EPA U.S. Environmental Protection Agency
Office of Research and Development

Industrial Environmental Research
Laboratory
Research Triangle Park, North Carolina 27711

EPA-600/7-78-051a
March 1978

EPA UTILITY FGD SURVEY: December 1977 - January 1978

Interagency
Energy-Environment
Research and Development
Program Report

RESEARCH REPORTING SERIES

Research reports of the Office of Research and Development, U.S. Environmental Protection Agency, have been grouped into nine series. These nine broad categories were established to facilitate further development and application of environmental technology. Elimination of traditional grouping was consciously planned to foster technology transfer and a maximum interface in related fields. The nine series are:

1. Environmental Health Effects Research
2. Environmental Protection Technology
3. Ecological Research
4. Environmental Monitoring
5. Socioeconomic Environmental Studies
6. Scientific and Technical Assessment Reports (STAR)
7. Interagency Energy-Environment Research and Development
8. "Special" Reports
9. Miscellaneous Reports

This report has been assigned to the INTERAGENCY ENERGY-ENVIRONMENT RESEARCH AND DEVELOPMENT series. Reports in this series result from the effort funded under the 17-agency Federal Energy/Environment Research and Development Program. These studies relate to EPA's mission to protect the public health and welfare from adverse effects of pollutants associated with energy systems. The goal of the Program is to assure the rapid development of domestic energy supplies in an environmentally-compatible manner by providing the necessary environmental data and control technology. Investigations include analyses of the transport of energy-related pollutants and their health and ecological effects; assessments of, and development of, control technologies for energy systems; and integrated assessments of a wide range of energy-related environmental issues.

EPA REVIEW NOTICE

This report has been reviewed by the participating Federal Agencies, and approved for publication. Approval does not signify that the contents necessarily reflect the views and policies of the Government, nor does mention of trade names or commercial products constitute endorsement or recommendation for use.

This document is available to the public through the National Technical Information Service, Springfield, Virginia 22161.

EPA-600/7-78-051a
March 1978

EPA UTILITY FGD SURVEY: December 1977 - January 1978

by

Bernard A. Laseke, Jr.

PEDCo Environmental, Inc.
11499 Chester Road
Cincinnati, Ohio 45246

Contract No. 68-01-4147
Task 3
Program Element No. EHE624

EPA Project Officers:
N. Kaplan and J. C. Herlihy

Industrial Environmental Research Laboratory
Office of Energy, Minerals and Industry
Research Triangle Park, N.C. 27711

Prepared for

U.S. ENVIRONMENTAL PROTECTION AGENCY
Office of Research and Development
Washington, D.C. 20460

NOTICE

This report, (prepared by PEDCo Environmental, Inc., Cincinnati, Ohio under EPA Contract No. 68-01-4147, Task No. 5) is provided as an information transfer document. Data in this report are supplied voluntarily by utility representatives; flue gas desulfurization (FGD) system designers, vendors, and suppliers; regulatory personnel; and others. Neither EPA nor the designated contractor warrants the accuracy or completeness of information contained in this report.

The format of this report, which represents the first in a series of six, has been extensively revised from previous issues. The succeeding five issues will be supplemental in nature. The user is therefore cautioned to retain this issue for reference throughout the year, because much of the information contained in this report will not be published again until around March 1979. Supplemental issues will be cumulative, so that it will be necessary only to retain the latest issue and this report to have all available information.

Initial distribution of the report (generally, one copy per company) is limited to organizations and individuals indicating a specific interest in the field of FGD technology. Additional copies of this report and succeeding issues can be purchased from National Technical Information Service, Springfield, Virginia 22151.

CONTENTS

Notice ii
Tables iv
Executive Summary and Highlights v

Table 1 Summary List of FGD Systems 1
Table 2 Status of FGD Systems 4
Table 3 Performance Description for Operational FGD Systems 22
Table 4 Summary of FGD Systems by Company 146
Table 5 Summary of FGD Systems by Vendor 147
Table 6 Summary of New and Retrofit FGD Systems by Process 149
Table 7 Summary of Operating FGD Systems by Process and Generating Units 150
Table 8 Summary of Sludge Disposal Practices for Operational FGD Systems 151
Table 9 Summary of FGD Systems by Process and Regulatory Class 152
Table 10 Summary of FGD Systems Under Construction 154
Table 11 Summary of Planned FGD Systems 156
Table 12 FGD System Operations That Have Been Terminated or Shut Down Indefinitely 159
Table 13 Total of FGD Megawatt Capacity by Year 213

Appendix A FGD Systems Economics A-1
Appendix B FGD Process Flow Diagrams B-1
Appendix C Definitions C-1

TABLES

Number		Page
I	Number and Total MW of FGD Systems	v
II	Summary of Changes: FGD Summary Report, December 1977 - January 1978	ix
III	Performance of Operational Units During December - January Period	x

EXECUTIVE SUMMARY AND HIGHLIGHTS

This report is prepared every other month by PEDCo Environmental, Inc., under a contract to the Industrial Environmental Research Laboratory/RTP and the Division of Stationary Source Enforcement of the U.S. Environmental Protection Agency. Table 1 summarizes the current status of the FGD systems addressed in this two-month period.

Table I

NUMBER AND TOTAL MW OF FGD SYSTEMS

Status	No. of units	MW
Operational	31	10,550
Under construction	38	15,664
Planning:		
Contract awarded	20	10,415
Letter of intent	3	865
Requesting/evaluating bids	6	2,660
Considering only FGD systems	33	15,525
TOTAL	131	55,679

Table II (page vii) summarizes the individual units that changed status during the report period.

The performance of the operating systems is summarized in Table III (page viii). Other activity highlights during the months of December and January are summarized below:

Present total power-generating capacity in the United States is approximately 570,000 MW. Of this total 250,000 MW are generated by coal. As indicated in Table I, 31 FGD-equipped units, representing 10,550 MW of power capacity, are now in service. Thus, a little under 2 percent of the total capacity and a little over 4

percent of the coal-fired capacity are controlled by FGD. By 1986 the projected total power-generating capacity in the United States will be 800,000 MW. Of this total approximately 570,000 MW will be coal-fired. As indicated in Table I, 131 FGD-equipped units representing 55,679 MW are projected for service. Therefore, assuming that no unit retirements occur, about 7 percent of the total projected generating capacity and about 16 percent of the projected coal-fired capacity will be controlled by FGD in 1986.

Alabama Electric Cooperative reported that construction of the Tombigbee 3 limestone FGD system commenced during the period. Foundation work is now in progress.

Arizona Public Service reported that Cholla 1 was not in service during the latter part of November, all of December, and the first part of January because of a scheduled unit outage for turbine, boiler, and FGD system overhaul. The unit resumed operations in late January and the boiler operated 135 hours during the remainder of the month. The A and B FGD modules operated 131 and 123 hours in January, producing operability index values of 97 and 91 percent, respectively.

Cincinnati Gas & Electric announced that the FGD contract for East Bend 2 has been awarded to Babcock & Wilcox (B&W). B&W will design and supply a lime scrubbing FGD system which will go into operation in January 1981.

Columbus and Southern Ohio Electric reported that the A-module of the Conesville 5 FGD system was restarted on December 3, 1977. The A-module operated 162 hours with an availability of 93 percent. The B-module operated 199 hours in December with an availability of 97 percent. Conesville 5 was shut down for a scheduled 3-month turbine, boiler, and FGD system overhaul beginning December 12, 1977.

Indianapolis Power & Light Company declared Petersburg 3 commercial on November 29 with two of its four scrubber modules in operation. All four modules were certified operable in December prior to a scheduled outage for completion of heat tracing.

Kansas City Power & Light Company reported that La Cygne 1 had a total system availability of 94 percent in November and 97 percent in December. The unit operated only 300 hours in December because of a turbine overhaul.

The Department of Electric and Water Utilities of the City of Lakeland, Florida, is currently evaluating bids for a new 350-MW coal-fired power-generating unit scheduled for installation at their McIntosh Station. McIntosh 3 will fire 2.5 to 3.0 percent sulfur coal and utilize ESP's and an FGD system for particulate

and sulfur dioxide control. McIntosh 3 is scheduled for operation in October 1981.

The FGD system on the 178-MW Cane Run 4 of Louisville Gas & Electric (LG&E) was available 85 and 90 percent for December and January, respectively. Although the utility encountered lime feed freeze up problems, the FGD system itself experienced no problems that required outage time during the period. LG&E also reported that the Mill Creek 4 FGD system is now under construction.

Montana Power reported that the Colstrip 1 and 2 lime/alkaline flyash FGD systems were available 96 and 98 percent, respectively, in December, and 98 percent for both systems in January.

Nevada Power reported operability index values for the Reid Gardner 3 FGD system of 92 and 99 percent for December and January, respectively. The Reid Gardner 2 FGD system remained in service during the period. The Reid Gardner 3 FGD system was down throughout December for repairs to the booster fan (new wear plates).

Northern States Power reported that the Sherburne No. 1 FGD system was available 93 percent during the period. The No. 2 FGD system was available 93 percent in December and 92 percent in January. Unavailability of the No. 1 system was attributed primarily to heavy maintenance on the 107 module. Unavailability of the No. 2 system was attributed to strainer and wash screen replacement in the module reaction tanks which commenced in late December and continued throughout the period.

Otter Tail Power announced that a contract has been awarded to Wheelebrator-Frye and Atomics International (AI) for a sodium carbonate FGD system for Coyote No. 1. The FGD system combines AI's aqueous carbonate process in a fabric filter supplied by Wheelebrator-Frye. The 400-MW system is scheduled to start-up in May 1981.

Pacific Gas & Electric (PG&E) announced that it plans to install a 2-unit, coal-fired power-generating station in Northern California. PG&E plans to burn low sulfur coal (0.8 percent) in both 800-MW units and use ESP's and FGD systems for the control of particulates and sulfur dioxide. Tentative operation dates are 1984 and 1985.

Potomac Electric and Power (PEPCO) reported that SO_2-removal capability will not be included in the wet scrubber modules now being installed on Dickerson 1 and 2. PEPCO plans to meet state emission regulations by burning low or medium sulfur coal in these units.

Public Service of Indiana (PSI) announced that the FGD systems planned for Gibson 3 and 4 have been cancelled because of a recent district court decision identifying the units as existing sources. PSI also announced that an FGD system is being planned for Gibson 5, which is a new coal-fired unit scheduled for operation in 1982.

The Tennessee Valley Authority reported that the 530-MW Widows Creek 8 FGD system achieved an operability of 97 percent in December and 96 percent in January. In addition, TVA also announced that the FGD contract for the Widows Creek 7 was awarded to Combustion Engineering (CE). CE will design and supply a 575-MW limestone scrubbing spray tower system for this unit.

TABLE II. SUMMARY OF CHANGES: FGD SUMMARY REPORT, DECEMBER 1977-JANUARY 1978

FGD status report	Operational		Under construction		Contract awarded		Letter of intent		Requesting/ evaluation bids		Considering FGD		Total	
	No.	MW	No.	MW	No.	MW	No.	MW	No.	MW	No.	MW	No.	MW
11/30/77	32	10,717	34	14,219	20	9,758	4	1,392	8	4,210	34	14,630	132	54,926
Alabama Electric Coop. Tombigbee No. 3			+1	225	-1	225								
Cincinnati Gas & Electric East Bend No. 2					+1	600			-1	600				
Commonwealth Edison Will County No. 1	-1	167											-1	167
Delmarva Power Delaware City Unit 1,2,3			+1	180	-1	180								
Lakeland Dept. of Elec. & Water McIntosh, No. 3									+1	350			+1	350
Louisville Gas & Electric Mill Creek No. 4			+1	495	-1	495								
Otter Tail Power Coyote No. 1					+1	400					-1	400		
Pacific Gas & Electric Fossil No. 1											+1	800	+1	800
Pacific Gas & Electric Fossil No. 2											+1	800	+1	800
Potomac Electric & Power Dickerson No. 1											-1	190	-1	190
Potomac Electric & Power Dickerson No. 2											-1	190	-1	190
Public Service of Indiana Gibson 3									-1	650			-1	650
Public Service of Indiana Gibson 4									-1	650			-1	650
Public Service of Indiana Gibson 5											+1	650	+1	650
Tennessee Valley Authority Widows Creek No. 7					+1	575					-1	575		
United Power Association Coal Creek 1			+1	545	-1	545								
Wisconsin Power & Light Columbia No. 2					+1	527	-1	527						
1/31/78	31	10,550	38	15,664	20	10,415	3	869	6	2,660	33	15,525	131	55,679

TABLE III. PERFORMANCE OF OPERATIONAL UNITS

DURING DECEMBER-JANUARY PERIOD

Plant	FGD system design capacity	FGD unit on-line during period*	No information for this period	Shut down throughout period	FGD system availability (%)**		FGD system operability (%)**		FGD system reliability (%)**		FGD system utilization (%)**	
					Dec	Jan	Dec	Jan	Dec	Jan	Dec	Jan
Cholla 1	115	115								94		
Conesville 5	400	400			95		69		72		24	
Elrama	510	310		200								
Phillips	410	410										
Petersburg 3	530	530										
Hawthorn 3	140	140			73	47						
Hawthorn 4	100	100			70	68						
La Cygne 1	820	820			97	94						
Lawrence 4	125	125										
Lawrence 5	400	400										
Green River 1, 2, and 3	64	64			50	31	63	32	63	32	50	23
Cane Run 4	178	178			85	90	85	67	100	87	82	67
Paddys Run 6	65			65								
M. R. Young 2	450	450										
Colstrip 1	360	360			98							
Colstrip 2	360	360			98							
Reid Gardner 1	125	125			85	56	82	68	83	69	71	56
Reid Gardner 2	125	125			0	67	0	74	0	67	0	67
Reid Gardner 3	125	125			88	99	92	99	96	99	93	99
D.H. Mitchell 11	115	115										
Sherburne 1	710	710			93	92						
Sherburne 2	710	710			93	92						
Bruce Mansfield 1	825		825									
Bruce Mansfield 2	825		825									
Edgystone 1A	120	120			41[a]							
Winyah 2	280	280										
Southwest 1	200			200								
Shawnee 10A	10	10										
Shawnee 10B	10	10										
Widow's Creek 8	550	550			56	88	97	96	59	96	56	79
Martin Lake 1	793	793										
Total (31)	10,550	8,435	1,650	465								

* This category includes the flue gas capacity being handled by the FGD system at least part of the time during the report period.

** The percent figures listed are average values for all system scrubbing trains during the period in question.

[a] Cummulative (October, November, December)

TABLE 1
SUMMARY LIST OF FGD SYSTEMS

FGD STATUS REPORT 01/78

COMPANY NAME	UNIT NAME	START UP DATE	STATUS	REG CLASS
ALABAMA ELECTRIC COOP	TOMBIGBEE NO. 2	6-78	2	A
ALABAMA ELECTRIC COOP	TOMBIGBEE NO. 3	6-79	2	A
ALLEGHENY POWER SYSTEM	PLEASANTS NO. 1	3-79	2	A
ALLEGHENY POWER SYSTEM	PLEASANTS NO. 2	3-80	2	A
ARIZONA ELECTRIC POWER COOP	APACHE NO 2	6-78	2	B
ARIZONA ELECTRIC POWER COOP	APACHE NO 3	4-79	2	B
ARIZONA PUBLIC SERVICE	CHOLLA NO 1	10-73	1	B
ARIZONA PUBLIC SERVICE	CHOLLA NO 2	6-78	2	B
ARIZONA PUBLIC SERVICE	CHOLLA NO. 4	6-80	3	E
ARIZONA PUBLIC SERVICE	FOUR CORNERS NO. 1	0- 0	6	B
ARIZONA PUBLIC SERVICE	FOUR CORNERS NO. 2	0- 0	6	B
ARIZONA PUBLIC SERVICE	FOUR CORNERS NO. 3	0- 0	6	B
ARIZONA PUBLIC SERVICE	FOUR CORNERS NO. 4	0- 0	6	B
ARIZONA PUBLIC SERVICE	FOUR CORNERS NO. 5	0- 0	6	B
BASIN ELECTRIC POWER COOP	ANTELOPE VALLEY NO. 1	0-81	6	B
BASIN ELECTRIC POWER COOP	ANTELOPE VALLEY NO. 2	0-83	6	B
BASIN ELECTRIC POWER COOP	LARAMIE RIVER NO. 1	4-80	3	B
BASIN ELECTRIC POWER COOP	LARAMIE RIVER NO. 2	10-80	3	B
BASIN ELECTRIC POWER COOP	LARAMIE RIVER NO. 3	6-83	6	B
BIG RIVERS ELECTRIC COOP CORP.	REID NO. 2	12-79	2	A
BIG RIVERS ELECTRIC COOP CORP.	REID NO. 3	12-80	2	A
BOARD OF MUNICIPAL UTILITIES	SIKESTON POWER STATION	11-80	3	A
BRAZOS ELECTRIC POWER COOP	SAN MIGUEL NO. 1	12-79	2	A
CENTRAL ILLINOIS LIGHT CO.	DUCK CREEK NO. 1	8-78	2	A
CENTRAL ILLINOIS LIGHT CO.	DUCK CREEK NO.2	1-82	6	A
CENTRAL ILLINOIS PUBLIC SERV	NEWTON NO.1	11-79	2	A
CENTRAL MAINE POWER CO.	SEARS ISLAND NO. 1	11-86	6	A
CINCINNATI GAS & ELECTRIC CO.	EAST BEND NO 2	1-81	3	A
COLORADO UTE ELECTRIC ASSN.	CRAIG NO. 1	3-79	2	B
COLORADO UTE ELECTRIC ASSN.	CRAIG NO. 2	3-79	2	B
COLUMBUS & SOUTHERN OHIO ELEC.	CONESVILLE NO 5	1-77	1	B
COLUMBUS & SOUTHERN OHIO ELEC.	CONESVILLE NO 6	10-78	2	B
COLUMBUS & SOUTHERN OHIO ELEC.	POSTON NO. 5	0-81	6	B
COLUMBUS & SOUTHERN OHIO ELEC.	POSTON NO. 6	0-83	6	B
COMMONWEALTH EDISON	POWERTON NO. 51	12-79	2	C
DELMARVA POWER CO.	DELAWARE CITY NOS. 1 2 & 3	4-80	2	C
DUQUESNE LIGHT	ELRAMA POWER STATION	10-75	1	B
DUQUESNE LIGHT	PHILLIPS POWER STATION	7-73	1	B
EASTERN KENTUCKY POWER COOP	SPURLOCK GENERATING PLANT NO.2	3-80	5	A
GENERAL PUBLIC UTILITIES	COMO NO.1	5-87	7	A
GENERAL PUBLIC UTILITIES	SEWARD NO.7	5-84	7	A
GULF POWER CO.	CRIST NO. 4 AND NO. 5	0-78	7	B
GULF POWER CO.	CRIST NO. 6 AND NO. 7	0-80	7	B
GULF POWER CO.	LANSING SMITH NO. 1 AND NO. 2	0-80	7	B
HOOSIER COOPERATIVE	MEROM NO. 1	0-80	5	A
HOOSIER COOPERATIVE	MEROM NO. 2	0-81	5	A
INDIANAPOLIS POWER & LIGHT CO.	PETERSBURG NO 3	10-77	1	A
INDIANAPOLIS POWER & LIGHT CO.	PETERSBURG NO 4	4-82	5	A
KANSAS CITY POWER & LIGHT	HAWTHORN NO. 3	11-72	1	B
KANSAS CITY POWER & LIGHT	HAWTHORN NO. 4	8-72	1	B
KANSAS CITY POWER & LIGHT	LA CYGNE NO 1	2-73	1	C
KANSAS POWER & LIGHT	JEFFERY NO. 1	6-78	2	B
KANSAS POWER & LIGHT	JEFFERY NO. 2	6-80	2	B
KANSAS POWER & LIGHT	LAWRENCE NO 4	12-68	1	B
KANSAS POWER & LIGHT	LAWRENCE NO 5	11-71	1	B
KENTUCKY UTILITIES	GREEN RIVER NOS. 1 2 AND 3	9-75	1	C
LAKELAND UTILITIES	MCINTOSH POWER PLANT UNIT NO.3	10-81	5	A
LOUISVILLE GAS & ELECTRIC	CANE RUN NO 4	8-76	1	B
LOUISVILLE GAS & ELECTRIC	CANE RUN NO 5	4-78	2	B

1. OPERATIONAL UNITS
2. UNITS UNDER CONSTRUCTION
3. PLANNED - CONTRACT AWARDED
4. PLANNED - LETTER OF INTENT SIGNED
5. PLANNED - REQUESTING/EVALUATING BIDS
6. CONSIDERING ONLY FGD SYSTEMS
7. CONSIDERING FGD SYSTEMS AS WELL AS ALTERNATIVE METHODS

A. BOILER CONSTRUCTED SUBJECT TO FEDERAL NSPS
B. BOILER SUBJECT TO STATE STANDARD THAT IS MORE STRINGENT THAN THE FEDERAL NSPS
C. BOILER SUBJECT TO STATE STANDARD THAT IS EQUAL TO OR LESS STRINGENT THAN NSPS
D. OTHER
E. REGULATORY CLASS UNKNOWN

TABLE 1
SUMMARY LIST OF FGD SYSTEMS

FGD STATUS REPORT 01/78

COMPANY NAME	UNIT NAME	START UP DATE	STATUS	REG CLASS
LOUISVILLE GAS & ELECTRIC	CANE RUN NO 6	11-79	2	B
LOUISVILLE GAS & ELECTRIC	MILL CREEK NO 1	1-82	6	B
LOUISVILLE GAS & ELECTRIC	MILL CREEK NO 2	1-81	6	B
LOUISVILLE GAS & ELECTRIC	MILL CREEK NO 3	4-78	2	B
LOUISVILLE GAS & ELECTRIC	MILL CREEK NO 4	6-80	2	A
LOUISVILLE GAS & ELECTRIC	PADDYS RUN NO 6	4-73	1	C
MINNESOTA POWER AND LIGHT CO.	CLAY BOSWELL NO. 4	0-80	3	A
MINNKOTA POWER COOPERATIVE	MILTON R. YOUNG NO. 2	9-77	1	B
MONTANA POWER CO.	COLSTRIP NO 1	11-75	1	B
MONTANA POWER CO.	COLSTRIP NO 2	7-76	1	B
MONTANA POWER CO.	COLSTRIP NO. 3	7-80	3	B
MONTANA POWER CO.	COLSTRIP NO. 4	7-81	3	B
NEVADA POWER	HARRY ALLEN STATION NO. 1	6-83	6	B
NEVADA POWER	HARRY ALLEN STATION NO. 2	6-84	6	B
NEVADA POWER	HARRY ALLEN STATION NO. 3	6-85	6	B
NEVADA POWER	HARRY ALLEN STATION NO. 4	6-86	6	B
NEVADA POWER	REID GARDNER NO 1	4-74	1	B
NEVADA POWER	REID GARDNER NO 2	4-74	1	B
NEVADA POWER	REID GARDNER NO 3	7-76	1	B
NEVADA POWER	REID GARDNER NO 4	0- 0	4	B
NEVADA POWER	WARNER VALLEY STATION NO. 1	6-82	6	B
NEVADA POWER	WARNER VALLEY STATION NO. 2	6-83	6	B
NEW ENGLAND ELEC SYSTEM	BRAYTON POINT NO.3	0- 0	6	C
NIAGARA MOHAWK POWER COOP.	CHARLES R. HUNTLEY NO.6	0-80	3	C
NORTHERN INDIANA PUB SERVICE	BAILLY NO. 7	0- 0	6	C
NORTHERN INDIANA PUB SERVICE	BAILLY NO. 8	0- 0	6	C
NORTHERN INDIANA PUB SERVICE	D.H. MITCHELL NO.11	6-77	1	C
NORTHERN STATES POWER CO.	SHERBURNE COUNTY STATION NO.1	3-76	1	B
NORTHERN STATES POWER CO.	SHERBURNE COUNTY STATION NO.2	4-77	1	B
NORTHERN STATES POWER CO.	SHERBURNE COUNTY STATION NO.3	5-81	3	B
NORTHERN STATES POWER CO.	SHERBURNE COUNTY STATION NO.4	5-83	3	B
OTTER TAIL POWER COMPANY	COYOTE NO. 1	5-81	3	B
PACIFIC GAS AND ELECTRIC	FOSSIL NO. 1	0-84	6	B
PACIFIC GAS AND ELECTRIC	FOSSIL NO. 2	0-85	6	B
PACIFIC POWER AND LIGHT CO.	JIM BRIDGER NO. 4	9-79	2	B
PENNSYLVANIA POWER CO.	BRUCE MANSFIELD NO. 1	4-76	1	B
PENNSYLVANIA POWER CO.	BRUCE MANSFIELD NO. 2	7-77	1	B
PENNSYLVANIA POWER CO.	BRUCE MANSFIELD NO. 3	4-80	3	B
PHILADELPHIA ELECTRIC CO.	CROMBY	6-80	6	B
PHILADELPHIA ELECTRIC CO.	EDDYSTONE NO. 1A	9-75	1	B
PHILADELPHIA ELECTRIC CO.	EDDYSTONE NO. 1B	6-80	4	B
PHILADELPHIA ELECTRIC CO.	EDDYSTONE NO. 2	6-80	6	B
POTOMAC ELECTRIC & POWER	DICKERSON NO. 4	5-85	7	D
POWER AUTHORITY OF NEW YORK	ARTHUR KILL	9-82	7	B
PUBLIC SERVICE CO OF NEW MEX.	SAN JUAN NO. 1	4-78	2	B
PUBLIC SERVICE CO OF NEW MEX.	SAN JUAN NO. 2	7-78	2	B
PUBLIC SERVICE CO OF NEW MEX.	SAN JUAN NO. 3	1-79	4	B
PUBLIC SERVICE CO OF NEW MEX.	SAN JUAN NO. 4	5-81	6	B
PUBLIC SERVICE OF INDIANA	GIBSON 5	0-82	6	A
SALT RIVER PROJECT	CORONADO NO.1	4-79	3	B
SALT RIVER PROJECT	CORONADO NO.2	4-80	3	B
SALT RIVER PROJECT	CORONADO NO.3	0-97	6	B
SOUTH CAROLINA PUBLIC SERVICE	WINYAH NO. 2	7-77	1	A
SOUTH CAROLINA PUBLIC SERVICE	WINYAH NO. 3	0-80	5	A
SOUTHERN ILLINOIS POWER COOP	MARION NO. 4	6-78	2	A
SOUTHERN INDIANA GAS&ELECTRIC	A.B. BROWN NO.1	4-79	2	A
SOUTHERN MISSISSIPPI ELECTRIC	R.D. MORROW NO.1	5-78	2	A
SOUTHERN MISSISSIPPI ELECTRIC	R.D. MORROW NO.2	8-78	2	A
SPRINGFIELD CITY UTILITIES	SOUTHWEST NO. 1	4-77	1	A

1. OPERATIONAL UNITS
2. UNITS UNDER CONSTRUCTION
3. PLANNED - CONTRACT AWARDED
4. PLANNED - LETTER OF INTENT SIGNED
5. PLANNED - REQUESTING/EVALUATING BIDS
6. CONSIDERING ONLY FGD SYSTEMS
7. CONSIDERING FGD SYSTEMS AS WELL AS ALTERNATIVE METHODS

A. BOILER CONSTRUCTED SUBJECT TO FEDERAL NSPS
B. BOILER SUBJECT TO STATE STANDARD THAT IS MORE STRINGENT THAN THE FEDERAL NSPS
C. BOILER SUBJECT TO STATE STANDARD THAT IS EQUAL TO OR LESS STRINGENT THAN NSPS
D. OTHER
E. REGULATORY CLASS UNKNOWN

TABLE 1
SUMMARY LIST OF FGD SYSTEMS

FGD STATUS REPORT 01/78

COMPANY NAME	UNIT NAME	START UP DATE	STATUS	REG CLASS
SPRINGFIELD WATER LIGHT&POWER	DALLMAN NO. 3	7-80	3	A
TENNESSEE VALLEY AUTHORITY	SHAWNEE NO.10A	4-72	1	C
TENNESSEE VALLEY AUTHORITY	SHAWNEE NO.10B	4-72	1	C
TENNESSEE VALLEY AUTHORITY	WIDOWS CREEK NO. 7	0- 0	3	C
TENNESSEE VALLEY AUTHORITY	WIDOWS CREEK NO. 8	5-77	1	C
TEXAS MUNICIPAL POWER AGENCY	GIBBONS CREEK UNIT NO. 1	1-82	3	A
TEXAS POWER AND LIGHT CO.	SANDOW NO.4	7-80	2	A
TEXAS POWER AND LIGHT CO.	TWIN OAKS NO. 1	8-83	6	A
TEXAS POWER AND LIGHT CO.	TWIN OAKS NO. 2	9-84	6	A
TEXAS UTILITIES CO.	FOREST GROVE NO. 1	0-81	6	A
TEXAS UTILITIES CO.	MARTIN LAKE NO. 1	8-77	1	A
TEXAS UTILITIES CO.	MARTIN LAKE NO. 2	2-78	2	A
TEXAS UTILITIES CO.	MARTIN LAKE NO. 3	12-78	2	A
TEXAS UTILITIES CO.	MARTIN LAKE NO. 4	11-82	3	A
TEXAS UTILITIES CO.	MONTICELLO NO.3	2-78	2	A
UNITED POWER ASSOCIATION	COAL CREEK NO. 1	11-78	2	A
UNITED POWER ASSOCIATION	COAL CREEK NO. 2	11-79	2	A
UTAH POWER & LIGHT CO.	EMERY NO.1	12-78	2	A
UTAH POWER & LIGHT CO.	HUNTINGTON NO.1	4-78	2	A
VIRGINIA ELECTRIC AND POWER CO	MT. STORM	0- 0	7	C
WISCONSIN POWER & LIGHT CO.	COLUMBIA NO. 2	1-80	3	A

1. OPERATIONAL UNITS
2. UNITS UNDER CONSTRUCTION
3. PLANNED - CONTRACT AWARDED
4. PLANNED - LETTER OF INTENT SIGNED
5. PLANNED - REQUESTING/EVALUATING BIDS
6. CONSIDERING ONLY FGD SYSTEMS
7. CONSIDERING FGD SYSTEMS AS WELL AS ALTERNATIVE METHODS

A. BOILER CONSTRUCTED SUBJECT TO FEDERAL NSPS
B. BOILER SUBJECT TO STATE STANDARD THAT IS MORE STRINGENT THAN THE FEDERAL NSPS
C. BOILER SUBJECT TO STATE STANDARD THAT IS EQUAL TO OR LESS STRINGENT THAN NSPS
D. OTHER
E. REGULATORY CLASS UNKNOWN

TABLE 2

STATUS OF FGD SYSTEMS AS OF 01/78

COMPANY POWER STATION	CURRENT MONTH
ALABAMA ELECTRIC COOP TOMBIGBEE NO. 2 225 MW - NEW COAL 0.8 - 1.5 PERCENT SULFUR PEABODY ENGINEERING LIMESTONE SCRUBBING STARTUP 6/78	PEABODY ENGINEERING HAS BEEN AWARDED THE CONTRACT FOR THE INSTALLATION OF A LIMESTONE SCRUBBING SYSTEM ON THIS UNIT. A HIGH-EFFICIENCY ESP WILL BE INSTALLED UPSTREAM OF THE SCRUBBING SYSTEM TO PROVIDE PRIMARY PARTICULATE CONTROL. THE FGD SYSTEM CONTAINS TWO SCRUBBING TRAINS, TREATING APPROXIMATELY 70 PERCENT OF THE FLUE GAS FOR REMOVAL OF SULFUR DIOXIDE. STACK GAS REHEAT WILL NOT BE REQUIRED. THE TOTAL INSTALLED COST FOR BOTH TOMBIGBEE NO. 2 AND NO. 3 FGD SYSTEMS IS $40.46 MM. CURRENTLY, ERECTION OF THE SCRUBBING EQUIPMENT IS IN PROGRESS.
ALABAMA ELECTRIC COOP TOMBIGBEE NO. 3 225 MW - NEW COAL 0.8 - 1.5 PERCENT SULFUR PEABODY ENGINEERING LIMESTONE SCRUBBING STARTUP 6/79	PEABODY ENGINEERING HAS BEEN AWARDED THE CONTRACT FOR THE INSTALLATION OF A LIMESTONE SCRUBBING SYSTEM ON THIS UNIT. A HIGH-EFFICIENCY ESP WILL BE INSTALLED UPSTREAM OF THE SCRUBBING SYSTEM TO PROVIDE PRIMARY PARTICULATE CONTROL. THE FGD SYSTEM CONTAINS TWO SCRUBBING TRAINS, TREATING APPROXIMATELY 70 PERCENT OF THE FLUE GAS FOR REMOVAL OF SULFUR DIOXIDE. STACK GAS REHEAT WILL NOT BE REQUIRED. UNIT NO. 3 TURBINE AND BOILER ARE CURRENTLY UNDER CONSTRUCTION. CURRENTLY, FOUNDATION WORK ON THE SCRUBBER PLANT IS COMPLETE. EQUIPMENT ERECTION WILL COMMENCE SHORTLY.
ALLEGHENY POWER SYSTEM PLEASANTS NO. 1 625 MW - NEW COAL 4.5 PERCENT SULFUR (MAX) BABCOCK & WILCOX LIME SCRUBBING STARTUP 3/79	THE THREE PRINCIPAL OPERATING UTILITY COMPANIES OF THE ALLEGHENY POWER SYSTEM ARE INSTALLING AN EMISSION CONTROL SYSTEM FOR THIS NEW COAL-FIRED UNIT WHICH INCLUDES A HIGH EFFICIENCY ESP UPSTREAM OF FOUR TRAY TOWERS FOR THE CONTROL OF PARTICULATES AND SULFUR DIOXIDE. DESIGN REMOVAL EFFICIENCIES FOR THIS EMISSION CONTROL SYSTEM ARE 99.5 AND 90 PERCENT RESPECTIVELY. THE DRAVO CO. IS SUPPLYING THIOSORBIC LIME. THE CONSULTING ENGINEERING FIRM IS UNITED ENGINEERS AND CONSTRUCTORS. CURRENTLY, ERECTION OF THE SCRUBBING EQUIPMENT IS IN PROGRESS.
ALLEGHENY POWER SYSTEM PLEASANTS NO. 2 625 MW - NEW COAL 4.5 PERCENT SULFUR (MAX) BABCOCK & WILCOX LIME SCRUBBING STARTUP 3/80	THE THREE PRINCIPAL OPERATING UTILITY COMPANIES OF THE ALLEGHENY POWER SYSTEM ARE INSTALLING AN EMISSION CONTROL SYSTEM FOR THIS NEW COAL-FIRED UNIT WHICH INCLUDES A HIGH EFFICIENCY ESP UPSTREAM OF FOUR TRAY TOWERS FOR THE CONTROL OF PARTICULATES AND SULFUR DIOXIDE. DESIGN REMOVAL EFFICIENCIES FOR THIS EMISSION CONTROL SYSTEM ARE 99.5 AND 90 PERCENT, RESPECTIVELY. THE DRAVO CO. IS SUPPLYING THIOSORBIC LIME. THE CONSULTING ENGINEERING FIRM IS UNITED ENGINEERS AND CONSTRUCTORS. CURRENTLY, FOUNDATION WORK ON THE SCRUBBER PLANT IS IN PROGRESS.
ARIZONA ELECTRIC POWER COOP APACHE NO 2 200 MW - NEW COAL 0.5- 0.8 PERCENT SULFUR RESEARCH COTTRELL LIMESTONE SCRUBBING STARTUP 6/78	AEPC HAS AWARDED A CONTRACT TO RESEARCH COTTRELL FOR A WET LIMESTONE SCRUBBING SYSTEM. THE UNIT WILL FIRE BITUMINOUS COAL WITH A SULFUR CONTENT OF 0.5-0.8%, AND ASH CONTENT OF 10.0% (HEATING VALUE - 10,000-11,000 BTU/LB). THERE IS A 22 ACRE SLUDGE POND AND A 64 ACRE ASH POND. PONDS WILL BE UNLINED AND 10 FEET DEEP. THERE WILL BE NO REHEAT. CONSTRUCTION OF THE SYSTEM IS NOW NEARING COMPLETION. ALL FGD EQUIPMENT IS INSTALLED. SCRUBBER LINING IS COMPLETE. THE PLASTIC GIRDERS SUPPORTING THE MIST ELIMINATORS WERE REPLACED WITH STEEL GIRDERS.
ARIZONA ELECTRIC POWER COOP APACHE NO 3 200 MW - NEW COAL 0.5- 0.8 PERCENT SULFUR RESEARCH COTTRELL LIMESTONE SCRUBBING STARTUP 4/79	STRUCTURAL STEELWORK FOR HOT-SIDE UOP ESP'S IS COMPLETE. STRUCTURE ERECTION OF THE SCRUBBER-ABSORBER TOWERS IS COMPLETE. EACH SCRUBBER CAN HANDLE 400,000 ACFM @ 270 F AND RECIRCULATE 20,000 GPM OF SLURRY. BOILER CONSTRUCTION HAS BEGUN. THERE ARE CURRENTLY 2 PONDS WITH A TOTAL OF 20-YRS CAPACITY FOR THE DISPOSAL OF THE UNFIXATED SLUDGE. 2 ADDITIONAL PONDS ARE PLANNED PROVIDING AN ADDITIONAL 20 YRS OF DISPOSAL CAPABILITY. THERE WILL BE NO REHEAT AND A KELLOGG LINER IS PLANNED FOR THE WET STACK, WHICH WILL CONSIST OF A COMMON OUTER SHELL AND A SEPARATE FLUE FOR EACH UNIT.
ARIZONA PUBLIC SERVICE CHOLLA NO 1 115 MW - RETROFIT COAL 0.44-1 PERCENT SULFUR RESEARCH COTTRELL LIMESTONE SCRUBBING STARTUP 10/73	REFER TO THE BACKGROUND INFORMATION SECTION IN TABLE 3 OF THIS REPORT. THIS LIMESTONE SCRUBBING SYSTEM WAS PLACED IN SERVICE IN OCTOBER 1973. THE SCRUBBER PLANT CONSISTS OF TWO PARALLEL SCRUBBING TRAINS. PARTICULATE CONTROL IS PROVIDED BY TWO FLOODED-DISC SCRUBBERS. SO2 CONTROL IS PROVIDED BY ONE PACKED (MUNTERS PACKING) TOWER (A-SIDE). FLUE GAS CLEANING WASTES ARE DISCHARGED TO AN EXISTING FLY ASH POND. NO WATER IS RECYCLED BACK FROM THE DISPOSAL POND. IN-LINE STEAM REHEATERS RAISE THE GAS TEMPERATURE 40 F.
ARIZONA PUBLIC SERVICE CHOLLA NO 2 250 MW - NEW COAL 0.44-1 PERCENT SULFUR RESEARCH COTTRELL LIMESTONE SCRUBBING STARTUP 6/78	THE CONTRACT FOR THIS WET LIMESTONE SCRUBBING SYSTEM HAS BEEN AWARDED BY THE UTILITY TO RESEARCH-COTTRELL. THIS SYSTEM IS A LARGER-SCALE APPLICATION OF THE CHOLLA NO.1 DESIGN. ALL DESIGN AND ENGINEERING WORK HAVE BEEN COMPLETED. CONSTRUCTION OF THE UNIT IS NOW NEARING COMPLETION. THE UNIT COMMERCIAL START-UP DATE IS JUNE 1978. THE FGD SYSTEMANT CONSISTS OF FOUR PARALLEL FLOODED-DISC SCRUBBERS AND PACKED TOWER ABSORBER TRAINS. THREE ARE REQUIRED FOR FULL LOAD CAPACITY. INITIAL BOILER START-UP DATE IS FEBRUARY 1978.

TABLE 2

STATUS OF FGD SYSTEMS AS OF 01/78

COMPANY POWER STATION	CURRENT MONTH
ARIZONA PUBLIC SERVICE CHOLLA NO. 4 350 MW - NEW COAL 0.44-1 PERCENT SULFUR RESEARCH COTTRELL LIMESTONE SCRUBBING STARTUP 6/80	UNIT NO. 4 IS CURRENTLY UNDER CONSTRUCTION. APS HAS AWARDED THE FGD CONTRACT TO RESEARCH COTTRELL. THE STATE REGULATORY AGENCY HAS NOT YET DECIDED THE EMISSIONS REGULATIONS WHICH WILL APPLY TO THE PLANT. THE C-E BOILER WILL FIRE THE SAME COAL AS CHOLLA NO. 1, WITH SULFUR CONTENT OF 0.44-1.0 PERCENT. THE A-E FIRM IS EBASCO. COMMERCIAL START-UP IS SLATED FOR 06/80. THE FGD SYSTEM IS A DOUBLE LOOP LIMESTONE ABSORPTION PROCESS AND REVENUES OF THE CONTRACT TO R-C ARE REPORTED TO BE $5 MM.
ARIZONA PUBLIC SERVICE FOUR CORNERS NO. 1 175 MW - RETROFIT COAL 0.75 PERCENT SULFUR CHEMICO/APS LIME/ALKALINE FLYASH SCRUBBING STARTUP 0/ 0	APS MAY BE UPGRADING THE OPERATIONAL PARTICULATE SCRUBBERS AT THE FOUR CORNERS UNIT NOS. 1, 2 AND 3 FOR SO2 REMOVAL. EACH UNIT HAS 2 VENTURI SCRUBBER MODULES FOR PARTICULATE CONTROL. APPROXIMATELY 30% OF THE FLUE GAS SO2 CONTENT IS REMOVED AT THE PRESENT TIME IN THE VENTURIES BECAUSE OF THE ALKALINITY OF THE COLLECTED FLYASH. NEW MEXICO APC OFFICIALS INDICATED THAT THE FOUR CORNERS STATION WILL BE REQUIRED TO REDUCE SO2 EMISSIONS AT LEAST 67.5% OF THE CURRENT LEVEL. UPGRADING OF THE VENTURIES WOULD BE AFFECTED BY SUPPLEMENTING THE ALKALINITY OF THE SCRUBBING FLUID.
ARIZONA PUBLIC SERVICE FOUR CORNERS NO. 2 175 MW - RETROFIT COAL 0.75 PERCENT SULFUR CHEMICO/APS LIME/ALKALINE FLYASH SCRUBBING STARTUP 0/ 0	APS MAY BE UPGRADING THE OPERATIONAL PARTICULATE SCRUBBERS AT THE FOUR CORNERS UNIT NOS. 1, 2 AND 3 FOR SO2 REMOVAL. EACH UNIT HAS 2 VENTURI SCRUBBER MODULES FOR PARTICULATE CONTROL. ROUGHLY 30% OF THE FLUE GAS SO2 CONTENT IS REMOVED AT THE PRESENT TIME IN THE VENTURIES WITH THE HIGH ALKALINE FLYASH. NEW MEXICO APC OFFICIALS INDICATED THAT THE 5 FOUR CORNERS UNITS WILL BE REQUIRED TO REMOVE AT LEAST 67.5% OF THE SO2 CONSIDERING ALL OF THE PLANTS TOGETHER. UPGRADING OF THE VENTURIES WOULD BE AFFECTED BY ADJUSTING ACID-ALKALINITY.
ARIZONA PUBLIC SERVICE FOUR CORNERS NO. 3 229 MW - RETROFIT COAL 0.75 PERCENT SULFUR CHEMICO/APS LIME/ALKALINE FLYASH SCRUBBING STARTUP 0/ 0	APS MAY BE UPGRADING THE OPERATIONAL PARTICULATE SCRUBBERS AT THE FOUR CORNERS UNIT NOS. 1, 2 AND 3 FOR SO2 REMOVAL. EACH UNIT HAS 2 VENTURI SCRUBBER MODULES FOR PARTICULATE CONTROL. ROUGHLY 30% OF THE FLUE GAS SO2 CONTENT IS REMOVED AT THE PRESENT TIME IN THE VENTURIES WITH THE HIGH ALKALINE FLYASH. NEW MEXICO APC OFFICIALS INDICATED THAT THE 5 FOUR CORNERS UNITS WILL BE REQUIRED TO REMOVE AT LEAST 67.5% OF THE SO2 CONSIDERING ALL OF THE PLANTS TOGETHER. UPGRADING OF THE VENTURIES WOULD BE AFFECTED BY ADJUSTING ACID-ALKALINITY.
ARIZONA PUBLIC SERVICE FOUR CORNERS NO. 4 755 MW - RETROFIT COAL 0.7 PERCENT SULFUR NOT SELECTED NOT SELECTED STARTUP 0/ 0	THE UTILITY IS CURRENTLY EVALUATING THE DATA AND INFORMATION ACCUMULATED DURING THE HORIZONTAL PROTOTYPE SCRUBBING PROGRAM IN ORDER TO ASCERTAIN VARIOUS POSSIBLE STRATEGIES TO CONTROL THE EMISSIONS FROM THIS COAL FIRED 755-MW UNIT. APS MAY BE REQUIRED TO REDUCE THE CURRENT LEVEL OF SO2 EMISSIONS FROM THE ENTIRE PLANT BY 67.5%. A DECISION ON THE USE OF FGD FOR THIS UNIT WILL BE ANNOUNCED SHORTLY.
ARIZONA PUBLIC SERVICE FOUR CORNERS NO. 5 755 MW - RETROFIT COAL 0.7 PERCENT SULFUR NOT SELECTED NOT SELECTED STARTUP 0/ 0	THE UTILITY IS CURRENTLY EVALUATING THE DATA AND INFORMATION ACCUMULATED DURING THE HORIZONTAL PROTOTYPE SCRUBBING PROGRAM IN ORDER TO ASCERTAIN VARIOUS POSSIBLE STRATEGIES TO CONTROL THE EMISSIONS FROM THIS COAL-FIRED 755-MW UNIT. A DECISION, PENDING THE OUTCOME OF LOCAL REGULATORY AGENCY HEARINGS WILL BE ANNOUNCED IN THE NEAR FUTURE.
BASIN ELECTRIC POWER COOP ANTELOPE VALLEY NO. 1 450 MW - NEW LIGNITE 1.0 PERCENT SULFUR NOT SELECTED NOT SELECTED STARTUP 0/81	THE UTILITY IS CURRENTLY PLANNING TO INSTALL A WET SCRUBBING SYSTEM TO CONTROL SO2 EMISSIONS FROM THIS LIGNITE-FIRED BOILER. VARIOUS PROCESSES ARE NOW BEING EVALUATED BY THE UTILITY. THIS NEW FACILITY IS LOCATED IN THE MERCER COUNTY AREA NEAR BEULAH, NORTH DAKOTA AND IS KNOWN AS THE ANTELOPE VALLEY STATION. BOTH UNITS 1 AND 2 WILL BE REQUIRED TO COMPLY WITH AIR EMISSION STANDARDS VIA BEST AVAILABLE TECHNOLOGY. START-UP IS SCHEDULED FOR 1981. BIDS ARE EXPECTED TO GO OUT THIS SPRING.
BASIN ELECTRIC POWER COOP ANTELOPE VALLEY NO. 2 450 MW - NEW LIGNITE 1.0 PERCENT SULFUR NOT SELECTED NOT SELECTED STARTUP 0/83	THE UTILITY IS CURRENTLY INVESTIGATING VARIOUS FGD PROCESSES FOR THIS SECOND LIGNITE-FIRED UNIT SCHEDULED AT THIS NEW STATION LOCATED IN MERCER COUNTY, NEAR BEULAH, NORTH DAKOTA. THIS NEW FACILITY WILL BE KNOWN AS THE ANTELOPE VALLEY STATION AND WILL BE REQUIRED TO COMPLY WITH AIR EMISSION STANDARDS VIA THE BEST AVAILABLE TECHNOLOGY. START-UP IS NOW SCHEDULED FOR 1983. BIDS ARE EXPECTED TO GO OUT THIS SPRING.

TABLE 2

COMPANY POWER STATION	STATUS OF FGD SYSTEMS AS OF 01/78 CURRENT MONTH
BASIN ELECTRIC POWER COOP LARAMIE RIVER NO. 1 550 MW - NEW COAL 0.8 PERCENT SULFUR RESEARCH COTTRELL LIMESTONE SCRUBBING STARTUP 4/80	RESEARCH-COTTRELL IS CURRENTLY FABRICATING THE DUAL-LOOP LIMESTONE WET SCRUBBERS. ON-SITE CONSTRUCTION IS TO BEGIN APRIL 1978. SLUDGE WILL BE DEWATERED TO 83% SOLIDS BEFORE LANDFILL. THE SCRUBBERS WILL BE MADE OF STAINLESS STEEL AND WILL HANDLE 2.3 MM ACFM AT 286 F. L/G RATIO WILL BE 60. THE TOTAL CAPITAL COST FOR BOTH THE SYSTEMS IS ESTIMATED TO BE 80 MM DOLLARS. THE OPERATING COST WILL BE 1.5 MILLS/KWH. B&W HAS BEEN AWARDED CONTRACT FOR 2 ESP'S AT A COMBINED COST OF $28 MM. THE ESP'S ARE FOR UNITS 1 AND 2. STACK WILL BE CONCRETE WITH ACID BRICK LINING.
BASIN ELECTRIC POWER COOP LARAMIE RIVER NO. 2 550 MW - NEW COAL 0.8 PERCENT SULFUR RESEARCH COTTRELL LIMESTONE SCRUBBING STARTUP 10/80	RESEARCH-COTTRELL IS CURRENTLY FABRICATING THE DUAL-LOOP LIMESTONE WET SCRUBBERS. ON-SITE CONSTRUCTION IS TO BEGIN APRIL 1978. SLUDGE WILL BE DEWATERED TO 83% SOLIDS BEFORE LANDFILL. THE SCRUBBERS WILL BE MADE OF STAINLESS STEEL AND WILL HANDLE 2.3 MM ACFM AT 286 F. L/G RATIO WILL BE 60. THE TOTAL CAPITAL COST FOR BOTH THE SYSTEMS IS ESTIMATED TO BE 80 MM DOLLARS. THE OPERATING COST WILL BE 1.5 MILLS/KWH. B&W HAS BEEN AWARDED CONTRACT FOR 2 ESP'S AT A COMBINED COST OF $28 MM. THE ESP'S ARE FOR UNITS 1 AND 2. STACK WILL BE CONCRETE WITH ACID BRICK LINING.
BASIN ELECTRIC POWER COOP LARAMIE RIVER NO. 3 550 MW - NEW COAL 0.8 PERCENT SULFUR NOT SELECTED NOT SELECTED STARTUP 6/83	THE UTILITY IS STILL CONSIDERING VARIOUS FGD PROCESSES. LARAMIE RIVER STATION WILL FIRE SUB-BITUMINOUS COAL WITH THE FOLLOWING CHARACTERISTICS* 8100 BTU/LB, 0.8 PERCENT SULFUR AND 7.0 PERCENT ASH.
BIG RIVERS ELECTRIC COOP CORP. REID NO. 2 250 MW - NEW COAL 3.5-4.0 PERCENT SULFUR AMERICAN AIR FILTER LIME SCRUBBING STARTUP 12/79	THE EMISSION CONTROL SYSTEM FOR THIS NEW COAL-FIRED UNIT IS BEING SUPPLIED BY AMERICAN AIR FILTER. THE SYSTEM WILL CONSIST OF A COLD-SIDE ESP AND TWO SPRAY TOWERS CONTROLLING PARTICULATE AND SO2 TO 99.6 PERCENT AND 90 PERCENT, RESPECTIVLEY. THE B&W BOILER WILL FIRE HIGH SULFUR (3.5 TO 4.5 PERCENT) WESTERN KENTUCKY COAL. FGD SYSTEM FOUNDATIONS HAVE BEEN LAID, ONE REACTION TANK HAS BEEN ASSEMBLED AND A SECOND TANK IS BEING CONSTRUCTED. THE FGD SYSTEM WILL INCLUDE AN INDIRECT HOT AIR REHEAT SYST. IUCS WILL CONSTRUCT A SLUDGE DISPOSAL SYSTEM TO SERVICE BOTH REID 2 AND 3
BIG RIVERS ELECTRIC COOP CORP. REID NO. 3 240 MW - NEW COAL 3.5-4.0 PERCENT SULFUR AMERICAN AIR FILTER LIME SCRUBBING STARTUP 12/80	THE EMISSION CONTROL SYSTEM FOR THIS NEW COAL-FIRED UNIT IS BEING SUPPLIED BY AMERICAN AIR FILTER. THE SYSTEM WILL CONSIST OF A COLD-SIDE ESP AND TWO SPRAY TOWERS CONTROLLING PARTICULATE AND SO2 TO 99.6 PERCENT AND 90 PERCENT, RESPECTIVELY. THE B&W BOILER WILL FIRE HIGH SULFUR (3.5 TO 4.5 PERCENT) WESTERN KENTUCKY COAL. THE FGD SYSTEM WILL INCLUDE AN INDIRECT HOT AIR REHEAT SYSTEM. IUCS WILL CONSTRUCT A SLUDGE DISPOSAL SYSTEM TO SERVICE BOTH REID 2 AND 3. THE BOILER IS CURRENTLY UNDER CONSTRUCTION.
BOARD OF MUNICIPAL UTILITIES SIKESTON POWER STATION 235 MW - NEW COAL 2.8 PERCENT SUFUR BABCOCK & WILCOX LIMESTONE SCRUBBING STARTUP 11/80	B&W WAS AWARDED A CONTRACT FOR BOILER AND AIR QUALITY CONTROL SYSTEM INSTALLATION. 2.8 PERCENT SULFUR COAL IS TO BE BURNED. THE AQC SYSTEM WILL CONSIST OF 2 ESP'S FOLLOWED BY 3 SCRUBBERS EACH CAPABLE OF HANDLING 50% OF THE BOILER LOAD-ONE WILL BE ON STAND-BY AT ALL TIMES. SIKESTON STATION WILL FEATURE A DOUBLE-LINED STACK, 2 PONDS, ONE FOR FLY ASH, THE OTHER FOR SCRUBBER SLUDGE/BOTTOM-ASH DISPOSAL, AND 4 AXIAL FLOW FANS. NO STACK GAS REHEAT IS PLANNED. GROUND BREAKING IS SET FOR APRIL 1978. MAXIMUM FLUE GAS CAPACITY IS 748,390 ACFM @ 288 F.
BRAZOS ELECTRIC POWER COOP SAN MIGUEL NO. 1 400 MW - NEW LIGNITE 1.67 PERCENT SULFUR BABCOCK & WILCOX LIMESTONE SCRUBBING STARTUP 12/79	THE EMISSION CONTROL EQUIPMENT FOR THE COAL-FIRED RADIANT BOILER WILL CONSIST OF AN ESP UPSTREAM OF FOUR LIMESTONE SCRUBBING MODULES. THE SCRUBBER FLUE GAS CAPACITY IS NOMINALLY DESIGNED AT 1.579 MILLION ACFM (302 F). DESIGN SO2 REMOVAL EFFICIENCY IS 86 PERCENT FOR 4400 PPM SO2 INLET. L/G RATIOS ARE 10 AND 45 FOR QUENCHER AND ABSORBER, RESPECTIVELY. RESEARCH COTTRELL HAS BEEN AWARDED SLUDGE DISPOSAL CONTRACT. FGD SYSTEM FOUNDATION IS COMPLETE WITH STRUCTURAL STEEL SOON TO BE ERECTED. BOILER CONSTRUCTION IS ABOUT 50% COMPLETE.
CENTRAL ILLINOIS LIGHT CO. DUCK CREEK NO. 1 400 MW - NEW COAL 2.5 - 3.0 PERCENT SULFUR RILEY STOKER / ENVIRONEERING LIMESTONE SCRUBBING STARTUP 8/78	CONSTRUCTION OF THE FOUR VENTURI-SORBER MODULES BY RILEY STOKER IS ON SCHEDULE. SCRUBBER TANKS AND PUMPS WILL BE NEOPRENE LINED. THE FIRST LIMESTONE SLURRY SCRUBBER MODULE WAS PLACED IN SERVICE ON SEPTEMBER 9, 1976, AND OPERATED INTERMITTENTLY UNTIL APRIL 1, 1977. A HIGH EFFICIENCY ESP IS INSTALLED UPSTREAM OF FOUR VENTURI-SORBER SCRUBBER MODULES FOR PARTICULATE CONTROL. CONCRETE STACK IS LINED WITH CEILCOTE FLAKELINE 151. NO REHEAT PLANNED. DESIGN PARTICULATE AND SULFUR DIOXIDE REMOVAL EFFICIENCIES ARE 99.8 AND 85 PERCENT, RESPECTIVELY.

TABLE 2

COMPANY — STATUS OF FGD SYSTEMS AS OF 01/78

POWER STATION	CURRENT MONTH
CENTRAL ILLINOIS LIGHT CO. DUCK CREEK NO.2 400 MW - NEW COAL 2.5-3.0 PERCENT SULFUR NOT SELECTED LIMESTONE SCRUBBING STARTUP 1/82	SCRUBBING UNIT IS SCHEDULED TO COMMENCE OPERATIONS IN JANUARY 1982. THE UTILITY HAS NOT YET SELECTED A SYSTEM SUPPLIER. A DECISION CONCERNING THE STATUS OF THE BOILER AND CONTROL STRATEGY WILL BE ANNOUNCED IN EARLY 1978. THE UTILITY IS LOOKING AT ESP'S FOR PARTICULATE CONTROL AND LIMESTONE OR DUAL ALKALI FOR SO2 SCRUBBING. THE PLANT IS NOW IN THE PROCESS OF PREPARING SPECS.
CENTRAL ILLINOIS PUBLIC SERV NEWTON NO.1 575 MW - NEW COAL 4.0 PERCENT SULFUR BUELL/ENVIROTECH DOUBLE ALKALI SCRUBBING STARTUP 11/79	A CONTRACT HAS BEEN AWARDED BY CIPSCO TO BUELL/ENVIROTECH FOR THE INSTALLATION OF AN EMISSION CONTROL SYSTEM ON UNIT NO. 1. THE KEY COMPONENTS OF THE EMISSION CONTROL SYSTEM INCLUDE* A HIGH-EFFICIENCY ESP, FOUR PRECOOLERS, FOUR POLYSPHERE ABSORBERS, THREE THICKENERS, TWO EXPERIMENTAL REHEAT SYSTEMS, AND THREE HORIZONTAL EXTRACTION FILTERS FOR SLUDGE DEWATERING. APPROXIMATELY 25 PERCENT OF THE CONSTRUCTION WORK AT THE PLANT HAS BEEN COMPLETED. THE FGD SYSTEM WILL HAVE CEILCOTE-LINED ABSORBER MODULES.
CENTRAL MAINE POWER CO. SEARS ISLAND NO. 1 600 MW - NEW COAL SOURCE UNDETERMINED NOT SELECTED NOT SELECTED STARTUP 11/86	BECAUSE OF THE DISCOVERY OF A GEOLOGICAL FAULT ON SEARS ISLAND, THE UTILITY HAS CANCELLED PLANS FOR A 1150-MW NUCLEAR POWER PLANT. A 600-MW COAL-FIRED UNIT IS NOW BEING PLANNED IN ITS PLACE. COMMERCIAL OPERATION IS PROJECTED FOR NOVEMBER 1986. COMPLIANCE WITH SO2 NSPS WILL BE ACHIEVED BY INSTALLING AN FGD SYSTEM. LIME AND LIMESTONE SCRUBBING PROCESSES ARE BEING GIVEN PRIMARY CONSIDERATION. CURRENTLY, CMPCO HAS FILED AN APPLICATION WITH THE STATE PUBLIC UTILITIES COMMISSION. AN ENVIRONMENTAL PERMIT APPLICATION WILL BE FILED WITHIN THE NEXT TWO YEARS..
CINCINNATI GAS & ELECTRIC CO. EAST BEND NO 2 600 MW - NEW COAL BABCOCK & WILCOX LIME SCRUBBING STARTUP 1/81	A CONTRACT HAS BEEN CONDITIONALLY AWARDED TO BABCOCK AND WILCOX FOR A COMMERCIAL LIME SCRUBBING SYSTEM. A COAL SOURCE AND SUPPLY HAS NOT BEEN FINALIZED. COMMERCIAL START-UP DATE HAS BEEN DELAYED ONE YEAR TO JANUARY 1981. THE A-E DESIGN FIRM IS SARGENT AND LUNDY.
COLORADO UTE ELECTRIC ASSN. CRAIG NO. 1 450 MW - NEW COAL 0.45 PERCENT SULFUR PEABODY ENGINEERING LIMESTONE SCRUBBING STARTUP 3/79	THE CONSTRUCTION OF THE LIMESTONE SLURRY SPRAY TOWER SCRUBBING SYSTEM FOR SULFUR DIOXIDE REMOVAL FROM LOW-SULFUR COAL-FIRED BOILER FLUE GAS HAS BEGUN. THE FOUNDATION IS COMPLETE AND THE SILOS ARE UP. PARTICULATE CONTROL WILL BE PROVIDED BY HOT-SIDE ESP'S UPSTREAM OF THE SCRUBBER PLANT. SLUDGE DISPOSAL IS UNDECIDED. THERE WILL BE A STEAM COIL TYPE STACK GAS REHEAT INCLUDED. REQUIRED PARTICULATE AND SULFUR DIOXIDE REMOVAL EFFICIENCIES ARE 99.8 AND 85 PERCENT, RESPECTIVELY. FGD SYSTEM START-UP IS SCHEDULED FOR SPRING 1979.
COLORADO UTE ELECTRIC ASSN. CRAIG NO. 2 450 MW - NEW COAL 0.45 PERCENT SULFUR PEABODY ENGINEERING LIMESTONE SCRUBBING STARTUP 3/79	PEABODY ENGINEERED SYSTEMS HAS BEEN AWARDED A CONTRACT IN EXCESS OF $60 MILLION TO DESIGN AND SUPPLY A LIMESTONE SLURRY SPRAY TOWER SCRUBBING SYSTEM FOR SO2 REMOVAL FROM LOW-SULFUR COAL-FIRED BOILER FLUE GAS FOR UNITS 1 & 2. PARTICULATE CONTROL WILL BE PROVIDED BY HOT-SIDE ESP'S UPSTREAM OF THE SCRUBBER PLANT. SLUDGE WILL BE STABILIZED AND HAULED TO A MINEFILL. THERE WILL BE A STEAM COIL TYPE STACK GAS REHEATER INCLUDED. REQUIRED PARTICULATE AND SO2 REMOVAL EFFICIENCIES ARE 99.8 AND 85 PERCENT, RESPECTIVELY. FGD START-UP IS SCHEDULED FOR SPRING 1979.
COLUMBUS & SOUTHERN OHIO ELEC. CONESVILLE NO 5 400 MW - NEW COAL 4.5 - 4.9 PERCENT SULFUR UNIVERSAL OIL PRODUCTS LIME SCRUBBING STARTUP 1/77	REFER TO THE BACKGROUND INFORMATION SECTION IN TABLE 3 OF THIS REPORT. THE BOILER AND ESP WERE COMPLETED AND PLACED IN SERVICE IN SEPT. 1976. THE B-SIDE MODULE BECAME AVAILABLE FOR SERVICE IN JANUARY 1977. COMMERCIAL OPERATIONS WERE ACHIEVED ON FEBRUARY 13, 1977. THE EMISSION CONTROL SYSTEM FOR THIS UNIT CONSISTS OF A COLD-SIDE ESP FOLLOWED BY TWO TCA LIME SCRUBBING MODULES SUPPLIED BY UOP. DRAVO IS SUPPLYING THE THIOSORBIC LIME SCRUBBING REAGENT. IUCS IS SUPPLYING THEIR POZ-O-TEC SLUDGE STABILAZATION FACILITY.
COLUMBUS & SOUTHERN OHIO ELEC. CONESVILLE NO 6 400 MW - NEW COAL 4.5 - 4.9 PERCENT SULFUR UNIVERSAL OIL PRODUCTS LIME SCRUBBING STARTUP 10/78	THE UTILITY SIGNED LONG-TERM CONTRACTS WITH DRAVO FOR THE PURCHASE OF THIOSORBIC LIME AND WITH IUCS FOR A SLUDGE FIXIATION SYSTEM. CONSTRUCTION OF THIS UNIT COMMENCED IN 1977 AND IS SCHEDULED TO BE COMPLETED BY JANUARY 1978. SIMILAR TO CONESVILLE NO.5, THIS MINE MOUTH PLANT WILL BURN COAL WITH 17 PERCENT ASH CONTENT AND 4.5 TO 4.9 PERCENT SULFUR CONTENT. AN ELECTROSTATIC PRECIPITATOR WILL BE INSTALLED UPSTREAM THE FGD SYSTEM. THE FGD SYSTEM WILL INCLUDE TWO TCA MODULES FOR THE REMOVAL OF SO2. THE A-E DESIGN FIRM IS BLACK AND VEATCH.

TABLE 2

COMPANY POWER STATION	STATUS OF FGD SYSTEMS AS OF 01/78 CURRENT MONTH
COLUMBUS & SOUTHERN OHIO ELEC. POSTON NO. 5 375 MW - NEW COAL 2.5 PERCENT SULFUR NOT SELECTED NOT SELECTED STARTUP 0/81	THIS UNIT WILL BURN HIGH SULFUR OHIO COAL (APPROXIMATELY 2.5 PERCENT SULFUR CONTENT). THE DESIGN OF THE EMISSION CONTROL STRATEGY HAS NOT YET BEEN FINALIZED.
COLUMBUS & SOUTHERN OHIO ELEC. POSTON NO. 6 375 MW - NEW COAL 2.5 PERCENT SULFUR NOT SELECTED NOT SELECTED STARTUP 0/83	THIS UNIT WILL BURN HIGH SULFUR COAL (APPROXIMATELY 2.5 PERCENT SULFUR CONTENT). THE DESIGN OF THE EMISSION CONTROL STRATEGY FOR THIS UNIT HAS NOT YET BEEN FINALIZED.
COMMONWEALTH EDISON POWERTON NO. 51 425 MW - RETROFIT COAL 3.6 PERCENT SULFUR UNIVERSAL OIL PRODUCTS LIMESTONE SCRUBBING STARTUP 12/79	UOP WAS AWARDED THE CONTRACT FOR THE INSTALLATION OF A WET LIMESTONE SCRUBBING SYSTEM THAT WILL BE BACKFITTED ONTO BOILER NO. 51, ONE OF TWO IDENTICAL BOILERS SUPPLYING STEAM TO AN 850-MW TURBINE-GENERATOR. THE FGD SYSTEM IS DESIGNED TO TREAT FLUE GAS RESULTING FROM THE COMBUSTION OF HIGH SULFUR COAL (3.6 PERCENT SULFUR* 8.3 PERCENT ASH* 17.3 PERCENT MOISTURE* 10,500 BTU/LB.) AND MEET SO2 EMISSION STANDARDS OF 1.8 LB. SO2/MM BTU. CURRENTLY, EXCAVATION, BACKFILL, AND STRUCTURAL STEEL ERECTION IS IN PROGRESS.
DELMARVA POWER CO. DELAWARE CITY NOS. 1 2 & 3 180 MW - RETROFIT COKE 7-8 PERCENT SULFUR DAVY POWERGAS WELLMAN LORD STARTUP 4/80	DELMARVA'S DELAWARE CITY PLANT HAS 4 BOILERS, 3 OF WHICH HAVE OUTPUTS OF 500K LBS STEAM/HR EACH. THE BOILERS GENERATE STEAM AS WELL AS ELECTRICAL POWER FOR GETTY REFINING & MARKETING. 7-8 % S COKE WILL BE BURNED IN THE BOILERS (INSTEAD OF THE LOW-S CRUDE OIL NOW BURNED) WHEN THE SCRUBBER GOES INTO OPERATION IN APRIL 1980. DELMARVA WILL USE VENTURI SCRUBBERS FOR PARTICULATE REMOVAL AND WELLMAN LORD FGD SYSTEMS AT EACH BOILER GAS EXIT FOR SO2 CONTROL. PARTICULATE AND SULFUR DIOXIDE REMOVAL EFFICIENCIES ARE 90 AND 85-90 PERCENT, RESPECTIVELY. CONSTRUCTION COMMENCED JAN. 1978.
DUQUESNE LIGHT ELRAMA POWER STATION 510 MW - RETROFIT COAL 1.0 - 2.8 PERCENT SULFUR CHEMICO LIME SCRUBBING STARTUP 10/75	REFER TO THE BACKGROUND INFORMATION SECTION IN TABLE 3 OF THIS REPORT. OPERATIONS ARE CONTINUING WITH THREE BOILERS COUPLED INTO THE FIVE-MODULE SCRUBBING SYSTEM. THE PLANT IS FIRING 1.0 - 2.8 PERCENT SULFUR COAL. SCRUBBING WASTES ARE CHEMICALLY FIXATED BY THE IUCS SYSTEM AND LANDFILLED.
DUQUESNE LIGHT PHILLIPS POWER STATION 410 MW - RETROFIT COAL 1.0- 2.8 PERCENT SULFUR CHEMICO LIME SCRUBBING STARTUP 7/73	REFER TO THE BACKGROUND INFORMATION SECTION IN TABLE 3 OF THIS REPORT. THIS SCRUBBING SYSTEM HAS BEEN IN SERVICE SINCE JULY 1973. ALL 6 BOILERS ARE COUPLED INTO THE SCRUBBING SYSTEM. THE PLANT FIRES COAL WITH A HEATING VALUE OF 11,000 BTU/LB AND ASH AND SULFUR CONTENTS OF 21 PERCENT AND 1.0 - 2.8 PERCENT, RESPECTIVELY. DEWATERED SLUDGE FROM THE IUCS INTERIM PROCESSING PLANT IS BEING HAULED TO AN OFF-SITE LANDFILL. THE SLUDGE CONTAINS NO FIXATIVE.
EASTERN KENTUCKY POWER COOP SPURLOCK GENERATING PLANT NO.2 500 MW - NEW COAL NOT SELECTED NOT SELECTED STARTUP 3/80	THE SPURLOCK GENERATING PLANT IS LOCATED APPROXIMATELY 3 MILES WEST OF MAYSVILLE, KENTUCKY. TWO NEW UNITS ARE SCHEDULED FOR THIS STATION. UNIT NO. 1 BEGAN OPERATION IN EARLY SEPT., IT DOES NOT HAVE TO MEET NSPS. THE CONTRACTED COAL FOR UNIT NO.1 WILL MEET SO2 COMPLIANCE. UNIT NO.2 WILL BE CONTROLLED BY A 99.5 PERCENT EFFICIENT ESP. THE UTILITY HAS COMPLETED SPECIFICATIONS FOR THE SCRUBBING SYSTEM. MAKEUP WATER WILL COME FROM COOLING TOWER BLOWDOWN. NEITHER THE FGD PROCESS NOR THE SUPPLIER HAS BEEN SELECTED.
GENERAL PUBLIC UTILITIES COHO NO.1 800 MW - NEW COAL 3.5 PERCENT SULFUR NOT SELECTED NOT SELECTED STARTUP 5/87	STARTUP DATE CHANGED TO 5/87 FOR BOTH BOILER AND DESULFURIZATION SYSTEM. LIME, LIMESTONE SCRUBBING, AND COAL DESULFURIZATION ARE THE PRIMARY STRATEGIES BEING CONSIDERED FOR COMPLIANCE WITH NEW SOURCE PERFORMANCE STANDARDS. NO DECISION HAS BEEN MADE YET.

TABLE 2

COMPANY POWER STATION	STATUS OF FGD SYSTEMS AS OF 01/78 CURRENT MONTH
GENERAL PUBLIC UTILITIES SEWARD NO.7 800 MW - NEW COAL NOT SELECTED NOT SELECTED STARTUP 5/84	STARTUP DATE CHANGED TO 5/84 FOR BOTH BOILER AND DESULFURIZATION SYSTEM. LIME, LIMESTONE SCRUBBING, AND COAL DESULFURIZATION ARE THE PRIMARY STRATEGIES BEING CONSIDERED FOR COMPLIANCE WITH NEW SOURCE PERFORMANCE STANDARDS. NO DECISION HAS BEEN MADE YET.
GULF POWER CO. CRIST NO. 4 AND NO. 5 150 MW - RETROFIT NOT SELECTED NOT SELECTED STARTUP 0/78	EACH UNIT IS 75 MW. IF SCRUBBERS ARE SELECTED THEY WILL BE REQUIRED IN 1978. NO DECISION HAS YET BEEN ANNOUNCED.
GULF POWER CO. CRIST NO. 6 AND NO. 7 820 MW - NEW NOT SELECTED NOT SELECTED STARTUP 0/80	UNIT 6 IS 320 MW. UNIT 7 IS 500 MW. FGD MAY BE REQUIRED IN 1980. NO DECISION HAS YET BEEN ANNOUNCED.
GULF POWER CO. LANSING SMITH NO. 1 AND NO. 2 305 MW - RETROFIT COAL NOT SELECTED NOT SELECTED STARTUP 0/80	UNIT NO. 1 IS 125 MW. UNIT NO. 2 IS 180 MW. IF SCRUBBERS ARE SELECTED, THEY WILL BE REQUIRED IN 1979 AND 1980 ON THE RESPECTIVE UNITS.
HOOSIER COOPERATIVE MEROM NO. 1 490 MW - NEW COAL 3.5 PERCENT SULFUR NOT SELECTED LIMESTONE SCRUBBING STARTUP 0/80	MEROM 1 AND 2 ARE HOOSIER COOP'S NEW 490 MW COAL-FIRED UNITS PLANNED FOR LOCATION IN SULLIVAN, INDIANA. THE FLUE GAS STREAMS WILL BE CLEANED OF PARTICULATES WITH ESPS (99.4%) AND OF SULFUR DIOXIDE WITH LIMESTONE SCRUBBERS (90%). SLUDGE WILL BE STABILIZED AND STOCK PILED. THE UTILITY IS CURRENTLY REQUESTING/EVALUATING BIDS FOR THE FGD SYSTEMS. FGD START-UP DATES ARE SCHEDULED FOR LATE 1980 (NO.1) AND MID 1981 (NO.2).
HOOSIER COOPERATIVE MEROM NO. 2 490 MW - NEW COAL 3.5 PERCENT SULFUR NOT SELECTED LIMESTONE SCRUBBING STARTUP 0/81	MEROM 1 AND 2 ARE HOOSIER COOP'S NEW 490 MW COAL-FIRED UNITS PLANNED FOR LOCATION IN SULLIVAN, INDIANA. THE FLUE GAS STREAMS WILL BE CLEANED OF PARTICULATES WITH ESPS (99.4%) AND OF SULFUR DIOXIDE WITH LIMESTONE SCRUBBERS (90%). SLUDGE WILL BE STABILIZED AND STOCK PILED. THE UTILITY IS CURRENTLY REQUESTING/EVALUATING BIDS FOR THE FGD SYSTEMS. FGD START-UP DATES ARE SCHEDULED FOR LATE 1980 (NO.1) AND MID 1981 (NO.2).
INDIANAPOLIS POWER & LIGHT CO. PETERSBURG NO 3 530 MW - NEW COAL 3.0-3.5 PERCENT SULFUR UNIVERSAL OIL PRODUCTS LIMESTONE SCRUBBING STARTUP 10/77	INDIANAPOLIS P & L HAS AWARDED A CONTRACT TO UNIVERSAL OIL PRODUCTS FOR A WET LIMESTONE SCRUBBING SO2 CONTROL SYSTEM. AN ESP PROVIDES PRIMARY PARTICULATE CONTROL. THE UNIT FIRES BITUMINOUS COAL WITH A SULFUR CONTENT OF 3.0-3.5%, AN ASH CONTENT OF 9-10%, AND A HEAT CONTENT OF 11,000 BTU/LB. THE FOUR MODULES OPERATED FOR 24 HOURS IN MID-DECEMBER FOR EQUIPMENT TESTING. THE SCRUBBERS WERE TAKEN OUT OF SERVICE SO THAT SOME FINAL ADJUSTMENTS COULD BE MADE. SCRUBBERS ARE EXPECTED TO BE BACK IN SERVICE BY EARLY MARCH 1978.
INDIANAPOLIS POWER & LIGHT CO. PETERSBURG NO 4 530 MW - NEW COAL 3.5 PERCENT SULFUR NOT SELECTED LIMESTONE SCRUBBING STARTUP 4/82	INDIANAPOLIS POWER & LIGHT ANNOUNCED THAT A NEW COAL-FIRED POWER GENERATING UNIT IS BEING PLANNED FOR THEIR PETERSBURG GENERATING STATION LOCATED IN PETERSBURG, INDIANA. THIS NEW UNIT WILL FIRE HIGH-SULFUR SUBBITUMINOUS COAL WITH A HEATING VALUE OF 11,000 BTU/LB AND ASH AND SULFUR CONTENTS OF 10 PERCENT AND 3.5 PERCENT, RESPECTIVELY. THE UTILITY IS NOW CONSIDERING VARIOUS FGD STRATEGIES FOR THE CONTROL OF SULFUR DIOXIDE, GIVING PRIMARY CONSIDERATION TO WET LIMESTONE SCRUBBING. BIDS FOR FGD SYSTEM ARE NOW BEING EVALUATED.

TABLE 2

COMPANY POWER STATION	STATUS OF FGD SYSTEMS AS OF 01/78 CURRENT MONTH
KANSAS CITY POWER & LIGHT HAWTHORN NO. 3 140 MW - RETROFIT COAL 0.5-3.5 PERCENT SULFUR COMBUSTION ENGINEERING LIME SCRUBBING STARTUP 11/72	REFER TO THE BACKGROUND INFORMATION SECTION IN TABLE 3 OF THIS REPORT. THE SCRUBBER PLANT HAS BEEN CONVERTED FROM A LIMESTONE FURNACE INJECTION AND TAIL-END SCRUBBING SYSTEM TO A TAIL-END WET LIME SCRUBBING SYSTEM. LIME-BASED OPERATIONS COMMENCED ON FEBRUARY 7, 1977. COMPLIANCE TESTING FOR KANSAS CITY PARTICULATE STANDARDS INDICATED THE NO.3 UNIT WAS WELL WITHIN THE 0.17 POUND REGULATION. THE 2-MODULE SCRUBBER PLANT CAN ONLY BE BY-PASSED DURING EMERGENCIES.
KANSAS CITY POWER & LIGHT HAWTHORN NO. 4 100 MW - RETROFIT COAL 0.5-3.5 PERCENT SULFUR COMBUSTION ENGINEERING LIME SCRUBBING STARTUP 8/72	REFER TO THE BACKGROUND INFORMATION SECTION IN TABLE 3 OF THIS REPORT. THE SCRUBBER PLANT HAS BEEN CONVERTED FROM A LIMESTONE FURNACE INJECTION AND TAIL-END SCRUBBING SYSTEM TO A TAIL-END WET LIME SCRUBBING SYSTEM. OPERATIONS IN THE LIME SCRUBBING MODE COMMENCED ON JANUARY 1, 1977. COMPLIANCE TESTING FOR KANSAS CITY PARTICULATE REGULATIONS INDICATED THE UNIT IS MEETING THE 0.17 POUND REGULATION. THE 2-MODULE SCRUBBER PLANT CAN ONLY BE BY-PASSED DURING EMERGENCIES.
KANSAS CITY POWER & LIGHT LA CYGNE NO 1 820 MW - NEW COAL 5.0 PERCENT SULFUR BABCOCK & WILCOX LIMESTONE SCRUBBING STARTUP 2/73	REFER TO THE BACKGROUND INFORMATION SECTION IN TABLE 3 OF THIS REPORT. THE EMISSION CONTROL SYSTEM FOR THIS NEW COAL-FIRED POWER-GENERATING UNIT CONSISTS OF EIGHT SCRUBBER MODULES FOR FLY ASH AND SO2 REMOVAL. EACH MODULE INCLUDES A VENTURI SCRUBBER IN SERIES WITH A 2-STAGE IMPINGEMENT PLATE ABSORBER. THE SCRUBBER PLANT IS AN INTEGRAL PART OF THE POWER-GENERATING COMPLEX, ALLOWING NO FLUE GAS BYPASS. INITIAL OPERATIONS COMMENCED IN FEB. 1973. COMMERCIAL SERVICE WAS ATTAINED BY JUNE 1973. TOTAL SYSTEM AVAILABILITY FOR THE MONTH OF JANUARY WAS 94 PERCENT.
KANSAS POWER & LIGHT JEFFERY NO. 1 680 MW - NEW COAL 0.30 PERCENT SULFUR COMBUSTION ENGINEERING LIMESTONE SCRUBBING STARTUP 6/78	KP&L HAS PURCHASED A COMBUSTION ENGINEERING AIR QUALITY CONTROL SYSTEM FOR PARTICULATE AND SO2 REMOVAL CONSISTING OF A COLD-SIDE ESP, I.D. FANS, BY-PASS CAPABILITY, AND SPRAY TOWERS. AN OVERFIRE AIR SYSTEM AT THE TANGENTIAL FIRED PULVERIZED BURNERS WILL CONTROL NOX EMISSIONS. THE CLEANED GASES WILL BE VENTED TO A 600 FT STACK. CONSTRUCTION IS PROCEEDING ACCORDING TO SCHEDULE. THE ESP'S HAVE BEEN INSTALLED. THE SLURRY HOLD TANKS AND ABSORBERS ARE IN PLACE. SLUDGE DISPOSAL STRATEGY HAS NOT BEEN FINALIZED. THIS UNIT WILL FIRE 0.3% SULFUR (6% ASH) WYOMING COAL.
KANSAS POWER & LIGHT JEFFERY NO. 2 680 MW - NEW COAL 0.30 PERCENT SULFUR COMBUSTION ENGINEERING LIMESTONE SCRUBBING STARTUP 6/80	KP&L HAS PURCHASED A COMBUSTION ENGINEERING AIR QUALITY CONTROL SYSTEM FOR PARTICULATE AND SO2 REMOVAL CONSISTING OF A COLD-SIDE ESP, I.D. FANS, BY-PASS CAPABILITY, AND SPRAY TOWERS. AN OVERFIRE AIR SYSTEM AT THE TANGENTIAL FIRED PULVERIZED BURNERS WILL CONTROL NOX EMISSIONS. THE CLEANED GASES WILL BE VENTED TO A 600 FT STACK. CONSTRUCTION IS PROCEEDING ACCORDING TO SCHEDULE. THE ESP'S ARE NOW GOING IN. THE SLURRY HOLD TANKS AND ABSORBERS ARE IN PLACE. SLUDGE DISPOSAL STRATEGY HAS NOT BEEN FINALIZED. THIS UNIT WILL FIRE 0.3% SULFUR (6% ASH) WYOMING COAL.
KANSAS POWER & LIGHT LAWRENCE NO 4 125 MW - RETROFIT COAL 0.5 PERCENT SULFUR COMBUSTION ENGINEERING LIMESTONE SCRUBBING STARTUP 12/68	REFER TO BACKGROUND INFORMATION SECTION IN TABLE 3 OF THIS REPORT. THE NEW LIMESTONE FGD SYSTEM COMMENCED OPERATIONS IN EARLY JANUARY 1977. THERE HAVE BEEN NO FORCED SCRUBBER OUTAGES REPORTED SINCE START-UP. CONTINUOUS SO2 MONITORS HAVE RECORDED SO2 REMOVAL EFFICIENCIES OF BETTER THAN 85%. PARTICULATE REMOVAL IS REPORTED TO BE EXCELLENT, YIELDING NO VISIBLE PLUME. THE PLANT IS FIRING COAL RATED AT 12,300 BTU/LB WITH A SULFUR CONTENT OF 3.5%.
KANSAS POWER & LIGHT LAWRENCE NO 5 400 MW - NEW COAL 0.5 PERCENT SULFUR COMBUSTION ENGINEERING LIMESTONE SCRUBBING STARTUP 11/71	REFER TO THE BACKGROUND INFORMATION SECTION IN TABLE 3 OF THIS REPORT. THE ORIGINAL LIMESTONE INJECTION AND TAIL-END SCRUBBING SYSTEM IS STILL IN SERVICE WHILE A NEW ROD-SCRUBBER AND SPRAY TOWER ABSORBER SYSTEM IS BEING ERECTED ALONG SIDE THE EXISTING SYSTEM. THE NEW SCRUBBER PLANT INCLUDES 2 MODULES EACH CAPABLE OF HANDLING APPROXIMATELY 50% OF THE TOTAL BOILER FLUE GAS FLOW. THE SYSTEM DESIGNER AND SUPPLIER IS COMBUSTION ENGINEERING. THE UNIT FIRES APPROXIMATELY 140 TONS/HOUR OF LOW SULFUR WYOMING COAL HAVING HEAT AND SULFUR CONTENTS OF 10,000 BTU/LB AND 0.5%.
KENTUCKY UTILITIES GREEN RIVER NOS. 1 2 AND 3 64 MW - RETROFIT COAL 3.8 PERCENT SULFUR AMERICAN AIR FILTER LIME SCRUBBING STARTUP 9/75	REFER TO BACKGROUND INFORMATION SECTION IN TABLE 3 OF THIS REPORT. THE SCRUBBER PLANT INSTALLED AT THIS STATION CONSISTS OF ONE MODULE DESIGNED TO REMOVE PARTICULATES (VARIABLE-THROAT VENTURI) AND SO2 (MOBILE-BED ABSORBER) FROM COAL-FIRED BOILER FLUE GAS. THE SCRUBBER WAS DESIGNED AND SUPPLIED BY AAF. INITIAL SCRUBBER PLANT STARTUP OCCURRED IN SEPTEMBER 1975. SCRUBBING OPERATIONS RESUMED IN NOVEMBER FOLLOWING A 5-MONTH SHUTDOWN RESULTING FROM A STRIKE BY PLANT OPERATING PERSONNEL. THE SYSTEM HAS HAD LOW AVAILABILITY BECAUSE OF FROZEN EQUIPMENT.

TABLE 2

COMPANY POWER STATION	STATUS OF FGD SYSTEMS AS OF 01/78 CURRENT MONTH
LAKELAND UTILITIES MCINTOSH POWER PLANT UNIT NO.3 350 MW - NEW COAL 2.6 PERCENT SULFUR NOT SELECTED LIMESTONE SCRUBBING STARTUP 10/81	THE CITY OF LAKELAND DEPARTMENT OF ELECTRIC AND WATER UTILITIES IS EVALUATING BIDS FOR IT NEW 350 MW POWER GENERATING UNIT, MCINTOSH NO. 3. THE UNIT WILL UTILIZE COLD-SIDE ESP'S FOR PARTICULATE REMOVAL AND LIMESTONE SCRUBBING FOR SO2 CONTROL. A DECISION SHOULD BE MADE PUBLIC IN MARCH. START-UP IS SCHEDULED FOR OCTOBER 1981.
LOUISVILLE GAS & ELECTRIC CANE RUN NO 4 178 MW - RETROFIT COAL 3.5 - 4.0 PERCENT SULFUR AMERICAN AIR FILTER LIME SCRUBBING STARTUP 8/76	REFER TO THE BACKGROUND INFORMATION SECTION IN TABLE 3 OF THIS REPORT. THE FGD SYSTEM RETROFITTED ON THIS BOILER WAS DESIGNED AND SUPPLIED BY AMERICAN AIR FILTER AND WAS FIRST PLACED IN THE GAS PATH ON AUGUST 7, 1976. THE SYSTEM CONSISTS OF TWO PARALLEL MODULES WHICH INCLUDE MOBILE BED CONTACTORS AND OPERATE WITH A CARBIDE LIME ADDITIVE. FOLLOWING A NUMBER OF MAJOR SYSTEM MODIFICATIONS (CHEVRON-TYPE MIST ELIMINATOR, OIL FIRED REHEAT, PLASITE DUCT LINER, HIGHER L/G), THE SYSTEM SUCCESSFULLY PASSED COMPLIANCE TESTING (85% SO2 REMOVAL) ON AUGUST 3 AND 4, 1977.
LOUISVILLE GAS & ELECTRIC CANE RUN NO 5 183 MW - RETROFIT COAL 3.5 - 4.0 PERCENT SULFUR COMBUSTION ENGINEERING LIME SCRUBBING STARTUP 4/78	COMBUSTION ENGINEERING HAS BEEN AWARDED A CONTRACT BY LG&E TO DESIGN AND SUPPLY TWO SPRAY TOWER ABSORBERS FOR FULL-LOAD SO2 REMOVAL SERVICE. THE ABSORBERS WILL UTILIZE CARBIDE LIME AS THE SCRUBBING REAGENT. IN-LINE STEAM REHEAT, A COMMON REACTION TANK, AND A THICKENER FOR SOLIDS DEWATERING ARE INCLUDED IN THE FGD PLANT. AN EXISTING UPSTREAM ESP PROVIDES PRIMARY PARTICULATE CONTROL. SYSTEM CONSTRUCTION IS NEARING COMPLETION. THE START-UP DATE FOR THE SCRUBBER PLANT HAS BEEN DELAYED UNTIL SPRING BECAUSE OF THE COAL STRIKE.
LOUISVILLE GAS & ELECTRIC CANE RUN NO 6 277 MW - RETROFIT COAL 3.5 - 4.0 PERCENT SULFUR ADL/COMBUSTION EQUIP ASSOCIATE DOUBLE ALKALI SCRUBBING STARTUP 11/79	THE CONTRACT FOR THIS FULL-SCALE DEMONSTRATION SCRUBBING SYSTEM HAS BEEN AWARDED TO A.D.LITTLE/COMBUSTION EQUIPMENT ASSOC. FOR THE INSTALLATION OF A DOUBLE ALKALI SCRUBBER. THE FEDERAL EPA WILL SUBSIDIZE A MAXIMUM $4.5 MM FOR OPERATION, RESEARCH AND DEVELOPMENT, AND REPORT WRITING FOR A ONE-YEAR PERIOD FOLLOWING THE FIRST THREE MONTHS OF OPERATION(NOTE*THIS SUBSIDY WILL NOT BE APPLIED FOR ANY CAPITAL EXPENDITURES). ENGINEERING DESIGN WORK IS UNDERWAY. SITE PREPARATION, EXCAVATION AND FOUNDATION WORK COMMENCED IN JULY. DUCTWORK TIE-IN IS COMPLETE.
LOUISVILLE GAS & ELECTRIC MILL CREEK NO 1 330 MW - RETROFIT COAL 3.5- 4.0 PERCENT SULFUR NOT SELECTED LIME SCRUBBING STARTUP 1/82	A COMPLIANCE SCHEDULE HAS BEEN SUBMITTED TO THE JEFFERSON COUNTY AIR POLLUTION CONTROL DISTRICT WITH 1/82 ESTABLISHED AS THE STARTUP DATE FOR AN FGD SYSTEM. OPERATING DATA AND INFORMATION FROM THE FULL-SCALE SCRUBBER PLANT NOW IN SERVICE ON THE NO.4 UNIT AT CANE RUN WILL BE OBTAINED BEFORE THE UTILITY PROCEEDS WITH ADDITIONAL SYSTEM DESIGN WORK.
LOUISVILLE GAS & ELECTRIC MILL CREEK NO 2 330 MW - RETROFIT COAL 3.5- 4.0 PERCENT SULFUR NOT SELECTED LIME SCRUBBING STARTUP 1/81	A COMPLIANCE SCHEDULE HAS BEEN SUBMITTED TO THE JEFFERSON COUNTY AIR POLLUTION CONTROL DISTRICT WITH 1/81 ESTABLISHED AS THE STARTUP DATE FOR AN FGD SYSTEM. OPERATING DATA AND INFORMATION FROM THE FULL-SCALE SCRUBBER PLANT NOW IN SERVICE ON THE NO.4 UNIT AT CANE RUN WILL BE OBTAINED BEFORE THE UTILITY PROCEEDS WITH ADDITIONAL SYSTEM DESIGN WORK.
LOUISVILLE GAS & ELECTRIC MILL CREEK NO 3 425 MW - NEW COAL 3.5- 4.0 PERCENT SULFUR AMERICAN AIR FILTER LIME SCRUBBING STARTUP 4/78	BECAUSE POWER DEMAND HAS NOT COME UP AS RAPIDLY AS HAD BEEN EXPECTED, UNIT START-UP HAS BEEN MOVED BACK TO APRIL 15, 1978. CONSTRUCTION ON THIS NEW FACILITY'S FGD SYSTEM IS NEARING COMPLETION. THE SYSTEM IS DESIGNED AND SUPPLIED BY AMERICAN AIR FILTER AND WILL UTILIZE CARBIDE LIME AS THE ABSORBENT. FOUR MOBILE-BED ABSORBERS WILL TREAT THE FLUE GAS RESULTING FROM THE COMBUSTION OF HIGH SULFUR COAL. THE SYSTEM WILL OPERATE IN A CLOSED WATER LOOP. THE SCRUBBING WASTE WILL BE STABILIZED WITH FLYASH AND LIME.
LOUISVILLE GAS & ELECTRIC MILL CREEK NO 4 495 MW - NEW COAL 3.5- 4.0 PERCENT SULFUR AMERICAN AIR FILTER LIME SCRUBBING STARTUP 6/80	BECAUSE POWER DEMAND HAS NOT COME UP AS RAPIDLY AS HAD BEEN EXPECTED, UNIT START-UP HAS BEEN MOVED BACK TO JUNE 1980. CONSTRUCTION OF THIS NEW 495-MW COAL-FIRED UNIT IS ON SCHEDULE. CURRENTLY, FOUNDATION WORK IS IN PROGRESS. THIS AAF SYSTEM WILL INCLUDE MOBILE-BED ABSORBERS TREATING HIGH SULFUR COAL FLUE GAS. THE SYSTEMS WATER LOOP WILL BE CLOSED. THE SLUDGE WILL BE STABILIZED WITH LIME AND FLYASH. STEAM REHEAT WILL PROVIDE GAS TEMPERATURE ELEVATION OF THE SCRUBBED GASES PRIOR TO DISCHARGE TO THE MAIN STACK.

TABLE 2

COMPANY POWER STATION	STATUS OF FGD SYSTEMS AS OF 01/78 CURRENT MONTH
LOUISVILLE GAS & ELECTRIC PADDYS RUN NO 6 65 MW - RETROFIT COAL 3.5 - 4.0 PERCENT SULFUR COMBUSTION ENGINEERING LIME SCRUBBING STARTUP 4/73	REFER TO THE BACKGROUND INFORMATION SECTION IN TABLE 3 OF THIS REPORT. THIS SCRUBBING SYSTEM WAS DESIGNED BY COMBUSTION ENGINEERING AND PLACED IN SERVICE IN APRIL 1973. THE FGD SYSTEM CONSISTS OF TWO 2-STAGE MARBLE BED ABSORBERS WHICH ARE DESIGNED TO USE CARBIDE LIME ADDITIVE AS THE SCRUBBING REAGENT. PADDYS RUN NO. IS A PEAK-LOAD UNIT THAT OPERATES ONLY DURING DEMAND PERIODS. AN EXTENSIVE EPA SCRUBBER/SLUDGE EVALUATION STUDY WAS COMPLETED IN AUGUST 1977.
MINNESOTA POWER AND LIGHT CO. CLAY BOSWELL NO. 4 500 MW - NEW COAL 0.8 PERCENT SULFUR PEABODY ENGINEERING LIME/ALKALINE FLYASH SCRUBBING STARTUP 0/80	MINNESOTA P & L HAS AWARDED A CONTRACT TO PEABODY ENGINEERING FOR A LIME/ ALKALINE FLYASH SO2 CONTROL SYSTEM. THE CONFIGURATION WILL BE VENTURI SCRUBBERS FOLLOWED BY SPRAY TOWERS. HOT SIDE ESP'S WILL BE USED FOR PARTICULATE CONTROL. STACK GAS REHEAT WILL BE ACCOMPLISHED BY BYPASSING 5% OF FLUE GAS AROUND THE SCRUBBER. THE UNIT WILL FIRE SUB-BITUMINOUS COLSTRIP COAL WITH A SULFUR CONTENT OF 0.8%, AND AN ASH CONTENT OF 9.0% (HEATING VALUE - 8300 BTU/LB). MAKE-UP WATER SOURCE WILL BE THE RIVER OR THE CLAY-LINED POND.
MINNKOTA POWER COOPERATIVE MILTON R. YOUNG NO. 2 450 MW - NEW LIGNITE 0.7 PERCENT SULFUR ADL/COMBUSTION EQUIP ASSOCIATE LIME/ALKALINE FLYASH SCRUBBING STARTUP 9/77	REFER TO THE BACKGROUND INFORMATION SECTION IN TABLE 3 OF THIS REPORT. THIS LIME/ALKALINE FLYASH SCRUBBING SYSTEM WAS DESIGNED AND SUPPLIED BY ADL/CONTRUCTION EQUIPMENT ASSOCIATEES. IT CONSISTS OF A COLD-SIDE ESP FOLLOWED BY TWO SPRAY TOWERS. MIST ELIMINATION IS PROVIDED BY A WASH TRAY AND CHEVRON ARRANGEMENT. 25% FLUE GAS BYPASS PROVIDES STACK GAS RE-HEAT. THE UNIT FIRES A LOW-SULFUR NORTH DAKOTA LIGNITE WITH AN AVERAGE ASH CONTENT OF 8 PERCENT, SULFUR CONTENT OF 0.7 PERCENT, AND HEAT CONTENT OF 6500 BTU/LB.
MONTANA POWER CO. COLSTRIP NO 1 360 MW - NEW COAL 0.8 PERCENT SULFUR ADL/COMBUSTION EQUIP ASSOCIATE LIME/ALKALINE FLYASH SCRUBBING STARTUP 11/75	REFER TO THE BACKGROUND INFORMATION SECTION IN TABLE 3 OF THIS REPORT. THIS FGD EQUIPPED UNIT WAS DECLARED COMMERCIAL IN NOVEMBER 1975. THE SCRUBBING SYSTEM PROVIDES PARTICULATE AND SO2 CONTROL WITH THREE SCRUB-BER MODULES. EACH MODULE CONSISTS OF A DOWNFLOW VENTURI SCRUBBER CENTER-ED WITHIN AN UPFLOW SPRAY TOWER ABSORBER. EACH MODULE CAN TREAT 40% OF THE TOTAL BOILER FLUE GAS AND THE MODULES CANNOT BE BYPASSED. THE UN-STABILIZED SLUDGE IS DISPOSED IN AN ON-SITE LINED DISPOSAL POND. IN-LINE STEAM REHEAT AND CLOSED WATER LOOP CAPABILITY ARE INCLUDED IN THE SYSTEM.
MONTANA POWER CO. COLSTRIP NO 2 360 MW - NEW COAL 0.8 PERCENT SULFUR ADL/COMBUSTION EQUIP ASSOCIATE LIME/ALKALINE FLYASH SCRUBBING STARTUP 7/76	REFER TO THE BACKGROUND INFORMATION SECTION IN TABLE 3 OF THIS REPORT. THIS FGD EQUIPPED UNIT WAS DECLARED COMMERCIAL IN AUGUST 1976. THE SCRUBBING SYSTEM PROVIDES PARTICULATE AND SO2 CONTROL WITH THREE SCRUB-BER MODULES. EACH MODULE CONSISTS OF A DOWNFLOW VENTURI SCRUBBER CENTER-ED WITHIN AN UPFLOW SPRAY TOWER ABSORBER. EACH MODULE CAN TREAT 70% OF THE TOTAL BOILER FLUE GAS AND THE MODULES CANNOT BE BYPASSED. THE UN-STABILIZED SLUDGE IS DISPOSED IN AN ON-SITE LINED DISPOSAL POND. IN-LINE STEAM REHEAT AND CLOSED WATER LOOP CAPABILITY ARE INCLUDED IN THE SYSTEM.
MONTANA POWER CO. COLSTRIP NO. 3 700 MW - NEW COAL 0.7 PERCENT SULFUR ADL/COMBUSTION EQUIP ASSOCIATE LIME/ALKALINE FLYASH SCRUBBING STARTUP 7/80	A CONTRACT FOR THE INSTALLATION OF TWO ADDITIONAL LIME/ALKALINE FLYASH SCRUBBING SYSTEMS HAS BEEN AWARDED TO A.D. LITTLE/COMBUSTION EQUIPMENT ASSOCIATES. THESE SYSTEMS WILL BE INSTALLED ON UNITS NOS. 3 AND 4 OF THE COLSTRIP POWER STATION. COLSTRIP UNITS 1 AND 2 ARE BOTH EQUIPPED WITH OPERATIONAL LIME/ALKALINE FLYASH SCRUBBING SYSTEMS FOR THE REMOVAL OF PARTICULATES AND SULFUR DIOXIDE. ENGINEERING WORK FOR THE NEW SYSTEMS IS NOW UNDERWAY. THIS CONTRACT IS EXPECTED TO EXCEED $50 MM.
MONTANA POWER CO. COLSTRIP NO. 4 700 MW - NEW COAL 0.7 PERCENT SULFUR ADL/COMBUSTION EQUIP ASSOCIATE LIME/ALKALINE FLYASH SCRUBBING STARTUP 7/81	A CONTRACT FOR THE INSTALLATION OF TWO ADDITIONAL LIME/ALKALINE FLYASH SCRUBBING SYSTEMS HAS BEEN AWARDED TO A.D. LITTLE/COMBUSTION EQUIPMENT ASSOCIATES. THESE SYSTEMS WILL BE INSTALLED ON UNITS NOS. 3 AND 4 OF THE COLSTRIP POWER STATION. COLSTRIP UNITS 1 AND 2 ARE BOTH EQUIPPED WITH OPERATIONAL LIME/ALKALINE FLYASH SCRUBBING SYSTEMS FOR THE REMOVAL OF PARTICULATES AND SULFUR DIOXIDE. ENGINEERING WORK FOR THE NEW SYSTEMS IS NOW UNDERWAY. THIS CONTRACT IS EXPECTED TO EXCEED $50 MM.
NEVADA POWER HARRY ALLEN STATION NO. 1 500 MW - NEW COAL NOT SELECTED NOT SELECTED STARTUP 6/83	CONSIDERING HOT SIDE ESP IN CONJUNCTION WITH AN FGD SYSTEM. SPECIFICA-TIONS HAVE NOT YET BEEN PREPARED.

TABLE 2

COMPANY — STATUS OF FGD SYSTEMS AS OF 01/78

POWER STATION	CURRENT MONTH
NEVADA POWER HARRY ALLEN STATION NO. 2 500 MW - NEW COAL NOT SELECTED NOT SELECTED STARTUP 6/84	CONSIDERING HOT SIDE ESP IN CONJUNCTION WITH AN FGD SYSTEM. SPECIFICATIONS HAVE NOT YET BEEN PREPARED.
NEVADA POWER HARRY ALLEN STATION NO. 3 500 MW - NEW COAL NOT SELECTED NOT SELECTED STARTUP 6/85	CONSIDERING HOT SIDE ESP IN CONJUNCTION WITH AN FGD SYSTEM. SPECIFICATIONS HAVE NOT YET BEEN PREPARED.
NEVADA POWER HARRY ALLEN STATION NO. 4 500 MW - NEW COAL NOT SELECTED NOT SELECTED STARTUP 6/86	CONSIDERING HOT SIDE ESP IN CONJUNCTION WITH AN FGD SYSTEM. SPECIFICATIONS HAVE NOT YET BEEN PREPARED.
NEVADA POWER REID GARDNER NO 1 125 MW - RETROFIT COAL 0.5 - 1.0 PERCENT SULFUR ADL/COMBUSTION EQUIP ASSOCIATE SODIUM CARBONATE SCRUBBING STARTUP 4/74	REFER TO THE BACKGROUND INFORMATION SECTION IN TABLE 3 OF THIS REPORT. THIS SODIUM CARBONATE-BASED (TRONA) SCRUBBING SYSTEM CONSISTS OF ONE MODULE CONTAINING A TWIN VARIABLE-THROAT VENTURI SCRUBBER FOLLOWED BY A SEPARATOR IN SERIES WITH A SINGLE-STAGE PERFORATED-PLATE ABSORBER TOWER. PRIMARY PARTICULATE CONTROL IS PROVIDED BY UPSTREAM MECHANICAL COLLECTORS. A STEAM INDIRECT HOT AIR REHEAT SYSTEM RAISES THE GAS TEMPERATURE 30 F PRIOR TO DISCHARGE TO THE MAIN STACK. THE FLUE GAS CLEANING WASTES ARE ULTIMATELY DISPOSED IN AN ON-SITE CLAY-LINED SOLAR EVAPORATION POND.
NEVADA POWER REID GARDNER NO 2 125 MW - RETROFIT COAL 0.5 - 1.0 PERCENT SULFUR ADL/COMBUSTION EQUIP ASSOCIATE SODIUM CARBONATE SCRUBBING STARTUP 4/74	REFER TO THE BACKGROUND INFORMATION SECTION IN TABLE 3 OF THIS REPORT. THIS SODIUM CARBONATE-BASED (TRONA) SCRUBBING SYSTEM CONSISTS OF ONE MODULE CONTAINING A TWIN VARIABLE-THROAT VENTURI SCRUBBER FOLLOWED BY A SEPARATOR IN SERIES WITH A SINGLE-STAGE PERFORATED-PLATE ABSORBER TOWER. PRIMARY PARTICULATE CONTROL IS PROVIDED BY UPSTREAM MECHANICAL COLLECTORS. A STEAM INDIRECT HOT AIR REHEAT SYSTEM RAISES THE GAS TEMPERATURE 30 F PRIOR TO DISCHARGE TO THE MAIN STACK. THE FLUE GAS CLEANING WASTES ARE ULTIMATELY DISPOSED IN AN ON-SITE CLAY-LINED SOLAR EVAPORATION POND.
NEVADA POWER REID GARDNER NO 3 125 MW - NEW COAL 0.5 - 1.0 PERCENT SULFUR ADL/COMBUSTION EQUIP ASSOCIATE SODIUM CARBONATE SCRUBBING STARTUP 7/76	REFER TO THE BACKGROUND INFORMATION SECTION IN TABLE 3 OF THIS REPORT. THIS UNIT IS A NEW COAL-FIRED BOILER THAT IS EQUIPPED WITH SODIUM CARBONATE-BASED(TRONA)SCRUBBING SYSTEM WHICH INCORPORATES A TWIN VARIABLE-THROAT VENTURI SCRUBBER FOLLOWED BY A SEPARATOR IN SERIES WITH A SINGLE-STAGE PERFORATED-PLATE ABSORBER TOWER. THE MODULE WAS FIRST PLACED IN SERVICE ON BOILER FLUE GAS IN JULY 1976. MECHANICAL COLLECTORS PROVIDE PRIMARY PARTICULATE CONTROL. REHEAT IS PROVIDED BY A STEAM INDIRECT HOT AIR REHEAT SYSTEM. WASTE DISPOSAL IS ON-SITE CLAY-LINED POND.
NEVADA POWER REID GARDNER NO 4 125 MW - NEW COAL 0-5- 1.0 PERCENT SULFUR ADL/COMBUSTION EQUIP ASSOCIATE SODIUM CARBONATE SCRUBBING STARTUP 0/ 0	NEVADA POWER COMPANY HAS SIGNED A LETTER OF INTENT WITH COMBUSTION EQUIPMENT ASSOCIATES FOR THE CONSTRUCTION OF AN FGD SYSTEM ON REID GARDNER NO. 4. HOWEVER, CONSTRUCTION OF THE BOILER HAS BEEN INDEFINITELY POSTPONED.
NEVADA POWER WARNER VALLEY STATION NO. 1 250 MW - NEW COAL NOT SELECTED NOT SELECTED STARTUP 6/82	SPECIFICATIONS ARE BEING PREPARED FOR A SCRUBBING SYSTEM. NEVADA POWER HAS NOT YET ANNOUNCED PLANS FOR THIS UNIT'S EMISSION CONTROL STRATEGY.

TABLE 2

COMPANY / POWER STATION	STATUS OF FGD SYSTEMS AS OF 01/78 — CURRENT MONTH
NEVADA POWER WARNER VALLEY STATION NO. 2 250 MW - NEW COAL NOT SELECTED NOT SELECTED STARTUP 6/83	SPECIFICATIONS ARE BEING PREPARED FOR A SCRUBBING SYSTEM. NEVADA POWER HAS NOT YET ANNOUNCED PLANS FOR THIS UNIT'S EMISSION CONTROL STRATEGY.
NEW ENGLAND ELEC SYSTEM BRAYTON POINT NO.3 650 MW - RETROFIT COAL 3.0 PERCENT SULFUR NOT SELECTED REGENERABLE NOT SELECTED STARTUP 0/ 0	THE UTILITY IS CURRENTLY INVESTIGATING VARIOUS ADVANCED REGENERABLE FLUE GAS DESULFURIZATION SYSTEMS WHICH OFFER A BREAKTHROUGH IN OPERATING COSTS AND PRODUCE ELEMENTAL SULFUR AS AN END PRODUCT. THE UTILITY IS CURRENTLY INVOLVED IN BENCH AND LABORATORY SCALE INVESTIGATIONS OF SULFUR RECOVERY. THE NO. 3 UNIT IS CURRENTLY OPERATIONAL, FIRING LOW SULFUR FUEL OIL.
NIAGARA MOHAWK POWER COOP. CHARLES R. HUNTLEY NO.6 100 MW - RETROFIT COAL 2.5-4.5 PERCENT SULFUR ATOMICS INTERNATIONAL AQUEOUS CARBONATE SCRUBBING STARTUP 0/80	A CONTRACT WAS AWARDED TO ATOMICS INTERNATIONAL FOR THE DESIGN AND INSTALLATION OF AN AQUEOUS CARBONATE FGD SYSTEM. THIS DEMONSTRATION SYSTEM WILL PRODUCE END-PRODUCT SULFUR. FUNDS ARE BEING PROVIDED BY THE US EPA AND THE EMPIRE STATE ELECTRIC ENERGY RESEARCH CORP. THE DESIGN SO2 REMOVAL EFFICIENCY WILL BE 90 PERCENT. AN INTERMEDIATE UNIT IS BEING CONSIDERED AS A PILOT BEFORE APPLICATION OF THE 100 MW SCALE UNIT. GROUND BREAKING FOR CONSTRUCTION WILL BE IN JUNE 1978.
NORTHERN INDIANA PUB SERVICE BAILLY NO. 7 190 MW - RETROFIT COAL 3 PERCENT SULFUR NOT SELECTED NOT SELECTED STARTUP 0/ 0	CONSIDERING A LIME OR LIMESTONE SCRUBBING UNIT. ALSO WAITING FOR PERFORMANCE OF WELLMAN LORD/ALLIED CHEMICAL UNIT IN SERVICE AT THEIR D.H. MITCHEL NO. 11 UNIT. LOW SULFUR COAL MAY BE EMPLOYED TO COMPLY WITH SO2 EMISSION REGULATIONS. APPLICABLE INDIANA SO2 REGULATIONS ARE STILL NOT FIRMLY ESTABLISHED.
NORTHERN INDIANA PUB SERVICE BAILLY NO. 8 400 MW - RETROFIT COAL 3 PERCENT SULFUR NOT SELECTED NOT SELECTED STARTUP 0/ 0	CONSIDERING A LIME OR LIMESTONE SCRUBBING UNIT. ALSO WAITING FOR PERFORMANCE OF WELLMAN LORD/ALLIED CHEMICAL UNIT UNDER CONSTRUCTION AT THEIR D. H. MITCHELL NO. 11 UNIT. LOW SULFUR COAL MAY BE BURNED TO COMPLY WITH SO2 EMISSION REGULATIONS. APPLICABLE INDIANA SO2 REGULATIONS ARE STILL NOT FIRMLY ESTABLISHED.
NORTHERN INDIANA PUB SERVICE D.H. MITCHELL NO.11 115 MW - RETROFIT COAL 3.2-3.5 PERCENT SULFUR DAVY POWERGAS/ALLIED CHEMICAL WELLMAN LORD/ALLIED CHEMICAL STARTUP 6/77	REFER TO THE BACKGROUND INFORMATION SECTION IN TABLE 3 OF THIS REPORT. THIS FGD SYSTEM IS AN INTEGRATION OF THE WELLMAN-LORD SO2 RECOVERY PROCES OFFERED BY DAVY POWERGAS AND THE SO2 TO SULFUR REDUCTION PROCESS DEVELOPED BY ALLIED CHEMICAL. DAVY POWERGAS IS THE DESIGN AND CONSTRUCTION FIRM AND ALLIED CHEMICAL IS SYSTEM OPERATOR AND PRODUCT MARKETER. PERFORMANCE TESTS WERE SUCCESSFULLY COMPLETED ON SEPTEMBER 14, 1977. A DEMONSTRATION YEAR COMMENCED ON SEPTEMBER 16, 1977.
NORTHERN STATES POWER CO. SHERBURNE COUNTY STATION NO.1 710 MW - NEW COAL 0.8 PERCENT SULFUR COMBUSTION ENGINEERING LIMESTONE SCRUBBING STARTUP 3/76	REFER TO THE BACKGROUND INFORMATION SECTION IN TABLE 5 OF THIS REPORT. FULL COMMERCIAL OPERATION OF THE SYSTEM BEGAN ON MAY 1, 1976. THE SCRUBBING SYSTEM FOR THIS UNIT CONSISTS OF 12 MODULES. EACH SCRUBBING MODULE INCORPORATES A VENTURI-ROD SECTION AND A MARBLE BED ABSORBER FOR PARTICULATE AND SULFUR DIOXIDE REMOVAL. A FORCED OXIDATION SYSTEM CONVERTS ALL THE CALCIUM SULFITE TO SULFATE PRIOR TO DISCHARGE TO A CLAY-LINED SETTLING POND. STACK GAS REHEAT IS PROVIDED BY IN-LINE HOT WATER TUBES.
NORTHERN STATES POWER CO. SHERBURNE COUNTY STATION NO.2 710 MW - NEW COAL 0.8 PERCENT SULFUR COMBUSTION ENGINEERING LIMESTONE SCRUBBING STARTUP 4/77	REFER TO THE BACKGROUND INFORMATION SECTION IN TABLE 3 OF THIS REPORT. THE SHERBURNE NO. 2 AIR QUALITY CONTROL SYSTEM IS IDENTICAL IN DESIGN TO THE SYSTEM IN OPERATION ON THE NO. 1 UNIT AT THIS STATION. TWELVE 2-STAGE PARTICULATE SCRUBBER (VENTURI-ROD SCRUBBER) AND SULFUR DIOXIDE ABSORBER (MARBLE-BED ABSORBER) MODULES ARE PROVIDED FOR FLY ASH AND SO2 CONTROL. ELEVEN MODULES ARE REQUIRED FOR FULL GENERATING CAPACITY OPERATIONS. THE CALCIUM SULFITE IS FORCIBLY OXIDIZED TO SULFATE PRIOR TO DISCHARGE TO THE DISPOSAL POND. STACK GAS REHEAT PROVIDED BY IN-LINE HOT WATER TUBES.

TABLE 2
STATUS OF FGD SYSTEMS AS OF 01/78

COMPANY POWER STATION	CURRENT MONTH
NORTHERN STATES POWER CO. SHERBURNE COUNTY STATION NO.3 860 MW - NEW COAL 0.8 PERCENT SULFUR COMBUSTION ENGINEERING LIMESTONE SCRUBBING STARTUP 5/81	TWO ADDITIONAL COAL-FIRED POWER-GENERATING UNITS ARE SCHEDULED TO BE INSTALLED AT NSP'S SHERBURNE COUNTY GENERATING STATION IN BECKER MINNESOTA. COMBUSTION ENGINEERING WAS AWARDED A CONTRACT FOR LIMESTONE SLURRY SPRAY TOWER FGD SYSTEMS ON THE 860 MW UNITS 3 & 4. THE TWO STAGE SCRUBBING MODULES REMOVE PARTICULATE (99.5%) & SO2 (80%). COMMERCIAL START-UP DATES ARE NOW SCHEDULED FOR MAY 1981 AND MAY 1983. THE BOILER CONTRACT HAS BEEN AWARDED TO BABCOCK AND WILCOX AND THE TURBINE WILL BE SUPPLIED BY GENERAL ELECTRIC. CONSTRUCTION IS SCHEDULED TO COMMENCE DURING THE SUMMER OF '78.
NORTHERN STATES POWER CO. SHERBURNE COUNTY STATION NO.4 860 MW - NEW COAL 0.8 PERCENT SULFUR COMBUSTION ENGINEERING LIMESTONE SCRUBBING STARTUP 5/83	TWO ADDITIONAL COAL-FIRED POWER-GENERATING UNITS ARE SCHEDULED TO BE INSTALLED AT NSP'S SHERBURNE COUNTY GENERATING STATION IN BECKER MINNESOTA. COMBUSTION ENGINEERING WAS AWARDED A CONTRACT FOR LIMESTONE SLURRY SPRAY TOWER FGD SYSTEMS ON THE 860 MW UNITS 3 & 4. THE TWO STAGE SCRUBBING MODULES REMOVE PARTICULATE (99.5%) AND SO2 (80%). COMMERCIAL START-UP DATES ARE NOW SCHEDULED FOR MAY 1981 AND MAY 1983. THE BOILER CONTRACT HAS BEEN AWARDED TO BABCOCK AND WILCOX AND THE TURBINE WILL BE SUPPLIED BY GENERAL ELECTRIC.
OTTER TAIL POWER COMPANY COYOTE NO. 1 400 MW - NEW LIGNITE 0.9 PERCENT SULFUR WHEELABRATOR-FRYE/A.I. AQUEOUS CARBONATE/FAB. FILTER STARTUP 5/81	THIS NEW COAL-FIRED STATION IS JOINTLY OWNED BY FIVE UTILITIES. OTTER TAIL POWER IS THE MAJOR OWNER AND CONSTRUCTOR. MONTANA-DAKOTA UTILITIES IS THE FACILITY OPERATOR. THIS PLANNED UNIT WILL FIRE LOW SULFUR LIGNITE FROM THE MERCER COUNTY AREA IN ITS B&W CYCLONE-FIRED BOILER. THE CONTRACT FOR THIS AQUEOUS CARBONATE/FABRIC FILTER SO2 SCRUBBER WAS AWARDED TO WHEELABRATOR-FRYE AND ATOMICS INTERNATIONAL. THE DRY REMOVAL SYSTEM COMBINES THE OPEN LOOP OF AI'S AQUEOUS CARBONATE PROCESS WITH A W-F FABRIC FILTER. ACTUAL PLANT CONSTRUCTION BEGAN SEPT. 77. START-UP SET FOR MAY 81.
PACIFIC GAS AND ELECTRIC FOSSIL NO. 1 800 MW - NEW COAL 0.8 PERCENT SULFUR NOT SELECTED LIMESTONE SCRUBBING STARTUP 0/84	THE CITY OF LAKELAND DEPARTMENT OF ELECTRIC AND WATER UTILITIES IS EVALUATING BIDS FOR IT NEW 350 MW POWER GENERATING UNIT, MCINTOSH NO. 3. THE UNIT WILL UTILIZE COLD-SIDE ESP'S FOR PARTICULATE REMOVAL AND LIMESTONE SCRUBBING FOR SO2 CONTROL. A DECISION SHOULD BE MADE PUBLIC IN MARCH. START-UP IS SCHEDULED FOR OCTOBER 1981.
PACIFIC GAS AND ELECTRIC FOSSIL NO. 2 800 MW - NEW COAL 0.8 PERCENT SULFUR NOT SELECTED LIMESTONE SCRUBBING STARTUP 0/85	THE CITY OF LAKELAND DEPARTMENT OF ELECTRIC AND WATER UTILITIES IS EVALUATING BIDS FOR IT NEW 350 MW POWER GENERATING UNIT, MCINTOSH NO. 3. THE UNIT WILL UTILIZE COLD-SIDE ESP'S FOR PARTICULATE REMOVAL AND LIMESTONE SCRUBBING FOR SO2 CONTROL. A DECISION SHOULD BE MADE PUBLIC IN MARCH. START-UP IS SCHEDULED FOR OCTOBER 1981.
PACIFIC POWER AND LIGHT CO. JIM BRIDGER NO. 4 509 MW - NEW COAL 0.56 PERCENT SULFUR(AVG.) UNIVERSAL OIL PRODUCTS SODIUM CARBONATE SCRUBBING STARTUP 9/79	UOP WAS AWARDED A CONTRAST FOR THE INSTALLATION OF THE FGD SYSTEM AT THE NEW 509 MW COAL-FIRED JIM BRIDGER UNIT NO. 4. THE FGD SYSTEM WILL CONSIST OF THREE PARALLEL ABSORBER MODULES EACH TREATING ONE-THIRD OF THE BOILER FLUE GAS AT FULL LOAD. AN ESP WILL PROVIDE PRIMARY PARTICULATE CONTROL. A CEILCOTE-LINED WET/DRY STACK IS INCLUDED IN THE SYSTEM. PPL'S PILOT STUDY INSPECTION REVEALED SCALE FORMATION PROBLEMS. TESTS ARE BEING CONDUCTED TO RESOLVE THIS PROBLEM. TO DATE, FOUNDATION CONSTRUCTION IS COMPLETE AND VESSEL ERECTION HAS COMMENCED.
PENNSYLVANIA POWER CO. BRUCE MANSFIELD NO. 1 825 MW - NEW COAL 4.7 PERCENT SULFUR CHEMICO LIME SCRUBBING STARTUP 4/76	THIS EMISSION CONTROL SYSTEM WAS DESIGNED TO REMOVE FLYASH AND SO2 FROM 3.35 MM ACFM OF FLUE GAS VIA WET LIME SCRUBBING. THE INITIAL SHAKEDOWN AND DEBUGGING PHASE OF OPERATION BEGAN FOR PART OF THE SYSTEM IN DECEMBER 1975. PARTIAL COMMERCIAL OPERATION COMMENCED IN APRIL 1976. THE UNIT WAS CERTIFIED FULL-LOAD COMMERCIAL IN JUNE 1976. THE FGD SYSTEM HAS EXPERIENCED OPERATIONAL PROBLEMS SINCE IT HAS BEEN IN SERVICE REQUIRING A NUMBER OF SYSTEM REPAIRS AND DESIGN MODIFICATIONS. REFER TO BACKGROUND INFORMATION SECTION IN TABLE 5 OF THIS REPORT FOR GREATER DETAIL.
PENNSYLVANIA POWER CO. BRUCE MANSFIELD NO. 2 825 MW - NEW COAL 4.7 PERCENT SULFUR CHEMICO LIME SCRUBBING STARTUP 7/77	REFER TO THE BACKGROUND INFORMATION SECTION IN TABLE 3 OF THIS REPORT. THIS EMISSION CONTROL SYSTEM WAS DESIGNED TO REMOVE FLYASH AND SO2 FROM 3.35 MM ACFM OF FLUE GAS USING THIOSORBIC LIME AS A SCRUBBING ABSORBENT. SIX SCRUBBING TRAINS, EACH INCLUDING TWO VENTURI SCRUBBERS IN SERIES ARRANGEMENT, ARE PROVIDED FOR FULL-LOAD OPERATION. THE INITIAL SHAKEDOWN AND DEBUGGING PHASE OF OPERATION BEGAN FOR THREE TRAINS IN JULY, 1977. FULL COMMERCIAL OPERATION FOR THE ENTIRE SYSTEM COMMENCED ON OCTOBER 1, 1977.

TABLE 2

COMPANY — STATUS OF FGD SYSTEMS AS OF 01/78

POWER STATION	CURRENT MONTH
PENNSYLVANIA POWER CO. BRUCE MANSFIELD NO. 3 825 MW - NEW COAL 4.7 PERCENT SULFUR PULLMAN KELLOGG LIME SCRUBBING STARTUP 4/80	THE PULLMAN KELLOGG DIVISION OF PULLMAN INCORPORATED HAS BEEN AWARDED A CONTRACT IN EXCESS OF $50 MILLION BY THE CAPCO CONSORTIUM FOR THE INSTALLATION OF SULFUR DIOXIDE ABSORBERS ON THIS 825 MW COAL-FIRED POWER-GENERATING UNIT. THE EMISSION CONTROL SYSTEM FOR THIS UNIT WILL CONSIST OF ESP'S UPSTREAM OF FIVE WEIR HORIZONTAL CROSSFLOW WET SCRUBBING MODULES. CONSTRUCTION OF THE BOILER IS CURRENTLY IN PROGRESS. DUE TO REVISED CAPCO FORECASTS, UNIT START-UP HAS BEEN MOVED BACK TO APRIL 1980.
PHILADELPHIA ELECTRIC CO. CROMBY 150 MW - RETROFIT COAL 2-4 PERCENT SULFUR UNITED ENGINEERS / PECO MAGNESIUM OXIDE SCRUBBING STARTUP 6/80	THE UTILITY PLANS TO RETROFIT ONE OF THE TWO BOILERS AT CROMBY WITH AN FGD SYSTEM. HOWEVER, A FINAL DECISION HAS NOT BEEN MADE. THE PROCESS BEING GIVEN PRIME CONSIDERATION IS MAGNESIUM OXIDE SCRUBBING, DESIGNED JOINTLY BY UNITED ENGINEERS AND PHILADELPHIA ELECTRIC. ENGINEERING DESIGN WORK IS SCHEDULED TO COMMENCE SOON. TENTATIVE FGD SYSTEM START-UP IS SCHEDULED FOR JUNE 1980. CURRENTLY, PECO IS CONTINUING PROCESS EVALUATION STUDIES AT THE EDDYSTONE EXPERIMENTAL UNIT.
PHILADELPHIA ELECTRIC CO. EDDYSTONE NO. 1A 120 MW - RETROFIT COAL 2.5 PERCENT SULFUR UNITED ENGINEERS / PECO MAGNESIUM OXIDE SCRUBBING STARTUP 9/75	REFER TO THE BACKGROUND INFORMATION SECTION IN TABLE 3 OF THIS REPORT. THE EMISSION CONTROL SYSTEM FOR THIS UNIT CONSISTS OF THREE PARALLEL SCRUBBING TRAINS FOR THE CONTROL OF PARTICULATE AND SULFUR DIOXIDE. THE C-SIDE SCRUBBING TRAIN INCLUDES AN SO2 ABSORBER MODULE IN SERIES WITH A PARTICULATE SCRUBBER. APPROXIMATELY ONE-THIRD OF THE BOILER FLUE GAS IS SCRUBBED WITH MAGNESIUM OXIDE SLURRY FOR SO2 REMOVAL. THE SPENT SLURRY IS REGENERATED AT THE ESSEX SULFURIC ACID PLANT IN NEWARK, N.J. THE REGENERATED MAGOX IS RETURNED TO THE PLANT FOR SO2 SCRUBBING SERVICE.
PHILADELPHIA ELECTRIC CO. EDDYSTONE NO. 1B 240 MW - RETROFIT COAL 2.5 PERCENT SULFUR UNITED ENGINEERS / PECO MAGNESIUM OXIDE SCRUBBING STARTUP 6/80	THE INSTALLATION OF SO2 SCRUBBERS ON THE BALANCE OF THE FLUE GAS FROM THIS UNIT WILL FOLLOW PENDING THE OUTCOME OF THE PERFORMANCE OF THE SCRUBBING UNIT WHICH HAS BEEN INSTALLED AND CURRENTLY OPERATIONAL ON THE EDDYSTONE NO. 1 UNIT. CURRENTLY, 3 WET PARTICULATE SCRUBBERS ARE TREATING THE FULL GAS LOAD FROM THIS UNIT. THE PERFORMANCE OF THE MAGOX UNIT IS DESCRIBED IN THE EDDYSTONE NO. IA FILE CONTAINED IN THIS REPORT.
PHILADELPHIA ELECTRIC CO. EDDYSTONE NO. 2 336 MW - RETROFIT COAL 2.4 PERCENT SULFUR UNITED ENGINEERS / PECO MAGNESIUM OXIDE SCRUBBING STARTUP 6/80	THE UTILITY IS AWAITING PERFORMANCE RESULTS FROM THE EXISTING MGO SCRUBBER INSTALLED ON UNIT NO. 1 AT THIS STATION BEFORE PROCEEDING WITH THE DESIGN OF AN FGD SYSTEM FOR THIS COAL-FIRED BOILER. THE PROCESS BEING GIVEN PRIME CONSIDERATION IS MAGNESIUM OXIDE SCRUBBING DESIGNED JOINTLY BY UNITED ENGINEERS AND PHILADELPHIA ELECTRIC. ENGINEERING DESIGN WORK IS SCHEDULED TO COMMENCE SOON. TENTATIVE FGD SYSTEM START-UP IS SCHEDULED FOR JUNE 1980.
POTOMAC ELECTRIC & POWER DICKERSON NO. 4 800 MW - NEW COAL 2.0 PERCENT SULFUR NOT SELECTED NOT SELECTED STARTUP 5/85	THERE ARE NO FIRM PLANS FOR INSTALLATION OF FGD SYSTEM. STARTUP DATE OF BOILER IS PLANNED FOR 1985. THIS UNIT WILL BURN 2 PERCENT SULFUR COAL WITH A HEATING VALUE OF 11,000 BTU/LB.
POWER AUTHORITY OF NEW YORK ARTHUR KILL 700 MW - NEW COAL - 3% SULFUR - REFUSE NOT SELECTED NOT SELECTED STARTUP 9/82	THE UTILITY IS CONSIDERING BOTH REGENERABLE AND LIMESTONE SCRUBBING PROCESSES. FGD TECHNOLOGY IS BEING CONSIDERED FOR A FOSSIL FUEL BURNING UNIT WHICH WILL EMPLOY COAL AS THE PRIMARY FUEL AND OIL AS BACKUP. REFUSE WILL BE PROVIDED FOR SUPPLEMENTAL FUEL SUPPLIES. THE PREFERRED PLANT SITE IS THE ARTHUR KILL FACILITY LOCATED ON STATEN ISLAND. THE PROJECT DESIGN ENGINEERING FIRM IS SARGENT AND LUNDY. PUBLIC SERVICE COMMISSION HEARINGS ARE IN PROGRESS. NO DECISIONS WILL BE MADE UNTIL LATE SPRING 1978.
PUBLIC SERVICE CO OF NEW MEX. SAN JUAN NO. 1 375 MW - NEW COAL 0.8 PERCENT SULFUR DAVY POWERGAS/ALLIED CHEMICAL WELLMAN LORD/ALLIED CHEMICAL STARTUP 4/78	CONSTRUCTION IS 90% COMPLETE. THIS FGD SYSTEM IS AN INTEGRATION OF THE WELLMAN LORD SO2 RECOVERY PROCESS OF DAVY POWERGAS AND ALLIED CHEMICAL'S SO2 REDUCTION TO SULFUR PROCESS. A HOT SIDE ELECTROSTATIC PRECIPITATOR WILL PRECEDE THE SCRUBBING UNIT. FOUR ABSORBER TOWERS WILL BE INSTALLED FOR EACH UNIT. THREE WILL CARRY THE FULL LOAD. MOLTEN SULFUR WILL BE STORED ON THE PLANT SITE. THE INSTRUMENTATION CONTROL PROBLEM PREVIOUSLY REPORTED HAS BEEN SOLVED. START-UP IS SCHEDULED FOR APRIL 1978.

TABLE 2

STATUS OF FGD SYSTEMS AS OF 01/78

COMPANY POWER STATION	CURRENT MONTH
PUBLIC SERVICE CO OF NEW MEX. SAN JUAN NO. 2 340 MW - RETROFIT COAL 0.8 PERCENT SULFUR DAVY POWERGAS/ALLIED CHEMICAL WELLMAN LORD/ALLIED CHEMICAL STARTUP 7/78	THE CONSTRUCTION OF THIS SYSTEM IS NOW UNDERWAY. CONSTRUCTION IS NEARING COMPLETION. START-UP IS NOW SCHEDULED FOR JULY 1978. THIS FGD SYSTEM IS AN INTEGRATION OF THE WELLMAN LORD SO2 RECOVERY PROCESS OF DAVY POWERGAS AND ALLIED CHEMICAL'S SO2 REDUCTION TO SULFUR PROCESS. A HOT SIDE ELECTROSTATIC PRECIPITATOR WILL PRECEDE THE SCRUBBING UNIT. FOUR ABSORBER TOWERS WILL BE INSTALLED FOR THIS UNIT. THREE WILL CARRY THE FULL LOAD. MOLTEN SULFUR WILL BE STORED ON THE PLANT SITE. START-UP DELAY WAS CAUSED BY A BOILER EXPLOSION.
PUBLIC SERVICE CO OF NEW MEX. SAN JUAN NO. 3 500 MW - NEW COAL 0.8 PERCENT SULFUR DAVY POWERGAS WELLMAN LORD STARTUP 1/79	THE UTILITY HAS SIGNED A LETTER-OF-INTENT WITH DAVY POWERGAS FOR ONE SCRUBBER MODULE WHICH WILL BE DESIGNED TO BRING THE UNIT INTO COMPLIANCE WITH NSPS BY JAN. 1979. THE FGD SYSTEM FOR THE REMAINDER OF THE FLUE GAS FROM THIS 500-MW UNIT HAS NOT BEEN SELECTED. PRIMARY PARTICULATE CONTROL WILL BE EFFECTED BY AN UPSTREAM ESP.
PUBLIC SERVICE CO OF NEW MEX. SAN JUAN NO. 4 500 MW - NEW COAL 0.8 PERCENT SULFUR DAVY POWERGAS WELLMAN LORD STARTUP 5/81	THE UTILITY HAS PLACED A HOLD ON FURTHER ENGINEERING DESIGN WORK AT THE PRESENT TIME. THE PROJECTED START-UP DATE FOR UNIT 4 IS MAY 1981. THE WELLMAN LORD SO2 RECOVERY PROCESS WILL BE UTILIZED TO BRING THE UNIT INTO COMPLIANCE WITH NSPS. AN ESP WILL BE PROVIDED UPSTREAM OF THE FGD SYSTEM FOR PRIMARY PARTICULATE CONTROL.
PUBLIC SERVICE OF INDIANA GIBSON 5 650 MW - NEW COAL 3.3 PERCENT SULFUR NOT SELECTED NOT SELECTED STARTUP 0/82	THE UTILITY IS IN THE PROCESS OF PREPARING SPECIFICATIONS. SCHEDULED START-UP OF THIS 650 MW UNIT IS 1982.
SALT RIVER PROJECT CORONADO NO.1 350 MW - NEW COAL 1.0 PERCENT SULFUR (MAX) PULLMAN KELLOGG LIMESTONE SCRUBBING STARTUP 4/79	THIS NEW UNIT WILL BURN LOW SULFUR WESTERN COAL. A MAXIMUM OF 80% OF THE FLUE GAS WILL BE SCRUBBED TO MEET SULFUR DIOXIDE EMISSION REGULATIONS. PULLMAN/KELLOGG WILL DESIGN AND FABRICATE TWO WEIR HORIZONTAL CROSSFLOW SCRUBBER MODULES, WHICH WILL UTILIZE LIMESTONE SLURRY FOR SO2 CONTROL. THE SYSTEM WILL UTILIZE RUBBER-LINED SLURRY RECYCLE PUMPS, EACH RATED AT 9800 GPM, RIGIFLAKE-LINED SCRUBBER MODULES, VERTICAL HEIL DEMISTERS, AND A MINIMUM OF 20 PERCENT REHEAT. THE SLUDGE WILL BE PONDED. THE FOUNDATION IS COMPLETED AND STRUCTURAL WORK HAS COMMENCED.
SALT RIVER PROJECT CORONADO NO.2 350 MW - NEW COAL 1.0 PERCENT SULFUR (MAX) PULLMAN KELLOGG LIMESTONE SCRUBBING STARTUP 4/80	THIS NEW UNIT WILL BURN LOW SULFUR WESTERN COAL. A MAXIMUM OF 80% OF THE FLUE GAS WILL BE SCRUBBED TO MEET SULFUR DIOXIDE EMISSION REGULATIONS. PULLMAN/KELLOGG WILL DESIGN AND FABRICATE TWO WEIR HORIZONTAL CROSSFLOW SCRUBBER MODULES, WHICH WILL UTILIZE LIMESTONE SLURRY FOR SO2 CONTROL. THE SYSTEM WILL UTILIZE RUBBER-LINED SLURRY RECYCLE PUMPS, EACH RATED AT 9800 GPM, RIGIFLAKE-LINED SCRUBBER MODULES, VERTICAL HEIL DEMISTERS AND A MINIMUM OF 20 PERCENT REHEAT. THE SLUDGE WILL BE PONDED. FOUNDATION WORK HAS BEEN COMPLETED, STRUCTURAL STEEL WORK HAS COMMENCED.
SALT RIVER PROJECT CORONADO NO.3 350 MW - NEW COAL 1.0 PERCENT SULFUR (MAX) NOT SELECTED LIMESTONE SCRUBBING STARTUP 0/97	THIS NEW UNIT WILL BURN LOW SULFUR WESTERN COAL. 80 PERCENT OF THE GAS WILL BE SCRUBBED TO MEET SULFUR DIOXIDE EMISSION REGULATIONS. THE UTILITY IS CURRENTLY CONSIDERING THE INSTALLATION OF TWO HORIZONTAL CROSSFLOW SCRUBBING MODULES EMPLOYING A LIMESTONE SCRUBBING SOLUTION TO REMOVE SO2 FROM THE FLUE GAS. SCHEDULED COMMERCIAL OPERATION DATE IS 1987. PLANS FOR AN EMISSION CONTROL SYSTEM HAVE NOT BEEN FINALIZED. SLUDGE WILL PROBABLY BE PONDED.
SOUTH CAROLINA PUBLIC SERVICE WINYAH NO. 2 280 MW - NEW COAL 1.0 PERCENT SULFUR BABCOCK & WILCOX LIMESTONE SCRUBBING STARTUP 7/77	REFER TO THE BACKGROUND INFORMATION SECTION IN TABLE 3 OF THIS REPORT. THE EMISSION CONTROL SYSTEM FOR THIS UNIT CONSISTS OF A 100% CAPACITY ESP FOLLOWED BY A 50% CAPACITY LIMESTONE FGD SYSTEM. ONE FGD MODULE, CONSISTING OF A VENTURI SCRUBBER AND TRAY TOWER ABSORBER, REMOVES 70% OF THE INLET SO2. REHEAT IS SUPPLIED BY THE FLUE GAS BYPASS. THE SCRUBBING WASTES ARE DISCHARGED TO AN ON-SITE, UNLINED DIKED POND. THE NO. 2 UNIT COMMENCED INITIAL OPERATIONS IN JULY 1977. THE ACCEPTANCE TEST FOR COMMERCIAL CERTIFICATION WAS SUCCESSFULLY COMPLETED IN DECEMBER 1977.

TABLE 2
STATUS OF FGD SYSTEMS AS OF 01/78

COMPANY POWER STATION	CURRENT MONTH
SOUTH CAROLINA PUBLIC SERVICE WINYAH NO. 3 300 MW - NEW COAL 2.3 PERCENT SULFUR NOT SELECTED NOT SELECTED STARTUP 0/80	SANTEE COOP, AND SOUTH CAROLINA PUBLIC SERVICE AWARDED RILEY STOKER A CONTRACT TO DESIGN, FABRICATE AND ERECT A NEW STEAM GENERATING UNIT. THE COAL-FIRED DRY-BOTTOM TURBO-FIRED FURNACE WILL PRODUCE STEAM FOR THE 300 MW TURBINE GENERATOR. 80% OF THE FLUE GAS WILL BE SCRUBBED FOR SO2, 20% WILL BE BYPASSED FOR REHEAT. THE COAL BURNED HAS A 11,500 BTU/LB AND 2.3% SULFUR. STARTUP IS SCHEDULED FOR THE SUMMER OF 1980. THE FGD SYSTEM CONTRACT IS UP FOR BIDS.
SOUTHERN ILLINOIS POWER COOP MARION NO. 4 184 MW - NEW COAL 4.5-5.0 PERCENT SULFUR BABCOCK & WILCOX LIMESTONE SCRUBBING STARTUP 6/78	THE EMISSION CONTROL SYSTEM FOR THIS NEW COAL-FIRED BOILER CONSISTS OF AN ESP FOR PARTICULATE CONTROL FOLLOWED BY 2 SPRAY TOWERS FOR SO2 CONTROL. LIMESTONE SLURRY WILL BE USED AS THE SCRUBBING REAGENT. SIPC IS NOT PLANNING TO UTILIZE FLUE GAS REHEAT AND IS CURRENTLY PLANNING ON BRICK LINING FOR THE STACK. SIPC INTENDS TO USE A LANDFILL WITH ASH STABILIZATION OF WASTE FOR SLUDGE DISPOSAL. CURRENTLY, CONSTRUCTION IS 75 PERCENT COMPLETE ON THE UNIT AND FGD SYSTEM.
SOUTHERN INDIANA GAS&ELECTRIC A.B. BROWN NO.1 250 MW - NEW COAL 3.75 PERCENT SULFUR FMC CORPORATION DOUBLE ALKALI SCRUBBING STARTUP 4/79	THE UTILITY HAS AWARDED A CONTRACT TO FMC FOR THE INSTALLATION OF A DOUBLE ALKALI SCRUBBING SYSTEM UTILIZING SODA ASH AND LYE. THIS UNIT IS A PART OF A NEW POWER STATION LOCATED IN WEST FRANKLIN, INDIANA. THE SYSTEM WILL PRODUCE FILTER CAKE AS A WASTE PRODUCT WHICH WILL BE DISPOSED OF IN AN ON-SITE LANDFILL. THE PARTICULATE EMISSIONS WILL BE CONTROLLED BY A BUELL-ENVIROTECH COLD-SIDE ESP. THE CONSTRUCTION WORK AND ENFINEERING IS 20% COMPLETE.
SOUTHERN MISSISSIPPI ELECTRIC R.D. MORROW NO.1 180 MW - NEW COAL 1.0 PERCENT SULFUR RILEY STOKER / ENVIRONEERING LIMESTONE SCRUBBING STARTUP 5/78	CONSTRUCTION OF THE WET LIMESTONE SCRUBBING SYSTEM IS 50 PERCENT COMPLETE. PARTICULATES WILL BE CONTROLLED BY A HIGH-EFFICIENCY ESP UPSTREAM OF THE SCRUBBING SYSTEM. DESIGN SULFUR DIOXIDE AND PARTICULATE REMOVAL EFFICIENCIES ARE 85 AND 99.6 PERCENT, RESPECTIVELY. A WATER SPRAY HAS BEEN ADDED IN THE BY-PASS DUCT TO PROTECT THE LINER FROM TEMPERATURE EXCURSION. SCRUBBER SLUDGE WILL BE STABILIZED WITH FLYASH AND DISPOSED ON THE PLANT SITE.
SOUTHERN MISSISSIPPI ELECTRIC R.D. MORROW NO.2 180 MW - NEW COAL 1.0 PERCENT SULFUR RILEY STOKER / ENVIRONEERING LIMESTONE SCRUBBING STARTUP 8/78	CONSTRUCTION OF THE WET LIMESTONE SCRUBBING SYSTEM IS 50 PERCENT COMPLETE. PARTICULATES WILL BE CONTROLLED BY A HIGH-EFFICIENCY ESP UPSTREAM OF THE SCRUBBING SYSTEM. DESIGN SULFUR DIOXIDE AND PARTICULATE REMOVAL EFFICIENCIES ARE 85 AND 99.6 PERCENT, RESPECTIVELY. A WATER SPRAY HAS BEEN ADDED IN THE BY-PASS DUCT TO PROTECT THE LINER FROM TEMPERATURE EXCURSION. SCRUBBER SLUDGE WILL BE STABILIZED WITH FLYASH AND DISPOSED ON THE PLANT SITE.
SPRINGFIELD CITY UTILITIES SOUTHWEST NO. 1 200 MW - NEW COAL 3.5 PERCENT SULFUR UNIVERSAL OIL PRODUCTS LIMESTONE SCRUBBING STARTUP 4/77	REFER TO THE BACKGROUND INFORMATION SECTION IN TABLE 3 OF THIS REPORT. THE EMISSION CONTROL SYSTEM FOR THIS NEW COAL-FIRED UNIT CONSISTS OF A FOUR-FIELD HIGH EFFICIENCY ESP (99.6% DESIGN) AND 2 TURBULENT CONTACT ABSORBER MODULES (80% DESIGN) FOR THE CONTROL OF PARTICULATES AND SO2. BOTH THE ESP AND LIMESTONE FGD SYSTEM ARE SUPPLIED BY UOP. THE SCRUBBING WASTES ARE DEWATERED BY A ROTARY DRUM VACUUM FILTER AND THE FILTER CAKE IS HAULED AWAY TO A LANDFILL. INITIAL OPERATION OF THE FGD SYSTEM OCCURRED IN APRIL 77. IN SEPT. 77, THE UNIT SUCCESSFULLY COMPLETED COMPLIANCE TESTING.
SPRINGFIELD WATER LIGHT&POWER DALLMAN NO. 3 190 MW - NEW COAL 3.0-4.3 PERCENT SULFUR RESEARCH COTTRELL LIMESTONE SCRUBBING STARTUP 7/80	A CONTRACT HAS BEEN AWARDED TO RESEARCH COTTRELL FOR THE INSTALLATION OF A LIMESTONE SCRUBBING SYSTEM. REQUIRED SULFUR DIOXIDE REMOVAL EFFICIENCY IS 90 PERCENT. A SLUDGE DISPOSAL STRATEGY HAS NOT BEEN FINALIZED, BUT THE UTILITY IS CONSIDERING EITHER PONDING OR LANDFILL. SCRUBBER CONSTRUCTION OF THE FGD SYSTEM SHOULD COMMENCE IN LATE 1978. FGD START-UP IS SCHEDULED FOR JULY 1980. BOILER OPERATION IS SCHEDULED TO COMMENCE IN JUNE 1978.
TENNESSEE VALLEY AUTHORITY SHAWNEE NO.10A 10 MW - RETROFIT COAL 2.9 PERCENT SULFUR UNIVERSAL OIL PRODUCTS LIME/LIMESTONE SCRUBBING STARTUP 4/72	REFER TO BACKGROUND INFORMATION SECTION IN TABLE 3 OF THIS REPORT. THIS TURBULENT CONTACT ABSORBER(TCA) LIME/LIMESTONE SCRUBBING SYSTEM HAS BEEN OPERATIONAL SINCE APRIL 1972. THIS TEST PROGRAM IS FUNDED BY THE EPA. TVA IS THE CONSTRUCTOR AND FACILITY OPERATOR. THE BECHTEL CORP. OF SAN FRANCISCO IS THE MAJOR CONTRACTOR, TEST DIRECTOR, AND REPORT WRITER. DURING THE REPORT PERIOD, OPERATIONS WERE CONDUCTED WITH LIMESTONE SLURRY CIRCULATING THROUGH THE UNIT. FORCED OXIDATION ON FLY ASH-LADEN FLUE GAS WAS EVALUATED.

TABLE 2
STATUS OF FGD SYSTEMS AS OF 01/78

COMPANY POWER STATION	CURRENT MONTH
TENNESSEE VALLEY AUTHORITY SHAWNEE NO.10B 10 MW - RETROFIT COAL 2.9 PERCENT SULFUR CHEMICO LIME/LIMESTONE SCRUBBING STARTUP 4/72	REFER TO BACKGROUND INFORMATION SECTION IN TABLE 3 OF THIS REPORT. THIS VENTURI/SPRAY TOWER LIME/LIMESTONE SCRUBBING SYSTEM HAS BEEN OPERATIONAL SINCE APRIL 1972. THIS TEST PROGRAM IS FUNDED BY THE EPA. TVA IS THE CONSTRUCTOR AND FACILITY OPERATOR. THE BECHTEL CORP. OF SAN FRANCISCO IS THE MAJOR CONTRACTOR, TEST DIRECTOR, AND REPORT WRITER. DURING THE REPORT PERIOD, FORCED OXIDATION WAS EVALUATED ON FLY ASH-FREE FLUE GAS WITH LIME SLURRY AS THE SCRUBBING AGENT.
TENNESSEE VALLEY AUTHORITY WIDOWS CREEK NO. 7 575 MW - RETROFIT COAL 3.7 PERCENT SULFUR COMBUSTION ENGINEERING LIMESTONE SCRUBBING STARTUP 0/ 0	TENNESSEE VALLEY AUTHORITY ANNOUNCED DURING THE REPORT PERIOD THAT A CONTRACT HAS BEEN AWARDED TO COMBUSTION ENGINEERING FOR A LIMESTONE SLURRY SPRAY TOWER FGD SYSTEM. THE FGD SYSTEM WILL TREAT HIGH SULFUR COAL FLUE GAS. THE SPRAY TOWER ABSORBERS WILL BE CONSTRUCTED OF 317 L STAINLESS STEEL. THE NO. 7 UNIT FIRES COAL WITH THE SAME CHARACTERISTICS AS THE COAL FIRED IN THE NO. 8 UNIT.
TENNESSEE VALLEY AUTHORITY WIDOWS CREEK NO. 8 550 MW - RETROFIT COAL 3.7 PERCENT SULFUR TENNESSEE VALLEY AUTHORITY LIMESTONE SCRUBBING STARTUP 5/77	REFER TO THE BACKGROUND INFORMATION SECTION IN TABLE 3 OF THIS REPORT. THE EMISSION CONTROL SYSTEM FOR THIS 550-MW COAL-FIRED POWER-GENERATING UNIT CONSISTS OF EXISTING ELECTROSTATIC PRECIPITATORS FOLLOWED BY FOUR PARALLEL SCRUBBING TRAINS, EACH CAPABLE OF HANDLING 25 PERCENT OF THE BOILER FLUE GAS FROM UNIT NO. 8. EACH TRAIN INCLUDES A RECTANGULAR-THROAT VENTURI SCRUBBER AND A GRID-TOWER ABSORBER SUPPLIED BY POLYCON. THE GRID TOWER CAN BE CONVERTED TO A MOBILE-BED TOWER IF GREATER SO2 REMOVAL IS REQUIRED.
TEXAS MUNICIPAL POWER AGENCY GIBBONS CREEK UNIT NO. 1 400 MW - NEW LIGNITE - 1.06 PERCENT SULFUR COMBUSTION ENGINEERING LIMESTONE SCRUBBING STARTUP 1/82	COMBUSTION ENGINEERING WAS AWARDED A CONTRACT TO DESIGN AND SUPPLY A 400 MW LIGNITE-FIRED BOILER, ESP, AND FGD SYSTEM AT GIBBONS CREEK STEAM ELECTRIC STATION UNIT NO. 1. THE BOILER WILL BURN 1.06% SULFUR LIGNITE. FLUE GAS WILL BE CLEANED OF PARTICULATES BY A COLD-SIDE ESP (99.73% EFFICIENCY). SO2 WILL BE REMOVED BY 3 SPRAY TOWER MODULES UTILIZING A LIMESTONE SLURRY (72.5 TO 87.5% EFFICIENCY). COMMERCIAL START-UP HAS BEEN SET FOR JANUARY 1982.
TEXAS POWER AND LIGHT CO. SANDOW NO.4 545 MW - NEW LIGNITE COMBUSTION ENGINEERING LIMESTONE SCRUBBING STARTUP 7/80	COMBUSTION ENGINEERING HAS BEEN CHOSEN AS THE BOILER AND FGD VENDOR FOR THIS UNIT. BOILER CONSTRUCTION BEGAN ON SEPTEMBER 9, 1977. THE PARTICULATE REMOVAL IS TO TAKE PLACE ON THE COLD-SIDE OF THE AIR HEATER. SOME PORTION OF FLUE-GAS WILL BYPASS SCRUBBER FOR REHEAT. THE SPENT SLURRY WILL BE PONDED AND WATER RECYCLED. FGD CONSTRUCTION IS SCHEDULED TO BEGIN NOVEMBER 1978.
TEXAS POWER AND LIGHT CO. TWIN OAKS NO. 1 750 MW - NEW LIGNITE NOT SELECTED NOT SELECTED STARTUP 8/83	THIS UNIT WILL BE JOINTLY OWNED BY TP&L AND ALCOA. A FIRM DECISION HAS NOT BEEN MADE WHETHER TO INSTALL FGD FACILITIES. THIS IS PRIMARILY DUE TO THE FACT THAT SUCH A DECISION IS NOT YET REQUIRED IN THE UTILITIES PLANNING TIMETABLE.
TEXAS POWER AND LIGHT CO. TWIN OAKS NO. 2 750 MW - NEW LIGNITE NOT SELECTED NOT SELECTED STARTUP 9/84	THIS UNIT WILL BE JOINTLY OWNED BY TP&L AND ALCOA. A FIRM DECISION HAS NOT BEEN MADE WHETHER TO INSTALL FGD FACILITIES. THIS IS PRIMARILY DUE TO THE FACT THAT SUCH A DECISION IS NOT YET REQUIRED IN THE UTILITIES PLANNING TIMETABLE.
TEXAS UTILITIES CO. FOREST GROVE NO. 1 750 MW - NEW LIGNITE NOT SELECTED NOT SELECTED STARTUP 0/81	TEXAS UTILITIES REPORTED THAT A NEW 750-MW LIGNITE-FIRED UNIT IS IN THE EARLY PLANNING STAGE FOR THE FOREST GROVE STATION IN ATHENS, TEXAS. START-UP IS SCHEDULED FOR LATE 1981. THE BOILER WILL BE SUPPLIED BY THE BABCOCK & WILCOX COMPANY.

TABLE 2

COMPANY POWER STATION	STATUS OF FGD SYSTEMS AS OF 01/78 CURRENT MONTH
TEXAS UTILITIES CO. MARTIN LAKE NO. 1 793 MW - NEW COAL 1.0 PERCENT SULFUR RESEARCH COTTRELL LIMESTONE SCRUBBING STARTUP 8/77	THIS NEW 793-MW POWER GENERATING UNIT FIRES TEXAS LIGNITE WHICH CONTAINS 0.9% SULFUR (AVG) AND 8.0% ASH (AVG.). IN ORDER TO MEET FEDERAL NSPS THE UNIT HAS BEEN EQUIPPED WITH AN EMISSION CONTROL SYSTEM WHICH INCLUDES COLD-SIDE ESP'S AND A LIMESTONE FGD SYSTEM BOTH SUPPLIED BY RESEARCH-COTTRELL. THE FGD SYSTEM CONSISTS OF 6 PACKED/SPRAY TOWER ABSORBERS WHICH TREAT 75% OF THE TOTAL BOILER FLUE GAS. THE REMAINING FLUE GAS IS BYPASSED FOR REHEAT. TOTAL SO2 REMOVAL EFFICIENCY IS 70.5%. THE FLUE GAS CLEANING WASTES ARE STABILIZED AND DISPOSED IN AN ON-SITE, LINED POND.
TEXAS UTILITIES CO. MARTIN LAKE NO. 2 793 MW - NEW COAL 1.0 PERCENT SULFUR RESEARCH COTTRELL LIMESTONE SCRUBBING STARTUP 2/78	THIS NEW 793-MW POWER GENERATING UNIT WILL FIRE TEXAS LIGNITE CONTAINING 0.9% SULFUR (AVG.) AND 8% ASH (AVG.). TO MEET FEDERAL NSPS, THE UNIT WILL BE EQUIPPED WITH AN EMISSION CONTROL SYSTEM CONSISTING OF COLD-SIDE ESP'S AND A LIMESTONE FGD SYSTEM, BOTH SUPPLIED BY RESEARCH-COTTRELL. THE FGD SYSTEM CONSISTS OF 6 PACKED/SPRAY TOWER ABSORBERS WHICH WILL TREAT 75% OF THE TOTAL BOILER FLUE GAS. THE REMAINING GAS WILL BE BYPASSED FOR REHEAT. TOTAL DESIGN SO2 REMOVAL EFFICIENCY IS 70.5%. THE FLUE GAS CLEANING WASTES WILL BE STABILIZED AND DISPOSED IN AN ON-SITE, LINED POND.
TEXAS UTILITIES CO. MARTIN LAKE NO. 3 793 MW - NEW COAL 1.0 PERCENT SULFUR RESEARCH COTTRELL LIMESTONE SCRUBBING STARTUP 12/78	THIS NEW 793-MW POWER GENERATING UNIT WILL FIRE TEXAS LIGNITE CONTAINING 0.9% SULFUR (AVG.) AND 8% ASH (AVG.). TO MEET FEDERAL NSPS, THE UNIT WILL BE EQUIPPED WITH AN EMISSION CONTROL SYSTEM CONSISTING OF COLD-SIDE ESP'S AND A LIMESTONE FGD SYSTEM, BOTH SUPPLIED BY RESEARCH-COTTRELL. THE FGD SYSTEM CONSISTS OF 6 PACKED/SPRAY TOWER ABSORBERS WHICH WILL TREAT 75% OF THE TOTAL BOILER FLUE GAS. THE REMAINING GAS WILL BE BYPASSED FOR REHEAT. TOTAL DESIGN SO2 REMOVAL EFFICIENCY IS 70.5%. THE FLUE GAS CLEANING WASTES WILL BE STABILIZED AND DISPOSED IN AN ON-SITE, LINED POND.
TEXAS UTILITIES CO. MARTIN LAKE NO. 4 793 MW - NEW COAL 1.0 PERCENT SULFUR RESEARCH COTTRELL LIMESTONE SCRUBBING STARTUP 11/82	THE CONTRACT FOR THIS FGD SYSTEM HAS BEEN AWARDED TO RESEARCH-COTTRELL. THE BOILER IS NOW BEING ERECTED. START-UP IS SCHEDULED FOR THE FOURTH QUARTER OF 1982.
TEXAS UTILITIES CO. MONTICELLO NO.3 750 MW - NEW LIGNITE 1.5 PERCENT SULFUR CHEMICO LIMESTONE SCRUBBING STARTUP 2/78	THE EMISSION CONTROL SYSTEM FOR THIS UNIT CONSISTS OF A HIGH EFFICIENCY ESP AND A LIMESTONE FGD SYSTEM. THE ESP (POLLUTION CONTROL-WALTHER) IS PROVIDED FOR PRIMARY PARTICULATE CONTROL (99.56%). THE FGD SYSTEM CONSISTS OF LIMESTONE SCRUBBING SPRAY TOWERS (CHEMICO) AND WILL PROVIDE PRIMARY SO2 CONTROL (74%). THE FGD SYSTEM IS DESIGNED TO TREAT APPROXIMATELY 3MM SCFM OF FLUE GAS RESULTING FROM COAL WITH 1.5% SULFUR, 18.9% ASH AND 0.04% CI. THE FLUE GAS CLEANING WASTES WILL BE STABILIZED AND DISPOSED IN AN ON-SITE, LINED POND. CURRENTLY, INSTALLATION IS NEARING COMPLETION.
UNITED POWER ASSOCIATION COAL CREEK NO. 1 545 MW - NEW LIGNITE - 0.63 PERCENT SULFUR COMBUSTION ENGINEERING LIME SCRUBBING STARTUP 11/78	THE CONTRACT FOR THIS SCRUBBING SYSTEM HAS BEEN AWARDED TO COMBUSTION ENGINEERING FOR THE INSTALLATION OF LIME FGD SYSTEMS ON UNITS NOS.1 AND 2 AT THIS STATION. THE SCRUBBING SYSTEM FOR EACH BOILER WILL CONSIST OF 4 SPRAY TOWER ABSORBER MODULES FOR REMOVING SO2 FROM THE FLUE GAS. ELECTROSTATIC PRECIPITATORS WILL BE INSTALLED UPSTREAM OF EACH SCRUBBING SYSTEM. FGD CONSTRUCTION BEGAN IN EARLY AUGUST 1977.
UNITED POWER ASSOCIATION COAL CREEK NO. 2 545 MW - NEW LIGNITE - 0.63 PERCENT SULFUR COMBUSTION ENGINEERING LIME SCRUBBING STARTUP 11/79	THE CONTRACT FOR THIS SCRUBBING SYSTEM HAS BEEN AWARDED TO COMBUSTION ENGINEERING FOR THE INSTALLATION OF LIME FGD SYSTEMS ON UNITS NOS. 1 AND 2 AT THIS STATION. THE SCRUBBING SYSTEM FOR EACH BOILER WILL CONSIST OF 4 SPRAY TOWER ABSORBER MODULES FOR REMOVING SO2 FROM THE FLUE GAS. ELECTROSTATIC PRECIPITATORS WILL BE INSTALLED UPSTREAM OF EACH SCRUBBING SYSTEM. FGD CONSTRUCTION BEGAN IN AUGUST 77. THE START-UP TARGET DATE MAY NOT BE ACHIEVED DUE TO DELAYS IN CONSTRUCTION SCHEDULE.
UTAH POWER & LIGHT CO. EMERY NO.1 400 MW - NEW COAL 0.5 PERCENT SULFUR CHEMICO LIME SCRUBBING STARTUP 12/78	A CONTRACT HAS BEEN AWARDED TO THE CHEMICO AIR POLLUTION DIVISION FOR A PEBBLE LIME WET SCRUBBING SYSTEM ON THIS NEW UNIT. THE SCRUBBING SYSTEM IS DESIGNED TO OPERATE IN AN OPEN WATER LOOP MODE WITH AN SO2 REMOVAL EFFICIENCY OF 80 PERCENT FOR LOW SULFUR UTAH COAL. PRIMARY PARTICULATE CONTROL WILL BE PROVIDED BY AN ESP UPSTREAM OF THE SCRUBBERS. THE SCRUBBER SLUDGE WILL BE STABILIZED WITH FLYASH AND DISPOSED ON THE PLANT SITE. THE A-E DESIGN FIRM FOR THIS PROJECT IS STEARNS-ROGER. CONSTRUCTION IS UNDERWAY ON THE FGD SYSTEM FOR THIS UNIT.

TABLE 2
STATUS OF FGD SYSTEMS AS OF 01/78

COMPANY POWER STATION	CURRENT MONTH
UTAH POWER & LIGHT CO. HUNTINGTON NO.1 415 MW - NEW COAL 0.5 PERCENT SULFUR CHEMICO LIME SCRUBBING STARTUP 4/78	A CONTRACT HAS BEEN AWARDED TO CHEMICO AIR POLLUTION DIVISION FOR A LIME SCRUBBING SYSTEM ON THIS NEW UNIT. SITE PREPARATION AND CONSTRUCTION IS NEARING COMPLETION. THE STATE OF UTAH REGULATIONS REQUIRE THE BEST AVAILABLE AND MOST COST EFFECTIVE TECHNOLOGY FOR SULFUR DIOXIDE REMOVAL. PRIMARY PARTICULATE REMOVAL WILL BE PROVIDED BY AN ESP INSTALLED UPSTREAM OF THE WET SCRUBBING SYSTEM. THE TURNKEY COST FOR THE TWO FGD SYSTEMS (EMERY NO.1 AND HUNTINGTON NO.1) IS $29 MM AND $26 MM RESPECTIVELY.
VIRGINIA ELECTRIC AND POWER CO MT. STORM 1147 MW - RETROFIT COAL NOT SELECTED NOT SELECTED STARTUP 0/ 0	THE UTILITY IS PRESENTLY CONSIDERING BOTH DESULFURIZATION AND THE USE OF LOW SULFUR COAL. A DESULFURIZATION SYSTEM WOULD TREAT 69 PERCENT OF THE FLUE GAS FROM THREE BOILERS. CONSTRUCTION AND STARTUP DATES ARE CONSIDERED INDEFINITE AT THIS TIME.
WISCONSIN POWER & LIGHT CO. COLUMBIA NO. 2 527 MW - NEW COAL 0.8 PERCENT SULFUR CHEMICO LIME/ALKALINE FLYASH SCRUBBING STARTUP 1/80	A CONTRACT HAS BEEN AWARDED TO CHEMICO FOR A LIME/FLYASH FGD SYSTEM. IT WILL CONSIST OF TWO SPRAY MODULES WITH A HOT-SIDE ESP FOR PARTICULATE REMOVAL. A CLOSED LOOP WATER SYSTEM IS ANTICIPATED WITH FLYASH STABILIZATION OF THE SLUDGE. A SLUDGE DISPOSAL POND LOCATED OFF-SITE IS BEING CONSIDERED. THE SCRUBBERS ARE BEING DESIGNED TO TREAT 60% OF THE FLUE GAS RESULTING FROM THE COMBUSTION OF LOW SULFUR COLSTRIP COAL. THE REMAINING 40% WILL BE BYPASSED FOR REHEAT. CURRENTLY, THE UTILITY IS MAKING TESTS TO STUDY ALTERNATE SO2 COMPLIANCE STRATEGIES.

CONTENTS - TABLE 3

UTILITY COMPANY POWER STATION	SIZE OF FGD RETROFIT UNIT (MW)	PROCESS/VENDOR	PAGE NO.
ARIZONA PUBLIC SERVICE CHOLLA NO 1	115	RESEARCH COTTRELL LIMESTONE SCRUBBING	24
COLUMBUS & SOUTHERN OHIO ELEC. CONESVILLE NO 5	400	UNIVERSAL OIL PRODUCTS LIME SCRUBBING	29
DUQUESNE LIGHT ELRAMA POWER STATION	510	CHEMICO LIME SCRUBBING	33
DUQUESNE LIGHT PHILLIPS POWER STATION	410	CHEMICO LIME SCRUBBING	38
INDIANAPOLIS POWER & LIGHT CO. PETERSBURG NO 3	530	UNIVERSAL OIL PRODUCTS LIMESTONE SCRUBBING	43
KANSAS CITY POWER & LIGHT HAWTHORN NO. 3	140	COMBUSTION ENGINEERING LIME SCRUBBING	45
KANSAS CITY POWER & LIGHT HAWTHORN NO. 4	100	COMBUSTION ENGINEERING LIME SCRUBBING	50
KANSAS CITY POWER & LIGHT LA CYGNE NO 1	820	BABCOCK & WILCOX LIMESTONE SCRUBBING	55
KANSAS POWER & LIGHT LAWRENCE NO 4	125	COMBUSTION ENGINEERING LIMESTONE SCRUBBING	60
KANSAS POWER & LIGHT LAWRENCE NO 5	400	COMBUSTION ENGINEERING LIMESTONE SCRUBBING	64
KENTUCKY UTILITIES GREEN RIVER NOS. 1 2 AND 3	64	AMERICAN AIR FILTER LIME SCRUBBING	68
LOUISVILLE GAS & ELECTRIC CANE RUN NO 4	178	AMERICAN AIR FILTER LIME SCRUBBING	73
LOUISVILLE GAS & ELECTRIC PADDYS RUN NO 6	65	COMBUSTION ENGINEERING LIME SCRUBBING	77
MINNKOTA POWER COOPERATIVE MILTON R. YOUNG NO. 2	450	ADL/COMBUSTION EQUIP ASSOCIATE LIME/ALKALINE FLYASH SCRUBBING	81
MONTANA POWER CO. COLSTRIP NO 1	360	ADL/COMBUSTION EQUIP ASSOCIATE LIME/ALKALINE FLYASH SCRUBBING	84
MONTANA POWER CO. COLSTRIP NO 2	360	ADL/COMBUSTION EQUIP ASSOCIATE LIME/ALKALINE FLYASH SCRUBBING	85
NEVADA POWER REID GARDNER NO 1	125	ADL/COMBUSTION EQUIP ASSOCIATE SODIUM CARBONATE SCRUBBING	88
NEVADA POWER REID GARDNER NO 2	125	ADL/COMBUSTION EQUIP ASSOCIATE SODIUM CARBONATE SCRUBBING	93
NEVADA POWER REID GARDNER NO 3	125	ADL/COMBUSTION EQUIP ASSOCIATE SODIUM CARBONATE SCRUBBING	99
NORTHERN INDIANA PUB SERVICE D.H. MITCHELL NO.11	115	DAVY POWERGAS/ALLIED CHEMICAL WELLMAN LORD/ALLIED CHEMICAL	104
NORTHERN STATES POWER CO. SHERBURNE COUNTY STATION NO.1	710	COMBUSTION ENGINEERING LIMESTONE SCRUBBING	107
NORTHERN STATES POWER CO. SHERBURNE COUNTY STATION NO.2	710	COMBUSTION ENGINEERING LIMESTONE SCRUBBING	111
PENNSYLVANIA POWER CO. BRUCE MANSFIELD NO. 1	825	CHEMICO LIME SCRUBBING	114
PENNSYLVANIA POWER CO. BRUCE MANSFIELD NO. 2	825	CHEMICO LIME SCRUBBING	120
PHILADELPHIA ELECTRIC CO. EDDYSTONE NO. 1A	120	UNITED ENGINEERS / PECO MAGNESIUM OXIDE SCRUBBING	123

CONTENTS - TABLE 3

UTILITY COMPANY POWER STATION	SIZE OF FGD UNIT RETROFIT (MW)	PROCESS/VENDOR	PAGE NO.
SOUTH CAROLINA PUBLIC SERVICE WINYAH NO. 2	280	BABCOCK & WILCOX LIMESTONE SCRUBBING	127
SPRINGFIELD CITY UTILITIES SOUTHWEST NO. 1	200	UNIVERSAL OIL PRODUCTS LIMESTONE SCRUBBING	130
TENNESSEE VALLEY AUTHORITY SHAWNEE NO.10A	10	UNIVERSAL OIL PRODUCTS LIME/LIMESTONE SCRUBBING	133
TENNESSEE VALLEY AUTHORITY SHAWNEE NO.10B	10	CHEMICO LIME/LIMESTONE SCRUBBING	134
TENNESSEE VALLEY AUTHORITY WIDOWS CREEK NO. 8	550	TENNESSEE VALLEY AUTHORITY LIMESTONE SCRUBBING	141
TEXAS UTILITIES CO. MARTIN LAKE NO. 1	793	RESEARCH CUTTRELL LIMESTONE SCRUBBING	144

TABLE 3
PERFORMANCE DESCRIPTION FOR OPERATIONAL FGD SYSTEMS THROUGH 01/78

UTILITY NAME	ARIZONA PUBLIC SERVICE
UNIT NAME	CHOLLA NO 1
UNIT LOCATION	JOSEPH CITY ARIZONA
UNIT RATING	115 MW
FUEL CHARACTERISTICS	COAL 0.44-1 PERCENT SULFUR
FGD VENDOR	RESEARCH COTTRELL
PROCESS	LIMESTONE SCRUBBING
NEW OR RETROFIT	RETROFIT
START UP DATE	10/73
FGD STATUS	OPERATIONAL
EFFICIENCY, PARTICULATES	99.7 PERCENT
SO2	58.5 PERCENT
WATER MAKE UP	OPEN LOOP 1.04 GPM/MW
SLUDGE DISPOSAL	EXISTING FLY ASH POND
UNIT COST	SEE APPENDIX A, FGD SYSTEM ECONOMICS
OPERATIONAL EXPERIENCE	REFER TO THE BACKGROUND INFORMATION SECTION IN TABLE 3 OF THIS REPORT. THIS LIMESTONE SCRUBBING SYSTEM WAS PLACED IN SERVICE IN OCTOBER 1973. THE SCRUBBER PLANT CONSISTS OF TWO PARALLEL SCRUBBING TRAINS. PARTICULATE CONTROL IS PROVIDED BY TWO FLOODED-DISC SCRUBBERS. SO2 CONTROL IS PROVIDED BY ONE PACKED (MUNTERS PACKING) TOWER (A-SIDE). FLUE GAS CLEANING WASTES ARE DISCHARGED TO AN EXISTING FLY ASH POND. NO WATER IS RECYCLED BACK FROM THE DISPOSAL POND. IN-LINE STEAM REHEATERS RAISE THE GAS TEMPERATURE 40 F.

BACKGROUND INFORMATION
ON
CHOLLA NO. 1

THE CHOLLA POWER STATION, LOCATED NEAR JOSEPH CITY, ARIZONA, HAS ONE 115-MW COAL-FIRED BOILER IN SERVICE AND TWO 250-MW UNITS UNDER CONSTRUCTION. CHOLLA NO. 1 IS A DRY-BOTTOM PULVERIZED-COAL-FIRED UNIT DESIGNED BY COMBUSTION ENGINEERING. THE AVERAGE CHARACTERISTICS OF THE COAL BURNED DURING THE COURSE OF 1975 ARE: HEAT CONTENT OF 10,150 BTU/LB; ASH CONTENT OF 13.45 PERCENT; SULFUR CONTENT OF 0.52 PERCENT; CHLORIDE OF 0.04 PERCENT (MAX.); AND MOISTURE CONTENT OF 14.77 PERCENT.

THE FGD SYSTEM AT THE CHOLLA PLANT WAS MANUFACTURED BY RESEARCH-COTTRELL, AND INSTALLATION WAS COMPLETED ON DECEMBER 3, 1973. THE COMBINED SULFUR DIOXIDE DESIGN REMOVAL EFFICIENCY (FOR BOTH MODULES A AND B) IS 58.5 PERCENT. THE SYSTEM CONSISTS OF TWO PARALLEL TRAINS (MODULES A AND B). EACH TRAIN IS DESIGNED FOR 240,000 ACFM THROUGHOUT AT 276 F, AND HANDLES APPROXIMATELY 50 PERCENT OF THE BOILER'S FLUE GAS LOAD. THE A-SIDE CONSISTS OF A CEILCOTE-LINED VARIABLE-THROAT FLOODED DISC SCRUBBER (FDS) FOLLOWED BY A PACKED TOWER (MUNTER'S PACKING). THE B-SIDE IS SIMILAR IN DESIGN. HOWEVER, THE TOWER IS NOT PACKED AND LIMESTONE SLURRY IS NOT CIRCULATED THROUGH IT. EITHER ONE OR BOTH OF THE SCRUBBERS CAN BE BY-PASSED. GAS LEAKAGE AROUND EACH TRAIN IS ESTIMATED TO BE ABOUT 4.5 PERCENT OF THE GAS BEING TREATED. THE TOWER PACKING, WHICH IS APPROXIMATELY 2-FEET THICK, IS CONSTRUCTED OF POLYPROPYLENE CORRUGATED SHEETS JOINED TOGETHER IN CRISS-CROSS PATTERNS SIMILAR TO HONEYCOMBS. THE TOWER MIST ELIMINATORS ARE CONSTRUCTED OF POLYPROPYLENE, AND THE REHEATERS ARE SHELL AND TUBE TYPE CONSISTING OF 3 STAINLESS STEEL TUBE BUNDLES PER UNIT. THE STACK IS ACID BRICK LINED. PIPING AND RECIRCULATING PUMPS ARE RUBBER LINED.

LIMESTONE FOR THE FGD SYSTEM IS PURCHASED IN GROUND FORM SUITABLE FOR SLURRYING. THE MAIN SOURCE OF SUPPLY IS THE SUPERIOR CO. LOCATED NEAR PHOENIX, ARIZONA. THIS GRADE OF LIMESTONE IS GENERALLY KNOWN AS RED WALL LIMESTONE AND IS CONSIDERED A VERY HIGH QUALITY GRADE. CHEMICAL SPECIFICATIONS ARE: MINIMUM CALCIUM OXIDE CONTENT, 52 PERCENT; MINIMUM CALCIUM CARBONATE CONTENT, 95 PERCENT; MAXIMUM MAGNESIUM OXIDE CONTENT, 2 PERCENT; MAXIMUM MAGNESIUM CARBONATE CONTENT, 0.5 PERCENT; MAXIMUM SILICA CONTENT, 1 PERCENT.

THE PLANT HAS NO SLUDGE TREATMENT OR FIXATION SYSTEMS. THE SLUDGE IS PUMPED TO THE FLY ASH POND ON AN INTERMITTENT BASIS THROUGH A COMMON PIPING SYSTEM WITH THE FLY ASH. NO POND WATER IS RECYCLED TO THE FGD SYSTEM (SOLAR EVAPORATION POND). A GENERAL PROCESS FLOW DIAGRAM OF THE CHOLLA FGD SYSTEM IS PRESENTED IN APPENDIX B.

PROBLMS AND SOLUTIONS: INITIAL AND SUBSEQUENT OPERATION

DECEMBER, 1973 TO APRIL 2, 1974: BECAUSE OF A DIFFERENCE IN THE SIZE OF THE MAIN DUCT AND REHEATER TRANSITION DUCT, THE GAS FLOW PRODUCED HARMONIC VIBRATIONS IN THE REHEATER. THE VIBRATIONS WERE PARTIALLY DAMPED BY INSTALLATION OF BAFFLES. ONE OF THE REHEATER TUBE BUNDLES WAS BADLY CORRODED BY ACID THAT CONDENSED IN THE UNINSULATED DUCT UPSTREAM OF THE REHEATERS. THE TUBE BUNDLE WAS REPLACED, AND A BAFFLE WAS INSTALLED TO DIVERT CONDENSED ACID FROM REHEATER TUBES. ALSO, THE DUCT UPSTREAM OF THE REHEATER WAS INSULATED. THE ACID CONDENSATION OCCURED ONLY IN THE B-MODULE WHICH CONTAINS NO INTERNAL PACKING AND THEREFORE HAS A LOWER DEGREE OF SULFUR DIOXIDE REMOVAL (25 PERCENT).

ANOTHER PROBLEM RESULTED BECAUSE OF SOLIDS BUILD UP IN THE FDS STUFFING GLAND BOX AND ON TOP OF THE SPRAY DOME. ALSO, SOME LINES PLUGGED, PARTICULARLY WHEN THE SYSTEM OPERATED AT LOW FLOW RATES. SOLIDS SETTLED OUT IN STANDBY PUMPS, AND EXCESSIVE FAN VIBRATIONS OCCURRED BECAUSE OF ACCUMULATION OF SCALE BUILDUP WHEN THE UNIT WAS IDLE. TO SOLVE THESE PROBLEMS, THE PACKING GLAND POSITION WAS REVERSED (INSTALLED UPSIDE DOWN), THE FAN WAS SANDBLASTED, THE PIPING WAS MODIFIED TO ELIMINATE STAGNANT POCKETS, AND PUMPS WERE FLUSHED IMMEDIATELY AFTER REMOVAL FROM SERVICE.

OPERATION OF THE SYSTEM THROUGHOUT 1975 AND 1976 WAS ACCOMPANIED BY A NUMBER OF MINOR PROBLEM AREAS INCLUDING: SIGNIFICANT CORROSION ATTACK IN THE VESSEL WALLS OF THE VENTURI FLOODED-DISC PARTICULATE SCRUBBER MODULE: ACID CORROSION IN THE B-SIDE REHEATER HOUSING; SCALE BUILDUP IN THE PIPEOUTLET AT THE SLUDGE/FLY ASH EVAPORATION POND; PLUGGING IN THE SCRUBBER TOWER PACKING AND MIST ELIMINATOR; EROSION IN THE PUMPS; CORROSION IN THE BOILER EXHAUST ELBOW OF THE DUCTWORK LEADING FROM THE SCRUBBERS TO THE STACK. ADDITIONAL INFORMATION AND DATA ON THE PERFORMANCE OF THE CHOLLA FGD SYSTEM ARE PROVIDED IN THE TABLE THAT FOLLOWS.

ARIZONA PUBLIC SERVICE | FGD SYSTEM RELIABILITY CHOLLA UNIT NO. 1 | CHOLLA UNIT NO. 1

MONTH	RELIABILITY (%) MODULE A	MODULE B	COMMENTS
JAN. 74	97	90	
FEB. 74	100	94	
MAR. 74	100	66	
APR. 74	66	57	
MAY 74	98	99	
JUN. 74	100	100	
JUL. 74	97	92	
AUG. 74	97	97	
SEP. 74	95	99	
OCT. 74	83	68	ANNUAL BOILER AND FGD SYSTEM OVERHAUL.
NOV. 74	100	98	
DEC. 74	100	100	
JAN. 75	98	99	
FEB. 75	96	99	
MAR. 75			
APR. 75	88	65	
MAY 75	48	40	MODULES WERE BOTH OFF-LINE FOR MOST OF MONTH FOR SCHEDULED REPAIRS AND CLEANING.
JUN. 75	100	100	PLUGGING IN THE A-SIDE ABSORBER PACKING AND MIST ELININATORS WAS OBSERVED. NO OTHER MAJOR PROBLEMS WERE ENCOUNTERED DURING THE PERIOD.
JUL. 75	97	98	MODULES WERE SHUT DOWN TO CLEAN FLOW RESTRICTIONS IN FLOODED-DISC RECIRCULATION LINES.
AUG. 75	95	100	THE A SIDE WAS SHUT DOWN ONCE FOR INSPECTION.
SEP. 75	98	97	MINOR OUTAGE RESULTED FROM PLUGGED FDS RECIRCULATION LINES.
OCT. 75	84	55	OUTAGES RESULTED FROM SCHEDULED EQUIPMENT OVERHAULS AND RECOATING OF VESSELS.
NOV. 75	100	80	NO MAJOR OUTAGES OR PROBLEMS OCCURED DURING THE REPORT PERIOD.
DEC. 75	100	100	MINOR PROBLEMS ENCOUNTERED INCLUDED RECYCLE PUMP REBUILDING AND MALFUNCTIONING OF THE B-SIDE REHEATER COIL.
JAN. 76	99	99	MODULE A OPERATED 715 HOURS DURING THE REPORT MONTH, AND MODULE B OPERATED 654 HOURS. MODULE A EXPERIENCED SOME MINOR VALVE AND LINE PLUGGING. MODULE B OPERATING HOURS WERE LOWER BECAUSE OF REDUCED SYSTEM REQUIREMENTS.
FEB. 76			
MAR. 76			
APR. 76	99	98	THE UNIT IS CURRENTLY EXPERIENCING COATING FAILURES IN THE ELBOW OF THE SCRUBBER EXHAUST DUCT. ALSO, THE UTILITY PERFORMED SOME MINOR REPAIRS TO THE HOUSING OF THE B-SIDE REHEATER.
MAY 76	76	100	DURING THE MONTH THE A-SIDE EXPERIENCED SOME CORROSION AND PLUGGING PROBLEMS IN THE REHEATER TUBES. IN ADDITION TO PLUGGED FDS LINES, PACKING AND MIST ELIMINATORS, APS ALSO REPORTED THAT HEAVY PUMP MAINTENANCE WAS REQUIRED.
JUN. 76	64	39	LOW RELIABILITY FACTORS FOR THE MONTH OF JUNE RESULTED FROM A SCHEDULED MID-YEAR SCRUBBER SHUTDOWN FOR MAINTENANCE, INSPECTION AND REPAIRS. SOME SCALING AND CORROSION PROBLEMS WERE UNCOVERED IN THE SYSTEM'S RECYCLE TANKS.
JUL. 76	100	98	DURING THE JULY-AUGUST PERIOD THE UTILITY REPORTED THAT REPAIRS

MONTH	RELIABILITY (%) MODULE A	MODULE B	COMMENTS
AUG. 76	100	100	TO THE COATING IN THE ELBOW OF THE SCRUBBER EXHAUST DUCT WERE COMPLETED. A MALFUNCTIONING SOLENOID VALVE IN THE MIST ELIMINATOR WASH SYSTEM OF THE B-SIDE, PREVENTING ADEQUATE WASHING, RESULTED IN A MINOR SCRUBBER OUTAGE.
SEP. 76	100	100	THE BOILER REMAINED IN SERVICE THE ENTIRE MONTH. A-SIDE SERVICE TIME WAS 720 HOURS. B-SIDE SERVICE TIME WAS 676 HOURS. NO SIGNIFICANT PROBLEMS WERE REPORTED.
OCT. 76	56	56	THE BOILER WAS IN SERVICE 417 HOURS DURING THE MONTH. A-SIDE AND B-SIDE OPERATIONAL HOURS WERE 415 AND 277 RESPECTIVELY.
NOV. 76	96	98	DURING THE MONTH THE BOILER, A-SIDE AND B-SIDE TRAINS WERE IN SERVICE 720, 682 AND 556 HOURS, RESPECTIVELY. TWO MINOR FORCED SCRUBBER OUTAGES OCCURRED DURING THE PERIOD DUE TO A REHEATER STEAM LEAK AND INLET GAS DAMPER ADJUSTMENTS TO BOTH THE A-SIDE AND B-SIDE SCRUBBING TRAINS.
DEC. 76	98	100	BOILER, A-SIDE, AND B-SIDE OPERATION HOURS FOR THE MONTH WERE 744, 742 AND 498 HOURS, RESPECTIVELY. ONE OUTAGE WAS REPORTED BECAUSE OF AN ADDITIONAL ADJUSTMENT TO THE A-SIDE GAS INLET DAMPER.

NOTE: THE PERFORMANCE INDEX VALUES CONTAINED IN THE TEXT OF THIS TABLE ARE BASED UPON THE MODULES' ACTUAL SERVICE TIME FOR THE PERIOD VERSUS THE NUMBER OF HOURS THE MODULES ARE CALLED UPON TO OPERATE FOR THE SAME PERIOD. THE MODULES OPERATE ON A DEMAND-ONLY BASIS. FLUE GAS IS BYPASSED AROUND THE MODULES WHEN THEY ARE NOT REQUIRED FOR SERVICE.

JAN. 77	72	93	SERVICE HOURS FOR JANUARY: BOILER = 744, A-SIDE = 532, B-SIDE = 684.
FEB. 77	99	99	SERVICE HOURS FOR FEBRUARY\ BOILER = 672, A-SIDE = 648, B-SIDE = 591. THE MUNTERS PACKING IN THE A-SIDE TOWER WAS REPLACED. IN ADDITION SOME MINOR PROBLEMS WERE ENCOUNTERED IN THE FORM OF SCRUBBER VESSEL PLUGGING, MINOR CORROSION AND LIQUID PIPING PROBLEMS, AND MECHANICAL DIFFICULTIES WITH THE BY-PASS DAMPERS. AVERAGE SO2 INLET/OUTLET VALVES DURING THE PERIOD WERE 350 PPM AND 175 PPM.
MAR. 77	72	93	SERVICE HOURS FOR MARCH: BOILER = 744, A-SIDE = 532, B-SIDE = 684.
APR. 77	100	100	SERVICE HOURS FOR APRIL: BOILER = 638, A-SIDE = 635, B-SIDE = 629.
MAY. 77	87	87	SERVICE HOURS FOR MAY: BOILER = 645, A-SIDE = 645, B-SIDE = 645. OUTAGE TIME FOR THE BOILER AND THE FGD SYSTEM WERE A RESULT OF THE SCHEDULED MID-YEAR SCRUBBER CLEANOUT. DURING MAY, RESEARCH-COTTRELL PERSONNEL CONDUCTED FORCED OXIDATION TESTS, BY BLOWING AIR INTO THE FLOODED DISC SCRUBBER AND CONVERTING ALL CASO3 TO CASO4 FOR SUPERIOR SLUDGE DEWATERING, HANDLING AND SCALE-FREE OPERATION.
JUN. 77	100	100	SERVICE HOURS FOR JUNE: BOILER, A-SIDE AND B-SIDE = 720.
JUL. 77	97	99	SERVICE HOURS FOR JULY: BOILER = 744, A-SIDE = 724, B-SIDE = 734. MINOR PROBLEMS INCLUDED A LEAK IN THE LIMESTONE SLURRY TANK AND A LEAK IN THE B-SIDE RETURN LIME FROM THE FDS TO THE FDS TANK. RESEARCH-COTTRELL PERSONNEL ARE STILL ON THE PLANT SITE, CONTINUING FORCED OXIDATION STUDIES.
AUG. 77	97	99	SERVICE HOURS FOR AUGUST: BOILER = 744, A-SIDE = 723.3, B-SIDE = 733.7.
SEP. 77	100	100	FOR SEPTEMBER: BOILER = 720, A-SIDE = 717.9, B-SIDE = 717.8. THE DOWNTIME WAS REQUIRED TO REPAIR TWO DIFFERENT LEAKS. ONE LEAK OCCURRED AT THE SLURRY DISPOSAL TANK. THE OTHER WAS LOCATED IN THE FDS RETURN LINE BETWEEN THE TOWER AND FDS TANK.
OCT. 77	100	100	SERVICE HOURS FOR OCTOBER: BOILER = 744, A-SIDE AND B-SIDE 743.2. OPERATIONS WERE VERY SUCCESSFUL IN OCTOBER 1977.

ARIZONA PUBLIC SERVICE FGD SYSTEM RELIABILITY CHOLLA UNIT NO. 1

CHOLLA UNIT NO. 1

MONTH	RELIABILITY (%) MODULE A	MODULE B	COMMENTS
NOV. 77	100	98	SERVICE HOURS FOR NOVEMBER: BOILER AND A-SIDE = 168.5, B-SIDE = 142. B-SIDE OUTAGE DUE TO LEAKS IN VENTURI SECTION OF SCRUBBER AND EXPANSION JOINT IN RECYCLE PUMP. BOILER OPERATED ONLY 168.5 HOURS BECAUSE OF A SHUTDOWN FOR OVERHAUL IN LAST HALF OF NOVEMBER. SCHEDULED START-UP IS MID-DECEMBER.
DEC. 77			THE BOILER AND THE SCRUBBERS WERE DOWN AS THE OVERHAUL PERIOD CONTINUED. THIS WAS A MAJOR OVERHAUL AND EXTENDED INTO JAN. 78.
JAN. 78	97	91	DURING THE OVERHAUL THE FLOODED DISC SCRUBBER TANK HEADER FOR SLURRY LIME WAS DAMAGED REPAIRED. THE BOILER WAS OPERATED ONLY 135 HRS. DURING JANUARY AS THE OVERHAUL HAD EXTENDED INTO THIS MONTH.

TABLE 3
PERFORMANCE DESCRIPTION FOR OPERATIONAL FGD SYSTEMS THROUGH 01/78

UTILITY NAME	COLUMBUS & SOUTHERN OHIO ELEC.
UNIT NAME	CONESVILLE NO 5
UNIT LOCATION	CONESVILLE OHIO
UNIT RATING	400 MW
FUEL CHARACTERISTICS	COAL 4.5 - 4.9 PERCENT SULFUR
FGD VENDOR	UNIVERSAL OIL PRODUCTS
PROCESS	LIME SCRUBBING
NEW OR RETROFIT	NEW
START UP DATE	1/77
FGD STATUS	OPERATIONAL
EFFICIENCY, PARTICULATES	99.6 PERCENT
SO2	89.5 PERCENT
WATER MAKE UP	OPEN LOOP
SLUDGE DISPOSAL	PUMPED TO A LANDFILL
UNIT COST	SEE APPENDIX A, FGD SYSTEM ECONOMICS
OPERATIONAL EXPERIENCE	REFER TO THE BACKGROUND INFORMATION SECTION IN TABLE 3 OF THIS REPORT. THE BOILER AND ESP WERE COMPLETED AND PLACED IN SERVICE IN SEPT. 1976. THE B-SIDE MODULE BECAME AVAILABLE FOR SERVICE IN JANUARY 1977. COMMERCIAL OPERATIONS WERE ACHIEVED ON FEBRUARY 13, 1977. THE EMISSION CONTROL SYSTEM FOR THIS UNIT CONSISTS OF A COLD-SIDE ESP FOLLOWED BY TWO TCA LIME SCRUBBING MODULES SUPPLIED BY UOP. DRAVO IS SUPPLYING THE THIOSORBIC LIME SCRUBBING REAGENT. IUCS IS SUPPLYING THEIR POZ-O-TEC SLUDGE STABILAZATION FACILITY.

BACKGROUND INFORMATION ON CONESVILLE NO. 5

THE CONESVILLE POWER STATION IS LOCATED ON THE MUSKINGUM RIVER, APPROXIMATELY 740 FEET ABOVE SEA LEVEL, NEAR COSHOCTON, IN NORTHEAST OHIO. THE PLANT HAS A CURRENT CAPACITY OF 1644 MW (NAMEPLATE) WITH AN ADDITIONAL 411 MW UNDER CONSTRUCTION. UNITS 1,2, AND 3 HAVE A COMBINED CAPACITY OF 433 MW (UNITS 1 AND 2 HAVE A COMMON STACK). UNIT NO.4 IS RATED AT 800 MW AND UNIT NO.5 IS RATED AT 411 MW. UNIT NO.6, CURRENTLY UNDER CONSTRUCTION WILL ALSO BE RATED AT 411 MW. UNITS 3 AND 4 HAVE SEPARATE STACKS. UNITS 5 AND 6 SHARE A COMMON STACK.

BOILER NO. 5 IS A DRY-BOTTOM, PULVERIZED-COAL-FIRED COMBUSTION ENGINEERING UNIT, INSTALLED IN 1976. THE BOILER IS FIRED WITH 25 PERCENT EXCESS AIR AND IS RATED AT 89 PERCENT EFFICIENCY. THE HEAT RATE IS 8800 BTU/KWH. THE PLANT BURNS A MIXTURE OF HIGH-SULFUR OHIO COAL, WITH SULFUR CONTENTS OF FROM 4.2 TO 5.1 PERCENT, ASH CONTENTS OF FROM 12 TO 19 PERCENT, AND HEATING VALUES OF FROM 10,300 TO 11,220 BTU/LB. FORTY PERCENT OF THE COAL FIRED COMES BY CONVEYOR FROM A NEARBY (7 MILES DISTANT) COAL MINE COMPLEX. THE REMAINDER IS TRUCKED IN FROM SOUTHEAST OHIO.

THE AIR POLLUTION CONTROL SYSTEM AT CONESVILLE NO. 5 CONSISTS OF A RESEARCH-COTTRELL COLD-SIDE ESP, FOLLOWED BY TWO UNIVERSAL OIL PRODUCTS (UOP) SO2 ABSORBER MODULES. THE ESP IS DESIGNED FOR 99.65 PERCENT REMOVAL EFFICIENCY AND THE TURBULENT CONTACT ABSORBERS (TCA) MODULES ARE DESIGNED FOR SO2 REMOVAL EFFICIENCY OF 89.6 PERCENT. THE SYSTEM IS DESIGNED FOR AN OUTLET SO2 LOADING OF 1.0 LB/MILLION BTU INPUT. BOILER I.D. FANS ARE LOCATED IMMEDIATELY DOWNSTREAM OF THE ESP.

FOLLOWING THE I.D. FANS, THE FLUE GAS IS HEADERED INTO THE TWO PARALLEL TCA SCRUBBING TRAINS, EACH ABSORBER CAPABLE OF HANDLING 60 PERCENT OF THE FLUE GAS FLOW. A PRESATURATOR SECTION, CONSTRUCTED OF CARPENTER 20, QUENCHES THE HOT GAS, LOWERING THE TEMPERATURE FROM 286F TO 125F, AND PROVIDING INITIAL SO2 REMOVAL. THE GAS THEN ENTERS THE NEOPRENE-LINED, CARBON STEEL ABSORBER MODULES, WHERE TWO LEVELS OF 1.5 INCH BALLS PROVIDE TURBULENT BEDS FOR FINAL SO2 REMOVAL. THE LOWER STAGE IS COMPARTMENTED TO MAINTAIN UNIFORM BALL DEPTH. FOLLOWING EACH ABSORBER MODULE, THE FLUE GAS PASSES THROUGH A FIBERGLASS TRAP-OUT TRAY AND TWO HORIZONTAL BANKS OF CHEVRON-TYPE MIST ELIMINATORS. THE BOTTOM OF THE TRAP-OUT TRAY IS WASHED INTERMITTENTLY AND THE LOWER MIST ELIMINATOR IS WASHED CONTINUALLY WITH RECYCLED POND WATER. THE FLUE GAS FROM THE PARALLEL ABSORBER TRAINS IS THEN HEADERED INTO THE 800-FT, CEILCOTE-LINED STACK. FOLLOWING THE BOILER I.D. FAN THERE IS BYPASS BREECHING AROUND THE ENTIRE SCRUBBER LOOP. THERE IS NO STACK GAS REHEAT CURRENTLY BEING EMPLOYED, ALTHOUGH THE POSSIBILITY EXISTS OF ADD-ON REHEAT AT SOME FUTURE DATE.

DRAVO THIOSORBIC LIME FROM MAYSVILLE, KENTUCKY IS UTILIZED IN THE UOP SCRUBBER MODULES AT A STOICHIOMETRIC RATIO OF 1.1. THE CALCINED, PELLETIZED LIME HAS A NOMINAL PARTICLE DIAMETER OF 1.75 INCH, AN MGO CONTENT OF 3 TO 8 PERCENT AND A CAO CONTENT OF 90 TO 95 PERCENT. THE LIME SLAKER DISCHARGED THE 20 PERCENT SOLIDS SLURRY INTO AN AGITATED LIME SLURRY SUMP WHERE IT IS RETAINED FOR A 5-MINUTE PERIOD PRIOR TO TRANSFER TO THE LIME SLURRY STORAGE TANK, WHICH HANDLES THE SURGE REQUIREMENTS OF THE ABSORPTION SYSTEM. THE TRANSFER OF SLURRY FROM THE STORAGE TANK TO THE TCA RECYCLE TANKS IS ACCOMPLISHED BY VARIABLE SPEED PUMPS WHICH RESPOND TO CHANGING SO2 AND LOAD CONDITIONS VIA A PH MONITOR. THE SCRUBBING LIQUOR CONTAINS 7 TO 12 PERCENT SOLIDS. THE ABSORBENT LIQUOR IS RECIRCULATED BY 4 PUMPS (1 STANDBY) EACH RATED AT 12,000 GPM. SCRUBBER OUTLET PH IS 5.8, AND PH IN THE RECYCLE TANK IS APPROXIMATELY 6.8.

A BLEED STREAM OF SPENT REACTION PRODUCTS IS CONTINUOUSLY WITHDRAWN FROM THE TANK PUMPED TO THE THICKENER SYSTEM. THE THICKENER IS 100 FT IN DIAMETER AND 14 FT DEEP IN THE CENTER. HERE THE REACTION PRODUCT SLURRY IS CONCENTRATED TO AN UNDERFLOW COMPOSITION OF APPROXIMATELY 30-35 PERCENT SOLIDS. THIS UNDERFLOW IS CYCLED TO THE IUCS FIXATION FACILITIES WHERE IT IS FURTHER THICKENED, VACUUM FILTERED AND MIXED WITH A BLEND OF DRY FLY ASH AND LIME TO FORM A 73 PERCENT SOLIDS SUBSTANCE (IUCS POZ-O-TEC). THE PRODUCT IS BEING CYCLED TO A DIKED POND.

THE WASTE WATER POND, WHICH WILL RECEIVE THE ASH WATER, COOLING WATER BLOWDOWN AND WATER FROM THE SLUDGE TREATMENT PLANT, IS EXPECTED TO OVERFLOW INTO THE MUSKINGUM RIVER DURING ALL PLANT OPERATING PERIODS (LOW AND HIGH LOAD OPERATIONS). THEREFORE, ALL SYSTEM OPERATIONS WILL BE CONDUCTED IN A WATER POSITIVE MODE.

REFER TO APPENDIX B FOR A GENERAL PROCESS FLOW DIAGRAM. THE OPERATING HISTORY OF THE CONESVILLE UNIT IS SUMMARIZED CHRONOLOGICALLY IN THE PERFORMANCE TABLE THAT FOLLOWS.

COLUMBUS & SOUTHERN OHIO ELECTRIC — OPERATING HISTORY — CONESVILLE UNIT. 5
CONESVILLE NO. 5

MONTH/YR	MODULE AVAILABILITY (PERCENT) A	MODULE AVAILABILITY (PERCENT) B	MODULE OPERABILITY (PERCENT) A	MODULE OPERABILITY (PERCENT) B	COMMENTS
DEC. 76					SO2 REMOVAL OPERATIONS WERE SCHEDULED TO COMMENCE IN DECEMBER. HOWEVER A MAJOR FIRE IN MODULE NO. 5A DELAYED START-UP. THE FIRE CAUSED $2.1 MILLION DAMAGE TO THE MODULE. THE UTILITY'S INSURANCE COVERED THE DAMAGE AND A NEW SCRUBBER MODULE WILL BE PURCHASED FROM AND INSTALLED BY U.O.P. THE 5A MODULE IS SCHEDULED TO COMMENCE OPERATIONS IN NOVEMBER 1977. THE UTILITY IS CURRENTLY CONDUCTING AIR AND WATER TESTS ON MODULE 5B AND SCRUBBING OPERATIONS WITH 5B ARE NOW SCHEDULED FOR JANUARY.
JAN. 77					INITIAL START-UP FOR DEBUGGING AND COMMISSIONING PURPOSES OCCURRED IN EARLY JANUARY. EARLY OPERATIONS WERE MARKED BY COLD WEATHER RELATED PROBLEMS SUCH AS FROZEN LINES AND GEARS, CRACKED FLANGES, A FROZEN LIME BELT CONVEYOR, AND A FROZEN PIPELINE FROM THE THICKENER TO THE IUCS FACILITY. COMMERCIAL AVAILABILITY FOR SERVICE OCCURRED ON JANUARY 27. NO JANUARY OPERATING HOURS ARE AVAILABLE.
FEB. 77				43	COMMERCIAL START-UP OF MODULE 5B ACHIEVED ON FEBRUARY 13, 1977. AFTER START-UP, THE SCRUBBER LOGGED 286 HOURS OF OPERATION. THE LONGEST PERIOD OF CONTINUOUS OPERATION WAS 132 HOURS. THE BOILER LOGGED 668 HOURS DURING FEBRUARY. PROBLEMS INCLUDED PRESSURE SURGES IN THE PRESATURATOR PIPING LINE, UNSATISFACTORY OPERATION OF THE CONTINUOUS SO2 ANALYZERS, POOR VELOCITY DISTRIBUTION THROUGH THE TCA BEDS, AND CARRYOVER OF SCRUBBING LIQUID INTO THE MIST ELIMINATOR SECTION. THE ESP IS REPORTED TO BE OPERATING SATISFACTORILY. COMPLIANCE TESTING FOR THIS UNIT IS SCHEDULED FOR MAY 1977.

COLUMBUS & SOUTHERN OHIO ELECTRIC — CONESVILLE UNIT NO. 5

PERIOD	OPERATION TIME (HR) BOILER	A-SIDE	B-SIDE	COMMENTS
APR. 77	685		261	THE UTILITY REPORTED A NUMBER OF PROBLEM AREAS REGARDING SCRUBBER OPERATIONS DURING THE REPORT PERIOD. SPECIFICALLY, SOME CORROSION HAS BEEN REPORTED IN THE PRESATURATOR AREA (316 SS CONSTRUCTION), THE RUBBER LINER IN THE RECYCLE TANK IS PEELING OFF (PROBABLY AN APPLICATION PROBLEM), SOME PLUGGING IN THE TUBE THICKENERS HAS OCCURRED, AND THE QUALITY OF THE LIME SLURRY HAS BEEN A REAL PROBLEM AREA (ROCKS UP TO FIVE INCHES IN DIAMETER HAVE BEEN DETECTED). THE LATTER ITEM HAS PROMPTED DRAVO TO INSTALL MECHANICAL SEPARATORS AND METAL DETECTORS AT THE LIME SHIPMENT FACILITY. A STACK OUTLET TEMPERATURE OF 200 F IS BEING MAINTAINED IN ORDER TO MINIMIZE ACID RAINOUT AND STACK CORROSION PROBLEMS.
AVAILABILITY = 40 PERCENT				
OPERABILITY = 38 PERCENT				
RELIABILITY = 39 PERCENT				
UTILIZATION = 36 PERCENT				
MAY 77	712		355	
AVAILABILITY = 58 PERCENT				
OPERABILITY = 50 PERCENT				
RELIABILITY = 51 PERCENT				
UTILIZATION = 48 PERCENT				
JUN. 77	713		418	
AVAILABILITY = 66 PERCENT				
OPERABILITY = 59 PERCENT				
RELIABILITY = 60 PERCENT				
UTILIZATION = 58 PERCENT				
JUL. 77	744		0	THE B-SIDE MODULE DID NOT OPERATE THE ENTIRE MONTH PENDING COMPLETION OF A NUMBER OF NECESSARY MODIFICATIONS AND REPAIRS. THE MAJOR ITEMS ADDRESSED DURING THE PERIOD INCLUDED: *M MODIFICATIONS TO THE UNIT PROCESS CONTROL SYSTEM AND INSTRUMENTATION LOOPS. *REPAIRS TO THE RECLAIM WATER PIPING NETWORK. *REPAIRS TO THE ABSORBER LINER. *REPAIRS TO THE PIPING BETWEEN THE THICKENER AND IUCS BUILDING. THE UTILITY IS CURRENTLY PLANNING TO CONDUCT A PARTICULATE DROP TEST DURING THE MONTH OF SEPTEMBER. THE REPLACEMENT A-SIDE TCA MODULE REPLACING THE ORIGINAL MODULE DESTROYED BY FIRE DECEMBER OF 1976 IS EXPECTED TO BE AVAILABLE FOR COMMERCIAL SERVICE IN JANUARY 1978.
AUG. 77	0			THE SCRUBBER WAS NOT OPERATING THE ENTIRE MONTH. REPAIRS AND MODIFICATIONS CONTINUED UNTIL SEPTEMBER 13. THERE WERE SOME WEATHER-RELATED DELAYS.
ALL INDEX VALUES = 0 PERCENT				
SEP. 77	469		187	THERE HAD BEEN NO PROBLEMS RECORDED SINCE THE SCRUBBER OPERATION BEGAN AGAIN ON SEPTEMBER 13. THE UTILITY IS PREPARING FOR AN SO2 AND PARTICULATE DROP TEST PUSHED BACK FROM SEPTEMBER, AS PREVIOUSLY REPORTED, TO THE WEEK OF OCTOBER 24.
AVAILABILITY = 52.9 PERCENT				
PEPRABILITY = 39.9 PERCENT				
RELIABILITY = 46.9 PERCENT				
UTILIZATION = 26 PERCENT				
OCT. 77	559	0	135	B-MODULE HAD TO BE RELINED IN SOME AREAS WITH NEOPRENE RUBBER. SCRUBBER WAS DOWN FROM OCT. 10 TO NOV. 10.
AVAILABILITY (%) =			32	
OPERABILITY (%) =			24	
RELIABILITY (%) =			25	
UTILIZATION (%) =			18	
NOV. 77	715	9	234	MODULE A WENT BACK ON LINE NOV. 21. DURING LOW LOAD PERIODS SOLIDS BUILD UP TENDED TO CAUSE PLUGGING BECAUSE OF LOW FLOW RATES. DURING LOW LOAD PERIODS ALL GAS WAS DUCTED THROUGH ONE SCRUBBER WHILE THE OTHER WAS SHUTDOWN. DURING THE DECEMBER 1977 TO MARCH 1978 SHUTDOWN, THE CARBON STEEL FLUE WILL BE REPLACED BY ACID-BRICK LINED STACK.
AVAILABILITY (%) =		10	33	
OPERABILITY (%) =		4	33	
RELIABILITY (%) =		4	33	
UTILIZATION (%) =		4	33	
DEC. 77		162	199	CONESVILLE NO. 5 WENT DOWN DECEMBER 12 FOR A 3-MONTH SCHEDULED OUTAGE. MODULE A WAS STARTED DECEMBER 3 AND OPERATED AS MUCH AS POSSIBLE THROUGH DECEMBER 12. MODULE B OPERATED DECEMBER 1 THROUGH 12. THE UNIT WENT DOWN FOR A COMPLETE OVERHAUL TO CHECK HOW WELL VENDOR SPECS WERE ACHIEVED ON THE BOILER AND TURBINES. THE UNIT IS SCHEDULED TO BE BACK ON LINE IN MID-MARCH BUT THIS MAY BE PUSHED BACK TO APRIL 1ST. RELINING OF THE STACK IS STILL CONTINUING
AVAILABILITY (%) =		93	97	
OPERABILITY (%) =		64	79	
RELIABILITY (%) =		62	76	
UTILIZATION (%) =		22	27	
JAN. 78		0	0	
ALL INDEX VALUES = 0 PERCENT				

TABLE 3
PERFORMANCE DESCRIPTION FOR OPERATIONAL FGD SYSTEMS THROUGH 01/78

UTILITY NAME	DUQUESNE LIGHT
UNIT NAME	ELRAMA POWER STATION
UNIT LOCATION	ELRAMA PENNSYLVANIA
UNIT RATING	510 MW
FUEL CHARACTERISTICS	COAL 1.0 - 2.8 PERCENT SULFUR
FGD VENDOR	CHEMICO
PROCESS	LIME SCRUBBING
NEW OR RETROFIT	RETROFIT
START UP DATE	10/75
FGD STATUS	OPERATIONAL
EFFICIENCY, PARTICULATES	99 PERCENT
SO2	83 PERCENT DESIGN - 2% S COAL
WATER MAKE UP	OPEN LOOP
SLUDGE DISPOSAL	HAULAWAY TO OFF SITE LANDFILL
UNIT COST	SEE APPENDIX A, FGD SYSTEM ECONOMICS
OPERATIONAL EXPERIENCE	REFER TO THE BACKGROUND INFORMATION SECTION IN TABLE 3 OF THIS REPORT. OPERATIONS ARE CONTINUING WITH THREE BOILERS COUPLED INTO THE FIVE-MODULE SCRUBBING SYSTEM. THE PLANT IS FIRING 1.0 - 2.8 PERCENT SULFUR COAL. SCRUBBING WASTES ARE CHEMICALLY FIXATED BY THE IUCS SYSTEM AND LANDFILLED.

BACKGROUND INFORMATION ON ELRAMA POWER STATION

DUQUENSE LIGHT COMPANY, AN INVESTOR-OWNED ELECTRIC UTILITY, SERVES ABOUT ONE-HALF CUSTOMERS IN SOUTHWESTERN PENNSYLVANIA AND HAS A NET GENERATING CAPABILITY OF APPROXIMATELY 2500 MW. THIS CAPABILITY IS GENERATED BY COMBUSTION TURBINES IN SIMPLE AND COMBINED-CYCLE MODES, BY NUCLEAR PLANTS, AND BY COAL-FIRED POWER STATIONS. THE COMPANY IS SOLE OWNER AND OPERATOR OF THREE COAL-FIRED STATIONS, TWO OF WHICH HAVE BEEN RETROFITTED WITH WET SCRUBBERS USING LIME AS THE ABSORBING REAGENT.

THE SCRUBBER FACILITY AT THE 494-MW ELRAMA STATION IS ALMOST IDENTICAL TO THE SYSTEM AT THE PHILLIPS STATION. GIBB & HILL WAS THE A-E FIRM AND CHEMICO SCRUBBERS HAVE BEEN INSTALLED WITHIN THE SAME DESIGNATED BATTERY LIMITS AS PHILLIPS. MECHANICAL AND ELECTRICAL DUST-REMOVAL EQUIPMENT REMOVES MOST PARTICULATES FROM THE BOILER EMISSIONS, AND THE GAS TO AND FROM THE SCRUBBERS IS HEADERED IN THE SAME WAY. UNLIKE THE PHILLIPS SYSTEM, HOWEVER, THERE ARE FOUR BOILERS, EACH WITH ITS OWN TURBINE GENERATOR. FIVE SINGLE-STAGE SCRUBBERS WERE INSTALLED, WITH THE INTENTION THAT KNOWLEDGE GAINED FROM THE TEST PROGRAM AT PHILLIPS WOULD BE APPLIED TO ELRAMA TO ENABLE COMPLIANCE WITH EMISSION REGULATIONS (0.6 LB. SO2/MILLION BTU).

THE FIRST ELRAMA SCRUBBER WAS PLACED IN SERVICE ON OCTOBER 26, 1975. IT HAD BEEN SCHEDULED FOR AN EARLIER STARTUP DATE, BUT BECAUSE OF THE SEVERITY AND NUMBER OF PROBLEMS ENCOUNTERED AT PHILLIPS, STARTUP WAS DELAYED UNTIL MANY OF THE PROBLEMS AT PHILLIPS WERE RESOLVED AND THE MODIFICATIONS COULD BE INCORPORATED AT BOTH STATIONS.

THE SCRUBBERS ARE 30 FT DIA X 60 FT HIGH AND LINED WITH CEILCOTE. THE GAS FLOW RATE IS 550,000 ACFM AT 325 F. THE OUTLET GAS TEMPERATURE IS 120 F. THE LIQUID RECIRCULATION RATE IS 16,000 GPM AND THE SLURRY CONTAINS 3-5% SOLIDS. A PH OF 6 IS MAINTAINED IN THE SCRUBBER. THE I.D. FANS ARE RUBBER LINED AND HAVE 5500 HP. THE OVERALL PRESSURE DROP IS ABOUT 30 IN WG. THE RECIRCULATING PUMPS ARE 317 L SS, WHEREAS THE INTERCONNECTING PIPING IS RUBBER LINED.

BOILER NO. 2 WAS INITIALLY CONNECTED TO THE FGD SYSTEM ON OCTOBER 26, 1975. THIS BOILER HAS AN EQUIVALENT CAPACITY OF APPROXIMATELY 100 MW, AND THE EMISSIONS ARE HANDLED BY ONE SCRUBBER. TO ENSURE RELIABILITY IN THE CASE OF A SCRUBBER MALFUNCTION, TWO SCRUBBERS ARE OPERATED AT PARTIAL LOAD TO PROTECT THE BOILER AND TURBINE GENERATOR AGAINST A TRIP-OFF.

THE BOILER OPERATED CONTINUOUSLY ON THE SCRUBBER SYSTEM THROUGH JANUARY 1976. TWO MINOR OUTAGES OCCURRED DURING THIS PERIOD, ONE CAUSED BY INOPERATIVE THROAT DAMPERS AND THE OTHER INVOLVING FAILURE OF A LIME FEEDER BELT. ON FEB. 4, 1976, A SECOND BOILER WAS COUPLED INTO THE SCRUBBER COMPLEX. PRESENTLY, 2 UNITS ARE THE MAXIMUM THAT CAN BE TIED INTO THE SCRUBBER PLANT. TO DATE, THE UTILITY HAS ENCOUNTERED THE USUAL MINOR STARTUP PROBLEMS AND SOME MAJOR PROBLEMS AS WELL. THE MAJOR PROBLEMS HAVE BEEN FROZEN PIPES AND THICKENERS, THE LATTER INVOLVING HARDWARE AND DESIGN ASSOCIATED WITH RECIRCULATION OF THE SLUDGE WITHIN THE THICKENERS TO ATTAIN 30 TO 40 PERCENT SOLIDS CONCENTRATION.

THE SLUDGE BEING GENERATED AT THIS STATION IS TREATED BY THE IUCS METHOD, WHICH EMPLOYS A VACUUM FILTER THAT INCREASES THE SOLIDS IN THE UNDERFLOW TO 50 TO 60 PERCENT, SO THAT LESSER AMOUNTS OF DRY FLY ASH ARE REQUIRED FOR MIXING WITH THE SLUDGE.

DUQUESNE LIGHT

ELRAMA POWER STATION

PERIOD	OPERATING HOURS BOILER	SCRUBBER VESSELS 101	201	301	401	501	
OCT. 75 TO JAN. 76		1169		1508	976	838	ONE BOILER WAS CONNECTED TO THE SCRUBBER SYSTEM ON OCTOBER 26, 1975. A SECOND BOILER WAS CONNECTED ON FEBRUARY 4, 1976. FOUR OF THE SCRUBBER VESSELS HAVE BEEN IN SERVICE IN VARIOUS COMBINATIONS. THE SERVICE HOURS TO JANUARY 31, 1974 ARE POSTED IN THE ACCOMPANYING TABLE. THE FIFTH VESSEL HAS NOT BEEN IN SERVICE BECAUSE IT IS BEING REVISED FOR TRIAL INSTALLATION OF RUBBER-LINED RECYCLE PUMPS.
FEB. 76							
MAR. 76 APR. 76							THE SYSTEM OPERATED DURING THE REPORT PERIOD WITH 2 BOILERS COUPLED INTO THE SCRUBBING SYSTEM. REVISIONS TO THE FIFTH SCRUBBING VESSEL HAVE BEEN COMPLETED AND OPERATIONS ARE PROCEEDING WITH TWO RUBBER-LINED RECYCLE PUMPS.
MAY 76 JUN. 76							THE SYSTEM IS STILL OPERATING WITH TWO BOILERS COUPLED INTO THE SCRUBBING SYSTEM. THE FIFTH SCRUBBING VESSEL WAS TAKEN OUT OF SERVICE FOR REPAIRS AND MODIFICATIONS REQUIRED FOR THE RUBBER-LINED RECYCLE PUMPS. THE UTILITY IS CURRENTLY CONDUCTING A PERFORMANCE TEST ON THE SCRUBBING SYSTEM IN THE TWO BOILER OPERATION MODE. THE IUCS SLUDGE FIXATION SYSTEM IS STILL OPERATING AT THIS STATION.
JUL. 76 AUG. 76							THE FIFTH SCRUBBING VESSEL EMPLOYING TWO RUBBER-LINED RECYCLE PUMPS WAS OPERATIONAL FOR A SHORT PERIOD OF TIME DURING THE REPORTING MONTHS. TWO BOILERS REMAIN COUPLED INTO THE SCRUBBING SYSTEM. THE CONSTRUCTION OF ADDITIONAL EQUIPMENT AT THIS FACILITY IS CONTINUING. ADDITIONAL LIME STORAGE SILOS AND A THICKENER WILL BE REQUIRED FOR FULL SCALE OPERATION. THE UTILITY HAS SIGNED A LETTER OF INTENT WITH IUCS FOR A LONG-TERM SLUDGE FIXATION SYSTEM. HIGH CALCIUM LIME IS STILL BEING EMPLOYED IN THE SCRUBBING SYSTEM.
SEP. 76 OCT. 76							OPERATIONS AT THIS STATION DURING THE REPORT PERIOD PROCEEDED WITH TWO BOILERS COUPLED INTO THE 5-MODULE SCRUBBING SYSTEM. THE 5TH SCRUBBING VESSEL WAS OPERATIONAL DURING THE REPORT PERIOD WITH THE RUBBER-LINED RECYCLE PUMPS IN SERVICE. TESTS WERE CONDUCTED DURING THE PERIOD TO DETERMINE PARTICULATE AND SO2 REMOVAL EFFICIENCIES. SO2 REMOVAL EFFICIENCY WAS 50 PERCENT. PARTICULATE EMISSIONS WERE BEING REDUCED WELL BELOW 0.1 LB/MM BTU STANDARD (ACTUAL RESULTS : 0.04 LB/MM BTU). THESE RESULTS WERE BASED ON 2 BOILERS COUPLED INTO THE 5 SCRUBBING MODULES WHILE BURNING MEDIUM-SULFUR (1.0 TO 2.8 PERCENT) COAL. THE MECHANICAL COLLECTORS AND ESP'S WERE IN SERVICE DURING THE TESTS. OPERATIONS ARE STILL PROCEEDING ON AN OPEN WATER-LOOP BASIS. PART OF THE THICKENER OVERFLOW IS STILL BEING DIVERTED TO THE ASH POND AND NOT RECYCLED BACK TO THE PROCESS. BECAUSE BOTH THE BEAVER VALLEY AND BRUCE MANSFIELD STATIONS ARE FULLY OPERATIONAL, THIS STATION HAS BEEN RELEGATED TO PEAK LOAD OPERATIONS. GENERAL LOAD OPERATIONS ARE FULL LOAD CAPACITY IN THE DAYTIME AND 50 TO 60 PERCENT LOAD REDUCTION AT NIGHT.
NOV. 76 DEC. 76							THE SCRUBBER REMAINED IN SERVICE THROUGHOUT THE REPORT PERIOD WITH TWO BOILERS COUPLED INTO THE SCRUBBING SYSTEM. RECYCLE PUMP EVALUATION IS BEING CONDUCTED BY THE UTILITY AT BOTH THE PHILLIPS AND ELRAMA STATIONS. OBSERVATIONS OF THE RUBBER-LINED RECYCLE PUMPS INDICATE SOME SEVERE ABRASION AND GOUGING HAVE OCCURRED AFTER 1000 HOURS OF SERVICE TIME.

DUQUESNE LIGHT

ELRAMA POWER STATION

PERIOD	OPERATING HOURS BOILER	SCRUBBER VESSELS 101	201	301	401	501	
JAN. 77 FEB. 77 MAR. 77							THE SCRUBBER PLANT CONTINUED OPERATIONS DURING THE REPORT PERIOD WITH TWO BOILERS COUPLED INTO THE SYSTEM. TESTING ON THIOSORBIC LIME WAS CONDUCTED DURING THE PERIOD. INSTALLATION OF THE ADDITIONAL THICKENER, LIME FEEDERS AND SILOS IS STILL IN PROGRESS. FULL COMPLIANCE OPERATION FOR THIS STATION IS SCHEDULED FOR EARLY 1978. THE FULL COMPLIANCE STRATEGY WILL CONSIST OF THE FOLLOWING: 83% SO2 REMOVAL FOR 2% SULFUR COAL UTILIZING THIOSORBIC LIME (6-12% MG), FIXATING THE SCRUBBER SLUDGE WITH THE IUCS POZ-O-TEC STABILIZATION METHOD AND HAULING THIS MATERIAL TO AN OFF-SITE DISPOSAL/LANDFILL AREA. CURRENT SO2 AND PARTICULATE REMOVAL EFFICIENCIES ARE 50 AND 99+%, RESPECTIVELY. THE INTERIM IUCS UNIT NOW IN SERVICE CONSISTS OF THE OLD MOHAVE PROTOTYPE PLUS A VACUUM FILTER. THE STABILIZED MATERIAL HAS BEEN UTILIZED IN A PARKING LOT CONSTRUCTION PROJECT. IUCS HAS BEEN AWARDED A 10-YEAR CONTRACT FOR THE CONTINUED USE OF THIS SYSTEM FOR FUTURE PLANT OPERATIONS.
APR. 77 MAY 77							CONSTRUCTION OF TWO 120-FOOT DIAMETER THICKENERS IS CONTINUING. DUE TO THE GOUGING OF THE RUBBER-LINED RECYCLE PUMPS DURING THEIR TESTING, THEY HAVE BEEN REMOVED. THE UTILITY IS CONSIDERING TRYING ANOTHER SET OF RUBBER-LINED PUMPS. DUQUESNE LIGHT ALSO IS CONTINUING EFFORTS TO OBTAIN ALTERNATE LANDFILL AREAS FOR SLUDGE DISPOSAL.
JUN. 77 JUL. 77							DUQUESNE LIGHT REPORTED THE FOLLOWING ITEMS FOR THE ELRAMA SCRUBBER PLANT DURING THE REPORT PERIOD * TWO BOILERS (200 MW) WERE COUPLED INTO THE SCRUBBER PLANT. * THE INTERIM IUCS STABILIZATION UNIT (MOHAVE PROTOTYPE) CONTINUED TO FIXATE SCRUBBER WASTES. * CONSTRUCTION OF THE TWO ADDITIONAL THICKENERS CONTINUED (CONSTRUCTION IS ON SCHEDULE). * FULL PLANT COMPLIANCE IS PROJECTED FOR FEBRUARY 1978. * SO2 REMOVAL EFFICIENCY IS APPROXIMATELY 50%. * ELRAMA IS OPERATING IN A BASE/INTERMEDIATE LOAD MODE (FULL LOAD DAYTIME/HALF LOAD NIGHTTIME). 1976 CAPACITY FACTOR WAS 69.5%.
AUG. 77 SEP. 77							DURING THE REPORT PERIOD: * THE TWO ADDITIONAL THICKENERS WERE COMPLETELY INSTALLED. * THE IUCS SYSTEM WAS UPGRADED. * END OF CONSTRUCTION IS PROJECTED FOR FEBRUARY 1978. * FULL PLANT COMPLIANCE IS PROJECTED FOR APRIL 1978.
OCT. 77							MODULE 101 WAS UNAVAILABLE OCTOBER 4 DUE TO A BLEED VALVE LEAK AND WAS TAKEN OUT OF SERVICE AT THE END OF THE MONTH FOR CLEANUP. MODULE 201 WAS AVAILABLE FOR THE COMPLETE MONTH. MODULE 301 AND 401 HAD OUTAGES IN OCTOBER DUE TO RUBBER LINING FAILURE ON I.D. FAN. MODULE 501 HAD RECYCLE PUMP OUTAGES IN LATE NOVEMBER. * NEW RUBBER LINED WORMEN RECYCLE PUMPS WERE INSTALLED. * LIME HANDLING SYSTEM INSTALLATION CONTINUES. * TUBE LEAKS FORCED BOILER OUTAGE IN NOVEMBER. * LAST TWO BOILERS EXPECTED TO TIE INTO FGD

DUQUESNE LIGHT ELRAMA POWER STATION

PERIOD	OPERATING HOURS BOILER	SCRUBBER VESSELS 101	201	301	401	501	
NOV. 77		0	84	672	162	426	MODULE 101, 201 AND 401 HAVE LOW OPERATIONAL HOURS BECAUSE ONLY 2 BOILERS ARE TIED INTO FGD SYSTEM TO DATE. THE SLUDGE HANDLING SYSTEM IS WORKING WELL.

DEC. 77
JAN. 78

SCRUBBER HOURS WERE NOT REPORTED BY THE UTILITY FOR THIS PERIOD, HOWEVER, THEY WILL BE AVAILABLE FOR THE NEXT UPDATE.
DURING THE PERIOD A NEW WORMER RECYCLE PUMP INSTALLED IN NOVEMBER EXPERIENCED JACK SHAFT BEARING PROBLEMS RESULTING IN THE REMOVAL OF SCRUBBER TRAIN 501 FROM SERVICE. BOILER NO. 4 WAS CONNECTED ADDING AN ADDITIONAL 176 MW TO THE FGD SYSTEM. THE IUCS SLUDGE DISPOSAL FACILITY IS IN SERVICE PRODUCING GOOD PRODUCT. LOW LOAD AND COAL STRIKE HAVE HAMPERED GOOD SCRUBBER OPERATIONS. THERE IS SOME OUTAGE TIME SCHEDULED FOR MARCH.

TABLE 3
PERFORMANCE DESCRIPTION FOR OPERATIONAL FGD SYSTEMS THROUGH 01/78

UTILITY NAME	DUQUESNE LIGHT
UNIT NAME	PHILLIPS POWER STATION
UNIT LOCATION	SOUTH HEIGHT PENNSYLVANIA
UNIT RATING	410 MW
FUEL CHARACTERISTICS	COAL 1.0- 2.8 PERCENT SULFUR
FGD VENDOR	CHEMICO
PROCESS	LIME SCRUBBING
NEW OR RETROFIT	RETROFIT
START UP DATE	7/73
FGD STATUS	OPERATIONAL
EFFICIENCY, PARTICULATES	99 PERCENT
SO2	83 PERCENT DESIGN - 2% S COAL
WATER MAKE UP	OPEN LOOP
SLUDGE DISPOSAL	HAULAWAY TO OFF SITE LANDFILL
UNIT COST	SEE APPENDIX A, FGD SYSTEM ECONOMICS
OPERATIONAL EXPERIENCE	REFER TO THE BACKGROUND INFORMATION SECTION IN TABLE 3 OF THIS REPORT. THIS SCRUBBING SYSTEM HAS BEEN IN SERVICE SINCE JULY 1973. ALL 6 BOILERS ARE COUPLED INTO THE SCRUBBING SYSTEM. THE PLANT FIRES COAL WITH A HEATING VALUE OF 11,000 BTU/LB AND ASH AND SULFUR CONTENTS OF 21 PERCENT AND 1.0 - 2.8 PERCENT, RESPECTIVELY. DEWATERED SLUDGE FROM THE IUCS INTERIM PROCESSING PLANT IS BEING HAULED TO AN OFF-SITE LANDFILL. THE SLUDGE CONTAINS NO FIXATIVE.

BACKGROUND INFORMATION ON PHILLIPS POWER STATION

THE PHILLIPS POWER STATION IS LOCATED ON THE OHIO RIVER ABOUT 20 MILES NORTHWEST OF PITTSBURGH. THE POWER STATION CONSISTS OF SIX COAL-FIRED BOILERS HAVING A NET GENERATING CAPABILITY OF 387 MW. THE RESULTANT FLUE GASES ARE DISCHARGED TO A COMMON HEADER, TO WHICH THE FGD MODULES ARE CONNECTED THROUGH ISOLATION VALVES. THE BOILERS ARE CURRENTLY BURNING COAL WITH A HEATING VALUE OF 11,350 BTU PER POUND AND SULFUR AND ASH CONTENTS OF 2.2 AND 18.2 PERCENT, RESPECTIVELY.

THE FGD SYSTEM, WHICH SUPPLEMENTS THE EXISTING MECHANICAL AND ELECTROSTATIC DUST COLLECTORS, CONSISTS OF FOUR TRAINS OF WET VENTURI-TYPE SCRUBBERS, INSTALLED AT A COST OF APPROXIMATELY $103/KW. GIBBS & HILL., WAS ENGAGED AS THE A-E FIRM FOR THE ENTIRE PROJECT. BATTERY LIMITS OF THE CHEMICO CORPORATION ARE CONFINED TO THE SCRUBBERS AND ASSOCIATED PUMPS AND CONTROLS BETWEEN THE INLET HOT GAS DUCT MANIFOLD AND THE EXIT WET GAS HEADER (INCLUDING THE REHEATER, EXCLUDING THE NEW ID FANS).

THE FOUR TRAINS ARE LOCATED DOWNSTREAM OF EXISTING MECHANICAL COLLECTORS AND ESP'S INSTALLED IN SERIES ON EACH OF THE SIX PULVERIZED-COAL-FIRED BOILERS. THREE OF THE TRAINS ARE SINGLE-STAGE VENTURI SCRUBBERS ORIGINALLY INTENDED FOR PARTICULATE REMOVAL. THE FOURTH TRAIN IS A DUAL-STAGE VENTURI SCRUBBER-ABSORBER AND IS THE PROTOTYPE FOR DETERMINING THE FEASIBILITY OF TWO-STAGE SCRUBBING FOR COMPLIANCE WITH SULFUR DIOXIDE EMISSION LIMITS. A DIAGRAM OF THE SCRUBBER-ABSORBER TRAIN INSTALLED AT THE PHILLIPS STATION IS PRESENTED IN APPENDIX B.

EACH TRAIN IS EQUIPPED WITH A NEW WET-TYPE ID FAN. A NEW COMMON DUCT DIRECTS GAS STREAMS FROM AIR BOILERS TO THE SCRUBBER SYSTEM, WHERE THEY CAN BE SENT TO ANY OR ALL OF THE TRAINS. THE SCRUBBED GAS IS EXHAUSTED THROUGH A COMMON DUCT AND AN OIL-FIRED REHEATER TO A NEW GROUND-SUPPORTED STACK WHICH CONTAINS AN ACID-RESISTANT BRICK LINER.

SLAKED QUICKLIME IS ADDED TO THE LOWER CONE OF EACH OF THE SCRUBBER VESSELS TO NEUTRALIZE THE RECIRCULATING LIQUOR, WHICH, IN SINGLE-STAGE SCRUBBING WITH HIGH-CALCIUM LIME, REACTS WITH APPROXIMATELY 50 PERCENT OF THE SULFUR DIOXIDE IN THE FLUE GAS. A LIQUOR BLEED FLOW OF APPROXIMATELY 4 PERCENT IS SENT TO ONE OR BOTH OF THE THICKENERS FOR REMOVAL OF SOLIDS. THE OVERFLOW IS RETURNED TO THE SYSTEM AND THE UNDERFLOW IS DISCHARGED TO THE IUCS SLUDGE FIXATION SYSTEM. THIS INTERIM SLUDGE FIXATION SYSTEM COMMENCED OPERATIONS IN DECEMBER 1976. THE FACILITY INCLUDES DEWATERING EQUIPMENT AND FLY ASH ADDITION EQUIPMENT (COLLECTED FROM THE ESP). THE FIXATED MATERIAL IS THEN HAULED AWAY TO AN OFF-SITE LANDFILL AREA.

FLUE GASES FROM THE BOILERS ARE ACCELERATED TO A HIGH VELOCITY IN THE SCRUBBER. AT THE THROAT, THE GASES COLLIDE WITH THE SCRUBBING LIQUID, ATOMIZING IT INTO SMALL DROPLETS. THE FLY ASH AND THE SULFUR DIOXIDE IN THE GAS ARE REMOVED BY THE SLURRY DROPLETS AND EXIT AT THE BASE OF THE TOWER. THE GAS THEN REVERSES DIRECTION AND FLOWS UP THROUGH THE MIST ELIMINATOR, WHERE FINE DROPLETS ARE REMOVED BEFORE THE GAS LEAVES THE SCRUBBER.

STARTUP OF A PORTION OF THE PHILLIPS SCRUBBER SYSTEM BEGAN JULY 1973. SEVERAL PROBLEMS THEN DEVELOPED IN THE FORM OF EROSION OF FANS AND THE LIME FEED SYSTEM, CAUSING OUTAGES OF THE SCRUBBER SYSTEM. AFTER AN EXTENDED OUTAGE, THE SCRUBBER SYSTEM WAS RETURNED TO SERVICE IN MARCH 1974. THE SYSTEM HAS BEEN OPERATING CONTINUOUSLY SINCE THAT TIME WITH VARIOUS NUMBERS OF BOILERS CONNECTED TO THE SCRUBBER SYSTEM AND SCRUBBER TRAINS IN SERVICE.

DETERMINATION OF THE AVAILABILITY OF THE PHILLIPS SYSTEM HAS BEEN DIFFICULT. UNTIL ALL BOILERS WERE CONNECTED TO THE SCRUBBERS, THERE WAS AT LEAST ONE SPARE TRAIN AND AS MUCH AS 100 PERCENT SPARE SCRUBBER CAPACITY. THEREFORE, HAVING A TRAIN OUT OF SERVICE FOR MAINTENANCE DID NOT REDUCE THE CAPABILITY OF THE SCRUBBER SYSTEM. UNTIL ALL SIX BOILERS WERE CONNECTED, MEANINGFUL AVAILABILITY FACTORS COULD NOT BE COMPUTED. ON MARCH 17, 1975, THE SIXTH BOILER WAS CONNECTED, AND ALL FOUR SCRUBBER TRAINS WERE REQUIRED TO BE IN SERVICE. OPERATION IN THAT MODE CONTINUED UNTIL AUGUST 4, 1975, WHEN THE NO. 6 BOILER WAS REMOVED FROM THE SCRUBBER SYSTEM BECAUSE THE PH LEVEL COULD NOT BE MAINTAINED AND DEPOSITS BECAME UNMANAGEABLE TO THE POINT THAT SCRUBBER OUTAGES WERE REDUCING GENERATING CAPABILITY OF THE STATION. ADDITIONAL INFORMATION AND DATA ON SUBSEQUENT BOILER AND SCRUBBER PLANT OPERATIONS ARE PROVIDED IN A CHRONOLOGICAL FASHION IN THE TABLE THAT FOLLOWS.

DUQUESNE LIGHT PHILLIPS POWER STATION

MONTH	OPERATING HOURS BOILER 2	2	3	4	5	6	SCRUBBER-ABSORBER 101	201	301	401
JUL. 75	83	644	703	349	605	643	400	180	531	723

FOURTH FGD TRAIN AND SIXTH BOILER WERE TIED IN ON MARCH 17, 1975. PARTICULATE TESTS IN MAY SHOWED OUTLET LOADINGS OF 0.04 LB/MILLION BTU. THE TWO-STAGE TRAIN HAS BEEN OUT OF SERVICE FROM JUNE 19 FOR GENERAL CLEANING AND REPAIR OF A LEAK IN THE FIRST-STAGE SCRUBBER.

AUG. 75	354	701	454	457	517	445	478	682	323	319

SCRUBBER UNAVAILABILITY FORCED RETURNING BOILER NO. 6 TO THE SCRUBBER BYPASS GAS PATH TO PREVENT LOSS OF BOILER CAPACITY. PLUGGING AND MAINTENANCE PROBLEMS HAVE BEEN ENCOUNTERED. EVALUATION OF VARIOUS RECYCLE PUMPS IS CONTINUING.

SEP. 75	463	287	669	503	672	525	57	561	685	536
OCT. 75	547	575	620	604	681	687	607	207	505	487

IN OCTOBER 1975, PHILLIPS INITIATED THIOSORBIC LIME SCRUBBING IN THEIR SINGLE-STAGE MODULES ON AN EXPERIMENTAL BASIS. THE PURPOSE IS TO STUDY COMPLIANCE FEASIBILITY, SO2 REMOVAL EFFICIENCY, AND QUALITY OF THE SLUDGE GENERATED BY THE SINGLE-STAGE MODULES.

NOV. 75	16	720	688	70	720	593	626	720	0	75
DEC. 75	172	660	709	0	689	547	360	661	182	386

THE UTILITY CONCLUDED THE THIOSORBIC LIME TESTING PROGRAM IN MID-DECEMBER. FOUR BOILERS WERE COUPLED TO THE SCRUBBING SYSTEM DURING THE RUN. THE UTILITY IS NOW ANALYZING THE DATA GENERATED DURING THE TEST PROGRAM. THE SCRUBBERS HAVE BEEN PUT BACK ON REGULAR LIME. NO UNUSUAL PROBLEMS WERE ENCOUNTERED DURING THE TEST RUN.

JAN. 76	222	722	639	0	662	661	277	536	101	707

THE 2.5-MONTH TEST PROGRAM WITH THIOSORBIC LIME INCLUDED 1612 HOURS ON ONE TRAIN AND 1309 HOURS ON ANOTHER TRAIN. RESULTS INDICATE THAT THE REQUIRED DEGREE OF SO2 REMOVAL(83 PERCENT) CAN BE OBTAINED WITH AN MGO CONTENT OF 8-10 PERCENT IN THE LIME WITH SINGLE-STAGE SCRUBBING.

FEB. 76	445	588	672	0	633	571	657	662	166	406
MAR. 76							695	353	659	461

APR. 76

PLANT OPERATION IS PROCEEDING WITH A TOTAL OF 4 BOILERS COUPLED INTO THE SCRUBBING SYSTEM (EQUALING 336 MW, WHICH IS 87 PERCENT OF THE TOTAL PLANT CAPACITY). THE FGD SYSTEM OPERATED ON HIGH CALCIUM LIME DURING THE REPORT PERIOD. THE GENERAL OPERATION MODE AT THIS FACILITY HAS ONE OF THE FOUR SCRUBBING TRAINS OUT CONTINUALLY FOR REPAIRS, CLEANING, AND PREVENTIVE MAINTENANCE. THE UTILITY IS STILL EXPERIENCING PROBLEMS WITH SOLIDS DEPOSITION IN THE VENTURI THROAT OF THE SCRUBBING MODULE, CAUSING MOVEMENT INHIBITION AND GREATER PRESSURE DROPS. THE FGD SYSTEM AVAILABILITY FOR THE FIRST QUARTER OF 1976 WAS 72 PERCENT. THE SLUDGE STABILIZATION PRACTICES ARE STILL CONTINUING AT THIS FACILITY.

MAY 76

JUN. 76

REDUCED LOAD OPERATIONS WERE REPORTED BY THE UTILITY FOR THE MAY-JUNE PERIOD BECAUSE OF A SCHEDULED TURBINE OVERHAUL TO UNIT NO.6. THE SCRUBBING SYSTEM WAS SHUT DOWN ON JUNE 27 FOR A SCHEDULED FOUR WEEK REPAIR PERIOD. THE MAJORITY OF THE WORK WILL BE CONCENTRATED ON THE STACK, ASSOCIATED DUCTWORK AND BOILER DAMPERS. ALSO, THE UTILITY IS PROCEEDING WITH THE INSTALLATION OF 3 ADDITIONAL LIME STORAGE SILOS AND A THIRD THICKENER.

JUL. 76

AUG. 76

THE 4-WEEK SYSTEM OVERHAUL WAS COMPLETED JULY 25. DURING THIS PERIOD, THE FOLLOWING REPAIRS AND MODIFICATIONS WERE MADE:

- *REPAIR OF THE TURNING VANES TO THE SCRUBBER DEMISTER.
- *REPAIR OF THE EXPANSION JOINT SEAL WHERE THE DUCTWORK TIES INTO THE MAIN STACK.
- *REPAIR OF STEEL BANDS AROUND INNER STACK STRUCTURE.
- *OVERHAUL OF I.D. FANS.
- *REPAIR OF BOILER EXIT DAMPERS.
- *REPAIR LEAKAGE OF THE ACID-BRICK LINING IN THE MAIN STACK.

THE THREE ADDITIONAL LIME STORAGE SILOS AND THE FOUNDATION FOR THE ADDITIONAL 75-FOOT DIAMETER THICKENER HAVE BEEN INSTALLED. THE UTILITY HAS SIGNED A LETTER-OF-INTENT WITH IUCS. FOR A LONG-TERM SLUDGE TREATMENT SYSTEM.

DUQUENSE LIGHT PHILLIPS POWER STATION

	OPERATING HOURS									
	BOILER						SCRUBBER-ABSORBER			
MONTH	1	2	3	4	5	6	101	201	301	401

SEP. 76

OCT. 76

BOILER NOS. 2-6 WERE COUPLED INTO THE SCRUBBING SYSTEM. BOILER NO. 1 IS DOWN FOR OVERHAUL AND REPAIRS. THE IUCS INTERIM SLUDGE PROCESSING PLANT IS UNDER CONSTRUCTION AND WILL BE IN SERVICE BY DECEMBER 1976. THE TEMPORARY FACILITIES WILL PROCESS THE THICKENER UNDER FLOW AND PONDED SLUDGE UNTIL THE POND IS DEPLETED OF SLUDGE AND THE PERMANENT FACILITY HAS BEEN INSTALLED. SCRUBBING OPERATIONS ARE STILL PROCEEDING IN AN OPEN-WATER-LOOP MODE WITH PART OF THE THICKER OVERFLOW BEING DIVERTED TO THE ASH POND. BECAUSE BOTH THE BEAVER VALLEY AND BRUCE MANSFIELD STATIONS ARE FULLY OPERATIONAL, THIS STATION HAS BEEN RELEGATED TO PEAK LOAD OPERATIONS. GENERAL LOAD OPERATIONS ARE FULL LOAD CAPACITY IN THE DAYTIME AND 50 TO 67 PERCENT LOAD REDUCTION AT NIGHT.

TOTAL SCRUBBER HOURS; 23,274
TOTAL BOILER HOURS; 83,642
TOTAL SCRUBBER OUTAGE TIME; 5,500
TOTAL SCRUBBER AVAILABILITY HOURS; 23,274
AVERAGE MW LOAD/ SCRUBBER OPERATION HOUR; 243
TOTAL OPERABILITY INDEX; 28 PERCENT
TOTAL RELIABILITY INDEX; 81 PERCENT

THE FIGURES IN THE LEFT-HAND COLUMNS HAVE BEEN COMPILED BY THE UTILITY FOR SYSTEM OPERATIONS FOR THE PERIOD FOLLOWING START-UP IN JULY 1973 INCLUSIVE TO OCTOBER 1976. THE TOTAL SCRUBBER HOURS VALUE INCLUDE OPERATION TIME WHEN ONE OR MORE OF THE MODULES WERE IN SERVICE. TOTAL BOILER AND UNAVAILABILITY VALUES APPLY FOR ALL THE CORRESPONDING UNITS. THE TOTAL SCRUBBER AVAILABILITY INDEX INCLUDES THE TIME WHEN ONE OR MORE MODULES WERE AVAILABLE FOR SERVICE.

NOV. 76

DEC. 76

THE UTILITY REPORTS THAT BOILERS 2-6 REMAINED COUPLED INTO THE SCRUBBING SYSTEM DURING THE REPORT PERIOD. THE INTERIM IUCS FIXATION FACILITY WAS INSTALLED AND COMMENCED OPERATIONS IN DECEMBER. THE UTILITY REPORTS THAT THE VENTURI SCRUBBERS ARE STILL DEVELOPING LARGE AMOUNTS OF SCALE ON THE INTERNALS, RESULTING IN TWICE NORMAL PRESSURE DROPS. THE RECYCLE PUMP EVALUATION HAS BEEN IN PROGRESS. APPROXIMATELY 2500 TO 2800 HOURS OF OPERATION TIME HAVE BEEN ACCUMULATED ON THE VARIOUS UNITS WITH NO FAILURES OR APPRECIABLE WEAR OBSERVED. THE ADDITIONAL DEWATERING AND REAGENT PREPARATION EQUIPMENT IS NOW BEING INSTALLED. THE CONTRACT HAS BEEN AWARDED TO DRAVO TO PROVIDE THIOSORBIC LIME FOR THIS SCRUBBING SYSTEM. ALL BOILERS HAVE BEEN HEADERED INTO THE SCRUBBER PLANT. A NUMBER OF THE UNITS WERE DOWN FOR OVERHAUL AND REPAIR THE INTERIM IUCS POZ-O-TEC UNIT REMAINED IN SERVICE, FILTERING OUT WATER ONLY. THE RECYCLE PUMP EVALUATION IS CONTINUING. AFTER 4000 HRS. OF OPERATION. THE CARBORUNDUM IMPELLERS AND WEAR RINGS STILL LOOK GOOD. SO2 AND PARTICULATE REMOVAL EFFICIENCIES ARE 50 & 99+% RESPECTIVELY. INSTALLATION OF THE ADDITIONAL SILOS, THICKENERS, AND LIME FEEDERS IS STILL IN PROGRESS. FULL COMPLIANCE PLANT OPERATIONS ARE SCHEDULED FOR DEC.

JAN. 77

FEB. 77

MAR. 77

1977 FULL COMPLIANCE OPERATIONS WILL INCLUDE 83% SO2 REMOVAL FOR 2% SULFUR COAL UTILIZING THIOSORBIC LIME (6-12%MG) & FIXATING THE SCRUBBER WASTES WITH THE IUCS POZ-O-TEC METHOD. THE FIXATED MATTER WILL BE HAULED AWAY TO AN OFF-SITE DISPOSAL AND LANDFILL. IUCS HAS BEEN AWARDED A 10 YEAR CONTRACT FOR THE USE OF THIS METHOD. THE CARBORUNDUM IMPELLORS AND WEAR RINGS CONTINUE TO LOOK GOOD AFTER MORE THAN 5000 HOURS OF OPERATION.

APR. 77

MAY. 77

THIOSORBIC LIME TESTS BEGAN IN LATE MAY BUT LASTED ONLY ABOUT ONE WEEK. THE SCRUBBER SYSTEM WAS SHUT DOWN FOR 3 TO 4 DAYS IN MAY DUE TO LEAKING IN THE WET DUCT HEADER THAT LEADS TO THE STACK. WHILE FIXING THE LEAK, INSPECTION OF OTHER COMPONENTS REVEALED THAT THE BOILER EXIT DAMPERS WERE ERODING. ONE 201 EXTERNAL MIST ELIMINATOR ALSO WAS SEVERLY ERODED AND PLUGGED ONCE THE LEAK TO THE HEADER WAS REPAIRED, FLUE GAS FROM FOUR BOILERS BEGAN TO BE SCRUBBED. TWO OF THE SIX BOILERS ARE DOWN FOR MAINTENANCE. THE DAMPERS AND MIST ELIMINATOR REPAIRS WILL BE CORRECTED AT A SCHEDULED OUTAGE TIME. OVERALL SCRUBBER AVAILABILITY IS ABOUT 75 PERCENT. THE INTERIM SLUDGE DISPOSAL SYSTEM STILL IS OPERATIONAL. THE PERMANENT SLUDGE DISPOSAL FACILITY IS ON SCHEDULE FOR THE DECEMBER 1977 COMPLETION DATE.

JUN. 77

JUL. 77

ALL 6 BOILERS ARE COUPLED INTO THE SCRUBBER PLANT. FLUE GAS FROM 5 OF THESE UNITS IS BEING TREATED BY THE SCRUBBERS. UNIT NO. 6 HAS BEEN DOWN FOR AN EXTENDED TURBINE REPAIR OUTAGE.

OPERATING HOURS

MONTH	BOILER 1	2	3	4	5	6	SCRUBBER-ABSORBER 101	201	301	401

OPERATIONS ARE PROCEEDING WITH ONE SCRUBBING TRAIN BEING SPARED AT ALL TIMES (MAINTENANCE AND CLEANOUT). SO2 REMOVAL EFFICIENCY IS APPROXIMATELY 50%. THE RECYCLE PUMP EVALUATION STUDY CONTINUED DURING THE PERIOD. COMPONENTS BEING EVALUATED INCLUDE* CARBORUNDUM IMPELLERS, CARBORUMDUM WEAR RINGS, TITANIUM IMPELLERS, 317SS WEAR RINGS STELLITE TIPPED. A THIOSORBIC LIME TEST WAS PREMATURELY TERMINATED BECAUSE OF SOME MINOR SLAKER/FEEDER PROBLEMS. HIGH CALCIUM VIRGIN LIME WAS UTILIZED DURING THE MAJORITY OF OPERATIONS THROUGHOUT THE PERIOD. ONLY 4 OF THE 6 BOILERS ARE OPERATING AS THE TURBINE REPAIR OUTAGE CONTINUES.

AUG. 77

SEP. 77

LIME HANDLING AND SOLID WASTE DISPOSAL FACILITIES WERE BEING SCALED UP TO HANDLE FULL CAPACITY AND A THIRD THICKENER WAS INSTALLED AND BROUGHT INTO SERVICE DURING THIS REPORT PERIOD. THE IUCS SYSTEM IS IN THE INTERIM PHASE. WASTE WATER IS BEING MIXED WITH FLYASH AND DISPOSED OF. CURRENT CONSTRUCTION WORK IS EXPECTED TO BE COMPLETED BY THE END OF JANUARY WHEN ALL 6 BOILERS WILL BE BACK ON LINE FOR A TWO MONTH TEST PERIOD. THIOSORBIC LIME IS STILL BEING TESTED. RESULTS ARE NOT YET AVAILABLE. THE FGD SYSTEM WILL BE DOWN FOR THE FIRST WEEKEND OF NOVEMBER. THE SYSTEM WILL ALSO BE CHECKED FOR MAIN DUCT LEAKS AT THIS TIME. ALSO THE SCRUBBER AND STACK LININGS AND RECYCLE PUMPS WILL BE THOROUGHLY CHECKED. NECESSARY REPLACEMENTS AND REPAIRS WILL BE CARRIED OUT. CURRENT SO2 REMOVAL EFFICIENCY IS 50 PERCENT. BY EARLY APRIL THE SYSTEM IS EXPECTED TO REACH COMPLIANCE WITH AN SO2 EFFICIENCY OF 83 PERCENT.

OCT. 77

MODULE 101 WAS DOWN A TOTAL OF 113 HOURS IN OCTOBER. MODULE 201 WAS PUT IN SERVICE ON OCTOBER 26 AFTER EXTENSIVE CLEAN UP AND REPAIRS TO RUBBER LINING AND I.D. FAN. MODULE 301 WAS DOWN A TOTAL OF 57 HOURS IN OCTOBER. MODULE 401 WAS DOWN A TOTAL OF 36 HOURS IN OCTOBER FOR REPAIRING HOLES IN FAN LINING AND TYING IN THICKENER BLEED LINE.

NOV. 77

DURING SHUTDOWN OUTLET DUCT LEAKS WERE REPAIRED. BOILER EXIT DAMPERS WERE REPLACED DUE TO EROSION BY FLYASH. CORROSION OF STEEL BANDS IN STACK WAS ALSO NOTICED. DEWATERING OPERATIONS ARE NOT WORKING PROPERLY, CAUSING PROBLEMS IN SLUDGE HANDLING. THE RESULTS FROM THIOSORBIC LIME USE CAN NOT YET BE QUANTIFIED DUE TO LIME FEED SYSTEM PROBLEMS.

DEC. 77

JAN. 77 (CUMULATIVE HRS. THRU 1-8-78) 22391 20998 22229 22259

SCRUBBER TRAIN 301 WAS DOWN FOR AN OVERHAUL FROM NOV. 17 TO MONDAY 2-6-78 WHEN IT RETURNED TO SERVICE.

SCRUBBER TRAIN 401 WAS REMOVED FROM SERVICE ON THE 6TH OF FEBRUARY.

THE IUCS INTERIM SLUDGE TREATMENT SYSTEM HAS HAD SOME DEWATERING PROBLEMS. DURING DECEMBER PHILLIPS EXPERIENCED POOR SLUDGE REMOVAL. THE IUCS PLANT IS WORKING ON A PART TIME BASIS. FULL OPERATIONS ARE EXPECTED LATE THIS SPRING.

THE POOR QUALITY SLUDGE IS SENT TO AN EMERGENCY POND AND THEN RECIRCULATED BACK TO THE THICKENER BUT THIS CAUSES A WATER UNBALANCE IN THE SYSTEM.

TESTING WITH THIOSORBIC LIME @ 5% MGO HAS SHOWN THAT THE MGO CONCENTRATION IS NOT GREAT ENOUGH TO EFFECT ADEQUATE SO2 REMOVAL ON A SINGLE STAGE SCRUBBER. THEY ARE GOING TO TEST AT A GREATER MGO CONCENTRATION BY STARTING AT 10% AND THEN DROPPING BACK UNTIL THE CONCENTRATION IS SATISFACTORY. THIS TESTING, AS WELL AS SCRUBBER OPERATIONS, HAVE, HOWEVER, BEEN HAMPERED BY LOW LOADS AS A RESULT OF THE COAL STRIKE.

THERE WILL BE AN OUTAGE AT PHILLIPS TO REPLACE THE CARBON STEEL BANDS WITH STAINLESS STEEL BANDS.

TABLE 3
PERFORMANCE DESCRIPTION FOR OPERATIONAL FGD SYSTEMS THROUGH 01/78

UTILITY NAME	INDIANAPOLIS POWER & LIGHT CO.
UNIT NAME	PETERSBURG NO 3
UNIT LOCATION	PETERSBURG INDIANA
UNIT RATING	530 MW
FUEL CHARACTERISTICS	COAL 3.0-3.5 PERCENT SULFUR
FGD VENDOR	UNIVERSAL OIL PRODUCTS
PROCESS	LIMESTONE SCRUBBING
NEW OR RETROFIT	NEW
START UP DATE	10/77
FGD STATUS	OPERATIONAL
EFFICIENCY, PARTICULATES	99.3 PERCENT
SO2	80 PERCENT (DESIGN)
WATER MAKE UP	
SLUDGE DISPOSAL	IUCS SLUDGE STABILIZATION
UNIT COST	SEE APPENDIX A, FGD SYSTEM ECONOMICS
OPERATIONAL EXPERIENCE	INDIANAPOLIS P & L HAS AWARDED A CONTRACT TO UNIVERSAL OIL PRODUCTS FOR A WET LIMESTONE SCRUBBING SO2 CONTROL SYSTEM. AN ESP PROVIDES PRIMARY PARTICULATE CONTROL. THE UNIT FIRES BITUMINOUS COAL WITH A SULFUR CONTENT OF 3.0-3.5%, AN ASH CONTENT OF 9-10%, AND A HEAT CONTENT OF 11,000 BTU/LB. THE FOUR MODULES OPERATED FOR 24 HOURS IN MID-DECEMBER FOR EQUIPMENT TESTING. THE SCRUBBERS WERE TAKEN OUT OF SERVICE SO THAT SOME FINAL ADJUSTMENTS COULD BE MADE. SCRUBBERS ARE EXPECTED TO BE BACK IN SERVICE BY EARLY MARCH 1978.

BACKROUND INFORMATION ON
PETERSBURG NO. 3

THE PETERSBURG POWER STATION, OWNED AND OPERATED BY THE INDIANAPOLIS POWER AND LIGHT COMPANY (IPALCO), IS LOCATED NEAR PETERSBURG, INDIANA, APPROXIMATELY 100 MILES SOUTHWEST OF INDIANAPOLIS. THE STATION CONSISTS OF THREE COAL-FIRED, STEAM-TURBINE, GENERATING UNITS, WHICH HAVE A COMBINED POWER GENERATING CAPACITY OF 1180 MW. UNIT 1 IS RATED AT 220 MW, UNIT 2 AT 430 MW, AND UNIT 3 AT 530 MW. THE UTILITY IS PLANNING THE INSTALLATION OF ANOTHER 530-MW UNIT, WHICH IS SCHEDULED TO BE IN SERVICE BY APRIL 1982. UNIT 4 WILL BRING THE STATION'S COMBINED POWER GENERATING CAPACITY TO 1710 MW. OF THE THREE OPERATIONAL UNITS, ONLY UNIT 3 IS REQUIRED TO MEET CURRENT FEDERAL NEW SOURCE PERFORMANCE STANDARDS FOR SULFUR DIOXIDE (SO2) EMISSIONS (1.2 LB/MM BTU). THIS UNIT IS FITTED WITH A FLUE GAS DESULFURIZATION (FGD) SYSTEM.

THE BOILER ON UNIT 3 IS A COMBUSTION ENGINEERING UNIT DESIGNED TO FIRE HIGH-SULFUR INDIANA BITUMINOUS COAL WITH THE FOLLOWING CHARACTERISTICS: HEAT CONTENT, 10,750 BTU/LB; SULFUR CONTENT, 4.50 PERCENT; ASH CONTENT, 8 TO 15 PERCENT; MOISTURE CONTENT, 10.5 TO 16.5 PERCENT. THE EMISSION CONTROL SYSTEM ON THIS UNIT CONSISTS OF TWO ELECTROSTATIC PRECIPITATORS (ESP'S) FOR THE CONTROL OF PARTICULATE MATTER AND AN FGD SYSTEM WITH FOUR WET LIMESTONE SCRUBBER MODULES FOR CONTROL OF SO2.

BOILER FLUE GAS, WHICH IS GENERATED AT A RATE OF 1.9 MILLION ACFM AT 279 F, CONTAINS 3.55 GRAINS OF PARTICULATES PER ACTUAL CUBIC FOOT AND 2567 PPM OF SO2. THE GAS FIRST ENTERS ONE OF THE TWO RESEARCH COTTRELL COLD-SIDE ESP'S FOR PRIMARY PARTICULATE CONTROL. THE ESP'S REMOVE 99.3 PERCENT OF THE INLET PARTICULATE MATTER, WHICH RESULTS IN AN OUTLET LOADING OF 0.025 GR/ACF (0.1 LB/MM BTU). FOUR FORCED-DRAFT BOOSTER FANS (ONE PER MODULE), EACH WITH AN 18 IN. W.G., THEN BOOST THE GAS THROUGH THE FGD SYSTEM. THE FOUR TURBULENT CONTACT ABSORBERS (TCA'S) THAT COMPRISE THE FGD SYSTEM WERE SUPPLIED BY UNIVERSAL OIL PRODUCTS (UOP). THE TOTAL CAPACITY OF THE SYSTEM IS DIVIDED EVENLY AMONG THE MODULES, EACH OF WHICH IS 30 FT. BY 30 FT. BY 100 FT. HIGH AND CAPABLE OF TREATING 475,000 ACFM OF FLUE GAS. LIMESTONE SLURRY IS CONTACTED WITH THE GAS STREAM IN EACH OF THREE LEVELS OF MOBILE BED PACKING (1.5-INCH-DIAMETER SPHERES) IN EACH MODULE. MODULE PRESSURE DROP IS 8.5 IN. W.G., SUPERFICIAL GAS VELOCITY IS 14.5 FT/S, AND LIQUID-TO-GAS (L/G) RATIO IS 60. TWO 9300-GPM PUMPS PROVIDE LIMESTONE SLURRY FOR EACH MODULE (ONE SPARE PUMP PER TWO MODULES). THE SCRUBBED FLUE GAS (375,000 ACFM AT 118 F), WHICH CONTAINS 385 PPM SO2, THEN PASSES THROUGH THE MIST ELIMINATORS AND IS REHEATED FROM 118 TO 148 F BEFORE IT IS DISCHARGED THROUGH THE 616-FT MAIN STACK. REHEAT IS PROVIDED BY HEATING AMBIENT AIR WITH STEAM TUBE BUNDLES LOCATED OUTSIDE THE GAS DUCTS.

THE SPENT SCRUBBING SOLUTION IS DISCHARGED FROM THE TCA MODULES TO AN EXTERNAL RECYCLE TANK, WHERE CHEMICAL REACTIONS ARE COMPLETED. FLUE GAS CLEANING WASTES (CALCIUM SULFITE, CALCIUM SULFATE, CALCIUM CARBONATE, FLY ASH) ARE DISCHARGED FROM THE LIQUID RECIRCULATION LOOP TO A THICKENER (165 FT IN DIAMETER), WHERE THE WASTE SOLIDS SETTLE OUT. THICKENER OVERFLOW IS SENT TO A THICKENER OVERFLOW RECLAIM WATER TANK FOR RETURN TO THE PROCESS; 150 TONS/HOUR OF THICKENER UNDERFLOW, WHICH IS 35 PERCENT SOLIDS, IS DISCHARGED TO AN IUCS SLUDGE STABILIZATION SYSTEM FOR CHEMICAL FIXATION BEFORE BEING PIPED TO FINAL DISPOSAL IN AN ON-SITE, UNLINED, DISPOSAL POND LOCATED APPROXIMATELY 4000 FT FROM THE GENERATING UNIT. CLARIFIED WATER IS RETURNED TO THE PROCESS FOR FURTHER USE.

A BALL MILL WITH A CAPACITY OF 50 TONS/HR PROVIDES ON SITE LIMESTONE PREPARATION. THE MILL IS FED DIRECTLY FROM A 400-TON LIMESTONE STORAGE SILO. THE CRUSHED LIMESTONE IS SLURRIED TO A 38 PERCENT SOLIDS SOLUTION AND STORED IN 320,000-GAL MIX/HOLD TANKS. TWO PUMPS TRANSFER FRESH SLURRY FROM THE STORAGE TANKS TO THE RECIRCULATION TANKS. THE MODULES, TANKS, AND PUMPS IN THE FGD SYSTEM ARE RUBBER-LINED. EXHAUST GAS DUCTWORK IS LINED WITH A CEILCOTE LINER.

INITIAL OPERATING EXPERIENCE

BY DECEMBER 12, 1977, IPALCO HAD PUT THE FIRST TWO TCA MODULES INTO OPERATION. THE OTHER TWO MODULES WERE PLACED ON LINE THE LATTER PART OF THE SAME MONTH. SEVERE COLD WEATHER CONDITIONS HAVE NECESSITATED THE ERECTION OF TEMPORARY ENCLOSURES AROUND SEGMENTS OF THE FGD SYSTEM UNTIL THE INSTALLATION OF HEAT TRACING IN THE LIQUID CIRCUIT IS COMPLETED.

TABLE 3
PERFORMANCE DESCRIPTION FOR OPERATIONAL FGD SYSTEMS THROUGH 01/78

UTILITY NAME	KANSAS CITY POWER & LIGHT
UNIT NAME	HAWTHORN NO. 3
UNIT LOCATION	KANSAS CITY MISSOURI
UNIT RATING	140 MW
FUEL CHARACTERISTICS	COAL 0.5-3.5 PERCENT SULFUR
FGD VENDOR	COMBUSTION ENGINEERING
PROCESS	LIME SCRUBBING
NEW OR RETROFIT	RETROFIT
START UP DATE	11/72
FGD STATUS	OPERATIONAL
EFFICIENCY, PARTICULATES	99 PERCENT
SO2	70 PERCENT
WATER MAKE UP	OPEN LOOP 7.0 GPM/MW
SLUDGE DISPOSAL	PLANT SITE DISPOSAL POND
UNIT COST	SEE APPENDIX A, FGD SYSTEM ECONOMICS
OPERATIONAL EXPERIENCE	REFER TO THE BACKGROUND INFORMATION SECTION IN TABLE 3 OF THIS REPORT. THE SCRUBBER PLANT HAS BEEN CONVERTED FROM A LIMESTONE FURNACE INJECTION AND TAIL-END SCRUBBING SYSTEM TO A TAIL-END WET LIME SCRUBBING SYSTEM. LIME-BASED OPERATIONS COMMENCED ON FEBRUARY 7, 1977. COMPLIANCE TESTING FOR KANSAS CITY PARTICULATE STANDARDS INDICATED THE NO.3 UNIT WAS WELL WITHIN THE 0.17 POUND REGULATION. THE 2-MODULE SCRUBBER PLANT CAN ONLY BE BY-PASSED DURING EMERGENCIES.

BACKGROUND INFORMATION ON HAWTHORN NOS. 3 AND 4

THE HAWTHORN POWER STATION IS OWNED AND OPERATED BY THE KANSAS CITY POWER AND LIGHT COMPANY AND SITUATED IN A HEAVILY INDUSTRIALIZED AREA ON THE NORTH BANK OF THE MISSOURI RIVER IN EAST KANSAS CITY, MISSOURI. THE PLANT CONTAINS FIVE COAL-FIRED BOILERS. UNITS 1 AND 2 ARE CONSIDERED PEAK BOILERS, EACH RATED AT 80 MW. UNITS 3 AND 4 ARE CYCLIC-LOAD BOILERS. EACH RATED AT 100 MW. UNIT 5 IS A BASE-LOAD BOILER RATED AT 500 MW. UNITS 1 TO 4 WERE PURCHASED AND PLACED IN SERVICE BETWEEN 1950 AND 1955. UNIT NO. 5 WAS PLACED IN SERVICE IN EARLY 1970. ALL THE HAWTHORN BOILERS ARE DRY-BOTTOM PULVERIZED-COAL-FIRED UNITS DESIGNED AND MANUFACTURED BY COMBUSTION ENGINEERING. TWO GRADES OF COAL ARE BURNED AT THE STATION; A LOW SULFUR COAL FROM THE WYOMING AREA THAT TYPICALLY CONTAINS 0.5% SULFUR AND 11 PERCENT ASH WITH A HEATING VALUE OF 9800 BTU/LB AND A HIGH SULFUR COAL FROM OKLAHOMA THAT TYPICALLY CONTAINS 3.5% SULFUR AND 14 PERCENT ASH WITH A HEATING VALUE OF 11,500 BTU/LB. OF THE FIVE COAL-FIRED BOILERS INSTALLED AT THE STATION, TWO UNITS 3 AND 4 HAVE BEEN RETRO-FITTED WITH PARTICULATE AND SULFUR DIOXIDE SCRUBBER PLANTS.

THE ORIGINAL SCRUBBER PLANTS INSTALLED ON UNITS 3 AND 4 CONSISTED OF LIMESTONE INJECTION AND TAIL-END WET SCRUBBER MODULES SUPPLIED BY COMBUSTION ENGINEERING AND PLACED IN SERVICE NOVEMBER 1972 AND AUGUST 1972, RESPECTIVELY. A GENERAL DESCRIPTION OF THE PROCESS FOLLOWS; DRY LIMESTONE WAS INJECTED DIRECTLY INTO THE FURNACE BOX AND CALCINED TO LIME. THE FURNACE-CALCINED LIMESTONE AND BOILER FLUE GAS WERE THEN DISCHARGED TO A TAIL-END WET SCRUBBING SYSTEM CONSISTING OF TWO MARBLE-BED ABSORBERS WHERE PARTICULATES AND SULFUR DIOXIDE WERE REMOVED FROM THE GAS STREAM. THE SPENT LIME AND OTHER SCRUBBING WASTES WERE THEN DISCHARGED INTO A COMMON CLARIFIER TANK AND THE UNDERFLOW WAS PUMPED, UNTREATED AND UNSTABILIZED, TO AN UNLINED DISPOSAL POND USED FOR THE DISPOSAL OF FLY ASH FROM THE OTHER BOILERS. THE SCRUBBER PLANT INSTALLED ON EACH BOILER CONTAINED TWO IDENTICAL MARBLE-BED ABSORBERS, EACH CAPABLE OF TREATING 500,000 ACFM OF FLUE GAS AT 300 F. A CHEVRON-TYPE MIST ELIMINATOR AND A FINNED-TUBE STEAM REHEATER WERE ALSO INCORPORATED IN EACH MODULE IN ADDITION TO A MIST ELIMINATOR WASH SYSTEM CONSISTING OF EIGHT AUTOMATICALLY-OPERATED WATER LANCES. BY-PASSING OF THE MODULES WAS POSSIBLE THROUGH A SERIES OF DAMPERS AND DUCTWORK AROUND EACH MODULE.

THE ORIGINAL SCRUBBER DESIGN OF THE SYSTEM INSTALLED ON THE NO. 4 BOILER HAD TO BE MODIFIED SHORTLY AFTER START-UP BECAUSE OF BOILER TUBE PLUGGING ATTRIBUTED TO THE LIMESTONE INJECTION. THE MODE OF OPERATION OF THIS SYSTEM WAS MODIFIED TO LIMESTONE INJECTION INTO THE FLUE GAS DUCT NEAR THE INLET TO THE MARBLE-BED ABSORBER. THE SIMPLIFIED PROCESS FLOW DIAGRAMS OF THESE ORIGINAL SCRUBBER PLANTS ARE PRESENTED IN APPENDIX B.

KANSAS CITY POWER & LIGHT — HAWTHORN UNIT NO. 3

MONTH	OPERATING HOURS BOILER	FGD OPERABILITY (%) MODULE 3A	MODULE 3B	MODULE A	MODULE B
JUL. 75	584	0	247	0	42
	PROBLEMS WITH MODULE 3A INCLUDED A LEAK IN CITY WATER LINE, A PLUGGED DUCT TO THE I.D. FAN, A MALFUNCTIONING OUTLET DAMPER FROM THE SCRUBBER. IN MODULE B MARBLES WERE LOST FROM THE BED AND A SPRAY HEADER WAS BROKEN.				
AUG. 75	0	0	0	0	0
	LOST I.D. FAN FOR HALF OF THE BOILER. CARRYOVER OF JULY PROBLEMS.				
SEP. 75	358	247	81	69	23
	OUTAGE DUE TO CLEANING AND MECHANICAL REPAIRS. POTS, COVERS, AND MARBLES IN THE MARBLE BED OF MODULE 3B WERE REPLACED.				
OCT. 75	180	117	145	65	81
	MODULE 3A OUTAGE WAS DUE LARGELY TO REPLACEMENT OF A RECYCLE PUMP MOTOR. A SCHEDULED BOILER OVERHAUL REDUCED BOILER OPERATION HOURS.				
NOV. 75	0	0	0	0	0
DEC. 75	0	0	0	0	0
JAN. 76	0	0	0	0	0
	BOILERS AND SCRUBBERS WERE SHUTDOWN FOR A SCHEDULED TURBINE OVERHAUL. THE SYSTEM IS SCHEDULED TO GO BACK ON-LINE IN JANUARY 1976. SYSTEM WAS DOWN ALL MONTH BECAUSE OF FROZEN EQUIPMENT AND LINES AND A MANPOWER SHORTAGE DUE TO A BOILER AND TURBINE OVERHAUL ON ANOTHER UNIT AT THIS STATION.				
FEB. 76	503	148	7	37	1
	SCRUBBER OUTAGES RESULTED FROM PLUGGING IN THE SCRUBBER BED, CAUSED BY CONVERSION FROM AN UNDER-BED TO OVER-BED SPRAY SYSTEM.				
MAR. 76	0	0	0	0	0
APR. 76	0	0	0	0	0
	RECONVERSION OF MODULE 3B'S SPRAY SYSTEM ARRANGEMENT HAS BEEN COMPLETED. ALSO THE BYPASS SYSTEM HAS BEEN MODIFIED AND CHANGED TO A SLIDE-GATE DAMPER ARRANGEMENT.				
MAY. 76	0	0	0	0	0
	THE SYSTEM WAS SHUT DOWN DURING THE MONTH DUE TO THE CONTINUATION OF MANPOWER SHORTAGE PROBLEMS. THE UTILITY DID PERFORM SOME CLEANING AND REPAIRS DURING THE MONTH.				
JUN. 76	505	198	220	39	44
	THE UTILITY IS IN THE PROCESS OF MODIFYING THE DEMISTER WASH SYSTEM BOTH UNITS NOS. 3 AND 4. THE WATER LANCES, FORMERLY CONSTRUCTED OF FRP, ARE BEING CHANGED TO CARBON STEEL COMPONENTS IN ORDER TO RECTIFY LOSS OF SPRAY NOZZLES AND SUBSEQUENT SHATTERING OF THE LANCES.				
JUL. 76					
AUG. 76					
	THE UTILITY IS NOW IN THE PROCESS OF CONVERTING THIS SYSTEM FROM LIMESTONE INJECTION AND TAIL END SCRUBBING TO A LIME SLURRY BASED SCRUBBING SYSTEM.				
SEP. 76					
OCT. 76					
	THE SYSTEM WAS VIRTUALLY OUT OF SERVICE THE ENTIRE REPORT PERIOD. MANPOWER COMMITMENTS WERE SERIOUSLY HAMPERED BY A MAJOR EXPLOSION WHICH OCCURRED IN THE COAL MILL PULVERIZING AREA OF HAWTHORN NO. 5.				
NOV. 76	0	0	0	0	0
DEC. 76	0	0	0	0	0
	THE UNIT DID NOT OPERATE DURING THE PERIOD BECAUSE OF THE ONGOING MAJOR MODIFICATIONS BEING IMPLEMENTED TO THE SCRUBBING SYSTEM. THE SYSTEM SHOULD BE READY FOR OPERATION FEB. 1. THE UNIT MUST UNDERGO A SERIES OF TESTS TO INSURE COMPLIANCE WITH CITY AND FEDERAL REGULATIONS.				
JAN. 77	0	0	0	0	0
FEB. 77	383	337	264	88	69
MAR. 77	482	476	411	99	85
	THE NO. 3 UNIT WAS DOWN THE ENTIRE MONTH OF JANUARY FOR COMPLETION OF MODIFICATIONS AND REPAIRS TO THE SCRUBBERS AND BOILER. THE UNIT BECAME AVAILABLE FOR SERVICE AND TESTING ON				

MONTH	OPERATING HOURS BOILER	FGD OPERABILITY (%) MODULE 3A	MODULE 3B	MODULE A	MODULE B

FEB. 7. THE UNIT'S MEASURED PARTICULATE EMISSIONS AT THE SCRUBBER OUTLET WAS 0.12 LB/MM BTU (WELL BELOW THE 0.17 LB REGS). A BLEND OF APPROXIMATELY 2.0 % SULFUR COAL IS BEING FIRED IN THE BOILER. THE CONVERSION FROM LIMESTONE TO LIME HAS BEEN GOOD. SOME INITIAL PROBLEMS WITH PROCESS CHEMISTRY CONTROL HAVE BEEN CORRECTED. IN ADDITION, SOME MINOR MECHANICAL PROBLEMS IN THE FORM OF PUMP MALFUNCTIONS AND LOSS OF SLAKING WATER PRESSURE HAVE BEEN ENCOUNTERED. SYSTEM OPERATIONS ARE STILL CONTINUING AT 0% SOLIDS AND 100% BLOWDOWN. FRESH WATER MAKE-UP REQUIREMENT IS APPROXIMATELY 7.0 GPM/MW.

APR. 77	720	408	408	57	57

MAY 77	736	302	302	58	58

THE SYSTEM IS NOW OPERATING WELL AT ABOUT 15-25 PERCENT BLOWDOWN. THE PH CONTROL SYSTEM OPERATIONS HAVE BEEN EXCELLENT. DURING MAY THE BOILER BURNED GAS FOR 216 HOURS. THE OPERABILITY VALUES DO NOT INCLUDE THESE HOURS. SO2 REMOVAL EFFICIENCY IS ESTIMATED AT 50-60 PERCENT FOR BOTH A AND B SCRUBBING MODULES, ALTHOUGH ACTUAL TESTS HAVE NOT BEEN RUN FOR ABOUT ONE-AND-A-HALF YEARS. CURRENTLY BOTH MODULES ARE OPERATING SIMULTANEOUSLY.

JUN. 77	720	72	72

THE UNIT FIRED GAS THROUGHOUT THE ENTIRE MONTH WITH THE EXCEPTION OF A 72-HOUR PERIOD DURING WHICH COAL WAS FIRED AND THE SCRUBBERS WERE OPERATED FOR SCRUBBER PERSONNEL OPERATING PURPOSES ONLY.

JUL. 77	744	FGD NOT REQUIRED-NATURAL GAS

THE UNIT WAS IN SERVICE THROUGHOUT THE ENTIRE PERIOD, FIRING NATURAL GAS. THE SCRUBBERS WERE NOT REQUIRED FOR SERVICE DURING THE MONTH.

AUG. 77	FGD NOT REQUIRED-NATURAL GAS

SEP. 77	FGD NOT REQUIRED-NATURAL GAS

THE UNIT CONTINUED TO FIRE NATURAL GAS FOR THE ENTIRE REPORT PERIOD.

KANSAS CITY POWER & LIGHT HAWTHORN UNIT NO. 3

MONTH	PERIOD HRS.	BOILER HRS.	FGD SYSTEM HRS.	FGD SYSTEM AVAILABILITY (%)
OCT. 77	744	0	0	0
NOV. 77	720	411	411	57

THE UNIT WAS SHUT DOWN BECAUSE OF A LACK OF NATURAL GAS. DURING THIS PERIOD THE FGD SYSTEM WAS OVERHAULED. THE ORIGINAL REACTION TANKS AND SPRAY HEADERS WERE REPLACED BY STAINLESS STEEL COMPONENTS. THE INTERCONNECTING PIPING IS RUBBER LINED. THE UNIT BEGAN FIRING COAL NOVEMBER 3.

NOTE: THE BOILER AND FGD SYSTEM MUST RUN SIMULTANEOUSLY BECAUSE NO BY-PASS IS ALLOWED EXCEPT DURING EMERGENCIES. WHENEVER THE BOILER IS DOWN THE SCRUBBER IS EFFECTIVELY UNAVAILABLE BECAUSE THE DOWN TIME IS UTILIZED FOR SCRUBBER MAINTENANCE AND REPAIR. THEREFORE, AVAILABILITY AND UTILIZATION FACTORS ARE IDENTICAL FOR THIS SYSTEM.

DEC. 77	744	541	541	73
JAN. 78	744	346	346	47

OUTAGES SOME LEAKS IN THE FGD PIPING WERE REPLACED AND MODULES WERE CLEANED. THERE WERE NO FGD RELATED OUTAGES.

TABLE 3
PERFORMANCE DESCRIPTION FOR OPERATIONAL FGD SYSTEMS THROUGH 01/78

UTILITY NAME	KANSAS CITY POWER & LIGHT
UNIT NAME	HAWTHORN NO. 4
UNIT LOCATION	KANSAS CITY MISSOURI
UNIT RATING	100 MW
FUEL CHARACTERISTICS	COAL 0.5-3.5 PERCENT SULFUR
FGD VENDOR	COMBUSTION ENGINEERING
PROCESS	LIME SCRUBBING
NEW OR RETROFIT	RETROFIT
START UP DATE	8/72
FGD STATUS	OPERATIONAL
EFFICIENCY, PARTICULATES	99 PERCENT
SO2	70 PERCENT
WATER MAKE UP	OPEN LOOP 7.0 GPM/MW
SLUDGE DISPOSAL	PLANT SITE DISPOSAL POND
UNIT COST	SEE APPENDIX A, FGD SYSTEM ECONOMICS
OPERATIONAL EXPERIENCE	REFER TO THE BACKGROUND INFORMATION SECTION IN TABLE 3 OF THIS REPORT. THE SCRUBBER PLANT HAS BEEN CONVERTED FROM A LIMESTONE FURNACE INJECTION AND TAIL-END SCRUBBING SYSTEM TO A TAIL-END WET LIME SCRUBBING SYSTEM. OPERATIONS IN THE LIME SCRUBBING MODE COMMENCED ON JANUARY 1, 1977. COMPLIANCE TESTING FOR KANSAS CITY PARTICULATE REGULATIONS INDICATED THE UNIT IS MEETING THE 0.17 POUND REGULATION. THE 2-MODULE SCRUBBER PLANT CAN ONLY BE BY-PASSED DURING EMERGENCIES.

BACKGROUND INFORMATION ON HAWTHORN NOS. 3 AND 4

THE HAWTHORN POWER STATION IS OWNED AND OPERATED BY THE KANSAS CITY POWER AND LIGHT COMPANY AND SITUATED IN A HEAVILY INDUSTRIALIZED AREA ON THE NORTH BANK OF THE MISSOURI RIVER IN EAST KANSAS CITY, MISSOURI. THE PLANT CONTAINS FIVE COAL-FIRED BOILERS. UNITS 1 AND 2 ARE CONSIDERED PEAK BOILERS, EACH RATED AT 80 MW. UNITS 3 AND 4 ARE CYCLIC-LOAD BOILERS. EACH RATED AT 100 MW. UNIT 5 IS A BASE-LOAD BOILER RATED AT 500 MW. UNITS 1 TO 4 WERE PURCHASED AND PLACED IN SERVICE BETWEEN 1950 AND 1955. UNIT NO. 5 WAS PLACED IN SERVICE IN EARLY 1970. ALL THE HAWTHORN BOILERS ARE DRY-BOTTOM PULVERIZED-COAL-FIRED UNITS DESIGNED AND MANUFACTURED BY COMBUSTION ENGINEERING. TWO GRADES OF COAL ARE BURNED AT THE STATION: A LOW SULFUR COAL FROM THE WYOMING AREA THAT TYPICALLY CONTAINS 0.5% SULFUR AND 11 PERCENT ASH WITH A HEATING VALUE OF 9800 BTU/LB AND A HIGH SULFUR COAL FROM OKLAHOMA THAT TYPICALLY CONTAINS 3.5% SULFUR AND 14 PERCENT ASH WITH A HEATING VALUE OF 11,500 BTU/LB. OF THE FIVE COAL-FIRED BOILERS INSTALLED AT THE STATION, UNITS 3 AND 4 HAVE BEEN RETRO-FITTED WITH PARTICULATE AND SULFUR DIOXIDE SCRUBBER PLANTS.

THE ORIGINAL SCRUBBER PLANTS INSTALLED ON UNITS 3 AND 4 CONSISTED OF LIMESTONE INJECTION AND TAIL-END WET SCRUBBER MODULES SUPPLIED BY COMBUSTION ENGINEERING AND PLACED IN SERVICE NOVEMBER 1972 AND AUGUST 1972, RESPECTIVELY. A GENERAL PROCESS DESCRIPTION OF THE PROCESS FOLLOWS: DRY LIMESTONE WAS INJECTED DIRECTLY INTO THE FURNACE BOX AND CALCINED TO LIME. THE FURNACE-CALCINED LIMESTONE AND BOILER FLUE GAS WERE THEN DISCHARGED TO A TAIL-END WET SCRUBBING SYSTEM CONSISTING OF TWO MARBLE-BED ABSORBERS WHERE PARTICULATES AND SULFUR DIOXIDE WERE REMOVED FROM THE GAS STREAM. THE SPENT LIME AND OTHER SCRUBBING WASTES WERE THEN DISCHARGED INTO A COMMON CLARIFIER TANK AND THE UNDERFLOW WAS PUMPED, UNTREATED AND UNSTABILIZED, TO AN UNLINED DISPOSAL POND USED FOR THE DISPOSAL OF FLY ASH FROM THE OTHER BOILERS. THE SCRUBBER PLANT INSTALLED ON EACH BOILER CONTAINED TWO IDENTICAL MARBLE-BED ABSORBERS, EACH CAPABLE OF TREATING 500,000 ACFM OF FLUE GAS AT 300 F. A CHEVRON-TYPE MIST ELIMINATOR AND A FINNED-TUBE STEAM REHEATER WERE ALSO INCORPORATED IN EACH MODULE IN ADDITION TO A MIST ELIMINATOR WASH SYSTEM CONSISTING OF EIGHT AUTOMATICALLY-OPERATED WATER LANCES. BY-PASSING OF THE MODULES WAS POSSIBLE THROUGH A SERIES OF DAMPERS AND DUCTWORK AROUND EACH MODULE.

THE ORIGINAL SCRUBBER DESIGN OF THE SYSTEM INSTALLED ON THE NO. 4 BOILER HAD TO BE MODIFIED SHORTLY AFTER START-UP BECAUSE OF BOILER TUBE PLUGGING ATTRIBUTED TO THE LIMESTONE INJECTION. THE MODE OF OPERATION OF THIS SYSTEM WAS MODIFIED TO LIMESTONE INJECTION INTO THE FLUE GAS DUCT NEAR THE INLET TO THE MARBLE-BED ABSORBER. THE SIMPLIFIED PROCESS FLOW DIAGRAMS OF THESE ORIGINAL SCRUBBER PLANTS ARE PRESENTED IN APPENDIX B.

KANSAS CITY POWER & LIGHT — HAWTHORN UNIT NO. 4

MONTH	OPERATING HOURS BOILER	MODULE 4A	MODULE 4B	FGD OPERABILITY (%) MODULE A	MODULE B
JUL. 75	518	41	128	8	25

MARBLE BED PLUGGING AND STRAINER PROBLEMS ON BOTH MODULES.

AUG. 75		168	212		

LOST HALF OF BOILER DUE TO NO. 4B I.D. FAN OUTAGE. BOTH FGD MODULES WERE SHUT DOWN TO ENSURE AGAINST THE LOSS OF THE ENTIRE UNIT. NEW CHEMISTRY- ATTEMPTING TO RUN AT 100% BLOWDOWN AND NEAR ZERO PERCENT SOLIDS. EMPHASIS ON PARTICULATE CONTROL. MAINTAINING PH AT 5 WITHOUT LIMESTONE INJECTION.

SEP. 75	395	206	210	52	53

SCRUBBER MODULES WERE RETURNED TO SERVICE ON SEP. 21 AFTER REPLACEMENT OF THE ORIGINAL I.D. FAN ON MODULE 4B SIDE.
NEW PROCESS DESIGN - MARBLES REMOVED FROM SCRUBBER BED OF MODULE A AND REPLACED WITH A STAINLESS STEEL PERFORATED BED. THE MARBLES WERE REMOVED BECAUSE OF CONTINUING OPERATIONAL DIFFICULTIES. VERY GOOD PERFORMANCE RESULTED IN INCREASED AVAILABILITY AND CONTINUATION OF HIGH PARTICULATE REMOVAL EFFICIENCY (97 PERCENT).

OCT. 75	721	429	656	60	91

MINOR BOILER RESTRICTION ON THE MODULE 4A SIDE BETWEEN THE ECONOMIZER AND THE INLET DRAFT DUCT-CHEMISTRY PROCESS MODIFICATION OF RUNNING AT 100 PERCENT BLOWDOWN AND ZERO PERCENT SOLIDS IS STILL IN PROGRESS. SO2 REMOVAL EFFICIENCY IN THE 50 TO 60 PERCENT RANGE. KCP&L IS CONCENTRATING HEAVILY ON PARTICULATE EMISSION CONTROL.

NOV. 75	720	0	713	0	99

MODULE 4A WAS SHUT DOWN DURING THE REPORT PERIOD BECAUSE OF LOSS OF DRAFT THROUGH THE DUCTWORK FROM THE ECONOMIZER TO THE AIR PREHEATER. THE REHEATER PLUGGED FREQUENTLY UNTIL THE SYSTEM WAS SHUT DOWN.

DEC. 75	640	0	103	0	16

BOILER OUTAGE OF 5 DAYS WAS DUE TO A SCHEDULED OVERHAUL.

JAN. 76	0	0	0	0	0

THE SYSTEM WAS DOWN ALL MONTH BECAUSE OF FROZEN EQUIPMENT AND LINES; MANPOWER WAS ASSIGNED TO A BOILER AND TURBINE OVERHAUL ON ANOTHER UNIT.

FEB. 76	579	0	450	0	78

MODULE 4A WAS SHUT DOWN THE ENTIRE MONTH BECAUSE OF CONTINUING LOSS OF DRAFT THROUGH THE DUCTWORK FROM THE ECONOMIZER TO THE AIR PREHEATER. MARBLE BED PLUGGING AND LOSS OF A RECYCLE PUMP OCCURED ON MODULE 4B.

MAR. 76	706	0	24	0	3
APR. 76	550	231	220	42	40

DURING THE REPORT PERIOD THE UNIT'S BYPASS SEALS WERE REPLACED WITH SLIDE-GATE DAMPERS.

MAY 76	365	99	99	27	27
JUN. 76	460	294	23	65	5

EXPERIENCING PLUGGING PROBLEMS. ONE SECTION OF THE REHEAT TUBE BUNDLES HAS BEEN REMOVED IN ORDER TO FACILITATE CLEANING AND MAINTENANCE. CURRENTLY, THE UTILITY IS IN THE PROCESS OF MODIFYING THE SCRUBBING SYSTEM FROM A LIMESTONE INJECTION AND TAIL-END BASED SYSTEM TO A LIME SLURRY-BASED SYSTEM.

SEP. 76
OCT. 76

THE SYSTEM WAS OUT OF SERVICE VIRTUALLY THE ENTIRE REPORT PERIOD. OPERATIONS AND MANPOWER COMMITMENTS WERE SERIOUSLY HAMPERED BY A MAJOR EXPLOSION WHICH OCCURRED IN THE COAL MILL PULVERIZING AREA OF HAWTHORN NO. 5.

NOV. 76	786	442	0	91	0
DEC. 76	0	0	0	0	0

THE UTILITY IS IN THE PROCESS OF CONVERTING THE SYSTEM TO A WET-LIME SCRUBBING SYSTEM. START-UP IN THE LIME SCRUBBING MODE WILL COMMENCE THE FIRST PART OF JANUARY.

JAN. 77	572	488	424	85	74
FEB. 77	591	168	292	80	50
MAR. 77	539	440	525	97	82

THE UNIT BECAME AVAILABLE FOR SERVICE IN THE LIME SCRUBBING MODE ON JAN. 1, 1977. TESTING FOR COMPLIANCE WITH PARTICULATE CODES OCCURRED DURING THE MONTH. THE 0.17 LB/MM BTU EMISSION REGULATION IS BEING MET BY THE NO. 4 UNIT. A BLEND OF APPROXIMATELY 2.0% SULFUR COAL IS BEING BURNED IN THE UNIT TO REMEDY THIS. SOME REHEAT PROBLEMS AND PLUGGING IN THE SUCTION OF THE RECYCLE TANK BY A RAINCOAT WERE ALSO REPORTED. SYSTEM OPERATIONS ARE STILL CONTINUING AT 0% SOLIDS AND 100% BLOWDOWN. THE FRESH WATER MAKE-UP REQUIREMENT IS 7.0 GPM/MW.

KANSAS CITY POWER & LIGHT — HAWTHORN UNIT NO. 4

MONTH	OPERATING HOURS BOILER	MODULE 4A	MODULE 4B	FGD OPERABILITY (%) MODULE A	MODULE B
APR. 77	720	311	311	43	43
MAY 77	740	180	180	54	54

THE SYSTEM IS NOW OPERATING WELL AT ABOUT 15-25% BLOWDOWN. THE PH CONTROL SYSTEM OPERATIONS HAVE BEEN EXCELLENT. DURING MAY THE BOILER BURNED GAS FOR 408 HOURS. THE OPERABILITY VALUES DO NOT INCLUDE THESE HOURS. THE OPERABILITY VALUES DO NOT INCLUDE THESE HOURS. SO2 REMOVAL EFFICIENCY IS ESTIMATED AT 50-60% FOR BOTH A AND B SCRUBBING MODULES, ALTHOUGH ACTUAL TESTS HAVE NOT BEEN RUN FOR ABOUT ONI-AND-A-HALF YEARS. CURRENTLY BOTH MODULES ARE BEING OPERATED SIMULTANEOUSLY.

JUN. 77 720 FGD NOT REQUIRED-NATURAL GAS

UNIT NO. 4 FIRED GAS THROUGHOUT THE MONTH. THE SCRUBBER PLANT WAS SHUT DOWN FOR MODIFICATIONS DURING THE PERIOD. SPECIFICALLY, ALL THE INTERNAL SCRUBBER COMPONENTS WERE REPLACED WITH 316 LSS (UNDER-BED SPRAY HEADERS), A NEW REACTION TANK LINER WAS INSTALLED, AND RUBBER-LINED PIPING REPLACED THE ORIGINAL CARBON STEEL RECYCLE PIPING (FROM THE RECYCLE PUMPS TO THE SPRAY MAIIFOLD).

JUL. 77	696	120	120		

THE STAINLESS STEEL MODIFICATIONS WERE COMPLETED BY JULY 25 AND THE UNIT RESUMED COAL FIRING. THE SCRUBBER MODULES WERE IN SERVICE APPROXIMATELY 120 HOURS FOR THE REMAINDER OF THE MONTH. THE SYSTEM SUCCESSFULLY COMPLETED FEDERAL PARTICULATE REMOVAL TESTS (0.15 LB/MM BTU MEASURED) DURING THIS TIME. THE UNIT FIRED THE HIGH SULFUR, HIGH ASH (PEABODY-OKLAHOMA) COAL DURING THE TEST. OPACITY TESTS FOR BOTH UNITS 3 AND 4 WILL BE CONDUCTED IN SEPTEMBER.

AUG. 77	550	550	550	74	74
SEP. 77	589	520	520	73	73

DURING THE LATTER PART OF SEPTEMBER THE CLARIFIER BECAME PLUGGED. THE UNIT FIRED NATURAL GAS WHILE THE CLARIFIER WAS CLEANED.

KANSAS CITY POWER & LIGHT — HAWTHORN UNIT NO. 4

MONTH	PERIOD HRS.	BOILER HRS.	FGD SYSTEM HRS.	FGD SYSTEM AVAILABILITY (%)
OCT. 77	744	550	550	74
NOV. 77	720	496	496	69

A GENERATOR EXCITER PROBLEM CAUSED A BOILER OUTAGE DURING OCTOBER. THERE WERE TWO OTHER OUTAGES DURING OCTOBER THAT WERE SCRUBBER RELATED. THE FIRST WAS CAUSED BY A PLUGGED HEADER AND THE SECOND OCCURRED WHEN THE LIQUID LEVEL IN INTERNAL REACTION TANK EXCEEDED CONTROL LEVEL RESULTING IN PROBLEMS TO THE INLET GAS DUCT OG THE SCRUBBER. DURING NOVEMBER THERE WERE TWO INSTANCES OF PLUGGED UNDER BED NOZZLES ON THE 4A MODULE. THE SCRUBBER WAS DOWN 117.33 HOURS FOR FGD RELATED MAINTENANCE.
ON NOVEMBER 10 AN EPA OPACITY TEST WAS RUN ON MODULES 3 AND 4. AVERAGE OPACITY WAS 16.76% RUNNING AT OR NEAR FULL LOAD. THE UNITS ARE NOW CERTIFIED FOR PARTICULATE AND OPACITY.

NOTE: THE BOILER AND FGD SYSTEM MUST RUN SIMULTANEOUSLY BECAUSE NO BY-PASS IS ALLOWED EXCEPT DURING EMERGENCIES. WHENEVER THE BOILER IS DOWN THE SCRUBBER IS EFFECTIVELY UNAVAILABLE BECAUSE THE DOWN TIME IS UTILIZED FOR SCRUBBER MAINTENANCE AND REPAIR. THREEFORE, AVAILABILITY AND UTILIZATION FACTORS ARE IDENTICAL FOR THIS SYSTEM.

DEC. 77	744	520	520	70
JAN. 78	744	508	508	68

MODULE 4A HAD SEVERAL PROBLEMS INCLUDING SPRAY NOZZLE PLUGGING. THE SCRUBBER ON THE RECYCLE PUMP MALFUNCTIONED. SOME NEW SPRAY NOZZLES WERE INSTALLED. THERE WERE SEVERAL BOILER RELATED OUTAGES.

TABLE 3
PERFORMANCE DESCRIPTION FOR OPERATIONAL FGD SYSTEMS THROUGH 01/78

UTILITY NAME	KANSAS CITY POWER & LIGHT
UNIT NAME	LA CYGNE NO 1
UNIT LOCATION	LA CYGNE KANSAS
UNIT RATING	820 MW
FUEL CHARACTERISTICS	COAL 5.0 PERCENT SULFUR
FGD VENDOR	BABCOCK & WILCOX
PROCESS	LIMESTONE SCRUBBING
NEW OR RETROFIT	NEW
START UP DATE	2/73
FGD STATUS	OPERATIONAL
EFFICIENCY, PARTICULATES	98 PERCENT
SO2	76 PERCENT
WATER MAKE UP	OPEN LOOP 1.4 GPM/MW
SLUDGE DISPOSAL	PLANT SITE DISPOSAL POND
UNIT COST	SEE APPENDIX A, FGD SYSTEM ECONOMICS
OPERATIONAL EXPERIENCE	REFER TO THE BACKGROUND INFORMATION SECTION IN TABLE 3 OF THIS REPORT. THE EMISSION CONTROL SYSTEM FOR THIS NEW COAL-FIRED POWER-GENERATING UNIT CONSISTS OF EIGHT SCRUBBER MODULES FOR FLY ASH AND SO2 REMOVAL. EACH MODULE INCLUDES A VENTURI SCRUBBER IN SERIES WITH A 2-STAGE IMPINGEMENT PLATE ABSORBER. THE SCRUBBER PLANT IS AN INTEGRAL PART OF THE POWER-GENERATING COMPLEX, ALLOWING NO FLUE GAS BYPASS. INITIAL OPERATIONS COMMENCED IN FEB. 1973. COMMERCIAL SERVICE WAS ATTAINED BY JUNE 1973. TOTAL SYSTEM AVAILABILITY FOR THE MONTH OF JANUARY WAS 94 PERCENT.

BACKGROUND INFORMATION
ON
LA CYGNE UNIT NO. 1

THE LA CYGNE POWER STATION OF KANSAS CITY POWER AND LIGHT COMPANY BEGAN COMMERCIAL OPERATION ON JUNE 1, 1973, AS A JOINT PROJECT OF KANSAS GAS AND ELECTRIC COMPANY AND KANSAS CITY POWER & LIGHT COMPANY. THE STATION IS LOCATED ABOUT 55 MILES SOUTH OF KANSAS CITY, IN LINN COUNTY, KANSAS.

ELECTRIC POWER GENERATING FACILITY CONSISTS OF TWO COAL-FIRED BASE-LOAD BOILERS WITH ASSOCIATED STEAM TURBINES AND ELECTRIC GENERATORS. THE PLANT HAS THREE OIL-FIRED BOILERS, USED PRIMARILY FOR STARTUP OF THE LARGE UNIT. THE COMBINED NET GENERATING CAPACITY OF THE PLANT IS APPROXIMATELY 1450 MW (UNIT NO. 1 - 820 MW, UNIT NO. 2 - 630 MW).

BOILER NO. 1 AT LA CYGNE, DESIGNED BY BABCOCK AND WILCOX, IS A DRY-BOTTOM, PULVERIZED-COAL-FIRED CYCLONE UNIT. THE COAL BURNED IS LOW-GRADE, SUBBITUMINOUS, WITH AN AS-FIRED HEATING VALUE OF 9000 TO 9700 BTU/LB AND ASH SULFUR CONTENTS OF 25 PERCENT AND 5 PERCENT, RESPECTIVELY. POLLUTION CONTROL EQUIPMENT ON THIS BOILER CONSISTS OF EIGHT SCRUBBING MODULES FOR THE CONTROL OF PARTICULATE AND SULFUR DIOXIDE EMISSIONS. THIS SCRUBBING SYSTEM WAS DESIGNED AND CONSTRUCTED BY BABCOCK AND WILCOX AS AN INTEGRAL PART OF THE POWER GENERATING FACILITIES. BYPASSING OF THE BOILER'S FLUE GAS AROUND THE FGD SYSTEM IS NOT POSSIBLE. A PROCESS FLOW DIAGRAM OF THE LA CYGNE AIR QUALITY CONTROL SYSTEM AND RELATED MAJOR EQUIPMENT IS PRESENTED IN APPENDIX B.

PROBLEMS AND SOLUTUIONS

THE FGD INSTALLATION HAS BEEN PLAGUED WITH NUMEROUS PROBLEMS SINCE THE FIRST TRIAL OPERATION ON DECEMBER 26, 1972. SOME OF THESE PROBLEMS, SUCH AS VIBRATIONS OF THE INDUCED-DRAFT FANS AND THEIR SENSITIVITY TO IMBALANCE, OCCURRED EVEN BEFORE THE BOILER WAS FIRED. AS THESE FABRICATION PROBLEMS WERE CORRECTED AND THE FGD SYSTEM WENT INTO OPERATION, TWO OTHER TYPES OF PROBLEMS APPEARED. THE FIRST TYPE, ASSOCIATED WITH THE WET LIMESTONE PROCESS, INCLUDED PLUGGING OF THE DEMISTER AND STRAINERS. THE CORROSION ASSOCIATED WITH CONDENSATION OF ACID VAPORS FROM THE GAS ON THE REHEATER TUBE BUNDLES WAS CONTROLLED BY INJECTION OF SLIP STREAMS OF HOT AIR FROM THE BOILER'S COMBUSTION AIR HEATER INTO THE SCRUBBED FLUE GASES AT THE INLET TO THE REHEATER UNITS. THIS PRACTICE, WHICH REDUCED THE MAXIMUM GENERATING CAPACITY OF THE BOILER BY LIMITING THE AIR AVAILABLE FOR COAL COMBUSTION, IS NO LONGER NECESSARY BECAUSE OF RECENT SYSTEM DESIGN MODIFICATIONS.

BECAUSE THE FGD SYSTEM INCLUDES NO SPARE MODULES AND IT CANNOT BE BYPASSED, OUTPUT OF THE BOILER IS TOTALLY CONTROLLED BY PERFORMANCE AND AVAILABILITY OF THE FGD MODULES. PRESENT PROCEDURES CALL FOR CLEANING ONE MODULE EACH NIGHT ON A ROTATIONAL SCHEDULE AND KEEPING ALL MODULES AVAILABLE DURING THE DAYTIME PEAK PERIODS. CLEANOUTS REQUIRE THREE MEN FOR A PERIOD OF 10 TO 12 HOURS. RECENT MODIFICATIONS BY THE UTILITY ON THE SCRUBBER INSTALLATION HAVE RESULTED IN PLANS FOR PROLONGED OPERATIONAL PERIODS, WITH MODULES STAYING ON-LINE CONTINUOUSLY FOR PERIODS UP TO 3 WEEKS. THIS PREVENTIVE MAINTENANCE AND CLEANOUT SCHEDULE HAS, TO DATE, NOT YET BEEN ADOPTED.

THE UTILITY HAS RECENTLY COMPLETED ADDITIONAL SYSTEM MODIFICATIONS, INCLUDING THE INSTALLATION OF AN EIGHTH SCRUBBING MODULE (PLACED IN COMMERCIAL SERVICE JULY 1977). THE COST OF THE ADDITIONAL MODULE WAS APPROXIMATELY $5.2 MILLION AND ENABLES THE PLANT TO INCREASE ITS MAXIMUM CONTINOUS GENERATING CAPACITY FROM THE PREVIOUS 700-MW LEVEL TO 800 MW. THE ORIGINAL AIR QUALITY CONTROL SYSTEM DESIGN ALLOTTED ADDITIONAL SPACE FOR SUCH A SYSTEM EXPANSION. OTHER SYSTEM MODIFICATIONS INCLUDE: CHANGING THE I.D. FANS IN ORDER TO MINIMIZE OR ELIMINATE A FAN PARALLELING PROBLEM, INSTALLATION OF ADDITIONAL BANKS OF STEAM TUBE REHEATERS, CHANGING THE MIST ELIMINATOR WASH SYSTEM, INSTALLATION OF AN ADDITIONAL SLUDGE POND, AND IMPROVEMENT OF THE SYSTEM'S INSTRUMENTATION/CONTROL LOOPS FOR AUTOMATIC OPERATION.
TABLE THAT FOLLOWS.

KANSAS CITY POWER & LIGHT — OPERATING HISTORY — LA CYGNE UNIT NO. 1

MONTH	BOILER HOURS	PERCENT AVAILABILITY-BY MODULE A	B	C	D	E	F	G	AVERAGE
JAN. 74		49	32	44	87	23	37	81	50
FEB. 74		66	68	59	76	52	100	65	69
MAR. 74		BOILER SHUTDOWN							
APR. 74		67	70	75	88	74	100	88	80
MAY 74		69	83	78	85	78	84	80	80
JUN. 74		92	84	83	90	82	83	87	86
JUL. 74		75	80	80	81	85	79	77	80
AUG. 74		90	90	73	81	81	78	99	85
SEP. 74		69	88	73	76	83	89	86	81
OCT. 74		90	71	60	61	84	85	84	76
NOV. 74		90	71	60	61	84	85	84	76
DEC. 74		BOILER SHUTDOWN							

NOTE: THE 1974 FIGURES ARE BASED UPON ACTUAL SYSTEM OPERATION HOURS AS A FUNCTION OF ACTUAL BOILER HOURS.

JAN. 75	BOILER SHUTDOWN								
FEB. 75	BOILER SHUTDOWN								
MAR. 75	694	82	96	90	76	93	92	96	90
APR. 75	5 DAYS OF OPERATION								

DURING REDUCED LOAD CONDITIONS SOME OF THE MODULES WERE NOT REQUIRED AND THEREFORE SHUT DOWN, ALTHOUGH THEY WERE AVAILABLE. AVAILABILITY WAS THEREFORE HIGHER THAN SOME OF THE POSTED FIGURES INDICATE. 1975 FIGURES ARE BASED UPON SYSTEM AVAILABLE HOURS AS A FUNCTION OF HOURS IN THE PERIOD.

MAY 75	683	95	85	94	90	90	89	83	89
JUN. 75	667	88	85	84	85	84	86	89	86
JUL. 75	590	78	90	90	84	85	87	85	86
AUG. 75	630	75	88	87	78	92	85	83	84

MODULES A AND D ARE USED FOR RESEARCH TESTS. ONE MODULE IS SHUT DOWN EACH EVENING FOR CLEANING.

SEP. 75	610	78	84	84	85	79	78	74	80

SYSTEM SHUTDOWN OCT. 16, 1975 OWING TO PROBLEMS WITH GENERATOR AND I.D. AIR FAN. SYSTEM REMAINED INOPERATIVE THROUGHOUT THE MONTH.

OCT. 75	231	66	77	46	74	72	73	65	68
NOV. 75	346	93	90	80	93	96	89	94	91
DEC. 75	597	91	87	81	85	87	89	84	86

AVAILABILITY FIGURES FOR OCTOBER AND NOVEMBER DO NOT INCLUDE THE OUTAGE TIME FROM OCTOBER 16 TO NOVEMBER 13. BOILER OUTAGES OF 80, 50, AND 11 HOURS, TOTALING 141 HOURS, OCCURRED DURING DECEMBER.

JAN. 76	618	86	85	91	72	84	52	84	83
FEB. 76	594	94	90	86	91	92	93	95	92
MAR. 76	643	92	90	88	93	94	91	91	91

KANSAS CITY POWER & LIGHT OPERATING HISTORY LA CYGNE UNIT NO. 1

MONTH	BOILER HOURS	PERCENT AVAILABILITY-BY MODULE A	B	C	D	E	F	G	AVERAGE
APR. 76		BOILER OVERHAUL							
	THE SYSTEM WAS SHUT DOWN ON APRIL 6 FOR A SCHEDULED BOILER, AIR PREHEATER, AND STACK BREECHING OVERHAUL. DURING THIS OUTAGE SOME MAINTENANCE WAS PERFORMED ON THE SCRUBBER DUCTWORK, PRIMARILY BECAUSE OF CORROSION PROBLEMS.								
MAY 76	436	96	92	93	96	89	95	96	94
	THE SCHEDULED UNIT OUTAGE ENDED MAY 10 WHEN THE SYSTEM WAS RESTARTED. DURING THE REMAINDER OF THE MONTH FOUR UNIT OUTAGES WERE ENCOUNTERED, TOTALING OVER 70 HOURS.								
JUN. 76		93	94	94	95	93	93	91	93
	FOUR FORCED MINOR SCRUBBER OUTAGES OCCURRED DURING THE MONTH, RESULTING IN A TOTAL AVERAGE SYSTEM AVAILABILITY OF 93.33 PERCENT.								
JUL. 76		96	95	92	93	93	94	94	94
	THE UNIT RECORDED ITS LARGEST MW-HOUR MONTH SINCE INITIATION OF COMMERCIAL OPERATION. TWO MINOR SCRUBBER OUTAGES OCCURRED DURING THE MONTH.								
AUG. 76		94	93	92	94	92	90	88	92
	THE SYSTEM WAS TAKEN OUT OF SERVICE AUGUST 24 FOR REPAIR OF A TURBINE BLADE. THE UTILITY TOOK ADVANTAGE OF THIS OUTAGE PERIOD TO PROCEED WITH COATING THE STACK INNER STRUCTURE WITH PLASTITE 4005. THE AUGUST AVAILABILITY FIGURES DO NOT INCLUDE THIS OUTAGE TIME.								
SEP. 76		TURBINE REPAIR							
OCT. 76		TURBINE REPAIR							
	UNIT NO. 1 REMAINED OUT OF SERVICE ALL OF SEPTEMBER AND THE FIRST THREE WEEKS OF OCTOBER BECAUSE OF COMPLETION TO TURBINE BLADE REPAIRS WHICH COMMENCED ON AUGUST 24. THE SYSTEM WAS RETURNED TO SERVICE ON OCTOBER 20. OPERATION WAS INTERMITTENT PENDING TURBINE BLADE REBALANCING AND REESTABLISHMENT OF NORMAL OPERATING CONDITIONS.								
NOV. 76	627	95	93	94	95	94	93	94	94
DEC. 76	706	87	89	81	94	94	95	91	90
	DURING THE MONTH OF DECEMBER THE UTILITY CONDUCTED SOME MINOR REPAIR AND MODIFICATION WORK ON THE AQCS. SPECIFICALLY A-MODULE EXPERIENCED SOME VENTURI RECYCLE PUMP PROBLEMS AND THE C-MODULE'S REHEAT STEAM TUBE BUNDLES WERE INCREASED IN NUMBER FROM FOUR TO EIGHT.								
JAN. 77	714	94	90	95	95	95	92	90	93
FEB. 77	634	93	93	93	94	93	94	88	93
MAR. 77		94	92	86	94	91	94	90	92
	KCP&L REPORTS THAT THE 8TH MODULE HAS BEEN INSTALLED AND WILL BE PLACED IN SERVICE SOMETIME DURING THE MONTH OF APRIL. THE SYSTEM MODIFICATIONS PROGRAM IS STILL IN PROGRESS. TWO CRUCIAL MODIFICATION AREAS ARE REHEAT AND MIST ELIMINATION. ADDITIONAL BANKS OF STEAM TUBE BUNDLES HAVE BEEN INSTALLED IN SOME MODULES. THE MIST ELIMINATORS IN TWO MODULES HAVE BEEN MODIFIED TO THE POINT WHERE THEY HAVE BEEN OPERATING CONTINUOUSLY CLEAN. THE AQCS'S WATER LOOP IS NOW 95% CLOSED. ALSO, A NEW SETTLING POND IS BEING INSTALLED AT THE PLANT. THE PLANT IS STILL GENERATING 700-720 MW DURING THE DAY AND 500-570 MW AT NIGHT. 50F OF REHEAT HAS BEEN DETERMINED AS THE NECESSARY AMOUNT FOR THE LA CYNGE NO. 1 UNIT.								
APR. 77		96	94	97	94	95	96	95	95
MAY 77		TURBINE REPAIR							
	DURING APRIL, THE AVERAGE AVAILABILITY INDEX FOR THE SEVEN MODULES WAS 95.2 PERCENT. THE EIGHTH MODULE IS READY FOR OPERATION AND IN FACT HAS BEEN RUN FOR TWO DAYS. HOWEVER, THE BOILER AND SCRUBBER SYSTEM WERE SHUT DOWN IN MAY DUE TO TURBINE PROBLEMS. THE BOILER AND EIGHT MODULES ARE EXPECTED TO START UP ABOUT JUNE 27, WHEN IT IS EXPECTED THAT 800 MW WILL GO ON LINE. THE MIST ELIMINATOR WASHING CONFIGURATION IS BEING CHANGED TO WORK COUNTER-CURRENT TO THE GAS FLOW. ADDITIONAL TUBE BUNDLES ARE BEING ADDED TO INCREASE THE REHEAT AREA. THESE CHANGES SHOULD BE TAKEN CARE OF BY THE END OF JUNE. THE NEW SETTLING POND IS STILL BEING DRAWN UP. EXCAVATION HAS NOT BEGUN.								
JUN. 77		TURBINE REPAIR							
	THE UNIT REMAINED SHUT DOWN DURING THE PERIOD AS THE TURBINE REPAIR AND OVERHAUL CONTINUED. MINOR CLEANOUT AND REPAIR WORK WAS DONE ON THE SCRUBBER PLANT DURING THE TURBINE OUTAGE.								

KANSAS CITY POWER & LIGHT OPERATING HISTORY LA CYGNE UNIT NO. 1

MONTH	BOILER HOURS	PERCENT AVAILABILITY-BY MODULE A	B	C	D	E	F	G	H	AVERAGE
JUL. 77	528	95	93	94	95	95	95	95	95	95

FOLLOWING THE TURBINE OUTAGE, THE UNIT WAS PLACED BACK IN COMMERCIAL SERVICE ON JULY 5. RESUMPTION OF OPERATIONS WAS CONDUCTED WITH EIGHT SCRUBBER MODULES IN THE FLUE GAS PATH, ENABLING THE UNIT TO OPERATE AT A MAXIMUM CONTINUOUS LOAD CAPACITY OF 800 TO 820 MW. PARTICULATE REMOVAL TESTS DETERMINING COMPLIANCE WITH KANSAS REGULATIONS (0.13 LB/MM BTU) IS SCHEDULED TO BE CONDUCTED IN LATE AUGUST.

AUG. 77	507	89	55	93	93	90	93	93	94	87
SEP. 77	524	93	94	89	90	93	95	92	93	92

THE PARTICULATE REMOVAL TESTS WERE CONDUCTED IN LATE AUGUST AND UNIT NO. 1 HAS PASSED THE COMPLIANCE REQUIREMENTS. MODULE B HAD LOW AVAILABILITY DUE TO THE BURNING OF THE MOTOR ON THE RECIRCULATING PUMP. IT WAS REMOVED AND STARTED AGAIN AFTER 12 DAYS.

OCT. 77	456	91	96	89	94	93	94	89	93	92

THE SYSTEM RAN SMOOTHLY THROUGH OCTOBER, HOWEVER, A 12-DAY BOILER OUTAGE WAS REQUIRED TO DESLAG THE BOILER.

NOV. 77	234	93	96	93	94	92	93	96	95	94

THE BOILER HAS BEEN DOWN SINCE NOV. 15 BECAUSE OF A NECESSARY TURBINE OVERHAUL AND IS EXPECTED TO GO BACK ON-LINE DEC. 19.

DEC. 77	300	98	98	96	96	96	97	98	99	97

THE TURBINE OVERHAUL CONTINUED UP TO DECEMBER 25. THERE WERE A FEW SMALL BOILER RELATED OUTAGES IN DECEMBER.

JAN. 78	300	90	95	95	95	93	94	94	94	94

THERE WERE SOME BOILER RELATED OUTAGES IN JANUARY, TOTALLING ABOUT 50 HOURS. THE FGD SYSTEM CONTINUED TO OPERATE WITHOUT ANY PROBLEMS.

TABLE 3
PERFORMANCE DESCRIPTION FOR OPERATIONAL FGD SYSTEMS THROUGH 01/78

UTILITY NAME	KANSAS POWER & LIGHT
UNIT NAME	LAWRENCE NO 4
UNIT LOCATION	LAWRENCE KANSAS
UNIT RATING	125 MW
FUEL CHARACTERISTICS	COAL 0.5 PERCENT SULFUR
FGD VENDOR	COMBUSTION ENGINEERING
PROCESS	LIMESTONE SCRUBBING
NEW OR RETROFIT	RETROFIT
START UP DATE	12/68
FGD STATUS	OPERATIONAL
EFFICIENCY, PARTICULATES	99 PERCENT
SO2	75 PERCENT
WATER MAKE UP	OPEN LOAD
SLUDGE DISPOSAL	PLANT SITE DISPOSAL POND
UNIT COST	
OPERATIONAL EXPERIENCE	REFER TO BACKGROUND INFORMATION SECTION IN TABLE 3 OF THIS REPORT. THE NEW LIMESTONE FGD SYSTEM COMMENCED OPERATIONS IN EARLY JANUARY 1977. THERE HAVE BEEN NO FORCED SCRUBBER OUTAGES REPORTED SINCE START-UP. CONTINUOUS SO2 MONITORS HAVE RECORDED SO2 REMOVAL EFFICIENCIES OF BETTER THAN 85%. PARTICULATE REMOVAL IS REPORTED TO BE EXCELLENT, YIELDING NO VISIBLE PLUME. THE PLANT IS FIRING COAL RATED AT 12,300 BTU/LB WITH A SULFUR CONTENT OF 3.5%.

BACKGROUND INFORMATION ON LAWRENCE NO. 4

KANSAS POWER AND LIGHT'S LAWRENCE NO. 4 UNIT, AT LAWRENCE, KANSAS, IS A CYCLIC-LOAD BOILER EQUIPPED TO BURN COAL, NATURAL GAS SUPPLEMENTED WITH FUEL OIL, OR A COMBINATION OF THESE THREE FUELS. THIS 125-MW COMBUSTION ENGINEERING UNIT BEGAN GENERATING OPERATIONS IN 1959. THE COAL FIRED IS FROM A LOW-SULFUR SOUTHEAST WYOMING SEAM, AND HAS AN AVERAGE HEATING VALUE OF 10,000 BTU/LB, A SULFUR CONTENT OF 0.5 PERCENT, AND AN ASH CONTENT OF 11 PERCENT.

LAWRENCE NO. 4 IS NOW OPERATING WITH A RETROFITTED COMBUSTION ENGINEERING WET LIMESTONE FGD SYSTEM WHICH BEGAN COMMERCIAL OPERATION IN EARLY JANUARY 1977. THE WET LIMESTONE SCRUBBING MODE REPLACES THE ORIGINAL FGD APPROACH WHICH WAS LIMESTONE INJECTION INTO THE BOILER BOX FOLLOWED BY SINGLE-STAGE MARBLE BED SCRUBBERS. A SIMILAR CONVERSION PROCESS IS PRESENTLY UNDERWAY AT THE 400-MW LAWRENCE NO. 5 UNIT, CURRENTLY SCHEDULED FOR START-UP IN THE FIRST HALF OF 1978. THE FGD SYSTEMS ON THESE TWO UNITS WILL SHARE THE NEW WET LIMESTONE MILLING FACILITIES AND RECIRCULATION TANKS IN BOTH THE PARTICULATE REMOVAL AND SO2 ABSORPTION LOOPS.

THE AIR QUALITY CONTROL SYSTEM AT THE LAWRENCE NO. 4 UNIT CONSISTS OF TWO-STAGE SCRUBBING FOLLOWED BY AN I.D. FAN LEADING INTO THE STACK. THE FIRST SCRUBBING STAGE UTILIZES THE ROD SCRUBBING APPROACH FOR PARTICULATE REMOVAL. THE SECOND STAGE IS A SPRAY TOWER SO2 ABSORPTION LOOP. OVERFLOW FROM THE SPRAY TOWER RECIRCULATION TANK FEEDS INTO THE PARTICULATE LOOP AND A SIGNIFICANT PORTION OF THE SO2 IS THEREFORE REMOVED IN THE PARTICULATE SCRUBBER.

THE FGD SYSTEMS ON LAWRENCE NO. 4 AND NO. 5 FEATURE FULLY-AUTOMATED CONTROLS. LIMESTONE FEED RATE IS CURRENTLY GOVERNED PRIMARILY BY A PH MONITORING SYSTEM, AND THE CAPABILITY EXISTS TO TIE IN THE INLET AND OUTLET SO2 MONITOR READINGS TO THE CONTROL SYSTEM. THERE ARE ALSO AUTOMATIC DENSITY METERS IN THE LIMESTONE SLURRY TANKS.

FOR A SIMPLIFIED FLOW DIAGRAM OF THE LIMESTONE SCRUBBING SYSTEM, REFER TO APPENDIX B. THE ORIGINAL LIMESTONE INJECTION SYSTEM, NOW REPLACED, IS ALSO REPRESENTED IN APPENDIX B.

A HISTORY OF PROBLEMS WITH THE INJECTION SYSTEM AT LAWRENCE NO. 4

PROBLEMS WITH THE FGD SYSTEM ON BOILER NO. 4 INCLUDED BUILDUP AND PLUGGING OF THE INLET DUCT WHERE HOT GASES ENTER THE SCRUBBERS, EROSION OF SCRUBBERS WALLS, CORROSION OF SCRUBBERS INTERNALS, BUILDUP ON ID FAN ROTORS, AND PLUGGING OF DRAIN LINES, MARBLE BEDS, AND DEMISTERS. LOW SO2 REMOVAL WAS CAUSED BY OVERBURNING OF THE LIMESTONE AND DROPOUT OF THE LIME WITH THE ASH IN THE BOTTOM OF THE SCRUBBER.

THE SCRUBBERS WERE MODIFIED IN 1969 BY RAISING THE DEMISTER AND ADDING SOOT BLOWERS IN THE INLET DUCT AND REHEATER TO REDUCE PLUGGING. NEW SPRAY NOZZLES WERE ALSO INSTALLED. REHEATER PLUGGING WAS ELIMINATED BY REPLACING COPPER REHEAT COILS WITH A CARBON STEEL UNIT HAVING WIDELY SPACED FINS.

MAJOR MODIFICATIONS IN 1970 WERE SANDBLASTING AND COATING OF THE INTERIOR OF THE SCRUBBERS, REPLACEMENT OF ALL INTERNAL STEEL PIPES WITH PLASTIC AND FIBERGLASS, AND REPLACEMENT OF STAINLESS STEEL DEMISTERS WITH FIBERGLASS. SINCE DEMISTER PLUGGING WAS NOT COMPLETELY ELIMINATED, THE UNIT WAS WASHED MANUALLY EVERY NIGHT TO MAINTAIN THE REQUIRED OUTPUT.

THE MODIFICATIONS IN THE SUMMER OF 1972 ON THE TWO FGD MODULES INCLUDED ENLARGEMENT OF THE CRYSTALLIZATION TANK, AND INSTALLATION OF NEW PLASTIC SPRAY NOZZLES, NEW SLURRY PUMPS AND STRAINERS, AND NEW MULTIPLE MIXERS IN THE TANK.

PROBLEMS THAT REMAINED INCLUDED CORROSION, INEFFICIENT DAMPERS, EXPANSION JOINT FAILURE, DEMISTER FOULING, RAPID EROSION OF THE SLURRY PUMP, AND VALVE FAILURE. OPERATION OF THE FGD SYSTEM SINCE THE FALL OF 1973 HAS BEEN THE MOST SUCCESSFUL TO DATE.

OPERATION OF THE SCRUBBER SYSTEM ON THE WYOMING COAL HAS PROVED TO BE MORE EFFICIENT AND ECONOMICAL THAN EARLIER OPERATIONS BECAUSE A LESSER DEGREE OF SO2 REMOVAL IS REQUIRED FOR COMPLIANCE. THE SCRUBBER SYSTEM IS STILL OPERATING IN THE HIGH-SOLIDS MODE AS AN SO2 AND PARTICULATE REMOVAL SYSTEM. NORMAL MANUAL CLEANING REQUIREMENTS HAVE BEEN REDUCED TO TWO 4-HOUR SHIFTS PER SCRUBBER PER WEEK.

IN 1974 THIS UNIT WAS AVAILABLE FOR OPERATION 343 DAYS. FIFTY PERCENT OF THE FUEL CONSUMED WAS COAL, 2 PERCENT FUEL OIL, AND 48 PERCENT NATURAL GAS. DURING 1975 THIS UNIT WAS AVAILABLE FOR OPERATING 333 DAYS. SIXTY-FOUR PERCENT OF THE FUEL CONSUMED WAS COAL, 3 PERCENT FUEL OIL, AND 33 PERCENT NATURAL GAS.

BY LATE 1976, THE ORIGINAL EMISSION CONTROL SYSTEM WAS REPLACED WITH A ROD AND SPRAY TOWER SCRUBBER FOR PARTICULATE AND SO2 REMOVAL. INFORMATION ON THE ORIGINAL AND REPLACEMENT SYSTEM IS GIVEN IN THE FOLLOWING TABLE.

KANSAS POWER & LIGHT LAWRENCE UNIT NO. 4

OPERATING HISTORY - NOW TERMINATED LIMESTONE INJECTION SYSTEM - LAWRENCE NO. 4

MONTH	BOILER	OPERATING HOURS MODULE A	OPERATING HOURS MODULE B	AVAILABILITY MODULE A	AVAILABILITY MODULE B

THE FGD SYSTEM HAS OPERATED SATISFACTORILY FOR OVER A YEAR. AVAILABILITY IS REPORTED TO BE ADEQUATE FOR THE OPERATION OF THIS STATION. STATION LOAD IS REDUCED TO 50 PERCENT EVERY NIGHT. THEREFORE, ONE OF THE MODULES CAN BE TAKEN OFF-LINE NIGHTLY FOR CLEANING OR REPAIR. WYOMING COAL (0.5 PERCENT SULFUR) IS BEING BURNED IN THE BOILER. SOME NATURAL GAS HAS BEEN BURNED SINCE JUNE 20.

JUL. 75 NOT LOGGED
AUG. 75

EACH MODULE SHUT DOWN ONCE PER WEEK FOR INSPECTION AND CLEAN-UP. NO BOILER OUTAGES OCCURRED DURING THE JULY-AUGUST PERIOD.

SEP. 75 NOT LOGGED
OCT. 75

NOV. 75 NOT LOGGED
DEC. 75

JAN. 76 NOT LOGGED
FEB. 76

PRESENT PROJECTIONS BY THE UTILITY CALL FOR THIS UNIT TO BE AVAILABLE 330 DAYS DURING 1976. THE FUEL CONSUMPTION WILL BE 80 PERCENT COAL, 12 PERCENT NATURAL GAS, AND 8 PERCENT FUEL OIL. THE UTILITY IS REPLACING THIS SCRUBBER SYSTEM WITH A VENTRI-ROD FOLLOWED BY A SPRAY TOWER.

MAR. 76
APR. 76

MAY. 76 NO INFORMATION WAS REPORTED BY THE UTILITY FOR THE PERIOD.
JUN. 76

JUL. 76 NO INFORMATION WAS REPORTED BY THE UTILITY FOR THE PERIOD.
AUG. 76

SEP. 76
OCT. 76

NOV. 76 TURBINE OVERHAUL AND REPAIR
DEC. 76

THE UTILITY REPORTS THAT THE UNIT REMAINED OUT OF SERVICE THROUGHOUT THE REPORT PERIOD AS A SCHEDULED TURBINE OVERHAUL, WHICH COMMENCED IN MID-SEPTEMBER, CONTINUED. THE NEW EMISSION CONTROL SYSTEM, CONSISTING OF A ROD SECTION AND SPRAY TOWER SCRUBBING SYSTEM, HAS BEEN INSTALLED ON THIS UNIT. INITIAL OPERATION OF THE SYSTEM WILL COMMENCE FOLLOWING COMPLETION OF THE TURBINE OVERHAUL. THE UNIT WILL CONTINUE TO FIRE LOW SULFUR WYOMING COAL (0.5% SULFUR 10,000 BTU/LB).

OPERATING HISTORY - WET LIMESTONE SCRUBBING SYSTEM - LAWRENCE NO. 4

JAN. 77 THE NEW LIMESTONE FGD SYSTEM BECAME COMMERCIALLY OPERABLE IN EARLY JANUARY 1977.
FEB. 77 THERE HAVE BEEN NO FORCED OUTAGES AND NO DOWNTIME SINCE START-UP. THE UTILITY REPORTS
MAR. 77 THAT BOTH PARTICULATE AND SO2 REMOVALS ARE QUITE SATISFACTORY. MINOR PROBLEMS HAVE BEEN RELATED TO MAINTAINING DESIRED SOLIDS LEVEL IN THE MAKE-UP TANK. MODIFICATION PLANS INCLUDE CESSATION OF SLURRY DILUTION, WHICH CURRENTLY PRECEDES THE INTRODUCTION OF THE FRESH LIMESTONE SLURRY INTO THE RECIRCULATION LOOP. THE UTILITY PLANS TO PUMP THE 35-PERCENT SOLIDS SLURRY DIRECTLY FROM THE SLURRY TANK INTO THE RECIRCULATION LOOP. CURRENTLY SEVERAL DIFFERENT MAKES OF SLURRY PUMPS ARE BEING USED. ALL ARE FUNCTIONING WELL SO FAR. THE PUMPS HAVE NOT BEEN IN SERVICE LONG ENOUGH FOR COMPARISONS TO BE DRAWN.

APR. 77 THE SCRUBBER WAS NOT REQUIRED FOR SERVICE DURING THE REPORT PERIOD BECAUSE NATURAL
MAY 77 GAS WAS FIRED IN THE BOILER. KP&L ANTICIPATES THAT THE NATURAL GAS AVAILABILITY SHOULD LAST THROUGHOUT THE MAJORITY OF THE SUMMER, REQUIRING NO SCRUBBER PLANT OPERATIONS DURING THE PERIOD.

JUN. 77 THE NO. 4 BOILER HAS BEEN FIRING 100% NATURAL GAS FOR ALL BUT APPROXIMATELY 8 TO 10
JUL. 77 DAYS SINCE THE BEGINNING OF APRIL 1977. DURING THE DAYS WHEN COAL WAS FIRED, THE TWO-STAGE WET PARTICULATE AND SO2 REMOVAL SYSTEM HAS BEEN UTILIZED AND OPERATIONS HAVE BEEN SATISFACTORY WITH THE EXCEPTION OF MINOR PROBLEMS RELATED TO THE MINIMAL USAGE OF THE SYSTEM. PROBLEMS IN THE SCRUBBING TRAIN HAVE INCLUDED SOME MIST ELIMINATOR CRACKS, PROBLEMS WITH THE RECYCLE TANK STRAINER SCREEN WASH, A COMPRESSOR BREAKDOWN IN THE RECYCLE TANK AIR AGITATION SYSTEM, AND SOME SOOT BLOWER PROBLEMS. IN ADDITION, THE DENVER SLURRY PUMPS ARE EXPERIENCING SOME ON-GOING PROBLEMS, WHILE THE ALLEN-SHERMAN-HOFF PUMPS ARE OPERATING SATISFACTORILY.

THE UTILITY IS PLANNING FOR AN INTERRUPTION OF GAS SUPPLY IN THE FOURTH QUARTER OF THIS YEAR, AND THE RESTART OF CONTINUOUS COAL-FIRING POWER GENERATION.

AUG. 77 THE BOILERS BURNED NATURAL GAS THROUGHOUT AUGUST. THE MIST ELIMINATOR CRACKS HAVE
SEP. 77 BEEN REPAIRED, BUT THE RECYCLE TANK STRAINER PROBLEMS PERSISTED. THE AIR AGITATION SYSTEM COMPRESSOR WAS MALFUNCTIONING. THE DENVER SLURRY PUMPS ARE FUNCTIONING ADEQUATELY AT PRESENT. THE PUMP GLAND PACKINGS ARE BEING REDESIGNED. AS OF 9/15/77 THE UNIT BURNED
OCT. 77 COAL. THE SYSTEM CAPACITY WAS CUT BACK TO 50 PERCENT (50-55 MW) IN OCTOBER BECAUSE A NEW
NOV. 77 COOLING TOWER IS BEING CONSTRUCTED. ON NOV. 15 A MAJOR FGD SYSTEM OVERHAUL TOOK PLACE WHILE THE TURBINE WAS DOWN FOR INSPECTION AND THE NEW COOLING TOWER WAS BEING CONNECTED. UNIT IS DUE BACK ON-LINE IN MID-DECEMBER.
DEC. 77 THE UNIT CAME ON-LINE DECEMBER 208 WITH FULL CAPACITY. THE CONSTRUCTION OF THE NEW COOLING TOWER IS COMPLETE. THE TURBINES WERE BALANCED.

JAN. 78 THE FGD SYSTEM OPERATED WITHOUT ANY PROBLEMS OTHER THAN SOME FREEZING OF THE PIPE-LINES. THE FREEZER IN THE DISCHARGE LINE CAUSED CLARIFIER PLUGGING.

TABLE 3
PERFORMANCE DESCRIPTION FOR OPERATIONAL FGD SYSTEMS THROUGH 01/78

UTILITY NAME	KANSAS POWER & LIGHT
UNIT NAME	LAWRENCE NO 5
UNIT LOCATION	LAWRENCE KANSAS
UNIT RATING	400 MW
FUEL CHARACTERISTICS	COAL 0.5 PERCENT SULFUR
FGD VENDOR	COMBUSTION ENGINEERING
PROCESS	LIMESTONE SCRUBBING
NEW OR RETROFIT	NEW
START UP DATE	11/71
FGD STATUS	OPERATIONAL
EFFICIENCY, PARTICULATES	99 PERCENT
SO2	65 PERCENT
WATER MAKE UP	OPEN LOOP
SLUDGE DISPOSAL	PLANT SITE DISPOSAL POND
UNIT COST	
OPERATIONAL EXPERIENCE	REFER TO THE BACKGROUND INFORMATION SECTION IN TABLE 3 OF THIS REPORT. THE ORIGINAL LIMESTONE INJECTION AND TAIL-END SCRUBBING SYSTEM IS STILL IN SERVICE WHILE A NEW ROD-SCRUBBER AND SPRAY TOWER ABSORBER SYSTEM IS BEING ERECTED ALONG SIDE THE EXISTING SYSTEM. THE NEW SCRUBBER PLANT INCLUDES 2 MODULES EACH CAPABLE OF HANDLING APPROXIMATELY 50% OF THE TOTAL BOILER FLUE GAS FLOW. THE SYSTEM DESIGNER AND SUPPLIER IS COMBUSTION ENGINEERING. THE UNIT FIRES APPROXIMATELY 140 TONS/HOUR OF LOW SULFUR WYOMING COAL HAVING HEAT AND SULFUR CONTENTS OF 10,000 BTU/LB AND 0.5%.

BACKGROUND INFORMATION
ON
LAWRENCE NO. 5

UNIT NO. 5 AT LAWRENCE POWER STATION IS A CYCLIC-LOAD STEAM BOILER EQUIPPED TO BURN COAL, NATURAL GAS SUPPLEMENTED WITH OIL, OR COMBINATIONS OF THESE FUELS. THE BOILER, PLACED IN SERVICE IN 1971, HAS A RATED CAPACITY OF 400 MW WHEN BURNING COAL AND NATURAL GAS.

THE COAL NOW BURNED AT THE LAWRENCE POWER PLANT IS A LOW-SULFUR SOUTHEAST COAL, HAVING AN AVERAGE HEATING VALUE OF 10,000 BTU/LB AND SULFUR AND ASH CONTENTS OF 0.5 AND 11 PERCENT RESPECTIVELY.

THE BOILER'S ORIGINAL FGD SYSTEM WAS SUPPLIED BY COMBUSTION ENGINEERING AND PLACED IN SERVICE IN 1971. ORIGINAL EQUIPMENT INCLUDED 8 IDENTICAL MODULES WITH A CAPACITY OF 150,000 SCFM/MODULE. EACH MODULE CONSISTS OF A SINGLE-STAGE MARBLE BED SCRUBBER FOLLOWED BY A CHEVRON-TYPE DEMISTER AND INDIRECT STEAM REHEATER. ALL THE MODULES ARE FITTED WITH BY-PASS DUCTS AND HYDRAULIC SEAL DAMPERS. THE PLANT INCLUDES FACILITIES FOR STORING AND MILLING LIMESTONE (COMPOSITION: 93 PERCENT CALCIUM CARBONATE, 6 PERCENT SILICA, AND 1 PERCENT MAGNESIUM CARBONATE).

SPENT SLURRY FROM THE UNIT ALONG WITH THE SLURRY FROM UNIT NO. 4 IS SENT TO THREE INTERCONNECTED UNLINED SLUDGE DISPOSAL PONDS OF 16, 28, AND 4 ACRES. COOLING TOWER BLOWDOWN SUPPLIES MAKE-UP WATER TO THE POND SYSTEM. CLARIFIED POND WATER IS RECYCLED. THE SLUDGE IS NOT TREATED FURTHER AND IS REPORTED TO SET AND SOLIDIFY IN THE PONDS.

PROBLEMS AND SOLUTIONS

PROBLEMS WITH THE FGD SYSTEM ON BOILER NO. 5 WERE SIMILAR PROBLEMS TO THOSE OF THE SYSTEM ON BOILER NO. 4: LOCALIZED CORROSION IN SOME EQUIPMENT, UNSATISFACTORY DAMPER OPERATION, DEMISTER FOULING, EXPANSION JOINT FAILURE, AND RAPID WEAR OF SLURRY-RECIRCULATING PUMPS. IN ADDITION TO THESE PROBLEMS, BOILER NO. 5 IS PLAGUED WITH POOR FLUE GAS DISTRIBUTION TO THE EIGHT FGD MODULES WHICH, UNLIKE THE MODULES ON BOILER NO. 4 ARE ALL INTERCONNECTED TO A COMMON STACK.

FGD SYSTEM AVAILABILITY IS ADEQUATE FOR THE OPERATION OF THIS STATION. BECAUSE THE STATION LOAD IS REDUCED TO FIFTY PERCENT, AS MANY AS FOUR MODULES ARE SHUT DOWN FOR CLEANING AND REPAIR EACH EVENING.

OPERATION OF THE SCRUBBER SYSTEM ON WYOMING COAL HAS PROVED TO BE MORE EFFICIENT AND ECONOMICAL BECAUSE OF THE LESSER DEGREE OF SO2 REMOVAL REQUIRED.

IN 1974 THE UNIT WAS AVAILABLE FOR OPERATION 338 DAYS* 66 PERCENT OF THE FUEL CONSUMED WAS NATURAL GAS, 27 PERCENT COAL, AND 6 PERCENT FUEL OIL. DURING 1975 THE UNIT WAS AVAILABLE FOR OPERATION 352 DAYS, FUEL CONSUMPTION WAS 45 PERCENT NATURAL GAS, 42 PERCENT COAL, AND 13 PERCENT FUEL OIL.

KP&L, IN ORDER TO MAINTAIN SCRUBBING OPERATIONS FOR THIS UNIT, IS NOW FOLLOWING A COURSE SIMULAR TO THE ONE EMPLOYED FOR THE NO. 4 UNIT AT THIS STATION. SPECIFICALLY, A TWO-TRAIN VENTURI-ROD SCRUBBER AND SPRAY TOWER ABSORBER ASSEMBLY IS BEING INSTALLED ALONGSIDE THE EXISTING MARBLE-BED SYSTEM. THE MARBLE-BED UNITS WILL REMAIN IN SERVICE UNTIL THE NEW SPRAY TOWER SYSTEM HAS BEEN COMPLETED AND DUCTED INTO THE BOILER FLUE GAS STREAM. THIS WILL OCCUR SOMETIME DURING THE COURSE OF 1978. ADDITIONAL DATA AND INFORMATION IS PROVIDED IN THE TABLE THAT FOLLOWS. A FLOW DIAGRAM OF THE INJECTION SYSTEM IS PROVIDED IN APPENDIX B.

MONTHS	OPERATING HOURS BOILER	FGD MODULES

WYOMING COAL IS BEING BURNED IN THIS UNIT. FGD SYSTEM AVAILABILITY IS REPORTED TO BE ADEQUATE FOR OPERATION OF THIS STATION. SINCE STATION LOAD IS REDUCED TO 50 PERCENT EVERY NIGHT, AS MANY AS FOUR MODULES CAN BE SHUT DOWN FOR CLEANING AND REPAIR EACH EVENING. FGD UNITS WERE OFF-LINE MOST OF JUNE FOR MAJOR REBUILDING OF THE SPRAY SYSTEMS IN ALL MODULES. SOME OIL WAS BURNED TO ALLOW BYPASSING OF THE REPAIR.

JUL. 75 NOT LOGGED
AUG. 75

OIL AND GAS WERE BURNED IN JULY AND AUGUST. NO FGD OPERATION.

SEP. 75 NOT LOGGED
OCT. 75

GAS AND OIL BURNED ON A PART-TIME BASIS DURING SEPTEMBER AND OCTOBER. BOILER OUTAGE WAS DUE TO INSPECTION, TURBINE REPAIR, AND REPLACEMENT OF THE SLURRY TANK SCREEN.

NOV. 75 NOT LOGGED
DEC. 75
JAN. 76 NOT LOGGED

PROJECTIONS BY THE UTILITY FOR THIS UNIT CALL FOR 330 DAYS OF OPERATION IN 1976 WITH FUEL CONSUMPTION BEING 60 PERCENT COAL, 25 PERCENT FUEL OIL, AND 15 PERCENT NATURAL GAS. LIKE UNIT 4, THIS UNIT MAY BE CONVERTED TO A VENTRI-ROD AND SPRAY TOWER SCRUBBING SYSTEM.

FEB. 76
MAR. 76 NO INFORMATION WAS REPORTED BY THE UTILITY FOR THE PERIOD.

APR. 76
MAY. 76 NO INFORMATION WAS REPORTED BY THE UTILITY FOR THE PERIOD.

JUN. 76
JUL. 76 NO INFORMATION WAS REPORTED BY THE UTILITY FOR THE PERIOD.

AUG. 76
SEP. 76 NO INFORMATION WAS REPORTED BY THE UTILITY FOR THE PERIOD.

OCT. 76
NOV. 76

DEC. 76

THE UTILITY REPORTS THAT THE INSTALLATION OF THE NEW ROD AND SPRAY TOWER SCRUBBING SYSTEM IS NOW IN PROGRESS. THE SYSTEM WILL INCLUDE TWO SCRUBBING TRAINS, EACH HANDLING 50 PERCENT OF THE FLUE GAS CAPACITY. FOUNDATION AND STRUCTURAL STEEL ERECTION HAS BEEN COMPLETED. SOME OF THE BREECHING HAS BEEN INSTALLED. THE FGD SYSTEM WILL OPERATE ON A FULLY AUTOMATED BASIS. KP&L REPORTS THAT C-E HAS ENCOUNTERED SOME PROBLEMS WORKING OUT AND FINE-TUNING SOME OF THE LOGIC CIRCUITS. THE BOILER FIRES NO.2 FUEL OIL IN ADDITION TO LOW SULFUR WYOMING COAL WHILE THE NEW SCRUBBING FACILITIES ARE BEING INSTALLED. THE ORIGINAL INJECTION AND TAIL-END SCRUBBING SYSTEM IS STILL AVAILABLE FOR SERVICE AND OPERATED WHEN THE UNIT FIRES COAL. THE SYSTEM WILL TREAT FLUE GAS RESULTING FROM THE BURNING OF LOW SULFUR (0.5 PERCENT) WYOMING COAL.

JAN. 77
FEB. 77
MAR. 77
APR. 77

MAY 77

KP&L REPORTED THAT CONSTRUCTION OF THE NEW SCRUBBING SYSTEM IS STILL IN PROGRESS. ALL FOUNDATION WORK HAS BEEN COMPLETED. ERECTION OF THE STRUCTURAL STEEL AND BREECHING IS CONTINUING. THE ORIGINAL SCRUBBING SYSTEM IS STILL AVAILABLE FOR SERVICE. THE INJECTION AND TAIL-END SCRUBBER PLANT WAS IN SERVICE AND OPERATED WHEN THE BOILER FIRED COAL. ERECTION OF THE NEW SCRUBBER PLANT IS CONTINUING. THE MODULES ARE NOW BEING ERECTED AT THE PLANT SITE, PARALLEL TO THE EXISTING MARBLE-BED SYSTEM.

JUN. 77
JUL. 77

OPERATION OF THE EXISTING MARBLE BED SCRUBBERS HAS BEEN QUITE SATISFACTORY AND NEARLY PROBLEM FREE. CONSTRUCTION ON THE NEW SCRUBBER PLANT IS CONTINUING. THE TWO PARALLEL SCRUBBING MODULES, EACH DESIGNED TO HANDLE FLUE GAS FROM 200 MW OF GENERATING CAPACITY, ARE INSTALLED, AS ARE THE REHEATER TUBE BUNDLES. THE CONNECTING DUCTWORK IS CURRENTLY GOING IN. THE EXISTING MARBLE BED SCRUBBERS WILL BE REMOVED WHEN THE NEW SCRUBBING SYSTEM IS READY FOR SO2 REMOVAL OPERATIONS.

AUG. 77
SEP. 77

THE CONSTRUCTION ON THE NEW SCRUBBER PLANT IS CONTINUING ACCORDING TO SCHEDULE AND IS EXPECTED TO BE COMPLETE BY APRIL 1978. KP&L INDICATED THAT MORE DETAILED INFORMATION WILL BE AVAILABLE FOR THE NEXT REPORT.

KANSAS POWER & LIGHT LAWRENCE UNIT NO. 5

MONTHS	OPERATING HOURS BOILER	FGD MODULES
OCT. 77		
NOV. 77		

THE SYSTEM OPERATED UNDER NORMAL CONDITIONS THROUGHOUT OCTOBER AND NOVEMBER WITH NO PROBLEMS.

DEC. 77
JAN. 78

THE CONSTRUCTION OF TWO NEW VENTURI SCRUBBERS IS OVER. INLET DUCTWORK IS BEING INSTALLED. THE OUTLET DUCTWORK WILL BE INSTALLED ALONG WITH ADDITIONAL CONTROLS DURING THE SCHEDULED OUTAGE IN APRIL 78. PRESENT FGD SYSTEM OPERATED WITHOUT ANY PROBLEMS.

TABLE 3
PERFORMANCE DESCRIPTION FOR OPERATIONAL FGD SYSTEMS THROUGH 01/78

UTILITY NAME	KENTUCKY UTILITIES
UNIT NAME	GREEN RIVER NOS. 1 2 AND 3
UNIT LOCATION	CENTRAL CITY KENTUCKY
UNIT RATING	64 MW
FUEL CHARACTERISTICS	COAL 3.8 PERCENT SULFUR
FGD VENDOR	AMERICAN AIR FILTER
PROCESS	LIME SCRUBBING
NEW OR RETROFIT	RETROFIT
START UP DATE	9/75
FGD STATUS	OPERATIONAL
EFFICIENCY, PARTICULATES	99.7 PERCENT
SO2	80 PERCENT GUARANTEE
WATER MAKE UP	OPEN LOOP 1.20 GPM/MW
SLUDGE DISPOSAL	PLANT SITE DISPOSAL POND
UNIT COST	SEE APPENDIX A, FGD SYSTEM ECONOMICS
OPERATIONAL EXPERIENCE	REFER TO BACKGROUND INFORMATION SECTION IN TABLE 3 OF THIS REPORT. THE SCRUBBER PLANT INSTALLED AT THIS STATION CONSISTS OF ONE MODULE DESIGNED TO REMOVE PARTICULATES (VARIABLE-THROAT VENTURI) AND SO2 (MOBILE -BED ABSORBER) FROM COAL-FIRED BOILER FLUE GAS. THE SCRUBBER WAS DESIGNED AND SUPPLIED BY AAF. INITIAL SCRUBBER PLANT STARTUP OCCURRED IN SEPTEMBER 1975. SCRUBBING OPERATIONS RESUMED IN NOVEMBER FOLLOWING A 5-MONTH SHUT-DOWN RESULTING FROM A STRIKE BY PLANT OPERATING PERSONNEL. THE SYSTEM HAS HAD LOW AVAILABILITY BECAUSE OF FROZEN EQUIPMENT.

BACKGROUND INFORMATION
ON
GREEN RIVER POWER STATION

THE GREEN RIVER POWER STATION IS WHOLLY OWNED AND OPERATED BY THE KENTUCKY UTILITIES COMPANY AND SITUATED ON THE GREEN RIVER, NEAR CENTRAL CITY IN MUHLENBERG COUNTY, KENTUCKY. THE STATION CONSISTS OF FOUR TURBINE GENERATORS AND FIVE COAL-FIRED BOILERS. TOTAL PLANT POWER-GENERATING CAPACITY IS APPROXIMATELY 242 MW.

AS THE RESULT OF A CONTRACT AWARDED BY KENTUCKY UTILITIES (KU) TO AMERICAN AIR FILTER (AAF), A TAIL-END WET LIME SCRUBBING SYSTEM WAS DESIGNED AND INSTALLED ON BOILERS 1, 2, AND 3 AT THE GREEN RIVER STATION.

THE FLUE GAS DESULFURIZATION (FGD) AND PARTICULATE REMOVAL SYSTEM CONSISTS OF ONE SCRUBBER MODULE DESIGNED TO HANDLE A MAXIMUM OF 360,000 ACFM OF FLUE GAS AT 300 F. THE BLOW-THROUGH SCRUBBER MODULE CONTAINS A VARIABLE-THROAT FLOODED-ELBOW VENTURI FOR FLY ASH REMOVAL AND A MOBILE BED CONTACTOR FOR SULFUR DIOXIDE REMOVAL. ENTRAINED WATER DROPLETS ARE REMOVED VIA A CENTRIFUGAL DEMISTER BEFORE DISCHARGE TO A LOCAL STACK. THE SLURRY RECYCLE/DISCHARGE SYSTEM CONSISTS OF ONE COMMON ACID RESISTANT TANK WITH TWO PARTITIONS MAKING A TOTAL OF THREE COMPARTMENTS. COMPLETION OF CHEMICAL REACTIONS, RECIRCULATION OF SOLUTION AND WASTES DISCHARGE ARE CONTROLLED AND MONITORED HERE. MECHANICAL COLLECTORS ARE PROVIDED UPSTREAM OF THE WET SCRUBBING SYSTEM FOR PRIMARY PARTICULATE MATTER REMOVAL.

THE SCRUBBER LINING WAS INITIALLY "CARBOLINE" WHICH HAD TO BE REPLACED DUE TO EXCESSIVE FLAKING. IN JANUARY 77, THE SCRUBBER AND STACK WERE RELINED BY PRECRETE. THE L/G RATIO MAINTAINED IS 39.5 AND A PH OF 7.8-8 IS MAINTAINED AT THE INLET OF THE SCRUBBER. THE GAS TEMPERATURE AT THE OUTLET IS 115 F WHEREAS THE SLURRY HAS AN OUTLET PH VALUE OF 5.6-6. THE SOLIDS CONTENT OF THE RECIRCULATING SLURRY IS 20%. THE SCRUBBER INTERNALS ARE POLYURETHANE PING-PONG BALLS (1 1/2 IN. DIA.). THE RECIRCULATING PUMPS WERE RUBBER LINED. THEY WERE REPLACED BY HIGH NI ALLOY MATERIAL.

BOILERS 1, 2, AND 3 ARE PULVERIZED COAL-FIRED UNITS SERVICING TWO TURBINES, EACH RATED AT 32 MW (GROSS). THE FUEL BURNED IN THESE UNITS IS PRIMARILY A HIGH SULFUR WESTERN KENTUCKY COAL (10,797 BTU/LB., 3.8 TO 4.0 PERCENT SULFUR, 13 TO 14 PERCENT ASH). THE FGD SYSTEM CAN BE BYPASSED THROUGH A SERIES OF DUCTWORK AND GUILLOTINE DAMPERS.

A TURNKEY CONTRACT FOR THIS PROJECT WAS AWARDED TO AAF IN JUNE 1973. CONSTRUCTION AND INSTALLATION OF THE SYSTEM WAS COMPLETED BY MID-SEPTEMBER 1975. FOLLOWING GENERAL ELECTRICAL AND MECHANICAL DEBUGGING, WHICH INCLUDED OPERATION OF THE AGITATORS AND PUMPS, THE UNIT WAS PUT IN SERVICE ON AIR AND WATER ONLY IN AUGUST 1975. DURING THIS OPERATION PERIOD, THE FLOW OF GAS AND LIQUID, OPERATION OF DAMPERS, AND SPRAY PATTERNS WERE MONITORED AND CALIBRATED. NEXT, THE SYSTEM WAS OPERATED ON AIR AND WATER UNDER NORMAL PROCESS CONDITIONS. THE PURPOSE OF THIS PHASE OF OPERATION WAS TO DETECT ANY EARLY FAILURES OF A MECHANICAL NATURE PRIOR TO THE INITIAL FLUE GAS RUN.

THE FLUE GAS RUN COMMENCED THE MORNING OF SEPTEMBER 13, 1975. INITIAL OPERATION PROCEEDED ON A HALF-LOAD BASIS BECAUSE ONE OF THE TURBINE GENERATORS WAS OUT OF SERVICE FOR OVERHAUL AND REPAIRS. IN ADDITION, OPERATION OF THE SCRUBBING SYSTEM WAS CONDUCTED ON AN OPEN-WATER-LOOP BASIS. THIS MODE OF OPERATION (HALFLOAD, OPEN LOOP) CONTINUED INTO THE FIRST QUARTER OF 1976. IN MARCH, THE SYSTEM BEGAN OPERATION AT FULL LOAD CAPACITY IN A CLOSED-WATER-LOOP MODE. GUARANTEED SULFUR DIOXIDE REMOVAL EFFICIENCY IS 80 PERCENT FOR 3.8 PERCENT SULFUR COAL HAVING A HEATING VALUE EQUAL TO OR GREATER THAN 11,000 BTU/LB.

ADDITIONAL INFORMATION ON THE OPERATION OF THIS SYSTEM IS PRESENTED IN THE PERFORMANCE TABLE THAT FOLLOWS. A GENERAL PROCESS FLOW DIAGRAM IS PRESENTED IN APPENDIX B.

KENTUCKY UTILITIES — GREEN RIVER UNIT NOS. 1, 2, AND 3

PERIOD	TOTAL PERIOD (HR)	BOILER OPERATION (HR)	MODULE AVAILABILITY (HR)	MODULE CALLED TO OPERATE (HR)	HR. MODULE OPERATED
DEC. 75	744	398	550	331	257

AVAILABILITY = 74%
RELIABILITY = 78%
OPERABILITY = 65%
UTILIZATION = 35%

SYSTEM BECAME OPERATIONAL SEPTEMBER 13, 1975 ON A HALF-LOAD BASIS BECAUSE OF TURBINE OVERHAUL. THE HALF-LOAD MODE CONTINUED THROUGHOUT THE REPORT PERIOD. LOGGING OF OPERATING DATA BEGAN DECEMBER 1975.

JAN. 76	744	572	312	456	64

AVAILABILITY = 42%
RELIABILITY = 14%
OPERABILITY = 11%
UTILIZATION = 9%

SYSTEM WAS DOWN A TOTAL OF 432 HOURS IN JANUARY. MAJOR PROBLEMS WERE FAILURE OF THE RECYCLE PUMPS AND FEED TANK AGITATOR. THAWING AND REPAIR OF NUMEROUS FROZEN LINES, AND SHUTDOWN OF SUMP PUMPS WAS NECESSARY.

FEB. 76	696	499	486	499	211

AVAILABILITY = 70%
RELIABILITY = 42%
OPERABILITY = 42%
UTILIZATION = 30%

THE SYSTEM WAS INOPERATIVE A TOTAL OF 210 HOURS IN FEBRUARY. OUTAGE WAS DUE TO REPAIRS OF TANK AGITATORS, RECYCLE PUMPS, AND REACTANT PUMPS AND TO CLEANOUT OF REACTANT PUMPS, SLURRY PUMPS, SLAKE TANKS, AND MIX-HOLD TANK.

MAR. 76	744	450	722	409	386

AVAILABILITY = 97%
RELIABILITY = 95%
OPERABILITY = 85%
UTILIZATION = 52%

DURING THE REPORT PERIOD ALL THE RUBBER-LINED IMPELLERS WERE REPLACED IN THE PUMPS.

APR. 76	720	522	648	522	522

AVAILABILITY = 90%
RELIABILITY = 100%
OPERABILITY = 100%
UTILIZATION = 77%

THE UTILITY MADE A PRIOR COMMITMENT TO RUN AT 100 PERCENT OPERABILITY DURING THE MONTH OF APRIL.

MAY 76	744	456	606	456	456

AVAILABILITY = 81%
RELIABILITY = 100%
OPERABILITY = 100%
UTILIZATION = 61%

JUN. 76	720	597	720	596	589

AVAILABILITY = 100%
RELIABILITY = 99%
OPERABILITY = 99%
UTILIZATION = 82%

JUL. 76	744	584	666	581	574

AVAILABILITY = 90%
RELIABILITY = 99%
OPERABILITY = 98%
UTILIZATION = 72%

AUG. 76	744	744	722	744	722

AVAILABILITY = 97%
RELIABILITY = 97%
OPERABILITY = 97%
UTILIZATION = 97%

THE MAJORITY OF THE TOTAL FORCED SCRUBBER OUTAGE TIME OCCURRED BECAUSE OF VIBRATION IN THE SCRUBBER BOOSTER I.D. FAN NECESSITATING SYSTEM SHUTDOWN AND REPAIR.

KENTUCKY UTILITIES — GREEN RIVER UNIT NOS. 1, 2, AND 3

PERIOD	TOTAL PERIOD (HR)	BOILER OPERATION (HR)	MODULE AVAILABILITY (HR)	MODULE CALLED TO OPERATE (HR)	HR. MODULE OPERATED
SEP. 76	720	571	617	571	571

AVAILABILITY = 86%
RELIABILITY = 100%
OPERABILITY = 100%
UTILIZATION = 79%

HALF-LOAD OPERATIONS WERE CONDUCTED THROUGHOUT THE PERIOD BECAUSE OF BEARING PROBLEMS TO ONE OF THE TWO TURBINE GENERATING UNITS. MINOR FAN PROBLEMS OCCURRED BUT NO FORCED OUTAGE TIME WAS REQUIRED.

OCT. 76	744	699	744	699	699

AVAILABILITY = 100%
RELIABILITY = 100%
OPERABILITY = 100%
UTILIZATION = 94%

NOV. 76	720	704	720	704	704

AVAILABILITY = 100%
OPERABILITY = 100%
RELIABILITY = 98%
UTILIZATION = 98%

DURING NOVEMBER AND DECEMBER SOME FLUE GAS WAS BY-PASSED AROUND THE SYSTEM WHILE THE UTILITY CONDUCTED A CHECKOUT OF THE SCRUBBER INTERNALS AND REPLACED SOME OF THE PACKING SPHERES IN THE MOBILE BED.

DEC. 76	744	536	539	591	517

AVAILABILITY = 73%
OPERABILITY = 97%
RELIABILITY = 87%
UTILIZATION = 70%

JAN. 77	744	744	698	744	698

AVAILABILITY = 94%
OPERABILITY = 94%
RELIABILITY = 94%
UTILIZATION = 94%

NO PROBLEMS OCCURRED DURING THE MONTH OF JANUARY.

FEB. 77	672	266	243	266	243

AVAILABILITY = 36%
OPERABILITY = 91%
OPERABILITY = 91%
UTILIZATION = 36%

DURING THE MONTH OF FEBRUARY IT WAS FOUND THAT THE CARBOLINE STACK LINER WAS BADLY DETERIORATED. SCRUBBER AND BOILER OPERATIONS WERE TERMINATED UNTIL THE STACK LINING IS REPAIRED. THE BOILER IS NOT OPERATED WITHOUT THE SCRUBBER BECAUSE THERE IS NO ESP FOR PARTICULATE CONTROL. A MAY FIRST RE-START IS CURRENTLY PLANNED.

MAR. 77	744	0	0	0	0

ALL INDEX VALUES = 0%

APR. 77	720	167	288	167	164

AVAILABILITY = 40%
RELIABILITY = 98%
OPERABILITY = 98%
UTILIZATION = 23%

CURRENT PLANT LOAD REQUIREMENTS DICTATE THAT OF THE THREE AVAILABLE BOILERS, ONE OR TWO ARE ON-LINE AT A GIVEN TIME AND THE THIRD IS UNDERGOING MAINTENANCE OPERATIONS.

MAY 77	744	527	736	527	513

AVAILABILITY = 99%
RELIABILITY = 98%
OPERABILITY = 98%
UTILIZATION = 69%

THE STACK WAS REPAIRED FIRST BY WELDING A BACKUP METAL PLATE TO THE PORTIONS OF THE STACK WHERE PITTING OCCURRED. THE ENTIRE STACK WAS THEN LINED WITH REFRACTORY COATING CALLED PRE-CRETE G-8 BY AAF. STACK REPAIRS WERE COMPLETED MARCH 7.

JUN. 77	720	34	720	34	34

AVAILABILITY = 100%
RELIABILITY = 100%
OPERABILITY = 100%
UTILIZATION = 5%

WORK ON THE SCRUBBER MODULE DURING THE MONTH CONCERNED REPAIRS TO THE UNDERBED DAMPER SYSTEM. LEAKING IN THE VENTURI AND LIME SLAKING OPERATIONS WAS ALSO REPAIRED.

KENTUCKY UTILITIES — GREEN RIVER UNIT NOS. 1, 2, AND 3

PERIOD	TOTAL PERIOD (HR)	BOILER OPERATION (HR)	MODULE AVAILABILITY (HR)	MODULE CALLED TO OPERATE (HR)	HR. MODULE OPERATED
JUL. 77	744	0	744	0	0

AVAILABILITY = 100%
ALL OTHER INDEX VALUES = 0%
A STRIKE BY PLANT OPERATING PERSONNEL RESULTED IN NO OPERATIONS FOR BOILERS 1, 2, AND 3 OR THE SCRUBBER MODULE THROUGHOUT THE MONTH. KU IS CONSIDERING INCLUDING A STACK GAS REHEAT SYSTEM AND MODIFYING THE MIST ELIMINATOR (RADIAL VANE TO A CHEVRON-TYPE UNIT).

AUG. 77	744	0	744	0	0

AVAILABILITY = 100%
ALL OTHER INDEX VALUES = 0%
THE STRIKE CONTINUED THROUGH THE MONTHS OF AUGUST AND SEPTEMBER. THE PLANT WAS REPORTED TO HAVE STARTED ON OCTOBER 10.

SEP. 77	720	0	744	0	0

AVAILABILITY = 100%
ALL OTHER INDEX VALUES = 0%
UNITS 1, 2, AND 3 AND SCRUBBER REMAINED OUT OF SERVICE BECAUSE OF THE CONTINUING PLANT STRIKE.

OCT. 77	744	0	744	0	0

AVAILABILITY = 100%
ALL OTHER INDEX VALUES = 0%
FGD SYSTEM WAS DOWN THIS MONTH DUE TO A STRIKE, HOWEVER, THE SYSTEM WAS AVAILABLE. THE UNITS AND SCRUBBER WERE BACK IN SERVICE IN NOVEMBER.

NOV. 77	720	332	634	332	301

AVAILABILITY = 86%
RELIABILITY = 91%
OPERABILITY = 91%
UTILIZATION = 41%
PROBLEMS ENCOUNTERED INCLUDE: FROZEN PIPES, SUMP AND RECYCLE PUMP FAILURES, AND LEAKS IN PACKING AND IMPELLER COATINGS. AS OF EARLY DECEMBER TWO PUMPS WERE DOWN AND BEING BY-PASSED.

DEC. 77	744	596	375	596	375

AVAILABILITY = 50%
RELIABILITY = 91%
OPERABILITY = 63%
UTILIZATION = 50%

JAN. 78	744	537	228	537	170

AVAILABILITY = 31%
RELIABILITY = 32%
OPERABILITY = 32%
UTILIZATION = 23%
DURING THE MONTHS OF DECEMBER AND JANUARY NUMEROUS FREEZE-UPS OCCURED. AS ONE COMPONENT WAS THAWED ANOTHER WOULD FREEZE.

TABLE 3
PERFORMANCE DESCRIPTION FOR OPERATIONAL FGD SYSTEMS THROUGH 01/78

UTILITY NAME	LOUISVILLE GAS & ELECTRIC
UNIT NAME	CANE RUN NO 4
UNIT LOCATION	LOUISVILLE KENTUCKY
UNIT RATING	178 MW
FUEL CHARACTERISTICS	COAL 3.5 - 4.0 PERCENT SULFUR
FGD VENDOR	AMERICAN AIR FILTER
PROCESS	LIME SCRUBBING
NEW OR RETROFIT	RETROFIT
START UP DATE	8/76
FGD STATUS	OPERATIONAL
EFFICIENCY, PARTICULATES	99 PERCENT
SO2	85 PERCENT
WATER MAKE UP	OPEN LOOP
SLUDGE DISPOSAL	PLANT-SITE DISPOSAL POND
UNIT COST	SEE APPENDIX A, FGD SYSTEM ECONOMICS
OPERATIONAL EXPERIENCE	REFER TO THE BACKGROUND INFORMATION SECTION IN TABLE 3 OF THIS REPORT. THE FGD SYSTEM RETROFITTED ON THIS BOILER WAS DESIGNED AND SUPPLIED BY AMERICAN AIR FILTER AND WAS FIRST PLACED IN THE GAS PATH ON AUGUST 7, 1976. THE SYSTEM CONSISTS OF TWO PARALLEL MODULES WHICH INCLUDE MOBILE BED CONTACTORS AND OPERATE WITH A CARBIDE LIME ADDITIVE. FOLLOWING A NUMBER OF MAJOR SYSTEM MODIFICATIONS (CHEVRON-TYPE MIST ELIMINATOR, OIL FIRED REHEAT, PLASITE DUCT LINER, HIGHER L/G), THE SYSTEM SUCCESSFULLY PASSED COMPLIANCE TESTING (85% SO2 REMOVAL) ON AUGUST 3 AND 4, 1977.

BACKGROUND INFORMATION
ON
CANE RUN NO. 4

THE CANE RUN POWER STATION IS OPERATED BY THE LOUISVILLE GAS AND ELECTRIC COMPANY AND LOCATED IN LOUISVILLE, KENTUCKY. THE PLANT CONSISTS OF SIX ELECTRIC POWER STEAM GENERATING UNITS HAVING A TOTAL STEAM TURBINE NET GENERATING CAPACITY OF 992-MW.

UNIT NO. 4 IS A COAL-FIRED STEAM GENERATING BOILER WITH A CONTINUOUS NET GENERATING CAPACITY OF 178-MW. THE UNIT HAS A MAXIMUM POWER GENERATION CAPACITY OF 190-MW. THE UNIT HEAT RATE IS 10,030 BTU/KWH. THE BOILER IS CURRENTLY BURNING COAL WITH A GROSS HEATING VALUE OF 11,500 BTU/LB AND AVERAGE SULFUR AND ASH CONTENTS OF 3.5-4.0 PERCENT AND 11.0-12.0 PERCENT, RESPECTIVELY.

THE EMISSION CONTROL SYSTEM FOR THIS UNIT CONSISTS OF AN ELECTROSTATIC PRECIPITATION (ESP) UPSTREAM OF A WET SCRUBBING SYSTEM. THE ESP PROVIDES PRIMARY PARTICULATE CONTROL WHILE THE WET SCRUBBING SYSTEM PROVIDES ADDITIONAL PARTICULATE REMOVAL AND PRIMARY SULFUR DIOXIDE CONTROL.

THE FLUE GAS DESULFURIZATION (FGD) SYSTEM CONSISTS OF TWO IDENTICAL PARALLEL SCRUBBING TRAINS DESIGNED AND SUPPLIED BY THE AMERICAN AIR FILTER (AAF) COMPANY. THE WET SCRUBBING SYSTEM UTILIZES A SLURRY OF CARBIDE LIME FOR SULFUR DIOXIDE REMOVAL FROM THE FLUE GAS. THE CARBIDE LIME IS A WASTE BY-PRODUCT OBTAINED FROM A NEARBY ACETYLENE MANUFACTURING PLANT. THE HYDRATED LIME CONTAINS 90.9 TO 92.0 PERCENT CALCIUM HYDROXIDE, 2.0 TO 2.5 PERCENT SILICA, 3.0 TO 8.0 PERCENT CALCIUM CARBONATE, AND 0.1 PERCENT MAGNESIUM OXIDE.

EACH SCRUBBING TRAIN IS EQUIPPED WITH A GUILLOTINE-TYPE BY-PASS DAMPER ALLOWING BY-PASSING OF THE GAS AROUND THE SCRUBBERS. EASH SCRUBBBING TRAIN CONTAINS THE FOLLOWING MAJOR PIECES OF EQUIPMENT: I.D. BOOSTER FAN, QUENCH SECTION, FLOODED ELBOW, MOBILE BED CONTACTOR, CENTRIFUGAL DEMISTER, AND A 3-SECTION REACTANT TANK SYSTEM. THE WASTE DISPOSAL SYSTEM CONSISTS OF A 75-FOOT DIAMETER THICKENER FOR LIQUID-SOLIDS SEPARATION AND A FLY ASH POND FOR ULTIMATE DISPOSAL OF THE THICKENER UNDERFLOW. THE SCRUBBING WASTES ARE STABILIZED WITH FLY ASH AND WATER IS RECYCLED BACK TO THE PROCESS. THE ORIGINAL SYSTEM DESIGN DOES NOT INCLUDE STACK GAS REHEAT CAPABILITY. THE SCRUBBED GASES ARE DISCHARGED TO AN EXISTING 250-FOOT, ACID BRICK-LINED STACK.

THE GAS FLOW RATE IS 370,000 ACFM @ 320 F. THE OUTLET GAS TEMPERATURE IS 130 F. A PH OF 9-9.2 IS MAINTAINED IN THE SCRUBBER WHICH IS LINED WITH PRECRETE AND PLACITE 4005 AND PACKED WITH 1 1/4 IN. DIA. POLYURETHANE BALLS. THE L/G RATIO VARIES FROM 55 FOR ABOVE 140 MW TO 65 FOR UNDER 100 MW. THE I.D. FANS ARE SITUATED BEFORE THE SCRUBBER AND CONSUME 1100 HP.

THE PERFORMANCE TABLE THAT FOLLOWS SUMMARIZES THE OPERATING HISTORY, PROBLEMS/SOLUTIONS AND MODIFICATIONS SINCE STARTUP. A SIMPLIFIED PROCESS FLOW DIAGRAM IS PROVIDED IN APPENDIX B OF THIS REPORT.

PERIOD	HOURS	BOILER (HR)	SCRUBBERS (HR)	PERFORMANCE FACTORS (%) OPERABILITY	UTILIZATION
AUG. 76	744	740	666	90	90

OUTAGE TIME DURING THE MONTH WAS DUE PRIMARILY TO EQUIPMENT INSPECTIONS, REPAIR/ REPLACEMENT OF AUXILIARY MOTOR PARTS, AND DEPLETION OF ABSORBENT SUPPLY BECAUSE OF A LATE BARGE DELIVERY. THE SCRUBBING SYSTEM HAS BEEN GENERALLY OPERATING AT APPROXIMATELY 50 TO 80 PERCENT FLUE GAS CAPACITY. SOME MINOR PROBLEMS HAVE BEEN ENCOUNTERED WITH AUXILIARY EQUIPMENT MOTORS AND SPRAY NOZZLES IN THE MOBILE BED CONTACTOR. THE SPRAY NOZZLES ARE SPINNER-VANE COMPONENTS ORIGINALLY CONSTRUCTED OF PLASTIC. OPERATING TEMPERATURES AND PRESSURES HAVE CAUSED THE PLASTIC HOUSING TO EXPAND RESULTING IN THE VANES EXTRUDING OUT THE FRONT END, SUBSEQUENTLY CAUSING A BLOCKAGE OF THE SLURRY FEED. THE NOZZLES HAVE BEEN REPLACED WITH CERAMIC CONSTRUCTED COMPONENTS.

SEP. 76	720	720	650	90	90

OCT. 76	744	600	540	90	73

THE SYSTEM WAS IN SERVICE THROUGHOUT THE MONTH, BEING AVAILABLE TO THE BOILER ON A 90 PERCENT BASIS. THE UNIT WAS TAKEN OUT OF SERVICE ON OCTOBER 25 TO IMPLEMENT ADDITIONAL MODIFICATIONS TO THE SCRUBBING SYSTEM. MAJOR SYSTEM MODIFICATIONS INCLUDE INCREASING PUMP CAPACITY AND DECREASING PRESSURE DROP. THESE TWO PROBLEMS HAVE HINDERED OPERATION OF THE UNIT AT FULL LOAD CAPACITY. TO DATE, THE MECHANICAL RELIABILITY OF THE SYSTEM, AS A FUNCTION OF SERVICE TIME VERSUS OUTAGE TIME, HAS BEEN VERY GOOD.

NOV. 76	720			95	

DEC. 76	744			90	

THE SYSTEM INCURRED NO MAJOR PROBLEMS OR UPSETS DURING THE REPORT PERIOD. CARBIDE LIME SLURRY IS EMPLOYED AS THE SULFUR DIOXIDE ABSORBENT.

JAN. 77	744	0	0	0	0

DURING JAN.1 - JAN.11, THE SCRUBBER WAS UTILIZED 95 PERCENT OF THE TIME. THEN THE OHIO RIVER BECAME IMPASSABLE DUE TO ICE FORMATION AND THIS CAUSED THE CESSATION OF BARGE DELIVERIES OF LIME.

FEB. 77	672	0	0	0	0

DURING FEBRUARY, THE SCRUBBER WAS ONLY OPERATED FOR TWO 4-HOUR PERIODS TO PREVENT TOTAL FREEZE-UP.

MAR. 77	744	432 (AFTER RESTART)	358 (AFTER RESTART)	83% (AFTER RESTART)	83% (AFTER RESTART)

IN MARCH, THE SCRUBBER CAME BACK ON-LINE AT 10 AM, ON MARCH 14TH, AND HAS RUN CONTINUOUSLY THROUGH THE END OF THE PERIOD. FROM THE 14TH THROUGH THE END OF THE MONTH, THERE WAS ONE PERIOD OF SCRUBBER BY-PASS, WHEN DC SUPPLY TO THE BY-PASS HAD TO BE REPAIRED.

APR. 77

MAY 77

THE SCRUBBER SYSTEM RAN FOR THE FIRST 18 DAYS IN APRIL, WITH A RELIABILITY OF 95%. FROM THAT TIME (APRIL 18) THROUGH AN EXPECTED DATE OF JULY 12, THE SCRUBBER SYSTEM WILL BE DOWN FOR THE FOLLOWING MODIFICATIONS:

1. TO REMOVE DEMISTER AND REPLACE WITH A CHEVRON TYPE.
2. TO INCREASE L/G BY ADDING A NEW SPRAY HEADER.
3. TO ADD DIRECT, OIL-FIRED REHEAT, AND
4. TO REPLACE THE LINING IN THE SYSTEM FROM THE DEMISTER THROUGH THE STACK WITH PLASTITE 4005 TO BE INSTALLED BY GENERAL COATINGS (THE ORIGINAL LINING WAS BUBBLING, BUT HAD NOT YET FAILED; FAILURE SEEMED IMMINENT WITHIN 4-5 MONTHS).

SYSTEM REMAINED OUT OF SERVICE PENDING COMPLETION OF SYSTEM MODIFICATIONS.

JUN. 77

JUL. 77	744	360 (AFTER RESTART)	324 (AFTER RESTART)	90 (AFTER RESTART)	90 (AFTER RESTART)

SYSTEM MODIFICATIONS WERE COMPLETED AND THE SCRUBBER PLANT WAS PLACED BACK IN SERVICE ON JULY 17. ON AUGUST 4 THE SYSTEM UNDERWENT AND SUCCESSFULLY COMPLETED TESTING FOR COMPLIANCE WITH LOCAL (JEFFERSON COUNTY) AND FEDERAL SO2 AIR EMISSION REGULATIONS. THE ABOVE-MENTIONED MODIFICATIONS ENABLED THE SYSTEM TO EXCEED THE 85% SO2 REQUIREMENT (JEFFERSON COUNTY) AND FEDERAL STANDARD (1.2 LB/MM BTU). ACTUAL TEST RESULTS INDICATED AN 86 TO 89% SO2 REMOVAL EFFICIENCY FOR 3.3 TO 3.4% SULFUR COAL, WHICH IS EQUIVALENT TO AN OUTLET EMISSION VALUE OF 0.8 LB/MM BTU HEAD INPUT. ALL TESTING WAS PERFORMED BY EPA PERSONNEL.

AUG. 77	744	657	588	94	93

SEP. 77	720	529	524	99	99

THE FGD SYSTEM WAS FURTHER TESTED USING METHOD 6 BY FEDERAL EPA AND WAS OFFICIALLY APPROVED TO HAVE ACHIEVED COMPLIANCE. THE SYSTEM PERFORMED VERY WELL DURING THIS PERIOD.

LOUISVILLE GAS AND ELECTRIC — CANE RUN UNIT NO. 4

PERIOD	HOURS	PERFORMANCE FACTORS (%) BOILER (HR)	SCRUBBERS (HR)	OPERABILITY	UTILIZATION
OCT. 77	744	677	662	98	89
	EPA MAY CONTINUE TO TEST THROUGHOUT JANUARY. NO REAL PROBLEMS ENCOUNTERED IN MAINTAINING COMPLIANCE.				
NOV. 77	720	483	454	94	63
DEC. 77	744	715	608	85	82
JAN. 78				67	67
	NO PROBLEMS OCCURRED DURING THIS PERIOD TO CREATE ANY FGD DOWNTIME. DURING DECEMBER, "AIRCO", THE LIME SUPPLIER, HAD 1200 FT OF THEIR FEED LINE FREEZE UP. LIME BECAME UNAVAILABLE FOR A TIME BUT THERE WERE NO SCRUBBER BREAKDOWNS.				

TABLE 3
PERFORMANCE DESCRIPTION FOR OPERATIONAL FGD SYSTEMS THROUGH 01/78

UTILITY NAME	LOUISVILLE GAS & ELECTRIC
UNIT NAME	PADDYS RUN NO 6
UNIT LOCATION	LOUISVILLE KENTUCKY
UNIT RATING	65 MW
FUEL CHARACTERISTICS	COAL 3.5 - 4.0 PERCENT SULFUR
FGD VENDOR	COMBUSTION ENGINEERING
PROCESS	LIME SCRUBBING
NEW OR RETROFIT	RETROFIT
START UP DATE	4/73
FGD STATUS	OPERATIONAL
EFFICIENCY, PARTICULATES	99 PERCENT
SO2	80 PERCENT
WATER MAKE UP	OPEN LOOP 0.7 GPM/MW
SLUDGE DISPOSAL	HAULAWAY TO BORROW PIT
UNIT COST	SEE APPENDIX A, FGD SYSTEM ECONOMICS
OPERATIONAL EXPERIENCE	REFER TO THE BACKGROUND INFORMATION SECTION IN TABLE 3 OF THIS REPORT. THIS SCRUBBING SYSTEM WAS DESIGNED BY COMBUSTION ENGINEERING AND PLACED IN SERVICE IN APRIL 1973. THE FGD SYSTEM CONSISTS OF TWO 2-STAGE MARBLE BED ABSORBERS WHICH ARE DESIGNED TO USE CARBIDE LIME ADDITIVE AS THE SCRUBBING REAGENT. PADDYS RUN NO. IS A PEAK-LOAD UNIT THAT OPERATES ONLY DURING DEMAND PERIODS. AN EXTENSIVE EPA SCRUBBER/SLUDGE EVALUATION STUDY WAS COMPLETED IN AUGUST 1977.

BACKGROUND INFORMATION
ON
PADDY'S RUN NO. 6

PADDY'S RUN POWER STATION IS LOCATED IN LOUISVILLE, KENTUCKY. THE PLANT HAS SIX ELECTRIC POWER GENERATING UNITS WITH A TOTAL RATED CAPACITY OF 320 MW. UNIT NO. 6 IS RETROFITTED WITH A CARBIDE LIME-BASED FGD SYSTEM.

UNIT NO. 6 IS A PEAK LOAD COAL-FIRED BOILER, MANUFACTURED BY FOSTER WHEELER AND INSTALLED IN 1950. THIS UNIT FIRES COAL WITH A GROSS HEATING VALUE OF 11,500 BTU/LB AND AVERAGE SULFUR AND ASH CONTENTS OF 3.7 PERCENT AND 13 PERCENT, RESPECTIVELY.

THE FGD SYSTEM CONSISTS OF TWO MODULES. EACH HANDLES 175,000 ACFM OF 350 F FLUE GAS. EACH MODULE IS MADE UP OF TWO STAGES OF 3-INCH MARBLE BEDS, FOLLOWED BY A TWO-STAGE CHEVRON-TYPE DEMISTER THE GAS IS REHEATED BY DIRECT COMBUSTION OF NATURAL GAS. AN EXISTING ELECTROSTATIC PRECIPATATOR (ESP, RESEARCH-COTTRELL) IS INSTALLED UPSTREAM OF THE SCRUBBING SYSTEM PROVIDING PRIMARY CONTROL OF PARTICULATE EMISSIONS. THIS UNIT OPERATES WITH A 99.1 PERCENT PARTICULATE REMOVAL EFFICIENCY. PARTICULATE LOADING AT THE ESP OUTLET IS 0.05 GR/SCF.

THE SYSTEM UTILIZES A SLURRY OF CARBIDE LIME AS THE SULFUR DIOXIDE ABSORBENT. THE CARBIDE LIME, A WASTE BY-PRODUCT OBTAINED FROM A NEARBY ACETYLENE MANUFACTURING PLANT CONTAINS 90 TO 92 PERCENT CALCIUM HYDROXIDE, 2.0 TO 2.5 PERCENT SILICA, 3.0 TO 8.0 PERCENT CALCIUM CARBONATE, AND 0.1 PERCENT MAGNESIUM OXIDE.

THE UNIT OPERATES IN A CLOSED-LOOP MODE. THE SULFUR DIOXIDE IS ABSORBED IN THE MARBLE BED BY A SLURRY OF CALCIUM SULFITE TO FORM A MIXTURE OF CALCIUM SULFITE/BISULFITE. EFFLUENT FROM THE MARBLE-BED TOWER IS CONVERTED IN THE REACTION TANK TO CALCIUM SULFITE BY THE ADDITION OF CALCIUM HYDROXIDE. HALF OF THE REACTION TANK EFFLUENT IS RETURNED TO THE ABSORBER TOWERS WHILE THE OTHER HALF IS FED TO A CLARIFIER TANK. THE CALCIUM SULFITE CRYSTALS PRECIPITATE WITH THE AID OF A FLOCCULANT, WHICH IS ADDED AT THE RATE OF 4 TO 7 PPM. THE OVERFLOW IS RETURNED TO THE REACTION TANK. THE UNDERFLOW, CONTAINING 22 TO 24 PERCENT SOLIDS, IS STABILIZED BY MIXING IT WITH LIME. APPROXIMATELY 60 TO 100 POUNDS OF LIME ARE USED PER TON OF DRY SOLIDS OF SLUDGE. THE FIXED SLUDGE IS TRANSPORTED BY TRUCKS TO A 10-ACRE OFF-SITE LANDFILL AREA.

ON-SITE CONSTRUCTION OF THE FGD SYSTEM COMMENCED IN JUNE 1972 AND WAS COMPLETED BY APRIL 1973. INITIAL STARTUP OCCURRED ON APRIL 5, 1973. SYSTEM SHAKEDOWN WAS COMPLETED BY JULY 1973. A SUMMARY OF THE SYSTEM'S PERFORMANCE HISTORY IS PROVIDED IN THE TABLE THAT FOLLOWS. A SIMPLIFIED PROCESS FLOW DIAGRAM IS PROVIDED IN APPENDIX B OF THIS REPORT.

LOUISVILLE GAS & ELECTRIC FGD SYSTEM OPERABILITY PADDY'S RUN UNIT NO. 6

MONTH	OPERABILITY (%) MODULE A	MODULE B	
APR. 73	18	56	MODULES WERE OPERATED ONE AT A TIME, WITH FREQUENT SHUTDOWNS FOR INSPECTION OF EQUIPMENT AND MINOR REPAIRS.
MAY 73	11	65	SINGLE-MODULE OPERATION CONTINUED THROUGH MAY 19, WHEN THE UNIT WAS SHUT DOWN FOR MODIFICATIONS. THE MOST SIGNIFICANT MODIFICATION WAS INSTALLATION OF EQUIPMENT FOR INJECTION OF A FLOCCULATING AGENT INTO THE CLARIFIER TANK.
JUN. 73	1	6	OPERATION WAS INTERMITTENT FROM JUNE 19 TO JULY 11 BECAUSE OF MECHANICAL PROBLEMS WITH THE SLURRY PUMPS.
JUL. 73	21	21	DURING A SCHEDULED OUTAGE FROM JULY 12 THROUGH AUGUST 1, SEVERAL REPAIRS WERE MADE TO THE LIME SLURRY MAKE-UP SYSTEM. A DISINTEGRATOR UNIT WAS INSTALLED TO REDUCE PLUGGING OF STRAINERS AND SLURRY CONTROL VALVES.
AUG. 73	53	64	THE OPERATION WAS CONTINUOUS FROM AUGUST 2 TO AUGUST 18 EXCEPT FOR A BRIEF SHUTDOWN DUE TO A BOILER-RELATED PROBLEM. FROM AUGUST 19 TO SEPTEMBER 5, THE SYSTEM WAS SHUT DOWN TO REPLACE THE CLARIFIER'S UNDERFLOW LINE WITH ONE OF LARGER DIAMETER AND TO INSTALL ADDITIONAL PUMP CAPACITY IN THE CLARIFIER'S OVERFLOW SYSTEM.
SEP. 73	85	72	THE UNIT OPERATED CONTINUOUSLY BETWEEN SEPTEMBER 6 AND SEPTEMBER 20 EXCEPT FOR A 7-HOUR SHUTDOWN TO REPAIR A MARBLE BED SUPPORT PLATE.
OCT. 73	49	94	THE UNIT WAS SHUT DOWN THE REMAINDER OF THE MONTH. THE FGD SYSTEM
NOV. 73	35	100	REMAINED IN SERVICE TO DEC. 20 AFTER WHICH THE BOILER AND THE SCRUB-
DEC. 73	44	78	BER MODULES WERE SHUT DOWN BECAUSE OF NO DEMAND (THIS IS A PEAKING-LOAD BOILER).
JAN. 74 THROUGH JUL. 74	0	0	BOILER SHUT DOWN BECAUSE OF NO DEMAND.
AUG. 74	50	77	UNIT HAS BEEN ON AND OFF FREQUENTLY DUE TO FLUCTUATION IN POWER DEMAND.
SEP. 74	0	0	BOILER DOWN BECAUSE OF NO DEMAND.
OCT. 74	100	100	BOILER TURNED ON SPECIFICALLY TO PERFORM LIMESTONE TESTS ON FGD SYSTEM.
NOV. 74 THROUGH AUG. 75			NO DEMAND
SEP. 75	100	100	BOILER AND FGD SYSTEM OPERATIONAL ALL OF SEPTEMBER AND FIRST TWO
OCT. 75	100	100	WEEKS IN OCTOBER. SYSTEM OUTAGE DURING THE LAST TWO WEEKS OF OCTOBER WAS DUE PRIMARILY TO BREECHING IN THE BOILER SECTION. OPERABILITY FOR BOTH MODULES DURING THE OPERATIONAL PERIOD WAS 100 PERCENT (BASED UPON LG&E'S PEAK LOAD DETERMINATION). SO2 REMOVAL WAS REPORTED TO BE OVER 98 PERCENT.
NOV. 75	100	100	BOILER AND SCRUBBER SYSTEM RAN MOST OF THE REPORT PERIOD ON A MONDAY-
DEC. 75	90	90	THROUGH-FRIDAY BASIS. TWO MINOR OUTAGES IN DECEMBER WERE DUE TO MALFUNCTION AND REPAIR OF THE DUAL STRAINER SWITCH SHAFT IN THE BOTTOM OF THE SCRUBBER MODULE.
JAN. 76	100	100	SO2 REMOVAL EFFICIENCY WAS REPORTED TO BE 99 PERCENT DURING JANUARY.
FEB. 76	NO DEMAND		THE SYSTEM WAS SHUT DOWN IN EARLY FEBRUARY IN PREPARATION FOR AN EPA SCRUBBER/SLUDGE STUDY SCHEDULED FOR JUNE OR JULY. THE SCRUBBER WILL NOT BE OPERATED UNTIL THE START OF THE STUDY PROGRAM UNLESS THE BOILER IS REQUIRED FOR PEAKING POWER DEMANDS. HIGHLIGHTS OF THE SCRUBBER/SLUDGE STUDY PROGRAM ARE AS FOLLOWS: 6 MONTHS DURATION. ONE SCHEDULED SHUTDOWN FOR TEST MODIFICATIONS. DELIBERATE HIGH CHLORIDE CONCENTRATION OPERATION. MGO INNOCULATION. EXTENSIVE SLUDGE STUDY: FIXATION, LEACHATES, SEASONAL VARIATIONS.
MAR. 76	NO DEMAND		THE UNIT DID NOT OPRATE DURING THE REPORT PERIOD IN ANTICIPATION OF
APR. 76	NO DEMAND		THE EPA SCRUBBER/SLUDGE STUDY. THE UTILITY IS NOW COMPLETING SYSTEM MODIFICATIONS FOR THE OPERATION OF THE TEST PROGRAM.

LOUISVILLE GAS AND ELECTRIC — FGD SYSTEM OPERABILITY — PADDY'S RUN UNIT NO. 6

MONTH	OPERABILITY (%) MODULE A	MODULE B	
MAY 76 JUN. 76	100	100	THIS PEAK LOAD UNIT WAS OPERATED PART OF THE TIME DURING THE REPORT PERIOD (APPROXIMATELY 2 WEEKS IN MAY AND 2 WEEKS IN JUNE). THE SCRUBBER WAS AVAILABLE TO THE BOILER 100 PERCENT OF THE TIME. SO2 REMOVAL EFFICIENCY WAS 98 TO 99 % DURING THIS OPERATING SEGMENT.
JUL. 76 AUG. 76	100 100	100 100	THE UNIT WAS OPERATIONAL PART OF THE TIME DURING THE JULY-AUGUST PERIOD. THE SCRUBBING SYSTEM WAS AVAILABLE TO THE BOILER ON A 100 PERCENT BASIS. NO MAJOR SCRUBBER-RELATED PROBLEMS WERE ENCOUNTERED.
SEP. 76 OCT. 76	NO DEMAND		THE UNIT DID NOT OPERATE THROUGHOUT SEPTEMBER AND THE FIRST 3 WEEKS OF OCTOBER. THE EPA-FUNDED SCRUBBER/SLUDGE STUDY PROGRAM COMMENCED OCTOBER 25. THE INITIAL PHASE OF THE PROGRAM CALLS FOR OPERATIONS TO PROCEED FOR A 20 TO 30-DAY PERIOD WITH CARBIDE LIME SCRUBBING ABSORBENT. FOLLOWING COMPLETION OF THIS RUN, THE UNIT WILL BE SHUT DOWN AND MODIFICATIONS WILL BE INCORPORATED INTO THE SYSTEM FOR OPERATION WITH COMMERCIAL GRADE (HIGH CALCIUM) LIME.
NOV. 76 DEC. 76	99 99	99 99	THE UNIT WAS IN SERVICE DURING THE REPORT PERIOD. THE SCRUBBING SYSTEM OPERATED 99.5 PERCENT OF THE TIME THE BOILER WAS IN SERVICE. CARBIDE LIME WAS EMPLOYED AS THE SO2 ABSORBENT. THE HIGH CALCIUM (VIRGIN) LIME RUN, SCHEDULED AS PART OF THE SCRUBBER/SLUDGE STUDY, WILL COMMENCE ON MARCH 1, 1977.
JAN. 77 FEB. 77 MAR. 77 APR. 77 MAY 77			BECAUSE OF SEVERE WEATHER CONDITIONS, THERE WERE NO BOILER OPERATIONS AND NO SCRUBBER OPERATIONS UNTIL MARCH 15, 1977. IN MID MARCH, LG&E BEGAN TESTS FOR EPA WITH REGULAR LIME, ONE OF THE OBJECTIVES OF THE TEST WAS TO DETERMINE WHETHER THERE WERE APPRECIABLE DIFFERENCES BETWEEN REGULAR LIME AND CARBIDE LIME AT THIS FACILITY. DURING OPERATION WITH REGULAR LIME, SCALING PROBLEMS OCCURRED WHICH INDICATES THAT THE SCALING RESULTED FROM INCREASED OXIDATION LEVELS. AVAILABLE OPTIONS FOR CONTROLLING SCALING WERE LIMITED BY THE FIXED DESIGN FEATURES OF THE SCRUBBER HARDWARE. THE OPTION SELECTED WAS ADDITION OF MGO TO THE SCRUBBING MEDIUM. WHEN MGO WAS ADDED, THE SCALING PROBLEM WAS ELIMINATED, ALLOWING COMPLETION OF THE TEST PROGRAM.
JUN. 77 JUL. 77 AUG. 77			THE SCRUBBER/SLUDGE EVALUATION STUDY CONTINUED DURING THE PERIOD. THE SCRUBBER PLANT (ONE MODULE IS BEING UTILIZED FOR THIS EXPERIMENTAL PROGRAM) WAS IN SERVICE ON A VIRTUALLY CONTINUOUS BASIS FROM JUNE 18 TO AUGUST 8, OPERATING ON MAGNESIUM INNOCULATED COMMERCIAL LIME. SYSTEM OPERABILITY DURING THIS PERIOD WAS APPROXIMATELY 96%. SO2 REMOVAL EFFICIENCY WAS MEASURED IN EXCESS OF 99.5%. THE SYSTEM WAS SHUTDOWN AT THIS POINT TO PERFORM A NUMBER SCHEDULED MODIFICATIONS TO THE SYSTEM FOR TEST PURPOSES. SPECIFICALLY, MODIFICATIONS ARE BEING IMPLEMENTED TO THE SYSTEM IN ORDER TO BYPASS THE REACTION TANK IN ORDER TO CONDUCT A SHORT TERM RETENTION TIME TEST. THE TESTING WAS COMPLETED IN AUGUST 77 AFTER THE MODIFICATIONS WERE MADE.
SEP. 77	NOT OPERATIONAL		THE UNIT IS CURRENTLY NOT OPERATING DUE TO LACK OF POWER REQUIREMENT.
OCT. 77	NOT OPERATIONAL		THE UNIT IS CURRENTLY NOT OPERATING DUE TO LACK OF POWER REQUIREMENT.
NOV. 77	NOT OPERATIONAL		THE UNIT IS CURRENTLY NOT OPERATING DUE TO LACK OF POWER REQUIREMENT.

DEC. 77 NOT OPERATIONAL
THE UNIT IS CURRENTLY NOT OPERATING DUE TO LACK OF POWER REQUIREMENT.

JAN. 78 NOT OPERATIONAL
THE UNITS IS CURRENTLY NOT OPERATING DUE TO LACK OF POWER REQUIREMENT.

TABLE 3
PERFORMANCE DESCRIPTION FOR OPERATIONAL FGD SYSTEMS THROUGH 01/78

UTILITY NAME	MINNKOTA POWER COOPERATIVE
UNIT NAME	MILTON R. YOUNG NO. 2
UNIT LOCATION	CENTER NORTH DAKOTA
UNIT RATING	450 MW
FUEL CHARACTERISTICS	LIGNITE 0.7 PERCENT SULFUR
FGD VENDOR	ADL/COMBUSTION EQUIP ASSOCIATE
PROCESS	LIME/ALKALINE FLYASH SCRUBBING
NEW OR RETROFIT	NEW
START UP DATE	9/77
FGD STATUS	OPERATIONAL
EFFICIENCY, PARTICULATES	99.6 PERCENT
SO2	75 PERCENT
WATER MAKE UP	CLOSED LOOP
SLUDGE DISPOSAL	PLANT SITE/MINE FILL
UNIT COST	SEE APPENDIX A, FGD SYSTEM ECONOMICS
OPERATIONAL EXPERIENCE	REFER TO THE BACKGROUND INFORMATION SECTION IN TABLE 3 OF THIS REPORT. THIS LIME/ALKALINE FLYASH SCRUBBING SYSTEM WAS DESIGNED AND SUPPLIED BY ADL/CONTRUCTION EQUIPMENT ASSOCIATEES. IT CONSISTS OF A COLD-SIDE ESP FOLLOWED BY TWO SPRAY TOWERS. MIST ELIMINATION IS PROVIDED BY A WASH TRAY AND CHEVRON ARRANGEMENT. 25% FLUE GAS BYPASS PROVIDES STACK GAS RE-HEAT. THE UNIT FIRES A LOW-SULFUR NORTH DAKOTA LIGNITE WITH AN AVERAGE ASH CONTENT OF 8 PERCENT, SULFUR CONTENT OF 0.7 PERCENT, AND HEAT CONTENT OF 6500 BTU/LB.

BACKROUND INFORMATION ON
MILTON R. YOUNG NO. 2

THE MILTON R. YOUNG POWER STATION, OWNED AND OPERATED BY MINNKOTA POWER COOPERATIVE AND SQUARE BUTTE ELECTRIC COOPERATIVE, IS LOCATED NEAR CENTER, NORTH DAKOTA, APPROXIMATELY 30 MILES NORTHWEST OF BISMARCK. THIS MINE-MOUTH PLANT, WHICH HAS A TOTAL OPERATING POWER-GENERATING CAPACITY OF 690 MW, CONSISTS OF TWO SEPARATE COAL-FIRED, STEAM-TURBINE, GENERATING UNITS. UNIT 1 IS RATED 235 MW. UNIT 2 IS RATED 440 MW. THE BOILERS ON BOTH UNITS FIRE NORTH DAKOTA LIGNITE FROM NEARBY MINES. AVERAGE CHARACTERISTICS OF THIS COAL ARE 6500 BTU/LB, 0.7 PERCENT SULFUR, AND 7.5 PERCENT ASH. BOTH UNITS ARE FITTED WITH ELECTROSTATIC PRECIPITATORS (ESP'S) FOR PARTICULATE CONTROL. UNIT 2 IS ALSO EQUIPPED WITH A FLUE GAS DESULFURIZATION (FGD) SYSTEM FOR SULFUR DIOXIDE (SO2) CONTROL.

BOILER 2 IS A CYCLONE-FIRED, STEAM-GENERATING UNIT SUPPLIED BY BABCOCK AND WILCOX. THE ESP, A COLD-SIDE UNIT SUPPLIED BY WHEELABRATOR-FRYE, PROVIDES PRIMARY PARTICULATE CONTROL. TWO SPRAY TOWERS, WHICH UTILIZE FLY ASH ALKALI AND LIME SUPPLEMENT AS SCRUBBING REAGENTS, PROVIDE PRIMARY SO2 CONTROL. THIS FGD PROCESS WAS DESIGNED AND SUPPLIED BY COMBUSTION EQUIPMENT ASSOCIATES AND ARTHUR D. LITTLE (CEA/ADL). DESIGN CRITERIA AND OPERATING PARAMETERS FOR THIS FULL-SCALE FGD SYSTEM WERE DETERMINED DURING AN EXTENSIVE PILOT PLANT (5000 ACFM) TEST PROGRAM CONDUCTED BY THE OWNING/OPERATING UTILITY COMPANIES AND THE SYSTEM SUPPLIER IN CONJUNCTION WITH THE MINNESOTA POWER AND LIGHT CO. AND GRAND FORKS ENERGY RESEARCH CENTER. THE EMISSION CONTROL SYSTEMS, COMPLETE WITH DISPOSAL SYSTEMS FOR WASTE SOLIDS AND WASTEWATER, ARE DESCRIBED BRIEFLY IN THE FOLLOWING PARAGRAPHS.

BOILER FLUE GAS (1.8 MILLION ACFM AT 340 F) FIRST PASSES THROUGH THE ESP, WHERE PRIMARY PARTICULATE REMOVAL TAKES PLACE. PARTICULATE LOADING IN THE FLUE GAS AT THE INLET TO THE ESP RANGES FROM 0.70 TO 1.50 GR/SCF AND AVERAGES APPROXIMATELY 1.15 GR/SCF. THE ESP IS DESIGNED TO REMOVE 99.5 PERCENT OF THE INLET PARTICULATE MATTER, WHICH MEANS THE OUTLET LOADING WILL AVERAGE 0.005 GR/SCF. AFTER IT PASSES THROUGH THE ESP, 85 PERCENT OF THE FLUE GAS IS ROUTED TO THE FGD SYSTEM. BASED ON A MAXIMUM SULFUR CONTENT OF 1.3 PERCENT IN THE COAL, APPROXIMATELY 1900 PPM (DRY) SO2 ENTERS THE FGD SYSTEM. THE FLUE GAS CONTACTS THE SCRUBBING SOLUTION THROUGH A SERIES OF SPRAY ZONES ARRANGED VERTICALLY IN THE SPRAY TOWERS. THE SCRUBBING MEDIUM IS A SOLUTION OF SOLUBILIZED ALKALI (CAO, MGO, NA2O) OBTAINED FROM THE FLY ASH COLLECTED IN THE ESP'S, SUPPLEMENTED BY A LIME REAGENT, WHICH IS ADDED TO THE SOLUTION FOR SO2 REMOVAL AND PH CONTROL PURPOSES. BASED ON THE MAXIMUM SO2 INLET CONCENTRATION AND THE REQUIRED NEW SOURCE EMISSION STANDARD OF 1.2 LB/MM BTU, THE ABSORBERS REMOVE APPROXIMATELY 85 PERCENT OF THE INLET SO2. BECAUSE 85 PERCENT OF THE FLUE GAS STREAM IS TREATED, THIS PRODUCES A TOTAL REMOVAL EFFICIENCY OF APPROXIMATELY 70 PERCENT AND RESULTS IN AN OUTLET SO2 CONCENTRATION OF 535 PPM (DRY). WHEN THE BOILER FIRES COAL WITH MAXIMUM SULFUR CONTENT (1.3%), THE FGD SYSTEM OPERATES AT A LIQUID TO GAS (L/G) RATIO OF 80 IN THE SPRAY TOWERS; THE PH AND SUSPENDED SOLIDS LEVELS IN THE RECYCLE SOLUTION ARE 6.4 TO 6.5 AND 12 PERCENT, RESPECTIVELY; AND SUPPLEMENTAL LIME IS ADDED TO THE SYSTEM AT A RATE OF 4 TONS/HR.

AFTER THE SCRUBBED GASES PASS THROUGH THE SPRAY ZONE OF THE ABSORBERS, THEY ENTER A CHEVRON-TYPE MIST ELIMINATOR (ME). A WASH TRAY, LOCATED BENEATH THE ME, DILUTES ANY ENTRAINMENT CARRIED INTO THE ME TO PREVENT PLUGGING, SCALING, AND EVENTUAL RESTRICTION OF GAS FLOW. THE WASH TRAY OPERATES OFF A SEPARATE RECIRCULATION LOOP AND TANK TO INSURE A HIGH-QUALITY WASH WATER LOW IN SUSPENDED SOLIDS AND DISSOLVED SALTS. TO PREVENT PLUGGING, SPRAYS IRRIGATE THE ME'S WITH A MIXTURE OF MAKEUP WATER AND CLARIFIED LIQUOR FROM THE TRAY LOOP. ALSO, SPRAYS UNDER THE WASH TRAY FLOOD THE UNDERSIDE OF THE TRAY AND THE AREA FROM THE TRAY DOWN TO THE TOP RECYCLE SPRAYS.

THE SCRUBBED GAS STREAM IS REHEATED BY MIXING IT WITH THE 340 F 15 PERCENT BYPASS FLUE GAS STREAM. THIS RAISES THE TEMPERATURE OF THE SATURATED SCRUBBED GAS STREAM FROM 135 TO 165 F. THE GASES ARE THEN DISCHARGED TO THE ATMOSPHERE THROUGH THE STACK. THE SPENT SCRUBBING SOLUTION IS DISCHARGED TO A RECYCLE TANK AT THE BOTTOM OF THE SPRAY TOWERS, WHERE THE CHEMICAL REACTIONS ARE COMPLETED. FLUE GAS CLEANING WASTES (ALKALI SULFITE/SULFATE SALTS, FLY ASH) ARE DISCHARGED FROM THE RECIRCULATION LOOP TO A THICKENER, WHERE THE WASTE SOLIDS SETTLE OUT. THE CLARIFIED OVERFLOW FROM THE THICKENER IS RETURNED TO THE PROCESS AND USED FOR FLY ASH SLURRY PREPARATION. THE THICKENER UNDERFLOW (MAXIMUM 40 PERCENT SOLIDS CONTENT) IS DISCHARGED TO A VACUUM THICKENER BUILDING, WHICH HOUSES TWO ROTARY-DRUM VACUUM FILTERS FOR ADDITIONAL SOLIDS DEWATERING. THE FILTER CAKE, WHICH IS PRODUCED AT A RATE OF 50 TONS/HR AND CONTAINS 60 PERCENT SOLIDS, IS TRANSPORTED BY CONVEYOR TO THREE 35 TON, OFF-THE-ROAD TRUCKS FOR CONTINUOS HAULING TO A MINE LANDFILL RECLAMATION AREA FOR FINAL DISPOSAL. ADDITIONAL WATER RECOVERED IN THE VACUUM FILTER PROCESS IS ALSO USED FOR FLY ASH SLURRY PREPARATION. DURING EMERGENCY CONDITIONS (MECHANICAL MALFUNCTION, HIGH FLOW RATES), THE SLUDGE FROM THE VACUUM FILTER SYSTEM CAN BE PILED OUTSIDE THE VACUUM FILTER BUILDING FOR HANDLING BY FRONT END LOADERS AND OFF THE ROAD TRUCKS.

INITIAL OPERATING EXPERIENCE

THE OPERATING UTILITY COMPANY HAS REPORTED INTERMITTENT OPERATION SINCE INITIAL START-UP IN SEPTEMBER 1977. MAJOR OPERATIONAL PROBLEMS HAVE OCCURRED AS A RESULT OF SEVERE WINTER WEATHER CONDITIONS, PARTICULARLY NUMEROUS INSTANCES OF FROZEN AND RUPTURED LINES. THE SYSTEM WAS SHUT DOWN DURING THE FIRST PART OF THE MONTH OF DECEMBER TO INSTALL HEAT TRACING IN THE LIQUID CIRCUIT. IN ADDITION, SOME MINOR PROBLEMS HAVE BEEN REPORTED WITH THE SYSTEM'S GUILLOTINE GAS DAMPERS AND FLOW METERS (ROTAMETERS).

OCTOBER-NOVEMBER 1977 - THE OPERATING UTILITY COMPANY WAS REPORTED INTERMITTENT OPERATION SINCE INITIAL START-UP IN SEPTEMBER. SEVERE WINTER WEATHER PROBLEMS HAVE CAUSED FROZEN AND RUPTURED LINES. THESE CONDTIONS HAVE MADE SHUTDOWNS NECESSARY FOR THE INSTALLATION OF ELECTRICAL HEAT TRACING ON SLURRY LINES AND WATER PIPING.

DECEMBER-JANUARY 1978 - THERE WAS AN EMERGENCY SHUTDOWN ON DECEMBER 5 AS A RESULT OF BEARING DAMAGE WITHIN THE TURBINES. AS A CONSEQUENCE, THE COMPLIANCE TEST ORIGINALLY SCHEDULED TO BE WITHIN THIS PERIOD HAS BEEN TENTATIVELY RESCHEDULED WITH THE EPA FOR THE END OF MARCH. THE UNIT IS EXPECTED TO BE BACK ON LINE FEB. 20 AT WHICH TIME THE UTILITY EXPECTS TO HAVE THE SYSTEMS IN EQUILIBRIUM (WATER BALANCE).

TABLE 3
PERFORMANCE DESCRIPTION FOR OPERATIONAL FGD SYSTEMS THROUGH 01/78

UTILITY NAME	MONTANA POWER CO.
UNIT NAME	COLSTRIP NO 1
UNIT LOCATION	COLSTRIP MONTANA
UNIT RATING	360 MW
FUEL CHARACTERISTICS	COAL 0.8 PERCENT SULFUR
FGD VENDOR	ADL/COMBUSTION EQUIP ASSOCIATE
PROCESS	LIME/ALKALINE FLYASH SCRUBBING
NEW OR RETROFIT	NEW
START UP DATE	11/75
FGD STATUS	OPERATIONAL
EFFICIENCY, PARTICULATES	99.5 PERCENT ACTUAL
SO2	70-75 PERCENT (ACTUAL)
WATER MAKE UP	CLOSED LOOP
SLUDGE DISPOSAL	CLAY-LINED DIKED POND
UNIT COST	SEE APPENDIX A, FGD SYSTEM ECONOMICS
OPERATIONAL EXPERIENCE	REFER TO THE BACKGROUND INFORMATION SECTION IN TABLE 3 OF THIS REPORT. THIS FGD EQUIPPED UNIT WAS DECLARED COMMERCIAL IN NOVEMBER 1975. THE SCRUBBING SYSTEM PROVIDES PARTICULATE AND SO2 CONTROL WITH THREE SCRUBBER MODULES. EACH MODULE CONSISTS OF A DOWNFLOW VENTURI SCRUBBER CENTERED WITHIN AN UPFLOW SPRAY TOWER ABSORBER. EACH MODULE CAN TREAT 40% OF THE TOTAL BOILER FLUE GAS AND THE MODULES CANNOT BE BYPASSED. THE UNSTABILIZED SLUDGE IS DISPOSED IN AN ON-SITE LINED DISPOSAL POND. IN-LINE STEAM REHEAT AND CLOSED WATER LOOP CAPABILITY ARE INCLUDED IN THE SYSTEM.

TABLE 3
PERFORMANCE DESCRIPTION FOR OPERATIONAL FGD SYSTEMS THROUGH 01/78

UTILITY NAME	MONTANA POWER CO.
UNIT NAME	COLSTRIP NO 2
UNIT LOCATION	COLSTRIP MONTANA
UNIT RATING	360 MW
FUEL CHARACTERISTICS	COAL 0.8 PERCENT SULFUR
FGD VENDOR	ADL/COMBUSTION EQUIP ASSOCIATE
PROCESS	LIME/ALKALINE FLYASH SCRUBBING
NEW OR RETROFIT	NEW
START UP DATE	7/76
FGD STATUS	OPERATIONAL
EFFICIENCY, PARTICULATES	99.5 PERCENT ACTUAL
SO2	70-75 PERCENT (ACTUAL)
WATER MAKE UP	CLOSED LOOP
SLUDGE DISPOSAL	
UNIT COST	SEE APPENDIX A, FGD SYSTEM ECONOMICS
OPERATIONAL EXPERIENCE	REFER TO THE BACKGROUND INFORMATION SECTION IN TABLE 3 OF THIS REPORT. THIS FGD EQUIPPED UNIT WAS DECLARED COMMERCIAL IN AUGUST 1976. THE SCRUBBING SYSTEM PROVIDES PARTICULATE AND SO2 CONTROL WITH THREE SCRUBBER MODULES. EACH MODULE CONSISTS OF A DOWNFLOW VENTURI SCRUBBER CENTERED WITHIN AN UPFLOW SPRAY TOWER ABSORBER. EACH MODULE CAN TREAT 70% OF THE TOTAL BOILER FLUE GAS AND THE MODULES CANNOT BE BYPASSED. THE UNSTABILIZED SLUDGE IS DISPOSED IN AN ON-SITE LINED DISPOSAL POND. IN-LINE STEAM REHEAT AND CLOSED WATER LOOP CAPABILITY ARE INCLUDED IN THE SYSTEM.

BACKGROUND INFORMATION
ON
COLSTRIP UNITS 1 AND 2

THE COLSTRIP POWER STATION OF THE MONTANA POWER COMPANY IS LOCATED NEAR COLSTRIP, MONTANA, APPROXIMATELY 100 MILES EAST OF BILLINGS, MONTANA. THE STATION CONTAINS TWO NEW 360-MW COAL-FIRED POWER-GENERATING UNITS. AT THE PRESENT TIME, THE UTILITY IS PLANNING THE ADDITION OF TWO MORE 700-MW COAL-FIRED POWER-GENERATING UNITS AT THE STATION. THIS MINE MOUTH PLANT FIRES LOW-SULFUR, LOW HEAT CONTENT COLSTRIP COAL, PRODUCING A FLUE GAS CONTAINING UP TO 6 GR/SCFD PARTICULATE AND UP TO 1000 PPM SULFUR DIOXIDE. THE GENERAL CHARACTERISTICS OF THIS COAL ARE; HEATING VALUE (AS FIRED) 8843 BTU/LB. (MIN. 8162 BTU/LB); SULFUR CONTENT, 0.77 PERCENT (12 MAX); ASH CONTENT, 8.59 PERCENT; MOISTURE CONTENT, 23.87 PERCENT.

IN ORDER TO MEET AIR POLLUTION EMISSION STANDARDS OF 400 PPM FOR SULFUR DIOXIDE (1.0 LB/MM BTU) AND 0.03 GR/SCFD FOR PARTICULATES, THE BOILERS ARE EQUIPPED WITH SCRUBBER PLANTS FOR THE CONTROL OF PARTICULATES AND SULFUR DIOXIDE. THE SYSTEMS INSTALLED ON UNITS 1 AND 2 WERE DESIGNED AND SUPPLIED BY COMBUSTION EQUIPMENT ASSOCIATES (CEA) AND AUTHUR D. LITTLE (ADL). THE PROCESS INSTALLED UTILIZES THE HIGH ALKALINITY OF THE FLY ASH (APPROXIMATELY 20 PERCENT CALCIUM OXIDE) FOR THE REMOVAL OF SULFUR DIOXIDE AND SUPPLEMENTAL LIME SLURRY FOR PH AND SCALE CONTROL. DESIGN PARTICULATE AND SULFUR DIOXIDE REMOVAL EFFICIENCIES ARE 99.5 AND 60 PERCENT, RESPECTIVELY.

EACH BOILER IS EQUIPPED WITH THREE SCRUBBER MODULES, EACH MODULE CAPABLE OF HANDLING 40 PERCENT OF THE BOILER FLUE GAS CAPACITY (1,430,000 ACFM AT 291F). EACH SCRUBBER INCORPORATES A VARIABLE-THROAT VENTURI (DESIGN SUPERFICIAL GAS VELOCITY; 200 FT/SEC), A SPRAY ABSORPTION SECTION (DESIGN SUPERFICIAL GAS VELOCITY; 11.5 FT/SEC), AN INTERNAL RECYCLE TANK, A WASH TRAY, AND A CHEVRON-TYPE MIST ELIMINATOR. THE VENTURI AND SPRAY SECTIONS OPERATE ON A RECIRCULATING SLURRY LOOP CONTAINING 12 PERCENT SOLIDS (CONSISTING PRIMARILY OF CALCIUM SALTS AND FLY ASH). TOTAL MODULE PRESSURE DROP IS APPROXIMATELY 23.5 INCHES H20. TOTAL MODULE LIQUID-TO-GAS RATIO IS APPROXIMATELY 33 GAL/1000 ACF. A WASH TRAY IS SITUATED BENEATH THE MIST ELIMINATOR IN ORDER TO DILUTE ANY ENTRAINMENT REACHING THE COMPONENT, THUS REDUCING THE POTENTIAL FOR PLUGGING AND SCALING. THE TRAY OPERATES OFF A SEPARATE RECYCLE TANK AND RECIRCULATION LOOP. REHEAT IS SUPPLIED BY IN-THE-FLUE-GAS-STREAM STEAM TUBE BUNDLES (MINIMUM DELTA T: 50F). THE REHEATERS ARE ALSO EQUIPPED WITH SOOT BLOWERS FOR CLEANING. THE SCRUBBER BOOSTER FANS (INCLUDED DRAFT, 43.5 INCHES H20) ARE LOCATED DOWNSTREAM OF THE SCRUBBERS AND OPERATE ON DRY, REHEATED FLUE GAS. THE FANS WERE LOCATED DOWNSTREAM IN THIS SCRUBBER DESIGN BECAUSE OF THE HIGH PARTICULATE LOADING OF THE INLET FLUE GAS. THE SCRUBBING WASTES (UNREACTED FLY ASH, 9 PARTS CALCIUM SULFATE/1 PART CALCIUM SULFITE) ARE DISCHARGED TO AN INITAL HOLDING BASIN (520 ACRE-FEET) ADJACENT TO THE SCRUBBER PLANT AND THEN PUMPED (50.8 DRY TPH/2 UNITS) THREE MILES TO A PERMANENT SLUDGE DISPOSAL POND (2218 ACRE-FEET, CLAY-LINED WHERE NECESSARY). CLEAN LIQUOR IS RETURNED FROM PONDS FOR ADDITIONAL SCRUBBING SERVICE. FRESH MAKE-UP WATER TO THE SYSTEM IS LIMITED TO APPROXIMATELY THE AMOUNT OF WATER LOST IN THE SCRUB BER PLANT VIA EVAPORATION AND SLUDGE.

PERFORMANCE HISTORY:

UNIT NO. 1 BECAME AVAILABLE FOR SERVICE DURING THE LATTER PART OF 1975. UNIT NO. 2 WAS PLACED IN SERVICE DURING THE SUMMER OF 1976. THE OVERALL PERFORMANCE OF THE SCRUBBER SYSTEM HAS BEEN EXCELLENT, HOWEVER, THE OPERATIONAL EXPERIENCE OF THESE FULL SCALE UNITS HAS SHOWN SEVERAL PROBLEM AREAS. INSTRUMENTATION IN SLURRY AND FLUE GAS SERVICE HAS NOT BEEN TROUBLE FREE. THE STACK OPACITY, SO2 AND NO3 MONITORS ALONG WITH SO2 MONITORS ON THE INLET AND THE OUTLET OF THE SCRUBBER MODULES HAVE EXHIBITED UNSTABLE AND ERRATIC BEHAVIOR. IN-LINE PH PROBES HAVE EITHER ERODED AWAY OR LOST SENSITIVITY DUE TO DEPOSITS FORMING ON THE ELEMENTS. MANUAL SAMPLING IS REQUIRED FOR CHEMICAL CONTROL OF THE PH AS WELL AS THE SLURRY DENSITY. WET-DRY DEPOSITS HAVE FORMED AT THE INLET TO THE SCRUBBER VESSEL WHERE THE HOT, DUST-LADEN GAS IS COOLED AND HUMIDIFIED. THESE DEPOSITS, NOT TO BE CONFUSED WITH CALCIUM SULFATE SCALE, REQUIRE MANUAL REMOVAL FROM EACH SCRUBBER MODULE EVERY TWO WEEKS. LABORATORY MODEL TESTS ON GAS FLOW AND LIQUID DISTRIBUTION PLUS FULL SCALE TESTS IN ONE SCRUBBER MODULE WHICH INVOLVE BOTH LIQUID AND GAS FLOW TURNING VANES SHOW PROMISE IN EXTENDING THE TIME BETWEEN CLEANINGS. IN VIEW OF THE PROMISING RESULTS, THESE MODIFICATIONS ARE BEING INSTALLED ON ALL THREE MODULES OF UNIT NO. 1.

THE SUPPLEMENTARY ALKALI FEED PROVIDED BY THE LIME SYSTEM IS REQUIRED FOR EFFECTIVE CHEMICAL CONTROL OF THE SCRUBBER SYSTEM. PLUGGING OF LINES AND EQUIPMENT FAILURE HAVE MADE THE LIME SYSTEM DIFFICULT TO USE, THE ALKALI FOUND IN THE ASH WHICH IS CAPTURED BY THE SCRUBBER HAS BEEN GENERALLY ADEQUATE TO KEEP THE PH WITHIN THE CONTROL RANGE. BETTER CONTROL OF THE LIME SYSTEM WOULD KEEP THE PH MORE CONSTANT AND ALLOW THE SO2 REMOVAL TO BE OPTIMIZED. FAILURES OF THE PROTECTIVE GLASS-FLAKE LINING OVER THE CARBON STEEL VESSEL WALLS AND DUCTS HAS OCCURRED IN SEVERAL AREAS. THESE FAILURES WERE EVIDENT PRIOR TO A MAJOR TEMPERATURE EXCURSION THAT OCCURRED ON UNIT NO. 1 IN OCTOBER 1976. THE TEMPERATURE EXCURSION FOLLOWED A STATION BLACKOUT AND THE FAILURE OF THE EMERGENCY SCRUBBER QUENCH WATER SUPPLY SYSTEM TO OPERATE. GLASS-FLAKE LINING AND PLASTIC CHEVRON MIST ELIMINATORS WERE DAMAGED AT THAT TIME AND ACCOUNT FOR THE LOW SCRUBBER AVAILABILITY DURING NOVEMBER AND DECEMBER. A FAILURE OF AN ID FAN MOTOR DURING THE SAME TIME PERIOD INDEPENDENT OF THE TEMPERATURE EXCURSION ALSO CONTRIBUTED TO THE LOWER AVAILABILITY FIGURE. QUICK CLEAN BASKET STRAINERS WERE ADDED TO THE SUCTION PIPING OF THE TWO MAIN RECYCLE PUMPS OF EACH VESSEL TO REMOVE FOREIGN MATERIALS AND DEPOSITS BEFORE THEY CLOG SPRAY NOZZLES.

A PROGRAM IS UNDER WAY TO EVALUATE ABRASION RESISTANT PROTECTIVE LINING MATERIALS THAT COULD BE USED WHERE THE FLUE GAS MAKES ITS 180 DEGREE TURN FOLLOWING THE VENTURI DOWN-COMER AND PASSES BY THE ABSORPTION SPRAYS.

ADDITIONAL INFORMATION CONCERNING THE PERFORMANCE OF THE COLSTRIP FGD SYSTEM MODULES IS INCLUDED IN THE FOLLOWING TABLE. A GENERAL PROCESS FLOW DIAGRAM OF THE SCRUBBING SYSTEM IS PRESENTED IN APPENDIX B.

NOTE: SCRUBBER AVAILABILITY IS DEFINED BY MONTANA POWER AS THE TOTAL MODULE HOURS AVAILABLE DIVIDED BY THREE TIMES THE HOURS IN THE MONTH (BECAUSE THERE ARE THREE SCRUBBER MODULES PER GENERATING UNIT) AND EXPRESSED AS A PERCENTAGE. WHENEVER WORK IS DONE ON A MODULE THAT TAKES IT OUT OF SERVICE OR WOULD PREVENT ITS USE (WHETHER THE BOILER IS OPERATING OR NOT), THE RESPECTED MODULE IS TERMED UNAVAILABLE.

	MONTHLY CAPACITY FACTOR %		NO. DAYS ON LINE		AVG MW FOR DAYS ON LINE		SCRUBBER AVAILABILITY %	
UNIT	1	2	1	2	1	2	1	2
SEP. 75	1		3		50			
OCT. 75	19		19		139			
NOV. 75	42		24		203			
DEC. 75	60		30		239			
JAN. 76	64		28		265		90	
FEB. 76	65		26		273		98	
MAR. 76	57		24		277		98	
APR. 76	50		28		219		74	
MAY 76	26	1	14	3	210	66	97	100
JUN. 76	0	23	0	16	0	171	0	100
JUL. 76	28	20	20	13	167	180	93	99
AUG. 76	38	13	23	10	194	162	95	96
SEP. 76	65	65	30	30	239	232	89	98
OCT. 76	73	77	30	31	281	298	80	90
NOV. 76	56	80	30	30	225	303	63	94
DEC. 76	67	82	31	31	249	297	74	93
JAN. 77	73	68	31	30	270	258	93	83
FEB. 77	3	75	2	27	161	285	95	94
MAR. 77	0	71	0	28		293		97
APR. 77	50	68	25	29	236	264	83	85
MAY 77	64	23	26	13	286	209	85	63
JUN. 77	69	61	28	28	284	249	87	88
JUL. 77	72	58	29	28	284	238	85	91
AUG. 77							93	81
SEP. 77							93	90
OCT. 77							96	77*
								98*
NOV. 77							96	98
DEC. 77							98	98

*UNIT NO. 2 AVAILABILITY OF 77% FOR OCTOBER 1977 INCLUDES NO AVAILABLE HOURS DURING A BOILER OUTAGE. SCRUBBER MAINTENANCE WAS PERFORMED THROUGH PART OF THE OUTAGE TIME. THE 98% FIGURE IS THE AVAILABILITY NOT INCLUDING THE BOILER OUTAGE TIME.

TABLE 3
PERFORMANCE DESCRIPTION FOR OPERATIONAL FGD SYSTEMS THROUGH 01/78

UTILITY NAME	NEVADA POWER
UNIT NAME	REID GARDNER NO 1
UNIT LOCATION	MOAPA NEVADA
UNIT RATING	125 MW
FUEL CHARACTERISTICS	COAL 0.5 - 1.0 PERCENT SULFUR
FGD VENDOR	ADL/COMBUSTION EQUIP ASSOCIATE
PROCESS	SODIUM CARBONATE SCRUBBING
NEW OR RETROFIT	RETROFIT
START UP DATE	4/74
FGD STATUS	OPERATIONAL
EFFICIENCY, PARTICULATES	99 PERCENT
SO2	85 PERCENT
WATER MAKE UP	OPEN LOOP 0.40 GPM/MW
SLUDGE DISPOSAL	SOLAR EVAPORATION POND
UNIT COST	SEE APPENDIX A, FGD SYSTEM ECONOMICS
OPERATIONAL EXPERIENCE	REFER TO THE BACKGROUND INFORMATION SECTION IN TABLE 3 OF THIS REPORT. THIS SODIUM CARBONATE-BASED (TRONA) SCRUBBING SYSTEM CONSISTS OF ONE MODULE CONTAINING A TWIN VARIABLE-THROAT VENTURI SCRUBBER FOLLOWED BY A SEPARATOR IN SERIES WITH A SINGLE-STAGE PERFORATED-PLATE ABSORBER TOWER. PRIMARY PARTICULATE CONTROL IS PROVIDED BY UPSTREAM MECHANICAL COLLECTORS. A STEAM INDIRECT HOT AIR REHEAT SYSTEM RAISES THE GAS TEMPERATURE 30 F PRIOR TO DISCHARGE TO THE MAIN STACK. THE FLUE GAS CLEANING WASTES ARE ULTIMATELY DISPOSED IN AN ON-SITE CLAY-LINED SOLAR EVAPORATION POND.

BACKGROUND INFORMATION
ON
REID GARDNER UNITS 1, 2, AND 3

THE REID GARDNER POWER STATION IS LOCATED NEAR MOAPA, NEVADA, ABOUT 50 MILES NORTH OF LAS VEGAS THE STATION HAS THREE ELECTRIC POWER GENERATING UNITS, (REID GARDNER 1, 2, AND 3) EACH RATED AT 125 MW. UNITS 1 AND 2 ARE RETROFITTED WITH SODIUM CARBONATE-BASED FGD SYSTEMS. UNIT NO. 3 IS A NEW INSTALLATION, ALSO EQUIPPED WITH A SODIUM CARBONATE-BASED FGD SYSTEM. THE COAL BURNED AT THE PLANT HAS AN AVERAGE GROSS HEATING VALUE OF 12,450 BTU/LB. AND ASH AND SULFUR CONTENTS OF 8 AND 0.5 PERCENT RESPECTIVELY.

THE FGD SYSTEMS INSTALLED ON REID GARDNER UNITS 1,2,&3 WERE DESIGNED AND INSTALLED BY COMBUSTION EQUIPMENT ASSOCIATES IN ASSOCIATION WITH A. D. LITTLE. THE SYSTEMS FOR UNITS 1 AND 2 WERE PLACED IN SERVICE IN APRIL 1974. THE SYSTEM FOR UNIT 3 WAS PLACED IN OPERATION ON JULY 12, 1976. THE SCRUBBING SYSTEM DESIGN WAS BASED ON INFORMATION AND DATA OBTAINED FROM AN 8000-ACFM PILOT PLANT PROGRAM CONDUCTED AT THIS STATION IN 1971 AND 1972.

THE FGD SYSTEM CONSISTS OF A SINGLE MODULE, DESIGNED TO HANDLE 473,000 ACFM OF GAS AT 350 F. THE MODULE IS MADE UP OF A TWIN VARIABLE-THROAT VENTURI SCRUBBER, FOLLOWED BY A SINGLE-STAGE TRAY TOWER ABSORBER. GAS BYPASS IS ACHIEVED BY A GUILLOTINE-TYPE DAMPER. A COMMON FACILITY FOR TRONA (SODIUM CARBONATE ORE) STORAGE AND SAND REMOVAL SERVES ALL THE FGD MODULES AT THE REID GARDNER PLANT. SULFUR DIOXIDE REMOVAL EFFICIENCY IS REPORTED TO BE 85 PERCENT. PRIMARY PARTICULATE REMOVAL IS ACCOMPLISHED BY 75 PERCENT EFFICIENT MECHANICAL COLLECTORS INSTALLED UPSTREAM OF THE WET SCRUBBERS. THE TOTAL PARTICULATE REMOVAL EFFICIENCY OF THE MECHANICAL COLLECTION AND WET SCRUBBING SYSTEM EXCEEDS THE 99 PERCENT LEVEL.

IN THIS SODIUM CARBONATE PROCESS, HOT FLUE GAS FROM THE BOILER PASSES FIRST THROUGH THE MECHANICAL COLLECTORS WHERE PRIMARY PARTICULATE REMOVAL TAKES PLACE. PRESSURE IS THEN BOOSTED BY AN INDUCED DRAFT FAN BEFORE THE GAS STREAM SPLITS AS IT ENTERS THE TWIN-THROAT VENTURI SCRUBBER. THE HOT FLUE GAS IS QUENCHED BY A SHOWER OF CIRCULATED SODIUM-BASE LIQUOR. THE GAS THEN ENTERS THE TRAY TOWER AND BUBBLES THROUGH THE RADIAL-VANE MIST ELIMINATOR, WHERE THE REMAINING LIQUID DROPLETS CARRIED OVER WITH THE GAS ARE TRAPPED AND REMOVED.

EFFLUENT FROM THE FGD SYSTEM IS FROM TWO SOURCES: THE SLIP STREAM OF SPENT LIQUOR DISCHARGED FROM THE RECIRCULATION TANK, AND THE ALKALINE CLARIFIER UNDERFLOW, WHICH SERVES TO NEUTRALIZE THE PH OF THE COMBINED LIQUOR BEFORE IT IS DISCHARGED TO THE SLUDGE SETTLING PONDS. THE SPENT LIQUOR IS PUMPED INTO ONE OF TWO SETTLING PONDS. THE OVERFLOW FROM THIS POND IS PUMPED TO A LARGER 45-ACRE POND, WHERE THE BRINE IS EVAPORATED. THE FGD SYSTEM OPERATES ON AN OPEN WATER LOOP WITH NO LIQUOR RECYCLED TO THE MODULES FROM THE PONDS.

ADDITIONAL INFORMATION CONCERNING THE PERFORMANCE OF THE SCRUBBERS INSTALLED AT THE REID GARDNER STATION, INCLUDING PROBLEMS, SOLUTIONS, AND MODIFICATIONS, ARE PRESENTED IN THE FOLLOWING TABLES. IN ADDITION, A GENERAL PROCESS FLOW DIAGRAM OF THE SODIUM CARBONATE SCRUBBING SYSTEM IS PRESENTED IN APPENDIX B.

PERIOD	TOTAL (HR.)	BOILER OPERATION (HR.)	MODULE AVAILABLE (HR.)	HR. CALLED UPON TO OPERATE	OPERATION (HR.)
MAR. 75					
APR. 75					
MAY 75					
JUN. 75					

DURING FEBRUARY THE FGD SYSTEM OPERATED WITH 95 PERCENT AVAILABILITY ON TRONA SUPPLEMENTED WITH SODA ASH. AVAILABILITY IN JANUARY WAS ONLY ABOUT 65 PERCENT BECAUSE OF FROZEN SODIUM CARBONATE FEED LINES. PROBLEMS IN FEBRUARY INCLUDED A 2-DAY LACK OF CHEMICALS. NO SIGNIFICANT PROBLEMS OCCURRED IN MARCH. THE UNIT RAN APRIL 1 THROUGH APRIL 12 WITH 100 PERCENT AVAILABILITY. THE BOILER WAS THEN SHUT DOWN FOR ROUTINE MAINTENANCE. THE SYSTEM WAS PLACED BACK ON LINE MAY 12. SECOND PERFORMANCE TEST WAS PASSED. PROBLEMS INCLUDED ABRASION OF RUBBER-LINED PIPES AND ROUTINE MECHANICAL AND INSTRUMENTAL PROBLEMS. HIGH ASH CONTENT, UP TO 20 PERCENT, HAD NO EFFECT ON EMISSIONS. OPERABILITY FOR THE MONTH OF JULY WAS 85 PERCENT.

JUL. 75					
AUG. 75					
SEP. 75	720	716			559

OPERABILITY = 78%
UTILIZATION = 78%

OF THE 4 OUTAGES REPORTED, 3 WERE CAUSED BY SCRUBBER MALFUNCTIONS.

OCT. 75	744	303			106

OPERABILITY = 60%
UTILIZATION = 14%

LOW OPERATING TIME WAS DUE TO SCHEDULED BOILER MAINTENANCE. ONE OUTAGE WAS DUE TO THE MALFUNCTION OF A SODA ASH BLOWER.

NOV. 75	720	654			394

OPERABILITY = 60%
UTILIZATION = 55%

THE UTILITY REPORTS SYSTEM PERFORMANCE IN TERMS OF THE OPERABILITY INDEX. UNIT NO. 1 OPERABILITY WAS LOW FOR THE MONTH OF NOVEMBER BECAUSE OF DELAYS IN DELIVERY OF REPAIR MATERIALS. THREE FORCED OUTAGES DURING THE MONTH WERE DUE TO REHEATER STEAM LEAKS, COLLAPSE OF A VENTURI STRAINER, AND A FROZEN CARBONATE LINE. THE SYSTEM WAS SHUT DOWN FOR 16 DAYS FOR COMPLETION OF PIPING CONVERSION: THIS OUTAGE WAS NOT DUE TO SCRUBBER MALFUNCTION.

DEC. 75					
JAN. 76	744	647	604	327	186

AVAILABILITY = 81%
OPERABILITY = 29%
RELIABILITY = 57%
UTILIZATION = 25%

FEB. 76	696	664	631	585	520

AVAILABILITY = 91%
OPERABILITY = 78%
RELIABILITY = 89%
UTILIZATION = 75%

THE UTILITY REPORTED FIVE SCRUBBER INOPERATIVE PERIODS DURING THE MONTH OF FEBRUARY, TWO OF WHICH WERE SCRUBBER RELATED OUTAGES. THE FORCED SCRUBBER OUTAGES OCCURRED BECAUSE OF A DEPLETION OF CHEMICAL, CHEMICAL LINE PLUGGING AND SEAL WATER PROBLEMS.

MAR. 76	744	398	743	288	287

AVAILABILITY = 99%
OPERABILITY = 72%
RELIABILITY = 99%
UTILIZATION = 39%

ONLY ONE FORCED SCRUBBER OUTAGE OCCURRED DURING THE MONTH BECAUSE OF A VENTURI LEAK.

APR. 76	720	106	106	97	97

AVAILABILITY = 15%
OPERABILITY = 91%
RELIABILITY = 100%
UTILIZATION = 13%

THE BOILER WAS TAKEN OUT OF SERVICE APRIL 5 FOR INSPECTION OF VALVES AND COAL CONDUITS.

MAY 76					
JUN. 76					

ALL INDEX VALUES = 0%

THE NO. 1 UNIT WAS SHUT DOWN THE ENTIRE MONTH FOR A SCHEDULED TURBINE OVERHAUL AND BURNER LINE CONDUIT REPLACEMENT.

PERIOD	TOTAL (HR.)	BOILER OPERATION (HR.)	MODULE AVAILABLE (HR.)	HR. CALLED UPON TO OPERATE	OPERATION (HR.)
JUL. 76					
ALL INDEX VALUES = 0%					
THE NO. 1 UNIT REMAINED OUT OF SERVICE THROUGHOUT THE MONTH FOR COMPLETION OF THE TURBINE AND BOILER OVERHAUL WHICH COMMENCED THE PRECEEDING MONTH.					
AUG. 76	744	479	719	386	360
AVAILABILITY = 97%					
OPERABILITY = 75%					
RELIABILITY = 94%					
UTILIZATION = 49%					
TWO FORCED SCRUBBER OUTAGES OCCURRED DURING THE MONTH ATTRIBUTED TO PLUGGING IN THE TRAY RECYCLE TANK AND THICKENER TANK. TOTAL BOILER OUTAGE TIME FOR THE MONTH EXCEEDED 265 HOURS.					
SEP. 76	720	656	683	676	639
AVAILABILITY = 95%					
OPERABILITY = 97%					
RELIABILITY = 95%					
UTILIZATION = 89%					
TWO FORCED SCRUBBER OUTAGES WERE REPORTED BY THE UTILITY FOR THE MONTH. THESE MINOR OUTAGES WERE CAUSED BY PLUGGING IN THE VENTURI SPRAY HEADERS AND AN I.D. FAN MALFUNCTION. TOTAL FORCED OUTAGE TIME AMOUNTED TO 36.84 HOURS.					
OCT. 76	744	678	728	664	648
AVAILABILITY = 98%					
OPERABILITY = 96%					
RELIABILITY = 98%					
UTILIZATION = 87%					
SCRUBBER OUTAGE TIME WAS REQUIRED FOR INSTALLATION OF A NEW CARBONATE FEED LINE. IN ADDITION, A MINOR SCRUBBER TRIP WAS CAUSED BY PLUGGING IN THE SCRUBBER EFFLUENT SUCTION LINE.					
NOV. 76	720	631	623	605	508
AVAILABILITY = 87%					
RELIABILITY = 84%					
OPERABILITY = 81%					
UTILIZATION = 71%					
ONE FORCED SCRUBBER OUTAGE OCCURRED DURING THE REPORT PERIOD BECAUSE OF A SCREW CONVEYOR FAILURE, RESULTING IN AN INABILITY TO MIX THE CHEMICAL ABSORBENT.					
DEC. 76	744	677	690	652	599
AVAILABILITY = 93%					
RELIABILITY = 92%					
OPERABILITY = 88%					
UTILIZATION = 80%					
TWO FORCED SCRUBBER OUTAGES OCCURRED DURING DECEMBER BECAUSE OF CHEMICAL DEPLETION AND A PLUGGED SENSING LINE.					
JAN. 77	744	645	533	501	437
AVAILABILITY = 72%					
RELIABILITY = 87%					
OPERABILITY = 67%					
UTILIZATION = 59%					
THE SCRUBBER OPERATED WITH NO DOWNTIME UNTIL JANUARY 22, WHEN RUBBER LINING REPAIRS WERE INITIATED IN THE SEPARATOR SECTION IN THE SCRUBBING MODULE. THE SCRUBBER WAS DOWN THROUGHOUT THE REST OF THE REPORT PERIOD.					
FEB. 77	672	599	0	599	0
ALL INDEX VALUES = 0%					
SYSTEM SHUT DOWN FOR CONTINUATION OF RUBBER LINING REPAIRS.					
MAR. 77	744	669	0	669	0
ALL INDEX VALUES = 0%					
SYSTEM SHUT DOWN FOR CONTINUATION OF RUBBER LINING REPAIRS.					
APR. 77					
ALL INDEX VALUES = 0%					
THE MODULE WAS UNAVAILABLE FOR SERVICE DURING THE REPORT MONTHS BECAUSE OF REPAIRS TO THE SCRUBBER LINING DAMAGED FROM A HIGH TEMPERATURE EXCURSION RESULTING FROM A MALFUNCTION IN THE UNIT'S AIR PREHEATER					
MAY 77					
ALL INDEX VALUES = 0%					

PERIOD	TOTAL (HR.)	BOILER OPERATION (HR.)	MODULE AVAILABLE (HR.)	HR. CALLED UPON TO OPERATE	OPERATION (HR.)
JUN. 77	720	701	339	720	315

AVAILABILITY = 47%
RELIABILITY = 44%
OPERABILITY = 45%
UTILIZATION = 44%

REPAIRS ON THE DAMAGED RUBBER LINING WERE COMPLETED BY MID-JUNE AND THE SYSTEM REMAINED IN SERVICE THROUGHOUT THE MONTH WITH THE EXCEPTION OF ONE MINOR FORCED OUTAGE (7.5 HRS. FOR A HIGH-LOW PRESSURE TRIP CAUSED BY A PLUGGED SENSING LINE).

JUL. 77	744	744	740	744	744

AVAILABILITY = 99%
RELIABILITY = 99%
OPERABILITY = 99%
UTILIZATION = 99%

THE SYSTEM WAS TAKEN OUT OF THE GAS PATH ONLY ONCE DURING THE MONTH BECAUSE OF A SCHEDULED INSPECTION OF THE NEWLY REPLACED RUBBER LINER IN THE SEPARATOR SECTION.

AUG. 77	744	662	138	744	138

AVAILABILITY = 19%
RELIABILITY = 19%
OPERABILITY = 21%
UTILIZATION = 19%

I.D. FAN RELAYS WERE INSTALLED BECAUSE OF HIGH FAN VIBRATIONS.

SEP. 77	720	343	720	720	252

AVAILABILITY = 84%
RELIABILITY = 69%
OPERABILITY = 73%
UTILIZATION = 35%

BOILER WAS OUT OF SERVICE FOR MOST OF THE MONTH. BOILER RETURNED TO SERVICE ON THE 24TH. THE SCRUBBER STILL HAD LIMIT SWITCH PROBLEM WITH 14 A & B GUILLOTINE DAMPERS.

OCT. 77	744	635	630	744	630

AVAILABILITY = 99%
RELIABILITY = 99%
OPERABILITY = 99%
UTILIZATION = 84.7%

THE UNIT WAS SHUT DOWN FOR 5 HOURS DURING OCTOBER TO REPAIR AN ID FAN LEAK. THE BALANCE OF THE OUTAGE TIME WAS BOILER RELATED. (TOTAL OUTAGE TIME WAS 113.92 HOURS).

NOV. 77	720	690	693	589	562

AVAILABILITY = 78.7%
RELIABILITY = 78.6%
OPERABILITY = 81.5%
UTILIZATION = 78.1%

THE SCRUBBER WAS DOWN APPROXIMATELY 153.57 HRS. DURING NOVEMBER. PROBLEMS ENCOUNTERED INCLUDED SCREEN PLUGGING IN THE RECYCLE TANK AND A SCRUBBER INSTRUMENTATION DIFFICULTY. THE SYSTEM WAS ALSO DOWN FOR THE INSTALLATION OF AN OUTLET NOZZLE IN THE BOOSTER TANK.

DEC. 77	744	631	522	744	522

AVAILABILITY = 85%
RELIABILITY = 83%
OPERABILITY = 82%
UTILIZATION = 71%

THE SCRUBBER WAS OFF-LINE FOR APPROXIMATELY 109 HOURS DUE TO HIGH TRAY DIFFERENTIAL PRESSURE AND SOME PLUGGING IN THE I.D. FAN SENSING LINE. THE BOILER WAS DOWN ABOUT 113 HRS. IN DEC.

JAN. 78	744	616	416	744	416

AVAILABILITY = 56%
RELIABILITY = 69%
OPERABILITY = 68%
UTILIZATION = 56%

THE MODULE WAS UNAVAILABLE APPROXIMATELY 328.15 HOURS DURING JANUARY. TWO OUTAGES WERE CAUSED BY HIGH TRAY DIFFERENTIAL PRESSURE. AN ELECTRICAL PROBLEM BECAUSE 1A FORCED DRAFT FAN WAS OUT AND LOST AIR TO THE I.D. FAN DAMPER CAUSED SOME OUTAGE TIME. THE BOILER WAS OUT OF SERVICE APPROXIMATELY 96 HRS.

TABLE 3
PERFORMANCE DESCRIPTION FOR OPERATIONAL FGD SYSTEMS THROUGH 01/78

UTILITY NAME	NEVADA POWER
UNIT NAME	REID GARDNER NO 2
UNIT LOCATION	MOAPA NEVADA
UNIT RATING	125 MW
FUEL CHARACTERISTICS	COAL 0.5 - 1.0 PERCENT SULFUR
FGD VENDOR	ADL/COMBUSTION EQUIP ASSOCIATE
PROCESS	SODIUM CARBONATE SCRUBBING
NEW OR RETROFIT	RETROFIT
START UP DATE	4/74
FGD STATUS	OPERATIONAL
EFFICIENCY, PARTICULATES	99 PERCENT
SO2	85 PERCENT
WATER MAKE UP	OPEN LOOP 0.40 GPM/MW
SLUDGE DISPOSAL	SOLAR EVAPORATION POND
UNIT COST	SEE APPENDIX A, FGD SYSTEM ECONOMICS
OPERATIONAL EXPERIENCE	REFER TO THE BACKGROUND INFORMATION SECTION IN TABLE 3 OF THIS REPORT. THIS SODIUM CARBONATE-BASED (TRONA) SCRUBBING SYSTEM CONSISTS OF ONE MODULE CONTAINING A TWIN VARIABLE-THROAT VENTURI SCRUBBER FOLLOWED BY A SEPARATOR IN SERIES WITH A SINGLE-STAGE PERFORATED-PLATE ABSORBER TOWER. PRIMARY PARTICULATE CONTROL IS PROVIDED BY UPSTREAM MECHANICAL COLLECTORS. A STEAM INDIRECT HOT AIR REHEAT SYSTEM RAISES THE GAS TEMPERATURE 30 F PRIOR TO DISCHARGE TO THE MAIN STACK. THE FLUE GAS CLEANING WASTES ARE ULTIMATELY DISPOSED IN AN ON-SITE CLAY-LINED SOLAR EVAPORATION POND.

BACKGROUND INFORMATION
ON
REID GARDNER UNITS 1, 2, AND 3

THE REID GARDNER POWER STATION IS LOCATED NEAR MOAPA, NEVADA, ABOUT 50 MILES NORTH OF LAS VEGAS THE STATION HAS THREE ELECTRIC POWER GENERATING UNITS, (REID GARDNER 1, 2, AND 3) EACH RATED AT 125 MW. UNITS 1 AND 2 ARE RETROFITTED WITH SODIUM CARBONATE-BASED FGD SYSTEMS. UNIT NO. 3 IS A NEW INSTALLATION, ALSO EQUIPPED WITH A SODIUM CARBONATE-BASED FGD SYSTEM. THE COAL BURNED AT THE PLANT HAS AN AVERAGE GROSS HEATING VALUE OF 12,450 BTU/LB. AND ASH AND SULFUR CONTENTS OF 8 AND 0.5 PERCENT RESPECTIVELY.

THE FGD SYSTEMS INSTALLED ON REID GARDNER UNITS 1,2,&3 WERE DESIGNED AND INSTALLED BY COMBUSTION EQUIPMENT ASSOCIATES IN ASSOCIATION WITH A. D. LITTLE. THE SYSTEMS FOR UNITS 1 AND 2 WERE PLACED IN SERVICE IN APRIL 1974. THE SYSTEM FOR UNIT 3 WAS PLACED IN OPERATION ON JULY 12, 1976. THE SCRUBBING SYSTEM DESIGN WAS BASED ON INFORMATION AND DATA OBTAINED FROM AN 8000-ACFM PILOT PLANT PROGRAM CONDUCTED AT THIS STATION IN 1971 AND 1972.

THE FGD SYSTEM CONSISTS OF A SINGLE MODULE, DESIGNED TO HANDLE 473,000 ACFM OF GAS AT 350 F. THE MODULE IS MADE UP OF A TWIN VARIABLE-THROAT VENTURI SCRUBBER, FOLLOWED BY A SINGLE-STAGE TRAY TOWER ABSORBER. GAS BYPASS IS ACHIEVED BY A GUILLOTINE-TYPE DAMPER. A COMMON FACILITY FOR TRONA (SODIUM CARBONATE ORE) STORAGE AND SAND REMOVAL SERVES ALL THE FGD MODULES AT THE REID GARDNER PLANT. SULFUR DIOXIDE REMOVAL EFFICIENCY IS REPORTED TO BE 85 PERCENT. PRIMARY PARTICULATE REMOVAL IS ACCOMPLISHED BY 75 PERCENT EFFICIENT MECHANICAL COLLECTORS INSTALLED UPSTREAM OF THE WET SCRUBBERS. THE TOTAL PARTICULATE REMOVAL EFFICIENCY OF THE MECHANICAL COLLECTION AND WET SCRUBBING SYSTEM EXCEEDS THE 99 PERCENT LEVEL.

IN THIS SODIUM CARBONATE PROCESS, HOT FLUE GAS FROM THE BOILER PASSES FIRST THROUGH THE MECHANICAL COLLECTORS WHERE PRIMARY PARTICULATE REMOVAL TAKES PLACE. PRESSURE IS THEN BOOSTED BY AN INDUCED DRAFT FAN BEFORE THE GAS STREAM SPLITS AS IT ENTERS THE TWIN-THROAT VENTURI SCRUBBER. THE HOT FLUE GAS IS QUENCHED BY A SHOWER OF CIRCULATED SODIUM-BASE LIQUOR. THE GAS THEN ENTERS THE TRAY TOWER AND BUBBLES THROUGH THE RADIAL-VANE MIST ELIMINATOR, WHERE THE REMAINING LIQUID DROPLETS CARRIED OVER WITH THE GAS ARE TRAPPED AND REMOVED.

EFFLUENT FROM THE FGD SYSTEM IS FROM TWO SOURCES* THE SLIP STREAM OF SPENT LIQUOR DISCHARGED FROM THE RECIRCULATION TANK, AND THE ALKALINE CLARIFIER UNDERFLOW, WHICH SERVES TO NEUTRALIZE THE PH OF THE COMBINED LIQUOR BEFORE IT IS DISCHARGED TO THE SLUDGE SETTLING PONDS. THE SPENT LIQUOR IS PUMPED INTO ONE OF TWO SETTLING PONDS. THE OVERFLOW FROM THIS POND IS PUMPED TO A LARGER 45-ACRE POND, WHERE THE BRINE IS EVAPORATED. THE FGD SYSTEM OPERATES ON AN OPEN WATER LOOP WITH NO LIQUOR RECYCLED TO THE MODULES FROM THE PONDS.

ADDITIONAL INFORMATION CONCERNING THE PERFORMANCE OF THE SCRUBBERS INSTALLED AT THE REID GARDNER STATION, INCLUDING PROBLEMS, SOLUTIONS, AND MODIFICATIONS, ARE PRESENTED IN THE FOLLOWING TABLES. IN ADDITION, A GENERAL PROCESS FLOW DIAGRAM OF THE SODIUM CARBONATE SCRUBBING SYSTEM IS PRESENTED IN APPENDIX B.

PERIOD	TOTAL (HR.)	BOILER OPERATION (HR.)	MODULE AVAILABLE (HR.)	HR. CALLED UPON TO OPERATE	OPERATION (HR.)
FEB. 75					
MAR. 75					
APR. 75					
MAY 75					
JUN. 75					

DURING FEBRUARY THE FGD SYSTEM OPERATED WITH 90 PERCENT OPERABILITY ON TRONA SUPPLEMENTED WITH SODA ASH. PROBLEMS INCLUDED A PLUGGED RECYCLE LINE STRAINER, SEAL WATER FILTERS, AND BOILER CONTROLS. UNIT WAS RESTARTED AFTER SHUTDOWN FOR 5-YEAR TURBINE OVERHAUL. SECOND PERFORMANCE TEST WAS PASSED. PROBLEMS INCLUDED ABRASION OF RUBBER-LINED PIPES AND ROUTINE MECHANICAL AND INSTRUMENTAL PROBLEMS. HIGH ASH CONTENT, UP TO 20 PERCENT, HAD NO EFFECT ON EMISSIONS.

JUL. 75					

THE FGD SYSTEM OPERABILITY FOR THE MONTH OF JULY WAS 85 PERCENT.

AUG. 75					
SEP. 75	720	645			496

OPERABILITY = 77%
UTILIZATION = 69%

THREE FORCED SCRUBBER OUTAGES OCCURRED BECAUSE OF STRAINER PLUGGING, BROKEN BUCKET ELEVATOR, WORN RECIRCULATION PIPING, AND RUBBER LINER LEAKAGE.

OCT. 75	744	531			464

OPERABILITY = 87%
UTILIZATION = 62%

THREE FORCED SCRUBBER OUTAGES WERE REPORTED FOR THE MONTH OF OCTOBER BECAUSE OF PUMP REPAIR, INSTRUMENT PLUGGING, AND REPAIR OF SYSTEM PIPING LEAKAGE.

NOV. 75	720	603			596

OPERABILITY = 99%
UTILIZATION = 83%

THE UTILITY PREFERS TO REPORT SYSTEM PERFORMANCE IN TERMS OF THE OPERABILITY INDEX BECAUSE OF EASE OF CALCULATION, REQUIRES NO JUDGEMENT, AND REFLECTS THE ACTUAL PERFORMANCE OF THE FGD SYSTEM ACCURATELY IF THE REASONS FOR DOWNTIME ARE KNOWN.

DEC. 75					
JAN. 76	744	691	535	691	458

AVAILABILITY = 72%
RELIABILITY = 66%
OPERABILITY = 66%
UTILIZATION = 62%

BOILER WAS OUT OF SERVICE A TOTAL OF 3 DAYS DURING THE MONTH. SCRUBBER OUTAGES WERE CAUSED BY FROZEN CARBONATE LINES, PLUGGED PRESSURE -SENSING LINES, DUCT PRESSURE TRIPS, AND OVERHAUL OF A TRAY RECYCLE PUMP.

FEB. 76	696	675	582	675	578

AVAILABILITY = 84%
RELIABILITY = 86%
OPERABILITY = 86%
UTILIZATION = 83%

THE UTILITY REPORTED FOUR SCRUBBER INACTIVE PERIODS DURING THE MONTH, THREE OF WHICH WERE SCRUBBER-RELATED OUTAGES. THE FORCED SCRUBBER OUTAGES OCCURRED BECAUSE OF PLUGGING IN A VENTURI PUMP, DEPLETION OF CHEMICAL, CHEMICAL LINE PLUGGING AND SEAL WATER PROBLEMS.

MAR. 76	744	660	495	633	395

AVAILIBILITY = 67%
RELIABILITY = 62%
OPERABILITY = 60%
UTILIZATION = 53%

TWO FORCED SCRUBBER OUTAGES WERE REPORTED FOR THE MONTH BECAUSE OF AN ELECTRICAL FAILURE AND PLUGGING IN THE TRAY SYSTEM RESULTING IN A SUBSEQUENT OVERHAUL OF THE TRAY CYCLE PUMPS.

APR. 76	720	629	622	584	488

AVAILABILITY = 85%
RELIABILITY = 83%
OPERABILITY = 77%
UTILIZATION = 68%

FOUR FORCED SCRUBBER OUTAGES WERE REPORTED BY THE UTILITY FOR APRIL. PROBLEMS ENCOUNTERED WERE; PLUGGED SENSING LINES, A REHEATER LEAK, VENTURI SPOOL RECYCLE REPLACEMENT, AND TANK PATCHING.

PERIOD	TOTAL (HR.)	BOILER OPERATION (HR.)	MODULE AVAILABLE (HR.)	HR. CALLED UPON TO	OPERATION (HR.)
MAY 76					
AVAILABILITY = 99%					
RELIABILITY = 98%					
OPERABILITY = 83%					
UTILIZATION = 79%					
PROBLEMS ENCOUNTERED DURING THE MONTH INCLUDED PLUGGED VENTURI LINES AND A PLUGGED SENSING LINE. TOTAL SCRUBBER OPERATION TIME TO DATE IS 9,488 HOURS.					
JUL. 76	744	518	676	43	421
AVAILABILITY = 91%					
RELIABILITY = 96%					
OPERABILITY = 81%					
UTILIZATION = 57%					
TWO FORCED SCRUBBER OUTAGES WERE REPORTED DURING THE MONTH. A PROBLEM WITH A HIGH SOLIDS CONCENTRATION IN THE VENTURI SCRUBBING CYCLE AND THE REPLACEMENT OF A RUBBER-LINED PIPE IN THE VENTURI SCRUBBER RESULTED IN AN OUTAGE TIME OF APPROXIMATELY 19 HOURS.					
AUG. 76	744	709	710	564	530
AVAILABILITY = 95%					
RELIABILITY = 94%					
OPERABILITY = 75%					
UTILIZATION = 71%					
FORCED SCRUBBER OUTAGE TIME TOTALED 34.5 HOURS. TWO TRIPS OCCURRED DURING THE MONTH BECAUSE OF LEAKAGE IN THE VENTURI RECYCLE LINE AND PLUGGING IN THE THICKENER TANK. THE REMAINING SCRUBBER OUTAGE TIME DURING THE MONTH RESULTED FROM DEPLETION OF CHEMICAL ABSORBENT (TRONA) AND BOILER TRIPS.					
SEP. 76	720	681	677	697	653
AVAILABILITY = 94%					
RELIABILITY = 94%					
OPERABILITY = 96%					
UTILIZATION = 91%					
TWO FORCED SCRUBBER OUTAGES, TOTALING 43.5 HOURS OF OUTAGE TIME, WERE REPORTED BY THE UTILITY DURING THE MONTH. MINOR TRIPS WERE CAUSED BY PLUGGING IN THE I.D. FAN REFERENCE LINES AND A FALSE HIGH TEMPERATURE READING IN THE VENTURI CAUSED BY WATER IN THE INSTRUMENT.					
OCT. 76	744	694	708	692	656
AVAILABILITY = 95%					
RELIABILITY = 95%					
OPERABILITY = 95%					
UTILIZATION = 88%					
TOTAL FORCED OUTAGE TIME FOR THE MONTH AMOUNTED TO APPROXIMATELY 36 HOURS. SCRUBBER TRIPS WERE CAUSED BY VENTURI GAS DAMPER PROBLEMS, PLUGGING IN THE SCRUBBER EFFLUENT LINE, AND REPLACEMENT OF THE CARBONATE FEED LINE. SCRUBBER OUTAGE TIME DUE TO BOILER TRIPS AMOUNTED TO APPROXIMATELY 65 HOURS.					
NOV. 76	720	621	374	709	363
AVAILABILITY = 52%					
RELIABILITY = 51%					
OPERABILITY = 58%					
UTILIZATION = 50%					
DURING A BOILER OUTAGE TO REPAIR A CONDENSER TUBE LEAK AND BOTTOM ASH NOZZLE, THE SCRUBBER'S GUILLOTINE DAMPERS WERE BADLY DAMAGED, AND THE SCRUBBER REMAINED OUT OF SERVICE DURING THE MONTH OF DECEMBER.					
DEC. 76	744	275	0	0	0
ALL INDEX VALUES = 0%					
JAN. 77	744	0	0	0	0
ALL INDEX VALUES = 0%					
THE BOILER WAS OFF-LINE DURING JANUARY FOR MAINTENANCE.					
FEB. 77	672	516	623	431	387
AVAILABILITY = 93%					
RELIABILITY = 88%					
OPERABILITY = 75%					
UTILIZATION = 56%					
TWO MINOR SCRUBBER OUTAGES RESULTED FROM A VENTURI PIPING LEAK WASH TRAY RECYCLE TANK CLEANING. AT THE END OF THE MONTH, THERE WERE SOME ELECTRICAL PROBLEMS.					

PERIOD	TOTAL (HR.)	BOILER OPERATION (HR.)	MODULE AVAILABLE (HR.)	HR. CALLED UPON TO OPERATE	OPERATION (HR.)
MAR. 77	744	659	688	585	567

AVAILABILITY = 92%
RELIABILITY = 97%
OPERABILITY = 86%
UTILIZATION = 76%

MINOR SCRUBBER OUTAGES WERE A RESULT OF ELECTRICAL PROBLEMS, A PLUGGED SPRAY TRAY, DUCT PRESSURE SWINGING, AND AN I.D. FAN SWING.

APR. 77	720	720	685	685	685

AVAILABILITY = 95%
RELIABILITY = 95%
OPERABILITY = 95%
UTILIZATION = 95%

THE SCRUBBER MODULE REMAINED IN SERVICE ON A CONTINUOUS BASIS THROUGHOUT THE MONTH. THE SYSTEM WAS FORCED OUT OF THE GAS PATH ON JUNE 29 BECAUSE OF A LEAK IN THE VENTURI DISCHARGE LINE (FORCED OUTAGE TIME = 34.67 HOURS).

MAY 77	744	524	734	455	445

AVAILABILITY = 99%
RELIABILITY = 98%
OPERABILITY = 85%
UTILIZATION = 60%

THE SCRUBBER MODULE WAS TAKEN OUT OF THE GAS PATH TWICE DURING MONTH. BOILER OUTAGE (256 HOURS) AND ONE FORCED SCRUBBER OUTAGE (NO EMERGENCY SPRAY BECAUSE THE ASH SERVICE PUMPS WERE OUT FOR APPROXIMATELY 10 HOURS).

JUN. 77	720	639	679	636	596

AVAILABILITY = 94%
RELIABILITY = 94%
OPERABILITY = 93%
UTILIZATION = 83%

FOUR OUTAGES WERE REPORTED. THREE WERE FORCED SCRUBBER OUTAGES DUE TO PLUGGING OF THE ID FAN SENSING LINE, A BREAKER TRIP RESULTING IN LOSS OF CONTROL POWER AND PLUGGED SPRAY NOZZLES IN THE VENTURI. TOTAL FORCED SCRUBBER OUTAGE TIME WAS APPROXIMATELY 41 HOURS FOR THE MONTH.

JUL. 77	744	733	298	744	298

AVAILABILITY = 40%
RELIABILITY = 40%
OPERABILITY = 41%
UTILIZATION = 40%

EIGHT FORCED SCRUBBER OUTAGES WERE REPORTED, SEVEN OF WHICH WERE DUE TO A HIGH/LOW TRIP IN SCRUBBER DUCT. ONE TWO HOUR OUTAGE WAS REQUIRED TO CORRECT A PLUGGING PROBLEM IN THE VENTURI SPRAY NOZZLES.

AUG. 77	744	629	590	744	590

AVAILABILITY = 87%
RELIABILITY = 87%
OPERABILITY = 91%
UTILIZATION = 79%

A LEAK IN THE VENTURI RECYCLE HEADER AND A SCRUBBER DUCT HI-LO BOILER TRIP PROBLEM WERE THE SCRUBBER RELATED OUTAGES DURING THE MONTH OF AUGUST. THERE ALSO WAS A BOILER OUTAGE.

SEP. 77	720	716	488	693	462

AVAILABILITY = 74%
RELIABILITY = 71%
OPERABILITY = 67%
UTILIZATION = 64%

OUTAGES DURING SEPTEMBER RESULTED FROM A LEAK IN THE VENTURI RECYCLE LINES, TRAY RECYCLE PUMP REPAIR AND DUCT PRESSURE HI-LO SENSING LINE PLUGGING. OUTAGES ALSO OCCURRED WHEN THE ASH SLUICE SYSTEM WENT OUT OF SERVICE (NO EMERGENCY SPRAYS), WHEN A TRAY PLUGGED AND ONE OCCURRED TO ALLOW CLEANING OF A SUCTION SCREEN IN THE TRAY RECYCLE TANK.

OCT. 77	744	704	564	742	562

AVAILABILITY = 76%
RELIABILITY = 76%
OPERABILITY = 80%
UTILIZATION = 80%

THE SCRUBBER WAS DOWN FOR 157 HOURS IN OCTOBER. THE SCRUBBER-RELATED OUTAGE TIME WAS NEEDED TO CLEAN A PLUGGED TRAY RECYCLE TANK SCREEN AND A SEPARATOR TO THE VENTURI TANK. ALSO, A HIGH SOLIDS PROBLEM IN THE VENTURI RECYCLE SYSTEM HAD TO BE CORRECTED, A SCRUBBER DUCT HI-LO PRESSURE BOILER TRIP WAS REPAIRED AND ID FAN LEAKS WERE PATCHED.

PERIOD	TOTAL (HR.)	BOILER OPERATION (HR.)	MODULE AVAILABLE (HR.)	HR. CALLED UPON TO OPERATE	OPERATION (HR.)
NOV. 77	720	98	622	98	0

AVAILABILITY = 86%
RELIABILITY = 0%
OPERABILITY = 0%
UTILIZATION = 0%

THE BOILER WAS OUT OF SERVICE FROM OCTOBER 31 UNTIL NOVEMBER 26. THE SCRUBBER WAS OUT OF SERVICE FOR AN ID FAN ROTOR REPAIR.

DEC. 77	744	742	0	744	0

ALL INDEX VALUES = 0%

THE SCRUBBER MODULE WAS OUT OF SERVICE TO INSTALL NEW WEAR PLATES ON I.D. FAN ROTOR.

JAN. 78	744	675	499	744	499

AVAILABILITY = 67%
RELIABILITY = 67%
OPERABILITY = 74%
UTILIZATION = 67%

SCRUBBER WENT BACK ON LINE ON JANUARY 4 AFTER THE INSTALLATION OF WEAR PLATES ON I.D. FAN ROTOR. REPAIRS ON THE THICKENER O'FLOW PUMP AND SOME BUILD UP IN THE VENTURI AMOUNTED TO 151.16 HOURS OF OUTAGE TIME DURING JANUARY.

TABLE 3
PERFORMANCE DESCRIPTION FOR OPERATIONAL FGD SYSTEMS THROUGH 01/78

UTILITY NAME	NEVADA POWER
UNIT NAME	REID GARDNER NO 3
UNIT LOCATION	MOAPA NEVADA
UNIT RATING	125 MW
FUEL CHARACTERISTICS	COAL 0.5 - 1.0 PERCENT SULFUR
FGD VENDOR	ADL/COMBUSTION EQUIP ASSOCIATE
PROCESS	SODIUM CARBONATE SCRUBBING
NEW OR RETROFIT	NEW
START UP DATE	7/76
FGD STATUS	OPERATIONAL
EFFICIENCY, PARTICULATES	99 PERCENT
SO2	85 PERCENT
WATER MAKE UP	OPEN LOOP 0.40 GPM/MW
SLUDGE DISPOSAL	SOLAR EVAPORATION POND
UNIT COST	
OPERATIONAL EXPERIENCE	REFER TO THE BACKGROUND INFORMATION SECTION IN TABLE 3 OF THIS REPORT. THIS UNIT IS A NEW COAL-FIRED BOILER THAT IS EQUIPPED WITH SODIUM CARBONATE-BASED(TRONA)SCRUBBING SYSTEM WHICH INCORPORATES A TWIN VARIABLE-THROAT VENTURI SCRUBBER FOLLOWED BY A SEPARATOR IN SERIES WITH A SINGLE-STAGE PERFORATED-PLATE ABSORBER TOWER. THE MODULE WAS FIRST PLACED IN SERVICE ON BOILER FLUE GAS IN JULY 1976. MECHANICAL COLLECTORS PROVIDE PRIMARY PARTICULATE CONTROL. REHEAT IS PROVIDED BY A STEAM INDIRECT HOT AIR REHEAT SYSTEM. WASTE DISPOSAL IS ON-SITE CLAY-LINED POND.

BACKGROUND INFORMATION
ON
REID GARDNER UNITS 1, 2, AND 3

THE REID GARDNER POWER STATION IS LOCATED NEAR MOAPA, NEVADA, ABOUT 50 MILES NORTH OF LAS VEGAS THE STATION HAS THREE ELECTRIC POWER GENERATING UNITS, (REID GARDNER 1, 2, AND 3) EACH RATED AT 125 MW. UNITS 1 AND 2 ARE RETROFITTED WITH SODIUM CARBONATE-BASED FGD SYSTEMS. UNIT NO. 3 IS A NEW INSTALLATION, ALSO EQUIPPED WITH A SODIUM CARBONATE-BASED FGD SYSTEM. THE COAL BURNED AT THE PLANT HAS AN AVERAGE GROSS HEATING VALUE OF 12,450 BTU/LB. AND ASH AND SULFUR CONTENTS OF 8 AND 0.5 PERCENT RESPECTIVELY.

THE FGD SYSTEMS INSTALLED ON REID GARDNER UNITS 1,2,&3 WERE DESIGNED AND INSTALLED BY COMBUSTION EQUIPMENT ASSOCIATES IN ASSOCIATION WITH A. D. LITTLE. THE SYSTEMS FOR UNITS 1 AND 2 WERE PLACED IN SERVICE IN APRIL 1974. THE SYSTEM FOR UNIT 3 WAS PLACED IN OPERATION ON JULY 12, 1976. THE SCRUBBING SYSTEM DESIGN WAS BASED ON INFORMATION AND DATA OBTAINED FROM AN 8000-ACFM PILOT PLANT PROGRAM CONDUCTED AT THIS STATION IN 1971 AND 1972.

THE FGD SYSTEM CONSISTS OF A SINGLE MODULE, DESIGNED TO HANDLE 473,000 ACFM OF GAS AT 350 F. THE MODULE IS MADE UP OF A TWIN VARIABLE-THROAT VENTURI SCRUBBER, FOLLOWED BY A SINGLE-STAGE TRAY TOWER ABSORBER. GAS BYPASS IS ACHIEVED BY A GUILLOTINE-TYPE DAMPER. A COMMON FACILITY FOR TRONA (SODIUM CARBONATE ORE) STORAGE AND SAND REMOVAL SERVES ALL THE FGD MODULES AT THE REID GARDNER PLANT. SULFUR DIOXIDE REMOVAL EFFICIENCY IS REPORTED TO BE 85 PERCENT. PRIMARY PARTICULATE REMOVAL IS ACCOMPLISHED BY 75 PERCENT EFFICIENT MECHANICAL COLLECTORS INSTALLED UPSTREAM OF THE WET SCRUBBERS. THE TOTAL PARTICULATE REMOVAL EFFICIENCY OF THE MECHANICAL COLLECTION AND WET SCRUBBING SYSTEM EXCEEDS THE 99 PERCENT LEVEL.

IN THIS SODIUM CARBONATE PROCESS, HOT FLUE GAS FROM THE BOILER PASSES FIRST THROUGH THE MECHANICAL COLLECTORS WHERE PRIMARY PARTICULATE REMOVAL TAKES PLACE. PRESSURE IS THEN BOOSTED BY AN INDUCED DRAFT FAN BEFORE THE GAS STREAM SPLITS AS IT ENTERS THE TWIN-THROAT VENTURI SCRUBBER. THE HOT FLUE GAS IS QUENCHED BY A SHOWER OF CIRCULATED SODIUM-BASE LIQUOR. THE GAS THEN ENTERS THE TRAY TOWER AND BUBBLES THROUGH THE RADIAL-VANE MIST ELIMINATOR, WHERE THE REMAINING LIQUID DROPLETS CARRIED OVER WITH THE GAS ARE TRAPPED AND REMOVED.

EFFLUENT FROM THE FGD SYSTEM IS FROM TWO SOURCES* THE SLIP STREAM OF SPENT LIQUOR DISCHARGED FROM THE RECIRCULATION TANK, AND THE ALKALINE CLARIFIER UNDERFLOW, WHICH SERVES TO NEUTRALIZE THE PH OF THE COMBINED LIQUOR BEFORE IT IS DISCHARGED TO THE SLUDGE SETTLING PONDS. THE SPENT LIQUOR IS PUMPED INTO ONE OF TWO SETTLING PONDS. THE OVERFLOW FROM THIS POND IS PUMPED TO A LARGER 45-ACRE POND, WHERE THE BRINE IS EVAPORATED. THE FGD SYSTEM OPERATES ON AN OPEN WATER LOOP WITH NO LIQUOR RECYCLED TO THE MODULES FROM THE PONDS.

ADDITIONAL INFORMATION CONCERNING THE PERFORMANCE OF THE SCRUBBERS INSTALLED AT THE REID GARDNER STATION, INCLUDING PROBLEMS, SOLUTIONS, AND MODIFICATIONS, ARE PRESENTED IN THE FOLLOWING TABLES. IN ADDITION, A GENERAL PROCESS FLOW DIAGRAM OF THE SODIUM CARBONATE SCRUBBING SYSTEM IS PRESENTED IN APPENDIX B.

PERIOD	TOTAL (HR.)	BOILER OPERATION (HR.)	MODULE AVAILABLE (HR.)	HR. CALLED UPON TO OPERATE	OPERATION (HR.)
JUL. 76	744	692	355	449	316

AVAILABILITY = 45%
RELIABILITY = 70%
OPERABILITY = 46%
UTILIZATION = 42%

COMMERCIAL OPERATION COMMENCED ON JULY 12, 1976. FOUR OUTAGES WERE REPORTED FOR THE MONTH, THREE OF WHICH WERE FORCED SCRUBBER OUTAGES. PROBLEMS WERE ENCOUNTERED WITH A BUCKET ELEVATOR MALFUNCTION AND A HIGH SOLIDS CONCENTRATION IN THE VENTURI SCRUBBING SOLUTION CYCLE.

AUG. 76	744	744	420	647	323

AVAILABILITY = 56%
RELIABILITY = 50%
OPERABILITY = 43%
UTILIZATION = 43%

FORCED SCRUBBER OUTAGES RESULTED FROM AN I.D. FAN ELECTRICAL MALFUNCTION, I.D. FAN INSULATION, THICKENER TANK PLUGGING, REHEATER MOTOR BURNOUT AND DESTRUCTION OF THE VENTURI FLOOR.

SEP. 76	720	679	352	682	314

AVAILABILITY = 49%
RELIABILITY = 46%
OPERABILITY = 46%
UTILIZATION = 44%

THE SYSTEM WAS PLACED BACK IN SERVICE ON SEPTEMBER 14 FOLLOWING EXTENSIVE REPAIRS AND MODIFICATIONS FROM THE PRECEDING MONTH. THREE MINOR SCRUBBER TRIPS WERE ENCOUNTERED THROUGHOUT THE DURATION OF THE MONTH. PROBLEMS REPORTED AT THE UTILITY WERE TWO REHEATER FAN TRIPS AND A VENTURI VIBRATION TRIP.

OCT. 76	744	548	160	743	159

AVAILABILITY = 22%
RELIABILITY = 21%
OPERABILITY = 29%
UTILIZATION = 21%

THREE FORCED SCRUBBER OUTAGES WERE REPORTED FOR THE MONTH. TRIPS OCCURRED BECAUSE OF HIGH SOLIDS CONTENT IN THE VENTURI RECYCLE SOLUTION, A SCRUBBER GAS DAMPER MALFUNCTION, AND VENTURI BOX.

NOV. 76	720	264	205	727	212

AVAILABILITY = 28%
RELIABILITY = 29%
OPERABILITY = 80%
UTILIZATION = 29%

THE SCRUBBER SYSTEM WAS NOT IN OPERATION THE FIRST HALF OF NOVEMBER DUE TO REPAIRS OF LEAKS IN THE VENTURI SCRUBBER BOX. THE SYSTEM WAS RESTARTED NOV. 19, AND EXPERIENCED ONE FORCED OUTAGE, BECAUSE OF A SCREW CONVEYOR MALFUNCTION, PREVENTING CHEMICAL MIXING.

DEC. 76	744	744	737	728	721

AVAILABILITY = 99%
RELIABILITY = 99%
OPERABILITY = 97%
UTILIZATION = 97%

DURING THE MONTH, ONE MINOR SCRUBBER OUTAGE OCCURRED BECAUSE OF REPAIRS TO THE I.D. FAN EXPANSION JOINT.

JAN. 77	744	690	731	689	676

AVAILABILITY = 98%
RELIABILITY = 98%
OPERABILITY = 98%
UTILIZATION = 91%

TWO MINOR FORCED OUTAGES WERE THE RESULTS OF A PLUGGED TRAY AND A REHEATER STEAM LEAK.

FEB. 77	672	575	543	594	422

AVAILABILITY = 81%
RELIABILITY = 72%
OPERABILITY = 74%
UTILIZATION = 63%

A TOTAL OF 117 HRS. OF DOWNTIME WAS THE RESULT OF THREE FORCED SCRUBBER OUTAGES CAUSED BY PROBLEMS WITH THE UPPER TRAY. A FOURTH OUTAGE RESULTED FROM DOWNTIME FOR CLEANING OUT THE SODIUM CARBONATE LINE.

NEVADA POWER REID GARDNER UNIT NO. 3

PERIOD	TOTAL (HR.)	BOILER OPERATION (HR.)	MODULE AVAILABLE (HR.)	HR. CALLED UPON TO OPERATE	OPERATION (HR.)
MAR. 77	744	639	324	627	324

AVAILABILITY = 44%
RELIABILITY = 52%
OPERABILITY = 51%
UTILIZATION = 44%

THE NO. 3 MODULE EXPERIENCED TWO MAJOR FORCED OUTAGES DURING MARCH. THE RUBBER LINING IN THE SEPARATOR REQUIRED DOWNTIME FOR CURING AND THE SCRUBBER FAN EXPANSION JOINT BLEW OUT. THREE MINOR OUTAGES WERE CAUSED BY A PLUGGED TRAY AND THE D35 LIMIT SWITCH TRIPPING.

APR. 77	720	709	618	702	600

AVAILABILITY = 86%
RELIABILITY = 85%
OPERABILITY = 85%
UTILIZATION = 83%

THREE SCRUBBER OUTAGES WERE REPORTED, TWO WERE FORCED OUTAGES. A HIGH TRAY DIFFERENTIAL AND A PLUGGED STRAINER IN THE TRAY RECYCLE TANK RESULTED IN A FORCED OUTAGE TIME OF APPROXIMATELY 102 HOURS.

MAY 77	744	470	467	594	124

AVAILABILITY = 63%
RELIABILITY = 21%
OPERABILITY = 26%
UTILIZATION = 16%

THE MODULE WAS UNAVAILABLE DURING THE FIRST THREE WEEKS OF THE MONTH BECAUSE OF A FORCED OUTAGE REQUIRED FOR THE REPLACEMENT OF THE FRP LINER IN THE MODULE'S SEPARATOR SECTION. NO OPERATING DATA WAS MADE AVAILABLE BY THE UTILITY FOR THE MONTH. IN ADDITION THE REHEATER FAN BREAKER WAS RECEIVED AND THE VENTURI DAMPER.

JUN. 77	720	705	475	688	443

AVAILABILITY = 98%
RELIABILITY = 64%
OPERABILITY = 63%
UTILIZATION = 62%

FOUR SCRUBBER OUTAGES WERE REPORTED, THREE OF WHICH WERE FORCED. PROBLEMS ENCOUNTERED INCLUDED A HIGH TRAY DIFFERENTIAL PRESSURE READING AND A VENTURI RECYCLE LINE THROTTLE VALUE.

JUL. 77	744	744	542	744	542

AVAILABILITY = 73%
RELIABILITY = 73%
OPERABILITY = 73%
UTILIZATION = 73%

FIVE FORCED SCRUBBER OUTAGES WERE CAUSED BY A HIGH TRAY DIFFERENTIAL PRESSURE READING, SCRUBBER FAN VIBRATION PROBLEMS, AND REPAIRS TO THE VENTURI DISCHARGE VALVE.

AUG. 77	744	629	375	744	375

AVAILABILITY = 70%
RELIABILITY = 63%
OPERABILITY = 63%
UTILIZATION = 50%

DUE TO A LEAK IN VENTURI RECYCLE LINE THE UNIT WAS OFF THE LINE PART OF THE MONTH. A FALSE ALARM DUE TO SCRUBBER OUTLET TEMPERATURE CAUSED SHUTDOWN FOR ABOUT A DAY. BOILER WAS OUT OF SERVICE FOR ABOUT A WEEK DURING THIS REPORT PERIOD.

SEP. 77	720	720	736	654	646

AVAILABILITY = 90%
RELIABILITY = 99%
OPERABILITY = 90%
UTILIZATION = 90%

HIGH SOLIDS IN THE VENTURI RECYCLE SYSTEM CAUSED SOME TIME OFF IN SEPTEMBER. NEW EFFLUENT AND POST NEUTRALIZATION LINES WERE INSTALLED.

OCT. 77	744	506	171	460	455

AVAILABILITY = 99%
RELIABILITY = 99%
OPERABILITY = 90%
UTILIZATION = 61%

THE SCRUBBER WAS DOWN 284.42 HOURS DURING OCTOBER FOR A SCHEDULED BOILER OUTAGE. 4.45 HOURS ADDITIONAL OUTAGE TIME OCCURRED AS A RESULT OF HIGH VIBRATION PROBLEMS ON A SCRUBBER FAN.

PERIOD	TOTAL (HR.)	BOILER OPERATION (HR.)	MODULE AVAILABLE (HR.)	HR. CALLED UPON TO OPERATE	OPERATION (HR.)
NOV. 77	720	709	705	640	624

AVAILABILITY = 89%
RELIABILITY = 89%
OPERABILITY = 88%
UTILIZATION = 87%

THE SCRUBBER WAS DOWN ROUGHLY 80 HOURS FOR THE INSTALLATION OF AN OUTLET NOZZLE IN THE BOOSTER TANK. THE BOILER WAS OUT OF SERVICE APPROXIMATELY 15 HOURS IN NOVEMBER.

DEC. 77	744	692	732	648	635

AVAILABILITY = 88%
RELIABILITY = 96%
OPERABILITY = 92%
UTILIZATION = 93%

THE SCRUBBER RELATED OUTAGES WERE FOR THE INSTALLATION OF TRAY SPRAY STRAINER, NEW SENSING LINES AND A FAULTY THERMOCOUPLE CAUSED "SEPARATOR HIGH TEMPERATURE". THE SCRUBBER OUTAGE TIME WAS APPROXIMATELY 89 HOURS. BOILER OUTAGE TIME AMOUNTED TO 51 HOURS.

JAN. 78	744	744	740	744	740

AVAILABILITY = 100%
RELIABILITY = 100%
OPERABILITY = 100%
UTILIZATION = 100%

A PLUGGED VENTURI NOZZLE CAUSED THE ONLY SCRUBBER OUTAGE. THE BOILER OPERATED THE ENTIRE MONTH WITH NO OPERATIONAL PROBLEMS.

TABLE 3
PERFORMANCE DESCRIPTION FOR OPERATIONAL FGD SYSTEMS THROUGH 01/78

UTILITY NAME	NORTHERN INDIANA PUB SERVICE
UNIT NAME	D.H. MITCHELL NO.11
UNIT LOCATION	GARY INDIANA
UNIT RATING	115 MW
FUEL CHARACTERISTICS	COAL 3.2-3.5 PERCENT SULFUR
FGD VENDOR	DAVY POWERGAS/ALLIED CHEMICAL
PROCESS	WELLMAN LORD/ALLIED CHEMICAL
NEW OR RETROFIT	RETROFIT
START UP DATE	6/77
FGD STATUS	OPERATIONAL
EFFICIENCY, PARTICULATES	99.5 PERCENT
SO2	90 PERCENT GUARANTEE
WATER MAKE UP	CLOSED LOOP
SLUDGE DISPOSAL	ELEMENTAL SULFUR PRODUCT
UNIT COST	SEE APPENDIX A, FGD SYSTEM ECONOMICS
OPERATIONAL EXPERIENCE	REFER TO THE BACKGROUND INFORMATION SECTION IN TABLE 3 OF THIS REPORT. THIS FGD SYSTEM IS AN INTEGRATION OF THE WELLMAN-LORD SO2 RECOVERY PROCES OFFERED BY DAVY POWERGAS AND THE SO2 TO SULFUR REDUCTION PROCESS DEVELOPED BY ALLIED CHEMICAL. DAVY POWERGAS IS THE DESIGN AND CONSTRUCTION FIRM AND ALLIED CHEMICAL IS SYSTEM OPERATOR AND PRODUCT MARKETER. PERFORMANCE TESTS WERE SUCCESSFULLY COMPLETED ON SEPTEMBER 14, 1977. A DEMONSTRATION YEAR COMMENCED ON SEPTEMBER 16, 1977.

BACKGROUND INFORMATION
ON
D.H. MITCHELL NO. 11

IN JUNE OF 1972 THE NORTHERN INDIANA PUBLIC SERVICE CO. (NIPSCO) AND THE U.S. ENVIRONMENTAL PROTECTION AGENCY ENTERED INTO A COST-SHARED CONTRACT FOR THE CONSTRUCTION AND OPERATION OF A WELLMAN-LORD/ALLIED CHEMICAL FGD DEMONSTRATION PLANT. THE SYSTEM WAS INSTALLED ON GENERATING UNIT NO. 11 AT NIPSCO'S D.H. MITCHELL POWER STATION IN GARY, INDIANA, ON THE SOUTHERN TIP OF LAKE MICHIGAN. UNIT NO. 11 IS RATED AT 115 MW AND FIRES MIDWEST COAL WITH A HEAT VALUE OF 11,000 BTU/LB. AND SULFUR AND ASH CONTENTS OF 3.5 AND 10.0% RESPECTIVELY.

THIS UNIT WILL BE THE FIRST REGENERABLE FGD SYSTEM TO CONTROL THE TOTAL FLUE GAS EMISSION FROM A FULL SCALE COAL-FIRED GENERATING UNIT. IT IS ALSO THE FIRST SYSTEM TO RECOVER ELEMENTAL SULFUR OF A MARKETABLE QUALITY FROM THE FLUE GAS OF AN ELECTRIC UTILITY. THE PRIMARY ENGINEERING AND CONSTRUCTION FIRM IS DAVY POWERGAS. ALLIED CHEMICAL, UNDER CONTRACT TO NIPSCO, OPERATES THE FGD FACILITY AND MARKETS THE USEFUL PRODUCTS.

THE FGD SYSTEM CONSISTS OF THREE MAJOR PROCESS UNITS: A WELLMAN-LORD SO2 RECOVERY UNIT, A DAVY POWERGAS PURGE TREATMENT UNIT, AND AN ALLIED CHEMICAL SO2 REDUCTION UNIT.

THE SO2 RECOVERY SYSTEM INCLUDES A FLUE GAS BOOSTER BLOWER, A PRESCRUBBER (ORIFICE CONTACTOR), A THREE-STAGE TRAY TOWER ABSORBER, AND AN EVAPORATOR/CRYSTALLIZER. THE PRESCRUBBER IS A VARIABLE-THROAT VENTURI USED TO SATURATE THE FLUE GAS AND REMOVE ANY FLYASH NOT COLLECTED IN THE ESP UNIT. THE FLYASH SLURRY IS SPENT CONTINUOUSLY TO THE ASH PONDS. THE ABSORBER IS A THREE-STAGE KOCH VALUE TRAY ABSORPTION TOWER FOLLOWED BY A MIST ELIMAINTOR AND A STACK GAS REHEATER. THE SPENT SCRUBBING (SODIUM SULFITE-BISULFITE) SOLUTION IS REGENERATED IN AN EVAPORATOR/CRYSTALLIZER. HERE THE SOLUTION IS HEATED UNTIL THE BISULFITE DECOMPOSES, EMITTING SO2 GAS AND PRECIPITATING SODIUM SULFITE CRYSTALS. THESE ARE REMOVED AND REDISSOLVED IN THE CONDENSATE FROM THE EVAPORATOR FOR RECYCLE TO THE ABSORBER.

A SMALL SIDESTREAM IS REMOVED FROM THE SCRUBBING LIQUOR LEAVING THE ABSORBER AND SENT TO THE PURGE TREATMENT UNIT TO REMOVE SODIUM SULFATE. THIS SYSTEM CONSISTS OF FOUR CHILLED-WALL CRYSTALLIZERS WHERE SODIUM SULFATE CRYSTALS FORM, FOLLOWED BY A CENTRIFUGE AND CRYSTAL DRYER.

THE SULFUR DIOXIDE FROM THE EVAPORATOR/CRYSTALLIZER IS COMPRESSED AND SENT TO THE ALLIED CHEMICAL SO2 REDUCTION PLANT, WHERE IT IS REACTED WITH NATURAL GAS. THE RESULTING ELEMENTAL SULFUR IS CONDENSED AND STORED IN MOLTEN FORM, WHILE THE OFF-GASES ARE BURNED IN A TAIL GAS INCINERATOR AND RETURNED TO THE ABSORBER INLET. THE ALLIED PLANT IS DESIGNED TO GENERATE 25 TON/DAY OF SULFUR.

A SUMMARY OF THE PERFORMANCE OF THE WELLMAN-LORD FGD DEMONSTRATION UNIT, PROBLEMS/SOLUTIONS AND MODIFICATIONS IS PROVIDED IN THE PERFORMANCE HISTORY TABLE THAT FOLLOWS. A SIMPLIFIED PROCESS FLOW DIAGRAM IS PROVIDED IN APPENDIX B OF THIS REPORT.

NIPSCO WELLMAN-LORD SO2 RECOVERY SYSTEM
OPERATING HISTORY

INITIAL OPERATING EXPERIENCE

FOLLOWING COMPLETION OF CONSTRUCTION IN MID-1976, START-UP OF THE VARIOUS SUBSYSTEMS AND COMPONENT PARTS WAS INITIATED. DURING THE PERIOD JULY THROUGH NOVEMBER, THREE SUSTAINED RUNS OF THE SO2 ABSORBER AND REGENERATION SYSTEM UNDER NORMAL OPERATING CONDITIONS WERE ACHIEVED. SO2 REMOVAL EFFICIENCY WAS EQUAL TO OR GREATER THAN THE 90% PERFORMANCE CRITERIA. UNIT 11 BOILER OPERATED 121 FULL DAYS AND 10 PARTIAL DAYS. THE WELLMAN-LORD SO2 RECOVERY UNIT OPERATED 71 FULL DAYS AND 23 PARTIAL DAYS. DURING THIS PERIOD, NUMEROUS MODIFICATIONS AND CORRECTIONS TO THE SYSTEM WERE COMPLETED. THESE INCLUDED MODIFYING THE ABSORBER KOCH VALVE TRAYS TO IMPROVE TURN-DOWN, RUBBER LINING THE BOTTOM ABSORBER COLLECTOR TRAY, RELOCATING AND IMPROVING TEMPERATURE CONTROL OF THE LOW PRESSURE STEAM SUPPLY, INSTALLING IMPROVED SO2 SAMPLE PROBES AND SEVERAL REPLACEMENTS AND MODIFICATIONS TO THE PURGE SALT RECOVERY AREA. FULLY INTEGRATED OPERATIONS INCLUDING SO2 REDUCTION AND SULFUR RECOVERY OCCURRED IN NOVEMBER, 1976. JANUARY THROUGH MAY 1977 - UNIT 11 BOILER WAS OUT-OF-SERVICE FOR ABOUT FIVE MONTHS FOLLOWING A BOILER RELATED MISHAP WHICH OCCURRED ON JANUARY 15, 1977, DURING START-UP AFTER A SCHEDULED MAINTENANCE TURN AROUND.

ON JUNE 13, 1977 FGD OPERATIONS RESUMED FOLLOWING RETURN TO FULL SERVICE OF UNIT 11 BOILER. BY JUNE 15 FULLY INTEGRATED OPERATION OF THE ENTIRE FGD PLANT WAS ACHIEVED. THROUGH JUNE AND JULY, SEVERAL HUNDRED HOURS OF TOTAL SYSTEM OPERATION AT BOTH PARTIAL AND FULL LOAD WERE ACCRUED.
PERFORMANCE TESTS

AUGUST-SEPTEMBER 1977 - PERFORMANCE TESTS COMMENCED ON AUGUST 29, 1977 AND WERE SUCCESSFULLY COMPLETED ON SEPTEMBER 14, 1977. THE TEST PERIOD INCLUDED 12 DAYS AT 92 MW FLUE GAS EQUIVALENT AND 3-1/2 DAYS AT 110 MW FLUE GAS EQUIVALENT. DURING THIS PERIOD, 91 PERCENT OF THE SO2 WAS REMOVED WHILE BURNING COAL CONTAINING 3 PERCENT SULFUR AND 204 TONS OF ELEMENTAL SULFUR WERE RECOVERED. ALL PERFORMANCE CRITERIA WERE MET INCLUDING SO2 REMOVAL, PARTICULATE EMMISSION, RAW MATERIAL AND UTILITY CONSUMPTIONS AND RECOVERED SULFUR QUALITY. THE FGD UNIT SHUT DOWN SEPTEMBER 19 AND REMAINED IDLE THROUGH MONTH END DUE TO COAL FEED PROBLEMS RESULTING FROM WET COAL ON THE UNIT 11 BOILER.
DEMONSTRATION PERIOD

OCTOBER 1977 - A DEMONSTRATION PERIOD OF ONE YEAR BEGAN SEPTEMBER 16. DURING OCTOBER, THE FGD UNIT OPERATED 132 HRS. OPERATIONS WERE INTERRUPTED WHILE HEAT BALANCE TESTS WERE CONDUCTED ON THE UNIT 11 BOILER BY NIPSCO AND TRW AND WERE INTERRUPTED FURTHER TO MAKE REPAIRS TO THE SO2 REDUCTION SECTION, THE EVAPORATOR, AND THE UNIT 11 BOILER.
OPERATING SUMMARY (HOURS AND VIABILITY PARAMETER DATA WILL BE INCLUDED IN THE NEXT REPORT.

TABLE 3
PERFORMANCE DESCRIPTION FOR OPERATIONAL FGD SYSTEMS THROUGH 01/78

UTILITY NAME	NORTHERN STATES POWER CO.
UNIT NAME	SHERBURNE COUNTY STATION NO.1
UNIT LOCATION	BECKER MINNESOTA
UNIT RATING	710 MW
FUEL CHARACTERISTICS	COAL 0.8 PERCENT SULFUR
FGD VENDOR	COMBUSTION ENGINEERING
PROCESS	LIMESTONE SCRUBBING
NEW OR RETROFIT	NEW
START UP DATE	5/76
FGD STATUS	OPERATIONAL
EFFICIENCY, PARTICULATES	99 PERCENT
SO2	5 PERCENT
WATER MAKE UP	OPEN LOOP 1.13 GPM/MW
SLUDGE DISPOSAL	CLAY-LINED DISPOSAL POND
UNIT COST	SEE APPENDIX A, FGD SYSTEM ECONOMICS
OPERATIONAL EXPERIENCE	REFER TO THE BACKGROUND INFORMATION SECTION IN TABLE 5 OF THIS REPORT. FULL COMMERCIAL OPERATION OF THE SYSTEM BEGAN ON MAY 1, 1976. THE SCRUBBING SYSTEM FOR THIS UNIT CONSISTS OF 12 MODULES. EACH SCRUBBING MODULE INCORPORATES A VENTURI-ROD SECTION AND A MARBLE BED ABSORBER FOR PARTICULATE AND SULFUR DIOXIDE REMOVAL. A FORCED OXIDATION SYSTEM CONVERTS ALL THE CALCIUM SULFITE TO SULFATE PRIOR TO DISCHARGE TO A CLAY-LINED SETTLING POND. STACK GAS REHEAT IS PROVIDED BY IN-LINE HOT WATER TUBES.

BACKGROUND INFORMATION
ON
SHERBURNE COUNTY GENERATING PLANT

THE SHERBURNE COUNTY GENERATING PLANT OF THE NORTHERN STATES POWER COMPANY IS LOCATED ON THE MISSISSIPPI RIVER IN SHERBURNE COUNTY NEAR BECKER, MINNESOTA. THIS NEW POWER GENERATING PLANT CURRENTLY HAS TWO COAL-FIRED UNITS IN SERVICE AND TWO IN THE EARLY PLANNING STAGES. UNIT NO. 1 IS RATED AT 710 MW AND FIRES MONTANA COLSTRIP COAL WITH A HEATING VALUE OF 8300 BTU/LB, AND SULFUR, ASH, AND MOISTURE CONTENTS OF 0.8, 9.0 AND 25.0 PERCENT, RESPECTIVELY. IN ORDER TO MEET MINNESOTA POLLUTION CONTROL AGENCY PARTICULATE AND SO2 EMISSION STANDARDS OF 0.96 LBS. SO2 AND 0.087 LBS. PARTICULATE PER MILLION BTU HEAT INPUT TO THE BOILER, THE UNIT WAS FITTED WITH A LIMESTONE-BASED WET SCRUBBING SYSTEM FOR SIMULTANEOUS PARTICULATE AND SO2 REMOVAL.

THE NORTHERN STATES POWER CO., SHERBURNE NO. 1 SCRUBBER DESIGN IS BASED UPON THE RESULTS OF A PILOT PLANT TEST PROGRAM CONDUCTED AT COMBUSTION ENGINEERING'S (CE) KREISINGER DEVELOPMENT LABORATORY AND A PROTOTYPE SCRUBBER PROGRAM CONDUCTED JOINTLY BY COMBUSTION ENGINEERING AND NORTHERN STATES POWER AT THE UTILITY'S BLACK DOG STATION. THE SCRUBBING SYSTEM IS COMPRISED OF A FIRST STAGE FIXED-ROD VENTURI SCRUBBER FOR PARTICULATE REMOVAL AND A MARBLE BED ABSORBER TO COMPLETE PARTICULATE REMOVAL AND ACHIEVE THE NECESSARY SULFUR DIOXIDE REMOVAL. THE SCRUBBING HAS BEEN GUARANTEED TO REMOVE 99 PERCENT OF THE PARTICULATE MATTER ENTERING THE SCRUBBING SYSTEM, OR MAINTAIN AN EMISSION 0.04 GR/DSCF, WHICHEVER OUTLET VALUE IS GREATER. THE SULFUR DIOXIDE DESIGN REMOVAL EFFICIENCY IS BASED UPON THE REMOVAL OF 50 PERCENT OF THE SULFUR IN THE FUEL (MAXIMUM FUEL SULFUR CONTENT OF 1.2 PERCENT) OR MAINTAIN AN EMISSION OF 200 PPM, WHICHEVER OUTLET VALUE IS GREATER.

THE GENERAL SCENARIO OF THE SHERBURNE NO. 1 SCRUBBING SYSTEM CONSISTS OF 12 SCRUBBING MODULES, 11 OF WHICH ARE REQUIRED FOR FULL LOAD CAPACITY. EACH MODULE HAS A RATED FLUE GAS CAPACITY OF 200,000 TO 220,000 ACFM AT 135 F. AN AGITATED REACTION TANK IS LOCATED AT THE BOTTOM OF EACH SCRUBBER MODULE. THE PURPOSE OF THE REACTION TANK IS TO ALLOW COMPLETION OF SULFUR DIOXIDE FORMATION TO SULFITE, PROVIDE FORCED OXIDATION OF SULFITE TO SULFATE, AND FACILITATE PRECIPITATION OF CALCIUM SULFATE SOLIDS. IN FORCED OXIDATION, AIR IS BUBBLED INTO THE REACTION TANK, OXIDIZING SULFITE TO SULFATE. THE SULFATE FORMED IS PRECIPITATED IN THE REACTION TANK BY ADDITION OF GYPSUM SEED CRYSTALS. A BLEED LINE PROVIDES THE NECESSARY SOLIDS REMOVAL TO A 160-FOOT DIAMETER CLARIFIER. HERE THE WASTE SOLIDS (FLY ASH, CALCIUM CARBONATE, AND CALCIUM SULFATE) SETTLE OUT AND THE CLARIFIED WATER IS RETURNED TO THE PROCESS.

THE SCRUBBER MODULES ARE 26 FT X 18 FT X 60 FT HIGH AND HAVE 4 IN. DEEP, 13/16 IN. DIA. GLASS MARBLE PACKING IN THE MARBLE BED SECTION. THE LIQUID FLOW RATE IN 5600 GPM PER MODULE AND OF WHICH ABOUT 3500 GPM IS RECYCLED. THE SOLIDS CONTENT OF THE SLURRY IS 8-10% BY WEIGHT AND THE PH MAINTAINED IS 5-5.5. THE I.D. FANS HAVE A POWER RATING OF 6000 HP AND THE PRESSURE DROP ACROSS EACH MODULE IS 20 IN. WG.

THE CLEANED FLUE GAS THEN PASSES THROUGH A DOUBLE ROW, TWO-PASS CHEVRON MIST ELIMINATOR. REHEAT OF 40 F IS ADDED TO THE GAS STREAM TO PROVIDE PROTECTION TO THE DOWNSTREAM DUCTWORK, I.D. FAN, AND PLUME CONTROL BEFORE FINAL DISCHARGE TO THE ATMOSPHERE. THE CLARIFIER UNDERFLOW IS PUMPED TO A SETTLING POND WHICH IS 45-FEET DEEP AND 62 ACRES IN AREA, WITH AN 18-INCH CLAY LINING. THE WATER IS RECYCLED FROM THE POND BACK TO THE PROCESS. A GENERAL FLOW DIAGRAM OF THE SHERBURNE SCRUBBER ARRANGEMENT IS PROVIDED IN APPENDIX B.

INITIAL OPERATION OF THE SYSTEM COMMENCED MARCH 16, 1976. FULL COMMERCIAL OPERATION COMMENCED MAY 1, 1976. PROBLEMS ENCOUNTERED DURING INITIAL STARTUP OPERATIONS HAVE INCLUDED THE USUAL MECHANICAL PROBLEMS ASSOCIATED WITH A NEW SYSTEM AND SOME PLUGGING IN THE SCRUBBER INTERVALS. SPECIFICALLY, PROBLEMS HAVE BEEN ENCOUNTERED IN THE SPRAY SYSTEM, REQUIRING THE DESIGN OF THE NOZZLES TO BE CHANGED FROM PLASTIC AND RUBBER COMPONENTS TO CERAMIC SPINNER-VANE COMPONENTS. ALSO, SOME PLUGGING PROBLEMS HAVE BEEN ENCOUNTERED IN THE SPRAY HEADERS, PRIMARY CONTACTOR, AND MARBLE BED. THIS HAS STEMMED LARGELY FROM THE MALFUNCTION OF THE STRAINER SYSTEM BECAUSE OF POOR NOZZLE CONFIGURATIONS. NSP IS CURRENTLY MAKING MODIFICATIONS IN THIS AREA.

NORTHERN STATES POWER CO. SHERBURNE COUNTY STATION UNIT NO. 1

BOILER OPERATION TIME AND MODULE OPERABILITY (%)

PERIOD	BOILER HR.	101	102	103	104	105	106	107	108	109	110	111	112
MAR. 76													

APR. 76

A PRELIMINARY SYSTEM CHECKOUT WAS SUCCESFULLY COMPLETED BY PASSING AIR AND WATER THROUGH THE SYSTEM. FIRST COMMERCIAL OPERATION COMMENCED MAY 1, 1976. THIS IS AN INTERMIDIATE LOAD UNIT, OPERATING NEAR FULL CAPACITY DURING THE DAY AND 35 PERCENT CAPACITY AT NIGHT.

MAY 76	657	62	83	81	59	72	90	57	69	60	75	72	67

TOTAL SYSTEM AVAILABILITY = 86%
MEGAWATT-HOURS GENERATED = 318,050

JUN. 76 688
TOTAL SYSTEM AVAILABILITY = 84%
MEGAWATT-HOURS GENERATED = 372,450

MODIFICATIONS ARE CONTINUING ON THE SPRAY SYSTEM, SPRAY NOZZLES AND STRAINER SYSTEM.

JUL. 76	512	80	62	71	81	80	68	81	75	79	63	91	69

TOTAL SYSTEM AVAILABILITY = 84%
MEGAWATT-HOURS GENERATED = 269,700

AUG. 76	705	46	93	51	84	83	76	71	84	81	76	87	91

TOTAL SYSTEM AVAILABILITY = 94%
MEGAWATT-HOURS GENERATED = 421,110

SINCE JULY 1, THE NO. 1 UNIT HAS BEEN GENERATING 95-98 PERCENT OF REQUIRED MW-HOURS. THE SLURRY NOZZLES ARE FREQUENTLY PLUGGED BY PARTICLES ABOVE QUARTER INCH SIZE. NSP IS NOW PLANNING TO MODIFY THE DUPLEX STRAINER SYSTEM TO ALLEVIATE THIS PROBLEM. IN ADDITION, THE DEPOSITION OF SOFT SOLIDS IS STILL CONTINUING IN THE DEMISTERS AND REHEATERS. HARD SCALE GYPSUM FORMATION ON THE VESSEL WALLS HAS LEVELED OFF. A CREW OF 70 PEOPLE IS REQUIRED TO MAINTAIN SCRUBBER OPERATIONS. THE CLEANING PROCEDURE CALLS FOR 3-4 MODULES TO BE TAKEN OUT OF SERVICE EACH NIGHT. THUS, EACH MODULE IS CLEANED ONCE EVERY THREE DAYS.

SEP. 76	566	87	90	93	76	76	79	85	79	85	80	92	96

TOTAL SYSTEM AVAILABILITY = 95 PERCENT
MEGAWATT-HOURS GENERATED = 349,470

OCT. 76	606	97	84	96	96	95	30	74	76	91	81	100	87

TOTAL SYSTEM OPERABILITY HAS TO BE 100 PERCENT SINCE THE SCRUBBERS CANNOT BE BYPASSED TO OPERATE THE BOILER. NSP IS NOW IN THE PROCESS OF MODIFYING THE STRAINER DESIGN. THE DUPLEX UNITS ARE TO BE REPLACED BY IN-TANK SCREENS AND SOOT BLOWERS, BOTH LOCATED AT THE SUCTION SIDE OF THE SPRAY WATER PUMP. CARBON STEEL FIN TUBE REHEAT BUNDLES ARE ALSO AN AREA OF CONCERN. MULTIPLE FAILURES IN FOUR UNITS HAVE BEEN EXPERIENCED.

NOV. 76	720	83	80	87	79	92	80	93	89	69	78	73	93

TOTAL SYSTEM AVAILABILITY = 93 PERCENT
MEGAWATT-HOURS GENERATED = 470,820

DEC. 76	722	88	84	87	80	71	97	91	95	94	88	73	75

TOTAL SYSTEM AVAILABILITY = 95 PERCENT
MEGAWATT-HOURS GENERATED = 460,920

THE MODIFICATIONS OF THE DUPLEX STRAINER SYSTEM IS ONGOING, CURRENTLY APPROXIMATELY ONE-THIRD COMPLETED ON THE UNIT NO. 1. THE UTILITY IS NOW CONDUCTING A FULL-LOAD EVALUATION STUDY, ANALYZING SYSTEM OPERATION ON 10 MODULES VS. THE DESIGNED 11 MODULES. THE UNIT IS CURRENTLY HAVING DIFFICULTY COMPLYING WITH THE 20 PERCENT OPACITY REGULATION, DUE TO THE EXTREMLY FINE FLY ASH BEING EMITTED(70 PERCENT LESS THAN 1 MICRON.)

JAN. 77	607	94	75	99	76	96	77	70	92	81	40	75	95

TOTAL SYSTEM AVAILABILITY = 90 PERCENT
MEGAWATT-HOURS GENERATED = 386,060

FEB. 77	609	89	99	64	96	64	99	81	62	98	93	98	61

TOTAL SYSTEM AVAILABILITY = 91 PERCENT
MEGAWATT-HOURS GENERATED = 395,210

MAR. 77	743	47	92	95	93	93	95	88	93	95	83	78	72

TOTAL SYSTEM AVAILABILITY = 95 PERCENT
MEGAWATT-HOURS GENERATED = 510,650

LOW OPERABILITIES ARE DUE PRIMARILY TO THE COMPLETION OF STRAINER MODIFICATIONS. THESE WERE PERFORMED ON ONE MODULE AT A TIME. MODULE 101 WAS THE LAST TO UNDERGO MODIFICATIONS AND WORK WAS COMPLETED IN THE THIRD WEEK OF MARCH. AT THE PRESENT TIME, ALL MODULES ARE FITTED WITH IN-TANK STRAINERS. THE 10 MODULES VS. 11 MODULES EVALUATION WILL BE RESUMED IN THE NEAR FUTURE.

BOILER OPERATION TIME AND MODULE OPERABILITY (%)

PERIOD	BOILER HR.	101	102	103	104	105	106	107	108	109	110	111	112
APR. 77	718	84	65	92	95	96	62	73	91	58	93	90	88

TOTAL SYSTEM AVAILABILITY = 95 PERCENT
MEGAWATT-HOURS GENERATED = 460,100

MAY 77	312	96	48	92	87	95	96	81	98	96	78	35	87

TOTAL SYSTEM AVAILABILITY = 92 PERCENT
MEGAWATT-HOURS GENERATED = 195,790

DURING THE REPORT PERIOD, THE UNIT WAS IN SERVICE ONLY 13 DAYS DURING THE MONTH OF MAY BECAUSE OF A SCHEDULED TURBINE OVERHAUL EXTENDING FROM MAY 14 TO MID-JUNE(JUNE 18 PROJ.)

JUN. 77	248	76	77	75	75	30	87	58	44	61	80	0	83

TOTAL SYSTEM AVAILABILITY = 92 PERCENT
MEGAWATT-HOURS GENERATED = 127,290

JUL. 77	736	93	66	92	90	92	94	91	17	94	83	78	83

TOTAL SYSTEM AVAILABILITY = 97 PERCENT
MEGAWATT-HOURS GENERATED = 476,490

THE UNIT CAME BACK ON LINE 6/18/77 AFTER COMPLETION OF THE FIRST YEAR INSPECTION. ONE OF THE HIGHEST AVAILABILITIES EVER DEMONSTRATED ON THIS UNIT WAS RECORDED DURING JULY AS A RESULT OF THE COMPLETED CLEANOUT OVER THE OUTAGE. A SCRUBBER CLEANOUT AND STAINLESS STEEL MODIFICATIONS TOOK PLACE.

AUG. 77	640	85	89	66	55	81	90	83	79	72	85	90	66

TOTAL SYSTEM AVAILABILITY = 95 PERCENT
MEGAWATT-HOURS GENERATED = 357,380

SEP. 77	686	86	85	88	92	88	62	83	90	86	77	77	82

TOTAL SYSTEM AVAILABILITY = 95 PERCENT
MEGAWATT-HOURS GENERATED = 416,430

DURING AUGUST ONLY NORMAL MAINTENANCE WAS REQUIRED. IN SEPT., MODULE 106 SPRAY WATER PUMP WAS OVERHAULED. SOME ANGLES WERE INSTALLED ON THE PRIMARY CONTACTOR RODS TO RESIST EROSION.

OCT. 77	609	70	81	95	97	63	35	87	99	96	39	58	96

TOTAL SYSTEM AVAILABILITY = 88 PERCENT
MEGAWATT-HOURS GENERATED = 360,850

NOV. 77	705	77	91	42	86	79	82	87	91	89	89	92	52

TOTAL SYSTEM AVAILABILITY = 92 PERCENT
MEGAWATT-HOURS GENERATED = 412,360

OPERABILITES BELOW 50 PERCENT ARE DUE TO SPRAY WATER PUMP OVERHAULS. TWENTY-FOUR PUMPS ARE BEING COMPLETELY OVERHAULED. STRAINER/WASHER SCREEN EROSION HAS BEEN A PROBLEM. REPAIR AND REPLACEMENT HAS BEEN CONTINUALLY NECESSARY. 316 SS MATERIAL WILL BE USED IN FUTURE. THE REPLACEMENT MATERIAL IS EXPECTED TO ARRIVE DEC. 12, 1977 AND WORK IS EXPECTED TO TAKE THREE MONTHS.

DEC. 77	557	97	90	95	94	71	92	26	67	96	98	95	90

TOTAL SYSTEM AVAILABILITY = 93 PERCENT
MEGAWATT-HOURS GENERATED = 325,050

JAN. 78	648	83	63	88	73	84	84	92	64	91	80	88	82

TOTAL SYSTEM AVAILABILITY = 92 PERCENT
MEGAWATT-HOURS GENERATED = 374,290

THE REPLACEMENT PROGRAM HAS BEGUN ON DEC.21. IT TAKES 4/6 DAYS FOR WORK ON EACH MODULE. MODULE 107 HAD HIGH MAINTENANCE ALONG WITH THE STRAINERS REPLACEMENT.

TABLE 3
PERFORMANCE DESCRIPTION FOR OPERATIONAL FGD SYSTEMS THROUGH 01/78

UTILITY NAME	NORTHERN STATES POWER CO.
UNIT NAME	SHERBURNE COUNTY STATION NO.2
UNIT LOCATION	BECKER MINNESOTA
UNIT RATING	710 MW
FUEL CHARACTERISTICS	COAL 0.8 PERCENT SULFUR
FGD VENDOR	COMBUSTION ENGINEERING
PROCESS	LIMESTONE SCRUBBING
NEW OR RETROFIT	NEW
START UP DATE	4/77
FGD STATUS	OPERATIONAL
EFFICIENCY, PARTICULATES	99 PERCENT
SO2	5 PERCENT
WATER MAKE UP	OPEN LOOP 1.13 GPM/MW
SLUDGE DISPOSAL	CLAY-LINED DISPOSAL POND
UNIT COST	SEE APPENDIX A, FGD SYSTEM ECONOMICS
OPERATIONAL EXPERIENCE	REFER TO THE BACKGROUND INFORMATION SECTION IN TABLE 3 OF THIS REPORT. THE SHERBURNE NO. 2 AIR QUALITY CONTROL SYSTEM IS IDENTICAL IN DESIGN TO THE SYSTEM IN OPERATION ON THE NO. 1 UNIT AT THIS STATION. TWELVE 2-STAGE PARTICULATE SCRUBBER (VENTURI-ROD SCRUBBER) AND SULFUR DIOXIDE ABSORBER (MARBLE-BED ABSORBER) MODULES ARE PROVIDED FOR FLY ASH AND SO2 CONTROL. ELEVEN MODULES ARE REQUIRED FOR FULL GENERATING CAPACITY OPERATIONS. THE CALCIUM SULFITE IS FORCIBLY OXIDIZED TO SULFATE PRIOR TO DISCHARGE TO THE DISPOSAL POND. STACK GAS REHEAT PROVIDED BY IN-LINE HOT WATER TUBES.

BACKGROUND INFORMATION
ON
SHERBURNE COUNTY GENERATING PLANT

THE SHERBURNE COUNTY GENERATING PLANT (SHERCO) OF THE NORTHERN STATES POWER COMPANY (NSP) IS LOCATED ON THE MISSISSIPPI RIVER IN SHERBURNE COUNTY, BECKER, MINNESOTA, APPROXIMATELY 45 MILES NORTHWEST OF MINNEAPOLIS. THIS NEW POWER-GENERATING PLANT CURRENTLY HAS TWO COAL-FIRED UNITS IN SERVICE AND TWO IN THE EARLY DESIGN STAGES. UNIT NO. 2 IS RATED AT 710 MW AND FIRES LOW SULFUR COLSTRIP MONTANA COAL THAT HAS A HEATING VALUE OF 830 BTU/LB, SULFUR CONTENT OF 0.8 PERCENT, ASH CONTENT OF 9.0 PERCENT, AND A MOISTURE CONTENT OF 25.0 PERCENT. IN ORDER TO MEET MINNESOTA POLLUTION CONTROL AGENCY EMISSION CODES OF 0.96 LB SULFUR DIOXIDE AND 0.087 LB PARTICULATES PER MILLION BTU HEAT-INPUT TO THE BOILER, THE UNIT WAS FITTED WITH A NON-REGENERABLE LIMESTONE-BASED WET SCRUBBING SYSTEM.

THE DESIGN OF THE SCRUBBER PLANT FOR SHERCO NO. 2 IS IDENTICAL TO THAT EMPLOYED FOR THE NO. 1 UNIT NOW IN SERVICE AT THIS STATION (SEE THE PRECEDING FILE IN THIS REPORT FOR ADDITIONAL INFORMATION). THE SCRUBBER DESIGN IS BASED UPON PILOT PLANT AND PROTOTYPE PLANT RESEARCH PROGRAMS CONDUCTED AT COMBUSTION-ENGINEERING'S (C-E) KREISINGER LABORATORY AND NSP'S BLACK DOG STATION. THE BLACK DOG PROTOTYPE UNIT WAS OPERATED FOR FOURTEEN MONTHS FROM MARCH 1973 TO MAY 1974. NSP, C-E, AND BLACK & VEATCH WERE RESPONSIBLE FOT THE OPERATION OF THE 13000 ACFM PROTOTYPE SCRUBBER. THE RESULTS OF THIS PROGRAM INDICATED THAT C-E FIXED-ROD SCRUBBER AND SINGLE-STAGE MARBLE-BED ABSORBER MODULES WOULD PROVIDE SUFFICIENT POLLUTANT REMOVAL CAPABILITY WITH MINIMAL SCALING AND PLUGGING PROBLEMS. THE SCRUBBING SYSTEM HAS BEEN GUARANTEED TO REMOVE 99 PERCENT OF THE INLET PARTICULATE MATTER ENTERING THE SCRUBBING PLANT OR MAINTAIN AN EMISSION OUTLET OF 0.04 GR/SCF, WHICHEVER VALUE IS GREATER, AND REMOVE 50 PERCENT OF THE SULFUR IN THE FUEL (MAXIMUM FUEL SULFUR CONTENT OF 1.2 PERCENT) OR MAINTAIN AN EMISSION OUTLET OF 200 PP M SO2, WHICHEVER VALUE IS GREATER.

THE SCRUBBER PLANT DESIGN FOR SHERCO NO. 2 CONSISTS OF 12 C-E VENTRI-ROD SCRUBBER AND MARBLE BED ABSORBER MODULES, 11 OF WHICH ARE REQUIRED FOR UNIT FULL-LOAD CAPACITY. EACH MODULE HAS A MAXIMUM FLUE GAS CAPACITY OF 220,000 ACFM AT 135 F. INCLUDED IN EACH MODULE IS A VENTURI SECTION WITH TWO PARALLEL ROWS OF HORIZONTALLY ORIENTED RODS (PRIMARY CONTACTOR), A SINGLE STAGE MARBLE-BED (3.5 TO 4.0-INCH DEEP BED OF 13/16-INCH DIAMETER GLASS SPHERES), LADDER VANES FOR GAS-FLOW DISTRIBUTION, TWO-STAGE CHEVRON-TYPE DEMISTER, FINNED-TUBE HOT WATER HEAT EXCHANGER, AND AN INTERNAL REACTION TANK. THE REACTION TANK IS LOCATED AT THE BOTTOM OF EACH MODULE AND FACILITATES THE COMPLETION OF THE CHEMICAL ABSORPTION OF SO2 TO CALCIUM SULFITE. IN ADDITION, THE SULFITE SPECIES FORMED IS FORCIBLY OXIDIZED TO SULFATE IN THE REACTION TANK VIA AIR BUBBLING AND AGITATION. THE SULFATE SPECIES FORMED IS PRECIPITATED OUT BY THE ADDITION OF A GYPSUM SEED TO THE REACTION TANK LIQUOR, DEWATERED IN A 160-FOOT DIAMETER CLARIFIER, AND DISPOSED OF WITH THE COLLECTED PARTICULATE MATTER IN AN ON-SITE 18-INCH CLAY-LINED SLUDGE POND (2790 ACRE-FEET CAPACITY). WATER IS RECYCLED BACK TO THE SCRUBBER PLANT FROM THE DISPOSAL POND FOR FURTHER SERVICE.

THE ABSORPTION OF SULFUR DIOXIDE FROM THE FLUE GAS STREAM RESULTS FROM THE PRESENCE OF TWO ALKALINE MATERIALS. THE CALCIUM OXIDE IN THE FLY ASH (APPROXIMATELY 17 PERCENT BY WEIGHT) AND THE CALCIUM CARBONATE IN THE TAIL-END LIMESTONE ADDITIVE.

ADDITIONAL INFORMATION OF THE OPERATION OF THIS UNIT IS PROVIDED IN THE PERFORMANCE HISTORY TABLE THAT FOLLOWS. A SIMPLIFIED PROCESS FLOW DIAGRAM OF THE SHERCO SCRUBBER SYSTEM IS PROVIDED IN APPENDIX B OF THIS REPORT.

BOILER OPERATION TIME AND MODULE OPERABILITY (%)

PERIOD	BOILER HR.	201	202	203	204	205	206	207	208	209	210	211	212
APR. 77	697	0	95	93	87	83	84	94	74	91	87	85	86

TOTAL SYSTEM AVAILABILITY = 92 PERCENT
MEGAWATT-HOURS GENERATED = 442,170
UNIT CAPACITY FACTOR = 78 PERCENT

MAY 77	644	33	100	44	95	94	100	76	98	94	92	91	98

TOTAL SYSTEM AVAILABILITY = 91 PERCENT
MEGAWATT-HOURS GENERATED = 421,020
UNIT CAPACITY FACTOR = 75 PERCENT

FROM FULL SCALE STARTUP ON APRIL 1, THE SYSTEM HAS BEEN OPERATING VERY WELL WITH NO MAJOR PROBLEMS ENCOUNTERED. THE UTILITY IS MAINTAINING A SCHEDULE OF NIGHTLY CLEANING ON THE SCRUBBERS. THE CURRENT SCHEME IS SUCH THAT EACH MODULE IS CLEANED AFTER 7-8 DAYS.

JUN. 77	720	92	76	78	79	89	74	67	88	88	78	45	85

TOTAL SYSTEM AVAILABILITY = 96 PERCENT
MEGAWATT-HOURS GENERATED = 423,680

JUL. 77	602	96	87	86	97	96	88	88	95	57	93	94	87

TOTAL SYSTEM AVAILABILITY = 97 PERCENT
MEGAWATT-HOURS GENERATED = 382,890

MODULE 101 HAS BEEN IN THE SPRAY TOWER MODE SINCE SEPT. 5, 1976. THIS DESIGN PAVED THE WAY FOR THE DESIGN ON SHERCO NOS. 3 AND 4. THE CEILCOAT LINING FAILURE IS OBSERVED ABOVE THE LIQUID LEVEL OF INTERNAL RECYCLE TANK. BUBBLING AND CRACKING CAN BE SEEN HERE. THE LINER EXTENDS UP THROUGH THE MODULE TO THE REHEATER.

AUG. 77	675	88	75	67	82	84	35	81	80	56	79	71	33

TOTAL SYSTEM AVAILABILITY = 93 PERCENT
MEGAWATT-HOURS GENERATED = 366,500

SEP. 77	717	89	61	82	90	81	82	52	88	56	87	73	86

TOTAL SYSTEM AVAILABILITY = 94 PERCENT
MEGAWATT-HOURS GENERATED = 423,280

MODULE 206 AND 209 SPRAY PUMPS WERE OVERHAULED. THE NOZZLES REQUIRED EXTENSIVE CLEANING. THE STRAINERS IN MODULE 207 AND 209 REACTION TANKS HAVE STARTED ERODING. NSP ANTICIPATES REPLACING THEM VERY SOON.

OCT. 77	684	98	89	87	86	62	99	98	93	96	96	70	81

TOTAL SYSTEM AVAILABILITY = 95 PERCENT
MEGAWATT-HOURS GENERATED = 449,140

NOV. 77	715	85	93	68	80	93	73	75	66	94	77	91	65

TOTAL SYSTEM AVAILABILITY = 91 PERCENT
MEGAWATT-HOURS GENERATED = 435,360

LOW OPERABILITIES ARE DUE TO SPRAY WATER PUMP OVERHAULS. 24 PUMPS ARE BEING OVERHAULED. STRAINER/WASHER SCREEN EROSION HAS BEEN A PROBLEM. 316 SS MATERIAL WILL BE USED IN FUTURE. REPLACEMENT MATERIAL IS EXPECTED TO ARRIVE DECEMBER 12, 1977 AND WORK IS EXPECTED TO LONG FOR THREE MONTHS.

DEC. 77	733	53	93	94	81	89	95	93	83	62	82	90	92

TOTAL SYSTEM AVAILABILITY = 93 PERCENT
MEGAWATT-HOURS GENERATED = 443,500

JAN. 78	682	91	75	64	72	74	67	91	88	77	72	73	84

TOTAL SYSTEM AVAILABILITY = 92 PERCENT
MEGAWATT-HOURS GENERATED = 387,190

THE REPLACEMENT OF STRAINER SCREENS HAS BEGUN ON DEC. 21. IT TAKES 4-6 DAYS FOR WORK ON EACH MODULE.

TABLE 3
PERFORMANCE DESCRIPTION FOR OPERATIONAL FGD SYSTEMS THROUGH 01/78

UTILITY NAME	PENNSYLVANIA POWER CO.
UNIT NAME	BRUCE MANSFIELD NO. 1
UNIT LOCATION	SHIPPINGPORT PENNSYLVANIA
UNIT RATING	825 MW
FUEL CHARACTERISTICS	COAL 4.7 PERCENT SULFUR
FGD VENDOR	CHEMICO
PROCESS	LIME SCRUBBING
NEW OR RETROFIT	NEW
START UP DATE	4/76
FGD STATUS	OPERATIONAL
EFFICIENCY, PARTICULATES	99.8 PERCENT DESIGN
SO2	92 PERCENT (DESIGN)
WATER MAKE UP	OPEN LOOP
SLUDGE DISPOSAL	RESERVOIR LANDFILL
UNIT COST	SEE APPENDIX A, FGD SYSTEM ECONOMICS
OPERATIONAL EXPERIENCE	THIS EMISSION CONTROL SYSTEM WAS DESIGNED TO REMOVE FLYASH AND SO2 FROM 3.35 MM ACFM OF FLUE GAS VIA WET LIME SCRUBBING. THE INITIAL SHAKEDOWN AND DEBUGGING PHASE OF OPERATION BEGAN FOR PART OF THE SYSTEM IN DECEMBER 1975. PARTIAL COMMERCIAL OPERATION COMMENCED IN APRIL 1976. THE UNIT WAS CERTIFIED FULL-LOAD COMMERCIAL IN JUNE 1976. THE FGD SYSTEM HAS EXPERIENCED OPERATIONAL PROBLEMS SINCE IT HAS BEEN IN SERVICE REQUIRING A NUMBER OF SYSTEM REPAIRS AND DESIGN MODIFICATIONS. REFER TO BACKGROUND INFORMATION SECTION IN TABLE 5 OF THIS REPORT FOR GREATER DETAIL.

BACKGROUND INFORMATION
ON
BRUCE MANSFIELD UNIT NO. 1

THE BRUCE MANSFIELD PLANT IS A 2475 NET MW, THREE-UNIT, COAL FIRED FACILITY LOCATED ON THE OHIO RIVER IN THE BOROUGH OF SHIPPINGPORT, PENNSYLVANIA. THIS NEW FACILTTY IS BEING BUILT BY PENNSYLVANIA POWER COMPANY, ACTING ON ITS OWN BEHALF AND AS AGENT FOR THE OTHER PARTICIPATING CENTRAL AREA POWER COORDINATION (CAPCO) GROUP OF INVESTOR-OWNED ELECTRIC UTILITIES, INCLUDING THE CLEVELAND ELECTRIC ILLUMINATING COMPANY, DUQUESNE LIGHT COMPANY, OHIO EDISON COMPANY, AND TOLEDO EDISON COMPANY.

BRUCE MANSFIELD NO. 1 IS A COAL-FIRED, ONCE-THROUGH, SUPERCRITICAL STEAM GENERATOR WHICH FIRES 333 TONS/HR OF COAL GENERATING APPROXIMATELY 6.5 MM LB/HR OF STEAM AT 3,785 PSIG, 1005 F/1005 F. THE EMISSION CONTROL EQUIPMENT REQUIRED FOR THIS UNIT IS DESIGNED TO MEET STATE EMISSION REGULATIONS OF 0.6 LBS SULFUR DIOXIDE/MM BTU OF HEAT INPUT AND 0.0175 GR/SCF OF PARTICULATE WHEN BURNING 11,900 BTU/LB COAL HAVING AVERAGE ASH AND SULFUR CONTENTS OF 12.5 AND 4.7 PERCENT, RESPECTIVELY.

IN LATE 1970, AN INTENSIVE INVESTIGATION OF MORE THAN 30 POTENTIAL DESULFURIZATION SYSTEMS WAS INITIATED. THE SYSTEM ULTIMATELY CHOSEN FOR THE REMOVAL OF FLY ASH AND SULFUR DIOXIDE WAS THE VENTURI WET-SCRUBBING SYSTEM, PROVIDED BY CHEMICO AIR POLLUTION CONTROL CO., UTILIZING THE DRAVO CORPORATION'S THIOSORBIC LIME AS THE SCRUBBING ABSORBENT.

THE DESIGN FEATURES OF THE SCRUBBING SYSTEM DICTATE THAT EACH SCRUBBING TRAIN CONSIST OF A SCRUBBING VESSEL (VARIABLE-THROAT VENTURI), A 9000 HP I.D. FAN, AND AN ABSORBER VESSEL (FIXED-THROAT VENTURI). THERE ARE SIX SCRUBBER TRAINS PER UNIT TO HANDLE THE FLUE GAS FLOW FROM EACH BOILER AT FULL LOAD (3.35 MM ACFM AT 285 F). THE SCRUBBER/ABSORBER TRAINS ARE ARRANGED IN TWO GROUPS OF THREE. THE TREATED FLUE GAS, WHICH HAS PASSED THROUGH EACH GROUP OF THE SCRUBBING SYSTEM TRAINS IS DUCTED THROUGH ONE OF THE TWO HEAT CHAMBERS AND THEN DISCHARGED FROM ONE OF TWO CHIMNEY FLUES. THE 950 FOOT CHIMNEY CONTAINS FOUR CARBON STEEL FLUES. THE INNER SURFACES OF WHICH ARE COATED WITH POLYESTER FLAKEGLASS LINING AND ARE CAPABLE OF ACCOMODATING TWO UNITS AT FULL LOAD.

THE ADJUSTABLE VENTURI THROAT SCRUBBING MODULES REMOVE MOST OF THE FLYASH CONTAINED IN THE FLUE GAS. THE ABSORBER MODULE, WHICH IS A FIXED-THROAT VENTURI, REMOVES SOME OF THE REMAINING FLYASH. SULFUR DIOXIDE IS ABSORBED IN BOTH THE SCRUBBER AND ABSORBER BY DROPLETS OF LIME SLURRY, CONTAINING 2 TO 6 PERCENT MAGNESIUM OXIDE.

THE SCRUBBER-RECYCLE BLEED IS COMBINED WITH A FLYASH SLURRY FROM THE BOILER AND DISCHARGED TO A 200-FOOT DIAMETER THICKENER. SLUDGE FROM THE THICKENER IS THEN PUMPED TO A WASTE DISPOSAL SYSTEM WHERE IT IS MIXED WITH A STABILIZING AGENT (CALCILOX) AND THEN PUMPED APPROXIMATELY 7 MILES TO THE LITTLE BLUE RUN DISPOSAL AREA. THE DISPOSAL AREA IS LOCATED IN A RAVINE UPSTREAM OF A 400 FT HIGH HYDRAULIC DAM DESIGNED TO CONTAIN THICKENER SLUDGE AND WATER.

A SIMPLIFIED PROCESS FLOW DIAGRAM IS PRESENTED IN APPENDIX B.
SINCE THE UNIT COMMENCED COMMERCIAL OPERATION IN APRIL 1976, A NUMBER OF PROBLEM AREAS HAVE BEEN ENCOUNTERED. MAJOR AREAS OF CONCERN ARE SPECIFIED BELOW:

1. EXCESSIVE MAINTENANCE PROBLEMS WITH THE WET I.D. FAN HOUSINGS.
2. EXCESSIVE WATER ENTRAINMENT AND CARRY OVER OUT OF THE STACK CAUSING A STACK RAIN PROBLEM.
3. REHEAT BURNER PROBLEMS.
4. STACK FLUE LINER FAILURES.

ADDITIONAL INFORMATION CONCERNING THE PERFORMANCES OF THIS SYSTEM, INCLUDING REMOVAL EFFICIENCY, PROBLEMS AND SOLUTIONS ARE PROVIDED IN THE PERFORMANCE TABLE THAT FOLLOWS.

PENNSYLVANIA POWER CO. BRUCE MANSFIELD UNIT NO. 1

MONTH	BOILER	OPERATING HOURS FGD MODULES A	B	C	D	E	F	COMMENTS
DEC. 75								INITIAL OPERATION (SHAKEDOWN AND DEBUGGING) FOR PART OF THE SYSTEM COMMENCED IN DECEMBER 1975.
JAN. 76								UNIT SHUT DOWN FOR ONE WEEK BECAUSE OF PLUGGED MIST ELIMINATORS AND I.D. FAN HOUSING VIBRATION PROBLEMS.
FEB. 76								FIRST ATTEMPTS AT STARTING UP THE REHEAT BURNERS WERE MADE THIS MONTH. SO MANY PROBLEMS ENCOUNTERED THAT THE VENDOR IS GOING TO REDESIGN NEW REHEAT BURNERS.
APR. 76	506	0*	210*	984*	2147*	2808*	2427*	THE INSTALLATION BEGAN PARTIAL COMMERCIAL OPERATION APRIL 5. THE SCRUBBING SYSTEM IS CURRENTLY HANDLING FLUE GAS AT A TOTAL EQUIVALENT CAPACITY OF APPROXIMATELY 640 MW (GROSS). TOTAL MODULE BY MODULE OPERATION HOURS LOGGED TO-DATE ARE POSTED IN THE ACCOMPANYING TABLE.
		*NOTE - THESE FIGURES REPRESENT TOTAL OPERATING HOURS ACCUMULATED TO DATE.						
MAY 76	595	209	605	592	492	622	493	THE LAST SCRUBBER TRAIN WAS PLACED IN SERVICE DURING THE MONTH. SERVICE TIME TOTALS FOR ALL 6 SCRUBBER-ABSORBER TRAINS THROUGH MAY ARE POSTED IN THE ACCOMPANYING TABLE ALONG WITH THE PERFORMANCE INDEX VALUES. DURING OFF-PEAK HOURS ON THE WEEKENDS WHEN THE UNIT IS OPERATING AT REDUCED LOADS MAINTENANCE IS PERFORMED ON THE SHUT DOWN FGD MODULES SO THAT THEY WILL BE IN OPERATING CONDITION FOR FULL LOAD OPERATION DURING THE HIGH DEMAND HOURS.
TOTAL SYSTEM AVAILABILITY = 80%								
TOTAL SYSTEM OPERABILITY = 100%								
TOTAL SYSTEM RELIABILITY = 100%								
TOTAL SYSTEM UTILIZATION = 80%								
JUN. 76	720	714	680	701	674	705	573	THE UNIT WAS DECLARED COMMERCIALLY AVAILABLE FOR FULL LOAD OPERATION AT 825 MW (NET) ON JUNE 1, 1976. INSTALLED THE REVISED SCRUBBER BAFFLE SYSTEM IN AN EFFORT TO CORRECT THE SCRUBBER RECYCLE PUMP CAVITATION PROBLEMS. THE VALUES DISPLAYED IN THE ACCOMPANYING TABLE INCLUDE THE ACTUAL BOILER HOURS AND THE MODULAR OPERATING HOURS. THE PERFORMANCE INDEX VALUES CALCULATED ARE BASED UPON TOTAL SCRUBBING SYSTEM OPERATION.
TOTAL SYSTEM AVAILABILITY = 100%								
TOTAL SYSTEM OPERABILITY = 100%								
TOTAL SYSTEM RELIABILITY = 100%								
TOTAL SYSTEM UTILIZATION = 100%								
JUL. 76	673	537	590	606	637	662	661	TESTS CONDUCTED THIS MONTH SHOWED THAT THE FGD SYSTEM MIST ELIMINATORS ARE NOT PERFORMING TO DESIGN AND THAT THERE IS EXCESSIVE WATER ENTRAINED IN THE CLEANED FLUE GASSES CAUSING A STACK RAIN PROBLEM. CHEMICO IS WORKING ON THE DESIGN OF ADDITIONAL MIST ELIMINATORS THAT WILL REMOVE THIS EXCESS WATER. THE VENDOR IS STILL TRYING TO SOLVE THE REHEAT BURNER PROBLEMS.
TOTAL SYSTEM AVAILABILITY = 90%								
TOTAL SYSTEM OPERABILITY = 100%								
TOTAL SYSTEM RELIABILITY = 100%								
TOTAL SYSTEM UTILIZATION = 90%								
AUG. 76	705	672	620	653	535	500	668	SECONDARY VERTICAL MIST ELIMINATORS WERE INSTALLED IN THE ABSORBER DISCHARGE DUCT IN AN ATTEMPT TO REDUCE THE EXCESSIVE ENTRAINED WATER. THEY DID NOT WORK BECAUSE THE FLUE GAS BLEW THEM APART IN A FEW MINUTES OF OPERATION.
TOTAL SYSTEM AVAILABILITY = 95%								
TOTAL SYSTEM OPERABILITY = 100%								
TOTAL SYSTEM RELIABILITY = 100%								
TOTAL SYSTEM UTILIZATION = 95%								
SEP. 76	720	708	617	693	695	596	464	
TOTAL SYSTEM AVAILABILITY = 100%								
TOTAL SYSTEM OPERABILITY = 100%								
TOTAL SYSTEM RELIABILITY = 100%								
TOTAL SYSTEM UTILIZATION = 100%								
OCT. 76	720	708	617	693	695	596	464	
TOTAL SYSTEM AVAILABILITY = 99%								
TOTAL SYSTEM OPERABILITY = 100%								
TOTAL SYSTEM RELIABILITY = 100%								
TOTAL SYSTEM UTILIZATION = 99%								
NOV. 76	277	270	278	282	113	159	246	DURING A THREE WEEK OUTAGE (DUE TO A FURNACE IMPLUSION) THE UNIT NO. 1 CHIMNEY FLUES WERE INSPECTED. THE 'A' FLUE POLYESTER LINING MATERIAL WAS FLAKING OFF AND ACID ATTACK WAS STARTING TO CORRODE THE CARBON STEEL FLUE. THE LINING VENDOR IS INVESTIGATING THE PROBLEM. DURING THE OUTAGE THE PLUGGED MIST ELIMINATORS WERE CLEANED AND THE SCALE THROUGHOUT THE FGD SYSTEM WAS REMOVED.
TOTAL SYSTEM AVAILABILITY = 38%								
TOTAL SYSTEM OPERABILITY = 100%								
TOTAL SYSTEM RELIABILITY = 100%								
TOTAL SYSTEM UTILIZATION = 38%								

PENNSYLVANIA POWER CO.

BRUCE MANSFIELD UNIT NO. 1

MONTH	BOILER	OPERATING HOURS FGD MODULES A	B	C	D	E	F	COMMENTS
DEC. 76	722	584	726	684	433	622	626	

TOTAL SYSTEM AVAILABILITY = 100%
TOTAL SYSTEM OPERABILITY = 100%
TOTAL SYSTEM RELIABILITY = 100%
TOTAL SYSTEM UTILIZATION = 97%

PENNSYLVANIA POWER CO. BRUCE MANSFIELD UNIT NO. 1

MONTH	BOILER	FGD MODULE A	B	C	D	E	F
JAN. 77							
OPERATING HOURS	675	660	613	502	664	627	614
FGD SYSTEM AVAILABILITY %		95	92	77	95	92	91
FGD SYSTEM OPERABILITY %		98	91	74	98	93	91
FGD SYSTEM UTILIZATION %		89	82	68	89	84	83

TOTAL FGD SYSTEM LOST GENERATION FACTOR* = 11%

DURING THE FIRST PART OF THE MONTH, THE THICKENER RAKE MECHANISM JAMMED AND COULD NOT BE REPAIRED. THE THICKENER WAS OPERATED FOR APPROXIMATELY THREE WEEKS WITH THE RAKE STOPPED UNTIL THE UNIT NO. 2 THICKENER COULD BE PUT INTO EMERGENCY SERVICE. SEVERE WINTER WEATHER MADE OPERATION OF THE OUTDOOR FGD SYSTEM VERY DIFFICULT AND AFFECTED THE RELIABILITY OF THE UNIT.

FEB. 77							
OPERATING HOURS	540	437	376	439	516	544	451
FGD SYSTEM AVAILABILITY %		77	69	77	86	92	81
FGD SYSTEM OPERABILITY %		81	70	81	96	100	84
FGD SYSTEM UTILIZATION %		65	56	65	77	81	67

TOTAL FGD SYSTEM LOST GENERATION FACTOR = 24.3%

A SECOND SET OF VERTICAL SECONDARY MIST ELIMINATORS WAS INSTALLED IN THE ABSORBER DISCHARGE DUCT BUT THE FLUE GAS BLEW THEM OUT BEFORE THEIR EFFICIENCY FOR REMOVING ENTRAINED WATER IN THE FLUE GAS COULD BE TESTED.

MAR. 1 THRU 12, 77							
OPERATING HOURS	264	259	264	152	252	257	202
FGD SYSTEM AVAILABILITY %		99	100	58	95	97	80
FGD SYSTEM OPERABILITY %		98	100	58	95	97	77
FGD SYSTEM UTILIZATION %		98	100	58	95	97	77

TOTAL FGD SYSTEM LOST GENERATION FACTOR = 12%

AT 0000 MARCH 12TH THE UNIT WAS SHUT DOWN FOR A 10-WEEK TURBINE OVERHAUL OUTAGE. DURING THE OUTAGE, REPAIRS WERE STARTED ON "A" CHIMNEY FLUE WHICH WILL NOT BE COMPLETED UNTIL THE END OF AUGUST. AN INSPECTION OF "B" CHIMNEY FLUE SHOWED THE SAME TYPE OF REPAIRS WOULD BE NEEDED, BUT WORK WILL NOT START ON "B" UNTIL THE "A" FLUE HAS BEEN REPAIRED. BECAUSE OF THESE REPAIRS, THE UNIT WILL BE OPERATING AT APPROXIMATELY HALF LOAD FOR ROUGHLY ONE YEAR.

MAR. 13 THRU MAY 22, 77							
OPERATING HOURS		0	0	0	0	0	0

TOTAL FGD SYSTEM LOST GENERATION FACTOR IS DEFINED AS THE TOTAL MONTHLY LOST GENERATION DUE TO FGD TRAIN OUTAGES DIVIDED BY THE TOTAL MONTHLY EXPECTED GENERATION IF THE FGD TRAINS WOULD HAVE BEEN AVAILABLE FOR OPERATION, EXPRESSED AS A PERCENTAGE.

BECAUSE OF THE EXCESSIVE MAINTENANCE REQUIRED ON THE RUBBER LINED CARBON STEEL I.D. FAN HOUSINGS, FROM PIECES OF SCRUBBER SCALE DAMAGING THE LINING AND CORROSION OF THE CARBON STEEL, INCONEL PLATE WILL BE INSTALLED ON THE SCROLL AREA OF EACH OF THE SIX FANS DURING THE OUTAGE.

A NEWLY DESIGNED SECONDARY VERTICAL MIST ELIMINATOR WILL BE INSTALLED IN THE ABSORBER DISCHARGE DUCT OF ONE OF THE SCRUBBER MODULES DURING THE OUTAGE.

DURING,THE OUTAGE, ALL SCRUBBING VESSELS, DUCTS, PIPING AND MIST ELIMINATORS WILL BE CLEANED AND ALL THE SCALE REMOVED.

DURING OPERATION OF THE FGD SYSTEM, THE PH CONTROL COULD NOT BE AUTOMATED BECAUSE OF POOR DESIGN AND OPERATIONAL PROBLEMS WITH THE PROVIDED CONTROL SYSTEM. PH CONTROL WAS MANUALLY SAMPLED AND CONTROLLED OVER APPROXIMATELY ONE YEAR OF OPERATION. THE PH CONTROL AND MONITORING SYSTEMS ARE BEING REVISED BY OPERATING PERSONNEL DURING THE OUTAGE IN AN EFFORT TO IMPROVE THE PH CONTROL SYSTEM.

THE LIME ADDITION PIPING IS BEING REVISED IN EACH OF THE SCRUBBER VESSELS DUE TO THE SEVERE SCALING OCCURRING WITH THE CURRENT LIME ADDITION SYSTEM. ALSO THE VENDOR IS REDESIGNING THE EXISTING MIST ELIMINATOR SPRAY PIPING IN AN EFFORT TO CORRECT THE EXCESSIVE SCALING AND PLUGGING OF THE MIST ELIMINATORS.

CHANGES IN FLUSH WATER AND SEAL WATER PIPING ARE BEING MADE IN AN EFFORT TO CLOSE THE WATER LOOP.

NEWLY MODIFIED REHEAT BURNERS WILL BE INSTALLED DURING THE OUTAGE AND TESTED ON "B" REHEATER WHEN THE UNIT STARTS UP IN MAY.

THE UNIT NO. 1 THICKENER WAS CLEANED OUT AND THE JAMMED RAKE DRIVE MECHANISM WAS REPAIRED DURING THE OUTAGE.

MAY 23 THRU 31, 77							
OPERATING HOURS	121	0	0	0	102	103	50
FGD SYSTEM AVAILABILITY %					100	100	47
FGD SYSTEM OPERABILITY %					84	85	41
FGD SYSTEM UTILIZATION %					47	48	23

TOTAL SYSTEM LOST GENERATION FACTOR = 87.2%

UNIT WAS STARTED UP ON MAY 23RD, USING D, E, AND F MODULES, DUE TO REPAIRS BEING MADE TO "A" CHIMNEY FLUE. HAD PROBLEMS SLAKING LIME AND GETTING MAGNESIUM LEVELS BUILT UP IN THE SCRUBBER RECYCLE LOOPS AFTER STARTUP.

PENNSYLVANIA POWER CO. BRUCE MANSFIELD UNIT NO. 1

MONTH BOILER	FGD MODULE A	B	C	D	E	F
JUN. 77						
OPERATING HOURS 669	0	0	0	678	685	646
FGD SYSTEM AVAILABILITY %				94	95	90
FGD SYSTEM OPERABILITY %				100	100	97
FGD SYSTEM UTILIZATION %				94	95	90

TOTAL FGD SYSTEM LOST GENERATION FACTOR = 53.7%

HORIZONTAL MIST ELIMINATOR PRESSURE DROPS INCREASED TO THE POINT THAT NEW MIST ELIMINATOR MODULES WERE INSTALLED ON D,E AND F SCRUBBERS AND D AND E ABSORBERS. THE ONLY OUTAGES EXPERIENCED BY THE UNIT THIS MONTH WERE DUE TO THE FGD SYSTEM.

JUL. 77						
OPERATING HOURS 473				490	493	471
FGD SYSTEM AVAILABILITY %				99	99	100
FGD SYSTEM OPERABILITY %				100	100	100
FGD SYSTEM UTILIZATION %				66	66	63

TOTAL FGD SYSTEM LOST GENERATION FACTOR = 50.5%

UNIT NO. 1 WAS DOWN FROM JULY 1ST THRU JULY 12 TO MAKE SOME MODIFICATIONS TO THE GENERATOR COOLING SYSTEM. ON JULY 19TH AND 20TH, PENNSYLVANIA'S DEPARTMENT OF ENVIRONMENTAL RESOURCES TESTED THE SO2 AND PARTICULATE EMISSIONS FROM UNIT NO. 1'S FGD SYSTEM. SO2 EMISSIONS WERE 0.44 LB SO2/MM BTU AND 1.26 LB SO2/MM BTU FOR THE TWO TESTS RESPECTIVELY. FGD SO2 REMOVAL EFFICIENCY VARIED FROM 78% TO 89% FOR THE MONTH.

AUG. 77 692	383	373	210	692	689	635
FGD AVAILABILITY FACTOR %	58	54	31	96	95	88
FGD OPERABILITY FACTOR %	57	56	31	100	99	95
FGD UTILIZATION FACTOR %	52	50	28	93	93	85

TOTAL FGD LOST GENERATION FACTOR = 32.5%

UNIT NO. 1 WAS DOWN FROM AUGUST 13 TO 15 BECAUSE OF BOILER TUBE LEAKS. ON AUGUST 16, 1A CHIMNEY FLUE LINER REPAIRS WERE COMPLETED AND A, B AND C TRAINS WERE STARTED UP. SEVERAL REPAIRS WERE MADE TO THE ID FAN HOUSINGS THIS MONTH. THE AVERAGE SO2 REMOVAL EFFICIENCY FOR THE MONTH WAS 86.7% GASED ON THREE GRAB SAMPLES. YORK RESEARCH BEGAN SETTING UP TO CONTINUOUSLY MONITOR THE SO2 REMOVAL EFFICIENCIES AS PART OF AN EPA RESEARCH PROJECT TO DETERMINE FEASIBLE NSPS FOR FGD. EXTENSIVE MODIFICATIONS ARE BEING MADE IN THE PH CONTROL SYSTEMS IN AN EFFORT TO DEVISE A WORKABLE PH CONTROL SYSTEM.

SEP. 77 558	543	528	545	334	314	245
FGD AVAILABILITY FACTOR %	87	82	81	53	50	43
FGD OPERABILITY FACTOR %	97	95	98	60	56	44
FGD UTILIZATION FACTOR %	75	73	76	46	44	34

TOTAL FGD LOST GENERATION FACTOR = 44.5%

A BOILER TUBE LEAK CAUSED THE UNIT TO BE DOWN SEPTEMBER 10 TO 12. FROM SEPTEMBER 17 TO 22 THE UNIT WAS DOWN TO INSTALL RIGGING IN 1B CHIMNEY FLUE TO BEGIN FLUE LINER REPAIRS. D, E AND F TRAINS WERE OFF THE REMAINDER OF THE MONTH. THE AVERAGE SO2 REMOVAL EFFICIENCIES FOR THE MONTH WERE 93.2% BASED ON FOUR GRAB SAMPLE TESTS.

OCT. 77 720	690	729	649	0	0	0
FGD AVAILABILITY FACTOR %	93	98	87	0	0	0
FGD OPERABILITY FACTOR %	96	100	90	0	0	0
FGD UTILIZATION FACTOR %	93	98	87	0	0	0

TOTAL FGD LOST GENERATION FACTOR = 55.4%

CLEANED MIST ELIMINATOR NOZZLES AND MIST ELIMINATOR ON "C". ABS STACK REPAIRS ON UNIT 2 NECESSITATED TAKING UNIT 1 DOWN FOR 2 DAYS. (A PROTECTIVE CAP HAD TO BE PUT OVER 2B FLUE BY HELICOPTER. PREVAILING WINDS NECESSITATED TAKING UNIT 1 OFF IN ORDER TO DO THIS.)

TABLE 3
PERFORMANCE DESCRIPTION FOR OPERATIONAL FGD SYSTEMS THROUGH 01/78

UTILITY NAME	PENNSYLVANIA POWER CO.
UNIT NAME	BRUCE MANSFIELD NO. 2
UNIT LOCATION	SHIPPINGPORT PENNSYLVANIA
UNIT RATING	825 MW
FUEL CHARACTERISTICS	COAL 4.7 PERCENT SULFUR
FGD VENDOR	CHEMICO
PROCESS	LIME SCRUBBING
NEW OR RETROFIT	NEW
START UP DATE	7/77
FGD STATUS	OPERATIONAL
EFFICIENCY, PARTICULATES	99.8 PERCENT (DESIGN)
SO2	92 PERCENT (DESIGN)
WATER MAKE UP	OPEN LOOP
SLUDGE DISPOSAL	RESERVOIR LANDFILL
UNIT COST	SEE APPENDIX A, FGD SYSTEM ECONOMICS
OPERATIONAL EXPERIENCE	REFER TO THE BACKGROUND INFORMATION SECTION IN TABLE 3 OF THIS REPORT. THIS EMISSION CONTROL SYSTEM WAS DESIGNED TO REMOVE FLYASH AND SO2 FROM 3.35 MM ACFM OF FLUE GAS USING THIOSORBIC LIME AS A SCRUBBING ABSORBENT. SIX SCRUBBING TRAINS, EACH INCLUDING TWO VENTURI SCRUBBERS IN SERIES ARRANGEMENT, ARE PROVIDED FOR FULL-LOAD OPERATION. THE INITIAL SHAKEDOWN AND DEBUGGING PHASE OF OPERATION BEGAN FOR THREE TRAINS IN JULY, 1977. FULL COMMERCIAL OPERATION FOR THE ENTIRE SYSTEM COMMENCED ON OCTOBER 1, 1977.

BACKGROUND INFORMATION
ON
BRUCE MANSFIELD UNIT NO. 2

THE BRUCE MANSFIELD PLANT IS A 2475 NET MW, THREE-UNIT, COAL-FIRED FACILITY LOCATED ON THE OHIO RIVER IN THE BOROUGH OF SHIPPINGPORT, PENNSYLVANIA. THIS NEW FACILITY IS BEING BUILT BY PENNSYLVANIA POWER COMPANY, ACTING ON ITS OWN BEHALF AND AS AGENT FOR THE OTHER PARTICIPATING CENTRAL AREA POWER COORDINATION (CAPCO) GROUP OF INVESTOR-OWNED ELECTRIC UTILITIES, INCLUDING THE CLEVELAND ELECRIC ILLUMINATING COMPANY, DUQUESNE LIGHT COMPANY, OHIO EDISON COMPANY, AND TOLEDO EDISON COMPANY. BRUCE MANSFIELD NO. 2, WHICH IS IDENTICAL TO THE NO. 1 UNIT, IS A COAL-FIRED, ONCE-THROUGH, SUPERCRITICAL STEAM GENERATOR WHICH FIRES 333 TONS/HR OF COAL GENERATING APPROXIMATELY 6.5 MM LB/HR STEAM AT 3,785 PSIG, 1005 F/1005 F. THE EMISSION CONTROL EQUIPMENT REQUIRED FOR THIS UNIT IS DESIGNED TO MEET STATE EMISSION REGULATIONS OF 0.6 LBS SULFUR DIOXIDE/MM BTU OF HEAT INPUT AND 0.0175 GR/SCF OF PARTICULATE WHEN BURNING 11,900 BTU/LB COAL HAVING AVERAGE ASH AND SULFUR CONTENTS OF 12.5 AND 4.7 PERCENT, RESPECTIVELY.

IN LATE 1970, AN INTENSIVE INVESTIGATION OF MORE THAN 30 POTENTIAL DESULFURIZATION SYSTEMS WAS INITIATED. THE SYSTEM ULTIMATELY CHOSEN FOR THE REMOVAL OF FLY ASH AND SULFUR DIOXIDE WAS THE VENTURI WET-SCRUBBING SYSTEM, PROVIDED BY CHEMICO AIR POLLUTION CONTROL CO., UTILIZING THE ORAVO CORPORATION'S THIOSORBIC LIME AS THE SCRUBBING ABSORBENT.

THE DESIGN FEATURES OF THE SCRUBBING SYSTEM DICTATE THAT EACH SCRUBBING TRAIN CONSIST OF A SCRUBBING VESSEL (VARIABLE-THROAT VENTURI), A 9000HP I.D. FAN, AND AN ABSORBER VESSEL (FIXED-THROAT VENTURI). THERE ARE SIX SCRUBBER TRAINS PER UNIT TO HANDLE THE FLUE GAS FLOW FROM EACH BOILER AT FULL LOAD (3.35 MM ACFM AT 285 F). THE SCRUBBER/ABSORBER TRAINS ARE ARRANGED IN GROUPS OF THREE. THE TREATED FLUE GAS, WHICH HAS PASSED THROUGH EACH GROUP OF THE SCRUBBING SYSTEM TRAINS IS DUCTED THROUGH ONE OF THE TWO HEAT CHAMBERS AND THEN DISCHARGED FROM ONE OF TWO CHIMNEY FLUES. THE 950 FOOT CHIMNEY CONTAINS FOUR CARBON STEEL FLUES, THE INNER SURFACES OF WHICH ARE COATED WITH POLYESTER FLAKEGLASS LINING AND ARE CAPABLE OF ACCOMMODATINGTWO UNITS AT FULL LOAD.

THE ADJUSTABLE VENTURI THROAT SCRUBBING MODULES REMOVE MOST OF THE FLYASH CONTAINED IN THE FLUE GAS. THE ABSORBER MODULE, WHICH IS A FIXED-THROAT VENTURI, REMOVES SOME OF THE REMAINING FLYASH. SULFUR DIOXIDE IS ABSORBED IN BOTH THE SCRUBBER AND ABSORBER BY DROPLETS OF LIME SLURRY, CONTAINING 2 TO 6 PERCENT MAGNESIUM OXIDE.

THE SCRUBBER-RECYCLE BLEED IS COMBINED WITH A FLYASH SLURRY FROM THE BOILER AND DISCHARGED TO A 200-FOOT DIAMETER THICKENER. SLUDGE FROM THE THICKENER IS THEN PUMPED TO A WASTE DISPOSAL SYSTEM WHERE IT IS MIXED WITH A STABILIZING AGENT (CALCILOX) AND THEN PUMPED APPROXIMATELY 7 MILES TO THE LITTLE BLUE RUN DISPOSAL AREA. THE DISPOSAL AREA IS LOCATED IN A RAVINE UPSTREAM OF A 400 FT HIGH HYDRAULIC DAM DESIGNED TO CONTAIN THICKENER SLUDGE AND WATER.

A SIMPLIFIED PROCESS FLOW DIAGRAM IS PRESENTED IN APPENDIX B.
INFORMATION CONCERNING THE PERFORMANCE OF THE UNIT SINCE COMMERCIAL OPERATIONS COMMENCED IN OCTOBER 1977 ARE SUMMARIZED AND PROVIDED IN THE TABLE THAT FOLLOWS.

PENNSYLVANIA POWER CO. BRUCE MANSFIELD UNIT NO. 2

MONTH	BOILER	OPERATING HOURS FGD MODULES A	B	C	D	E	F
OCT. 77	595	621	652	645	361	349	305
FGD AVAILABILITY FACTOR%		94	97	98	63	66	61
FGD OPERABILITY FACTOR%		100	100	100	61	59	51
FGD UTILIZATION FACTOR%		83	88	87	48	47	41

TOTAL FGD LOST GENERATION FACTOR 25.7%

UNIT 2 WAS DECLARED AVAILABLE FOR COMMERCIAL OPERATION AT 825 MW ON OCTOBER 1, 1977. CLEANED SPRAYS IN 2F FAN. REPAIRS BEING MADE TO 2B FLUE STACK LINING DUE TO PREMATURE FAILURE OF SEVERAL TEST PATCHES. UNIT TRIPPED DUE TO FAULTY GENERATOR CONTROL TRANSFORMERS.

TABLE 3
PERFORMANCE DESCRIPTION FOR OPERATIONAL FGD SYSTEMS THROUGH 01/78

UTILITY NAME	PHILADELPHIA ELECTRIC CO.
UNIT NAME	EDDYSTONE NO. 1A
UNIT LOCATION	EDDYSTONE PENNSYLVANIA
UNIT RATING	120 MW
FUEL CHARACTERISTICS	COAL 2.5 PERCENT SULFUR
FGD VENDOR	UNITED ENGINEERS / PECO
PROCESS	MAGNESIUM OXIDE SCRUBBING
NEW OR RETROFIT	RETROFIT
START UP DATE	9/75
FGD STATUS	OPERATIONAL
EFFICIENCY, PARTICULATES	99.9 PERCENT
SO2	90 PERCENT
WATER MAKE UP	OPEN LOOP 1.1 GPM/MW
SLUDGE DISPOSAL	ACID PLANT REGENERATION
UNIT COST	SEE APPENDIX A, FGD SYSTEM ECONOMICS
OPERATIONAL EXPERIENCE	REFER TO THE BACKGROUND INFORMATION SECTION IN TABLE 3 OF THIS REPORT. THE EMISSION CONTROL SYSTEM FOR THIS UNIT CONSISTS OF THREE PARALLEL SCRUBBING TRAINS FOR THE CONTROL OF PARTICULATE AND SULFUR DIOXIDE. THE C-SIDE SCRUBBING TRAIN INCLUDES AN SO2 ABSORBER MODULE IN SERIES WITH A PARTICULATE SCRUBBER. APPROXIMATELY ONE-THIRD OF THE BOILER FLUE GAS IS SCRUBBED WITH MAGNESIUM OXIDE SLURRY FOR SO2 REMOVAL. THE SPENT SLURRY IS REGENERATED AT THE ESSEX SULFURIC ACID PLANT IN NEWARK, N.J. THE REGENERATED MAGOX IS RETURNED TO THE PLANT FOR SO2 SCRUBBING SERVICE.

BACKGROUND INFORMATION
ON
EDDYSTONE NO. 1

THE EDDYSTONE STATION OF THE PHILADELPHIA ELECTIRC CO. (PECO) IS LOCATED ON THE DELAWARE RIVER IN EDDYSTONE, PENNSYLVANIA, ABOUT 11 MILES SOUTHWEST OF THE CENTER OF PHILADELPHIA. THE PLANT IS APPROXIMATELY FIVE MILES WEST OF ONE OF THE MAIN RUNWAYS OF THE PHILADELPHIA INTERNATIONAL AIRPORT.

THE STATION HAS FOUR GENERATORS WITH A TOTAL NET GENERATING CAPACITY OF 1370 MW. UNITS 1 AND 2 BURN COAL WITH AN AVERAGE GROSS HEATING VALUE OF 12,100 BTU/LB AND ASH AND SULFUR CONTENTS OF 12 PERCENT AND 2.3 PERCENT, RESPECTIVELY. STEAM CONDITIONS ARE 5,000 PSI AND 1150 F. THESE ARE THE HIGHEST UTILITY PLANT OPERATING PRESSURE AND TEMPATURE CONDITIONS IN THE UNITED STATES. UNITS 1 AND 2 ARE BASE-LOAD UNITS. UNITS 3 AND 4 ARE PEAK-LOAD GENERATORS WHICH BURN NO. 6 OIL.

THERE ARE TWO FURNACES ON THE UNIT 1 BOILER. EACH FURNACE WAS INSTALLED WITH PARTICULATE CONTROLS CONSISTING OF MECHANICAL COLLECTORS AND AN ELECTROSTATIC PRECIPITATOR.

THE MAGNESIUM OXIDE-BASED FLUE GAS DESULFURIZATION (FGD) SYSTEM ON BOILER NO. 1 AT THE EDDYSTONE STATION OF PHILADELPHIA ELECTRIC COMPANY (PECO) WAS DESIGNED AND INSTALLED BY UNITED ENGINEERS AND CONSTRUCTORS, INC., IN CO-OPERATION WITH PHILADELPHIA ELECTRIC. THE SYSTEM CONSISTS OF THREE FIRST-STAGE SCRUBBER MODULES IN PARALLEL FOR PARTICULATE CONTROL (TWO ENVIRONEERING VENTURI ROD UNITS AND ONE PEABODY-LURGI VENTURI UNIT) AND A SECOND-STAGE ENVIRONEERING ABSORBER MODULE WITH TWO VENTURI-ROD BEDS FOR SULFUR DIOXIDE REMOVAL.

THE THREE FIRST-STAGE SCRUBBERS TOGETHER ARE SIZED TO HANDLE ALL THE EXHAUST GAS FROM UNIT 1 WHICH HAS A NET ELECTRIC GENERATING CAPACITY OF 316 MW. THE SECOND-STAGE ABSORBER IS SIZED TO HANDLE ONE-THIRD OF THE GAS FLOW, EQUIVALENT TO APROXIMATELY 105 MW (NET). THE SYSTEM IS DESIGNED TO REMOVE 90 PERCENT OF THE SULFUR DIOXIDE FROM BOILER STACK GAS. A GENERAL PROCESS FLOW DIAGRAM OF THE WET SCRUBBING SYSTEM IS PRESENTED IN APPENDIX B.

SCRUBBER OPERATING HISTORY

THERE WAS A BRIEF OPERATING PERIOD ON THE PARTICULATE SCRUBBERS FROM MID-NOVEMBER, 1974 TO MARCH, 1975, THAT UNCOVERED A NUMBER OF PROBLEM AREAS. DUE TO A NUMBER OF EXTENUATING CIRCUMSTANCES, PARTICULATE SCRUBBING WAS NOT RESTARTED UNTIL JULY 23, 1975, WITH ONE PARTICULATE SCRUBBING TRAIN FOLLOWED BY THE OTHER TWO TRAINS, ON AUGUST 15 AND OCTOBER 2, RESPECTIVELY. THE SULFUR DIOXIDE ABSORBER WAS STARTED FOR THE FIRST TIME ON OCTOBER 2, 1975, AND THE MAGNESIUM OXIDE REGENERATION FACILITY FIRST PROCESSED MAGNESIUM SULFITE FROM THE EDDYSTONE SCRUBBER ON OCTOBER 28, 1975.

THE MAGNESIUM OXIDE REGENERATION FACILITY HAS BEEN OPERATED TO PROCESS ALL MAGNESIUM SULFITE DOWNS AT THE EDDYSTONE SCRUBBER.

THE SULFUR DIOXIDE SCRUBBING SYSTEM WAS TEMPORARILY SHUT DOWN DECEMBER 31, 1975, BECAUSE THE ACID PLANT REGENERATION FACILITY AT THE OLIN CHEMICAL SULFURIC ACID PLANT IN PAULSBORO, NEW JERSEY PERMANENTLY CEASED OPERATIONS. THE ACID PLANT REGENERATION FACILITY WAS RELOCATED TO THE ESSEX CHEMICAL PLANT IN NEWARK, NEW JERSEY.

THE PARTICULATE AND SULFUR DIOXIDE REMOVAL SYSTEM INSTALLED ON THE EDDYSTONE NO. 1 UNIT IS THE FIRST PHASE OF A TWO-PHASE PROJECT. FOLLOWING SUCCESSFUL DEVELOPMENT OF THIS SYSTEM WITH MORE CONTINUOUS OPERATION, IT WILL BE INCORPORATED INTO THE DESIGN FOR THE COMPLETE SULFUR DIOXIDE REMOVAL ON EDDYSTONE NO. 2 AND ONE OF THE TWO EXISTING UNITS AT THE CROMBY STATION.

ADDITIONAL INFORMATION AND DATA CONCERNING THE OPERATION OF THE PARTICULATE AND SULFUR DIOXIDE SCRUBBERS INSTALLED AT THIS PLANT ARE PROVIDED IN THE PERFORMANCE TABLE THAT FOLLOWS.

PERIOD	COMMENTS
NOV. 74 DEC. 74 JAN. 75 FEB. 75 MAR. 75 APR. 75 MAY 75 JUN. 75	THE SCRUBBING SYSTEM AT THIS PLANT CONSISTS OF THREE PARALLEL SCRUBBING TRAINS INCORPORATING 3 WET PARTICULATE SCRUBBERS AND ONE SO2 ABSORBER MODULE. THERE WAS A BRIEF OPERATING PERIOD ON THE PARTICULATE SCRUBBERS FROM MID-NOVEMBER 1974 TO MARCH 1975. PROBLEMS ENCOUNTERED CENTERED AROUND THE SCRUBBER BOOSTER FANS AND THE FLUE GAS AND LIQUID CONDITIONS. THE B-SIDE BOOSTER FAN DEVELOPED HIGH SHAFT VIBRATION WHEN STARTED FOR THE FIRST TIME. THIS PROBLEM WAS DESIGN-RELATED, INVOLVING AN EXCESSIVE CLEARANCE AREA BETWEEN THE SHAFT AND THE WHEEL HUB. ALSO, EXTENSIVE CORROSION DEVELOPED IN THE C-SIDE PARTICULATE SCRUBBER INTERNALS. THIS WAS CAUSED BY LOW SCRUBBING SOLUTION PH LEVELS AND CHLORIDE LEVELS AS HIGH AS 2000 PPM. THESE CONDITIONS COUPLED WITH THE THERMAL SHOCK OF A HOT START PROCEDURE CAUSED THE CORROSION. THIS PROBLEM WAS AMELIORATED BY CAUSTIC ADDITION, HIGHER BLOWDOWN AND EMPLOYING A COLD START PROCEDURE. AT APPROXIMATELY THIS TIME, A CHECKOUT OF SO2 SYSTEM WAS CONDUCTED. BLISTERING AND PEELING OF THE POLYURETHANE COATINGS WERE DETECTED AND CORRECTED BY RECOATING WITH FLAKE GLASS.
JUL. 75 AUG. 75 SEP. 75 OCT. 75 NOV. 75 DEC. 75 JAN. 76	THE C-SIDE PARTICULATE SCRUBBER RESTARTED ON JULY 23, 1975. THE TWO REMAINING TRAINS, B-SIDE AND A-SIDE, WERE PUT INTO OPERATION ON AUGUST 15 AND OCTOBER 2, RESPECTIVELY. THE SO2 ABSORBER MODULE IN THE C-SIDE SCRUBBING TRAIN WAS INITIALLY PLACED IN SERVICE OCTOBER 2, 1975. THE OLIN CHEMICAL MGO REGENERATION FACILITY FIRST PROCESSED MAGNESIUM SULFITE FROM THE EDDYSTONE SCRUBBER ON OCTOBER 28, 1975. THE C-SIDE PARTICULATE SCRUBBER OPERATED A TOTAL OF 2831 HOURS THROUGH JANUARY 31, 1976, FOR AN AVAILABILITY OF 70 PERCENT. THE B-SIDE TRAIN HAS OPERATED A TOTAL OF 1933 HOURS THROUGH JANUARY 31, 1976 FOR AN AVAILABILITY OF 55 PERCENT. THE A-SIDE TRAIN OPERATED A TOTAL OF 626 HOURS THROUGH JANUARY 31, 1976, FOR AN AVAILABILITY OF 24 PERCENT. THE C-SIDE SO2 ABSORBER WAS IN SERVICE A TOTAL OF 556 HOURS THROUGH DECEMBER 31, 1975, WITH AN AVAILABILITY OF 33 PERCENT SINCE STARTUP. PROBLEMS ENCOUNTERED IN THE OPERATION OF THE THREE SCRUBBING TRAINS INCLUDED: UNDER-DESIGNED RECIRCULATION PUMPS, MALFUNCTION OF THE FLUE GAS BY-PASS DAMPER DRIVE UNITS AND FAILURE OF THE DOUBLE-BRICK REFRACTORY LINING IN THE REHEAT COMBUSTION CHAMBER.
FEB. 76 MAR. 76 APR. 76 MAY 76	OPERATION OF THE SO2 SCRUBBING SYSTEM AT EDDYSTONE WAS TEMPORARILY HALTED BECAUSE THE ACID PLANT REGENERATION FACILITY AT THE OLIN CHEMICAL SULFURIC ACID PLANT IN PAULSBORO, NEW JERSEY PERMANENTLY CEASED OPERATIONS. THE UTILITY IS NOW INVESTIGATING ALTERNATIVE REGENERATION SITES. A MINUMUM PERIOD OF SIX MONTHS WILL BE REQUIRED FOR RELOCATION ONCE A CHOICE IS MADE. THE UTILITY ANNOUNCED PLANS FOR RELOCATION OF THE REGENERATION FACILITY AT THE ESSEX CHEMICAL PLANT IN NEWARK, NEW JERSEY.
JUN. 76 JUL. 76 AUG. 76	RESUMPTION OF SO2 SCRUBBING OPERATIONS IS PRESENTLY SCHEDULED FOR DECEMBER 1976. THE RELOCATION OF THE REGENERATION FACILITY IS NOW IN PROGRESS. THE PARTICULATE SCRUBBERS ARE OPERATIONAL. THE C-SIDE BOOSTER FAN HAS DEVELOPED A MATERIALS FAILURE BETWEEN THE HUB AND SHAFT (IDENTICAL TO THE B-SIDE UNIT MENTIONED ABOVE).
SEP. 76 OCT. 76	ALL THREE BOOSTER FANS HAVE NOW DEVELOPED THE MATERIALS FAILURE BETWEEN THE HUB AND SHAFT (AS IDENTIFIED IN THE ABOVE FOR THE B-SIDE UNIT). THESE UNITS HAVE BEEN RETURNED TO THE MANUFACTURER FOR MODIFICATIONS AND REPAIRS. CURRENTLY, ONE OF THE PARTICULATE SCRUBBERS IS IN THE FLUE GAS STREAM. TO DATE, ALL THREE OF THE WET PARTICULATE SCRUBBERS HAVE NOT SEEN ANY APPRECIABLE SIMULTANEOUS SERVICE TIME.
NOV. 76 DE. 76	MGO SCRUBBING OPERATIONS ARE NOW SCHEDULED TO RESTART IN MAY 1977. REGENERATION FACILITY RELOCATION IS BEING COMPLETED, AND MODIFICATIONS TO THE ID BOOSTER FANS CURRENTLY BEING EFFECTED CONSIST OF CONVERSION FROM A SHRINK FIT TO A SLIP FIT. THESE MODIFICATIONS ARE EXPECTED TO ELIMINATE RECURRING VIBRATION PROBLEMS.
JAN. 77 FEB. 77 MAR. 77	THE MAGNESIUM OXIDE SCRUBBING SYSTEM AT EDDYSTONE NO. 1A IS STILL SCHEDULED FOR RESTART IN MAY 1977. THE START-UP OF THE NEW MAGNESIUM SULFITE REGENERATION FACILITY AT THE ESSEX CHEMICAL PLANT AT NEWARK, N.J. IS ALSO SCHEDULED FOR MAY 1977. THE THREE PARALLEL VENTURI SCRUBBERS CONTROLLING PARTICULATE EMISSIONS ON EDDYSTONE NO. 1 WENT BACK INTO SERVICE IN MARCH 1977.
APR. 77 MAY 77	RESUMPTION OF MAGNESIUM OXIDE SCRUBBING OPERATIONS OCCURED DURING THE REPORT PERIOD. THE UTILITY REPORTED THAT SO2 SCRUBBING OPERATIONS WERE NOT CONTINUOUS THROUGHOUT THE PERIOD. THE ABSORBER WAS IN SERVICE APPROXIMATELY 206 HOURS DURING MAY. REGENERATION OPERATIONS AT THE ESSEX FACILITY WERE NOT CONDUCTED DURING THE PERIOD. PECO INTENDS TO INITIATE SO2 RECOVERY AND MAGOX REGENERATION OPERATIONS DURING THE MONTH OF JUNE. THE SO2 MODULE CONTAINS TWO ABSORBER SECTIONS IN SERIES (EACH SECTION CONSISTING OF AN ADJUSTABLE ROD DECK WITH UNDERSPRAYS). ONLY ONE OF THE ABSORBER SECTIONS IS BEING USED FOR SO2 REMOVAL. SO2 REMOVAL EFFICIENCY HAS NOT BEEN MEASURED. MAGNESIUM OXIDE LOSSES IN THE SYSTEM (ABSORTION AND REGENERATION) ARE ESTIMATED AT 10 PERCENT.
JUN. 77 JUL. 77	FAILURE OF MINOR ANCILLARY EQUIPMENT CAUSED SOME SHUTDOWNS. LATER, THE BOILER ITSELF WENT DOWN. OVER THIS PERIOD THE ROTARY VALVE ON THE MAG. SULFITE DRYER DISCHARGE PLUGGED REPEATEDLY. ALSO THE BELTS ON THE AGITATOR ON THE MAG-OX. PRESLAKER FAILED.

PHILADELPHIA ELECTRIC CO. FGD SYSTEM PERFORMANCE EDDYSTONE UNIT NO. 1

PERIOD	COMMENTS
AUG. 77 SEP. 77	THE ROTARY VALVE PROBLEM APPEARS TO BE SOLVED. CUMULATIVE AVAILABILITY SINCE MAY IS ESTIMATED TO BE ROUGHLY 33%. PECO REPORTED 131 HOURS OF CONTINUOUS OPERATION FOR THE SCRUBBER AND THICKENER CENTRIFUGE DRYER LOOP. DURING THE REPORT PERIOD THERE HAVE BEEN CONTINUAL PROBLEMS WITH THE GLAND PACKING ON THE FGD SYSTEM CIRCULATION PUMPS (STUFFING BOX). PECO HAS SINCE CHANGED THE GLAND CONFIGURATION. THERE ALSO WAS A PROBLEM WITH HIGH
OCT. 77	SOLIDS FORMATION IN THE THICKENER. DURING THE OCTOBER-NOVEMBER PERIOD THERE WAS ONE RUN WHICH LASTED APPROXIMATELY 5 DAYS.
NOV. 77	GLAND PACKING PROBLEMS PERSISTED AND MECHANICAL SEALS ARE BEING CONSIDERED AS POSSIBLE ALTERNATIVES. EVEN WITH HEAT TRACING THE SEAL WATER FROZE-UP CAUSING ROTAMETERS TO BURST. HIGH SOLIDS PROBLEM IN THICKENER IS STILL A PROBLEM AREA.
DEC. 77 JAN. 78	THE UNIT WENT DOWN DECEMBER 22 FOR A TURBINE OVERHAUL. DURING THE OUTAGE MAINTENANCE AND MINOR MODIFICATIONS WILL BE MADE ON THE SCRUBBERS. THE UNIT IS EXPECTED BACK ON LINE THE FIRST WEEK IN MARCH. THE AVAILABILITY FACTOR FOR THE OCT, NOV, AND DEC QUARTER WAS 41%. DURING THIS PERIOD SOME OF THE HEAT TRACING FAILED AND OTHER PROBLEMS OCCURED WHEN LINES FROZE AT THE ACID PLANT CAUSING THE FACILITY TO BE RUN INTERMITTENTLY. THE GLAND PACKING PROBLEMS HAVE NOT YET BEEN SOLVED AND MECHANICAL SEALS ARE STILL BEING CONSIDERED.

TABLE 3
PERFORMANCE DESCRIPTION FOR OPERATIONAL FGD SYSTEMS THROUGH 01/78

UTILITY NAME	SOUTH CAROLINA PUBLIC SERVICE
UNIT NAME	WINYAH NO. 2
UNIT LOCATION	GEORGETOWN SOUTH CAROLINA
UNIT RATING	280 MW
FUEL CHARACTERISTICS	COAL 1.0 PERCENT SULFUR
FGD VENDOR	BABCOCK & WILCOX
PROCESS	LIMESTONE SCRUBBING
NEW OR RETROFIT	NEW
START UP DATE	7/77
FGD STATUS	OPERATIONAL
EFFICIENCY, PARTICULATES	99.4 PERCENT
SO2	35 PERCENT (TOTAL)
WATER MAKE UP	OPEN LOOP
SLUDGE DISPOSAL	
UNIT COST	SEE APPENDIX A, FGD SYSTEM ECONOMICS
OPERATIONAL EXPERIENCE	REFER TO THE BACKGROUND INFORMATION SECTION IN TABLE 3 OF THIS REPORT. THE EMISSION CONTROL SYSTEM FOR THIS UNIT CONSISTS OF A 100% CAPACITY ESP FOLLOWED BY A 50% CAPACITY LIMESTONE FGD SYSTEM. ONE FGD MODULE, CONSISTING OF A VENTURI SCRUBBER AND TRAY TOWER ABSORBER, REMOVES 70% OF THE INLET SO2. REHEAT IS SUPPLIED BY THE FLUE GAS BYPASS. THE SCRUBBING WASTES ARE DISCHARGED TO AN ON-SITE, UNLINED DIKED POND. THE NO. 2 UNIT COMMENCED INITIAL OPERATIONS IN JULY 1977. THE ACCEPTANCE TEST FOR COMMERCIAL CERTIFICATION WAS SUCCESSFULLY COMPLETED IN DECEMBER 1977.

BACKGROUND INFORMATION
ON
WINYAH NO. 2

THE SOUTH CAROLINA PUBLIC SERVICE AUTHORITY OWNS AND OPERATES THE WINYAH STEAM PLANT WHICH IS LOCATED IN GEORGETOWN, SOUTH CAROLINA, THIS NEW COAL-FIRED POWER-GENERATING STATION CONSISTS OF TWO OPERATIONAL UNITS AND ONE IN THE EARLY PLANNING STAGES. UNITS NO. 1 AND NO. 2 ARE RATED AT 315 MW AND 280 MW, RESPECTIVELY, AND FIRE A MEDIUM SULFUR VIRGINIA COAL WITH THE FOLLOWING GENERAL CHARACTERISTICS: 11,200 BTU/LB, 1.9 PERCENT SULFUR (MAXIMUM), 19 PERCENT ASH (MAXIMUM) AND 10 PERCENT MOISTURE (MAXIMUM). IN ORDER TO MEET FEDERAL NEW SOURCE PERFORMANCE STANDARDS FOR PARTICULATE AND SULFUR DIOXIDE EMISSIONS, UNIT NO. 2 IS FITTED WITH AN EMISSION CONTROL SYSTEM WHICH INCLUDES AN ELECTROSTATIC PRECIPITATOR (ESP) AND A WET SCRUBBING SYSTEM. THE ESP, INSTALLED UPSTREAM OF THE SCRUBBER-ABSORBER PLANT, IS SUPPLIED BY RESEARCH-COTTRELL AND DESIGNED TO REMOVE APPROXIMATELY 99 PERCENT OF THE INLET FLY ASH. THE WET SCRUBBING SYSTEM CONSISTS OF A LIMESTONE BASED FGD DESIGNED AND SUPPLIED BY BABCOCK AND WILCOX TO REMOVE ADDITIONAL FLY ASH AND REMOVE 69 PERCENT OF THE SULFUR DIOXIDE FROM 50 PERCENT OF THE FLUE GAS. THE REMAAINING HALF OF THE BOILER FLUE GAS IS BYPASSED AROUND THE FGD SYSTEM AND RECOMBINED WITH THE SCRUBBED PORTION FOR REHEAT PURPOSES PRIOR TO DISCHARGE TO THE STACK.

THE FGD SYSTEM CONSISTS OF ONE SCRUBBER-ABSORBER TRAIN, INCLUDING A VENTURI SCRUBBER AND TRAY TOWER ABSORBER. FOLLOWING PASSAGE OF THE FLUE GAS THROUGH THE ESP (0.1 LB/MM BTU DESIGN OUTLET LOADING), 50 PERCENT OF THE FLUE GAS (407,015 ALFM, 270 F) IS BOOSTED THROUGH THE SCRUBBER AND ABSORBER BY A DRY, FORCED-DRAFT BOOSTER FAN (DESIGN PRESSURE DROP OF 13.5 INCHES). THE VENTURI SCRUBBER PROVIDES ADDITIONAL FLY ASH AND INITIAL SULFUR DIOXIDE REMOVAL. THE DESIGN FEATURES OF THE VENTURI INCLUDE A 3 INCH PRESSURE DROP, A SUPERFICIAL GAS VELOCITY OF 90 FT/SEC., AND L/G OF 14.4. THE SATURATED FLUE GAS (338,000 ACFM, 126 F) THEN PASSES THROUGH THE TRAY TOWER WHERE SULFUR DIOXIDE REMOVAL IS COMPLETED. THE DESIGN FEATURES OF THE ABSORBER INCLUDE A 4.5 INCH PRESSURE DROP, A SUPERFICIAL GAS VELOCITY OF 10.5 FT./SEC., AND A L/G OF 47.5. THE SCRUBBING SOLUTION IS A 20 PERCENT SOLIDS LIMESTONE SLURRY FED TO THE FGD SYSTEM AT A 130 PERCENT STOICHIOMETRIC LEVEL. THE OVERALL EMISSION CONTROL SYSTEM REMOVAL EFFICIENCY IS 99.55 PERCENT FOR PARTICULATE AND 35 PERCENT FOR SULFUR DIOXIDE (935 PPM INLET AND 294 PPM OUTLET FOR THE FGD SYSTEM). THE SCRUBBING WASTES (6.45 TONS PER HOUR, 35 PERCENT SOLIDS) ARE DISCHARGED VIA PUMP TO AN ON-SITE, UNLINED DIKED POND WITH A 20-YEAR CAPACITY. THE CLEANED GASES ARE RECOMBINED WITH THE BYPASSED PORTION AND DISCHARGED TO AN FRP-LINED STACK.

COMMENTS

PERIOD	
OCT. 77 NOV. 77	DURING UPDATE PERIOD THE SCRUBBER SYSTEM WAS OPERATIONAL AND AVAILABLE 100% OF THE TIME.
DEC. 77 JAN. 78	DURING THE UPDATE PERIOD, THERE WERE NO FORCED OUTAGES EXCEPT IN EARLY JANUARY WHEN THE SYSTEM WAS DOWN FOR TWO DAYS TO CHECK THE INSTRUMENTATION. THE SO2 MONITORS ARE NOT FUNCTIONING PROPERLY. ALL THE SAMPLE LINES HAVE BEEN REPLACED SEVERAL TIMES. NEW HEAT TRACINGS ARE INSTALLED AROUND THEM. THE ACCEPTANCE TESTS ARE EXPECTED TO BE OVER BY THE END OF FEB.

TABLE 3
PERFORMANCE DESCRIPTION FOR OPERATIONAL FGD SYSTEMS THROUGH 01/78

UTILITY NAME	SPRINGFIELD CITY UTILITIES
UNIT NAME	SOUTHWEST NO. 1
UNIT LOCATION	SPRINGFIELD MISSOURI
UNIT RATING	200 MW
FUEL CHARACTERISTICS	COAL 3.5 PERCENT SULFUR
FGD VENDOR	UNIVERSAL OIL PRODUCTS
PROCESS	LIMESTONE SCRUBBING
NEW OR RETROFIT	NEW
START UP DATE	4/77
FGD STATUS	OPERATIONAL
EFFICIENCY, PARTICULATES	99.8 PERCENT (ACTUAL)
SO2	92 PERCENT (ACTUAL)
WATER MAKE UP	
SLUDGE DISPOSAL	FILTER CAKE LANDFILL
UNIT COST	SEE APPENDIX A, FGD SYSTEM ECONOMICS
OPERATIONAL EXPERIENCE	REFER TO THE BACKGROUND INFORMATION SECTION IN TABLE 3 OF THIS REPORT. THE EMISSION CONTROL SYSTEM FOR THIS NEW COAL-FIRED UNIT CONSISTS OF A FOUR-FIELD HIGH EFFICIENCY ESP (99.6% DESIGN) AND 2 TURBULENT CONTACT ABSORBER MODULES (80% DESIGN) FOR THE CONTROL OF PARTICULATES AND SO2. BOTH THE ESP AND LIMESTONE FGD SYSTEM ARE SUPPLIED BY UOP. THE SCRUBBING WASTES ARE DEWATERED BY A ROTARY DRUM VACUUM FILTER AND THE FILTER CAKE IS HAULED AWAY TO A LANDFILL. INITIAL OPERATION OF THE FGD SYSTEM OCCURRED IN APRIL 77. IN SEPT. 77, THE UNIT SUCCESSFULLY COMPLETED COMPLIANCE TESTING.

BACKGROUND INFORMATION
ON
SOUTHWEST NO. 1

THE SOUTHWEST POWER STATION OF THE CITY UTILITIES OF SPRINGFIELD IS LOCATED APPROXIMATELY FIVE MILES SOUTHWEST OF SPRINGFIELD, MISSOURI. THE STATION NOW OPERATES ONE COAL-FIRED STEAM TURBINE GENERATOR, WHICH HAS A TOTAL GENERATING CAPACITY OF 200 MW. PLANS CALL FOR A SECOND COAL-FIRED GENERATOR OF LIKE CAPACITY TO BEGIN OPERATING IN 1981, WHICH WILL BRING THE STATION'S CAPACITY UP TO 400MW.

THE NO. 1 BOILER IS A RILEY STOKER PULVERIZED COAL-FIRED UNIT. THE FUEL IS A HIGH-SULFUR BITUMINOUS KANSAS COAL WITH THE FOLLOWING AVERAGE CHARACTERISTICTS: 10 PERCENT ASH, 3.5 PERCENT SULFUR, AND 12,500 BTU/LB HEATING VALUE. PRIMARY PARTICULATE CONTROL IS PROVIDED BY A COLD-SIDE ELECTROSTATIC PRECIPITATOR (ESP) WITH AN EFFICIENCY OF 99.7 PERCENT, AND PRIMARY SULFUR DIOXIDE (SO2) EMISSION CONTROL BY A LIMESTONE SLURRY FLUE GAS DESULFURIZATION (FGD) SYSTEM WITH A DESIGN EFFICIENCY OF 80 PERCENT. THESE UNIVERSAL OIL PRODUCTS CONTROL SYSTEMS ARE DESIGNED TO MEET NEW SOURCE PERFORMANCE STANDARDS OF 0.1 LB/MM BTU FO2 PARTICULATES AND 1.2 LB/MM BTU FO2,SO2 EMISSIONS.

THE FGD SYSTEM INCLUDES TWO 50 PERCENT CAPACITY TURBULENT CONTACT ABSORBER (TCA) MODULES AND FACILITIES FOR LIMESTONE CRUSHING AND PREPARATION AND SLUDGE STABILIZATION. THE BOILER FLUE GAS FIRST PASSES THROUGH THE ESP FOR PARTICULATE REMOVAL AND IS THEN BOOSTED THROUGH THE TWO TCA MODULES BY FORCED-DRAFT BOOSTER FANS. EACH TCA MODULE CONTAINS A PRESATURATOR SECTION AND TWO LEVELS OF TURBELENT PACKING (1.25-INCH DIAMETER MODULE SPHERES) WHERE THE SO2 IN THE SATURATED GAS STREAM IS REMOVED WHEN IT CONTACTS WITH THE LIMESTONE SLURRY. EACH MODULE IS EQUIPPED WITH A SEPARATE RECIRCULATION TANK, WHERE REACTIONS ARE COMPLETED, FRESH SCRUBBING SLURRY IS ADDED, AND FLUE GAS CLEANING WASTES ARE DISCHARGED. THE CLEANED, SATURATED FLUE GAS THEN PASSES THROUGH A SET OF MIST ELIMINATORS BEFORE IT IS DISCHARGED TO THE ATMOSPHERE THROUGH THE MAIN STACK. THE FLUE GAS CLEANING WASTES ARE DISCHARGED FROM THE RECIRCULATION TANKS TO A THICKENER, WHERE SOLIDS ARE SEPARATED OUT AND THE CLARIFIED LIQUOR IS RETURNED TO THE PROCESS. THE SLUDGE IS FIXATED TO A CEMENTITIOUS MATERIAL (70 TO 75 PERCENT SOLIDS), THEN HAULED AWAY BY FRONT-END LOADERS TO A 10-ACRE VALLEY LANDFILL AREA ON SITE. MAKEUP WATER FOR THE FGD SYSTEM IS SUPPLIED BY COOLING TOWER BLOWDOWN WATER. ONE OR BOTH FGD MODULES CAN BE BYPASSED DURING EMERGENCY OF MALFUNCTION PERIODS BY THE USE OF SEAL-AIR GAS CLAMPERS.

INITIAL OPERATING EXPERIENCE

INSTALLATION OF THE LIMESTONE FGD SYSTEM WAS COMPLETED DURING THE FIRST QUARTER OF 1977 (BEHIND SCHEDULE, PRIMARILY BECAUSE OF DELAYS IN ELECTRICAL WORK). FOLLOWING AIR/WATER TESTS AND CHECKOUT OF LIMETSONE PREPARATION FACILITIES, THE FGD PLANT WAS STARTED UP IN EARLY APRIL 1977 FOR MECHANICAL SHAKEDOWN AND DEBUGGING, WHICH CONTINUED THROUGHOUT THE SUMMER. COMPLIANCE TESTING AND CERTIFICATION OF COMMERCIAL AVAILABILITY WERE SUCCESSFULLY COMPLETED IN SEPTEMBER, JUST BEFORE A SCHEDULED 3-MONTH FALL SHUTDOWN. TO DATE, OPERATION OF THE SYSTEM HAS BEEN HAMPERED BY A NUMBER OF PROBLEMS: MIST ELIMINATOR PLUGGING (PIPING TO MIST ELIMINATOR SPRAY SYSTEM HAS BEEN MODIFICATION), CORROSION IN THE PRESATURATOR (WAS RELINED WITH PRECRETE), CORROSION OF THE INLET/OUTLET GAS DAMPERS (REPLACED WITH 316 SS DAMPERS), AND FAILURE OF PRECRETE LINING IN THE SCRUBBER AND CEILCOTE IN THE STACK (BOTH FAILURES IDENTIFIED AS APPLICATION PROBLEMS). IN ADDITION TO THESE PROBLEMS, THE UTILITY ALSO FOUND IT NECESSARY TO CHANGE THE SYSTEM'S PH CONTROL POINT FROM 5.9 TO 5.6 TO INCREASE LIMESTONE UTILIZATION AND DECREASE PLUGGING WITHIN THE SYSTEM. AT PRESENT THE UTILITY IS KEEPING ONE TCA IN SERVICE AND IMPLEMENTING MODIFICATIONS ON IT, WHICH, IF SUCCESSFUL, WILL THEN BE INCORPORATED INTO THE SECOND MODULE.

SPRINGFIELD CITY UTILITIES SOUTHWEST UNIT NO. 1

FGD SYSTEM PERFORMANCE HISTORY

PERIOD COMMENTS

AUG. 77
SEP. 77

DURING THE REPORT PERIOD THE FGD SYSTEM WAS OPERATING ROUGHLY 60 PERCENT OF THE TIME. A NEW SOURCE PERFORMANCE TEST WAS RUN DURING THE SECOND WEEK OF SEPTEMBER. LATER, THE UNIT WAS SHUT DOWN FOR THE FIRST TURBINE INSPECTION.

OCT. 77

DURING THE OCTOBER OUTAGE THE SCRUBBER OUTLET DAMPER WAS MODIFIED, SCRUBBER PACKING AND SCRUBBER OUTLET DUCTWORK LINING WERE REPLACED, AND INSULATION WAS INSTALLED AROUND THE SEAL-AIR FAN BETWEEN THE INLET DAMPERS. THE UNIT WAS EXPECTED TO BE BACK IN SERVICE IN DECEMBER.

NOV. 77

PLANT WAS SHUT DOWN DURING OCTOBER AND NOVEMBER AND SCHEDULED TO START UP AGAIN IN JANUARY 1978. THE FOLLOWING MODIFICATIONS WERE MADE DURING THIS PERIOD:

* OUTLET DAMPERS WERE REPLACED BY 316 L SS DAMPERS.
* PRESATURATOR WAS RELINED WITH HI-MO STEEL.
* OUTLET DUCT WAS RELINED WITH CEILCOTE.
* HOLLOW PACKING BALLS WERE REPLACED BY SOLID 1.25-IN. DIAMETER BALLS.
* LEAKING AROUND OUTLET DAMPERS WAS MINIMIZED BY SEAL-AIR FANS.

DEC. 77
JAN. 78

THE PLANT SHUT DOWN CONTINUED UNTIL JANUARY 28 WHEN THE BOILER RESTARTED. THE FGD SYSTEM WILL BE PUT ON LINE IN FEBRUARY 1978. DURING THE OUTAGE ALL REMAINING MODIFICATIONS TO THE FGD SYSTEM WERE COMPLETED.

NOTE:

THE HOLLOW PACKING BALLS WERE REPLACED WITH HEAVIER-WALL BALLS RATHER THAN THE SOLID 1.25 INCH DIAMETER BALLS REPORTED EARLIER.

TABLE 3
PERFORMANCE DESCRIPTION FOR OPERATIONAL FGD SYSTEMS THROUGH 01/78

UTILITY NAME	TENNESSEE VALLEY AUTHORITY
UNIT NAME	SHAWNEE NO.10A
UNIT LOCATION	PADUCAH KENTUCKY
UNIT RATING	10 MW
FUEL CHARACTERISTICS	COAL 2.9 PERCENT SULFUR
FGD VENDOR	UNIVERSAL OIL PRODUCTS
PROCESS	LIME/LIMESTONE SCRUBBING
NEW OR RETROFIT	RETROFIT
START UP DATE	4/72
FGD STATUS	OPERATIONAL
EFFICIENCY, PARTICULATES	EXPERIMENTALLY CONTROLLED
SO2	EXPERIMENTALLY CONTROLLED
WATER MAKE UP	EXPERIMENTALLY CONTROLLED
SLUDGE DISPOSAL	EXPERIMENTALLY CONTROLLED
UNIT COST	
OPERATIONAL EXPERIENCE	REFER TO BACKGROUND INFORMATION SECTION IN TABLE 3 OF THIS REPORT. THIS TURBULENT CONTACT ABSORBER(TCA) LIME/LIMESTONE SCRUBBING SYSTEM HAS BEEN OPERATIONAL SINCE APRIL 1972. THIS TEST PROGRAM IS FUNDED BY THE EPA. TVA IS THE CONSTRUCTOR AND FACILITY OPERATOR. THE BECHTEL CORP. OF SAN FRANCISCO IS THE MAJOR CONTRACTOR, TEST DIRECTOR, AND REPORT WRITER. DURING THE REPORT PERIOD, OPERATIONS WERE CONDUCTED WITH LIMESTONE SLURRY CIRCULATING THROUGH THE UNIT. FORCED OXIDATION ON FLY ASH-LADEN FLUE GAS WAS EVALUATED.

TABLE 3
PERFORMANCE DESCRIPTION FOR OPERATIONAL FGD SYSTEMS THROUGH 01/78

UTILITY NAME	TENNESSEE VALLEY AUTHORITY
UNIT NAME	SHAWNEE NO.10B
UNIT LOCATION	PADUCAH KENTUCKY
UNIT RATING	10 MW
FUEL CHARACTERISTICS	COAL 2.9 PERCENT SULFUR
FGD VENDOR	CHEMICO
PROCESS	LIME/LIMESTONE SCRUBBING
NEW OR RETROFIT	RETROFIT
START UP DATE	4/72
FGD STATUS	OPERATIONAL
EFFICIENCY, PARTICULATES	EXPERIMENTALLY CONTROLLED
SO2	EXPERIMENTALLY CONTROLLED
WATER MAKE UP	EXPERIMENTALLY CONTROLLED
SLUDGE DISPOSAL	EXPERIMENTALLY CONTROLLED
UNIT COST	
OPERATIONAL EXPERIENCE	REFER TO BACKGROUND INFORMATION SECTION IN TABLE 3 OF THIS REPORT. THIS VENTURI/SPRAY TOWER LIME/LIMESTONE SCRUBBING SYSTEM HAS BEEN OPERATIONAL SINCE APRIL 1972. THIS TEST PROGRAM IS FUNDED BY THE EPA. TVA IS THE CONSTRUCTOR AND FACILITY OPERATOR. THE BECHTEL CORP. OF SAN FRANCISCO IS THE MAJOR CONTRACTOR, TEST DIRECTOR, AND REPORT WRITER. DURING THE REPORT PERIOD, FORCED OXIDATION WAS EVALUATED ON FLY ASH-FREE FLUE GAS WITH LIME SLURRY AS THE SCRUBBING AGENT.

BACKGROUND INFORMATION
ON
SHAWNEE NOS. 10A AND 10B

IN JUNE 1968, THE EPA INITIATED A PROGRAM TO TEST PROTOTYPE LIME AND LIMESTONE SYSTEMS FOR REMOVAL OF SULFUR DIOXIDE AND PARTICULATE FROM COAL-FIRED BOILER FLUE GASES. THE PROGRAM WAS CARRIED OUT IN A TEST FACILITY INCORPORATED INTO THE FLUE GAS DUCTWORK OF UNIT NO. 10, A COAL-FIRED BOILER AT THE TVA SHAWNEE POWER STATION, PADUCAH, KENTUCKY. TVA IS THE CONSTRUCTOR AND FACILITY OPERATOR AND BECHTEL CORP. IS THE MAJOR CONTRACTOR, TEST DIRECTOR, AND REPORT WRITER.

THE TEST FACILITY CONSISTS OF THREE PARALLEL SCRUBBER SYSTEMS OF PROTOTYPE SIZE, TREATING PART OF THE FLUE GAS FROM THE BOILER. EACH SCRUBBER TRAIN IS CAPABLE OF TREATING APPROXIMATELY 30,000 ACFM OR THE EQUIVALENT OF APPROXIMATELY 10 MW OF POWER PLANT GENERATING CAPACITY.

THREE PARALLEL WET SCRUBBER SYSTEMS WERE SELECTED FOR THE TEST PROJECT: 1) A VENTURI WITH A SPRAY TOWER AFTER ABSORBER, 2) A TURBULENT CONTACT ABSORBER (TCA), AND 3) A MARBLE-BED ABSORBER. THE VENTURI SYSTEM, MANUFACTURED BY CHEMICAL CONSTRUCTION CO., CONTAINS AN ADJUSTABLE THROAT THAT PERMITS CONTROL AND VARIATION OF PRESSURE DROP UNDER A WIDE RANGE OF FLOW CONDITIONS. THE TCA UNIT, MANUFACTURED BY UNIVERSAL OIL PRODUCTS, INCORPORATES A FLUIDIZED BED OF LOW DENSITY PLASTIC SPHERES THAT ARE FREE TO MOVE BETWEEN RETAINING GRIDS. THE MARBLE-BED ABSORBER, SUPPLIED BY COMBUSTION ENGINEERING CO., USES A PACKING OF 3/4-INCH GLASS MARBLE SPHERES AND A TURBULENT LAYER OF LIQUID AND GAS ABOVE THE MARBLE LAYER TO ENHANCE MASS TRANSFER.

IN JUNE 1974, THE EPA BEGAN A 3-YEAR ADVANCED TEST PROGRAM AT THE SHAWNEE FACILITY WITH THESE MAJOR GOALS: (1) CONTINUATION OF LONG-TERM TESTING, WITH EMPHASIS PLACED UPON THE RELIABLE OPERATION OF MIST ELIMINATION SYSTEMS AT INCREASED GAS VELOCITY, (2) INVESTIGATION OF ADVANCED PROCESS AND EQUIPMENT DESIGN VARIATIONS FOR IMPROVING SYSTEM RELIABILITY AND PROCESS ECONOMICS, AND (3) LONG-TERM RELIABILITY TESTING ON PROMISING PROCESS AND EQUIPMENT DESIGN VARIATIONS.

THE TWO PARALLEL SCRUBBING SYSTEMS OPERATING DURING THE ADVANCED PROGRAM ARE THE VENTURI/SPRAY TOWER SYSTEM AND THE TCA UNIT. GENERAL PROCESS FLOW DIAGRAMS OF THE TWO PROTOTYPE UNITS ARE PROVIDED IN APPENDIX B. OPERATION OF THE MARBLE-BED ABSORBER UNIT HAS BEEN PERMANENTLY DISCONTINUED.

EACH OF THE SCRUBBING SYSTEMS CONTAINS ITS OWN SLURRY HANDLING FACILITIES AND CAN TREAT APPROXIMATELY 30,000 ACFM OF GAS AT 300 F CONTAINING 1800 TO 4000 PPM OF SULFUR DIOXIDE AND 2 TO 4 GRAINS/SCF OF PARTICULATE. BOILER NO. 1 NORMALLY BURNS A HIGH-SULFUR BITUMINOUS COAL.

FROM JUNE 1974 TO JANUARY 1976, MIST ELIMINATION AND LIMESTONE UTILIZATION TESTS WERE CONDUCTED AT THE SHAWNEE FACILITY. DURING THIS TEST PERIOD THE VENTURI/SPRAY TOWER SYSTEM WAS OPERATED ON BOTH LIME AND LIMESTONE AND THE TCA SYSTEM WITH LIMESTONE. TESTING WAS PERFORMED UNDER A CLOSED-WATER OPERATION MODE. DURING THIS PERIOD THE SLURRY SOLIDS CONTAINED APPROXIMATELY 40 TO 50 PERCENT-BY-WEIGHT FLY ASH BECAUSE OF RELATIVELY HIGH GAS INLET PARTICULATE LOADING. THIS TESTING PROGRAM IS SCHEDULED TO RUN THROUGH TO FEB. 1978.

ADDITIONAL INFORMATION AND DATA CONCERNING THE DETAILS OF THE ADVANCED TEST PROGRAM ARE PRESENTED IN THE PERFORMANCE TABLE THAT FOLLOWS.

SEP. 75 THIS EXPERIMENTAL EPA-FUNDED OPERATION IS PROCEEDING WITH THE TEST PROGRAM. TWO
OCT. 75 ABSORBER MODULES ARE CURRENTLY OPERATIONAL (10 MW EACH). THE MARBLE-BED ABSORBER IS STILL INOPERATIVE (SINCE JULY 1973). CURRENT EXPERIMENTS ARE RELATED TO MIST ELIMINATOR SECTION.

NOV. 75 RECENT TESTING AT SHAWNEE HAS SHOWN THAT THE CHEVRON MIST ELIMINATORS IN BOTH THE SPRAY
DEC. 75 TOWER AND THE TCA CAN BE KEPT FREE OF SOLIDS BUILDUP AT HIGH ALKALI UTILIZATION (GREATER THAN 90 PERCENT), USING ONLY INTERMITTENT WASHING WITH AVAILABLE RAW WATER. THIS HIGH UTILIZATION IS NORMALLY ACHIEVED WITH LIME. IT HAS BEEN ACHIEVED WITH LIMESTONE AT REDUCED SCRUBBER INLET SLURRY PH (ABOUT 5.2) AND WITH THREE EFFLUENT TANKS IN SERIES TO SIMULATE A PLUG-FLOW REATOR. TESTING IS CONTINUING TO DETERMINE THE EFFECTS OF PROCESS VARIABLES ON MIST ELIMINATOR PERFORMANCE AND ON LIMESTONE UTILIZATION. FUTURE PLANS INCLUDE: (1) FACTORIAL TESTING WITH LIME AND LIMESTONE TO DETERMINE THE EFFECTS OF PROCESS VARIABLES ON SO2 REMOVAL AND (2) TESTING THE OXIDATION OF SLUDGE TO GYPSUM IN THE VENTURI/SPRAY TOWER SYSTEM USING AIR SPARGING OF AN ACIDIFIED SLURRY BLEED STREAM.

JAN. 76 THE ADVANCED TEST PROGRAM IS CONTINUING. HIGHLIGHTS OF THE PROGRAM ARE AS FOLLOWS:
FEB. 76 EVALUATE SCRUBBER OPERABILITY DURING VARIABLE LOAD OPERATION.
CONTINUE LONG-TERM RELIABILITY TESTING.
INVESTIGATE METHODS FOR IMPROVING WASTE SOLIDS SEPERATION.
CONTINUE SLUDGE OXIDATION AND SLUDGE FIXATION STUDY PROGRAMS.
EVALUATE SYSTEM PERFORMANCE AT REDUCED FLY ASH LOADINGS.
DETERMINE THE PRACTICAL UPPER LIMITS OF SO2 REMOVAL EFFICIENCY.
EVALUATE ADDITION OF MAGNESIUM ION TO THE SCRUBBING SLURRY.
CHARACTERIZE ALL STACK GAS EMISSION COMPONENTS.
EVALUATE MATERIALS OF CONSTRUCTION OF ALL SCRUBBER AND PLANT-RELATED COMPONENTS.
DEVELOP A COMPUTER PROGRAM FOR DESIGN AND COST ANALYSIS OF FULL-SCALE LIME/LIMESTONE SYSTEM.

MAR. 76 BECHTEL REPORTED THAT THE FACTORIAL TEST PROGRAM, EVALUATING THE PERFORMANCE OF THE LIME/LIMESTONE SCRUBBING

APR. 76 SYSTEMS WITH AND WITHOUT MAGNESIUM ADDITION HAS BEEN COMPLETED. CURRENTLY TESTING IS PROCEEDING ON THE EVALUATION OF SYSTEM PERFORMANCE AS A FUNCTION OF LOW RESIDENCE TIMES (1.5 TO 5.0 MINUTES) IN THE RECYCLE TANKS. IN ADDITION, A FLY-ASH-FREE DUCT IS BEING INSTALLED AT THE TEST FACILITY, THUS ENABLING EVALUATION OF SYSTEM PERFORMANCE IN THE ABSENCE OF FLY ASH.

MAY 76 THE TEST DIRECTOR, BECHTEL, PROVIDED THE FOLLOWING INPUT CONCERNING THE OPERATION OF THE EXPERIMENTAL SCRUBBING SYSTEMS DURING THE REPORT PERIOD.

JUN. 76 THE EFFECT OF MGO ADDITION WAS EXPLORED IN BOTH SCRUBBER SYSTEMS. RESULTS INDICATE MAGNESIUM ION IN THE SCRUBBER SLURRY LIQUOR ENHANCES SO2 REMOVAL AND CAN DEPRESS SULFATE SUPERSATURATION. IT WAS FOUND THAT THE MAGNESIUM ION CONCENTRATION HAD TO EXCEED THE EQUIVALENT CHLORIDE ION CONCENTRATION TO HAVE AN EFFECT ON SO2 REMOVAL.
IN THE TCA UNIT, WITH LIMESTONE SLURRY, SO2 REMOVAL WAS INCREASED FROM 75 TO 95 PERCENT BY INCREASING THE MAGNESIUM ION CONCENTRATION TO 9,000 PPM IN EXCESS OF EQUIVALENT EQUAL TO 6 PERCENT BY WEIGHT OF THE LIMESTONE ADDITION RATE. IN THE VENTURI/SPRAY TOWER SYSTEM, WITH LIME SLURRY, SO2 REMOVAL WAS INCREASED FROM 75 TO 90 PERCENT BY INCREASING MAGNESIUM ION CONCENTRATION TO 2,000 PPM IN EXCESS OF EQUIVALENT CHLORIDE ION. THE MAGNESIUM OXIDE ADDITION RATE WAS 2 PERCENT BY WEIGHT OF THE LIME ADDITION RATE. BOTH SCRUBBING SYSTEMS OPERATED IN THE SUBSATURATED SULFATE MODE WHEN MAGNESIUM OXIDE WAS ADDED. INLET SO2 CONCENTRATIONS DURING THE TESTS AVERAGE APPROXIMATELY 3,000 PPM DURING THESE TESTS.
FOLLOWING THE TEST BLOCKS MENTIONED ABOVE, BOTH SCRUBBERS ARE OPERATING WITH LIME SLURRY SCRUBBING SOLUTIONS, THE TCA SYSTEM ON FLUE GAS CONTAINING FLY ASH AND THE VENTURI/SPRAY TOWER SYSTEM ON FLY ASH-FREE FLUE GAS.

JUL. 76 EXPERIMENTAL OPERATION OF THE EPA/TVA ALKALI SCRUBBING TEST FACILITY CONTINUED DURING THE REPORT PERIOD. BECHTEL,THE TEST DIRECTOR, PROVIDED THE FOLLOWING INPUT CONCERNING
AUG. 76 THE OPERATION OF THE PROTOTYPE TEST UNITS.
VENTURI/SPRAY TOWER SYSTEM: THIS SYSTEM RAN ON FLY ASH-FREE FLUE GAS USING A LIME SLURRY SCRUBBING SOLUTION. NO SIGNIFICANT DIFFERENCES IN SO2 REMOVAL, GYPSUM SATURATION AND SULFITE OXIDATION WERE DETECTED (VERSUS FLY ASH-LADEN FLUE GAS). ONE DIFFERENCE NOTED WAS THE FILTER CAKE SOLIDS CONTENT WHICH WAS APPROXIMATELY 10 PERCENT LOWER FOR THE FLY ASH-FREE SLUDGE (40 TO 50 PERCENT SOLIDS) VERSUS THE FLY ASH-LADEN SLUDGE (50 TO 60 PERCENT SOLIDS). IN ADDITION, OPERATION IN A LOW RESIDENCE TIME MODE (3 MINUTES) WAS EXPLORED. SCALE-FREE OPERATION WAS ACHIEVED IN THIS MODE UNDER THE FOLLOWING CONDITIONS: 8 PERCENT SOLIDS (NO FLY ASH) IN THE RECIRCULATED SLURRY, PH OF THE SCRUBBER LIQUID INLET WAS 8.0, SUPERFICIAL GAS VELOCITY OF 9.4 FT./SEC., AND A TOTAL LIQUID-TO-GAS RATIO (L-G) OF 71 GAL./MCF. SOME SCALE FORMATION OCCURED WHEN THE SOLIDS CONTENT IN THE RECIRCULATED SLURRY DROPPED BELOW THE 4 PERCENT LEVEL.
TCA SYSTEM: THIS SYSTEM OPERATED ON FLY ASH-LADEN FLUE GAS USING A LIME SLURRY SCRUBBING SOLUTION INNOCULATED WITH MAGNESIUM OXIDE. GYPSUM SUBSATURATION OPERATION WAS ACHIEVED UNDER THE FOLLOWING CONDITIONS: MAGNESIUM ION CONCENTRATION EXCEEDED THE CHLORIDE ION CONCENTRATION BY 2000 PPM, SUPERFICIAL GAS VELOCITY WAS 12.5 FT./SEC., L/G

WAS 50. THE SCRUBBING SOLUTION INLET PH WAS 7.0, AND RESIDENCE TIME WAS 4-MINUTES. THE SO2 REMOVAL EFFICIENCY WAS APPROXIMATELY 90 PERCENT. WHEN L/G WAS REDUCED TO 37, WHILE ALL OTHER CONDITIONS REMAINED CONSTANT, SEVERE GYPSUM SCALE FORMATION RESULTED. INCREASING THE EFFECTIVE MAGNESIUM ION CONCENTRATION TO 4000 PPM AND THE SCRUBBER LIQUID INLET PH TO 8.0 DID NOT AMELIORATE THE SCALE PROBLEM. PRESENTLY, THE VENTURI/SPRAY TOWER SYSTEM OS OPERATING ON FLY ASH-FREE FLUE GAS WITH A MAGNESIUM OXIDE-INNOCULATED LIME SCRUBBING SLURRY.

SEP. 76 OCT. 76 IN SEPTEMBER AND OCTOBER 1976, THE VENTURI/SPRAY SYSTEM WAS OPERATED WITH FLY ASH-FREE FLUE GAS USING LIME SLURRY WITH ADDED MAGNESIUM OXIDE. TYPICAL TEST CONDITIONS WERE 9.4 FT/SEC SPRAY TOWER GAS VELOCITY, 21 GAL/MCF VENTURI L/G, 50 GAL/MCF SPRAY TOWER L/G, 8 PERCENT SLURRY SOLIDS (FLY ASH-FREE), 3 MINUTES RESIDENCE TIME, 7.0 SCRUBBER INLET PH, AND 2000 PPM EFFECTIVE MG ION CONCENTRATION (I.E., EXCESS OVER EQUIVALENT CHLORIDE ION). RESULTS WERE NOT CONSISTENT AT THESE CONDITIONS. DURING ONE PERIOD, SCRUBBING INLET LIQUOR GYPSUM SATURATION AVERAGED 85 PERCENT WITH 80 PERCENT SO2 REMOVAL AND WITH SOME GYPSUM SCALE FORMATION. IN A LATER PERIOD, AT SEEMINGLY IDENTICAL TEST CONDITIONS, GYPSUM SATURATIONS DROPPED TO 10 PERCENT WITH 98 PERCENT SO2 REMOVAL AND THE SCRUBBER DESCALED. A SEVEN-WEEK PROGRAM OF INTENSIVE FLUE GAS CHARACTERIZATION TESTING WAS STARTED IN MID-OCTOBER ON THE VENTURI/SPRAY TOWER SYSTEM. THESE TESTS ARE BEING MADE TO MEASURE SIMULTANEOUS INLET AND OUTLET FLUE GAS PARTICULATE MASS LOADING, PARTICULATE SIZE DISTRIBUTION, AND GASEOUS SO3 CONCENTRATION. THE TCA SYSTEM CONTINUED TO OPERATE DURING THIS PERIOD ON FLY ASH-LADEN FLUE GAS USING LIME SLURRY WITH ADDED MAGNESIUM OXIDE. THE TEST RESULTS SOFAR INDICATED THAT THE DEGREE OF SULFATE (GYPSUM) SUBSATURATION IS A SENSITIVE FUNCTION OF THE EFFLUENT RESIDENCE TIME CONDITIONS: GAS VELOCITY 12.5 FT/SEC, L/G OF 50, PH OF 7.0, 2000 PPM OF MG ION, AND 8 PERCENT SOLIDS. AT THESE CONDITIONS GYPSUM SATURATIONS WERE 95, 50, AND 92 PERCENT, AT RESIDENCE TIMES OF 3, 4, AND 12 MINUTES, RESPECTIVELY. FURTHER TESTS WERE RUN AT 37 GAL/MCF L/G, AND 8.0 SCRUBBER INLET PH WITH OTHER CONDITIONS THE SAME. DURING THESE TESTS GYPSUM SATURATIONS WERE 95, 95, 50, AND 90 PERCENT AT 3, 4, 5.4, AND 16 MINUTES RESIDENCE TIMES, RESPECTIVELY.

NOV. 76 DEC. 76 FROM MID-OCTOBER THROUGH EARLY DECEMBER AN INTENSIVE FLUE GAS CHARACTERIZATION TESTING PROGRAM WAS CONDUCTED ON THE VENTURI/SPRAY TOWER SYSTEM WITH LIME SLURRY.
OVER THE RANGE TESTED, OUTLET PARTICULATE MASS LOADING WAS FOUND TO BE INDEPENDENT OF SLURRY COMPOSITION (8 TO 15 PERCENT SUSPENDED SOLIDS, 3,000 TO 16,000 PPM DISSOLVED SOLIDS), GAS FLOW RATE (20,000 TO 35,000 ACFM), SPRAY TOWER LIQUID RATE (0 TO 1,400 GPM) AND VENTURI PRESSURE DROP (3 TO 9 INCHES H20). WITH 4 TO 6 GR/DSCF PARTICULATE IN THE INLET, TYPICAL OUTLET LOADINGS WERE 0.02 TO 0.04 GR/DSCF. WHEN OPERATING WITH FLUE GAS FROM THE ELECTROSTATIC PRECIPITATOR (0.1 TO 0.4 GR/DSCF TO THE SCRUBBER), THE SCRUBBER OUTLET LOADING AVERAGED 0.005 GR/DSCF. THUS, ENTRAINED SLURRY FROM THE MIST ELIMINATOR MUST HAVE BEEN LESS THAN 0.005 GR/DSCF. SIZE DISTRIBUTION DATA ARE STILL BEING ANALYZED. SULFURIC ACID MIST VALUES WERE APPROXIMATELY 2 TO 25 PPM AT THE SCRUBBER INLET AND REMOVALS HAVE BEEN ABOUT 50 TO 75 PERCENT.
FOR THE REMAINDER OF DECEMBER THE VENTURI/SPRAY TOWER SYSTEM WAS DOWN FOR MODIFICATIONS FOR TWO-STAGE OXIDATION TESTING. SEE APPENDIX B FOR A PROCESS FLOW DIAGRAM.
DURING NOVEMBER THE TCA WAS OPERATED WITH FLY-ASH CONTAINING FLUE GAS USING LIME SLURRY WITHOUT ADDED MAGNESIUM OXIDE. OPERATING CONDITIONS WERE 12.5 FT/SEC GAS VELOCITY, 50 GAL/MCF L/G, 8.0 SCRUBBER INLET PH, AND 8 TO 15 PERCENT SLURRY SOLIDS. AT THESE CONDITIONS THE SO2 REMOVAL WAS ABOUT 80 PERCENT.
FLY-ASH FREE LIMESTONE TESTS WITHOUT MAGNESIUM OXIDE ADDITION BEGAN ON THE TCA SYSTEM IN LATE NOVEMBER. TYPICAL OPERATING CONDITIONS WERE 12.5 FT/SEC GAS VELOCITY, 50 GAL/MCF L/G, AND 1.1 TO 1.2 STOICHIOMETRIC RATIO. AT THE SAME STOICHIOMETRY, THE PH OF THE FLY-ASH FREE SLURRY WAS 0.2 TO 0.3 UNITS HIGHER THAN OBSERVED IN PREVIOUS RUNS WITH FLY ASH.

JAN. 77 FEB. 77 THE VENTURI/SPRAY TOWER SYSTEM HAS BEEN OPERATED IN A TWO-SERIES-SCRUBBER MODE WITH FORCED OXIDATION SINCE EARLY JANUARY 1977 AFTER SYSTEM MODIFICATIONS TO ALLOW OPERATION OF THE VENTURI AND SPRAY TOWER WITH INDEPENDENT SLURRY RECIRCULATION LOOPS. SULFITE OXIDATION WAS CARRIED OUT IN AN 8 FT. DIAMETER VENTURI (PRE-SCRUBBER) EFFLUENT HOLD TANK WHICH HAD A 130 - 1/8 INCH HOLE AIR SPARGER IMMERSED IN 18 FT. OF SLURRY. THE SPRAY TOWER (AFTER SCRUBBER) FUNCTIONED AS A PRIMARY SO2 ABSORBER.
TYPICAL OPERATING CONDITIONS, USING LIMESTONE SLURRY, WERE 6.7 FT/SEC SPRAY TOWER GAS VELOCITY, 20-30 GAL/MCF VENTURI L/G, 70 GAL/MCF SPRAY TOWER L/G, 15 PERCENT SOLIDS (WITH FLY ASH) IN VENTURI RECIRCULATED SLURRY, 4.5-5.0 VENTURI INLET (OXIDATION TANK) PH, AND 11.3 MINUTES OXIDATION TANK RESIDENCE TIME (BASED ON 600 GPM SLURRY FLOW TO VENTURI). DURING THESE TESTS, AVERAGE OVERALL SULFITE OXIDATION RANGED FROM 93 TO 99 PERCENT AT AIR STOICHIOMETRIC RATIO OF 1.0 TO 4.7 LB-ATOMS OXYGEN/LB-MOLE SO2 ABSORBED. CORRESPONDING AVERAGE OXIDATION IN THE SPRAY TOWER RANGED FROM 10 TO 16 PERCENT. AVERAGE OVERALL LIMESTONE UTILIZATION RANGED FROM 83 TO 96 PERCENT. NO SCALING WAS EXPERIENCED IN EITHER SCRUBBER. AVERAGE FILTER CAKE SOLIDS WERE 79 TO 86 PERCENT BY WEIGHT COMPARED WITH 55-65 PERCENT WITHOUT FORCED OXIDATION. SLURRY SOLIDS SETTLING RATE RANGED 0.5 TO 1.4 CM/MIN, 5 TO 10 TIMES FASTER THAN THAT FOR UNOXIDIZED SLURRY. FINAL SETTLED DENSITY RANGED 65-80 PERCENT SOLIDS COMPARED WITH 45-60 PERCENT FOR SLURRY WITHOUT FORCED OXIDATION.
FLY ASH-FREE LIMESTONE TESTING ON THE TCA SYSTEM WAS COMPLETED IN EARLY FEBRUARY. THE PH OF THE FLY ASH-FREE SLURRY WAS 0.2 TO 0.3 UNITS HIGHER THAN OBSERVED IN PREVIOUS RUNS WITH FLY ASH. IN ADDITION, THE FLY ASH-FREE SLURRY APPEARED TO HAVE INFERIOR SOLIDS DEWATERING CHARACTERISTICS. FOR EXAMPLE, THE CENTRIFUGE CAKE SOLIDS AVERAGED ABOUT 50 PERCENT COMPARED WITH ABOUT 60 PERCENT FOR SLUDGE CONTAINING FLY ASH.

INTENSIVE FLUE GAS CHARACTERIZATION TESTING WITH LIMESTONE SLURRY ON THE TCA SYSTEM BEGAN IN EARLY FEBRUARY AND ENDED IN EARLY MARCH 1977. PRELIMINARY ANALYSIS OF THE DATA SHOWED AN OUTLET MASS LOADING OF 0.04-0.08 GRAIN/DSCF FOR FLUE GAS CONTAINING FLY ASH AND 0.02-0.03 GRAINS/DSCF FOR FLUE GAS WITHDRAWN DOWNSTREAM OF THE ESP. IT WAS ESTIMATED THAT THESE OUTLET MASS LOADINGS CONTAINED ABOUT 0.03 GRAIN/DSCF FLY ASH, 0.02 GRAIN/DSCF RE-ENTRAINED SLURRY SOLIDS, AND 0.015 ENTRAINED DISSOLVED SOLIDS (WHEN A CONTINUOUS MIST ELIMINATOR UNDER WASH WAS USED). THESE VALUES VARY DEPENDING ON THE MIST ELIMINATOR WASH SCHEME AND GAS FLOW RATE.

MAR. 77 DURING MARCH, THE VENTURI/SPRAY TOWER WAS TESTED WITH LIME SLURRY AND FLY ASH LADEN FLUE GAS IN A TWO-STAGE SCRUBBER MODE WITH FORCED OXIDATION. OPERATION WITH LIME WAS SIMILAR TO THE PREVIOUSLY REPORTED LIMESTONE OPERATION WITH GREATER THAN 95 PERCENT OXIDATION AT AN AIR STOICHIOMETRIC RATIO OF 1.5 LB-ATOMS OXYGEN/LB-MOLE SO2 ABSORBED WITH A SIMPLE AIR SPARGER IN A VENTURI HOLD TANK. SLURRY SOLIDS SETTLING RATE VARIED FROM 0.6 TO 1/9 CM/MIN (A 5 TO 10 FOLD ENHANCEMENT OVER UNOXIDIZED SLURRY) AND FILTER CAKE SOLIDS RANGED FROM 74 TO 88 PERCENT (COMPARED WITH 45 TO 60 PERCENT WITH UNOXIDIZED SLURRY).
TWO MAJOR DIFFERENCES BETWEEN LIME AND LIMESTONE WERE OBSERVED IN A TWO-STAGE FORCED OXIDATION. TO MAINTAIN PH CONTROL, IT WAS NECESSARY TO FEED LIME TO BOTH STAGES. WITH LIMESTONE, FEED ONLY TO THE SECOND STAGE WAS ADEQUATE. TO MAINTAIN 80 PERCENT SO2 REMOVAL, IT WAS NECESSARY TO OPERATE WITH HIGHER SLURRY SOLIDS CONCENTRATION IN THE SPRAY TOWER LOOP WITH LIMESTONE (15 PERCENT) THAN WITH LIME (6 PERCENT), RESULTING IN A TIGHTER WATER BALANCE WITH LIMESTONE AND INADEQUATE WATER TO FLUSH THE MIST ELIMINATOR.
PRELIMINARY LIMESTONE TYPE AND GRIND TESTS MADE ON THE TCA SYSTEM DURING MARCH INDICATED THAT SO2 REMOVAL IS IMPROVED BY THE USE OF FINER GROUND LIMESTONE. SO2 REMOVAL WITH EQUIVALENT GROUND FREDONIA WHITE AND LONGVIEW, ALABAMA LINESTONES WAS THE SAME.
BLEEDSTREAM FORCED OXIDATION TESTS ARE BEING CONDUCTED WITH A PENBERTHY ELL-3 EJECTOR IN A CLOSED LOOP AROUND A BLEED STREAM HOLD TANK. INITIAL TESTS WERE UNSUCCESSFUL DUE TO HIGH PH OF 7 TO 8 IN THE HOLD TANK. BY LOWERING THE HOLD TANK PH TO 5 TO 6, SULFITE OXIDATION UP TO 98 PERCENT WAS ACHIEVED.

APR. 77 UNIT 10 BOILER WAS SHUT DOWN FOR A SCHEDULED TWO-MONTH MAINTAINANCE OUTAGE. BECAUSE OF
MAY 77 THE BOILER OUTAGE, THE SHAWNEE SCRUBBERS WILL NOT OPERATE DURRING APRIL AND MAY.
JUN. 77 SCRUBBER OPERATION RESUMED ON JUNE 15 AFTER A 10-WEEK SCHEDULED MAINTENANCE OUTAGE ON THE BOILER.

JUL. 77 THE VENTURI/SPRAY TOWER SYSTEM CONTINUED TO OPERATE WITH TWO SCRUBBER STAGES AND FORCED OXIDATION BY MEANS OF AN AIR SPARGING RING IN THE VENTURI HOLD TANK. IN JUNE AND JULY, OPERATION WAS WITH LIME SLURRY AND FLY ASH-FREE FLUE GAS. THE SYSTEM PERFORMED WELL WITH LITTLE DIFFERENCE FROM THE PREVIOUS LIME SLURRY TEST BLOCK WHEN THERE WAS FLY ASH IN THE FLUE GAS. TYPICAL RESULTS WERE ABOUT 97 PERCENT SULFITE OXIDATION AT AN AIR STOICHIOMETRY OF 1.6 LB-ATOMS OXYGEN/LB-MOLE SO2 ABSORBED AND AN OXIDATION TANK PH OF 5.5. TYPICAL SOLIDS SETTLING RATE WAS ABOUT 2 CM/MIN (AN ORDER OF MAGNITUDE BETTER THAN WITH UNOXIDIZED SLURRY) AND FILTER CAKE SOLIDS CONCENTRATION AVERAGED ABOUT 80 PERCENT (COMPARED WITH 45 TO 60 PERCENT WITH UNOXIDIZED SLURRY).
THE TCA SYSTEM OPERATED WITH FORCED OXIDATION IN THE HOLD TANK ACHIEVED BY CIRCULATING SLURRY THROUGH AN AIR EDUCTOR. IN JUNE AND JULY, OPERATION WAS WITH LIMESTONE SLURRY AND FLY ASH IN THE FLUE GAS. SULFITE OXIDATION WAS POOR IN INITIAL TEST (LESS THAN 90 PERCENT) MAINLY BECAUSE OF INADEQUATE AIR/SLURRY CONTACT IN THE HOLD TANK. BY INCREASING AGITATOR SPEED (TO 68 RPM), HOLD TANK SLURRY LEVEL (TO 12FT) AND DECREASING PH (TO LESS THAN 5.5) IN THE SLURRY TO THE EDUCTOR, SULFITE OXIDATION ABOVE 90 PERCENT WAS CONSISTANTLY ACHIEVED AT AN AIR STOICHIOMETRY OF ABOUT 4.5 LB/ATOMS OXYGEN/LB-MOLE SO2 ABSORBED.
WASTE SOLIDS PROPERTIES WERE ENHANCED WITH OXIDATION TO ABOUT THE SAME EXTENT AS OBSERVED IN THE VENTURI/SPRAY TOWER SYSTEM. ADDITIONAL TESTING WILL BE DIRECTED TOWARD ACHIEVING 90 PERCENT OR BETTER SULFITE OXIDATION AT A REDUCED AIR STOICHIOMETRY.

AUG. 77 THE VENTURI/SPRAY TOWER SYSTEM CONTINUED TO OPERATE WITH TWO SCRUBBER STAGES AND FORCED
SEP. 77 OXIDATION USING AN AIR SPARGER IN THE VENTURI HOLD TANK. OPERATION DURING AUGUST AND SEPTEMBER WAS WITH LIMESTONE SLURRY AND FLUE GAS WITH LOW FLY ASH LOADING (FLUE GAS FROM DOWNSTREAM OF THE ESP). THE SYSTEM PERFORMED WELL AT 4.5 TO 5.0 OXIDATION PH, WITH LITTLE DIFFERENCE FROM THE PREVIOUS LIMESTONE TESTS WHEN THE FLUE GAS HAD HIGH FLY ASH LOADING. (THE PREVIOUS TESTS WERE MADE ONLY AT OXIDATION PH OF 4.5 AND 5.0).
FOR THE AUGUST AND SEPTEMBER TESTS, THE OXIDATION PH WAS FURTHER INCREASED TO 5.5, APPROACHING THE PH IN THE SPRAY TOWER. THIS CAUSED SOME DIFFICULTIES IN THE OXIDATION PH CONTROL AND WIDER FLUCTUATIONS IN VENTURI AND SPRAY TOWER LIMESTONE STOICHIOMETRIC RATIOS. HOWEVER, NEAR COMPLETE OXIDATION WAS STILL ACHIEVED AT THE HIGHER PH. TYPICAL RESULTS WERE BETTER THAN 97 PERCENT SULFITE OXIDATION AT AN AIR STOICHIOMETRY OF 1.7 ATOMS OXYGEN/MOLE SO2 ABSORBED AND AN OXIDATION PH OF 5.5. THE FILTER CAKE SOLIDS CONTENT AVERAGED BETTER THAN 85 PERCENT. TESTS WERE ALSO CONDUCTED WITHOUT THE DESUPERSATURATION TANK IN THE VENTURI SLURRY LOOP AND WITH THE OXIDATION TANK LEVEL DROPPED FROM 18 TO 14 FT WITHOUT ADVERSE EFFECTS.
DURING AUGUST AND SEPTEMBER, THE TCA SYSTEM WAS OPERATED MOSTLY IN A TWO-TANK FORCED OXIDATION MODE USING AN AIR EDUCTOR. THE TCA EFFLUENT (LIMESTONE SLURRY WITH HIGH FLY ASH LOADING) WAS COLLECTED IN A SMALL LOW-PH SLURRY HOLD TANK AND THEN PUMPED THROUGH THE AIR EDUCTOR TO THE REGULAR HOLD TANK WHERE LIMESTONE WAS ADDED, THUS TAKING THE ADVANTAGE OF THE LOW PH SLURRY THROUGH THE AIR EDUCTOR FOR IMPROVED SULFITE OXIDATION AND HIGH PH SLURRY TO TCA FOR BETTER SO2 REMOVAL.

TESTS WERE MADE BOTH WITH THE AIR EDUCTOR MOUNTED ON TOP OF THE EFFLUENT HOLD TANK WITH DOWNWARD SLURRY DISCHARGE, AND WITH THE EDUCTOR MOUNTED OUTSIDE OF THE TANK WITH RADIAL DISCHARGE TO THE BOTTOM OF THE TANK. AVERAGE SULFITE OXIDATION RANGED FROM 93 TO 98 PERCENT AT ABOUT 2.5 AIR STOICHIOMETRY AND 5.2 EDUCTOR INLET PH. DURING TWO OF THE RUNS MADE IN AUGUST WHEN THE ROTARY DRUM FILTER WAS USED, THE FILTER CAKE SOLIDS CONTENT AVERAGED 85 AND 88 PERCENT.
A TEN-DAY RUN WAS MADE IN SEPTEMBER ON THE TCA SYSTEM WITH AUTOMATIC LIMESTONE FEED CONTROL BASED ON STOICHIOMETRY. THE LIMESTONE SLURRY FEED RATE WAS CONTROLLED BY THE FLUE GAS FLOW RATE AND THE INLET SO2 CONCENTRATION. THE CONTROL SYSTEM WORKED WELL ACCORDING TO THE SPECIFICATIONS.

OCT. 77 NOV. 77 THE VENTURI/SPRAY TOWER SYSTEM CONTINUED TO OPERATED WITH TWO SCRUBBER STAGES AND FORCED OXIDATION IN THE VENTURI HOLD TANK. IN OCTOBER, THE FOLLOWING IMPROVEMENTS WERE MADE WITH NO SIGNIFICANT DROP IN OXIDATION EFFICIENCY AND WITH SATISFACTORY SO2 REMOVAL EFFICIENCY.

- *THE SPRAY TOWER GAS VELOCITY WAS INCREASED FROM 6.7 TO 9.4 FT/SEC.
- *THE OXIDATION TANK LEVEL WAS DROPPED FROM 18 FT TO 14 FT.
- *THE AIR SPARGER RING, CONTAINING 40 1/4-INCH DIAMETER HOLES, WAS REPLACED WITH A SINGLE 3-INCH DIAMETER PIPE DISCHARGING DOWNWARD AT THE CENTER OF THE OXIDATION TANK 3 INCHES FROM THE BOTTOM.

WITH AIR DISCHARGED FROM AN OPEN-ENDED PIPE IT WAS APPARENT THAT AIR DISPERSION IN THE OXIDATION TANK WAS ACCOMPLISHED MAINLY BY THE TURBINE AGITATOR RATHER THAN THE SPARGER.
IN NOVEMBER, A ONE-MONTH RELIABILITY TEST WAS STARTED ON THE VENTURI/SPRAY TOWER SYSTEM USING FORCED OXIDATION WITH TWO SCRUBBER STAGES AND LIMESTONE SLURRY WITH HIGH FLY ASH LOADING. THE FLUE GAS RATE TO THE SCRUBBER SYSTEM WAS VARIED ACCORDING TO THE BOILER LOAD WHICH RANGED BETWEEN 100 AND 155 MW. TEST CONDITIONS WERE SELECTED TO MEET THE EPA NEW SOURCE PERFORMANCE STANDARDS OF 1.2 LBS SO2 AND 0.1 LB PARTICULATE PER MILLION BTU. THIS RUN WAS STILL IN PROGRESS AT THE END OF NOVEMBER. ON THE TCA SYSTEM, FORCED OXIDATION WITH A SINGLE SCRUBBER STAGE USING AN AIR EDUCTOR WAS DISCONTINUED IN EARLY OCTOBER AFTER A HOLE ERODED THROUGH THE EDUCTOR BODY. FORCED OXIDATION TESTING WILL BE RESUMED IN EARLY DECEMBER AFTER AN AIR SPARGER IS INSTALLED.
IN OCTOBER-NOVEMBER, A ONE-MONTH RELIABILITY TEST WITHOUT FORCED OXIDATION WAS CONDUCTED ON THE TCA SYSTEM WITH LIMESTONE SLURRY, FLUE GAS WITH HIGH FLY ASH LOADING, THREE HOLD TANKS IN SERIES, AND 7.5 INCHES STATIC HEIGHT OF NITRILE FOAM SPHERES IN EACH OF 3 BEDS IN THE TCA. GAS RATE TO THE SCRUBBER WAS VARIED WITH BOILER LOAD AND STOICHIOMETRIC RATIO WAS CONTROLLED BY AN AUTOMATIC LIMESTONE FEED SYSTEM. CONDITIONS WERE SELECTED TO MEET THE EPA NEW SOURCE PERFORMANCE STANDARDS AT A LOW STOICHIOMETRIC RATIO OF 1.2 MOLES CA/MOLE SO2 ABSORBED. THE AVERAGE SO2 REMOVAL FOR THE ENTIRE RUN WAS 86 PERCENT AT 2800 PPM WHICH WAS BETTER THAN THE 83 PERCENT REQUIRED TO MEET TEHE EMISSIONS STANDARD. HOWEVER, THE STANDARD WAS FREQUENTLY EXCEEDED FOR PERIODS GREATER THAN THE 3 HOURS ALLOWED BY THE EPA REGULATIONS. AVERAGE OUTLET PARTICULATE MASS LOADING WAS 0.043 GRAIN/SCF DRY WHICH WAS BETTER THAN THE 0.052 GRAIN/SCF DRY (AT 30 PERCENT EXCESS AIR) REQUIRED TO MEET THE STANDARD. THE RANGE OF THE OUTLET MASS LOADING WAS 0.026 TO 0.069 GRAIN/SCF DRY.

DEC. 77 JAN. 78 A LIMESTONE RELIABILITY TEST ON THE VENTURI/SPRAY TOWER SYSTEM WAS COMPLETED IN MID-DECEMBER, 1977 AFTER 965 OPERATING HOURS. THE TEST WAS CONDUCTED WITH TWO SCRUBBER LOOPS WITH FORCED OXIDATION IN THE FIRST (VENTURI) LOOP. THE FLUE GAS FLOW RATE WAS VARIED ACCORDING TO THE BOILER LOAD WHICH RANGED BETWEEN 100 AND 155 MW.
TEST CONDITIONS WERE SELECTED TO MEET THE EPA NEW SOURCE PERFORMANCE STANDARDS OF 1.2 LB SO2 AND 0.1 LB PARTICULATE PER MILLION BTU. THE OPERATING RELIABILITY OF THE SYSTEM WAS DEMONSTRATED. HOWEVER, DUE TO WIDE VARIATION IN THE INLET SO2 CONCENTRATION (2500-3400 PPM) AND THE SLOW SYSTEM RESPONSE TIME, THE SO2 EMISSION STANDARD WAS FREQUENTLY EXCEEDED FOR PERIODS GREATER THAN THE THREE HOURS ALLOWED BY EPA REGULATIONS. AVERAGE SO2 REMOVAL FOR THE ENTIRE RUN WAS 86 PERCENT AT 2950 PPM AVERAGE INLET SO2, WHICH WAS HIGHER THAN THE 84 PERCENT REQUIRED TO MEET THE STANDARD FOR 2800 PPM INLET SO2. THE OUTLET PARTICULATE LOADING RANGED FROM 0.021 TO 0.063 GRAIN/DRY SCF, WITH A RUN AVERAGE OF 0.042 GRAIN/DRY SCF. THESE VALUES COMPARE WITH A LOADING OF 0.052 GRAIN/DRY SCF OR LESS REQUIRED TO MEET THE EPA PARTICULATE STANDARD, ASSUMING 30 PERCENT TOTAL BOILER EXCESS AIR.

ANOTHER RELIABILITY RUN ON THE VENTURI/SPRAY TOWER SYSTEM WAS STARTED IN MID DECEMBER USING LIME SCRUBBING. THE RUN WAS COMPLETED IN JANUARY 1978. WITH THE EXCEPTION OF HIGHER SPRAY TOWER INLET PH AND HIGHER ALKALI UTILIZATION INHERENT WITH THE LIME SYSTEM, THE OPERATING CONDITIONS AND THE TEST RESULTS WERE SIMILIAR TO THOSE OF THE LIMESTONE RELIABILITY RUN.

ON THE TCA SYSTEM, TWO RUNS WERE MADE WITH THE NITRILE FOAM SPHERES REPLACED BY A 46 INCH HEIGHTH (23 LAYERS) OF CEILCOTE PACKING SUPPORT PLATES. AT FULL GAS FLOW RATE OF 30,000 ACFM, THE SO2 REMOVAL FOR THE CEILCOTE PLATES WAS SLIGHTLY LESS THAN THAT OF A 3-BED, 4-GRID TCA WITH FIVE INCHES OF STATIC SPHERE HEIGHT PER BED. HOWEVER, AT 18,000 ACFM, THE SO2 REMOVAL FOR THE CEILCOTE PLATES WAS A FEW PERCENTAGE POINTS HIGHER THAN EXPERIENCED WITH THE TCA BEDS.

FORCED OXIDATION TESTS WERE CONDUCTED ON THE TCA SYSTEM WITH AN AIR SPARGER USING LIMESTONE SLURRY WITH HIGH FLY ASH LOADING. BOTH ONE-TANK (AIR SPARGING AND LIME-

STONE ADDITION IN THE SAME TANK) AND TWO-TANK (AIR SPARGING IN THE FIRST TANK AND LIMESTONE ADDITION IN THE SECOND) CONFIGURATIONS WERE USED. NEAR COMPLETE SULFITE OXIDATION WAS ACHIEVED IN BOTH CONFIGURATION AT AN AIR STOICHIOMETRY OF 1.8 ATOMS OXYGEN/MOLE SO2 ABSORBED AND OXIDATION TANK PH OF 5.4-5.7. THE OXIDATION TANK LEVEL WAS 18 FT.

TABLE 3
PERFORMANCE DESCRIPTION FOR OPERATIONAL FGD SYSTEMS THROUGH 01/78

UTILITY NAME	TENNESSEE VALLEY AUTHORITY
UNIT NAME	WIDOWS CREEK NO. 8
UNIT LOCATION	BRIDGEPORT ALABAMA
UNIT RATING	550 MW
FUEL CHARACTERISTICS	COAL 3.7 PERCENT SULFUR
FGD VENDOR	TENNESSEE VALLEY AUTHORITY
PROCESS	LIMESTONE SCRUBBING
NEW OR RETROFIT	RETROFIT
START UP DATE	5/77
FGD STATUS	OPERATIONAL
EFFICIENCY, PARTICULATES	99.5 PERCENT
SO2	80 PERCENT
WATER MAKE UP	
SLUDGE DISPOSAL	100-ACRE DIKED POND
UNIT COST	SEE APPENDIX A, FGD SYSTEM ECONOMICS
OPERATIONAL EXPERIENCE	REFER TO THE BACKGROUND INFORMATION SECTION IN TABLE 3 OF THIS REPORT. THE EMISSION CONTROL SYSTEM FOR THIS 550-MW COAL-FIRED POWER-GENERATING UNIT CONSISTS OF EXISTING ELECTROSTATIC PRECIPITATORS FOLLOWED BY FOUR PARALLEL SCRUBBING TRAINS, EACH CAPABLE OF HANDLING 25 PERCENT OF THE BOILER FLUE GAS FROM UNIT NO. 8. EACH TRAIN INCLUDES A RECTANGULAR-THROAT VENTURI SCRUBBER AND A GRID-TOWER ABSORBER SUPPLIED BY POLYCON. THE GRID TOWER CAN BE CONVERTED TO A MOBILE-BED TOWER IF GREATER SO2 REMOVAL IS REQUIRED.

BACKGROUND INFORMATION
ON
WIDOWS CREEK NO. 8

IN MID-1970, TENNESSEE VALLEY AUTHORITY DECIDED TO INSTALL A FULL-SCALE DEMONSTRATION LIMESTONE SCRUBBING SO2 REMOVAL SYSTEM ON GENERATING UNIT NO. 8 AT THE WIDOWS CREEK PLANT. THE PRIMARY OBJECTIVE WAS TO WORK OUT DESIGN AND OPERATING PROBLEMS IN SO2 REMOVAL OPERATIONS AS A PREPARATION FOR THE POSSIBILITY OF FUTURE TVA FGD OPERATIONS.

THE WIDOW CREEK POWER STATION IS LOCATED IN NORTHEAST ALABAMA, NEAR CHATTANOOGA, TENNESSEE. UNIT NO. 8 IS A COAL-FIRED BOILER WITH A MAXIMUM GENERATING CAPACITY OF 550 MW, AND A MAXIMUM STACK GAS RATE OF 1,600,000 CFM AT 280 DEGREES F. THE BOILER AND ESP UNITS WERE COMMISSIONED BY TVA IN 1963.

THE WET LIMESTONE FGD SYSTEM AT WIDOWS CREEK WAS PLACED IN SERVICE ON MAY 16, 1977. THE SYSTEM CONSISTS OF FOUR IDENTICAL SCRUBBING MODULES (IDENTIFIED AS A, B, C, AND D) EACH HANDLING 25 PERCENT OF THE FLUE GAS FROM UNIT NO. 8. LIMESTONE STORAGE AND MILLING FACILITIES AND A SLUDGE DISPOSAL POND ARE ALSO LOCATED ON SITE.

FLUE GAS ENTERING THE SCRUBBING MODULE FROM THE EXISTING ELECTROSTATIC PRECIPITATORS PASSES THROUGH A 400,000 ACFM CAPACITY F.D. FAN AND INTO THE VENTURI. THE VENTURI SCRUBBER IS A RECTANGULAR THROAT DESIGN USED TO SATURATE, AND REMOVE FLYASH FROM THE GAS. DUE TO THE INEFFICIENCY OF THE OLD ESP UNITS, LARGE VENTURI SCRUBBERS WERE REQUIRED IN ALL MODULES TO REMOVE PARTICULATES. SO2 REMOVAL EFFICIENCY IN THE VENTURI IS ABOUT 10 PERCENT. THE ABSORBER IS A GRID TYPE ABSORPTION TOWER WHICH WAS SUPPLIED BY POLYCON. THE GRID TOWER WILL BE USED INITIALLY AS A SPRAY TOWER AND WILL OPERATE AT A LIQUID-TO-GAS RATIO OF 50. THE SO2 REMOVAL EFFICIENCY FOR THE ABSORBER IS ABOUT 70%, GIVING A COMBINED SCRUBBER DESIGN EFFICIENCY OF ABOUT 80 PERCENT FOR THE ABSORBER AND VENTURI TOGETHER. THE ENTRAINMENT SEPARATOR IS A CHEVRON VANE TYPE (4 PASS) LOCATED VERTICALLY IN A HORIZONTAL SHELL. THE REHEAT SYSTEM CONSISTS OF A STEAM/HOT AIR INJECTION SYSTEM RAISING THE FLUE GAS TO AN OUTLET TEMPERATURE OF 175 F.

LIMESTONE HANDLING AND MILLING EQUIPMENT INCLUDES A SHAKER FOR TRUCK AND RAIL UNLOADING, A LIVE STORAGE SILO, A WET BALL MILL, AND A CYCLONE CLASSIFIER. THE GRINDING SYSTEM IS DESIGNED TO PRODUCE A GROUND PARTICLE SIZE OF 90 PERCNET MINUS 200 MESH AT THE DESIGN RATE OF 50 TONS PER HOUR DRY LIMESTONE. THE UNLOADING AND STORAGE FACILITIES UP TO AND INCLUDING THE LIVE STORAGE SILO ARE DESIGNED TO ACCOMODATE A FUTURE LIMESTONE SCRUBBING FACILITY ON WIDOWS CREEK UNIT NO. 7.

WASTE BY-PRODUCT SOLIDS FROM THE SCRUBBING FACILITY WILL BE DISPOSED OF IN A DIKED POND 100 ACRES IN AREA BY 30 FEET IN HEIGHT. AN ADDITIONAL 10 FEET IN HEIGHT MAY BE ADDED TO YIELD A TOTAL SLUDGE STORAGE CAPACITY OF 5.8 MM. CUBIC YARDS, OR 10 YEARS OF SCRUBBER EFFLUENT STORAGE. THE SLUDGE, CONSISTING OF FLYASH, REACTION PRODUCTS (HYDRATES OF CALCIUM SULFITE AND SULFATE) AND UNREACTED LIMESTONE IS PUMPED TO THE POND AS A 15-16 PERCENT SOLIDS SOLUTION.

THE WIDOWS CREEK NO. 8 SCRUBBING UNIT IS DESIGNED TO BE AS FLEXIBLE AS POSSIBLE. A LARGE RESERVOIR OF QUENCH WATER IS LOCATED ABOVE THE ABSORBER TO GRAVITY FEED WATER TO THE TOWER IN CASE OF POWER FAILURE, THEREBY SAVING THE ABSORBER AND RUBBER LINING. THE ABSORBER CAN BE OPERATED AS A MULTI-GRID, TURBULENT CONTACT, OR SPRAY TOWER ABSORBER. PROVISIONS HAVE BEEN MADE IN THE ABSORBER DESIGN SO THAT IT CAN READILY BE CONVERTED TO A MOBILE BED TYPE ABSORBER SHOULD IT PROVE DESIRABLE IN THE FUTURE TO OBTAIN IMPROVED SO2 REMOVAL.

ADDITIONAL INFORMATION AND DATA ARE PROVIDED IN THE PERFORMANCE HISTORY TABLE THAT FOLLOWS. A SCHEMATIC DIAGRAM OF THE WIDOWS CREEK SCRUBBER PLANT IS PROVIDED IN APPENDIX B OF THIS REPORT.

INITIAL OPERATING EXPERIENCE

VIRTUALLY ALL MAJOR CONSTRUCTION ON THE SCRUBBER PLANT WAS COMPLETED DURING THE FIRST QUARTER OF 1977. STARTUP AND SHAKEDOWN PROCEDURES COMMENCED OFFICIALLY ON APRIL 30, 1977. OPERATIONS DURING THIS INITIAL MECHANICAL SHAKEDOWN AND DEBUGGING PHASE OF OPERATIONS FOR THIS FOUR TRAIN WET LIMESTONE SCRUBBING SYSTEM CONTINUED THROUGHOUT THE SUMMER. COMMERCIAL SCRUBBER PLANT OPERATION COMMENCED SOMETIME IN LATE SEPTEMBER. THE UTILITY REPORTED A NUMBER OF PROBLEMS WITH BOTH THE BOILER SIDE AND THE SCRUBBER SIDE. ALL FOUR SCRUBBER MODULES HAD NOT BEEN IN SERVICE SIMULTANEOUSLY.

TENNESSEE VALLEY AUTHORITY FGD PERFORMANCE HISTORY WIDOWS CREEK UNIT NO. 8

MONTH	BOILER	OPERATING HOURS A-SIDE	B-SIDE	C-SIDE	D-SIDE	COMMENTS
AUG. 77 AVAILABILITY = 26 PERCENT OPERABILITY = 30 PERCENT RELIABILITY = 30 PERCENT UTILIZATION = 26 PERCENT	657	149	298	273	62	TVA HAS HAD EXTENSIVE PROBLEMS WITH START-UP OF ITS SCRUBBER FACILITY. THESE PROBLEMS INCLUDE EROSION OF ID FAN BLADES AND TROUBLE WITH THE DRIVE UNITS ON THE ID FANS. THE GUILLOTINE DAMPERS ARE INOPERABLE DUE TO JAMMED GEAR BOXES. THE SEALS AROUND THE DAMPERS HAVE CORRODED CAUSING LEAKAGE OF THE FLUE GAS AND PARTICULATE. THE RUBBER LINING IN IN THE ABSORBER SECTION OF ALL FOUR TRAINS HAS DETACHED IN VARIOUS PLACES. THE VENDOR HAS REPAIRED THE DEFECTIVE SECTIONS. INSTRUMENTATION HAS BEEN A SERIOUS PROBLEM AREA. THE BALL MILL WHICH HAS A CAPACITY OF GRINDING 50 TPH IS ONLY ABLE TO PRODUCE 35 TPH OF LIMESTONE SLURRY.
SEP. 77 AVAILABILITY = 75 PERCENT OPERABILITY = 71 PERCENT RELIABILITY = 71 PERCENT UTILIZATION = 60 PERCENT	609	128	416	591	598	DURING THIS MONTH THE BOILER WAS OPERATED AT A REDUCED LOAD OF ABOUT 300 MW. AT THIS REDUCED LOAD ONLY THREE TRAINS WERE REQUIRED TO SCRUB 100 PERCENT OF THE GAS. SOME SCALING WAS DISCOVERED IN THE ABSORBER COLUMN AND THE ENTRAINMENT SEPARATOR OUTLET OF ONE TRAIN. SERIOUS EROSION PROBLEMS CONTINUE WITH THE ID FAN ROTORS. THE UNIT WENT OFF LINE ON SEPTEMBER 30 FOR A SCHEDULED OUTAGE TO REPAIR BOILER TUBES. DURING THE OUTAGE, AN ATTEMPT WILL BE MADE TO CORRECT MANY OF THE MECHANICAL PROBLEMS.
OCT. 77	SCHEDULED BOILER OUTAGE					UNIT 8 WAS OFFLINE FOR THE ENTIRE MONTH DURING A SCHEDULED OUTAGE FOR REPAIR OF BOILER TUBES. DURING THIS PERIOD, MANY MECHANICAL AND INSTRUMENTAL SCRUBBER PROBLEMS WERE CORRECTED.
NOV. 77 AVAILABILITY = 86 PERCENT OPERABILITY = 88 PERCENT RELIABILITY = 88 PERCENT UTILIZATION = 50 PERCENT	413	353	371	412	313	THE UNIT WAS BROUGHT BACK IN SERVICE ON NOVEMBER 11 FOLLOWING THE SCHEDULED BOILER OUTAGE. ALL ID FANS HAVE BEEN REBUILT. THE GAS LEAKAGE FROM THE DAMPERS WAS CORRECTED BY WELDING A COVER PLATE OVER THE SEAL DOORS. THE VENDOR IS CURRENTLY WORKING ON A NEW DESIGN FOR THE DAMPERS. ALMOST ALL INSTRUMENTATION PROBLEMS CONTINUE TO HAMPER PROPER SCRUBBER OPERATION. * AVAILABILITY WAS CALCULATED FROM NOVEMBER 11 - NOVEMBER 30.
DEC. 77 AVAILABILITY = 56% OPERABILITY = 97% RELIABILITY = 59% UTILIZATION = 56%	426	418	417	414	406	THE UNIT WAS OFF-LINE FROM DECEMBER 20-DECEMBER 31 FOR REPAIRS OF A BOILER TUBE LEAK. DURING THIS OUTAGE, AN INSPECTION OF THE SCRUBBER MODULES WAS MADE. THE RUBBER LINER WAS FOUND MISSING IN SEVERAL AREAS OF ALL FOUR MODULES. THE RUBBER LINER WAS REPAIRED DURING THE OUTAGE.
JAN. 78 AVAILABILITY = 88% OPERABILITY = 96% RELIABILITY = 96% UTILIZATION = 79%	618	609	584	568	600	ALL FOUR SCRUBBER MODULES RETURNED TO SERVICE THIS MONTH FOLLOWING REPAIR WORK ON THE RUBBER LINER. THERE HAVE BEEN MINOR PROBLEMS WITH COOLING LINES FREEZING AND BURSTING. FEED HOPPERS AT THE LIMESTONE STORAGE AREA PLUGGING BECAUSE OF FROZEN GRAVEL, LINERS WEARING OUT IN BALL MILL SUMP PUMPS, AND SOME PLUGGING OF VENTURI SPRAY NOZZLES. INSTRUMENTATION CONTINUES TO BE A MAJOR PROBLEM WITH OPERATION OF THE SCRUBBER.

TABLE 3
PERFORMANCE DESCRIPTION FOR OPERATIONAL FGD SYSTEMS THROUGH 01/78

UTILITY NAME	TEXAS UTILITIES CO.
UNIT NAME	MARTIN LAKE NO. 1
UNIT LOCATION	TATUM TEXAS
UNIT RATING	793 MW
FUEL CHARACTERISTICS	COAL 1.0 PERCENT SULFUR
FGD VENDOR	RESEARCH COTTRELL
PROCESS	LIMESTONE SCRUBBING
NEW OR RETROFIT	NEW
START UP DATE	8/77
FGD STATUS	OPERATIONAL
EFFICIENCY, PARTICULATES	99.4 PERCENT
SO2	70.5 PERCENT (TOTAL)
WATER MAKE UP	
SLUDGE DISPOSAL	STABILIZED/ON-SITE DISPOSAL
UNIT COST	SEE APPENDIX A, FGD SYSTEM ECONOMICS
OPERATIONAL EXPERIENCE	THIS NEW 793-MW POWER GENERATING UNIT FIRES TEXAS LIGNITE WHICH CONTAINS 0.9% SULFUR (AVG) AND 8.0% ASH (AVG.). IN ORDER TO MEET FEDERAL NSPS THE UNIT HAS BEEN EQUIPPED WITH AN EMISSION CONTROL SYSTEM WHICH INCLUDES COLD-SIDE ESP'S AND A LIMESTONE FGD SYSTEM BOTH SUPPLIED BY RESEARCH-COTTRELL. THE FGD SYSTEM CONSISTS OF 6 PACKED/SPRAY TOWER ABSORBERS WHICH TREAT 75% OF THE TOTAL BOILER FLUE GAS. THE REMAINING FLUE GAS IS BYPASSED FOR REHEAT. TOTAL SO2 REMOVAL EFFICIENCY IS 70.5%. THE FLUE GAS CLEANING WASTES ARE STABILIZED AND DISPOSED IN AN ON-SITE, LINED POND.

BACKGROUND INFORMATION
ON
MARTIN LAKE NO. 1

INITIAL OPERATING EXPERIENCE

THE INSTALLATION OF THE LIMESTONE SCRUBBING SYSTEM AND THE ESP WAS OVER IN OCTOBER 77 AS SCHEDULED. THE UTILITY HAS EXPERIENCED SOME DIFFICULTIES IN THE SLURRY HANDLING SYSTEM. THE INITIAL OPERATING PHASE IS EXPECTED TO CONTINUE THROUGH FIRST QUARTER OF 77. COMPLIANCE TESTING WAS CONDUCTED IN LATE 77, AND CERTIFICATION OF COMMERCIAL AVAILABILITY IS AWAITED.

TABLE 4
SUMMARY OF FGD SYSTEMS BY COMPANY

UTILITY	TOTAL NO	TOTAL MW	STATUS: OPERATIONAL NO	OPERATIONAL MW	CONSTRUCTION NO	CONSTRUCTION MW	CONTRACT AWARDED NO	CONTRACT AWARDED MW	PLANNED NO	PLANNED MW
ALABAMA ELECTRIC COOP	2	450.	0	0.	2	450.	0	0.	0	0.
ALLEGHENY POWER SYSTEM	2	1250.	0	0.	2	1250.	0	0.	0	0.
ARIZONA ELECTRIC POWER COOP	2	400.	0	0.	2	400.	0	0.	0	0.
ARIZONA PUBLIC SERVICE	8	2804.	1	115.	1	250.	1	350.	5	2089.
BASIN ELECTRIC POWER COOP	5	2550.	0	0.	0	0.	2	1100.	3	1450.
BIG RIVERS ELECTRIC COOP CORP.	2	490.	0	0.	2	490.	0	0.	0	0.
BOARD OF MUNICIPAL UTILITIES	1	235.	0	0.	0	0.	1	235.	0	0.
BRAZOS ELECTRIC POWER COOP	1	400.	0	0.	1	400.	0	0.	0	0.
CENTRAL ILLINOIS LIGHT CO.	2	800.	0	0.	1	400.	0	0.	1	400.
CENTRAL ILLINOIS PUBLIC SERV	1	575.	0	0.	1	575.	0	0.	0	0.
CENTRAL MAINE POWER CO.	1	600.	0	0.	0	0.	0	0.	1	600.
CINCINNATI GAS & ELECTRIC CO.	1	600.	0	0.	0	0.	1	600.	0	0.
COLORADO UTE ELECTRIC ASSN.	2	900.	0	0.	2	900.	0	0.	0	0.
COLUMBUS & SOUTHERN OHIO ELEC.	4	1550.	1	400.	1	400.	0	0.	2	750.
COMMONWEALTH EDISON	1	425.	0	0.	1	425.	0	0.	0	0.
DELMARVA POWER CO.	1	180.	0	0.	1	180.	0	0.	0	0.
DUQUESNE LIGHT	2	920.	2	920.	0	0.	0	0.	0	0.
EASTERN KENTUCKY POWER COOP	1	500.	0	0.	0	0.	0	0.	1	500.
HOOSIER COOPERATIVE	2	980.	0	0.	0	0.	0	0.	2	980.
INDIANAPOLIS POWER & LIGHT CO.	2	1060.	1	530.	0	0.	0	0.	1	530.
KANSAS CITY POWER & LIGHT	3	1060.	3	1060.	0	0.	0	0.	0	0.
KANSAS POWER & LIGHT	4	1885.	2	525.	2	1360.	0	0.	0	0.
KENTUCKY UTILITIES	1	64.	1	64.	0	0.	0	0.	0	0.
LAKELAND UTILITIES	1	350.	0	0.	0	0.	0	0.	1	350.
LOUISVILLE GAS & ELECTRIC	8	2283.	2	243.	4	1380.	0	0.	2	660.
MINNESOTA POWER AND LIGHT CO.	1	500.	0	0.	0	0.	1	500.	0	0.
MINNKOTA POWER COOPERATIVE	1	450.	1	450.	0	0.	0	0.	0	0.
MONTANA POWER CO.	4	2120.	2	720.	0	0.	2	1400.	0	0.
NEVADA POWER	10	3000.	3	375.	0	0.	0	0.	7	2625.
NEW ENGLAND ELEC SYSTEM	1	650.	0	0.	0	0.	0	0.	1	650.
NIAGARA MOHAWK POWER COOP.	1	100.	0	0.	0	0.	1	100.	0	0.
NORTHERN INDIANA PUB SERVICE	3	705.	1	115.	0	0.	0	0.	2	590.
NORTHERN STATES POWER CO.	4	3140.	2	1420.	0	0.	2	1720.	0	0.
OTTER TAIL POWER COMPANY	1	400.	0	0.	0	0.	1	400.	0	0.
PACIFIC GAS AND ELECTRIC	2	1600.	0	0.	0	0.	0	0.	2	1600.
PACIFIC POWER AND LIGHT CO.	1	509.	0	0.	1	509.	0	0.	0	0.
PENNSYLVANIA POWER CO.	3	2475.	2	1650.	0	0.	1	825.	0	0.
PHILADELPHIA ELECTRIC CO.	4	846.	1	120.	0	0.	0	0.	3	726.
PUBLIC SERVICE CO OF NEW MEX.	4	1715.	0	0.	2	715.	0	0.	2	1000.
PUBLIC SERVICE OF INDIANA	1	650.	0	0.	0	0.	0	0.	1	650.
SALT RIVER PROJECT	3	1050.	0	0.	0	0.	2	700.	1	350.
SOUTH CAROLINA PUBLIC SERVICE	2	580.	1	280.	0	0.	0	0.	1	300.
SOUTHERN ILLINOIS POWER COOP	1	184.	0	0.	1	184.	0	0.	0	0.
SOUTHERN INDIANA GAS&ELECTRIC	1	250.	0	0.	1	250.	0	0.	0	0.
SOUTHERN MISSISSIPPI ELECTRIC	2	360.	0	0.	2	360.	0	0.	0	0.
SPRINGFIELD CITY UTILITIES	1	200.	1	200.	0	0.	0	0.	0	0.
SPRINGFIELD WATER LIGHT&POWER	1	190.	0	0.	0	0.	1	190.	0	0.
TENNESSEE VALLEY AUTHORITY	4	1145.	3	570.	0	0.	1	575.	0	0.
TEXAS MUNICIPAL POWER AGENCY	1	400.	0	0.	0	0.	1	400.	0	0.
TEXAS POWER AND LIGHT CO.	3	2045.	0	0.	1	545.	0	0.	2	1500.
TEXAS UTILITIES CO.	6	4672.	1	793.	3	2336.	1	793.	1	750.
UNITED POWER ASSOCIATION	2	1090.	0	0.	2	1090.	0	0.	0	0.
UTAH POWER & LIGHT CO.	2	815.	0	0.	2	815.	0	0.	0	0.
WISCONSIN POWER & LIGHT CO.	1	527.	0	0.	0	0.	1	527.	0	0.
TOTALS	131	55679.	31	10550.	38	15664.	20	10415.	42	19050.

NOTE - PLANNED STATUS INCLUDES LETTER OF INTENT SIGNED, REQUESTING/EVALUTING BIDS, AND CONSIDERING ONLY FGD SYSTEMS

TABLE 5
SUMMARY OF FGD SYSTEMS BY VENDOR

MANUFACTURER/PROCESS	TOTAL		STATUS: OPERATIONAL		CONSTRUCTION		CONTRACT AWARDED	
	NO.	MW	NO.	MW	NO.	MW	NO.	MW
ADL/COMBUSTION EQUIP ASSOCIATE								
DOUBLE ALKALI SCRUBBING	1	277.	0	0.	1	277.	0	0.
LIME/ALKALINE FLYASH SCRUBBING	5	2570.	3	1170.	0	0.	2	1400.
SODIUM CARBONATE SCRUBBING	3	375.	3	375.	0	0.	0	0.
TOTAL -	9	3222.	6	1545.	1	277.	2	1400.
AMERICAN AIR FILTER								
LIME SCRUBBING	6	1652.	2	242.	4	1410.	0	0.
TOTAL -	6	1652.	2	242.	4	1410.	0	0.
ATOMICS INTERNATIONAL								
AQUEOUS CARBONATE SCRUBBING	1	100.	0	0.	0	0.	1	100.
TOTAL -	1	100.	0	0.	0	0.	1	100.
BABCOCK & WILCOX								
LIME SCRUBBING	3	1850.	0	0.	2	1250.	1	600.
LIMESTONE SCRUBBING	5	1919.	2	1100.	2	584.	1	235.
TOTAL -	8	3769.	2	1100.	4	1834.	2	835.
BUELL/ENVIROTECH								
DOUBLE ALKALI SCRUBBING	1	575.	0	0.	1	575.	0	0.
TOTAL -	1	575.	0	0.	1	575.	0	0.
CHEMICO								
LIME SCRUBBING	6	3385.	4	2570.	2	815.	0	0.
LIME/ALKALINE FLYASH SCRUBBING	1	527.	0	0.	0	0.	1	527.
LIME/LIMESTONE SCRUBBING	1	10.	1	10.	0	0.	0	0.
LIMESTONE SCRUBBING	1	750.	0	0.	1	750.	0	0.
TOTAL -	9	4672.	5	2580.	3	1565.	1	527.
COMBUSTION ENGINEERING								
LIME SCRUBBING	6	1578.	3	305.	3	1273.	0	0.
LIMESTONE SCRUBBING	11	6545.	4	1945.	3	1905.	4	2695.
TOTAL -	17	8123.	7	2250.	6	3178.	4	2695.
DAVY POWERGAS								
WELLMAN LORD	1	180.	0	0.	1	180.	0	0.
TOTAL -	1	180.	0	0.	1	180.	0	0.
DAVY POWERGAS/ALLIED CHEMICAL								
WELLMAN LORD/ALLIED CHEMICAL	3	830.	1	115.	2	715.	0	0.
TOTAL -	3	830.	1	115.	2	715.	0	0.
FMC CORPORATION								
DOUBLE ALKALI SCRUBBING	1	250.	0	0.	1	250.	0	0.
TOTAL -	1	250.	0	0.	1	250.	0	0.
PEABODY ENGINEERING								
LIME/ALKALINE FLYASH SCRUBBING	1	500.	0	0.	0	0.	1	500.
LIMESTONE SCRUBBING	4	1350.	0	0.	4	1350.	0	0.
TOTAL -	5	1850.	0	0.	4	1350.	1	500.
PULLMAN KELLOGG								
LIME SCRUBBING	1	825.	0	0.	0	0.	1	825.
LIMESTONE SCRUBBING	2	700.	0	0.	0	0.	2	700.
TOTAL -	3	1525.	0	0.	0	0.	3	1525.
RESEARCH COTTRELL								
LIMESTONE SCRUBBING	12	5577.	2	908.	5	2236.	5	2433.
TOTAL -	12	5577.	2	908.	5	2236.	5	2433.
RILEY STOKER / ENVIRONEERING								
LIMESTONE SCRUBBING	3	760.	0	0.	3	760.	0	0.
TOTAL -	3	760.	0	0.	3	760.	0	0.
TENNESSEE VALLEY AUTHORITY								
LIMESTONE SCRUBBING	1	550.	1	550.	0	0.	0	0.

TABLE 5
SUMMARY OF FGD SYSTEMS BY VENDOR

MANUFACTURER/PROCESS	TOTAL NO.	TOTAL MW	STATUS: OPERATIONAL NO.	OPERATIONAL MW	CONSTRUCTION NO.	CONSTRUCTION MW	CONTRACT AWARDED NO.	CONTRACT AWARDED MW
TOTAL -	1	550.	1	550.	0	0.	0	0.
UNITED ENGINEERS / PECO								
MAGNESIUM OXIDE SCRUBBING	1	120.	1	120.	0	0.	0	0.
TOTAL -	1	120.	1	120.	0	0.	0	0.
UNIVERSAL OIL PRODUCTS								
LIME SCRUBBING	2	800.	1	400.	1	400.	0	0.
LIME/LIMESTONE SCRUBBING	1	10.	1	10.	0	0.	0	0.
LIMESTONE SCRUBBING	3	1155.	2	730.	1	425.	0	0.
SODIUM CARBONATE SCRUBBING	1	509.	0	0.	1	509.	0	0.
TOTAL -	7	2474.	4	1140.	3	1334.	0	0.
WHEELABRATOR-FRYE/A.I.								
AQUEOUS CARBONATE/FAB. FILTER	1	400.	0	0.	0	0.	1	400.
TOTAL -	1	400.	0	0.	0	0.	1	400.
	89	36629.	31	10550.	38	15664.	20	10415.

TABLE 6
SUMMARY OF NEW AND RETROFIT FGD SYSTEMS BY PROCESS

PROCESS	NEW OR RETROFIT	OPERATIONAL NO.	OPERATIONAL MW	CONSTRUCTION NO.	CONSTRUCTION MW	CONTRACT AWARDED NO.	CONTRACT AWARDED MW	PLANNED NO.	PLANNED MW	TOTAL NO. OF PLANTS NO.	TOTAL NO. OF PLANTS MW
LIME SCRUBBING	N	3	2050	11	4965	2	1425	0	0	16	8440
	R	7	1467	1	183	0	0	2	660	10	2310
LIME/ALKALINE FLYASH SCRUBBING	N	3	1170	0	0	4	2427	0	0	7	3597
	R	0	0	0	0	0	0	3	579	3	579
LIME/LIMESTONE SCRUBBING	N	0	0	0	0	0	0	0	0	0	0
	R	2	20	0	0	0	0	0	0	2	20
LIMESTONE SCRUBBING	N	8	4443	18	7585	11	5488	8	4210	45	21726
	R	3	790	1	425	1	575	0	0	5	1790
SUBTOTAL - LIME/LIMESTONE	N	14.	7663.	29.	12550.	17.	9340.	8.	4210.	68.	33763.
	R	12.	2277.	2.	608.	1.	575.	5.	1239.	20.	4699.
AQUEOUS CARBONATE SCRUBBING	N	0	0	0	0	0	0	0	0	0	0
	R	0	0	0	0	1	100	0	0	1	100
AQUEOUS CARBONATE/FAB. FILTER	N	0	0	0	0	1	400	0	0	1	400
	R	0	0	0	0	0	0	0	0	0	0
DOUBLE ALKALI SCRUBBING	N	0	0	2	825	0	0	0	0	2	825
	R	0	0	1	277	0	0	0	0	1	277
MAGNESIUM OXIDE SCRUBBING	N	0	0	0	0	0	0	0	0	0	0
	R	1	120	0	0	0	0	3	726	4	846
NOT SELECTED	N	0	0	0	0	0	0	18	9000	18	9000
	R	0	0	0	0	0	0	4	2100	4	2100
REGENERABLE NOT SELECTED	N	0	0	0	0	0	0	0	0	0	0
	R	0	0	0	0	0	0	1	650	1	650
SODIUM CARBONATE SCRUBBING	N	1	125	1	509	0	0	1	125	3	759
	R	2	250	0	0	0	0	0	0	2	250
WELLMAN LORD	N	0	0	0	0	0	0	2	1000	2	1000
	R	0	0	1	180	0	0	0	0	1	180
WELLMAN LORD/ALLIED CHEMICAL	N	0	0	1	375	0	0	0	0	1	375
	R	1	115	1	340	0	0	0	0	2	455
TOTALS	N	15.	7788.	33.	14259.	18.	9740.	29.	14335.	95.	46122.
	R	16.	2762.	5.	1405.	2.	675.	13.	4715.	36.	9557.
LIME/LIMESTONE % OF TOTAL MW	N	98		88		96		29		73	
	R	82		43		85		26		49	

TABLE 7
SUMMARY OF OPERATING FGD SYSTEMS BY
PROCESS AND GENERATING UNITS AS OF 01/78

PROCESS/GENERATING UNITS	FGD/MW	STARTUP	EXPERIENCE(MO.)
LIME SCRUBBING			
BRUCE MANSFIELD NO. 1	825	4-76	21
BRUCE MANSFIELD NO. 2	825	7-77	6
CANE RUN NO 4	178	8-76	17
CONESVILLE NO 5	400	1-77	12
ELRAMA POWER STATION	510	10-75	27
GREEN RIVER NOS. 1 2 AND 3	64	9-75	28
HAWTHORN NO. 3	140	11-72	62
HAWTHORN NO. 4	100	8-72	65
PADDYS RUN NO 6	65	4-73	57
PHILLIPS POWER STATION	410	7-73	54
	3517.		349
LIME/ALKALINE FLYASH SCRUBBING			
COLSTRIP NO 1	360	11-75	26
COLSTRIP NO 2	360	7-76	18
MILTON R. YOUNG NO. 2	450	9-77	4
	1170.		48
LIME/LIMESTONE SCRUBBING			
SHAWNEE NO.10A	10	4-72	69
SHAWNEE NO.10B	10	4-72	69
	20.		138
LIMESTONE SCRUBBING			
CHOLLA NO 1	115	10-73	51
LA CYGNE NO 1	820	2-73	59
LAWRENCE NO 4	125	12-68	109
LAWRENCE NO 5	400	11-71	74
MARTIN LAKE NO. 1	793	8-77	5
PETERSBURG NO 3	530	10-77	3
SHERBURNE COUNTY STATION NO.1	710	3-76	22
SHERBURNE COUNTY STATION NO.2	710	4-77	9
SOUTHWEST NO. 1	200	4-77	9
WIDOWS CREEK NO. 8	550	5-77	8
WINYAH NO. 2	280	7-77	6
	5233.		355
MAGNESIUM OXIDE SCRUBBING			
EDDYSTONE NO. 1A	120	9-75	28
	120.		28
SODIUM CARBONATE SCRUBBING			
REID GARDNER NO 1	125	4-74	45
REID GARDNER NO 2	125	4-74	45
REID GARDNER NO 3	125	7-76	18
	375.		108
WELLMAN LORD/ALLIED CHEMICAL			
D.H. MITCHELL NO.11	115	6-77	7
	115.		7

TABLE 8
SUMMARY OF SLUDGE DISPOSAL PRACTICES FOR OPERATIONAL FGD SYSTEMS AS OF 01/78

PROCESS/GENERATING UNIT	--SLUDGE-- STABILIZED	--SLUDGE-- UNSTABILIZED	---POND--- LINED	---POND--- UNLINED
LIME SCRUBBING				
BRUCE MANSFIELD NO. 1	825			
BRUCE MANSFIELD NO. 2	825			
CANE RUN NO 4	178			178
CONESVILLE NO 5	400			400
ELRAMA POWER STATION	510			510
GREEN RIVER NOS. 1 2 AND 3		64		64
HAWTHORN NO. 3		140		140
HAWTHORN NO. 4		100		100
PADDYS RUN NO 6	65			65
PHILLIPS POWER STATION	410			410
TOTAL	3213.	304.	0.	1867.
LIME/ALKALINE FLYASH SCRUBBING				
COLSTRIP NO 1		360	360	
COLSTRIP NO 2		360		360
MILTON R. YOUNG NO. 2		450		
TOTAL	0.	1170.	360.	360.
LIMESTONE SCRUBBING				
CHOLLA NO 1		115		115
LA CYGNE NO 1		820		820
LAWRENCE NO 4		125		125
LAWRENCE NO 5		400		400
MARTIN LAKE NO. 1	793		793	
PETERSBURG NO 3	530			530
SHERBURNE COUNTY STATION NO.1		710	710	
SHERBURNE COUNTY STATION NO.2		710	710	
WIDOWS CREEK NO. 8		550		550
WINYAH NO. 2		280		280
TOTAL	1323.	3710.	2213.	2820.
SODIUM CARBONATE SCRUBBING				
REID GARDNER NO 1		125		
REID GARDNER NO 2		125		
REID GARDNER NO 3		125		
TOTAL	0.	375.	0.	0.

TABLE 9
SUMMARY OF FGD SYSTEMS BY PROCESS AND REGULATORY CLASS

PROCESS	REGULATORY CLASS	OPERATIONAL NO.	OPERATIONAL MW	CONSTRUCTION NO.	CONSTRUCTION MW	CONTRACT AWARDED NO.	CONTRACT AWARDED MW	PLANNED NO.	PLANNED MW	TOTAL NO. PLANTS NO.	TOTAL NO. PLANTS MW
LIME SCRUBBING	A	0	0	9	4140	1	600	0	0	10	4740
	B	8	3388	3	1008	1	825	2	660	14	5881
	C	2	129	0	0	0	0	0	0	2	129
	D	0	0	0	0	0	0	0	0	0	0
	E	0	0	0	0	0	0	0	0	0	0
LIME/ALKALINE FLYASH SCRUBBING	A	0	0	0	0	2	1027	0	0	2	1027
	B	3	1170	0	0	2	1400	3	579	8	3149
	C	0	0	0	0	0	0	0	0	0	0
	D	0	0	0	0	0	0	0	0	0	0
	E	0	0	0	0	0	0	0	0	0	0
LIME/LIMESTONE SCRUBBING	A	0	0	0	0	0	0	0	0	0	0
	B	0	0	0	0	0	0	0	0	0	0
	C	2	20	0	0	0	0	0	0	2	20
	D	0	0	0	0	0	0	0	0	0	0
	E	0	0	0	0	0	0	0	0	0	0
LIMESTONE SCRUBBING	A	4	1803	11	4675	4	1618	5	2260	24	10356
	B	5	2060	7	2910	6	3520	3	1950	21	10440
	C	2	1570	1	425	1	575	0	0	4	2370
	D	0	0	0	0	0	0	0	0	0	0
	E	0	0	0	0	1	350	0	0	1	350
SUBTOTAL - LIME/LIMESTONE	A	4.	1803.	20.	8815.	7.	3245.	5.	2260.	36.	16123.
	B	16.	6618.	10.	3918.	9.	5745.	8.	3189.	43.	19470.
	C	6.	1519.	1.	425.	1.	575.	0.	0.	8.	2519.
	D	0.	0.	0.	0.	0.	0.	0.	0.	0.	0.
	E	0.	0.	0.	0.	1.	350.	0.	0.	1.	350.
AQUEOUS CARBONATE SCRUBBING	A	0	0	0	0	0	0	0	0	0	0
	B	0	0	0	0	0	0	0	0	0	0
	C	0	0	0	0	1	100	0	0	1	100
	D	0	0	0	0	0	0	0	0	0	0
	E	0	0	0	0	0	0	0	0	0	0
AQUEOUS CARBONATE/FAB. FILTER	A	0	0	0	0	0	0	0	0	0	0
	B	0	0	0	0	1	400	0	0	1	400
	C	0	0	0	0	0	0	0	0	0	0
	D	0	0	0	0	0	0	0	0	0	0
	E	0	0	0	0	0	0	0	0	0	0
DOUBLE ALKALI SCRUBBING	A	0	0	2	825	0	0	0	0	2	825
	B	0	0	1	277	0	0	0	0	1	277
	C	0	0	0	0	0	0	0	0	0	0
	D	0	0	0	0	0	0	0	0	0	0
	E	0	0	0	0	0	0	0	0	0	0
MAGNESIUM OXIDE SCRUBBING	A	0	0	0	0	0	0	0	0	0	0
	B	1	120	0	0	0	0	3	726	4	846
	C	0	0	0	0	0	0	0	0	0	0
	D	0	0	0	0	0	0	0	0	0	0
	E	0	0	0	0	0	0	0	0	0	0

A. BOILER CONSTRUCTED SUBJECT TO FEDERAL NSPS
B. BOILER SUBJECT TO STATE STANDARD THAT IS MORE STRINGENT THAN THE FEDERAL NSPS
C. BOILER SUBJECT TO STATE STANDARD THAT IS EQUAL TO OR LESS STRINGENT THAN NSPS
D. OTHER
E. REGULATORY CLASS UNKNOWN

TABLE 9
SUMMARY OF FGD SYSTEMS BY PROCESS AND REGULATORY CLASS

PROCESS	REGULATORY CLASS	OPERATIONAL NO.	OPERATIONAL MW	CONSTRUCTION NO.	CONSTRUCTION MW	CONTRACT AWARDED NO.	CONTRACT AWARDED MW	PLANNED NO.	PLANNED MW	TOTAL NO. PLANTS NO.	TOTAL NO. PLANTS MW
NOT SELECTED	A	0	0	0	0	0	0	7	4300	7	4300
	B	0	0	0	0	0	0	13	6210	13	6210
	C	0	0	0	0	0	0	2	590	2	590
	D	0	0	0	0	0	0	0	0	0	0
	E	0	0	0	0	0	0	0	0	0	0
REGENERABLE NOT SELECTED	A	0	0	0	0	0	0	0	0	0	0
	B	0	0	0	0	0	0	0	0	0	0
	C	0	0	0	0	0	0	1	650	1	650
	D	0	0	0	0	0	0	0	0	0	0
	E	0	0	0	0	0	0	0	0	0	0
SODIUM CARBONATE SCRUBBING	A	0	0	0	0	0	0	0	0	0	0
	B	3	375	1	509	0	0	1	125	5	1009
	C	0	0	0	0	0	0	0	0	0	0
	D	0	0	0	0	0	0	0	0	0	0
	E	0	0	0	0	0	0	0	0	0	0
WELLMAN LORD	A	0	0	0	0	0	0	0	0	0	0
	B	0	0	0	0	0	0	2	1000	2	1000
	C	0	0	1	180	0	0	0	0	1	180
	D	0	0	0	0	0	0	0	0	0	0
	E	0	0	0	0	0	0	0	0	0	0
WELLMAN LORD/ALLIED CHEMICAL	A	0	0	0	0	0	0	0	0	0	0
	B	0	0	2	715	0	0	0	0	2	715
	C	1	115	0	0	0	0	0	0	1	115
	D	0	0	0	0	0	0	0	0	0	0
	E	0	0	0	0	0	0	0	0	0	0
TOTALS	A	4.	1803.	22.	9640.	7.	3245.	12.	6560.	45.	21248.
	B	20.	7113.	14.	5419.	10.	6145.	27.	11250.	71.	29927.
	C	7.	1634.	2.	605.	2.	675.	3.	1240.	14.	4154.
	D	0.	0.	0.	0.	0.	0.	0.	0.	0.	0.
	E	0.	0.	0.	0.	1.	350.	0.	0.	1.	350.
LIME/STONE % OF TOTAL MW	A	100		91		100		34		76	
	B	93		72		93		28		65	
	C	93		70		85		0		61	
	D	0		0		0		0		0	
	E	0		0		100		0		100	

A. BOILER CONSTRUCTED SUBJECT TO FEDERAL NSPS
B. BOILER SUBJECT TO STATE STANDARD THAT IS MORE STRINGENT THAN THE FEDERAL NSPS
C. BOILER SUBJECT TO STATE STANDARD THAT IS EQUAL TO OR LESS STRINGENT THAN NSPS
D. OTHER
E. REGULATORY CLASS UNKNOWN

TABLE 10
SUMMARY OF FGD SYSTEMS UNDER CONSTRUCTION AS OF 01/78

UTILITY COMPANY POWER STATION	NEW OR RETROFIT	SIZE OF FGD UNIT (MW)	PROCESS/VENDOR	START-UP DATE
ALABAMA ELECTRIC COOP TOMBIGBEE NO. 2	N	225	PEABODY ENGINEERING LIMESTONE SCRUBBING	6/78
ALABAMA ELECTRIC COOP TOMBIGBEE NO. 3	N	225	PEABODY ENGINEERING LIMESTONE SCRUBBING	6/79
ALLEGHENY POWER SYSTEM PLEASANTS NO. 1	N	625	BABCOCK & WILCOX LIME SCRUBBING	3/79
ALLEGHENY POWER SYSTEM PLEASANTS NO. 2	N	625	BABCOCK & WILCOX LIME SCRUBBING	3/80
ARIZONA ELECTRIC POWER COOP APACHE NO 2	N	200	RESEARCH COTTRELL LIMESTONE SCRUBBING	6/78
ARIZONA ELECTRIC POWER COOP APACHE NO 3	N	200	RESEARCH COTTRELL LIMESTONE SCRUBBING	4/79
ARIZONA PUBLIC SERVICE CHOLLA NO 2	N	250	RESEARCH COTTRELL LIMESTONE SCRUBBING	6/78
BIG RIVERS ELECTRIC COOP CORP. REID NO. 2	N	250	AMERICAN AIR FILTER LIME SCRUBBING	12/79
BIG RIVERS ELECTRIC COOP CORP. REID NO. 3	N	240	AMERICAN AIR FILTER LIME SCRUBBING	12/80
BRAZOS ELECTRIC POWER COOP SAN MIGUEL NO. 1	N	400	BABCOCK & WILCOX LIMESTONE SCRUBBING	12/79
CENTRAL ILLINOIS LIGHT CO. DUCK CREEK NO. 1	N	400	RILEY STOKER / ENVIRONEERING LIMESTONE SCRUBBING	8/78
CENTRAL ILLINOIS PUBLIC SERV NEWTON NO.1	N	575	BUELL/ENVIROTECH DOUBLE ALKALI SCRUBBING	11/79
COLORADO UTE ELECTRIC ASSN. CRAIG NO. 1	N	450	PEABODY ENGINEERING LIMESTONE SCRUBBING	3/79
COLORADO UTE ELECTRIC ASSN. CRAIG NO. 2	N	450	PEABODY ENGINEERING LIMESTONE SCRUBBING	3/79
COLUMBUS & SOUTHERN OHIO ELEC. CONESVILLE NO 6	N	400	UNIVERSAL OIL PRODUCTS LIME SCRUBBING	10/78
COMMONWEALTH EDISON POWERTON NO. 51	R	425	UNIVERSAL OIL PRODUCTS LIMESTONE SCRUBBING	12/79
DELMARVA POWER CO. DELAWARE CITY NOS. 1 2 & 3	R	180	DAVY POWERGAS WELLMAN LORD	4/80
KANSAS POWER & LIGHT JEFFERY NO. 1	N	680	COMBUSTION ENGINEERING LIMESTONE SCRUBBING	6/78
KANSAS POWER & LIGHT JEFFERY NO. 2	N	680	COMBUSTION ENGINEERING LIMESTONE SCRUBBING	6/80
LOUISVILLE GAS & ELECTRIC CANE RUN NO 5	R	183	COMBUSTION ENGINEERING LIME SCRUBBING	4/78
LOUISVILLE GAS & ELECTRIC CANE RUN NO 6	R	277	ADL/COMBUSTION EQUIP ASSOCIATE DOUBLE ALKALI SCRUBBING	11/79
LOUISVILLE GAS & ELECTRIC MILL CREEK NO 3	N	425	AMERICAN AIR FILTER LIME SCRUBBING	4/78
LOUISVILLE GAS & ELECTRIC MILL CREEK NO 4	N	495	AMERICAN AIR FILTER LIME SCRUBBING	6/80
PACIFIC POWER AND LIGHT CO. JIM BRIDGER NO. 4	N	509	UNIVERSAL OIL PRODUCTS SODIUM CARBONATE SCRUBBING	9/79

TABLE 10
SUMMARY OF FGD SYSTEMS UNDER CONSTRUCTION AS OF 01/78

UTILITY COMPANY POWER STATION	NEW OR RETROFIT	SIZE OF FGD UNIT (MW)	PROCESS/VENDOR	START-UP DATE
PUBLIC SERVICE CO OF NEW MEX. SAN JUAN NO. 1	N	375	DAVY POWERGAS/ALLIED CHEMICAL WELLMAN LORD/ALLIED CHEMICAL	4/78
PUBLIC SERVICE CO OF NEW MEX. SAN JUAN NO. 2	R	340	DAVY POWERGAS/ALLIED CHEMICAL WELLMAN LORD/ALLIED CHEMICAL	7/78
SOUTHERN ILLINOIS POWER COOP MARION NO. 4	N	184	BABCOCK & WILCOX LIMESTONE SCRUBBING	6/78
SOUTHERN INDIANA GAS&ELECTRIC A.B. BROWN NO.1	N	250	FMC CORPORATION DOUBLE ALKALI SCRUBBING	4/79
SOUTHERN MISSISSIPPI ELECTRIC R.D. MORROW NO.1	N	180	RILEY STOKER / ENVIRONEERING LIMESTONE SCRUBBING	5/78
SOUTHERN MISSISSIPPI ELECTRIC R.D. MORROW NO.2	N	180	RILEY STOKER / ENVIRONEERING LIMESTONE SCRUBBING	8/78
TEXAS POWER AND LIGHT CO. SANDOW NO.4	N	545	COMBUSTION ENGINEERING LIMESTONE SCRUBBING	7/80
TEXAS UTILITIES CO. MARTIN LAKE NO. 2	N	793	RESEARCH CUTTRELL LIMESTONE SCRUBBING	2/78
TEXAS UTILITIES CO. MARTIN LAKE NO. 3	N	793	RESEARCH CUTTRELL LIMESTONE SCRUBBING	12/78
TEXAS UTILITIES CO. MONTICELLO NO.3	N	750	CHEMICO LIMESTONE SCRUBBING	2/78
UNITED POWER ASSOCIATION COAL CREEK NO. 1	N	545	COMBUSTION ENGINEERING LIME SCRUBBING	11/78
UNITED POWER ASSOCIATION COAL CREEK NO. 2	N	545	COMBUSTION ENGINEERING LIME SCRUBBING	11/79
UTAH POWER & LIGHT CO. EMERY NO.1	N	400	CHEMICO LIME SCRUBBING	12/78
UTAH POWER & LIGHT CO. HUNTINGTON NO.1	N	415	CHEMICO LIME SCRUBBING	4/78

TABLE 11
SUMMARY OF PLANNED FGD SYSTEMS AS OF 01/78

UTILITY COMPANY POWER STATION	NEW OR RETROFIT	SIZE OF FGD UNIT (MW)	VENDOR/PROCESS	START-UP DATE
CONTRACTS AWARDED				
ARIZONA PUBLIC SERVICE CHOLLA NO. 4		350	RESEARCH COTTRELL LIMESTONE SCRUBBING	6/80
BASIN ELECTRIC POWER COOP LARAMIE RIVER NO. 1	N	550	RESEARCH COTTRELL LIMESTONE SCRUBBING	4/80
BASIN ELECTRIC POWER COOP LARAMIE RIVER NO. 2	N	550	RESEARCH COTTRELL LIMESTONE SCRUBBING	10/80
BOARD OF MUNICIPAL UTILITIES SIKESTON POWER STATION	N	235	BABCOCK & WILCOX LIMESTONE SCRUBBING	11/80
CINCINNATI GAS & ELECTRIC CO. EAST BEND NO 2	N	600	BABCOCK & WILCOX LIME SCRUBBING	1/81
MINNESOTA POWER AND LIGHT CO. CLAY BOSWELL NO. 4	N	500	PEABODY ENGINEERING LIME/ALKALINE FLYASH SCRUBBING	0/80
MONTANA POWER CO. COLSTRIP NO. 3	N	700	ADL/COMBUSTION EQUIP ASSOCIATE LIME/ALKALINE FLYASH SCRUBBING	7/80
MONTANA POWER CO. COLSTRIP NO. 4	N	700	ADL/COMBUSTION EQUIP ASSOCIATE LIME/ALKALINE FLYASH SCRUBBING	7/81
NIAGARA MOHAWK POWER COOP. CHARLES R. HUNTLEY NO.6	R	100	ATOMICS INTERNATIONAL AQUEOUS CARBONATE SCRUBBING	0/80
NORTHERN STATES POWER CO. SHERBURNE COUNTY STATION NO.3	N	860	COMBUSTION ENGINEERING LIMESTONE SCRUBBING	5/81
NORTHERN STATES POWER CO. SHERBURNE COUNTY STATION NO.4	N	860	COMBUSTION ENGINEERING LIMESTONE SCRUBBING	5/83
OTTER TAIL POWER COMPANY COYOTE NO. 1	N	400	WHEELABRATOR-FRYE/A.I. AQUEOUS CARBONATE/FAB. FILTER	5/81
PENNSYLVANIA POWER CO. BRUCE MANSFIELD NO. 3	N	825	PULLMAN KELLOGG LIME SCRUBBING	4/80
SALT RIVER PROJECT CORONADO NO.1	N	350	PULLMAN KELLOGG LIMESTONE SCRUBBING	4/79
SALT RIVER PROJECT CORONADO NO.2	N	350	PULLMAN KELLOGG LIMESTONE SCRUBBING	4/80
SPRINGFIELD WATER LIGHT&POWER DALLMAN NO. 3	N	190	RESEARCH COTTRELL LIMESTONE SCRUBBING	7/80
TENNESSEE VALLEY AUTHORITY WIDOWS CREEK NO. 7	R	575	COMBUSTION ENGINEERING LIMESTONE SCRUBBING	0/ 0
TEXAS MUNICIPAL POWER AGENCY GIBBONS CREEK UNIT NO. 1	N	400	COMBUSTION ENGINEERING LIMESTONE SCRUBBING	1/82
TEXAS UTILITIES CO. MARTIN LAKE NO. 4	N	793	RESEARCH COTTRELL LIMESTONE SCRUBBING	11/82
WISCONSIN POWER & LIGHT CO. COLUMBIA NO. 2	N	527	CHEMICO LIME/ALKALINE FLYASH SCRUBBING	1/80
LETTER OF INTENT SIGNED				
NEVADA POWER REID GARDNER NO 4	N	125	ADL/COMBUSTION EQUIP ASSOCIATE SODIUM CARBONATE SCRUBBING	0/ 0
PHILADELPHIA ELECTRIC CO. EDDYSTONE NO. 1B	R	240	UNITED ENGINEERS / PECO MAGNESIUM OXIDE SCRUBBING	6/80
PUBLIC SERVICE CO OF NEW MEX. SAN JUAN NO. 3	N	500	DAVY POWERGAS WELLMAN LORD	1/79

TABLE 11
SUMMARY OF PLANNED FGD SYSTEMS AS OF 01/78

UTILITY COMPANY POWER STATION	NEW OR RETROFIT	SIZE OF FGD UNIT (MW)	VENDOR/PROCESS	START-UP DATE
REQUESTING/EVALUATING BIDS				
EASTERN KENTUCKY POWER COOP SPURLOCK GENERATING PLANT NO.2	N	500	NOT SELECTED NOT SELECTED	3/80
HOOSIER COOPERATIVE MEROM NO. 1	N	490	NOT SELECTED LIMESTONE SCRUBBING	0/80
HOOSIER COOPERATIVE MEROM NO. 2	N	490	NOT SELECTED LIMESTONE SCRUBBING	0/81
INDIANAPOLIS POWER & LIGHT CO. PETERSBURG NO 4	N	530	NOT SELECTED LIMESTONE SCRUBBING	4/82
LAKELAND UTILITIES MCINTOSH POWER PLANT UNIT NO.3	N	350	NOT SELECTED LIMESTONE SCRUBBING	10/81
SOUTH CAROLINA PUBLIC SERVICE WINYAH NO. 3	N	300	NOT SELECTED NOT SELECTED	0/80
CONSIDERING FGD SYSTEM				
ARIZONA PUBLIC SERVICE FOUR CORNERS NO. 1	R	175	CHEMICO/APS LIME/ALKALINE FLYASH SCRUBBING	0/ 0
ARIZONA PUBLIC SERVICE FOUR CORNERS NO. 2	R	175	CHEMICO/APS LIME/ALKALINE FLYASH SCRUBBING	0/ 0
ARIZONA PUBLIC SERVICE FOUR CORNERS NO. 3	R	229	CHEMICO/APS LIME/ALKALINE FLYASH SCRUBBING	0/ 0
ARIZONA PUBLIC SERVICE FOUR CORNERS NO. 4	R	755	NOT SELECTED NOT SELECTED	0/ 0
ARIZONA PUBLIC SERVICE FOUR CORNERS NO. 5	R	755	NOT SELECTED NOT SELECTED	0/ 0
BASIN ELECTRIC POWER COOP ANTELOPE VALLEY NO. 1	N	450	NOT SELECTED NOT SELECTED	0/81
BASIN ELECTRIC POWER COOP ANTELOPE VALLEY NO. 2	N	450	NOT SELECTED NOT SELECTED	0/83
BASIN ELECTRIC POWER COOP LARAMIE RIVER NO. 3	N	550	NOT SELECTED NOT SELECTED	6/83
CENTRAL ILLINOIS LIGHT CO. DUCK CREEK NO.2	N	400	NOT SELECTED LIMESTONE SCRUBBING	1/82
CENTRAL MAINE POWER CO. BEARS ISLAND NO. 1	N	600	NOT SELECTED NOT SELECTED	11/86
COLUMBUS & SOUTHERN OHIO ELEC. POSTON NO. 5	N	375	NOT SELECTED NOT SELECTED	0/81
COLUMBUS & SOUTHERN OHIO ELEC. POSTON NO. 6	N	375	NOT SELECTED NOT SELECTED	0/83
LOUISVILLE GAS & ELECTRIC MILL CREEK NO 1	R	330	NOT SELECTED LIME SCRUBBING	1/82
LOUISVILLE GAS & ELECTRIC MILL CREEK NO 2	R	330	NOT SELECTED LIME SCRUBBING	1/81
NEVADA POWER HARRY ALLEN STATION NO. 1	N	500	NOT SELECTED NOT SELECTED	6/83
NEVADA POWER HARRY ALLEN STATION NO. 2	N	500	NOT SELECTED NOT SELECTED	6/84
NEVADA POWER HARRY ALLEN STATION NO. 3	N	500	NOT SELECTED NOT SELECTED	6/85

TABLE 11
SUMMARY OF PLANNED FGD SYSTEMS AS OF 01/78

UTILITY COMPANY POWER STATION	NEW OR RETROFIT	SIZE OF FGD UNIT (MW)	VENDOR/PROCESS	START-UP DATE
NEVADA POWER HARRY ALLEN STATION NO. 4	N	500	NOT SELECTED NOT SELECTED	6/86
NEVADA POWER WARNER VALLEY STATION NO. 1	N	250	NOT SELECTED NOT SELECTED	6/82
NEVADA POWER WARNER VALLEY STATION NO. 2	N	250	NOT SELECTED NOT SELECTED	6/83
NEW ENGLAND ELEC SYSTEM BRAYTON POINT NO.3	R	650	NOT SELECTED REGENERABLE NOT SELECTED	0/ 0
NORTHERN INDIANA PUB SERVICE BAILLY NO. 7	R	190	NOT SELECTED NOT SELECTED	0/ 0
NORTHERN INDIANA PUB SERVICE BAILLY NO. 8	R	400	NOT SELECTED NOT SELECTED	0/ 0
PACIFIC GAS AND ELECTRIC FOSSIL NO. 1	N	800	NOT SELECTED LIMESTONE SCRUBBING	0/84
PACIFIC GAS AND ELECTRIC FOSSIL NO. 2	N	800	NOT SELECTED LIMESTONE SCRUBBING	0/85
PHILADELPHIA ELECTRIC CO. CROMBY	R	150	UNITED ENGINEERS / PECO MAGNESIUM OXIDE SCRUBBING	6/80
PHILADELPHIA ELECTRIC CO. EDDYSTONE NO. 2	R	336	UNITED ENGINEERS / PECO MAGNESIUM OXIDE SCRUBBING	6/80
PUBLIC SERVICE CO OF NEW MEX. SAN JUAN NO. 4	N	500	DAVY POWERGAS WELLMAN LORD	5/81
PUBLIC SERVICE OF INDIANA GIBSON 5	N	650	NOT SELECTED NOT SELECTED	0/82
SALT RIVER PROJECT CORONADO NO.3	N	350	NOT SELECTED LIMESTONE SCRUBBING	0/97
TEXAS POWER AND LIGHT CO. TWIN OAKS NO. 1	N	750	NOT SELECTED NOT SELECTED	8/83
TEXAS POWER AND LIGHT CO. TWIN OAKS NO. 2	N	750	NOT SELECTED NOT SELECTED	9/84
TEXAS UTILITIES CO. FOREST GROVE NO. 1	N	750	NOT SELECTED NOT SELECTED	0/81

CONTENTS - TABLE 12

UTILITY COMPANY POWER STATION	SIZE OF FGD RETROFIT UNIT (MW)	PROCESS/VENDOR	PAGE NO.
ARIZONA PUBLIC SERVICE FOUR CORNERS NO. 5A	160	SO. CALIFORNIA EDISON LIME SCRUBBING	192
BOSTON EDISON MYSTIC NO 6	150	CHEMICO MAGNESIUM OXIDE SCRUBBING	195
CENTRAL ILLINOIS LIGHT CO. DUCK CREEK NO. 1A	100	RILEY STOKER / ENVIRONEERING LIMESTONE SCRUBBING	198
COMMONWEALTH EDISON WILL COUNTY NO 1	167	BABCOCK & WILCOX LIMESTONE SCRUBBING	201
DAIRYLAND POWER COOP ALMA STATION	80	FOSTER WHEELER LIME INJECTION	212
DETROIT EDISON ST. CLAIR NO 6	163	PEABODY ENGINEERING LIMESTONE SCRUBBING	213
GULF POWER CO. SCHOLZ NO. 1A	20	ADL/COMBUSTION EQUIP ASSOCIATE DOUBLE ALKALI SCRUBBING	217
GULF POWER CO. SCHOLZ NO. 2A	20	FOSTER WHEELER ACTIVATED CARBON	220
GULF POWER CO. SCHOLZ NOS. 1B & 2B	23	CHIYODA INTERNATIONAL THOROUGHBRED 101	223
ILLINOIS POWER WOOD RIVER NO 4	110	MONSANTO ENVIRO CHEM SYSTEMS CATALYTIC OXIDATION	227
KEY WEST UTILITY BOARD STOCK ISLAND PLANT	37	ZURN AIR SYSTEMS LIMESTONE SCRUBBING	230
POTOMAC ELECTRIC & POWER DICKERSON NO. 3	95	CHEMICO MAGNESIUM OXIDE SCRUBBING	233
PUBLIC SERVICE CO OF COLORADO VALMONT NO. 5	50	UOP/PUB SERVICE OF COLORADO LIMESTONE SCRUBBING	236
SOUTHERN CALIFORNIA EDISON MOHAVE NO 1A	170	UNIVERSAL OIL PRODUCTS LIMESTONE SCRUBBING	239
SOUTHERN CALIFORNIA EDISON MOHAVE NO. 2A	160	SCE/STEARNS ROGER LIME SCRUBBING	240
TENNESSEE VALLEY AUTHORITY SHAWNEE NO. 10C	10	TENNESSEE VALLEY AUTHORITY LIME/LIMESTONE SCRUBBING	244
UNION ELECTRIC CO. MEREMAC NO. 2	140	COMBUSTION ENGINEERING LIMESTONE INJECTION/WET SCRUB	246

TABLE 12
DESCRIPTION OF TERMINATED FGD SYSTEMS 01/78

UTILITY NAME	ARIZONA PUBLIC SERVICE
UNIT NAME	FOUR CORNERS NO. 5A
UNIT LOCATION	FARMINGTON NEW MEXICO
UNIT RATING	160 MW
FUEL CHARACTERISTICS	COAL 0.7 PERCENT SULFUR
FGD VENDOR	SO. CALIFORNIA EDISON
PROCESS	LIME SCRUBBING
NEW OR RETROFIT	RETROFIT
START UP DATE	2/76
FGD STATUS	TERMINATED
EFFICIENCY, PARTICULATES	
SO2	
WATER MAKE UP	
SLUDGE DISPOSAL	
UNIT COST	
OPERATIONAL EXPERIENCE	REFER TO THE BACKGROUND INFORMATION SECTION IN TABLE 12 OF THE REPORT. THIS MODULE WAS ORIGINALLY INSTALLED AT THE MOHAVE GENERATING STATION AND OPERATED DURING THE TEST MODULES EVALUATION PROGRAM. THE UNIT WAS THEN SHUTDOWN, MOVED FROM THE MOHAVE TEST SITE, AND REASSEMBLED AT THE FOUR CORNERS STATION OF APS. THE MODULE WAS IN SERVICE DURING SEGMENTS FROM FEB. 1976 TO DEC. 6, 1976, TREATING APPROXIMATELY 20 PERCENT OF THE FLUE GAS FLOW FROM THE 755-MW RATED UNIT. THE PROGRAM HAS BEEN TERMINATED AND THE MODULE DISASSEMBLED.

BACKGROUND INFORMATION
ON
FOUR CORNERS NO. 5A - EXPERIMENTAL HORIZONTAL SCRUBBER

THE FOUR CORNERS POWER STATION, LOCATED NEAR FARMINGTON, NEW MEXICO, IS JOINTLY OWNED BY THE ARIZONA PUBLIC SERVICE COMPANY AND THE SOUTHERN CALIFORNIA EDISON COMPANY. THIS STATION CONTAINS FIVE COAL-FIRED BOILERS WITH AN EQUIVALENT ELECTRIC POWER GENERATING CAPACITY OF 2233-MW. ONLY UNIT NO. 5 IS RETROFITTED WITH AN FGD SYSTEM.

UNIT NO. 5 IS A COAL-FIRED BOILER CAPABLE OF GENERATING 5,44,000 LBS. OF STEAM, WHICH IS EQUIVALENT TO 800-MW OF NET ELECTRICAL POWER. THIS UNIT WAS FIRST PLACED IN COMMERCIAL OPERATION JULY 1970. APPROXIMATELY 20 PERCENT OF THE FLUE GAS GENERATED BY THIS BOILER IS BEING SCRUBBED INITIALLY IN ORDER TO ESTABLISH WHAT SULFUR DIOXIDE AND PARTICULATE REMOVAL EFFICIENCIES CAN BE OBTAINED.

THE FGD SYSTEM WHICH HAS BEEN RETROFITTED ON UNIT NO. 5 IS THE WEIR HORIZONTAL CROSSFLOW SPRAY SCRUBBER WHICH WAS FORMERLY INSTALLED AND OPERATED IN A TEST PROGRAM AT THE MOHAVE GENERATING STATION OF THE SOUTHERN CALIFORNIA EDISON COMPANY (SEE MOHAVE NO. 2A IN TABLE 16 OF THIS REPORT).

DURING THE MOHAVE TEST PROGRAM THE HORIZONTAL MODULE WAS OPERATIONAL FROM NOVEMBER 1, 1973, TO JANUARY 16,1974, FOR SHAKEDOWN PURPOSES. OVER THE COURSE OF THE ACTUAL TEST PROGRAM, WHICH EXTENDED FROM JANUARY 16, 1974, TO FEBRUARY 9, 1975, THE PROTOTYPE UNIT OPERATED A TOTAL OF 5,927 HOURS IN VARIOUS TEST MODES. FOLLOWING COMPLETION OF TESTS, THE MODULE WAS SHUT DOWN, DISMANTLED, TRANSPORTED, AND REASSEMBLED AT THE FOUR CORNERS GENERATING STATION OF ARIZONA PUBLIC SERVICE FOR FURTHER TESTING.

THE HORIZONTAL MODULE IS A FOUR-STAGE SCRUBBING CHAMBER WITH FOLLOWING DIMENSIONS: LENGTH - 48 FEET, WIDTH - 28 FEET, HEIGHT - 15 FEET. THE MODULE ITSELF IS A HOLLOW CHAMBER CONSISTING OF FOUR STAGES OF CROSSFLOW SPRAY NOZZLES. EACH STAGE CONTAINS A ROW OF 36 EXTERNALLY-MOUNTED NOZZLES. THE SLURRY IS CYCLED THROUGH THE SCRUBBER IN A COUNTERCURRENT MANNER AT A RATE OF 36,000 GPM/STAGE. FRESH LIME SLURRY IS SPRAYED ACROSS THE FLUE GAS AT THE FOURTH STAGE, WHICH IS THE DISCHARGE END OF THE SCRUBBING CHAMBER. THE SCRUBBING SOLUTION IS THEN COLLECTED AND RECYCLED SUCCESSIVELY TO THE THIRD, SECOND, AND FIRST STAGES OF THE SCRUBBING MODULE. THIS ALLOWS FOR COMPLETE DEPLETION OF ANY EXCESS ALKALINITY AND INSURES THAT FRESH SLURRY IS CONTACTING GAS HAVING THE LOWEST SULFUR DIOXIDE CONCENTRATION. THE LIQUID RECIRCULATION RATE CAN BE ADJUSTED OVER A WIDE RANGE. THE MODULE IS DESIGNED TO TREAT A MAXIMUM FLUE GAS CAPACITY OF 450,000 SCFM. THE DESIGN GAS VELOCITY THROUGH THE MODULE IS 21.6 FT/SEC. THE CLEANED GASES THEN PASS THROUGH A DEMISTER AND ARE REHEATED BEFORE BEING DISCHARGED TO THE STACK. THE SPENT SLURRY IS DISCHARGED FROM THE SCRUBBING SYSTEM TO A THICKENER AND THE UNDERFLOW IS PUMPED TO AN ON-SITE SETTLING POND. WATER IS RETURNED TO THE PROCESS FOR FURTHER USE.

A CUTAWAY VIEW OF THE WEIR SCRUBBING CHAMBER IS PRESENTED IN APPENDIX B.

ARIZONA PUBLIC SERVICE — FOUR CORNERS UNIT NO. 5A

PERIOD	OPERATING HOURS BOILER	OPERATING HOURS FGD SYSTEM	COMMENTS
MONTH/YEAR			
FEB. 76			INSTALLATION OF THE MODULE AT THE FOUR CORNERS GENERATING STATION WAS COMPLETED AND THE MODULE WAS PLACED IN-SERVICE FEBRUARY 17, 1976, FOR INITIAL OPERATION.
MAR. 76			
APR. 76			THE SYSTEM WAS TAKEN DOWN IN MID-APRIL FOR A SCHEDULED BOILER OVERHAUL.
MAY 76			SYSTEM RESTART IS SCHEDULED FOR JULY 1976.
JUN. 76			
JUL. 76			THE SYSTEM HAS REMAINED OUT OF SERVICE SINCE MID-APRIL 1976 BECAUSE OF AN EXTENSIVE OVERHAUL TO THE NO. 5 BOILER PLUS THE DEVELOPMENT OF PROBLEMS WITH THE SCRUBBER MODULE'S REHEATER UNIT.
AUG. 76			
SEP. 76			
OCT. 76			
NOV. 76			THE PROTOTYPE WAS IN SERVICE THROUGHOUT THE MONTH OF NOVEMBER. ON DEC. 6 THE TEST PROGRAM WAS CONCLUDED AND THE UNIT HAS SINCE BEEN DISMANTLED. APS IS NOW IN THE PROCESS OF ANALYZING THE OPERATING DATA ACCUMULATED DURING THE TEST PERIOD. A REPORT ADDRESSING THE RESULTS OF THE PROGRAM WILL BE PUBLISHED IN FEBRUARY 1977.
DEC. 76			

TABLE 12
DESCRIPTION OF TERMINATED FGD SYSTEMS 01/78

UTILITY NAME	BOSTON EDISON
UNIT NAME	MYSTIC NO 6
UNIT LOCATION	EVERETT MASSACHUSETTS
UNIT RATING	150 MW
FUEL CHARACTERISTICS	OIL 2.5 PERCENT SULFUR
FGD VENDOR	CHEMICO
PROCESS	MAGNESIUM OXIDE SCRUBBING
NEW OR RETROFIT	RETROFIT
START UP DATE	4/72
FGD STATUS	TERMINATED
EFFICIENCY, PARTICULATES	50 PERCENT
SO2	90 PERCENT
WATER MAKE UP	
SLUDGE DISPOSAL	ACID PLANT REGENERATION
UNIT COST	SEE APPENDIX A, FGD SYSTEM ECONOMICS
OPERATIONAL EXPERIENCE	REFER TO THE BACKGROUND INFORMATION SECTION IN TABLE 12 OF THIS REPORT. THIS DEMONSTRATION MAGNESIUM OXIDE SCRUBBER PLANT CONSISTED OF ONE SINGLE-STAGE VENTURI MODULE DESIGNED BY CHEMICO. THE UNIT WAS ORIGINALLY PLACED IN SERVICE IN APRIL 1972. TERMINATION OF THE DEMONSTRATION PROGRAM OCCURRED IN JUNE 1974. FUNDING FOR THE DEMONSTRATION PROGRAM WAS PROVIDED PRIMARILY BY THE UTILITY AND EPA. THE BOILER FIRED NO.6 HIGH SULFUR RESIDUAL FUEL OIL DURING THE COURSE OF THE PROGRAM. SYSTEM OPERABILITY INDEX VALUES ARE PROVIDED IN THE FOLLOWING TABLE

BACKGROUND INFORMATION
ON
MYSTIC NO. 6 MAGNESIUM OXIDE SCRUBBER

THE MAGNESIUM OXIDE-BASED FGD SYSTEM INSTALLED AT THE MYSTIC POWER STATION OF THE BOSTON EDISON COMPANY CONSISTS OF A CHEMICO-DESIGNED SINGLE-STAGE VENTURI SCRUBBER MODULE. THE MODULE IS CONSTRUCTED OF CARBON STEEL LINED WITH A SPRAY-APPLIED POLYESTER MATERIAL. TOTAL FLUE GAS CAPACITY OF THE SYSTEM IS 440,000 ACFM AT 300 F. MAXIMUM DESIGN SULFUR DIOXIDE CONCENTRATION AND REMOVAL EFFICIENCY IS 1500 PPM AND 90 PERCENT RESPECTIVELY.

THIS EXPERIMENTAL MAGNESIUM OXIDE SCRUBBING UNIT IS RETROFITTED ON A 155-MW, OIL-FIRED STEAM-GENERATING BOILER MANUFACTURED BY COMBUSTION ENGINEERING. THIS BOILER FIRES NO. 6 RESIDUAL FUEL OIL WITH THE FOLLOWING AVERAGE CHARACTERISTICS: HEAT CONTENT OF 149,000 BTU/GAL: ASH CONTENT OF 0.07 PERCENT: AND A SULFUR CONTENT OF 2.0 PERCENT. THE UNIT'S HEAT RATE IS APPROXIMATELY 9500 BTU/NET KWH.

SIMULTANEOUS REMOVAL OF SULFUR DIOXIDE AND PARTICULATES OCCURS IN THE VENTURI SCRUBBER MODULE. DESIGN REMOVAL EFFICIENCIES ARE 90 PERCENT AND 55 PERCENT RESPECTIVELY. SULFUR DIOXIDE FROM THE FLUE GAS OCCURS BY WET SCRUBBING WITH MAGNESIUM OXIDE SLURRY. THE SULFUR DIOXIDE IS CAPTURED AND CONVERTED TO MAGNESIUM SULFITE IN THE VENTURI. THIS PRODUCT SLURRY IS THEN FILTERED AND DRIED. THE DRY MATERIAL IS CALCINED AT HIGH TEMPERATURES TO DRIVE OFF THE SULFUR DIOXIDE AND REGENERATE MAGNESIUM OXIDE. THE SULFUR DIOXIDE STREAM IS PROCESSED IN A SULFURIC ACID PLANT TO MAKE 98 PERCENT GRADE OF SULFURIC ACID. A SCHEMATIC FLOW DIAGRAM OF THE SCRUBBING AND REGENERATION FACILITIES IS PRESENTED IN APPENDIX B.

THE UTILITY AND THE EPA PROVIDED THE MAJOR PORTION OF THE FUNDING FOR THIS REGENERABLE DEMONSTRATION PROJECT. EACH PARTY CONTRIBUTED APPROXIMATELY $4.5 MM TO THE PROJECT. BOSTON EDISON'S INVESTMENT HAS BEEN SPENT PRIMARILY ON CONSTRUCTION AND OPERATION OF THE SCRUBBER AND RELATED EQUIPMENT AT THE MYSTIC STATION. EPA'S INVESTMENT WAS PROVIDED PRIMARILY FOR THE REGENERATION FACILITIES AT ESSEX CHEMICAL'S SULFURIC ACID PLANT IN RUMFORD, RHODE ISLAND. THE SYSTEM SUPPLIER ALSO UNDERWROTE PART OF THE COSTS FOR FUTURE PROCESS DEVELOPMENT.

PROBLEMS AND SOLUTIONS

FROM THE INITIAL START-UP IN APRIL 1972 UNTIL MAY 1973 THE SCRUBBER OPERATED INTERMITTENTLY BECAUSE OF MECHANICAL DIFFICULTIES. THE MAJOR PROBLEM, ENTAILING DESIGN AND OPERATION OF THE MAGNESIUM SULFITE CRYSTAL DRYER, APPARENTLY HAS BEEN RESOLVED BY REDESIGN AND FUEL CHANGE. PROBLEMS WITH THE STACK AND PUMP OCCURED DURING USE OF REGENERATED MAGNESIUM OXIDE. OVERHEATING OF THE SLURRY DURING ACTIVATION OF THE STEAM FREEZE PROTECTION SYSTEM CAUSED FORMATION OF SCALE IN THE MGO SLURRY PIPING. IN 1974, SYSTEM OPERATION WAS LIMITED BY BOILER AVAILABILITY. SINCE FEBRUARY 1974 AVAILABILITY OF THE BOILER HAS BEEN INCREASED. THE SYSTEM HAS BEEN SHUT DOWN INDEFINITELY SINCE JUNE 1974, WHEN EPA FUNDS FOR THE CALCINING PORTION OF THIS OPERATION WERE EXHAUSTED.

AVAILABILITY FACTORS AND COMMENTS CONCERNING THE OPERATION OF THIS SYSTEM SINCE STARTUP ARE PRESENTED IN THE FOLLOWING TABLE.

BOSTON EDISON — FGD SYSTEM AVAILABILITY — MYSTIC UNIT NO. 6

MONTH/YR	BOILER OPERATION (HR)	SCRUBBER OPERATION (HR)	OPERABILITY (%)	
APR. 72 TO MAY 73			17	THE MODULE OPERATED INTERMITTENTLY BECAUSE OF MECHANICAL DIFFICULTIES. A MAJOR PROBLEM CONCERNED THE OPERATION OF THE MAGNESIUM SULFITE CRYSTALS DRYER.
JUN. 73	592	402	68	THE LONGEST PERIOD OF CONTINUOUS OPERATION, 7.5 DAYS, OCCURRED DURING JUNE AND JULY.
JUL. 73	575	351	61	
AUG. 73	BOILER SHUTDOWN			THE BOILER WAS DOWN FOR THE ANNUAL OVERHAUL.
SEP. 73	637	243	38	SYSTEM AVAILABILITY DECREASED DURING THE LAST QUARTER OF THE YEAR BECAUSE OF HEAVY EROSION/CORROSION IN THE LIQUOR RECIRCULATION PUMPS AND CENTRIFUGE.
OCT. 73	627	377	60	
NOV. 73	629	162	26	
DEC. 73	658	86	13	
JAN. 74	555	152	28	SYSTEM AVAILABILITY WAS LIMITED BY BOILER-RELATED PROBLEMS THAT CAUSED FREQUENT SHUTDOWNS IN JANVARY AND FEBRUARY.
FEB. 74	541	138	25	
MAR. 74	408	353	87	
APR. 74	585	471	81	TWO 7-DAY CONTINUOUS OPERATION PERIODS OCCURRED DURING THE MONTH.
MAY 74	488	280	57	THE 57 PERCENT OPERABILITY INDEX VALUE FOR THE MONTH WAS DUE TO A 2-WEEKS OUTAGE OF THE ACID PLANT RATHER THAN TO FGD SYSTEM FAILURE. DEMONSTRATION PROGRAM WAS COMPLETED AND FGD SYSTEM WAS SHUT DOWN. EPA FUNDING OF MGSO3 CALCINATION HAS EXPIRED. THERE ARE NO DEFINITE PLANS FOR RESTARTING OF THIS UNIT. MAJOR PROBLEM AREAS ENCOUNTERED DURING THE OPERATION OF THIS PROTOTYPE UNIT INCLUDED TRIHYDRATE INSTEAD OF HEXAHYDRATE SULFITE CRYSTAL FORMATION, DUST PROBLEMS IN THE DRYER, LACK OF STACK GAS REHEAT CAUSING CONDENSATION IN THE STACK, LOUVER DAMPER PROBLEMS, EROSION OF PUMPS, PIPING, AND CENTRIFUGE, AND MINOR ANCILLARY EQUIPMENT FAILURES.
JUN. 74	559	288	80	

TABLE 12
DESCRIPTION OF TERMINATED FGD SYSTEMS 01/78

UTILITY NAME	CENTRAL ILLINOIS LIGHT CO.
UNIT NAME	DUCK CREEK NO. 1A
UNIT LOCATION	CANTON ILLINOIS
UNIT RATING	100 MW
FUEL CHARACTERISTICS	COAL 2.5 - 3.0 PERCENT SULFUR
FGD VENDOR	RILEY STOKER / ENVIRONEERING
PROCESS	LIMESTONE SCRUBBING
NEW OR RETROFIT	NEW
START UP DATE	9/76
FGD STATUS	TERMINATED
EFFICIENCY, PARTICULATES	99.8 PERCENT
SO2	85 PERCENT
WATER MAKE UP	CLOSED LOOP
SLUDGE DISPOSAL	
UNIT COST	SEE APPENDIX A, FGD SYSTEM ECONOMICS
OPERATIONAL EXPERIENCE	THE INSTALLATION OF ONE OF A TOTAL OF FOUR SCRUBBER MODULES WAS COMPLETED IN JULY 1976 AND START-UP OPERATIONS COMMENCED. SHAKEDOWN AND DEBUGGING OPERATIONS PROCEEDED ON AN INTERMITTENT BASIS BECAUSE OF NUMEROUS CHEMICAL AND MECHANICAL-RELATED PROBLEMS. THE SINGLE COMPLETED SCRUBBER MODULE HAS BEEN SHUTDOWN UNTIL THE OTHER THREE MODULES, REPRESENTING 300 MW OF SCRUBBING CAPACITY, ARE READY IN AUGUST 1978. UNTIL THAT TIME THE 400-MW UNIT WILL BE UTILIZING COLORADO LOW-SULFUR COAL FOR POWER GENERATION OPERATIONS.

BACKGROUND INFORMATION
ON
DUCK CREEK PLANT NO 1A

THE DUCK CREEK PLANT OF THE CENTRAL ILLINOIS LIGHT COMPANY (CILCO) IS A NEW COAL-FIRED POWER-GENERATING STATION LOCATED IN AN UNRECLAIMED STRIP-MINING AREA NEAR CANTON, ILLINOIS. AT THE PRESENT TIME, ONE 400-MW COAL-FIRED UNIT IS IN SERVICE AND THREE MORE IDENTICAL UNITS ARE BEING PLANNED, BRINGING THE TOTAL PLANNED PLANT CAPACITY TO 2000 MW.

THE NO. 1 POWER-GENERATING UNIT INCLUDES A 3-MILLION LBS./HR. STEAM-GENERATING BOILER (2600 PSIG, 1005F/1005F, SINGLE REHEAT, PULVERIZED-COAL-FIRED, BALANCED DRAFT) SUPPLIED BY THE RILEY STOKER CORPORATION TO PROVIDE STEAM TO 400-MW TURBINE. THE BOILER IS DESIGNED TO FIRE HIGH-SULFUR ILLINOIS COAL, AVAILABLE FROM NEARBY MINES, HAVING THE FOLLOWING AVERAGE CHARACTERISTICS: HEAT CONTENT, 10,500 BTU/LB; SULFUR CONTENT 2.4 TO 4.0 PERCENT; ASH CONTENT, 6.0 TO 18.0 PERCENT. CONSTRUCTION OF THE NO. 1 UNIT BEGAN IN THE EARLY PART OF 1972. COMMERCIAL SERVICE COMMENCED IN JUNE 1976.

THE DESIGN OF THE EMISSION CONTROL SYSTEM FOR THIS UNIT CONSISTS OF TWO 99.8 PERCENT-EFFICIENT ELECTROSTATIC PRECIPITATORS SUPPLIED BY POLLUTION CONTROL-WALTHER (PCW) FOR THE CONTROL OF PARTICULATES AND FOUR WET-LIMESTONE SCRUBBER MODULES SUPPLIED BY RILEY STOKER/ENVIRONEERING FOR THE REMOVAL OF 75 PERCENT OF THE SULFUR DIOXIDE. THE EMISSION CONTROL SYSTEM IS DESIGNED TO FUNCTION IN THE FOLLOWING MANNER: THE BOILER FLUE GAS, AFTER PASSING THROUGH TWO AIR PREHEATER UNITS, ENTERS THE PCW ESP'S WHERE PRIMARY PARTICULATE REMOVAL OCCURS. THE PARTICULATE-CLEANED GAS IS THEN DISCHARGED TO A MANIFOLD SUPPLYING FOUR CENTRIFUGAL INDUCED DRAFT FANS (RADICAL TIP, INLET-DAMPER CONTROL, 900 RPM, 4000 HP EACH). THE FLUE GAS IS BOOSTED THROUGH A COMMON HEADER INTO THE 4-MODULE SCRUBBER PLANT. EACH VENTURI-ABSORBER MODULE IS EQUIPPED WITH INLET/OUTLET DAMPERS SO THAT GAS CAN BE ROUTED AROUND ONE OR ALL THE MODULES THROUGH BY-PASS BREECHING TO THE MAIN STACK. SULFUR DIOXIDE IS REMOVED FROM THE FLUE GAS IN COUNTERCURRENT FASHION VIA LIMESTONE SLURRY SPRAYED ON THE MOD SECTIONS IN THE ABSORBER MODULES. THE LIMESTONE REAGENT IS STORED ON THE PLANT SITE AND PREPARED IN SLURRY FROM VIA GRINDING IN A 40 TPH WET BALL MILL. THE PRODUCT OF THE MILL SYSTEM, A 35 TO 40 PERCENT SOLIDS SOLUTION, IS PUMPED TO AN AGITATED STORAGE TANK AND THEN TRANSFERRED INTO THE RECYCLE TANK SYSTEM FOR SULFUR DIOXIDE-REMOVAL SERVICE. AFTER PASSAGE THROUGH A HORIZONTAL, TILTED MIST ELIMINATOR, THE SATURATED 125 F FLUE GAS IS DISCHARGED TO A 500 FT. WET STACK (NO REHEAT, ENTRAINED DROPLETS FALL OUT OF THE GAS IN THE STACK AND ARE COLLECTED IN BOTTOM HOPPERS AT THE BASE OF THE STACK). THE SCRUBBING PRODUCTS (CALCIUM SULFITE, CALCIUM SULFATE, AND UNREACTED CALCIUM CARBONATE) ARE DISCHARGED TO A RECYCLE TANK WHERE REACTIONS ARE COMPLETED, SOLUTION RECIRCULATED BACK TO THE ABSORBER, AND SPENT SLURRY (15% SOLIDS) IS DISCHARGED DIRECTLY TO A WASTE STORAGE POND WITHOUT PRIOR THICKENING OR DEWATERING. ALL THE WATER DISCHARGED TO THE POND IS RETURNED TO THE PLANT FOR REUSE IN THE ASH AND SO2-REMOVAL SYSTEMS.

CURRENT STATUS: CONSTRUCTION OF THE NO. 1 UNIT COMMENCED IN THE EARLY PART OF 1972 AND WAS VIRTUALLY COMPLETED BY THE SPRING OF 1976. COMMERCIAL OPERATION COMMENCED IN JUNE 1976 WITH THE ESP MODULES IN THE GAS PATH. THE FIRST MODULE OF THE FOUR-MODULE SCRUBBER PLANT WAS INSTALLED BY JUNE 1976 AND START-UP FOR SHAKEDOWN AND DEBUGGING PURPOSES OCCURRED IN JULY. ONE MODULE IS CAPABLE OF TREATING THE EQUIVALENT OF APPROXIMATELY 100-MW OF BOILER FLUE GAS. THE REMAINING THREE MODULES OF THE SCRUBBER PLANT ARE NOW BEING INSTALLED. INITIAL OPERATION OF THE SCRUBBING SYSTEM WITH ALL FOUR MODULES IN THE GAS PATH IS SCHEDULED FOR AUGUST 1, 1978. A SIMPLIFIED PROCESS FLOW DIAGRAM OF THE DUCK CREEK NO. 1 EMISSION CONTROL SYSTEM IS PROVIDED IN APPENDIX B. ADDITIONAL INFORMATION ADDRESSING THE INITIAL OPERATION OF THE NO. 1 MODULE IS PROVIDED IN THE PERFORMANCE TABLE THAT FOLLOWS.

CENTRAL ILLINOIS LIGHT CO. PERFORMANCE HISTORY DUCK CREEK UNIT NO. 1A

PERIOD	MODULE OPERATION HRS.	COMMENTS
JUL. 76	8 HRS.	INITIAL OPERATION OF THE FIRST SCRUBBER MODULE FOR SHAKEDOWN AND DE-BUGGING PURPOSE OCCURED DURING THE MONTH. LIMITED SERVICE TIME RESULTED FROM PROBLEMS WITH BAD WELDS, FAULTY PIPE HANGES, AND ABSORBER LEAKS.
AUG. 76	18 HRS.	LIMITED OPERATIONS CONTINUED THROUGHOUT AUGUST BECAUSE OF THE START-UP AND CONSTRUCTION PROBLEMS MENTIONED ABOVE. THE MODULE WAS TAKEN OUT OF THE GAS PATH AT THIS POINT TO CONCENTRATE ON RESOLVING THESE PROBLEM AREAS.
SEP. 76	360 HRS.	MODULE RESTART OCCURRED ON SEPT. 9. OPERATION CONTINUED THROUGHOUT THE REMAINDER OF THE MONTH ON AN INTERMITTANT BASIS. MAJOR PROBLEMS INCLUDED PIPE BREAKING, PUMP LINER FAILURES, PLUGGING AND SEALING OF MIST ELIMINATORS, AND SOME BOILER-RELATED PROBLEMS. THE MODULE REMAINED IN SERVICE FOR APPROXIMATELY 15 DAYS OF NON-CONTINUOUS OPERATION. THE PCW ESP MODULES HAVE REMAINED IN SERVICE WITHOUT THE OCCURRENCE OF ANY MAJOR PROBLEMS.
OCT. 76	385 HRS.	TOTAL OPERATION TIME DURING THE MONTH WAS APPROXIMATELY 16 DAYS (NON-CONTINUOUS). MAJOR PROBLEM AREA WAS THE CONTINUATION OF MASSIVE SCALE DEVELOPMENT ON THE MIST ELIMINATORS, RESULTING IN PLUGGING OF THE PIPING AND NOZZLES TO THE COMPONENTS SPRAY SYSTEM.
NOV. 76	24 HRS.	SPORADIC OPERATION RESULTED FROM CONTINUED SCALING PROBLEMS IN THE MIST ELIMINATOR SECTION. RILEY AND CILCO INITIATED MODIFICATIONS TO THE DESIGN OF THE MODULE. SPECIFICALLY, A ROD DECK WAS CHANGED IN THE ABSORBER, PRESSURE DROP ACROSS THE ABSORBER WAS INCREASED, PIPING AND PUMP LINER MATERIALS WERE MODIFIED/REPLACED, AND A FRESH WATER WASH SYSTEM WAS INSTALLED FOR THE MIST ELIMINATOR.
DEC. 76		THE MODULE REMAINED OUT OF SERVICE THE ENTIRE MONTH. DURING THIS TIME, THE BOILER FIRED LOW SULFUR (0.6%) KENTUCKY COAL.
JAN. 77 FEB. 77		THE NO. 1 UNIT WAS DOWN THROUGHOUT THE ENTIRE PERIOD FOR TURBINE/BOILER OVERHAUL. DURING THE UNIT OUTAGE, A NUMBER OF MODIFICATIONS WERE MADE TO THE SCRUBBER.
MAR. 77	350 HRS.	THE NO. 1 UNIT WAS RETURNED TO SERVICE IN MID-MARCH. THE SCRUBBER WAS PLACED IN SERVICE TO TEST THE MODIFICATIONS MADE DURING THE PRECEDING OUTAGE. THESE MODIFICATIONS INCLUDED: * THE MIST ELIMINATOR SPRAY WASH SYSTEM PIPING WAS CHANGED FROM PVC TO FRP MATERIALS. ALSO, AN ADDITIONAL SPRAY HEADER WAS ADDED. * THE SLURRY CIRCULATION SYSTEM WAS REVAMPED. * NEOPRENE PUMP FILTERS HAVE REPLACED THE ORIGINAL RUBBER LINES. FLUSH/DRAIN SYSTEMS HAVE BEEN INCLUDED TO MINIMIZE SOLIDS BUILD UP. * PIPING VALVES MOVED CLOSER TO THE RECYCLE TANK. * SLURRY STORAGE TANKS EQUIPPED WITH FLUSH/DRAIN SYSTEMS. * ADDITIONAL MIXERS ADDED FOR GREATER AGITATION TO PROMOTE PROCESS CHEMISTRY. DURING THE LAST PART OF MARCH THE MODULE REMAINED IN SERVICE ON A CONTINUAL BASIS WITH THE EXCEPTION OF A FEW MINOR BOILER OUTAGES. CILCO INTENDS TO CONTINUE EXPERIMENTAL OPERATIONS THROUGHOUT THE APRIL-MAY PERIOD, TESTING THE MECHANICAL MODIFICATIONS AND THE AUTOMATIC CONTROL LOOPS (SYSTEM CHEMISTRY WILL BE CONTROLLED BY INLET/OUTLET SO2 LOADING, SOLUTION PH, SOLUTION SOLIDS. OPERATION UP TO THIS POINT HAS PROCEEDED IN A MANUAL CONTROL MODE). CONTINUED OPERATION BEYOND THIS TIME FRAME WILL DEPEND UPON THE SUCCESS OF EXPERIMENTAL OPERATIONS. CILCO HAS THE OPTION OF FIRING LOW SULFUR COAL UNTIL THE ENTIRE 4-MODULE SCRUBBER PLANT IS READY FOR SERVICE IN AUGUST 1978.
APR. 77 MAY 77		THE UNIT CONTINUED TO FIRE LOW-SULFUR COLORADO COAL DURING THE REPORT PERIOD. THE RESTART OF SCRUBBER OPERATIONS CONTINUES TO BE SCHEDULED FOR AUGUST 1978.

TABLE 12
DESCRIPTION OF TERMINATED FGD SYSTEMS 01/78

UTILITY NAME	COMMONWEALTH EDISON
UNIT NAME	WILL COUNTY NO 1
UNIT LOCATION	ROMEOVILLE ILLINOIS
UNIT RATING	167 MW
FUEL CHARACTERISTICS	COAL 0.3 PERCENT SULFUR
FGD VENDOR	BABCOCK & WILCOX
PROCESS	LIMESTONE SCRUBBING
NEW OR RETROFIT	RETROFIT
START UP DATE	2/72
FGD STATUS	TERMINATED
EFFICIENCY, PARTICULATES	98 PERCENT
SO2	82 PERCENT
WATER MAKE UP	OPEN LOOP 1.66 GPM/MW
SLUDGE DISPOSAL	HAULAWAY TO LANDFILL
UNIT COST	SEE APPENDIX A, FGD SYSTEM ECONOMICS
OPERATIONAL EXPERIENCE	REFER TO THE BACKGROUND INFORMATION SECTION IN TABLE 12 OF THIS REPORT. THIS FULL SCALE DEMONSTRATION SCRUBBING SYSTEM HAS BEEN IN SERVICE SINCE FEBRUARY 1972. THE SYSTEM INCLUDES TWO SCRUBBING TRAINS FOR THE CONTROL OF PARTICULATES AND SULFUR DIOXIDE. MODULE AVAILABILITY, OPERABILITY, RELIABILITY, AND UTILIZATION INDEX VALUES FOR THE REPORT PERIOD ARE PROVIDED IN THE BACKGROUND INFORMATION SECTION. EXPERIMENTAL SO2 REMOVAL OPERATIONS WERE CONCLUDED IN JULY 1977, HOWEVER, PARTICULATE SCRUBBING OPERATIONS ARE CONTINUING ON LOW-S WESTERN COAL FLUE GAS.

BACKGROUND INFORMATION
ON
WILL COUNTY NO. 1

IN 1970, COMMONWEALTH EDISON CONTRACTED WITH THE BECHTEL CORPORATION TO INVESTIGATE THE SULFUR REMOVAL SYSTEMS THEN AVAILABLE HAVING A SUFFICIENT DEGREE OF DEVELOPMENT TO WARRANT LARGE-SCALE INSTALLATION ON WILL COUNTY STATION'S UNIT NO. 1. AFTER DECIDING ON A WET SCRUBBER SYSTEM USING LIME OR LIMESTONE, BECHTEL PREPARED A SPECIFICATION AND RELEASED IT FOR BID. FROM NINE BIDDERS THAT WERE SOLICITED, SEVEN PROPOSALS WERE RECEIVED. AFTER DETAILED STUDY AND BID EVALUATION WITH SPECIAL CONSIDERATION OF THE PROJECT SCHEDULE, BABCOCK AND WILCOX WAS AUTHORIZED IN SEPTEMBER 1970 TO BEGIN DETAILED ENGINEERING FOR A LIMESTONE SLURRY SYSTEM. COMPLETION DEADLINE FOR THE PROJECT WAS DECEMBER 31, 1971. A DEADLINE ESTABLISHED BY THE ILLINOIS COMMERCE COMMISSION AS PART OF A RATE CASE.

THE BABCOCK AND WILCOX PROCESS WAS GUARANTEED TO REMOVE 98 PERCENT OF THE FLY ASH AND 76 PERCENT OF THE SULFUR DIOXIDE. THESE EFFICIENCIES WERE BASED ON A DUST INLET LOADING OF 1.355 GRAINS PER STANDARD CUBIC FOOT AT 70 F AND ON BURNING OF ILLINOIS COAL CONTAINING 4 PERCENT SULFUR.

THE WILL COUNTY POWER STATION IS LOCATED NEAR ROMEOVILLE, ILLINOIS. THE PLANT HAS FOUR ELECTRIC POWER GENERATING UNITS WITH A TOTAL RATED CAPACITY OF 1147 MW. ONLY UNIT NO. 1 IS RETROFITTED WITH AN FGD SYSTEM.

UNIT NO. 1 IS A WET-BOTTOM COAL-FIRED BOILER PRODUCING 167 MW OF ELECTRICITY. THE BOILER WAS MANUFACTURED BY BABCOCK AND WILCOX AND WAS INSTALLED IN 1955. THE PLANT NOW BURNS A LOW-SULFUR (0.4 PERCENT) WESTERN COAL AND A HIGH-SULFUR (4.0 PERCENT) ILLINOIS COAL.

THE WET LIMESTONE FGD SYSTEM AT WILL COUNTY WAS PLACED IN SERVICE ON FEBRUARY 23, 1972. THE SYSTEM CONSISTS OF TWO FGD MODULES (IDENTIFIED AS A AND B), LIMESTONE HANDLING AND MILLING FACILITIES, AND A SLUDGE TREATMENT AND STABILIZATION UNIT. A PROCESS FLOW DIAGRAM OF THE FGD SYSTEM IS GIVEN IN APPENDIX B. SULFUR DIOXIDE REMOVAL EFFICIENCY HAS BEEN MEASURED AT 82 PERCENT. SHORTLY AFTER STARTUP AND DURING INITIAL SHAKEDOWN, NUMEROUS PROBLEMS WERE ENCOUNTERED. COMMONWEALTH EDISON SHUTDOWN MODULE B IN MAY 1973 TO CONCENTRATE ON SOLVING THE PROBLEMS OF MODULE A. MODULE B WAS NOT RESTARTED UNTIL MAY 1975.

THE LIMESTONE GRINDING FACILITIES CONSIST OF TWO WET BALL MILLS, EACH RATED AT 12 TONS PER HOUR OF LIMESTONE. THE LIMESTONE IS 97.5 PERCENT CALCIUM CARBONATE, AND CONTAINS 0.99 PERCENT MAGNESIUM CARBONATE AND 0.48 PERCENT SILICA. IT IS RECEIVED IN COARSE-GROUND FORM (ABOUT 1/2 INCH OR LESS) AND FINELY GROUND TO 95 PERCENT THROUGH 320 MESH.

SLUDGE FROM THE SYSTEM IS SENT TO A CLARIFIER. THE OVERFLOW IS RETURNED TO THE PROCESS AND THE UNDERFLOW IS STABILIZED BY MIXING IT WITH LIME AND FLY ASH. APPROXIMATELY 200 POUNDS OF LIME AND 400 POUNDS OF FLY ASH ARE USED PER TON OF DRY SOLIDS OF SLUDGE. THE STABILIZED MATERIAL IS THEN TRANSPORTED BY CONCRETE MIXING TRUCKS FOR ULTIMATE DISPOSAL IN AN OFF-SITE LANDFILL AREA.

PROBLEMS AND SOLUTIONS

1972 - DEMISTER PLUGGING WAS A CONSTANT PROBLEM, MAINLY BECAUSE OF HEAVY LIMESTONE ACCUMULATION ON THE BOTTOM OF THE DEMISTER AND ALSO BECAUSE OF LOW WASH-WATER PRESSURE CAUSED BY LEAKS IN THE POND RETURN BYPASS. BECAUSE OF THESE PROBLEMS, MODULES A AND B WERE OUT OF SERVICE FOR SEVERAL DAYS EACH MONTH DURING MARCH, APRIL, JUNE, AND JULY 1972. THE MODULES WERE ALSO OUT OF SERVICE FROM SEPTEMBER 26 TO NOVEMBER 21, 1972, BECAUSE THE BOILER WAS DOWN.

IN ORDER TO SOLVE THE DEMISTER PROBLEM, THE SLURRY NOZZLES WERE LOWERED AND THE SLURRY CIRCULATION SYSTEM WAS LEFT OUT OF SERVICE TO KEEP THE DEMISTER CLEAN. SINCE THE SITUATION DID NOT IMPROVE, THE DEMISTER ELEMENTS WERE HAND-WASHED. THIS SOLVED THE PROBLEM PARTIALLY, BUT CAUSED DIFFICULTY WITH THE VENTURI NOZZLES BECAUSE BROKEN ELEMENTS FROM THE DEMISTER GOT INTO THE SLURRY SYSTEM.

AT HIGH GAS FLOW RATES, THE REHEATER OF MODULE B VIBRATED EXCESSIVELY. THEREFORE, MODULE B WAS TAKEN OUT OF SERVICE IN APRIL TO ALLOW REHEATER MODIFICATIONS, WHICH INCLUDED REBRACING OF THE REHEATER TUBES AND INSTALLATION OF A BAFFLE PLATE TO REDUCE THE VIBRATIONS.

OTHER REASONS FOR OUTAGES WERE EROSION AND PLUGGING OF SPRAY NOZZLES, INTERNAL AND EXTERNAL BUILDUP OF DEPOSITS ON VENTURI NOZZLES, CORROSION, SULFITE BLINDING PROBLEMS, AND FAN VIBRATIONS.

1973 - DEMISTER PLUGGING CONTINUED. FURTHERMORE, THE DEMISTER ON MODULE B BROKE LOOSE FROM ITS MOUNTINGS AND THE RESULTANT CARRYOVER OF WASHWATER PLUGGED THE REHEATER. THIS REHEATER ALSO LEAKED BECAUSE OF CHLORIDE PITTING CORROSION. MODULE A WAS DOWN FROM APRIL 24 TO MAY 24, 1973, AND MODULE B REMAINED OUT OF SERVICE FROM MAY 1973 TO MAY 20, 1975. THERE WAS NO SCRUBBER OPERATION FROM AUGUST 27 TO SEPTEMBER 26, 1973.

IN EFFORTS TO SOLVE THE DEMISTER AND REHEATER PROBLEMS, A CONSTANT UNDERSPRAY AND INTERMITTENT OVERSPRAY WERE USED TO WASH ALL THE DEMISTER COMPARTMENTS OF MODULE A. EXTRA NOZZLES WERE ADDED AND A CLEAN WATER SUPPLY WAS MAINTAINED. THE REHEATER UNIT WAS ALSO RETUBED.

1974 - ONLY MODULE A OPERATED DURING 1974. THE MAIN PROBLEMS WERE FREEZING OF THE VENTURI THROAT DRIVE MECHANISM, TANK SCREEN BLINDING, DUCT CORROSION, AND VIBRATIONS. LOSS OF BUILDING HEAT CAUSED EXTENSIVE DAMAGE AND KEPT THE SYSTEM DOWN FOR THE ENTIRE MONTH OF JANUARY 1974.

1975 - ENTERING 1975 MODULE A WAS OPERATIONAL AND MODULE B WAS STILL UNDERGOING MODIFICATION.

IN THE FIRST QUARTER OF 1975 THERE WERE 8 A-MODULE OUTAGES, ONE OF WHICH WAS A FORCED OUTAGE, DUE TO THE SPLITTING OF A SLURRY HOSE. MODULE B WAS RETURNED TO SERVICE ON MAY 20, 1975. THE UTILITY DECIDED TO OPERATE THE SCRUBBER ON ILLINOIS HIGH-SULFUR COAL. WHEN THIS OPERATION BEGAN, A MULTITUDE OF PROBLEMS OCCURRED; LOWER PARTICULATE REMOVAL EFFICIENCIES, HIGH SLURRY CARRYOVERS, DEMISTER PLUGGING, REHEATER COIL FOULING AND LEAKS. MODULE A WAS TAKEN OUT OF SERVICE IN MID-JUNE FOR THE REMAINDER OF 1975. BY MID-SEPTEMBER 1975 MODULE B WAS TAKEN OUT OF SERVICE OWING TO MASSIVE SCALING IN THE ABSORBER SYSTEM. FINALLY, UNIT NO. 1 WAS SHUT DOWN FOR OVERHAUL OF THE BOILER, TURBINE, AND SCRUBBER IN MID-OCTOBER; THIS OUTAGE LASTED MORE THAN 4 MONTHS.

PERFORMANCE FACTORS FOR EACH MODULE AND CORRESPONDING COMMENTS FOR THE REPORT PERIOD ARE PRESENTED IN THE FOLLOWING TABLE.

COMMONWEALTH EDISON — FGD SYSTEM OPERABILITY — WILL COUNTY UNIT NO. 1

PERIOD MONTH/YEAR	OPERABILITY (%) MODULE A	MODULE B	COMMENTS
MAR. 72	0	35	MODULE A DOWN FOR REPAIR AND MODIFICATION OF DEMISTER WASH PIPING ASSEMBLY. MODULE B WAS REMOVED FROM SERVICE EVERY 2 OR 3 DAYS TO HAND-WASH THE DEMISTER. OTHER PROBLEMS WERE VIBRATION OF REHEATER TUBE BUNDLE, RAPID EROSION OF SCRUBBER SPRAY NOZZLES,&PLUGGING OF VENTURI NOZZLES.
APR. 72	34	14	MODULE A OUT OF SERVICE FOR 6 DAYS BECAUSE OF NEAR-RUPTURE OF A VENTURI PIPE EXPANSION JOINT AND HEAVY BUILDUP OF SOLIDS ON DEMISTER. MODULE B OUT OF SERVICE MOST OF THE TIME FOR SIMILAR REPAIR OF VENTURI PIPE EXPANSION JOINT, AND FOR MODIFICATION OF REHEATER UNIT AND DEMISTER WASH SYSTEM.
MAY 72	70	32	A TWO-WEEK OUTAGE OF MODULE B WAS INCURRED TO REBRACE THE REHEATER UNIT, INSTALL UNDERSPRAY NOZZLES ON DEMISTER, AND INSTALL HEAVIER SCREENS IN THE SUMP. REHEATER PLUGGING CAUSED ADDITIONAL OUTAGES.
JUN. 72	8	31	BOTH MODULES WERE OUT OF SERVICE OWING TO HIGH DIFFERENTIAL PRESSURE ACROSS THE DEMISTERS. LEAKAGE OF A POND RETURN BYPASS VALVE CAUSED DEMISTER PLUGGING. ALSO DURING THIS PERIOD, THE RUBBER LINING IN MODULE A WAS REPLACED
JUL. 72			
AUG. 72	79	21	PLUGGING OF VENTURI NOZZLES AND DEMISTER CAUSED SHUTDOWN OF MODULE A FOR 2 DAYS FOR REPAIRS. MODULE B WAS OUT OF SERVICE FOR 22 DAYS FOR CLEANING OF THE DEMISTER AND REHEATER UNIT, INSTALLATION OF OVERHEAD SPRAY NOZZLES AND REPLACEMENT OF SECTIONS OF THE DEMISTER. THE UNIT WAS SHUT DOWN FOR TWO DAYS FOR TURBINE-GENERATOR REPAIR.
SEP. 72	0	30	BOILER DOWN SEPT. 1-5 BECAUSE OF NO DEMAND. I.D. FAN PROBLEM CAUSED UNSTABLE OPERATION OF THE BOILER MOST OF THE MONTH. MODULE A WAS DOWN FOR MODIFICATION OF REHEATER UNIT AND REPAIR OF RECIRCULATION TANK SCREENS.
OCT. 72	0	0	BOILER AND SCRUBBERS WERE DOWN. PRINCIPAL MODIFICATIONS INCLUDED INSTALLATION OF REHEATER BAFFLE PLATES TO DAMPEN VIBRATIONS AND INSTALLATION OF AN EXPERIMENTAL DEMISTER WASH SYSTEM.
NOV. 72	0	0	BOILER PROBLEMS CAUSING UNSTABLE OPERATION KEPT BOTH MODULES DOWN DURING THIS MONTH.
DEC. 72	22	30	MODULES OPERATED INTERMITTENTLY BECAUSE OF ELECTROSTATIC PRECIPITATOR TESTING AND MISCELLANEOUS INSTRUMENT PROBLEMS.
JAN. 73	0	0	BOTH MODULES WERE DOWN FOR REPAIRS AND MODIFICATIONS.
FEB. 73	22	24	MODULES WERE OUT OF SERVICE BECAUSE OF CRACKS IN THE INLET DUCTWORK OF THE BOOSTER FAN. IMPROPER INSTALLATION OF THE DEMISTER IN THE B-SIDE CAUSED REHEATER PLUGGING.
MAR. 73	65	11	MODULE A WAS OUT OF SERVICE FOR 5 DAYS BECAUSE OF DEMISTER PLUGGING. BOILER WAS DOWN FOR 4 DAYS OF INSPECTION. MODULE B WAS DOWN BECAUSE OF LEAKS FROM REHEATER TUBES.
APR. 73	6	13	PERSISTING PROBLEMS WITH DEMISTER AND DEPOSITS OF CALCIUM SULFATE SCALE ON REHEATER TUBES OF MODULE A WERE ENCOUNTERED DURING THE MONTH.
MAY 73	0	0	BOTH MODULES WERE OUT OF SERVICE DURING THIS MONTH.
JUN. 73	16	0	MODULE B WAS KEPT DOWN TO ALLOW CONCENTRATION ON THE PROBLEMS WITH MODULE A. BOILER-RELATED PROBLEMS WERE RESPONSIBLE FOR MOST OF THE OUTAGES OF MODULE A.
JUL. 73	51	0	MODULE A PROBLEMS: REHEATER TUBE LEAKS AND HIGH FAN VIBRATIONS.
AUG. 73	19	0	MORE REHEATER TUBE LEAKS ON MODULE A ATTRIBUTED TO CHLORIDE CORROSION ATTACK.
SEP. 73	0	0	MODULES WERE DOWN. DURING THIS MONTH CHICAGO FLY ASH CO. FINISHED CLEANING AND TREATING THE NORTHEAST HALF OF THE SLUDGE POND.

COMMONWEALTH EDISON

FGD SYSTEM OPERABILITY WILL COUNTY UNIT NO. 1

PERIOD MONTH/YEAR	OPERABILITY (%) MODULE A	MODULE B	COMMENTS
OCT. 73	32	0	MODULE A TRIPPED SEVERAL TIMES BECAUSE OF BAD LIMIT SWITCHES IN THE BYPASS AND BLOCK DAMPERS. UNIT WAS ALSO TAKEN DOWN TO BALANCE THE BOOSTER I.D. FAN.
NOV. 73	51	0	ROUTINE INSPECTION OF MODULE A REVEALED SOME PLUGGING. MODULE WAS KEPT DOWN FOR CLEANING AND SOME MODIFICATION. POOR GAS DISTRIBUTION IN MODULE SUSPECTED TO CONTRIBUTE TO DEMISTER PROBLEMS.
DEC. 73	0	0	MODULES WERE DOWN. THE MONTH WAS DEVOTED TO MODIFICATION AND MAINTENANCE, PARTICULARLY DEMISTER, VENTURI THROATS, PUMPS, AND ISOLATION VALVES.
JAN. 74	0	0	MODULES WERE DOWN OWING TO FREEZING IN THE 10-INCH-DIAMETER, 4400 FT. LINE BETWEEN MODULES AND POND. SOME DAMAGE TO SUMP PUMPS OCCURRED. FREEZING ALSO DAMAGED SOME INSTRUMENTS.
FEB. 74	0	0	THE FROZEN PIPELINE WAS THAWED, REANCHORED, AND RETURNED TO SERVICE. THE INSTRUMENTS DAMAGED BY FREEZING WERE REPAIRED. MODULE A WAS KEPT DOWN UNTIL ARRIVAL OF SECOND-STAGE DEMISTER.
MAR. 74	21	0	MODULE A WAS READY FOR SERVICE MARCH 20 BUT WAS NOT RETURNED TO SERVICE TILL MARCH 27 BECAUSE THE BOILER WAS DOWN.
APR. 74	72	0	MODULE A CONTINUED TO OPERATE UNTIL APRIL 19 (EXCEPT FOR TWO SHORT INSPECTION OUTAGES) FOR 23 CONSECUTIVE DAYS. OPERATION WAS ON LOW-SULFUR COAL. SUMP SCREEN FROM MODULE B WAS SUBSTITUTED FOR DAMAGED SCREEN IN MODULE A.
MAY 74	93	0	MODULE A OPERATED FOR ENTIRE MONTH EXCEPT FOR SHORT OUTAGES FOR INSPECTION. MUCH OF THIS OPERATION WAS ON HIGH-SULFUR COAL.
JUN. 74	55	0	MODULE A OPERATED FOR ABOUT 300 HOURS. THE SYSTEM WAS OFF FOR 2 WEEKS FOR REPAIR OF VENTURI THROAT DRIVE.
JUL. 74	96	0	MODULE A OPERATED FOR THE ENTIRE MONTH EXCEPT FOR AN INSPECTION OUTAGE AND TWO BOILER SHUTDOWNS. MODULE B WILL REMAIN DOWN UNTIL SATISFACTORY OPERATION OF MODULE A IS ACHIEVED.
AUG. 74	91	0	MODULE A WAS DOWN SIX TIMES THIS MONTH; THREE TIMES BECAUSE OF NO BOILER DEMAND, TWICE FOR REPAIR OF LEAKS IN STEAM PIPING, AND ONCE FOR BALANCING OF A FAN.
SEP. 74	85	0	MODULE A WAS OFF THREE TIMES; ONCE FOR CLEANING OF DEPOSITS FROM THE VENTURI THROAT, ONCE FOR REPAIR OF A DESUPERHEATER LEAK, AND ONCE BECAUSE BOILER WAS DOWN.
OCT. 74	94	0	MODULE A WAS DOWN FOUR TIMES; ONCE BECAUSE OF BOILER OUTAGES, ONCE FOR INSPECTION, AND TWICE FOR REPAIR OF REHEATER LEAKS.
NOV. 74	97	0	MODULE A WAS OUT OF SERVICE THREE TIMES; TWICE BECAUSE OF NO DEMAND AND ONCE FOR INSPECTION.
DEC. 74	99	0	MODULE A WAS DOWN TWICE; ONCE FOR INSPECTION AND ONCE FOR REPAIR OF VALVE IN SPENT LIQUOR LINE TO POND.
JAN. 75	99	0	MODULE A WAS DOWN TWICE; ONCE FOR INSPECTION AND ONCE FOR NO DEMAND. MODIFICATION OF MODULE B IS CONTINUING.
FEB. 75	99	0	MODULE A WAS OUT OF SERVICE TWICE; ONCE FOR INSPECTION AND ONCE FOR NO DEMAND. ONE SMALL REHEATER LEAK IN A STAINLESS STEEL BUNDLE WAS BLANKED-OFF ON-LINE. DURING THE INSPECTION DEMISTER UNDERWASH NOZZLES WERE CLEANED AND A SMALL SECTION OF DEMISTER WAS REPLACED. INSPECTION SHOWED THAT CONDITIONS INSIDE THE SCRUBBER WERE ABOUT THE SAME AS BEFORE. COAL BURNED THIS MONTH AVERAGED LESS THAN 1% SULFUR. MODIFICATION OF MODULE B IS CONTINUING. CHICAGO FLYASH IS TREATING MATERIAL FROM THE SCRUBBER WITH PORTLAND CEMENT AND FLYASH AND DUMPING THE TREATED MATERIAL INTO THE NORTH HALF OF THE HOLDING BASIN.

COMMONWEALTH EDISON — WILL COUNTY UNIT NO. 1

SYSTEM PERFORMANCE FACTORS (%)

PERIOD MONTH/YEAR	MODULE	AVAILABILITY	OPERABILITY	RELIABILITY	UTILIZATION
MAR. 75	A	94	99	93	81

MODULE A WAS DOWN FOUR TIMES; TWICE FOR NO DEMAND, ONCE FOR A VENTURI HOSE LEAK, ONCE FOR AN ACCIDENTAL 50-MINUTE TRIP. THE SYSTEM OPERATED ON LOW SULFUR COAL DURING THE MONTH. MODULE B MODIFICATIONS ARE CONTINUING.

APR. 75	A	37	40	36	35

SLUDGE POND WAS OVERBURDENED BY NEAR-CONTINUOUS OPERATION OF MODULE A. THE FGD SYSTEM WAS SHUT DOWN TO ALLOW EVAPORATION OF WATER FROM THE POND. DURING SHUT-DOWN THE FOLLOWING MODIFICATIONS WERE MADE: PUMP GLAND WATER FLOWS WERE REDUCED FROM 10 TO 5 GPM (FILTER BACKWASH WAS ROUTED OUT OF SYSTEM), CONTINUOUS DEMISTER UNDERSPRAY WAS CHANGED TO INTERMITTENT. RECLAIM COAL WAS BURNED IN THE BOILER DURING THE MONTH.

MAY 75	A	84	84	84	84
	B	37	37	37	37

MODULE A REMAINED OUT OF SERVICE UNTIL MAY 5 WHEN IT WAS DETERMINED THAT THERE WAS ENOUGH FREEBOARD IN THE POND TO START OPERATING. THERE WERE TWO MORE OUTAGES; ONE FOR 45 MINUTES, THE RESULT OF A DAMPER TRIP, THE OTHER FOR CLEANING OF UNDERSPRAY NOZZLES. MODULE B WAS PLACED IN SERVICE AT TEN A.M. MAY 20 FOR THE FIRST TIME SINCE NOON ON APRIL 13, 1973. AFTER BRIEF START UP, WHICH WAS ROUTINE, OPERATION WAS DELAYED UNTIL THE 20TH BECAUSE OF TWO BROKEN OIL PUMPS ON THE RECIRCULATION TANK MIXERS. SINCE THE STARTUP MODULE B HAS BEEN OUT OF SERVICE TWICE; ONCE FOR A VENTURI PUMP TRIP AND ONCE FOR A RECIRCULATION TANK LEVEL TRIP. THE TOTAL OUTAGE TIME WAS ONLY 1 HOUR, 40 MINUTES. RECLAIM COAL OF VARYING SULFUR CONTENT WAS AGAIN BURNED IN THE BOILER. THE SCRUBBER SLUDGE WAS STABILIZED WITH LIME AND FLYASH AND STORED IN THE HOLDING BASIN.

JUN. 75	A	64	61	60	54
	B	85	85	84	75

MODULE A SUSTAINED FIVE OUTAGES DURING THE MONTH. THE MODULE IS PRESENTLY OUT OF SERVICE TO ALLOW INSTALLATION OF NEW DEMISTERS AND REHEATERS. MODULE B WAS OUT OF SERVICE EIGHT TIMES. LONGEST OUTAGE WAS 95 HOURS FOR CLEANING OF BOOSTER FAN AND DEMISTER. BOOSTER FAN VIBRATIONS CAUSED A SHUTDOWN ON JUNE 30. A HIGH SULFUR COAL TEST BURN WAS CONDUCTED FOR APPROXIMATELY 2 WEEKS. LOW SULFUR WESTERN COAL WAS BURNED IN THE UNIT FOR THE REMAINDER OF THE MONTH.

JUL. 75	B	79	79	77	74

MODULE A CANNOT BE RETURNED TO SERVICE UNTIL THE NEW REHEATER ORDERED IN APRIL IS RECIEVED AND INSTALLED. MODULE B SUSTAINED FOUR OUTAGES, ONE FOR NO DEMAND. REHEATER FAILURES AT 1000 HOURS SEEM TO BE CAUSED BY VIBRATION FATIGUE. ONE MINOR STEAM HEADER LEAK ALSO OCCURRED. LOW SULFUR COAL WAS BURNED DURING THE FIRST 3 WEEKS AND HIGH SULFUR ILLINOIS COAL WAS BURNED DURING THE LAST WEEK OF THE MONTH.

AUG. 75	B	94	100	92	76

MODULE A REMAINED OUT OF SERVICE ALL MONTH. MODULE B WAS SHUT DOWN SEVEN TIMES DURING THE MONTH, FOUR OF WHICH WERE DUE TO "NO DEMAND." HIGH SULFUR PILE COAL WAS BURNED IN THE UNIT DURING THE MONTH, RESULTING IN A SUBSTANTIAL INCREASE IN SLUDGE PRODUCTION AND FORCING A 6-DAY, 10 HR/DAY, SLUDGE DISPOSAL OPERATION. SLUDGE STABILIZATION IS CONTINUING.

SEP. 75	B	63	63	63	63

MODULE A REMAINED OUT OF SERVICE ALL MONTH BECAUSE OF DELAY ON THE NEW REHEATER ORDER. MODULE B WAS DOWN 8 TIMES BECAUSE OF MASSIVE ABSORBER SCALE, DEMISTER AND I.D. BOOSTER FAN CLEANING, BALANCING I.D. BOOSTER FAN, AND PLUGGING OF ABSORBER PUMP SCREEN. TOTAL OUTAGE TIME WAS 238 HOURS, 40 MINUTES FOR CLEANOUT AND FAN BALANCING. HIGH SULFUR COAL WAS BURNED IN THE BOILER WHEN THE SCRUBBER WAS IN THE GAS PATH.

OCT. 75	B	32	100	28	26

ON OCTOBER 11, OVERHAUL BEGAN ON THE WILL COUNTY UNIT NO. 1 BOILER, TURBINE, AND SCRUBBER. MODULE B EXPERIENCED TWO MINOR OUTAGES DURING THE 11-DAY PERIOD PRIOR TO THE OVERHAUL. MODULE A REMAINED OUT OF SERVICE PENDING DELIVERY OF THE NEW REHEATER.

NOV. 75 TURBINE, BOILER, AND SCRUBBER OVERHAUL

THE SCHEDULED OVERHAUL OF THE BOILER, TURBINE, AND SCRUBBER MODULES CONTINUED. MAJOR MAINTENANCE AREAS INCLUDED MODULE REHEATERS, POND RETURN PUMP, VENTURI SPRAY NOZZLES, VENTURI AND ABSORBER MODULES, PUMP VALVES, AND SUMPS.

DEC. 75 TURBINE, BOILER, AND SCRUBBER OVERHAUL

MODULE B REHEATER WAS RETURNED FROM MANUFACTURER AFTER REPAIRS AND REVISIONS. SCRUBBER REHEATERS COULD BE INSTALLED AND OPERATING BY THE END OF JANUARY.

JAN. 76 TURBINE, BOILER, AND SCRUBBER OVERHAUL

COMMONWEALTH EDISON

WILL COUNTY UNIT NO. 1

PERIOD MONTH/YEAR	MODULE	SYSTEM PERFORMANCE FACTORS (%) AVAILABILITY	OPERABILITY	RELIABILITY	UTILIZATION
FEB. 76	TURBINE, BOILER, AND SCRUBBER OVERHAUL				
	THE UNIT REMAINED OUT OF SERVICE FOR COMPLETION OF THE BOILER, TURBINE, AND SCRUBBER OVERHAUL THAT BEGAN ON OCTOBER 11, 1975. SYSTEM RESTART IS NOW SCHEDULED FOR MID-MARCH 1976.				
MAR. 76	A	30	45	21	19
	B	9	20	8	8
	UNIT NO. 1 RETURNED TO SERVICE IN MARCH FOLLOWING THE EXTENDED MAJOR BOILER, TURBINE AND SCRUBBER OVERHAUL LATE IN THE MONTH. THE A-SIDE WAS PUT INTO THE GAS PATH ON MARCH 22 AND REMAINED AVAILABLE FOR SERVICE THE REST OF THE MONTH. THE B-SIDE REMAINED OUT OF SERVICE UNTIL MARCH 29 BECAUSE OF DELAYS IN THE INSTALLATION OF A REPAIRED REHEATER. DURING MARCH HIGH SULFUR ILLINOIS COAL WAS FIRED IN THE BOILER.				
APR. 76	A	23	20	20	19
	B	51	49	49	47
	A & B*		20		19
	DURING THE MONTH OF APRIL THE A-SIDE INCURRED PUMP LINER FAILURES WHEN AN ISOLATION VALVE BROKE AND FELL INTO THE VENTURI RECYCLE PUMP. B-SIDE OUTAGES DURING APRIL RESULTED FROM REHEATER TUBE BUNDLE LEAKS, PLUGGED ABSORBER TANK SCREEN, AND VENTURI PUMP LINE FAILURE. HIGH SULFER COAL (3.5 PERCENT SULFUR) WAS BURNED IN THE BOILER THROUGHOUT THE MONTH. IN ADDITION, THE UTILITY INITIATED A TESTING AND EVALUATION PROGRAM DURING THE MONTH. THIS PROGRAM IS DESIGNED TO PROVIDE DATA AND INFORMATION CONCERNING CHEMISTRY AND RELATED OPERATING CHARACTERISTICS.				
MAY 76	B	87	85	85	76
	THE A-SIDE WAS DOWN THE ENTIRE MONTH AWAITING A PARTS SHIPMENT (VENTURI PUMP LINERS). MODULE B ENCOUNTERED FOUR FORCED SCRUBBER OUTAGES. THREE OF THESE OUTAGES WERE MECHANICAL PROBLEMS, DUE TO A VENTURI HOSE LEAK, PLUGGED ABSORBER TANK SCREEN, AND A FOULED I.D. BOOSTER FAN. HIGH SULFER ILLINOIS COAL WAS BURNED IN THE BOILER DURING THE MONTH. THE SLUDGE WAS STABILIZED WITH LIME AND FLY ASH AND HAULED TO AN OFF-SITE DISPOSAL AREA.				
JUN. 76	A	50	44	42	36
	B	83	85	81	70
	A & B*		37		31
	SIDE-A WAS RETURNED TO SERVICE JUNE 9 FOLLOWING THE INSTALLATION OF A NEW VENTURI PUMP LINER. FOUR FORCED SCRUBBER OUTAGES WERE REPORTED TWO BECAUSE OF NO DEMAND, ONE FOR A BYPASS DAMPER FAILURE AND ONE FOR I.D. BOOSTER FAN FOULING. THE B-SIDE ENCOUNTERED SEVERAL FORCED SCRUBBER OUTAGES, TWO DUE TO NO DEMAND AND SEVERAL SHORT TRIPS BECAUSE OF SCALING AND PLUGGING IN THE VENTURI TANK SCREEN. HIGH SULFUR ILLINOIS COAL WAS BURNED IN THE BOILER DURING THE MONTH. SLUDGE FIXATION AND HAULAWAY TO A DISPOSAL SITE CONTINUED.				
JUL. 76	A	20	0	0	0
	B	86	90	84	72
	THE A-SIDE REMAINED OUT OF SERVICE THE ENTIRE MONTH BECAUSE OF REPAIRS TO A DAMAGED ABSORBER PUMP AND POND THICKENER SLUDGE OVERLOADING. THE B-SIDE ENCOUNTERED FOUR FORCED SCRUBBER OUTAGES, TWICE FOR NO DEMAND, ONCE TO BALANCE THE I.D. BOOSTER FANS, AND ONCE TO WASH THE I.D. BOOSTER FANS.				
AUG. 76	A	98	57	96	38
	B	65	61	54	41
	A & B*		17		11
	THE A-SIDE REMAINED OUT OF SERVICE 50 PERCENT OF THE TIME DURING THE MONTH TO AVOID POND THICKENER OVERLOADING. FOUR SCRUBBER OUTAGES WERE REPORTED, ONE BECAUSE OF NO DEMAND AND THREE BECAUSE OF MINOR PROBLEMS. THE B-SIDE ENCOUNTERED THREE NO-DEMAND OUTAGES, TWO BECAUSE OF LOSS OF CHEMICAL CONTROL, ONCE FOR FOULING AND ONCE FOR SPENT SLURRY VALVE REPAIRS. EXPERIMENTATION WITH THE SYSTEM'S PROCESS CHEMISTRY, BY LOWERING THE PH SET POINT FROM 5.4 TO 5.1, WAS CONDUCTED BY THE UTILITY DURING THIS PERIOD. THIS VARIATION IN OPERATION WAS BELIEVED TO HAVE CAUSED THE MASSIVE GYPSUM SCALING IN BOTH MODULES WHICH OCCURRED DURING THE PERIOD. THE PH SET POINT WAS RETURNED BACK TO THE 5.4 VALVE. HIGH SULFER ILLINOIS COAL WAS BURNED IN THE BOILER DURING THE MONTH. SLUDGE STABILIZATION PRACTICES CONTINUED.				
SEP. 76	A	42	29	28	42
	B	79	76	74	60
	A & B*		5		4
	FIVE OUTAGE PERIODS WERE REPORTED DURING THE MONTH FOR THE A-SIDE, THREE OF WHICH RESULTED FROM FORCED SCRUBBER OUTAGES. PROBLEMS WERE REPORTED WITH LOW FLOW TRIPS IN THE VENTURI, NOZZLE FOULING CLEANING AND INSPECTION OF THE RECIRCULATION TANK, PUMP AND VALVES, AND A PUMP MOTOR FAILURE. THE B-SIDE ENCOUNTERED FOUR FORCED SCRUBBER OUTAGES, TWO BECAUSE OF SPENT SLURRY VALVE TROUBLE, ONE LOW VENTURI FLOW TRIP AND ONCE BECAUSE OF LOSS OF CHEMICAL CONTROL. HIGH SULFUR ILLINOIS COAL BURNING WAS CONTINUED IN THE BOILER DURING THE MONTH.				

COMMONWEALTH EDISON

SYSTEM PERFORMANCE FACTORS (%) WILL COUNTY UNIT NO. 1

PERIOD MONTH/YEAR	MODULE	AVAILABILITY	OPERABILITY	RELIABILITY	UTILIZATION
OCT. 76	A	30	29	28	28
	B	76	56	70	55
	A & B*	0	0	0	0
NOV. 76	A	20	26	20	20
	B	72	70	66	55
	A & B*		8		7

PROBLEMS RELATED TO THE A-SIDE SCRUBBER WERE DUE PRIMARILY TO REPAIRS NECESSARY TO THE 1A1 RECYCLE PUMP, AND DELAYS IN REPLACEMENT PARTS SHIPMENTS. THE A-SIDE MODULE WAS IN SERVICE WHEN THE B-SIDE WAS DOWN, HOWEVER SCRUBBING LIQUOR FLOW WAS REDUCED BECAUSE ONLY ONE RECYCLE PUMP WAS IN USE. AT THE END OF NOVEMBER, THE REMAINING A-SIDE PUMP WAS TAKEN OUT OF SERVICE FOR OVERHAUL AND REPAIRS. FOLLOWING THIS THE A-SIDE WILL RESUME OPERATIONS ON ONE PUMP. ON THE B-SIDE, 3 FORCED SCRUBBER OUTAGES OCCURRED DURING OCTOBER. ONE WAS BECAUSE OF REPAIRS OF A REHEATER HEADER LEAK AND THE TIE-IN OF A VACUUM FILTER AT THE THICKENER. THE OTHER TWO RESULTED FROM A VENTURI NOZZLE CLEAN-OUT AND A VENTURI LOW-FLOW TRIP. DURING NOVEMBER, 4 SCRUBBER TRIPS OCCURRED BECAUSE OF A MILLING SYSTEM FAILURE, VENTURI HEADER LEAK REPAIR AND VENTURI NOZZLE CLEANING, REPLACEMENT OF SPENT SLURRY VALVE, AND CHEMICAL SYSTEM UPSET. TWO OUTAGES WERE ALSO LOGGED BECAUSE OF NO DEMAND.

*NOTE- A&B DESIGNATION AND THE CORRESPONDING PERFORMANCE VALUES REFER TO THE SIMULTANEOUS OPERATION OF BOTH SCRUBBING TRAINS DURING THE REPORT PERIOD IN QUESTION.

DEC. 76	A	45	48	45	45
	B	53	52	51	48

THE A-SIDE WAS PLACED IN SERVICE DURING THE LATTER PART OF THE MONTH AND OPERATED CONTINUOSLY WITH THE EXCEPTION OF ONE MINOR OUTAGE FOR SLURRY VALVE REPAIRS. A SPENT SLURRY VALVE FAILURE FORCED THE B-SIDE OUT OF SERVICE THE REMAINDER OF THE MONTH. SIMULTANEOUS MODULE OPERATION TIME WAS 0 HOURS. THE SCRUBBER MODULES ARE SEEING SERVICE ON A ROTATIONAL BASIS, I.E., ONE MODULE UP, ONE MODULE DOWN. SLUDGE STABILIZATION PRACTICES AND OPERATION ON LOW SULFUR COAL CONTINUED DURING THE MONTH.

JAN. 77	A	98	99	98	96
	B	14	1	1	1

ROTATIONAL MODULE OPERATIONS CONTINUED. A-SIDE OUTAGES WERE SPENT SLURRY VALVE FAILURE AND PLUGGED DEMISTER UNDERSPRAYS. THE DECEMBER SPENT SLURRY VALVE FAILURE KEPT THE B-SIDE OUT OF SERVICE UNTIL JAN. 27. ACTUAL B-SIDE SERVICE TIME WAS ONE DAY. SLUDGE STABILIZATION AND DISPOSAL PRACTICES CONTINUED. LOW SULFUR WESTERN COAL WAS BURNED IN THE BOILER. SIMULTANEOUS MODULE OPERATION WAS 0 HOURS.

FEB. 77	A	39	42	39	39
	B	72	45	60	41
	A & B*		13		12

DURING THE ENTIRE MONTH OF FEB. 1977, LOW-SULFUR COAL WAS BURNED IN THE BOILER. THERE WAS VERY LITTLE DIGGING IN THE RECIRCULATION PONDS. CHICAGO FLYASH SPENT MOST OF THEIR TIME ON CLEANING AND MAINTENANCE. MODULE A WAS OFF THE FIRST PART OF THE MONTH FOR CLEANING OF UNDERSPRAYS, OVERSPRAYS AND ABSORBER SPRAY NOZZELS. PLUGGING WAS CAUSED BY A FAILED CLASSIFIER LINER, WHICH ALLOWED OVERSIZED PARTICLES TO ENTER THE SYSTEM. THE CLASSIFIER LINER WAS REPLACED. MODULE B WAS FORCED OUT OF THE GAS PATH THREE TIMES THIS MONTH. THE REASONS WERE: HIGH VIBRATION OF I.D. BOOSTER FAN, REPACKING OF 1B1 AND 1B2 ABSORBER PUMPS, AND BEARING FAILURES IN A AND B SLURRY TRANSFER PUMPS.

MAR. 77	A	97	66	95	64
	B	81	75	79	73
	A & B*		52		51

IN MARCH AN ERT SO2 ANALYZER WAS INSTALLED ON THE DISCHARGE SIDE OF B MODULE I.D. BOOSTER FAN. THIS IS AN "IN SITU" NON-DISPERSIVE ANALYZER THAT CONTINUALLY MEASURES AND READS OUT CONCENTRATIONS OF SO2, CO2, CO AND NO. HIGH-SULFUR COAL WAS BURNED FOR SEVEN DAYS DURING MARCH TO PROVIDE HIGH SULFUR SLUDGE FOR THE U.O.P. SLUDGE TEST (A U.O.P. TEST CREW WAS EXPERIMENTING WITH POWERTON FLYASH AND HIGH-SULFUR SLUDGE). CHICAGO FLYASH SPENT ABOUT 75% OF THEIR TIME DIGGING IN THE RECIRCULATION POND. THE REST WAS SPENT ON THE THICKENER AND VACUUM FILTER OPERATIONS. THE SCRUBBER WASTE MATERIAL WAS TREATED WITH LIME AND FLYASH AND HAULED TO AN OFF-SITE DISPOSAL AREA. MODULE FORCED OUT OF THE GAS PATH ONCE THIS MONTH TO ALLOW FOR REPAIR TO A VENTURI FLOW DIFFERENTIAL LINE. MODULE FORCED OUT OF THE GAS PATH FOUR TIMES. THE REASONS WERE: RUPTURED DIAPHRAM ON REHEATER STEAM VALVE, ABSORBER SUCTION LEAK, SPENT SLURRY VALVE GASKET LEAK AND PLUGGED FEED SLURRY RECIRCULATION LINE.

COMMONWEALTH EDISON

WILL COUNTY UNIT NO. 1

PERIOD MONTH/YEAR	MODULE	SYSTEM PERFORMANCE FACTORS (%) AVAILABILITY	OPERABILITY	RELIABILITY	UTILIZATION
APR. 77	A	86	68	81	61
	B	45	30	33	21
	A & B*		23		20

2 OUTAGES WERE REPORTED FOR THE A-SIDE DURING APRIL, ONE FOR A BOILER TUBE LEAK REPAIR, AND ONE TO REPAIR A VENTURI THROAT LEAK. B-SIDE OUTAGES OCCURRED TWICE FOR ABSORBER SUCTION HEADER REPAIR, AND ONCE TO WASH THE I.D. BOOSTER FAN. BOTH MODULES WERE FORCED OUT OF SERVICE APRIL 23 WHEN THE SLURRY STORAGE TANK MIXER STRIPPED A PINION GEAR. PREPARATIONS ARE BEING MADE FOR MGO ADDITION AND FORCED OXIDATION TEST. THE ERT SO2 ANALYZER PERFORMANCE HAS BEEN INCONSISTENT PRIMARILY DUE TO A FAULTY CIRCUIT. HIGH-SULFUR COAL WAS BURNED FOR SEVEN DAYS AND SLUDGE STABILIZATION PRACTICES INVOLVING LIME AND FLYASH TREATMENT WERE CONTINUED DURING THE MONTH.

MAY 77	A	89	2	16	2
	B	98	51	96	47
	A & B*		0		0

A-SIDE OUTAGE OCCURRED ONCE DURING MAY DUE TO INLET VALVE FAILURE ON THE 1A2 ABSORBER PUMP. THE B-SIDE MODULE WAS TAKEN OFF FOR INSPECTION AND CLEANING OF THE REHEATER TUBES. TRANSFORMER FAILURE ON THE POND RETURN PUMPS KEPT BOTH SIDES OUT OF SERVICE FOR THE FIRST 15 DAYS OF THE MONTH. ERT SO2 ANALIZER HAS BEEN REMOVED FROM SERVICE DUE TO POOR PERFORMANCE. HIGH SULFUR COAL WAS BURNED FOR ELEVEN DAYS FOR THE MGO TEST, WHICH WENT WELL. RESULTS SHOW ABOUT 10% GREATER SO2 REMOVAL EFFICIENCY WITH THE MG ION ADDITION. BUT NO IMPROVEMENT FOR THICKENER OR SLUDGE PRODUCTION PROBLEMS. THE LIMESTONE CONSUMPTION RATE WAS ABOUT THE SAME. SLUDGE STABILIZATION AND DISPOSAL PRACTICES CONTINUE. THERE WAS NO SIMULTANEOUS OPERATION OF A&B SCRUBBER MODULES.

JUN. 77	A	32	13	13	10
	B	93	93	92	73
	A & B*	0			0

THE A-SIDE MODULE WAS FORCED OUT OF SERVICE MOST OF THE MONTH BECAUSE OF ISOLATION VALVE FAILURES WITH THE ABSORBER RECYCLE PUMPS (0.25 INCH FLATSTOCK UNIT, BREAKAGE OF SHEAR PINS). TWO FORCED OUTAGES OF THE B-SIDE MODULE RESULTING FROM A SPENT SLURRY LINE LEAK AND CLEANOUT OF THE ID BOOSTER FAN. LOW SULFUR COAL WAS BURNED IN THE BOILER. THICKENER UNDERFLOW WAS STABILIZED WITH LIME AND FLYASH AND HAULED TO THE OFF-SITE DISPOSAL AREA. EVALUATION OF SO2 ANALYZERS CONTINUED. A DUPONT UNIT WORKED ALL MONTH WITH VERY LITTLE MAINTENANCE. GRAB SAMPLES VERIFIED THE UNIT'S READINGS.

JUL. 77	A	27	53	27	27
	B	70	41	41	21
	A & B*		5		3

THE CHEMICAL TESTING PROGRAM ON THE SO2 SCRUBBER WAS CONCLUDED THIS MONTH. THE FINAL TEST WAS A FORCED OXIDATION TEST. IT SEEMS TO HAVE BEEN THE MOST SUCCESSFUL OF ALL. USING LIQUID OXYGEN, EACH VENTURI DOWNCOMER WAS FED UP TO 12,000 CFH OF GASEOUS 02. OXIDATION OF SULFITE TO SULFATE WAS INCREASED FROM APPROXIMATELY 35% TO 90%. THE THICKENER WAS ABLE TO HANDLE BOTH MODULES ON HIGH SULFUR COAL. LIMESTONE CONSUMPTION WAS NORMAL FOR HIGH SULFUR OPERATION. THE DUPONT SO2 ANALYZER WORKER ALL MONTH WITH LITTLE MAINTANENCE. HAND GRAB SAMPLES CONCURRED WITH THE DUPONT TEST READINGS. A MODULE HAD ONLY ONE FORCED OUTAGE THIS MONTH. B MODULE WAS FORCED OUT OF THE GAS PATH THREE TIMES, ONCE TO REMOVE A PLUGGED DIFFUSER, ONCE FOR A LOW LEVEL IN THE SLURRY STORAGE TANK AND ONCE FOR LEAKS IN THE REHEATER TUBE BUNDLES. HIGH SULFUR COAL WAS BURNED FOR EIGHT DAYS THIS MONTH. CHICAGO ADMIXTURES SPENT MOST OF THEIR TIME OPERATING OUT OF THE THICKENER. THE SCRUBBER WASTE MATERIAL WAS TREATED WITH LIME AND FLYASH AND HAULED TO AN OFF-SITE DISPOSAL AREA.

AUG. 77	A	99	81	99	81
	B	10	89	10	10

B MODULE WAS OUT OF THE GAS PATH ALMOST ALL OF THE MONTH BECAUSE OF REHEAT TUBES LEAKS. SIX NEW TUBE MODULES ON HAND WERE INSTALLED. TWELVE NEW TUBE MODULES WERE PUT ON ORDER FOR B MODULE. A MODULE WAS AVAILABLE THE ENTIRE MONTH WITH JUST THE VENTURI OPERATING. CHICAGO ADMIXTURES SPENT MOST OF THEIR TIME OPERATING OUT OF THE THICKENER SINCE LOWER SLUDGE LEVELS HAVE MADE OVERFLOW INTO THE SLUDGE POND UNNECESSARILY, THE THICKENER WASTE WAS TREATED WITH FLYASH AND SHIPPED TO THE DISPOSAL SITE.

SEP. 77	A	59	78	56	52
	B	51	75	51	51

B MODULE HAD HIGH VIBRATIONS ON THE BOOSTER FAN WHICH CUT THE AVAILABILITY OF B MODULE FOR THE FIRST WEEK OF THIS MONTH, AFTER BALANCING THE BOOSTER FAN, B MODULE OPERATED UNTIL THE UNIT OUTAGE.
A MODULE OPERATED UNTIL THE 19TH, WHEN A COMBINATION OF MUD AND SCALE BUILD-UP ON THE SUMP FLOOR STRUCTURALLY DAMAGED A MODULE. A DAMAGE COST STUDY IS BEING UNDERTAKEN.
CHICAGO ADMIXTURES SPENT MOST OF THEIR TIME OPERATING OUT OF THE THICKENER. THE WASTE MATERIAL WAS TREATED WITH LIME AND FLYASH AND HAULED TO A DISPOSAL AREA.

COMMONWEALTH WILL COUNTY UNIT NO. 1

PERIOD MONTH/YEAR	MODULE	SYSTEM PERFORMANCE FACTORS (%) AVAILABILITY	OPERABILITY	RELIABILITY	UTILIZATION
OCT. 77	TURBINE, BOILER AND SCRUBBER OVERHAUL				
NOV. 77	A	0	0	0	0
	B	9	50	9	9

UNIT 1 CAME ON LINE FOLLOWING A SIXTY-THREE DAY UNIT OUTAGE ON 11/25/77. A MODULE, HOWEVER, WAS STILL UNDERGOING SUMP REPAIRS WITH AN EXPECTED SERVICE DATE OF LATE DECEMBER. B MODULE IS IN GAS PATH AFTER EXPERIENCING SOME DIFFICULTY IN BALANCING ITS BOOSTER FAN.

DEC. 77	A	43	48	43	42
	B	84	94	84	84

THE MONTH OF DECEMBER SAW TROUBLESOME REHEAT PLUGGING ON B MODULE. BECAUSE OF NO SPARE REHEAT-COILS WE TRIED TAKING SOME COILS FROM A MODULE TO USE IN B MODULE; HOWEVER, B MODULE SEEMS TO BE PLUGGED MORE SEVERELY THAN ORIGINALLY BELIEVED. A MODULE WAS DOWN HALF THE MONTH BECAUSE OF A MAIN STEAM LEAK WHICH COULD NOT BE ISOLATED AND FINISHING THE DAMAGED SUMP FLOOR.
CHICAGO ADMIXTURES SPENT MOST OF THEIR TIME OPERATING OUT OF THE THICKENER. THE WASTE MATERIAL WAS TREATED WITH LIME AND FLYASH AND HAULED TO A DISPOSAL AREA.

TABLE 12
DESCRIPTION OF TERMINATED FGD SYSTEMS 01/78

UTILITY NAME	DAIRYLAND POWER COOP
UNIT NAME	ALMA STATION
UNIT LOCATION	ALMA WISCONSIN
UNIT RATING	80 MW
FUEL CHARACTERISTICS	COAL 3.0-3.5 PERCENT SULFUR
FGD VENDOR	FOSTER WHEELER
PROCESS	LIME INJECTION
NEW OR RETROFIT	RETROFIT
START UP DATE	6/71
FGD STATUS	TERMINATED
EFFICIENCY, PARTICULATES	
SO2	25 PERCENT
WATER MAKE UP	
SLUDGE DISPOSAL	
UNIT COST	
OPERATIONAL EXPERIENCE	THIS EXPERIMENTAL WET LIME FURNACE SYSTEM BEGAN OPERATIONS IN '71 AND WAS OPERATIONAL FOR PERIODS UP TO 30 DAYS. IN AUGUST 1974 THE UNIT WAS TESTED FOR TWO DAYS USING WESTERN LOW-SULFUR COAL. THE TEST SHOWED ABOUT 50% SO2 REMOVAL EFFICIENCY, BUT PRECIPITATOR PERFORMANCE WAS ADVERSELY AFFECTED. THE FGD PROJECT HAS BEEN SHUT DOWN INDEFINITELY SINCE AUGUST 1974, AND THERE ARE NO PLANS FOR FUTURE OPERATION.

TABLE 12
DESCRIPTION OF TERMINATED FGD SYSTEMS 01/78

UTILITY NAME	DETROIT EDISON
UNIT NAME	ST. CLAIR NO 6
UNIT LOCATION	BELLE RIVER MICHIGAN
UNIT RATING	163 MW
FUEL CHARACTERISTICS	COAL 0.3 PERCENT SULFUR
FGD VENDOR	PEABODY ENGINEERING
PROCESS	LIMESTONE SCRUBBING
NEW OR RETROFIT	RETROFIT
START UP DATE	5/76
FGD STATUS	TERMINATED
EFFICIENCY, PARTICULATES	99.7 PERCENT
SO2	90 PERCENT
WATER MAKE UP	OPEN LOOP 1.07 GPM/MW
SLUDGE DISPOSAL	10-ACRE SETTLING POND
UNIT COST	SEE APPENDIX A, FGD SYSTEM ECONOMICS
OPERATIONAL EXPERIENCE	REFER TO THE BACKGROUND INFORMATION SECTION IN TABLE 12 OF THIS REPORT. FOLLOWING THE COMPLETION OF A TWO MONTH INTERNAL SO2 SCRUBBING DEMONSTRATION PROGRAM THE SCRUBBER PLANT WAS BYPASSED. MODIFICATIONS WERE IMPLEMENTED TO OPERATE IN THE PARTICULATE MODE ONLY. VENTURI SCRUBBERS FOR PARTICULATE REMOVAL WERE PUT BACK IN OPERATION IN OCTOBER 1977. SPRAY TOWERS ARE NOT COUPLED INTO THE SCRUBBING SYSTEM. THE BOILER IS NOW FIRING LOW-SULFUR (0.3 PERCENT) WESTERN (DECKER) COAL. COMPLIANCE WITH SO2 REGULATIONS IS BEING ACHIEVED WITHOUT THE NECESSITY OF SCRUBBING.

BACKGROUND INFORMATION
ON
ST. CLAIR NO. 6

THE ST. CLAIR POWER PLANT OF THE DETROIT EDISON COMPANY IS LOCATED ON THE ST. CLAIR RIVER IN BELLE RIVER, MICHIGAN, APPROXIMATELY 45 MILES NORTHEAST OF DOWNTOWN DETROIT. THIS PLANT CONTAINS 7 FOSSIL-FUEL-FIRED GENERATING UNITS WHICH HAVE A TOTAL NET GENERATING CAPACITY OF 1775-MW. UNIT NO. 6 IS A COAL-FIRED TWO-STAGE SUPERHEATER UNIT, CONTAINING TWO SEPERATE BOILER BOXES KNOWN AS THE SOUTH BOILER AND THE NORTH BOILER. THE TOTAL NET GENERATING CAPACITY OF THE NO. 6 UNIT IS 325 MW. THE SUPERHEATER WAS MANUFACTURED BY COMBUSTION ENGINEERING AND PLACED IN SERVICE IN 1961. BOTH THE NORTH BOILER AND THE SOUTH BOILER ARE EQUIPPED WITH EMISSION CONTROL SYSTEMS. THE UNIT CURRENTLY OPERATES AT EXCESS AIR RATES OF 115 TO 120 PERCENT.

THE ST. CLAIR NO. 6 BOILER FIRES EXCLUSIVELY A LOW SULFUR WESTERN SUBBITUMINOUS COAL ORIGINATING FROM DECKER COMPANY'S DIETZ MINE LOCATED IN SOUTHERN MONTANA. THE AVERAGE CHARACTERISTICS OF THIS COAL ARE: HEAT CONTENT 9500 TO 9600 BTU/LB; SULFUR CONTENT OF 0.3 TO 0.4 PERCENT; ASH CONTENT OF 4.0 PERCENT; AND A TOTAL MOISTURE CONTENT OF 22.0 TO 24.0 PERCENT.

THE EMISSION CONTROL SYSTEM INSTALLED ON THE NORTH BOILER CONSISTS OF MECHANICAL COLLECTORS AND AN ELECTROSTATIC PRECIPITATOR (ESP) INSTALLED UPSTREAM OF A WET SCRUBBING SYSTEM. THE MECHANICAL COLLECTORS AND ESP ARE PROVIDED FOR PRIMARY PARTICULATE CONTROL THE WET SCRUBBING SYSTEM PROVIDES ADDITIONAL PARTICULATE REMOVAL AND PRIMARY DIOXIDE CONTROL.

THE FLUE GAS DESULFURIZATION (FGD) CONSISTS OF TWO PEABODY-LURGI VENTURI SCRUBBER AND SPRAY TOWER ABSORBER MODULES WITH A TOTAL FLUE GAS CAPACITY OF 493,500 ACFM AT 270 F. THIS VOLUME IS EQUIVALENT TO APPROXIMATELY 50 PERCENT OF THE TOTAL FLUE GAS FROM THE NO. 6 UNIT. THE DESIGN FLOW RATE PER SCRUBBING TRAIN IS 246,700 ACFM AT 270 F. FLUE GAS CAN BE BYPASSED AROUND THE SCRUBBING SYSTEM. 6.6 MW OF ELECTRICAL POWER ARE CONSUMED BY THE SCRUBBING OPERATIONS. THIS FGD SYSTEM IS AN EXPERIMENTAL DEMONSTRATION UNIT DESIGNED AND INSTALLED BY PEABODY ENGINEERED SYSTEMS IN COOPERATION WITH THE DETROIT EDISON COMPANY. EACH SCRUBBING TRAIN INCLUDES A CLEAR WATER TRAY AND RADIAL VANE MIST ELIMINATOR, A COMMON RECYCLE TANK, INDUCED DRAFT FAN, OIL-FIRED HOT-AIR-INJECTION REHEAT SYSTEM AND A 10.8-ACRE CLAY-LINED SETTLING POND. DESIGN REMOVAL EFFICIENCY OF THIS EMISSION CONTROL SYSTEM IS 99.7 PERCENT FOR PARTICULATES AND 90 PERCENT FOR SULFUR DIOXIDE BASED UPON HIGH SULFUR EASTERN COAL. A DIAGRAM OF ONE OF THE TWO PARALLEL SCRUBBING TRAINS IS PRESENTED IN APPENDIX B.

PERIOD	COMMENTS
NOV. 74 DEC. 74 JAN. 75	INSTALLATION OF THE FGD SYSTEM WAS ESSENTIALLY COMPLETED BY THIS TIME. A FAULTY INSTRUMENT PANEL WHICH WAS INCORRECTLY WIRED HAS BEEN RETURNED TO THE MANUFACTURER FOR REPAIR. TO DATE, THE UTILITY HAS WATER TESTED ALL THE AUXILIARY EQUIPMENT. THE I.D. FAN HAS BEEN TESTED AND AIR BALANCE HAS BEEN CHECKED.
FEB. 75 MAR. 75 APR. 75	A COLD FLUE GAS RUN WAS SUCCESSFULLY CONDUCTED MAR. 22-23. DURING THIS PERIOD, THE RUBBER-LINED PUMPS WERE REPAIRED AND THE LIMESTONE PREPARATION SYSTEM WAS CALIBRATED.
MAY 75 JUN. 75 JUL. 75	THE FIRST HOT FLUE GAS RUN WAS CONDUCTED ON JUNE 22, 1975. THE RUN LASTED FOR A PERIOD OF 22 HOURS. DURING THIS RUN, THE SCRUBBER WAS PURPOSELY TRIPPED OFF AT LOADS OF 40 AND 80 PERCENT. THIS WAS PERFORMED TO OBSERVE IF ANY DETRIMENTAL EFFECTS TO THE STEAM GENERATION OPERATIONS RESULTED. NONE WERE DETECTED. THE SYSTEM WAS TAKEN OUT OF SERVICE FOLLOWING THIS GAS RUN TO CORRECT THE FOLLOWING MAJOR OPERATION AREAS: *GAS CIRCUIT: LURGI THROAT POSITIONAL FAILURE; DETERIORATION OF THE DAMPER SEALS; SEVERE DUCT VIBRATIONS; SO2 ANALYZERS INOPERATIVE. *LIQUID CIRCUIT: FAILURE OF PH CONTROL SYSTEM; TARGET FLOW METER TARGETS HAVE BEEN BROKEN OFF; PUMP SEAL WATER LOW FLOW ALARM TRIPS.
AUG. 75	A SECOND HOT FLUE GAS RUN WAS INITIATED ON AUGUST 6 AND LASTED 27 HOURS. THE RUN WAS TERMINATED BECAUSE OF A REHEATER THERMOCOUPLE FAILURE. A SUBSEQUENT INSPECTION OF THE SCRUBBING SYSTEM REVEALED NO APPARENT ABNORMALITIES OR MALFUNCTIONS.
SEP. 75	A THIRD HOT FLUE GAS RUN OF 41 HOURS DURATION WAS COMPLETED OCTOBER 9. THE MAIN OBJECTIVE OF THIS RUN WAS TO EVALUATE VARIOUS COMPONENTS OF THE FRESH WATER SPRAY SYSTEM AND EFFECTS ON SYSTEM OPERATION. THE TEST RUN WAS PREMATURELY TERMINATED BECAUSE OF A BOILER FEED PUMP MALFUNCTION, RESULTING IN A REDUCED BOILER LOAD CAUSING SUBSEQUENT WEEPING OF THE WASH TRAY.
NOV. 75	
DEC. 75	A FOURTH FLUE GAS RUN OF 23 DAYS DURATION WAS TERMINATED DUE TO EXCESSIVE VIBRATION IN THE I.D. BOOSTER FAN. ONE OTHER SCRUBBER-RELATED OUTAGE OCCURRED WHEN THE PACKING OF ONE OF THE SCRUBBER RECIRCULATION PUMPS NEEDED MAINTENANCE. SO2 REMOVAL DURING THIS PERIOD WAS 90 PERCENT AND PARTICULATE OUTLET LOADING WAS 0.1 LB/1000 LBS OF FLUE GAS FOR 1-3 PERCENT SULFUR COAL.
JAN. 76	
FEB. 76	
MAR. 76	
APR. 76	THE 30-DAY VENDOR QUALIFICATION RUN AND FINAL ACCEPTANCE TEST WERE COMPLETED BY MAY 29. THE QUALIFICATION RUN WAS CONDUCTED ON A "HANDS OFF" BASIS USING PLANT PERSONNEL EXCLUSIVELY. THE SYSTEM WAS IN SERVICE 100 PERCENT OF THE TIME THE BOILER WAS OPERATIONAL. THE FINAL ACCEPTANCE TEST CONSISTED OF SIX 4-HR. TEST RUNS CONDUCTED IN THE SPACE OF ONE WEEK. THE SO2 REMOVAL EFFICIENCY FOR HIGH SULFUR COAL WAS 90.9 PERCENT. PARTICULATE REMOVAL ALSO EXCEEDED DESIGN LEVELS. NO MAJOR MECHANICAL OR CHEMICAL-RELATED PROBLEMS WERE ENCOUNTERED.
JUN. 76	
JUL. 76	
AUG. 76	THE UTILITY IS NOW PREPARING TO CONDUCT A 2 MONTH MINIMUM INTERNAL SCRUBBER DEMONSTRATION PROGRAM TO ACQUIRE OPERATING DATA AND INFORMATION. FOLLOWING THE COMPLETION OF THIS PROGRAM THE BOILERS WILL FIRE LOW SULFUR DECKER COAL (0.3 TO 0.4 PERCENT) TO MEET SO2 EMISSION REGULATIONS. THE SCRUBBERS WILL CONTINUE TO OPERATE IN THE PARTICULATE REMOVAL MODE
SEP. 76 OCT. 76	THE INTERNAL SO2 SCRUBBING DEMONSTRATION PROGRAM COMMENCED ON OCTOBER 14. THE SCRUBBERS OPERATED CONTINUOUSLY FOR 10 DAYS. OPERATION WAS INTERRUPTED BY A FORCED SCRUBBER OUTAGE RESULTING FROM SCALE AND SOLIDS CARRYOVER FROM THE WASH TRAY AND MIST ELIMINATOR TO THE SCRUBBER I.D. BOOSTER FAN ASSEMBLY, CAUSING VIBRATION AND BALANCE PROBLEMS. IT WAS DECIDED TO SANDBLAST THE FAN TO REMOVE SOLIDS BUILDUP ON THE FAN ASSEMBLY. THE UTILITY PLANS TO MODIFY THE COMPONENT'S WASH SYSTEM FOR GREATER FLOW CAPABILITY AFTER COMPLETION OF THE SO2 SCRUBBING PROGRAM. DECO ALSO PLANS TO CONTINUE PARTICULATE SCRUBBING FOLLOWING THE TERMINATION OF THE SO2 PROGRAM BY UNCOUPLING THE SPRAY TOWERS AND MAINTAINING THE PEABODY-LURGI VENTURI SCRUBBERS IN THE FLUE GAS STREAM. SOME LIMESTONE MAY HAVE TO BE ADDED TO THE PARTICULATE SCRUBBING SOLUTION IN ORDER TO PREVENT LOW PH SWINGS AND MINIMIZE THE POSSIBILITY OF ACID CORROSION DAMAGE TO THE INTERNAL COMPONENTS.

PERIOD	COMMENTS
NOV. 76	FOLLOWING THE COMPLETION OF SAND BLASTING OPERATIONS TO SCRUBBER'S I.D. BOOSTER FAN FOR REMOVAL OF SOLIDS BUILD UP, OPERATIONS RESUMED ON NOVEMBER 7 AND CONTINUED THROUGHOUT THE MONTH. THE SYSTEM'S AVAILABILITY INDEX FOR THE MONTH WAS 80 PERCENT THE MAJORITY OF THE OUTAGE TIME WAS CONSUMED PROCURING SAND BLASTING SERVICES. THE OPERATION ITSELF REQUIRED ONLY 8 HOURS.
DEC. 76	THE SO2 DEMONSTRATION PROGRAM CONTINUED THROUGHOUT DECEMBER. THE SYSTEM'S AVAILABILITY INDEX FOR THE PERIOD WAS 51 PERCENT. SCRUBBER OUTAGES RESULTED FROM MALFUNCTIONS OF THE LIMESTONE FEEDER, THE DENSE SLURRY TRAVERSE PUMP, THE DENSE SLURRY TANK AGITATORS, AND PLUGGING OF THE PH SAMPLE LINE.
JAN. 77 FEB. 77	THE SO2 DEMONSTRATION PROGRAM WAS OFFICIALLY TERMINATED ON DEC. 31, 1976. THE SCRUBBER PLANT WAS SHUT DOWN AT THIS POINT AND FLUE GAS WAS BY-PASSED AROUND THE SYSTEM.
MAR. 77	THE BOILER REMAINS IN SERVICE, FIRING LOW SULFUR (0.3%) WESTERN COAL. CURRENT PLANS CALL FOR THE SCRUBBER PLANT TO REMAIN OUT OF SERVICE UNTIL MID-JUNE FOR DESIGN AND OPERATIONS MODIFICATIONS. RESUMPTION OF SCRUBBER OPERATIONS WILL OCCUR IN THE PRIMARY PARTICULATE-REMOVAL MODE. THE PEABODY-LURGI VENTURI SCRUBBERS AND SPRAY TOWER ABSORBERS WILL REMAIN IN THE GAS STREAM. SOLUTION WILL BE CIRCULATED THROUGH THE VENTURI'S, WASH TRAYS, AND MIST ELIMINATORS. NO SOLUTION WILL BE CIRCULATED THROUGH THE SPRAY ZONE OF THE ABSORBER TOWERS. LIMESTONE REAGENT WILL BE ADDED TO THE SCRUBBING SOLUTION IN ORDER TO PREVENT LOW PH SWINGS AND SUBSEQUENT MATERIALS DAMAGE TO THE SCRUBBER'S INTERNALS. SO2 REMOVAL SHOULD RESIDE IN THE 35 TO 50% RANGE IN THIS MODE OF OPERATION BECAUSE OF THE SOLUTION'S ALKALINITY DUE TO THE FLY ASH AND LIMESTONE. ALSO DECO PLANS TO MAINTAIN A HIGHER L/G RATIO IN THE SCRUBBER MODULES. THIS MODE OF OPERATION IS PROJECTED TO CONTINUE FOR A ONE TO THREE-YEAR PERIOD FOLLOWING THE MID-JUNE RESTART.

TABLE 12
DESCRIPTION OF TERMINATED FGD SYSTEMS 01/78

UTILITY NAME	GULF POWER CO.
UNIT NAME	SCHOLZ NO. 1A
UNIT LOCATION	CHATTAHOOCHEE FLORIDA
UNIT RATING	20 MW
FUEL CHARACTERISTICS	COAL 3.0 PERCENT SULFUR
FGD VENDOR	ADL/COMBUSTION EQUIP ASSOCIATE
PROCESS	DOUBLE ALKALI SCRUBBING
NEW OR RETROFIT	RETROFIT
START UP DATE	2/75
FGD STATUS	TERMINATED
EFFICIENCY, PARTICULATES	99.7 PERCENT
SO2	95 PERCENT
WATER MAKE UP	CLOSED LOOP
SLUDGE DISPOSAL	ON-SITE LINED DISPOSAL POND
UNIT COST	
OPERATIONAL EXPERIENCE	REFER TO THE BACKGROUND INFORMATION SECTION IN TABLE 12 OF THIS REPORT. THIS PROTOTYPE SCRUBBING SYSTEM WAS INITIALLY PLACED IN SERVICE FEBRUARY 1975 AND WAS OPERATIONAL A TOTAL OF 4744 HOURS THROUGHOUT THE YEAR. THE SYSTEM REMAINED IN SERVICE DURING THE FOLLOWING 6 MONTHS IN 1976. SUCCESSFUL COMPLETION OF THIS PROGRAM OCCURRED ON JULY 2, 1976. PRESENT PLANS CALL FOR A FULL SCALE EPA-SPONSORED DEMONSTRATION PROGRAM WITH THE INSTALLATION SITE BEING LOUISVILLE GAS & ELECTRIC'S CANE RUN STATION, UNIT NO. 6.

BACKGROUND INFORMATION
ON
SCHOLZ CEA/ADL DUAL ALKALI PROTOTYPE

THE SCHOLZ STEAM POWER PLANT OF GULF POWER COMPANY IS LOCATED IN CHATTAHOOCHEE, FLORIDA. UNIT NO. 1 IS A COLA-FIRED STEAM BOILER DESIGNED AND INSTALLED BY BABCOCK AND WILCOX IN 1953. THIS UNIT IS NORMALLY RATED AT 40 MW AND IS CAPABLE OF 47.5 MW MAXIMUM CAPACITY. THIS UNIT FIRED VARIOUS TYPES OF COAL FOR TEST PURPOSES. THE AVERAGE CHARACTERISTICS OF THE COAL BURNED IN THIS UNIT DURING THE FGD DEMONSTRATION PROGRAM ARE* HEAT CONTENT OF 12,400 BTU/LB* MAXIMUM SULFUR CONTENT OF 5 PERCENT* ASH CONTENT OF 14 PERCENT* AND A MAXIMUM CHLORIDE CONTENT OF 0.15 PERCENT.

A 20-MW PROTOTYPE DUAL ALKALI SYSTEM WAS JOINTLY DEVELOPED, DESIGNED, AND INSTALLED BY COMBUSTION EQUIPMENT ASSOCIATES AND ARTHUR D. LITTLE. THE PROTOTYPE SYSTEM AT THE SCHOLZ STEAM PLANT IS INSTALLED ON THE NO. 1 BOILER. THE SYSTEM IS DESIGNED TO HANDLE APPROXIMATELY 50 PERCENT OF THE FLUE GAS FROM THE BOILER. THE BOILER HAS BEEN RETROFITTED WITH A SECTIONALIZED, HIGH-EFFICIENCY ESP INSTALLED UPSTREAM OF THE FGD SYSTEM AND CAPABLE OF 99.7 PERCENT PARTICULATE REMOVAL. THE ESP CAN BE SELECTIVELY DE-ENERGIZED FOR STUDY OF PARTICULATE IMPACT ON THE FGD OPERATION.

THE PROTOTYPE UNIT INCORPORATES A HIGH DEGREE OF FLEXIBILITY FOR GENERATION OF DESIGN AND OPERATING INFORMATION FOR A WIDE VARIETY OF APPLICATIONS. ALTHOUGH THE BASIC MODE OF SYSTEM OPERATION IS DUAL ALKALI WITH LIME REGENERATION, THE SYSTEM WAS DESIGNED TO ACCOMMODATE LIMESTONE REGENERATION AND LIME/LIMESTONE REGENERATION. THE SYSTEM CONSISTS OF A VENTURI SCRUBBER AND AN ABSORPTION TOWER, WITH AN ADDITIONAL STORAGE SILO FOR LIMESTONE, A MIX TANK, AND OTHER ASSORTED TANKS, PUMPS, CONTROLLERS, PIPING, AND A LINED DISPOSAL POND.

THE PROTOTYPE SYSTEM WAS COMPLETED AND PUT IN OPERATION BY CEA/ADL IN EARLY FEBRUARY 1975. IN MID-WAY AN EPA DUAL ALKALI TEST PROGRAM WAS INITIATED BY SOUTHERN SERVICES, CEA, AND ADL. THE SYSTEM WAS OPERATIONAL THROUGH EARLY JANUARY 1976 WHEN THE BOILER WAS SHUT DOWN FOR A SCHEDULED OVERHAUL. THE BOILER AND PROTOTYPE SYSTEM WERE PLACED BACK IN SERVICE IN EARLY MARCH 1976. THE SYSTEM HAS OPERATED CONTINUOSLY DURING THIS PERIOD ON A HIGH SULFUR COAL (3.5 TO 4.5 PERCENT) APPLICATION, TREATING FLUE GAS WITH SULFUR DIOXIDE CONCENTRATIONS IN THE 2000 TO 2500 PPM RANGE. IN ADDITION, THE SYSTEM WAS TESTED OUT ON FLUE GAS OFVARYING PARTICULATE TO DETERMINE THE IMPACT OF FLY ASH OF SYSTEM OPERATIONS. THE PROTOTYPE PROGRAM WAS SUCCESSFULLY CONCLUDED ON JULY 3, 1976 AT 6 A.M. RESULTS OF THE PROGRAM ARE BEING PREPARED FOR PUBLICATION. THIS PROCESS IS NOW SCHEDULED FOR FULL SCALE DEMONSTRATION APPLICATION AT LOUISVILLE GAS AND ELECTRIC'S CANE RUN NO. 6 UNIT.

THE PERFORMANCE OF THE SCHOLZ PROTOTYPE UNIT AND COMMENTS ARE LISTED BELOW IN THE PERFORMANCE TABLE. A PROCESS FLOW DIAGRAM OF THE SCHOLZ PROTOTYPE FGD UNIT IS PROVIDED IN APPENDIX B.

PERIOD	TOTAL HOURS	UNIT OPERATING HOURS BOILERS	FGD SYSTEM	FGD SYSTEM OPERABILITY	PERFORMANCE (%) UTILIZATION
FEB. 75	672	459	454	99	68
MAR. 75	744	507	485	96	665
APR. 75	720	604	336	56	47
MAY 75	744	598	375	63	50
JUN. 75	720	720	720	100	100
JUL. 75	744	683	221	32	30

UNIT WAS PLACED IN OPERATION FEB. 8, 1975 AND OPERATED UNTIL JULY 18 WHEN IT WAS SHUT DOWN FOR 2 MONTHS MODIFICATIONS, REPAIRS, AND REPLACEMENT OF PARTS. THE SYSTEM WAS UNAVAILABLE TO THE BOILER FOR A 491-HR PERIOD BECAUSE OF ADJUSTMENTS AND MODIFICATIONS REQUIRED FOR THE FORMAL EPA TEST PROGRAM IN MID-MAY.

AUG. 75	744	744	0	0	0
SEP. 75	720	577	254	44	35
OCT. 75	744	559	559	100	75

THE SYSTEM WAS SHUT DOWN FROM MID-JULY TO MID-SEPTEMBER FOR MECHANICAL OVERHAUL INVOLVING REPLACEMENT PARTS FOR VALVES THAT HAD FAILED. THE SYSTEM WAS PUT BACK IN OPERATION ON SEP 16, 1975. FROM MID-SEP. TO MID-OCT. THE AIR PREHEATER WAS REPAIRED AND BOILER OPERATION ADJUSTED TO REDUCE OXYGEN LEVELS IN THE FLUE GAS TO THE 5 TO 6 PERCENT RANGE. THE SYSTEM OPERATED APPROXIMATELY 800 HRS. DURING THISPERIOD.

NOV. 75	720	620	560	90	78
DEC. 75	744	732	732	100	98

THE SYSTEM RAN CONTINUOUSLY FOR THE REMAINDER OF THE TEST PERIOD THROUGH JANUARY 2, 1976. SO2 LEVELS DURING THIS PERIOD RANGED FROM 800 TO 1700 PPM. THE SYSTEM OPERATED IN THE CONCENTRATED MODE THROUGHOUT THE REMAINDER OF THE TEST PERIOD. IN THE PERIOD FROM MID-SEP. TO JAN. 2, 1976, THE SYSTEM OPERATED ABOUT 2100 HRS., WITH AN OPERABILITY FACTOR OF 97 PERCENT.

JAN. 76	744				
FEB. 76	696				

THE FGD SYSTEM AND BOILER UNDERWENT A SCHEDULED OVERHAUL DURING THE REPORT PERIOD. SYSTEM RESTART IS SCHEDULED FOR MID-MARCH 1976, TO CONTINUE UNTIL JUNE. DURING THIS OPERATING PERIOD HIGH-SULFUR COAL (3.5-4.0%) WILL BE BURNED TO ALLOW EVALUATION OF SYSTEM PERFORMANCE ON HIGH SULFUR COAL.

MAR. 76	744	742	445	60	60

THE SYSTEM WAS PUT BACK IN SERVICE ON MAR. 12, 1976. THE TOTAL NUMBER OF OPERATING HRS. FOR THE MONTH OF MAR. WAS 445 HRS. THIS TRANSLATES INTO A 94% OPERABILITY FACTOR SINCE THE MAR. 12 RESTART.

APR. 76	720	642	616	96	86
MAY. 76	744	735	651	89	88

SOME MINOR MECHANICAL PROBLEMS IN THE FORM OF AGITATOR SHAFT AND CONTROL VALVE FAILURES WERE ENCOUNTERED DURING THE REPORT PERIOD. SINCE THE SYSTEM RESTART ON MARCH. 12, HIGH-SULFUR COAL HAS BEEN BURNED IN THE BOILER (3.5 TO 4.5% SULFUR), RESULTING IN THE SO2 INLET CONCENTRATION LEVELS IN THE 2000 TO 2500 PPM RANGE.

JUN. 76	720	656	641	93	89

DURING THE LAST PHASE OF OPERATION, THE SYSTEM WAS TREATING FLUE GAS OF VARYING PARTICULATE LOADS. THE UPSTREAM ESP WAS SELECTIVELY DE-ENERGIZED, BOTH PARTIALLY AND TOTALLY, NO MAJOR UPSETS IN THE PROCESS CHEMISTRY OCCURRED. BOILER LOAD VARIATION RANGED FROM 30 TO 100%. THE PROTOTYPE PROGRAM AT THE PLANT WAS SUCCESSFULLY CONDUCTED ON JULY 2. ADL IS CURRENTLY COMPLETING DATA ACQUISTION AND ANALYSIS.

JUL. 76	744	54	54	100	

THE PROTOTYPE TEST PROGRAM WAS SUCCESSFULLY CONCLUDED ON JULY 3, 1976.

NOTE: THE BOILER HRS., SYSTEM OP HRS., AND THE CORRESPONDING PERFORMANCE VALUE CALCULATED INCLUDES SYSTEM OP UP TO THE SCHEDULED SHUTDOWN, ON JULY 3, 6 O'CLOCK A.M., 1976.

TABLE 12
DESCRIPTION OF TERMINATED FGD SYSTEMS 01/78

UTILITY NAME	GULF POWER CO.
UNIT NAME	SCHOLZ NO. 2A
UNIT LOCATION	CHATTAHOOCHEE FLORIDA
UNIT RATING	20 MW
FUEL CHARACTERISTICS	COAL 3.0 PERCENT SULFUR
FGD VENDOR	FOSTER WHEELER
PROCESS	ACTIVATED CARBON
NEW OR RETROFIT	RETROFIT
START UP DATE	2/76
FGD STATUS	TERMINATED
EFFICIENCY, PARTICULATES	99.7 PERCENT
SO2	74.5 PERCENT (DESIGN)
WATER MAKE UP	N/A DRY ADSORPTION SYSTEM
SLUDGE DISPOSAL	MOLTEN ELEMENTAL SULFUR
UNIT COST	SEE APPENDIX A, FGD SYSTEM ECONOMICS
OPERATIONAL EXPERIENCE	REFER TO THE BACKGROUND INFORMATION SECTION IN TABLE RED IN AUGUST 1975, REPORT. THIS IS A PROTOTYPE DRY ADSORPTION REGENERABLE SYSTEM DESIGNED BY FOSTER WHEELER AND BERGBAU FORSCHUNG. OPERATION OF THE PROTOTYPE UNIT DURING THE SCHOLZ DEMONSTRATION PROGRAM PROCEEDED ON AN INTERMITTENT BASIS. OPERATIONAL SEGMENTS OCCURED IN AUGUST 1975, OCTOBER 1975, AND MARCH, APRIL AND MAY 1976. SYSTEM OPERATIONS WERE PREMATURELY TERMINATED AT THIS POINT AND THE PROTOTYPE UNIT WAS SHUT DOWN. THE SYSTEM IS CURRENTLY INACTIVE.

BACKGROUND INFORMATION
ON
SCHOLZ FWBF DRY ADSORPTION PROTOTYPE

IN JANUARY 1973, THE SOUTHERN SERVICES COMPANY OF GULF POWER AWARDED A CONTRACT TO THE FOSTER WHEELER CORPORATION TO BUILD A 20-MW PROTOTYPE DRY ADSORPTION SYSTEM FOR FLUE GAS DESULFURIZATION. CONSTRUCTION ON THE FOSTER WHEELER PROCESS STARTEDFEBRUARY 15, 1974, AT THE SCHOLZ STEAM POWER PLANT IN CHATTACHOOCHEE, FLA. CONSTRUCTION WAS COMPLETED AND A TESTING PROGRAM WAS INITIATED IN MAY 1975.

THE SYSTEM AT THE SCHOLZ PLANT CONSISTS OF A 20-MW ADSORBER SECTION AND A 47.5-MW REGENERATION AND REDUCTION SECTION. THE 20 MW ADSORBER IS DESIGNED TO ACCEPT HALF OF THE MAXIMUM FLUE GAS FLOW FROM UNIT NO. 2. THE COAL-FIRED BOILER IS RATED AT 40 MW (NOMINAL)* IT FIRES COAL WITH AN AVERAGE HEATING VALUE OF 12,400 BTU/LB. MAXIMUM ASH AND SULFUR CONTENTS ARE 14 AND 5 PERCENT, RESPECTIVELY.

THE PURPOSE OF THE ADSORPTION SECTION OF THE FWBF DRY REMOVAL SYSTEM IS TO REMOVE SULFUR DIOXIDE, NITROGEN OXIDES, AND PARTICULATE FROM THE FLUE GAS WITH ACTIVATED CHAR, CONVERTING THE CAPTURED POLLUTANTS TO SULFURIC ACID. THE REGENERATION SECTION PROVIDES CONTINUOUS ON-SITE REGENERATION OF THE CHAR, WHICH HAS BEEN LOADED WITH SULFUR DIOXIDE IN THE FORM OF SULFURIC ACID. THE CHAR IS REGENERATED AND A LOW-VOLUME, SULFUR DIOXIDE-RICH OFF-GAS STREAM IS FED FORWARD TO THE RESOX REACTOR, WHICH REDUCES THE SULFUR DIOXIDE STREAM TO GASEOUS ELEMENTAL SULFUR THAT IS COLLECTED AND STORED IN AN INSULATED TANK.

THE DEMONSTRATION UNIT HAS TWO ROWS OF MODULES, EASH ROW CONSISTING OF SIX MODULES. THE ADSORPTION SECTION IS A TWO-STAGE DESIGN CONSISTING OF VERTICAL COLUMNS OF PARALLEL LOUVER BEDS WHICH SUPPORT AND CONTAIN THE ACTIVATED CHARCOAL. SULFUR DIOXIDE, OXYGEN, WATER VAPOR, AND NITROGEN OXIDES ARE ADSORBED BY THE CHAR PELLETS FROM THE CROSS-FLOWING FLUE GAS AT 250 TO 300 F. THE SULFUR DIOXIDE THEN REACTS WITH OXYGEN AND WATER TO FORM SULFURIC ACID WHICH IS FIRMLY RETAINED IN THE INTERIOR PORE SYSTEM OF THE CHAR PELLETS. THE CHAR IS THEN REGENERATED IN THE REGENERATOR VESSEL BY HEATING TO 1200 F, DRIVING OFF THE ENTRAINED GASES, AND REDUCING SULFURIC ACID TO SULFUR DIOXIDE. THE SULFUR DIOXIDE-RICH GAS IS THEN PASSED THROUGH A VESSEL CONTAINING CRUSHED COAL, RESULTING IN REDUCTION TO GASEOUS ELEMENTAL SULFUR AND CARBON DIOXIDE. THIS LATTER PROCESS IS CARRIED OUT AT 1200 TO 1500 F. A SCHEMATIC OF THE PROCESS COMPONENTS FOR THE FW-BF DRY ADSORPTION IS PRESENTED IN APPENDIX B.

THE INITIAL SHAKEDOWN ON FLUE GAS BEGAN AUG. 11, 1975, AND PROCEEDED CONTINUOUSLY FOR 10 DAYS. THE REGENERATION SECTION WAS OPERATIONAL ABOUT 60 PERCENT OF THE TIME. HOWEVER, THE REDUCTION SECTION HAS NOT YET BEEN INTEGRATED INTO SYSTEM OPERATION. SULFUR DIOXIDE REMOVAL WAS WELL ABOVE EXPECTATIONS AND PRESSURE DROP ACROSS THE ADSORBER WAS WELL BELOW DESIGN LEVELS. THE SYSTEM WAS SHUT DOWN FOR CORRECTION OF SEVERAL OPERATING PROBLEMS, EQUIPMENT MODIFICATIONS, AND EVALUATION OF THE INITIAL OPERATING DATA. OPERATION WAS RESUMED IN OCTOBER 1975, WHEN TWO CONSECUTIVE RUNS WERE CONDUCTED WITH THE REDUCTION PORTION OF THE SYSTEM PROCESSING FRONT-END OFF-GAS AT FULL OPERATING TEMPERATURES. A PROGRAM OF MODIFICATION WAS COMPLETED ON THIS SYSTEM IN EARLY JANUARY 1976. REINTRODUCTION OF FLUE GAS INTO THE INTEGRATED SYSTEM COMMENCED IN FEBRUARY 1976. OPERATIONS THROUGH A FINAL 4-MONTH TEST PROGRAM WERE PREMATURELY TERMINATED ON MAY 2, 1976.

PERIOD	COMMENTS
MAY 75 JUN. 75 JUL. 75 AUG. 75	COMPLETION OF CONSTRUCTION WAS FOLLOWED BY A 3-MONTH COMMISSIONING PERIOD DURING WHICH VARIOUS PIECES OF EQUIPMENT WERE OPERATED INDIVIDUALLY AND THEN IN COMBINATIONS TO SIMULATE SUBSYSTEM OPERATION. SUBSYSTEM OPERATIONS WERE INTEGRATED INTO SECTION OPERATIONS AND FLUE GAS WAS PASSED THROUGH THE ABSORBER AND REGENERATOR FOR A 10-DAY PERIOD BEGINNING AUGUST 11. RESOX CONSTRUCTION WAS INCOMPLETE AT THIS TIME.
OCT. 75	TWO CONSECUTIVE RUNS WERE CONDUCTED ON THE RESOX PORTION OF THE SYSTEM ON FRONT-END PROCESS OFF-GAS AT FULL OPERATING TEMPERATURES. THIS OPERATIONAL PERIOD LASTED 5 DAYS.
NOV. 75 DEC. 75 JAN. 76	A PROGRAM OF MODIFICATIONS ON THE SYSTEM BEGAN IN LATE AUGUST 1975 AND CONTINUED THROUGH JAN. 1976, WITH THE EXCEPTION OF THE 5-DAY RESOX OPERATION IN OCTOBER. MODIFICATIONS WERE COMPLETED AND PRE-STARTUP TESTING WAS CONDUCTED IN LATE JANUARY AND EARLY FEBRUARY. A 3-DAY CONTINUOUS RUN WAS SUCCESSFULLY COMPLETED.
FEB. 76	ALL MATERIALS-HANDLING LOOPS AND RESOX LOOPS WERE OPERATED AT FULL OPERATING TEMPERATURES AND PRESSURES. REENTRODUCTION OF FLUE GAS INTO THE SYSTEM COMMENCED, AND A 4-MONTH FORMAL TEST PROGRAM CONDUCTED BY SOUTHERN SERVICES AND FOSTER WHEELER IS NOW IN PROGRESS.
MAR. 76 APR. 76	THREE OPERATIONAL PERIODS WERE LOGGED BY THE PROTOTYPE SYSTEM DURING THE REPORT MONTHS. DURING THESE RUNS THE ADSORPTION AND REGENERATION SECTIONS PERFORMED ADEQUATELY. THE RESOX SECTION OPERATED INTERMITTENTLY BECAUSE OF PLUGGING PROBLEMS IN THE SULFUR CONDENSER. ALSO, THE FRONT END OF THE SYSTEM WAS TAKEN DOWN AT ONE POINT DUE TO FREQUENT HIGH TEMPERATURE EXCURSIONS. THIS PROBLEM WAS CORRECTED BY MODIFYING SYSTEM OPERATING PROCEDURES. CURRENTLY, WORK IS PROCEEDING ON THE SOLUTION OF THE SULFUR CONDENSER PROBLEM.
MAY 76	THE FW-BF UNIT COMPLETED AN OPERATIONAL PERIOD IN EARLY MAY WHICH HAD COMMENCED ON APRIL 26. THE SYSTEM WAS TAKEN DOWN AT THIS POINT FOR THE FOLLOWING REASONS: * DEPLETION OF CHAR SUPPLY. * HIGH CHAR CONSUMPTION RATES DUE TO MECHANICAL ATTRITION. * CORRECT/MODIFY THE CHAR/SAND SCREEN SEPARATOR. AT THIS POINT THE DECISION WAS MADE TO PREMATURELY TERMINATE THE FW-BF DEMONSTRATION PROGRAM RATHER THAN SHUT DOWN, DEBUG, AND RESTART THE SYSTEM AGAIN. THE SYSTEM SUPPLIER IS PURSUING ADDITIONAL FUNDING FOR THE CONTINUATION OF THE PROTOTYPE DEMONSTRATION PROGRAM.

TABLE 12
DESCRIPTION OF TERMINATED FGD SYSTEMS 01/78

UTILITY NAME	GULF POWER CO.
UNIT NAME	SCHOLZ NOS. 1B & 2B
UNIT LOCATION	CHATTAHOOCHEE FLORIDA
UNIT RATING	23 MW
FUEL CHARACTERISTICS	COAL 5.0 PERCENT SULFUR (MAX)
FGD VENDOR	CHIYODA INTERNATIONAL
PROCESS	THOROUGHBRED 101
NEW OR RETROFIT	RETROFIT
START UP DATE	3/75
FGD STATUS	TERMINATED
EFFICIENCY, PARTICULATES	99.7 PERCENT
SO2	90 PERCENT
WATER MAKE UP	OPEN LOOP
SLUDGE DISPOSAL	DRY GYPSUM POND
UNIT COST	SEE APPENDIX A, FGD SYSTEM ECONOMICS
OPERATIONAL EXPERIENCE	REFER TO THE BACKGROUND INFORMATION IN TABLE 12 OF THIS REPORT. CHIYODA AND GULF POWER ANNOUNCED ON MARCH 22 THE COMPLETION OF THIS DEMONSTRATION PROGRAM. DURING JANUARY, FEBRUARY, AND MARCH OPERATIONS, THERE WERE ONLY 20 MINUTES OF FORCED SCRUBBER OUTAGE. UTILIZATION WAS ESSENTIALLY 100 PERCENT UNTIL PROGRAM TERMINATION. PROCESS UTILIZATION WAS GREATER THAN PERCENT FROM OCT. 17 THROUGH PROGRAM COMPLETION. CHIYODA HAS SINCE ABANDONED THE 101 PROCESS DESIGN IN FAVOR OF THE 121 PROCESS DESIGN WHICH INCORPORATES LIMESTONE SCRUBBING IN A JET BUBBLER REACTOR.

BACKGROUND INFORMATION
ON
SCHOLZ UNITS 1 AND 2 - CHIYODA

THE SCHOLZ POWER PLANT IS LOCATED IN CHATTAHOOCHEE, FLORIDA, ABOUT 50 MILES WEST OF TALLAHASSEE. THE FGD SYSTEM WAS DESIGNED BY CHIYODA INTERNATIONAL CORP., FOR TESTING AND PROCESS DEMONSTRATION ON A COAL-FIRED APPLICATION. THE PROCESS IS USED IN JAPAN EXCLUSIVELY ON OIL-FIRED AND GAS-FIRED BOILERS, AND TAIL GAS FROM CLAUS UNITS.

THE SYSTEM AT SCHOLZ CAN HANDLE ONE-HALF THE LOAD (53,000 SCFM) FROM EITHER OF THE 40-MW NOMINALLY RATED BOILERS, WHICH WERE DESIGNED AND INSTALLED BY BABCOCK AND WILCOX IN 1953. DESIGN ABSORBER INLET SULFUR DIOXIDE CONCENTRATION IS 2250 PPM. VARIOUS TESTS COALS WITH SULFUR CONTENTS RANGING UP TO 5 PERCENT ARE SCHEDULED FOR BURNING.

THE PARTICULATE LOADS FROM NEWLY INSTALLED ELECTROSTATIC PRECIPITATORS ON THE TWO UNITS RANGE FROM 0.02 TO 0.1 GR/SCF. FLUE GAS FROM THE PRECIPITATORS IS QUENCHED WITH COOLING WATER TO REMOVE ADDITIONAL FLY ASH AND TO COOL THE GAS BEFORE IT ENTERS THE SULFUR DIOXIDE ABSORBER.

SULFUR DIOXIDE IS ABSORBED IN WATER AND CATALYTICALLY OXIDIZED WITH AIR TO FORM SULFURIC ACID. THE DILUTE ACID IS RECIRCULATED THROUGH THE ABSORBER. A PORTION OF THE ACID IS NEUTRALIZED WITH LIMESTONE TO PRODUCE GYPSUM AS A BY-PRODUCT.

BREAK-IN TESTING COMMENCED IN FEBRUARY 1975. THE FIRST FEW MONTHS OF THE SHAKEDOWN PERIOD WERE CHARACTERIZED BY MANY MINOR PROBLEMS, RESULTING IN A LOW OPERABILITY INDEX VALUE (30% FOR FEB-MAY). MANY OF THESE PROBLEMS WERE RESOLVED BY JUNE, (MANIFESTED BY A HIGHER OPERABILITY INDEX (84%) VALUE FOR THE JUNE-JULY PERIOD). A 6-WEEK SCRUBBER OUTAGE PERIOD COMMENCED IN AUGUST FROM UNBALANCING OF THE GYPSUM CENTRIFUGES. AFTER REPAIR OF THE CENTRIFUGES AND INSTALLATION ON SEPTEMBER 15, THE OPERABILITY INDEX THROUGH DECEMBER 1975, AVERAGED ABOVE 97 PERCENT.

CHIYODA, GULF POWER, AND SOUTHERN COMPANY SERVICES SUCCESSFULLY CONCLUDED CT-101 OPERATIONS ON MARCH 22, 1977, AFTER MORE THAN TWO YEARS OF INTENSIVE TESTING, EVALUATION, AND DEMONSTRATION. INFORMATION AND DATA CONCERNING THE OPERATION OF THE CT-101 PROTOTYPE UNIT ARE PRESENTED IN THE PERFORMANCE TABLE THAT FOLLOWS. A PROCESS FLOW DIAGRAM IS PROVIDED IN APPENDIX B.

GULF POWER CO. SCHOLZ 1B AND 2B - CHIYODA SCHOLZ UNIT NOS. 1B AND 2B

UNIT OPERATING HOURS

MONTH	TOTAL HOURS	BOILER	FGD SYSTEM	FGD SYSTEM PERFORMANCE (%) OPERABILITY	UTILIZATION
FEB. 75	672	672			
APR. 75	720	720	200	28	28
MAY 75	744	744	100	13	13

THIS IS A PILOT PLANT SIZE DEMONSTRATION UNIT. PRELIMINARY ENGINEERING AND DESIGN WORK BEGAN IN 1973. INITIAL SHAKEDOWN AND DEBUGGING OPERATIONS COMMENCED ON FEBRUARY 11, 1975. PROBLEMS ENCOUNTERED INCLUDED CRACKS IN THE FRP LINING AT THE OXIDIZING TOWER. STARTUP OCCURRED IN MARCH 1975. AFTER INITIAL OPERATION FOR BREAK-IN TESTS, THE UNIT WAS SHUT DOWN FOR INTERNAL INSPECTION. RELIABILITY TESTS THEN FOLLOWED IN JULY 1975. CHEMICAL PERFORMANCE WAS SATISFACTORY. EMISSION TESTS HAVE NOT BEEN PERFORMED. SOME PUMP AND INSTRUMENT FAILURES HAVE OCCURRED.

JUN. 75	720	685	685	100	95
JUL. 75	744	744	624	84	84

A 100 PERCENT OPERABILITY FACTOR WAS REGISTERED FOR THE MONTH OF JUNE. DURING THE MONTH OF JULY ONE CENTRIFUGE BECAME UNBALANCED, REQUIRING THE SPARE TO BE PLACED IN SERVICE.

AUG. 75	744		0		
SEP. 75	720	720	337	46	46

DURING THE MONTH OF AUGUST BOTH CENTRIFUGES BECAME UNBALANCED REQUIRING A FORCED OUTAGE WHICH EXTENDED TO MID-SEPTEMBER. UNIT OPERATED AT A 95 PERCENT SO2 REMOVAL EFFICIENCY DURING THIS PERIOD. GULF POWER IS ATTEMPTING TO UPGRADE THIS VALUE TO A HIGHER EFFICIENCY LEVEL.

OCT. 75	744	744	744	100	0

WASTE WATER DISCHARGE FROM THIS UNIT STILL A PROBLEM AREA.

NOV. 75	720	720	720	100	100

OUTAGE TIME WAS LESS THAN ONE HOUR DURING NOVEMBER OPERATION DUE TO A BROKEN FLUE GAS BLOWER INLET VANE AND REPAIR OF A PINHOLE IN THE PRESCRUBBER FRP LINING.

DEC. 75	744	744	726	98	98

SCRUBBER OUTAGES DURING DECEMBER RESULTED FROM CONTINUING REPAIRS TO A PINHOLE IN THE PRESCRUBBER FRP LINING.

JAN. 76	744	680	450	66	60
FEB. 76	696	690	77	11	11

OUTAGE TIME IN JANUARY-FEBRUARY WAS PRIMARILY FOR REPAIR AND MODIFICATION OF THE SUCTION AND DISCHARGE PIPING ON THE ABSORBENT CIRCULATION PUMPS. THESE FRP LINES BROKE IN JANUARY AT SOME WEAK FIELD JOINTS. SO2 REMOVAL EFFICIENCY HAS BEEN AS HIGH AS 95%.

MAR. 76	744	744	741	100	100
APR. 76	720	720	101	14	14

PLANT WAS STOPPED APRIL 5 FOR A SCHEDULED SHUTDOWN TO ALLOW INSTALLATION AND MODIFICATIONS FOR REDUCING THE QUANTITY OF LIQUID WASTE FROM THE SYSTEM. START-UP AND TESTING OF THIS MODIFICATION WAS PLANNED FOR THE FIRST WEEK IN MAY. A FIRE AT THE PLANT, HOWEVER, NECESSITATED A DELAY IN SYSTEM RESTART FOR AN ADDITIONAL 3 TO 4 WEEKS.

MAY 76

JUN. 76

THE SYSTEM WAS SHUTDOWN APRIL 24 BECAUSE OF EXTENSIVE FIRE DAMAGE IN THE OXIDIZING TOWER. THE FIRE, CAUSED BY A WELDING ACCIDENT, DAMAGED FRP AND POLYPROPYLENE COMPONENTS IN THE OXIDIZING TOWER. REPAIRS CONTINUED AS THE SYSTEM REMAINED OUT OF SERVICE DURING THE REPORT PERIOD. SYSTEM RESTART IS SCHEDULED FOR THE END OF JULY.

JUL. 76

AUG. 76	744	744	492	66	66

THE PROTOTYPE UNIT REMAINED OUT OF SERVICE MAY, JUNE AND JULY TO REPAIR THE FIRE-DAMAGED AREAS. THE SYSTEM WAS PUT BACK IN OPERATION IN AUGUST. THE SYSTEM WAS AGAIN BROUGHT DOWN DURING THE MONTH TO COMPLETE ADDITIONAL REPAIRS WHICH WENT UNDETECTED DURING THE PREVIOUS OUTAGE. 241.67 HOURS OF THE 251.75 HOURS OF AUGUST OUTAGE TIME WAS CONSUMED FOR THESE ADDITIONAL REPAIRS. THE WATER SAVINGS PROGRAM IS NOW BEING CONDUCTED ON THIS SYSTEM. BASICALLY, THIS TEST PROGRAM CALLS FOR A REDUCTION IN WASTEWATER BLOWDOWN AND FRESH WATER MAKEUP REQUIREMENTS BY RECYCLING THE MOTHER LIQUOR BLEED BACK TO THE PROCESS FOR ADDITIONAL SERVICE.

GULF POWER CO. SCHOLZ 1B AND 2B - CHIYODA SCHOLZ UNIT NOS. 1B AND 2B

UNIT OPERATING HOURS

MONTH	TOTAL HOURS	BOILER	FGD SYSTEM	FGD SYSTEM PERFORMANCE (%) AVAILABILITY	OPERABILITY	RELIABILITY	UTILIZATION
SEP. 76	720	720	496	99	69	99	69

TOTAL FORCED OUTAGE TIME DURING THE MONTH AMOUNTED TO 5.1 HOURS.

OCT. 76	744	744	357	70	48	62	48

TOTAL DOWN TIME DURING THE MONTH AMOUNTED TO 386.9 HOURS. OF THIS TOTAL 1.1 HOUR WAS ATTRIBUTED TO A FORCED SCRUBBER OUTAGE, 218 HOURS WAS REQUIRED TO REPAIR EXPECTED DAMAGES INCURRED IN THE PRESCRUBBER RESULTING FROM OPERATIONS IN THE WATER SAVINGS PROGRAM. SPECIFICALLY, THE LINING WAS SUFFERING FROM EXTENSIVE CORROSION DAMAGE BECAUSE OF HIGH ACID CONCENTRATIONS WHICH DEVELOPED IN THE PRESCRUBBER SCRUBBER SOLUTION. THIS OUTAGE WAS SCHEDULED FOR INSPECTION, REPAIR, AND PROVIDE DESIGN DATA FOR FUTURE UNITS. SO2 REMOVAL EFFICIENCY STILL RESIDES IN THE 85-95 PERCENT RANGE.

NOV. 76	720	720	717	99	99	99	99
DEC. 76	744	744	741	99	99	99	99

A TOTAL OF THREE FORCED SCRUBBER OUTAGES OCCURRED RESULTING IN OUTAGE TIME TOTALLING 6.5 HRS. PROBLEMS INCLUDED A MALFUNCTION OF A LEVEL INDICATOR, A BROKEN GUIDE VANE, AND AN OPERATOR ERROR RESULTING IN A LEAK OF SLURRY INTO THE WATER HEADER. ON NOV. 1, SOUTHERN SERVICES FINISHED ITS SCHOLZ EVALUATION OF THE CT-101. A PERFORMANCE REPORT IS DUE SPRING 1977. GULF POWER WILL CONTINUE OPERATION OF THE CHIYODA UNIT FOR AN UNSPECIFIED PERIOD IN 1977.

JAN. 77	744	744	744	100	100	100	100
FEB. 77	672	672	672	100	100	100	100
MAR. 77	744	744	514	100		100	

CIC, GPC, & SCS SUCCESSFULLY CONCLUDED THE CT-101 TESTING AND DEMONSTRATION PROGRAM ON MARCH 22. DURING THE REPORT PERIOD, THE TOTAL SCRUBBER OUTAGE TIME WAS 0.33 HR. THE SYSTEM HAS BEEN IN SERVICE ON A VIRTUALLY CONTINUOUS BASIS SINCE OCT. 17, TOTALLING OVER 5 MONTHS OF 100% RELIABLE OPERATION.

THE PROGRAM WAS TERMINATED TO ALLOW CIC TO DEVELOPE AND DEMONSTRATE A NEW FGD DESIGN. NO DEMONSTRATION COMMITMENTS HAVE YET BEEN MADE.

TABLE 12
DESCRIPTION OF TERMINATED FGD SYSTEMS 01/78

UTILITY NAME	ILLINOIS POWER
UNIT NAME	WOOD RIVER NO 4
UNIT LOCATION	EAST ALTON ILLINOIS
UNIT RATING	110 MW
FUEL CHARACTERISTICS	COAL 2.9-3.2 PERCENT SULFUR
FGD VENDOR	MONSANTO ENVIRO CHEM SYSTEMS
PROCESS	CATALYTIC OXIDATION
NEW OR RETROFIT	RETROFIT
START UP DATE	10/72
FGD STATUS	TERMINATED
EFFICIENCY, PARTICULATES	99 PERCENT
SO2	85 PERCENT
WATER MAKE UP	
SLUDGE DISPOSAL	SULFURIC ACID PRODUCT
UNIT COST	SEE APPENDIX A, FGD SYSTEM ECONOMICS
OPERATIONAL EXPERIENCE	REFER TO THE BACKGROUND INFORMATION SECTION IN TABLE 12. SYSTEM START-UP OCCURRED IN OCTOBER 1972. INITIAL AND SUBSEQUENT OPERATIONS WERE ACCOMPANIED BY A NUMBER OF SEVERE MECHANICAL-RELATED PROBLEMS RESULTING IN LIMITED OPERATIONS AND EVENTUAL TERMINATION OF THE PROGRAM. TOTAL OPERATION TIME WAS 444 HOURS IN 1972, 158 HOURS IN 1973 AND 55 HOURS IN 1974.

BACKGROUND INFORMATION
ON
WOOD RIVER NO. 4

THE WOOD RIVER POWER STATION OF THE ILLINOIS POWER COMPANY IS LOCATED NEAR EAST ALTON, ILLINOIS, NORTH OF ST. LOUIS, MISSOURI. THE NO. 4 BOILER IS A COMBUSTION ENGINEERING PULVERIZED-COAL-FIRED UNIT THAT HAS A GROSS RATED CAPACITY OF 109 MW AND A NET CAPACITY OF 103 MW. THIS UNIT FIRES A HIGH SULFUR CENTRAL ILLINOIS COAL WITH TYPICAL CHARACTERISTICS OF 3.1 PERCENT SULFUR, 10 PERCENT ASH AND A HEAT CONTENT OF 10,800 BTU/LB. ANNUAL COAL CONSUMPTION IS APPROXIMATELY 275,000 TONS/YEAR.

THE EMISSION CONTROL EQUIPMENT FOR THIS BOILER INCLUDES MECHANICAL COLLECTORS, A HIGH EFFICIENCY ESP, AND A MONSANTO CATALYTIC OXIDATION (CATOX) FGD SYSTEM FOR THE CONTROL OF PARTICULATES AND SULFUR DIOXIDE. DESIGN REMOVAL EFFICIENCIES OF THIS CONTROL SYSTEM ARE 99.9 PERCENT FOR PARTICULATES AND 85 PERCENT FOR SULFUR DIOXIDE. INLET SULFUR DIOXIDE CONCENTRATIONS TO THE CATOX SYSTEM ARE GENERALLY IN THE 2000 TO 2200 PPM RANGE.

FOLLOWING PASSAGE THROUGH THE PARTICULATE REMOVAL SYSTEM, THE FLUE GAS ENTERING THE SCRUBBING SYSTEM IS HEATED TO A TEMPERATURE OF 850 F AND PASSES THROUGH A VANADIUM PENTOXIDE FIXED-BED CATALYTIC CONVERTER, WHERE THE SULFUR DIOXIDE IS OXIDIZED TO SULFUR TRIOXIDE. THE GAS THEN FLOWS THROUGH AN ACID ABSORPTION TOWER, WHERE THE SULFUR TRIOXIDE IN THE GAS IS CONVERTED TO SULFURIC ACID. AN ACID MIST ELIMINATOR ENSURES REMOVAL OF ENTRAINED ACID MIST FROM THE GAS STREAM. THE CLEANED GAS IS DISCHARGED TO THE STACK AND THE PRODUCT ACID IS COOLED AND STORED IN TANKS. A SIMPLIFIED PROCESS FLOW DIAGRAM OF THE WOOD RIVER CATOX SYSTEM IS PRESENTED IN APPENDIX B.

THIS DEMONSTRATION SYSTEM, PARTIALLY FINANCED BY EPA, WAS STARTED UP IN SEPTEMBER 1972. WHILE THE MAIN PARTS OF THE UNIT PERFORMED ACCEPTABLY, VARIOUS TROUBLES WITH ASSOCIATED EQUIPMENT CAUSED EXTENSIVE SHUTDOWNS AND DELAYS, TO THE EXTENT THAT APPROXIMATELY 27 DAYS OF FULL OPERATION HAVE BEEN OBTAINED IN ALMOST TWO YEARS. A 24-HOUR PERFORMANCE TEST RUN WAS COMPLETED IN JULY 1973. THE FOLLOWING GUARANTEES WERE ACHIEVED AND EXCEEDED: 90 PERCENT CONVERSION OF SULFUR DIOXIDE TO SULFUR TRIOXIDE (ABOUT 85 PERCENT NET REMOVAL), 99 PERCENT REMOVAL OF PARTICULATE ENTERING THE SYSTEM, LESS THAN 1 MG/ACF OF ACID MIST IN GAS LEAVING THE SYSTEM, PRODUCTION OF 60 DEGREES BAUME ACID.

PERFORMANCE SUMMARY

THE WOOD RIVER SYSTEM WAS STARTED-UP IN SEPTEMBER 1972 BUT WAS SHUT DOWN ALMOST IMMEDIATELY (IN OCTOBER) TO CONVERT THE BURNERS TO OIL FIRING, WHICH WAS NOT COMPLETED UNTIL JUNE 1973. A SUCCESSFUL PERFORMANCE TEST WAS THEN MADE, BUT BECAUSE OF THE CATALYST PLUGGING HAZARD,THE SYSTEM WAS SHUT DOWN AGAIN TO INSTALL AN EXTENAL BURNER SYSTEM, WHICH WAS NOT COMPLETED UNTIL APRIL 1974. VARIOUS OTHER PROBLEMS WITH STANDARD EQUIPMENT HAVE BEEN ENCOUNTERED SINCE, WITH THE RESULT THAT ONLY 657 HOURS OF OPERATING TIME HAVE BEEN LOGGED IN TWO YEARS.

SEVERAL OTHER MAJOR PROBLEM AREAS ENCOUNTERED DURING THE INTERMITTENT OPERATION OF THIS REGENERABLE SYSTEM INCLUDED: FROZEN DAMPERS ON REHEAT BURNERS, CRACKS IN THE TEFLON LINER ON THE ACID PUMP'S DISCHARGE HEADER, CRACKS IN THE REHEAT DUCTING, FALL OF REFRACTORY BRICKS FROM THE REHEATER BURNER DOME, AND NEED FOR REINFORCEMENT OF THE STRUCTURE SUPPORTING THE HIGH TEMPERATUR FLUE GAS DUCT TO THE CATALYTIC CONVERTER.

OPERATING LOG

CATALYTIC OXIDATION SYSTEM
WOOD RIVER NO. 4 - ILLINOIS POWER CO.
1972 TO 1973

DATE	HOURS	DATE	HOURS
10-6-72	24	9-4-72	12
10-9-72	24	9-5-72	24
10-10-72	16	9-6-72	24
10-13-72	20	9-7-72	2
10-14-72	16	9-11-72	2
10-30-72	24	9-12-72	16
10-31-72	16	9-13-72	24
7-21-73	18	9-14-72	24
7-22-73	24	9-15-72	24
7-23-73	18	9-16-72	24
7-24-73	24	9-17-72	24
7-25-73	14	9-18-72	24
7-26-73	13	9-19-72	3
7-17-73	19	9-24-72	17
7-28-73	19	10-6-72	12
7-29-73	9	10-7-72	24

NOTE: THE OPERATION TIME LOG DOES NOT INCLUDED INTERMITTENT SYSTEM OPERATION DURING 1974. SYSTEM OPERATIONS FOR 1974 AMOUNTED TO 55 HRS. TOTAL OPERATION TIME FOR 2.5 YRS. OF OPERATION WAS 657 HRS.

TABLE 12
DESCRIPTION OF TERMINATED FGD SYSTEMS 01/78

UTILITY NAME	KEY WEST UTILITY BOARD
UNIT NAME	STOCK ISLAND PLANT
UNIT LOCATION	KEY WEST FLORIDA
UNIT RATING	37 MW
FUEL CHARACTERISTICS	OIL 2.4 PERCENT SULFUR
FGD VENDOR	ZURN AIR SYSTEMS
PROCESS	LIMESTONE SCRUBBING
NEW OR RETROFIT	NEW
START UP DATE	10/72
FGD STATUS	TERMINATED
EFFICIENCY, PARTICULATES	90 PERCENT
SO2	85 PERCENT-ESTIMATED
WATER MAKE UP	OPEN LOOP 2.7 GPM/MW
SLUDGE DISPOSAL	SOLAR EVAPORATION POND
UNIT COST	SEE APPENDIX A, FGD SYSTEM ECONOMICS
OPERATIONAL EXPERIENCE	REFER TO BACKGROUND INFORMATION IN TABLE 12 OF THIS REPORT. THIS FGD SYSTEM WAS FIRST PLACED IN SERVICE OCTOBER 1972. THE FGD SYSTEM HAS BEEN OUT OF SERVICE SINCE JANUARY 28, 1975. EXTENSIVE MODIFICATIONS AND REPAIRS HAVE BEEN REQUIRED. RESUMPTION OF OPERATIONS IN THE FUTURE LOOKS VERY DOUBTFUL.

BACKGROUND INFORMATION
ON
STOCK ISLAND PLANT

THE UTILITY BOARD OF THE CITY OF KEY WEST OWNS AND OPERATES A NEW 37-MW OIL-FIRED POWER BOILER, INSTALLED AT THEIR STOCK ISLAND PLANT WHICH IS LOCATED DIRECTLY ADJACENT TO THE ISLAND CITY OF KEY WEST. THE BOILER IS AN ERIE CITY BALANCED-DRAFT OIL-FIRED UNIT THAT IS NOMINALLY RATED AT 37 MW AND CAN ACHIEVE 42 MW AT FULL PERFORMANCE. THE UNIT FIRES NO. 6 RESIDUAL FUEL OIL FROM VENEZUELA WITH SULFUR AND ASH CONTENTS OF 2.75 AND 0.05 PERCENT, RESPECTIVELY. THE UNIT'S GROSS HEAT RATE IS 11,380 BTU/KWH. INITIAL OPERATION OF THE UNIT COMMENCED IN NOVEMBER 1972.

THE EMISSION CONTROL SYSTEM FOR THIS UNIT CONSISTS OF A MULTIPLE TUBE MECHANICAL DUST COLLECTOR INSTALLED UPSTREAM OF TWO SULFUR DIOXIDE WET SCRUBBERS DESIGNED AND INSTALLED BY ZURN AIR INDUSTRIES. THIS IS A DEMONSTRATION FACILITY (EPA FUNDED) EMPLOYING LIMESTONE IN A SEAWATER SOLUTION FOR THE REMOVAL OF SULFUR DIOXIDE FROM THE BOILER FLUE GAS STREAM. NO PROVISIONS FOR STACK GAS REHEAT EXIST AT THE FACILITY.

THE LIMESTONE ABSORBENT IS OBTAINED FROM CORAL DREDGED FROM THE OCEAN. THE CORAL CONSISTS PRIMARILY OF CACO3 WITH LITTLE OR NO MGCO3. THE CORAL IS GROUND TO A FINE POWDER IN A HAMMERMILL CRUSHER TO 90 PERCENT MINUS 325 MESH AND SLURRIED IN SEAWATER.

ZURN DUSTRAXTORS ARE EMPLOYED FOR THE REMOVAL OF SULFUR DIOXIDE AND RESIDUAL PARTICULATE FROM THE BOILER FLUE GAS. THE TWO SCRUBBER MODULES ARE DESIGNED TO HANDLE A COMBINED TOTAL OF 126,950 CFM AT 150 F. FLUE GASES FROM THE BOILER ARE DRAWN THROUGH AN INDUCED DRAFT FAN AND FORCED EITHER THROUGH THE BYPASS DUCT OR THROUGH ONE OR BOTH SCRUBBERS VIA THREE SETS OF DAMPERS BETWEEN THE INDUCED-DRAFT FAN AND THE STACK. BEFORE ENTERING THE SCRUBBING SYSTEM THE GAS IS COOLED FROM 360 F TO 160 F BY SEAWATER SPRAYS. THIS COOLING PROTECTS THE FIBERGLASS COMPONENTS OF THE SCRUBBER MODULES. A PRESSURE DROP OF 12 TO 14 INCHES WATER GAUGE IS THE NORMAL OPERATING RANGE FOR THE SCRUBBERS. THE SPENT SCRUBBING SLURRY IS BLED OFF TO TWO ON-SITE SETTLING PONDS WITH A RETENTION CAPACITY OF 21 DAYS. THE SLUDGE SETTLES OUT AND CLARIFIED WATER IS DISCHARGED BACK INTO THE SEA BY AN OVERFLOW PIPE AND SEEPAGE. THE PARTICULATE AND SULFUR DIOXIDE REMOVAL EFFICIENCIES OF THE EMISSION CONTROL SYSTEM ARE 64 TO 82 PERCENT AND 68 TO 73 PERCENT, RESPECTIVELY. ACTUAL INLET AND OUTLET SULFUR DIOXIDE LOADINGS ARE 1300 TO 1500 PPM AND 300 TO 500 PPM. INLET AND OUTLET PARTICULATE LOADINGS ARE 0.20 GR/SCF AND 0.05 GR/SCF.

SYSTEM PERFORMANCE

START-UP OF THE SCRUBBING SYSTEM OCCURRED IN AUGUST 1973. ENSUING OPERATION HAS PROCEEDED ON AN INTERMITTENT BASIS. THE MAJOR PROBLEM AREAS ENCOUNTERED HAVE INCLUDED:

*SEVERE CORROSION OF GAS QUENCH DUCT AND DAMPER SEALING FANS ON INLET AND OUTLET OF SCRUBBERS.
*PLUGGING AT THE BOTTOM OF SCRUBBER TUBES.
*LIQUID LEVEL CONTROL FAILURES IN THE SCRUBBER MODULES.
*POOR LIMESTONE UTILIZATION (APPROXIMATELY 20 PERCENT).
*INDUCED DRAFT FAN REPAIRS.
*REPLACEMENT OF INTERNAL STAINLESS STEEL PARTS WITH MONEL COMPONENTS.
*BOILER FOUNDATION AND BOILER TUBE PROBLEMS.
*LIMESTONE SUPPLY SHORTAGES.

ADDITIONAL INFORMATION AND DETAILS ON THE PROGRESS OF THIS INSTALLATION ARE PRESENTED IN THE PERFORMANCE TABLE BELOW. A PROCESS FLOW DIAGRAM IS PRESENTED IN APPENDIX B.

KEY WEST UTILITY BOARD

STOCK ISLAND PLANT

PERIOD	TOTAL PERIOD (HRS)	PERFORMANCE HISTORY BOILER (HRS)	SCRUBBER (HRS)	OPERABILITY (%)
SEP. 72	696	0	0	0
OCT. 72	744	0	0	0
NOV. 72	720	528	0	0
DEC. 72	744	192	0	0
JAN. 73	744	384	0	0
FEB. 73	672	672	120	18
MAR. 73	744	744	0	0
APR. 73	720	720	0	0
MAY 73	744	744	0	0
JUN. 73	720	720	0	0
JUL. 73	744	744	0	0
AUG. 73	744	744	40	5
SEP. 73	720	720	0	0
OCT. 73	744	522	24	5
NOV. 73	720	720	42	6
DEC. 73	744	744	72	10
JAN. 74	744	624	209	33
FEB. 74	672	600	0	0
MAR. 74	744	744	0	0
APR. 74	720	720	0	0
MAY 74	744	30	0	0
JUN. 74	720	120	0	0
JUL. 74	744	744	0	0
AUG. 74	552	552	24	4
AUG. 74	840	641	216	34
SEP. 74	672	36	0	0
OCT. 74	672	672	252	38
NOV. 74	840	840	362	43
DEC. 74	672	672	108	16
JAN. 75	672	672	110	16
FEB. 75	840	642	0	0
MAR. 75	672	672	0	0
APR. 75	672	672	0	0
MAY 75	840	840	0	0
JUN. 75	672	672	0	0
JUL. 75	672	672	0	0
AUG. 75	840	160	0	0
TOTAL	26880	20895	1579	8

AS OF MARCH 1977 IT HAD NOT BEEN DECIDED WHETHER THERE WOULD BE FUTURE FGD OPERATIONS AT THE STOCK ISLAND PLANT.

TABLE 12
DESCRIPTION OF TERMINATED FGD SYSTEMS 01/78

UTILITY NAME	POTOMAC ELECTRIC & POWER
UNIT NAME	DICKERSON NO. 3
UNIT LOCATION	DICKERSON MARYLAND
UNIT RATING	95 MW
FUEL CHARACTERISTICS	COAL 2.0 PERCENT SULFUR
FGD VENDOR	CHEMICO
PROCESS	MAGNESIUM OXIDE SCRUBBING
NEW OR RETROFIT	RETROFIT
START UP DATE	9/73
FGD STATUS	TERMINATED
EFFICIENCY, PARTICULATES	99.3 PERCENT
SO2	90 PERCENT
WATER MAKE UP	3.2 GPM/MW
SLUDGE DISPOSAL	ACID PLANT REGENERATION
UNIT COST	SEE APPENDIX A, FGD SYSTEM ECONOMICS
OPERATIONAL EXPERIENCE	REFER TO BACKGROUND INFORMATION SECTION IN TABLE 12 OF THIS REPORT. A SINGLE, TWO-STAGE VENTURI SCRUBBER-ABSORBER MODULE UTILIZING THE CHEMICO-BASIC MAGNESIUM OXIDE SULFUR DIOXIDE REMOVAL/RECOVERY PROCESS WAS RETROFITTED ONTO THE NO. 3 UNIT, HANDLING APPROXIMATELY 50 PERCENT OF THE COAL-FIRED FLUE GAS. THE MAGNESIUM SULFITE BY PRODUCT WAS REGENERATED AT AN EPA-FINANCED REGENERATION FACILITY AT THE ESSEX CHEMICAL COMPANY IN RHODE ISLAND. MAGOX OPERATIONS WERE COMPLETED IN 08/75. PARTICULATE MODE OPERATIONS ARE CONTINUING.

BACKGROUND INFORMATION
ON
DICKERSON NO. 3

THE DICKERSON STATION OF POTOMAC ELECTRIC POWER CO. (PEPCO) IS LOCATED ON THE POTOMAC RIVER NEAR DICKERSON, MARYLAND, ABOUT 30 MILES NORTHWEST OF WASHINGTON, D.C. THE STATION HAS 3 ELECTRIC GENERATORS, EACH RATED AT 190 MW. UNIT NO. 3 IS A DRY BOTTOM COAL-FIRED BOILER DESIGNED BY COMBUSTION ENGINEERING AND INSTALLED IN 1962. THE COAL NOW BURNED HAS AN AVERAGE GROSS HEATING VALUE OF 11,700 BTU/LB AND AVERAGE ASH AND SULFUR CONTENTS OF 14 AND 2 PERCENT, RESPECTIVELY. THE BOILER IS FITTED WITH AN ELECTROSTATIC PRECIPITATOR DESIGNED AND INSTALLED BY RESEARCH-COTTRELL IN 1962. THE FGD SYSTEM EMPLOYS THE CHEMICO-BASIC MAGNESIUM OXIDE SCRUBBING PROCESS. THE RETROFIT SYSTEM HANDLES APPROXIMATELY 50 PERCENT OF THE EXHAUST GAS FROM THE NO. 3 UNIT.

THE FGD SYSTEM CONSISTS OF A SINGLE, TWO-STAGE SCRUBBER/ABSORBER, WHICH INCORPORATES AN ADJUSTABLE-THROAT VENTURI SCRUBBER FOR PARTICULATE REMOVAL AND A SECOND STAGE ABSORBER WITH A FIXED VENTURI TO REMOVE SULFUR DIOXIDE. THE LIQUOR STREAMS FOR BOTH STAGES ARE SEPARATE AND OPERATE IN A CLOSED-LOOP MODE. UNTIL MID-1975 THE MAGNESIUM SULFITE GENERATED WAS TRANSFERRED TO AN EPA FINANCED FACILITY AT THE ESSEX CHEMICAL COMPANY SULFURIC ACID MANUFACTURING PLANT IN RUMFORD, RHODE ISLAND, WHERE MAGNESIUM OXIDE WAS REGENERATED AND SULFUR DIOXIDE FROM THE REGENERATION PROCESS WAS CONVERTED TO SULFURIC ACID. THE RUMFORD FACILITY HAS SINCE BEEN CLOSED DOWN. A GENERAL PROCESS FLOW DIAGRAM OF THE DICKERSON NO. 3 WET SCRUBBING SYSTEM AND REGENERATION FACILITIES IS PRESENTED IN APPENDIX B.

CONSTRUCTION WAS COMPLETED IN AUGUST AND THE SYSTEM STARTED UP IN SEPTEMBER 1973. DURING INTERMITTENT OPERATIONS FOR SHAKEDOWN THROUGH JANUARY 1974, THE SYSTEM'S LONGEST CONTINUOUS RUN WAS 271 HOURS. THE SYSTEM WAS RESTARTED FROM JULY THROUGH DECEMBER 1974, AND AGAIN ON AUGUST 11, 1975, FOR APPROXIMATELY 87 HOURS.

FGD UNIT OUTAGES WERE CAUSED PRIMARILY BY PIPE AND PUMP CORROSION AND MAJOR TURBINE OVERHAUL OF THE BOILER. PARTICULATE AND SULFUR DIOXIDE REMOVAL EFFICIENCY GUARANTEES WERE CORROBORATED DURING OPERATIONAL PHASES.

THE REMAINING SUPPLY OF MAGNESIUM OXIDE, ABOUT 100 TONS (10 DAYS), HAS BEEN DEPLETED, AND THE DICKERSON UNIT HAS BEEN TERMINATED AS AN FGD SYSTEM.

POTOMAC ELECTRIC & POWER FGD SYSTEM OPERATING HISTORY DICKERSON UNIT NO. 3

OPERATING PERIOD	COMMENTS
SEP. 73 TO JAN. 74	PROBLEMS DURING THIS PERIOD RANGED FROM CORROSION LEAKS IN EXPANSION JOINTS TO PROBLEMS IN MATERIAL HANDLING EQUIPMENT, FEEDING AND SLAKING OF MGO, PLUGGING IN THE MGO MIX TANK AND SUCTION LINES TO THE MGO MAKE-UP PUMPS.
JAN. 74 TO APR. 74	MAINTENANCE AND MODIFICATIONS WERE PERFORMED ON THE SYSTEM. THE MAJOR SYSTEM REVISION MADE DURING THIS PERIOD WAS THE ADDITION OF A PRE-MIX TANK IN THE MGO SYSTEM.
APR. 74 TO JUL. 74	LIMITED OPERATION BECAUSE THE UTILITY DID NOT HAVE ACCESS TO THE EPA CALCINING FACILITY AT THE ESSEX CHEMICAL COMPANY SULFURIC ACID PLANT. BY THE END OF JUNE 1974, ALL THE MGO AT DICKERSON HAD BEEN USED AND A SILO PLUS THREE CARS WERE FULL OF MGSO3.
AUG. 74 TO DEC. 74	DURING THIS PERIOD THE SYSTEM GENERALLY OPERATED AT 75 PERCENT OF THE DESIGN GAS FLOW.
JAN. 75 FEB. 75 TO JUL. 75	PROBLEMS DEVELOPED IN THE BUCKET ELEVATOR TRANSPORTING THE MGSO3 FROM THE DRYER TO THE STORAGE SILO. UNIT NO. 3 WAS TAKEN OUT OF SERVICE FOR AN 8 TO 12 WEEK TURBINE OVERHAUL. THE SCRUBBER WAS INSPECTED, MAINTENANCE AND MODIFICATIONS WERE MADE.
AUG. 75	THE FGD SYSTEM WAS RESTARTED IN AUGUST. STEAM WAS LOST TO THE MGO MIX TANK, RESULTING IN A VERY MOIST PRODUCT FROM THE CENTRIFUGE. CAKING IN THE DRYER OCCURRED. AT THIS POINT, THE UTILITY DECIDED TO TEST ONLY THE FIRST-STAGE OF THE SCRUBBING SYSTEM, TAKING GAS AHEAD OF THE PRECIPITATOR. FGD OPERATION AT DICKERSON TERMINATED AT THIS POINT.

TABLE 12
DESCRIPTION OF TERMINATED FGD SYSTEMS 01/76

UTILITY NAME	PUBLIC SERVICE CO OF COLORADO
UNIT NAME	VALMONT NO. 5
UNIT LOCATION	VALMONT COLORADO
UNIT RATING	50 MW
FUEL CHARACTERISTICS	COAL 0.72 PERCENT SULFUR
FGD VENDOR	UOP/PUB SERVICE OF COLORADO
PROCESS	LIMESTONE SCRUBBING
NEW OR RETROFIT	RETROFIT
START UP DATE	10/74
FGD STATUS	TERMINATED
EFFICIENCY, PARTICULATES	95 PERCENT
SO2	85 PERCENT
WATER MAKE UP	CLOSED LOOP
SLUDGE DISPOSAL	
UNIT COST	
OPERATIONAL EXPERIENCE	REFER TO BACKGROUND INFORMATION IN TABLE 12 OF THIS REPORT. THIS FGD SYSTEM HAS BEEN OPERATIONAL SINCE NOVEMBER 1974. THE FGD SYSTEM TERMINATED AT THIS STATION IS AN EXPERIMENTAL UNIT, ORIGINALLY DESIGNED BY UNIVERSAL OIL PRODUCTS FOR PARTICULATE REMOVAL ONLY. ONE OF THE TWO PARALLEL SCRUBBING MODULES WAS CONVERTED TO LIMESTONE SCRUBBING FOR EXPERIMENTAL PURPOSES ONLY. PSC IS UNDECIDED ABOUT RESUMPTION OF SO2 CONTROL ACTIVITIES ON THIS UNIT. PARTICULATE REMOVAL OPERATIONS ARE CONTINUING.

BACKGROUND INFORMATION ON VALMONT NO. 5

THE VALMONT POWER STATION OF THE PUBLIC SERVICE OF COLORADO IS LOCATED IN VALMONT (NEAR BOULDER, COLO.), COLORADO, APPROXIMATELY 20 MILES NORTH OF DENVER. VALMONT NO. 5 IS A 166 MW (SO_2 SCRUBBING CAPACITY-50 MW MODULE) PULVERIZED-COAL FIRED UNIT. VALMONT NO. 5 CAME ON LINE ORIGINALLY IN 1964 AND EMPLOYS A ONCE-THROUGH COOLING SYSTEM UTILIZING RESERVOIRS TOTALING APPROXIMATELY 530 SURFACE ACRES. THE STATION BURNS A WYOMING ROSEBUD SUB-BITUMINOUS TYPE COAL WITH A SULFUR CONTENT OF APPROXIMATELY 0.6 PERCENT, AN ASH CONTENT OF 5.2 PERCENT, AND A CALCIUM OXIDE CONTENT OF APPROXIMATELY 20 PERCENT IN THE FLYASH. THE ORIGINAL AIR QUALITY CONTROL EQUIPMENT AT THE PLANT CONSISTED OF A MECHANICAL COLLECTOR FOLLOWED IN SERIES BY A COLD SIDE ESP. PUBLIC SERVICE COMPANY OF COLORADO LATER EQUIPPED FIVE BOILERS WITH UNIVERSAL OIL PRODUCTS (UOP) TCA WET PARTICULATE SCRUBBERS. EACH OF THE TURBULENT CONTACT ABSORBERS (TCA) CONSISTS OF THREE STAGES OF PLASTIC MOBILE PACKING SIMILAR TO "PING PONG" BALLS, WITH A WATER SPRAY DIRECTED DOWNWARD THROUGH THE PACKING COUNTER CURRENT TO THE FLUE GAS FLOW. AT VALMONT NO. 5 ALL OF THE FLUE GASES PASS THROUGH A MECHANICAL COLLECTOR AFTER WHICH THEY ARE DIVIDED, WITH APPROXIMATELY 50 PERCENT OF THE GAS FLOW GOING TO THE PRECIPITATOR AND THE OTHER 50 PERCENT TO THE 2 MODULE SCRUBBER. AFTER EXITING THE ESP AND SCRUBBER, THE GAS FLOWS ARE JOINED TOGETHER AND DISCHARGED SIMULTANEOUSLY TO THE STACK.

ALTHOUGH THE SCRUBBER WAS ORIGINALLY INSTALLED SPECIFICALLY FOR PARTICULATE REMOVAL, SINCE THE PLANT BURNS LOW SULFUR COAL, 45 PERCENT OF THE SO_2 WAS REMOVED AS WELL BECAUSE OF THE ALKALINITY OF THE FLYASH.

DURING THE FIRST YEAR OF OPERATION PROBLEMS INCLUDED DIFFICULTIES WITH THE MODULE PACKING GRID SUPPORT, GENERAL VESSEL SCALE FORMATION, FLOW DISTRIBUTION PROBLEMS, BALL BREAKAGE, SCALING IN THE MIST ELIMINATOR SECTION, AND PLUGGING OF THE REHEATER. SCALE FORMATION WAS THE MOST PREDOMINANT CONTINUING MAJOR CAUSE OF DOWNTIME IN THE SCRUBBER. SCALE ACCUMULATION WAS NOTED ON THE WET-DRY INTERFACE IMMEDIATELY DOWNSTREAM OF THE PRESATURATION NOZZLES. SCALE ALSO ACCUMULATED HEAVILY ON THE UNDERSIDE OF THE FIRST LAYER OF GRID BARS.

SCALE ON THE UPPER GRID BARS WAS LESS PREVALENT AS THE ACTION OF THE "PING PONG" BALLS TENDS TO KEEP THE SCALE OFF OF THESE SECTIONS. SCALE ALSO COLLECTED ON THE WALLS OF THE VESSEL AND INTERMITTENTLY SLOUGHED OFF AND FELL INTO THE SUMP IN LARGE PIECES CAUSING BLOCKAGE OF THE RECIRCULATION PUMP SUCTION SCREENS. SCALING OF THE MIST ELIMINATOR ABATED SOMEWHAT WITH THE INTRODUCTION OF A CLEAR RINSE WATER WASH. SCALE FORMATION IN THE REHEAT SECTION SOMETIMES REQUIRED SUPPLEMENTAL CLEANING OF THE REHEATER IN ADDITION TO THE CLEANING OBTAINED BY THE USE OF THE SOOTBLOWERS WHICH WERE INSTALLED AS PART OF THE REHEATER EQUIPMENT. UNDER NORMAL OPERATION, THE SOOTBLOWERS LOCATED IN THIS REHEAT SECTION WERE FAIRLY SUCCESSFUL IN REMOVING THE ACCUMULATION OF THE SCALE IN THE REHEATER.

ALTHOUGH MANY OF THE INITIAL START-UP PROBLEMS WERE SOLVED OVER A PERIOD OF TIME, THE CALCIUM SULFATE-FLY ASH SCALING CONTINUED TO BE A SIGNIFICANT OPERATING PROBLEM AT THE VALMONT INSTALLATION. IN ADDITION TO THESE SCALING RELIABILITY PROBLEMS, A WATER QUALITY CONCERN ALSO SURFACED THAT WAS A DIRECT RESULT OF THE PARTICULATE SCRUBBER OPERATION. THE RELATIVELY HIGH CAO CONCENTRATION IN THE VALMONT FLY ASH RESULTED IN FAIRLY HIGH SO_2 REMOVAL RATES (45-50 PERCENT) WITHIN THE UNITS. SINCE NO PH CONTROL CAPABILITY FOR EITHER THE RECIRCULATING SLURRY OR THE SYSTEM BLOWDOWN SLURRY WAS DESIGNED INTO THE SYSTEM, AN ACID CONDITION WAS CREATED IN THE SLURRY AND THE BLOWDOWN STREAM. PH LEVELS OF THE BLOWDOWN NORMALLY RANGED BETWEEN 1.7 AND 2.0. ALTHOUGH THE STREAM WAS NEUTRALIZED TO A DEGREE BY ALKALINE FLY ASH, PSCC FELT THAT IT WAS IMPORTANT TO INVESTIGATE VARIOUS CONTROL MEASURES WHICH COULD BE APPLIED TO THIS STREAM. THE CALCIUM SULFATE SCALING PROBLEM WAS THOUGHT TO BE THE RESULT OF A SUPER-SATURATED CALCIUM SULFATE CONDITION IN THE RECIRCULATING SLURRY. BECAUSE OF THIS IT WAS FELT THAT CONTINUOUS PH CONTROL OF THE RECIRCULATING SLURRY, CONVERSION OF THE SYSTEM TO CLOSED LOOP OPERATION AND ESTABLISHING A HIGHER CONCENTRATION OF SEEDING SOLIDS IN THE RECIRCULATION SLURRY (THEREBY CONTROLLING THE SCALING PROBLEMS WITHOUT CHEMICAL ADDITIVES) WOULD BE NECESSARY MEASURES.

FOR PH CONTROL, LIMESTONE WAS TESTED INITIALLY, THEN LIME WAS UTILIZED FOR THE ALKALI REAGENT. IN THE FIRST TEST, SINCE LIMESTONE UTILIZATION WAS A MAJOR CONCERN, A SPECIAL EFFORT WAS MADE TO REDUCE THE POTENTIAL FOR THE SHORT CIRCUITING OF THE ADDED LIMESTONE AND TO PROVIDE SUFFICIENT RESIDENCE TIME IN THE REACTOR SECTION OF THE SYSTEM. BY UTILIZING FOUR REACTION MIX TANKS IN SERIES, PLUG FLOW WAS EXPECTED TO BE MORE CLOSELY SIMULATED. TO MAINTAIN A CLOSED LOOP SYSTEM WHERE THE QUANTITY OF WATER REMOVED FROM THE SYSTEM WAS HELD TO A MINIMUM, FOUR SYSTEM DESIGN FEATURES WERE UTILIZED.

1. UTILIZATION OF A COMBINATION OF POND SUPERNATANT AND MAKE-UP WATER FOR RECYCLE WATER.
2. PRESATURATION OF THE INCOMING FLUE GAS WITH RECIRCULATING SLURRY.
3. INTERMITTENT MIST ELIMINATOR WASH.
4. PROPER SELECTION OF MATERIALS OF CONSTRUCTION TO PROTECT AGAINST ATTACK CAUSED BY HIGH CHLORIDE CONCENTRATIONS.

THE SCRUBBERS R & D FACILITY WAS NOT EQUIPPED WITH A MECHANICAL THICKENER FOR CONTROL OF THE SUSPENDED SOLIDS CONCENTRATION OF THE RECIRCULATING SLURRY (ALL PURGED MATERIAL WAS SENT TO THE SLUDGE POND). WITH A 500 PPM SO_2 CONCENTRATION IN THE FLUE GAS, IT IS EXPECTED THAT THE RECIRCULATING SLURRY SOLIDS COULD BE REALLY CONTROLLED IN THE 5 TO 7 PERCENT RANGE. DUE TO THE MIXED FUEL FIRED AT THE UNIT DURING THE TEST PERIOD, HOWEVER, THE SO_2 CONCENTRATIONS EMITTED FROM THE BOILER AND HENCE PRESENT IN THE FLUE GAS STREAM VARIED SIGNIFICANTLY AND FINALLY FELL TO SUCH LOW LEVELS (OFTEN 100-200 PPM) THAT SUSPENDED SOLIDS CONCENTRATIONS IN THE SLURRY COULD NOT BE MAINTAINED. IT IS ALMOST CERTAIN THAT A THICKENER, WITH THE SUBSEQUENT RETURN OF SOLIDS TO THE SCRUBBER LIQUOR, COULD HAVE BEEN USED TO GOOD ADVANTAGE DURING THIS TIME PERIOD. GENERALLY SPEAKING, THE SEVERE SCALING CONDITIONS PLAGUING THE TEST MODULE WERE INTENSIFIED DURING THESE PERIODS OF LOW INLET SO_2 CONDITIONS.

TABLE 12
DESCRIPTION OF TERMINATED FGD SYSTEMS 01/78

UTILITY NAME	SOUTHERN CALIFORNIA EDISON
UNIT NAME	MOHAVE NO 1A
UNIT LOCATION	LAUGHLIN NEVADA
UNIT RATING	170 MW
FUEL CHARACTERISTICS	COAL 0.5 - 0.8 PERCENT SULFUR
FGD VENDOR	UNIVERSAL OIL PRODUCTS
PROCESS	LIMESTONE SCRUBBING
NEW OR RETROFIT	RETROFIT
START UP DATE	11/74
FGD STATUS	TERMINATED
EFFICIENCY, PARTICULATES	93 PERCENT
SO2	95 PERCENT
WATER MAKE UP	0.92 GPM/MW
SLUDGE DISPOSAL	EXPERIMENTAL METHODS
UNIT COST	NOT AVAILABLE
OPERATIONAL EXPERIENCE	THIS EXPERIMENTAL MODULE (VERTICAL TCA TOWER SUPPLIED BY UOP) STARTED UP OCT. 31, 1974 AND OPERATED WITH AN AVAILABILITY OF 72% THROUGH 8 MONTHS OF TESTING. TESTING HAS BEEN COMPLETED, AND THE FGD SYSTEM WAS SHUT DOWN INDEFINITELY ON JULY 2, 1975. NEVADA ASSEMBLY BILL NO. 708 HAS PLACED A TWO YEAR MORATORIUM ON THE ENFORCEMENT OF THE COMPLIANCE SCHEDULE FOR THIS STATION. FURTHER FGD ACTIVITIES WILL BE DEPENDENT ON FUTURE LEGISLATION.

TABLE 12
DESCRIPTION OF TERMINATED FGD SYSTEMS 01/78

UTILITY NAME	SOUTHERN CALIFORNIA EDISON
UNIT NAME	MOHAVE NO. 2A
UNIT LOCATION	LAUGHLIN NEVADA
UNIT RATING	160 MW
FUEL CHARACTERISTICS	COAL 0.5-0.8 PERCENT SULFUR
FGD VENDOR	SCE/STEARNS ROGER
PROCESS	LIME SCRUBBING
NEW OR RETROFIT	RETROFIT
START UP DATE	11/73
FGD STATUS	TERMINATED
EFFICIENCY, PARTICULATES	93 PERCENT
SO2	95 PERCENT
WATER MAKE UP	1.0 GPM/MW
SLUDGE DISPOSAL	
UNIT COST	NOT AVAILABLE
OPERATIONAL EXPERIENCE	REFER TO THER BACKGROUND INFORMATION SECTION IN TABLE 12 OF THIS REPORT A PROTOTYPE HOIZONTAL SPRAY TOWER WAS FITTED ONTO THE NO. 2 UNIT AT THIS STATION AND WAS OPERATED IN AN EXPERIMENTAL MODE FROM JAN. 16, 1974 TO FEB. 9, 1975. SO2 AND PARTICULATE REMOVAL EFFICIENCIES IN EXCESS OF 90% WERE ACHIEVED DURING THE PROGRAM. FOLLOWING TERMINATION OF THE PROGRAM. THE MODULE WAS SHUT DOWN, DISASSEMBLED AND SHIPPED TO THE FOUR CORNERS STATION FOR FURTHER EVALUATION.

BACKGROUND INFORMATION ON THE MOHAVE TEST MODULES PROGRAM: NOS. 1A AND 2A

TWO PROTOTYPE SULFUR DIOXIDE ABSORBER MODULES WERE INSTALLED IN 1973 AT THE MOHAVE GENERATING STATION OF THE SOUTHERN CALIFORNIA EDISON COMPANY. A VERTICAL MODULE, RATED AT 170 MW, WAS INSTALLED TO TREAT 450,000 SCFM PORTION OF THE FLUE GAS FROM UNIT NO. 1. A HORIZONTAL MODULE, ALSO RATED AT 170 MW. WAS INSTALLED TO TREAT A SIMILAR FLUE GAS PORTION FROM UNIT NO. 2. UNITS 1 AND 2 ARE IDENTICAL BOILERS, EACH HAVING A MAXIMUM NET CONTINUOUS GENERATING CAPACITY OF 790 MW AND EACH BURNING A WESTERN, LOW-SULFUR COAL WITH A HEATING VALUE OF 11,500 BTU/LB AND ASH AND SULFUR CONTENTS OF 10 AND 0.4 PERCENT RESPECTIVELY.

VERTICAL MODULE

THE VERTICAL MODULE, A UNIVERSAL OIL PRODUCTS TURBULENT CONTACT ABSORBER (TCA), WAS TESTED IN TWO MODES; FIRST, AS A TCA UNIT, FROM NOVEMBER 2, 1974 TO APRIL 30, 1975, AND SECOND AS A POLYGRID PACKED ABSORBER (PPA), WHEN THE "PING PONG BALLS" WERE REPLACED WITH A PLASTIC "EGGCRATE" PACKING WITH TESTING CONTINUING TO JULY 2, 1975.

STARTUP OF THE VERTICAL MODULE WAS INITIATED ON SCHEDULE JANUARY 1, 1974. ON JANUARY 24, 1974, A FIRE BURNED MOST OF THE CHLOROBUTYL LINING AND SYSTEM RESTART WAS DELAYED UNTIL OCTOBER 1, 1974. TESTING OF THIS MODULE FOLLOWED A MONTH LATER AND WAS COMPLETED AFTER 3,131 HRS. OF OP. THE MODULE IS PRESENTLY SHUT DOWN IN A COLD STAND-BY CONDITION AT THE MOHAVE GENERATING STA.

HORIZONTAL MODULE

THE HORIZONTAL MODULE, A FOUR-STAGE HORIZONTAL CROSSFLOW SPRAY SCRUBBER, WAS OPERATED BY THE UTILITY IN A SHORT SERIES OF STARTUP TESTS THAT ENDED ON JANUARY 16, 1974, WHEN A FORMAL TEST PROGRAM WAS INITIATED TO ASSESS THE PERFORMANCE AND RELIABILITY CHARACTERISTICS OF THE SCRUBBING SYSTEM. THE TEST PROGRAM WAS TERMINATED ON FEBRUARY 9, 1975 FOLLOWING 5,927 HOURS OF OPERATION. THE MODULE WAS SUBSEQUENTLY DISMANTLED, TRANSPORTED, AND REASSEMBLED AT THE FOUR CORNERS PLANT OF ARIZONA PUBLIC SERVICE WHERE ADDITIONAL TESTING WAS CONDUCTED AND COMPLETED (DECEMBER 1976).

INFORMATION AND DATA CONCERNING THE PERFORMANCE OF MOHAVE TEST MODULES ARE GIVEN IN THE FOLLOWING PERFORMANCE TABLES. PROCESS FLOW DIAGRAMS OF THE TEST MODULES ARE PROVIDED IN APPENDIX B.

MOHAVE NO. 1A - VERTICAL TEST MODULE
OUTAGE TIME HISTORY: NOVEMBER 2, 1974 TO JULY 2, 1975

	REASON	TIME (HR)
1.	REPAIR GRIDS AND REDISTRIBUTE TCA BALLS	710
2.	CLEAN SCALE FROM SCRUBBER INTERNALS	344
3.	REPAIR/REPLACE PLUGGED NOZZLES	153
4.	REPAIR LEAKS IN TRAP-OUT TRAY	120
5.	REPAIR/REALIGN PPA PACKING	85
6.	CORRECT BOOSTER FAN TRIP PROBLEMS	72
7.	CONDUCT INSPECTIONS FOR EXTENDED OPERATIONS	46
8.	REMOVE HARDHAT FROM THICKENER	46
9.	TOTAL OUTAGE TIME	1585

TOTAL OUTAGE TIME: 1585 HOURS
TOTAL CALENDER TIME: 5813 HOURS
TOTAL OPERATIONAL TIME: 4228 HOURS
PERCENT AVAILABILITY: 72.73

MOHAVE NO. 2A - HORIZONTAL TEST MODULE
OUTAGE TIME HISTORY: JANUARY 16, 1974 TO FEBRUARY 9, 1975

	REASON	TIME (HR)
1.	MODIFY AND REPRIR PLASTIC DEMISTER BLADES	503
2.	CORRECT BOOSTER FAN BALANCE PROBLEMS	317
3.	PUMP REPAIR	256
4.	SPRAY NOZZLE REPLACEMENT	238
5.	MODIFY GAS INLET FLOW DISTRIBUTION	162
6.	REPAIR HOPPER LEAKS	135
7.	REMOVE HARDHAT FROM THICKENER	82
8.	MODIFY SLAKING WATER FOR SCALE PREVENTION	45
9.	CONDUCT INSPECTION FOR EXTENDED OPERATIONS	19
10.	TOTAL OUTAGE TIME	1757

TOTAL OUTAGE TIME: 1757 HOURS
TOTAL CALENDER TIME: 9328 HOURS
TOTAL OPERATING TIME: 7571 HOURS
PERCENT AVAILABILITY: 81.16%

TABLE 12
DESCRIPTION OF TERMINATED FGD SYSTEMS 01/78

UTILITY NAME	TENNESSEE VALLEY AUTHORITY
UNIT NAME	SHAWNEE NO. 10C
UNIT LOCATION	PADUCAH KENTUCKY
UNIT RATING	10 MW
FUEL CHARACTERISTICS	COAL 2.9 PERCENT SULFUR
FGD VENDOR	TENNESSEE VALLEY AUTHORITY
PROCESS	LIME/LIMESTONE SCRUBBING
NEW OR RETROFIT	RETROFIT
START UP DATE	4/72
FGD STATUS	TERMINATED
EFFICIENCY, PARTICULATES	EXPERIMENTALLY CONTROLLED
SO2	EXPERIMENTALLY CONTROLLED
WATER MAKE UP	EXPERIMENTALLY CONTROLLED
SLUDGE DISPOSAL	EXPERIMENTALLY CONTROLLED
UNIT COST	NOT APPLICABLE
OPERATIONAL EXPERIENCE	REFER TO BACKGROUND INFORMATION SECTION IN TABLE 12. THIS EXPERIMENTAL FGD UNIT BECAME OPERATIONAL IN APRIL, 1972. THE MARBLE-BED ABSORBER, A 30,000 ACF UNIT (10 MW), MANUFACTURED BY COMBUSTION ENGINEERING CO., WAS DISCONTINUED EARLY IN THE TEST PROGRAM JULY 1973 BECAUSE OF CONTINUED OPERATING PROBLEMS WITH NOZZLE FAILURE AND SUBSEQUENT PLUGGING OF THE MARBLE BED. THIS SYSTEM BECAME OPERATIONAL IN APRIL 1972, AND IT WAS SHUT DOWN PERMANENTLY IN JULY 1973.

BACKGROUND INFORMATION
ON
SHAWNEE NOS. 10 A, 10B, AND 10C

IN JUNE 1968, THE EPA INITIATED A PROGRAM TO TEST PROTOTYPE WET LIME AND LIMESTONE SCRUBBING SYSTEMS FOR REMOVAL OF SULFUR DIOXIDE AND PARTICULATES FROM FLUE GAS. THE PROGRAM WAS CARRIED OUT IN A TEST FACILITY INCORPORATED INTO THE FLUE GAS DUCT WORK OF UNIT NO. 10, A COAL-FIRED BOILER AT THE TVA SHAWNEE POWER STATION, PADUCAH, KENTUCKY. TVA IS THE CONSTRUCTION AND FACILITY OPERATOR AND THE BETCHEL CORP. IS THE MAJOR CONTRACTOR AND TEST DIRECTOR.

THE TEST FACILITY CONSISTS OF THREE PARALLEL SCRUBBER SYSTEMS OF PROTOTYPE SIZE TREATING PART OF THE FLUE GAS FROM THE BOILER. EACH SCRUBBER TRAIN IS CAPABLE OF TREATING APPROXIMATELY 30,000 ACFM, OR THE EQUIVALENT OF APPROXIMATELY 10 MW OF POWER PLANT GENERATING CAPACITY.

THREE PARALLEL WET SCRUBBER SYSTEMS WERE SELECTED FOR THE TEST PROJECT: 1) A VENTURI WITH A SPRAY TOWER AFTER ABSORBER: 2) A TURBULENT CONTACT ABSORBER (TCA AND 3) A MARBLE-BED ABSORBER. THE VENTURI SYSTEM, MANUFACTURED BY CHEMICAL CONSTRUCTION CO., CONTAINS AN ADJUSTABLE THROAT THAT PERMITS CONTROL AND VARIATION OF PRESSURE DROP UNDER A WIDE RANGE OF FLOW CONDITIONS. THE TCA UNIT, MANUFACTURED BY UNIVERSAL OIL PRODUCTS, EMPLOYS A FLUIDIZED BED OF LOW DENSITY PLASTIC SPHERES THAT ARE FREE TO MOVE BETWEEN RETURNING GRIDS. THE MARBLE-BED ABSORBER, SUPPLIED BY COMBUSTION ENGINEERING CO., USES A PACKING OF 3/4-INCH GLASS MARBLE SPHERES AND A TURBULENT LAYER OF LIQUID AND GAS ABOVE THE MARBLE LAYER TO ENHANCE MASS TRANSFER.

THE TEST FACILITY WAS DESIGNED SO THAT MODIFICATIONS AND VARIATIONS OF SCRUBBER INTERVALS AND PIPING COULD BE READILY EMPLOYED FOR EACH SCRUBBER SYSTEM. EACH SYSTEM CAN TREAT APPROXIMATELY 30,000 ACFM OF FLUE GAS AT 300 F CONTAINING 1800 TO 4000 PPM OF SO2 AND 2 TO 5 GRAINS/SCF OF PARTICULATES. TESTING OF THE TCA AND THE VENTURI SPRAY TOWER IS IN PROGRESS: OPERATION OF THE MARBLE-BED ABSORBER UNIT HAS BEEN PERMANENTLY DISCONTINUED.

TABLE 12
DESCRIPTION OF TERMINATED FGD SYSTEMS 01/78

UTILITY NAME	UNION ELECTRIC CO.
UNIT NAME	MEREMAC NO. 2
UNIT LOCATION	ST. LOUIS COUNTY MISSOURI
UNIT RATING	140 MW
FUEL CHARACTERISTICS	COAL 3.4 PERCENT SULFUR
FGD VENDOR	COMBUSTION ENGINEERING
PROCESS	LIMESTONE INJECTION/WET SCRUB
NEW OR RETROFIT	RETROFIT
START UP DATE	3/68
FGD STATUS	TERMINATED
EFFICIENCY, PARTICULATES	99 PERCENT
SO2	83 PERCENT
WATER MAKE UP	CLOSED LOOP
SLUDGE DISPOSAL	
UNIT COST	
OPERATIONAL EXPERIENCE	THE FIRST COMMERCIAL SCRUBBER APPLICATION ON A UTILITY COAL-FIRED BOILER OCCURRED AT THIS STATION IN EARLY 1968. THE SCRUBBING STRATEGY INCLUDED LIMESTONE INJECTION INTO THE FURNACE WITH AN EXISTING COAL PULVERIZER AND TAIL-END SCRUBBING WITH THE CALCINED REAGENT IN TWO MARBLE-BED ABSORBERS. THIS FULL-SCALE EXPERIMENTAL SCRUBBING PROGRAM WAS EVENTUALLY TERMINATED AND THE INSTALLATION WAS ABANDONED. PROBLEMS ENCOUNTERED INCLUDED BOILER TUBE FOULING BECAUSE OF CLOSE TUBE SPACING, WIDESPREAD SCALING, SEVERE CORROSION, INEFFICIENT MIST ELIMINATOR AND PROBLEMS WITH WASTE DISPOSAL.

TABLE 13
TOTAL FGD MEGAWATT CAPACITY BY YEAR *

YEAR	NO. UNITS	MEGAWATTS
1968	1	125
1971	1	400
1972	4	260
1973	4	1410
1974	2	250
1975	4	1054
1976	5	2198
1977	10	4853
1978	19	7718
1979	15	6031
1980	23	9658
1981	11	5805
1982	7	3353
1983	7	3735
1984	3	2050
1985	2	1300
1986	2	1100
UNDEFINED	10	4029

* TOTALS DISPLAYED DO NOT INCLUDE TERMINATED OR INACTIVE SYSTEMS.

APPENDIX A

FGD SYSTEMS ECONOMICS

APPENDIX A. FGD SYSTEM ECONOMICS: OPERATIONAL SYSTEMS

COMPANY PLANT UNITS TOTAL CAPACITY, MW	PROCESS STATUS START-UP DATE	REPORTED CAPITAL COSTS,		REPORTED OPERATING COSTS,		COMMENTS
		$ MILLION	$/KW	$ ANNUAL	MILLS/KWH	
Arizona Public Service Cholla Electric Generating Station No. 1 115	Limestone Operational 10/73	6.555	57.0		2.20	1. Capital cost figure includes the venturi scrubbers (2) for particulate control. This figure represents total expenditures made by the utility through 1973. 2. Capital cost figure does not include limestone preparation, sludge handling facilities and interest on capital during construction. 3. Additional costs incurred by the system supplier have not been reported. 4. The operating cost figure includes operating and maintenance expenditures only.
Columbus & So. Ohio Electric Conesville Generating Station No. 5 400	Lime Operational 1/77	15.27	37.90	7.765 MM	5.61	1. The capital cost figure includes direct costs only. 2. The capital cost figure includes two scrubber modules, all ancillary equipment, sludge disposal system -site preparation, and construction costs. Indirects are not included. 3. Annual operating costs are estimated at a load factor 39.5%. 4. Annual costs include capitalization, raw materials waste disposal, maintenance, labor, and utilities. 5. All cost estimates are given in 1976 dollars.

Note: N/A indicates figures are not available.

APPENDIX A (Continued). FGD SYSTEM ECONOMICS: OPERATIONAL SYSTEMS

COMPANY PLANT UNITS TOTAL CAPACITY, MW	PROCESS STATUS START-UP DATE	REPORTED CAPITAL COSTS,		REPORTED OPERATING COSTS,		COMMENTS
		$ MILLION	$/KW	$ ANNUAL	MILLS/KWH	
Duquesne Light F.R. Phillips Station Nos. 1 to 6 410	Lime Operational 7/73	44.219	114	14 MM	5.86	1. Total capital cost figures for Phillips and Elrama include all expenditures required to bring the entire plants into compliance.
Elrama Station Nos. 1 to 4 510	Lime Operational 10/75	52.919	107	16.2 MM	5.35	2. Total capital cost figures include all process equipment, engineering costs, contractor's fees and interest on capital during construction. Excluded are the costs of additional long term sludge disposal facilities that may be required. However, equipment for short term disposal is included ($2 MM). The $/kW values are based upon the station's net generating capacities with the scrubbers in service. The Phillips and Elrama Stations net generating capacities are 387 and 494 MW respectively. 3. Annual operating cost figures of 6 mills/kWh is based upon the combined operating costs for the Phillips and Elrama stations when full SO_2 compliance is achieved. This amounts to approximately $32 million annually. 4. A weighted average replacement energy cost based on system cost and purchased power cost for each plant of 13.69 mills/kWh is not included in the cost figures. 5. All costs are given in 1977 dollars except the replacement energy cost which is given in 1976 dollars.
Indianapolis Power & Light Petersburg Generating Station No. 3 530	Limestone Operational 10/77	32.082	61.891			1. Capital cost figure includes scrubbers, pumps, fan reheat and all auxiliary equipment ($25.9 MM); sludge stabilization, and disposal ($3.5 to $4.0 MM); and indirect costs ($1.616 MM). 2. The cost of the ESP's installed upstream of the scrubber plant for particulate control ($4.083 MM) is not included. 3. Interest during construction is not included. 4. FGD design and costs are based upon 4.5% sulfur coal, which is the maximum allowable sulfur content for the scrubber plant.

Note: N/A indicates figures are not available.

APPENDIX A (Continued). FGD SYSTEM ECONOMICS: OPERATIONAL SYSTEMS

COMPANY PLANT UNITS TOTAL CAPACITY, MW	PROCESS STATUS START-UP DATE	REPORTED CAPITAL COSTS,		REPORTED OPERATING COSTS,		COMMENTS
		$ MILLION	$/KW	$ ANNUAL	MILLS/KWH	
Kansas City Power & Light La Cygne Power Station No. 1 820	Limestone Operational 2/73	52.4	63.9	5.35 MM	1.402	1. The capital cost figure includes $45.4 million in expenditures already made plus an additional $7 million required to reach optimum system performance ($5.2 million for the installation of an eighth scrubber module). 2. The annual operating cost figures include operating labor and materials, maintenance labor and materials, limestone and reheat energy. 3. The annual operating and maintenance cost figure is based upon a 1976 capacity factor of 53%. 4. A replacement energy cost of 8.8 mills/kWh is not included in the cost figures. 5. Cost estimates are given in 1976 dollars.
Kansas Power & Light Lawrence Energy Center Nos. 4 & 5 525	Limestone Injection & Wet Scrubbing Terminated, Operational 12/68 & 11/71	3.5	7	N/A	N/A	1. The capital cost figure presented represents a sum paid by the utility for both systems in 1968. Expenses incurred in many subsequent modifications over the years were largely underwritten by the system supplier. Therefore, the figures listed are unrealistically low and are not meaningful. 2. These units have been and are now being replaced with venturi rod scrubber and spray tower systems utilizing a limestone-based scrubbing slurry. 3. Lawrence No. 4 rod scrubber and spray tower limestone scrubbing system was placed in service Jan. 1977. The original injection unit has been dismantled. 4. Lawrence No. 5 rod scrubber and spray tower scrubbing system is now being erected. The original injection unit is still in service. Start up of the new system scheduled for Mar. 1978

Note: N/A indicates figures are not available.

APPENDIX A (Continued). FGD SYSTEM ECONOMICS: OPERATIONAL SYSTEMS

COMPANY PLANT UNITS TOTAL CAPACITY, MW	PROCESS STATUS START-UP DATE	REPORTED CAPITAL COSTS,		REPORTED OPERATING COSTS,		COMMENTS
		$ MILLION	$/KW	$ ANNUAL	MILLS/KWH	
Kentucky Utilities Green River Power Station Nos. 1, 2 & 3 64	Lime Operational 9/75	3.674	57.4	4.419 MM	2.02	1. The capital cost figure for this turnkey installation includes installed cost of FGD equipment, ancillaries, and sludge disposal-site preparation and waste transport system. 2. The operating cost figure includes feed material and chemicals, labor and supervision, waste disposal, maintenance materials, labor and supervision and reheat energy cost. 3. The capacity factor for Green River 1,2 and 3 in 1976 was 47.5%. 4. A replacement energy cost of 10.04 mills/kWh is not included in the cost figures. 5. Cost figures are given in 1976 dollars.
Louisville Gas & Electric Cane Run Power Station No. 4 178	Lime Operational 8/76	10.4	58.4	2.5	N/A	1. The total installed capital cost includes the installed cost of FGD equipment, ancillaries and sludge disposal - site preparation and waste transport system, and the carbide lime unloading docks for all three FGD - equipped Cane Run units (Nos. 4,5, and 6). The total also includes $85,000 to reline the exhaust ductwork and stack. 2. The reported annual operating cost figure includes all operating and maintenance charges. 3. The cost figures are given in 1977 dollars. 4. A replacement energy cost of .23 mills/kWh is not included in the cost figures.

Note: N/A indicates figures are not available.

APPENDIX A (Continued). FGD SYSTEM ECONOMICS: OPERATIONAL SYSTEMS

COMPANY PLANT UNITS TOTAL CAPACITY, MW	PROCESS STATUS START-UP DATE	REPORTED CAPITAL COSTS,		REPORTED OPERATING COSTS,		COMMENTS
		$ MILLION	$/KW	$ ANNUAL	MILLS/KWH	
Louisville Gas & Electric Paddys Run Power Station No. 6 65	Lime Operational 4/73	3.38	52		5.6	1. The capital cost figures are based on the boiler rating minus system power consumption. The costs includes everything except the final waste disposal site. This is a borrow pit supplied by the State highway department at no cost to the utility. 2. The operating costs include feed material and chemicals, labor and supervision, maintenance materials, labor and supervision and reheat energy cost. 3. Cost of the carbide lime absorbent is confidential. 4. Costs are atypical because the unit is used for peak loads and the scrubber is a research and development tool for future full scale installations now operational, under construction or planned by the utility. 5. A replacement cost of .25 mills/kWh is not included in the cost figures. 6. The cost figures are given in 1976 dollars.
Minnkota Power Coop. M.R. Young Station No. 2 450	Fly Ash/Lime Operational 9/77	32	71.11			1. The total installed capital cost figure represents an estimated value for the unit's entire emission control system. 2. An upstream ESP for primary particulate control ($12 million) is not included. 3. The capital cost figure does not include the extensive sludge handling and disposal strategy proposed for this unit (vacuum filters and building, conveyor, by-pass equipment, trucks and front-end loaders.
Montana Power Co. Colstrip Plant Nos. 1 & 2 720	Fly Ash/Lime Operational 10/75 & 7/76	55.27	83.74	1.185 MM	0.26	1. The reported capital cost includes foundation, field wiring, insulation, heat tracing, painting, piping to ponds, piping between modules, field distributions in addition to the scrubber modules, ductwork, equipment supply and erection. Also included is the interest costs, cost of fly ash ponds, fly ash slurry transport systems and evaporation pond, and incremental costs such as auxiliary boiler, F.D. fans, start-up and auxiliary transformer.

Note: N/A indicates figures are not available.

APPENDIX A (Continued). FGD SYSTEM ECONOMICS: OPERATIONAL SYSTEMS

COMPANY PLANT UNITS TOTAL CAPACITY, MW	PROCESS STATUS START-UP DATE	REPORTED CAPITAL COSTS,		REPORTED OPERATING COSTS,		COMMENTS
		$ MILLION	$/KW	$ ANNUAL	MILLS/KWH	
Nevada Power Co. Reid Gardner Station Nos. 1 & 2 250	Sodium Carbonate Operational 4/74	11	44	1.2 MM	N/A	1. The total installed capital cost figure is an estimate that was originally provided by the utility for expenditures completed by installation date (1974). Included are both scrubbing systems along with all the raw material handling and pond equipment cost. 2. The annual operating cost figure includes $600,000 annualized for each unit.
Northern Indiana Public Serv. D.H. Mitchell Station No. 11 115	Wellman-Lord Operational 6/77	14,825	129	6.006 MM	8.1	1. The capital figure includes interest during construction and overhead charges. 2. Reported operating cost figure is a total annualized cost value that includes operation and maintenance costs, and anti-oxidant agent costs. 3. Fixed charges are calculated for a 10-15 year plant lifetime (26% of $41,825 MM). Assume an annual unit load factor of 73.5%. 4. The cost figures are given in 1976 dollars.

Note: N/A indicates figures are not available.

APPENDIX A (Continued). FGD SYSTEM ECONOMICS: OPERATIONAL SYSTEMS

COMPANY PLANT UNITS TOTAL CAPACITY, MW	PROCESS STATUS START-UP DATE	REPORTED CAPITAL COSTS,		REPORTED OPERATING COSTS,		COMMENTS
		$ MILLION	$/KW	$ ANNUAL	MILLS/KWH	
Northern States Power Sherburne County Generating Plant Nos. 1 & 2 1420	Limestone Operational 5/76 & 5/77	60	44	3.77 MM	0.40	1. The total installed capital cost figure includes direct costs only, indirect costs are excluded. 2. The total cost figure applies to 1976/1977 installation and does not include escalation factors. 3. The annual operating cost figure is an estimate that applies to 1977 operations at an 80% unit load factor. Included in this figure are direct and indirect costs. 4. The $/KW figure is based upon the net generating capacity of both units (680 MW/unit, 1360 MW total). 5. The cost of one redundant scrubber train is included for each system.
Pennsylvania Power Bruce Mansfield Plant Nos. 1 & 2 1650	Lime Operational 4/76 & 7/77	249.15	151	28.2 MM	4.25	1. Cost figures presented are estimates provided by the utility. 2. The total installed capital cost figures includes all direct and indirect costs plus escalation factors. 3. The cost of the venturi scrubbers required for particulate emission control are included. 4. All cost figures are reported in 1977 dollars.
Philadelphia Electric Eddyston Generating Station Unit No. 1A 316	Magnesium Oxide Operational 9/75	28.44	90		4.7	1. The capital cost figure includes installed cost of FGD equipment, ancillaries, sludge disposal-site preparation and waste transport system. The magnesium oxide regenerating facility cost is also included. The cost of particulate scrubbing is also included. 2. The operating cost figure includes feed material disposal, maintenance materials, labor and supervision and reheat energy cost. 3. A replacement energy cost of 12.3 mills/kWh is not included in the cost figures. 4. The cost figures are given in 1976 dollars.

Note: N/A indicates figures are not available.

APPENDIX A (Continued). FGD SYSTEM ECONOMICS: OPERATIONAL SYSTEMS

COMPANY PLANT UNITS TOTAL CAPACITY, MW	PROCESS STATUS START-UP DATE	REPORTED CAPITAL COSTS,		REPORTED OPERATING COSTS,		COMMENTS
		$ MILLION	$/KW	$ ANNUAL	MILLS/KWH	
South Carolina Public Service Winyah Generating Station No. 2 280	Limestone Construction 7/77	6.345	22.66		0.333	1. Fifty percent of the boiler's flue gas is scrubbed for SO_2 removal. SO_2 removal efficiency is 69%. 2. The total direct and indirect cost for the ESP provided for primary particulate control upstream of the scrubbers is $1.686 MM (not included in this table). 3. The capital cost figures include installed cost of FGD equipment, ancillaries, sludge disposal-site preparation, and waste transport system. 4. The operating cost figure includes feed material and chemicals, labor and supervision, waste disposal, maintenance materials, labor and supervision and reheat energy cost. 5. A replacement energy cost of 20 mills/kWh is not included in the cost figures. 6. The cost figures are given in 1976 dollars.
Springfield City Utilities Southwest Generating Station No. 1 200	Limestone Operational 4/77	15	75			1. The capital cost figures are actual FGD system costs given by the Utility. 2. The $5 MM particulate cleaning cost (ESP) is not included. 3. The cost figures are given in 1977 dollars.
Tennessee Valley Authority Widows Creek Steam Plant No. 8 550	Limestone Operational 5/77	56.284	102.33	5.226 MM	1.72	1. The total installed capital cost figure is an estimate that includes all expenditures made by February 1977. 2. Included in the total installed figure are the costs of the existing ESP and venturi scrubbers for control of particulate emissions, plus all direct and indirect costs, and escalation. 3. Sludge handling and disposal facilities are not included in the above estimate. 4. The annual operating cost figure is an estimate that applies to operation in 1977. 5. The annual operating cost estimate includes particulate removal costs. Amortization of investment is not included. 6. The mills/kWh figure derived from the operating expenditures is the total annual cost estimates (direct and indirect) at a unit capacity factor of 63%.

Note: N/A indicates figures are not available.

APPENDIX A (Continued). FGD SYSTEM ECONOMICS: NONOPERATIONAL SYSTEMS

COMPANY PLANT UNITS TOTAL CAPACITY, MW	PROCESS STATUS START-UP DATE	REPORTED CAPITAL COSTS,		REPORTED OPERATING COSTS,		COMMENTS
		$ MILLION	$/KW	$ ANNUAL	MILLS/KWH	
Alabama Electric Coop. Tombigbee Power Station Nos. 2 & 3 510	Limestone Construction 3/78 & 3/79	35.464	69.54	240,323	0.77	1. Capital cost figures includes SO_2 scrubber trains, limestone milling facilities, sludge treatment and disposal pond, engineering costs, contractors fee and interest on capital during construction. 2. 70% of the flue gas capacity is scrubbed. 3. Annual operating costs are calculated for 1978 with a 60% boiler capacity factor. 4. Included in the operating costs are all direct costs minus maintenance and solid waste disposal costs. 5. Indirect costs are not included in the operating cost figure provided. 6. A replacement energy cost of 15.5 mills/kWh per boiler is not included in the cost figures.
Arizona Electric Power Apache Station Nos. 2 and 3 400	Limestone Construction 6/78 & 4/79	21	5.25			1. Reported capital cost includes the 4 scrubbers, 2 feed tanks, recycle pumps, piping and instrumentation. Lime handling equipment, the ESP's and waste disposal system is not included in the figures.
Basin Electric Power Coop. Laramie River Station Nos. 1 and 2 1100	Limestone Contract Awarded 4/80 & 10/80	80	68.2		1.5	1. The reported capital cost figure provided in the table applies to the total installed cost for both double-loop wet limestone scrubbing systems including waste disposal, piping, and sludge handling. 2. Breakdown of the capital cost is not available. 3. Reported operational cost is an estimate as of December 1977.
Big Rivers Electric Coop Reid Steam Station No. 2 250	Lime Contract Awarded 1979	10.81	43.24			1. The reported capital cost figure applying to the amount of the contract awarded to AAF for the turnkey emission control installation was $16 million, $5.19 million of which covered particulate controls. 2. All figures are reported in 1976 dollars. 3. The $16 million figure includes an AAF-ELEX ESP, two spray towers, reheater, ancillary equipment, ductwork, and modular pre-wired control rooms.
Big Rivers Electric Coop Reid Steam Station No. 3 240	Lime Contract Awarded 1980	10				1. The contract awarded amounted to greater than $10 million for the FGD system.

Note: N/A indicates figures are not available.

APPENDIX A (Continued). FGD SYSTEM ECONOMICS: NONOPERATIONAL SYSTEMS

COMPANY PLANT UNITS TOTAL CAPACITY, MW	PROCESS STATUS START-UP DATE	REPORTED CAPITAL COSTS,		REPORTED OPERATING COSTS,		COMMENTS
		$ MILLION	$/KW	$ ANNUAL	MILLS/KWH	
Boston Edison Company Mystic Power Station No. 1 155	Magnesium Oxide Terminated 4/72	9.510	63.4	615,000	3.0	1. All cost figures are reported for the project completion date of 1974. 2. The total installed capital cost of the Rumford calcination facility was approximately $4.5 MM. 3. Capital charges are not included because of non-applicability to a 2-year demonstration program. 4. Operating costs for the acid plant regeneration facility are not included. 5. The cost of make-up magnesium oxide ($150/T) is not included. 6. 3.0 mills/kWh is an estimate for total operation and maintenance costs, including calcination. 7. BECO and EPA each subsidized approximately 50% of the costs of the demonstration program. Chemico also underwrote some of the program costs.
Central Illinois Light Co. Duck Creek Power Plant No. 1 400	Limestone Construction 8/78	37.328	93.32		3.31	1. The capital cost figure is an estimate of system expenditures, including the cost of the installation of the FGD system ancillaries, the limestone milling and waste disposal facilities. 2. One module has been completely installed and temporarily operated from September 1976 to April 1977. Full system operation is scheduled to commence in August 1978. 3. The annual cost includes feed material and chemicals, labor and supervision and $3.390 million for the sludge/ash disposal pond as well as the power consumption cost. 4. The replacement energy cost of 10 mills/kWh is not included in the cost figures. 5. Cost figures are given in 1976 dollars.

Note: N/A indicates figures are not available.

APPENDIX A (Continued). FGD SYSTEM ECONOMICS: NONOPERATIONAL SYSTEMS

COMPANY PLANT UNITS TOTAL CAPACITY, MW	PROCESS STATUS START-UP DATE	REPORTED CAPITAL COSTS,		REPORTED OPERATING COSTS,		COMMENTS
		$ MILLION	$/KW	$ ANNUAL	MILLS/KWH	
Central Illinois Public Serv. Newton Station No. 1 575	Double Alkali Construction 11/79	108.5	189			1. The capital cost figure is an estimate covering all the scrubber unit operation areas. 2. Capital figure is quite high because of the deliberate overdesign and redundancy incorporated into the system for achievement of reliable operations. 3. The $/kW figure is calculated on the unit's net generating capacity of 575 MW. 3% of the unit's net generating capacity is required to power the scrubber plant.
Colorado Ute Electric Craig Station Nos. 1 & 2 900	Limestone Construction 03/79	105	117	15 MM	2.7	1. The total capital cost figure is an estimate provided by the utility that does not include reagent preparation and sludge disposal facilities. 2. The total revenues of the contract awarded to Peabody Engineered Systems for two limestone slurry spray tower scrubbing systems is expected to exceed $60 MM. 3. Electrostatic precipitators are included in the capital cost figure. 4. The annual operating cost figure is a preliminary utility estimate based upon a 70% load factor.
Commonwealth Edison Powerton Station No. 51 425	Limestone Construction 12/79	50	117.65		8.70	1. The total installed capital cost expenditures apply to the following timetable: all expenditures will be made from May 1976 to December 1978; expenditures of $16 MM will be made from October 1976 to October 1977. 2. The annual operating cost is an estimate which includes the following items: ° 2.7 mills/kWh for operation and maintenance. ° 6.0 mills/kWh for auxiliary power requirements. ° Scrubber life span is estimated for an annual usage rate of 148,000,000 kWh. This is equivalent to approximately $900,000 annual for auxiliary power consumption.

Note: N/A indicates figures are not available.

APPENDIX A (Continued). FGD SYSTEM ECONOMICS: NONOPERATIONAL SYSTEMS

COMPANY PLANT UNITS TOTAL CAPACITY, MW	PROCESS STATUS START-UP DATE	REPORTED CAPITAL COSTS,		REPORTED OPERATING COSTS,		COMMENTS
		$ MILLION	$/KW	$ ANNUAL	MILLS/KWH	
Commonwealth Edison Will County Station No. 1 167	Limestone Terminated 2/72	15.542	113	3.985 MM	13.06	1. The capital cost figure includes the venturi scrubbers for particulate control. 2. The $/kW figure is based upon the unit's maximum net generating capacity with the FGD system, 137 MW. 3. The annual operating cost figure is based on a system lifetime of 14 years. Sludge treatment costs include handling to an off-site disposal area. The figure provided is the cost to own and operate the scrubbing system for 1975. 4. Unit load capacity factor for 1975 was 49.4%.
Detroit Edison St. Clair No. 6 163	Limestone Terminated 5/76	13.089	80.3		9.60	1. The capital cost figure includes the installed FGD cost, ancillaries, sludge disposal-site preparation, and waste transport system. 2. The annual operating cost figure includes feed material and chemicals, labor and supervision, waste disposal, maintenance materials, labor and supervision, and the cost of reheat energy. 3. All costs are given in 1976 dollars. 4. The replacement energy cost of 9.0 mills/kWh is not included in the cost figures.
Gulf Power Scholz Steam Plant Nos. 1 & 2 23	Dilute Acid, Terminated 2/75	3.0	130	N/A	N/A	1. The total installed capital cost figure provided for the CT-101 prototype unit includes the scrubbers and ancillary equipment, engineering costs and contractors fee. This figure is not representative of a full-scale application.
Gulf Power Scholz Steam Plant No. 2 20	Dry Adsorption Terminated 2/76	N/A	N/A	N/A	N/A	1. Actual cost figures for this prototype unit are not available. Foster Wheeler has published initial capital cost figures which range from $25 to $35 per kW for low sulfur removal efficiency and $70 to $75 per kW for high sulfur removal efficiency.

Note: N/A indicates figures are not available.

APPENDIX A (Continued). FGD SYSTEM ECONOMICS: NONOPERATIONAL SYSTEMS

COMPANY PLANT UNITS TOTAL CAPACITY, MW	PROCESS STATUS START-UP DATE	REPORTED CAPITAL COSTS,		REPORTED OPERATING COSTS,		COMMENTS
		$ MILLION	$/KW	$ ANNUAL	MILLS/KWH	
Illinois Power Wood River Power Station No. 4 110	Catalytic Oxidation Terminated 10/72	8.5	82.5	952.000		1. Reported capital cost figure represents the total expenditures during the 2.5 year duration of the program. 2. The $/kW figure is based upon the system's net generating capacity of 103 MW. 3. ESP cost is included since upstream fly ash removal is a necessary feature of this regenerable system. 4. The annual cost figure is an estimate representing system running costs only. Excluded are capital charges and a credit for product. This figure translates into a value of $3.46 per ton of coal consumed.
Kansas City Power & Light Hawthorn Power Station Nos. 3 & 4 525	Limestone Injection & Wet Scrubbing Terminated 11/72	5.32	19		2.2-2.5	1. This figure is unrealistically low because these installations were experimental in nature and were heavily underwritten by the system supplier. 2. This system has been terminated as limestone-based system and converted to a wet lime scrubbing system. The costs of additional slakers, feeders, and other necessary equipment are not included. 3. Sludge disposal facilities are not included in the total cost figure. 4. The annual operating cost figure does not include fixed costs. 5. The replacement energy cost of .058 mills/kWh is not included in the cost figures.

Note: N/A indicates figures are not available.

APPENDIX A (Continued). FGD SYSTEM ECONOMICS: NONOPERATIONAL SYSTEMS

COMPANY PLANT UNITS TOTAL CAPACITY, MW	PROCESS STATUS START-UP DATE	REPORTED CAPITAL COSTS,		REPORTED OPERATING COSTS,		COMMENTS
		$ MILLION	$/KW	$ ANNUAL	MILLS/KWH	
Key West Utility Stock Island Power Plant 37	Limestone Terminated 10/72	0.750	20.7		0.7	1. This system was jointly funded by the EPA and the utility. The system supplier has also underwritten a considerable amount of the capital expenditures. This figure, therefore, is unrealistically low. 2. The utility has had to pay for the cost of a new primary crushing system. 3. The operating cost figure provided was an original estimate and has not been corroborated or disputed by actual experience. This estimate was based upon the following factors: ° Capitalization rate of 10%; no taxes, no insurance. ° Maintenance cost of 5% of equipment cost. ° Labor cost at $20,000 per year. ° Limestone cost at $4.05 per ton.
Louisville Gas & Electric Cane Run Power Station No. 5 183	Lime Construction 12/77	12	66			1. The total installed capital cost is an estimated figure that includes the costs of lime handling and sludge disposal facilities.
Louisville Gas & Electric Cane Run Power Station No. 6 277	Double Alkali Construction 2/79	16.3	58.9	7.3 MM		1. The total installed capital cost figure is an estimate provided by the utility. 2. The annual operating cost figure provided is an estimate for one year's service following the first three months of operations. $4.5 million of this total will be subsidized by the EPA for technology research, development and report writing. This subsidy will not be utilized for any capital expenditures
Montana Power Co. Colstrip Plant Nos. 3 & 4 1400	Fly Ash/Lime Contract Awarded 7/80 & 7/81	N/A	N/A	N/A	N/A	1. Capital cost figures are currently not available for publication. The contract awarded to the system supplier is expected to exceed $50 MM for both units.
Pacific Power & Light Idaho Power Company Jim Bridger Plant No. 3	Sodium Carbonate Construction 9/79	50-60 MM	110-120			1. The total installed capital cost figures are estimated values provided by the utility. 2. The system will be comprised of 3 parallel absorption towers each handling 33.3% of the flue gas capacity. 3. The reagent, a nominal 30 wt. % Na_2CO_3 purge solution, will be purchased from a local soda ash manufacturer.

Note: N/A indicates figures are not available.

APPENDIX A (Continued). FGD SYSTEM ECONOMICS: NONOPERATIONAL SYSTEMS

COMPANY PLANT UNITS TOTAL CAPACITY, MW	PROCESS STATUS START-UP DATE	REPORTED CAPITAL COSTS,		REPORTED OPERATING COSTS,		COMMENTS
		$ MILLION	$/KW	$ ANNUAL	MILLS/KWH	
Potomac Electric Power Dickerson Station No. 3 190	Magnesium Oxide Terminated 9/73	6.5	68	990,000	N/A	1. The total installed capital cost figure is an estimate provided by the utility in 1973. 2. This figure does not include regeneration and acid plant costs. 3. The operating cost figure is an estimate provided for 1974 operations. This figure includes operation maintenance costs and acid plant freight and operation charges. Not included in this figure are fixed charges, utility charges, project management and engineering costs.
Public Serv. Co. of Colorado Valmont Station No. 5 50	Limestone Terminated 10/74	4.35	87			1. The capital costs reprsent $44/kW for the particulate scrubber installed in 1971 and $43/kW for the cost of the retrofit slurry treatment equipment installation in 1974 to control the pH of the scrubber slurry. 2. The SO_2 removal system was installed as a research and development project. It was not operating long enough for the utility to determine an annual operating cost.
Public Service of New Mexico San Juan Station Nos. 1 & 2 715	Wellman Lord Construction 11/77	89.510	127.87	7.236 MM	5.0	1. The total installed capital cost figure is an estimated value that applies to 1977 installation. Included are all direct and indirect costs plus an escalation factor. 2. The $/kW figure is based on a net generating capacity of 700 MW. 3. The costs of the venturi scrubbers for particulate removal are included in the total cost figure. 4. The cost of one redundant scrubber train is included. 5. The annual operating costs and the mills/kWh value derived are estimated for 1978 operations and based upon a capacity factor of 77%. 6. No credit is allowed for by-product recovery (this includes both the elemental sulfur product and the sodium sulfate purge product for use in pulp and paper processes.

Note: N/A indicates figures are not available.

APPENDIX A (Continued). FGD SYSTEM ECONOMICS: NONOPERATIONAL SYSTEMS

COMPANY PLANT UNITS TOTAL CAPACITY, MW	PROCESS STATUS START-UP DATE	REPORTED CAPITAL COSTS,		REPORTED OPERATING COSTS,		COMMENTS
		$ MILLION	$/KW	$ ANNUAL	MILLS/KWH	
Salt River Project Coronado Station Nos. 1 & 2 700	Limestone Contract Awarded 4/79 & 4/80	69	98		2.8	1. The contracts for the ESP and scrubbing system have been awarded. The combined cost of these two new power-generating facilities, including emission control is estimated at 685 MM. 2. Total capital and operating costs are estimated as 1978 dollars. 3. Total capital costs include direct material and construction costs, engineering, contingencies, escalation and interest during construction. 4. The operating costs include energy and demand costs, limestone supply, operating and maintenance, and capital carrying charges. Sludge disposal is not included.
So. Indiana Gas & Electric A.B. Brown Station No. 1 250	Double Alkali Construction 4/79	10.8	43.2		1.08	1. FMC was awarded a contract in excess of $8 million for the design and installation of a double alkali scrubbing system. 2. Total expensitures for this new plant are estimated at $134 MM. 3. The total installed capital cost figure includes installed cost of FGD equipment, ancillaries, sludge disposal-site preparation and the waste transport system. 4. The operating cost figures include feed material and chemicals, labor and supervision, waste disposal as well as maintenance materials, labor and supervision and reheat energy costs. 5. The replacement energy cost of 7 mills/kWh is not included in the cost figures. 6. Costs are given in 1976 dollars.

Note: N/A indicates figures are not available.

APPENDIX A (Continued). FGD SYSTEM ECONOMICS: NONOPERATIONAL SYSTEMS

COMPANY PLANT UNITS TOTAL CAPACITY, MW	PROCESS STATUS START-UP DATE	REPORTED CAPITAL COSTS,		REPORTED OPERATING COSTS,		COMMENTS
		$ MILLION	$/KW	$ ANNUAL	MILLS/KWH	
Southern Mississippi Power R.D. Morrow Generating Plant Nos. 1 & 2 360	Limestone Construction 11/77 & 6/78	13.447	37.35			1. The total installed capital cost figure is a 1975 estimate. 2. Included in the cost figure are the scrubbers and ancillary equipment, fans, construction field expenses, and interest during construction. 3. The ESP costs, ($5.4 MM equipment costs for two units) are not included. 4. Sludge handling and disposal facilities are not included in the total cost figure.
Texas Utilities Co. Montecello Station No. 3 750	Limestone Construction 2/78	18.5	25			1. The capital cost figures include the installed cost of FGD equipment, ancillaries, sludge disposal-site preparation and waste transport system.
Wisconsin Power & Light Columbia Plant No. 2 527	Fly Ash/Lime Letter of Intent 1/80	30	57	4.2 MM		1. The total installed capital cost figure is a preliminary estimate that includes the scrubbers and ancillary equipment, erection, disposal piping and basin area. 2. Sludge handling and disposal equipment and the upstream ESP are not included in this figure. 3. The operating cost figures provided are estimated values.

Note: N/A indicates figures are not available.

APPENDIX B

FGD PROCESS FLOW DIAGRAMS

THIS APPENDIX COMPRISES BOTH ACTIVE AND INACTIVE UNITS

ARRANGED ALPHABETICALLY ACCORDING TO UTILITY

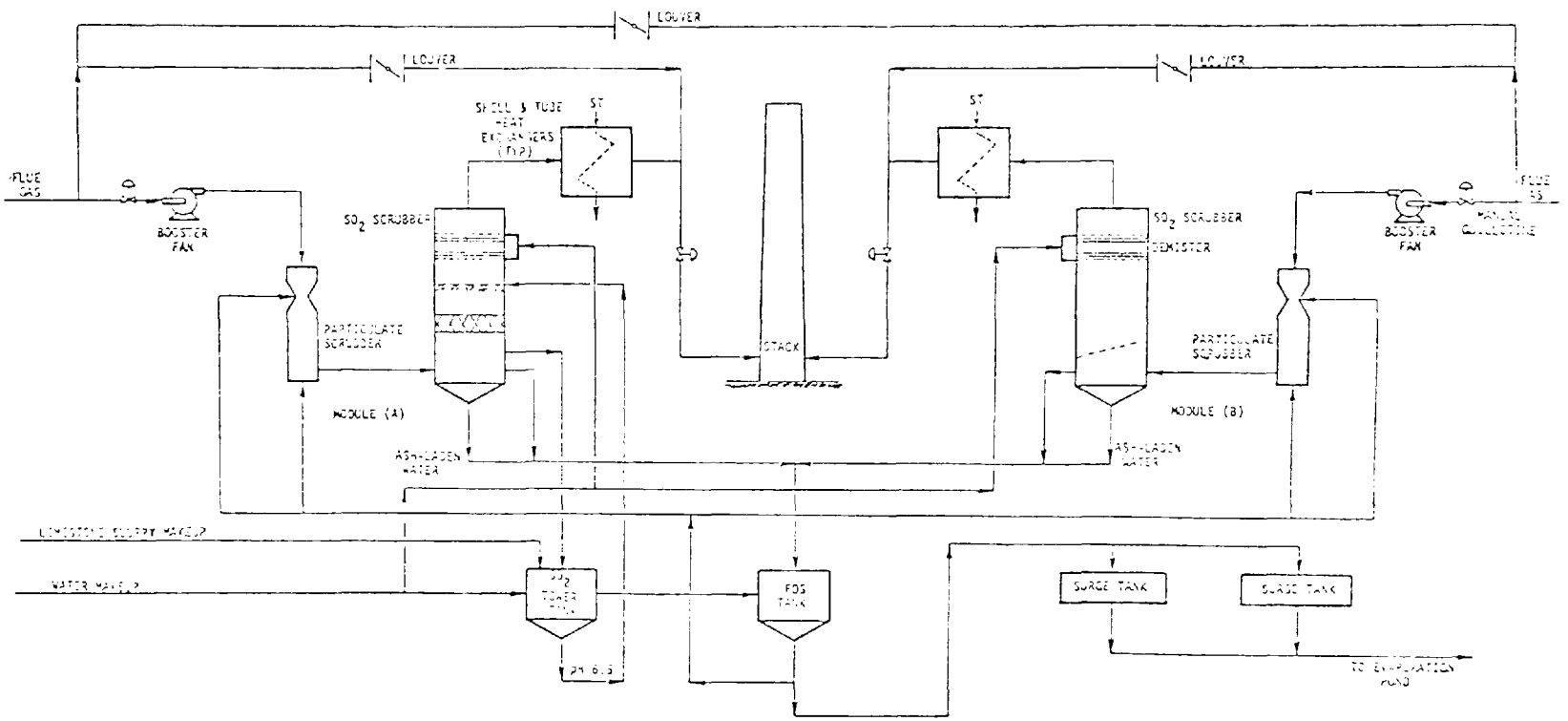

Arizona Public Service, Cholla No. 1 FGD System:
General Flow Diagram.

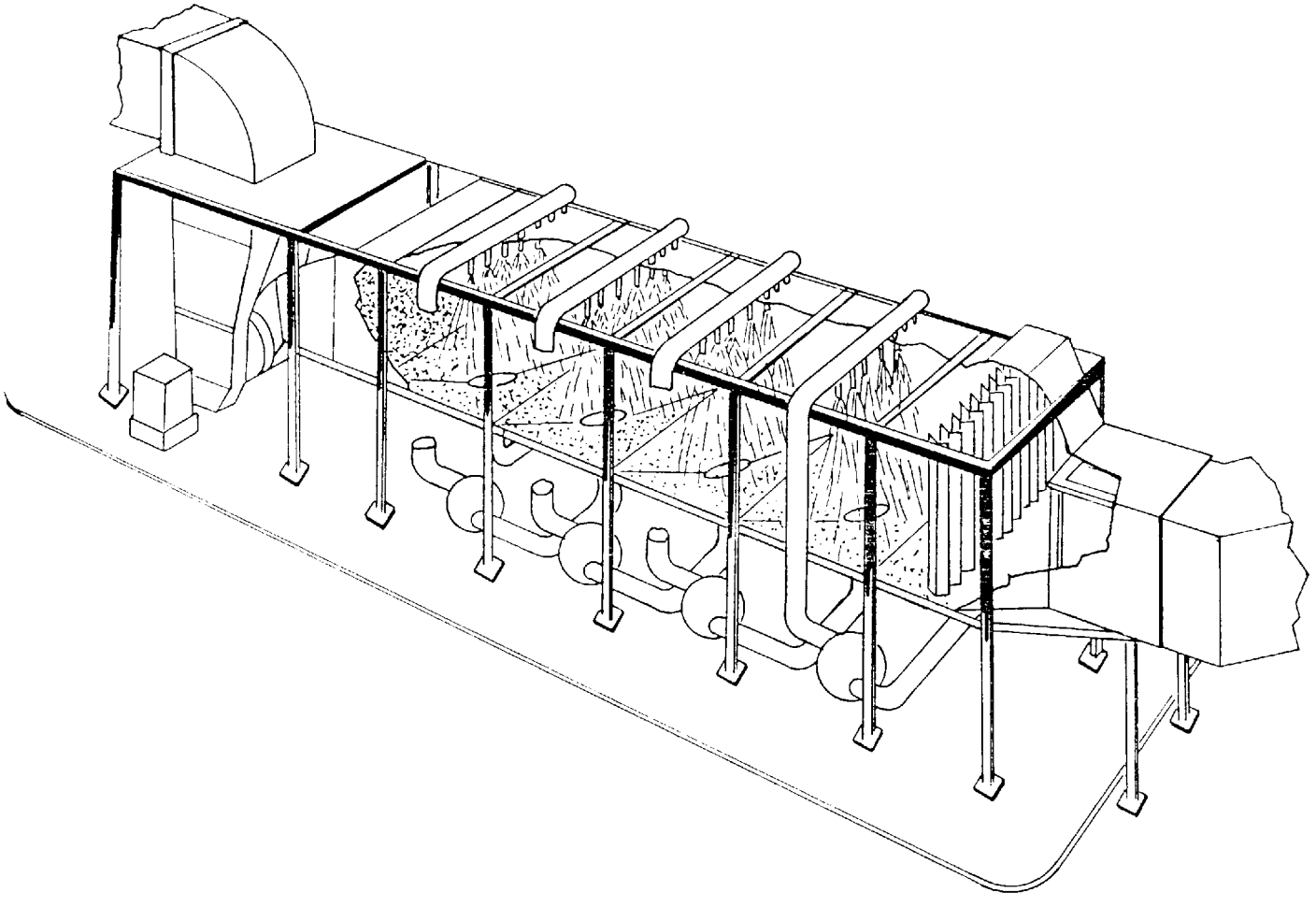

Arizona Public Service, Four Corners Prototype Scrubber Module:
Cross Section Diagram.

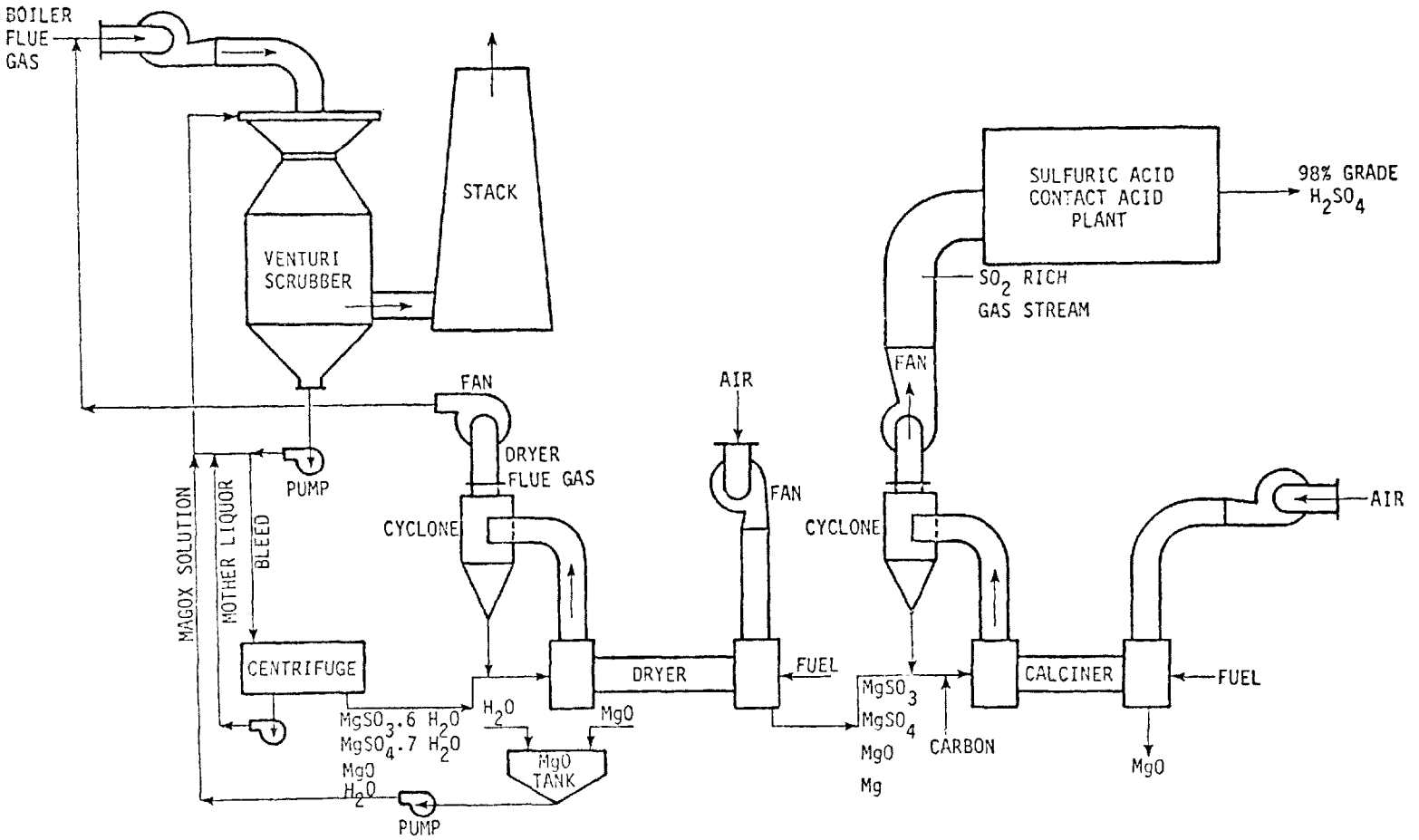

Boston Edison, Mystic No. 6 FGD System and Essex Chemical Plant Regeneration Facility: Schematic Flow Diagram.

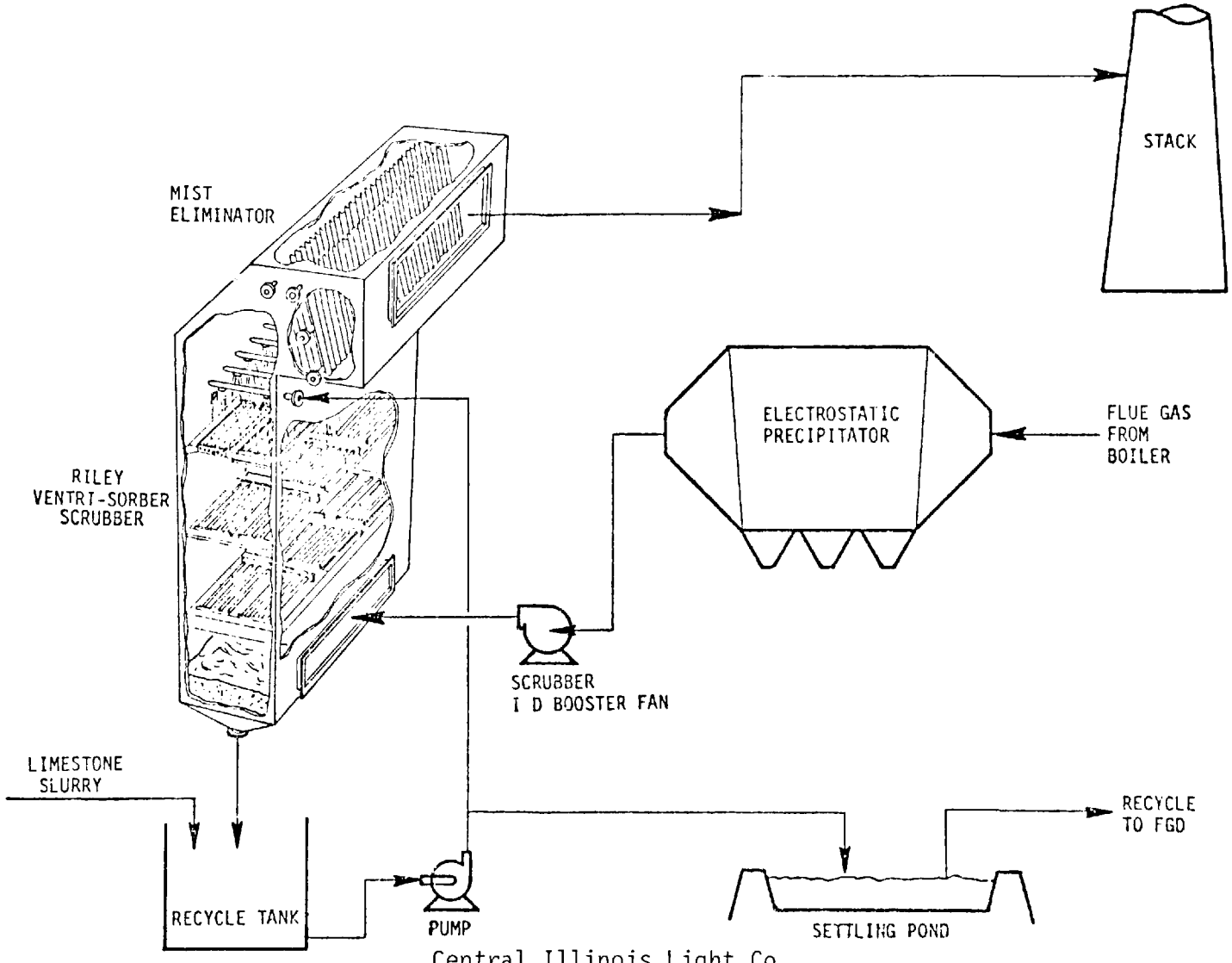

Central Illinois Light Co.,
Duck Creek No. 1 FGD System Module:
Simplified Process Diagram.

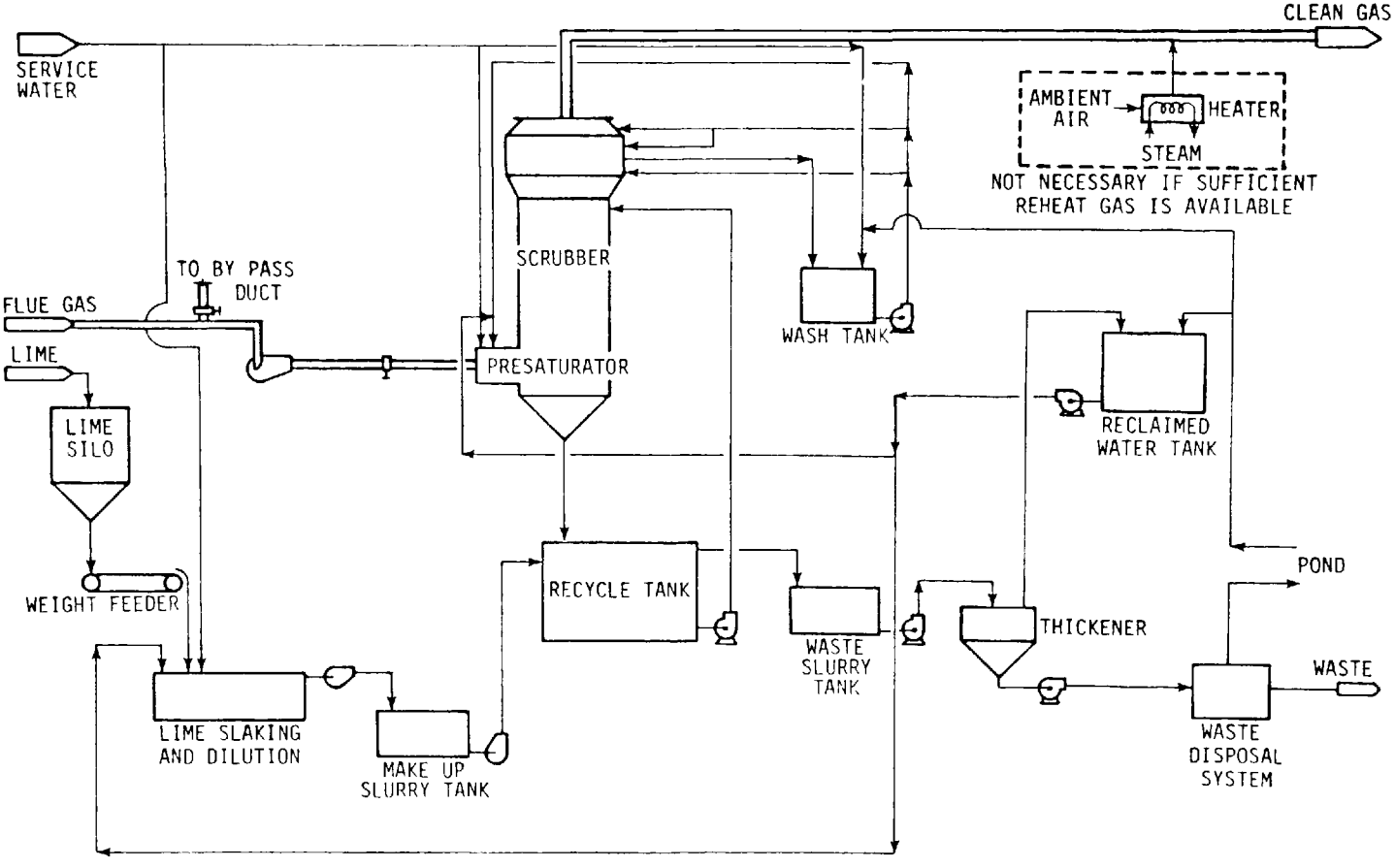

Columbus and Southern Ohio Electric, Conesville No. 5 FGD System:
Process Flow Diagram.

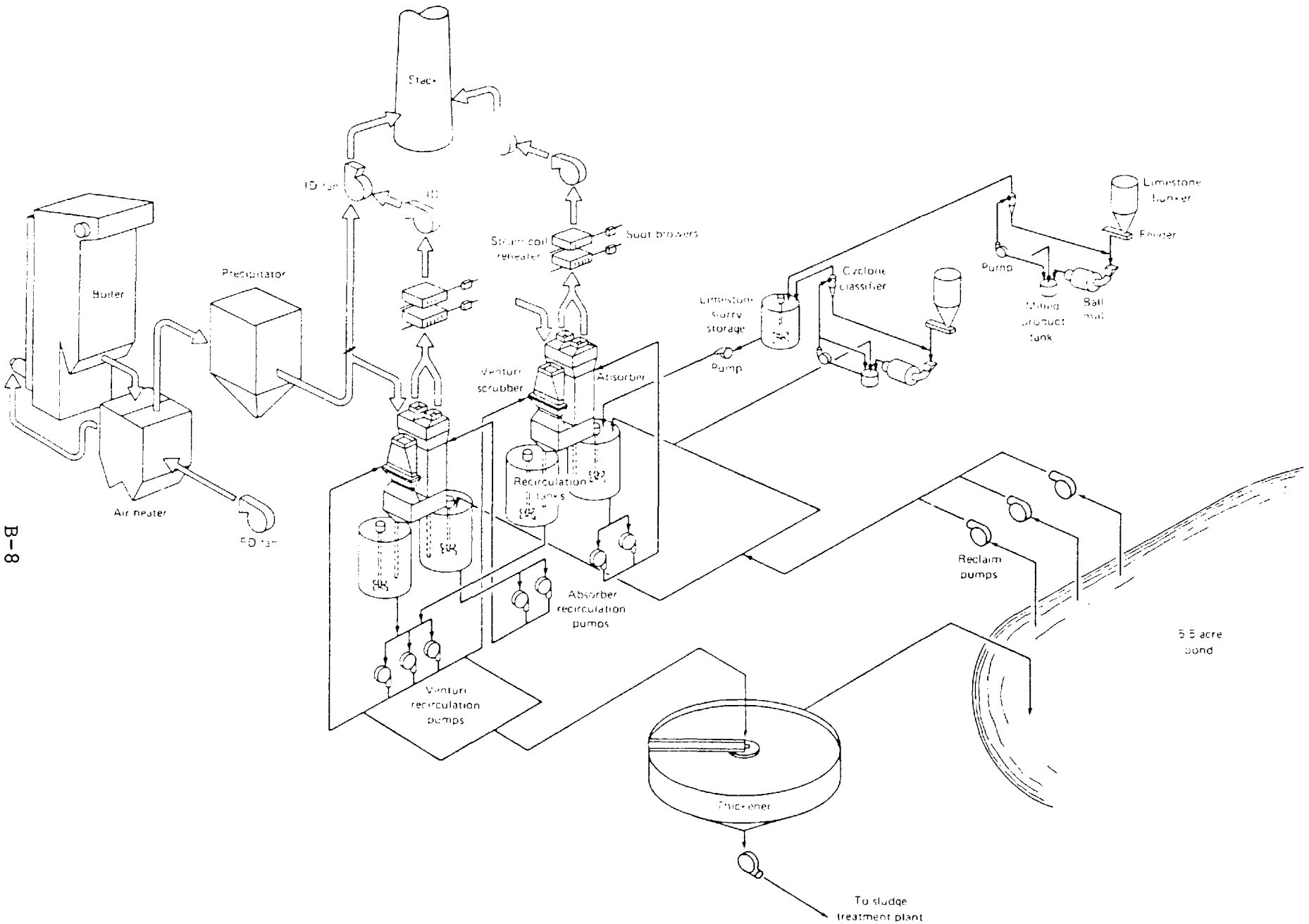

Commonwealth Edison, Will County No. 1 FGD System:
General Process Diagram.

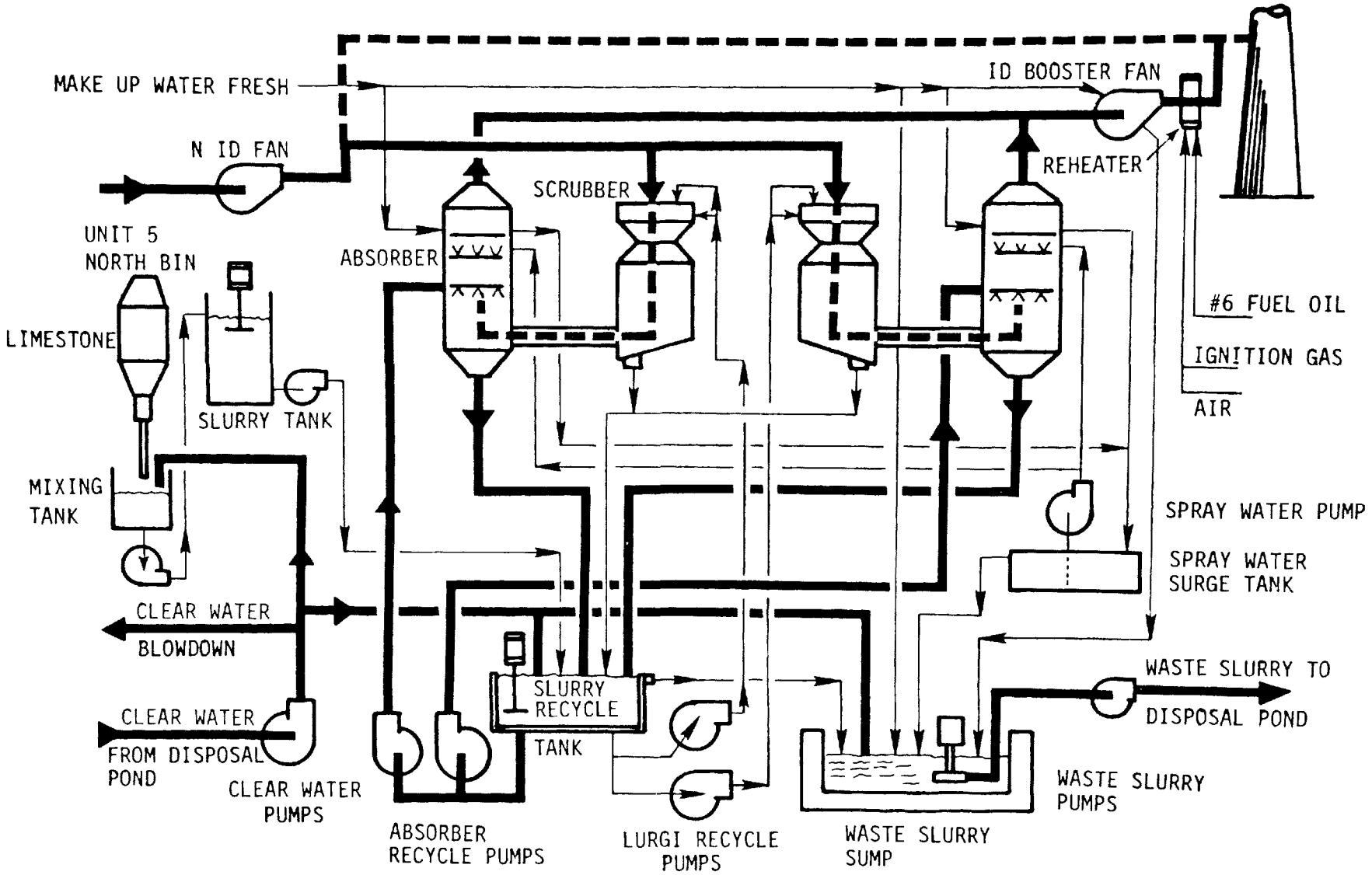

Detroit Edison, St. Clair No. 6 FGD System:
General Process Diagram.

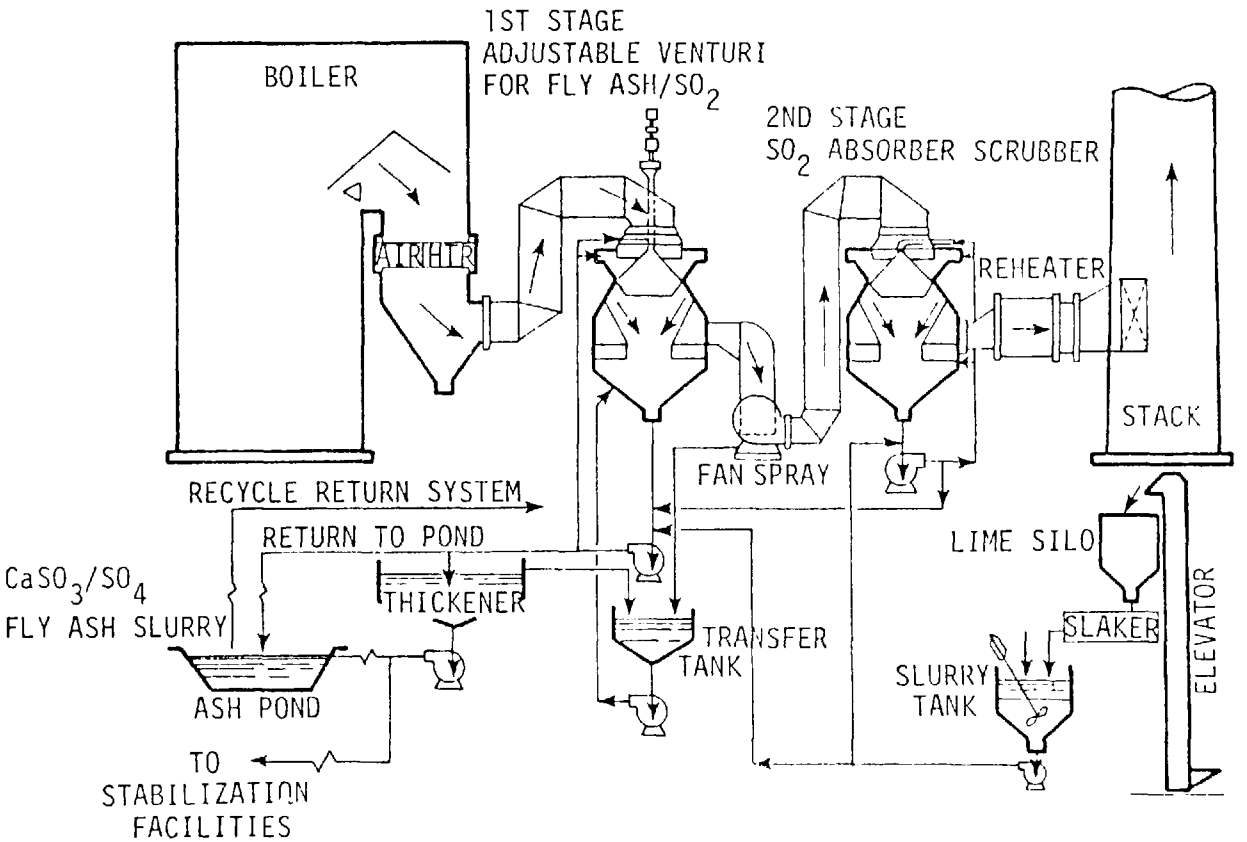

Duquesne Light, F. R. Phillips FGD System:
General Diagram.

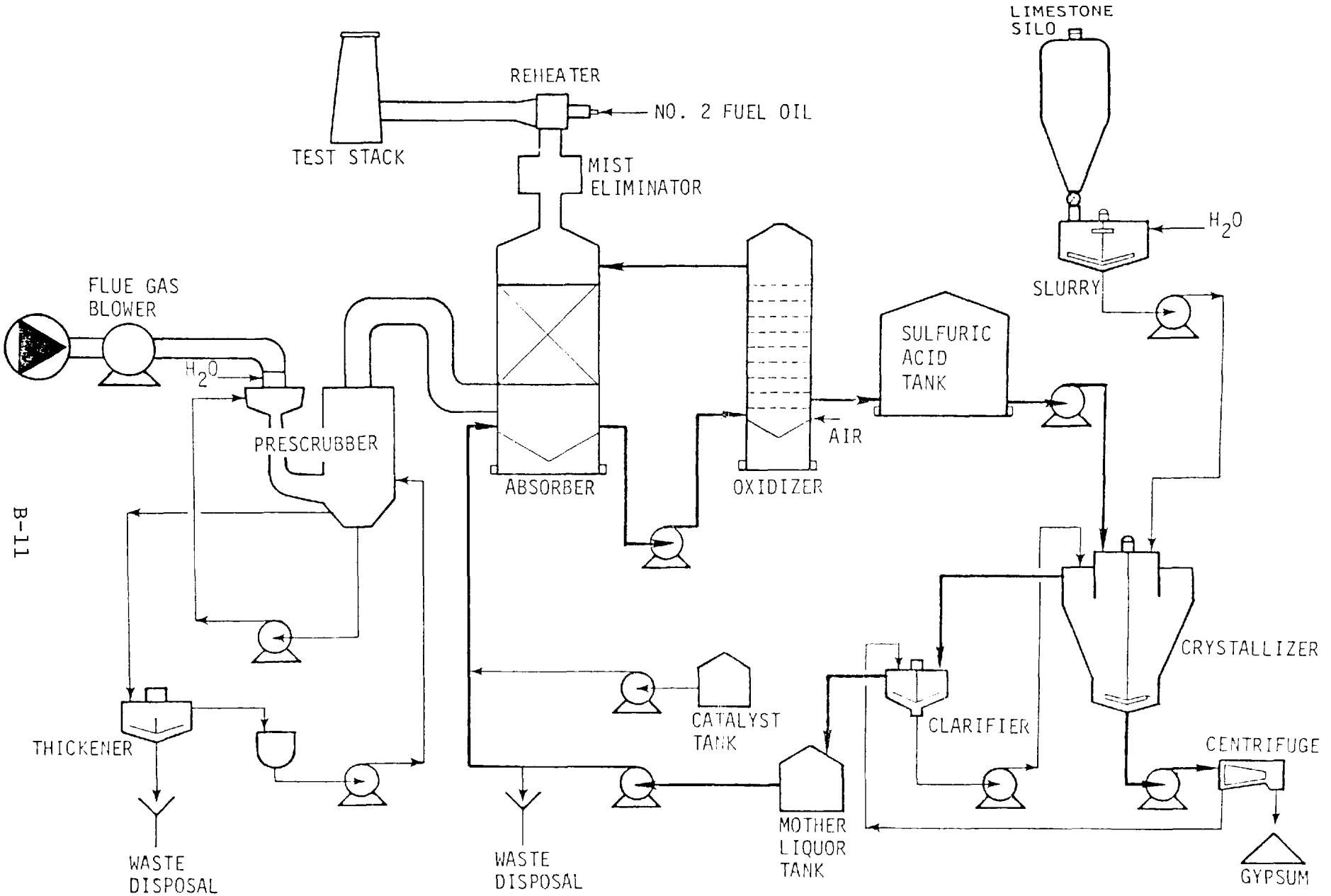

Gulf Power, Chiyoda Throughbred 101 FGD Prototype:
General Process Diagram.

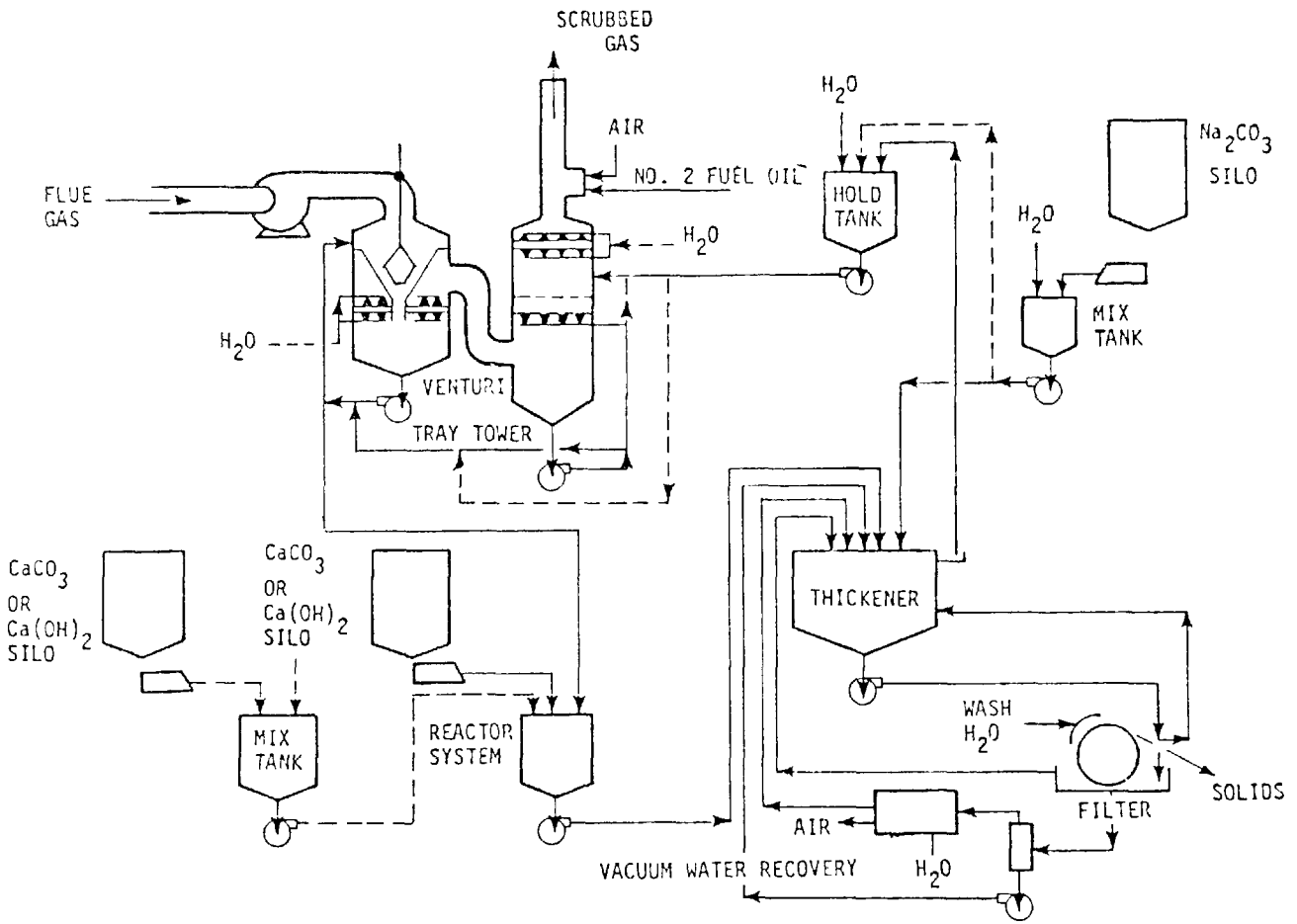

Gulf Power, Scholz CEA/ADL Dual Alkali Prototype:
General Process Diagram.

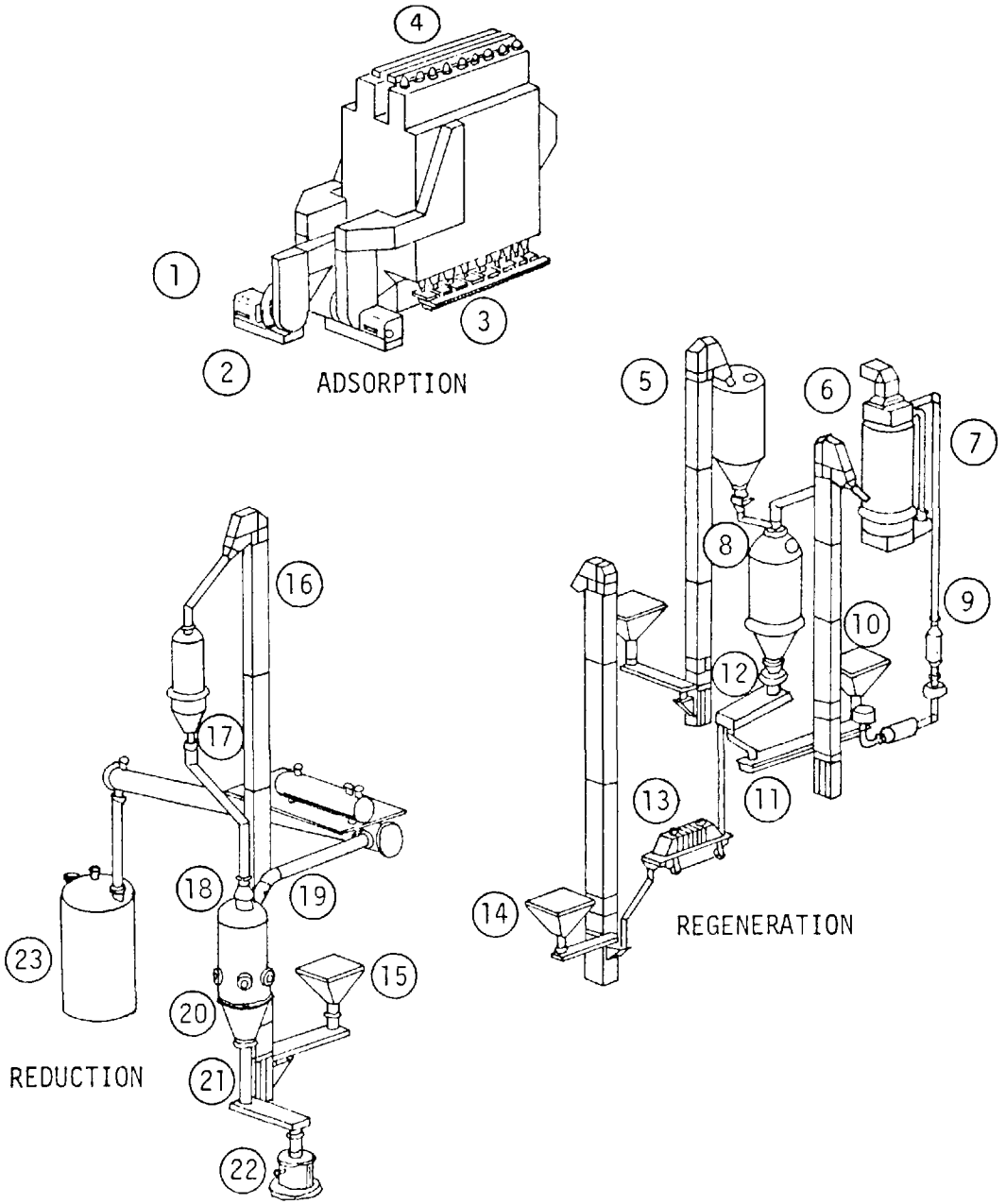

ADSORPTION SECTION

1. INLET FLUE GAS DUCTING, DILUTION AIR DESIGN, AND ADSORPTION SECTION OVERALL LAYOUT.
2. ADSORPTION DISCHARGE FANS.
3. ADSORBER DISCHARGE FEEDERS CONVEYORS AND SITE GLASSES WHICH SHOW CHAR MOVEMENT.
4. ADSORBER FEED CONVEYORS.
5. CHAR BUCKET ELEVATORS.

REGENERATION SECTION

6. AIR PREHEATER, SAND FLUID BED HEATER, HOT SAND BUCKET ELEVATOR.
7. START UP AIR HEATER.
8. SATURATED CHAR SURGE TANK, SATURATED CHAR FEEDER, REGENERATOR.
9. SAND HEATER BLOWER.
10. SAND MAKE UP HOPPER, FEEDER.
11. HOT SAND CONVEYOR.
12. CHAR-SAND SEPARATOR FEEDER.
13. REGENERATED CHAR COOLER.
14. REGENERATED CHAR BUCKET ELEVATOR, CHAR MAKE UP HOPPER, FEEDER.

REDUCTION SECTION

15. COAL MAKE UP HOPPER, FEEDER FEED BUCKET ELEVATOR.
16. COAL FEED BIN.
17. COAL FEED BIN ACTIVATOR, ROTARY COAL AIRLOCK, RESOX START UP HEATER.
18. RESOX REACTOR.
19. SULFUR CONDENSER, TAIL GAS BLOWER.
20. CONTROL AIR BLOWER.
21. ASH DISCHARGE FEEDER
22. ASH RECEIVER VESSEL, WEIGH SCALE.
23. SULFUR STORAGE TANK, SULFUR TRANSFER PUMP.

Gulf Power, Scholz FW-BF Dry Adsorption Prototype:
General Equipment Schematic.

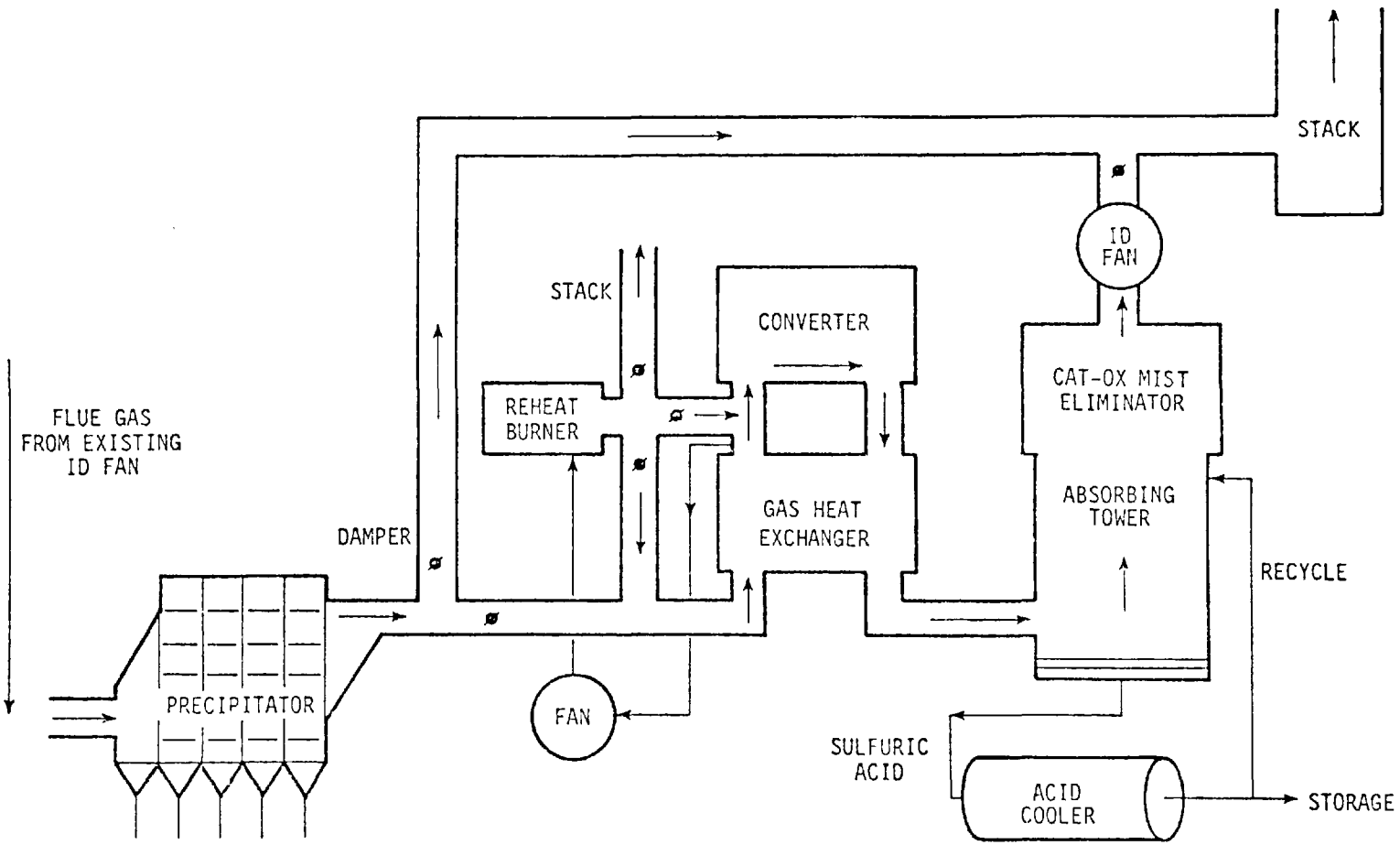

Illinois Power, Wood River No. 4 Catalytic Oxidation FGD System:
Simplified Process Diagram.

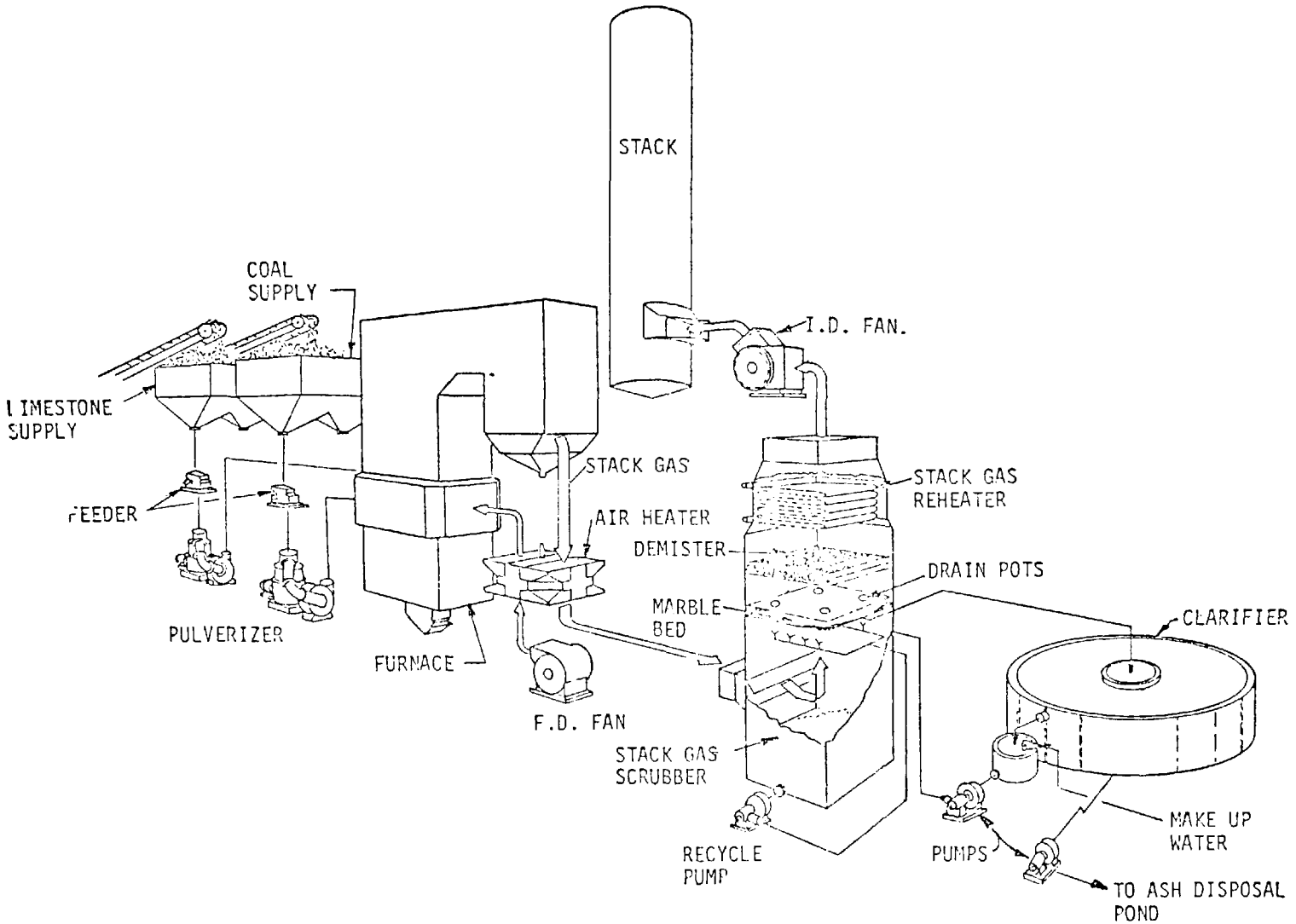

Kansas City Power and Light,
Terminated Hawthorn No. 3 FGD System: General Process Diagram.

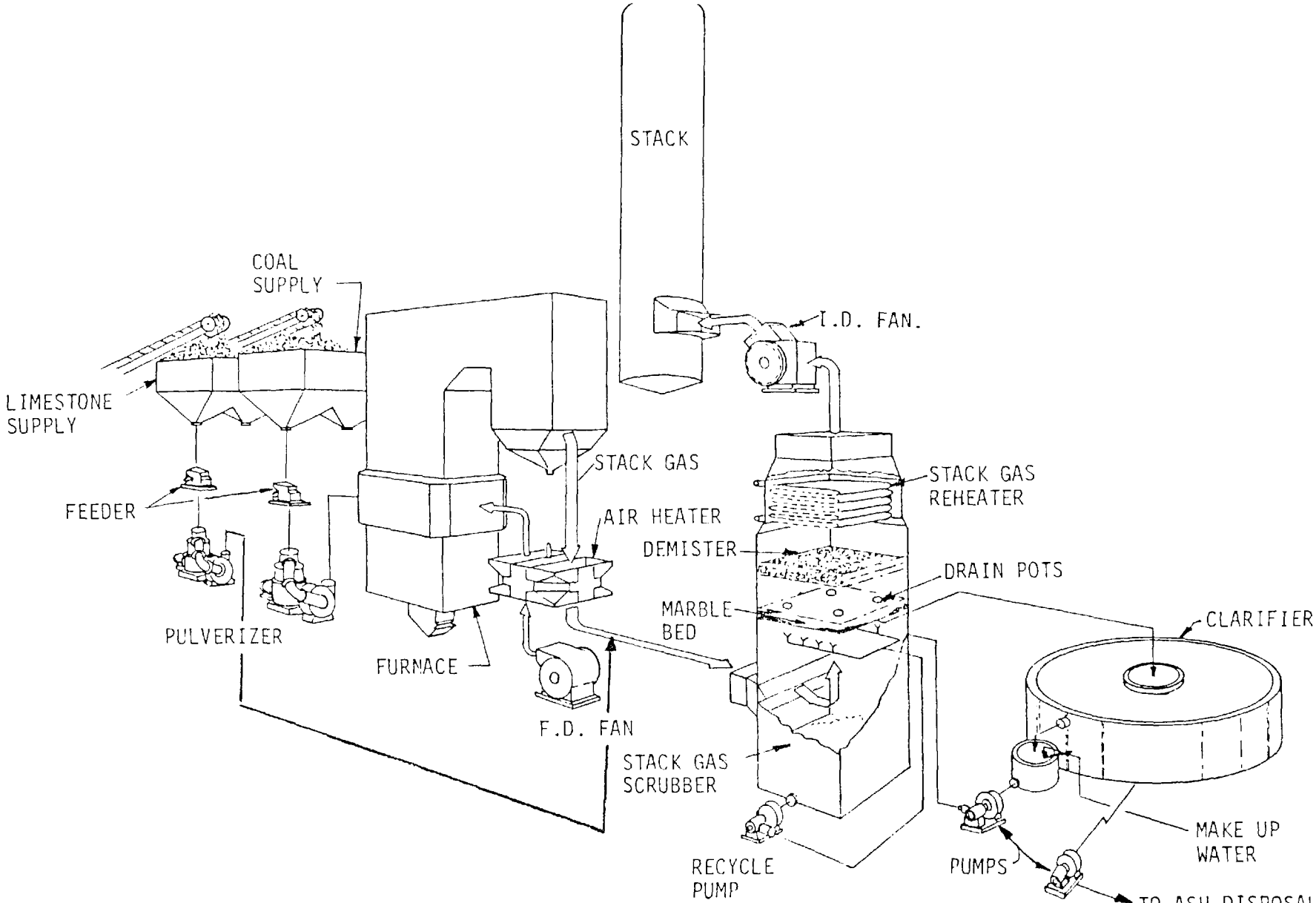

Kansas City Power and Light
Terminated Hawthorn No. 4 FGD System:
General Process Diagram.

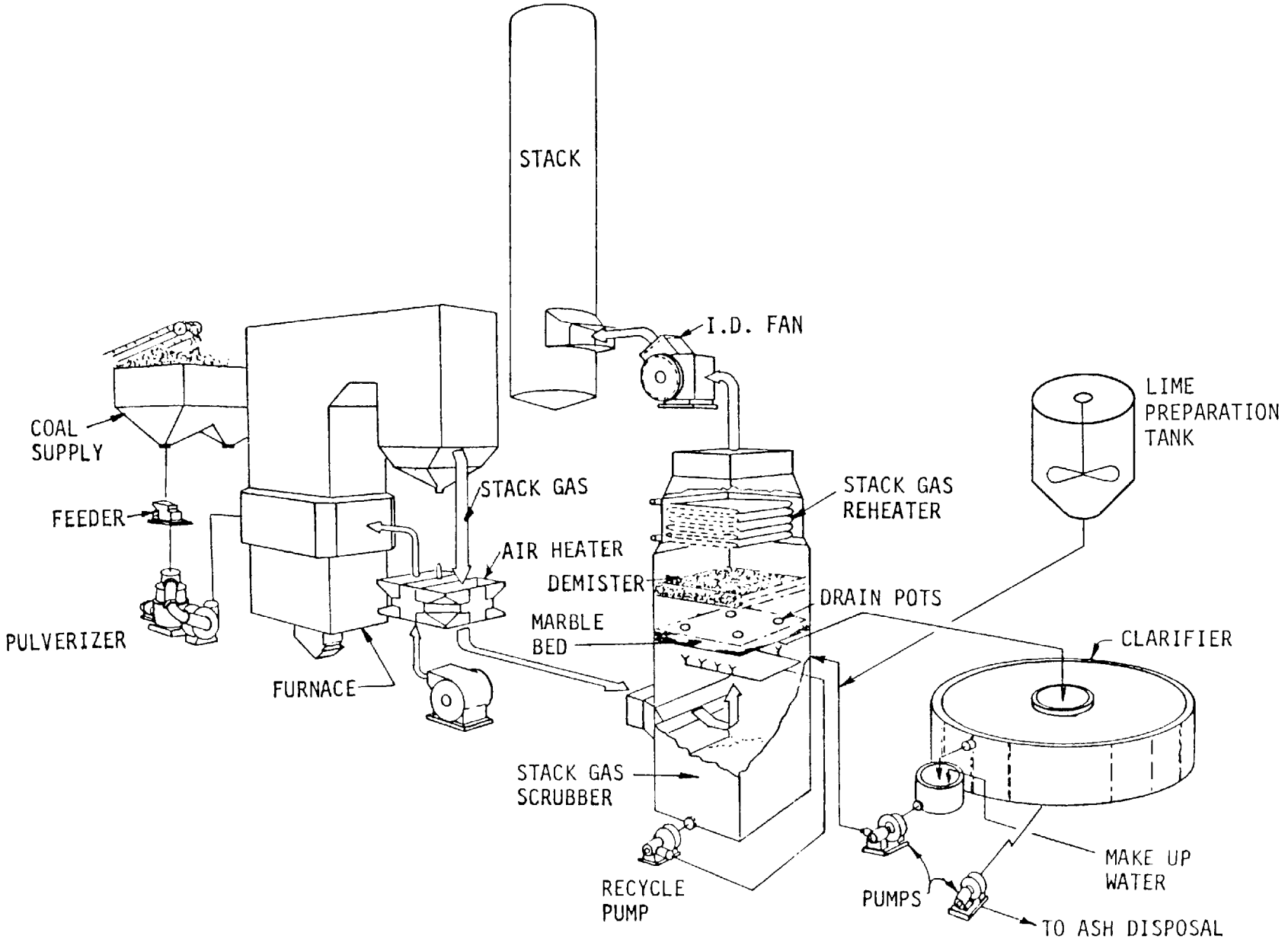

Kansas City Power and Light, Hawthorn Units 3 and 4:
Simplified Process Flow Diagram of the Lime Scrubbing Process

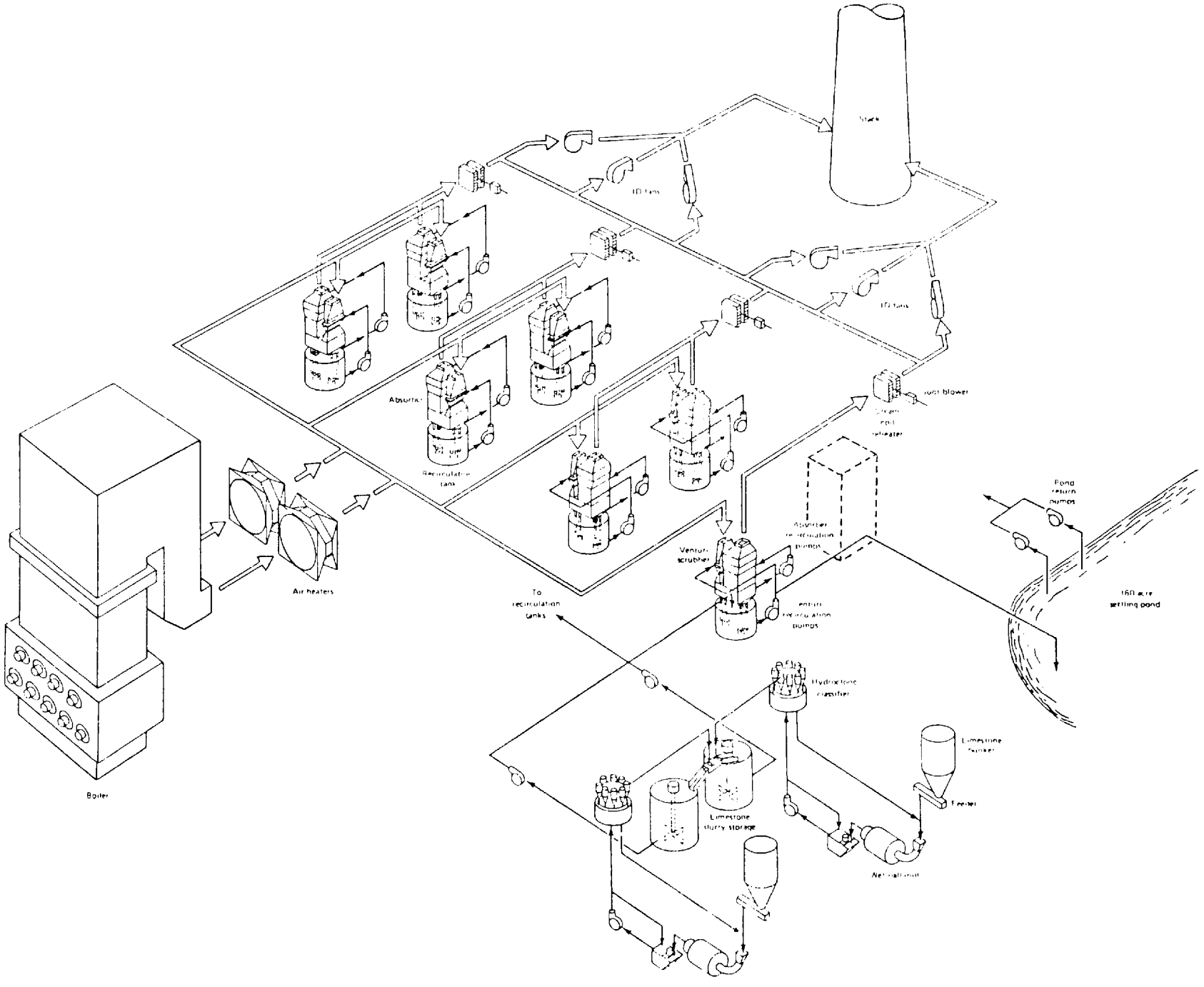

Kansas City Power and Light, La Cygne No. 1 FGD System:
General Diagram.

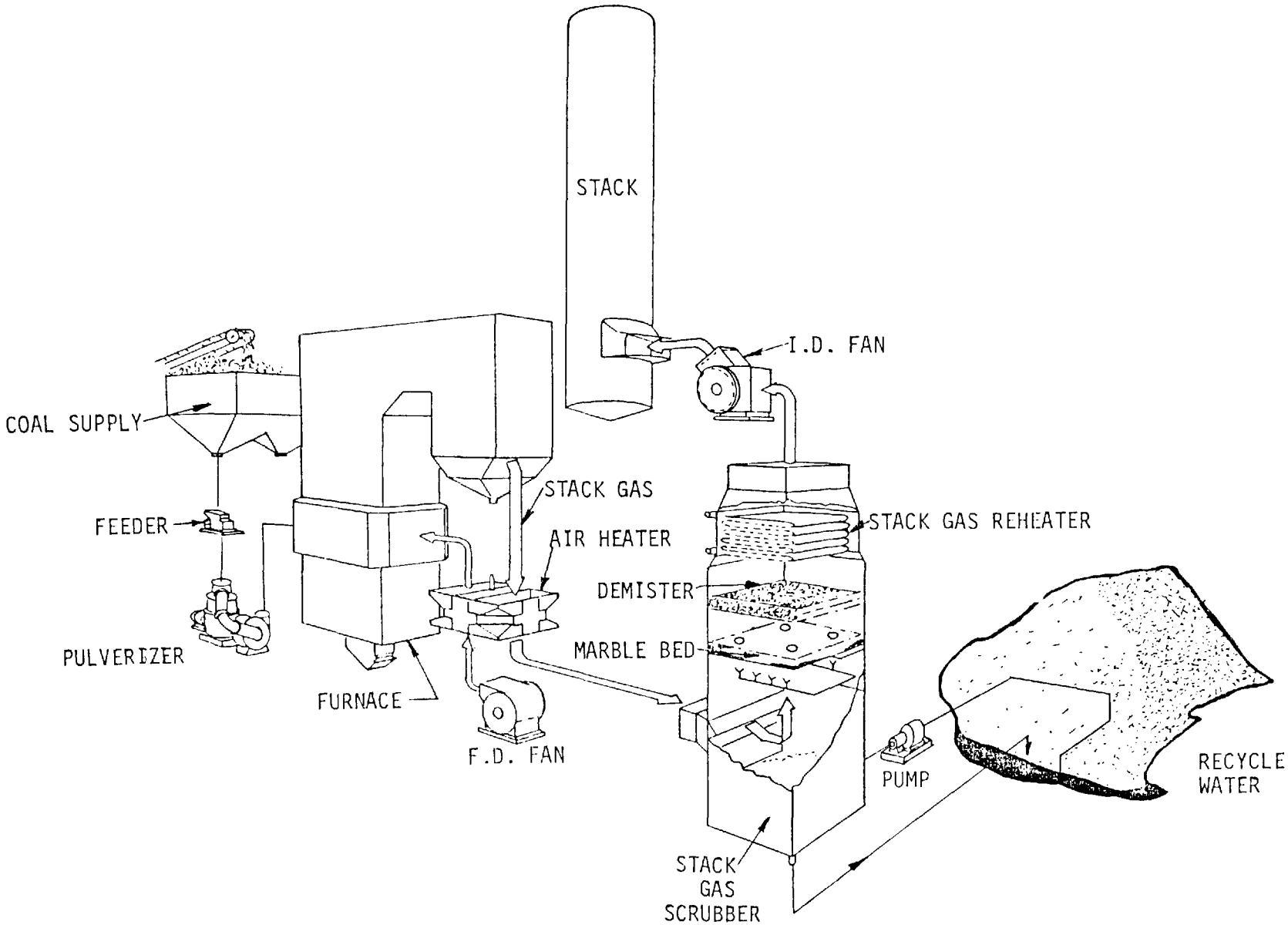

Kansas City Power and Light,
Original Operational FGD System at Lawrence No. 4.

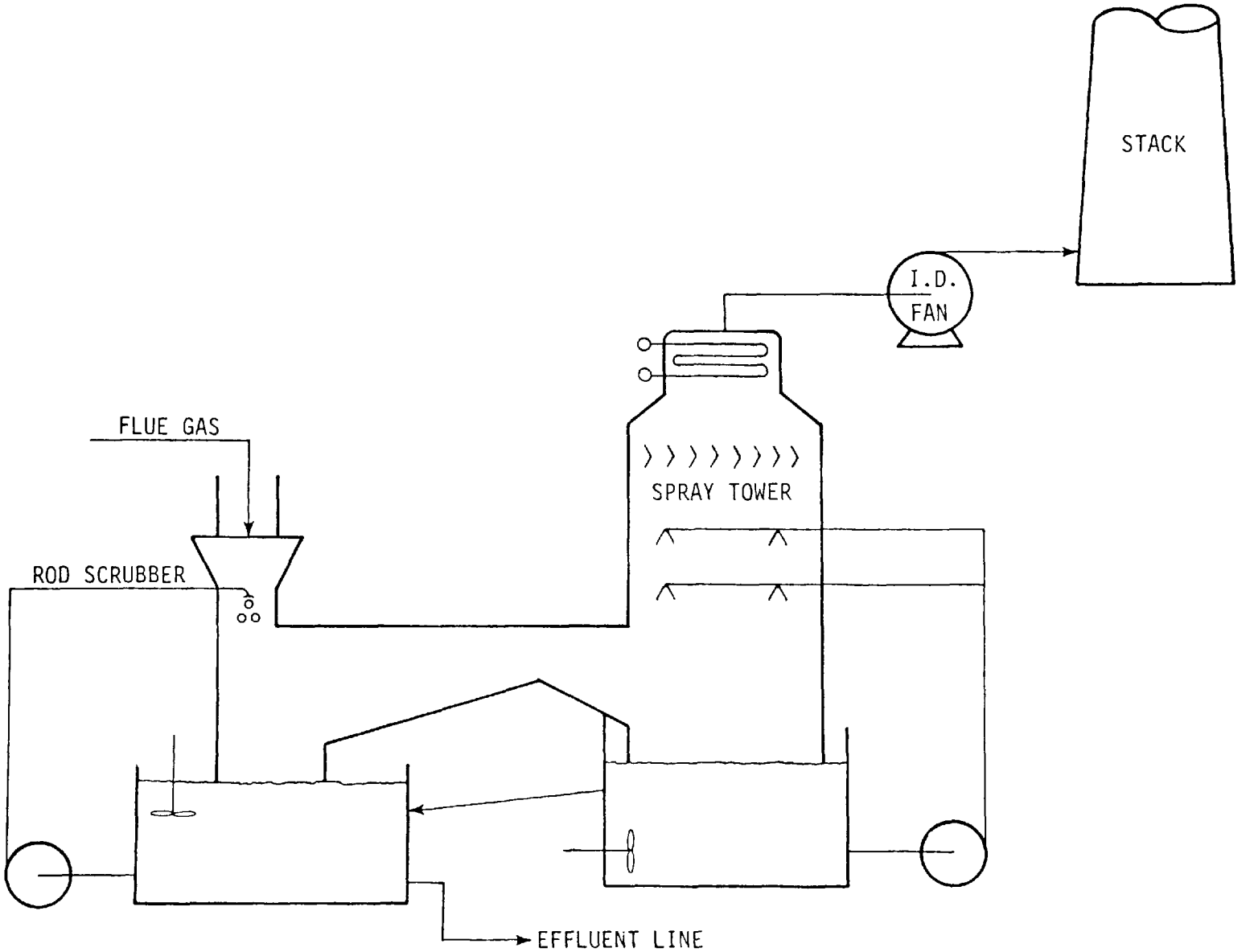

Kansas City Power and Light, Lawrence No. 4 Operational FGD System:
Simplified Flow Diagram.

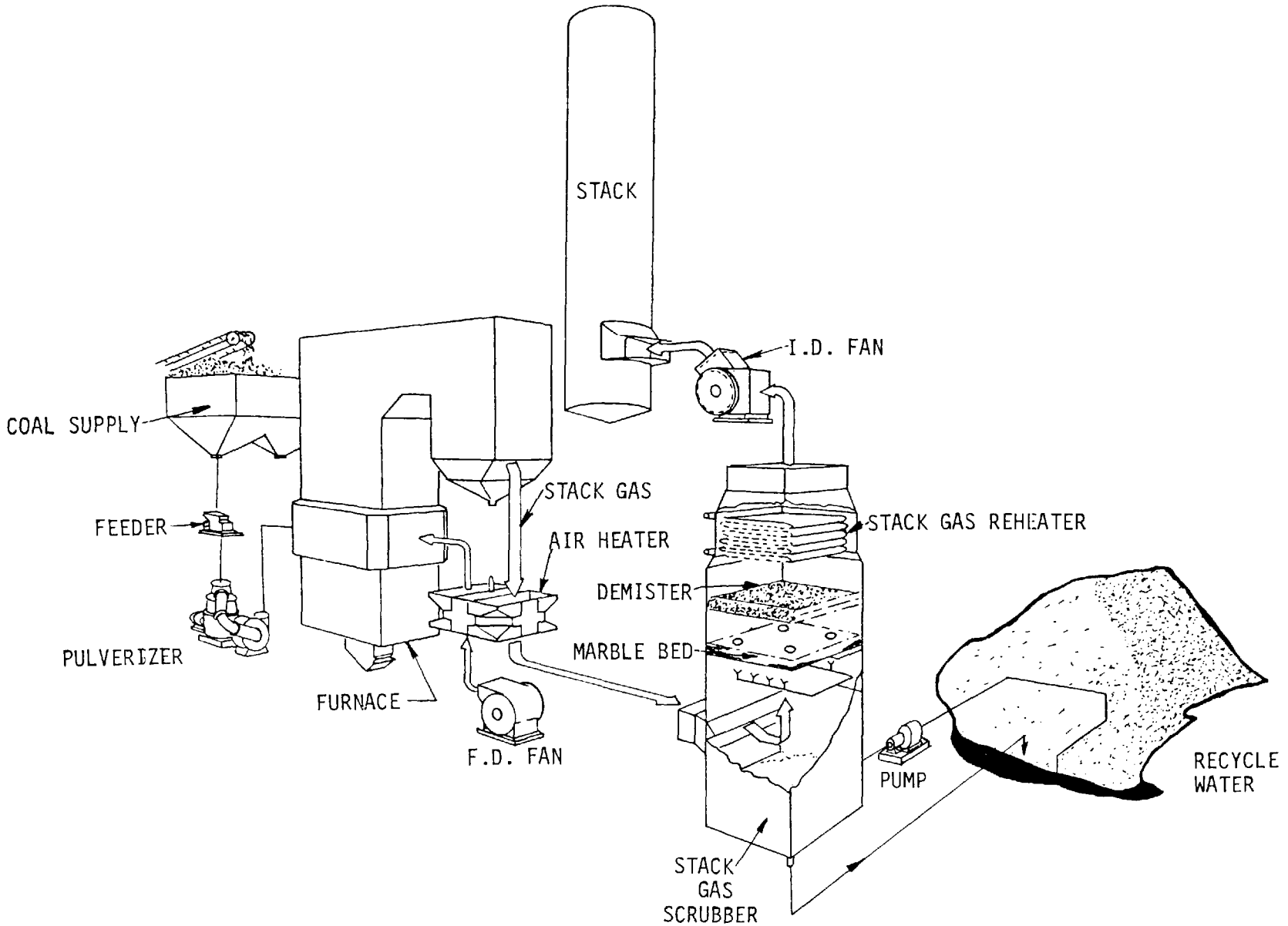

Kansas City Power and Light,
Original FGD System Installed at Lawrence No. 5:
Simplified Process Flow Diagram.

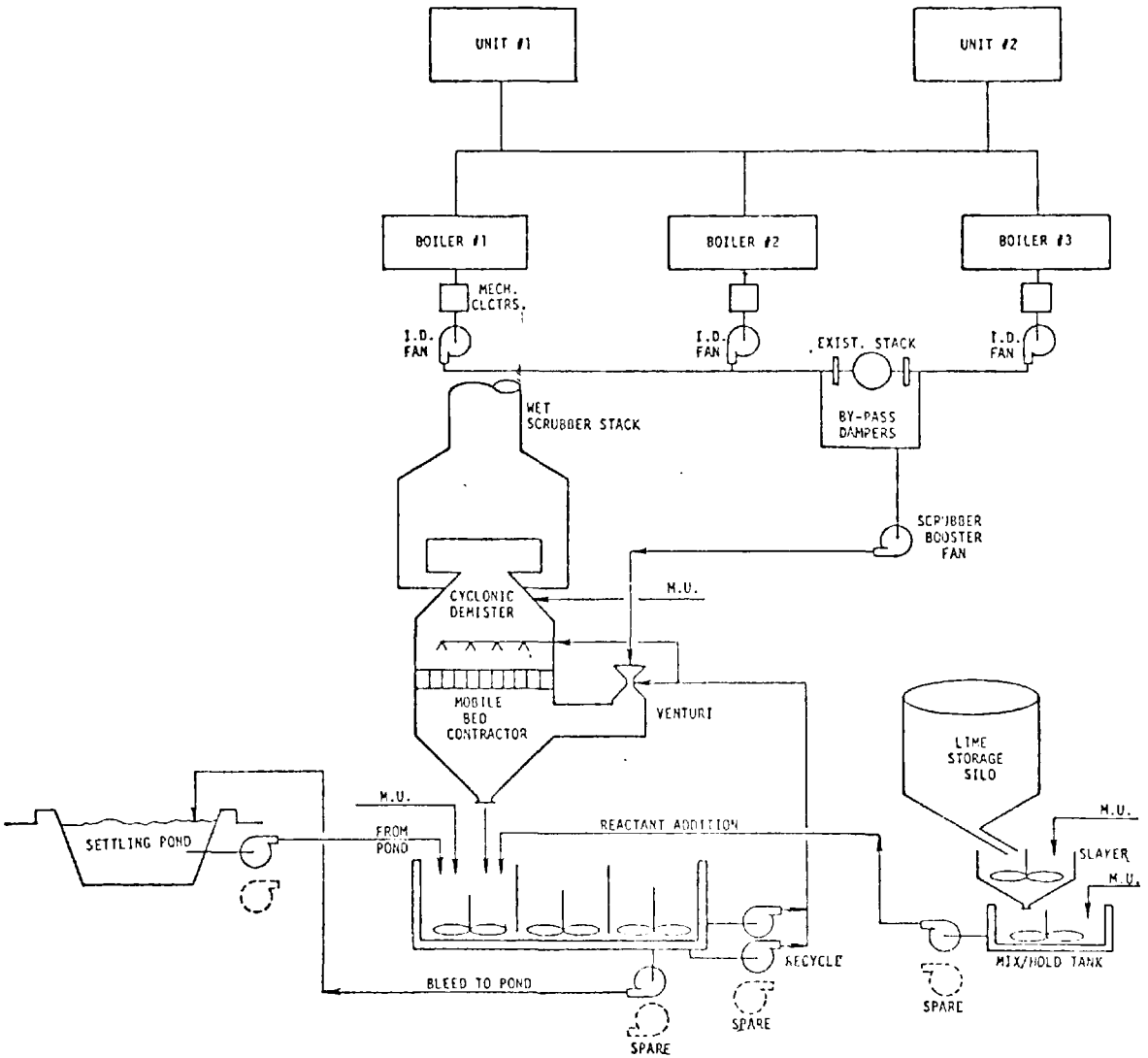

Kentucky Utilities, Green River FGD System:
General Process Diagram.

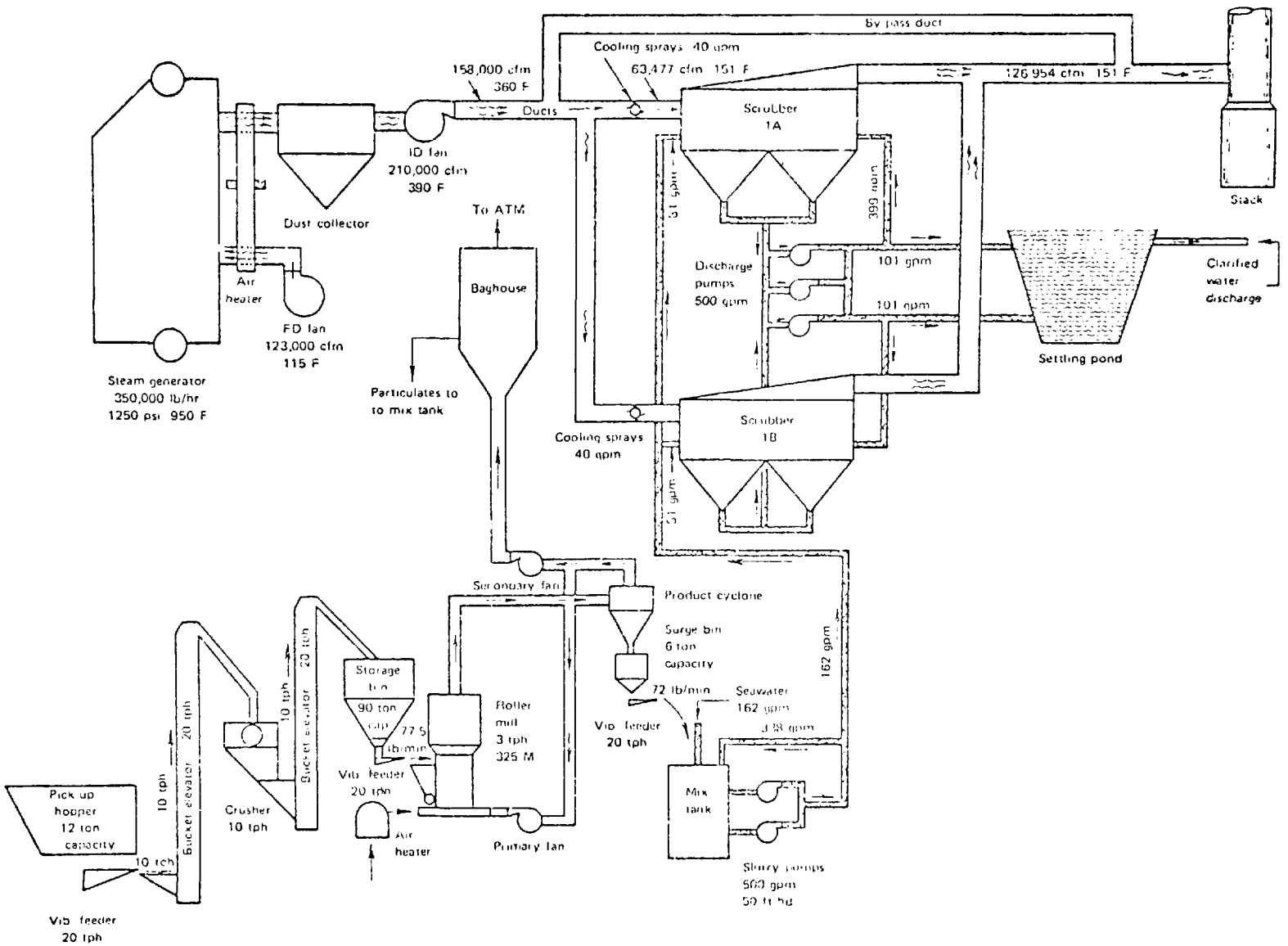

Key West Utilities Board, Stock Island Plant FGD System:
Process Flow Diagram.

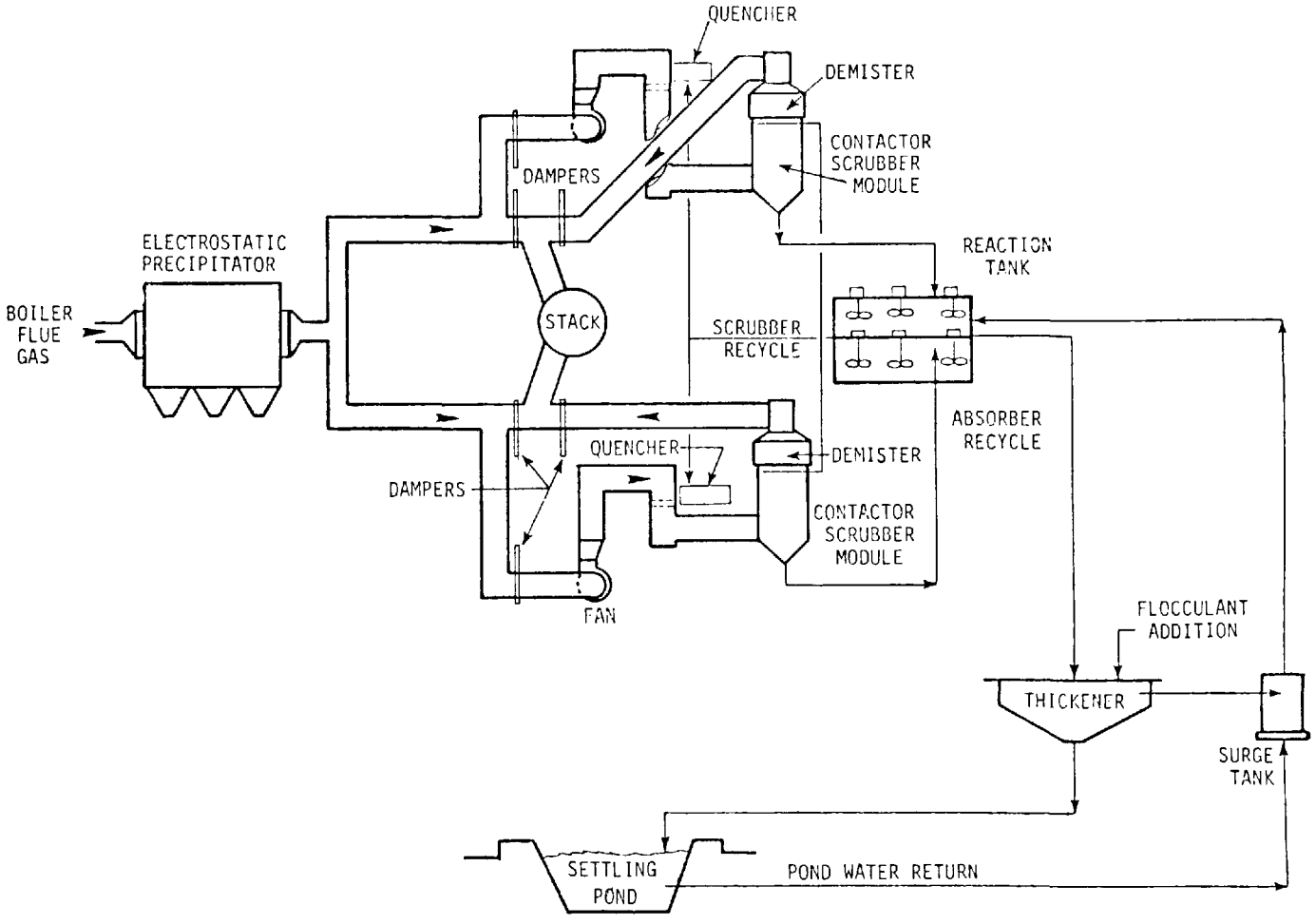

Louisville Gas and Electric, Cane Run No. 4 FGD System:
Simplified Process Flow Diagram.

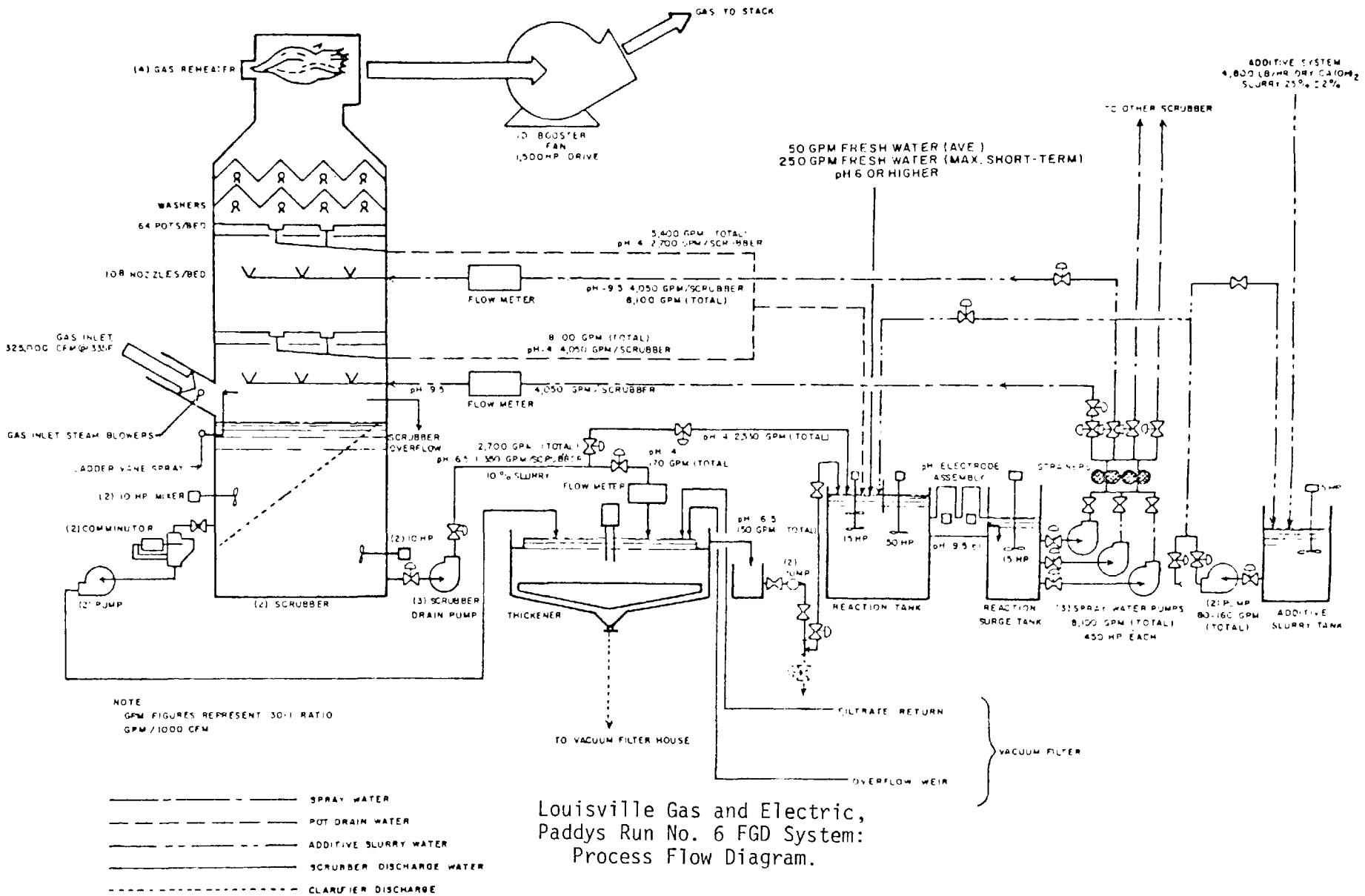

Louisville Gas and Electric,
Paddys Run No. 6 FGD System:
Process Flow Diagram.

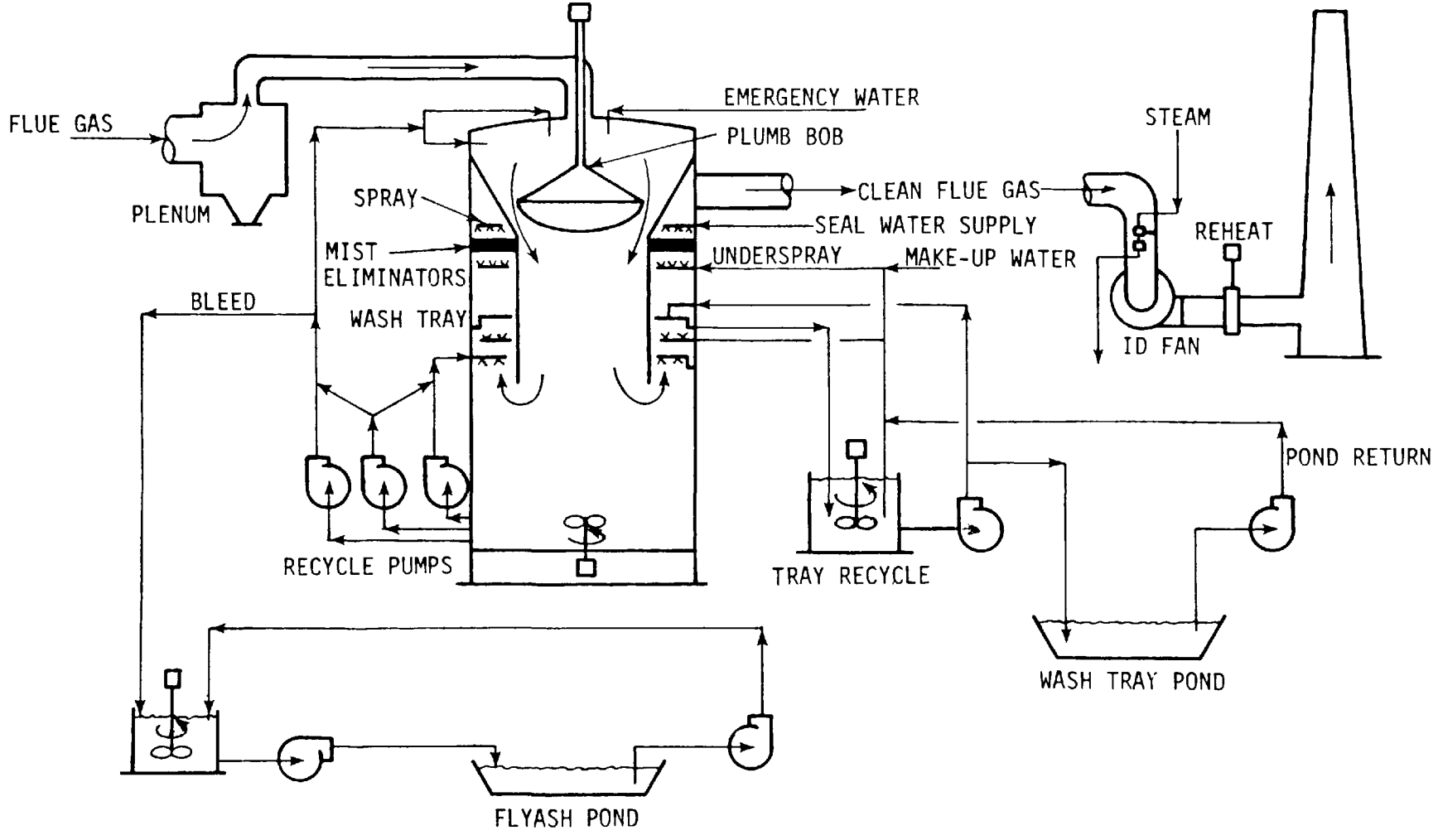

Montana Power and Light, Colstrip FGD Systems:
General Process Diagram

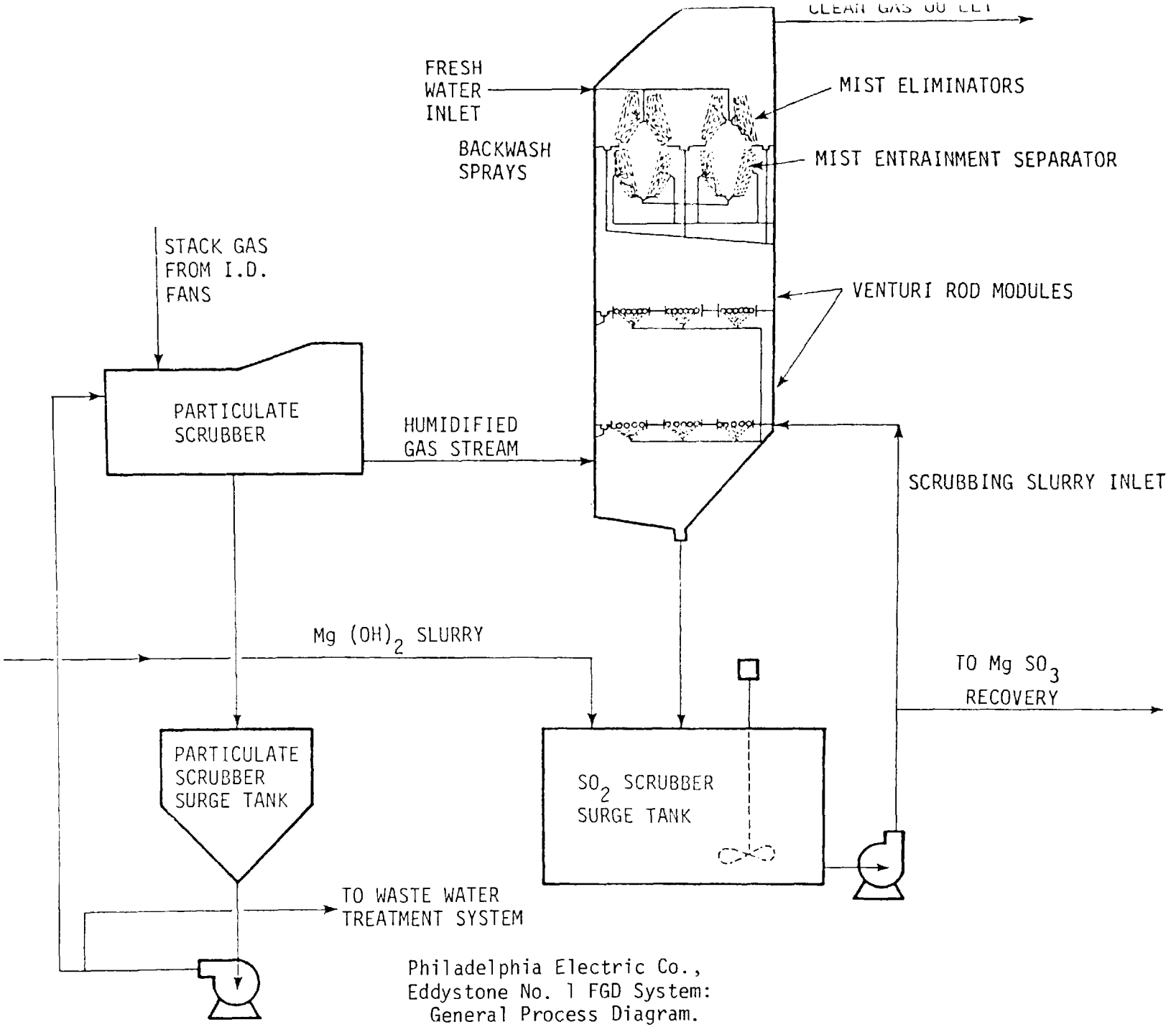

Philadelphia Electric Co.,
Eddystone No. 1 FGD System:
General Process Diagram.

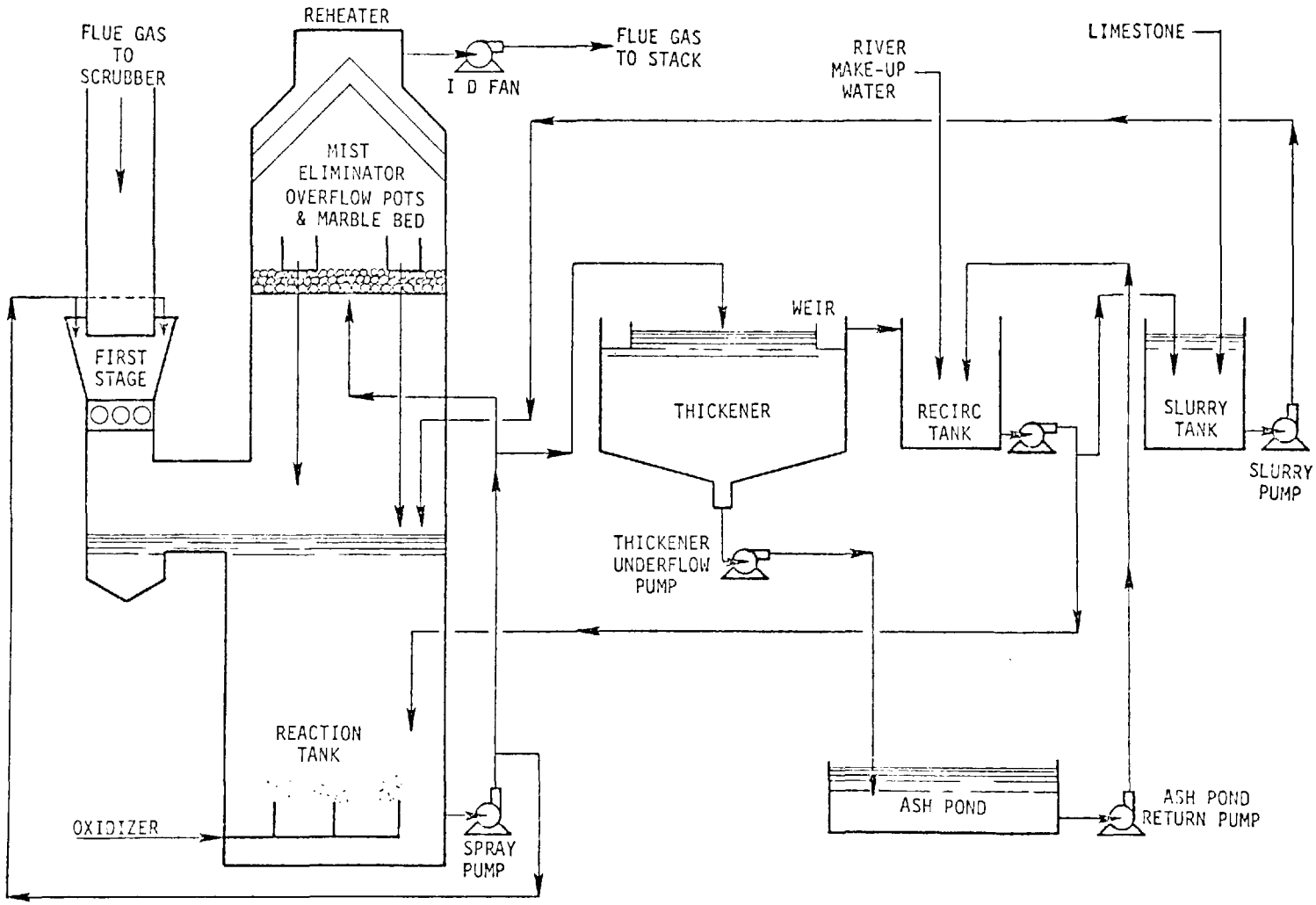

Northern States Power Co. Sherburne No. 1 and 2 FGD system
Simplified Process Diagram.

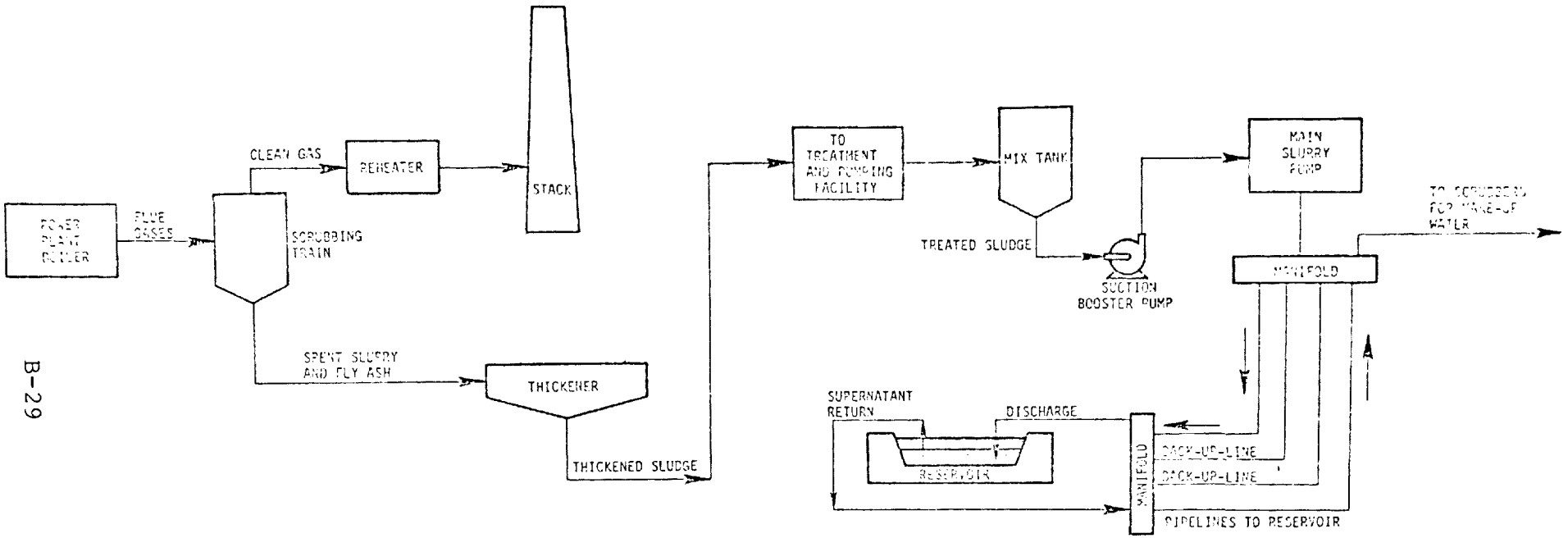

Pennsylvania Power Co., Bruce Mansfield No. 1 FGD System:
Simplified Process Diagram.

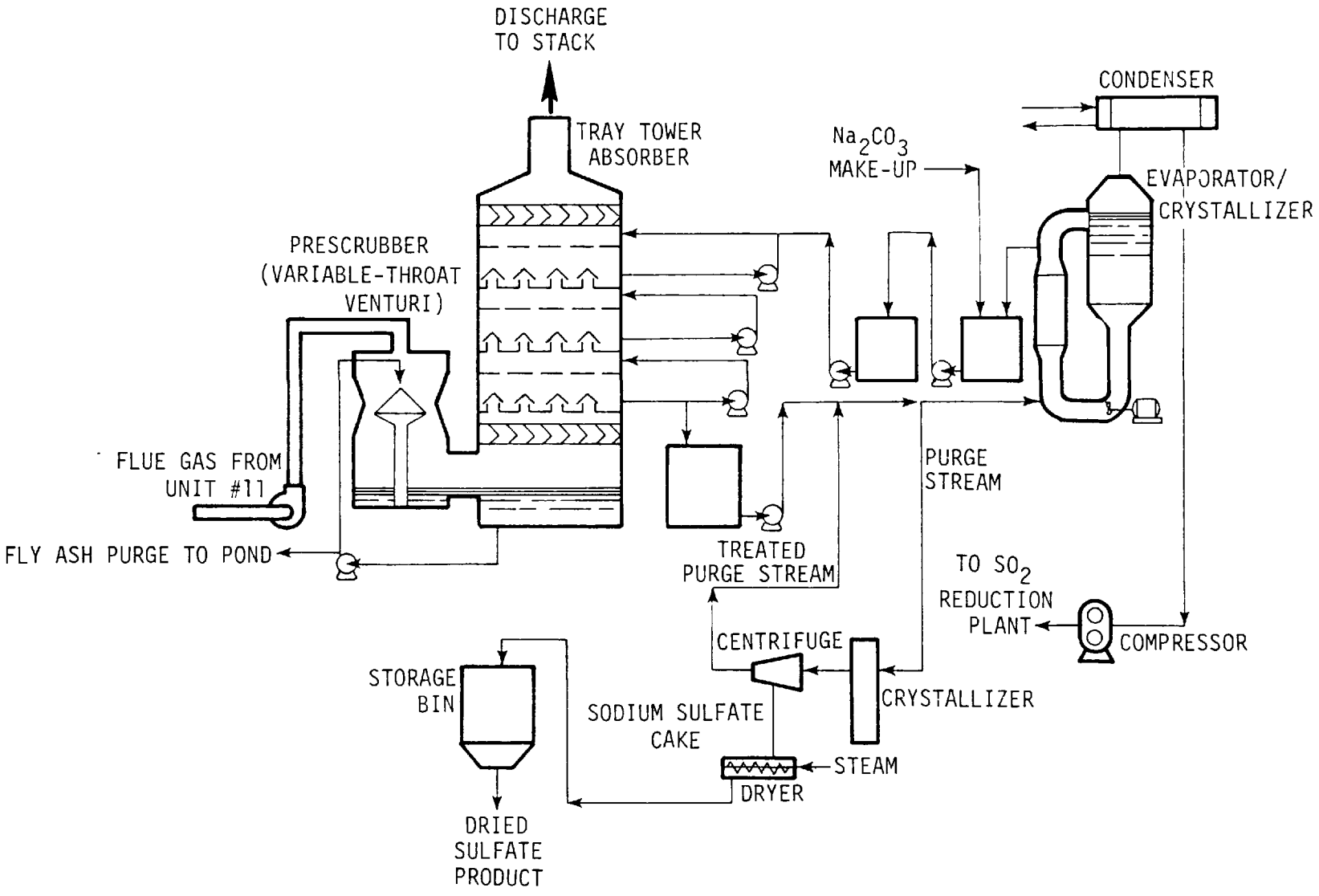

Northern Indiana Public Service,
D. H. Mitchell No. 11 Wellman Lord/Allied System:
General Process Diagram.

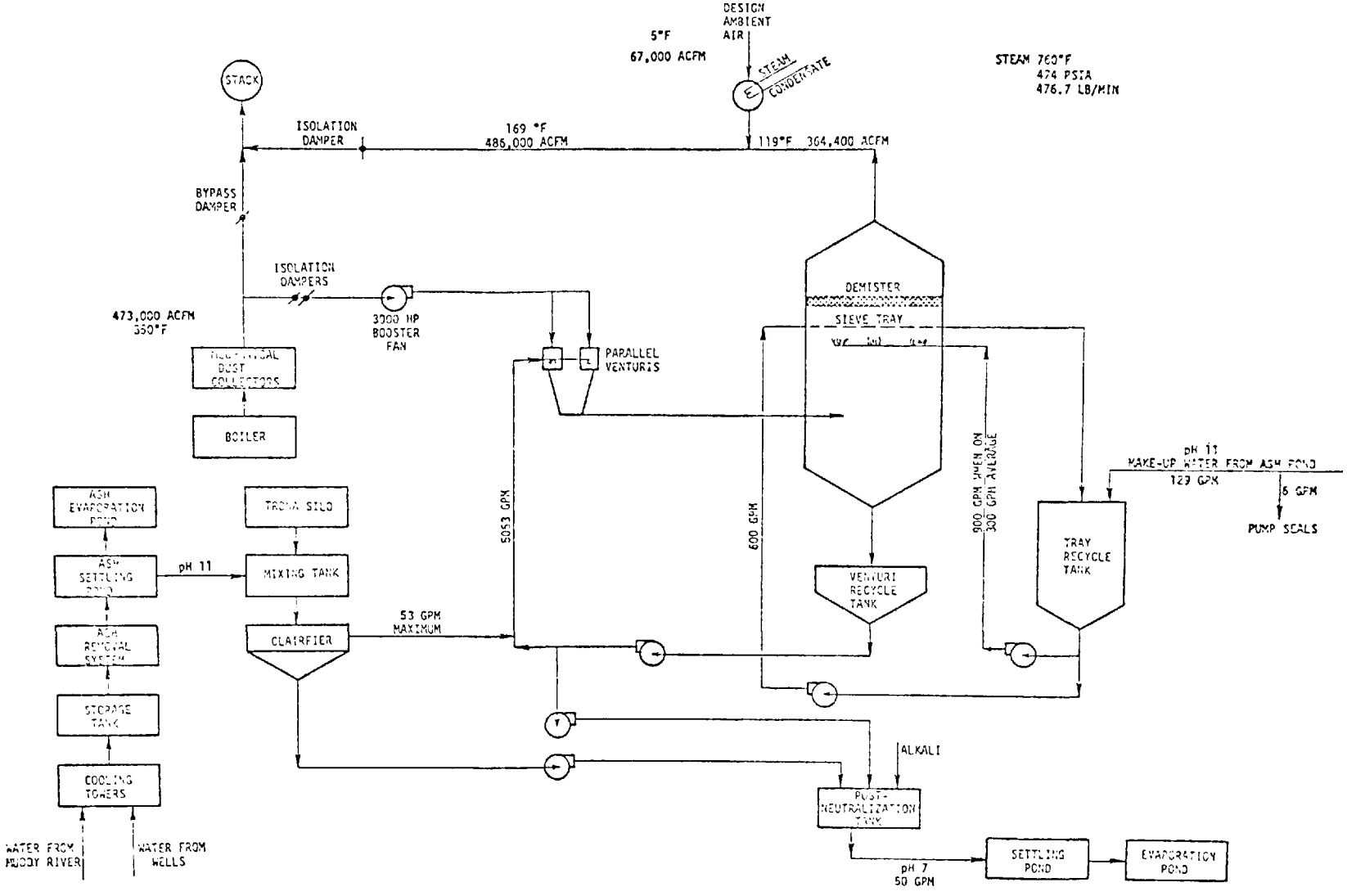

Nevada Power, Reid Gardner FGD Systems, Units 1, 2, and 3:
General Process Diagram.

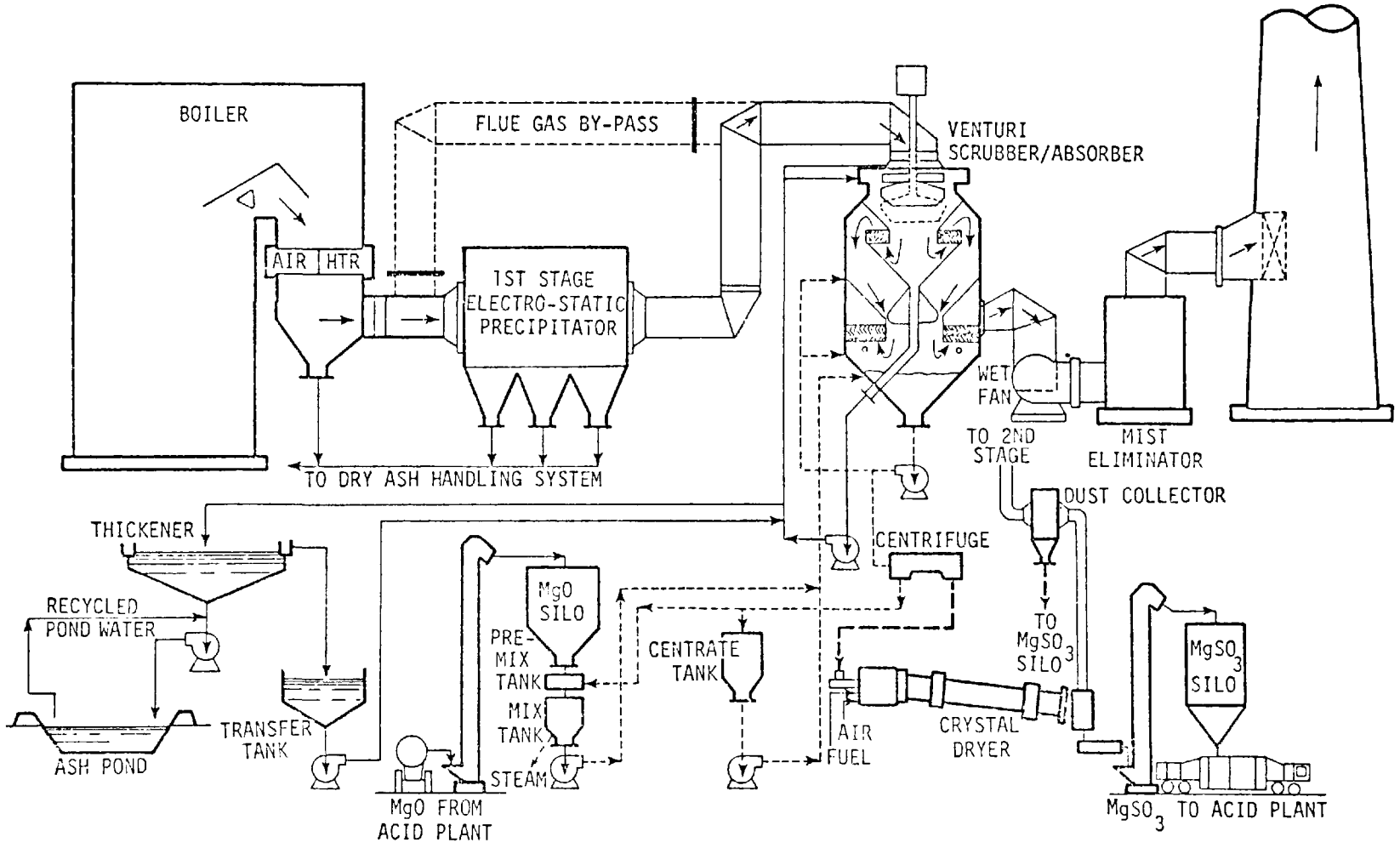

Potamic Electric and Power,
Dickerson No. 3 Regenerative FGD System:
General Process Diagram.

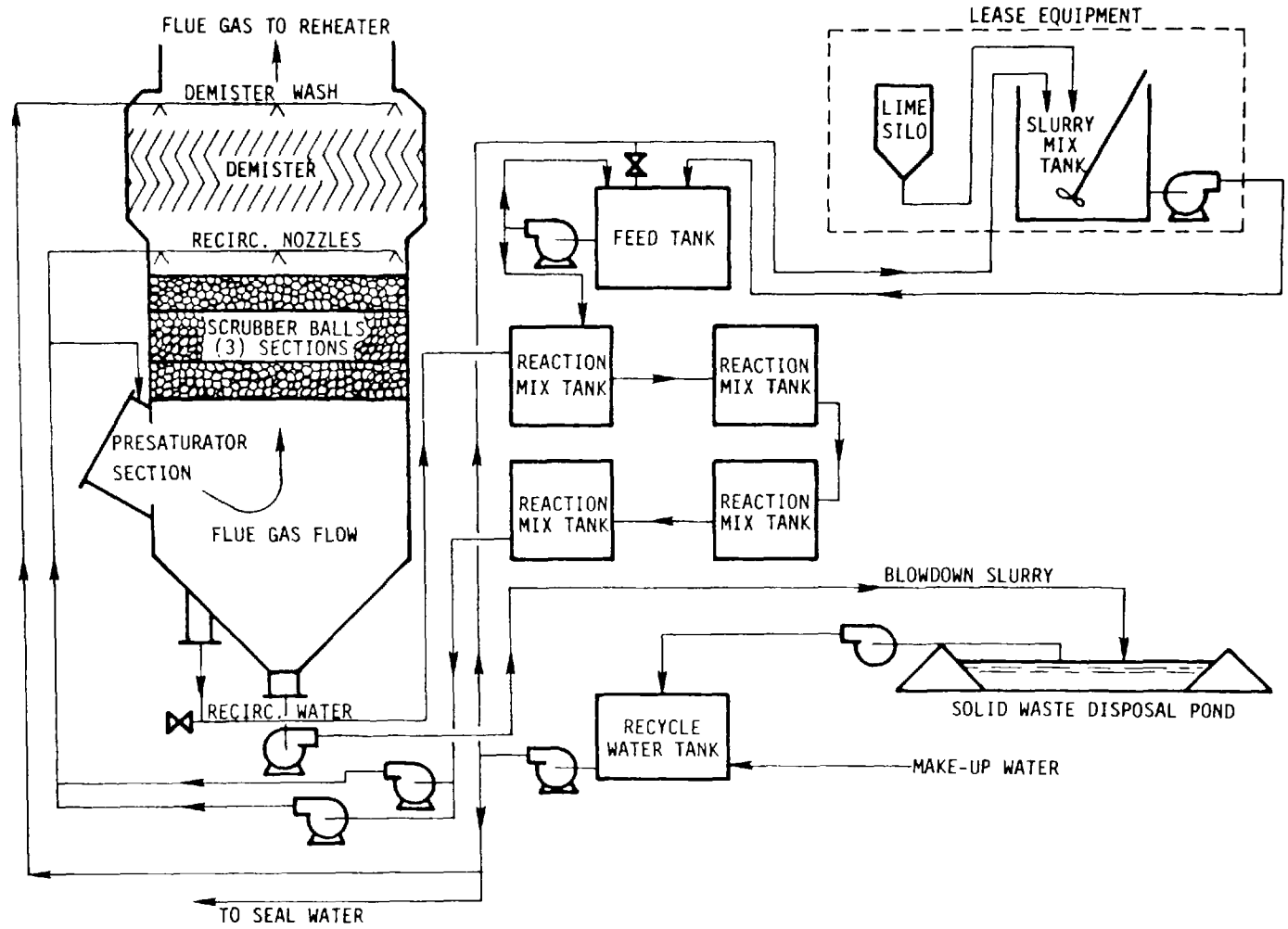

Public Service Co. of Colorado, Valmont Station No. 5:
Modified Scrubber Flow Diagram.

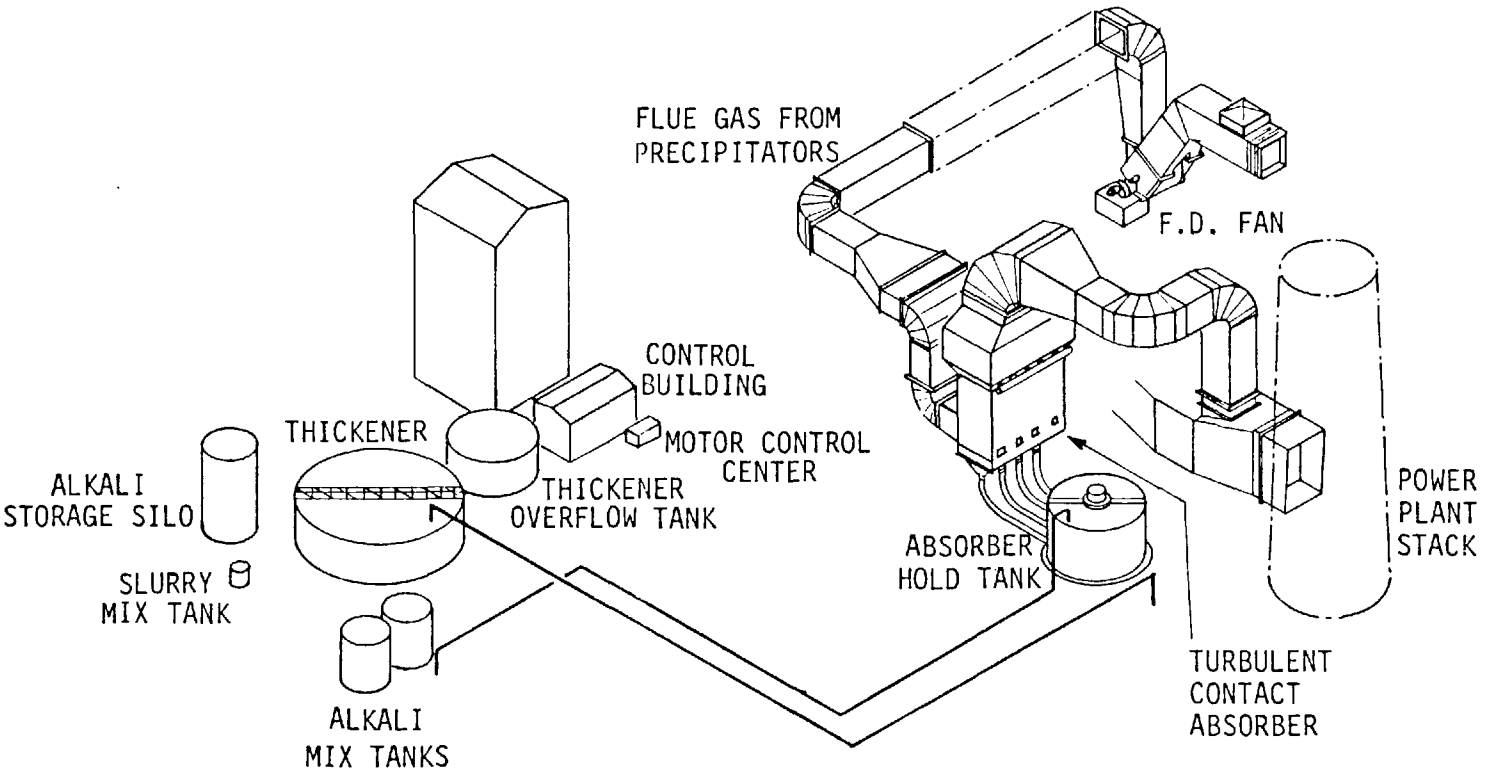

Southern California Edison,
Mohave No. 1 Vertical Test Module:
Simplified Process Diagram.

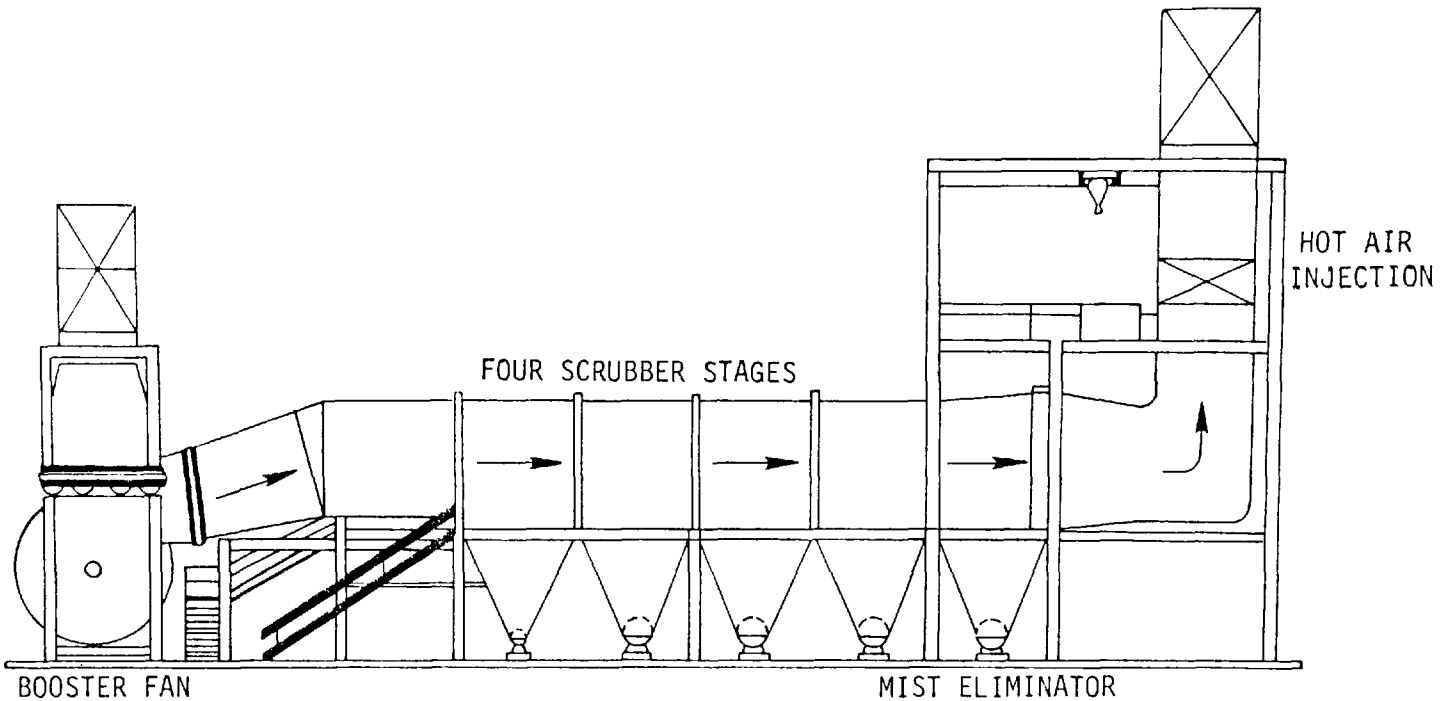

Southern California Edison, Mohave No. 2 Horizontal Test Module:
Simplified Side View.

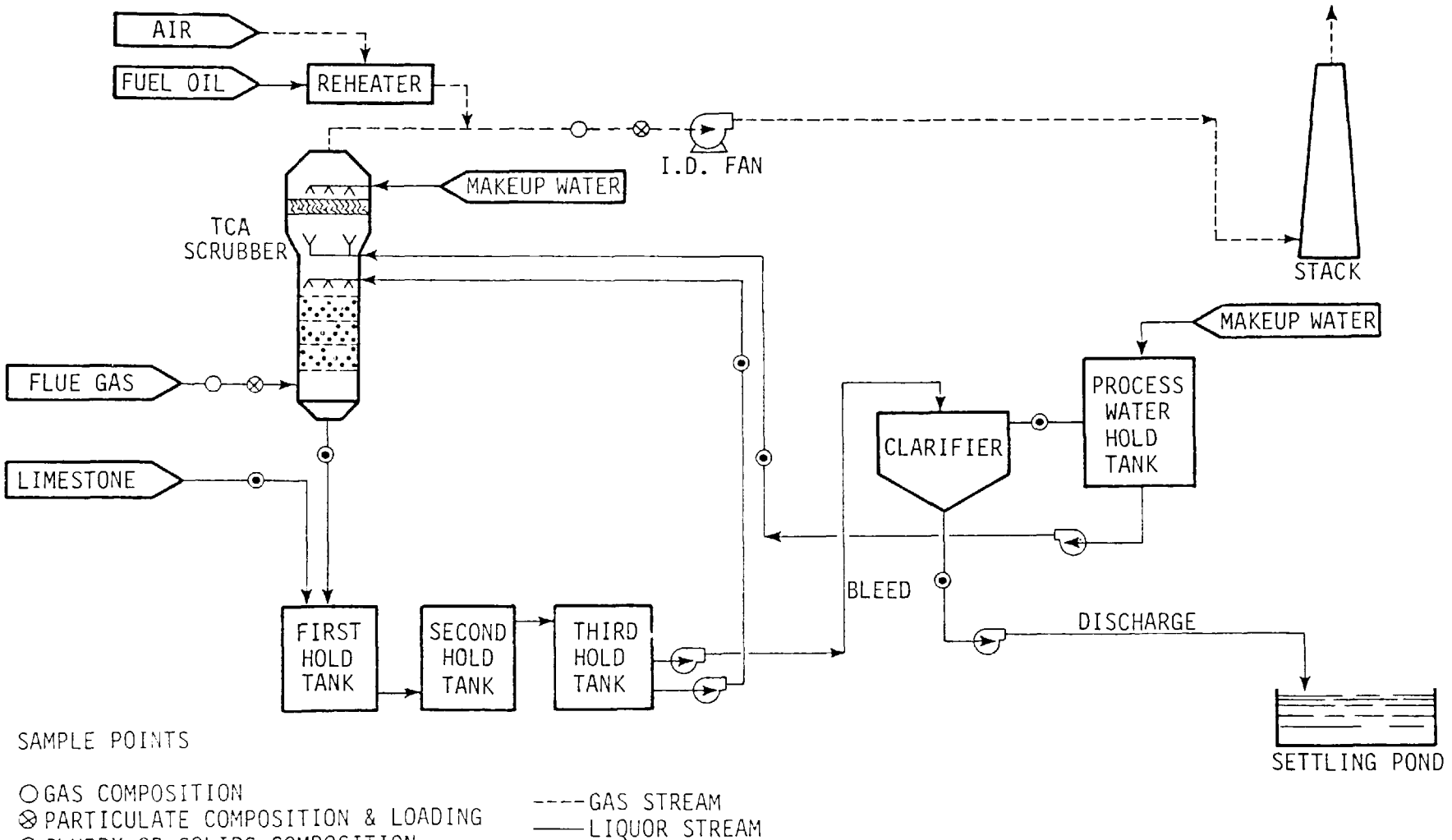

Tennessee Valley Authority,
Shawnee No. 10 Prototype Test Unit:
General Process Diagram.

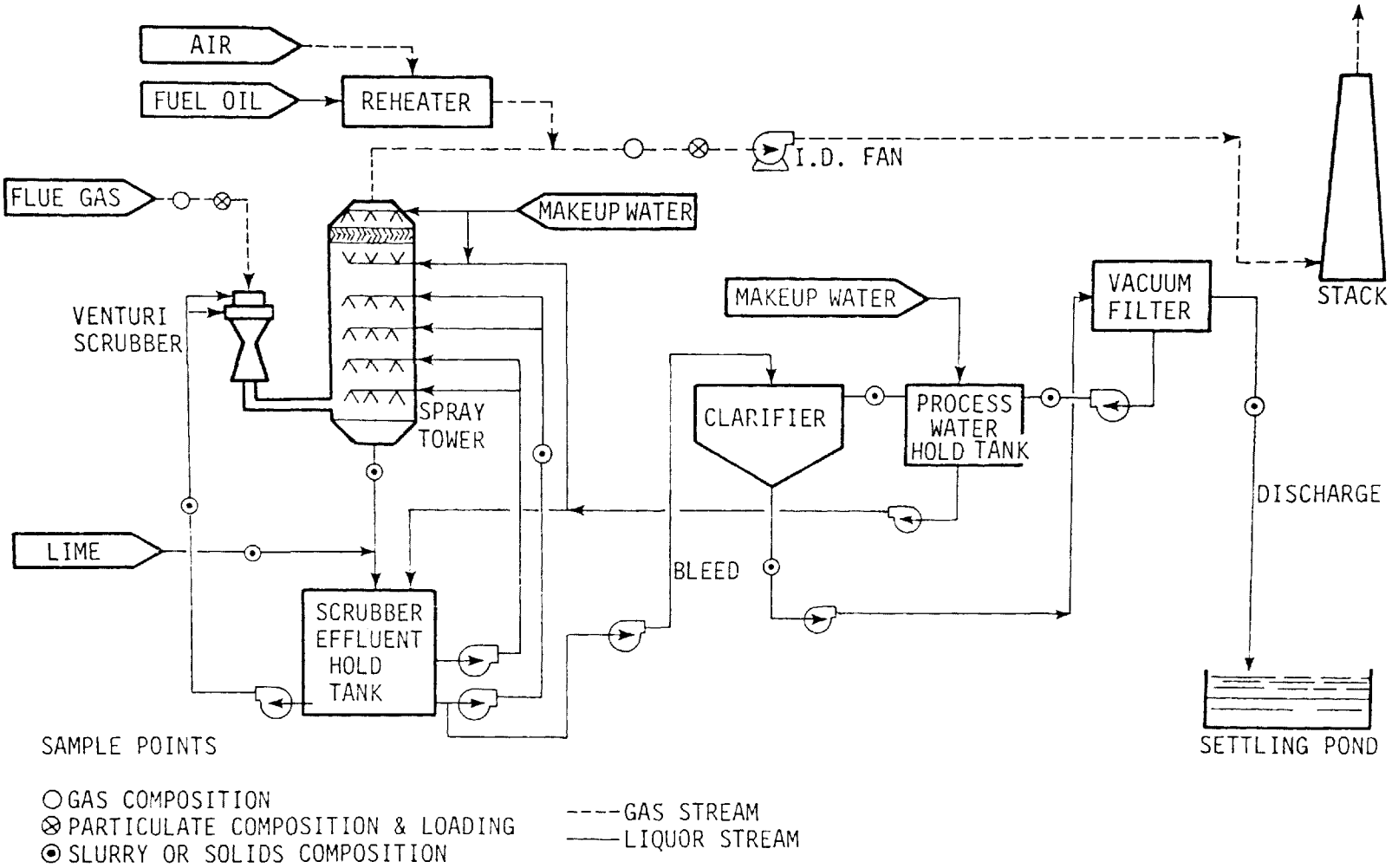

Tennessee Valley Authority, Shawnee No. 10 Prototype Unit:
General Process Diagram.

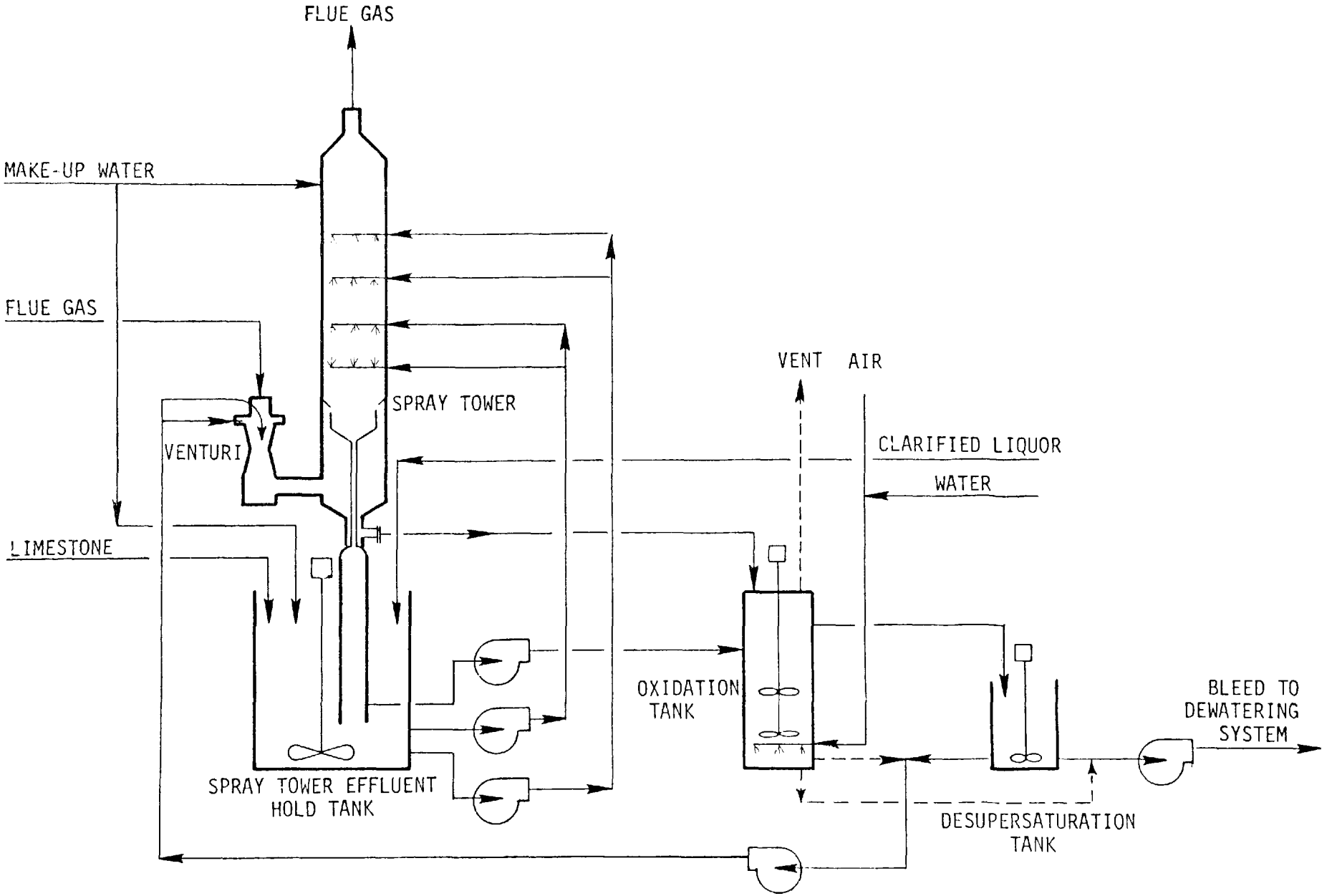

Tennessee Valley Authority, Shawnee No. 10 Prototype Test Unit:
Modified Venturi/Spray Tower System for 2-Stage Oxidation Testing.

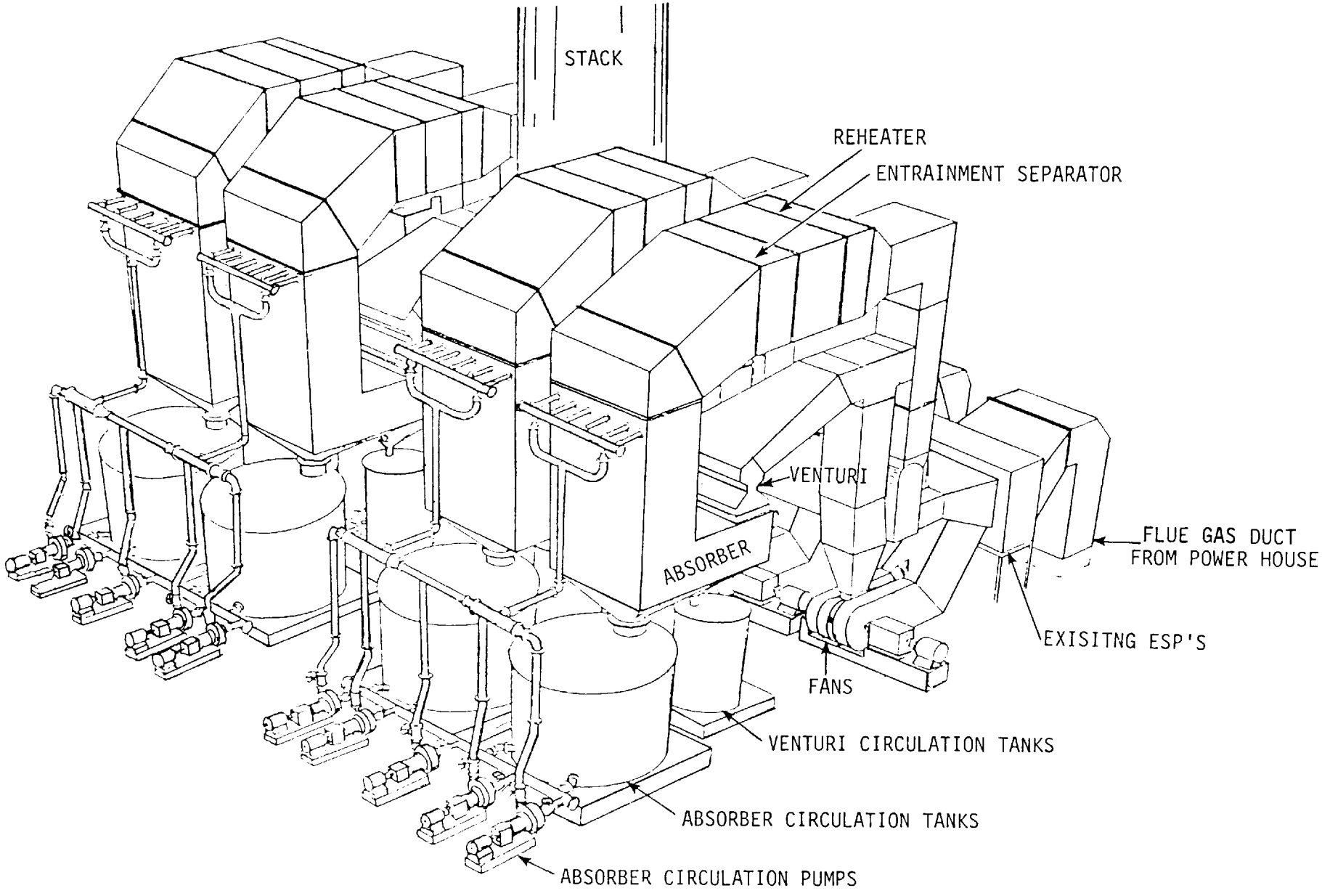

Tennessee Valley Authority
TVA Widows Creek No. 8 FGD System:
Schematic Diagram.

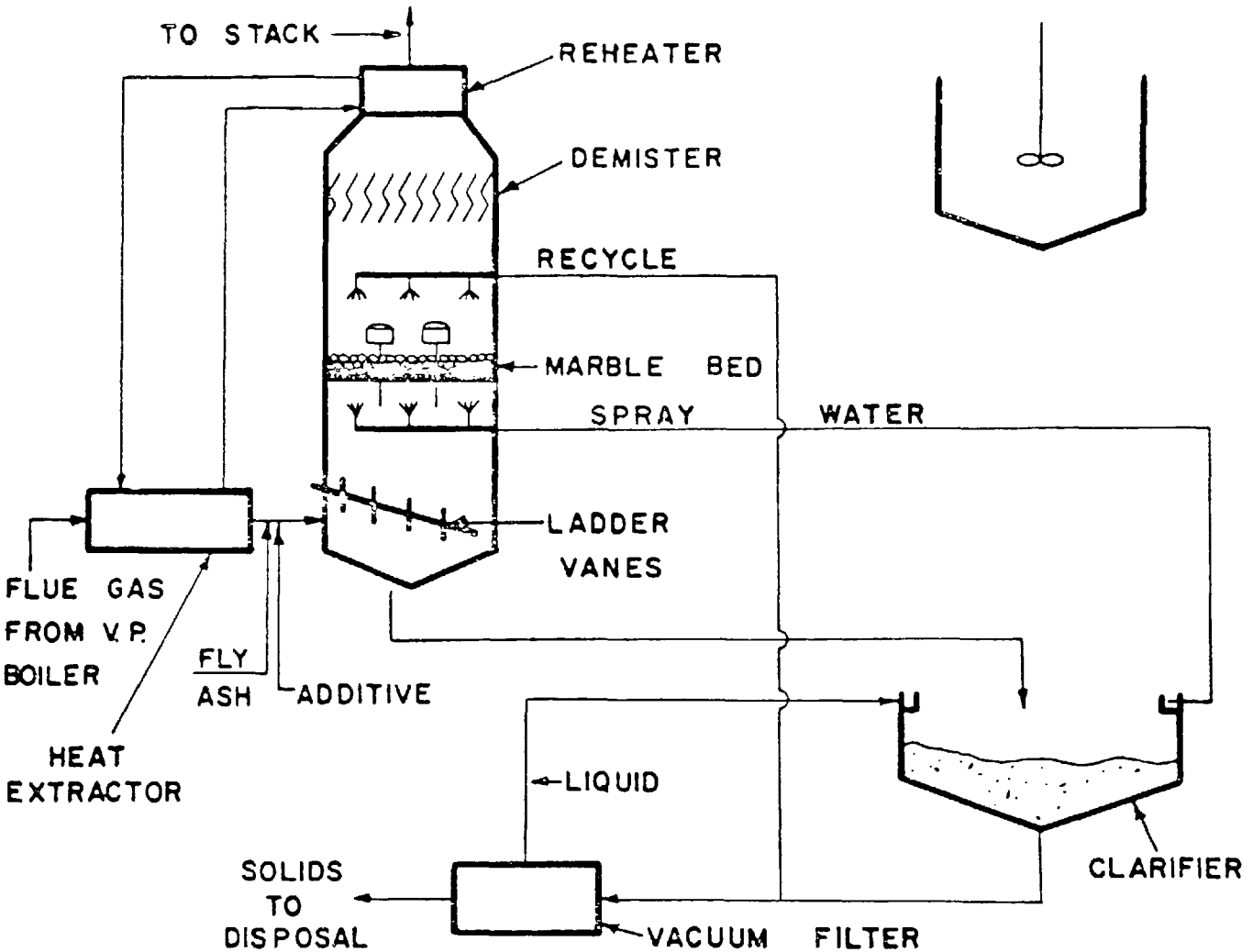

Union Electric Co., Meremae No. 2 FGD System:
Simplified Process Flow Diagram of
Injection and Time-End Scrubbing System.

APPENDIX C

DEFINITIONS

DEFINITIONS

Boiler Capacity Factor:	(kWh generation in year)/(maximum continuous generating capacity in kW x 8760 hr/yr).
Boiler Utilization Parameter:	Hours boiler operated/hours in period, expressed as a percentage.
Efficiency:	
Particulates	The actual percentage of particulates removed by the emission control system (mechanical collectors, ESP, or fabric filter and FGD) from the untreated flue gas.
SO_2	The actual percentage of SO_2 removed from the flue gas by the FGD system. Design removal efficiency values are presented for nonoperational systems or for operational systems for which actual removal data are not available.
FGD Viability Indexes	Several parameters have been developed to quantify the viability of FGD system technology. Various terms such as "availability," "reliability," "operability," and "utilization" are used to accurately represent the operation of any FGD system during a given period. The above-mentioned parameters are defined below and discussed briefly. The objectives of this discussion are to make the reader aware that several different definitions are being used and to select appropriate parameters that can be used for reporting purposes so that reasonably consistent comparisons can be made.

DEFINITIONS

Availability Index	Hours the FGD system is available for operation (whether operated or not) divided by hours in period, expressed as a percentage. This parameter tends to overassess the viability of the FGD system because it does not penalize for election not to operate the system when it could have been operated. Boiler downtime may tend to increase the magnitude of the parameter because FGD failures generally cannot occur during such periods.
Reliability Index	Hours the FGD system was operated divided by the hours the FGD system was called upon to operate, expressed as a percentage. This parameter has been developed in order not to penalize the FGD system for elected outages, e.g., periods when the FGD system could have been run but was not run because of chemical shortages, lack of manpower, short duration boiler operations, etc. The main problem in using this formula is the concise determination whether or not the system was "called upon to operate" during a given time period. In addition, an undefined value can result when the FGD system is not called upon to operate for a given period (e.g., turbine or boiler outage when FGD system is available).
FGD Operability Index	Hours the FGD system was operated divided by boiler operating hours in period, expressed as a percentage. This parameter indicates the degree to which the FGD system is actually used, relative to boiler operating time. The parameter does not reflect the extent of exertion on the FGD system, that is, the magnitude of the parameter has little or no correlation with FGD system operating time. Also, the parameter is penalized when options are exercised not to use the FGD system in periods when the system is operable. In addition, an undefined

	value can result when the FGD system is not called upon to operate for a given period (e.g., turbine or boiler outage when FGD system is available).
FGD Utilization Index	Hours that the FGD system operated divided by total hours in period. This parameter is a relative stress factor for the FGD system. It is not a complete measure of FGD system viability because the parameter can be strongly influenced by conditions that are external to the FGD system (e.g., infrequent boiler operation will lower the value of the parameter although the FGD system may be highly dependable in its particular application)
FGD Status:	
Category 1	Operational - FGD system is in service removing SO_2
Category 2	Under Construction - ground has been broken for installation of FGD system, but FGD system has not become operational.
Category 3	Planned, Contract Awarded - contract has been signed for purchase of FGD system but ground has not been broken for installation.
Category 4	Planned, Letter of Intent Signed - letter of intent has been signed, but legal contract for purchase has not been awarded.
Category 5	Planned, Requesting/Evaluating Bids - bid requests have been released but no letter of intent or contract has been issued.
Category 6	Considering only FGD Systems - an FGD system is proposed as a means to meet an SO_2 regulation.

Category 7	Considering an FGD system as well as alternative methods.
Category 8	Nonoperational - FGD system has been in service in the past but has been shut down permanently or for an extended indefinite period of time.
FGD Vendor	A firm which fabricates and supplies FGD systems, most notably the flue gas treating and ancillary equipment.
Fuel Characteristics	Type of fuel, average gross heating value in Btu/lb. average percent ash and average percent sulfur content for fuel as fired.
New	FGD unit and boiler were designed at the same time or space for addition of an FGD unit was reserved when boiler was constructed.
Nonregenerable	The SO_2 removed from the flue gas is not recovered in a usable or marketable form and resulting sulfur-bearing waste products must be disposed in an environmentally acceptable fashion.
Operational Experience	Summary of FGD status and description of current month's progress.
Process	Company name if process is patented. Generic name if several companies have similar processes.
Regulatory Class	A. New boiler constructed subject to Federal New Source Performance Standards. B. Existing boiler subject to State Standard that is more stringent than the Federal New Source Performance Standard (NSPS).

C. Existing boiler subject to State Standard that is equal to or less stringent than NSPS.

D. Other (unknown, undetermined).

Regenerable	The SO_2 removed from the flue gas is recovered in a usable or marketable form (e.g., sulfur, sulfuric acid, gypsum, ammonium sulfate, sodium sulfate).
Retrofit	FGD unit must be added to an existing boiler not specifically designed to accommodate FGD unit.
Sludge Disposal	Disposal method for nonregenerable systems producing sludge including: lines or unlined ponds, stabilized or unstabilized sludge, and on- or off-site disposal, disposal type (minefill, landfill, structural fill). For the regenerable systems, the form or method of sulfur recovery is provided (e.g. - molten elemental sulfur, sulfuric acid plant).
Start-up Date	Date when initial SO_2 removal began or is scheduled to begin.
Total FGD System Lost	The total monthly lost generation hours due to FGD train outages divided by the total monthly expected generation if the FGD trains would have been available for operation, expressed as a percentage.
Unit Cost	Capital Cost in $/kW including: SO_2 absorption and regeneration system, SO_2 recovery system, solids disposal, site improvements, land, roads, tracks, substation, engineering costs, contractors fee and interest on capital during construction.

DEFINITIONS

	Annualized Cost in mills/kWh including fixed and variable costs. Fixed costs include: interest on capital, depreciation, insurance, taxes, and labor costs including overhead. Variable costs include: raw materials, utilities, and maintenance.
Unit Location	City and State listed in mailing address.
Unit Name	Unit identification as it appears in Electrical World - Directory of Electrical Utilities, McGraw-Hill - Current Edition - or as indicated by utility representative for installations in planning stages.
Unit Rating	Operational - Maximum continuous gross generation capacity in MW; Preoperational - maximum continuous design generation capacity in MW.
Utility Name	Name of corporation as it appears in Electrical World - Directory of Electrical Utilities, McGraw-Hill - Current Edition - as space permits.
Water Make-Up	Gallons per minute of make-up water required per MW of capacity.

TECHNICAL REPORT DATA
(Please read Instructions on the reverse before completing)

1. REPORT NO.	2.	3. RECIPIENT'S ACCESSION NO.
EPA-600/7-78-051a		

4. TITLE AND SUBTITLE	5. REPORT DATE
EPA Utility FGD Survey: Dec '77 - Jan '78	March 1978
	6. PERFORMING ORGANIZATION CODE

7. AUTHOR(S)	8. PERFORMING ORGANIZATION REPORT NO.
Bernard A. Laseke, Jr.	

9. PERFORMING ORGANIZATION NAME AND ADDRESS	10. PROGRAM ELEMENT NO.
PEDCo Environmental, Inc. 11499 Chester Road Cincinnati, Ohio 45246	EHE624
	11. CONTRACT/GRANT NO. 68-01-4147, Task 3

12. SPONSORING AGENCY NAME AND ADDRESS	13. TYPE OF REPORT AND PERIOD COVERED
EPA, Office of Research and Development Industrial Environmental Research Laboratory Research Triangle Park, NC 27711	Periodic; 7-77-1/78
	14. SPONSORING AGENCY CODE EPA/600/13

15. SUPPLEMENTARY NOTES EPA project officers are N. Kaplan (IERL-RTP, 919/541-2556) and J. C. Herlihy (DSSE, 202/755-8137).

16. ABSTRACT The report presents a survey of utility flue gas desulfurization (FGD) systems in the U.S. It summarizes information contributed by the utility industry, process suppliers, regulatory agencies, and consulting engineering firms. Systems are tabulated alphabetically, by development status (operational, under construction, in planning stages, or terminated operations), by utility company, by process supplier, by process, by waste disposal practice, and by regulatory class. It presents data on system design, fuel sulfur content, operating history, and actual performance. It discusses problems and solutions associated with the boilers and FGD systems. Process flow diagrams and FGD system economic data are appended to the report.

17. KEY WORDS AND DOCUMENT ANALYSIS

a. DESCRIPTORS	b. IDENTIFIERS/OPEN ENDED TERMS	c. COSATI Field/Group
Pollution	Pollution Control	13B
Flue Gases	Stationary Sources	21B
Desulfurization	Utility Boilers	07A,07D
Electric Utilities		
Waste Disposal		15E
Boilers		13A
Maintenance		

18. DISTRIBUTION STATEMENT	19. SECURITY CLASS *(This Report)*	21. NO. OF PAGES
Unlimited	Unclassified	291
	20. SECURITY CLASS *(This page)*	22. PRICE
	Unclassified	

EPA Form 2220-1 (9-73)