EPA U.S. Environmental Protection Agency
Office of Research and Development
Industrial Environmental Research Laboratory
Research Triangle Park, North Carolina 27711
EPA-600/7-78-069
April 1978

MINIPLANT STUDIES OF PRESSURIZED FLUIDIZED-BED COAL COMBUSTION: Third Annual Report

Interagency
Energy-Environment
Research and Development
Program Report

RESEARCH REPORTING SERIES

Research reports of the Office of Research and Development, U.S. Environmental Protection Agency, have been grouped into nine series. These nine broad categories were established to facilitate further development and application of environmental technology. Elimination of traditional grouping was consciously planned to foster technology transfer and a maximum interface in related fields. The nine series are:

1. Environmental Health Effects Research
2. Environmental Protection Technology
3. Ecological Research
4. Environmental Monitoring
5. Socioeconomic Environmental Studies
6. Scientific and Technical Assessment Reports (STAR)
7. Interagency Energy-Environment Research and Development
8. "Special" Reports
9. Miscellaneous Reports

This report has been assigned to the INTERAGENCY ENERGY-ENVIRONMENT RESEARCH AND DEVELOPMENT series. Reports in this series result from the effort funded under the 17-agency Federal Energy/Environment Research and Development Program. These studies relate to EPA's mission to protect the public health and welfare from adverse effects of pollutants associated with energy systems. The goal of the Program is to assure the rapid development of domestic energy supplies in an environmentally-compatible manner by providing the necessary environmental data and control technology. Investigations include analyses of the transport of energy-related pollutants and their health and ecological effects; assessments of, and development of, control technologies for energy systems; and integrated assessments of a wide range of energy-related environmental issues.

EPA REVIEW NOTICE

This report has been reviewed by the participating Federal Agencies, and approved for publication. Approval does not signify that the contents necessarily reflect the views and policies of the Government, nor does mention of trade names or commercial products constitute endorsement or recommendation for use.

This document is available to the public through the National Technical Information Service, Springfield, Virginia 22161.

EPA-600/7-78-069
April 1978

MINIPLANT STUDIES OF PRESSURIZED FLUIDIZED-BED COAL COMBUSTION: Third Annual Report

by

R.C. Hoke, R.R. Bertrand, M.S. Nutkis,
L.A. Ruth, M.W. Gregory, E.M. Magee,
M.D. Loughnane, R.J. Madon, A.R. Garabrant, and M. Ernst

Exxon Research and Engineering Company
P.O. Box 8
Linden, New Jersey 07036

Contract No. 68-02-1312
Program Element No. EHE623A

EPA Project Officer: D. Bruce Henschel

Industrial Environmental Research Laboratory
Office of Energy, Minerals, and Industry
Research Triangle Park, N.C. 27711

Prepared for

U.S. ENVIRONMENTAL PROTECTION AGENCY
Office of Research and Development
Washington, D.C. 20460

ABSTRACT

The pressurized fluidized bed combustion of coal and regeneration of spent sorbent were studied in the continuous 480 lb coal/hr (220 kg/hr) "miniplant" FBC unit. The effect of coal sulfur content and the use of pre-calcined limestone sorbent on control of SO_2 emissions was studied. NO_x emissions were well within the current new source performance standard for NO_x. Particulate emissions in the flue gas after passage through cyclone cleaners exceeded the new source performance standard.

The continuous operation of the combustor and regenerator sections was demonstrated in a 125 hour run. SO_2 emissions in the combustor flue gas were less than the new source performance standard at all times during the run. Makeup sorbent fed to the combustor was about 25% of the rate which would have been required in once through operation to maintain the SO_2 emissions at the same overall average level.

A granular bed filter was installed in the miniplant flue gas stream and initial shake down was completed in a 24 hour continuous run. The minimum particulate concentration measured in the filter outlet gas was about 0.1 g/m^3 (0.05 gr/SCF), somewhat higher than anticipated.

A program to provide a comprehensive analysis of all potentially harmful emissions from a pressurized FBC unit began in the miniplant. Analysis of materials including those present in trace concentrations was completed.

The smaller 28 lb coal/hr (13 kg/hr) batch unit was modified to operate in a continuous fashion.

This report is submitted in fulfillment of Contract Number 68-02-1312 by Exxon Research and Engineering Company under sponsorship of the Environmental Protection Agency. Work was completed in August, 1977.

TABLE OF CONTENTS

		Page
Abstract		iii
List of Figures		v
List of Tables		ix
Acknowledgements		x
Sections		
I	Summary	1
II	Introduction	11
III	Combustion Studies	15
	Equipment, Materials, Procedures	15
	Experimental Results and Discussion	46
IV	Regeneration Studies	65
	Equipment, Materials, Procedure	65
	Experimental Results and Discussion	70
V	Granular Bed Filtration Studies	84
	Equipment, Procedures	85
	Experimental Results and Discussion	100
VI	Modification of Batch Unit	115
	Combustor Section	115
	Regenerator Facilities	121
VII	Comprehensive Analysis	126
VIII	Analysis of Desulfurization Data	127
IX	Continuing Studies	150
X	References	153
XI	List of Publications	155
XII	Appendices	157

LIST OF FIGURES

		Page
II-1	Pressurized Fluidized Bed Coal Combustion System	12
II-2	Exxon Fluidized Bed Combustion Miniplant	14
III-1	Exxon Fluidized Bed Combustion Miniplant (Schematic)	16
III-2	Coal and Limestone Feed System	17
III-3	Combustor Vessel	19
III-4	Cooling Coils After 600 Hour Exposure	20
III-5	Liquid Fuel System	21
III-6	Liquid Fuel Injector Nozzle	23
III-7	Combustor Fluidizing Grid	24
III-8	Combustor Corrosion Probe Location	25
III-9	Combustor Lower Corrosion Probe Section	26
III-10	Combustor Lower Corrosion Probe and Bed Sampling Probe	27
III-11	Combustor Upper Corrosion Probe Section	29
III-12	Combustor Corrosion Probe	30
III-13	Westinghouse Erosion Probe	32
III-14	Combustor Bed Sampling Probe	33
III-15	Sorbent Utilization Vs. Time	34
III-16	Miniplant Particulate Sampling System	36
III-17	Combustor Eccentric Acurex Probe Section	38
III-18	Acurex Probe	39
III-19	Coal Particle Size Distribution	41
III-20	Sorbent Particle Size Distribution	44
III-21	SO_2 Retention with Dolomite Sorbent	47
III-22	SO_2 Retention with Precalcined Limestone	49

LIST OF FIGURES (Continued)

		Page
III-23	Effect of Low Temperature Operation on SO_2 Retention	50
III-24	Correlation of NO_x Emissions	53
III-25	NO_x Vs CO in Flue Gas	55
III-26	Calculated Combustion Efficiency Vs Observed Combustion Efficiency	62
III-27	Secondary Cyclone Efficiency Vs. Particle Size	64
IV-1	Miniplant Solids Transfer System (Schematic)	68
IV-2	Miniplant Solids Transfer System	69
IV-3	Combustor and Regenerator Bed Heights During Demonstration Run	75
IV-4	Total Inventory of Sorbent in the Combustor and Regenerator during Demonstration Run	76
IV-5	Combustor SO_2 Emissions During Demonstration Run	78
IV-6	SO_2 Emission Vs. Ca/S Ratio	79
V-1	Single Bed Test Rig	86
V-2	Single Bed Test Rig Schematic	87
V-3	Schematic of Single Ducon Filter Bed	88
V-4	Granular Bed Filter Operation	89
V-5	Ducon Filter Element and Shroud	90
V-6	Original Exxon Filter Element and Shroud	91
V-7	Ducon Sonic Filter Schematic	93
V-8	Schematic of a Single Exxon Filter Bed	94
V-9	Modified Exxon Filter Element	95
V-10	Modified Filter Bed	96
V-11	Granular Bed Filter Pressure Vessel and Structure	97

LIST OF FIGURES (Continued)

		Page
V-12	Granular Bed Filter Pressure Vessel Interior	99
V-13	Test Rig Results - ΔP Vs. Time	101
V-14	Ducon Filter with Plugged Screens	103
V-15	Effect of Blow Back on Filter Pressure Drop Run 55	109
V-16	Modified Exxon Filter with Plugged Inlet Retaining Screens	111
V-17	Flue Gas Temperature Profile	113
V-18	Schematic of the Ejector Blow Back System	114
VI-1	Schematic of Modified Batch Unit	116
VI-2	Bench Unit Cyclone Assembly	118
VI-3	Bench Unit Coal Injector Vessel	120
VI-4	Bench Unit Regenerator Fluidizing Grid	122
VI-5	Bench Unit Regenerator Cyclone	125
VIII-1	Ln (1-SR) Vs. Gas Phase Residence Time	129
VIII-2	Sulfur Removal Efficiency Vs. Ca/S	130
VIII-3	Sulfur Removal Efficiency @ 2 Sec. Vs. Ca/S	131
VIII-4	Sulfur Removal Efficiency @ 2 Sec. Vs. Temperature	133
VIII-5	Effect of Temperature on Desulfurization Rate Constant	134
VIII-6	Comparison of Set Vs. Calculated Ca/S Effects	135
VIII-7	Sulfation Rate Constant Vs. Sorbent Utilization	141
VIII-8	SO_2 Retention @ 2 Sec. Vs. Ca/S Set	142
VIII-9	Time for a Particle to Reach Calcium Utilization Level in Atmosphere of 2500 ppm SO_2 at 900°C	143

LIST OF FIGURES (Continued)

		Page
VIII-10	Contribution of Particles in Bed for Various Time Periods to Steady State Value of Given Parameters	145
VIII-11	SO_2 Retention @ 2 Sec, 900°C Vs. Ca/S Molar Ratio	147
VIII-12	Time in Combustor Vs. Ca/S Ratio	148

LIST OF TABLES

		Page
III-1	Coal Composition	42
III-2	Sorbent Composition	45
III-3	Sorbent Requirements	52
III-4	Particulate Sampling Summary I (Before Modification to Sampling System)	56
III-5	Particulate Sampling Summary II (After First Modification to Sampling System	57
III-6	Comparison of Particulate Loadings Measured by Total Filter (Exxon) and SASS Train (Battelle)	58
III-7	Sizing of Particles Obtained on Balston Filters Before Modification	58
III-8	Individual Filter Results (Runs 50 to 59)	59
III-9	Sizing of Particles Obtained on Balston Filters After Modification	60
III-10	Comparison of Particle Size Distributions Measured by Three Different Methods	60
III-11	Second Stage Cyclone Lock Hopper Particle Size Distributions	63
IV-1	Operating Conditions During Demonstration Run	71
IV-2	Feed Rates of Makeup Limestone to Combustor During Combustor-Regenerator Demonstration Run	74
IV-3	Analyses of Bed Material Discharged from Combustor and Regenerator After Demonstration Run	81
IV-4	Sulfur Balance Combustion-Regeneration Demonstration Run	82
V-1	Granular Bed Filter Run Summary for Modified Filter Elements	106
VIII-1	Comparison of Rate Constants	146

ACKNOWLEDGEMENTS

Many individuals at Exxon Research and Engineering Company played major roles in the conduct of this program. The authors wish to acknowledge the contributions made by them and to express their gratitude. We particularly wish to acknowledge the efforts of H. R. Silakowski, the miniplant operations supervisor. His contributions played a large part in the successful operation of the miniplant. We also wish to acknowledge the efforts of the operating and mechanical crews, A. Altobelli, J. Bond, R. Burakiewicz, D. Duffy, J. Fowlks, T. Gaydos, E. Hellwege, F. Huber, M. Moroski, T. Morrison, S. Pampinto, J. Sansone, R. Schroeder, W. Spond, T. Sutowski, L. Tucker and G. Walsh. We also wish to thank our math clerk, S. Walther, W. Dravis and N. Bissoni of the Mechnical Division G. Milliman of the Analytical Division, V. S. Engleman, and G. A. Gagliardo for their support. A special acknowledgement goes to N. Malinowsky who typed this report.

The personnel of the Industrial Environmental Research Laboratory of the EPA have been most helpful and deserve special thanks. We wish to express our gratitude for the help of D. B. Henschel, the EPA Project Officer, P. P. Turner and R. P. Hangebrauck.

SECTION I

SUMMARY

The pressurized fluidized bed combustion of coal (PFBC) and regeneration of sulfated SO_2 sorbent were studied in the continuous miniplant unit. In the combustion program, the effect of operating conditions on SO_2, NO_x, and particulate emissions from the miniplant was studied. In this latest series of combustion tests, the effect of burning a higher sulfur Illinois No. 6 coal was determined, the effect of using precalcined limestone sorbent and operation at very low combustor "turndown" temperatures were studied. Sorbent levels required to meet SO_2 emission standards were determined. Combustion efficiency and cyclone collection efficiency were also measured.

The regenerator and combustor sections of the miniplant were operated continuously for 125 hrs and the operability of the system was demonstrated. The drop in activity of the regenerated sorbent with time, and the SO_2 content in the regenerator off gas were measured.

A granular bed filter was installed on the miniplant flue gas and initial shakedown was completed. A comprehensive analysis of all potentially hazardous emissions from the miniplant was completed. The smaller, semi-batch unit was not operated during this period, but was modified to operate in a continuous fashion.

COMBUSTION STUDIES

The miniplant combustor consists of a refractory lined vessel 10 m (33 ft) high with an inside diameter of 32 cm (12.5 in). A number of vertical water-cooled tubes are mounted in the combustor to remove the heat of combustion. Two new sections of the combustor were installed to hold air-cooled tubes used for materials testing purposes. One of the sections holds tubes immersed in the fluidized bed, the other holds tubes mounted in the freeboard above the fluidized bed.

Premixed coal and sorbent are injected into the combustor a single point 28 cm (11 in) above the fluidized bed support grid. The combustor is capable of operating at pressures up to 1000 kPa (10 atm), at temperatures up to the ash agglomeration temperature of the coal (usually less than 980°C), at superficial velocities of up to 3 m/s (10 ft/sec) and with expanded beds of up to 6.1 m (20 ft). The maximum design coal feed rate is 200 kg/hr (480 lb/hr). Flue gas leaving the combustor passes through two cyclones in series to remove most of the particulate matter. A granular bed filter was recently installed and piped into the flue gas system such that the flue gas leaving the second stage cyclone can either be sent to or by pass the filter. Particulates captured in the first cyclone are recycled to the combustor to improve combustion efficiency. Particulates captured in the second stage cyclone and the granular bed filter are rejected through lock hoppers. Spent sorbent is also rejected from the combustor through a lock hopper system to maintain a constant bed level in the combustor.

Runs were made with an Eastern bituminous Pittsburgh seam coal (Champion) containing 2% sulfur screened to a particle size distribution of 200 to 2400 microns, and an Illinois No. 6 coal containing 4.2% sulfur also screened to a particle size distribution of 200 to 2400 microns. Two sorbents were used: a Virginia limestone (Grove No. 1359) and an Ohio dolomite (Pfizer No. 1337). Both were screened to a size range of 840 to 2400 microns.

Operational performance of the combustor continued to be good. As of July 1977, over 1500 hrs of coal combustion time was accumulated. Additional modifications were made to the combustor which further improved performance. The baffled vertical cooling coils performed very well, showing no sign of erosion after about 600 hrs of running time. A new fluidization grid was fabricated with better distribution of the cooling water flow through the grid. The refractory lining in the second stage cyclone began to fail and was replaced with a more erosion resistant material. A sampling system was also developed which permits the extraction of solids from the combustor during the run.

SO_2 retention results were obtained using 4.2% sulfur Illinois No. 6 coal and Pfizer No. 1337 dolomite. SO_2 retention data plotted against the Ca/S molar ratio fit reasonably well with the data obtained with 2% sulfur Eastern coal. This suggests that the sulfation reaction is first order in SO_2 concentration and is consistent with results published by other laboratories. SO_2 retention was also measured using precalcined Grove No. 1359 limestone sorbent. Calcination was carried out in the combustor burning natural gas at 930 kPa (9 atm) and 870°C (1600°F). The calcined sorbent was then removed and fed with the coal during a subsequent series of runs. The precalcined limestone was found to be as active, at an equivalent Ca/S ratio, as dolomite and was much more active than "raw" limestone. The activity was also maintained at temperatures as low as 865°C, where limestone would be expected to be present as the carbonates. The precalcined limestone was also active at a very low "turndown" temperature (760°C) where previously, "raw" limestone was shown to be completely inactive. At 760°C, precalcined limestone is slightly less active than at temperatures in excess of 865°C. It is, however, still as active as dolomite, at an equivalent Ca/S ratio, even though the low temperatures would strongly favor the formation of $CaCO_3$ rather than CaO. The high activity is believed due to the formation of very large pores during precalcination. The pores are apparently large enough that carbonation of the stone does not prevent diffusion of SO_2 into the interior of the particles. Sorbent requirements were then estimated for precalcined limestone and compared to dolomite and limestone requirements. Precalcined limestone is more effective, on a weight basis, than either dolomite or limestone. The weight requirements, expressed on an uncalcined limestone basis, are half the dolomite requirements and as little as 40% of the requirement for "raw" limestone.

NO_x emissions were found to follow the same trend line developed in earlier studies. The NO_x emissions vary from 50 to 200 ppm or 0.04 to 0.17 g (as NO_2)/MJ (0.1 to 0.4 lb/M BTU). The primary variable affecting NO_x emission is excess air (or O_2 content in the flue gas). Temperature over the range of 670 to 940°C (1250 to 1750°F) had a secondary effect. The emissions are well below the EPA new source performance standard of 0.3 g/MJ (0.7 lb/M BTU) and have an average value of 0.09 g/MJ (0.2 lb/M BTU) at 15% excess air,

the level most likely to be used in commercial practice. Indications that NO_x could be reduced even further by two stage combustion were made during an upset period of one run. In this case, oxygen content in the flue gas dropped to very low levels, CO content increased to 1800 ppm and as it did, the NO_x content dropped to 10 to 20 ppm.

Particulate emissions in the flue gas after two stages of cyclone cleanup averaged about 2.3 g/m^3 (1 gr/SCF) with a mass mean particle size of 3 to 6 microns. The second stage cyclone was found to have an overall efficiency of 85% with a 50% cut point between 3 and 3.5 microns.

Carbon combustion efficiency results were satisfactorily correlated using multiple regression. Temperature and excess air were shown to be the most significant variables. Two other variables which had a significant effect were the cube of the residence time and the cross product of temperature and excess air.

REGENERATION STUDIES

The regenerator consists of a refractory lined vessel with an inside diameter of 22 cm (8.5 in) and an overall height of 6.7 m (22 ft). Gaseous fuel is burned in a plenum below the fluidized bed to achieve the reaction temperature. Additional fuel is injected directly into the fluidized bed just above the fluidizing grid to create a reducing zone in which the $CaSO_4$ reduction reaction occurs. Supplementary air is injected directly into the bed at a higher elevation to create an oxidizing zone. The oxidizing environment at the top of the bed assures high selectivity to CaO, the desired product of the regeneration reaction, by minimizing the formation of CaS, an undesired by product.

The successful operation of the coupled regeneration/combustor system was demonstrated in a 125 hr uninterrupted run. The miniplant was operated with limestone sorbent continuously recirculating between the combustor and regenerator until the run was voluntarily terminated. The major purpose of the run was to demonstrate that the system could operate continuously for 100 hrs. Operating conditions were deliberately chosen to be conservative in order to maximize the chance of reaching this goal. All conditions were held constant except the feed rate of fresh limestone into the combustor. This was adjusted to maintain constant bed levels in the combustor and regenerator. Used sorbent was not planned to be removed from the system during the run unless the SO_2 content in the combustor flue gas exceeded the EPA new source performance standard of 1.2 lb/M BTU. At that point, used sorbent was planned to be removed and the fresh sorbent feed rate would be increased. Pressure in the two vessels was controlled at a somewhat lower level (about 760 kPa (7.5 atm)) during most of the run in order to increase fluidization velocity in the regenerator to a more realistic level and to avoid agglomeration problems. Regeneration temperature was also held constant at a lower level, 1010°C (1850°F) to minimize the chances of bed agglomeration. Combustion temperature was 900°C (1650°F), Eastern coal and Grove No. 1359 limestone were used.

For the first 24 hours of the run, the regenerator was operated in oxidizing conditions in order to establish base line operating conditions. Sorbent recirculated between the combustor and regenerator during this

period. Subsequently, reducing conditions were established by increasing the flow of supplementary fuel to the regenerator. Operation of the system continued, uninterrupted, for the next 100 hours. Operation of the combustor-regenerator during the extended run was exceptionally smooth. A hot spot did develop in the regenerator just above the grid in which the temperature was 200 to 250°C (450°F) higher than the rest of the regenerator The temperature profile was improved somewhat by decreasing the pressure to 760 kPa, thereby increasing the fluidization velocity. Some signs of agglomeration were noted in the bed after completion of the run. This could have caused the hot spot to form.

The limestone addition rate was initially set at a Ca/S ratio of 0.74. However, solids inventory in the combustor and regenerator began dropping and the feed rate was increased to a Ca/S ratio of 1.3. Part of the drop in bed levels was due to the inadvertent removal of some combustor solids early in the run. After the bed levels increased, the Ca/S was dropped to 1.06, then 0.46 and finally was decreased to 0 for the last 40 hours of the run.

SO_2 emissions from the combustor leveled out at 550 ppm (about 1.2 lb/M BTU) during the first 24 hours of the run while the regenerator was operating under oxidizing conditions. Emissions fell rapidly to less than 200 ppm when reducing (regenerating) conditions were established in the regenerator. SO_2 emissions from the combustor increased as the run progressed and as the sorbent deactivated. At the end of the run, after 100 hours of regeneration, the emissions were about 550 ppm. If the run had gone longer, removal of used sorbent and an increase in the fresh Ca/S ratio would have been required to maintain the SO_2 emissions at this level. During the 100 hours of regeneration, the sorbent underwent about 15 cycles of combustion and regeneration. The average Ca/S ratio during the run was 0.55, although as mentioned above, it was varied from 0 to 1.3. This represents about a four fold reduction in the limestone feed rate which would have been required in a once through system to control the SO_2 emissions to the average level measured in this run.

The concentration of SO_2 in the regenerator off gas was nearly steady throughout the run and averaged 0.53 mole percent (dry basis). This is very close to the concentration predicted by a sulfur mass balance based on the feed rate and sulfur content of the coal entering the combustor. The calculated equilibrium concentration at the operating conditions of the regenerator was 2.9 percent; hence, higher SO_2 levels would probably have been achieved by burning in the combustor more coal of a high sulfur content. The sulfur balance of the run was 104%, an acceptable level.

GRANULAR BED FILTRATION STUDIES

The objective of the granular bed filtration program was to determine if such a filter could reduce particulate concentrations in the flue gas, at high temperature and high pressure, to a level which would prevent damage to the gas turbine as well as satisfy environmental requirements. Tentative estimates of the particulate concentration which could be tolerated by the turbine range from 45 to 1 mg/m^3 (0.02 to 0.004 gr/SCF), and also depend on the particulate size distribution. Current environmental standards requires the particulate emission to be less than approximately 100 mg/m^3 (0.05 gr/SCF). To meet these requirements, a particulate removal system consisting of two cyclones followed by a high efficiency third stage device such as a

granular bed filter is now envisioned. The granular bed filter test program is intended to determine if the filter can achieve these particulate emission targets, if the performance can be maintained, to uncover operating problems and to measure the long term life of the filter hardware.

A granular bed filter was purchased from the Ducon Company and evaluated. The Ducon-type granular bed filter consists of a number of small beds packed with suitable granular filter media such as alumina, quartz, etc. A stack of the filter beds form a single filter element. A number of filter elements can be used depending on the volume of gas to be filtered. Dirty gas passes through inlet screen sections down into the filter beds immediately below the screen sections. Clean gas from the beds is collected in a manifold in the interior of the element and then passes to the clean gas outlet system. As the filtration step proceeds, the pressure drop across the element increases and eventually the element must be cleaned by the reverse flow of clean gas. This "blow back" occurs by flowing clean gas in reverse direction through the outlet gas manifold, up through each filter bed and out through the screens. The function of the screens is to retain the filter media during the blow back step, keeping it inside the filter beds, while allowing the fine particulates removed from the filter media by the blow back gas to pass through. The fine particulate then settles outside the filter elements and is collected at the bottom of the vessel containing the filter elements.

A pressure vessel 2.4 m (8 ft) in diameter by 3.4 m (11 ft) high was installed on the miniplant to house up to four filter elements. Each element is contained within a shroud inside the pressure vessel. Inlet gas is piped to each shroud, passing through orifices which measure the flow rate to each filter element. Clean gas exits each element and fills the interior of the pressure vessel. Particulates removed from the filter elements during blow back impinge on the inside surface of the shrouds, fall to the bottom and are collected in lock hoppers. The pressure vessel and filter elements are heated prior to the start of a run with a gas-fired burner to a temperature greater than the dew point of the flue gas.

A number of high temperature runs were then attempted but the pressure drops across the filter were extremely high and all attempts at blow back were unsuccessful. Inspection of the filter elements after each of these runs showed that a hard filter cake had formed on the inlet retaining screens. The filter medium was usually particulate free indicating very little penetration through the screens. The initial tests were made before the preheat burner was installed and it was thought that the plugging was caused by condensation of moisture during start up. However, runs made after the preheat burner was in operation were also terminated by screen plugging problems. As a result, this filter design was deemed unacceptable for this application.

Discussions with the Ducon Company led to the design and fabrication of modified filter elements. Ducon suggested removing the inlet screens and designing the individual filter beds with more freeboard to prevent entrainment of the filter media during blow back. It was also suggested that a gas distribution plate be used at the bottom of each bed to assure good distribution of the blow back air.

Operability of the modified filter system was demonstrated. The end of the initial shakedown phase was signified by the successful completion of a 24 hour demonstration run. This run was preceded by a number of shorter duration runs used to establish suitable operating conditions for the demonstration run. These runs were successful in that filtration, ability to blow back, ability to maintain low pressure drops and collection of particulates after blow back were demonstrated. Collection efficiencies of 90 to 95% were measured for the first few hours of the runs based on outlet particulate concentrations of about 100 mg/m^3 (0.05 gr/SCF). Operation for up to 24 hours was also demonstrated with no significant increase in base line pressure drop across the filter. Blow back was usually required every 10-20 minutes during which time the filter pressure drop had increased 14 kPa (2 psi) above its base line value. A range of blow back conditions were used to restore the base line pressure drop. Blow back durations ranged between 2 and 30 seconds and superficial velocity between 0.15 and 0.75 m/s (0.5 and 2.5 ft/s). The quantity of blow back air used ranged from 1 to 5% of the filtered gas rate. Filtration velocities generally ranged between 20 and 24 m/min (60 and 80 ft/min). Filter media consisting of 300 to 600 micron quartz particles were tested.

The particulates passing the filter had a mass median size of about 3 microns with about 10% larger than 10 microns.

A number of problems were defined during the shakedown and operation of the filter. Demonstrated particulate outlet concentrations are still higher than the tentative gas turbine inlet requirements. However, firm turbine requirements have not been set as yet and it may be too early to reach any conclusions regarding the suitability of the filter to protect a gas turbine. The lower outlet particulate loadings of 100 mg/m^3 (0.05 gr/SCF) meet the current EPA emission standards. However, in all runs, it was observed that the outlet loadings increased with time. It has not as yet been demonstrated that the EPA emission standard can be met for more than a few hours of operation.

Another observation has been the retention of a significant portion of the filtered particulates in the filter beds. This has amounted to as much as 30% of the weight of the filter media. The retained particulates were also found to be uniformly distributed through the filter beds instead of forming a layer on the top of the beds as had been expected. Distribution of particulates throughout the bed was probably responsible for much of the particulate penetration through the bed, and hence the observed increase of outlet loadings with time.

Loss of filter media during blow back was another reoccuring problem. Since inlet retaining screens were found to be susceptible to plugging, better control of the blow back air rate must be established to minimize the losses.

Another potential problem with the current design is its vulnerability to upsets. If upsets occur, such as bed plugging or loss of filter media, the operating problems caused by such upsets usually require shut down of the system. It is usually not possible to take corrective action which restores good operation. Another problem which may be unique to the mini-plant was the interaction of the granular bed filter with the rest of the

FBC system during blow back cycle. An increase in system pressure was noted during blow back resulting in problems with the coal feed system which is controlled by the differential pressure between the coal feed vessel and combustor. Modifications to the coal feed control system were required to minimize the effects.

COMPREHENSIVE ANALYSIS OF EMISSIONS

A program was begun to carry out a comprehensive analysis of all potentially hazardous materials in the effluents from the miniplant unit. A series of runs was completed in which samples of the input streams as well as the effluents were taken and analyzed. This work was done in cooperation with Battelle Columbus Laboratory, the contractor coordinating all such activities for the EPA. The results of the test will be summarized in a report to be issued jointly by Battelle and Exxon Research and Engineering Company.

MODIFICATION OF THE BENCH SCALE UNIT

The bench scale unit which was originally designed to operate in a batch or semi-batch fashion was modified to permit continuous operation. The modifications will permit the continuous feeding of coal and sorbent to the combustor and the continuous withdrawal of spent sorbent. Solids captured in the first stage cyclone will be able to be recycled to the combustor if desired. The regenerator will also be capable of continuous feeding of sulfated sorbent and withdrawal of regenerated sorbent.

ANALYSIS OF DESULFURIZATION DATA

Additional analysis of flue gas desulfurization data measured in the miniplant and batch units was carried out. SO_2 retention results have been correlated as function of the Ca/S molar ratio calculated from a sulfur balance and based on measurements of sulfur contents in the flue gas and the spent sorbent. This was done to minimize the effect of mechanical difficulties with the coal/sorbent blending equipment and an incomplete approach to steady state conditions. The desulfurization data were again analyzed using the Ca/S ratio set on the solids blending equipment but corrected for variations in combustor temperature and gas phase residence time. Residence time corrections were based on the use of a first order rate expression which had been developed previously and more recently verified. Temperature corrections were based on a calculated activation energy of 13 kcal/mole. Correcting for residence time and temperature variations gave a good correlation of SO_2 retention with Ca/S ratio set on the blender. The correlation agreed reasonably well with that based on the Ca/S ratio calculated from analysis of gas and solids.

SO_2 retention results measured in the batch unit and the continuous miniplant were also compared after correcting for the effect of solids residence time distribution in the miniplant. Reaction rate constants were calculated from the batch unit results and were used to calculate the SO_2 retention as a function of Ca/S ratio for a continuous unit. It was assumed that the gas moved in a plug flow fashion through the miniplant combustor, that the solids were well mixed and the residence time distribution of the solids could be described by an exponential distribution function. The

corrected batch results were then compared to results measured in the miniplant. The corrected batch data did not exactly correspond to the miniplant data, but were still quite representative of desulfurization performance with dolomite sorbents.

Residence time distribution of solids in the combustor can also be used to gain some insight into the factors which control desulfurization performance. It was estimated that 15% of the sorbent particles in the combustor at typical operating conditions have a residence time between 0 and 1 hour but because of the higher activity of fresh sorbent, these particles account for 55% of the SO_2 retention achieved in the combustor. Also, 85% of the SO_2 removal occurs on particles which have been in the combustor for 3 hours or less, even though these particles represent only 31% of the combustor inventory. It is this high level of effectiveness of fresh sorbent particles which results in a fairly rapid approach to a steady state SO_2 concentration after a change in the Ca/S feed ratio.

CONTINUOUS STUDIES

The particulate removal program will continue with the objective of optimizing the performance of the granular bed filter. Particulate removal efficiency must be improved, loss of filter media during blow back decreased and the blow back made more effective. The use of transparent models to observe the mechanics of the filtration and blow back steps will begin in an attempt to learn more of what is occuring in the filter. Long term testing with the filter will begin in conjunction with the Department of Energy (DOE) sponsored program to evaluate gas turbine materials. The DOE hot corrosion testing on the miniplant will be conducted under a cooperative agreement between EPA and DOE.

Following the granular bed filter tests, one or possibly two alternate particulate control devices will be evaluated. The choice of the devices will be made after consultation with the EPA. Currently, devices such as a high temperature electrostatic precipitator or a high temperature bag filter are being considered.

The comprehensive analysis program will be extended to include operations with the regenerator. More quantitative tests (Level 2 and Level 3 tests) will be carried out based on the results of the initial screening tests (Level 1 tests). Two high temperature, high pressure particulate sampling systems capable of sample particulates at temperatures up to 870°C will be fabricated and installed.

The regeneration program will consist in a series of runs of two to five days duration aimed at generating sufficient data to evaluate the economic feasibility of regeneration. The tests will determine the make up sorbent requirements and will indicate the level of SO_2 in the regenerator off gas which can be obtained.

Future work in the bench scale combustor unit will consist in evaluating various coals and sorbents. NO_x control studies will also be made. Regeneration studies will determine the activity maintenance of sorbent recycled between the combustor and regenerator while operating under various regeneration conditions. The use of coal as fuel for the regenerator will be included.

SECTION II

INTRODUCTION

The pressurized fluidized bed combustion of coal is a new combustion technique which can reduce the emission of SO_2 and NO_x from the burning of sulfur-containing coals to levels meeting EPA emission standards. This is done by using a suitable SO_2 sorbent such as limestone or dolomite as the fluidized bed material. In addition to emissions control, this technique has other potential advantages over conventional coal combustion systems which could result in a more efficient and less costly method of electric power generation. By immersing steam generating surfaces in the fluidized bed, the bed temperature can be maintained at low and uniform temperatures in the vicinity of 800 to 950°C. The lower temperatures allow the use of lower grade coals (since these temperatures are lower than ash slagging temperatures), and also decrease NO_x emissions. Operation at elevated pressures, in the range of 600 to 1000 kPa, offers further advantages. The hot flue gas from a pressurized system can be expanded through a gas turbine, thereby increasing the power generating efficiency. Operation at the higher pressure also results in a further decrease in NO_x emissions.

In the fluidized bed boiler, limestone or dolomite is calcined and reacts with SO_2 and oxygen in the flue gas to form $CaSO_4$ as shown in reaction (1).

$$CaO + SO_2 + 1/2O_2 \rightarrow CaSO_4 \qquad (1)$$

Fresh limestone or dolomite sorbent feed rates to the boiler can be reduced by regeneration of the sulfated sorbent to CaO and recycle of the regenerated sorbent back to the combustor. One regeneration system, studied by Exxon Research and Engineering Company in the past, is the so-called one step regeneration process in which sulfated sorbent is reduced to CaO in a separate vessel at a temperature of about 1100°C according to equation (2). The goal is to produce SO_2 in the regenerator off gas at a sufficiently high concentration to be recovered in a by-product sulfur plant.

$$CaSO_4 + \overset{CO}{H_2} \rightarrow CaO + SO_2 + \overset{CO_2}{H_2O} \qquad (2)$$

A diagram of the pressurized fluidized bed combustion and regeneration process is shown in Figure II-1.

Exxon Research and Engineering Company, under contract to the EPA, has built two pressurized fluidized bed combustion units to study the combustion and regeneration processes. The smaller of the two units, the batch unit, was built under contract CPA 70-19 and was described in previous reports (1,8,9). Those reports also described regeneration and combustion studies carried on in the batch unit. The batch unit is being converted to a continuous bench scale unit and the modifications required for the conversion are described in this report. No experimental work has been done in the batch/bench unit during this current reporting period.

FIGURE II-1

PRESSURIZED FLUIDIZED BED
COAL COMBUSTION SYSTEM

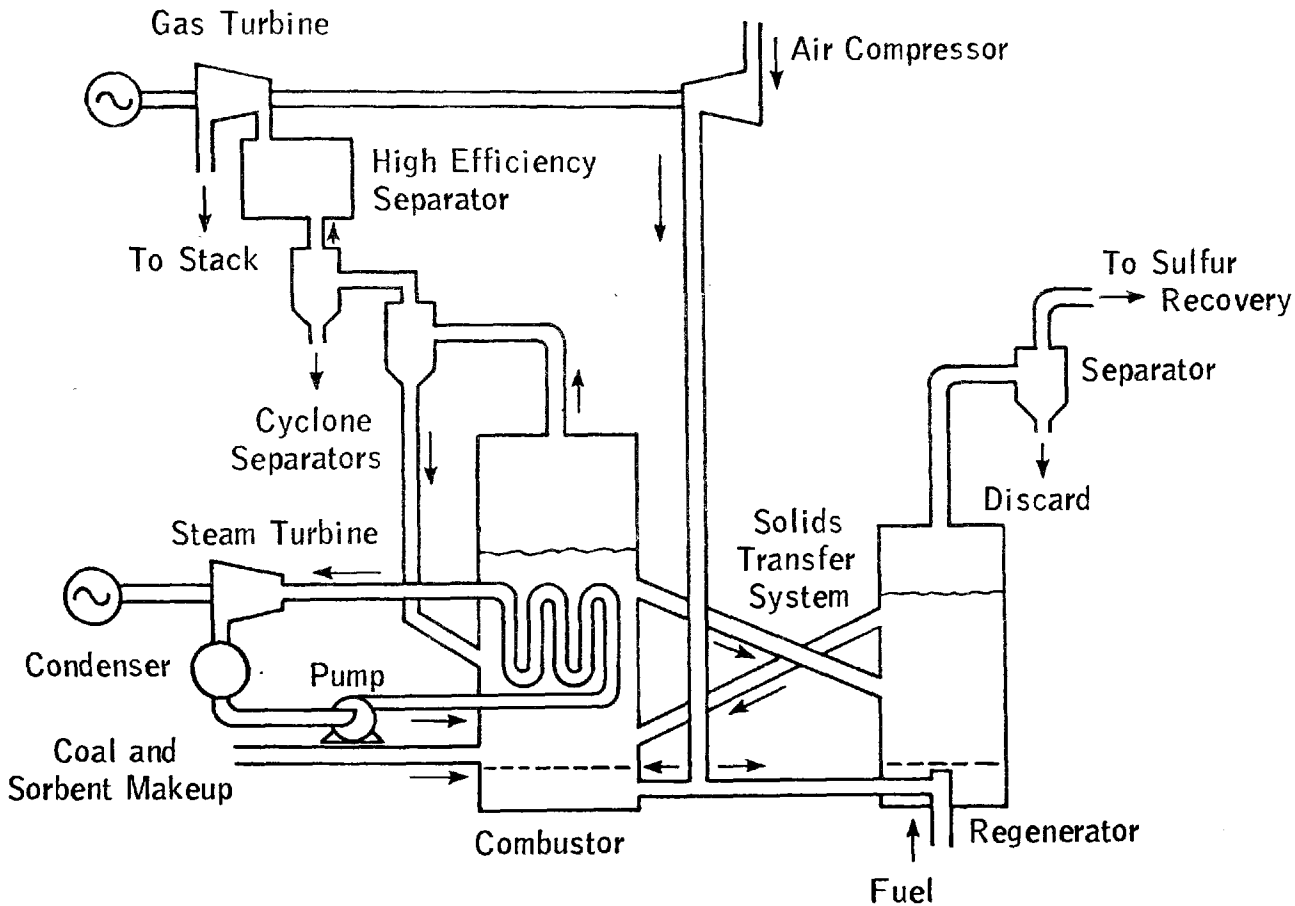

The larger unit, called the miniplant, was designed under EPA Contract CPA 70-19 and built under Contract 68-02-0617. Figure II-2 shows a photograph of the miniplant. The shakedown and operation of the unit was funded under Contract 68-02-1312. Previous reports (1,7,9) described design, shakedown and operation of the unit. This report includes additional results from the operation of the combustion section of the miniplant. The effect of operating conditions on SO_2, NO_x and particulate emissions, and combustion efficiency was measured. Various coals and sorbents were tested, including precalcined limestone sorbent. The first test in a series of tests aimed at developing a comprehensive analysis of all emissions especially trace emissions, from the miniplant pressurized FBC unit was completed. The design and shakedown of a granular bed filter intended to remove particulates from the flue gas to very low levels is also described in this report.

This report also describes the operation of the regenerator section of the miniplant. The previous report (1) described the regenerator and the shakedown tests. This report describes a 125 hour run in which the combustor and regenerator were both operated continuously and the operability of the system was demonstrated.

The period of performance discussed in this report is August 1, 1976 to August 12, 1977.

FIGURE II-2

EXXON FLUIDIZED BED COMBUSTION MINIPLANT

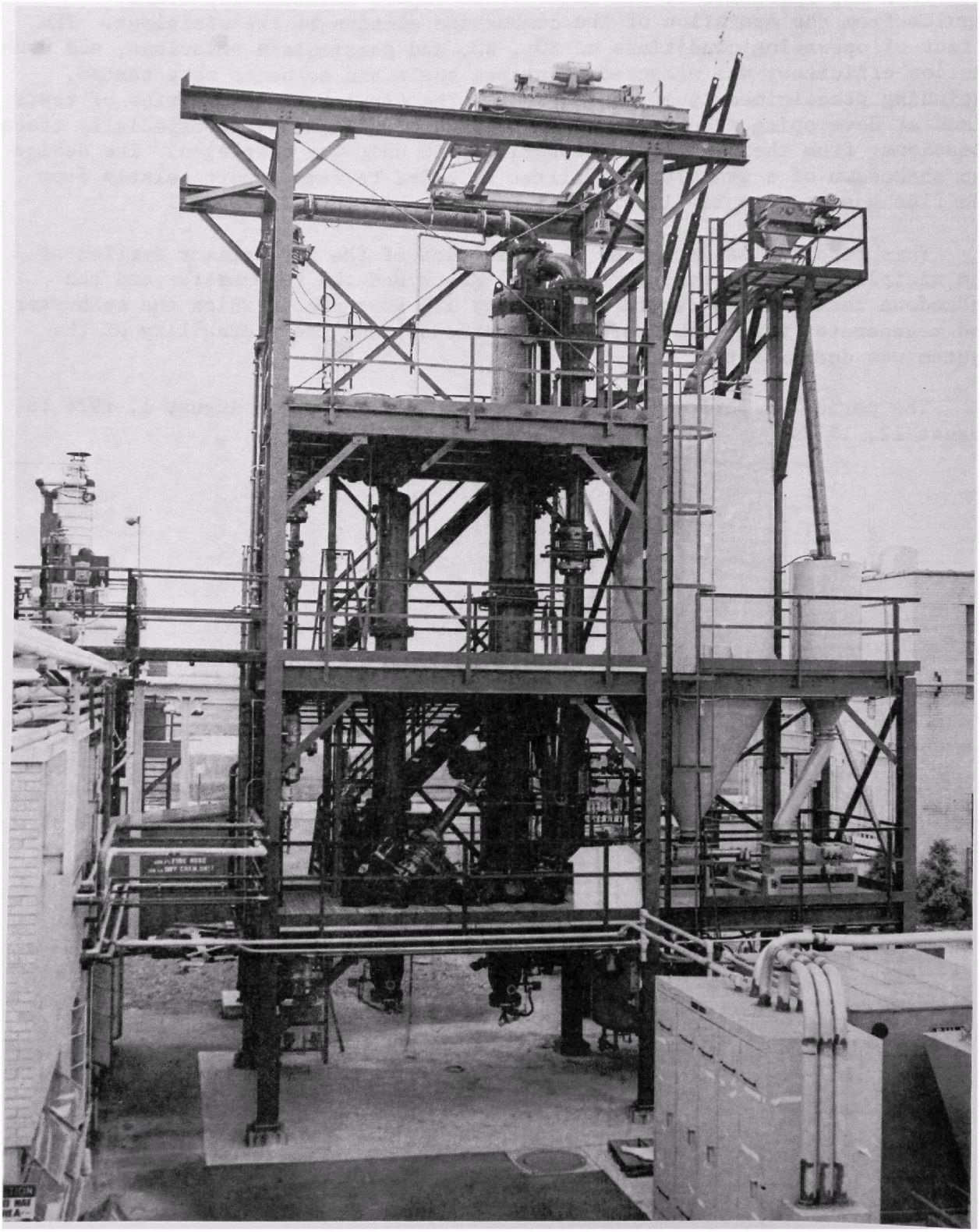

SECTION III

COMBUSTION STUDIES

Combustion studies have been carried out in the EPA/Exxon pressurized fluidized bed combustor referred to as the miniplant. The miniplant has provisions for continuous addition of coal and sorbent and continuous withdrawal of sulfated sorbent. The miniplant is shown schematically in Figure III-1. As of July 1977, the combustor has been operated for a total of approximately 1500 hours in a series of individual runs up to 240 hours duration. This section of the report describes the combustor equipment, operating procedures, combustor performance and combustion results. A discussion of the regeneration work is given in Section IV.

EQUIPMENT, MATERIALS, PROCEDURES

This section will focus on the major system components which include: 1) solids feeding system, 2) combustor with internal subcomponents, 3) combustor cyclones, 4) pressure control and flue gas discharge system, 5) flue gas sampling and analytical system, 6) process monitoring and data generation system, 7) combustor safety and alarm system, 8) coal and sorbent properties, 9) operating procedures, and 10) analytical procedures. A detailed description of each of these systems can be found in an earlier report and only a brief discussion will be included here (1,9).

Solids Feeding System

Figure III-2 displays a schematic of the miniplant coal and sorbent feeding system. Crushed and sized coal and limestone or dolomite are held in separate storage bins (20 tonnes for coal and 3 tonnes for sorbent) under atmospheric conditions. On demand, the solids from the bins are proportioned to a specific coal/sorbent ratio. Inverters control the motor speeds of separate coal and sorbent screw feeders and volumetrically control the coal/sorbent ratio. A blending screw transports mixture into a solids feed vessel. The coal/sorbent mixture is held in this vessel until refill of the injector vessel is required.

The solids feeding system provides for continuous solids delivery (coal and sorbent) from the injector vessel to the pressurized pressurized combustor, while allowing intermittent refilling of the injector vessel (193 kg operating capacity). Load cells located under the injector vessel monitor the solids feed rate and actuate control signals for the refill cycle. Prior to initiation of a refilling operation, the injector vessel, feed vessel, and the pair of solids storage bins remain isolated from each other. When the load cell under the injector vessel detects a solids loading of less than 102 kg, 91 kg of solids are automatically transferred pneumatically from the feed vessel to the pressurized injector vessel without interrupting feed to the combustor. Refilling is usually completed in about 5 minutes. After refilling, the feed vessel is again isolated from the injector vessel, vented, and filled with solids from the storage bins. The feed vessel is then isolated and repressurized to await another cycle.

FIGURE III-1

EXXON FLUIDIZED BED COMBUSTION MINIPLANT

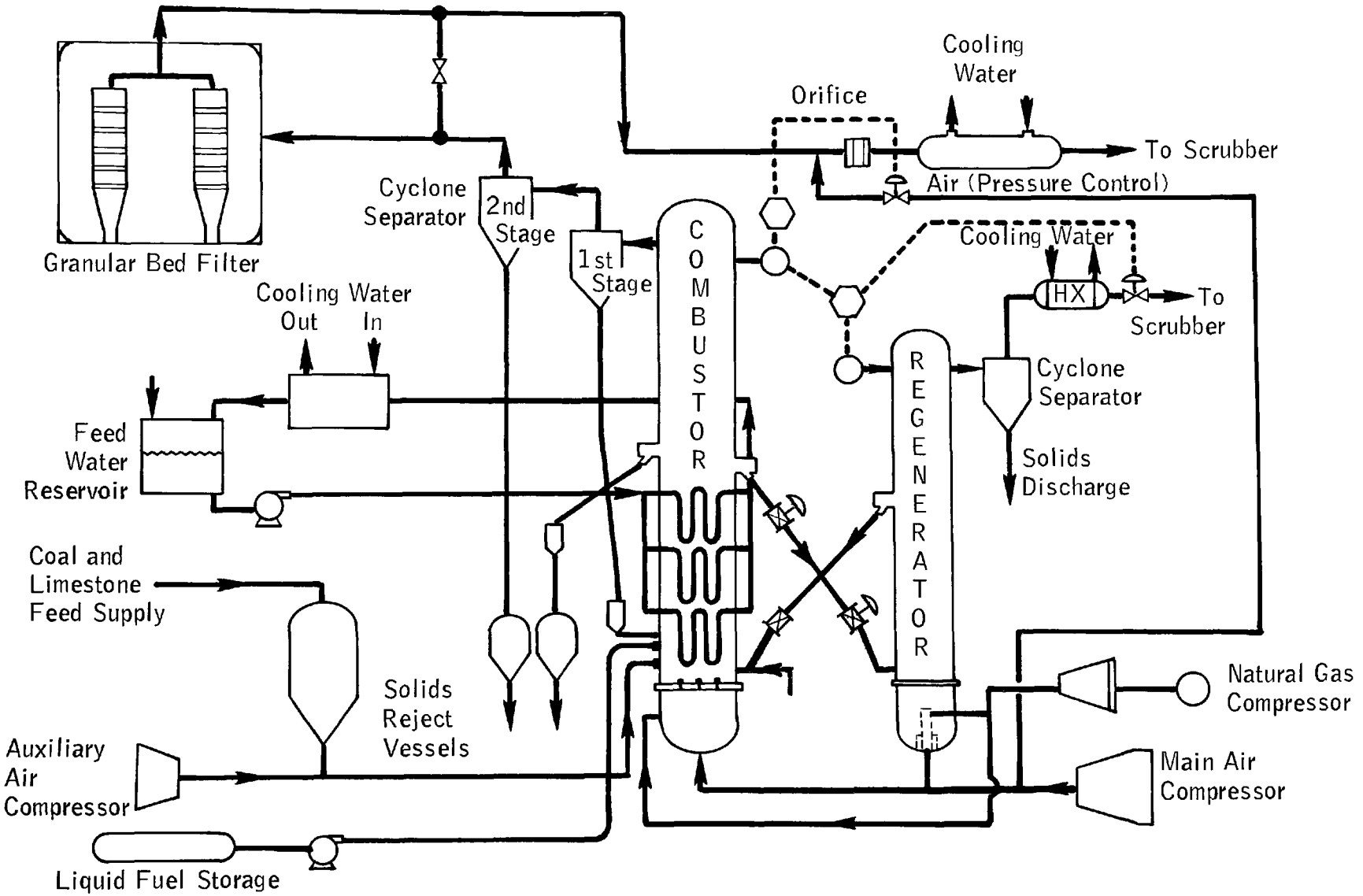

FIGURE III-2

COAL & LIMESTONE FEED SYSTEM

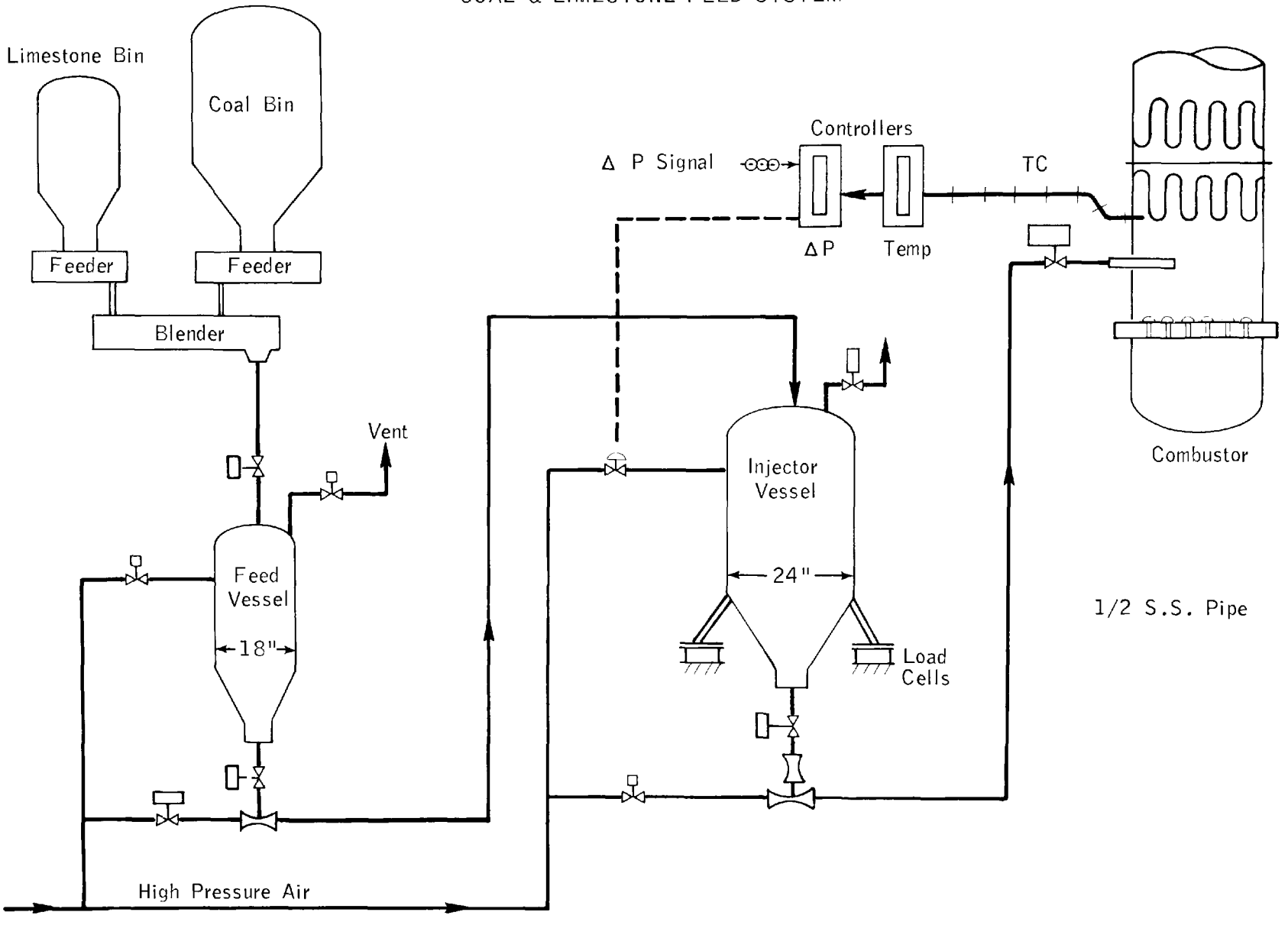

Solids in the injector vessel are continuously aerated by the pressurizing air stream, which is automatically controlled at a pressure level slightly above that in the combustor. The coal/sorbent mixture is discharged from the injector vessel through a 1.3 cm diameter orifice and pneumatically conveyed by a stream of dried transport air through an s-shaped 1/2-inch stainless steel pipe to the combustor. A short section of high pressure rubber hose is used to connect the discharge orifice to the injection line to avoid interference with the load cell operation.

Final entry of solids into the combustor is through a 1.3 cm I.D. nozzle located 28 cm above the fluidizing grid and horizontally extending about 2.5 cm beyond the reactor wall. The tip of the probe includes ten 0.79 mm diameter holes which surround the solids feed opening. They are used to continuously inject an annular stream of sonic-velocity air to assist penetration of the solids feed into the fluidized bed and to protect the feed nozzle from blockage with bed solids. The flow of solids into the combustor is controlled to maintain constant temperature in the combustor.

Combustor

The combustor consists of a 61 cm I.D. steel shell refractory lined to an inside diameter of 33 cm. The 9.75 m high unit is fabricated in flanged sections to allow insertion and removal of the cooling coils. Various ports are strategically located to allow for material entry and discharge. Numerous taps are also provided for monitoring both pressure and temperature. A schematic of the combustor is shown in Figure III-3.

Heat removal from the combustor is provided by cooling coils located in discrete vertical zones above the grid. Each coil has a total surface area of 0.55 m^2 and consists of vertically-oriented loops constructed of 1/2-inch Schedule 40 316 stainless steel pipe. The number of coils can vary from one to ten depending on the combustor operating conditions and the amount of cooling required. A high pressure pump is used to pump the cooling water through a closed-loop arrangement consisting of a demineralized feed water reservoir, cooling coils, and a heat exchanger. The flow rate and exit temperature from each coil can be separately controlled and monitored.

The baffled cooling coils were inspected after Run 65 and found to be in excellent condition. These coils were installed prior to Run 29 and logged more than 600 hours of running time. There was no sign of the erosion seen on earlier unbaffled coils. Even the baffles were not eroded as seen in Figure III-4.

The combustion air to the unit is provided by a main air compressor having a capacity of 40 Sm^3/min at 1030 kPa (1400 SCFM at 150 psig). Preheat of the combustor during start-up is made possible by a natural gas burner which is housed in the bottom plenum section of the combustor. Once the fluidized bed temperature reaches approximately 430°C a liquid fuel system is used to heat the bed further to the coal ignition temperature.

The liquid fuel used to heat up the combustor is "Varsol" or kerosene. The fuel is pumped, under pressure slightly higher than combustor pressure, from either of two 218 l (55 gal) drums through a rotameter to an injector nozzle located at port #5, 15.2 cm above the combustor grid (Figure III-5).

FIGURE III-3

COMBUSTOR VESSEL

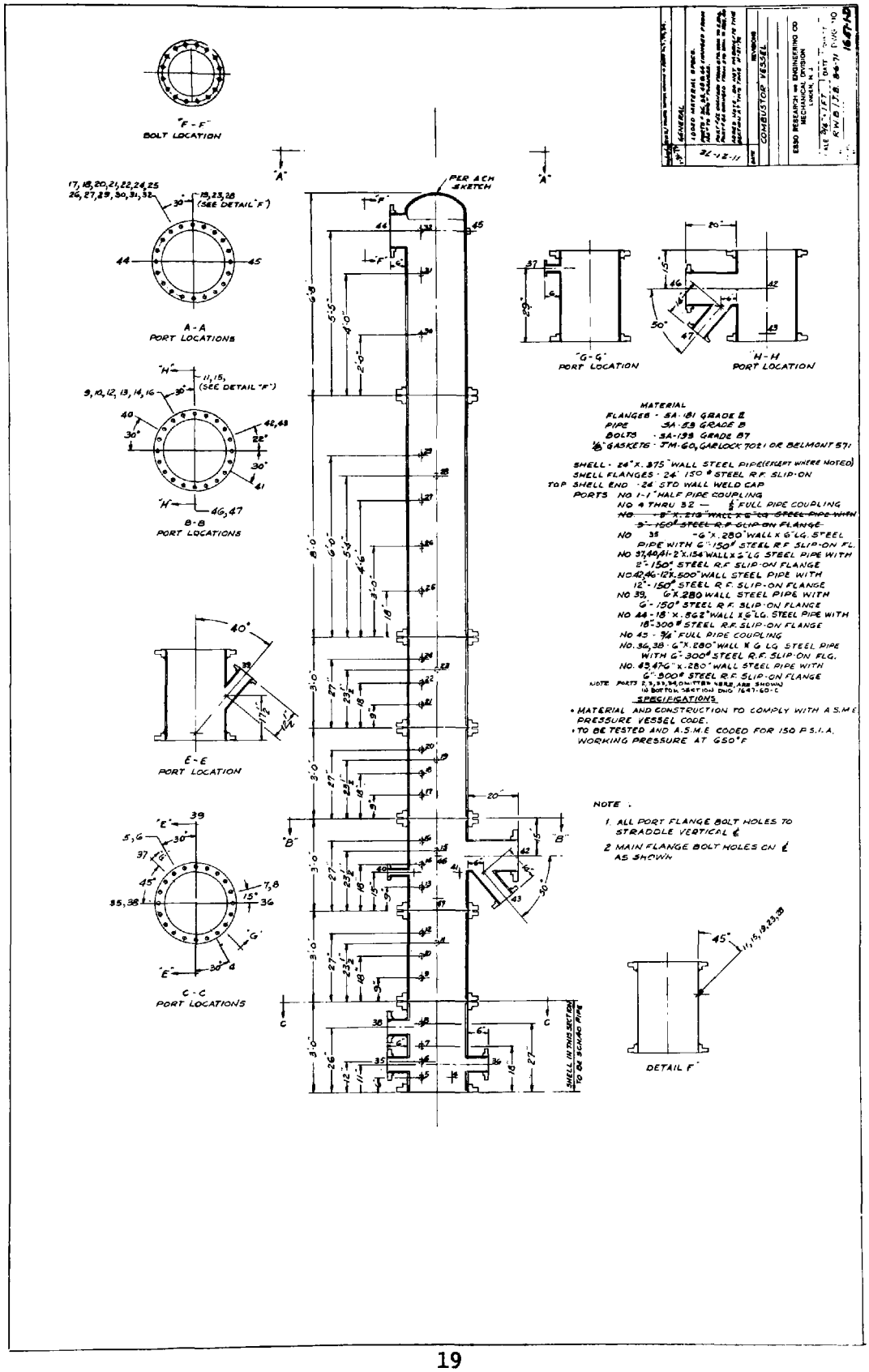

FIGURE III-4

COOLING COILS AFTER 600 HOUR EXPOSURE

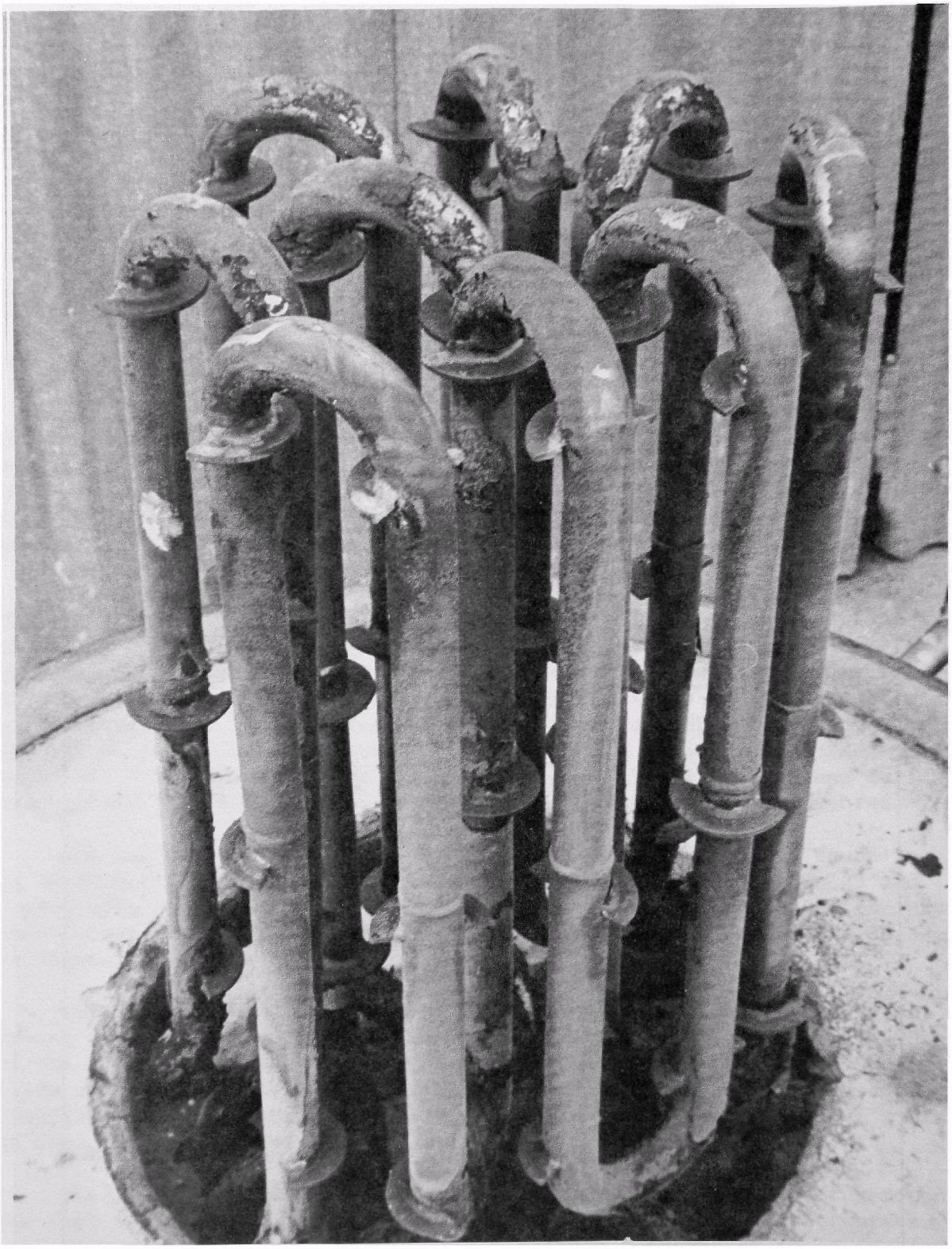

FIGURE III-5

LIQUID FUEL SYSTEM

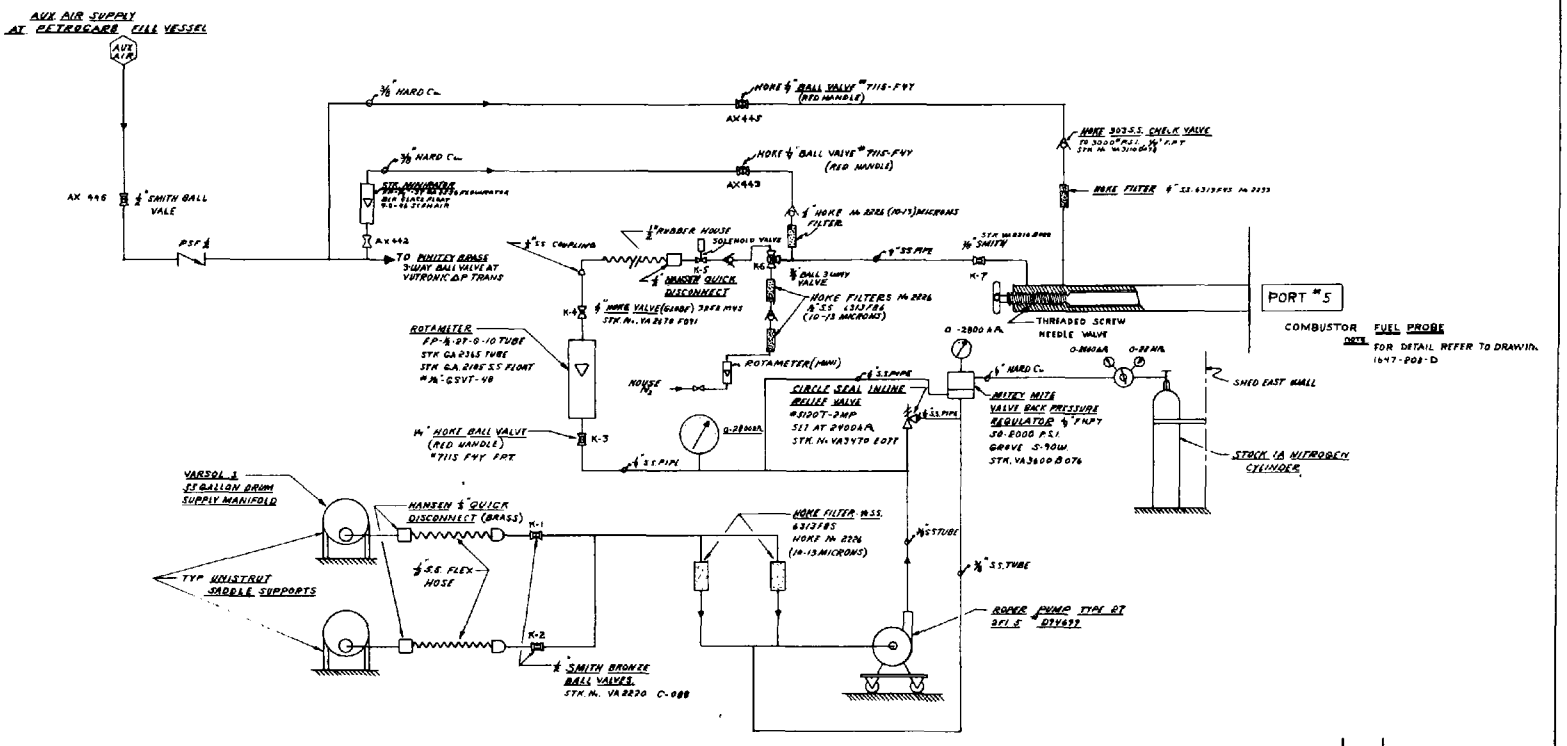

The injector nozzle atomizes the fuel to insure complete combustion (Figure III-6). The fuel flow rate must be manually set at the rotameter, however, a solenoid valve is used for on/off control from the control panel. The liquid fuel system is also activated during coal feed problems to maintain combustor bed temperature above the coal ignition temperature.

Coal and sorbent are injected pneumatically into the combustor through a single side-entering port 28 cm above the fluidizing grid. The maximum design solids feed rate is approximately 227 kg/hr. The combustor is capable of operating at pressures up to 1000 kPa and temperatures to 1100°C, superficial velocities up to 3 m/s with expanded beds to 6.1 m. The expanded bed height can be controlled at any level above 2.3 m by the continuous withdrawal of bed solids through a port located 2.3 m above the fluidizing grid. Solids flow by gravity through a refractory lined pipe into a "pulse pot" from where they are pneumatically transported by controlled nitrogen pulses to a pressurized lock hopper.

The combustor fluidizing grid consists of 332 3/32 inch holes and four independent cooling water loops consisting of five channels each (see Figure III-7). The previous grid, which was installed through Run No. 49, had only one cooling water loop with twenty channels in the grid. This grid suffered from uneven grid temperature distributions due to preferential water flow. Some erosion was seen on the old grid, however, it did not fail. The current grid cooling scheme results in even grid temperatures and should result in longer grid life.

Combustion gases exit the combustor and go to a two stage cyclone system. The primary intent of the first cyclone is to recirculate larger unburned carbon particles back to the combustor to improve combustion efficiency. Particulates collected in the second stage cyclone are dropped into a lock hopper and disposed of on a batch basis. Due to refractory deterioration and severe pitting, the second stage cyclone was recast with a more resistant refractory (Resco RS-17-E). The barrel was also made smaller to correspond to the smaller inlet and outlet pipes that were installed last year. The particulate collection efficiency was not changed significantly due to this modification.

Flue gas is sampled at a point about 7 m downstream of the second stage cyclone. The system is designed to produce a solids-free, dry stream of flue gas at approximately ambient temperature and atmospheric pressure whose composition, except for moisture, is essentially unaltered from that of the original flue gas. The system was described in the previous report (1). Particulates are also sampled near this point. The particulate sampling system is discussed in detail on page 35.

New Combustor Sections

Two new sections fabricated for a fireside corrosion program sponsored by the Department of Energy (DOE) and conducted in cooperation with Westinghouse Research Laboratory have been installed in the combustor. The DOE-funded fireside corrosion work will be conducted on the miniplant under a cooperative agreement between EPA and DOE. The orientation of these sections is shown schematically in Figure III-8. The lower corrosion test section (Figures III-9 and III-10) measures 0.91 m in height and is located 0.91 m

FIGURE III-6

LIQUID FUEL INJECTOR NOZZLE

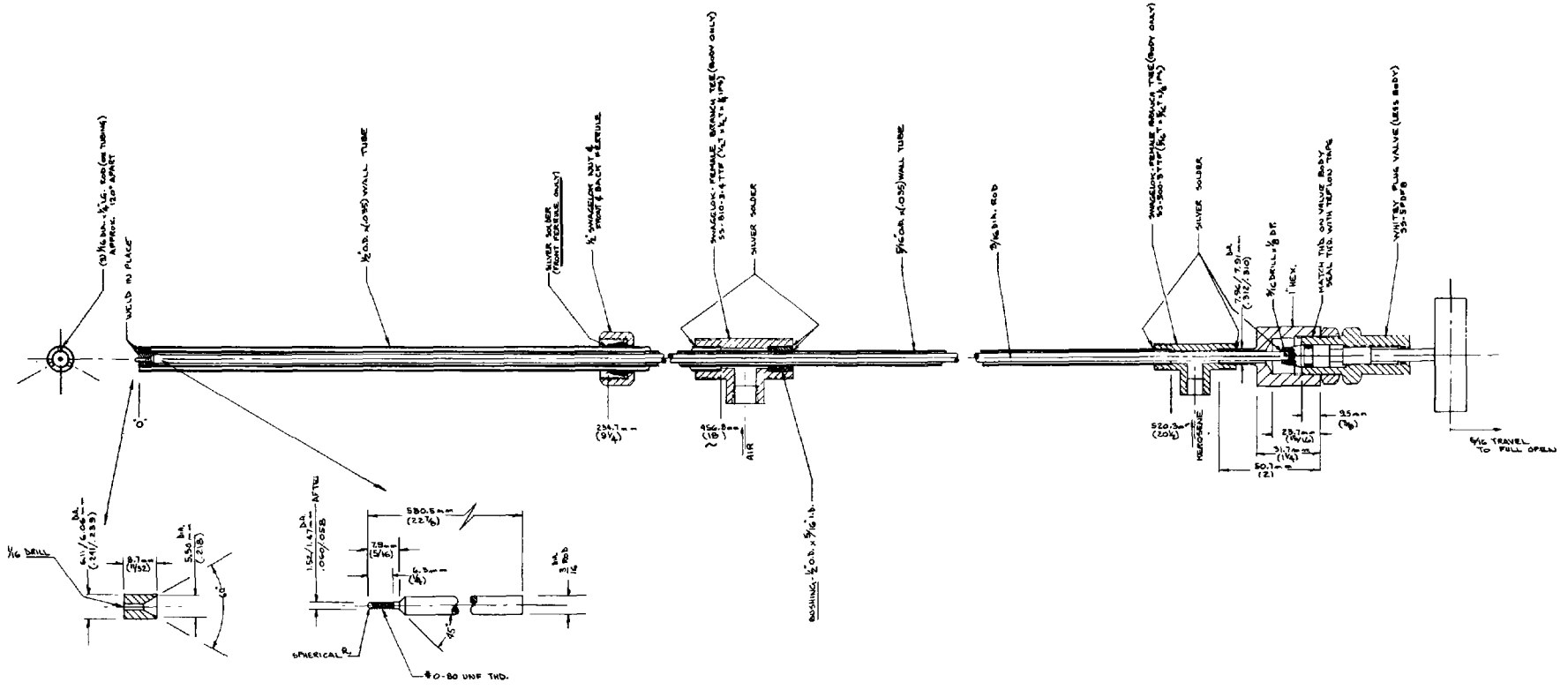

NOTE:
1. MATL. S.S. TYPE 304

DATE	REVISION
INJECTOR NOZZLE	
COMBUSTOR	
FBCC MINI-PLANT	
EXXON RESEARCH AND ENGINEERING COMPANY MECHANICAL DIVISION LINDEN, N.J.	
SCALE FULL & HALF	PROJECT NO. 79068/7371520/68-80
DRAWN	DATE
DESIGNED BY W. DRAVIS	DATE 5/4/76
APPROVED BY	DATE
DWG. NO. 1647-202-D	

FIGURE III-7

COMBUSTOR FLUIDIZING GRID

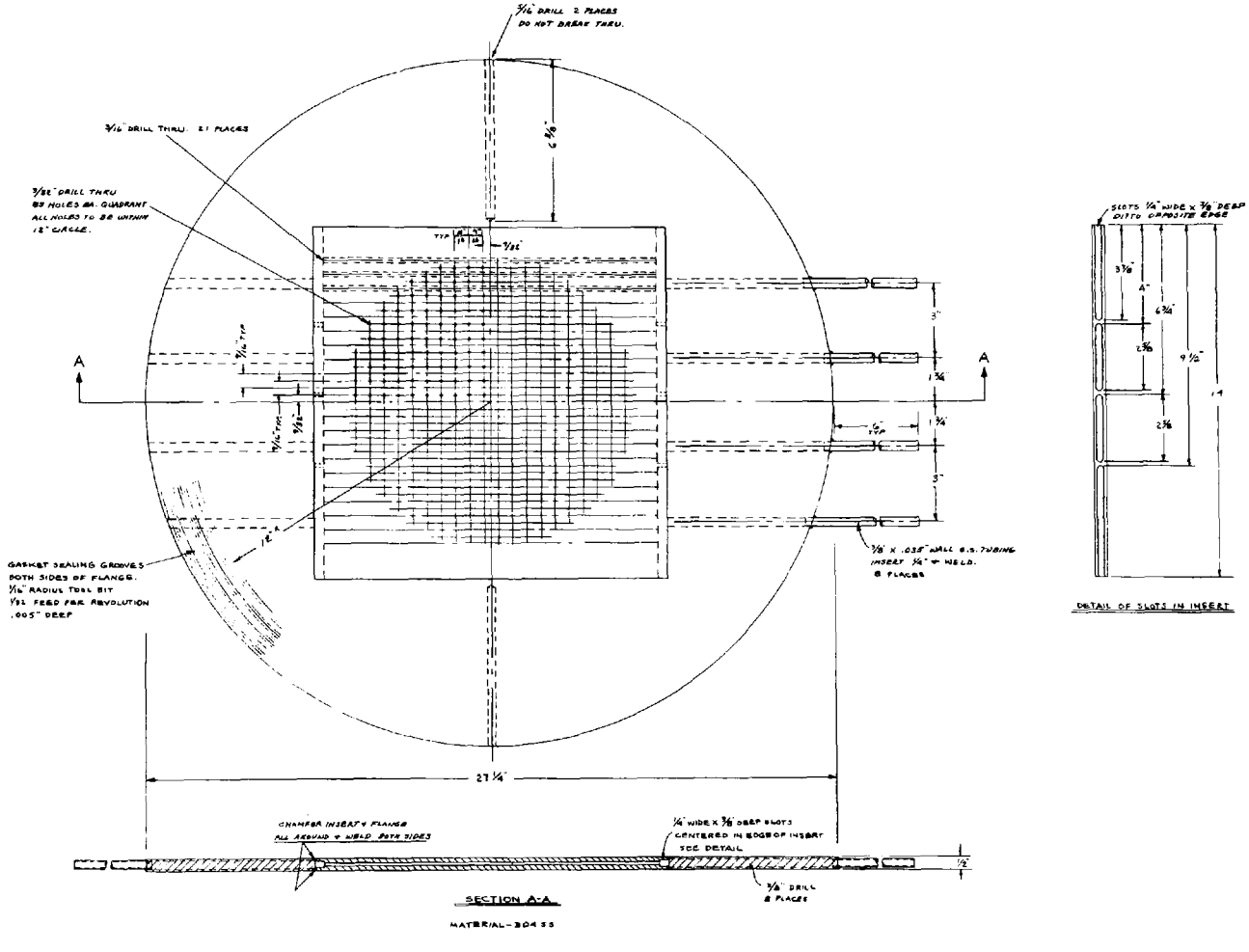

DETAIL OF SLOTS IN INSERT

DATE	REVISION
FBCC MINI-PLANT	
COMBUSTOR GRID 322 3/32" HOLES	

EXXON RESEARCH AND ENGINEERING COMPANY
MECHANICAL DIVISION
LINDEN, N.J.

SCALE 1/2 PROJECT NO.
DRAWN L. KUTH DATE
DESIGN BY R.W. BRIANT 1/14/77 DATE DWG. NO. 1647.3-D-2
APPROVED BY DATE

FIGURE III-8

COMBUSTOR CORROSION PROBE LOCATION

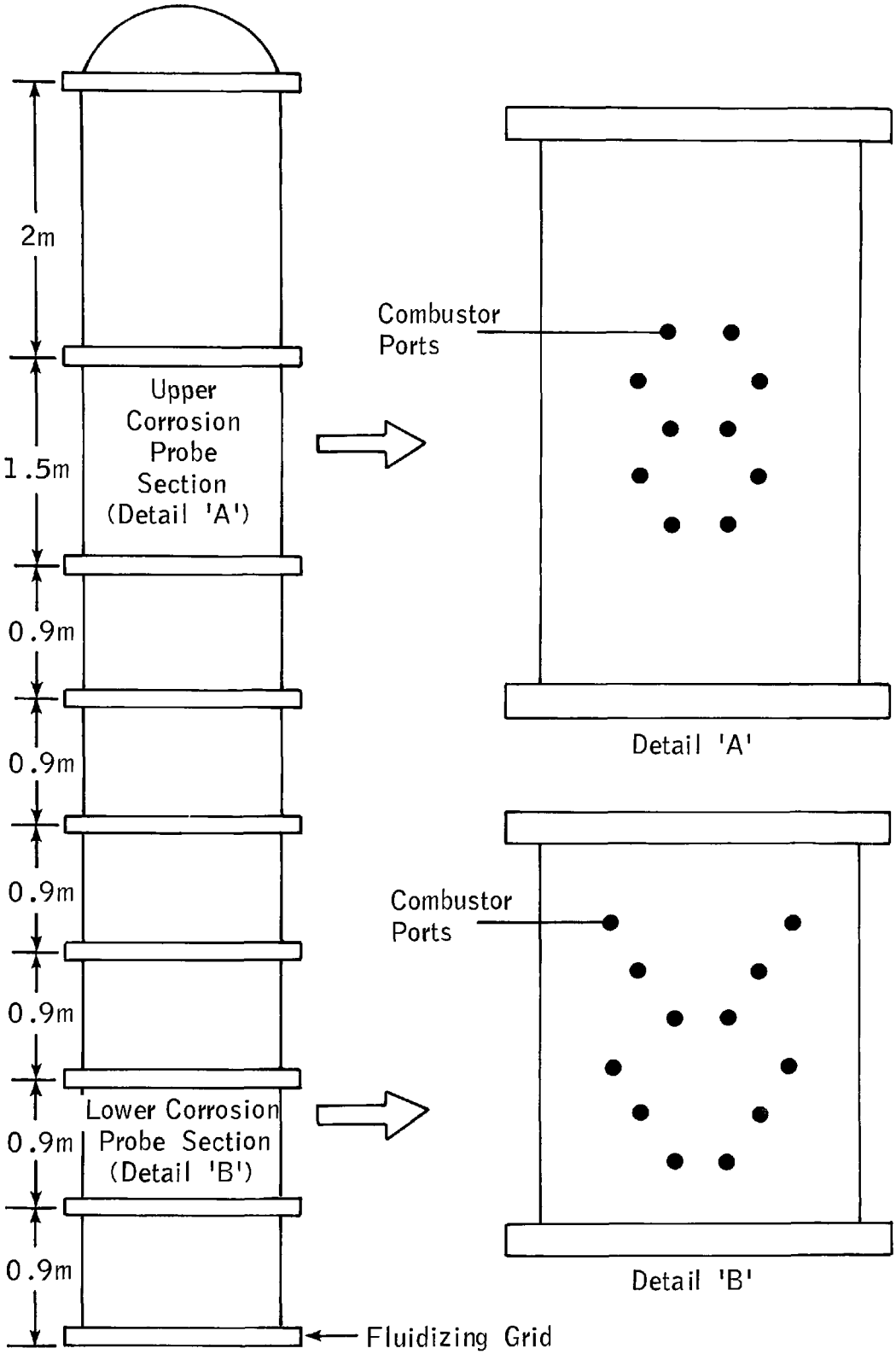

FIGURE III-9

COMBUSTOR LOWER CORROSION PROBE SECTION

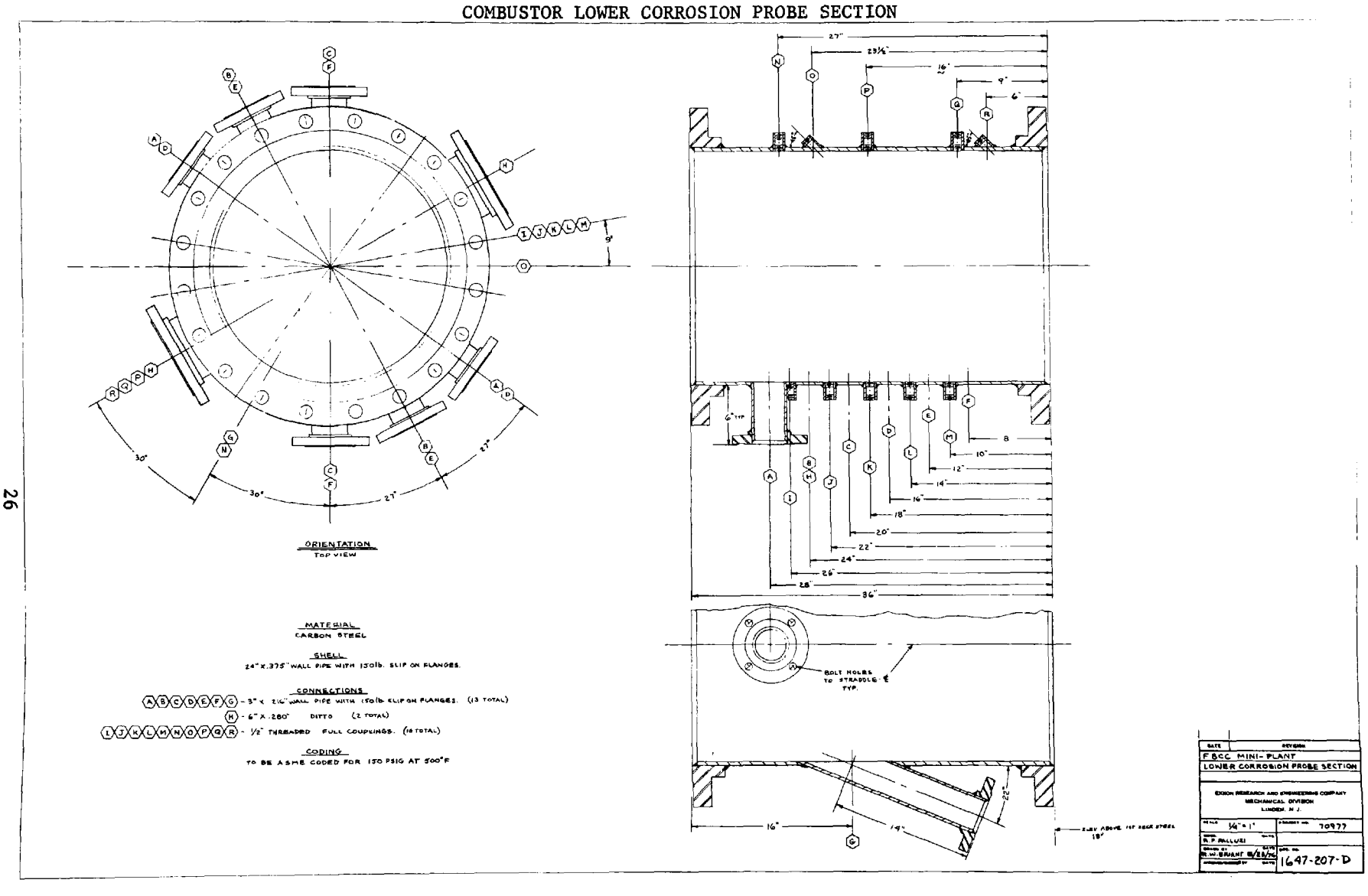

FIGURE III-10

COMBUSTOR LOWER CORROSION PROBE AND BED SAMPLING PROBE

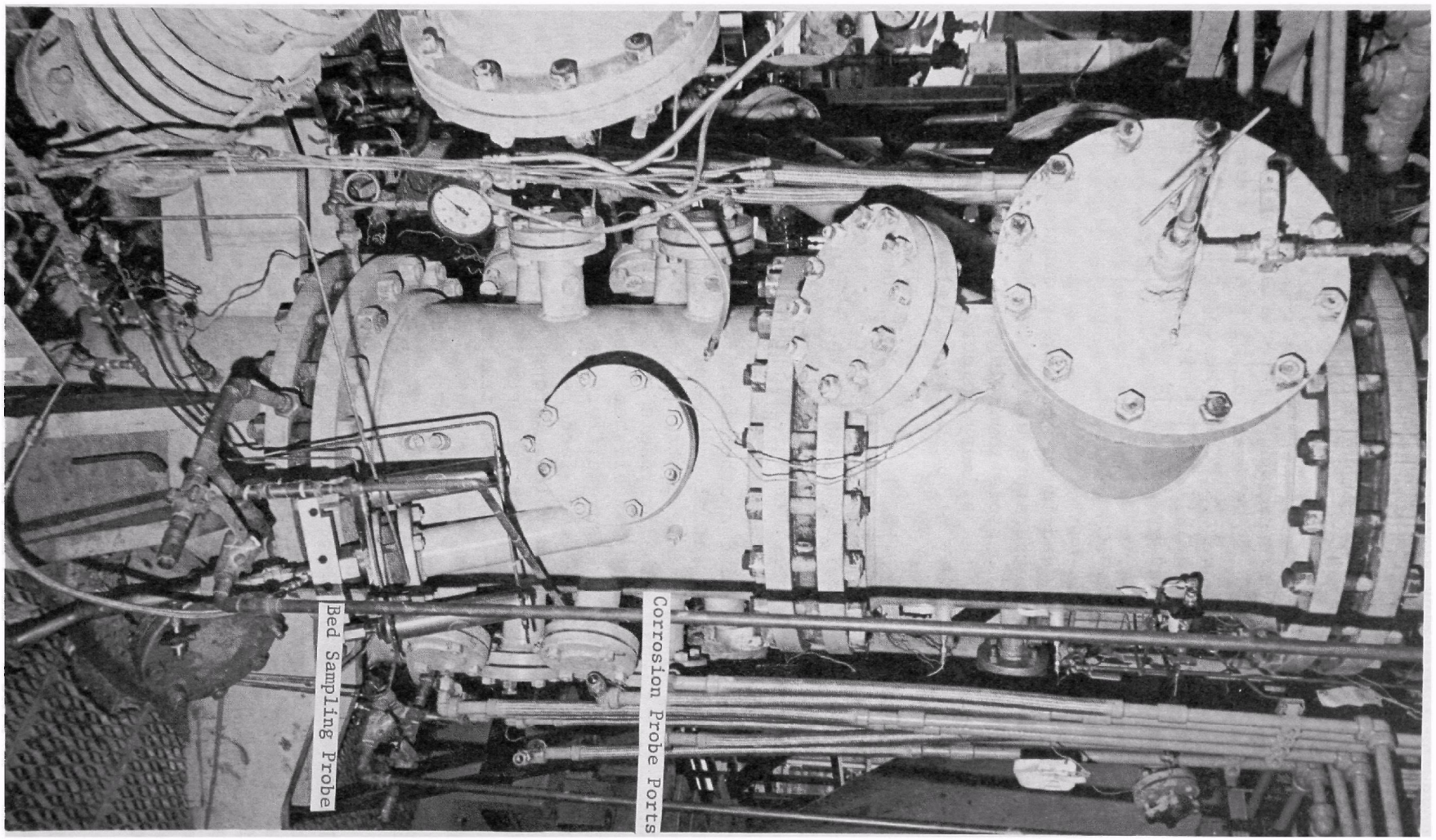

above the fluidizing grid. The upper corrosion test section (Figure III-11) measures 1.5 m in height and is located 5.5 m above the fluidizing grid. Both sections are refractory lined to an internal diameter of 0.32 m to conform to the dimensions of the combustor.

These two sections will provide a test site and environment for exposure of 21 specimens of heat exchanger materials. Twelve of the specimen probes will be located in the lower section within the expanded bed while the remaining nine will be located in the upper section in the freeboard region. The probes (Figure III-12) will be air cooled and temperature controlled to requirements specified by Westinghouse.

Temperature Control

Rate of solids feed is automatically controlled in order to maintain a specific operating temperature within the combustor. This is accomplished through a series of controls involving the combustor temperature, pressure differential between the primary injector and combustor, the injector pressure, and the transport air flow rate (Figure III-2).

A thermocouple in the lower zone of the combustor, 46 cm above the fluidizing grid, is used as the sensor for the control of the combustor temperature. The coal feed rate to the combustor is regulated by the pressure differential between the injector vessel and the combustor - the greater the pressure difference, the greater the feed rate. Temperature control is accomplished by a cascade type control loop using two controllers, one for temperature control and another for ΔP control. A deviation of the desired temperature from the actual combustor temperature causes a signal to be transmitted by the temperature controller to the ΔP coal feed rate controller. This error signal actually resets the set point of the ΔP controller so that a different ΔP will be established between the coal vessel and the combustor. This change in the pressure difference between the coal vessel and combustor causes a change in the coal feed rate which will tend to return the bed temperature to the desired value. Proper tuning of the controllers is necessary for optimum reaction to system perturbations and anticipation of changes in bed conditions. This control system has performed very satisfactorily and provides excellent temperature control and response.

Pressure Control

The FBC Miniplant Combustor has the capability of operating at pressure levels of up to 10.5 atmospheres (140 psig). Pressure control is achieved by restricting the discharge flow of gas from the combustor, so as to achieve an increase in back pressure. This is done by use of a converging nozzle inserted in the discharge line. Adjustment of the combustor pressure is accomplished by metering high pressure air into the discharge line just upstream of the flow nozzle. A 2 inch-ball valve equipped with a pneumatic positioner and actuator regulates the amount of air added in response to a signal from the pressure controller.

The converging nozzle is machined from a silicon carbide section which is inserted into an 8 inch carbon steel blind flange. Four nozzle inserts are currently on hand, with throat diameters of 2.41, 2.67, 2.79 and 2.91

FIGURE III-11

COMBUSTOR UPPER CORROSION PROBE SECTION

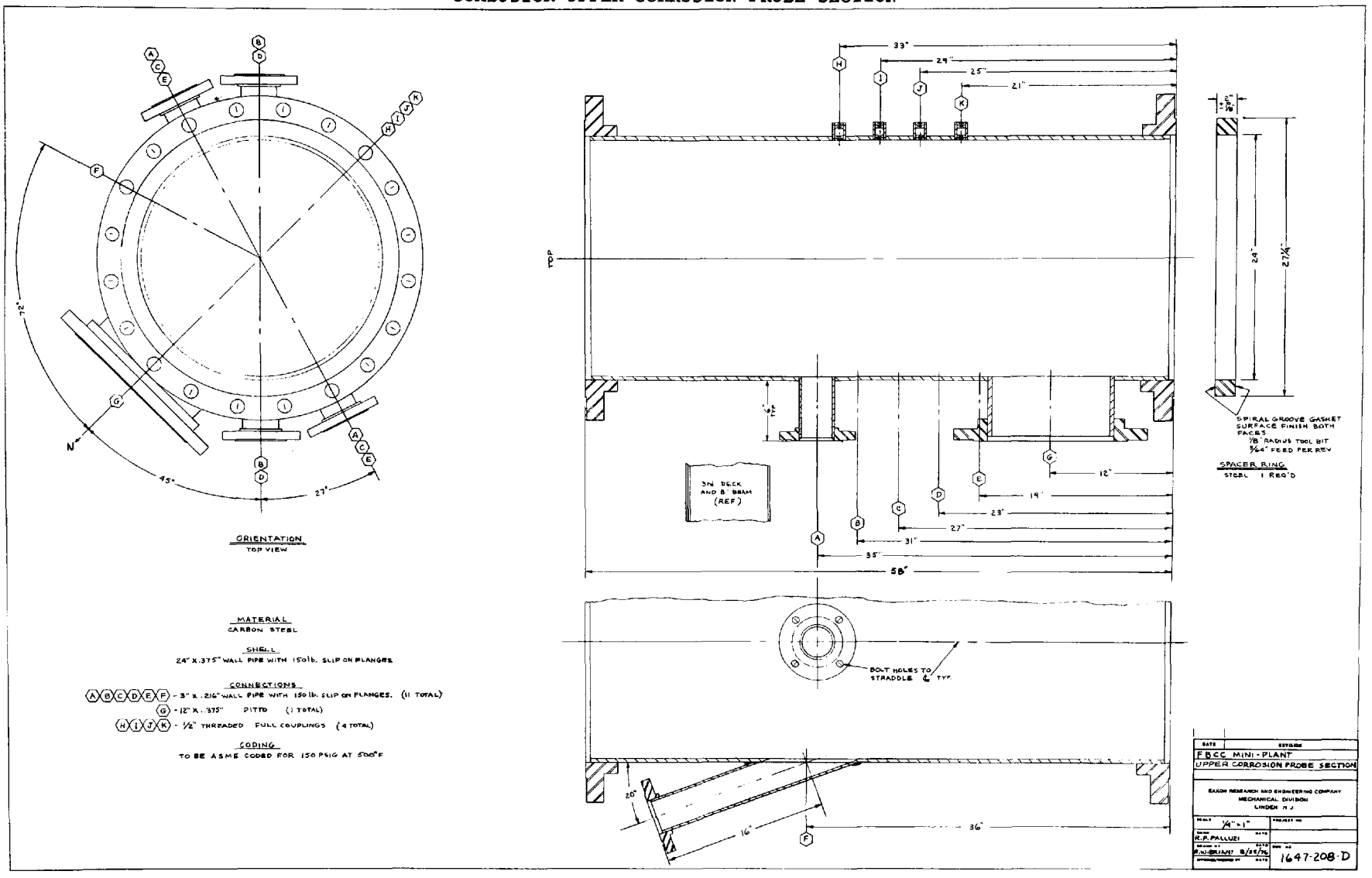

FIGURE III-12

COMBUSTOR CORROSION PROBE

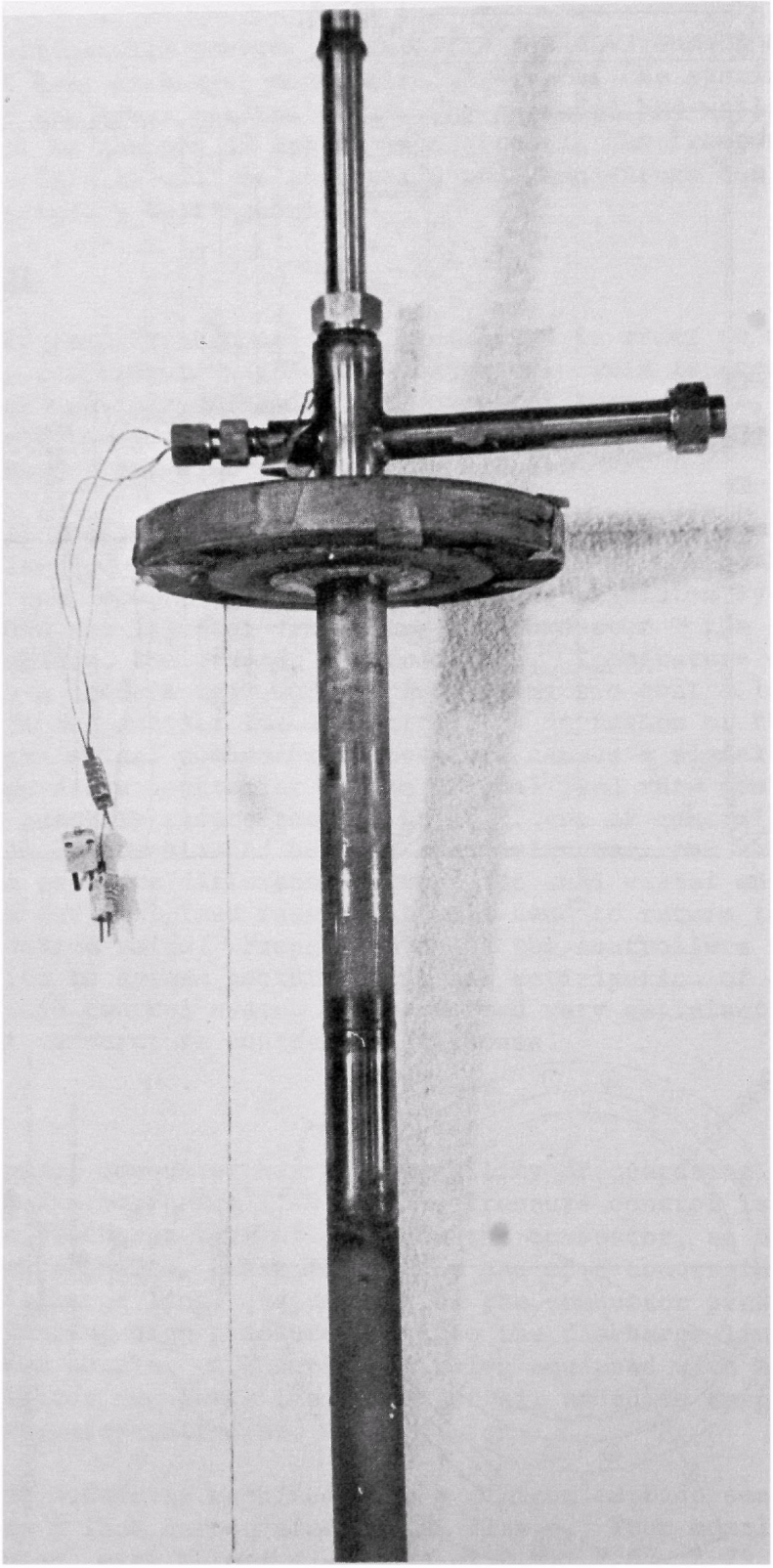

centimeters. By proper nozzle preselection, a wide range of combustor flow conditions can be handled. Control of combustor pressure has always been very good, with variations from the set pressure usually less than 0.1 atmospheres.

Turbine Specimen Erosion Section

A turbine specimen/erosion section was fabricated for EPA by Westinghouse Research Laboratory and inserted in the flue gas line downstream of the secondary cyclone. This includes a nozzle which enables high velocities to be reached at the specimen location with relatively low combustor air flow rates. The section measures 45.7 cm long and has an entrance diameter of 8.9 cm which converges to 2.9 cm at the specimen position. Some of the factors affecting erosion were discussed by Westinghouse in a report to the EPA (3).

During Miniplant Run 52 an erosion test rod supplied by Westinghouse was exposed to superficial velocities of 259 m/sec (850 ft/sec). The base material of the rod was X-45 and was coated with Co-Cr-Al-Y. The temperature at the section was 760°C and the grain loading was measured to be 2.4 gm/m^3 (1.1 gr/SCF). Inspection of the rod following 32 hours of exposure showed considerable erosion (Figure III-13). The rod has been returned to Westinghouse for analysis.

Sampling and Analytical Systems

Bed Sampling Probe--

A solids sampling probe has been designed, constructed and installed to enable acquisition of samples from the combustor bed while a run is in progress (Figure III-10). The need for such a sampling probe was evident during the regenerator demonstration run. In that run, which lasted 125 hours, bed solids did not have to be rejected to maintain bed height, and accordingly no information could be obtained on the composition of the combustor bed. A cross-section of the probe is shown in Figure III-14. The probe consists of a closed-end tube which contains a hole on the sidewall near the top of the tube. In normal operation the top end of the probe is recessed into the refractory wall of the combustor vessel. In this position, the bed particles form a seal around the top of the probe preventing particles from reaching the hole in the sidewall. When it is desired to take a sample, a pneumatic piston pushes the probe forward into the combustor bed, exposing the hole on the upper sidewall. Bed particles rush into this hole in the sidewall and fill the probe cavity. The probe is pneumatically pulled back into the recess in the combustor refractory wall and the captured sample of bed particles is removed from the lower end of the probe.

In Run No. 51, bed samples were taken using the sampling probe at one-hour intervals. The utilization of the bed solids determined from analysis of the particles obtained from the probe samples is shown in Figure III-15. The sorbent utilization decreased with time. This is consistent with an approach toward the expected steady state value of 50 percent sorbent utilization expected for the calcium to sulfur molar feed ratio of 1.67 for this run. The sorbent utilization determined from a bed solid reject sample taken at 5.8 hours into the run is included for comparison in the Figure III-15 and shows good agreement with the results obtained using the sampling

FIGURE III-13

WESTINGHOUSE EROSION PROBE

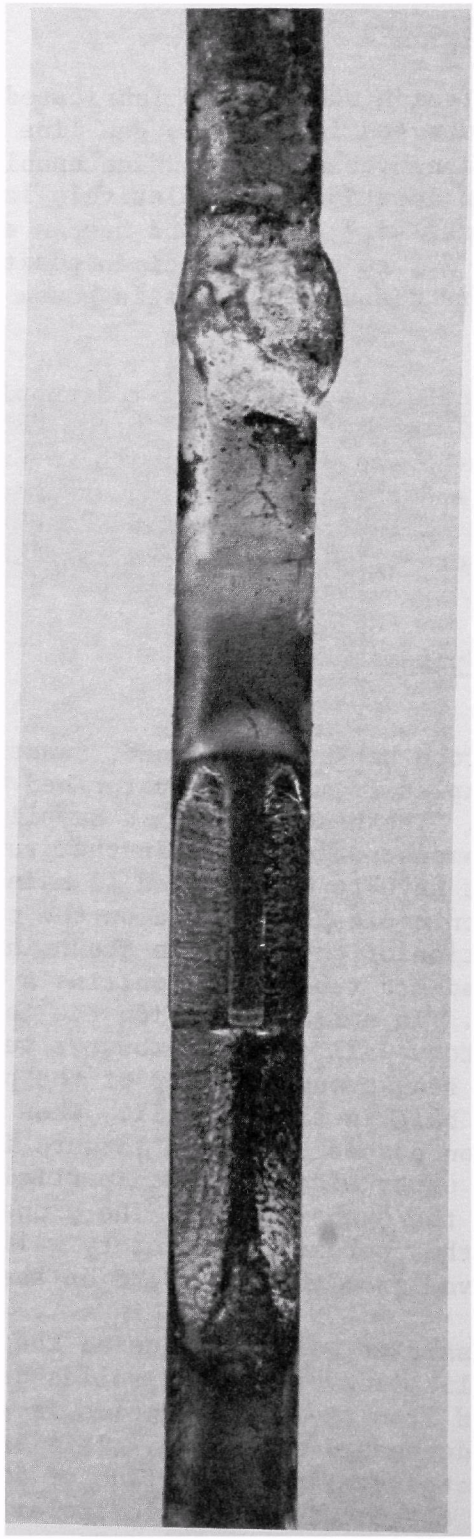

FIGURE III-14

COMBUSTOR BED SAMPLING PROBE

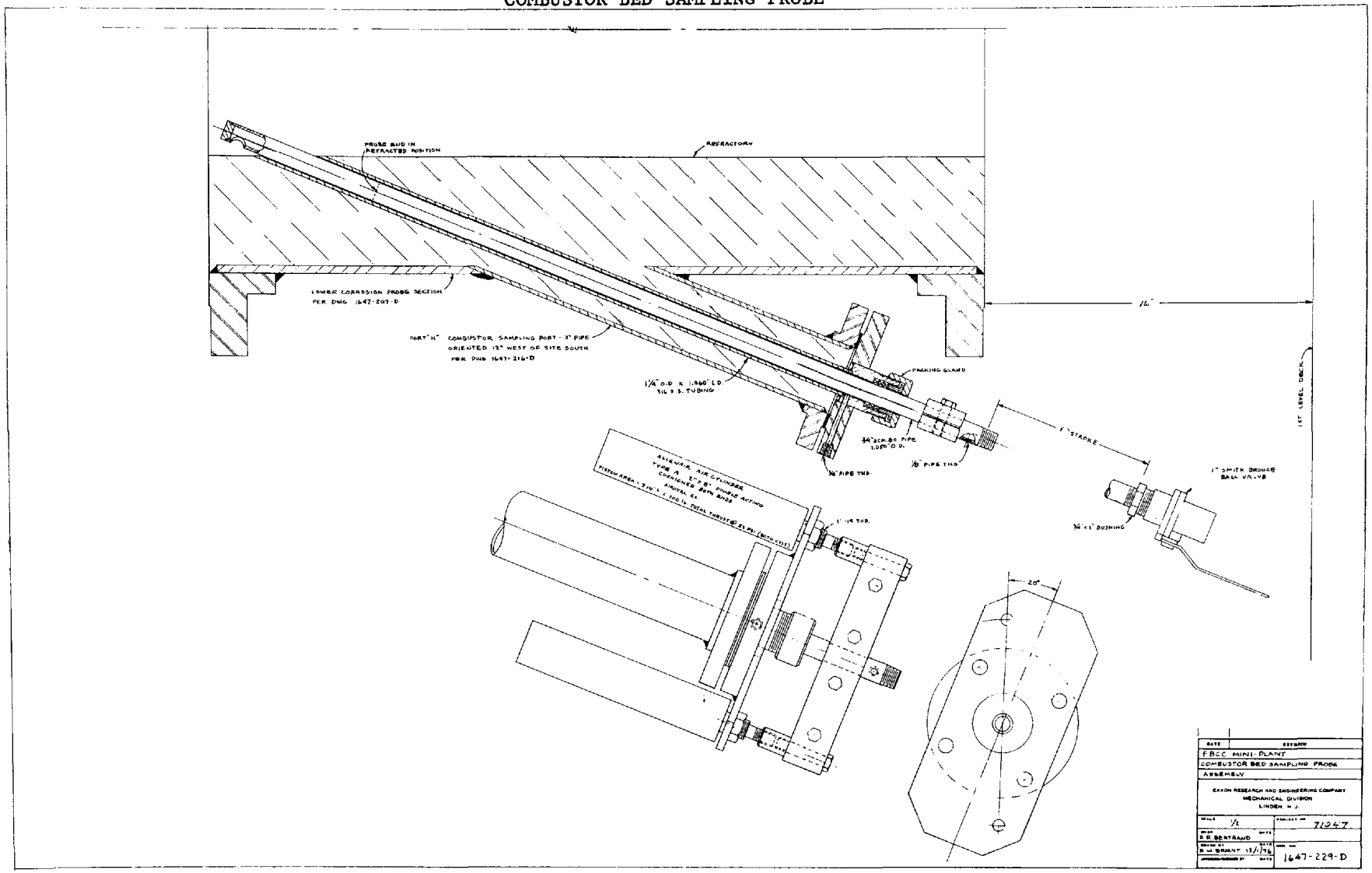

FIGURE III-15

SORBENT UTILIZATION VS. TIME

RUN No. 51

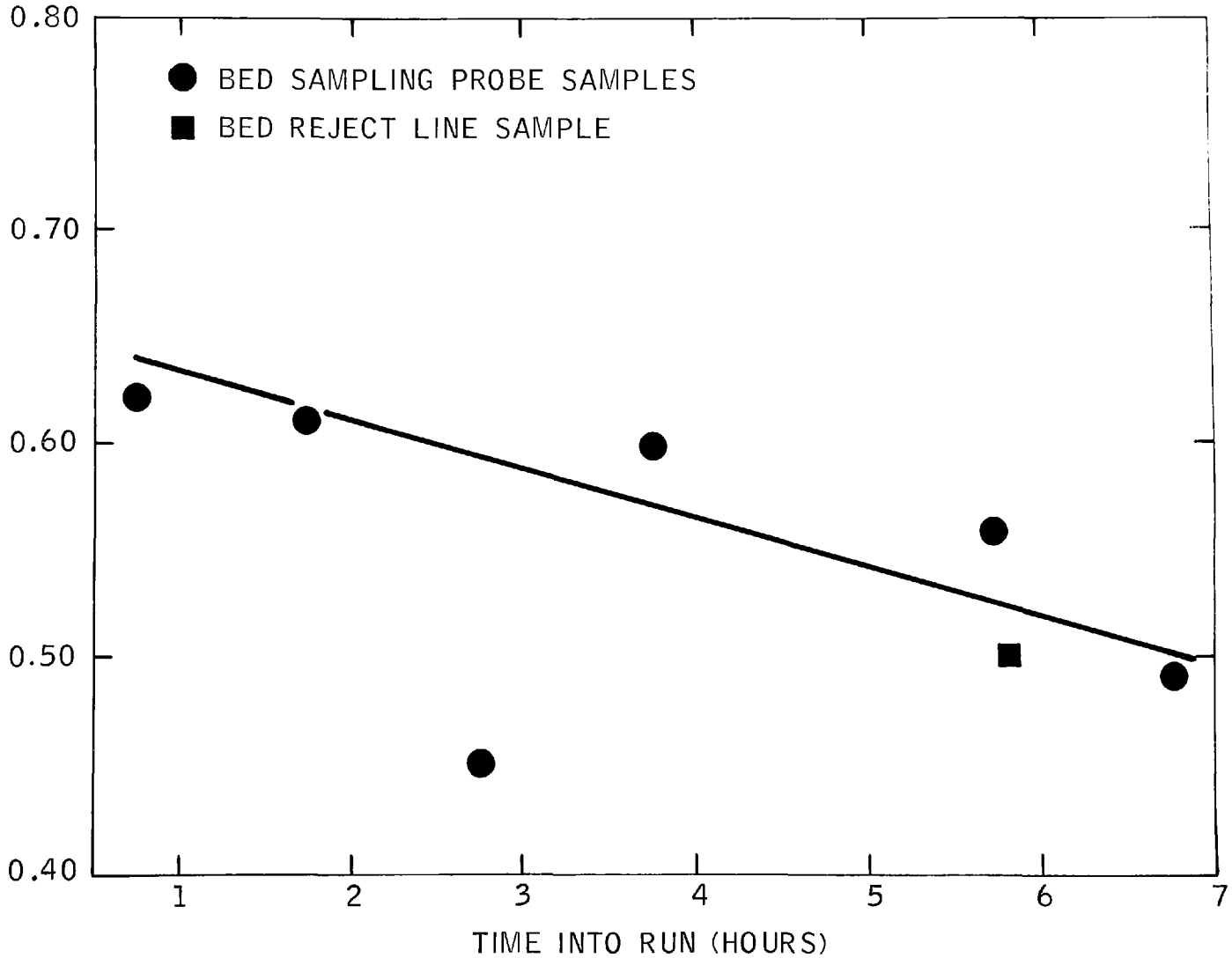

probe. One of the values determined for the sorbent utilization during this period was well outside the range of the other values. This points out the need for taking multiple samples to avoid erroneous results due to non-representative samples.

Gas Sampling System--

The flue gas sampling system is installed at a point downstream of the secondary cyclone. It was described in the previous report (1). The system is designed to produce a solids-free, dry stream of flue gas at ambient temperature and low pressure whose composition except for moisture, is essentially unaltered from that of the original flue gas. This system provides a gas sample which is analyzed by the continuous, on-line, gas analyzers. Another flue gas sample can be extracted which has been filtered, cooled and depressured, but not dried. This system is used to obtain batch samples of flue gas for analysis by wet chemistry methods.

Particulate Sampling System--

The particulate sampling system initially installed on the miniplant is shown in Figure III-16. A 1.09 cm probe was used, and as this system was initially intended to be used at about 275°C, a three stage water cooled heat exchanger was provided. Total particulate sampling was done with Balston Type 30/25 and 30/12 filters containing high temperature resistant (~530°C) BH cartridges. The gas passing the filter was cooled to 200°C and passed through another filter which removed condensed matter. Size distributions were to be made with a Brink impactor at 175°C.

This system was intended to obtain samples at temperatures high enough to prevent condensation of moisture. Some operating problems with this system became apparent and modifications were made. The section containing the impactor was removed after run 50 due to problems of gas leakage from the impactor. It was also decided to increase the operating temperature of the filters to the maximum to avoid condensation of substances other than moisture, which could affect the particulate loading, particle size distribution and composition. The modifications made to the sampling system for the above and other reasons are described below.

- Before Run 50, a second 30/25 (high temperature) filter was placed immediately after the first filter. The second filter was used as a back-up filter in case the cartridge material of the first filter failed or particle by-pass occurred due to excessive pressure drop across the first filter.

- In order to increase the operating temperature of the filter for Run 52, the three stage water cooled heat exchanger was replaced with a five foot length of 1.27 cm OD ss pipe.

- At the end of Run 54, the system was again modified. The changes corresponded to (a) the use of a smaller probe diameter (0.77 cm) to decrease the pressure drop across the filters by reducing the flow rate at isokinetic velocities, and (b) the ability to place the first and second filters next to the high temperature valve, if required, so that the filters may operate at a high temperature (maximum allowable temperature for the filter cartridges is 530°C).

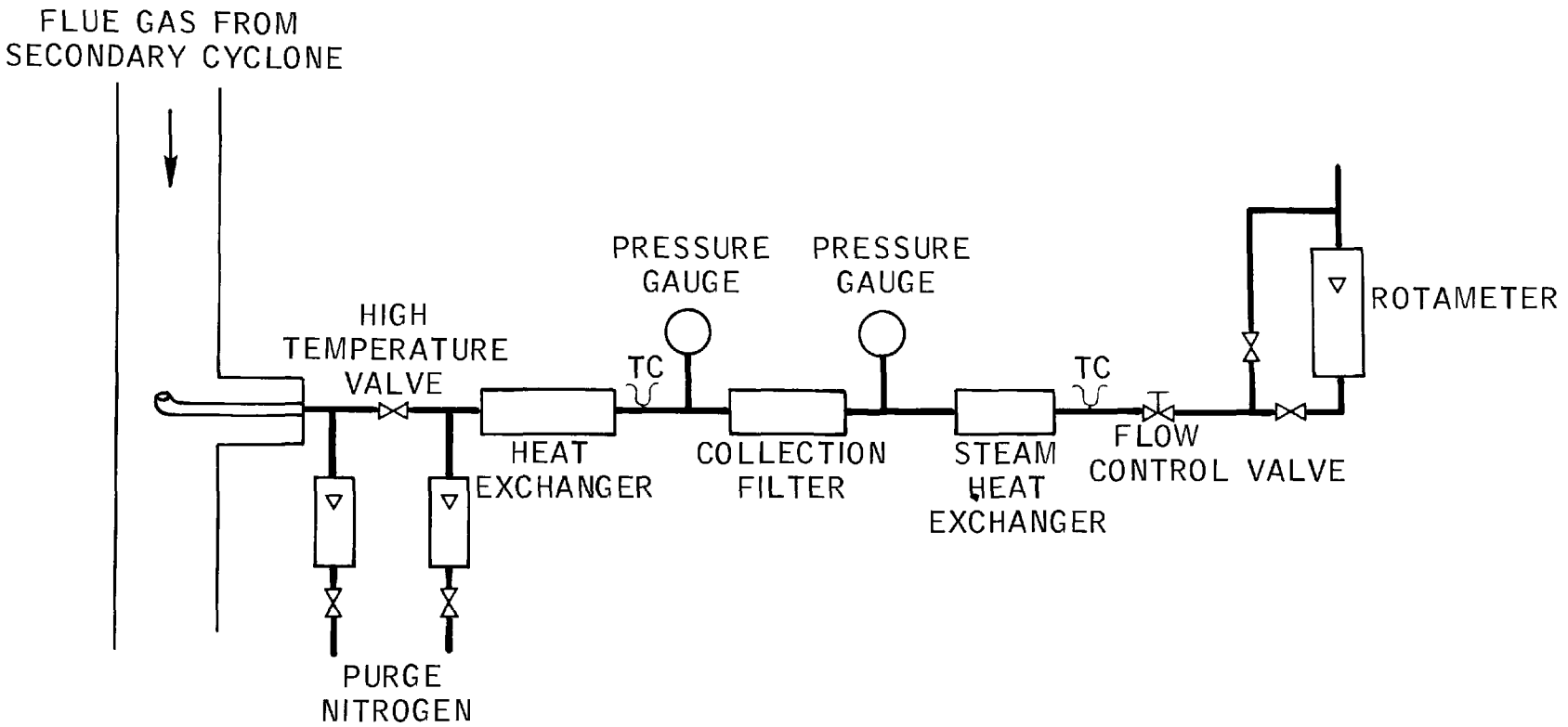

FIGURE III - 16

MINIPLANT PARTICULATE SAMPLING SYSTEM

Future work on particulate sampling will entail the current equipment discussed above, as modified after Run 54, and two other more sophisticated systems. One of these systems will be placed before the granular bed filter and will contain Southern Research Institute's specially designed cyclone set; the other system will be placed after the granular bed filter and will contain an impactor and/or a total filter. Both these systems have been designed to perform at 870°C and 909 kPa, and automatic flow and temperature control devices have been incorporated.

Samples of flue gas will be extracted under isokinetic or constant flow conditions and the temperature of the sample will be maintained by line heaters. The sampling device (cyclone or impactor) will be enclosed in a pressurized furnace in which the temperature is held at the flue gas temperature (up to 870°C). The pressure inside the furnace will be the same as the pressure inside the sampling device so the device will not have to be built to withstand a high pressure. This will minimize structural, sealing and leakage problems. Each system will be self contained and can be moved to different locations on the miniplant. Although the systems will be built to operate up to 870°C, the effect of sampling temperature on particulate loading, size and composition will be measured and the most suitable operating temperature will be determined.

In this report, results on particulate sampling will be given for all runs up to Run 59, in which sampling experiments were carried out.

Acurex Sampling Section--

Several miniplant discharge line sections were modified in December 1976 to allow insertion of a new high temperature-high pressure (HTHP) particulate sampling probe developed by the Aerotherm Division of the Acurex Company. The probe was developed under EPA contract and is described in a recent report (17).

Exxon was requested to build a sampling section to allow a test of the sampling system under high temperature, high pressure conditions. The probe sampling section fabricated by ER&E has a 10 inch stainless steel liner inside of a 16-inch refractory lined pipe section (Figure III-17). Eccentric reducers at each end of the sampling section were necessary to adapt to the existing discharge line piping and also avoid extensive modification of the miniplant structure.

The initial miniplant field test of the Acurex HTHP sampling probe was made during the four day Comprehensive Analysis test series (run #50) March 29 to April 1, 1977. Additional tests with the Acurex HTHP probe were conducted during the week of May 23, 1977. A photograph of the Acurex HTHP sampling probe installation at the miniplant is shown in Figure III-18. This photograph also shows the location of the Westinghouse turbine test section.

Process Monitoring and Data Generation System

Data characterizing the miniplant operating conditions are recorded on 5 multipoint recorders. Three recorders (24-channel Honeywell Electronik 112) monitor output from various measuring instruments - thermocouples, differential pressure transmitters, etc. Two recorders continuously monitor the

FIGURE III-17

COMBUSTOR - ECCENTRIC ACUREX PROBE SECTION

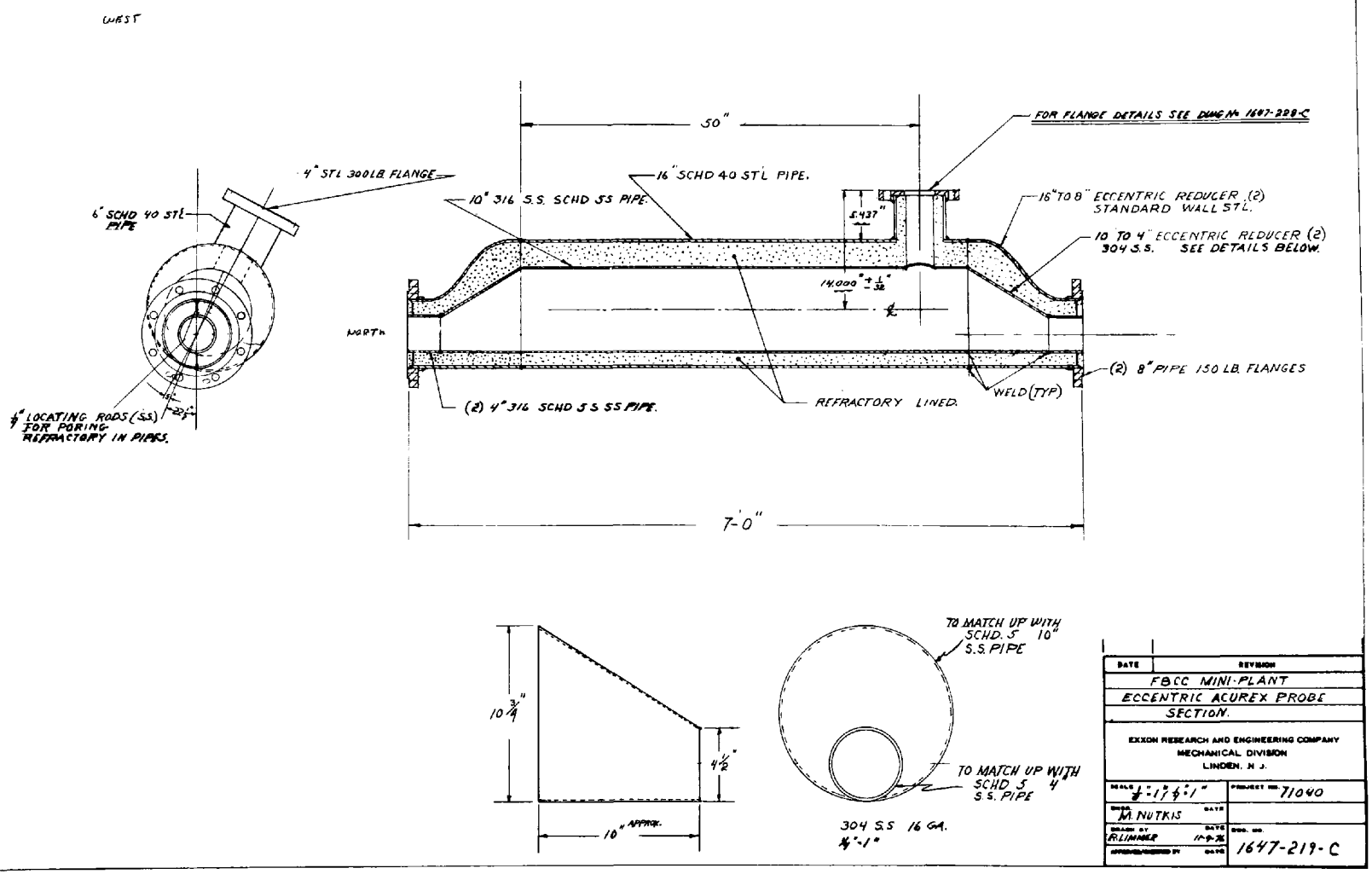

FIGURE III-18

ACUREX PROBE

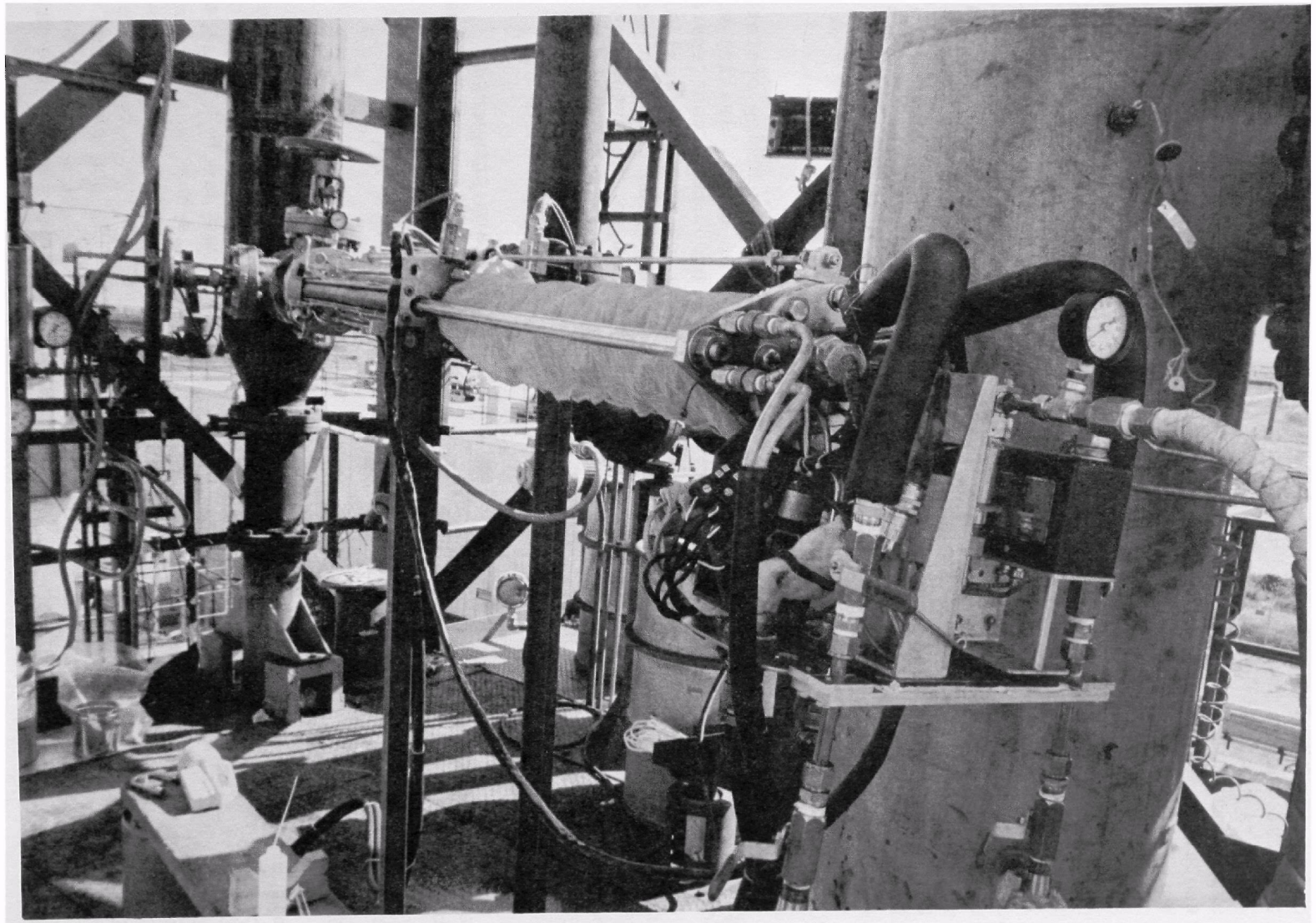

output signals from the gas analyzers. In addition, at one minute intervals, the same output is recorded by a data logger system consisting of a Digitrend 210 data logger with printer and a Kennedy 1701 magnetic tape recorder. Approximately 100 pieces of data are logged with three-quarters involving temperature measurement while the rest deal with pressure and material flow rate. The points logged are given in Appendix F.

Signals from the data logger are scanned every minute and appear as digital output on printed paper tape and are also stored on magnetic tape. The magnetic tape, containing about 6000 items of data per hour of run time, is fed to a computer which converts the logger output to flow rates, pressures, etc. with the proper dimensions. The data are then averaged and standard deviations calculated over preselected time intervals (usually 10 min.). Other quantities are also calculated. This includes average bed temperature, based on four thermocouple readings covering the 15-114 cm interval above the fluidizing grid, superficial gas velocity, excess air, as well as the important gas concentrations.

Combustor Safety and Alarm System

A process alarm system was designed to warn of impending operational problems. Two general alarm categories exist. The first, dealing with less critical situations, alerts the operator of the problem so that appropriate corrective action can be taken. The second class of more critical alarms results in the immediate or time delayed shutdown of the complete system or specific subsystems. An alarm condition is brought to the attention of the operators by a flashing light above the control panel accompanied by a high pitch sound. The sensitivity of the individual alarms is controlled by potentiometers located beneath the control panel.

Appendix G gives a brief description of the alarm triggering condition, the mechanical sensoring device, and the follow-up actions taken by the system.

Coal and Sorbent Properties

Coal--

Coals used in the miniplant variables study were a high volatile bituminous coal from the Consolidation Coal Company's "Champion" preparation plant in Pennsylvania and Illinois No. 6 seam coal obtained from Carter Oil Company's Monterey No. 1 mine. The Champion coal was partly classified to remove fines smaller than 40 U.S. Mesh. The Illinois coal was screened to 6 X 25 U.S. Mesh to prevent plugging of the primary injector feed vessel. Particulate size distribution and composition data for both coals are shown in Figure III-19 and Table III-1 respectively. During and after Run 50, the Champion coal sulfur content changed from the average of 2 $\pm$ 0.1% to between 1 and 1.6% due to dilution with a 0.6% sulfur Kentucky coal at the preparation plant. This was not detected until after the runs had begun.

Sorbent

Sorbent--

Grove limestone (BCR No. 1359) and Pfizer dolomite (BCR No. 1337) were the primary sorbents used in the miniplant variables study. The composition

FIGURE III-19

COAL PARTICLE SIZE DISTRIBUTION

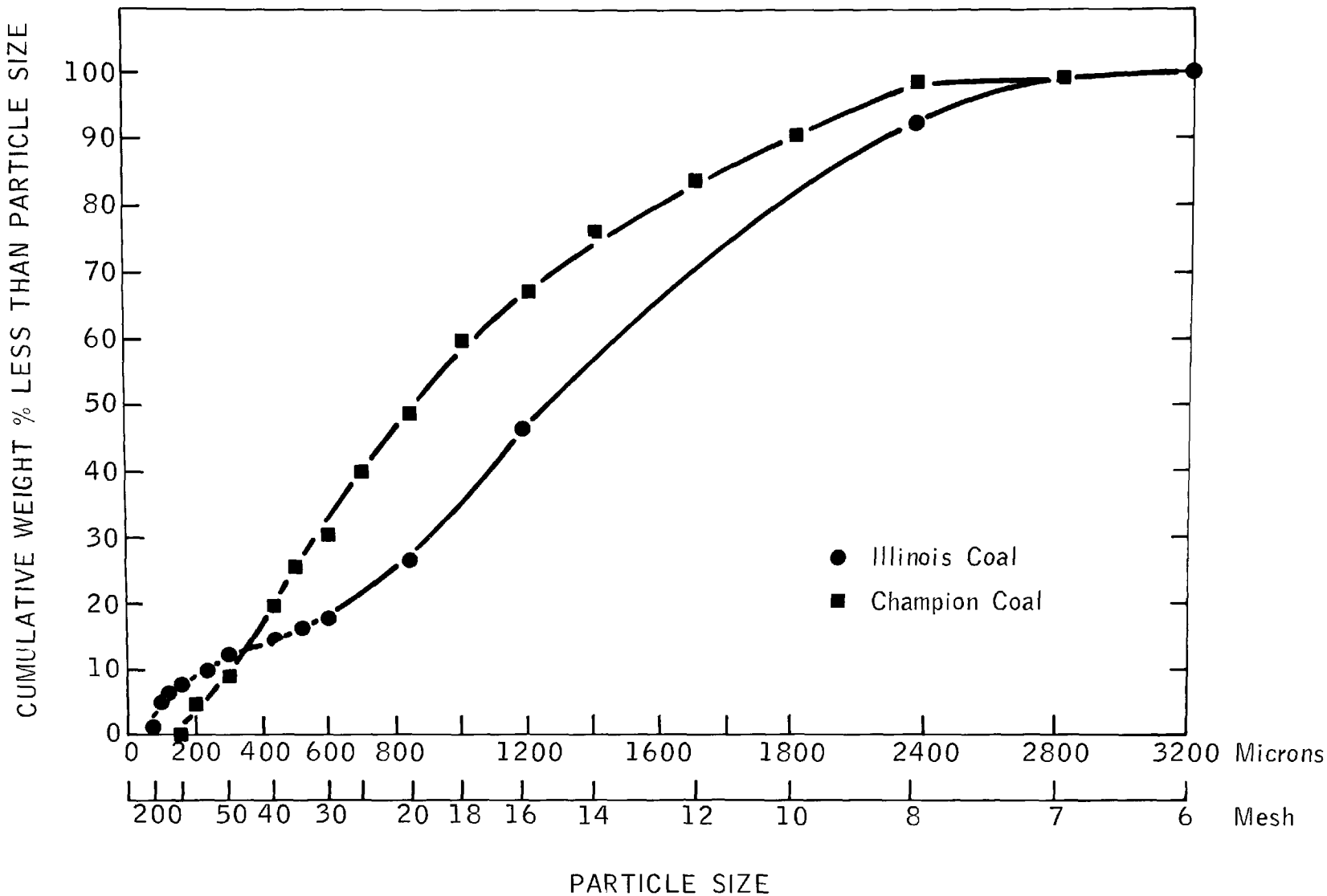

TABLE III-1. COAL COMPOSITION

Run No.	Coal Type	Ultimate Analysis								
		Moisture	Ash	Total Carbon	H	S	N	Cl	O_2	Heating Value BTU/lb
41.1	Champion	2.83	8.03	70.38	5.01	1.96	1.36	0.09	10.43	13,346
41.2	Arkwright	0.88	7.42	77.11	5.09	2.47	1.07	0.14	5.96	13,699
43.1-43.5	Illinois	3.01	9.95	67.71	4.77	4.20	1.17	0.05	9.19	12,254
45.1-48	Champion	2.83	8.03	70.38	5.01	1.96	1.36	0.09	10.43	13,346
50.1A-50.3	Champion(1)	1.67	13.10	74.00	5.00	1.85	1.50	--	2.40	12,973
50.4-52	Champion(1)	1.32	11.90	73.40	5.00	1.66	1.40	--	4.20	13,268
54-59	Champion(1)	2.19	12.50	71.35	4.74	1.40	1.54	0.07	6.31	12,514

---

(1) Diluted with 0.6% sulfur Kentucky coal.

of these stones is given in Table III-2. Most of the runs were made with the stone screened to give the distribution of limestone and dolomite shown in Figure III-20.

Operating Procedures

Prior to initiating a run, a detailed checkout procedure is followed to insure that the system is ready for operation. This includes various equipment checks, alarm system checks, calibration of flue gas analyzers, activation of process monitoring and control systems, and the turning on of all cooling water systems. All runs are begun with an initial bed of sorbent in the combustor. This consists of either a fresh charge of uncalcined limestone or the bed from the previous run.

The first operation of start-up involves heating the gently fluidized sorbent bed by burning natural gas in the burner plenum followed by injection of kerosene into the bed. Prior to ignition of natural gas, an air flow of about 9.9 Sm^3/min (350 SCFM) or about half that used at normal operating conditions is fed through the burner while combustor pressure is raised to 280 kPa gauge. Once ignition begins, this procedure maximizes incoming gas temperature under conditions which allow good natural gas combustion and adequate bed fluidization. Water flow rates through the combustor cooling coils are kept low to reduce heat loss to the coils. Ignition begins by simultaneously feeding 0.57 Sm^3/min (20 SCFM) of natural gas through the burner while activating an ignition electrode.

Because of the limited capacity of the gas compressor, natural gas burned in the plenum is used only to heat the bed to a temperature of about 430°C, sufficient to insure self-ignition of kerosene. This generally requires 20-30 minutes. At this point, kerosene is injected into the lower portion of the bed. When rising temperatures indicate ignition of liquid fuel, natural gas feed is discontinued to insure sufficient air for complete combustion of kerosene. Approximately 10-15 minutes are required to raise the bed temperature to 650°C, which is sufficient to achieve self-ignition of coal.

Coal, usually mixed with limestone, is then fed to the combustor from the primary injector. A steady stream of 1.7 Sm^3/min (60 SCFM) of transport air is used to convey coal into the combustor. Actual rate of coal injection is determined by the pressure differential between the injector and combustor. The rate is initially set at an appropriate value based on past experience under similar operating conditions. Once ignition of coal is verified by rapidly rising temperatures, kerosene flow is stopped. At this time, the main combustion air feed line to the plenum is opened allowing most of the air to bypass the burner, and both combustion air flow rate and combustor pressure are rapidly increased to their designated operating values. Flow of water to each cooling coil is adjusted to maintain steam/water exiting temperatures of 138-150°C. Once the desired bed temperature has been reached, it is held constant by the automatic coal feed rate control system.

FIGURE III-20

SORBENT PARTICLE SIZE DISTRIBUTION

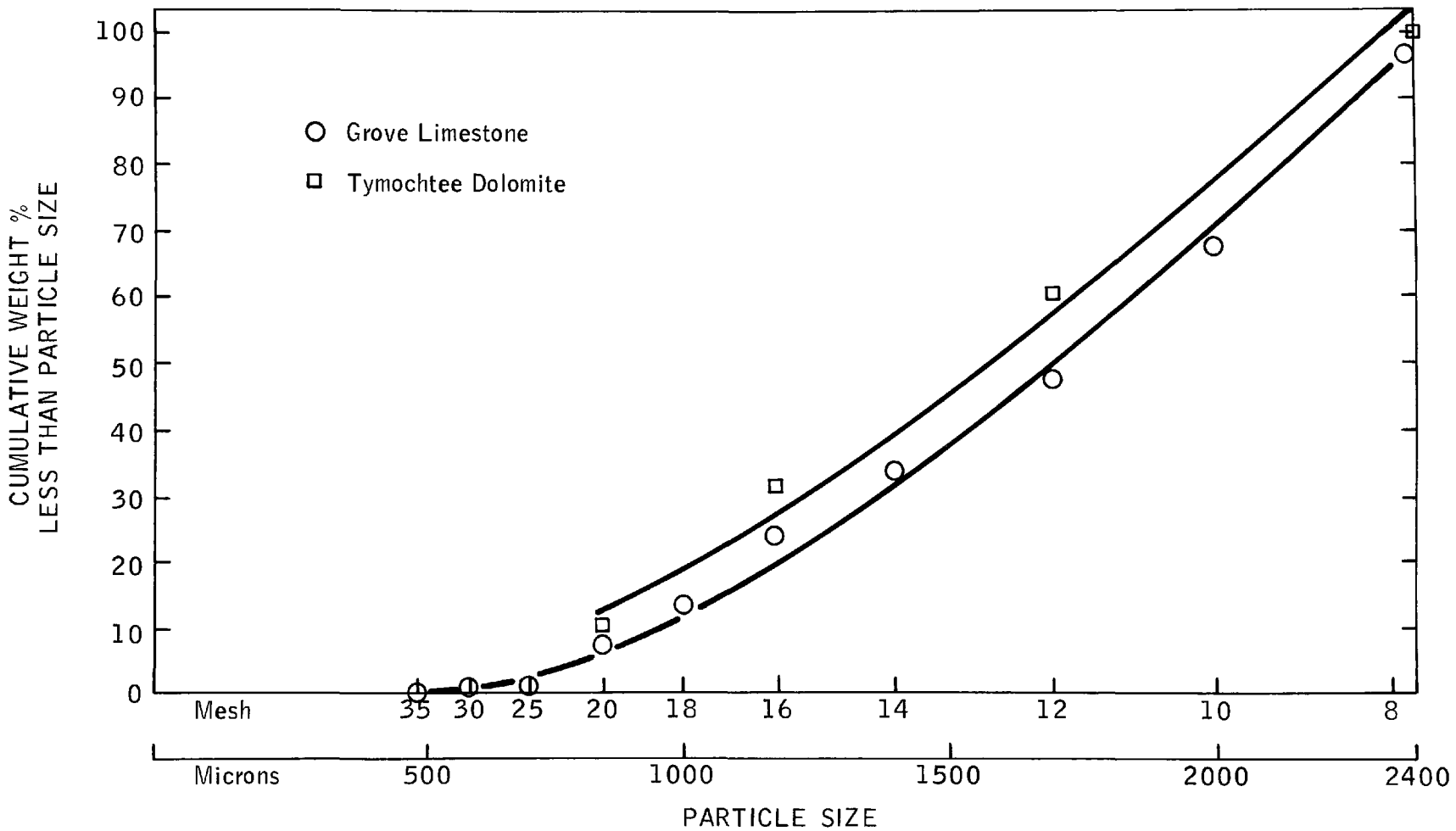

TABLE III-2. SORBENT COMPOSITION

Run Number	Quarry	Sorbent Type	Weight Percent				
			CaO	MgO	SiO_2	Al_2O_3	Fe_2O_3
41.1-41.2	Grove	Limestone	97.0	1.2	1.1	0.3	0.2
43.1-43.5	Pfizer	Dolomite	54.0	44.0	0.9	0.2	0.3
45.1-47	Grove	Limestone	97.0	1.2	1.1	0.3	0.2
48-51	Pfizer	Dolomite	54.0	44.0	0.9	0.2	0.3
52	Pfizer	Dolomite	57.8	40.7	0.25	1.9	0.133
56-59	Pfizer	Dolomite	57.8	40.7	0.25	1.9	0.133

Analytical Procedures

Particulate Sampling

The equipment for particulate sampling has been described on page 35. The key to sampling consists of accurately weighing the filter elements and cartridges before and after the experiment and sustaining isokinetic velocity throughout the experiment. Before starting, air is admitted to the probe to prevent it from plugging. This air is shut off after the filters are in place, and the high temperature valve is opened. Pressure and temperature readings are taken at regular intervals, and the rotameter is constantly and carefully checked and/or adjusted for isokinetic sampling. At the end of the sampling period, the high temperature valve is shut off, and air is admitted into the sampling system and into the probe.

After the total weight of the particulates is obtained, the solids are wet sieved to obtain the $\pm$ 45 μm fractions. The -45 μm fraction, which usually consists of 80%$^{+}$ of the total, is then analyzed by a Coulter Counter to obtain the particle distribution.

EXPERIMENTAL RESULTS AND DISCUSSION

The combustion experimental program was directed primarily toward understanding the factors which control SO_2 emissions from the pressurized combustor. However, information on NO_x emissions, particulate emissions, and carbon combustion efficiency were also obtained. In addition, the first test in a series of tests was completed designed to make a comprehensive analysis of all emissions, especially trace emissions of potentially harmful materials. Other information such as temperature profiles in the combustor and cyclone efficiency data was also generated in the test program.

This section reports and discusses the results of the combustion program.

SO_2 Retention

The objectives of the SO_2 retention program were to study the effect of coal type and the use of precalcined limestone sorbent on SO_2 retention. The effect of other variables was studied and reported previously (1).

Effect of Coal Type--

The effect of coal type and sulfur content was determined in a series of runs made with an Illinois No. 6 coal containing 4.2% sulfur and Pfizer No. 1337 dolomite sorbent. Coal and sorbent properties are given in Tables III-1, III-2. Details of the runs (43.2 to 43.5) are given in Appendix H-1. The Ca/S molar ratio, i.e., moles of calcium fed in the dolomite to moles of sulfur fed in the coal, was varied from 0.7 to 1.6. SO_2 retention results using the Illinois coal are shown in Figure III-21 as a function of the Ca/S ratio and are compared to data reported previously using a Pittsburgh Seam coal (Champion) containing 2% sulfur (1). As seen in Figure III-21, the retentions measured with the Illinois coal fit reasonably well with the data and the correlating line established for the Pittsburgh coal. This suggests that the dolomite sulfation reaction is first order in SO_2 concentrations and is consistent with results reported previously by others (2,3,4).

FIGURE III-21

SO_2 RETENTION WITH DOLOMITE SORBENT

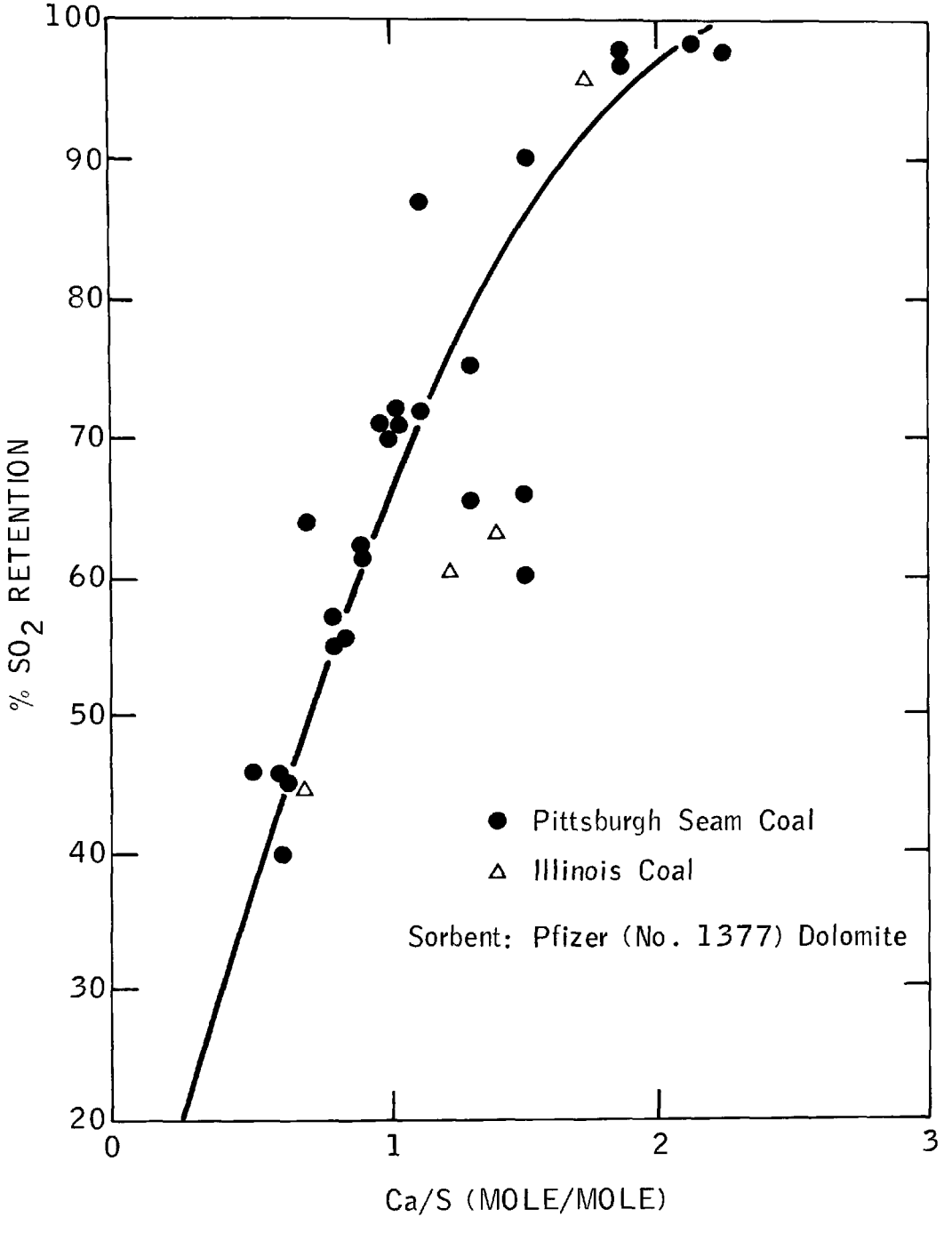

Effect of Limestone Precalcination--

Previous pressurized FBC studies with limestone sorbent indicated that the limestone desulfurization activity was determined in part, by the extent of calcination occurring in the combustor (1). Higher combustor temperatures promoted calcination and increased limestone activity. However, even at the higher combustor temperatures, limestone was less active than dolomite at an equivalent Ca/S molar ratio. It was also found that limestone desulfurization activity approached zero under low temperature "turndown" operating conditions due to the inability of the limestone to calcine at those conditions. Since the level of calcination figured so strongly in determining the activity of the limestone, a series of runs were made in which the limestone was precalcined and fed to the combustor in the calcined form along with the coal. The runs were made with Champion coal and Grove No. 1359 limestone. Coal and limestone properties are given in Tables III-1 and III-2. The limestone was calcined in the miniplant combustor at a temperature of about 870°C at 940 kPa pressure. The natural gas fired preheat burner was used during calcination to maintain the temperature at 870°C. A single cooling coil of reduced size was used to remove excess heat and control the temperature at the proper level. The CO_2 partial pressure in the combustor during calcination was about 109 kPa. The calcined limestone was removed from the combustor, stored in steel drums and then added, by hand, to the coal/limestone blender located in front of the coal/stone injector vessel. The detailed run conditions and results (runs 46.1-46.4) are in Appendix H-1. The runs were made under variable temperature conditions with temperatures ranging from 760 to 920°C. Ca/S molar ratios varied from 0.9 to 2.5.

The results of the runs using precalcined limestone at 865 to 920°C are given in Figure III-22. Figure III-22 also shows, for comparison, the correlating lines for dolomite and raw limestone developed earlier and reported in the previous report (1). As seen in Figure III-22, the precalcined limestone is as active, at an equivalent Ca/S molar ratio, as dolomite and is much more active than raw limestone. Also, the activity is maintained at the lower temperature (865°C) where limestone would not be expected to calcine extensively in the combustor.

A run was also made with precalcined limestone at a very low "turndown" temperature (760°C) where previously, raw limestone was shown to be completely inactive (1). The result is given in Figure III-23 where it is compared to earlier results obtained with dolomite. The solid line is the correlating line developed for dolomite and precalcined limestone. The individual data points are those obtained with dolomite and precalcined limestone at the very low temperature "turndown" conditions (690-760°C). The dashed line correlates the low temperature results obtained with dolomite and shows that the dolomite is slightly less active at the lower temperatures. Again, precalcined limestone is as active, at an equivalent Ca/S molar ratio, as dolomite, even though the low temperatures would strongly favor the formation of $CaCO_3$ rather than CaO in the combustor.

The effect of precalcining limestone was studied previously in TGA equipment by Westinghouse Research Laboratory (5). In that study it was found that precalcination under a high CO_2 partial pressure resulted in a very active sorbent. The results obtained in this study support the Westinghouse results. In other studies carried out at Argonne National Laboratory (6) it was found that the activity of a sorbent could be related to the surface

FIGURE III-22

SO_2 RETENTION WITH PRECALCINED LIMESTONE

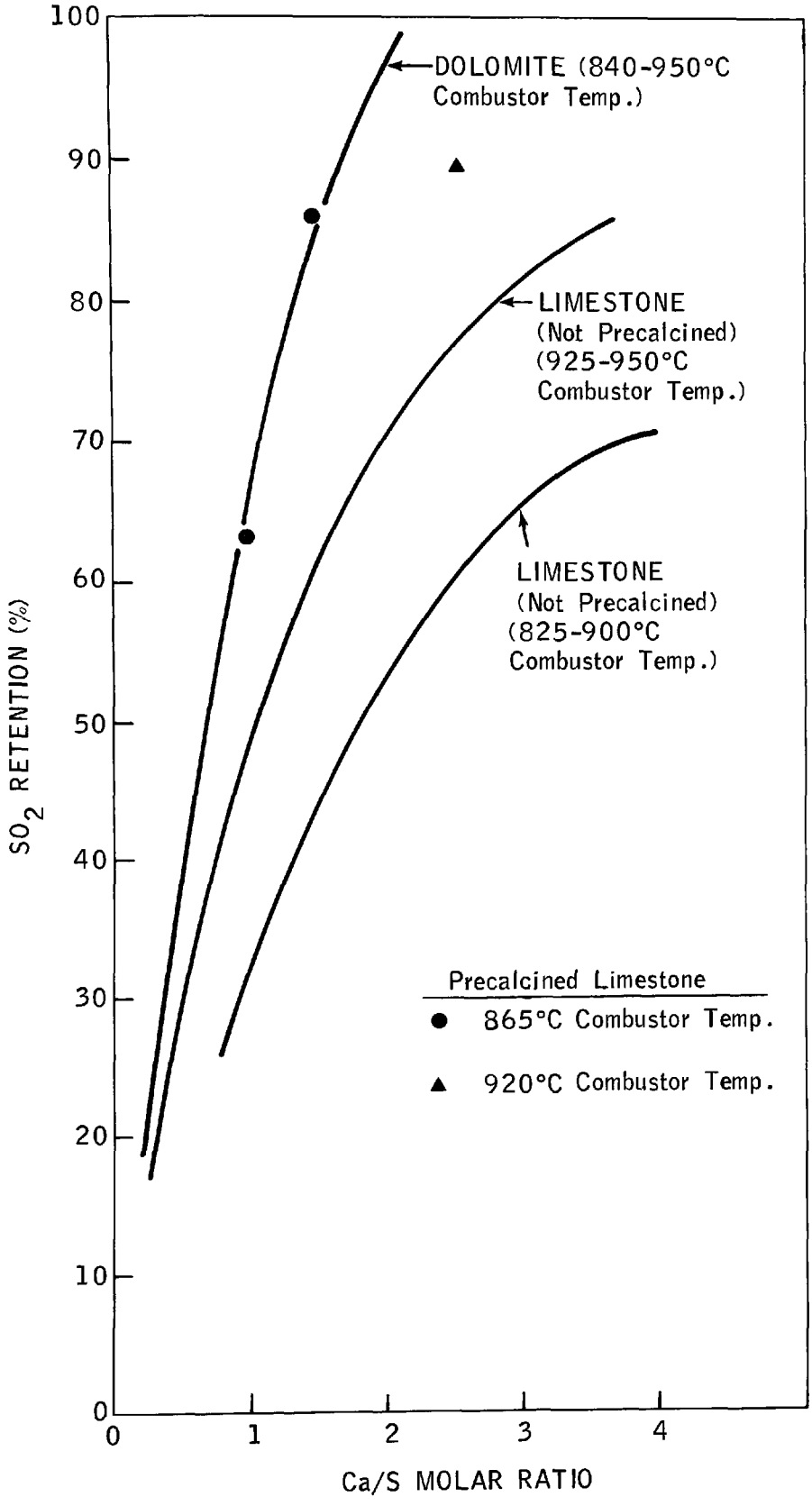

FIGURE III-23
EFFECT OF LOW TEMPERATURE OPERATION ON SO_2 RETENTION

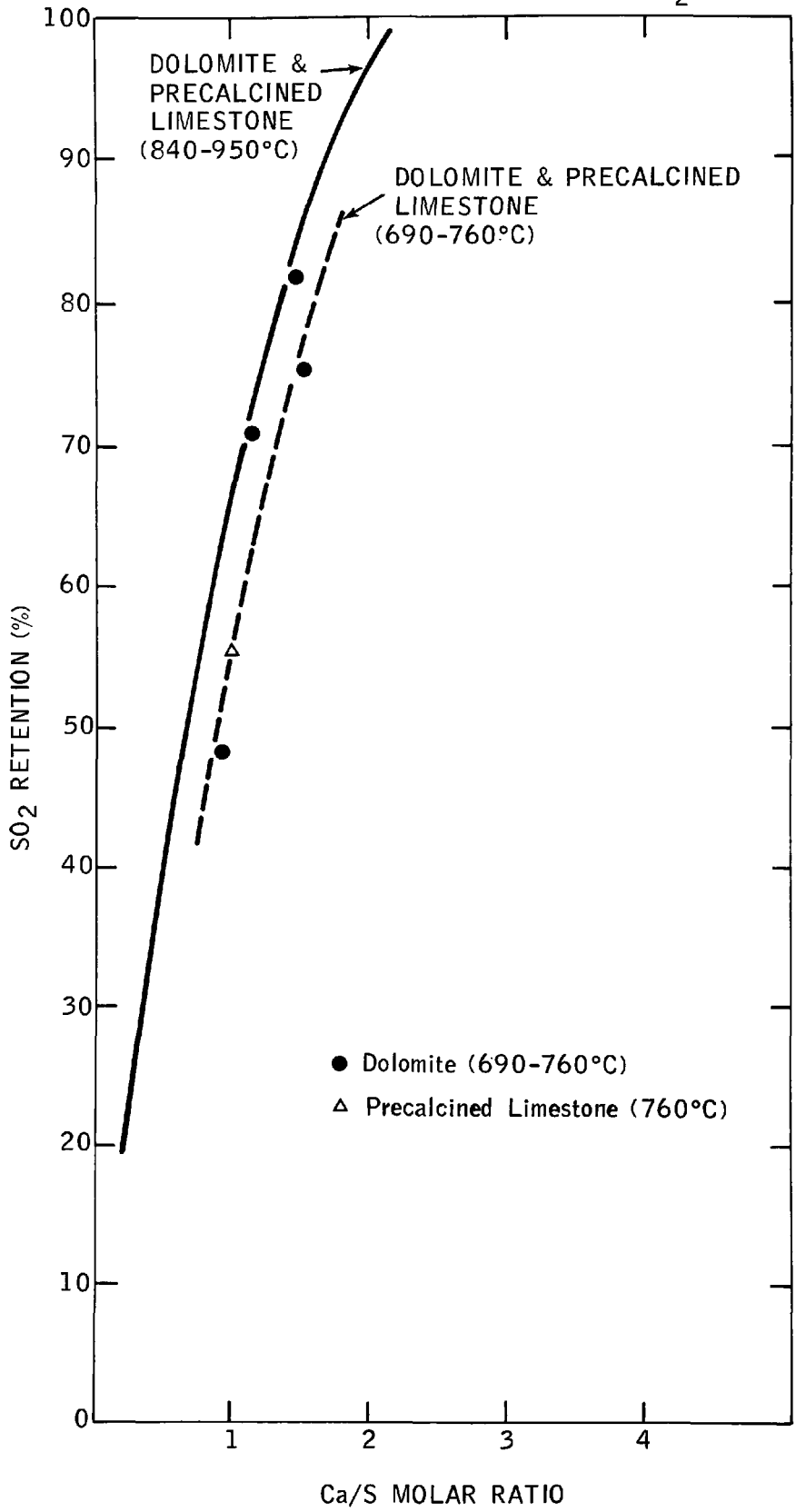

area of the sorbent occurring in large diameter pores. Precalcining under high CO_2 partial pressure conditions apparently produces such a favorable pore structure. Also, the pores appear to be large enough that carbonation of the limestone, which occurs under very low temperature conditions, does not reduce the pore diameter enough to prevent diffusion of SO_2 into the interior of the limestone particles.

Further evidence of the high activity of the precalcined limestone can be seen from the level of calcium sulfation in the used sorbent. The sulfation levels of limestone varied from 20 to 39% in previous runs made in the miniplant. In the series of runs made with precalcined limestone, the sulfation level ranged from 55 to 67%. This is comparable to sulfation levels normally measured with dolomite sorbent.

As a result of the above and previous studies, the sorbent requirements needed to satisfy the current EPA new source performance standards for SO_2 emissions from a coal fired boiler (1.2 lb SO_2/M BTU coal fired) can be estimated. The estimate is shown in Table III-3. The estimate was based on a gas phase residence time of 2 s and a boiler temperature of 930°C. As seen in Table III-3, dolomite and precalcined limestone are more effective than limestone on a molar basis. However, on a weight basis, limestone is slightly more effective than dolomite with a coal containing 2% sulfur. Limestone and dolomite are equivalent for a 3% sulfur coal. For coals containing more than 3% sulfur, dolomite is more effective than limestone even on a weight basis. However, precalcined limestone is more effective than dolomite for all sulfur levels.

The advantage of precalcined limestone as seen in Table III-3 is significant. The weight requirements, which are expressed on an uncalcined stone basis, are half the dolomite requirements and as little as 40% of the limestone requirement without precalcination.

NO_x Emissions

NO_x emissions measured in all miniplant runs, including those reported previously, are plotted in Figure III-24 as a function of percent excess air. Data obtained in the runs made in this reporting period follow the same trend line and are within the data scatter of the earlier runs. The NO_x emissions were found to vary from 50 to 200 ppm or 0.04 to 0.17 g (as NO_2)/MJ (0.1 to 0.4 lb/M BTU). Though the operating conditions varied greatly, the only statistically significant variables were the excess air (or the flue gas oxygen concentration) and bed temperature. The NO_x emissions increased 4 fold, from 0.04 to 0.17 g/MJ over the 5 to 110% range of excess air. The temperature effect in the 670 to 940°C (1250 to 1750°F) range was secondary and caused only a 25% increase in the emission level. The emissions are well below the EPA new source performance standard of 0.3 g (as NO_2)/MJ (0.7 lb/M BTU) and have an average value of only 0.09 g/MJ (0.2 lb/M BTU) at 15% excess air, the level most likely to be used in a commercial size boiler.

Previous studies carried out by Argonne (4) and Exxon (7) indicated that NO_x emissions from an atmospheric FBC unit could be reduced by a two stage combustion process. In this process, a substoichiometric quantity of air would be used to fluidize the bed and partially burn the coal. The balance of the combustion air would be added at a slightly higher elevation

TABLE III-3. SORBENT REQUIREMENTS

		Ca/S			Wt. Uncalcined Sorbent/100 Wt. Coal		
S (%)	Retention (%)	Limestone	Precalcined Limestone	Dolomite	Limestone	Precalcined Limestone	Dolomite
2	59	1.3	0.8	0.8	8.2	5.0	10
3	73	2.1	1.0	1.0	20	9.4	20
4	79	2.8	1.2	1.2	34	15	29
5	84	3.2	1.3	1.3	51	20	40

Residence Time 2 s

Temperature >930°C

SO_2 Emissions 1.2 lb/M BTU

FIGURE III-24

CORRELATION OF NO_x EMISSIONS

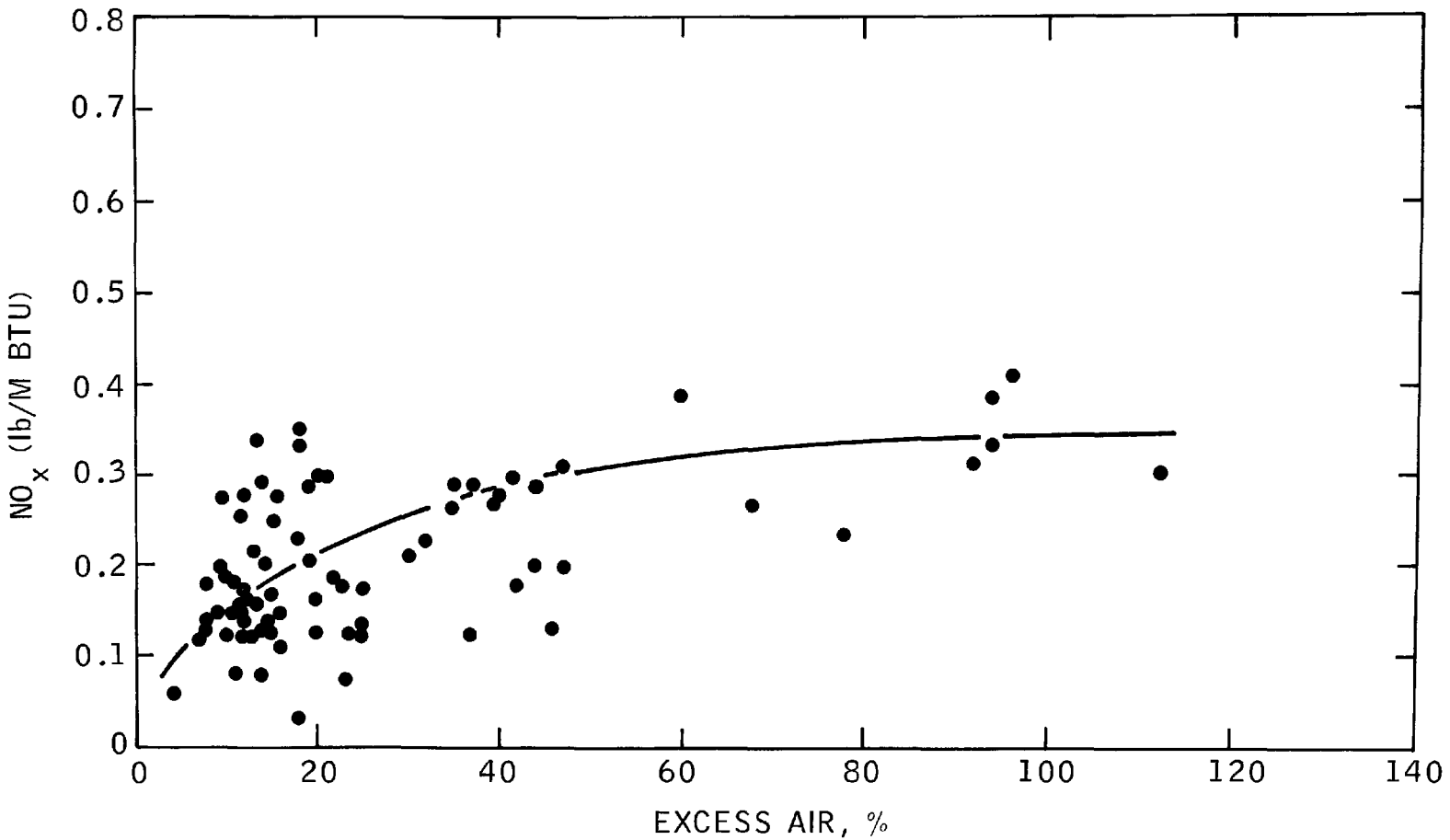

in the combustor. In the zone between the coal injection point and the point where the secondary air was added, a reducing environment would be established which would promote NO destruction reactions such as reduction with CO, H_2 or carbon. This concept was tested by Argonne and Exxon and was found to reduce NO_x emissions significantly. No extensive, planned experimental work has been carried out to investigate the use of staged combustion in a pressurized FBC system. However, some unplanned results were obtained in a miniplant run which suggests that staged combustion may have merits in a pressurized system as well. In one run (run 47), air compressor problems resulted in poor combustion of coal and the formation of CO levels in the flue gas up to 1800 ppm. As the CO concentration increased, the NO_x concentration dropped to 10 to 20 ppm. This is shown in Figure III-25. These very low NO_x levels measured under reducing conditions indicate that two stage combustion may be a possibility for pressurized FBC and could reduce NO_x emissions to almost insignificant levels.

Other Gaseous Emissions

SO_3 emissions in the flue gas were found to vary widely, usually over a range of 0 to 30 ppm with some measurements as high as 50 to 150 ppm. No correlation was found with operating conditions and it is postulated that the SO_3 was most likely formed in the flue gas sampling system.

CO emissions were very low, generally in the range of 50 to 200 ppm at bed temperatures above 825°C except in those cases, as described above, where upsets occurred which produced poor coal combustion conditions. As the temperature was reduced below 825°C, CO emissions increased sharply to 300 to 800 ppm at 700 to 750°C.

Particulate Emissions

Particulate emissions in the flue gas downstream of the secondary cyclone were measured using the system described on page 35.

Tables III-4 and III-5 summarize particulate emission results. The first table gives results before the sampling system was modified by placement of a second Balston filter immediately after the first filter. The second table gives the particulate test results after the modification. Data are also shown after further modification (see p. 35) and after the granular bed filter was operated. In Table III-4 some deviation in grain loading can be observed. When the loading values were $\gtrsim 4$ g/m^3, it was due to the plugging and ineffectiveness of the secondary cyclone during those particular runs. Run 43 showed consistently low loadings, and it may be related to the fact that Illinois No. 6 coal was used in that run. In most other runs the values fluctuate between about 1 to 2.3 g/m^3 (0.4 to 1.0 gr/SCF) giving a mean value of 1.5 g/m^3 (0.65 gr/SCF) with a standard deviation of 52%. After system modification, however, and before the granular bed filter was operated, particulate loading value (Table III-5) were quite constant with a mean value of 2.3 g/m^3 (1.0 gr/SCF) and a standard deviation of 13%. These results seem to indicate that when low loadings were observed before system modification, they may have been due to particulates by-passing the first filter either due to a leak developing in the cartridge or displacement in the cartridge-housing assembly. Such problems may occur due to cartridge

FIGURE III-25

NO_x VS. CO IN FLUE GAS

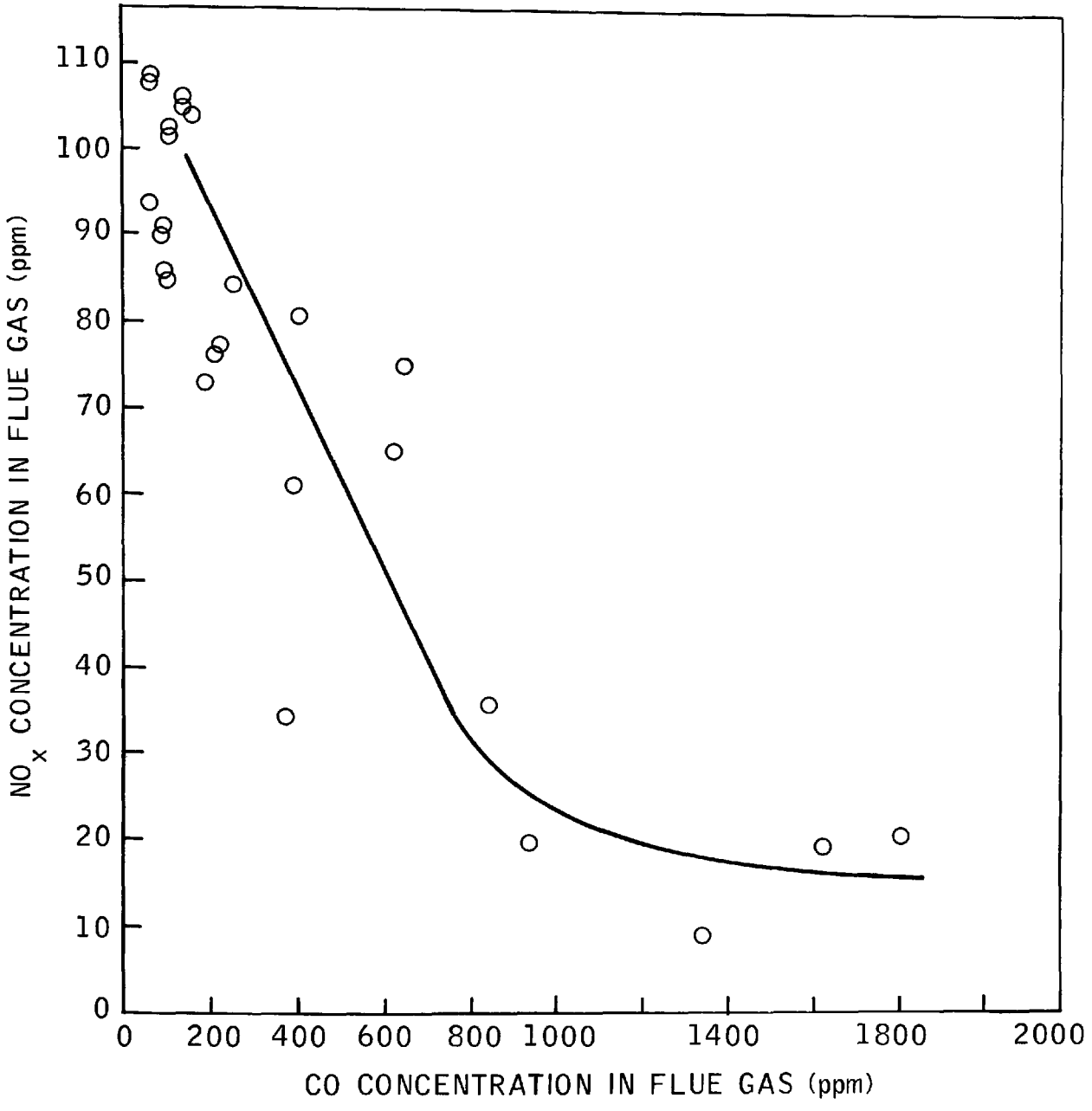

TABLE III-4. PARTICULATE SAMPLING SUMMARY I
(BEFORE MODIFICATION TO SAMPLING SYSTEM)

Run No.	Sampling Time (h)	Total Solids Collected (g)	Deviation from Isokinetic Sampling (%)	Particulate Loading in Flue Gas	
				(g/m^3)	(gr/SCF)
26	13.58	224.5	+42	0.80	0.35
28.1	1.70	16.9	0	0.59	0.26
28.4	1.30	4.0	0	0.37	0.16
28.5	1.25	7.0	0	0.30	0.13
29	2.58	19.0	-16	0.53	0.23
30.1	2.58	14.0	-22	0.43	0.19
31	2.00	45.0	-7	2.88	1.26
32.2	2.75	25.0	+4	0.92	0.40
32.3	2.50	27.0	-12	1.65	0.72
33.1	5.47	95.0	+11	1.42	0.62
34	4.42	85.0	+11	1.58	0.69
36.2	2.58	77.0	+10	2.20	0.96
37	3.00	86.0	-48	2.36	1.01
39.1	2.5	175.5	+3	4.81	2.10
39.2	3.5	260.4	+3	4.81	2.10
43.2	1.50	14.5	-4	0.73	0.32
43.3	2.00	9.9	+10	0.37	0.16
43.4	2.50	11.0	+12	0.32	0.14
43.5	1.00	4.5	+12	0.29	0.13
45				1.15	0.4
47				5.03	2.2
48	2.08	38	-3	1.53	0.67

TABLE III-5. PARTICULATE SAMPLING SUMMARY II
(AFTER FIRST MODIFICATION TO SAMPLING SYSTEM)

Run No.	Sampling Time (h)	Total Solids Collected (g)	Deviation from Isokinetic Sampling (%)	Particulate Loading in Flue Gas	
				(g/m^3)	(gr/SCF)
50.12	5.28	112.63	-5.8	2.60	1.05
50.2	1.15	35.09	+1.8	2.88	1.26
50.4	1.48	33.69	-7.4	2.31	1.01
50.5	0.58	13.31	-7.4	2.33	1.02
51 (Catch 1)	0.63	14.78	-4.3	1.95	0.85
51 (Catch 2)	0.60	13.64	-5.8	1.92	0.84
52	0.50	14.73	-0.4	2.65	1.07
RUNS WITH GRANULAR BED FILTER (AFTER SECOND MODIFICATION TO SAMPLING SYSTEM)					
57	1.08		-0.9		0.08
59 (Catch 1)	1.17		+1.4		0.08
59 (Catch 2)	13.33		-3.0		0.28
59 (Catch 3)	2.00		-0.4		0.54

overloading and/or a high pressure drop across the filter. Though a slight fluctuation in grain loading may be expected for different runs, an average value of 2.3 g/m^3 (1 gr/SCF) may be used at present.

Operation with the granular bed filter resulted in lower particulate levels. This is discussed further in Section V.

A comparison was made between the loadings measured using the Balston total filter system and a SASS train (3 cyclones plus a total filter) used by Battelle during runs 50.1 to 50.5 (18). As seen in Table III-6, the loadings compare well, with an average deviation of 30%.

TABLE III-6. COMPARISON OF PARTICULATE LOADINGS MEASURED BY TOTAL FILTER (EXXON) AND SASS TRAIN (BATTELLE)

	Particulate Loading (g/m^3)	
Run No.	Balston Filter	SASS Train
50.1	2.60	1.81
50.2	2.88	1.92
50.4	2.31	2.86
50.5	2.33	2.79

Individual filter loadings and temperatures are given in Table III-8 for Runs 50 to 59. The required high temperatures were realized in Run 52. However, when the granular bed filter was operated, the temperatures were lower due to heat loss in the granular bed filter. Future runs will aim towards measurement near the cartridge allowable temperature of 530°C for the first two filters and 206°C for the third low temperature filter. A significant amount of material was collected in the second filter at times. Much of the material collected in filter 3 (low temperature) was often greenish-black in color and was due to corrosion of the piping and the heat exchanger tubes.

Finally, Tables III-7 and III-9 show particulate distributions. The values in the two tables, corresponding to runs before and after system modification, are slightly different. The later values, Table III-9, show a mass median particle size of 3 to 6 μm compared to earlier values of 6 to 8 μm. Runs made with the granular bed filter (Runs 57 and 59) show a smaller median particle size of 2 to 5 μm as expected.

TABLE III-7. SIZING OF PARTICLES OBTAINED ON BALSTON FILTERS BEFORE MODIFICATION

	Particle Size (μm)				
Run No.	10% Less Than	25% Less Than	50% Less Than	75% Less Than	90% Less Than
31	1.8	3.1	8.0	23.5	~50
32.2	2.0	3.1	5.8	12	24
32.3	2.3	3.3	5.9	13	32.5
33	3.3	4.8	7.6	13.5	25.5
36.2	2.5	4.1	7.5	14.3	30
37	2	3.3	6.5	14.5	30

TABLE III-8. INDIVIDUAL FILTER RESULTS (RUNS 50 TO 59)

Run	Filter 1		Filter 2		Filter 3	
	Op. Temp.,[1] °C	Loading, g	Op. Temp., °C	Loading, g	Op. Temp., °C	Loading, g
50.1	55 to 330	91.4	50 to 290	19.4	70 to 170	1.9
50.2	90 to 270	35.0	70 to 220	0.3	80 to 130	0.04
50.4	50 to 360	15.2	40 to 310	17.9	70 to 150	0.5
50.5	80 to 290	12.7	70 to 240	0.01	75 to 140	0.6
51 (Catch 1)	125 to 390	12.79	80 to 310	0.3	100 to 180	1.69
51 (Catch 2)	170 to 390	12.94	95 to 310	0.32	100 to 180	0.38
52	370 to 500	12.63	255 to 440	2.21	200 to 210	0.09
57[2]	230[3]		170[3]			
59 (Catch 1)	360		240			
59 (Catch 2)	380		270			
59 (Catch 3)	390		270			

---

(1) Operating temperature at the beginning and end of sampling time.

(2) Runs 57 and 59 made with granular bed filter

(3) At end of sampling time.

TABLE III-9. SIZING OF PARTICLES OBTAINED ON BALSTON FILTERS AFTER MODIFICATION

Run	Particle Size (μm) 10% Less Than	30% Less Than	50% Less Than	70% Less Than
50.1	1.0	2.3	4.5	8.8
50.2	0.9	1.6	3.0	7.8
50.4	1.0	1.6	2.7	5.2
50.5	1.0	2.2	3.8	6.4
51 (Catch 1)	1.1	3.7	7.8	22.5
51 (Catch 2)	0.8	1.9	3.0	6.0
52	1.1	2.7	5.6	13.0
57	1.8	3.0	5.4	10.0
59 (Catch 1)	1.8	2.1	2.7	3.9
59 (Catch 2)	1.0	1.5	2.0	2.7
59 (Catch 3)	1.0	1.7	2.6	5.6

A comparison was also made with the particle size distributions measured by Battelle using the SASS train (18) and by Acurex using a cascade impactor for run 50.5 (17). The result, shown in Table III-10, show good agreement with those measured by Exxon by using the Coulter Counter method on particles captured by the Balston filter.

TABLE III-10. COMPARISON OF PARTICLE SIZE DISTRIBUTIONS MEASURED BY THREE DIFFERENT METHODS

Laboratory	Method	Particle Size (μm) 10% Less Than	30% Less Than	50% Less Than	70% Less Than
Exxon	Coulter Counter of Filter Sample	1.0	2.2	3.8	6.4
Battelle	SASS Train	1.2	2.6	5.0	10
Acurex	Cascade Impactor	1.0	2.8	5.8	11
		0.8	2.0	3.7	7.4

Attempts made to date to determine if the particulate loading, size and composition are affected by condensation have yielded inconclusive results. The sampling temperatures have been too low. The new, high temperature system should help determine if condensation occurs at temperatures less than 870°C and if this does influence the particulate measurements.

Combustion Efficiency

Carbon combustion efficiency results published in the previous report (1) indicated that a regression analysis determined that temperature was the only variable influencing combustion efficiency. However, a plot of combustion efficiency against temperature showed three distinct curves with a fair degree of data scatter. The reasons for the three curves and the

scatter were not explained at that time. Combustion efficiency data were again studied using multiple regression analysis. Data from 55 miniplant runs were correlated using 29 possible variables including interactions between variables.

The best fit correlation indicated that the combustion efficiency is a strong function of temperature (T) and also the excess air level (EA), a result which is consistent with data reported by other investigators (10,11) and also found in previous batch unit results by Exxon (1).

The other variables that showed a significant effect on combustion efficiency were the cross product of temperature and excess air level and the cube of the residence time (t). The equation correlating these variables to combustion efficiency was determined to be:

$$C.E.(\%) = 161.3 = 1.62 \times 10^{-1} (T) + 1.0 \times 10^{-4} (T^2) + 7.51 \times 10^{-5} (T)(EA) - 4.62 \times 10^{-4} (EA)^2 + 1.73 \times 10^{-2} (t)^3$$

where T is in °C, EA in % and t in s.

The correlation coefficient corresponding to this fit is 82%. The standard error of the correlation is 0.6 combustion efficiency units.

A plot of the calculated combustion efficiencies using this equation versus the observed combustion efficiency is presented in Figure III-26. One explanation for the apparent data scatter in the graph is the difficulty in correlating a large number of observations with such a small span of the dependent variable. It should be noted that the miniplant uses a particulate recycle system to increase combustion efficiency. This may have the effect of reducing to insignificance variables which may be highly significant in a once through system without particulate recycle. Additional work will be required to compare the efficiencies measured in a once through system with those measured in a recycle system. A preliminary estimate of the effect of recycle was obtained when a single run (run 51) was made with no recycle from the first stage cyclone to the combustor. The cyclone was deactivated for this run by slipping a blind between the flange at the bottom of the cyclone and the top of the return line. The combustion efficiency in this run made at 875°C at an excess air level of 45% was 98.2%. Runs made under similar conditions but with recycle, gave combustion efficiencies 1.0 to 1.5 percentage points higher.

Cyclone Efficiency

The collection efficiency of the second stage miniplant cyclone was calculated using collection and particle size data obtained in recent runs (Runs 48, 50.3 and 51). The overall secondary cyclone efficiency was as follows:

Run	Overall Efficiency, %
48	84
50.3	84
51	86

FIGURE III-26

COMBUSTION EFFICIENCY CALCULATED VS. MEASURED

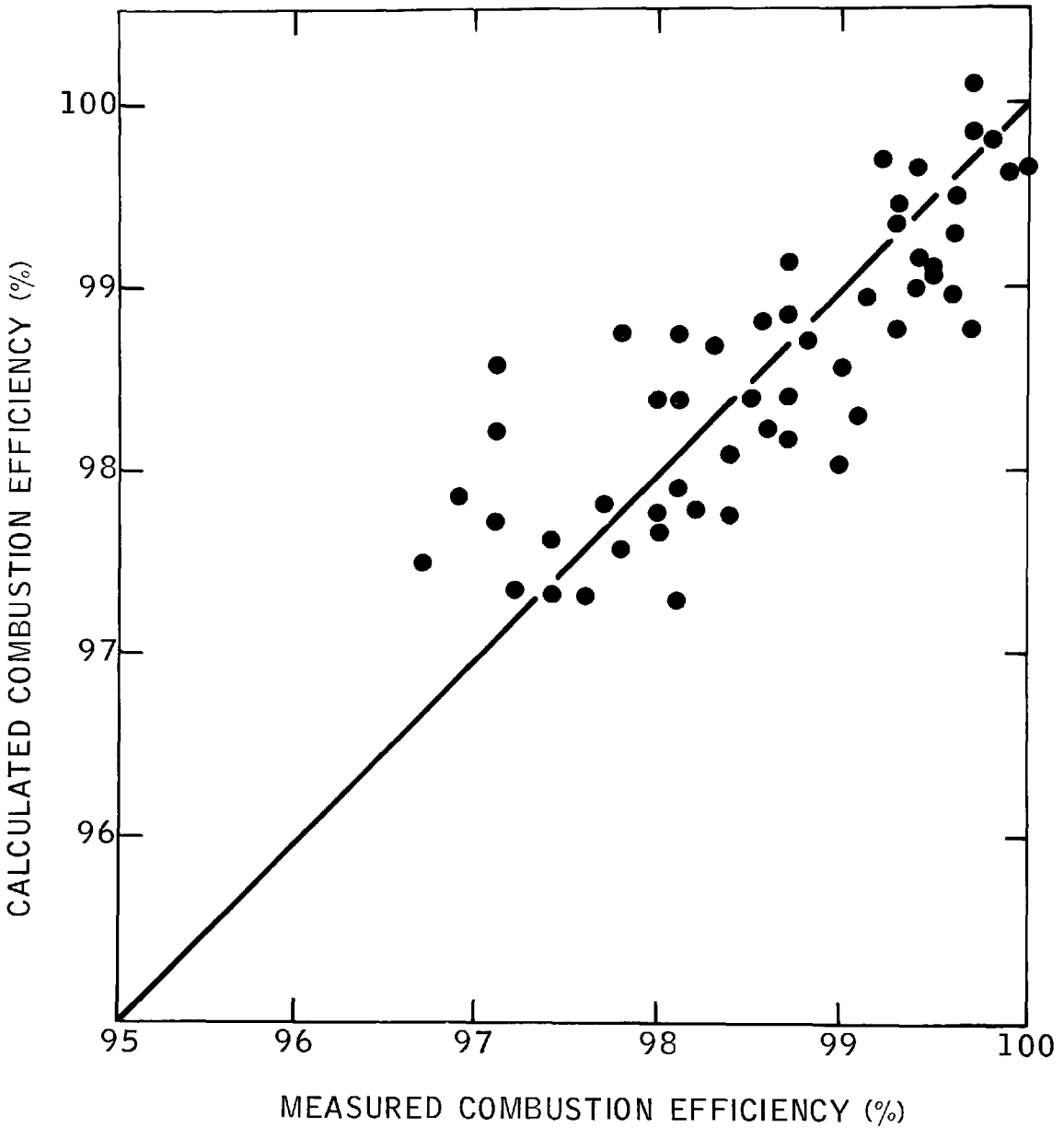

The values given above indicate the cyclone efficiency to be the same within experimental errors. It should be noted that during Run 51 the primary cyclone was not used, and the secondary cyclone was used alone. Yet the overall cyclone efficiency value from Run 51 corresponds closely to the results from those runs in which the primary cyclone was also operating. The efficiency curves for all 3 runs are given in Figure III-27. With the amount of data available at present, it is difficult to state whether differences in the efficiency curves are due to the operation of the second cyclone by itself or not. However, these curves are comparable to those obtained from earlier runs. The 50% cut point lies between 3 to 3.5 μm, indicating a relatively high efficiency for a conventional cyclone.

Particle size distribution of the material collected in the second stage cyclone is typified by results for Runs 50.1, 50.2 and 50.3 shown in Table III-11. These distributions are similar to those reported previously (1). Additional size distribution data for other runs are given in Appendix H-2.

TABLE III-11. SECOND STAGE CYCLONE
LOCK HOPPER PARTICLE SIZE DISTRIBUTIONS

	Particle Size (μm)				
Run No.	10 Wt. % Less Than	25 Wt. % Less Than	50 Wt. % Less Than	75 Wt. % Less Than	90 Wt. % Less Than
50.1	7	13	22	52	98
50.2	6	9	17	38	66
50.3	6	10	17	37	69

FIGURE III-27

SECONDARY CYCLONE EFFICIENCY VS. PARTICLE SIZE

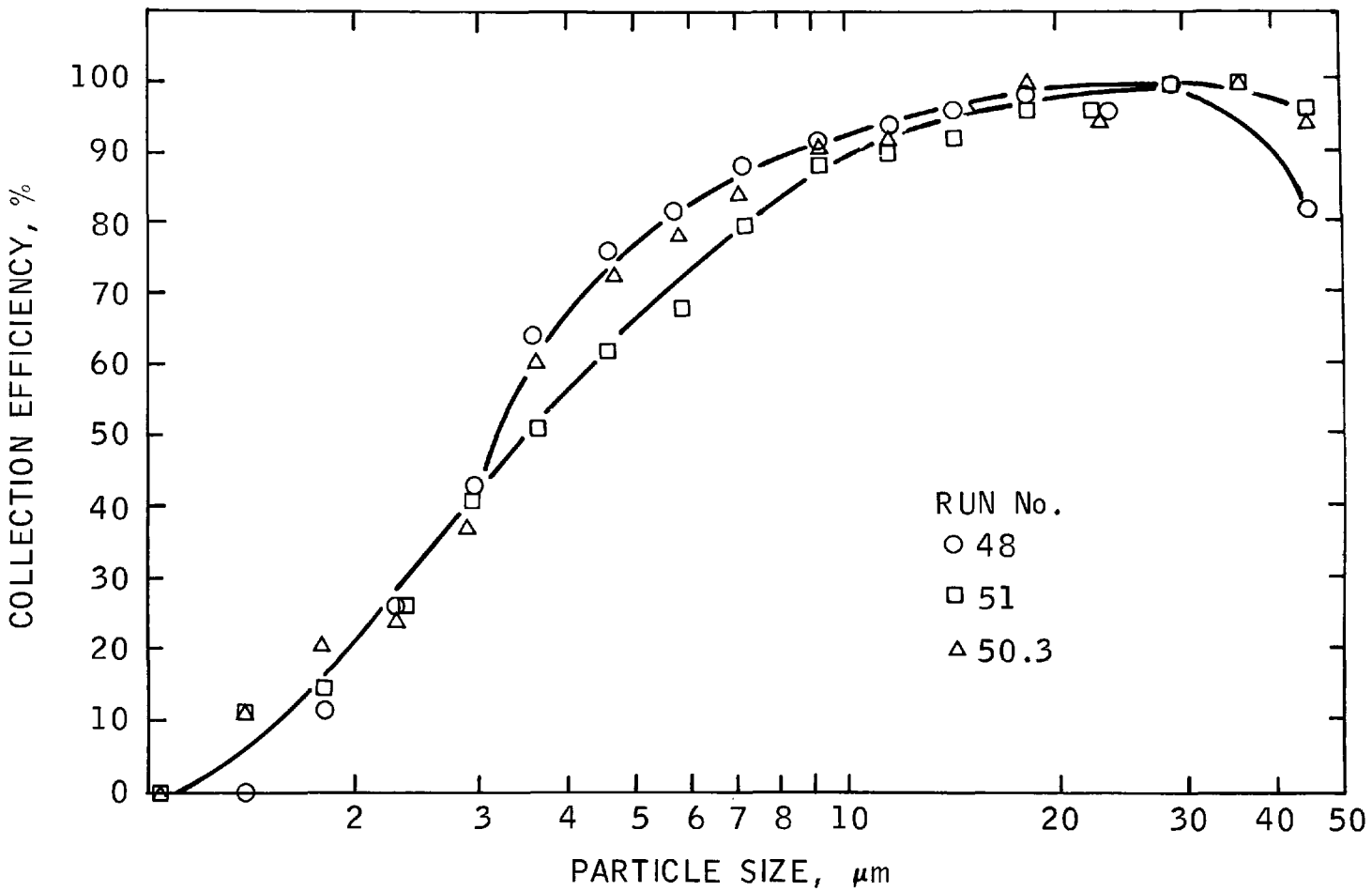

SECTION IV

REGENERATION STUDIES

Work is continuing to develop a process for continuously regenerating sulfated limestone or dolomite sorbent ($CaSO_4$) in a fluidized bed by reaction with a reducing gas at about 1100°C and elevated pressure. In the previous annual report (1), experiments were described in which batches of sulfated sorbent were regenerated in the miniplant regeneration vessel. In those preliminary tests, up to 3.7 mole percent (dry basis) of SO_2 was produced, reduction of $CaSO_4$ to CaO was nearly complete, and agglomeration of the fluidized bed was avoided by careful control of temperature. The regenerator was coupled to the miniplant combustor so that sorbent could be continuously recirculated between the two vessels and a 24 hour shakedown run was completed. Since the last report, the operability of this system was demonstrated in a five day run in which both combustor and regenerator operated without interruption. In this report, the equipment and procedures used to make the run, and the experimental results are described.

EQUIPMENT, MATERIALS, PROCEDURES

Equipment

The equipment and materials were described in detail in the previous report (1). In most cases, no major changes have occurred since and only summaries are reported. When changes have occurred, for example in the fluidizing grid for the regenerator, a detailed description is given here. Also described here are the design and operation of the system used to transfer sorbent between the combustor and regenerator.

Air System

The two separate air systems are (1) burner air and (2) supplementary air. All air is supplied by the main air compressor. Automatic control systems, consisting of control valves, flow measuring orifices, and electronic controllers, are used to regulate air flow. Burner air is supplied to the burner, located beneath the fluidizing grid, in sufficient quantity to completely burn the fuel (natural gas). Supplementary air is added about halfway up the bed in order to create an oxidizing zone in the upper portion of the bed.

Fuel System

The two fuel systems are (1) burner fuel and (2) supplementary fuel. Automatic control systems, similar to those used for air flows, are used to regulate the flow of natural gas. Burner fuel is supplied to the burner where it is burned with an approximately stoichiometric amount of air. Supplementary fuel is added directly to the regenerator column just above the fluidizing grid in order to produce reducing gases (CO, H_2).

Off Gas Handling

Hot pressurized gases leaving the regenerator are cooled in a single pass double pipe heat exchanger and expanded to nearly atmospheric pressure across a control valve. Dust is removed from the gas upstream of the cooler

by a cyclone and upstream of the pressure control valve by a sintered stainless steel bayonet-type filter. The gas is filtered in order to reduce wear on the pressure reducing valve.

Off-gases from the regenerator are sent to a Research-Cottrell scrubber for cleanup before venting. An alkaline solution (Na_2CO_3) is used in the scrubber to absorb SO_2.

Gas-Sampling System

A slipstream is taken downstream of the pressure reducing valve. The gas is filtered (Balston Model 33 filter) and dried (Perma-Pure Model PD-1000-24S self-regenerative membrane-type dryer) before entering the analyzers.

Fluidizing Grid

The fluidizing grid had failed due to overheating at the conclusion of the 24-hour shakedown run of the combustor-regenerator. This grid had 88 holes of 3.6 mm (9/64 in) diameter for passage of the fluidizing gases (from burner located beneath grid) and 14 water cooling channels of 4.8 (3/16 in) diameter. Cooling water was supplied through two 7.7 mm (0.305 in) I.D. tubes to a header and flowed in parallel through the cooling channels. Examination of the grid showed that the metal surrounding the outer channels had been overheated. It was concluded that the flow of water through the channels was non-uniform, with the inner channels receiving most of the water.

In order to achieve more uniform flow of water throughout all the cooling channels, the grid was modified so that water flow could be controlled independently through six separate cooling zones. Hence, the 14 channels were separated into groups of 3, 2, 2, 2, 2, and 3, each group or zone having its own water supply. The new design apparently solved the problem: after the 125 hour demonstration run, the grid was examined and found to be in excellent condition, with no signs of overheating.

Burner

No changes were made to the regenerator burner since the last report. This unit is identical to that used in the miniplant combustor and is described in the previous annual report (1).

Sorbent Transfer System

Combined operation of the combustor and regenerator required development of a transfer system to circulate sorbent between the two vessels. A number of alternative approaches were considered and tested (1). Basically, these approaches could be divided into two types: high and low density solids flow. The approach thought to be most suitable for the miniplant utilized high bulk density (stick-slip) flow of sorbent in transfer lines. This technique had the important advantages that (1) large amounts of carrier gas would not be needed, as would be the case if pneumatic conveying were used, and (2) short, straight transfer lines could be used. The small distance between the combustor and regenerator would have made it difficult to accommodate the U-shaped transfer lines that would have been required in a pneumatic system.

Figure IV-1 shows schematically the sorbent transfer system. Pressure in the regenerator was maintained slightly higher than that in the combustor. Solids in the regenerator-to-combustor transfer line moved into the combustor when a pulse of nitrogen was applied to the lower end of the transfer line. The flow rate of solids was controlled by adjusting the frequency, duration, and intensity of the pulse. Two slide valves were used in the combustor-to-regenerator transfer line in order to prevent back flow of gas from the regenerator up the line. These automatic valves trapped solids in the piping between them. Solids were discharged into the regenerator when the bottom valve was opened. The two solids' take-off plugs shown in Figure IV-1 were inserted into the ports during start-up to prevent solids from entering the lines. Plugging could occur if the solids became wet due to water condensation during start-up. The manual slide valve in the regenerator-to-combustor line was also closed during start-up and also during upsets. A photograph may be seen in Figure IV-2.

The components of the sorbent transfer system (valves, expansion joints, etc.) are described in detail in the previous annual report. The transfer lines themselves were fabricated from 6 inch Schedule 40 carbon steel pipe and refractory lined to an inside diameter of 7.6 cm. The sloping portions of the lines were sleeved with 2-1/2 inch Schedule 10 316 stainless steel pipe, which had an inside diameter of 6.7 cm.

Miscellaneous Modifications to Equipment Made Prior to Demonstration Run

In addition to redesigning the regenerator fluidizing grid, a number of other changes were made to the combustor-regenerator prior to the demonstration run in order to improve reliability. The more noteworthy changes were:

(a) Spare supplementary fuel and air inlet ports were added. If a plug occurred at one inlet port, the second could be used to continue the run.

(b) The double pipe off-gas cooler was shortened in order to raise the temperature of gas exiting from the cooler and reduce water condensation.

(c) A second pressure control valve was added in parallel with the original valve. One valve was used at a time but the second could be put in service without interrupting the run if a problem occurred.

(d) A new thermocouple port was added just above the fluidizing grid in order to detect high temperatures in this critical region.

(e) The system to measure pressure drop across the fluidizing grid and across different points in the bed was modified to be more reliable and provide more accurate data.

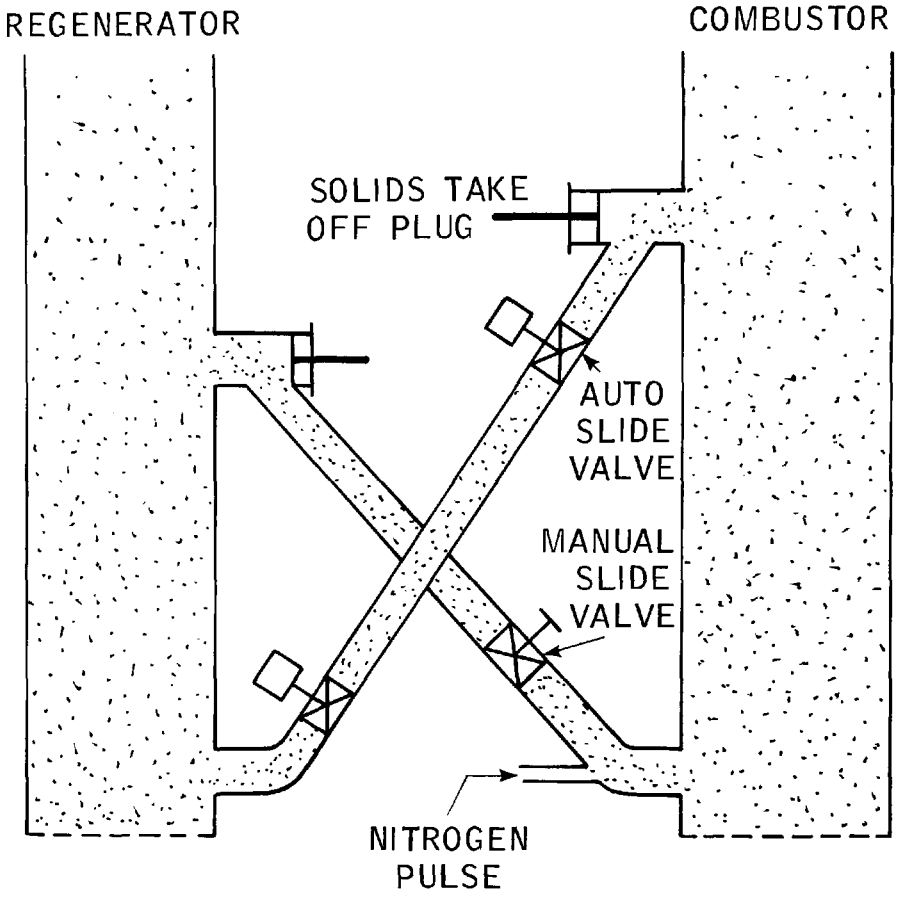

FIGURE IV-I

MINIPLANT SOLIDS TRANSFER SYSTEM (SCHEMATIC)

FIGURE IV-2

MINIPLANT SOLIDS TRANSFER SYSTEM

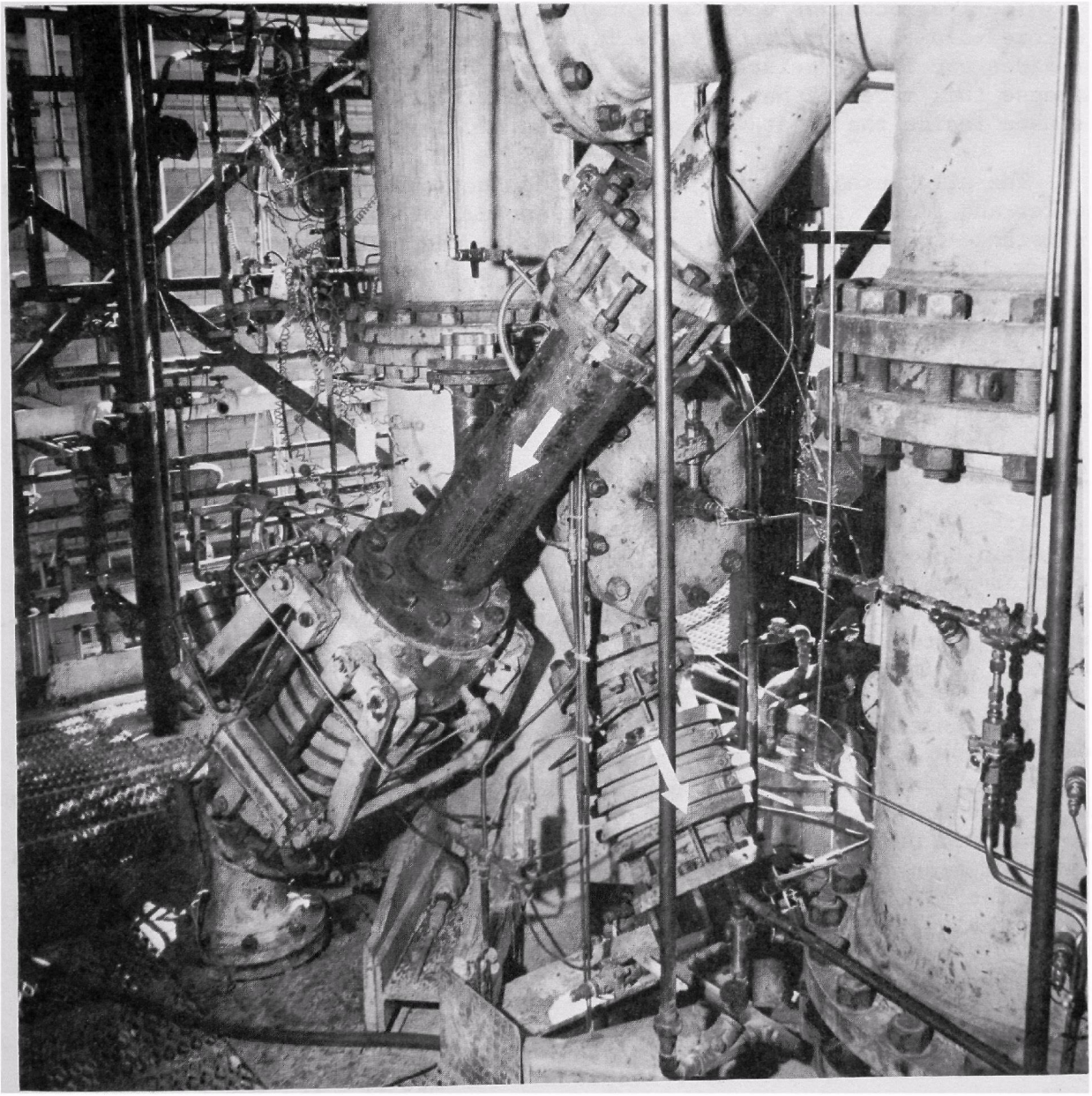

Materials

No changes in materials of construction occurred during the past year.

The regenerator is lined with General Refractories Litecast 75-28, a castable refractory with a service temperature limit of 1540°C (2800°F) and a thermal conductivity (at 540°C) of 0.55 W/m^2°C (3.8 BTU/hr ft^2 °F/in).

The thermocouples used to measure fluidized bed temperature are Type K (chromel-alumel) protected by a silicon carbide sheath. Silicon carbide provides excellent resistance to high temperatures and chemical attack. Because this material has very little strength in tension, an Inconel tube is used inside the sheath to provide reinforcement.

The alloy used for the gas-contacted sections of the regenerator off gas cooler and filter is type 316 stainless steel. This material offers good resistance to dry and wet SO_2 although H_2SO_4 can cause serious corrosion even at low concentrations. This has been a problem with the filter element which, because of its high surface area, is more susceptible to corrosion. Corrosion has been minimized by thoroughly washing and drying the filter element after each run.

EXPERIMENTAL RESULTS AND DISCUSSIONS

Combustor-Regenerator Demonstration Run

A successful combustor-regenerator demonstration run (Run 45) was completed in October, 1976. The miniplant was operated with limestone sulfur acceptor recirculating between the combustor and regenerator until the run was voluntarily terminated after 125 hours of continuous operation. No interruptions in coal feed to the combustor or fuel feed to the regenerator occurred during the extended run.

Two unsuccessful attempts preceeded the successful run. The first was shut down after only four hours when a temperature runaway in the combustor resulted in agglomerated bed. This problem was caused by a malfunction in the load cell amplifier for the coal feed system. Electrical problems also plagued the second attempt and the run was terminated when a malfunction of the ΔP transmitter in the control loop for regenerator fluidizing air caused the air flow to rapidly increase, thereby blowing a portion of the bed out of the regenerator.

Operating Plan and Conditions

The major purpose of the run was to demonstrate that the combustor-regenerator could be operated continuously for 100 hours. Thus, operating conditions were deliberately conservative in order to maximize the chance of reaching this goal. It was intended to keep all operating conditions steady throughout the demonstration run, with the exception of the feed rate of fresh (makeup) limestone into the combustor (Ca/S ratio). Operating conditions are summarized in Table IV-1.

TABLE IV-1. OPERATING CONDITIONS
DURING DEMONSTRATION RUN

	Combustor	Regenerator
Pressure, kPa	760	770
Bed Temperature, Average, °C	900	1010
Bed Height, Expanded, Avg., m	3.4	2.3
Superficial Gas Velocity, m/sec	1.5	0.6
Solids Recirculation Rate, kg/hr	45	
Makeup Acceptor Addition Rate,		
Equiv. Ca/S, Average	0.55	
Range	0-1.3	
Combustor Coal Feed Rate, kg/hr	79	--
Coal Type	Champion (Pittsburgh Seam), 2.0% S	
Stone Type	Grove Limestone No. 1359	

One of the most pressing questions the operator of a fluidized bed combustion system could ask is what savings in sorbent would be realized if a regenerator were added to his system. In order to make a first attempt at answering this question, it was decided to feed the smallest quantity of makeup sorbent into the combustor that would allow operating the system with (1) SO_2 emissions from the combustor below the EPA emission standard, and (2) constant fluidized bed levels in both the combustor and regenerator. In other words, the amount of fresh limestone required would be determined either by the activity or the attrition rate of the sorbent. As it turned out, the limiting factor during this run was maintaining bed levels. Over the 100 hour period of regeneration, SO_2 emissions from the combustor were always below the EPA standard of 1.2 lbs $SO_2/10^6$ BTU, but makeup limestone had to be added because bed levels declined during the first half of the run. However, it is quite likely that had the run been continued, makeup limestone would have been needed to increase sorbent activity and control SO_2 emissions.

There was an alternative manner in which the system could have been operated. Since it was not known in advance exactly what attrition rates would prevail, a makeup rate could have been chosen which was sure to be higher than the maximum attrition rate expected, say 2.0/1 or 3.0/1 Ca/S. The limestone makeup rate would then have been constant throughout the run and bed levels could have been maintained by varying the rate at which stone was rejected from the combustor. However, this would have been a very unrealistic way of operating a real plant, since far more fresh sorbent would be used than was needed. Furthermore, operating the system in this manner would not have provided any information on the degree of reduction in sorbent requirements possible in a regenerative system.

For the first 24 hours of the run, the regenerator was operated under oxidizing conditions in order to establish baseline operating conditions. Sorbent was recirculated between the combustor and regenerator during this period. Subsequently, reducing conditions were established by increasing the flow of supplementary fuel to the regenerator. Operation of the system continued, uninterrupted, for the next 100 hours.

Operating Performance

Operation of the combustor-regenerator during the extended run was exceptionally smooth and no interruptions in coal feed to the combustor, fuel feed to the regenerator, or in the recirculation of solids occurred during the 100 hour period when the regenerator was in reducing conditions. The only potentially serious problem was a hot spot just above the regenerator fluidizing grid. The hot spot developed during startup as the regenerator bed (fresh limestone) was being heated under oxidizing conditions. When the bed temperature reached about 1000°C a sudden shift in the temperature profile occurred and the temperatures at the bottom of the bed quickly climbed to about 1200°C. Temperature was reduced by decreasing the air and fuel inputs. The regenerator was maintained at constant oxidizing conditions for 24 hours in order to establish baseline operation in the combustor. Transfer of solids occurred continuously throughout this period.

When reducing conditions were established in the regenerator, temperature of the hot spot increased to about 1260°C. Fuel and air flows were decreased and pressure was reduced from the initial pressure of 920 to the ultimate operating pressure 760 kPa. The reduction in pressure caused an increase in superficial gas velocity, which improved mixing of solids and flattened the temperature profile somewhat. Superficial gas velocity was 0.6 m/s, which is just slightly above the minimum velocity to achieve fluidization.

There were no changes in operating conditions in the regenerator for the duration of the extended run. However, the hot spot, which was initially located at a position about 13 cm above the fluidizing grid, increased in size so that towards the end of the run, high temperatures were present as high as 43 cm. above the grid. By comparison, the reducing zone of the regenerator extended to 74 cm above the grid and the average total expanded bed height was 230 cm.

After the run, the plenum of the regenerator was dismantled and the fluidizing grid and bed examined. The grid was in excellent condition and no signs of overheating were present. There was a "crust" of bed material which covered the grid to a depth of about 8 cm, this material was loosely packed and porous and would not have interfered with flow of air through the grid. Above the crust was about 30 cm of hard, fused bed, much of which must have formed during shutdown. Upon shutdown, air was blown through the bed and temperatures at the bottom of the bed increased over 1000°C. The temperature excursion was probably caused by oxidation of calcium sulfide which was present in the reducing zone of the bed. Normally, nitrogen is used during shutdown to prevent this type of occurrence. However, in this case, the compressed nitrogen supply was inadequate and compressed air was used instead.

Makeup Limestone Addition Rate.
Fluidized Bed Levels

Makeup limestone was added to the combustor in order to maintain reasonably constant fluidized bed levels in the combustor and regenerator. The feed rates of makeup limestone are summarized in Table IV-2. The makeup rate from the start of the run was 3.6 kg/hr, which is equivalent to a Ca/S molar ratio (Ca in stone to S in coal) of 0.74. This makeup rate was chosen because bed levels during the 24-hour shakedown run made in July 1976 were kept constant using this rate. Bed height in both combustor and regenerator is plotted against hours into the run in Figure IV-3. It can be seen that bed levels in the combustor began to drop after about 40 hours. When levels dropped to the height of the takeoff port to the combustor-to-regenerator solids transfer line, the feed rate of makeup stone was increased to 1.30 Ca/S. Failure to increase the makeup rate would have resulted in the level of solids in the combustor falling below the takeoff port. This would have caused the transfer of solids to stop.

The total mass of solids in the combustor and regenerator is plotted vs. time into the run in Figure IV-4. As can be seen, inventory was dropping fairly sharply after about 40 hours and feed rates of makeup limestone had to be increased.

TABLE IV-2. FEED RATES OF MAKEUP LIMESTONE TO COMBUSTOR DURING COMBUSTOR-REGENERATOR DEMONSTRATION RUN

Hours Into Run	Feed Rate of Makeup Limestone, kg/hr	Feed Rate of Makeup Limestone, Equivalent Ca/S
0 - 5	0	0
5 - 24	3.6	0.74
24	Reducing Conditions Established in Regenerator	
24 - 56	3.6	0.74
56 - 65	6.4	1.30
65 - 80	5.2	1.06
80 - 86	2.3	0.46
86 - 124	0	0

FIGURE IV-3

COMBUSTOR AND REGENERATOR BED HEIGHTS

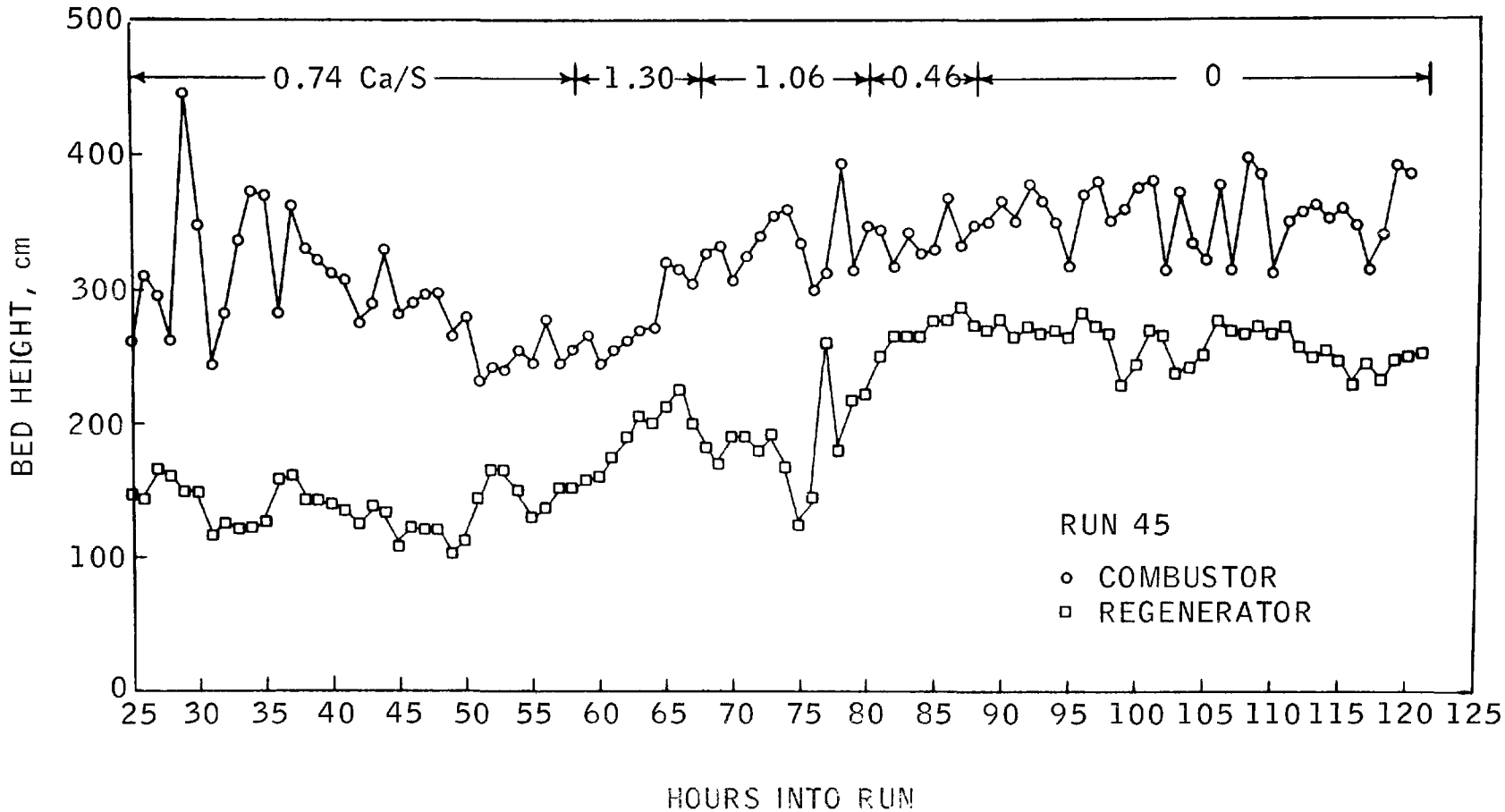

FIGURE IV-4

TOTAL INVENTORY OF SORBENT IN THE COMBUSTOR AND REGENERATOR

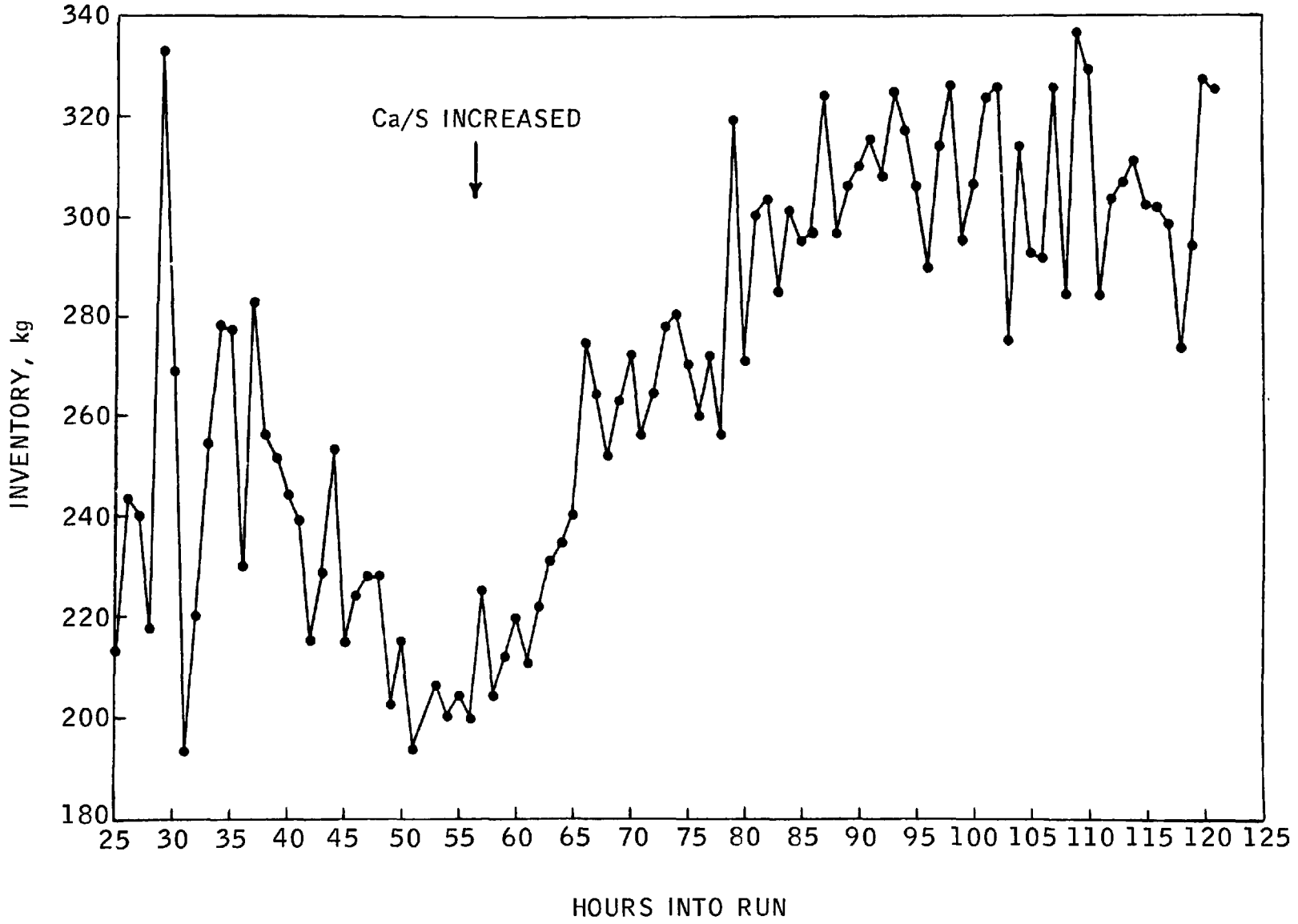

It was intended not to reject any sorbent from the combustor during the run. However, after the run, it was discovered that 180 kg of sorbent had been inadvertently removed from the combustor early in the run. This discovery explains why high limestone addition rates were required early in the run.

Combustor SO_2 Emissions

SO_2 emissions from the combustor are given in Figure IV-5. For the first 24 hours the regenerator was operated under oxidizing conditions with sorbent recirculating between the combustor and regenerator. Emissions gradually increased to about 550 ppm (1.1 lbs $SO_2/10^6$ BTU). Since the SO_2 emissions would have been about 1330 ppm at zero retention, 550 ppm corresponds to 59 percent retention. The makeup rate of fresh limestone feed into the combustor during this period was 3.6 kg/hr (7.9 lbs/hr), which is equivalent to a Ca/S feed ratio of 0.74 (see Table IV-2).

It is interesting to compare the SO_2 emissions from the combustor during the first day (oxidizing conditions in regenerator) to the emissions that would have been expected without the regenerator. Figure IV-6 gives SO_2 emissions from once-through operation of the combustor as a function of Ca/S feed ratio using limestone at carbonating and calcining conditions. The combustor was operated at 900°C (1650°F) (carbonating conditions) so at a Ca/S of 0.74, the expected SO_2 emission level would have been about 1100 ppm. However, the measured SO_2 concentrated started to level out at about 550 ppm. The lower than expected emission level can be explained because even though no regeneration was occurring in the regenerator, calcination of the limestone was occurring. The calcining conditions in the regenerator were the same as those used in the limestone precalcination tests (p. 48). The SO_2 retention (59%) measured during this period was also comparable to that measured in run 46.4 made with precalcined limestone at similar operating conditions. Therefore, the regenerator was operating as a precalciner and the SO_2 emissions from the combustor were indicative of those expected from the use of a precalcined limestone, rather than from uncalcined limestone used under carbonating combustor conditions.

Within about four hours after reducing conditions were established in the regenerator by increasing the flow of supplementary fuel, SO_2 emissions from the combustor fell from 550 ppm to below 200 ppm. After about 50 hours into the run (25 hours under reducing conditions) SO_2 levels gradually increased and reached about 550 ppm when the run was terminated after 100 hours of regeneration. The increase in emissions is, for the present, assumed to have been caused by a gradual decline in the activity of the regenerated sorbent. About fifteen cycles of sulfur sorption and regeneration should have occurred during the 100 hour period during which the regenerator was in reducing conditions.

The average feed rate of makeup sorbent was equivalent to a Ca/S ratio of 0.55; however, the makeup rate was varied over the Ca/S range of 0-1.3 in order to maintain constant bed levels. It should be emphasized that this variation in makeup sorbent rate was very small compared to the rate at which

FIGURE IV-5

COMBUSTOR SO_2 EMISSIONS

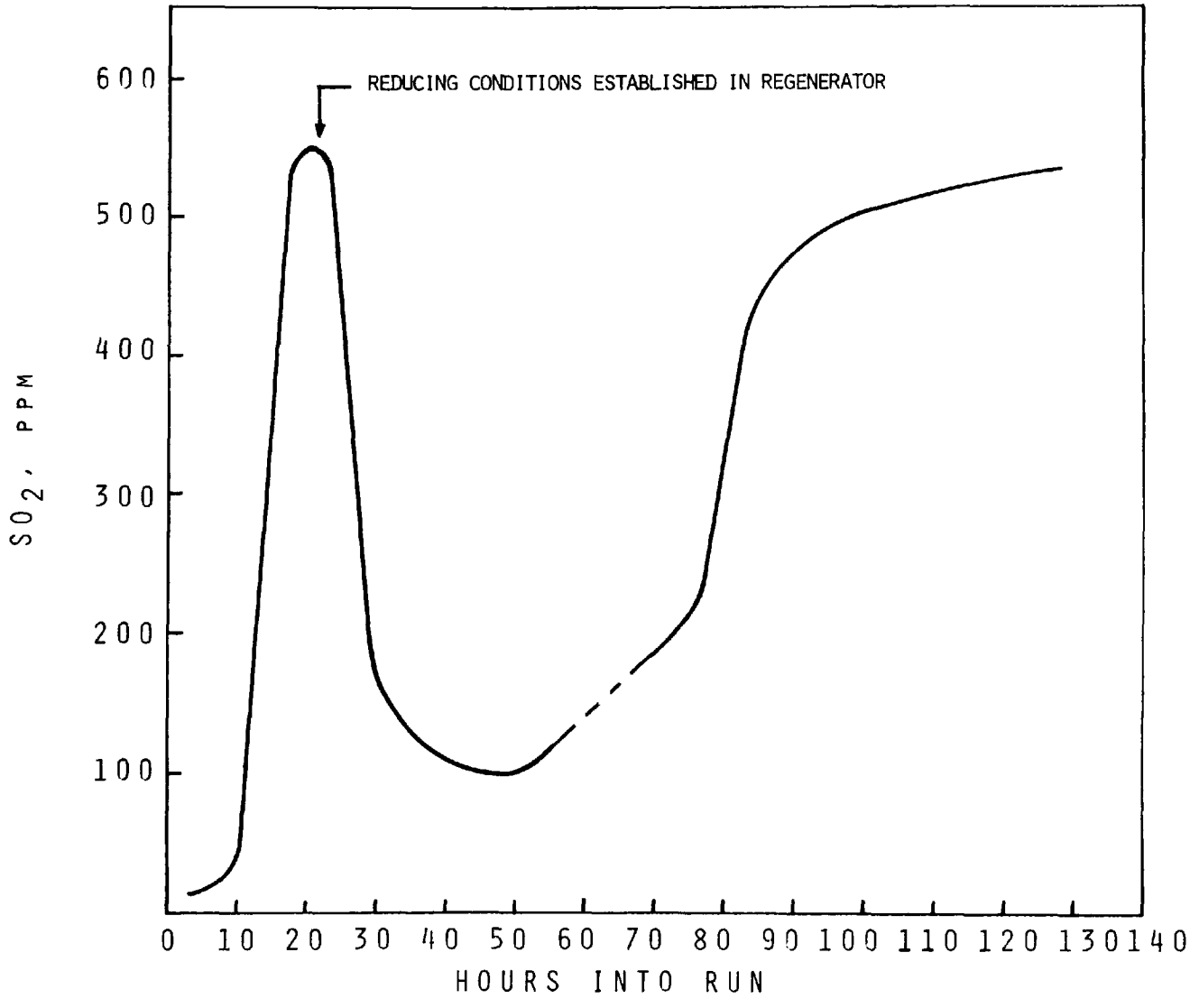

FIGURE IV-6

SO_2 EMISSIONS VS. Ca/S RATIO

LIMESTONE No. 1359 IN ONCE-THROUGH OPERATION (REF. 1)

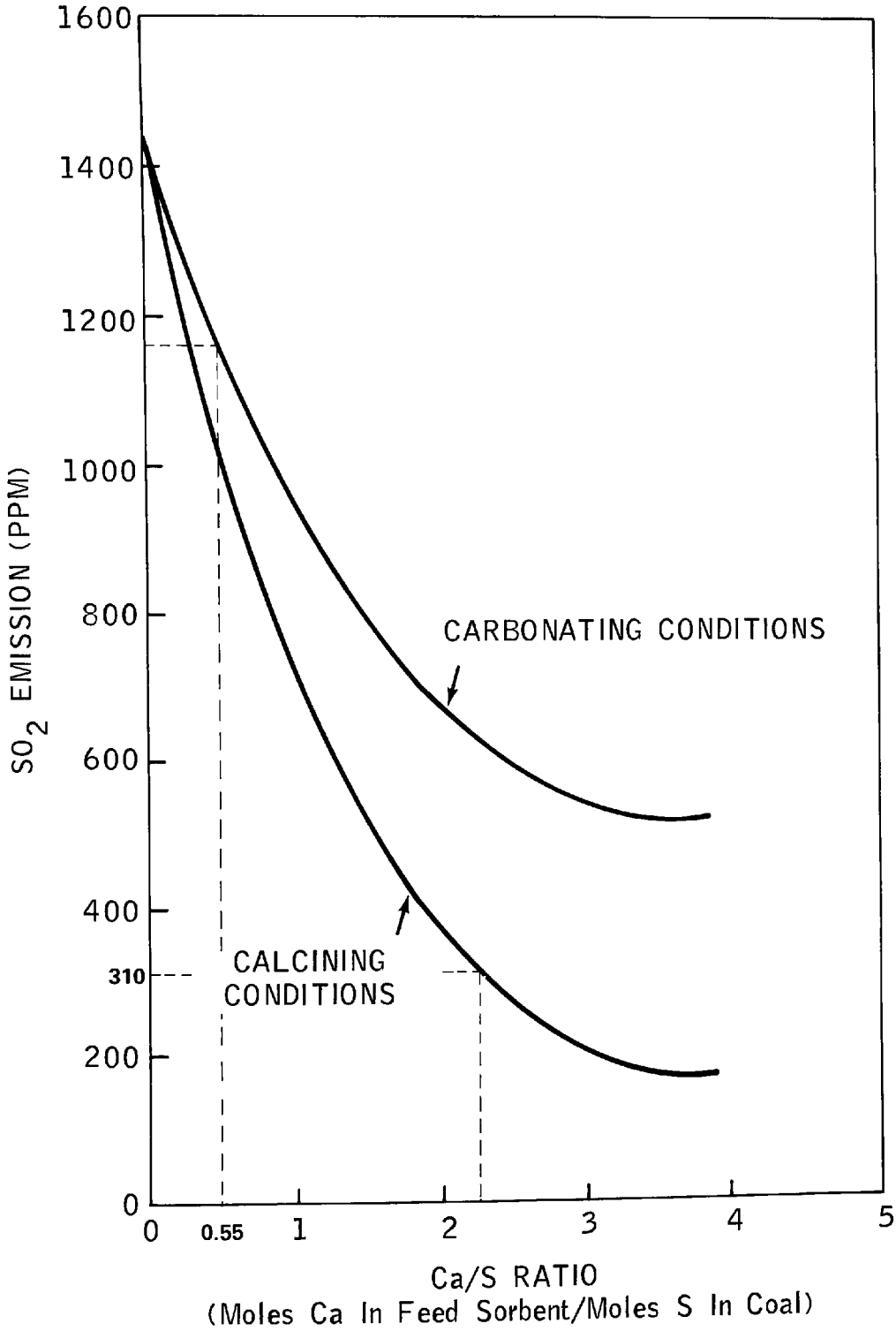

recirculated sorbent entered the combustor, which was equivalent to a Ca/S ratio of about 17. There was no apparent immediate effect of varying the makeup rate on the emissions of SO_2 from the combustor.

Levels of SO_2 in Regenerator Off-Gas

The concentration of SO_2 in the regenerator off-gas was nearly steady throughout the run and averaged 0.53 mole percent (dry basis). This is very close to the concentration predicted by a sulfur mass balance based on the feed rate and sulfur content of the coal entering the combustor. The calculated equilibrium concentration at the operating conditions of the regenerator was 2.9 percent; hence, higher SO_2 levels would probably have been achieved by burning more coal, of a higher sulfur content in the combustor. A commercial-sized plant would not be expected to be mass-balance limited and this would be expected to yield higher SO_2 concentrations in the off gas.

Attrition Rate

During the 125 hour demonstration run, 336 kg (740 lbs) of fresh limestone was added to the combustor to maintain constant bed levels; however, as noted earlier, 180 kg (396 lbs) of sorbent was inadvertently dumped from the combustor early in the run. The approximate amount of sorbent lost due to attrition and entrainment was 336-180 = 156 kg (344 lbs). The inventory of solids in the system was about 280 kg (620 lbs). Hence, the average entrainment rate was 156/125 (280) = 0.0045 kg/hr kg inventory or 156/336 = 0.46 when expressed as a fraction of the limestone makeup rate. This rate is higher than expected based on once through (non regenerative) entrainment measurements. More work is needed to explain this anomoly.

Analysis of Bed Solids

After the run, samples of bed were taken from the combustor and regenerator for analysis. Three samples of regenerator bed were analyzed because of the large variability among samples. Only one complete analysis of combustor bed was made because sulfate analysis of three samples showed very close agreement. The large variability in samples from the regenerator was probably a result of sampling problems caused by the regenerator bed being partly agglomerated. Agglomeration occurred during shutdown when air was blown through the hot bed, causing an exothermic oxidation of CaS and a temperature rise to over 1100°C (2000°F). Table IV-3 gives the analytical results. Note that no CaS was found.

Table IV-3

Analyses of Bed Material Discharged from Combustor and Regenerator After Demonstration Run

Component	Mole Percent			
	Sample #1	Sample #2	Sample #3	Average
Regenerator				
CaO	87.0	73.2	81.2	80.5
$CaCO_3$	2.7	1.4	2.7	2.3
$CaSO_4$	10.3	25.4	16.1	17.3
Combustor				
CaO	35.8			
$CaCO_3$	18.5			
$CaSO_4$	45.7			

Sulfur Mass Balance

Table IV-4 is a sulfur mass balance for the demonstration run (entire 125 hour period). Recovery of sulfur was 103.5 percent.

The sulfur accumulated section of Table IV-4 comes about because the system was charged with fresh limestone prior to the run, but sulfated limestone remained at the conclusion. Also, the sulfur balance is very sensitive to the sulfur content of the coal. A sulfur level of 2.0 percent was the most recent analysis of Champion coal available. The actual sulfur level would have had to be only 2.07 percent to get a calculated sulfur recovery of 100 percent.

Conclusions

Operation of the combustor-regenerator during the demonstration run was encouraging. In particular, the sorbent transfer system operated for 125 hours without a single problem. The chances are excellent that this system can be used successfully in future runs.

Several areas leave room for improvement. The superficial gas velocity in the regenerator was only 0.6 m/sec, which is only slightly above the minimum fluidizing velocity. As a result, mixing of the regenerator bed was slow. This factor surely contributed to the poor temperature profile and localized agglomeration. The velocity will be increased slightly in subsequent runs by using higher bed temperatures; however, it may be necessary to operate the regenerator at lower pressures or even reduce its size in order to obtain suitable gas velocities.

Another area for improvement is the concentration of SO_2 in the regenerator off-gas. During the demonstration run, the average concentration was only 0.5 mole percent. This level was determined by a sulfur mass balance for the combustor-regenerator system and not by thermodynamics, which would have permitted 2.9 percent SO_2. Hence, the SO_2 level could have been higher

TABLE IV-4. SULFUR BALANCE
COMBUSTION-REGENERATION DEMONSTRATION RUN

		kg	% of Sulfur Entering
• Sulfur Entering System			
a. Coal		194.8	100
	Total	194.8	100
• Sulfur Leaving System			
a. Regenerator off gas		91.8	47.1
b. Combustor flue gas		39.5	20.3
c. Combustor bed reject		17.5	9.0
d. Combustor overhead solids (flyash)		22.6	11.6
e. Regenerator overhead solids		2.0	1.0
	Total	173.4	89.0
• Sulfur Accumulated (Δ Inventory)			
a. Regenerator bed		3.1	1.6
b. Combustor Bed		25.1	12.9
	Total	28.2	14.5
• % S Recovery			103.5

if coal of a higher sulfur content was burned, and if the coal feed rate into the combustor was higher. Runs planned for the future will use operating conditions which should result in higher regenerator SO_2 levels.

Continuous operation of the miniplant provided a realistic way of measuring the potential benefits of a regenerative system compared to a once-through system. An important question is what reduction in sorbent requirements can be realized in a regenerative system. Since only one continuous run has been made thus far, and at non-optimum conditions, this question cannot be answered with a high degree of certainty. However, the average SO_2 emissions from the combustor were 310 ppm (0.63 lbs $SO_2/10^6$ BTU) at an average Ca/S ratio of 0.55. Figure IV-6, based on data from a once-through combustion system, shows that at least four times this makeup rate would have been required in a once-through system, had the combustor been under calcining conditions. Actually, carbonating conditions prevailed in the combustor and Figure IV-6 shows that the observed emission level could not have been reached in a once-through system at any Ca/S makeup rate. Another way to show the effect of regeneration on sorbent requirements is illustrated in Figure IV-6. At the average Ca/S ratio of 0.55 used in this run, the expected SO_2 emission from the combustor in a once-through system would have been about 1150 ppm compared to 310 ppm measured.

Additional combined combustor-regenerator runs will soon be underway to study the effects on performance of the important variables, including sorbent recirculation rate, regenerator temperature, and type of sorbent. It is hoped to determine which combustor and regenerator operating conditions provide, simultaneously, low emissions of SO_x and other pollutants from the combustor, high concentrations of SO_2 in the off-gas from the regenerator, low makeup rates of fresh sorbent, and moderate recirculation rates between combustor and regenerator.

In the future, the use of coal as a fuel for the regenerator will be studied. The batch combustor and regenerator are being converted to continuous units to study this and other areas. One problem is recovering sulfur from the fairly low levels of SO_2 present in the regenerator off-gas. Other problems are sorbent deactivation and attrition. These problems need to be understood and solved before regeneration can become a commercial endeavor.

SECTION V

GRANULAR BED FILTRATION STUDIES

INTRODUCTION

The successful development of the pressurized fluidized bed coal combustion process is dependent on the ability of particulate control devices to remove particulates from the hot combustor flue gas to very low levels. This must be done to assure that the expansion of the flue gas through the gas turbine does not cause damage to the turbine by erosion, corrosion, or deposition of solids on the turbine blades. At the present time, the turbine requirements are not well defined. Current estimates of the allowable particulate concentration in the flue gas entering the turbine range from 45 to 1 mg/m^3 (0.02 to 0.0004 grains/SCF). In addition to the gas turbine inlet requirements, the U.S. Environmental Protection Agency has imposed limits on the emission of particulates from coal fired installations of 0.043 g/MJ (0.1 lb/M BTU). For a typical coal, this standard translates to a particulate concentration in the flue gas of approximately 100 mg/m^3 (0.05 gr/SCF). Therefore, at the present time, removal efficiencies are dictated by the turbine requirements. To meet these estimated requirements, the flue gas leaving a pressurized combustor must first be precleaned in a two stage cyclone system and then be sent to a third stage cleanup device. To meet the current environmental standard the third stage device will be required to have an efficiency of approximately 67%. To meet the estimated turbine requirements, efficiencies must be in the range of 95 to 99.7%.

The objective of the flue gas particulate removal program is to evaluate two removal devices which have the potential for reducing particulate loadings to the required levels. The devices will be installed on the miniplant which has a maximum flue gas flow rate of about 20 Sm^3/min (700 SCFM). The first device is a granular bed filter of a design developed by the Ducon Company. The results of the initial testing to evaluate this device will be covered in this section of the report. Further testing of the granular bed filter is planned, and will be reported in a subsequent report. The choice of the second device has not been made at this point.

The objectives of the granular bed filter test program were to measure the outlet loading from the filter, determine if the removal efficiency was maintained with use, measure operational stability of the filter (e.g., can a low pressure drop across the filter be maintained, does the filter plug, is the amount of blow back gas needed to maintain steady operation within reason, etc.), and finally, to measure the long term life of the filter hardware. The primary operating parameters were: the filtered gas flow rate, usually measured as the gas velocity entering each filter bed, the reverse flow clean gas ("blow back") velocity, the duration and frequency of the blow back step, the type of filter media used (i.e., particle size, shape, density), and media bed depth.

EQUIPMENT, PROCEDURES

Equipment

Single Bed Test Rig--

To provide support information for the evaluation of the granular bed filter, a single bed test rig was designed and tested. A photograph of the test rig is shown in Figure V-1. A schematic of the test rig is shown in Figure V-2. The test rig was designed to filter an isokinetic sample which was extracted through a 1.6 cm (0.5 in) probe which was located in the miniplant ducting downstream of the second stage cyclone. The test rig consisted of one of the Exxon designed filter beds described in a subsequent section enclosed in a refractory lined vessel to permit filtration at system temperature and pressure. The gas exiting the test rig was filtered by a glass microfiber filter to allow a measurement of particle loading in the gas leaving the rig. (The particle loading of the gas entering the rig was estimated based upon past measurements on the miniplant without the granular bed filter.) The pressure drop across the filter bed was measured by a ΔP cell. When blow back was required, as determined by an unacceptable pressure drop, the sample flow was stopped and the filter vessel was vented to the atmosphere. The blow back cycle was then initiated using air rates up to 0.14 Sm^3/m (5 SCFM).

Original Ducon Filters--

Three filter elements were purchased from the Ducon Company for evaluation. The Ducon filter element consists of a number of small beds packed with a suitable filter media such as alumina, quartz, etc. and supported on a bottom retaining screen. A stack of the filter beds form a single filter element. A number of filter elements can be used depending on the volume of gas to be filtered. A schematic of a single filter bed is shown in Figure V-3. The operation of the filter is shown schematically in Figure V-4. During the filtration cycle, dirty gas passes through the 50 X 50 mesh inlet screens down into the filter beds. Clean gas from the beds is collected in a manifold in the interior of the element and then passes to the clean gas outlet system. As the filtration step proceeds, the pressure drop across the element increases and eventually the element must be cleaned by the reverse flow of clean gas. This "blow back" occurs by flowing clean gas in reverse direction through the outlet gas manifold, up through each filter bed and out through the screens. The function of the screens is to retain the filter media during the blow back step, keeping it inside the filter bed, while allowing the fine particulates removed from the filter media by the blow back gas to pass through. The fine particulate then settles outside the filter elements and is collected at the bottom of the shroud containing the filter elements.

The nominal flow capacity of each of the three elements purchased from the Ducon Company was 8.5 Sm^3/min (300 SCFM). Each element was 20 cm (8 in) in diameter by 1.8 m (6 ft) long and contained twelve beds having a total filtration area of 0.24 m^2 (2.6 ft^2). A photograph of one of the filter elements and the shroud in which it is contained when placed in the pressure vessel is shown in Figure V-5. One of the Ducon elements was designed to be blown back by short sonic pulses of high pressure air as shown in Figure V-6. The pulse duration was approximately 0.5 sec. This blow back method was not tested. The other two Ducon elements were blown

FIGURE V-1

SINGLE BED TEST RIG

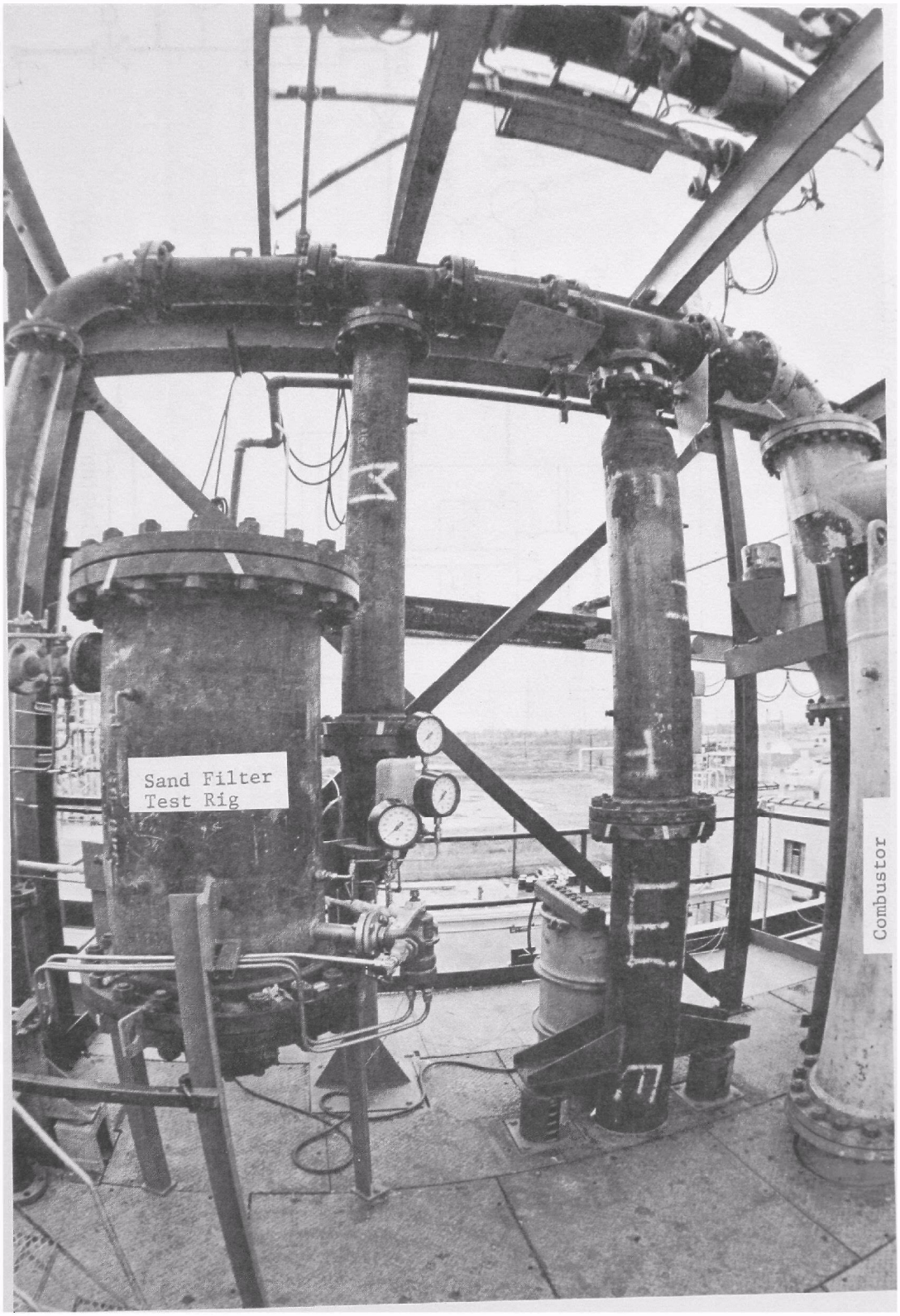

FIGURE V-2

SINGLE BED TEST RIG ASSEMBLY

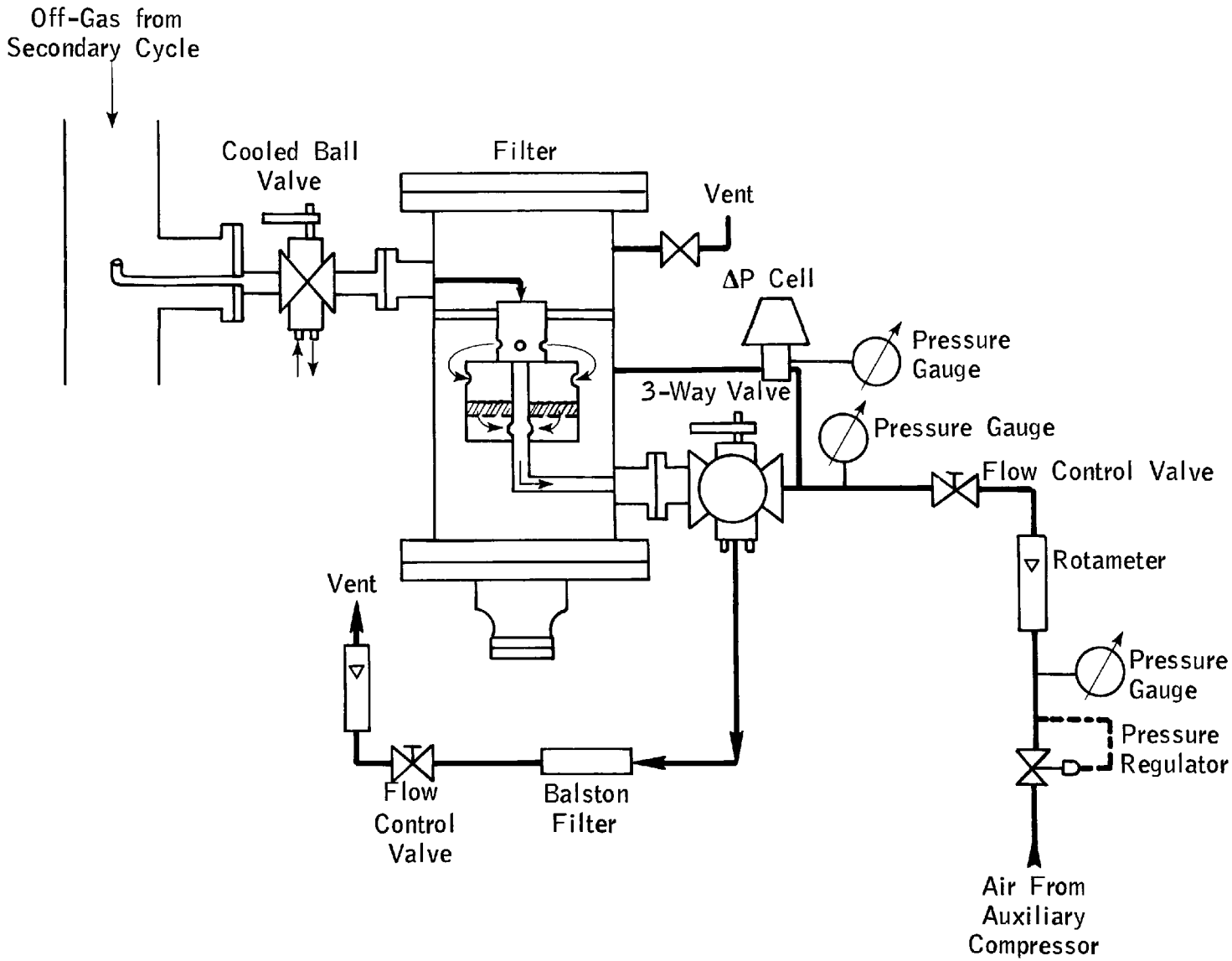

FIGURE V-3

SCHEMATIC OF A SINGLE DUCON FILTER BED

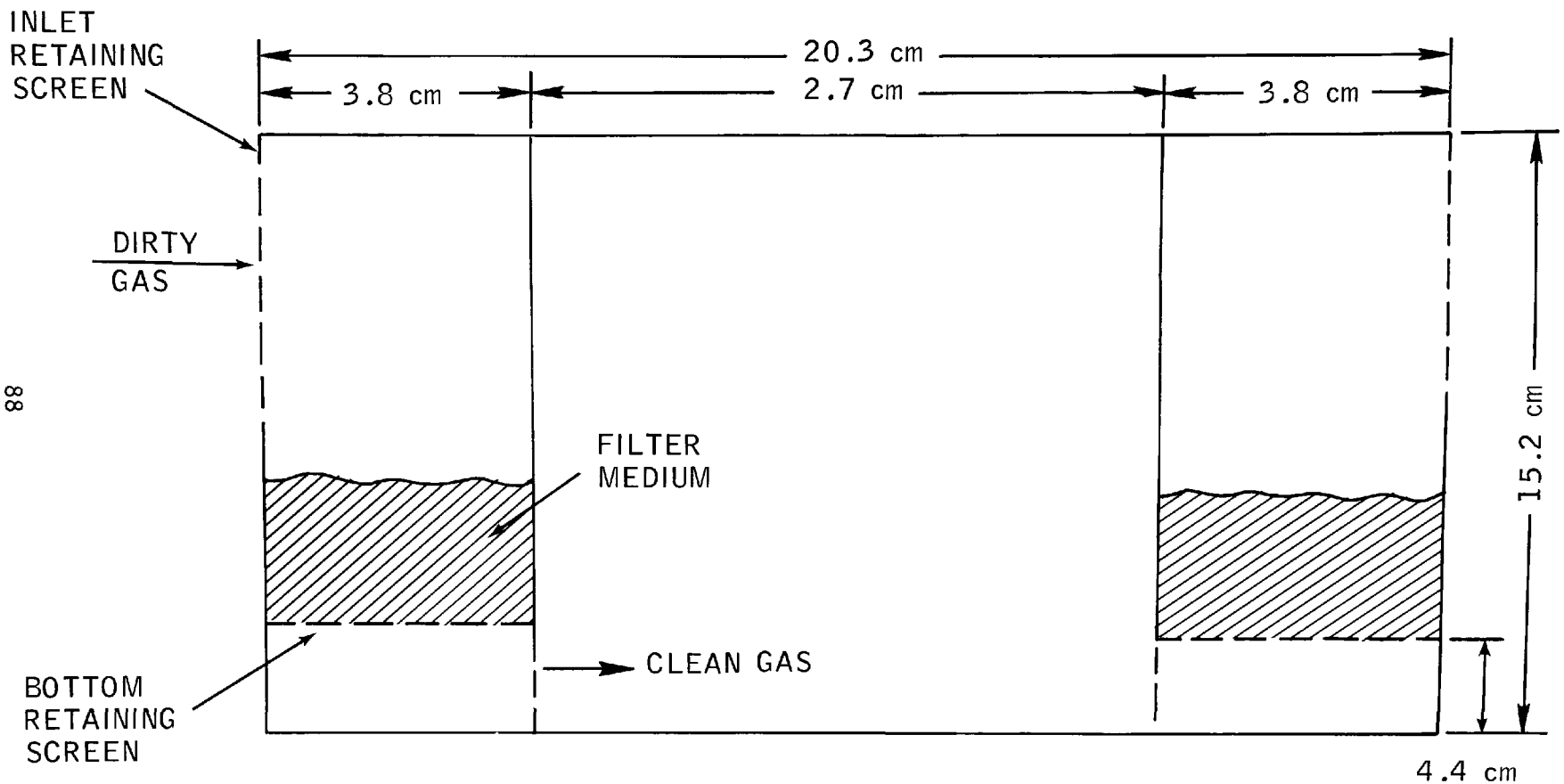

FIGURE V-4

DUCON FILTER SCHEMATIC

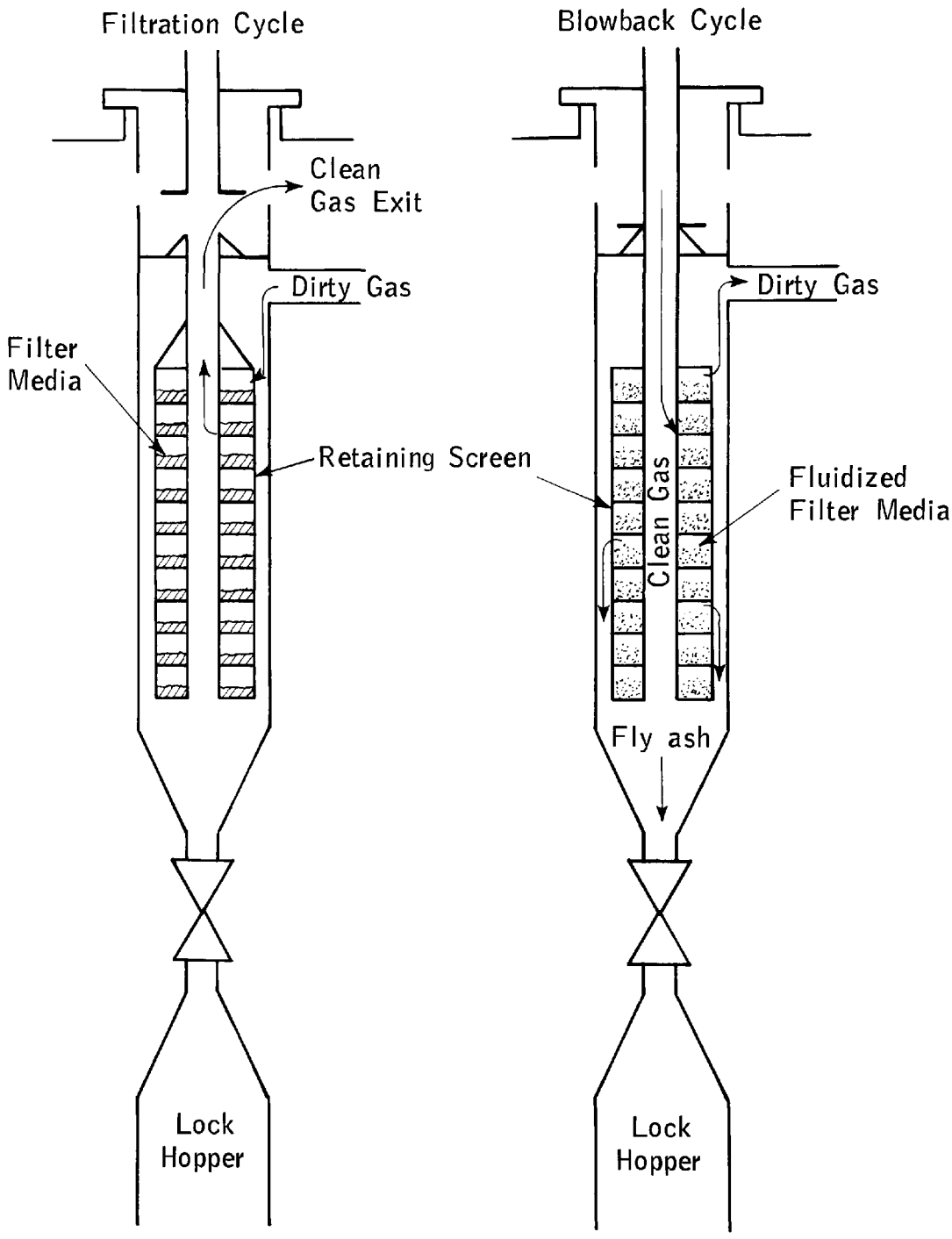

FIGURE V-5

DUCON FILTER ELEMENT AND SHROUD

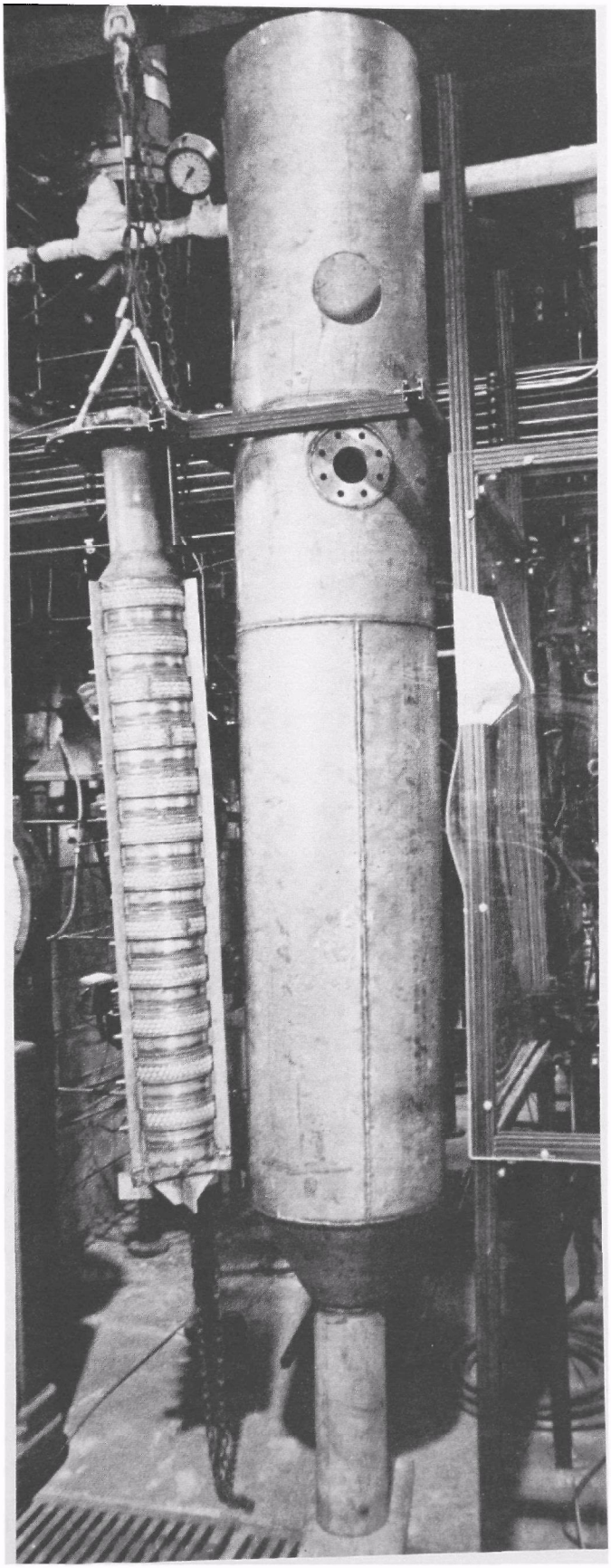

FIGURE V-6

EXXON FILTER SCHEMATIC

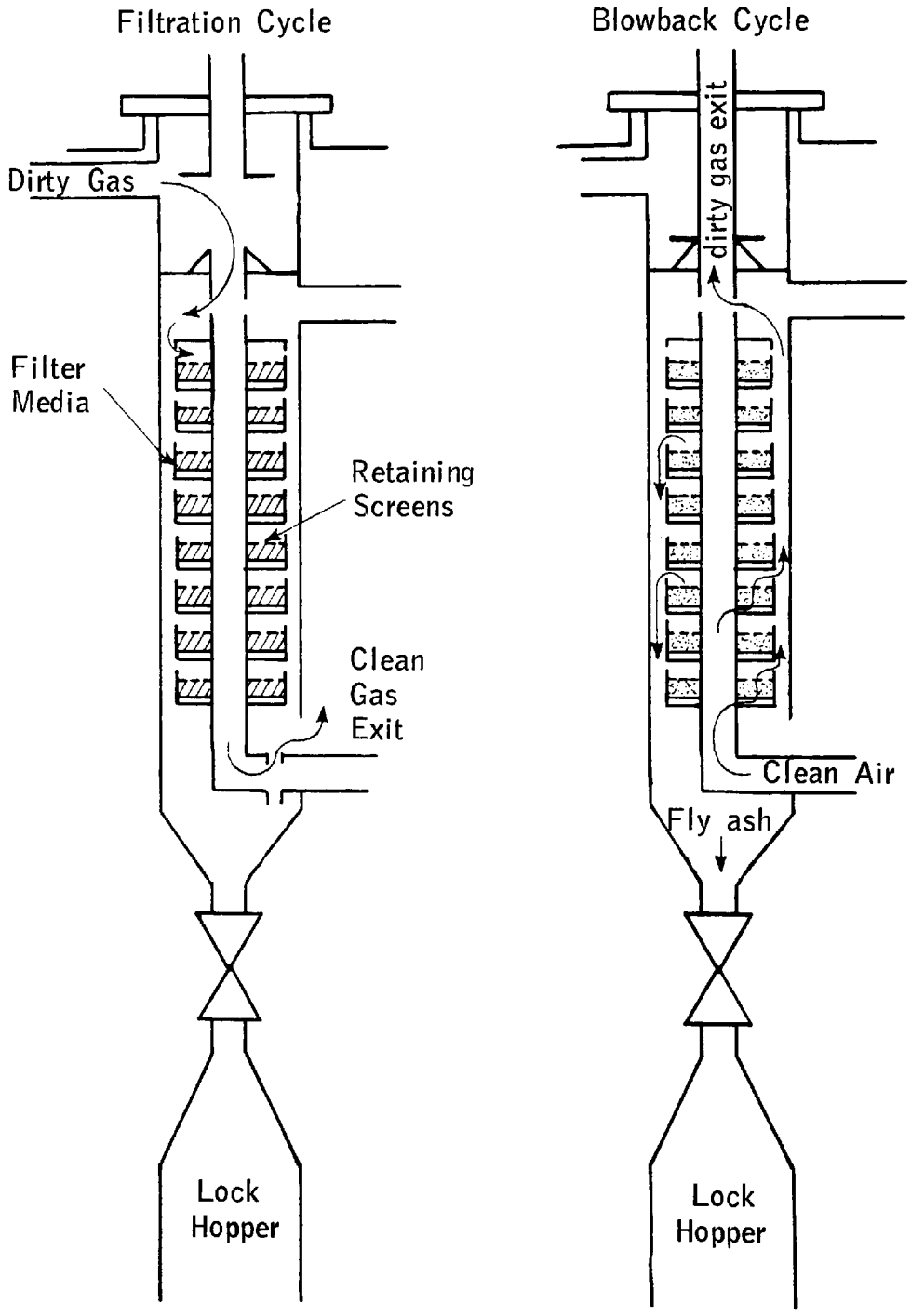

back with a larger volume of sub-sonic air for longer durations. The intent was to fluidized the filter beds rather than shock them with a short pulse of high pressure air. This method is described in Figure V-4.

Original Exxon Filter--

A fourth filter element designed by Exxon was also fabricated and tested. The Exxon filter element consisted of ten beds (instead of twelve) and was designed to permit easy disassembly and removal of the 50 X 50 mesh retaining screens. A schematic of the filter element and the arrangement within its shroud is shown in Figure V-7. Figure V-8 is a sketch of an individual bed. The blow back method was also different. The Exxon filter element used a "positive blow back" technique. It was equipped with shut off valves to allow it to be completely isolated from the feed and product streams during the blow back. The element was then depressurized and blown back with a larger volume of low pressure air.

Current System--

Discussion with the Ducon Company were held after operating problems developed with the original filter design. The problems are discussed in a subsequent section. These discussions led to the design and fabrication of a third filter system. The current system consists of two filter elements, each having five filter beds as shown in Figure V-9. The filter beds incorporate the modifications recommended by Ducon which included removing the inlet retaining screens to prevent plugging and increasing the freeboard of each bed to prevent entrainment of the filter media during blow back. A schematic of one of the modified filter beds is shown in Figure V-10. An annular fluidizing grid containing 56, 0.5 cm diameter holes was also installed at the bottom of each bed beneath the bottom retaining screen, as shown in a photograph of the clean gas side of the grid (Appendix J-2). The intent of the grid was to assure good distribution of the blow back air. Dirty gas enters the bed through the opening below the top flange and passes downward through the filter bed and out into the clean gas outlet tube in the center of the element. During blow back, the blow back air passes up through the fluidizing grids supporting each bed, fluidizes the beds and blows the fine particulates out through the inlet slot. A 18 cm (7 in) freeboard above the filter beds acts as a disengaging section for the filter media and prevents its entrainment through the outlet slot.

Pressure Vessel, Internal Piping--

The granular bed filter (GBF) was installed on the miniplant between the second stage cyclone and pressure control nozzle. The piping from the existing miniplant off gas line to the GBF is 30.5 cm (12 in) carbon steel pipe. It is refractory lined with Grefco 75-28 to an internal diameter of 10.2 cm (4 in) and is lined inside with a 4 inch Schedule 5 stainless steel pipe. The return line from the GBF outlet is 20.3 cm (8 in) diameter carbon steel pipe also refractory and steel lined to a 10.2 cm (4 inch) diameter. The pressure vessel housing the filter elements consists of a refractory lined vessel approximately 2.4 m (8 ft) in diameter by 3.4 m (11 ft) high. Figure V-11 is a photograph of the filter vessel and shows the size and structural relationship of the GBF to the rest of the miniplant. The pressure vessel is supported on a structure which is 5.6 m (18.5 ft) by 4.6 m (15 ft) and 5.9 m (19.25 ft) high. Appendix J-3 and J-4 are drawings showing the vessel dimensions and the locations of the various access ports. Appendix J-5 is a closeup photograph of the pressure vessel. The piping arrangement is shown schematically in Appendix J-6.

FIGURE V-7

DUCON SONIC FILTER SCHEMATIC

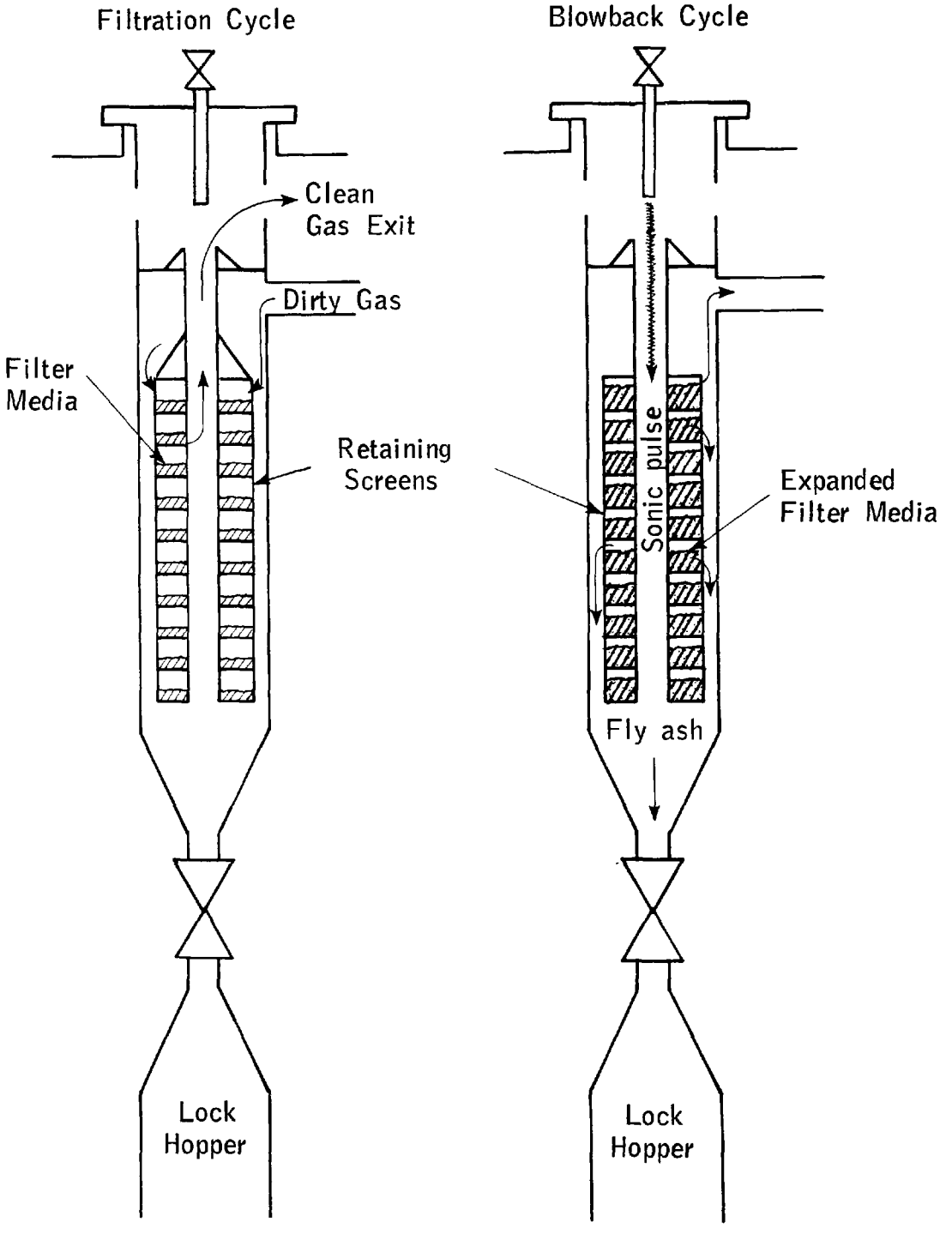

FIGURE V-8

SCHEMATIC OF A SINGLE EXXON FILTER BED

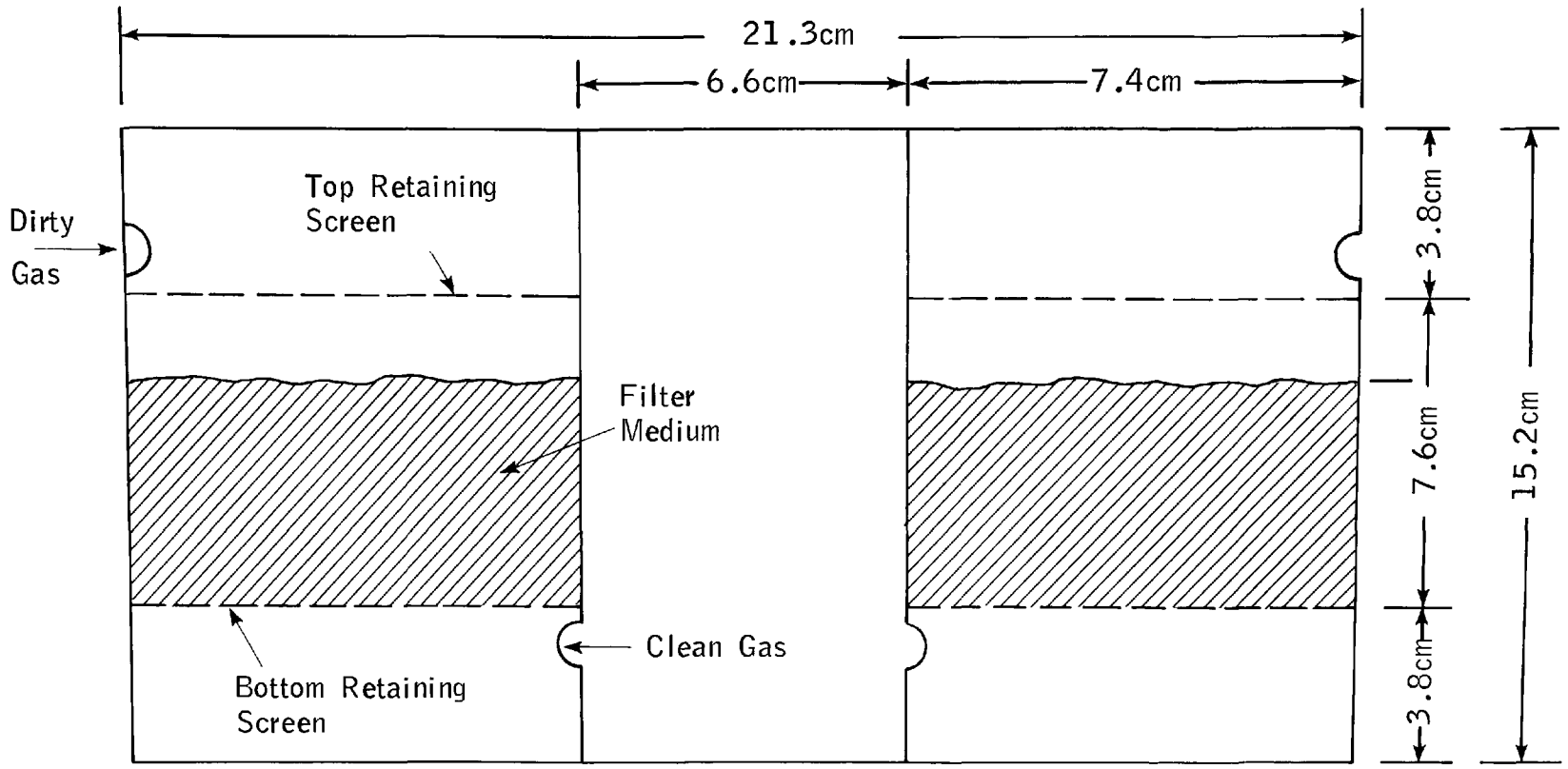

FIGURE V-9

MODIFIED EXXON FILTER ELEMENT

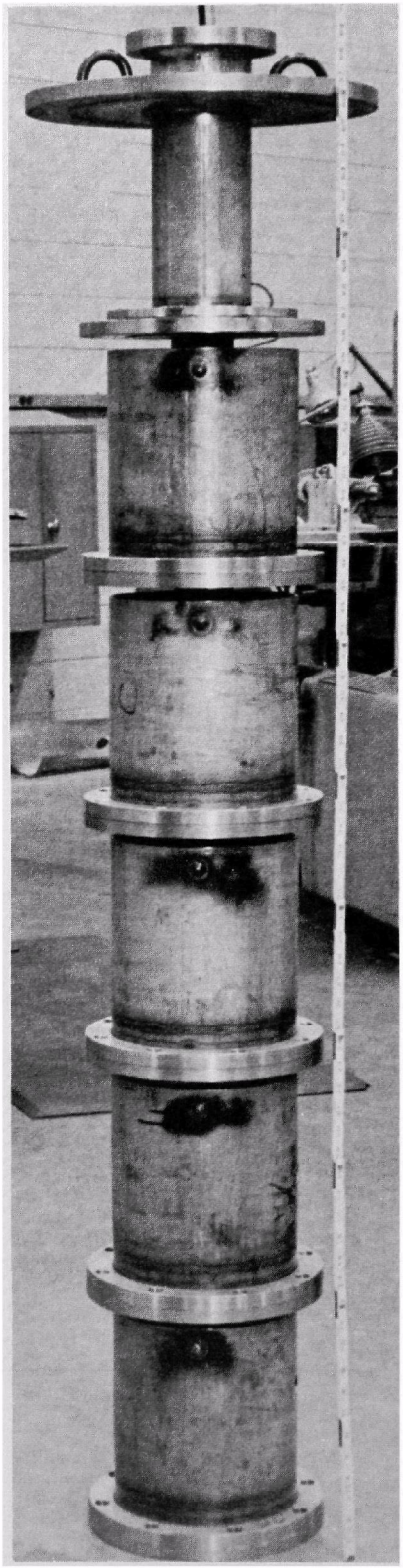

FIGURE V-10

MODIFIED FILTER BED

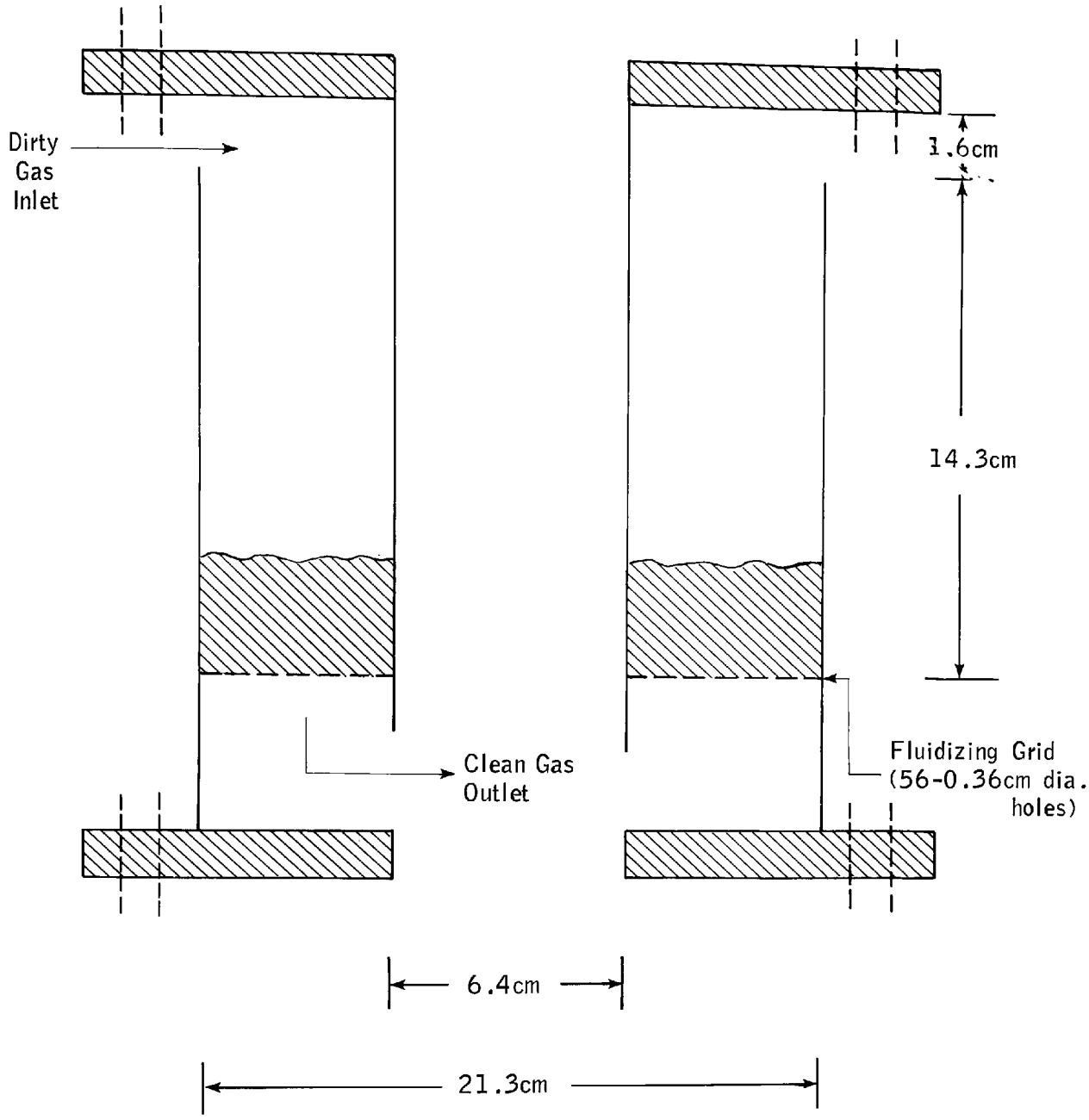

FIGURE V-11

GBF PRESSURE VESSEL AND STRUCTURE

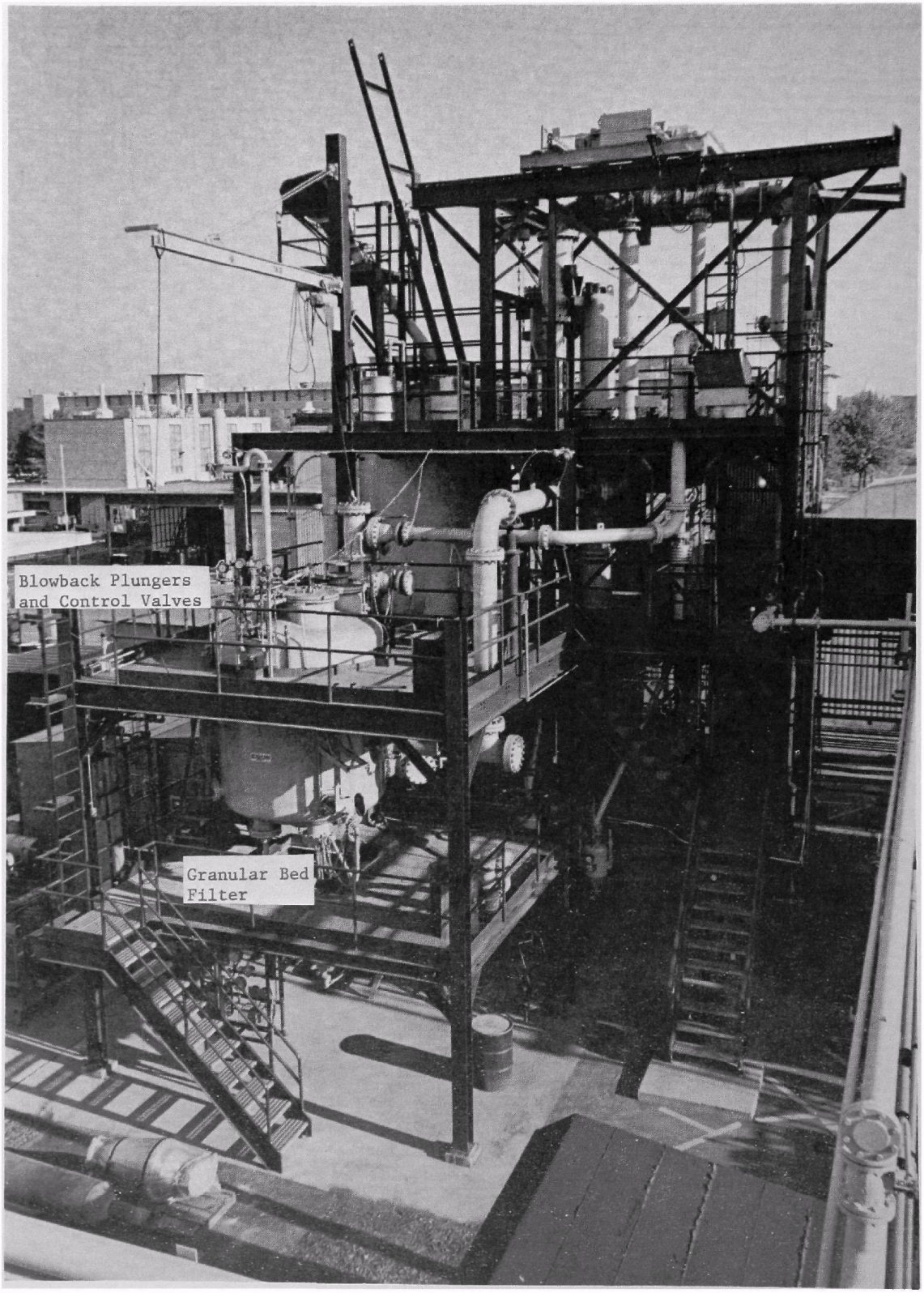

Access to the interior can be made through a 70 cm (27 in) manhole. The vessel can hold up to four filter elements installed through four flanges at the top of the vessel as shown in Figure V-11. Each filter element is contained within a shroud in the inside of the pressure vessel. Inlet gas is piped to each shroud, passing through a measuring orifice to determine the flow rate to each filter element. This is shown in Figure V-12. Clean gas exits from each shroud through openings at the top (Figure V-12) and fills the interior of the pressure shell. Blow back air enters each filter element through the top flanges of the pressure vessel (Figure V-11) and flows in reverse direction through each filter element. Particulates removed from the filter element during blow back impinge on the inside surface of the shroud, fall to the bottom and are collected in lock hoppers. The blow back gas leaving a filter element flows in reverse direction through the inlet gas system into the other filter elements which are in the filtration mode. Each element is blown back separately.

Startup Burner, Natural Gas Injection--

A natural gas burner was installed to preheat the interior of the pressure vessel to a temperature above the dew point of the combustor flue gas before starting a filtration test. The burner is a self-contained, direct-fired air heater capable of burning natural gas to give heat input rates of up to 146,500 W (500,000 BTU/hr). A schematic of the burner flow systems is shown in Appendix J-7. Burner operations are automatically controlled as are all the required startup sequencing and emergency shutdown procedures. The burner fires into the vessel through a side port for an 8 to 12 hour period prior to the start of a run. The filter vessel is at atmospheric pressure during this period.

Natural gas injection into the flue gas ducting between the miniplant second stage cyclone and the granular bed filter was found necessary to maintain the flue gas temperature above 843°C (1550°F) at the filter inlet. Gas was injected at four points through injection probes located 2.3 m (7.5 ft), 6.7 m (22 ft), 9.8 m (32 ft) and 14.6 m (48 ft) downstream of the second stage cyclone. Gas flows of approximately 0.03 s m^3/min (1 SCFM) through each probe was found effective in maintaining the gas temperature at the desired level.

Operating Procedures

To prevent condensation during startup, the pressure vessel housing the filter elements vessel was preheated for a period of 8 to 12 hours. After the preheat period, startup activities included calibration of all ΔP transmitters, turning on purge air flows for the pressure taps, and turning on the blow back air compressor. The proper blow back air pressure and flow were then set. A schematic of the GBF blow back air supply is shown in Figure J-9. At this point, the miniplant combustor was started up and flue gas was sent to the granular bed filter. During the filtration cycle, the pressure drop across the filter vessel and the flow to each element were continuously monitored. When the pressure drop increased to an unacceptable level (generally, 14 kPa above the baseline pressure drop), the blow back cycle was initiated. Blow back was accomplished by stopping the flow to one filter element by engaging a blow back nozzle and seal plate and blowing back with air at a pressure slightly above the filtration pressure. The other elements would then pick up the additional filtration load. The

FIGURE V-12

GBF PRESSURE VESSEL INTERIOR

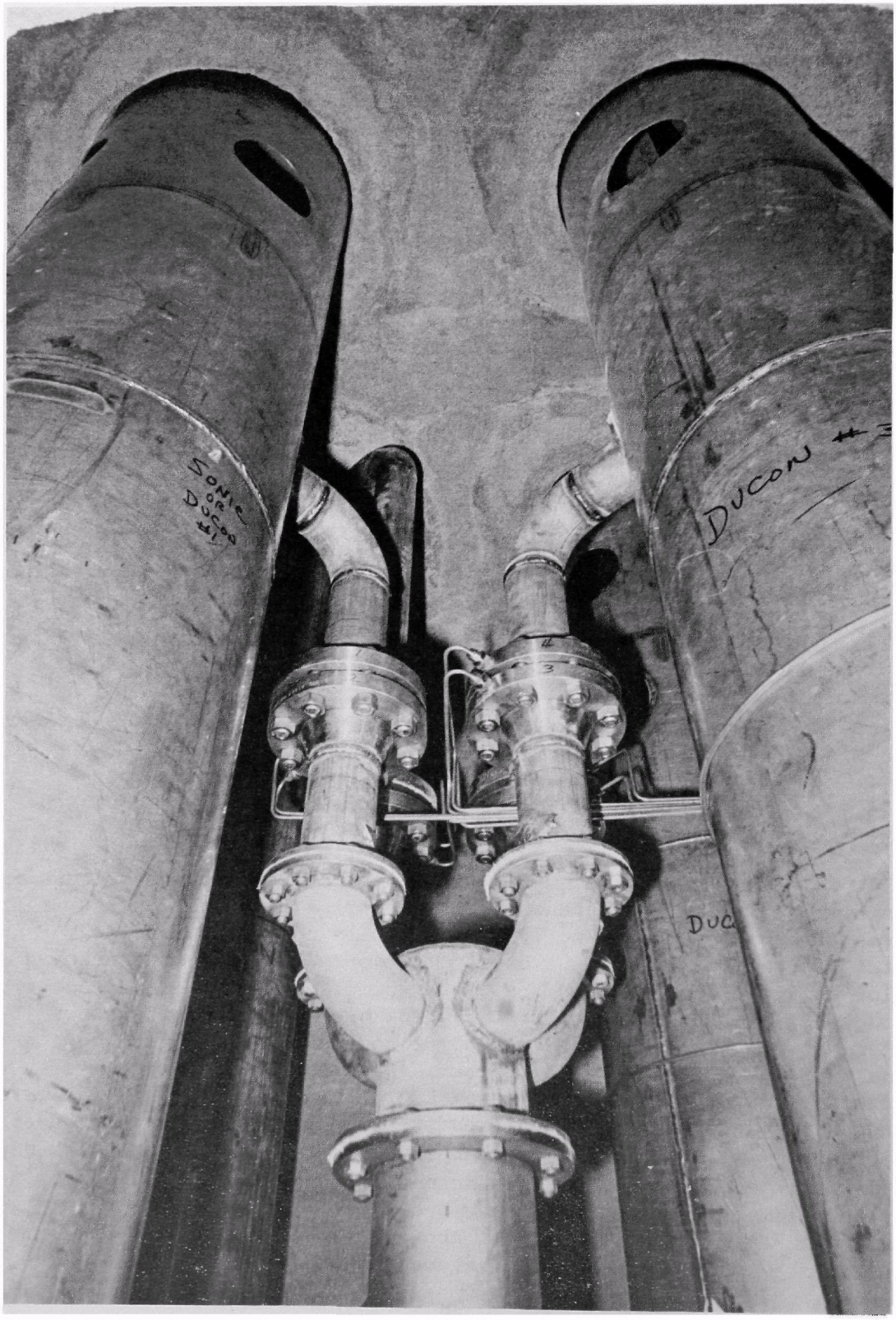

filter elements were blown back consecutively and all operations were controlled from the miniplant panel board. After a number of filtration/blow back cycles, the particulate collection lock hoppers were emptied.

EXPERIMENTAL RESULTS AND DISCUSSIONS

Test Rig Preliminary Results

The granular bed filter test rig was successfully operated during miniplant runs 46.1 and 46.2. The primary intent of these tests were to establish operating procedures and to determine, at least qualitatively, how readily the fly ash could be cleaned from the filter bed. A 6.4 m (2.5 in) deep bed of granular quartz was used during the test with a particle size ranging between 300 and 600 microns with 50 weight percent being finer than 400 microns. This particle size distribution was selected as a compromise between higher collection efficiency at a finer particle size and support screen plugging problems associated with too fine a particle size. The filtration velocity during these tests was approximately 6.1 m/min (20 ft/min). The blow back duration ranged between 3 and 10 min in these preliminary tests and the blow back air superficial velocity ranged between 0.18 and 0.34 m/sec (0.6 and 1.1 ft/sec). Some of the more important conclusions of the test are as follows:

1. The granular bed was capable of filtering fly ash.

2. As shown in Figure V-13, the bed exhibited a linear increase in ΔP with time. An analysis of the data indicates that the ΔP across the bed increased at a rate of 0.4 kPa/min (1.6 in H_2O/min).

3. Although blow back conditions were more favorable than can be afforded in a practical cycle, the ΔP across the bed was always able to be brought back close to its baseline value of about 1 kPa. The differences in the filter pressure drop after each of the blow backs was caused by differences in blow back conditions.

4. Extrapolation of the test results indicated that to maintain the ΔP across the bed below the design value of 14 kPa (2 psi), a cycle time of approximately 20-35 minutes was required between blow backs.

5. Although the filter collection efficiency was not measured, an inspection of the backup filter indicated that most of the fly ash was being trapped by the granular filter.

6. Inspection of the filter bed showed no signs of interraction, sticking or agglomeration of the fly ash and the filter media. The fly ash was easily removed from the quartz particles.

Operation of the filter was also attempted during miniplant runs 46.3 and 46.4 but was not successful due to condensation of moisture in the filter vessel. The initial pressure drop across the bed was well above

FIGURE V-13

TEST RIG RESULTS - ΔP VS. TIME

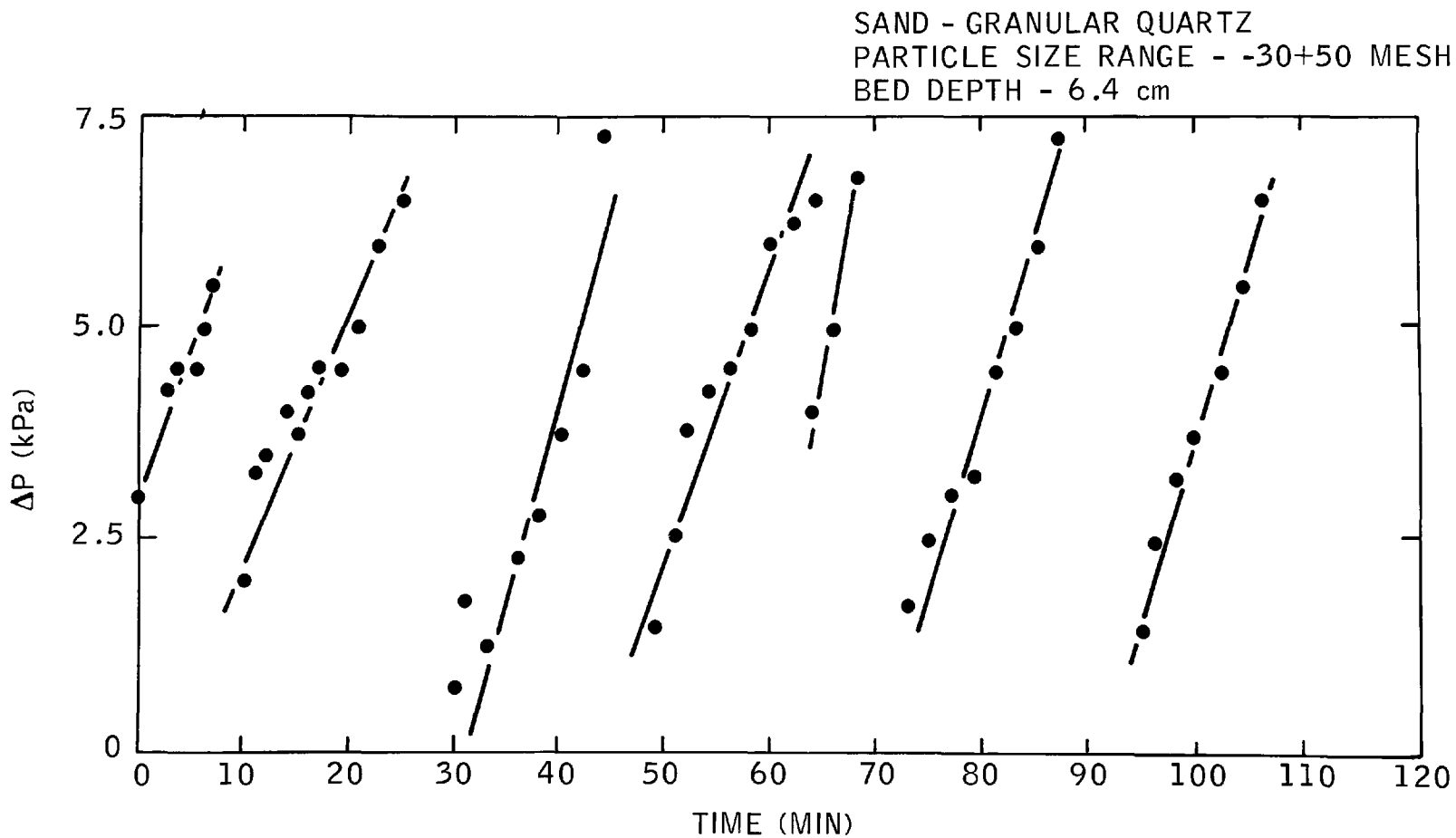

the design value of 14 kPa (2 psi) and the increase with time was much greater than during the initial tests. Inspection showed plugging of screens with caked carryover material, possibly precipitated by presence of moisture. Based on these observations, every precaution must be taken to assure that the filter is not operated below the dew point of the flue gas.

Testing of Original Ducon and Exxon Filters

After installation of the filters, shakedown began with ambient temperature testing of the system.

The objectives of these preliminary tests were to (1) check combustor pressure control with the filter on line, (2) pressure test the system, (3) check the alignment of the blow back nozzles, (4) check out the operation of the blow back flow system, and (5) measure the distribution of flow to each one of the filter elements. A number of mechanical problems were discovered (leaks, misalignments, etc.) and had to be corrected before further testing could be resumed.

Two high temperature runs were then attempted but the pressure drops across the filter became extremely high and all attempts at blow back were unsuccessful. Inspection of the filter elements after each of these runs showed that a hard filter cake had formed on the inlet retaining screens. This is shown in Figure V-14. Note in Figure V-14 that the particles are adhering to all surfaces, not only to the inlet screens, although the cake is thicker over the screens. The filter medium was usually particulate free indicating very little penetration through the screens. Since these initial runs were made before the preheat burner was installed it was originally thought that the plugging occurred during startup when moisture could condense before the filter vessel had come up to temperature. The preheat burner was later installed and a run (58) was made to re-evaluate the Ducon filter. The same screen plugging problems occurred before even one blow back could be successfully completed, and the original Ducon filter was deemed to be unacceptable for our application.

Runs using the Exxon designed filter also proved unsuccessful. Some screen plugging was in evidence but it was the inability to seal the blow back nozzles which caused the most problems. Proper engagement and sealing of the blow back nozzles were necessary in order to isolate the filter from the system so that depressurization and blow back could be initiated. Evaluation of the Exxon filter was discontinued at this point.

Modifications

At this point, a meeting was held with personnel from Ducon to discuss the problem of screen plugging. The discussions led to the design and fabrication of a third filter system. Ducon indicated that they had encountered the same screen plugging problem with fly ash and prevented it by removing the screens and designing the individual beds with more freeboard to prevent entrainment of the filter media during blow back. It was also recommended that a fluidizing grid be used at the bottom of the beds to assure good distribution of the blow back air. The use of an ejector to replace the sometimes troublesome plunger type blow back nozzles was also suggested. A detailed description of the modified filter was given in an

FIGURE V-14

DUCON FILTER WITH PLUGGED SCREENS

earlier section. Filter elements incorporating these suggestions were fabricated and shakedown continued using two of these elements each of which contained five filter beds. An ejector system for blow back was also designed, but was not tested during the period covered by this report.

Testing of Modified System

Operability of the modified filter system (not including the ejector) was demonstrated. The end of the initial shakedown phase was signified by the completion of a 24 hour run (Run 59). The ability to filter and blow back, the ability to maintain low pressure drops, and the ability to collect particulates after blow back were demonstrated. Collection efficiencies of over 90% were calculated during the initial portion of the run based on measured outlet particulate concentrations of about 70 mg/m^3 (0.03 gr/SCF). The particulate loading in the outlet from the secondary cyclone had been measured a number of times prior to the granular bed filter runs and had averaged about 2300 mg/m^3 (1 gr/SCF). It was assumed that this was the inlet loading to the filter during these tests. In the future, provisions will be added to sample particulates at the inlet and outlet of the filter simultaneously. The particulate escaping the granular bed filter had a weight median particle size of 4 microns. A complete size distribution is shown in Table III-8. Stable operation for up to 24 hours was also demonstrated with no significant increase in baseline pressure drop across the filter. Blow back was usually required every 10-20 minutes during which time the filter pressure drop had increased by 14 kPa (2 psi) above its baseline value. A range of blow back conditions were used to restore the baseline pressure drop. Blow back durations ranged between 2 and 30 seconds and superficial velocity between 0.15 and 0.75 m/s (0.5 and 2.5 ft/s). Filtration velocities generally ranged between 18.3 and 24.4 m/min (50 and 80 ft/min). Filter media consisting of 300 to 600 micron quartz particles were tested. The quantity of blow back air used ranged from 1 to 5% of the filtered gas rate.

A number of problem areas were defined during the shakedown portion of the program. Demonstrated particulate outlet concentrations were still higher than the tentative turbine inlet requirements, although the lowest levels measured to date are only slightly above the upper limit of the tentative target range. Firm turbine requirements have not been set and it is too early to judge the suitability of the filter to protect gas turbines. However, at times, the filtration efficiency was very poor and the outlet particulate concentrations were as high as 700 to 1200 mg/m^3 (0.3 to 0.5 gr/SCF). It was also observed that the efficiency decreased with time in some of the longer runs, including the 24-hour run, dropping from 90% initially to about 50% later in the run. Loss of filter media during blow back was another reoccurring problem during shakedown. Since inlet retaining screens were found to be susceptible to plugging, screens probably cannot be used and better control of the blow back air supply must be established to minimize these losses. A significant buildup of particulates in the filter beds was also observed amounting to about 30% of the weight of the filter media. A possible steady long term increase in filter pressure drop may result because of this. However, no significant increase in filter pressure drop was noted during any of the shakedown runs.

It was also observed that the particulates were not only building up in the beds, but were uniformly mixed with the filter media. It is possible that the buildup and mixing of particulates in the bed could be responsible for the increase in the particulate concentration in the outlet gas with time. The cleaning of the filter media by blow back must be improved.

Another potential problem with the current design is its vulnerability to upsets. If upsets occur, such as bed plugging or loss of filter media, the operating problems caused by such upsets usually require shutdown of the system. It is usually not possible to take corrective action which restores good operation. Another problem which may be unique to the Miniplant was the interaction of the granular bed filter with the rest of the FBC system during the blow back cycle. An increase in system pressure was noted during blow back resulting in problems with the coal feed system which is controlled by the differential pressure between the coal feed vessel and combustor. This required modifications to the coal feed control system to minimize the effects.

Test Details--

A detailed description of the runs made to date follows. Table V-1 summarizes the filter operating conditions for the five high temperature runs made to evaluate the performance of the modified filter system. Prior to these runs, a series of ambient temperature runs was made using fly ash and talc particulates injected into a compressed air stream. Some indication of the effect of blow back conditions on restoring the bed pressure drop was obtained. An 8 s blow back at a velocity of 0.5 m/s seemed adequate. However, loss of filter media during blow back and outlet screen plugging occurred during the runs and the significance of the results was uncertain.

Miniplant run 54 was the first high temperature run using the modified filter elements. The combustor was operated at a temperature of 910°C (1670°F) and at a pressure of 595 kPa (86 psia). The combustor air flow rate was set to give a filter face velocity of 25 m/min (83 ft/min). Coal was burned for a total of five hours and the pressure drops across the two filter elements were approximately 14 kPa (2 psi) just prior to the start of coal combustion and were allowed to build up to as high as 41 kPa (6 psi) during the first hour of coal combustion. The blow back cycle was relatively successful and was able to reduce the pressure drops to approximately 21 kPa (3 psi). The filter elements were blown back at superficial velocities of 0.34-0.49 m/sec (1.1-1.6 ft/sec) for durations ranging between 8 sec and 30 sec. However, in the latter part of the run, the pressure drops across the filter elements just after blow back began to increase indicating a decline in blow back efficiency. When the run was ended, the pressure drops across the filter elements were approximately 69 and 110 kPa (10 and 16 psi).

During the latter part of the run a flue gas particulate sample was taken downstream of the GBF. A grain loading of 1570 mg/m^3 (0.69 gr/scf) was measured, giving an overall filtration efficiency of approximately 20-30%. Moisture condensed in the filter during heat up, since the preheat burner had not been installed before this test was run, causing some of the particulates to agglomerate in the filter. This probably influenced the effectiveness of the blow back and the filtration efficiency.

TABLE V-1. GRANULAR BED FILTER RUN SUMMARY
FOR MODIFIED FILTER ELEMENTS

Filter Description	Run 54 (6/29/77)	Run 55 (7/14/77)	Run 56 (7/26/77)
Number of Elements	2	2	2
Number of Beds/Elements	5	5	5
Inlet Retaining Screens	None	None	None
Filter Medium	Quartz	Quartz	Quartz
Bed Depth (cm)	3.8	3.8	3.8
Filter Medium Part. Size (μm)	250-600	250-600	250-600
Operating Conditions			
Filter Vessel Preheat Temperature (°C)	No Preheat	450	450
Filter Vessel Inlet Temperature (°C)	815	740	760
Filter Vessel Outlet Temperature (°C)	540	510	510
Pressure (kPa)	590	570	800
Filtration Velocity (m/min)	25	21	18
Baseline ΔP (kPa)	14 (70-100 at end)	20 (35-40 at end)	20
ΔP Before Blow Back (kPa)	40	50	50
Run Length (hrs)	5.5	1.5	2.5
Blow Back Conditions			
Superficial Velocity (m/s)	0.34-0.49	0.55-0.73	0.76
Duration (s)	8-30	15-30	8
Interval Between Blow Backs (min)	5-10	5	5-10
Particulate Emissions			
Measured Part. Concentration (mg/m^3)	1570	Not Measured	Not Measured
Estimated Removal Efficiency (%)	30	--	--

TABLE V-1 (Continued). GRANULAR BED FILTER RUN SUMMARY FOR MODIFIED FILTER ELEMENTS

Filter Description	Run 57 (8/2/77)	Run 58 (8/5/77)	Run 59 (8/11/77)
Number of Elements	2	2	2
Number of Beds/Element	5	12	5
Inlet Retaining Screens	None	50 X 50 mesh	50 X 50 mesh
Filter Medium	Quartz	Quartz	Quartz
Bed Depth (cm)	6.4	3.2	6.4
Filter Media Part. Size (μm)	250-600	250-600	250-600
Operating Conditions			
Filter Vessel Preheat Temperature (°C)	650	Original Ducon system used. Run unsuccessful because of screen plugging.	650
Filter Vessel Inlet Temperature (°C)	860		860
Filter Vessel Outlet Temperature (°C)	700		740
Pressure (kPa)	815		790
Filtration Velocity (m/min)	18		26
Baseline ΔP (kPa)	28		28
ΔP Before Blow Back (kPa)	55		55
Run Length (hrs)	6		23
Blow Back Conditions			
Superficial Velocity (m/s)	0.46		0.46
Duration (s)	8		8
Interval Between Blow Backs (min)	10		10, 60-90
Particulate Emissions			
Measured Part. Concentration (mg/m3)	40-180	--	180,640,1230
Estimated Removal Efficiency (%)	98-92	--	92, 72, 47

Miniplant run 55 was also made at a low pressure because of blow back air supply limitations. The natural gas preheat burner was used for the first time to preheat the granular bed filter pressure vessel above the gas dew point. The system worked well and the temperature within the vessel reached 454°C (850°F) before particulate laden gas was passed through the filter elements. Baseline pressure drops of 21 kPa (3 psi) were measured across the filter elements during the combustor preheat. During the combustor preheat period, in which kerosene was burned in the combustor, the pressure drop across the filters increased 24-28 kPa (3.5 - 4 psi) every 30 minutes. Blow backs at 0.73 m/sec (2.4 ft/sec) superficial velocity were successful in restoring the filter ΔP to the original 21 kPa (3 psi). The collected particulate had a blackish coloration indicative of collection of oil soot and attrited sorbent.

During a 1-1/2 hour period burning coal, pressure build up was more rapid necessitating blow back approximately every 5 minutes (Figure V-15). The filtration velocity during this period was 27.6 m/min (90.6 ft/min). Equal flow distribution was not achieved during the coal burning phase, one of the elements constantly passing more gas than the other. The collected particulates had the characteristic red-brown coloration of a mixture of coal, fly ash and attrited sorbent. The quantity of particulates collected in the lock hoppers amounted to about 50% of the anticipated particulate loading to the GBF.

The filter elements were inspected after the run and considerable build-up of particulates in the individual beds was evident. The particulate sampling system was not in operation during the run and the filtration efficiency was not measured. However, the clean gas outlet tubes and the interior of the GBF pressure vessel showed little evidence of particulate pass through. The outlet retaining screens were quite clean and showed no evidence of plugging.

Miniplant run number 56 was an attempt to operate the granular bed filter system at the full operating pressure of 928 kPa (135 psi). This run was attempted after modifications were made on the blow back system to increase the capacity of the system in terms of pressure and flow. Coal was burned for almost 2-1/2 hours and the pressure drop across the filter was able to be controlled between 21 and 48 kPa (3 and 7 psi) with 8 second duration blow backs at a superficial velocity of 0.76 m/s (2.5 ft/s) every 5-10 minutes. The filter operations appeared to be successful and the run was only terminated when a fire developed in the coal injection vessel. However, upon inspection after the run, it was found that most of the filtering media had been lost from the filter beds during the blow back cycle probably because of a excessively high blow back air flow. Again, no particulate measurements were made and the filtration efficiency was not determined.

Miniplant run number 57 was a repeat of the previous run with emphasis on maintaing control of the blow back velocity since bed losses during blow back were appreciable during run 56. Each filter bed was 6.4 cm (2-1/2 in) deep and consisted of 250-600 micron diameter quartz particles. An approach velocity of the gas to the filter elements of 18.3 m/min (60 ft/min) was measured.

FIGURE V-15

EFFECT OF BLOWBACK ON FILTER PRESSURE DROP
RUN 55

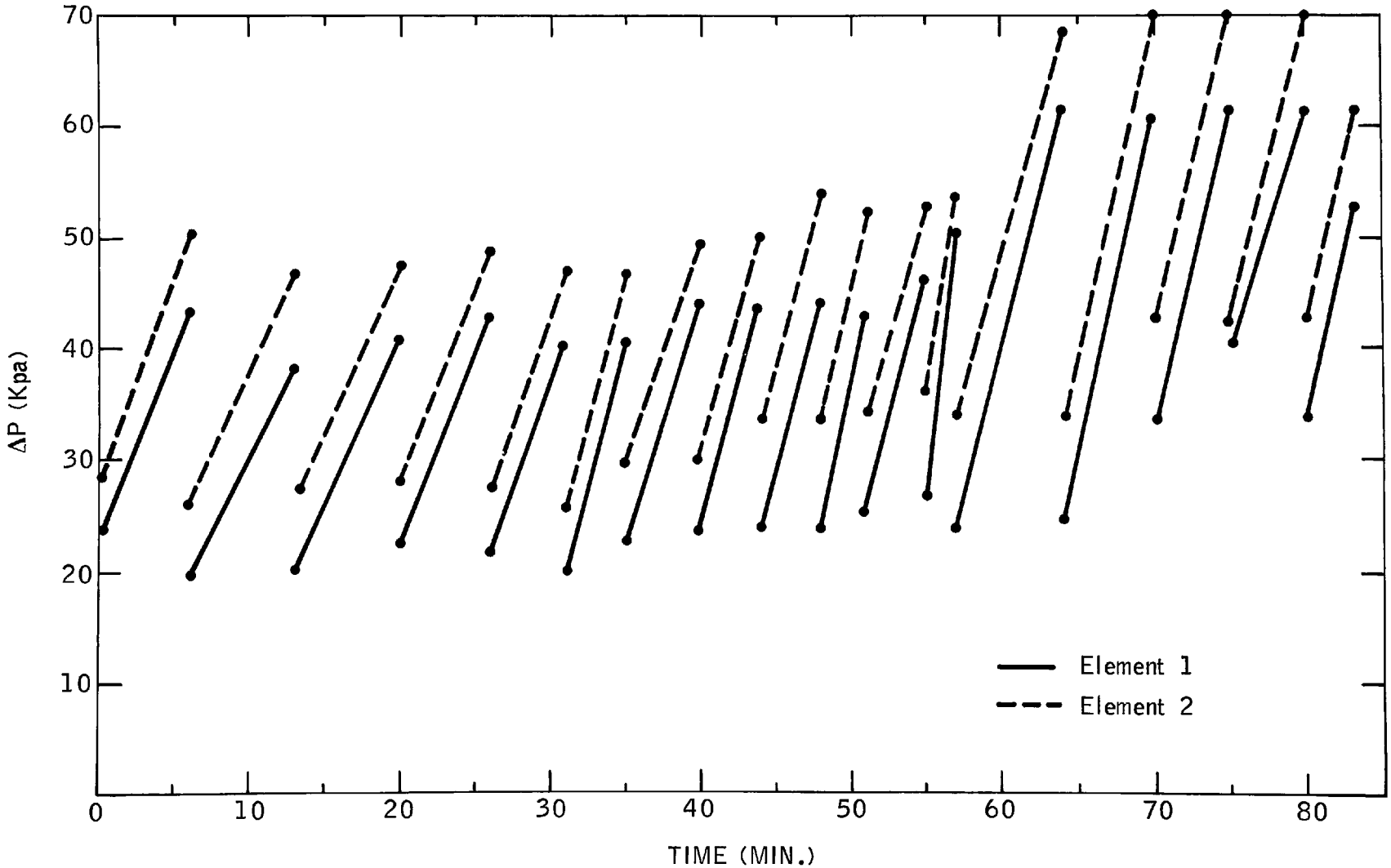

The blow backs were made at 10 minute intervals using a pulse duration of 8 seconds at a superficial velocity of 0.46 m/s (1.5 ft/sec). During the filtration period between blow backs, the pressure drop across the filter beds increased from the baseline level of 28 to 55 kPa (4 to 8 psi). The profile of the bed pressure drop was very reproducible. During the 6 hours of the run, collection of the particulates captured by the filters was achieved in the lock hoppers. Although filter medium loss did occur, it was not as appreciable as in run 56. Retention of a significant amount of captured particulates in the filter beds was also apparent. A particulate sample of the off gas from the GBF was obtained during this run. The particulate loading was measured to be 187 mg/m^3 (0.08 gr/SCF), which represents a collection efficiency between 90 and 95%.

Miniplant run 59 was made after 50 X 50 mesh inlet retaining screens were installed on the modified filter elements to prevent loss of filter media. The objectives of the run were to: (1) demonstrated GBF operations over a 24 hour period, (2) observe any changes in baseline ΔP over a number of blow back cycles, (3) determine again if inlet retaining screens could be used to prevent loss of the filter medium during blow back without plugging, and (4) measure temperature profiles from the combustor bed through the filter vessel.

The GBF was continuously operated for a total of 28-1/2 hours during which coal was burned for 23 hours. The baseline pressure drop across the filter elements was measured to be 28 kPa (4 psi) and was allowed to build up an additional 14 kPa (2 psi) before blowing back. Filtration was done at an approach velocity of 25.6 m/min (84 ft/min). Blow backs at a superficial velocity of 0.46 m/sec (1.5 ft/sec) for an 8 second duration were successful in restoring the ΔP to the baseline value.

The run appeared to have two distinct segments as far as particulate removal was concerned. During the first 8 hours of operation on coal, the time between blow backs was 8-10 minutes. During a one hour particulate sampling period, a particulate concentration of the gas leaving the GBF of 180 mg/m^3 (0.077 gr/SCF) was measured. This loading was comparable with that measured during run 57. At this point in the run, the coal feed was interrupted for a 4 hour period during which kerosene was burned to maintain the combustor bed temperature. No blow backs were made during this period. During the last 14 hours on coal, the time between blow backs increased to between 1 and 1-1/2 hours. In an 9 hour particulate sampling period, a loading of 653 mg/m^3 (0.28 gr/SCF) was measured. During the last 2 hours of the run, another particulate sample gave a loading of 1260 mg/m^3 (0.54 gr/SCF).

On inspection of the filter elements after the run, it was seen that the inlet retaining screens were partially plugged. Figure V-16 is a photograph of one of the filter beds after the run which clearly illustrates the nature of the problem. It appeared that the gas was entering the bed through a narrow slit between the screen and the flange of the next bed. A considerable amount of particulate was retained in the filter beds in the form of a hard filter cake. The fact that rat holing had occurred was apparent. The filter cake probably formed during the period when kerosene was burned and the subsequent low measured collection efficiencies resulted because of the rat holing.

FIGURE V-16

MODIFIED EXXON FILTER WITH PLUGGED INLET RETAINING SCREENS

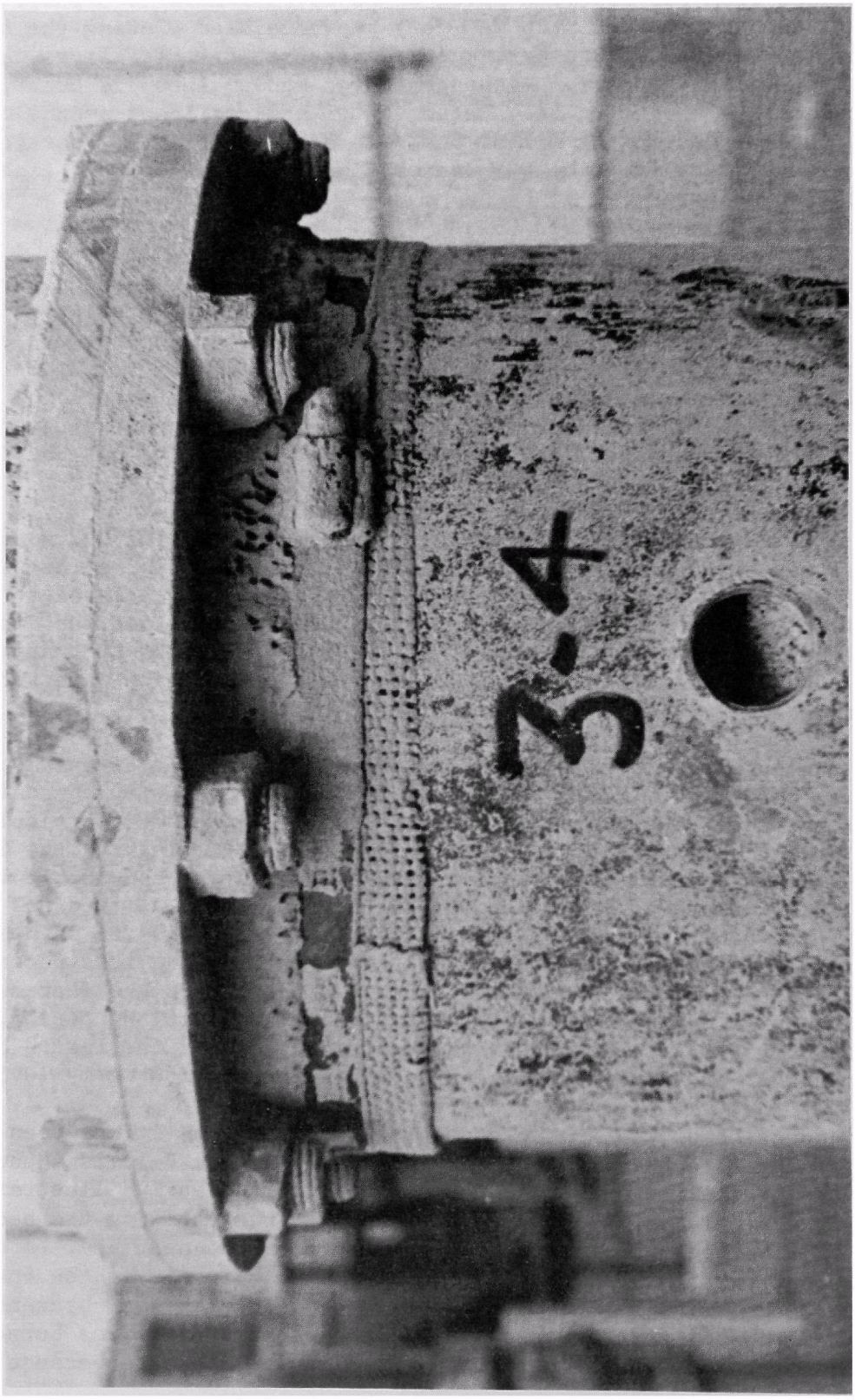

Pressure control in the entire FBC system was susceptible to upsets during blow back pulses. The differential pressure between the coal injection vessel and the combustor was easily upset. Three fires occurred in the injection vessel as a result of pressure upsets which caused hot bed solids to flow back into the injection vessel. Alternate blow back procedures or modifications to the coal feed system must be developed in order to minimize these upsets.

Natural Gas Injection Tests--

Natural gas injection into the flue gas line between the second stage cyclone and the GBF was investigated as a means of maintaining the flue gas temperature above 925°C (1700°F) before entering the GBF. During an initial test, natural gas was injected at a single point 2.3 m (7.5 ft) downstream of the second stage cyclone and the effect on the GBF inlet line temperature profile was observed. As seen in Figure V-17, the GBF inlet was able to be increased from 749°C (1380°F) to 829°C (1525°F) but a sharp temperature rise near the injection nozzle caused by the instantaneous combustion of natural gas was also observed. To minimize this temperature rise, natural gas was later injected at three additional points but keeping the total natural gas flow the same as in the single injection point test. This technique was successful in maintaining the GBF inlet at 925°C (1700°F) without any sharp temperature rises. A temperature profile is shown in Figure V-17.

Blow Back Gas Ejector Design--

A blow back gas ejector was designed to replace the blow back gas inlet plunger and seal plate assembly. Figure V-18 is a sketch of the ejector system. The motive gas is air compressed to 2550 kPa. The ejector system was not tested during this reporting period but is scheduled to be tested in the future.

FIGURE V-17

FLUE GAS TEMPERATURE PROFILE

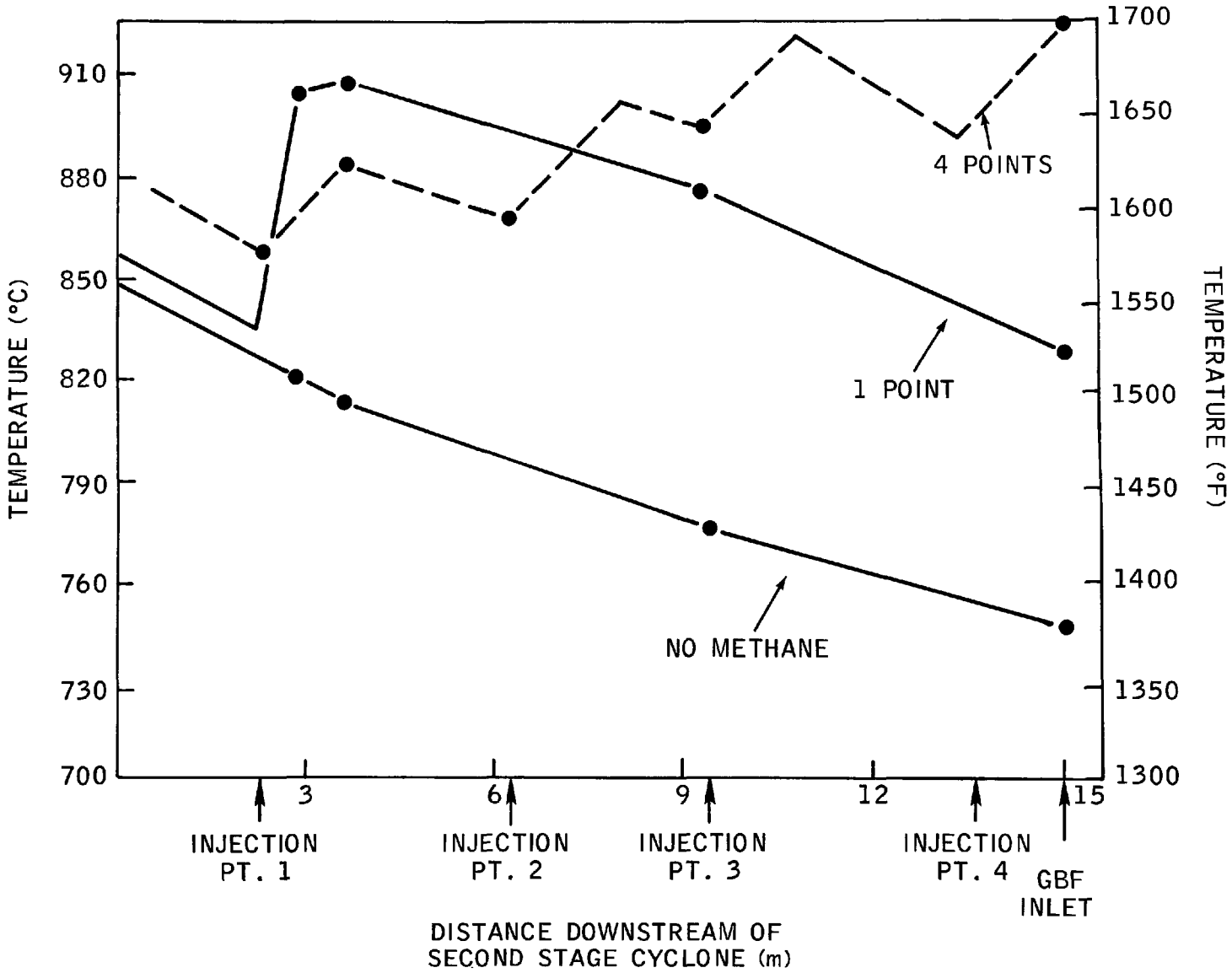

FIGURE V-18

SCHEMATIC OF THE EJECTOR BLOW BACK SYSTEM

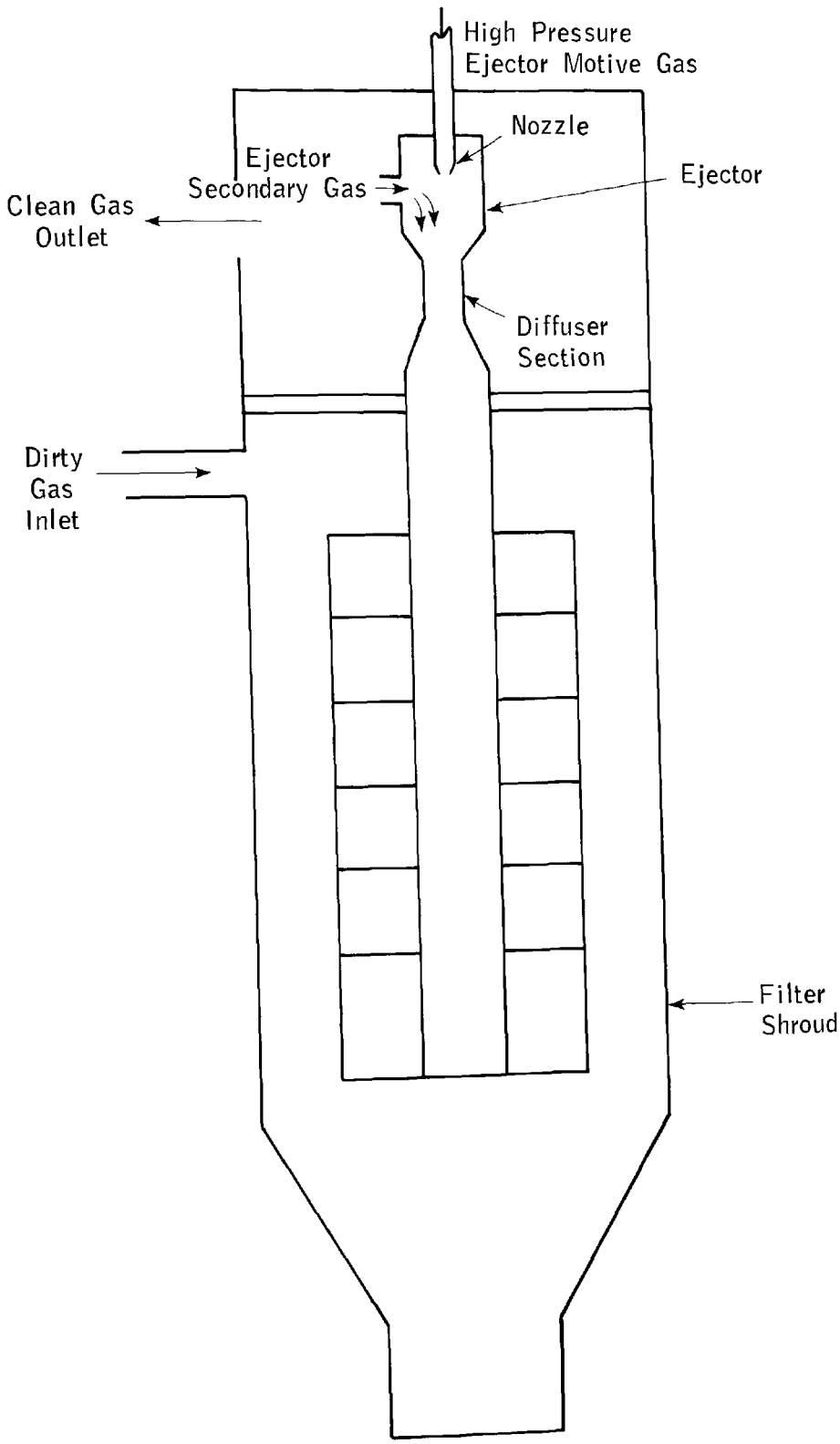

SECTION VI

MODIFICATION OF THE BATCH UNIT

The combustor and regenerator sections of the batch unit were modified to permit continuous operation. Prior to these modifications they could only be operated in a batch or semi-batch manner. Operation of the unit in the continuous mode will increase its flexibility and enable the unit to provide the type of data which can only be obtained from continuous units such as the miniplant.

The modifications will permit the continuous feeding of both coal and sorbent, and the continuous removal of solids from the combustor. In the past the facilities permitted only the continuous charging of coal to the combustor. Sorbent was changed at the beginning of the run, with no provision for withdrawal or makeup. The regenerator can now be operated continuously. Previously, the regenerator was operated only in a batchwise manner. In addition there were no provisions for recycling the primary cyclone's solids to the combustor. This has an adverse effect upon combustion efficiency, as the first cyclone's solids contain an appreciable amount of unburned coal "fines." The modified system now has provisions both to recycle or not and will permit the measurement of combustion efficiency with either method of operation.

In the discussion that follows the modified facilities will be described. Facilities retained from the batch unit were discussed in previous reports (1,9) and will not be described in detail.

COMBUSTOR SECTION

Combustor Vessel

A schematic flow diagram of the modified combustor and the off gas and solids flow are shown in Figure VI-1.

The combustor was constructed from four sections of 25 cm (10 inch) diameter standard wall carbon steel pipe, lined with Grefco 75-28 refractory to an inside diameter of 11.4 cm (4.5 inches). The height of the vessel above the fluidizing grid is about 4.9 m (16 ft). Below the grid is a 61 cm (24 inch) burner section, lined with Grefco Bubblite Refractory. A 4 inch ID hand hole is provided directly above the grid to facilitate the complete removal of solids after a run. The preheat burner was described previously (1).

A water cooled fluidizing grid is inserted between the burner section and the first combustor section. The grid supports the static bed and provides a uniform flow of fluidizing air to the bed during operation. The fluidizing air enters through 80-0.16 cm holes in the grid.

FIGURE VI-1

SCHEMATIC OF MODIFIED BATCH UNIT

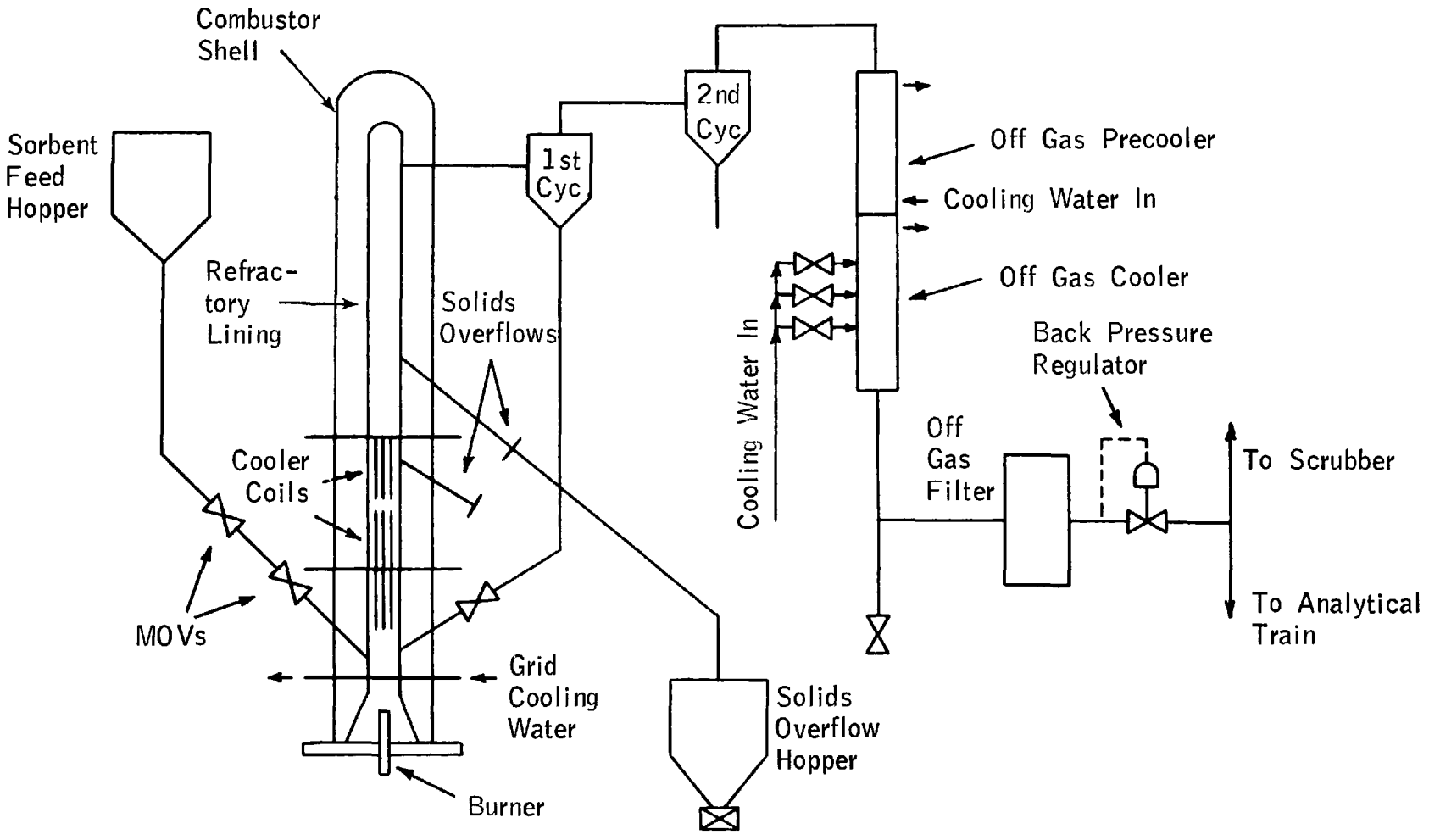

Three sets of vertical cooling coils are located within the combustor which control combustor temperature. The coils are made of 6.4 mm 316 SS tubing with a surface area of 0.06 m^2 per coil. The cooling coils are supplied with dimineralized water, and the flow rate is controlled to produce a steam/water outlet mixture. High flow rates can be used to prevent steam formation when heat transfer coefficients are measured.

Two flanged inlets are welded into the side walls of the first section above the grid at an angle of 60° to the horizontal (well above the angle of repose for sorbents and fly ash). These serve as a sorbent charging line and as a return line for solids from the primary cyclone. The sorbent charging line is 1-1/2 inch IPS Sched. 40 and the primary cyclone return line is 4 inch IPS, Sched. 40, CS refractory lined to a 5 cm (2 inch) ID. Both are projected through the refractory and terminate about 0.013 cm (1/2 inch) above the grid. Introduction of the solids immediately above the grid improves mixing of the solids.

The second and third sections above the grid have outlets 0.46 cm (18 inches) long and inclined at 60° to the horizontal welded into three side walls. The outlets are 4 inch IPS Sched. 40 CS, refractory lined to a 5 cm (2 inch) ID. Both are projected through the refractory to the combustion zone. These serve as solids overflow lines. The projection of the lower outlet terminates 1.09 m (43 inches) above the grid, and provides a bed volume of 0.0111 m^3. The projection of the upper outlet terminates 1.85 m (73 inches) above the grid, and provides a bed volume of 0.0189 m^3. The overflow lines discharge to a solids overflow hopper.

Combustor Off Gas System

The off gas system may be classified into three major components; they are:

- Primary and secondary cyclones
- Off gas coolers
- Off gas filter and back pressure regulator

Cyclones--

Both cyclones have been rebuilt in order to increase their efficiency. They were cast with Resco RS17-E refractory with the aid of wood mandrels, which were "burned out" with a torch after the refractory had hardened. The refractory is highly abrasion resistant. The gas discharge lines, at the top of the cyclones, are made of 316 SS in order to resist corrosion. Details may be found in Figure VI-2.

The primary cyclone will recover unburned coal and some fly ash and sorbent from the off gas and return it to the combustor or to a receiving hopper. The solids return line is fabricated with a length of 2 inch flexible hose that may be connected either to the combustor or to a receiving hopper.

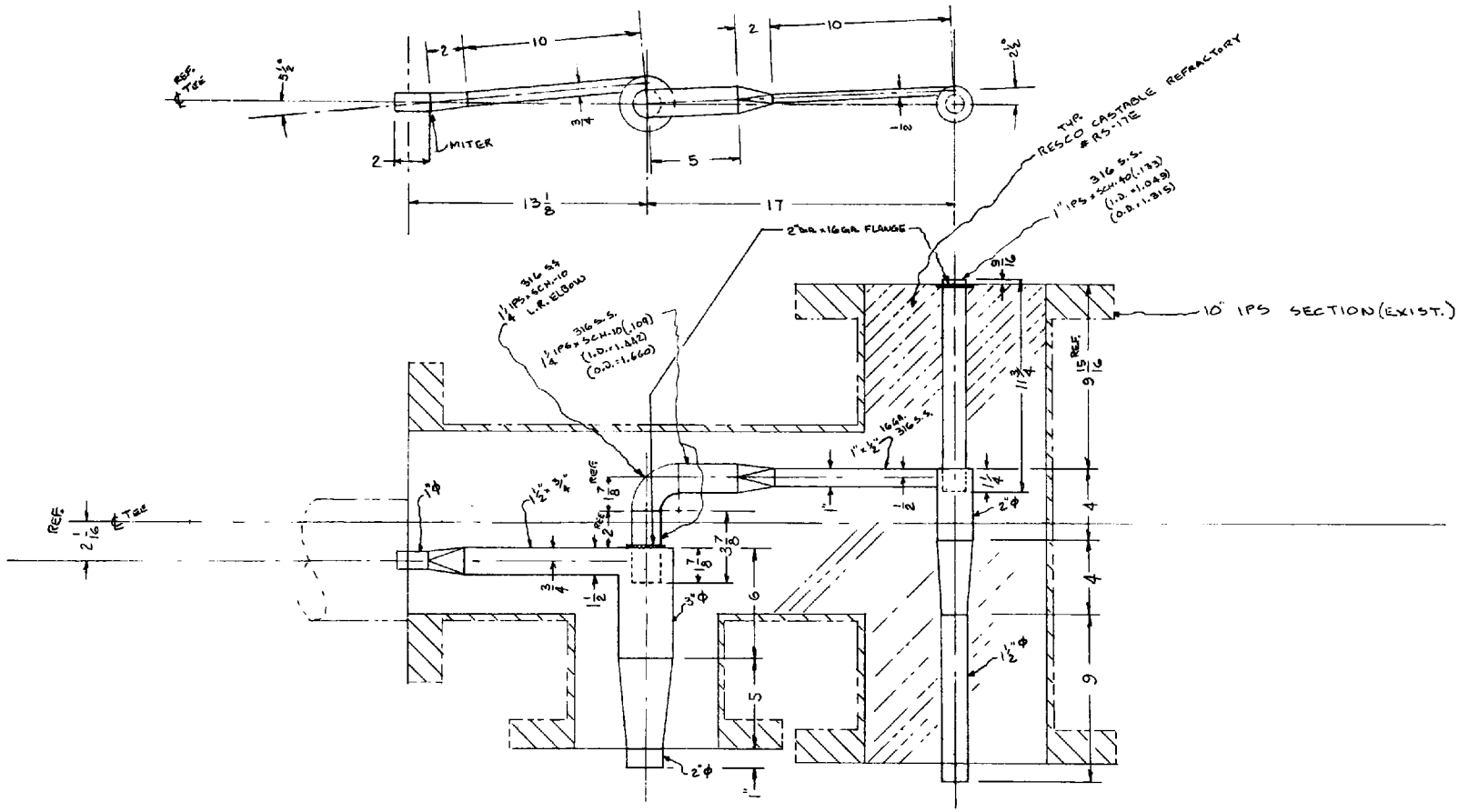

FIGURE VI-2

BENCH UNIT CYCLONE ASSEMBLY

DATE	REVISION
CYCLONE ASSY. 1ST & 2ND	
STAGE - BATCH UNIT	
COMBUSTOR - FBCC	
EXXON RESEARCH AND ENGINEERING COMPANY MECHANICAL DIVISION LINDEN, N. J.	
SCALE 1/4" = 1"	PROJECT NO.
DRGN. DATE	
DRAWN BY W.B.D. DATE 4/2/77	DWG. NO. 1633-18-C
APPROVED/CHECKED BY DATE	

The secondary cyclone will remove the remaining fly ash and sorbent from the off gas in order to minimize the load on the off gas filter. The small volume of removed fly ash will be collected in a standpipe and discarded periodically.

Off Gas Coolers--

The off gas coolers are of the single-pass, water cooled, counter-current flow double pipe type and are mounted vertically. The inner tube (gas flow) is 1 inch IPS Sched. 80, 316 SS, the outer shell (water flow) is 2 inches IPS Sched. 40, CS.

The off gas first flows through a precooler intended to reduce the off gas temperature from about 760°C (1400°F) to approximately 370°C (700°F). A second heat exchanger (the off gas cooler) is used to reduce further the off gas temperature from 370°C (700°F) to 150°C (300°F). The precooler has a fixed heat exchange area (gas side) of 0.18 m^2 (1.9 ft^2). The off gas cooler has provision for drawing off the cooling water at nine locations along the shell. This results in a variable area (gas side) ranging from 0.023 m^2 (0.225 ft^2) to 0.268 m^2 (2.88 ft^2). The variable area cooler will provide precise control of off gas temperature at all combustor operating conditions. This will insure that the temperature of the off gas does not fall below its "dew point" regardless of the system's operating conditions.

Coal Feeder

The coal feeder vessel previously used has been replaced with one of larger capacity. The new coal feeder vessel has a capacity of 0.184 m^3 (6.5 ft^3). This will permit the storage of 109 kg (240 lbs) of coal and 52.7 kg (116 lbs) of sorbent. Solids feed rate will be about 13.6 kg/hr (30 lbs/hr) and will permit eight to twelve hour runs without recharging the vessel.

The control system previously employed will be retained for the new coal feeder. As in the past, coal will be injected into the combustor directly above the grid. In order to insure adequate mixing of the coal with the contents of the combustor bed, the incoming coal-air stream will be surrounded by a stream of high pressure boost air at sonic velocity as done in the past. Details of the coal injector may be found in Figure VI-3.

Sorbent Charging and Removal Systems

The charging of a premixed coal and sorbent mixture to the combustor would be the optimum way in which to charge sorbent to the combustor. However, this may not be feasible because the coal feeder orifice may be too small to permit the passage of sorbent. Any major increase in orifice size would have an adverse effect upon the control of coal feed rates. This possibility will be studied immediately after the "shakedown" of the combustor has been made. If simultaneous coal-sorbent feeding is not feasible, sorbent will be fed using a pressurized lock hopper in short and intermittent intervals. See Figure VI-1.

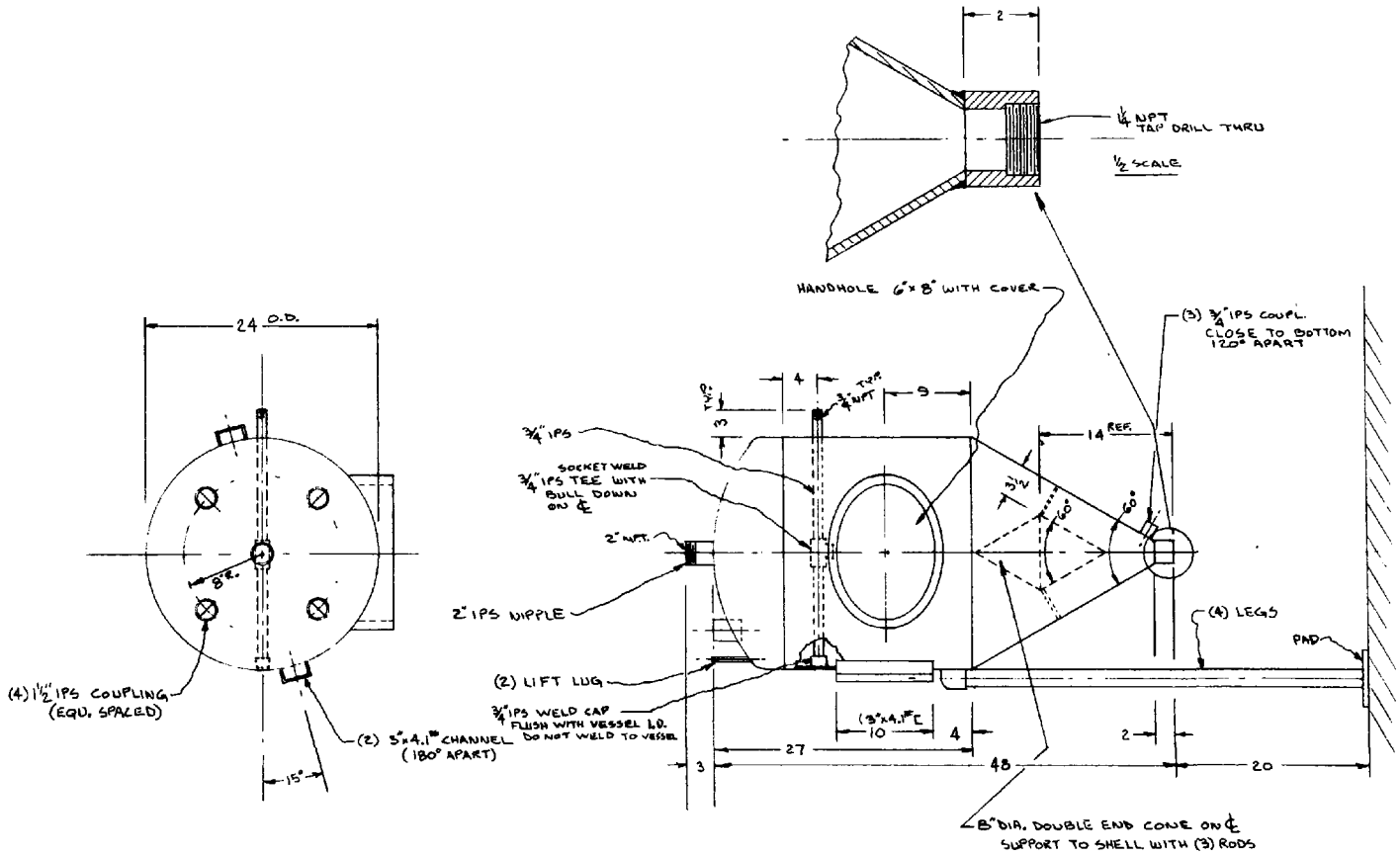

NOTE ~
1. ALL MAT'L. CARBON ST'L.
2. WELDED CONSTRUCTION

SPECIFICATION
VESSEL TO COMPLY WITH A.S.M.E. PRESSURE VESSEL CODE SECT. VIII, DIV. 1
M.A.W.P. - 160 P.S.I.G.
WORKING TEMP. AMBIENT

DATE	REVISION
COAL INJECTOR VESSEL	
BATCH UNIT	
FBCC	
EXXON RESEARCH AND ENGINEERING COMPANY MECHANICAL DIVISION LINDEN, N.J.	
SCALE 1/8"=1'-4 NOTED	PROJECT NO.
ENGR. DATE	
DRAWN BY W.D.DRAVIS DATE 3/17/77	DWG. NO. 1633-15-C
APPROVED/CHECKED BY DATE	

FIGURE VI-3
BENCH UNIT COAL INJECTOR VESSEL

Intermittent charging of fresh sorbent to the combustor bed can produce substantial changes in the bed composition unless the charging is carefully controlled. Frequent addition of small amounts of sorbent will limit the changes in bed composition to acceptable values. An upper acceptable limit of 5% changes in the bed composition during the addition of fresh sorbent has been set. Two motor operated valves (MOV) spaced 30 cm apart on the discharge line will meter the incoming sorbent; the valves are operated by a cycle timer. For a bed height of 109 cm (small bed) each sorbent charge will introduce 5% of new material to the bed; for a 185 cm bed height (large bed) each sorbent change will introduce 3% of new material to the bed.

Valve cycle times are based upon the maximum coal firing rate (14 kg/hr), a 5% sulfur coal, and dolomite as the sorbent with a Ca/S ratio of 3.0; these are expected to be the most severe operating conditions that will be encountered. Under these conditions 39 cycles per hour will be required. Milder operating conditions, such as a coal firing rate of 9 kg/hr, 2% sulfur coal and a Ca/S ratio of 1.0, would require only 4 cycles per hour. 1-1/2 inch-carbon steel-full bore ball valves will be used to meter solids flow. Valve ball and seats are stellite faced.

Bed inventory (or volume) will be controlled by overflow from the top of the bed to a receiving hopper of the same volume as the charging hopper. Bed heights of 109 cm (43 inches) and 185 cm (73 inches) will be employed. These heights correspond to volume of 0.11 m^3 and 0.19 m^3 respectively and, in conjunction with variable gas flow rates, should provide adequate variation in residence times.

The capacities of the charging and overflow hoppers are 103 kg (227 lb) or 0.078 m^3 (2.75 ft^3). These are more than adequate for 8 hour runs under the most severe conditions.

REGENERATOR FACILITIES

Many of the control and supply facilities for the air, nitrogen and gas systems are common to the combustor and regenerator and were discussed previously. Only those portion of these systems that are unique to the regenerator will be discussed in this section.

Regenerator Vessel

The regenerator has an effective height (grid to off gas discharge) of 4.57 m (15 ft) and is constructed of 12 inch IPS, pipe, and lined with Grefco 75-28 refractory to an inside diameter of 9.52 cm (3.75 inch). The plenum chamber below the grid is 0.69 m (2.25 ft) high and is lined with Grefco Bubblelite refractory.

A fluidizing grid is inserted between the plenum chamber and the first section of the regenerator. The grid serves to support the static bed, and to provide a uniform distribution of fluidizing air when the regenerator is in operation. The previously used grid will be replaced with a new grid (Figure VI-4). The new grid, having four cooling water circuits, will operate at much cooler and more uniform temperatures than did the old grid, with only one cooling water circuit.

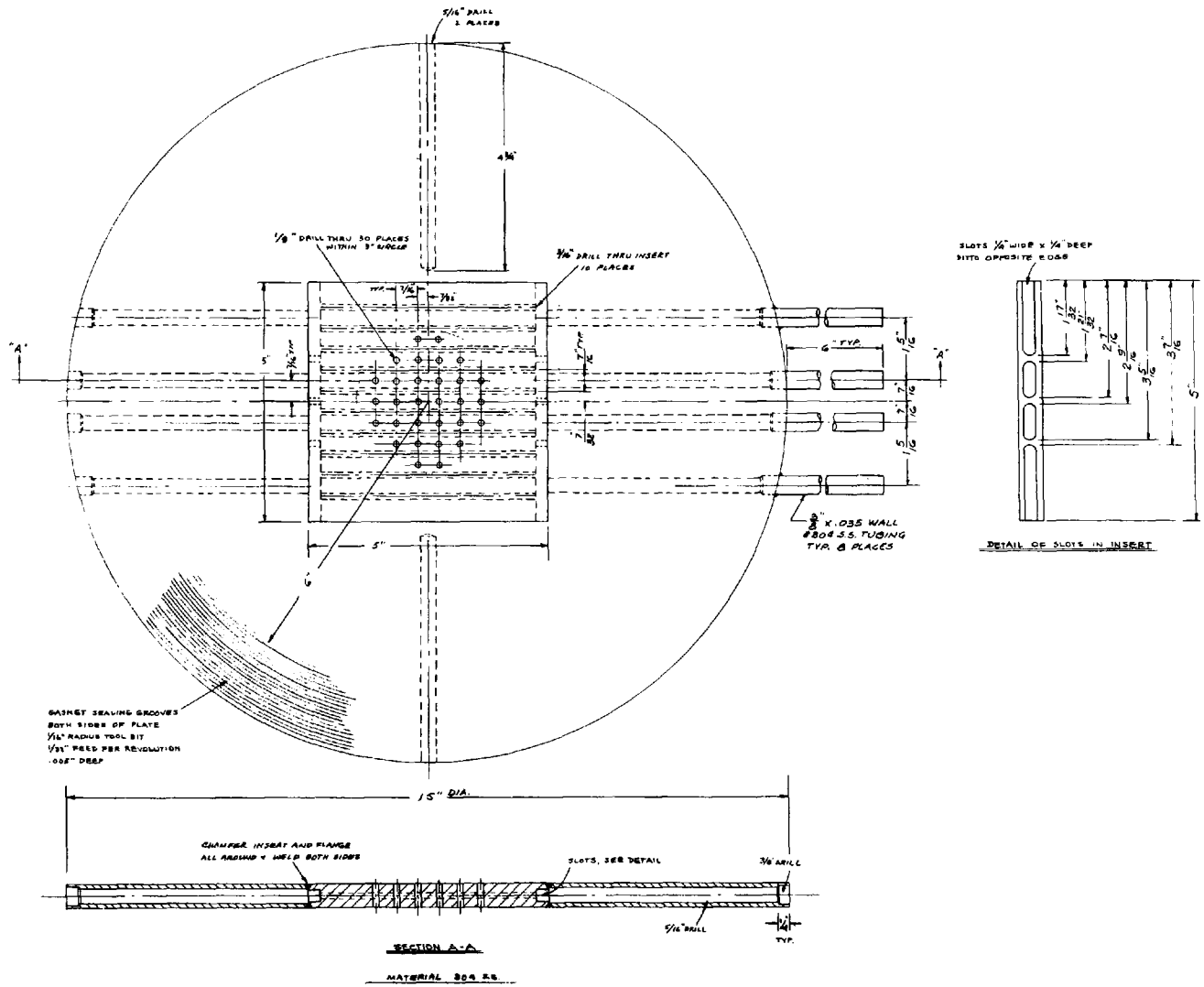

1-20-77	8 TUBES WAS 6 TUBES
DATE	REVISION
BATCH REGENERATOR GRID	
30 - 1/8" HOLES	
EXXON RESEARCH AND ENGINEERING COMPANY MECHANICAL DIVISION LINDEN, N.J.	
FULL	
L. ROTH	
R. W. BRANT 1/13/77	1649-1-D-2

FIGURE VI-4

BENCH UNIT REGENERATOR FLUIDIZING GRID

The regenerator is equipped with two bed overflow lines. These are 4 inch IPS, Sched. 40, carbon steel pipe section that are refractory lined to a 5 cm (2 inch) ID. The lower pipe provides a bed depth of 60 cm (24 inch) and a bed volume of 0.00428 m^3 (261 in^3). The discharge line may be blanked off and a refractory plug inserted when it is desired to use a greater bed height. The high overflow line provides a bed depth of 121 cm (48 inch) and a bed volume of 0.00863 m^3 (527 in^3).

The overflow lines are connected to an overflow lock hopper of 0.98 m^3 (3.5 ft^3) with the aid of 5.1 cm ID flexible stainless steel hose. The use of flexible hose eliminates the rigid pipe connections between the overflow lines and the hopper. This eliminates a possible source of leakage and alignment problems due to thermal distortion. The lock hopper volume is more than adequate for eight hours of operation under the highest anticipated sorbent discharge rates.

Sorbent is charged to the regenerator from a lock hopper (of 0.98 m^3 capacity also) via rigid piping and a 1-1/2 inch ID flexible hose. The sorbent is introduced at the bottom of the bed to insure complete mixing; the charge point is 9.5 cm (3.75 inches) above the grid. The sorbent charging line is equipped with two MOV's to meter in fresh sorbent in the same manner as was discussed for the combustor.

Supplementary air and methane, over and above that supplied to the burner, are introduced at about the middle of the bed and just above the fluidizing grid respectively. Supplementary air and fuel are used to produce oxidizing and reducing zones which are needed to carry out the regeneration reactions.

The regeneration reactions are highly endothermic and unlike the combustor, no bed cooling coils are used in the regenerator. Instead, a 7.5 kw air preheater has been installed in the regenerator air supply line to provide a auxiliary heat source, if needed.

Provisions have been made for feeding coal to the regenerator, either as a primary or supplementary fuel. These facilities have not been installed as yet, but injector ports have been allocated and capped off.

Thermocouples have been installed to provide bed temperature readings every 15 cm. Above the bed, gas temperatures will be read at 30-38 cm intervals.

The plenum chamber is mounted directly below the grid and contains the burner. The functions and mode of operation of the burner are essentially the same as for the combustor preheat burner. Safety and cooling system functions in the same manner for both units.

Pressure differentials are measured across the grid and, at partial and total bed heights, in order that bed heights, bed densities and pressure drops across the grid may be obtained.

Regenerator Off Gas System

The regenerator off gas is passed to a single cyclone (Figure VI-5) whose solids are returned to a pressurized standpipe. The clean off gas is passed to an off gas precooler (0.194 m^3 area) and an off gas cooler (0.197 m^3 area). These are of the single-pass, water cooled counter-current flow, tube and shell type, and are mounted vertically. The precooler is intended to reduce the off gas temperature from 982°C (1800°F) to 370°C (700°F). The off gas then passes to the cooler where the temperature is further reduced to 150°C (300°F).

The off gas facilities for the regenerator that are downstream of the cooler are identical to those for the combustor. These have been discussed previously.

FIGURE VI-5

BENCH UNIT REGENERATOR CYCLONE

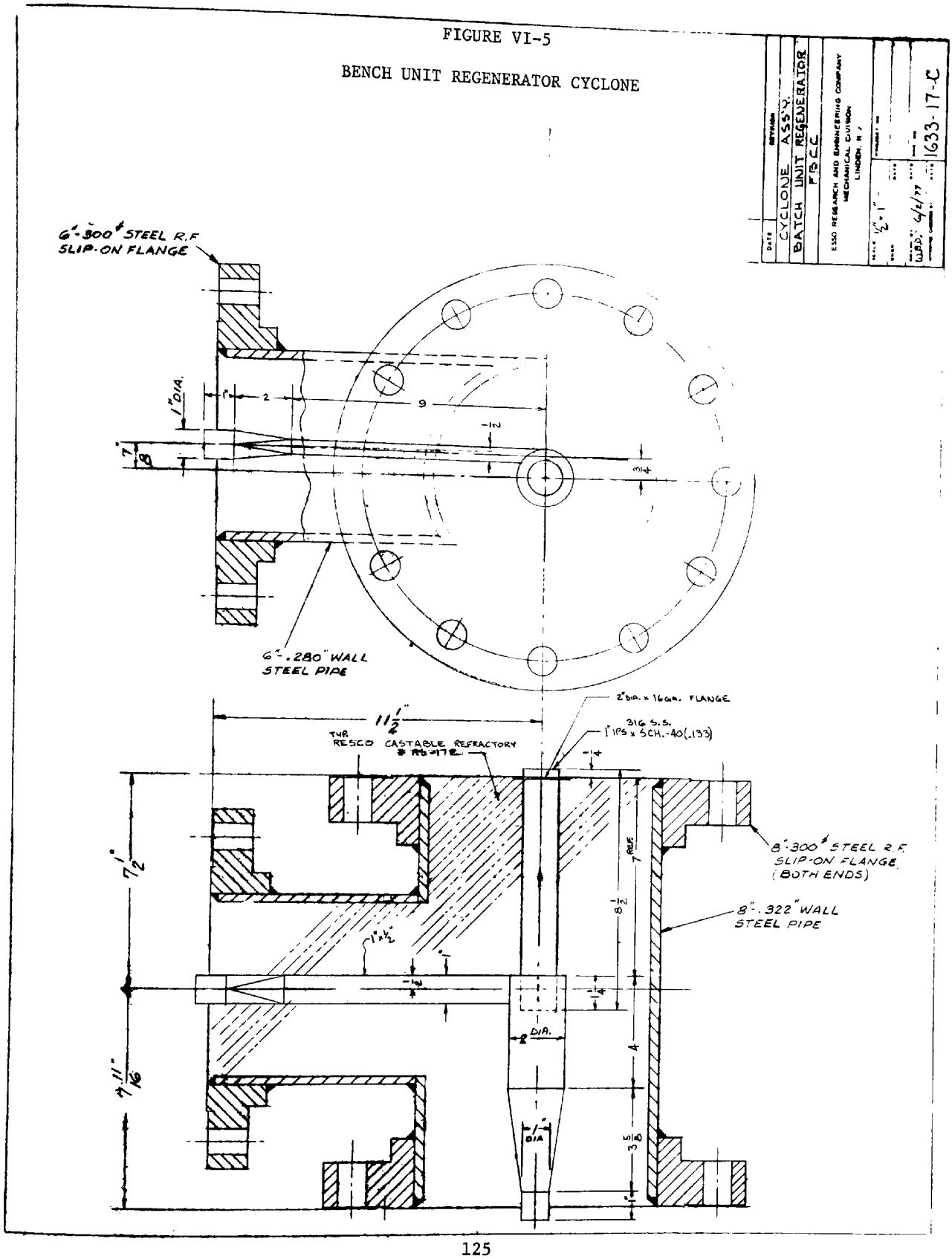

SECTION VII

COMPREHENSIVE ANALYSIS OF EMISSIONS

A program is now underway sponsored by the EPA to assess the environmental effect of fluidized bed coal combustion. The program consists in setting emission goals for all potentially harmful emissions and measuring the concentration of these materials in all the effluents from fluidized bed combustion units. The contractor currently coordinating the work for the EPA is Battelle Columbus Laboratories. Exxon Research and Engineering Company has been requested by the EPA to participate in the program by carrying out a series of comprehensive analysis tests in the miniplant. In these tests, specified emissions ranging from SO_2, NO_x, etc which are routinely measured to trace inorganic and organic materials present in the solid and gaseous effluents from the miniplant are to be measured. The first series of these tests (Run 50) was completed in April 1977 in cooperation with Battelle. Samples were obtained and analyzed by both laboratories. The results will be published in a summary report prepared jointly by Battelle and Exxon early in 1978.

SECTION VIII

ANALYSIS OF DESULFURIZATION DATA

In this section an additional analysis of desulfurization data is discussed. Previous analysis of the data was based on the use of Ca/S ratio calculated from the analysis of the spent sorbent and the flue gas. The desulfurization data were again analyzed using the Ca/S ratio set on the solids feeding system but corrected for variations in combustor temperature and gas phase residence time. A comparison of SO_2 retention results obtained in batch and continuous FBC units was also made. In this comparison, corrections were applied to batch data to account for the residence time distribution effects occurring in continuous units. An examination of the approach to steady state in a combustor with continuous sorbent feed and used sorbent withdrawal was also made.

ANALYSIS OF DESULFURIZATION RESULTS BASED ON Ca/S RATIO SET ON SOLIDS FEEDER

In the previous report (1) and in an earlier section of this report, desulfurization data using Pfizer dolomite sorbent were reported. Correlation of the desulfurization results was based on the use of a Ca/S molar ratio calculated from a sulfur balance using the expression

$$Ca/S = \frac{\%\ SO_2\ \text{Retention (SR)}}{\%\ \text{Ca Utilization}\ (X_B)} \qquad (1)$$

This approach was used to minimize the possible effects caused by an incomplete approach to steady state operation and mechanical problems with the coal/sorbent feed blender. As pointed out in the earlier discussions, this approach correlated the data reasonably well with an acceptably small amount of data scatter whereas the use of the Ca/S ratio set on the solids feeder resulted in more scatter. However, the correlation of SO_2 retention data with a Ca/S ratio calculated from the same SO_2 retention results would be expected to smooth the data and could give a misleading correlation. The desulfurization data were again analyzed using the Ca/S ratios actually set on the feed solids blender but corrected for residence time and temperature variations. This was done to determine if an acceptable correlation could be developed without referring to a calculated Ca/S ratio.

Test of the First-Order Reaction Rate

Residence time corrections were to be made using the first order rate expression discussed in the previous report (1). In Run No. 51, operating conditions were adjusted to permit a specific test of the validity of a first order kinetic expression. This established a firmer basis for the subsequent residence time corrections. This test was accomplished by quickly reducing the bed height (by rejecting bed solids) while maintaining the superficial velocity constant. As the change in bed height occurred over a very short interval of time, the average sorbent utilization in the bed would remain nearly constant. If the rate constant for desulfurization has a first order dependence, a linear relationship between the ln (1-SR), where SR is the fraction SO_2 retention, and the residence time would be

expected, with the slope of the line equal to the negative of the rate constant. In Figure VIII-1, the values of ln (1-SR) for twelve determinations in Run No. 51 are shown plotted against the gas phase residence time. The first seven determinations represent data taken as the bed height was increasing during the course of the run and the last five points are data taken during the rapid withdrawal of bed solids. During this rapid withdrawal of bed solids, the change in bed height caused the gas phase residence time to drop 25 percent.

The data in Figure VIII-1 follow the expected relationship for a first order rate constant. The calculated rate constant is 1.28 s^{-1} (based on the volume of settled particulate bed). The sorbent utilization in Run No. 51 measured at the time of the test was 47 percent.

Correction of SO_2 Retention for Gas Phase Residence Time

The measured SO_2 retention for the runs using Pfizer dolomite are shown in Figure VIII-2 versus the Ca/S molar feed ratio determined from the coal and sorbent feed rates set on the solids feeder. These runs were made with coals containing 2 and 4 percent sulfur. While the SO_2 retention does not appear to be dependent on the coal sulfur content, the scatter of the experimental data, as measured, is considerable. The data shown covers a range of gas phase residence times between 1.5 and 3.8 s and average combustor bed temperatures between 684 and 945°C. These wide variations would be expected to cause data scatter beyond that due to uncertainty in the Ca/S ratio.

The measured SO_2 retention (SR) values shown in Figure VIII-2, were corrected to a constant value of 2 s for the gas phase residence time in the expanded bed of use by the following first order rate expression.

$$SR_{2s} = 1 - \exp\left(\frac{2 \ln (1-SR_{meas})}{t_{meas}}\right)$$

Where t_{meas} is the measured gas phase residence time in the expanded bed.

The SO_2 retention values for a 2 s gas phase residence time in the expanded bed are shown in Figure VIII-3. While the absolute values of the SO_2 retention have been changed (best observed by looking at the change in values of the open circles in Figures VIII-2 and VIII-3), the scatter in the experimental values still exists.

Temperature Dependence of the Desulfurization Performance

Four of the SO_2 retention values corrected to a 2 s gas phase residence time shown in Figure VIII-3 which deviate markedly from the trend (labelled L.T.) correspond to data obtained at combustor bed temperatures of 690, 684, 762 and 829°C. As pointed out in the previous section, desulfurization was found to decrease at temperatures under 800°C.

FIGURE VIII-1

Ln (I-SR) VS. GAS PHASE RESIDENCE TIME

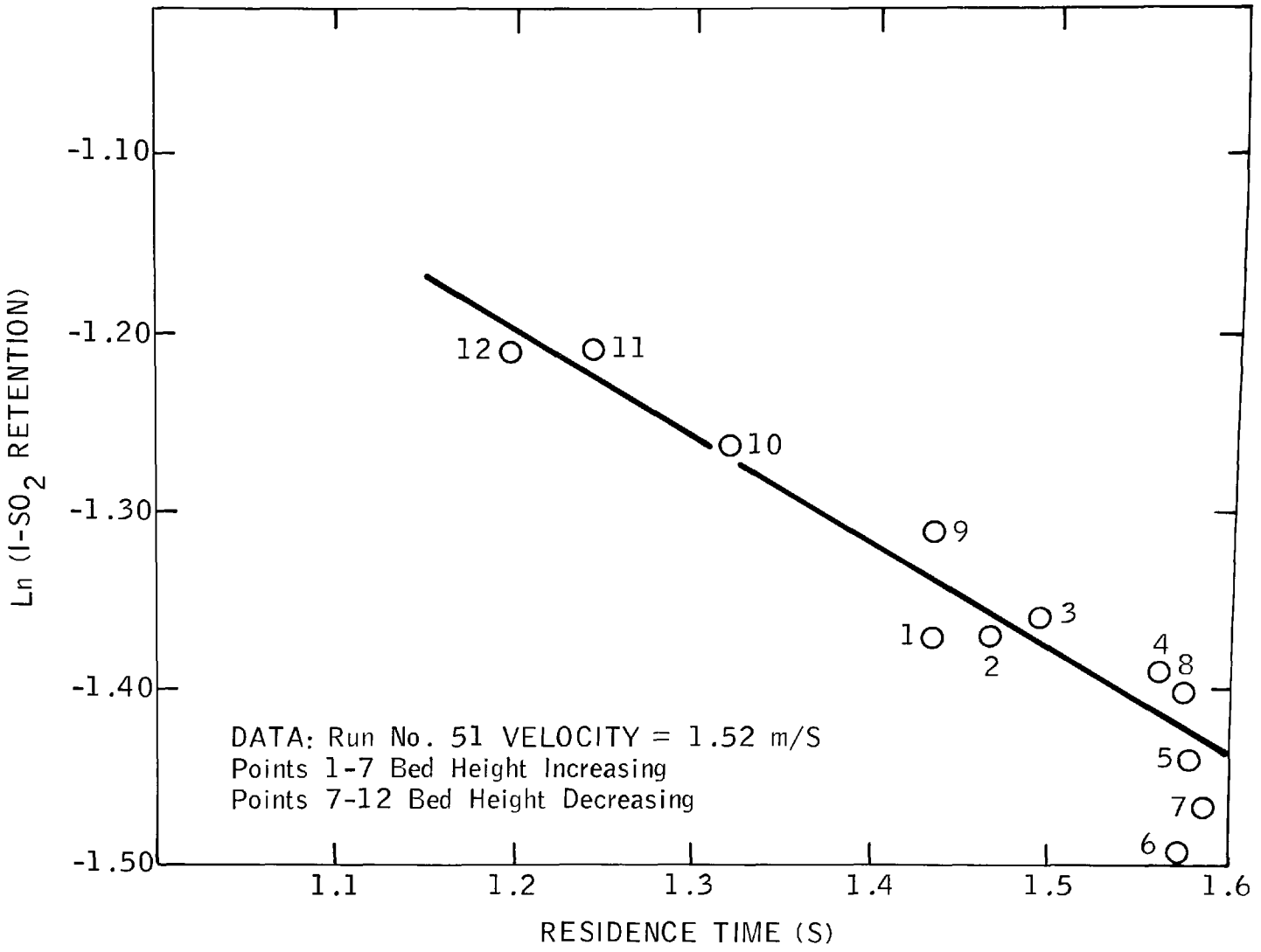

FIGURE VIII-2

SULFUR REMOVAL EFFICIENCY VS. Ca/S

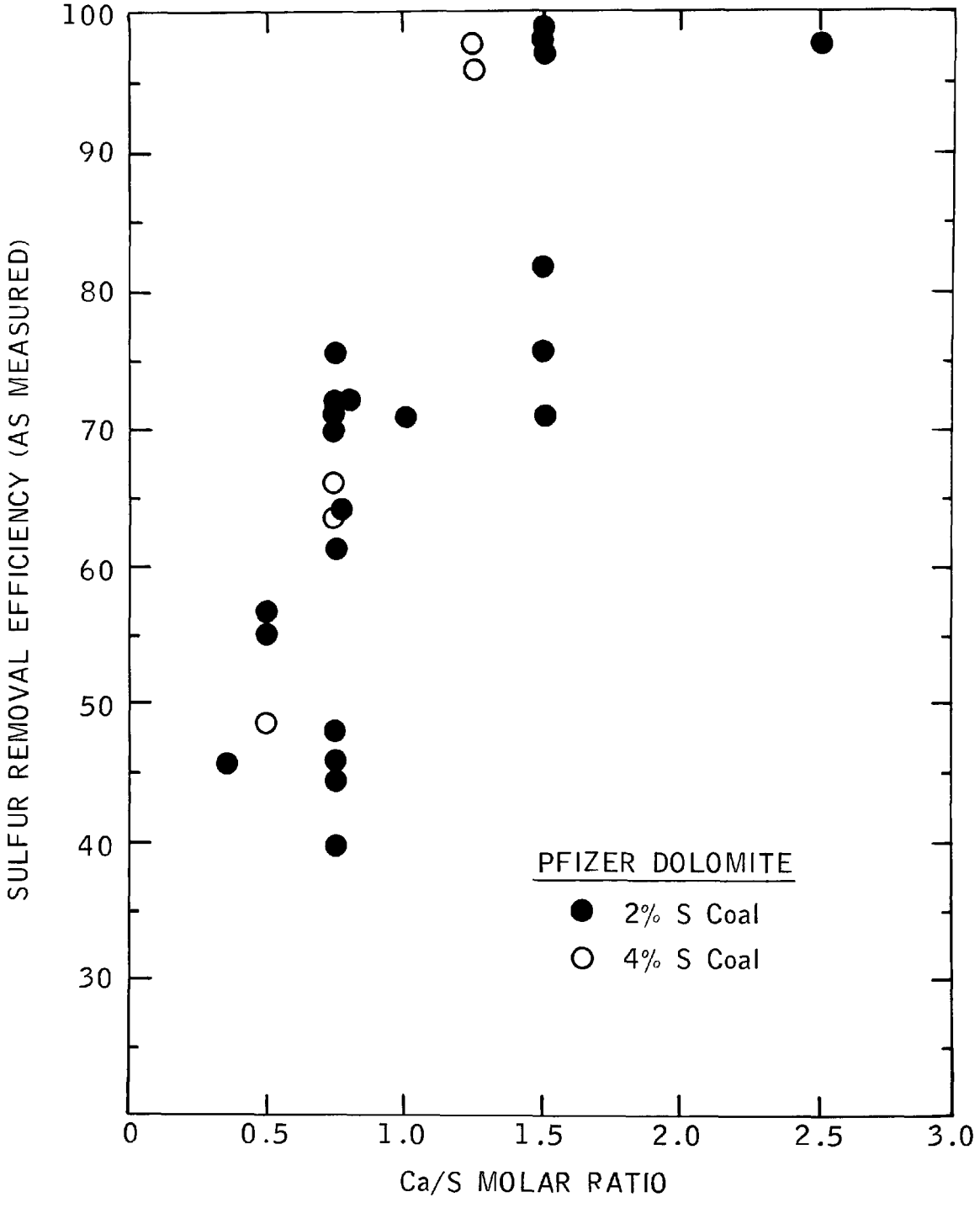

FIGURE VIII-3

SULFUR REMOVAL EFFICIENCY @ 2 SEC. VS. Ca/S

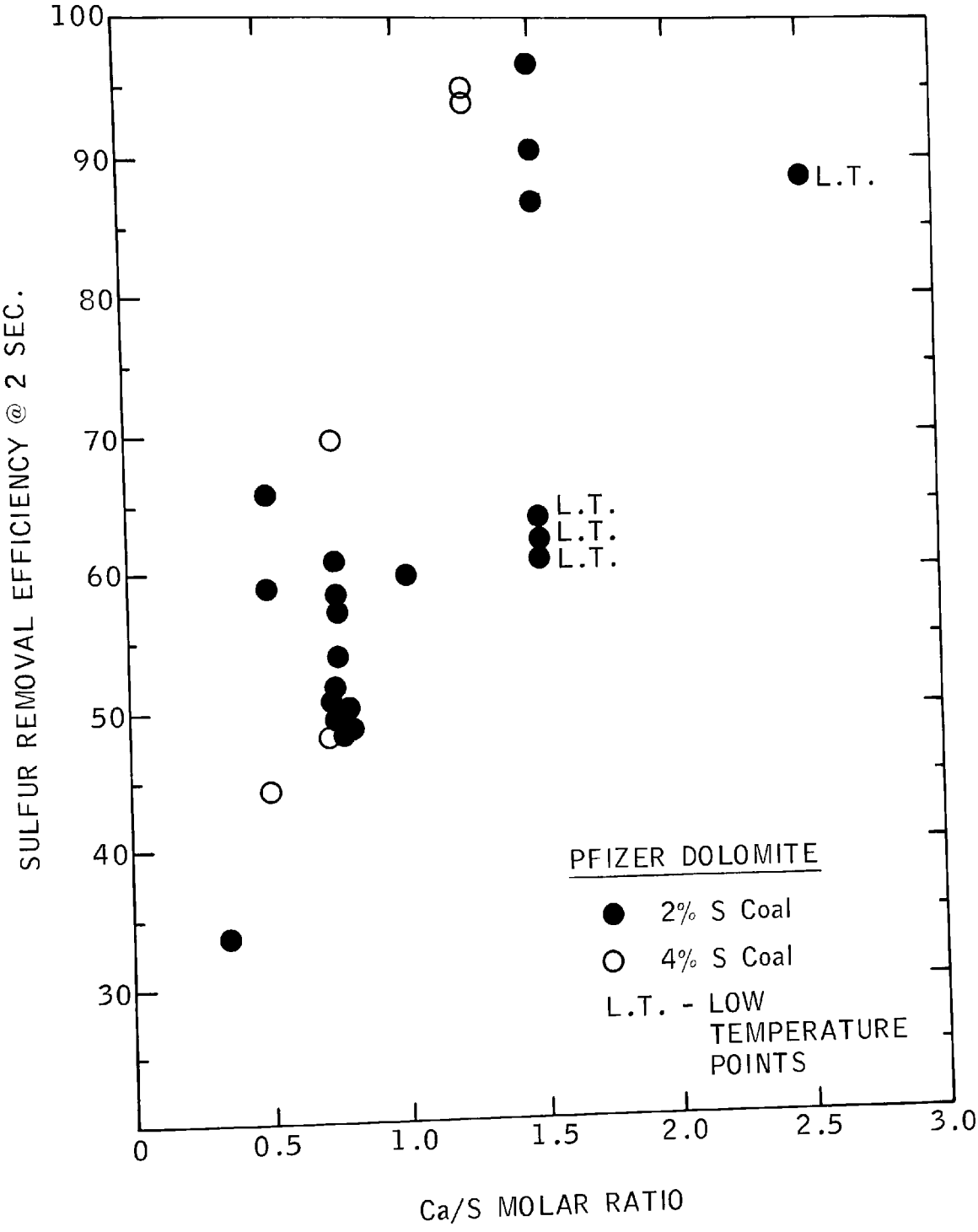

The temperature dependence of the SO_2 retention corrected to 2 s gas phase residence time in the expanded bed is shown in Figure VIII-4 for two Ca/S feed ratios. The use of a constant gas phase residence time for this analysis removes much of the variation in the data which would normally mask the effect of temperature. Clearly a temperature dependence is evident. The experimentally determined desulfurization rate constant for runs made at a Ca/S feed ratio of 1.5 was then evaluated for the temperature dependence using an Arrhenius plot, as shown in Figure VIII-5. An activation energy of 13.3 kcal/gm mole was determined which is in good agreement with the value reported by Borgwart of 10-20 kcal/gm mole for various limestones (14).

Correction of the SO_2 Retention for Temperature

The measured SO_2 retention values were corrected to a constant 2 s gas phase residence time in the expanded bed and to a constant reactor bed temperature of 900°C using the activation energy of 13.3 kcal/g mole. The SO_2 retention at a 2 s gas phase residence time and 900°C is shown in Figure VIII-6. It is evident that most of the experimental scatter has now been removed. The trend in SO_2 retention determined by this analysis is in good agreement with that shown in Figure III-21 although the Ca/S feed ratio used in this analysis is based on calcium and sulfur feed rates while the data from Figure III-21 is based on calculated Ca/S feed ratios using the measured values of SO_2 removal and sorbent utilization.

COMPARISON OF SO_2 RETENTION RESULTS OBTAINED IN BATCH AND CONTINUOUS UNITS

In the previous report (1) it was shown that the values of SO_2 retention at a given calcium to sulfur feed ratio obtained in the continuous pressurized fluidized bed combustors from different laboratories were in agreement when appropriate corrections were made to reduce the data to a common gas phase residence time. Agreement of the results obtained in batch fluidized bed combustors with that observed in continuous units, i.e., the miniplant has been less satisfactory (1). This lack of agreement between the results obtained in the batch units and in the continuous units is not surprising when one considers the difference in the operating environment between these units. In the batch units, a charge of fresh sorbent particles initially removes essentially all the SO_2 released during combustion and in the process becomes partially sulfated, with presumably each particle reaching the same level of utilization at the same time. As the particle utilization increases, the ability to remove SO_2 decreases and the SO_2 retention drops. In the continuous units, fresh sorbent is continuously being added to the reactor and an average mixture of sorbent particles is being removed from the bed, such that a steady state value of both sulfur removal efficiency and sorbent utilization is established.

With the increased availability of continuous reactors and batch reactors for fluidized bed combustion studies and the increasing use of thermogravimetric analyies (TGA) to study sorbent utilization, it would be highly desirable to be able to relate the desulfurization performance obtained in the various units. If such a relationship can be obtained, it would enable

FIGURE VIII-4

SULFUR REMOVAL EFFICIENCY @ 2 SEC. VS. TEMPERATURE

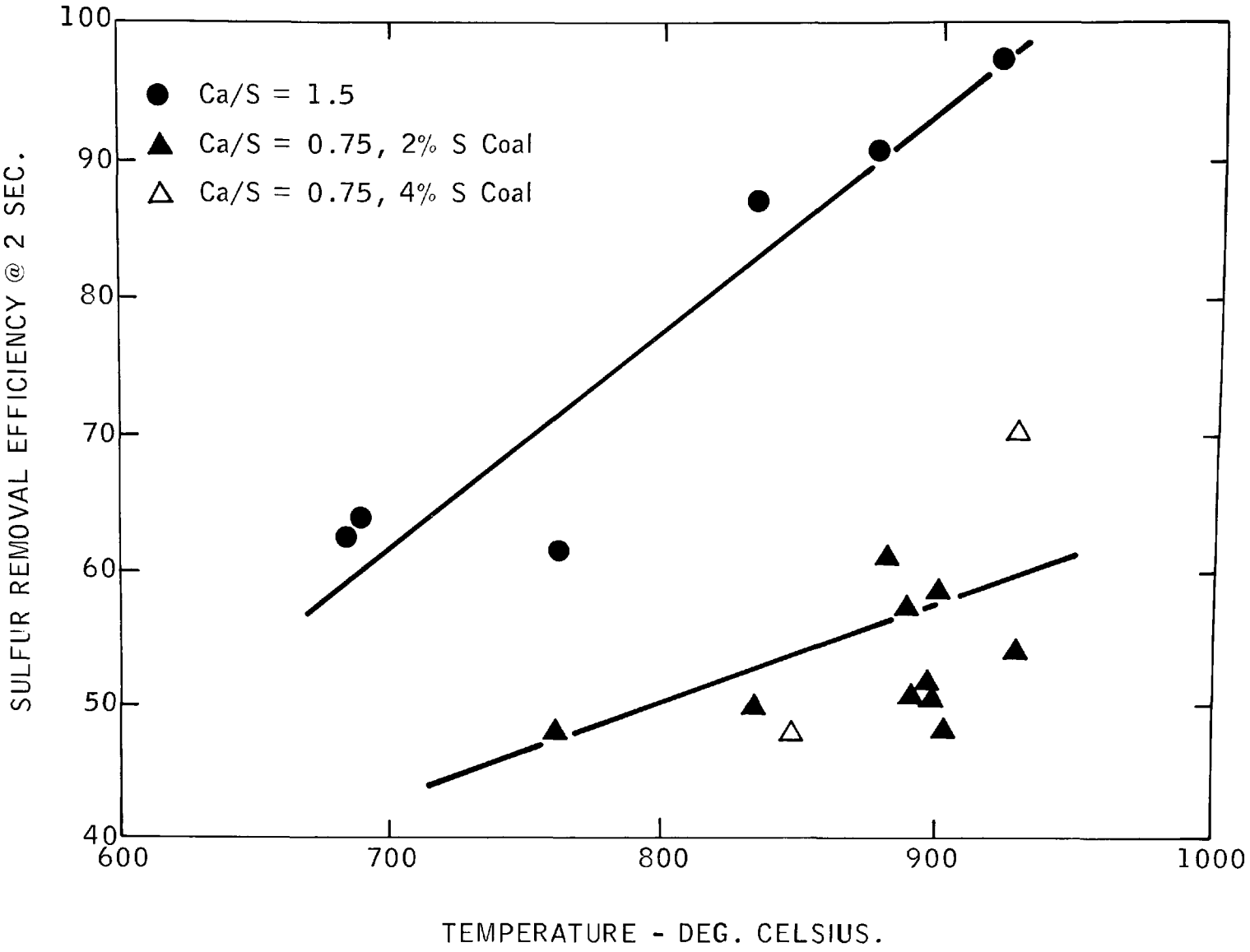

FIGURE VIII-5

EFFECT OF TEMPERATURE ON DESULFURIZATION RATE CONSTANT

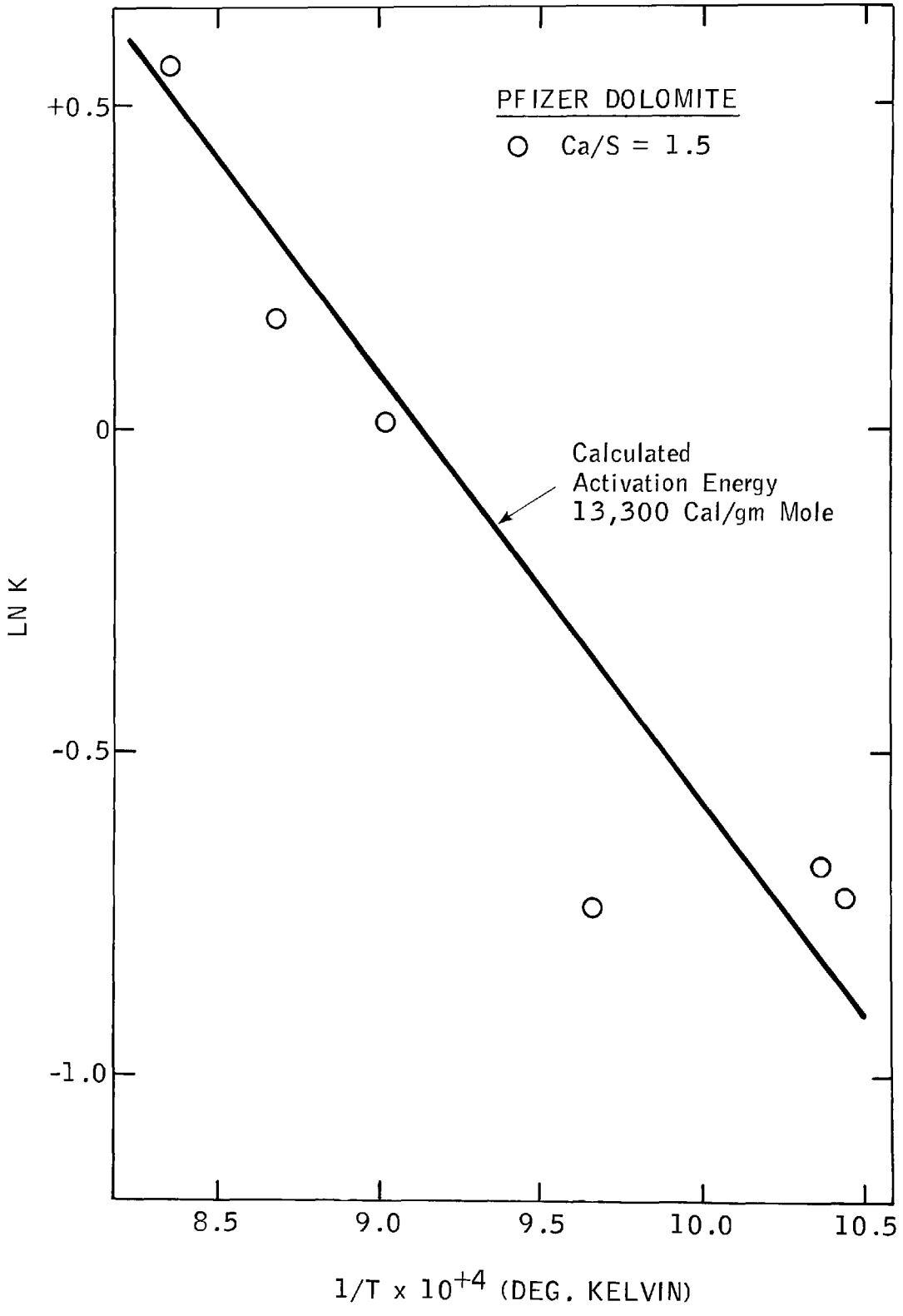

FIGURE VIII-6

COMPARISON OF SET VS. CALCULATED Ca/S EFFECTS

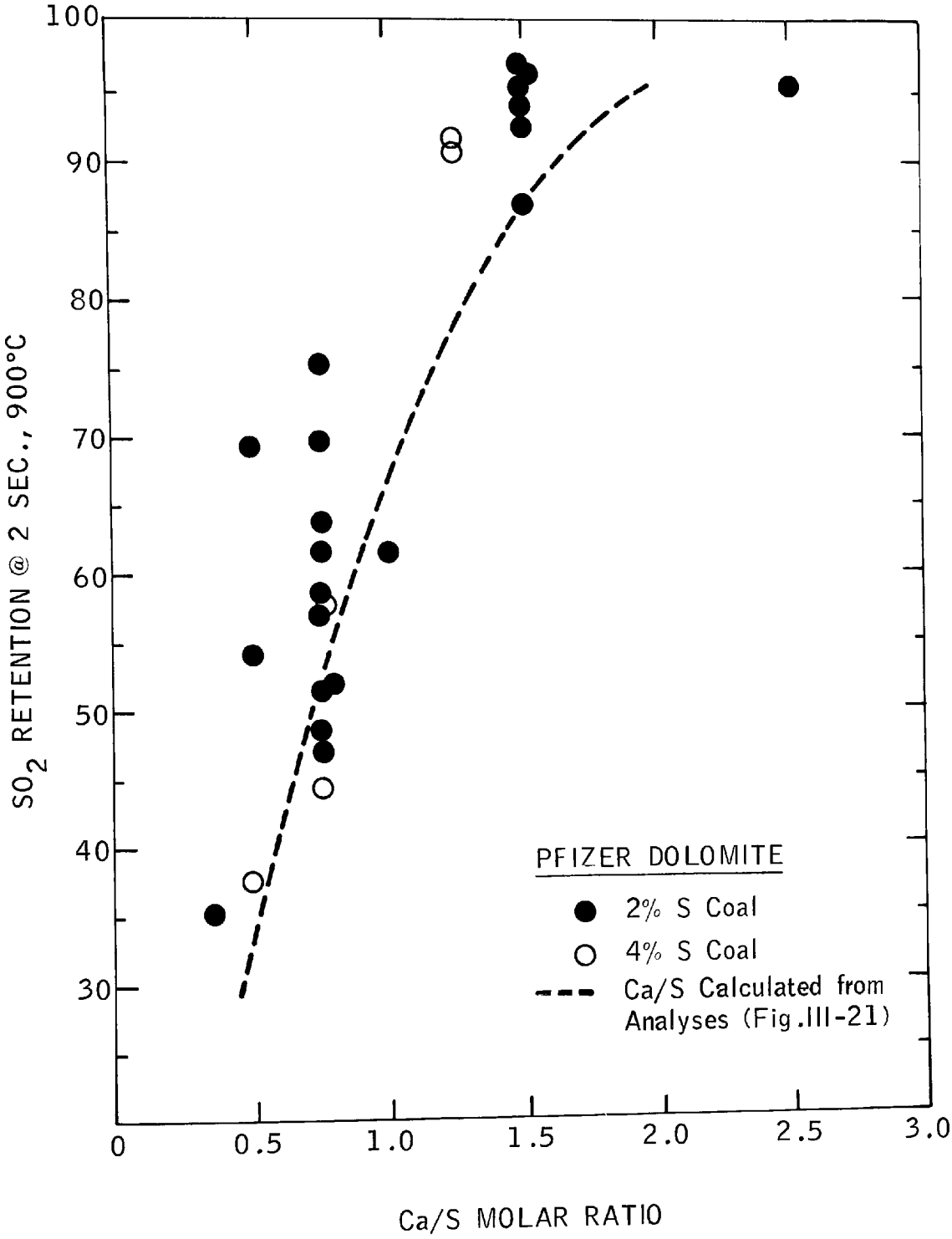

an expanded use of the TGA and batch units to screen new sorbents which might be considered for use in the larger continuous units. Such a relationship would also increase the confidence that the performance data obtained in process development scale continuous units, i.e., the miniplant, can be used for predicting the performance of commercial size fluidized bed combustors.

This subsection describes an attempt to relate the performance observed in these various units.

Residence Time Averaging for the Effective
Rate Constant in the Miniplant Combustor

The miniplant combustor, unlike the smaller batch combustor, will be in a dynamic state as far as solids entering and leaving the reactor.

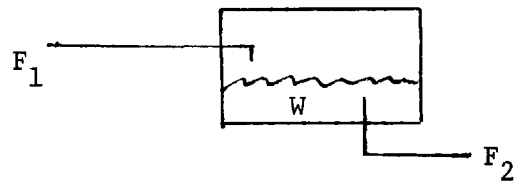

Where F_1 = feed rate of uncalcined stone to the reactor - moles/hr

F_2 = removal rate of sulfated product - moles/hr

W = bed hold up - moles

The feed and removal rates, F_1 and F_2, are adjusted to maintain a uniform quantity of material, W, in the fluidized bed. The backmixing of solids which occurs in the fluid bed results in an age distribution for the solids, i.e., the solid particles being removed from the bed in the overflow stream F_2 have been in the bed for various lengths of time. This variation in the residence time of the solids is of course reflected in their degree of CaO utilization.

The kinetic data obtained from the batch combustor gives the reaction rate constant as a function of particle utilization, X_B. In order to use this rate information it is necessary to know how the utilization of the particle changes with the time the particles are in the bed, (the particle age or particle residence time θ).

Assume an increment of fresh particles of mass, w, added to this fluidized bed at time $\theta = 0$. The rate of SO_2 uptake by these particles is:

$$\frac{dNO_{SO_2}}{d\theta} = k(X_B)\cdot w\cdot C'_{SO_2} \qquad (1)$$

where N_{SO_2} = mass SO_2

θ = time particle is in bed (s)

$k(X_B)$ = rate constant (s^{-1})

C'_{SO_2} = average concentration of SO_2 seen by particles (mass SO_2/mass particles)

The rate constant is written $k(X_B)$ to indicate that it is a function of the sorbent utilization (or sulfation level), X_B.

At steady state, C'_{SO_2} is constant during the residence time of the particles at some average value between C'_{SO_2} in and C'_{SO_2} out.

Equation (1) can be expressed in terms of a concentration C_{SO_2} given in units of mass SO_2/volume of settled bed, by

$$\frac{dN_{SO_2}}{d\theta} = \frac{k(X_B)}{\rho_s} \cdot w \cdot C_{SO_2}$$

where ρ_s = bulk density of the settled bed.

In this analysis, all bed volumes and gas phase residence times are based on the settled rather than the expanded bed.

The sorbent utilization X_B is the SO_2 uptake compared to the maximum SO_2 capacity of the particles.

$$X_B = \frac{\text{wt } SO_2 \text{ uptake}}{\text{capacity for } SO_2} = \frac{N_{SO_2}}{w \cdot \alpha} \tag{3}$$

where α = mass capacity of SO_2 per unit mass of stone.

Differentiating equation (3)

$$dX_B = \frac{dN_{SO_2}}{w \cdot \alpha} \tag{4}$$

Substituting equation (4) into equation (2) and separating variables,

$$\frac{dX_B}{k(X_B)} = \frac{\bar{C}_{SO_2}}{\rho_s \alpha} \cdot d\theta \tag{5}$$

A logarithmic mean concentration for C_{SO_2} is the appropriate averaged concentration.

On integration between $X_B = 0$ and X_B at time θ, we obtain after rearrangement:

$$\int_0^{X_B} \frac{dX_B}{k(X_B)} = \frac{\bar{C}_{SO_2}}{\rho_s \cdot \alpha} \theta \tag{6}$$

The integral in equation (6) is solved numerically to various values of X_B and the particle residence time to obtain that X_B given by:

$$\theta = \frac{A \cdot \rho_s \cdot \alpha}{\bar{C}_{SO_2}} \tag{7}$$

where A is the area under the X_B vs. $\frac{1}{k(X_B)}$ curve from $X_B = 0$ to X_B.

In order to predict the limiting performance of the continuous unit it is necessary to know the age distribution of the reacting solids. It has been found that the following particle age distribution function, $I(\theta)$, is quite accurate (13).

$$I(\theta) = \frac{1}{\theta} \exp(-\theta/\theta) \tag{8}$$

Where $\bar{\theta}$ is the average particle residence time defined as

$$\bar{\theta} = \frac{W}{F_1}$$

The analysis of the reaction rate constant showed that the rate constant, $k(X_B)$, depended on the degree of CaO utilization, X_B. The degree of CaO utilization, X_B, for a particle injected into the fluid bed reactor was shown above to depend on the length of time the particle was in the reactor, θ. These considerations suggest that the reaction constant, $k(X_B)$, for a given sorbent particle will depend on the time that this particle has been in the reactor. The expression for this dependence of the rate constant on the particle residence time, $k(\theta)$, can readily be obtained from the expressions previously determined for the dependence of the rate constant on the degree of CaO utilization, $k(X_B)$, and the dependence of the degree of CaO utilization on the particle residence time $X_B(\theta)$.

The desulfurization performance for the miniplant combustor will be made up of the contribution of all the particles in the fluid bed, each with its own particular residence time. The average rate constant for the miniplant combustor, $\bar{k}$, is obtained by integrating the product of the expressions for the variation of rate constant with particle residence time, $k(\theta)$, and the age distribution for the particles, $I(\theta)$ over all values of particle residence time, θ.

$$\bar{k} = \int_0^\infty k(\theta)\cdot I(\theta)d\theta \tag{10}$$

This expression is solved graphically.

The fractional SO_2 retention, SR, at steady state can now be calculated, using the rate expression for the plug flow reactor model, by specifying the operating parameters

$$SR = 1 - \exp\left(-\bar{k}\cdot\frac{Hs}{U}\right) \tag{11}$$

where Hs is the settled bed height, and U is the superficial velocity in the miniplant combustor.

The overflow stream for the fluid bed, F_2, contains, as mentioned earlier, a wide distribution of particle ages, each with a degree of CaO utilization dependent on its history in the bed. An analysis similar to that used above leads to an expression for the average CaO utilization, X_B, in the commercial reactor.

$$X_B = \int_0^\infty X_B(\theta)\cdot I(\theta)\, d\theta \tag{12}$$

The degree of CaO utilization can also be obtained at a given value of the calcium to sulfur molar feed ratio, Ca/S, by using the value of the SO_2 retention, SR, calculated from equation (11), and the following expression which reflects a steady state sulfur balance around the reactor

$$X_B = \frac{Ca/S}{SR} \tag{13}$$

The expression for the degree of CaO utilization from equation (12) is designated X_B (Distribution Function) to signify its direct calculation from the assumed particle distribution function. The expression from equation (13) is designated X_B (Performance) to signify its calculation from the calculated sulfur removal efficiency at a given molar feed ratio of sorbent calcium to coal sulfur. The adequacy of the assumed particle distribution function can be tested by comparing the values of X_B calculated in these two ways.

Calculation of the Miniplant Desulfurization Performance

The calculation procedure described above has been used to calculate the desulfurization performance expected in the miniplant combustor with Pfizer dolomite as the sorbent based on the performance data measured in the batch combustor. The batch unit performance data for 1500 micron Tymochtee dolomite (tests No. 71 to 82) were used to calculate the necessary values of the reaction rate constant, k. As the batch unit data was limited to sorbent utilization levels between 0.20 and 0.46, while the calculation

procedures described above require averaging over all values of particle residence time (equivalent to all values of X_B between 0 and 1), the necessary integration of 1/k in equation (6) was performed after first fitting a linear equation to values of 1/k measured in the batch unit. The values of the reaction rate, k, measured in the batch unit and the curve fitted expression for k as a function of X_B which was used in these calculations is shown in Figure VIII-7.

The bed hold-up, W, required by the expression for the average particle residence time in equation (8) is determined by specifying the settled bed height for the case to be calculated and the area of the miniplant combustor. The SO_2 inlet concentration required to calculate the average SO_2 concentration seen by the particles, equation (1), is determined by specifying the coal feed rate, the superficial velocity and the temperature for the case to be calculated. The sorbent feed rate, F_1, is determined by specifying the Ca/S ratio for the case to be calculated.

The numerical procedure used to calculate the desulfurization performance of the miniplant combustor first estimates a value of the desulfurization performance to enable the calculation of the average SO_2 concentration seen by a particle in equation (1). The entire calculation procedure is performed and the desulfurization performance calculated by equation (11). The calculated value is compared with the estimated value, a new value for the desulfurization performance estimated, and the calculation procedure repeated until the two values agree.

An example of the prediction of the miniplant reactor performance from the batch combustor data is given in Figure VIII-8 for the operating conditions of 900°C and a 2 second gas phase residence time (based on the time for the gas to transit the expanded bed) and the predicted values are compared with the experimental values measured in the miniplant. While the predicted performance does not exactly correspond to the experimental data measured in the miniplant, the predicted values are non-the-less quite representative of the desulfurization performance with dolomitic sorbents. The model predicts the same desulfurization performance, irrespective of the sulfur content of the coal feed, which agrees with the experimental determinations.

Comparison with the Performance Measured in the TGA

The time that a given sorbent particle requires to achieve a given level of utilization can be calculated from equation (7). A comparison of the time to a given utilization level predicted from the data obtained in the batch combustor with the time experimentally measured in the thermogravimetric analyzer (TGA) for Pfizer dolomite is shown in Figure VIII-9. In these TGA experiments the temperature was maintained at 900°C and the concentration of SO_2 passing the sorbent particle was maintained constant at 2500 ppm. The agreement is sufficient to distinguish clearly the predicted values as that for a dolomite sorbent, as contrasted to the value expected for other types of sorbents, i.e., a high calcium content limestone.

FIGURE VIII-7

SULFATION RATE CONSTANT VS. SORBENT UTILIZATION

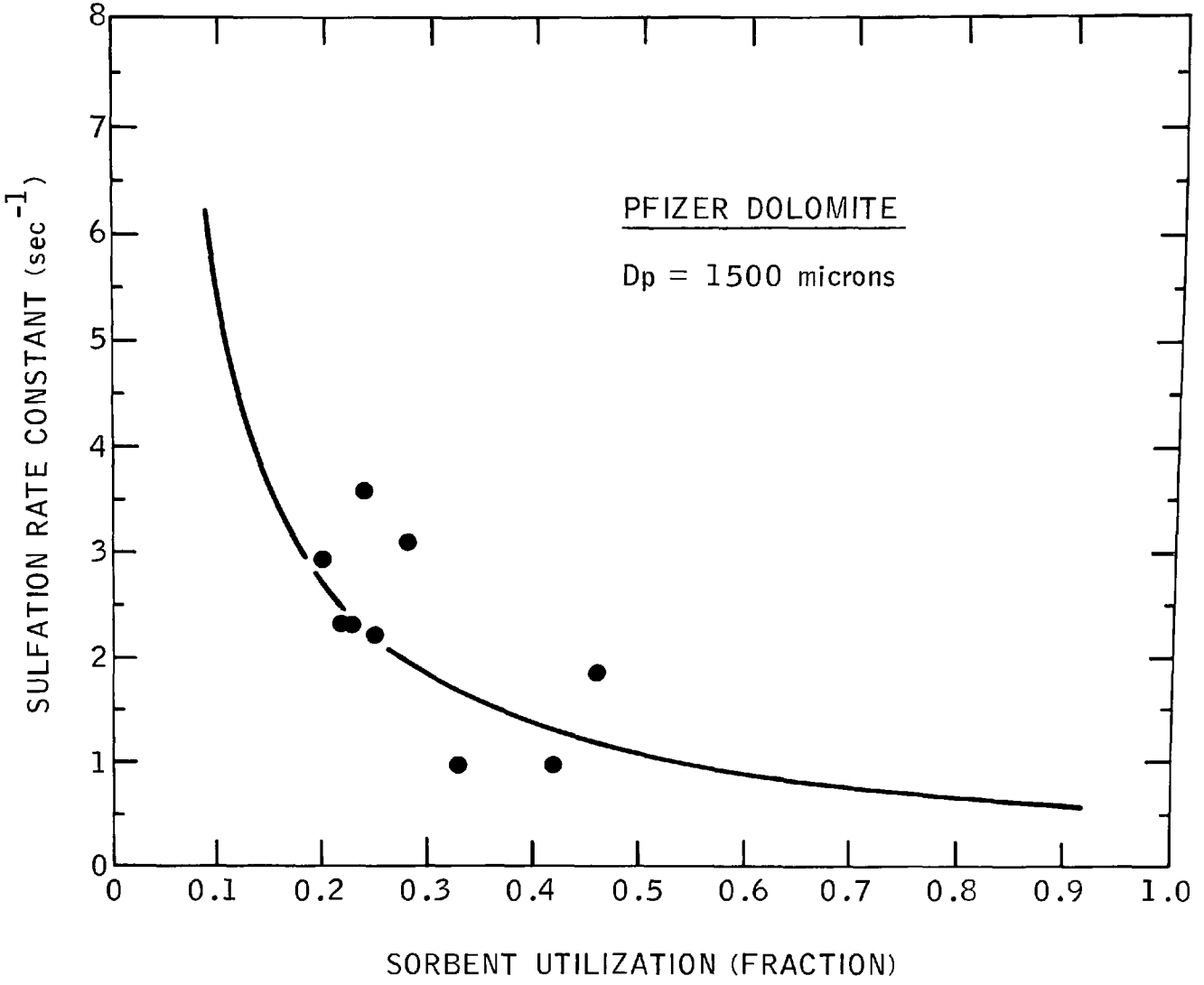

FIGURE VIII-8

SO_2 RETENTION @ 2 SEC. VS. Ca/S SET

EXXON MINIPLANT PERFORMANCE
PFIZER DOLOMITE

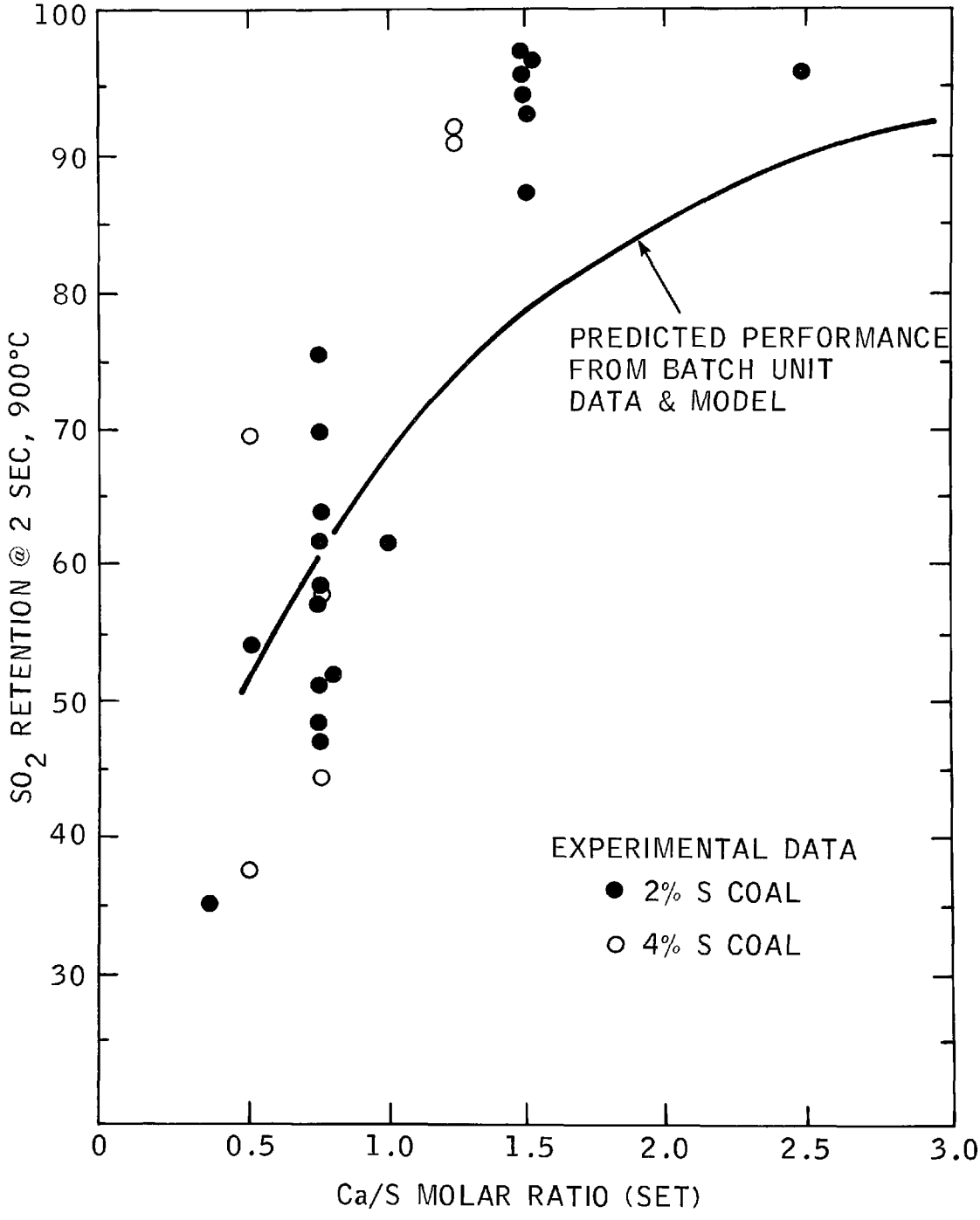

FIGURE VIII-9

TIME FOR A PARTICLE TO REACH CALCIUM UTILIZATION LEVEL IN ATMOSPHERE OF 2500 PPM SO_2 AT 900°C

PFIZER DOLOMITE

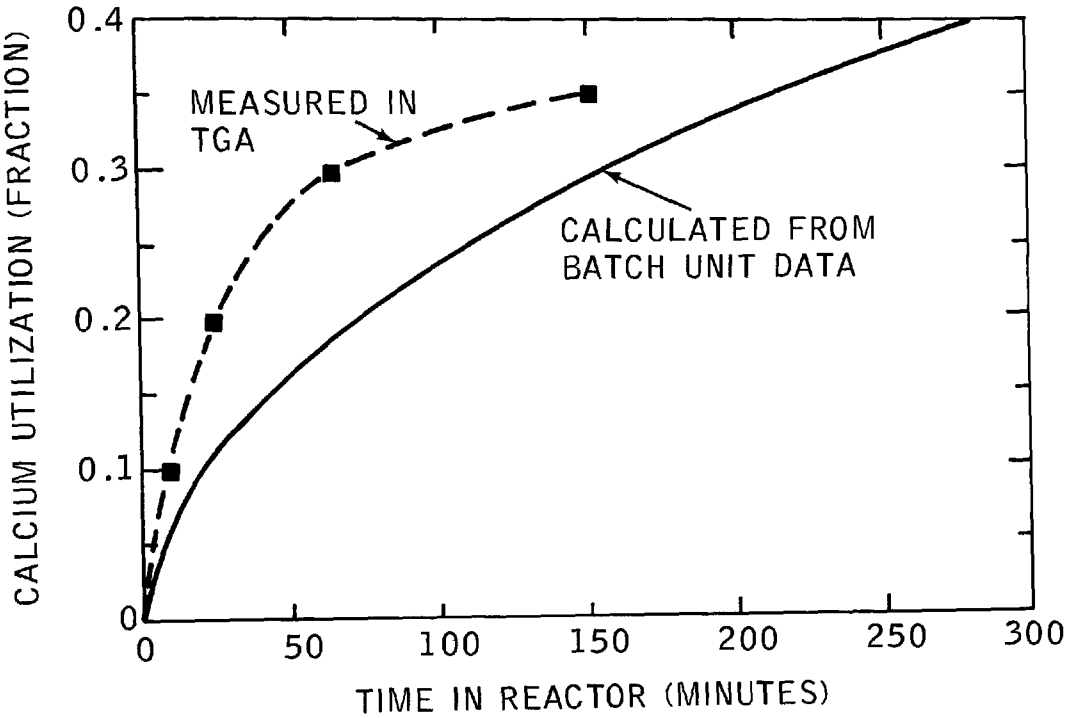

Implications of the Model

The model provides an insight into some of the factors that control the desulfurization performance in a continuously fed combustor like the miniplant. Perhaps the most striking of these factors is the surprising effectiveness of fresh sorbent particles, e.g., those particles most recently fed to the reactor, in determining the desulfurization performance. In Figure VIII-10 are shown three histograms which represent the contribution of particles which have been in residence in the reactor for different hourly time increments to the total number of particles, to the sulfur removal efficiency and to the sorbent utilization attained at steady state conditions for a sorbent feed rate corresponding to a calcium to sulfur molar feed ratio of 1.5. The contributions shown are for Pfizer dolomite as the sorbent at a gas phase residence time in the expanded bed of 2 seconds.

It is seen from the histograms that the 15 percent of the total particles which have been in the reactor for a time interval between 0 and 1 hours, account for nearly 55% of the sulfur removal achieved. The particles in the bed for a time duration up to three hours, while representing only 31% of the particles in the reactor, account for 85% of the sulfur removal. It is this marked effectiveness of fresh sorbent particles for sulfur removal that results in a psuedo steady state SO_2 concentration being obtained within a few hours following a change in the Ca/S ratio.

While the fresh particles are very effective in determining the degree of sulfur removal achieved, Figure VIII-10 does indicate that they contribute little to the steady state value of sorbent utilization. Those same 31 percent of the particles that accounted for 85% of the sulfur removed, account for only 15 percent of the sorbent utilization. The reason for this is that a small, but significant, fraction of the sorbent particles are in the reactor for very long periods of time. In the example shown in Figure VIII-10, the average particle residence time is 6.8 hours, up to which time 63% of the total number of particles are accounted for. The remaining sorbent particles have longer residence times and correspondingly higher utilization levels.

This model provides an explanation for the experimental observation that the degree of SO_2 removal appears to approach its steady state value within only a few hours following a change in the Ca/S feed ratio. The analysis also points out the care that must be exercised in calculating the Ca/S ratio from the experimental measurements of sorbent utilization and SO_2 retention and the expression for the sulfur and calcium mass balance around the combustor at steady state conditions. Clearly, one must allow sufficient time following any change in the feed ratios to insure that the sorbent utilization has indeed approached its steady state value for the calculated Ca/S feed ratio to be valid. The danger in using this method to calculate the Ca/S ratio can better be appreciated using an example based on the data shown in Table VIII-1. In this table the steady state values of SO_2 retention and sorbent utilization for various Ca/S feed ratios are given for Pfizer dolomite sorbent at a gas phase residence time of 2 seconds in the expanded bed.

FIGURE VIII-10

CONTRIBUTION OF PARTICLES IN BED FOR VARIOUS TIME PERIODS TO STEADY STATE VALUE OF GIVEN PARAMETERS

Ca/S = 1.5, DOLOMITE, 2 SEC GAS RESIDENCE TIME

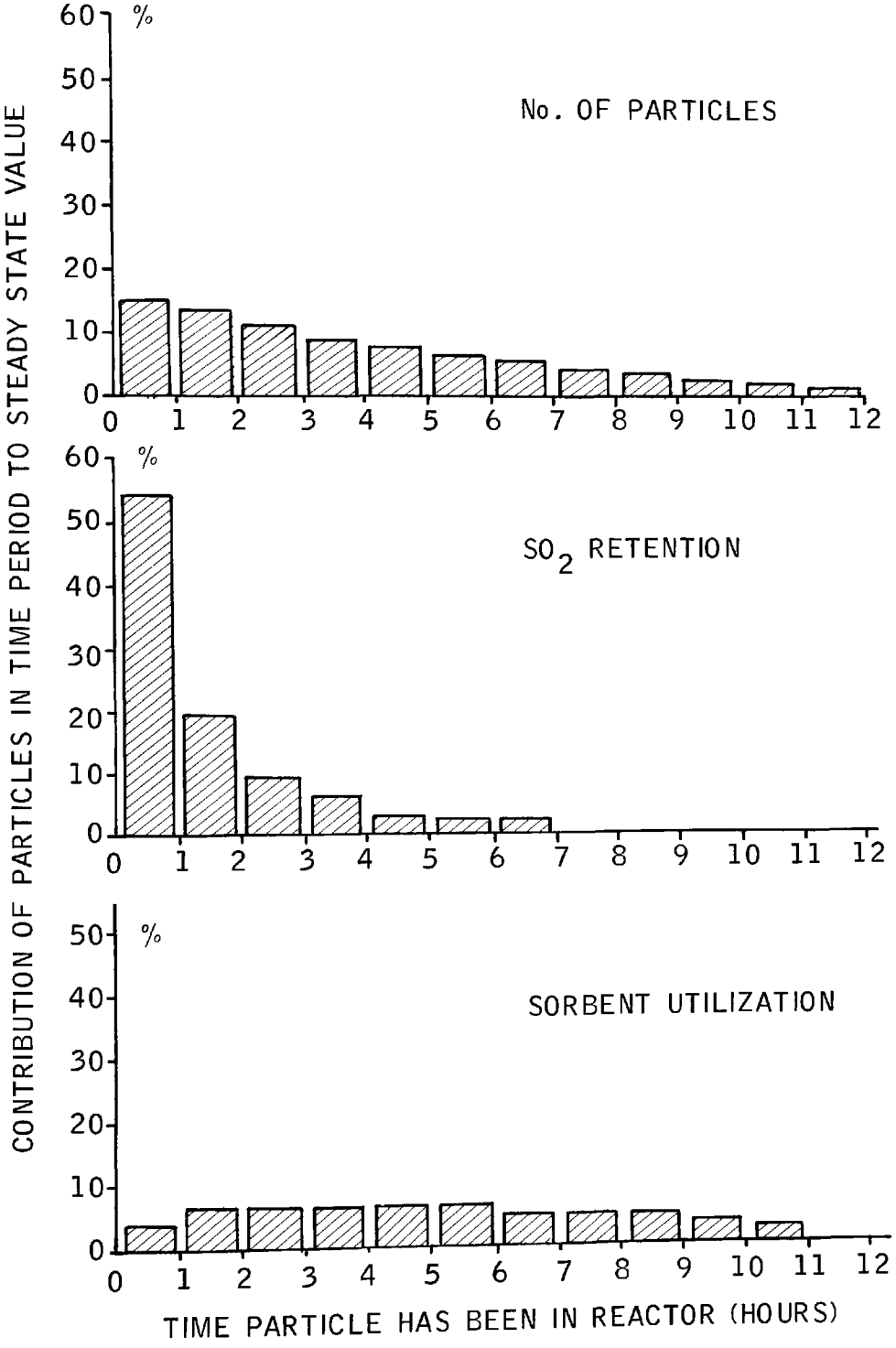

Table VIII-1. Comparison of Rate Constants

Ca/S	SR	X_B (Performance)	k_{ave} (s^{-1})	k_{batch} (s^{-1})
1.0	0.67	0.67	1.09	0.82
1.5	0.78	0.52	1.48	1.02
2.0	0.84	0.42	1.79	1.20
2.5	0.89	0.36	2.11	1.42
3.0	0.92	0.31	2.40	1.74

As an example, assume that steady state conditions were established at a Ca/S ratio of 2.0. The sorbent utilization at this condition would be 42 percent. If the Ca/S ratio were changed to 1.0, within a few hours the measured SO_2 level above the combustor bed would begin to approach a value corresponding to the steady state value of sulfur removal efficiency of 67%. It has been shown that the average sorbent utilization in the reactor bed does not respond nearly as rapidly and will within the same time interval more closely correspond to that of the previous established steady state value of 42 percent for a Ca/S ratio of 2.0. It would clearly be wrong to calculate the Ca/S ratio from the values of the sulfur removal efficiency and the sorbent utilization measured within a few hours of this change in Ca/S ratio.

The marked effect of the fresh particles in determining the sulfur removal, results in the average rate constant observed at a given steady state value of the sorbent utilization in the continuously fed combustor, i.e., the miniplant, being larger than the corresponding value of the rate constant at the same value of sorbent utilization in a batch combustor. This can be seen by comparing the values of k_{ave} and k_{batch} in Table VIII-1. Stated another way, if the rate constant obtained in the batch combustor is used directly in equation (12) the SO_2 retention calculated at a given gas phase residence time will be less than that obtained using the above described model. This is shown in Figure VIII-11 for Tymochtee dolomite at a 2 second gas phase residence time.

The model can also be used to explain the maximum degree of sorbent utilization that can be achieved in a given continuously fed combustor. To a first approximation, the degree of sorbent utilization that can be achieved, is determined by comparing the time that a sorbent particle spends on the average in the combustor and the time that it takes an individual sorbent particle to reach a given level of utilization. As an example in Figure VIII-12, the average particle residence time in the miniplant combustor and the time for a particle to reach different levels of utilization is shown for dolomite sorbent at a 2 second gas phase residence time in the expanded bed for different Ca/S feed ratios. It can be seen, that at a Ca/S of 1.5, (the level necessary to meet the EPA new source performance standards for SO_2 emissions when burning a 4 percent sulfur coal), the achievable sorbent utilization is only 60 percent, as at this Ca/S feed ratio, the average particle residence time in the miniplant combustor of 10 hours does not provide sufficient time for the sorbent particle to achieve a higher level of utilization. This is in good agreement with values measured during the course of this program. The figure also enables an estimate of the effect on sorbent

FIGURE VIII-11

SO_2 RETENTION @ 2 SEC, 900°C VS. Ca/S MOLAR RATIO

PREDICTED EXXON MINIPLANT PERFORMANCE

PFIZER DOLOMITE

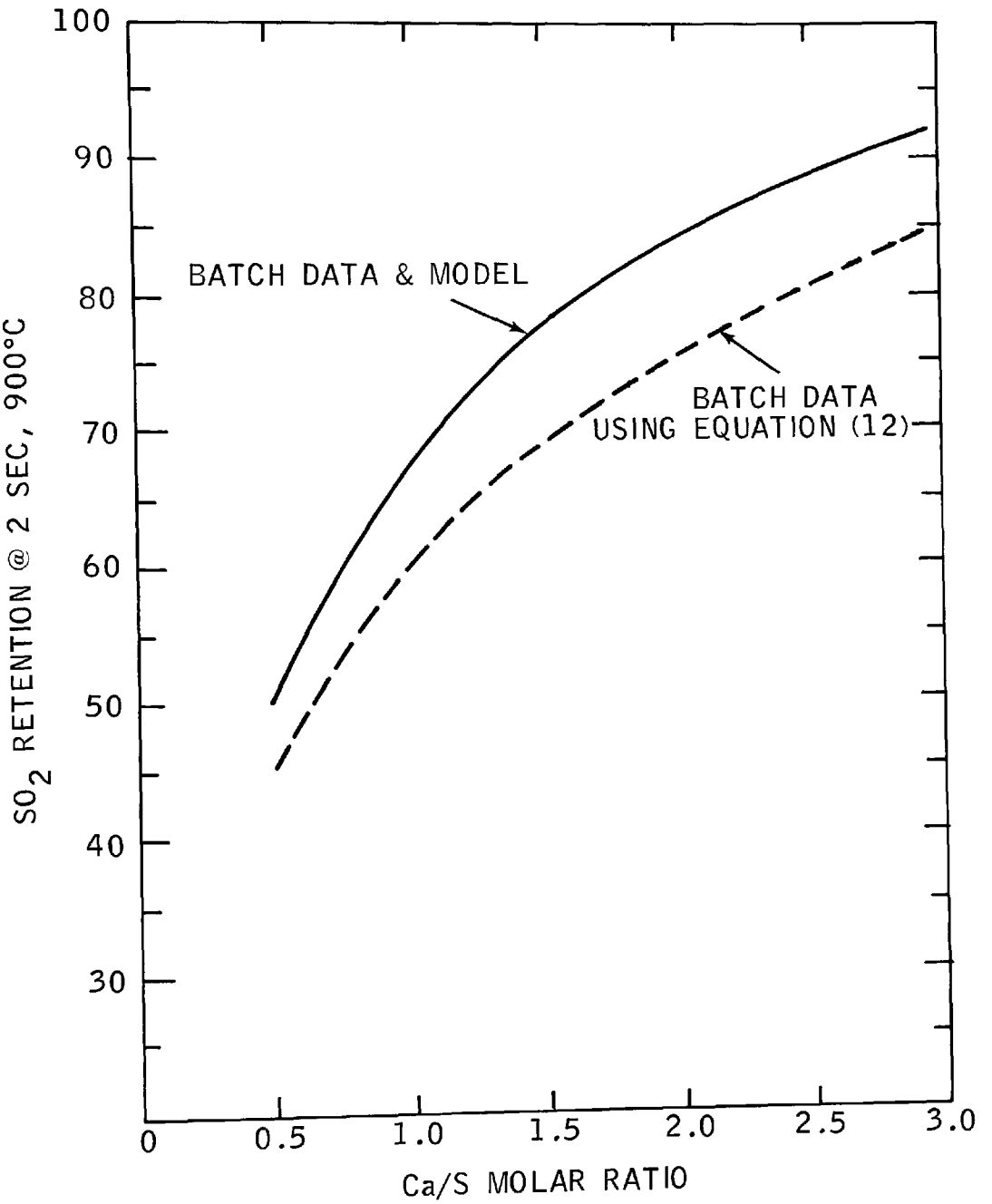

FIGURE VIII-12

TIME IN COMBUSTOR VS. Ca/S RATIO

EXXON MINIPLANT PERFORMANCE CALCULATION

PFIZER DOLOMITE

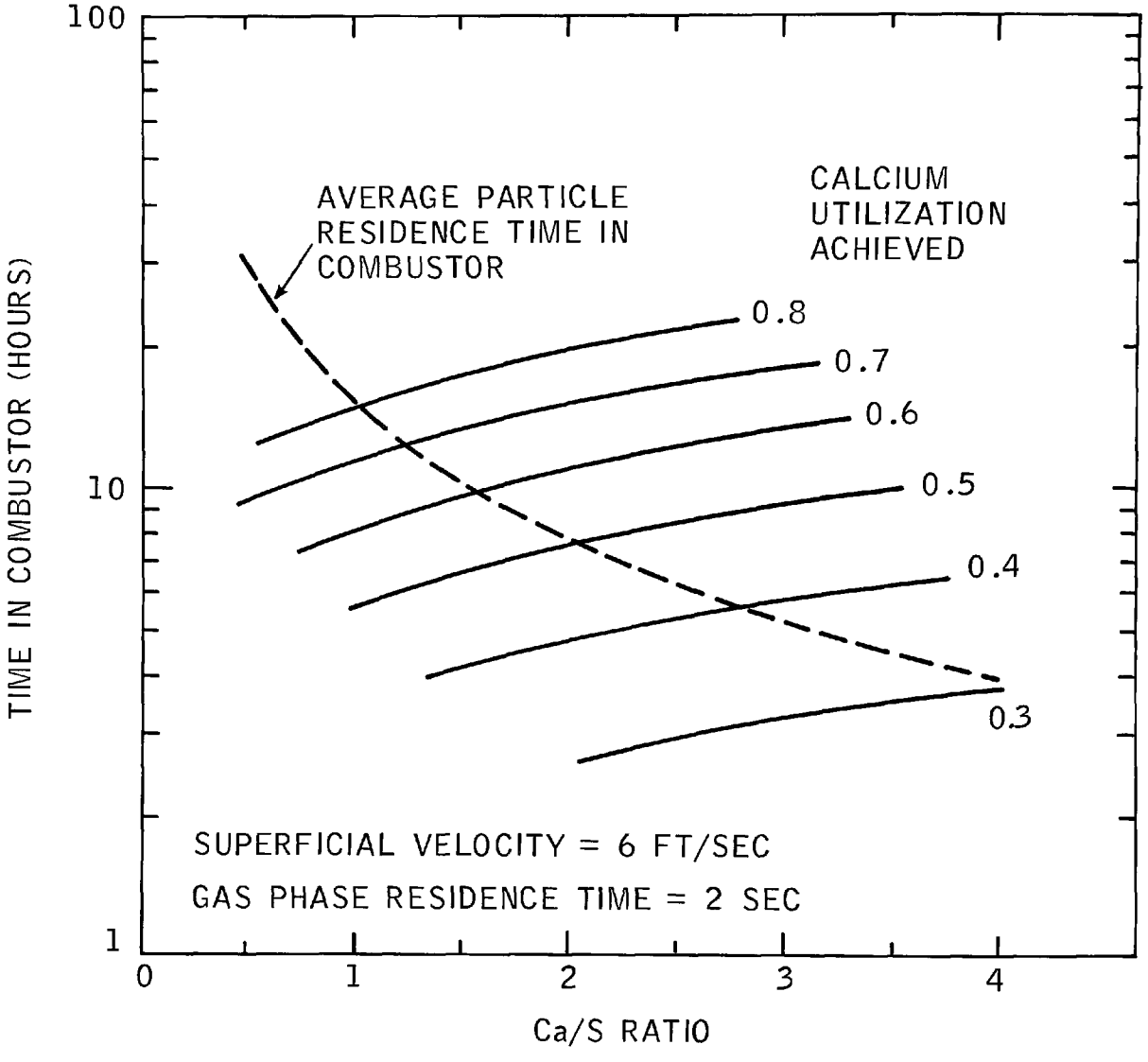

utilization if the SO_2 emission standard were to be tightened. By way of example, if a 3 to 1 ratio of Ca/S feed were to be required to meet the new standard, the expected sorbent utilization which could be achieved in the miniplant would be less than 40 percent.

SECTION IX

CONTINUING STUDIES

The future program in the miniplant will be concentrated on three major tasks; high temperature, high pressure particulate removal, a comprehensive analysis of all emissions from the unit and regeneration studies. After conversion of the batch unit to a continuous bench scale unit, experimental programs will begin centering on the study of NO_x emissions, evaluation of various coal and sorbent types and regeneration tests. These continuing studies are described in more detail in this section.

HIGH TEMPERATURE, HIGH PRESSURE PARTICULATE REMOVAL

The particulate removal program is now concentrated on optimizing the performance of a granular bed filter. Although operability for over a 24 hour period has been demonstrated, particulate removal efficiency must be improved, loss of filter media during blow back decreased and certain operational problems corrected. Buildup of particulates within the filter beds indicate the blow back has not been effective in cleaning the beds and this will be studied. The use of various filter media of differing size and density will be studied, filtration and blow back conditions and methods will also be varied and the effects measured. It is also planned to use low temperature transparent models to observe the action of the particulates and the filter media during filtration and blow back. This will be done in an attempt to learn more of what is occurring in the filter at high temperatures.

The filter will then be readied for extended testing. These tests are part of the DOE sponsored program to study erosion, corrosion and solids deposition effects for a series of gas turbine blade materials exposed to typical PFBC flue gas conditions. The program, which is a part of the cooperative EPA/DOE FBC effort, will use gas turbine blade materials and a test passage supplied by General Electric Company. In addition to the gas turbine materials test, boiler tubing materials will also be tested in samples mounted in the combustor vessel within and above the expanded bed. These samples will be supplied by Westinghouse Research Laboratory.

The extended tests will consist of a 100 hour shakedown run to test the compatibility of the combustor, filter and materials test sections. If the systems are compatible and the filter performs satisfactorily, long term testing will begin. If the systems are not compatible or if the filter does not perform satisfactorily, a decision will be made whether to proceed with the long term tests and with what gas cleanup configuration. The long term tests will consist of a series of exposure tests totalling 1000 hours exposure time. Gas turbine and boiler materials will be periodically removed and inspected by General Electric and Westinghouse respectively.

Following the completion of the filter tests, one or possibly two alternate particulate control devices will be fabricated, installed and tested on the miniplant in place of the granular bed filter. The choice of the alternate devices will be made in consultation with the EPA. Currently, devices such as a high temperature electrostatic precipitator or a high temperature bag filter are being considered.

COMPREHENSIVE ANALYSIS

At the present time, a Level 1 analysis has been conducted on the effluents from the miniplant combustor. The program calls for the completion of another Level 1 analysis with the combustor coupled to the regenerator. In addition, Level 2 and Level 3 analyses are also planned with the combustor and regenerator.

In support of the comprehensive analysis and particulate removal programs, two high temperature particulate sampling systems have been designed and are now under construction. These will be used to sample particulates entering and leaving the granular bed filter to determine particulate concentration, size distribution and composition. Provisions will be included to maintain temperature of the particulates at 870°C or higher to prevent a change in composition due to condensation of volatile materials on the particulates.

REGENERATION

A test program is being planned to characterize and develop sufficient information to determine the feasibility of the combustion-regeneration system. The primary independent variables are makeup Ca/S rate and solids recirculation rate. Another independent variable is sorbent type (limestone and dolomite). Dependent variables include SO_2 emissions from the combustor and regenerator. Parameters which are expected to be kept fixed during the program are combustor and regenerator temperatures, regenerator air/fuel ratio, combustor excess air level, bed depths, and coal type (Illinois coal will be used). The operating pressures in the combustor and regenerator will probably be fixed at 5 to 6 atm to provide sufficient fluidization velocity in the regenerator to permit good mixing of solids. This pressure level is a compromise. Otherwise, significant modifications must be made to permit operation of the system at 9 atm.

Runs of two to five days duration are planned. However, because the activity of the sorbent is expected to decline gradually over many cycles of sulfation and regeneration, it may not be practicable to reach a true steady state. By removing samples of bed periodically, it may be possible to follow the activity of the sorbent as a function of time and number of cycles and extrapolate these results to longer times. A thermogravimetric analyzer (TGA) may be used to run a standard "activity" test by sulfating samples of regenerator bed. The rate of sulfation would provide a measure of activity of the recycled stone.

BENCH SCALE UNIT

The future work in the bench scale combustor unit will evaluate various coal and sorbent types. Coals of various rank, ash and sulfur content will be tested as well as lignites, chars, etc. The effect of recycle of particulates from the first stage cyclone to the combustor on combustion efficiency will also be measured. Staged combustion to reduce NO_x levels will be studied.

Regeneration studies will also be carried out. Activity maintenance of the recycled sorbent will be measured as a function of regeneration conditions including the use of coal as the regenerator fuel.

SECTION X

REFERENCES

1. Hoke, R. C. et al, "Studies of the Pressurized Fluidized-Bed Coal Combustion Process," EPA-600/7-77-107, September, 1977.

2. "Reduction of Atmospheric Pollution," Vol. 1, p. 119, National Coal Board (U.K.), September, 1971.

3. Keairns, D. L. et al, "Fluidized Bed Combustion Process Evaluation - Phase II - Pressurized Fluidized-Bed Coal Combustion Development," EPA/650-2-75-027C, September, 1975.

4. Vogel, G. J. et al, "Bench Scale Development of Combustion and Additive Regeneration in Fluidized Beds," Proceedings of the Third International Conference on Fluidized-Bed Combustion, EPA-650/2-73-053 p. I-1-1, December, 1973.

5. O'Neill, E. P. et al, "A Thermogravimetric Study of Limestone and Dolomite - The Effect of Calcination Conditions," Thermochemica Acta 14, 209 (1976).

6. Jonke, A. A. et al, "Sulfated Limestone Regeneration and General FBC Support Studies," Proceedings of the Fluidized Bed Combustion Technology Workshop, Vol. II, p. 343, CONF-770447-P-2, April 13-15, 1977.

7. Skopp, A et al, "Studies of the Fluidized Lime-Bed Coal Combustion Desulfurization System," December 31, 1971.

8. Hoke, R. C. et al, "A Regenerative Limestone Process for Fluidized-Bed Coal Combustion and Desulfurization," EPA-650/2-74-001, January, 1974.

9. Hoke, R. C. et al, "Studies of the Pressurized Fluidized-Bed Coal Combustion Process," EPA-600/7-76-011, September, 1976.

10. "Pressurized Fluidised Bed Combustion," R&D Report No. 85, Interim No. 1, National Coal Board (U.K.), September, 1973.

11. Vogel, G. J. et al, "Recent ANL Bench-Scale, Pressurized Fluidized Bed Studies," Proceedings of the Fourth International Conference on Fluidized-Bed Combustion, p. 21, December 9-11, 1975.

12. Hoy, H. R., Roberts, A. G., "Further Experiments on a Pilot-Scale Pressurized Fluidized Bed Combustor at Leatherhead, England," Proceedings of the Fluidized Bed Combustion Technology Workshop Vol. II, p. 43, April 13-15, 1977, CONF-770447-P-2.

13. Nauman, E. G., Collinge, C. N., Chem. Eng. Sci., 23, 1317 (1968).

14. Borgwardt, "Kinetics of Reaction of SO_2 with Calcined Limestone," Env. Sci. & Tech., 4, 1, January, 1970, pp. 59-63.

15. Vogel, G. J. et al, "Reduction of Atmospheric Pollution by the Application of Fluidized-Bed Combustion and Regeneration of Sulfur-Containing Additives," EPA-650/2-74-104, September, 1974.

16. Crumpler, T. B., Yoe, J. H., Chemical Computations and Errors, John Wiley NY, 1949.

17. Cooper, L., "Measurement of High-Temperature, High-Pressure Processes," EPA-600/7-78-011, January, 1978.

18. Murthy, K. S., et al, "Comprehensive Analysis of Emissions from Fluidized Bed Combustion Processes," Process Measurements for Environmental Assessment Symposium, Atlanta, GA, February, 1978.

SECTION XI

LIST OF PUBLICATIONS

1. Hodges, J. L., Hoke, R. C., Bertrand, R. R., "Prediction of Temperature Profiles in Fluid Bed Boilers," ASME/AIChE Heat Transfer Conference, St. Louis, MO, August 9-11, 1976.

2. Hoke, R. C., "Particulate Control in Pressurized FBC-Granular Bed Filter Applications," High Temperature and Pressure Particulate Control Symposium. Washington, DC, November 9, 1976.

3. Hoke, R. C., Nutkis, M. S., Kinzler, D. D., "Pressurized FBC Studies I. Combustion," Proceedings of the Fluidized Bed Combustion Technology Exchange Workshop Vol. II, p. 157, CONF-770447-P-2, Reston, VA, April 13-15, 1977.

4. Nutkis, M. S., Loughnane, M. D., "A Program for Hot Corrosion/Erosion Materials Testing for Application to Fluidized Bed Coal Combustion," Proceedings of the Fluidized Bed Combustion Technology Exchange Workshop, Vol. II, p.217, CONF-770447-P-2, Reston, VA, April 13-15, 1977.

5. Ruth, L. A., "Regenerable Sorbents for Fluidized Bed Combustion," Proceedings of the Fluidized Bed Combustion Technology Exchange Workshop Vol. II, p. 301, CONF-770447-P-2, Reston, VA, April 13-15, 1977.

6. Ruth, L. A., Gregory, M. W., Bertrand, R. R., "Pressurized FBC Studies II. Sorbent Regeneration and Particulate Control," Proceedings of the Fluidized Bed Combustion Technology Exchange Workshop Vol. II, p. 329, CONF-770447-P-2, Reston, VA, April 13-15, 1977.

7. Nutkis, M.S., "Hot Corrosion/Erosion Materials Program and Experience in the Pressurized Fluidized Bed Coal Combustion Miniplant," Engineering Foundation/ASME Conference on Ash Deposits and Corrosion Due to Impurities in Combustion Gases, Henniker, NH, June, 1977.

8. Bertrand, R. R., "Temperature Control in the Exxon Fluidized Bed Combustion Miniplant," 1977 ISA Symposium on Instrumentation and Control for Fossil Demonstration Plants, Chicago, IL, July 13, 1977.

9. Hoke, R. C., "Pressurized Fluidized Bed Combustion," Proceedings of the 12th Intersociety Energy Conversion Engineering Conference, Vol. I p. 737, Washington, DC, August 28 - September 2, 1977.

10. Ruth, L. A., "Sorbent Regeneration in Fluidized Bed Combustion," Proceedings of the 12th Intersociety Energy Conversion Engineering Conference, Vol. II, p. 758, Washington, DC, August 28 - September 2, 1977.

11. Ruth, L. A., Varga, G. M., "Developing Regenerable SO_2 Sorbents for Fluidized Bed Coal Combustion Using Thermogravimentric Analysis," paper presented at NATAS 7th Conference, St. Louis, MO, September, 1977.

12. Nutkis, M. S., "Hot Corrosion Erosion Testing of Materials for Application to Advanced Power Conversion Systems Using Coal-Derived Fuels Task II - Fluidized Bed Combustion," First International Conference on Materials for Coal Conversion and Utilization, CONF-771025 UC-90h, V-1, Gaithersburg, MD, October 11-13, 1977.

OTHER PRESENTATIONS

Bertrand, R. R., Hoke, R. C., Seminar on Fluidized Bed Combustion, Massachusetts Institute of Technology, January 1977.

Hoke, R. C., Seminar on Fluidized Bed Combustion, Polytechnic Institute of New York, October, 1977.

SECTION XII

APPENDICES

		Page
A	FBC Solid Effluent Rates, Balances, Composition	159
B	Second Order Correlation of SO_2 Retention Data	164
C	Error Analysis	182
D	Data Management Systems	183
E	Analytical Techniques	196
F	Data Logger Channel Identification	197
G	FBC Miniplant Alarm/Shutdown System	199
H	Tables	
H-1	Miniplant Fluidized Bed Coal Combustion Run Summary	203
H-2	Particle Size Distribution Spent Pfizer 1337 Dolomite Sorbent (Except As Noted)	211
H-3	Particle Size Distribution Primary Cyclone Capture	211
H-4	Particle Size Distribution Secondary Cyclone Capture	212
H-5	Particle Size Distribution GBF Capture	213
H-6	Particle Size Distribution Flue Gas Particulates No Filter	214
H-7	Particle Size Distribution Flue Particulates After Filter	214
H-8	Miniplant Solids Analysis	215
H-9	Miniplant Solids Composition	221
H-10	Miniplant Sample Shipments	224
J	Figures	
J-1	Modified Filter Bed	227
J-2	Modified Filter Element Fluidizing Grid	228
J-3	GBF Pressure Vessel	229

APPENDICES (Continued)

		Page
J-4	GBF Pressure Vessel Lining	230
J-5	Filter Pressure Vessel (Side View)	231
J-6	GBF Piping Arrangement	232
J-7	Preheat Burner System Schematic	233
J-8	Granular Bed Filter Blow Back System Flow Schematic	234

APPENDIX A

FBC SOLID EFFLUENT RATES, BALANCES, COMPOSITION

Solid rates, concentrations and compositions were summarized for two combustion runs made in the Exxon miniplant using Illinois No. 6 coal and Pfizer No. 1337 dolomite. Conditions and emission results for the two runs, Nos. 43.4 and 43.5, are given in Appendix H-1. Both runs were made at a pressure of 940 kPa, an average bed temperature of 950°C, a superficial velocity of 1.7 m/s and excess air of 25%. Run 43.4 was made at a Ca/S ratio of 1.8 and 43.5 at 0.7. Run 43.4 achieved a 96% retention of SO_2, run 43.5 a 44% retention.

SOLIDS RATES AND BALANCES

A calcium balance was made over the entire time period during which runs 43.4 and 43.5 were selected. The balance was more meaningful over the entire time period because the bed height and composition changed during the time period. The results of the calcium balance are shown in Table A-1. The imbalance of only 7% is very good.

Individual calcium balances were then calculated for the two runs considering only the steady state periods and the results are shown in Table A-2. It is evident that the "loss" of calcium from runs 43.4 and 43.5 is due to bed build up.

If the bed had been maintained at a constant height, the fraction of calcium in the bed removal line would have been 0.65 using the overall results and 0.59 using the combined results at steady state. The overall results, when normalized to 100%, give the ratio of bed-removal-calcium to overhead-calcium of 58:42 or, roughly 60:40.

Since the amount of calcium removed from the bed is less in run 43.4, this suggests that the bed build up occurred primarily, if not completely, in run 43.4. This was verified by bed height measurements which indicated a 30% build up in bed height in run 43.4 and a 3% build up in run 43.5.

The ratios of solids added and removed from the combustor to the coal feed are shown in Table A-3. Since a build up occurred in 43.4, the solids retained in the bed to coal feed ratio was estimated and is also shown in the table. The total solids removed and retained in 43.4 equal 0.27 wt/wt coal which is about 80% of the expected weight ratio. In run 43.5, the total solids removed equal 0.23 wt/wt coal which is about 115% of the expected weight ratio. Therefore, even with the correction for an increase in bed height, the disposition of the output solids was not properly split between the two runs. However, by combining the two runs and calculating average input and output rates, an acceptable ratio of measured to expected solids output of 95% was determined.

TABLE A-1. CALCIUM BALANCE

Runs 43.4-43.5 Entire Time Period

	Percent of Ca Into Bed
Fly Ash Line[1]	41
Bed Removal Line	38
Particulates	1
Increase of Ca in Bed	27
TOTAL	107

---

(1) Secondary cyclone discharge

TABLE A-2. INDIVIDUAL CALCIUM BALANCES

Runs 43.4 and 43.5 Steady State Periods

	Percent of Ca Into Bed			
Run No.	Bed Removal Line	Fly Ash Line	Particulates	Total
43.4	27	43	0.4	70
43.5	44	40	0.7	85
Combined Runs	32	42	0.6	75
Combined Runs Corrected for Bed Build Up	59	42	0.6	102

TABLE A-3. SOLIDS/COAL WEIGHT RATIOS

Run No.	Coal Fed	Sorbent Fed	Bed Removal Line	Fly Ash Line(1)	Flue Gas Particulate	Retained in Bed	Σ Solids Out Expectation
43.4	1.00	0.32	0.05	0.13	0.004	~0.09	~0.80
43.5	1.00	0.13	0.10	0.13	0.004	0	1.15
Combined	1.00	0.22	0.08	0.13	0.004	~0.04	~0.95

---

(1) Secondary Cyclone Discharge

TABLE A-4. ASH BALANCE

Run No.	Ash Removed/Ash Fed Bed Removal Line	Fly Ash Line	Particulates	Total (Ash Balance)	Retained in Bed	Corrected Balance
43.4	0.09	0.61	0.03	0.73	~0.27	1.00
43.5	0.10	0.81	0.03	0.94	0	0.94

Ash balances were also calculated for the two runs. The results are shown in Table A-4. Again, if a correction is applied to 43.4 for the build up in the bed, good balances are calculated. As shown in Table A-4, 65 to 85% of the ash is removed overhead, the balance is removed with the used bed.

A sulfur balance was also made during the entire run period from start up to shut down. The results are shown in Table A-5. The balance on sulfur was 87%, while this was not as good as the calcium balance, it is nevertheless reasonable.

SOLIDS COMPOSITION

The composition of the solids removed from the bed and the fly ash is given in Table A-6. The percentage of the solids present as unburned carbon and used sorbent was calculated from chemical analysis of the solids. The percentage of ash in the solids was then obtained by difference. The composition of the calcium portion of the bed removal solids and fly ash was also calculated from the chemical composition and is given in Table A-6.

Solids from Run 43.5 were also analyzed for sodium and potassium by atomic absorption. The results are given in Table A-7.

TABLE A-5. SULFUR BALANCE

Runs 43.4-43.5

	Percent of S into Bed
Fly Ash Line	25%
Bed Removal Line	18%
Stack Gas	27%
Increase of S in Bed	17%
TOTAL	87%

TABLE A-6. SOLIDS COMPOSITION (WT %)

Run No.	Carbon	Sorbent	Ash	Sorbent Calcium Composition CaO	$CaCO_3$	$CaSO_4$
43.4						
Bed Removal Line	1	82	17	37	10	53
Fly Ash Line	1	54	45	16	6	78
43.5						
Bed Removal Line	1	89	10	29	7	64
Fly Ash Line	1	35	64	24	3	73
Particulate	3	35	62	--	--	--

TABLE A-7. ALKALI CONTENT OF SOLIDS - RUN 43.5

Solid	Na (Wt %)	K (Wt %)
Dolomite	0.04	0.008
Bed Material (After 43.4, Before 43.5)	0.05	0.02
Fly Ash	0.37	0.63
Particulates	0.80	1.34

APPENDIX B

SECOND ORDER CORRELATION OF SO_2 RETENTION DATA

In the previous report (1), sulfation data from Exxon and other laboratories, using dolomite sorbent, were correlated by using a first order expression for the rate constant (Eq. 1). The rate constant was then related to the degree of sulfation of the dolomite.

$$k_1 = -\frac{1}{t} \ln(1-x) \tag{1}$$

k_1 = first order constant

t = residence time (bed height/superficial velocity)

x = fraction SO_2 retention (SR)

This procedure gives a good correlation but has some draw backs when used for design purposes. For example the Ca/S molar ratio does not enter explicitly into the value of x that would be calculated for a given set of conditions. Also, the sulfation level is not known a priori (moles SO_4 in bed/moles Ca in bed).

Another correlation has been developed that not only allows the SO_2 retention to be calculated but also takes into account all the major design parameters. This technique is derived by assuming that the rate of removal of SO_2 and CaO is second order (first order in CaO and first order in SO_2). It is assumed that sulfur in the coal is instantly converted to SO_2 and that the dolomite is instantly calcined. It is also assumed that the gas/solid reduction between SO_2 and the sorbent can be treated in a manner similar to that used for homogeneous reactions.

The second order rate expression is

$$\frac{dx'}{dt} = k_2(a'x')(b'-x') \tag{2}$$

where a' = initial concentration of CaO, mols/m^3

b' = initial concentration of SO_2, mols/m^3

x' = concentration of product ($CaSO_4$), mols/m^3

t = time, s

k_2 = second order rate constant, m^3/mol-s

Integration of this expression gives

$$\frac{1}{a'-b'} \ln\frac{b'(a'-x')}{a'(b'-x')} = k_2 t \tag{3}$$

On dividing the numerator and denominator of the logarithmic operand by $(b')^2$, one obtains

$$\frac{1}{a'-b'} \ln \frac{\left(\frac{a'}{b'} - \frac{x'}{b'}\right)}{\frac{a'}{b'}\left(1-\frac{x'}{b'}\right)} = k_2 t \tag{4}$$

By definition, $a'/b' = a$ = Ca/S molar ratio in the feed. Similarly, $x'/b' = x$ = fraction of SO_2 retained at steady state.

One then arrives at:

$$\frac{1}{a'-b'} \ln \frac{a-x}{a(1-x)} = k_2 t \tag{5}$$

If b' is factored out of the prelogarithmic term, there results

$$\frac{1}{b'(a-1)} \ln \frac{a-x}{a(1-x)} = k_2 t \tag{6}$$

The quantity b', the initial concentration of SO_2, is given by

$$b' = \frac{(S)(R)}{(11.52 \times 10^6)(V)(A)} \tag{7}$$

where S = Percent sulfur in coal,
R = Coal feed rate, kg/hr,
V = Superficial velocity of gas through the bed, m/sec,
A = Reactor cross sectional area, m^2,

and 11.52×10^6 is a conversion factor so that b' is in mols/m^3.

The reaction time is given by

$$t = H/V \tag{8}$$

where H is the expanded bed height in meters.

Upon substitution of (7) and (8) into (6), one arrives at an equation whose parameters are those commonly used in FBC technology:

$$\frac{11.52 \times 10^6 (V)(A)}{(S)(R)(a-1)} \ln \frac{a-x}{a(1-x)} = k_2 \frac{H}{V} = f \tag{9}$$

Another method of arriving at equation (9) is given in a subsequent section. That method assumes SO_2 moves in plug flow but that the solids are well mixed.

The value of k_2 is found by plotting f vs t, where t = H/V. The plot, using data from Exxon miniplant dolomite runs 19 through 51, is shown in Figure B-1. The several points shown for run 51 were obtained in an experiment in which the bed height was altered while other parameters remained constant.

FIGURE B-1

SECOND ORDER PLOT USING ACTUAL CONCENTRATIONS

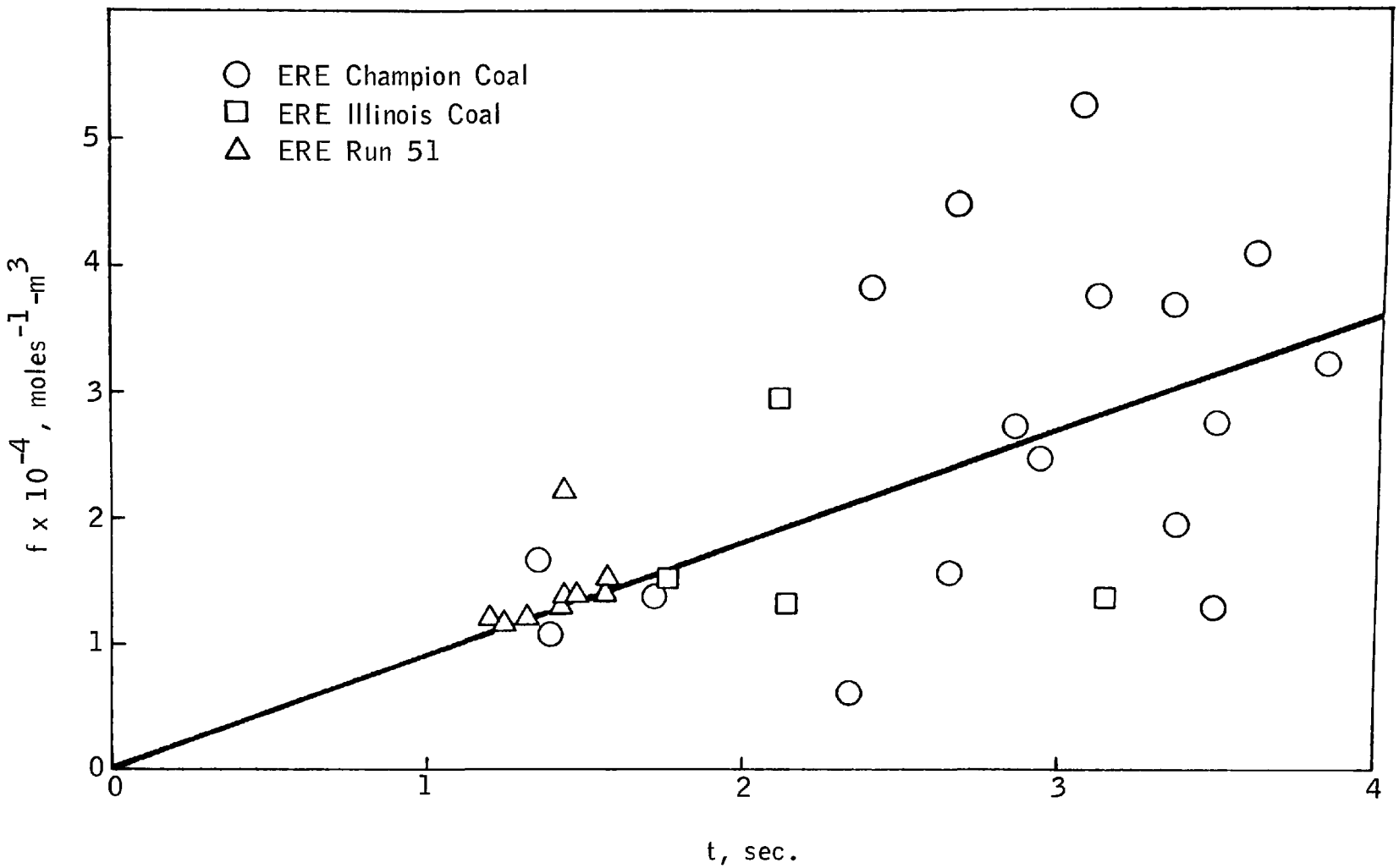

The least square fit of the data gives a value for k_2 of 9.512×10^3 m^3/mole-sec.

To determine the expected retention of SO_2 for any set of parameters, equation (9) is inverted to give

$$x = \frac{a(e^c-1)}{ae^c-1} \tag{10}$$

$$\text{Where } c = \frac{(k_2)(a-1)(S)(R)(H)}{11.52 \times 10^6 (A)(V)^2}$$

The reliability of equation (10) may be seen by calculating the expected SO_2 retention and plotting the calculated values vs the measured values. This has been done for the ER&E data and the results are shown in Figure B-2. Included in this figure are runs where $x > a$. These data could not be used in equation (9) to estimate k_2. (It should be noted that in equations (9) and (10), when $a = 1$, indeterminate values are found. In calculations, it is only necessary to set $a = 0.99999$ or 1.000001 and then perform the calculation.)

To test the validity of equation 10 even further, data were used from Argonne National Laboratories (ANL) (15) and from the National Coal Board (NCB)(10,12). The retentions calculated from equation (10) using the second order rate constant determined from the Exxon data were plotted against the measured retentions and the results are shown in Figure B-3. Again, a good fit is found.

The scope of Equation 10 can be appreciated when it is realized that the expected retention can be calculated with only one adjustable constant, k_2, which is obtained from actual experimental data. The range of variables in Figures B-2 and B-3 are shown in Table B-1. It can be seen that equation (10) has been shown to be valid over a wide range of variables.

Equation (10) can be used to show the effect on sulfur retention of changing one operating variable while the other variables are held constant. Figures B-4 and B-5 show the effect of the variables in this fashion.

The top section of Figure B-4 shows the SO_2 retention vs the feed Ca/S ratio for coals of different sulfur content. For a given Ca/S ratio, the retention increases as coal sulfur content increases. This effect differs from that predicted by the first order model in which SO_2 retention is independent of the sulfur content of the coal. Also shown in the figure is the locus of Ca/S requirements to give 0.52 g SO_2/MJ (1.2 lb SO_2/M BTU) for coals of 2.8 MJ/kg (12,000 BTU/lb) and 1.4 MJ/kg (6000 BTU/lb). It is interesting to note that for the coal with the lower heating value, a larger Ca/S ratio is required for the 1% coal than the 6% coal.

The superficial velocity (V) has a dramatic effect on the retention when all other factors are constant. This effect is shown in the central section of Figure B-4 for two levels of Ca/S. The large effect is not surprising since V enters Equation 10 to the second power.

FIGURE B-2

PREDICTED SO_2 RETENTION VS. MEASURED SO_2 RETENTION, EXXON DOLOMITE RUNS

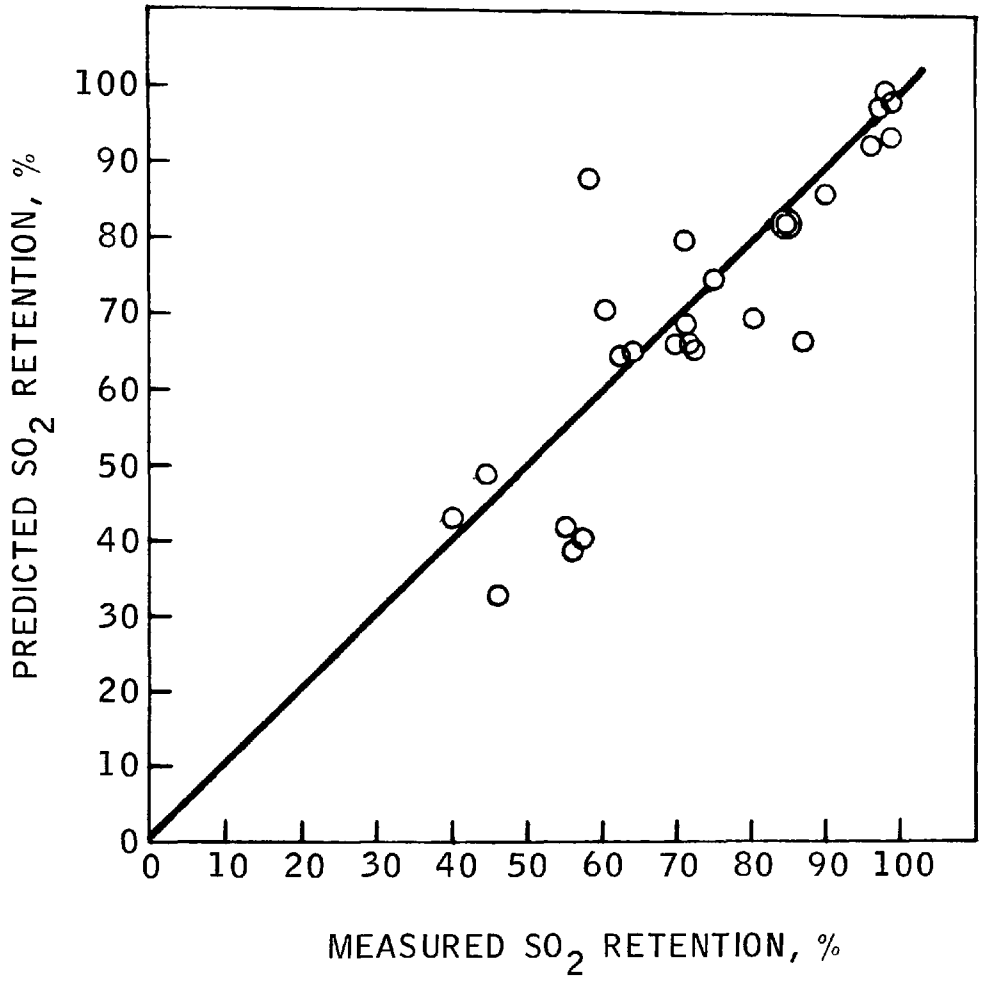

FIGURE B-3

PREDICTED RETENTION VS. MEASURED RETENTION

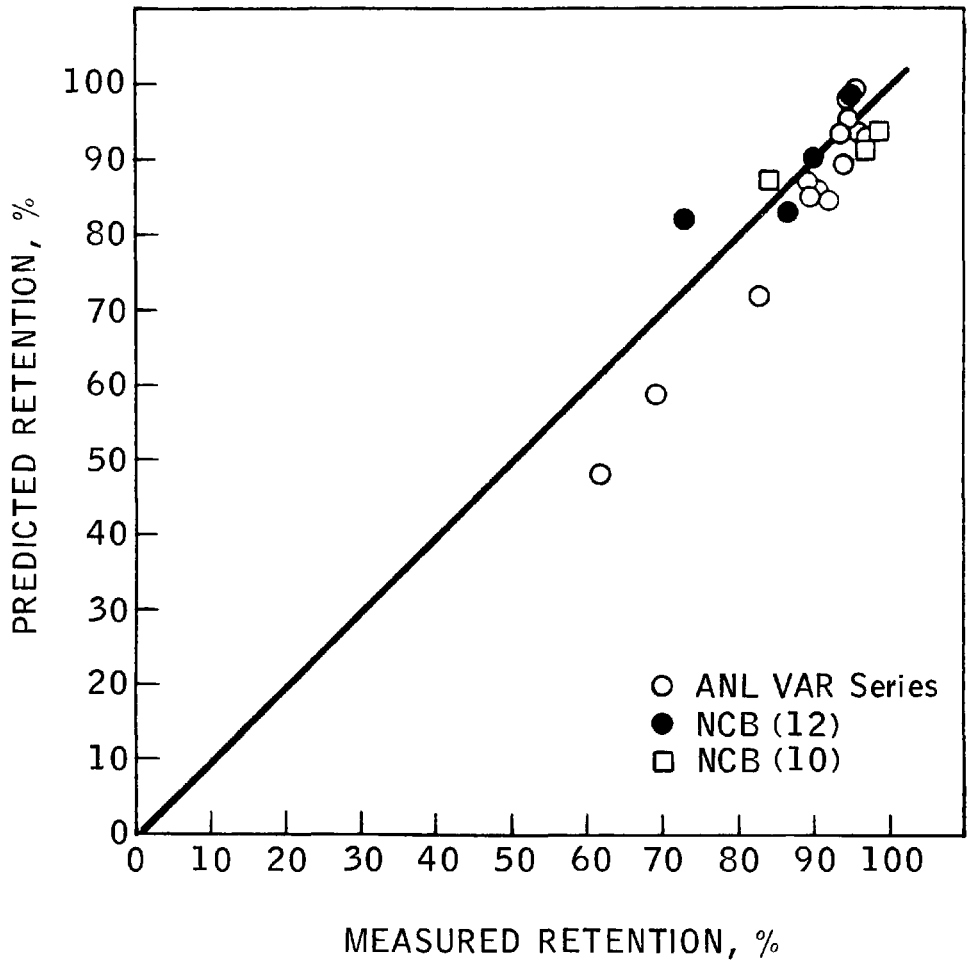

TABLE B-1. RANGE OF VARIABLES FOR WHICH EQUATION 10 HAS BEEN SHOWN TO BE VALID

Variable	Range for Data Source			
	ER&E	ANL	NCB	OVERALL (NOMINAL)
A, m^2	0.0794-0.0873	0.0183	0.558	0.018-0.56
S, %	1.96-4.2	2.82	2.97	2-4.2
Ca/S	0.5-2.5	1-3.2	1-2.18	0.5-3.2
V, m/s	1.52-2.96	0.64-1.49	0.7-0.762	0.64-3.0
H, m	2.4-7	0.915	1.34-2.44	0.92-7
R, kg/hr	78-149	7.75-23.43	144-273	7.8-270

FIGURE B-4

PREDICTIONS USING SECOND-ORDER MODEL

EFFECT OF Ca/S RATIO ON RETENTION

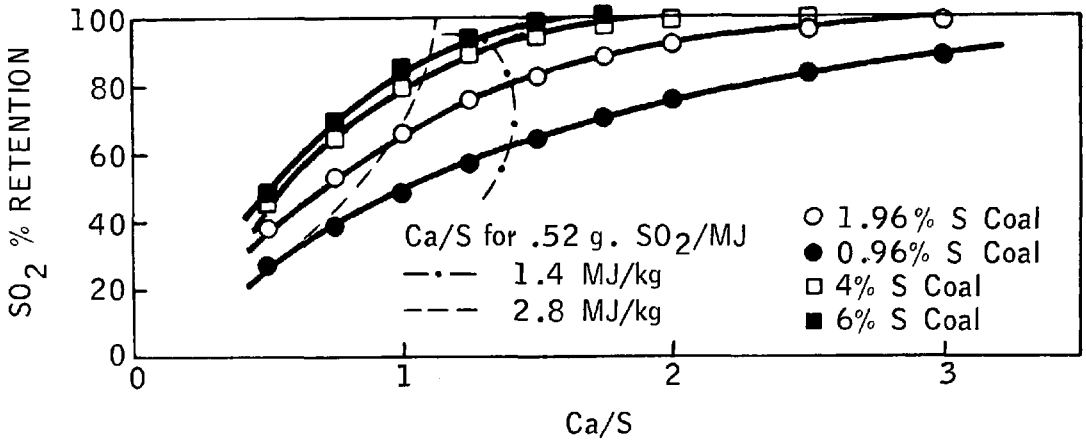

EFFECT OF SUPERFICIAL VELOCITY ON RETENTION

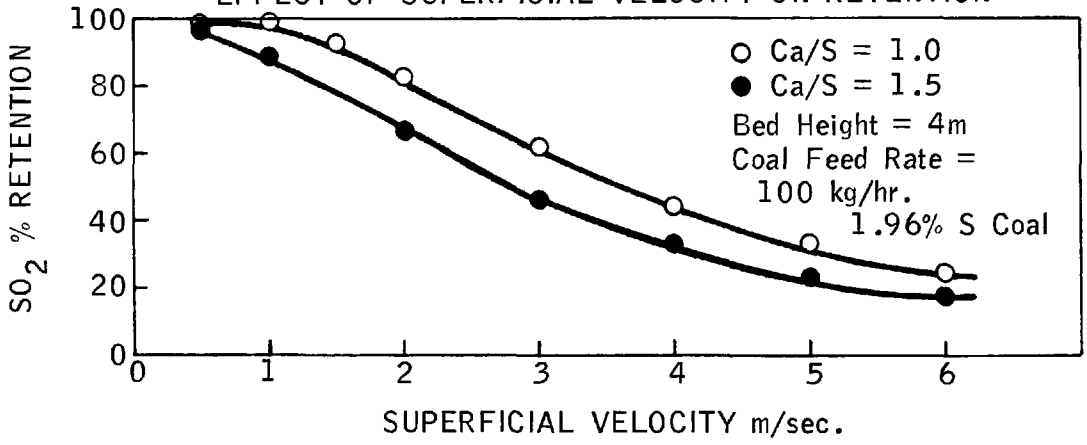

EFFECT OF BED HEIGHT ON SO_2 RETENTION

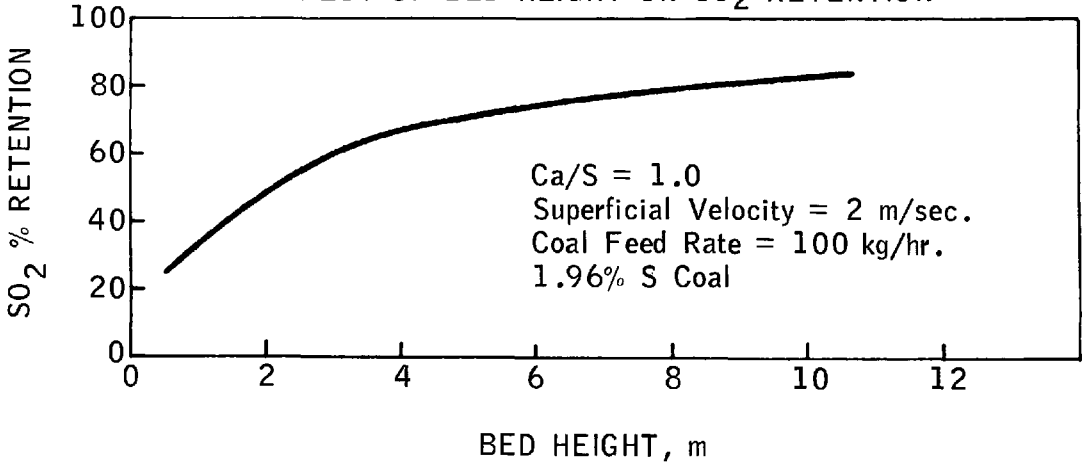

FIGURE B-5

PREDICTIONS USING SECOND-ORDER MODEL

EFFECT OF COAL SULFUR CONTENT ON SO_2 RETENTION

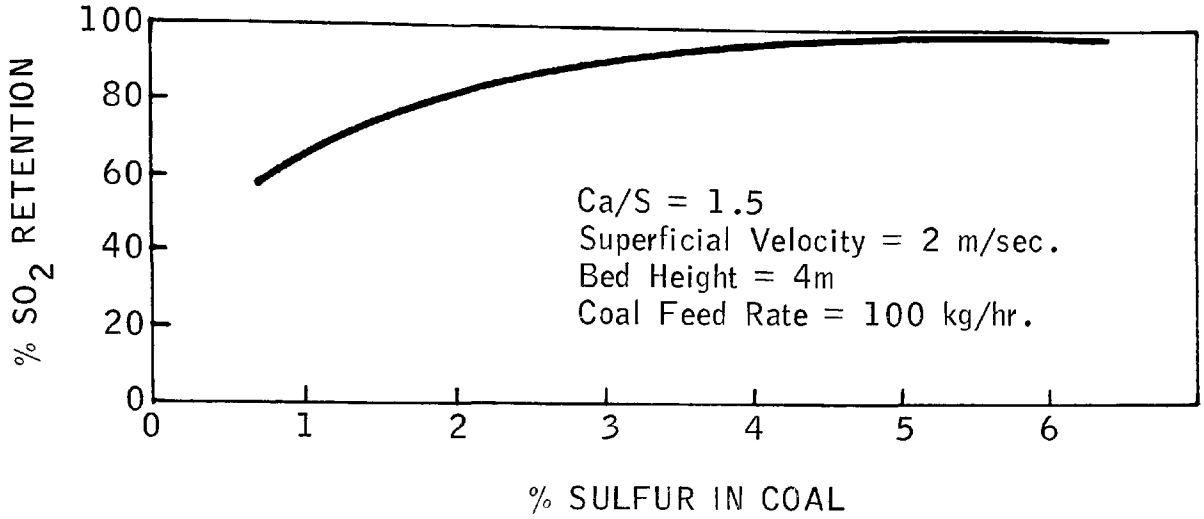

EFFECT OF COAL FEED RATE ON SO_2 RETENTION

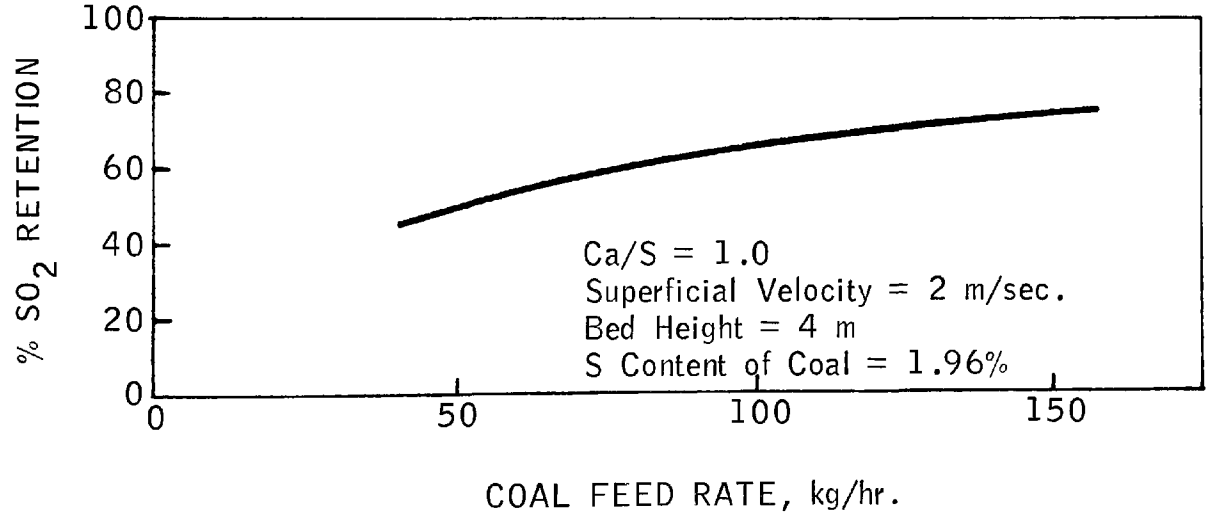

The lower portion of Figure B-4 illustrates the effect of bed height on the retention. The effect is significant, especially with shallow beds.

The effects of coal sulfur content (S) and coal feed rate (R) are portrayed in Figure B-5. Both effects arise because of the higher initial sulfur contentration with increasing S or R.

It should be noted, on reviewing Table B-1, that Equation 10 has been shown to hold over most of the range of Ca/S in the upper portion of Figure B-4 (Ca/S = 0.5-3.2). The equation holds for a good portion of the central part of Figure B-4 (V = 0.64-3.0) and for the lower section (H = 0.92-7). Experimental data confirm Equation 10 for a large section of the upper portion of Figure B-5 (S = 2-4.2) and for all of the lower portion of B-5 (R = 7.8-270).

Figure B-6 shows the percent SO_2 retention vs the Ca/S ratio for different residence times, t, when other parameters are held constant. The actual parameter varied is the superficial velocity for the solid lines and change of the bed height at t = 1 s for the dashed line. As seen in Equation (10), velocity enters as the square while H enters as the first power. If this model is valid, there is no unique value for sulfur retention at a given value of residence time.

Since equation (10) can be used so effectively for design purposes, it would be very desirable to delineate the extent for which the equation is valid. The region of low retention would be very valuable to investigate.

Figure B-7 shows how this was done for one experiment during run 51. The bed height was varied while all other variables were constant. Figure B-7 shows that the calculated retention fits the experimental data well over a narrow range of bed heights. It would be useful, however, to expand the experimental range from, for example, a bed height of 1m to 5m.

This second order kinetic model is an alternate way to analyze, correlate data and predict results. It has certain advantages over this first order model described in the previous report (1), and appears to correlate the data well. Both methods will be evaluated further as more data becomes available.

ALTERNATE DERIVATION OF SECOND ORDER RATE EXPRESSION

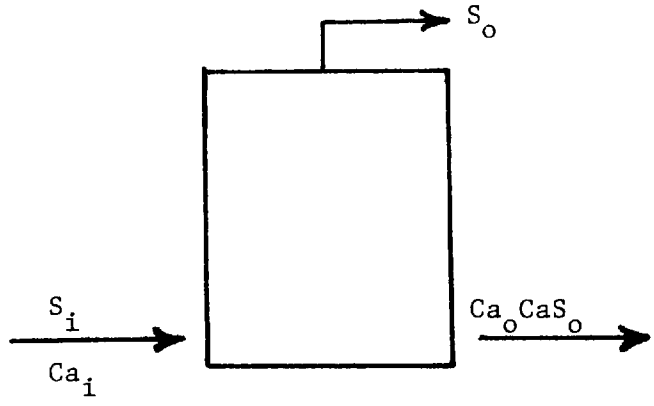

FIGURE B-6

PREDICTIONS USING SECOND-ORDER MODEL

EFFECT OF Ca/S RATIO FOR
DIFFERENT RESIDENCE TIMES

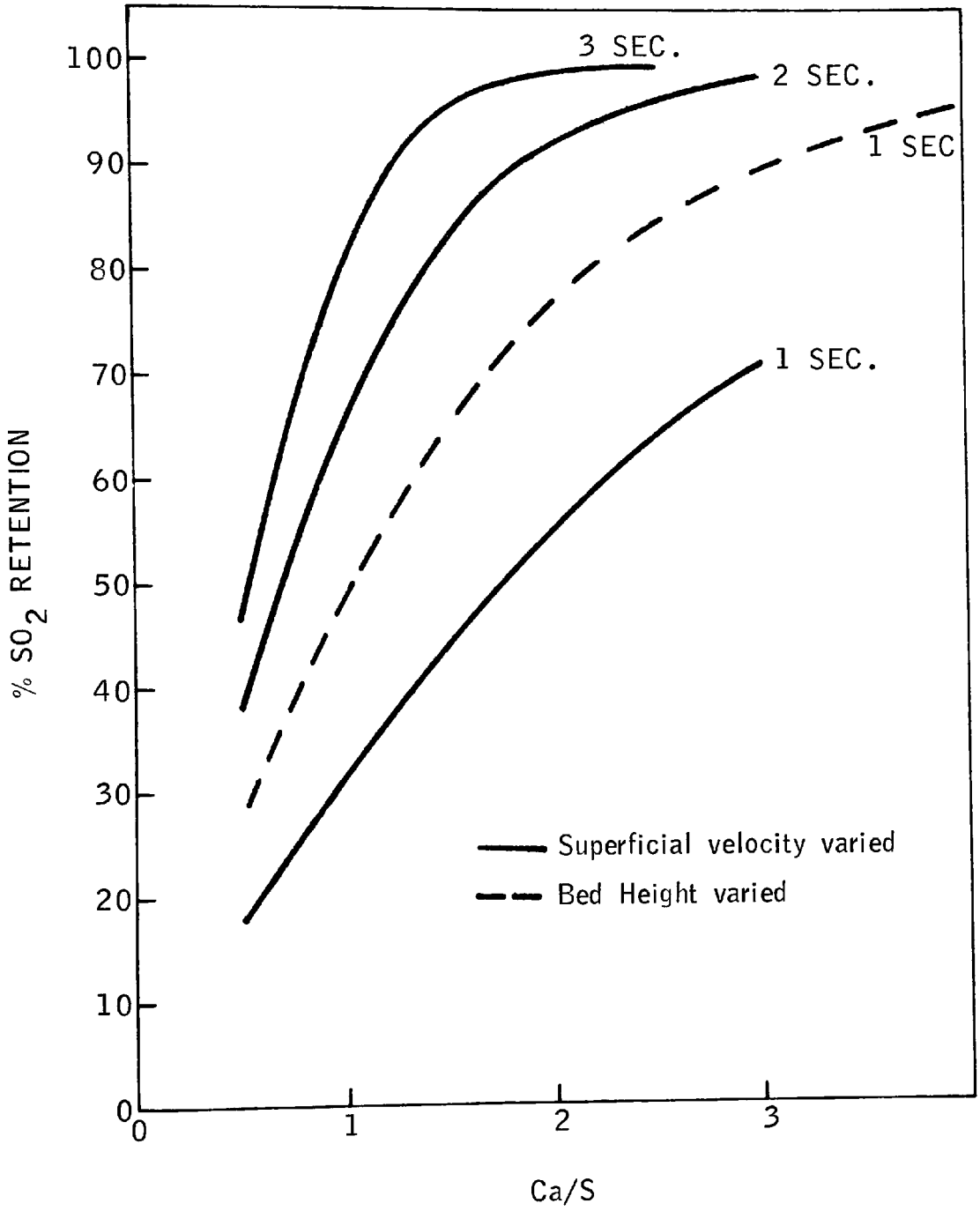

FIGURE B-7

COMPARISON OF EXPERIMENTAL EFFECT OF BED HEIGHT WITH THEORETICAL

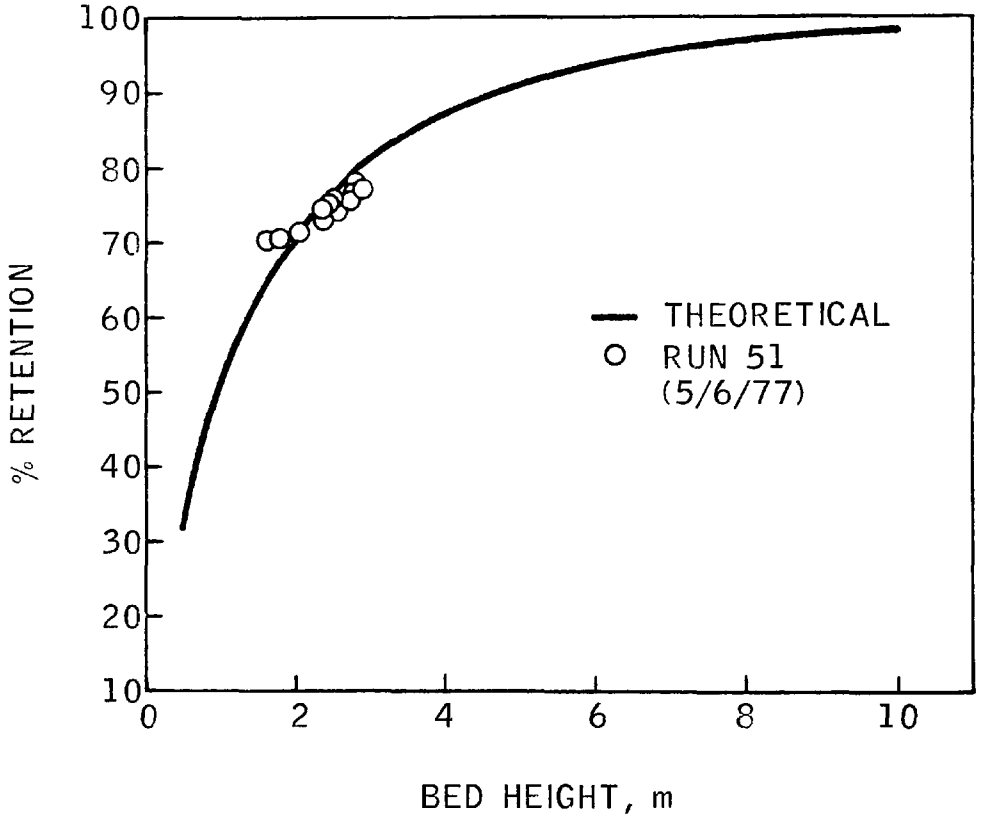

The above diagram is a representation of a fluid bed combustor (FBC). The sulfur enters in the coal and the $CaCO_3$ enters as a solid. Assume that the sulfur in the coal as instantly converted to SO_2 and the sorbent is instantly calcined.

S_i = rate of sulfur input, mols/s
= rate of SO_2 input

Ca_i = rate of Ca input, mols/s
= rate of CaO input, mols/s

x = fraction of sulfur retained

S_o = rate of sulfur out, mols/s
= rate of SO_2 out, mols/s

Ca_o = rate of CaO out, mols/s

CaS_o = rate of $CaSO_4$ out, mols/s

The SO_2 leaves as a gas and the CaO and $CaSO_4$ leave in various solid streams.

The assumption is made that the solids are completely mixed and the SO_2 moves through the reactor in plug flow.

Now by definition,

$$\frac{CaS_o}{S_i} = x \tag{11}$$

A material balance and (11) give

$$Ca_i - Ca_o = CaS_o = x\, S_i \tag{12}$$

On rearranging (12), one obtains

$$Ca_o = Ca_i - xS_i \tag{13}$$

Factoring S_i out of (13) gives

$$Ca_o = S_i\left(\frac{Ca_i}{S_i} - x\right) \tag{14}$$

Now by definition, Ca_i/S_i = Ca/S molar ratio in the feed. On denoting this by a,

$$Ca_o = S_i\,(a-x) \tag{15}$$

The initial concentration of SO_2 is S_i/AFR, where AFR is the air flow rate in m^3/sec. The concentration of CaO, [Ca] is obtained by dividing (15) by the air flow rate, AFR. (This may be visualized by assuming all CaO is taken overhead in the gas stream.) Equation (15) then becomes

$$[Ca] = Ca_o/AFR = \frac{S_i}{AFR}(a-x) \tag{16}$$

Now S_i/AFR is the initial concentration of SO_2 in the gas stream. If this concentration, in $mols/m^3$, is denoted by b, Equation 6 becomes

$$[Ca] = b(a-x) \tag{17}$$

If the reasonable assumption is made that the rate of disappearance of SO_2 is proportional to the sulfur dioxide and calcium oxide concentrations, one obtains

$$\frac{[dS]}{d\tau} = -k[S][Ca] \tag{18}$$

When (17) is substituted into (18), there results

$$\frac{[dS]}{d\tau} = -k[S]b(a-x) \tag{19}$$

Now [S] at the time of exit, τ, is given by

$$[S]_\tau = \frac{S_o}{AFR} \tag{20}$$

The value of S_o is

$$S_o = S_i - CaS_o \tag{21}$$

From (10), (21) becomes

$$S_o = S_i - S_i x = S_i(1-x) \tag{22}$$

When (22) is substituted into (20), there results

$$[S]_\tau = \frac{S_i}{AFR}(1-x) = b(1-x) \tag{23}$$

On substitution of [S] into (19), one obtains

$$\frac{d[S]_\tau}{d\tau} = \frac{bd(1-x)}{d\tau} = -kb^2(1-x)(a-x) \tag{24}$$

or, on dividing by b,

$$\frac{d(1-x)}{d\tau} = -kb(1-x)(a-x) \tag{25}$$

If one lets 1-x = y, (25) becomes

$$\frac{dy}{d\tau} = -kb(y)(a-1+y) \tag{26}$$

This can be integrated directly to give

$$\frac{1}{b(a-1)} \ln\frac{a-1+y}{y} = k\tau + C \tag{27}$$

Substituting 1-x = y into (27) gives

$$\frac{1}{b(a-1)} \ln\frac{a-x}{1-x} = k\tau + C \tag{28}$$

at τ = o, x = o and

$$C = \frac{1}{b(a-1)} \ln a \tag{29}$$

Substitution of (29) into (28) and rearranging gives

$$\frac{1}{b(a-1)} \ln \frac{a-x}{a(1-x)} = k\tau \tag{30}$$

Now b, the initial concentration of SO_2, is given by

$$b = \frac{(S)(R)}{11.52 \times 10^6 \ (V)(A)} \tag{31}$$

Where (S) = % sulfur in the coal

R = coal feed rate, kg/hr

V = superficial velocity of gas, m/s

A = combustor cross section, m^2

11.52×10^6 = conversion factor

When (31) is substituted into (30), one obtains

$$f = \frac{11.52 \times 10^6 \ (V)(A)}{(S)(R)(a-1)} \ \ln\frac{a-x}{a(1-x)} = k\,\frac{H}{V} \qquad (32)$$

Where H = bed height ($H/V = \tau$)

The units of k are m^3/mol-s. The parameters in (32) are those commonly used in FBC work.

TABLE B-2. CALCULATED VS MEASURED SO_2 RETENTION USING SECOND ORDER EQUATION

Exxon Data

Coal % S = 1.96

Run	Coal Feed Rate (kg/hr)	Superficial Velocity (m/s)	Ca/S	Expanded Bed Height (m)	% SO_2 Retention Calc.	% SO_2 Retention Meas.
27.1	135	2.01	0.5	4	42	55
27.2	139	2.15	0.5	4	43	57
27.3	133	1.98	0.5	3	40	
27.5	122	1.72	2.5	6	100	
27.6	123	1.72	0.8	5	72	80
27.7	132	1.72	1.5	6	99	97.2
27.8	134	1.83	1.5	7	99	98
27.9	142	2.09	1.5	5	95	98.5
27.10	135	1.87	0.75	5	67	72
27.11	149	2.23	0.75	7	68	70
27.12	133	1.94	0.75	7	70	71
27.13	134	2.02	0.35	6	34	46
27.14	137	2.04	0.75	6	68	64
27.15	136	1.88	1.0	5	82	71
27.17	136	1.97	0.72	6	66	72
27.18	143	2.09	1.0	7	85	84
27.19	137	2.08	1.5	7	98	90
35	80	1.54	0.75	4.4	63	62
37	110	2.96	0.75	4	20	46
38.1	90	2.08	0.75	2.9	31	40
38.2	90	2.09	0.75	3.6	41	45
43.2	88	1.81	0.75	5.7	73	60
43.3	93	1.77	0.75	3.1	68	63
43.4	96	1.69	1.25	3.6	96	96
43.5	95	1.71	0.5	3.7	49	44
48	90.9	1.46	1.4	3.4	91	58
50.1	74.5	1.19	1.25	3.0	--	--
51	78.5	1.52	1.4	2.4	75	75

TABLE B-2 (Continued). CALCULATED VS MEASURED SO_2 RETENTION USING SECOND ORDER EQUATION

ANL Data

A = 0.01825 m^2
Coal % S = 2.82

Run	Superficial Velocity (m/s)	Coal Feed Rate (kg/hr)	Expanded Bed Height (m)	Ca/S	% SO_2 Retention Calc.	% SO_2 Retention Meas.
1	0.64	8.42	0.915	2.9	100	95
2	1.46	23.43	0.915	2.9	92	94
3	0.64	7.63	0.915	1.1	70	82
4	0.701	7.75	0.915	1.9	89	94
5	1.037	13.79	0.915	1.0	50	69
6	1.098	13.75	0.915	2.0	79	92
6R	1.098	13.21	0.915	2.1	82	90
62R	1.067	13.66	0.915	2.0	82	90
7	1.280	19.07	0.915	2.2	84	89
8	1.098	12.73	0.915	3.2	94	94
9	1.494	18.12	0.915	1.0	20	62

NCB Data

A = 0.558 m^2
Coal % S = 2.97

6/1A	0.762	260	2.44	1.0	84	73
6/1B	0.762	259	2.44	1.7	99	95
6/2A	0.762	150	2.44	1.55	92	90
6/2B	0.762	144	2.44	1.3	84	87
1	0.70	254.5	1.34	1.95	92	97
2	0.76	272.7	1.40	2.18	94	99
3.1	0.70	245	1.34	1.40	88	84
3.2	0.70	262	1.43	1.70	93	98

APPENDIX C

ERROR ANALYSIS

An analysis was made of the expected error in the value of the calculated Ca/S molar feed ratio used to correlate desulfurization results. The Ca/S ratio is calculated from two measured quantities, the SO_2 retention and the degree of calcium sulfation (or utilization) in the used sorbent. The error in each of the measured quantities was first estimated and used to determine the error in the Ca/S ratio.

The SO_2 retention is calculated from the following expression

$$SO_2 \text{ Retention} = 1 - \frac{\text{Air rate} \times (\%\ SO_2 + SO_3 \text{ in flue gas})}{\text{coal rate} \times (\%\ S \text{ in coal})}$$

The calcium sulfation level is given by

$$\text{Ca Sulfation} = \frac{FA\left(\frac{\text{moles } SO_4}{\text{moles Ca}}\right)_{FA} + US\left(\frac{\text{moles } SO_4}{\text{moles Ca}}\right)_{US}}{FA + US}$$

Where: FA = Fly ash generation rate

US = Used sorbent generation rate

and the subscripts denote the SO_4/Ca ratio in the fly ash and used sorbent.

The errors in the SO_2 retention and Ca sulfation were estimated using standard propagation of error calculation methods (16). The errors were estimated based on the following estimated uncertainities in each of the individual measured quantities used to calculate the SO_2 retention and Ca sulfation.

Measured Quantity	Uncertainty
Air rate	1 %
SO_2 emission	10 ppm
Coal rate	2 %
SO_3 emission	10 ppm
S in coal	5 %
Fly ash rate	8.5 %
Used sorbent rate	8 %
$SO_4^=$ in fly ash	6 %
Ca in fly ash	6 %
$SO_4^=$ in used sorbent	6 %
Ca in used sorbent	6 %

Applying these uncertainties to run 50.2 gave an estimated error in the SO_2 retention of 3.3% at a retention level of 88%. The error in the calcium sulfation was estimated as 13.4% at a sulfation level of 52%. These uncertainties generated an error in the calculated Ca/S ratio of 14% at a Ca/S ratio of 1.63.

APPENDIX D

DATA MANAGEMENT SYSTEMS

A run in the miniplant combustor usually spans a time period of about ten hours. During this period the conditions in the combustor approach steady state values resulting in three to four hour data generating periods characteristic of the chosen set of input variables. In runs were the regenerator is included in the system, the approach to steady state conditions is much slower, due not only to the presence of the regenerator vessel, but also the deactivation of the recycled sorbent. The large quantity of data generated during these extended runs requires a systematic method of data management. It is the purpose of this section to describe systems now being used to collect, compute, and summarize the data generated in the miniplant.

DATA GENERATION

Run 51 will be used as an example of the data that are generated during a typical run in the miniplant. In this run, only the miniplant combustor was operated. The regenerator and the granular bed filter systems were not used. The primary objective of this run, which spanned a time period of 7-1/2 hours, was to measure combustion efficiency and particulate loading in the flue gas when operating without recycle of material from the first stage cyclone back into the combustor.

During the run, operational parameters and some of the desired output results were continuously recorded by the data logging system at one minute intervals. Of the 100 channels of information available on the data logger, 70 channels were in use. The remaining channels were connected to instruments used only during a regeneration run. As a back up, in case of a failure in the data logger system, most of these parameters and output data were continuously recorded on multi-point strip-chart recorders. The data logger output, 70 channels of information for the 7-1/2 hours duration of the run, resulted in 315,000 pieces of experimental data from this source alone.

Eight discharges from the second cyclone lock hopper, and six discharges from the bed solids lock hoppers were made during the run. These 12 discharges provided a measure of the rates of fly ash generation and bed solids which are needed in determining a mass balance around the unit. Four of the second cyclone discharges and two of the bed solids samples were later selected as representative of the steady state conditions achieved and submitted for detailed chemical and particle size analysis. During the run, seven samples of the combustor bed composition were taken using the bed sampling probe and submitted for chemical and particle size analyses. Two measurements of particulate concentration in the off gas from the second stage cyclone were made during the run and the particulate catch submitted for chemical and particle size analyses. The initial and final combustor bed was also submitted for chemical analysis. These 15 solid samples, selected as representative of the steady state operating conditions, were each analyzed for six chemical components and the particle size distribution in 12 size

fractions was determined. The particulate distribution in the off gas from the second cyclone was determined in an additional 12 smaller size fractions. Two wet chemistry measurements for SO_2 and SO_3 were also made to check the analytical instruments.

A total of 106 individual analysis, 204 particulate size fraction determinations, and 14 solid generation rates were obtained for Run No. 51, a short duration run with only the combustor operational. These determinations do not include any replicate chemical analysis which frequently are required to resolve uncertainties in the analysis.

DATA NEEDS

This quantity of generated data is used in several ways to meet the data needs of the program. The first need is a rapid (soon after the run) method to select that specific time interval within the run in which steady state conditions were achieved. This selection needs to consider all of the data collected by the data logger system to determine when operating conditions (bed temperatures, coal feed rates, etc) and output variables (SO_2 and NO_x emissions, excess oxygen levels, etc.) have reached steady values. Once this time period has been selected, a determination can be made as to which solid samples need to be submitted for chemical and particle size analysis.

The second need is experienced when an operational problem which forces an abrupt shutdown of the unit occurs during the run or when the value of the output variables is not that expected from past experience. In these instances the problem is to access and digest the necessary data over the time interval desired when the information is part of a set of several hundred thousand data points on the data logger tape.

A third need is to enable a comprehensive data analysis of a run. Of the 70 points recorded by the data logger each minute during a run using only the combustor, about 40 points determine the value of output variables necessary for an analysis of the run. The other 30 points are operational variables used to determine what went wrong when problems develop or to provide internal checks on the functioning of the data recording system. The average value of these 40 output variables over the steady state period represent one set of inputs to the data analysis. Of course, in determining the average value of each variable, checks on the functioning of the recording system must be made to determine if the value of the variable at a given time should, or should not be included in the average. The specification of the chemical composition of the coal and sorbent used in the run and the average generation rates, chemical analysis and particulate size distributions of the various output solid streams complete the data input needed for the data analysis. Based on this information, some 30 output parameters need to be calculated to provide a complete description of the output variables for the input variables selected for the run. A mass balance for the major chemical elements (C, S, Ca and Mg) and for the solid inorganics around the various input and output streams is also desirable.

The fourth need is to search selectively all or several runs in order to provide run summaries or to determine the relationships between output and input variables. In this context it is desirable to be able to place the recovered data into files which can be subsequently operated on by statistical or graphical routines.

DATA MANAGEMENT SYSTEMS

In order to handle the data generated and to satisfy the data needs of the program, several computer oriented data handling programs have been developed to supplement the manual recording and storage of the data. Certain of these programs provide a capability to input data directly from the data logging system while also permitting an operator later to enter analytical and particulate size distribution data into the computer storage files. Other programs provide the capability to access the information as needed.

Three major computer systems have been developed to meet the needs of this program. They are described in the sections that follow under their call names of Hoke, NCSS and I/O.

Hoke System

The data logging system consists of a Digitrend data logger electronically interfaced with a Kennedy magnetic tape recorder. The Hoke computer program consists of a subprogram to convert the instrument outputs recorded by the data logger to physical quantities such as temperatures, flow rates, pressures, concentrations, etc. These values are subsequently used in another subprogram to calculate derived quantities such as superficial velocity, expanded bed height, excess air, etc. The data are then averaged over preselected time intervals (usually 10 minutes) tabulated, and printed. If necessary, a complete data printout of an operation can be obtained within two hours following the completion of the run.

Figure D-1 is an example of the tabular form of data printout received from a run. This printout is then used in conjunction with the continuous recorder charts to determine the steady state period. When a steady state period has been determined, the magnetic tape is rerun using the Hoke steady state program (HOKSS). This program averages selected values over the indicated steady state period. Another feature of the HOKSS program is that it will delete any value which does not fall into a fixed number of standard deviations of the average values. Faulty values may result from failure of a measuring device, recording device, or a momentary upset in the system. Consequently this value is not representative of steady state and should not be included in the average. Finally, the average values from the HOKSS program are inserted into the Input/Output System for record keeping as well as further calculations. The Input/Output system will be discussed later in the text.

NCSS System

The NCSS System consists of programs to convert the instrument outputs recorded by the data logger to physical quantities and programs to search the physical quantities selectively for a given run or series of runs. Further data reduction to calculate derived quantities from the measured parameters, e.g., superficial velocity calculated from flow rate, temperature and pressure, is also provided. In addition, the system includes auxiliary informational and diagnostic programs. This section discusses the NCSS System.

FIGURE D-1

MINIPLANT ANALYSIS PROGRAM

1 TIME
2 SUPERFICIAL GAS VELOCITY - FTPS
3 COMBUSTOR AIR FLOW - SCFM
4 CA/S MOLAR FEED RATIO
5 COAL FEED RATE - LB/HR
6 TEMPERATURE GRADIENT- DEG F/FT.
7 DELTA P (PT. 15)
8 EXPANDED BED HEIGHT - IN.
9 AVE. COMB. TEMP - DEG F
10 LOWER COMB. TEMP - DEG F
11 PERCENT EXCESS AIR FROM FLUE GAS COMP.
12 PERCENT EXCESS AIR FROM AIR/FUEL
13 COMBUSTOR PRESSURE-ATM.

RUN	1	2	3	4	5	6	7	8	9	10	11	12	13
64.0	10 20	4.6	528.9	0.00	197.2	6.8	102.2	158.0	1712.7	1719.1	30.3	6.8	8.4
64.0	10 30	4.6	526.6	0.00	212.5	7.1	90.7	142.7	1711.8	1719.7	30.6	1.3	8.4
64.0	10 40	4.6	531.8	0.00	213.3	5.6	91.7	141.5	1721.6	1727.0	26.3	0.6	8.4
64.0	10 50	4.6	536.6	0.00	212.5	5.0	103.9	156.1	1713.6	1718.3	31.1	0.5	8.5
64.0	11 0	4.7	538.1	0.00	199.2	5.0	114.4	162.0	1712.1	1716.9	29.5	7.5	8.4
64.0	11 10	4.7	538.5	0.00	199.2	5.0	126.5	180.1	1709.3	1714.9	28.4	7.6	8.4
64.0	11 20	4.7	538.4	0.00	209.6	5.8	137.6	189.2	1710.4	1717.4	26.9	2.3	8.4
64.0	11 30	4.6	532.9	0.00	204.4	6.4	202.2	279.5	1704.1	1713.0	27.5	3.8	8.4
64.0	11 40	4.7	534.4	0.00	195.5	5.1	212.8	305.1	1708.2	1714.6	23.1	8.8	8.3
64.0	11 50	4.8	538.3	0.00	202.2	4.9	263.8	368.5	1704.3	1710.0	27.3	6.0	8.2
64.0	12 0	4.8	536.7	0.00	205.1	4.7	275.0	367.0	1708.8	1713.3	25.6	4.2	8.1

Data Conversion Programs--

The information on the data logger tape is converted to a form that is readable by the IBM 370 System and this tape (the "1130 tape") is processed onto the master tape by a program package called PR1130. The PR1130 program package mounts the "1130 tape," calls a short Fortran program to mount the master tape, specifies the auxiliary files to be used, species the Fortran programs to be loaded, converts the instrument readings to physical quantities, calculates derived quantities, and stores the quantities on the master tape. There are also a number of auxiliary files used in creating the master tape, including:

- library of runs on master tape
- names of variables recorded on master tape
- cross-reference between variable names and data logger position
- library of calibration factors and thermocouples used in temperature averages

The main program in the PR1130 package calls subroutines to create the master tape and to establish the cross-reference file between the variables and the data logger positions. The user can ask to see the existing cross-reference file, use an old file, create a new file or edit an old file. After the cross-reference file is established, the user can specify any changes in the calibration factors or thermocouples used in the temperature averages. These factors are used by subroutines which reduce the data from the data logger tape into physical quantities, such as, temperatures, flow rates, pressures, etc., and also calculate derived quantities, such as, superficial velocity and residence time. These quantities are then written onto the master tape.

Data Searching Programs--

The primary search tool is a program package which allows the user to:

- examine the list of available runs
- select a run to be search
- select the number of minutes to be averaged
- choose whether standard deviations are to be calculated
- select the portion of the run to be search
- check the millivolt standard for each minute and discard data for minutes during which the millivolt standard is outside the allowable range
- examine the list of variable choices
- select the variables to be searched

One of the variables selected can be a "key variable." When an upper bound and lower bound are set for a key variable and that variable is outside the given range, not only will the value for that variable be discarded but all the values for all variables during that minute of data will be discarded. Even though the user may select only one key variable, in effect he has

three key variables at his disposal since both the time and the standard millivolt checks also function as key variables. A preselected series of variables, including limits, can be requested by using a single "calling number" through the use of macro files. When one of these calling numbers is used, a subroutine inserts the preselected list into the search specifications. More than one macro at a time can be requested if desired.

After the search specifications are established, the program: finds the correct position on the tape to start the search, locates the variables according to the search specifications, calculates the averages and standard deviations, and prints the data. The data can be printed at the console, at a local printer, or at a remote printer, as requested by the user. As an illustration of the type of output available from the data searching programs, a selection of eight recorded and calculated quantities from a 15 minute average of data from Run No. 37 is shown, with standard deviations, in Figure D-2. The data can also be filed for statistical analysis. If it is, the program writes the data into a data file specified by the user and tells the user how many observations are filed for how many variables and also which variables are filed.

Input-Output Programs

ARG1 Series of Programs--

The ARG1 Series of programs are intended to create and support a data bank established for the storage, calculation, and retrieval of selected miniplant operating data. The program are written in a conversational mode.

The program ARG1 "drives" the subroutines which file and edit the input information, and which calculate and print selected input and calculated parameters.

The subroutine ARG1C creates the data bank. This subroutine reads the file which contains the properties of the coal and sorbent used in the run and reads the data logger tape data for the run generated by the program HOKSS, described earlier. A singular case of the ARG1C subroutine is the creation of a list of matrix addresses (known as "the road map") for the variables. The road map is used to edit existing data banks as additional information becomes available.

The data bank consists of an unformatted file (ARGF1) of 52 records with a capacity of 1000 words in each record. The data from a miniplant run is assigned to an individual record in the file. Each record contains 228 alphameric variables and 900 numeric variables. Provisions are available in the data bank for including data related to operation of the regenerator and the granular bed filter, in addition to combustor operation data.

The subroutine ARG1E edits an existing data bank. Additional alphameric and numerics may be added to the data bank as they become available. Typical examples are chemical and physical properties of the combustor and regenerator beds, and additional coal and sorbent data. Erroneous or obsolete information may be replaced with new information using this subroutine. A desk console is used to add this information to the data file.

Figure D-2. CSS -- MINIPLANT ANALYSIS PROGRAMS -- FBCPRT

RUN NO. 37, PFIZER DOLOMITE, CHAMPION COAL, HIGH VELOCITY
4/7/76

1 CONSTANT MILLIVOLT STANDARD SOURCE (40 MV)
2 SOLIDS FLOW RATE (KG/HR)
3 RATIO LIMESTONE/COAL (KG/KG)
4 COMBUSTOR COAL FEED RATE (KG/HR)
5 COMBUSTOR CA/S MOLAR FEED RATIO
6 CALCULATED SULFATION LEVEL
7 SO2 EMISSION INDEX (LB/MBTU)
8 COMBUSTOR NO2 EMISSION INDEX (LB/MBTU)

TIME	1	2	3	4	5	6	7	8
18 7	40.045	141.490	0.097	128.972	0.804	0.657	1.483	0.303
	(0.104)	(8.961)	(0.000)	(8.170)	(0.000)	(0.069)	(0.175)	(0.019)
18 22	40.049	128.349	0.097	116.993	0.804	0.708	1.354	0.332
	(0.102)	(9.521)	(0.000)	(8.682)	(0.000)	(0.061)	(0.154)	(0.025)
18 37	40.047	131.485	0.097	119.849	0.805	0.663	1.467	0.318
	(0.103)	(6.704)	(0.000)	(6.111)	(0.000)	(0.046)	(0.116)	(0.015)
18 52	40.048	134.397	0.097	122.505	0.804	0.811	1.093	0.312
	(0.102)	(8.059)	(0.000)	(7.344)	(0.000)	(0.054)	(0.137)	(0.018)
19 7	40.045	126.333	0.097	115.158	0.804	0.761	1.220	0.324
	(0.104)	(5.791)	(0.000)	(5.280)	(0.000)	(0.074)	(0.187)	(0.016)
19 22	40.040	132.157	0.097	120.469	0.804	0.710	1.594	0.298
	(0.106)	(5.027)	(0.000)	(4.580)	(0.000)	(0.374)	(0.078)	(0.012)
19 37	40.034	133.277	0.097	121.483	0.804	0.734	1.288	0.295
	(0.025)	(4.595)	(0.000)	(4.186)	(0.000)	(0.038)	(0.095)	(0.009)
19 52	40.037	127.229	0.097	115.969	0.805	0.650	1.501	0.309
	(0.100)	(5.939)	(0.000)	(5.415)	(0.000)	(0.064)	(0.163)	(0.014)

The subroutine ARG1D is used to compute calculated values of operating parameters. Calculations are performed for some 30 output variables required to characterize a given run, i.e., superficial velocity, excess air, Ca/S feed ratio, coal feed rate, etc. A calculation of a mass accountability for carbon, sulfur, calcium, magnesium and solid inorganics over each of the input and output streams and a mass balance for these components is also performed.

The subroutine ARG1P prints the contents of the data bank. The user has many print options available to him depending upon his needs, and the amount of information available. The printing format has been selected such that missing data is printed as a series of asterisks. An "XXXXXX" rotation is used for those parameters (such as the sulfur content of the combustion air) that are not obtained. These conventions distinguish between those parameters which are necessary and those which are never obtained. Data may be printed on a DS-40 terminal or on the IBM-1403 terminal.

As an example of the use of the ARG1 series of programs, a segment of the computer print out obtained using the ARG1P subroutine is shown in Figures D-3 to D-5. The first three figures are examples of experimental data inputs to the file and the last two figures are calculated outputs. Figure D-3 shows the average values of the operational parameters for Run No. 50 and is illustrative of the data logger input to the data file provided through the HOKSS program. The values of the output variables required to characterize Run No. 50, as calculated by subroutine ARG1D, is shown in Figure D-4, while the mass accountability and mass balance for the same run is shown in Figure D-5.

Ancillary Programs--

The program ARGZ is used to retrieve data selected by the user from the data file for subsequent statistical analysis or for out-filing the data in an unformatted data file for other uses.

The program ARG4 is used to summarize mass balances for selected miniplant runs that have been previously filed in the data bank. The program's output is presented in tabular form suitable for inclusion in finished reports. An option to summarize the mass balances for all miniplant runs to date is also provided. This option is becoming more valuable as the number of miniplant runs on file in the data bank increases.

The program ARG5 is used to summarize preselected parameters for selected, or all, miniplant runs filed to date in a tabular form suitable for inclusion in finished reports. The preselected parameters cover operating conditions, flue gas emissions and overall performance. An illustrative example is shown in Figure D-6.

FIGURE D-3

EXXON MINIPLANT RUN NUMBER 30.200

DESCRIPTION: COMPREHENSIVE ANALYSIS RUN W/BATTELLE

RUN DATE MONTH 3. DAY 30. YEAR 77.
START TIME 611. HOURS DURATION 11.60 HOURS
PERIOD FOR THIS SUMMARY 1231. TO 1751. DAY 30.
NUMBER OF COOLING COILS IN COMBUSTOR= ***

COAL: FILE NO. ***** TYPE EASTERN MINE CHAMPION
PARTICLE SIZE: PLUS ***** MESH,MINUS ***** MESH

SORBENT: FILE NO. ***** TYPE DOLOMITE SOURCE PFIZER BCR NO.1337.
PARTICLE SIZE: PLUS ***** MESH,MINUS ***** MESH

COAL ANALYSIS

MOISTURE	1.67	WPCT
ASH	13.10	WPCT
TOTAL CARBON	74.00	WPCT
HYDROGEN	5.00	WPCT
SULFUR	1.85	WPCT
NITROGEN	1.50	WPCT
CHLORINE	********	WPCT
OXYGEN	2.40	WPCT
HEATING VALUE	12973.	BTU/LB
CALCIUM	********	PPM
MAGNESIUM	********	PPM
POTASSIUM	********	PPM
SODIUM	********	PPM

SORBENT ANALYSIS (CALCINED)

CAO	54.00	WPCT
MGO	44.00	WPCT
SIO2	0.90	WPCT
AL2O3	.20	WPCT
FE2O3	0.30	WPCT
POTASSIUM	********	PPM
SODIUM	********	PPM

FIGURE D-4

MASS BALANCES (WPCT)

RUN NUMBER	48.00	50.11	5 .12	50.20	50.30	50.40	50.50	51.00
TOTAL MASS	99.93	100.32	99.90	99.81	99.14	99.55	99.73	99.71
SULFUR	94.75	52.83	131.71	106.24	58.42	81.16	88.10	79.37
CARBON	104.59	109.45	104.62	87.90	89.60	93.83	93.32	137.51
CALCIUM	108.78	15.42	149.63	104.65	57.73	81.66	98.51	63.99
REACTIVE OXYGEN	100.71	102.21	102.96	92.10	97.65	98.27	99.35	105.12
MAGNESIUM	90.19	10.63	9 .66	84.31	54.36	70.94	79.69	50.68
BBB	******	******	******	******	******	******	******	******
SOLID INORGANICS	101.66	163.93	96.54	101.96	72.52	97.32	104.30	94.20

FIGURE D-5

MINIPLANT FLUIDIZED BED COAL COMBUSTION RUN SUMMARY

RUN NUMBER	48.00	50.11	5 .12	50.20	50.30	50.40	50.50	51.00
OPERATING CONDITIONS:								
RUN LENGTH(HRS)	8.25	9.50	12.00	11.60	15.00	12.50	18.00	8.25
PRESSURE(KPA)	932.	916.	919.	901.	901.	900.	900.	930.
LOWER BED TEMP(CELSIUS)	904.	901.	895.	814.	900.	902.	905.	876.
AVERAGE BED TEMP(CELSIUS)	874.	891.	888.	803.	886.	889.	896.	876.
SUPERFICIAL VELOCITY(M/SEC)	1.47	1.18	1.21	1.22	1.32	1.33	1.34	1.65
SETTLED BED HEIGHT(M)								
INITIAL	1.52	1.58	******	******	******	******	******	1.93
FINAL	2.16	******	******	******	******	******	2.16	******
EXPANDED BED HEIGHT(M)	3.37	3.02	3.93	3.19	3.22	3.31	3.29	2.30
COAL FEED RATE(KG/HR)	90.96	74.30	74.54	70.86	82.94	83.43	86.20	78.78
CA/S MOLAR FEED RATE-SET	1.39	1.34	1.34	1.34	1.34	1.49	1.49	1.69
CA/S MOLAR FEED RATE-CALC	0.91	******	1.29	1.63	1.48	1.66	1.45	1.31
EXCESS AIR(VPCT)	39.17	34.59	35.91	55.05	40.87	39.01	34.90	44.76
SORBENT	DOLO	DOLO	DOLO	DOLO	DOLO	DOLO	DOLO	DOLO
COAL	EAST	EAST	EAST	EAST	EAST	EAST	EAST	EAST
FLUE GAS EMISSIONS:								
SO2(PPM)	510.	373.	355.	151.	62.	41.	29.	253.
NOX(PPM)	92.	97.	104.	138.	129.	127.	119.	143.
CO(PPM)	114.	95.	98.	131.	90.	55.	53.	125.
CO2(VPCT)	13.29	13.84	13.75	9.82	12.06	12.50	13.10	13.30
O2(VPCT)	5.98	5.48	5.64	7.55	6.18	5.93	5.51	6.53
RESULTS:								
RETENTION(WPCT)	55.78	68.10	70.23	85.63	93.46	95.81	97.02	69.42
SULFATION(WPCT)	61.45	******	54.93	52.58	63.03	57.83	66.89	52.91
SO2(LBS/MBTU)	1.13	0.91	0.32	0.41	0.14	0.09	0.06	.74
NOX(LBS/MBTU)	0.10	0.12	.12	0.19	0.15	0.14	0.13	0.21
COMBUSTION EFFICIENCY	99.25	99.33	99.15	98.93	99.89	99.42	99.86	98.19

FIGURE D-6

SUMMARY OF SELECTED PARAMETERS.

RUN NUMBER		48.00	50.11	50.12	50.20	50.30
PARAMETERS						
COMB EFF (PCT)	694	99.25	99.33	99.15	98.93	99.89
NOX (PPM)	440	107.65	113.60	115.40	180.09	141.35
CO (PPM)	441	133.39	111.50	108.58	171.68	98.60
SO2 (LB/MBTU)	444	1.13	0.91	0.82	0.41	0.14
NOX (LB/MBTU)	445	0.10	0.12	0.12	0.19	0.15
SULF REM EFF (PCT)	447	55.78	68.10	70.23	85.63	93.46
COAL FEED (KG/HR)	464	90.86	74.30	74.54	70.86	82.94
SORBENT FEED (KG/HR)	696	15.36	11.38	11.42	10.86	12.71

RUN NUMBER		50.40	50.50	51.00
PARAMETERS				
COMB EFF (PCT)	694	99.42	99.86	98.19
NOX (PPM)	440	141.15	126.27	210.26
CO (PPM)	441	60.72	55.82	183.80
SO2 (LB/MBTU)	444	0.09	0.06	0.74
NOX (LB/MBTU)	445	0.14	0.13	0.21
SULF REM EFF (PCT)	447	95.81	97.02	69.42
COAL FEED (KG/HR)	464	83.48	86.20	78.78
SORBENT FEED (KG/HR)	696	12.80	13.21	13.71

The program ARG6 is used to summarize selected parameters from selected, or all, miniplant runs whose data has been filed in the data bank. The results are presented in tabular form, suitable for inclusion in finished reports. Unlike the two preceding programs, the user may select the parameters that he wishes to review. The program also permits the identification of these parameters (by the user) with a 20 character description.

APPENDIX E

ANALYTICAL TECHNIQUES

Analysis of Solids

Solids from combustion runs were analyzed for SO_4^{-2}, CO_3^{-2}, Ca^{+2}, Mg^{+2}, Na^{+}, carbon and total sulfur. The analytical techniques that were used are described below.

SO_4^{-2}	-	The sample was treated with acidic $BaCl_2$ solution. The $BaSO_4$ precipitate was weighed.
CO_3^{-2}	-	HCl was added to an acidified sample. The solution was stripped with N_2 and the gas passed through drierite, $CuSO_4$ and ascarite. CO_3^{-2} was determined from the weight gain of the ascarite.
Ca^{+2} Mg^{+2} Na^{+}	-	The sample was digested by heating vigorously in a medium of perchloric acid/nitric acid. The determination of Ca, Mg and Na was made by atomic absorption.
Total Sulfur	-	(Dietert Sulfur Method) - The sample is combusted in an oxygen atmosphere at 1250°C. The SO_2-SO_3 products in the effluent gas were analyzed by an automatic Leco titrator.
Total Carbon	-	(Carbon on Catalyst Method) - The sample is combusted in an oxygen atmosphere at 1200°C. The CO_2 evolved was determined from the weight gain of ascarite.

Analysis of Flue Gas by Wet Chemical Methods

SO_3	-	The amount absorbed by an 80% isopropanol solution was determined titrimetrically using 0.01N barium perchlorate as the titrant and thorin as the indicator.
SO_2	-	The amount absorbed by a 3% hydrogen peroxide solution was determined titrimetrically using 0.01N sodium hydroxide as the titrant and methyl orange as the indicator.

APPENDIX F

DATA LOGGER CHANNEL IDENTIFICATION

Pt. No.	Loop No.	Identification
01	1-0	Constant Millivolt Std. Signal (40 MV)
02	21	Coal, Weight in Primary Injector
03	12	Combustor, Water Flow Rate - Coil #1A
04	13	Combustor, Water Flow Rate - Coil #1B
05	14	Combustor, Water Flow Rate - Coil #2A
06	15	Combustor, Water Flow Rate - Coil #2B
07	16	Combustor, Water Flow Rate - Coil #3A
08	18	Combustor, Water Flow Rate - Coil #3B
09	1-9	Batch Unit, Analyzer, NO_x (10,000 ppm)
10	1-10	Batch Unit, Analyzer, SO_2 (10,000 ppm)
11	10	Combustor, Flow Rate - Main Air
12	11	Combustor, Pressure
13	36	Combustor, ΔP - Coal Feed Vessel
14	34	Combustor, ΔP - Fluidizing Grid
15	35	Combustor, ΔP - Bed (Port 4 to 31)
16	40	Combustor, ΔP - Bed (Port 4 to 11)
17	44	Combustor, Water Flow Rate - Heat Transfer Loop
18	32	Spare
19	22	Regenerator, Flow Rate - Burner Air
20	23	Regenerator, Flow Rate - Burner Fuel
21	24	Regenerator, Flow Rate - Supplemental Air
22	25	Regenerator, Flow Rate - Supplemental Fuel
23	26	Regenerator, Pressure (or ΔP to Combustor)
24	29	Regenerator, ΔP - Fluidizing Grid
25	29	Regenerator, ΔP - Bed (Port 29 to 34)
26	30	Regenerator, ΔP - Bed (Port 29 to 31)
27	33	Limestone to Coal Weight Ratio
28	20	Main Air Pressure at Measuring Orifice
29	1-29	Run Identification Number
30	1-30	Combustor, Temperature - Burner Grid Metal
31	1-31	Combustor, Temperature - Burner Grid Cooling Water
32	1-32	Combustor, Temperature - Fluidizing Grid Metal
33	1-33	Combustor, Temperature - Fluidizing Grid Cooling Water
34	1-34	Combustor, Temperature - Port #3 (Burner Zone)
35	1-35	Combustor, Temperature - Port #5 (6")
36	1-36	Combustor, Temperature - Port #7 (18")
37	1-37	Combustor, Temperature - Port #8 (27")
38	1-38	Combustor, Temperature - Port #9 (48")
39	1-39	Combustor, Temperature - Port #12 (64")
40	1-40	Combustor, Temperature - Port #13 (85")
41	1-41	Combustor, Temperature - Port #14 (94")
42	1-42	Combustor, Temperature - Port #16 (103")
43	1-43	Combustor, Temperature - Port #20 (140")
44	1-44	Combustor, Temperature - Port #22 (169")
45	1-45	Combustor, Temperature - Port #26 (207")
46	1-46	Combustor, Temperature - Port #28 (252")
47	1-47	Combustor, Temperature - Port #32 (354")
48	1-48	Combustor, Temperature - Coal Injector Line

Pt. No.	Loop No.	Identification
49	1-49	Combustor, Temperature - Cooling Water to Coils
50	1-50	Combustor, Temperature - Cooling Water from #1A
51	1-51	Combustor, Temperature - Cooling Water from #1B
52	1-52	Combustor, Temperature - Cooling Water from #2A
53	1-53	Combustor, Temperature - Cooling Water from #2B
54	1-54	Combustor, Temperature - Cooling Water from #3A
55	1-55	Combustor, Temperature - Cooling Water from #3B
56	1-56	Combustor, Analyzer Range Switch - SO_2
57	1-57	Combustor, Analyzer Range Switch - NO_x
58	1-58	Combustor, Analyzer Range Switch - CO
59	1-59	Combustor, Analyzer Range Switch - O_2
60	1-60	Combustor, Temperature - 1st Cyclone Gas Discharge
61	1-61	Combustor, Temperature - 2nd Cyclone Gas Discharge
62	1-62	Combustor, Temperature - Off-Gas Upstream of Nozzle
63	1-63	Combustor, Temperature - Off-Gas Downstream of Nozzle
64	1-64	Combustor, Temperature - 1st Cyclone Dip Leg
65	1-65	Combustor, Temperature - 2nd Cyclone Dip Leg
66	1-66	Combustor, Temperature - Solids Reject Line (Before Pulse Pot)
67	1-67	Combustor, Temperature - Solids Reject Lock Hopper
68	1-68	Combustor, Temperature - Fly Ash Lock Hopper
69	1-69	Combustor, Temperature - Surface - Lower Deck
70	1-70	Combustor, Temperature - Sullair to Measuring Orifice
71	1-71	Regenerator, Temperature - Port #2
72	1-72	Regenerator, Temperature - Port #3
73	1-73	Regenerator, Temperature - Port #4
74	1-74	Regenerator, Temperature - Port #5
75	1-75	Regenerator, Temperature - Port #6
76	1-76	Regenerator, Temperature - Port #7
77	1-77	Regenerator, Temperature - Port #9
78	1-78	Regenerator, Temperature - Port #10
79	1-79	Regenerator, Temperature - Port #11
80	1-80	Regenerator, Temperature - Port #12
81	1-81	Regenerator, Temperature - Port #13
82	1-82	Regenerator, Temperature - Port #14
83	1-83	Regenerator, Temperature - Port #16
84	1-84	Regenerator, Temperature - Port #18
85	1-85	Regenerator, Temperature - Port #21
86	1-86	Regenerator, Temperature - Port #24
87	1-87	Regenerator, Temperature - Port #26
88	1-88	Regenerator, Temperature - Cyclone Gas Discharge
89	1-89	Regenerator, Temperature - Off-Gas from Cooler
90	1-90	Combustor, Analyzer - SO_2 (3,000 ppm)
91	1-91	Combustor, Analyzer - NO_x (10,000 ppm)
92	1-92	Combustor, Analyzer - O_2 (25%)
93	1-93	Combustor, Analyzer - CO_2 (25%)
94	1-94	Combustor, Analyzer - CO (6250 ppm)
95	1-95	Regenerator, Analyzer - SO_2 (15%)
96	1-96	Batch Unit, Analyzer - O_2 (25%)
97	1-97	Batch Unit, Analyzer - CO_2 (25%)
98	1-98	Batch Unit, Analyzer - CO (5000 ppm)

APPENDIX G

FBC MINIPLANT ALARM/SHUTDOWN SYSTEM

Alarm #	System Unit	System Description	Alarm Condition	Sensor/Function	Action: Alarm Only	Action: Time Delay	Action: Shut-Down
1	Comb	Fluidizing Air	Low Flow	Orifice ΔP Cell		15 sec	X
2	Comb	Fluidizing Air	High Flow	Orifice ΔP Cell	✓		
3	Comb	Cooling Coil Water Loop	Low Total Flow	Flow Switch	✓		
4	Comb	Cooling Water to Each Coil (5)	Low Flow	Orifice ΔP Cells		4 min	X
5	Comb	Condenser Cooling Water	Low Flow	Flow Switch	✓		
6	Comb	Coal Injection	Low Flow	Ultrasonic Microphone	✓		
8	Comb	1st Stage Cyclone Dipleg	Low Flow	Thermocouple	✓		
9	Comb	2nd Stage Cyclone Dipleg	Low Flow	Thermocouple	✓		
10		Cooling Tower Water	Low Pressure		✓		
11	Comb	Reactor Vessel	High Pressure	Pressure Cell		0	X
12	Comb	Fluidizing Grid	High ΔP	ΔP Cell	✓		
13	Comb	Fluidized Bed	High ΔP or Low ΔP	ΔP Cell- *TD Before Alarm	✓*		
14	Comb	Coal Injection Vessel	Low ΔP	*Close Coal Block Valve and Valve AV10		0*	
15		Demineralized Cooling Water Reservoir	Low Level	Thermowatch Capacitance Switch	✓		

FBC MINIPLANT ALARM/SHUTDOWN SYSTEM (Continued)

Alarm #	System Unit	System Description	Alarm Condition	Sensor/Function	Action: Alarm Only	Action: Time Delay	Action: Shut-Down
16	Comb	Natural Gas Flame	Flame Out	UV Sensor *Fuel Shutdown			X*
17	Comb	Burner Grid	High Temperature	Thermocouple	✓		
18	Comb	Fluidizing Grid	High Temperature	Thermocouple	✓		
19	Comb	Bed Temperature at 3 Points	High Temperature	Thermocouple	✓		
20	Comb	Bed Temperature	Low Temperature	Thermocouple	✓		
21	Comb	Upper Bed Temperature	High, High Temp.	Thermocouple	✓		
22	Comb	Cooling Water From Each Coil	High Temperature	Thermocouple		4 min	X
23	Comb	Coal Injection Probe	High Temperature	Thermocouple	✓		
24	Comb	Coal Injection Line	High Temperature	Thermocouple *Close Coal Block Valve		0*	
25	Comb	Coal Injection Ready	Low Combustor Temp.	Thermocouple *Close Valve AV10		0*	
26	Comb	Off Gas from Cooler	High Temperature	Thermocouple	✓		
27	Comb	Combustor to Regenerator Transfer Line	Low Temperature	Thermocouple	✓		
28	Comb	Fly Ash Lock Hopper	High Temperature	Thermocouple	✓		
29	Comb	Reactor Shell Surface	High Temperature	Thermocouple	✓		
30	Comb	Coal Injector Vessel	High ΔP	ΔP Cell *Close Valve AV10		0*	

FBC MINIPLANT ALARM/SHUTDOWN SYSTEM (Continued)

Alarm #	System Unit	System Description	Alarm Condition	Sensor/Function	Action: Alarm Only	Action: Time Delay	Action: Shut-Down
33		Main Air Compressor	Low Pressure	Pressure Switch	✓		
34		Aux. Air Compressor	Low Pressure	Pressure Switch	✓		
35		Site Air	Low Pressure	Pressure Switch	✓		
37	Reg.	Burner Air	Low Flow	Orifice ΔP Cell		0	X
38	Reg.	Burner Fuel	High or Low Flow	Orifice ΔP Cell	✓		
39	Reg.	Supplemental Air	High or Low Flow	Orifice ΔP Cell	✓		
40	Reg.	Regenerator/ Reg. to Comb.	High Pressure/ High Pressure Drop	Pressure Cell/ ΔP Cell	✓		
41	Reg.	Burner Air	High Flow	Orifice ΔP Cell	✓		
43		Nitrogen Compressor	Low Pressure	Pressure Switch	✓		
44	Reg.	Reactor	High Pressure	Pressure Cell		0	✓
45	Reg.	Supplemental Fuel	High or Low Flow				
46	Reg.	Fluidizing Grid	High ΔP	ΔP Cell	✓		
47	Reg.	Fluidized Bed	High ΔP or Low ΔP	ΔP Cell *T.D. Before Alarm	✓*		
49	Reg.	Natural Gas Flame	Flame Out	U.V. Sensor		10 sec or 5 min	
50	Reg.	Burner Grid	High Temperature	Thermocouple	✓		

FBC MINIPLANT ALARM/SHUTDOWN SYSTEM (Continued)

Alarm #	System Unit	System Description	Alarm Condition	Sensor/Function	Action: Alarm Only	Action: Time Delay	Action: Shut-Down
51	Reg.	Fluidizing Grid	High Temperature	Thermocouple	✓		
52	Reg.	Bed Temperature At 2 Points	High Temperature	Thermocouple	✓		
53	Reg.	Bed Temperature At 2 Points	High Temperature	Thermocouple	✓		
54	Reg.	Bed Temperature Upper 2 Points	High, High Temp.	Thermocouple	✓		
55	Reg.	Off Gas from Cooler	High Temperature	Thermocouple	✓		
57	Reg.	Supplemental Fuel Injection Ready	Low Temperature	Thermocouple	✓		
58	Reg.	Reactor Shell Surface	High Temperature	Thermocouple	✓		

APPENDIX H-1. MINIPLANT FLUIDIZED BED COAL COMBUSTION RUN SUMMARY

Operating Conditions:	41.1(7/26-27/76)*	41.2(7/27/76)*	43.1(8/24/76)	43.2(8/24-25/76)
Run Length, hrs.	20.5	5	10	7
Pressure, kPa	912	912	840	880
Air Flow Rate, m^3/min	19.6	19.4	18.4	22.9
Avg. Bed Temperature, °C	889	875	940	845
Sup. Vel., m/s	1.6	1.5	1.7	1.8
Settled Bed Height, m				
Initial	2.3	--	1.4	--
Final	--	1.9-2.2	--	2.1
Expanded Bed Height, m	--	--	3.9	5.7
Coal Feed Rate, kg/hr	86	69	98	88
Ca/S Molar Feed Ratio-Set	0.84	0.84	1.25	0.75
Ca/S Molar Feed Ratio-Calc	--	3.92	--	1.23
Excess Air, %	44	37	24	42
Sorbent	GL	GL	PD	PD
Coal	CH	AR	IL	IL
Flue Gas Emission:				
SO_2, ppm	350	0	60	720
NO_x, ppm	111	127	80	120
CO, ppm	116	133	180	250
CO_2, %	14	12	14	9-12
O_2, %	6	6	4	6
Results:				
Retention, %	68	100	98	60
Sulfation, %	--	26	--	49
Lb SO_2/M BTU	0.90	0.00	0.14	2.58
Lb NO_x/M BTU	0.20	0.30	0.13	0.31

---

* Combined Combustor/Regenerator Runs; Combustor Results Only. Run Discussed in Reference 1.

CH = Champion Coal PD = Pfizer Dolomite (BCR No. 1337) IL = Illinois Coal No. 6
AR = Arkwright Coal GL = Grove Limestone (BCR No. 1359)

APPENDIX H-1 (CONTINUED). MINIPLANT FLUIDIZED BED COAL COMBUSTION RUN SUMMARY

Operating Conditions:	43.3(8/25/76)	43.4(9/2/76)	43.5(9/2/76)	45-1(10/11-12/76)*
Run Length, hrs.	6	6.3	4.3	24
Pressure, kPa	885	940	940	780
Air Flow Rate, m^3/min	20.8	21.1	21.2	14.2
Avg. Bed Temperature, °C	940	940	945	880
Sup. Vel., m/s	1.8	1.7	1.7	1.4
Settled Bed Height, m				
Initial	1.6	1.6	--	2.3
Final	1.9	--	2.2	--
Expanded Bed Height, m	3.1	3.6	3.7	3.2
Coal Feed Rate, kg/hr	93	96	95	82
Ca/S Molar Feed Ratio-Set	0.75	1.25	0.50	0.74
Ca/S Molar Feed Ratio-Calc	1.44	1.80	0.68	--
Excess Air, %	25	25	25	37
Sorbent	PD	PD	PD	GL
Coal	IL	IL	IL	CH
Flue Gas Emissions:				
SO_2, ppm	870	114	1328	493
NO_x, ppm	90	79	75	--
CO, ppm	240	201	201	--
CO_2, %	12	14	14	--
O_2, %	4	4	4	6
Results:				
Retention, %	63	96	44	65
Sulfation, %	45	53	65	--
Lb SO_2/M BTU	2.39	0.26	3.62	1.04
Lb NO_x/M BTU	0.18	0.13	0.15	--

---

* Combined Combustor/Regenerator Runs; Combustor Results Only.

PD = Pfizer Dolomite (BCR No. 1337)
GL = Grove Limestone (BCR No. 1359)
CH = Champion Coal
IL = Illinois Coal No. 6

APPENDIX H-1 (CONTINUED). MINIPLANT FLUIDIZED BED COAL COMBUSTION RUN SUMMARY

Operating Conditions:	45-2(10/12-13/76)*	45-3(10/13-14/76)*	45-4(10/14/76)*	45-5(10/14-15/76)*
Run Length, hrs.	30	14	12	28
Pressure, kPa	780	780	780	780
Air Flow Rate, m^3/min	14.2	14.2	14.2	14.2
Avg. Bed Temperature, °C	885	890	870	875
Sup. Vel., m/s	1.4	1.4	1.4	1.4
Settled Bed Height, m				
Initial	--	--	--	--
Final	--	--	--	--
Expanded Bed Height, m	2.8	2.9	3.4	3.6
Coal Feed Rate, kg/hr	79	81	83	85
Ca/S Molar Feed Ratio-Set	0.74	1.30	1.06	0.00
Ca/S Molar Feed Ratio-Calc	--	--	--	--
Excess Air, %	40	33	30	28
Sorbent	GL	GL	GL	GL
Coal	CH	CH	CH	CH
Flue Gas Emission:				
SO_2, ppm	107	217	249	635
NO_x, ppm	--	--	--	--
CO, ppm	--	--	--	--
CO_2, %	--	--	--	--
O_2, %	6	5	5	5
Results:				
Retention, %	92	84	82	56
Sulfation, %	--	--	--	--
Lb SO_2/M BTU	0.23	0.46	0.52	1.29
Lb NO_x/M BTU	--	--	--	--

---

* Combined Combustor/Regenerator Runs; Combustor Results Only.

GL = Grove Limestone (BCR No. 1359)
CH = Champion Coal

APPENDIX H-1 (CONTINUED). MINIPLANT BED COAL COMBUSTION RUN SUMMARY

Operating Conditions:	45-6(10/14-15/76)*	46.1(11/18/76)	46.2(11/18/76)	46.3(11/22/76)
Run Length, hrs.	12	3.67	4.5	7.67
Pressure, kPa	780	940	940	940
Air Flow Rate, m^3/min	14.2	15.0	15.0	16.7
Avg. Bed Temperature, °C	875	920	865	760
Sup. Vel., m/s	1.4	1.3	1.2	1.0
Settled Bed Height, m				
Initial	--	1.8	--	>2.3
Final	2.2	--	>2.3	--
Expanded Bed Height, m	3.6	3.0	3.3	2.7
Coal Feed Rate, kg/hr	85	81	78	65
Ca/S Molar Feed Ratio-Set	0.00	2.50	2.50	2.50
Ca/S Molar Feed Ratio-Calc	1.69	--	1.49	1.01
Excess Air, %	27	37	47	40
Sorbent	GL	GL(P)	GL(P)	GL(P)
Coal	CH	CH	CH	CH
Flue Gas Emission:				
SO_2, ppm	555	130	170	416
NO_x, ppm	--	80	120	120
CO, ppm	--	100	150	180
CO_2, %	--	13	11	10
O_2, %	4	6	7	6
Results:				
Retention, %	62	90	86	55
Sulfation, %	37	--	58	55
Lb SO_2/M BTU	1.13	0.29	0.40	1.31
Lb NO_x/M BTU	--	0.13	0.20	0.27

* Combined Combustor/Regenerator Runs; Combustor Results Only.
GL = Grove Limestone (BCR No. 1359)
GL(P) = Grove Limestone (Precalcined)
CH = Champion Coal

APPENDIX H-1 (CONTINUED). MINIPLANT FLUIDIZED BED COAL COMBUSTION SUMMARY

Operating Conditions:	46.4(11/22/76)	47(12/9/76)	48(2/24/77)	50.1A(3/29/77)
Run Length, hrs.	3.5	3.5	8	9.5
Pressure, kPa	940	1075	930	910
Air Flow Rate, m^3/min	16.7	30.0	17.9	13.9
Avg. Bed Temperature, °C	865	885	875	890
Sup. Vel., m/s	1.4	2.2	1.5	1.2
Settled Bed Height, m				
Initial	--	2.1	1.5	1.6
Final	2.0	2.3	2.2	--
Expanded Bed Height, m	3.1	3.8	3.4	3.0
Coal Feed Rate, kg/hr	81	179	91	75
Ca/S Molar Feed Ratio-Set	1.50	1.50	1.40	1.25
Ca/S Molar Feed Ratio-Calc	1.14	0.06	1.32	--
Excess Air, %	35	18	39	41
Sorbent	GL(P)	GL	PD	PD
Coal	CH	CH	CH	CH/K
Flue Gas Emission:				
SO_2, ppm	425	1400	510	373
NO_x, ppm	150	100	92	97
CO, ppm	100	175	114	94
CO_2, %	11	14	13	14
O_2, %	5	3	6	5
Results:				
Retention, %	64	2.7	58	69
Sulfation, %	56	49	44	--
Lb SO_2/M BTU	1.07	2.86	1.16	0.87
Lb NO_x/M BTU	0.27	0.15	0.16	0.16

GL = Grove Limestone (BCR No. 1359)
GL(P) = Grove Limestone (Precalcined)
PD = Pfizer Dolomite (BCR No. 1337)
CH = Champion Coal
CH/K = Mixture of Champion Coal (2% Sulfur) and Kentucky Coal (0.6% Sulfur)

APPENDIX H-1 (CONTINUED). MINIPLANT FLUIDIZED BED COAL COMBUSTION RUN SUMMARY

Operating Conditions:	50.1B(3/29-30/77)	50.2(3/30/77)	50.3(3/31/77)	50.4(3/31/77)
Run Length, hrs.	12	11.6	15	12.5
Pressure, kPa	915	900	900	900
Air Flow Rate, m^3/min	14.3	15.3	15.3	15.4
Avg. Bed Temperature, °C	890	805	890	890
Sup. Vel., m/s	1.2	1.2	1.3	1.3
Settled Bed Height, m				
Initial	--	--	--	--
Final	--	--	--	--
Expanded Bed Height, m	3.9	3.2	3.2	3.3
Coal Feed Rate, kg/hr	75	71	83	84
Ca/S Molar Feed Ratio-Set	1.25	1.25	1.25	1.25
Ca/S Molar Feed Ratio-Calc	1.52	1.95	2.35	2.44
Excess Air, %	45	63	40	40
Sorbent	PD	PD	PD	PD
Coal	CH/K	CH/K	CH/K	CH/K
Flue Gas Emission:				
SO_2, ppm	355	151	62	41
NO_x, ppm	102	136	128	124
CO, ppm	100	130	90	56
CO_2, %	14	10	12	12
O_2, %	6	8	6	6
Results:				
Retention, %	70	86	95	96
Sulfation, %	46	44	41	40
Lb SO_2/M BTU	0.85	0.41	0.14	0.09
Lb NO_x/M BTU	0.18	0.26	0.21	0.20

PD = Pfizer Dolomite (BCR No. 1337)
CH/K = Mixture of Champion Coal (2% Sulfur) and Kentucky Coal (0.6% Sulfur)

APPENDIX H-1 (CONTINUED). MINIPLANT FLUIDIZED BED COAL COMBUSTION RUN SUMMARY

Operating Conditions:	50.5(3/31-4/1/77)	51(5/6/77)	52(5/24/77)	54(6/29/77)
Run Length, hrs.	18	8	23	5.5
Pressure, kPa	900	932	930	595
Air Flow Rate, m^3/min	15.5	18.3	17.8	14.6
Avg. Bed Temperature, °C	895	871	890	910
Sup. Vel., m/s	1.4	1.5	1.5	1.9
Settled Bed Height, m				
Initial	--	1.9	1.7	--
Final	2.2	--	1.6	--
Expanded Bed Height, m	3.3	2.3	2.7-3.5	2.7
Coal Feed Rate, kg/hr	86	79	75-102	81
Ca/S Molar Feed Ratio-Set	1.25	1.40	1.25	0.00
Ca/S Molar Feed Ratio-Calc	2.00	1.60	--	--
Excess Air, %	36	46	26-50	29
Sorbent	PD	PD	PD	None
Coal	CH/K	CH/K	CH/K	CH/K
Flue Gas Emission:				
SO_2, ppm	29	253	115-710	660
NO_x, ppm	119	143	90-125	--
CO, ppm	53	125	80-125	--
CO_2, %	13	14	14	--
O_2, %	6	7	6	5
Results:				
Retention, %	97	71	--	31
Sulfation, %	49	45	53	52
Lb SO_2/M BTU	0.06	0.72	--	1.41
Lb NO_x/M BTU	0.19	0.29	--	--

PD = Pfizer Dolomite (BCR No. 1337)
CH/K = Mixture of Champion Coal (2% Sulfur) and Kentucky Coal (0.6% Sulfur)

APPENDIX H-1 (CONTINUED). MINIPLANT FLUIDIZED BED COAL COMBUSTION RUN SUMMARY

Operating Conditions:	55(7/14/77)	56(7/26/77)	57(8/2/77)	59.1(8/11/77)	59.2(8/12/77)
Run Length, hrs.	3.5	4	6	10.5	12
Pressure, kPa	570	800	810	890	873
Air Flow Rate, m^3/min	12.5	14.8	13.7	17.7	17.7
Avg. Bed Temperature, °C	930	815	935	956	949
Sup. Vel., m/s	2.1	1.4	1.4	1.6	1.7
Settled Bed Height, m					
Initial	--	1.8	--	--	--
Final	--	--	1.6	--	1.3
Expanded Bed Height, m	2.5	2.6	3.0	3.7	7.2
Coal Feed Rate, kg/hr	83	73	91	105	109
Ca/S Molar Feed Ratio-Set	0.00	0.69	0.75	0.75	0.00
Ca/S Molar Feed Ratio-Calc	0.37	1.05	1.07	--	0.80
Excess Air, %	13	34	14*	33	26
Sorbent	None	PD	PD	PD	PD
Coal	CH/K	CH/K	CH/K	CH/K	CH/K
Flue Gas Emission:					
SO_2, ppm	792	62	150	120	360
NO_x, ppm	110	104	35	78	55
CO, ppm	213	11	145	156	163
CO_2, %	15	8	13	--	19
O_2, %	5	2	3	5	4
Results:					
Retention, %	30	93	87	88	66
Sulfation, %	82	89	81	--	83
Lb SO_2/M BTU	1.57	0.16	0.29	0.58	0.79
Lb NO_x/M BTU	0.16	0.20	0.05	0.27	0.08

PD = Pfizer Dolomite (BCR No. 1337)
CH/K = Mixture of Champion Coal (2% Sulfur) and Kentucky Coal (0.6% Sulfur)

* Excess Air Percent derived from flue gas composition.

APPENDIX H-2. PARTICLE SIZE DISTRIBUTION SPENT PFIZER 1337 DOLOMITE SORBENT (EXCEPT AS NOTED)

Run No.	Material	Particle Size (μm) 5% Less Than	10% Less Than	25% Less Than	50% Less Than	75% Less Than	90% Less Than	95% Less Than
41 (1)	Final Bed	29	150	320	490	--	--	--
45 (1)	Final Bed	295	350	440	--	--	--	--
48	Final Bed	200	260	680	1520	--	--	--
50.1B	Rejected Solids	--	120	420	960	1500	--	--
50.2	Rejected Solids	160	235	480	1040	1720	--	--
50.3	Rejected Solids	130	215	440	1080	--	--	--
50.5	Final Bed	560	870	1260	--	--	--	--
51	Rejected Solids	180	280	470	750	1240	--	--
	Rejected Solids	320	440	660	1060	1540	--	--
	Rejected Solids	300	450	560	920	1360	--	--
56	Final Bed	220	270	340	540	920	1400	1700

---

(1) Grove 1359 Limestone-Regenerated

APPENDIX H-3. PARTICLE SIZE DISTRIBUTION PRIMARY CYCLONE CAPTURE

Run No.	Particle Size (μm) 5% Less Than	10% Less Than	25% Less Than	50% Less Than	75% Less Than	90% Less Than	95% Less Than
48	130	140	190	300	880	--	--
56	102	130	235	710	1150	1550	1850
57	--	--	--	135	240	800	1175
59	--	--	140	190	365	850	1250

APPENDIX H-4. PARTICLE SIZE DISTRIBUTION
SECONDARY CYCLONE CAPTURE

	Particle Size (μm)						
Run No.	5% Less Than	10% Less Than	25% Less Than	50% Less Than	75% Less Than	90% Less Than	95% Less Than
41 (1)	5.6	8	15	36	58	80	98
43.1 (2)	9.2	12	21	39	59	92	110
43.2 (2)	7.4	11	20	57	79	115	145
43.3 (2)	3.2	8.0	16	35	68	92	110
43.4 (2)	5.6	9.8	20	45	70	95	112
43.4	12	18	49	72	80	94	110
43.5 (2)	5.4	8.8	18	39	77	110	145
45 (1)	--	3.1	8.6	23	60	120	230
48	4.4	5.6	8.9	16	29	68	90
50.1A	6	8.2	14	26	72	115	185
50.2	4.3	5.8	10	18	39	72	100
50.3	4.5	6.1	10	19	44	86	115
51 (3)	6.3	9.6	15	53	180	320	375
51 (3)	5.4	7.4	13	23	75	140	215
51 (3)	6.0	8.0	14	27	94	210	320
51 (3)	4.2	5.5	9.4	20	67	160	250
52	4.1	5.6	11	19	36	54	72
52	4.1	5.7	10	19	34	59	78
52	4.2	5.7	11	20	38	58	76
55	5.2	7.3	15	45	140	275	335
56	5.4	8.0	15	31	54	76	94
57	4.8	6.8	12	23	47	78	100
57	4.7	6.4	12	23	46	69	84
59	3.8	5.2	9.8	19	36	70	105
59	3.9	5.2	9.6	18	35	70	105
59	4.0	5.8	12	26	48	80	115

Pfizer 1337 Dolomite, Champion Coal Except as Noted

(1) Grove 1359 Limestone-Regenerated

(2) Pfizer Dolomite, Illinois Coal

(3) First Cyclone Deactivated

APPENDIX H-5. PARTICLE SIZE DISTRIBUTION GBF CAPTURE

Run No.	Filter Element No.	Particle Size (μm) 5% Less Than	10% Less Than	25% Less Than	50% Less Than	75% Less Than	90% Less Than	95% Less Than
54	--	2.5	3.3	5.5	10	18	30	37
55	2	2.0	2.6	4.5	9.5	22	36	--
55	2	2.1	2.7	4.7	10	24	38	--
55	2	1.8	2.2	4.0	13	25	33	--
55	2	1.6	1.9	3.0	6.5	18	35	--
55	3	2.3	2.9	4.5	8.0	21	38	--
55	3	1.8	2.2	3.7	8.8	22	35	--
55	F(1)	1.4	2.2	4.1	7.3	13	20	--
59	2	1.2	1.6	2.6	5.2	9.8	25	--
59	2	1.4	1.8	2.7	4.9	9.0	15	21
59	3	1.6	2.2	3.9	7.1	11	18	--
59	3	1.5	1.9	3.0	5.4	9.6	18	30

---

(1) Fines Collected on Exterior of Filter Element

APPENDIX H-6. PARTICLE SIZE DISTRIBUTION FLUE GAS PARTICULATES NO FILTER

Run No.	5% Less Than	10% Less Than	25% Less Than	50% Less Than	75% Less Than	90% Less Than	95% Less Than
	Particle Size (μm)						
48	--	--	1.5	3.1	6.5	11	15
50.1	--	--	1.8	4.7	7.2	13	16
50.2	--	--	1.4	2.4	4.7	8.8	12
50.4	--	--	1.5	2.5	5.0	9	12
50.5	--	1	1.9	3.3	6.5	11	14
51	--	--	2.0	4.6	9.2	15	--
51	--	--	1.5	2.8	6.9	11	14

APPENDIX H-7. PARTICLE SIZE DISTRIBUTION FLUE PARTICULATES AFTER FILTER

Run No.	5% Less Than	10% Less Than	25% Less Than	50% Less Than	75% Less Than	90% Less Than	95% Less Than
	Particle Size (μm)						
54	1.3	1.8	2.7	5.0	17	--	--
57	2.0	2.3	3.4	6.7	15	25	31
59	1.3	1.7	2.4	3.4	2.7	13	20
59	1.0	1.3	1.7	2.5	4.0	9.0	16
59	1.0	1.3	1.9	3.3	8.5	20	30

APPENDIX H-8. MINIPLANT SOLIDS ANALYSIS

Run No.	Source	Ca	Weight Percent S	SO_4	CO_3	Total C	Mg	Other
41.1	Second Cyclone #2	10.8	4.0	12.4	0.6	6.8	--	
	Second Cyclone #3	8.8	2.3	9.6	0.6	4.4	--	
	Second Cyclone #4	6.6	1.9	8.1	0.5	3.4	--	
41.2	Final Bed	36.4	7.2	22.3	5.8	1.1	--	
	Second Cyclone #5	16.8	3.8	12.1	1.7	8.7	--	
43.1	Initial Bed	34.5	3.0	14.0	37.6	8.6	0.5	
	Second Cyclone #8	15.8	7.8	27.1	1.7	0.5	8.4	
	Second Cyclone #9	14.8	7.4	26.1	1.7	0.6	8.3	
	Second Cyclone #10	15.6	7.6	26.6	1.7	0.2	9.0	
43.2	Second Cyclone #13	10.7	5.7	19.6	1.6	1.6	5.6	
	Second Cyclone #14	11.1	5.5	18.5	1.8	1.9	5.7	
	Second Cyclone #15	10.3	5.1	26.0	1.6	2.2	5.5	
	Flue Gas Particulates	6.1	9.4	27.6	0.0	0.5	3.1	
	Intermediate Bed	25.3	9.0	29.8	18.6	2.6	8.9	
43.3	Second Cyclone #25	9.1	5.9	18.3	0.7	1.2	4.9	
	Second Cyclone #26	9.9	5.8	20.4	0.8	1.0	5.5	
	Second Cyclone #27	10.1	5.9	18.2	0.9	3.8	5.5	
	Flue Gas Particulates	7.3	9.8	25.7	0.0	4.1	3.2	
	Final Bed	26.8	8.7	28.6	1.3	0.6	11.5	
43.4	Initial Bed	26.8	8.7	28.6	1.3	0.6	11.5	
	Rejected Solids #2	23.3	11.2	28.0	2.9	1.2	8.3	
	Rejected Solids #3	26.6	11.6	31.5	4.2	1.2	5.8	
	Rejected Solids #4	30.3	11.9	33.0	4.6	1.3	8.9	
	Second Cyclone #5	15.3	8.2	25.9	1.5	0.7	8.7	
	Second Cyclone #6	12.4	8.5	26.2	1.3	0.6	6.8	
	Second Cyclone #7	14.0	7.5	26.1	0.8	0.4	7.7	
	Flue Gas Particulates	7.2	11.5	30.4	0.1	1.4	2.7	

APPENDIX H-8 (CONTINUED). MINIPLANT SOLIDS ANALYSIS

Run No.	Source	Weight Percent						
		Ca	S	SO4	CO_3	Total C	Mg	Other
43.5	Rejected Solids #8	26.0	10.4	40.4	2.6	1.4	10.2	Na = .04
	Second Cyclone #11	9.1	5.1	16.0	0.4	1.1	4.9	Na = 0.4
	Flue Gas Particulates	5.7	9.3	28.4	--	2.6	2.2	Na = 0.8
	Final Bed	27.5	12.4	34.7	2.8	0.5	11.3	
45	Second Cyclone #6	5.8	1.9	7.0	0.3	13.9	--	
	Second Cyclone #9	6.5	2.7	10.7	0.5	12.8	--	
	Second Cyclone #17	8.2	2.7	8.1	0.5	8.4	--	
	Second Cyclone #22	8.1	2.5	7.4	1.0	13.6	--	
	Second Cyclone #27	5.6	2.0	5.3	0.6	11.6	--	
	Second Cyclone #30	4.3	1.5	4.1	0.1	12.4	--	
	Second Cyclone #33	3.4	1.1	2.9	0.1	13.5	--	
	Second Cyclone #36	3.8	1.2	2.9	0.1	12.4	--	
	Second Cyclone #37	3.0	1.0	2.6	0.1	15.5	--	
	Second Cyclone #39	3.3	0.9	2.7	0.1	11.7	--	
	Flue Gas Particulates	5.9	--	17.9	0.1	1.7	--	
	Final Bed	32.6	10.9	28.7	2.3	0.8	--	
46.1-.2	Final Bed	26.3	12.4	36.7	7.0	1.5	--	
	GBF	8.3	2.8	9.7	7.5	7.1	--	
46.3	Second Cyclone #7	5.4	2.9	7.5	1.5	16.3	--	
	Second Cyclone #8	4.5	4.6	7.1	3.8	17.3	--	
	Rejected Solids #4	26.2	11.4	34.5	5.3	1.9	--	
	Rejected Solids #5	27.4	10.5	33.5	7.2	2.5	--	
46.4	Second Cyclone #10	5.3	2.5	7.5	1.5	8.5	--	
	Rejected Solids #6	26.1	11.8	35.1	7.8	2.2	--	
	Primary Cyclone	5.6	--	10.6	1.1	1.8	--	
	Final Bed	24.4	13.1	37.6	10.5	2.4	--	
47	Second Cyclone #1	5.2	--	12.8	2.8	36.6	--	
	Second Cyclone #2	7.4	--	8.6	1.1	12.4	--	
	Second Cyclone #5	7.8	--	7.2	1.7	8.3	--	
	Flue Gas Particulates	4.6	2.7	7.1	0.9	36.7	--	
	Primary Cyclone	13.5	5.2	12.9	1.5	3.0	--	
	Final Bed	29.7	12.6	35.1	13.6	4.4	--	

APPENDIX H-8 (CONTINUED). MINIPLANT SOLIDS ANALYSIS

Run No.	Source	Weight Percent Ca	S	SO_4	CO_3	Total C	Mg	Other
50.3	Second Cyclone #43	8.8	5.0	14.7	2.1	3.7	4.4	
	Second Cyclone #46	7.7	4.0	13.2	1.9	3.8	4.3	
	Rejected Solids #25	23.5	6.8	21.9	22.3	1.4	13.5	
	Rejected Solids #28	22.5	7.2	22.8	21.6	1.3	13.0	
50.4	Second Cyclone #49	7.6	4.3	12.9	1.6	4.6	4.0	
	Second Cyclone Mix #1	8.7	4.9	14.0	2.1	3.3	4.9	
	Second Cyclone Mix #2	7.5	4.5	12.8	2.0	3.6	4.1	
	Rejected Solids #31	22.4	6.0	19.1	23.7	1.5	13.1	
	Rejected Solids Mix #1	20.0	7.5	18.0	14.8	3.0	16.9	
	Rejected Solids Mix #2	19.9	7.5	22.0	14.5	2.9	12.1	
	Flue Gas Particulates	4.0	3.1	10.0	0.0	2.0	1.6	
50.5	Second Cyclone #61	7.7	5.2	14.6	2.7	3.1	4.4	
	Second Cyclone #63	8.9	5.0	14.6	2.0	2.6	4.8	
	Second Cyclone #65	6.5	4.8	14.0	1.5	2.4	3.5	
	Rejected Solids #44	17.3	6.7	21.7	20.1	1.6	9.6	
	Rejected Solids #46	21.8	7.8	24.2	19.7	1.4	13.1	
	Rejected Solids #47	21.8	8.5	24.9	17.9	1.0	13.0	
	Flue Gas Particulates	4.1	1.2	6.4	0.0	1.7	2.0	
51	Second Cyclone #4	5.0	2.1	6.7	1.9	6.6	2.6	
	Second Cyclone #5	4.5	2.4	6.1	1.8	9.0	2.3	
	Second Cyclone #6	4.8	4.1	6.6	2.0	12.5	2.4	
	Second Cyclone #7	3.8	2.0	5.5	1.4	9.8	2.1	Na = 0.6%
	Rejected Solids #1	21.9	7.6	26.3	21.2	3.8	12.9	
	Rejected Solids #2	9.6	7.8	24.9	23.8	4.7	5.6	Na = 0.0%
	Flue Gas Particulates	4.0	4.3	15.7	0.3	3.6	1.7	Na = 0.3%
	Flue Gas Particulates	3.6	4.7	13.7	0.1	3.1	1.6	Na = 0.5%
	Initial Bed	22.2	9.9	35.1	14.7	3.8	12.9	
	Bed Probe #1 (> 100 Mesh)	18.4	11.3	32.3	7.7	1.6	10.6	
	Bed Probe #1 (< 100 Mesh)	19.7	9.4	29.3	17.5	2.8	12.1	
	Bed Probe #2	19.2	8.9	28.0	17.3	3.0	12.3	
	Bed Probe #3	20.6	7.0	22.4	23.0	3.2	12.3	

APPENDIX H-8 (CONTINUED). MINIPLANT SOLIDS ANALYSIS

Run No.	Source	Weight Percent Ca	S	SO4	CO3	Total C	Mg	Other
48	Second Cyclone #4	5.2	3.1	9.8	0.7	8.9	2.3	Fe = 10.1
	Second Cyclone #5	4.7	2.9	9.2	0.5	6.5	2.3	Fe = 10.5
	Second Cyclone #6	4.7	2.6	8.9	0.3	6.2	2.4	Fe = 10.4
	Second Cyclone #7	4.3	2.8	9.1	0.4	6.8	2.4	Fe = 10.1
	Flue Gas Particulates	3.6	5.1	19.1	0.0	2.9	1.5	Fe = 7.4
	Flue Gas Particulates	3.7	6.8	17.8	0.0	1.8	1.5	Fe = 7.0
	Primary Cyclone	11.0	5.4	16.2	1.2	2.2	6.1	Fe = 11.7
	Initial Bed	17.2	13.6	42.2	2.5	0.8	9.4	Fe = 2.1
	Final Bed	22.1	7.1	23.5	22.9	4.1	13.2	Fe = 0.3
50.1-50.5	Initial Bed	22.9	7.4	21.7	22.9	3.9	13.7	
	Final Bed	16.4	8.4	25.7	20.6	2.3	9.8	
	Primary Cyclone	14.9	7.3	23.4	2.3	1.4	9.5	
	Flue Gas Particulates	3.8	5.3	12.3	0.9	1.9	1.9	
50.1A	Second Cyclone Mix #1	7.3	4.6	13.4	5.3	5.7	3.4	
	Second Cyclone Mix #2	8.3	3.8	13.0	4.7	7.1	3.9	
50.1B	Second Cyclone #12	6.5	4.3	11.7	1.3	8.8	3.1	
	Second Cyclone #15	5.7	3.2	10.6	0.9	8.2	2.7	
	Second Cyclone #17	5.2	3.1	9.4	0.7	7.2	2.4	
	Rejected Solids #1	23.4	9.4	28.2	11.2	2.3	6.5	
	Rejected Solids #2	23.4	7.9	23.9	20.4	3.7	9.9	
	Rejected Solids #3	22.3	7.9	24.5	21.7	1.6	12.7	
	Flue Gas Particulates	4.4	6.7	21.8	0.2	3.1	1.5	
50.2	Second Cyclone #25	7.7	4.0	11.9	3.5	9.3	4.3	
	Second Cyclone #27	6.0	3.3	9.1	2.8	9.4	3.2	
	Second Cyclone #28	5.8	3.3	9.5	3.0	9.8	2.8	
	Rejected Solids #8	20.3	7.6	23.5	16.1	2.0	11.8	
	Rejected Solids #10	22.2	7.5	21.3	22.7	2.3	13.0	
	Flue Gas Particulates	3.5	4.6	14.3	0.1	3.5	1.3	

APPENDIX H-8 (CONTINUED). MINIPLANT SOLIDS ANALYSIS

Run No.	Source	Weight Percent						
		Ca	S	SO_4	CO_3	Total C	Mg	Other
51 (Cont)	Bed Probe #4	20.3	8.2	29.4	16.4	2.4	12.8	
	Bed Probe #5	22.9	5.8	18.0	25.7	3.1	13.1	
	Bed Probe #6	20.0	8.4	26.8	18.7	2.5	12.0	
	Bed Probe #7	21.1	9.0	24.9	17.4	4.2	13.4	
	Final Bed	21.3	8.1	20.8	22.3	3.1	12.8	
52	Second Cyclone #7	6.8	3.9	11.5	0.7	3.9	3.9	
	Second Cyclone #9	5.6	3.9	10.7	1.0	3.5	3.3	
	Second Cyclone #11	7.0	3.9	11.9	1.2	2.6	4.3	
	Rejected Solids #2	16.9	7.5	23.4	15.2	1.8	10.8	
	Rejected Solids #4	21.9	5.6	20.4	24.5	1.8	13.2	
	Rejected Solids #5	17.1	7.6	26.6	21.3	1.7	9.9	
	Flue Gas Particulates	4.0	3.8	8.6	0.4	2.8	1.6	
	Initial Bed	23.1	6.4	26.7	11.6	3.5	12.8	
	Bed Probe #3	22.2	7.0	17.4	24.7	3.6	14.3	
	Bed Probe #7	20.3	8.7	24.4	19.3	2.8	12.8	
	Bed Probe #10	20.6	7.7	22.6	20.8	2.2	13.4	
	Final Bed	21.7	8.9	29.2	16.1	4.0	13.3	
54	Second Cyclone #4	7.9	3.0	8.2	0.6	12.4	1.6	
	Second Cyclone #5	5.0	2.8	5.7	0.2	15.5	1.3	
	Bed Probe #4	32.6	14.0	43.4	3.9	0.6	0.4	
	Bed Probe #5	33.0	14.3	40.8	4.7	0.7	0.4	
55	Second Cyclone #1	12.8	5.5	15.1	0.3	14.3	4.9	
	Second Cyclone #2	5.4	2.4	7.8	0.2	17.1	1.6	
	GBF	4.1	3.5	9.9	0.4	1.3	1.2	
	Primary Cyclone	15.2	7.2	21.8	0.6	0.6	5.7	
	Final Bed	23.5	14.6	46.3	0.6	1.4	7.3	

APPENDIX H-8 (CONTINUED). MINIPLANT SOLIDS ANALYSIS

Run No.	Source	Weight Percent						
		Ca	S	SO_4	CO_3	Total C	Mg	Other
56	Second Cyclone #1	13.8	5.6	17.6	9.5	10.3	7.8	
	Initial Bed	24.7	10.4	34.2	6.2	0.9	10.0	
	Bed Probe #1	22.6	8.5	25.5	18.6	1.7	12.5	
	Bed Probe #2	21.8	11.2	34.8	12.5	1.5	11.4	
	Final Bed	20.8	14.3	44.3	0.6	0.5	6.2	
	Primary Cyclone	19.6	10.4	29.3	4.4	1.1	11.6	
57	Second Cyclone #4	9.3	4.6	13.0	0.3	4.0	5.0	
	Second Cyclone #5	8.3	4.1	12.8	0.3	6.2	4.5	
	Initial Bed	24.2	11.7	40.6	8.6	1.9	5.3	
	Bed Probe #4	19.7	12.5	38.5	3.1	0.6	7.1	
	Primary Cyclone	16.9	9.1	27.0	0.5	0.8	10.5	
59	Second Cyclone #8	4.4	1.6	4.5	--	3.1	2.4	
	Second Cyclone	4.5	1.7	5.0	--	5.2	2.4	
	Second Cyclone	3.3	1.5	2.9	--	2.8	1.8	
	Flue Gas Particulates	3.3	4.1	14.4	--	1.9	0.9	
	Flue Gas Particulates	1.9	3.1	10.2	--	1.2	0.6	
	Primary Cyclone	11.6	4.9	13.1	0.4	0.4	7.7	
	Final Bed	15.6	10.3	31.0	0.1	1.0	9.1	

APPENDIX H-9. MINIPLANT SOLIDS COMPOSITION

Run Number	Source	Composition (wt. %) C (Combustible)	Ash	Sorbent	Sorbent Portion Composition (Mole %) CaO	$CaCO_3$	$CaSO_4$
41.1	Sec. Cyclone	4.7	74	48	48	4	48
41.2	Final Bed	0.0	26	74	64	11	26
	Sec. Cyclone	8.3	57	35	63	7	30
43.1	Sec. Cyclone	0.1	41	59	21	7	72
43.2	Final Bed	0.0	12	89	2	49	49
	Sec. Cyclone	1.6	55	43	7	10	83
	Flue Gas Part.	0.5	63	37	(1)	--	--
43.3	Final Bed	0.3	18	81	52	3	45
	Sec. Cyclone	1.8	59	39	13	5	82
	Flue Gas Part.	4.1	59	37	--	--	--
43.4	Reject Solids	0.5	20	79	34	10	56
	Sec. Cyclone	0.3	45	55	16	6	78
	Flue Gas Part.	1.4	59	40	--	--	--
43.5	Final Bed	0.0	12	88	41	7	53
	Reject Solids	0.9	10	89	28	7	65
	Sec. Cyclone	1.0	64	35	24	3	73
45	Final Bed	0.4	28	71	59	5	37
	Sec. Cyclone	12.5	75	12	50	4	46
	Flue Gas Part.	1.7	75	23	--	--	--
46.2	Final Bed	0.1	27	72	24	18	58
	GBF	5.6	69	25	-9(2)	60	49
46.3	Sec. Cyclone	16.2	69	15	-2	41	61
	Reject Solids	0.8	30	69	31	14	55
46.4	Final Bed	0.3	26	73	7	29	64
	Reject Solids	0.6	28	72	24	20	56
	Sec. Cyclone	8.2	77	15	22	19	59
	Prim. Cyclone	1.6	81	17	8	13	80
47	Final Bed	1.7	18	81	20	31	49
	Sec. Cyclone	18.7	62	19	23	18	58
	Flue Gas Part.	36.5	50	13	--	--	--
	Prim. Cyclone	2.7	67	31	53	8	40
48	Final Bed	0.0	11	89	-13	69	44
	Sec. Cyclone	7.2	74	19	12	7	81
	Flue Gas Part.	2.7	74	23	--	--	--
	Prim. Cyclone	0.6	60	40	31	7	61

APPENDIX H-9 (CONTINUED). MINIPLANT SOLIDS COMPOSITION

Run Number	Source	Composition (wt. %) C (Combustible)	Ash	Sorbent	Sorbent Portion Composition (Mole %) CaO	$CaCO_3$	$CaSO_4$
50	Final Bed	0.0	26	76	-49	84	65
50.1A	Sec. Cyclone	5.4	63	32	-14	43	71
50.1B	Sec. Cyclone	7.9	70	22	13	11	76
	Reject Solids	0.0	18	83	2	51	46
	Flue Gas Part.	3.1	70	27	--	--	--
50.2	Sec. Cyclone	8.9	66	26	2	32	66
	Reject Solids	0.0	18	83	-5	61	44
	Flue Gas Part.	3.5	78	19	--	--	--
50.3	Sec. Cyclone	3.3	65	32	13	16	71
	Reject Solids	0.0	14	89	-4	64	41
50.4	Sec. Cyclone	3.4	66	31	14	16	70
	Reject Solids	0.0	19	82	4	57	40
	Flue Gas Part.	2.0	81	17	--	--	--
50.5	Sec. Cyclone	2.3	66	31	4	18	78
	Reject Solids	0.0	21	82	-12	63	49
	Flue Gas Part.	1.7	84	14	--	--	--
	Prim. Cyclone	0.0	41	58	24	10	65
51	Final Bed	0.0	16	85	-11	70	41
	Sec. Cyclone	9.1	74	17	16	26	58
	Reject Solids	0.0	25	75	-13	71	42
	Flue Gas Part.	3.3	76	20	--	--	--
	Bed Probe	0.0	17	84	-13	59	54
52	Final Bed	0.8	10	89	-6	50	56
	Sec. Cyclone	3.1	71	26	17	10	73
	Reject Solids	0.0	23	79	-25	73	53
	Flue Gas Part.	2.7	82	16	--	--	--
	Bed Probe	0.0	41	61	-11	69	43
54	Sec. Cyclone	13.8	69	17	50	4	45
	Bed Probe	0.0	15	85	38	9	54
55	Final Bed	1.2	15	84	16	2	82
	Sec. Cyclone	17.1	66	17	37	3	60
	Prim. Cyclone	0.5	50	49	38	2	60
	Flue Gas Part.	1.2	83	16	--	--	--
56	Final Bed	0.4	23	77	9	2	89
	Sec. Cyclone	8.4	38	54	1	46	53
	Prim. Cyclone	0.2	25	74	23	15	62
	Bed Probe	0.0	14	88	-3	47	57

APPENDIX H-9 (CONTINUED). MINIPLANT SOLIDS COMPOSITION

Run Number	Source	Composition (wt. %) C (Combustible)	Ash	Sorbent	Sorbent Portion Composition (Mole %) CaO	$CaCO_3$	$CaSO_4$
57	Sec. Cyclone	5.1	64	31	37	2	61
	Prim. Cyclone	0.7	35	64	32	2	67
	Bed Probe	0.0	26	74	8	10	81
59	Final Bed	1.0	36	63	17	0	83
	Sec. Cyclone	3.6	83	13	50	8	42
	Flue Gas Part.	1.5	83	15	--	--	--
	Prim. Cyclone	0.3	59	40	51	2	47

---

(1) Flue gas particulates sulfate during sampling at lower temperatures giving erroneous results.

(2) Negative values caused by calculation procedure and possible error in analyses.

APPENDIX H-10. MINIPLANT SAMPLE SHIPMENTS

Requestor	Sample Description	Sorbent	Run No.	Amount	Date
Brookhaven National Labs	Fly Ash	Dolomite	43.5	5 lbs.	3/14/77
Uptin, NY	Primary Cyclone	Dolomite	43.5	5 lbs.	3/14/77
Curtiss-Wright	Fly Ash	Dolomite	37	110 lbs.	10/29/76
Wood-Ridge, NJ					
Dravo Corp.	Bed	Dolomite	23	5 gallons	3/4/76
Pittsburgh, PA					
EPA	Bed	Alumina	28	2 gallons	4/1/76
Research Triangle Park, NC	Flue Gas Particulates	Limestone	45	13.5 grams	1/7/77
ERE					
Florham Park, NJ	Limestone	--	--	2 gallons	9/21/76
Baton Rouge, LA	Fly Ash	Limestone	45	360 lbs.	11/2/76
	Illinois Coal Fines	Dolomite	43	360 lbs.	11/2/76
	Limestone	--	--	10 lbs.	1/7/77
Baytown, Texas	Limestone Fines	--	--	900 lbs.	5/14/76
	Limestone	--	--	1 lb.	5/23/77
	Dolomite	--	--	1 lb.	5/23/77
	Aragonite	--	--	1 lb.	5/23/77
	Limestone	--	--	5 lbs.	8/2/77
	Dolomite	--	--	5 lbs.	8/2/77
Foster Wheeler Co.	Primary Cyclone	Limestone	47	5 lbs.	1/7/77
Livingston, NJ					
General Electric Co.	Fly Ash	Dolomite	37	240 lbs.	3/2/77
Schenectady, NY	Fly Ash	Dolomite	51	168 lbs.	6/6/77
MIT	Dolomite	--	--	25 lbs.	7/13/76
Cambridge, MA	Illinois Coal Fines	--	--	100 lbs.	2/3/77
	Illinois Coal No. 6	--	--	100 lbs.	2/14/77

APPENDIX H-10 (CONTINUED). MINIPLANT SAMPLE SHIPMENTS

Requestor	Sample Description	Sorbent	Run No.	Amount	Date
National Gypsum Co. Buffalo, NY	Bed	Limestone	19.6	1 gallon	1/19/77
O.R.N.L. Oak Ridge, TN	Fly Ash	Dolomite	38.1	2 lbs.	4/23/76
Pratt & Whitney Co. Middletown, CT	Fly Ash	Limestone	45	20 lbs.	2/9/77
	Fly Ash	Dolomite	43.4	5 lbs.	4/8/77
Ralph Stone & Co., Inc. Los Angeles, CA	Bed	Limestone	19.7	200 lbs.	4/27/76
	Fly Ash	Dolomite	37	200 lbs.	4/27/76
	Bed	Dolomite	43.5	100 lbs.	10/22/76
	Fly Ash	Dolomite	43.5	150 lbs.	10/22/76
	Bed	Dolomite	37	100 lbs.	12/15/76
	Fly Ash	Dolomite	37	100 lbs.	12/15/76
Research Cottrell Bound Brook, NJ	Flue Gas Particulates	Dolomite	50.1	25 grams	5/17/77
	*Flue Gas Particulates *(under non-isokinetic conditions)	Dolomite	50.1-50.5	200 grams	5/17/77
T.V.A. Muscle Shoals, AL	Bed	Limestone	19.3	500 grams	3/4/76
	Bed	Limestone	30.1	500 grams	3/4/76
	Bed	Limestone	30.2	500 grams	3/4/76
	Bed	Dolomite	32.3	500 grams	3/4/76
	Bed	Limestone	19.5	7 lbs.	12/21/76
	Bed	Dolomite	43.5	7 lbs.	12/21/76

APPENDIX H-10 (CONTINUED). MINIPLANT SAMPLE SHIPMENTS

Requestor	Sample Description	Sorbent	Run No.	Amount	Date
Westinghouse Research Labs. Pittsburgh, PA	Bed	Dolomite	27	50 lbs.	3/8/76
	Fly Ash	Dolomite	27	50 lbs.	3/8/76
	Bed	Limestone	19.6	50 lbs.	3/8/76
	Bed	Limestone	30.2	50 lbs.	3/8/76
	Fly Ash	Limestone	19.6	2 lbs.	3/8/76
	Fly Ash	Limestone	26	2 lbs.	3/8/76
	Flue Gas Particulates	Dolomite	34	100 grams	4/12/76
	Fly Ash	Dolomite	43.3	300 lbs.	11/18/76
	Bed	Dolomite	43.3	275 lbs.	11/18/76
	Bed	Limestone	45	20 lbs.	1/7/77
	Fly Ash	Limestone	45	35 lbs.	1/7/77
	Regenerator Bed	Limestone	45	50 lbs.	1/7/77

APPENDIX J-1

MODIFIED FILTER BED

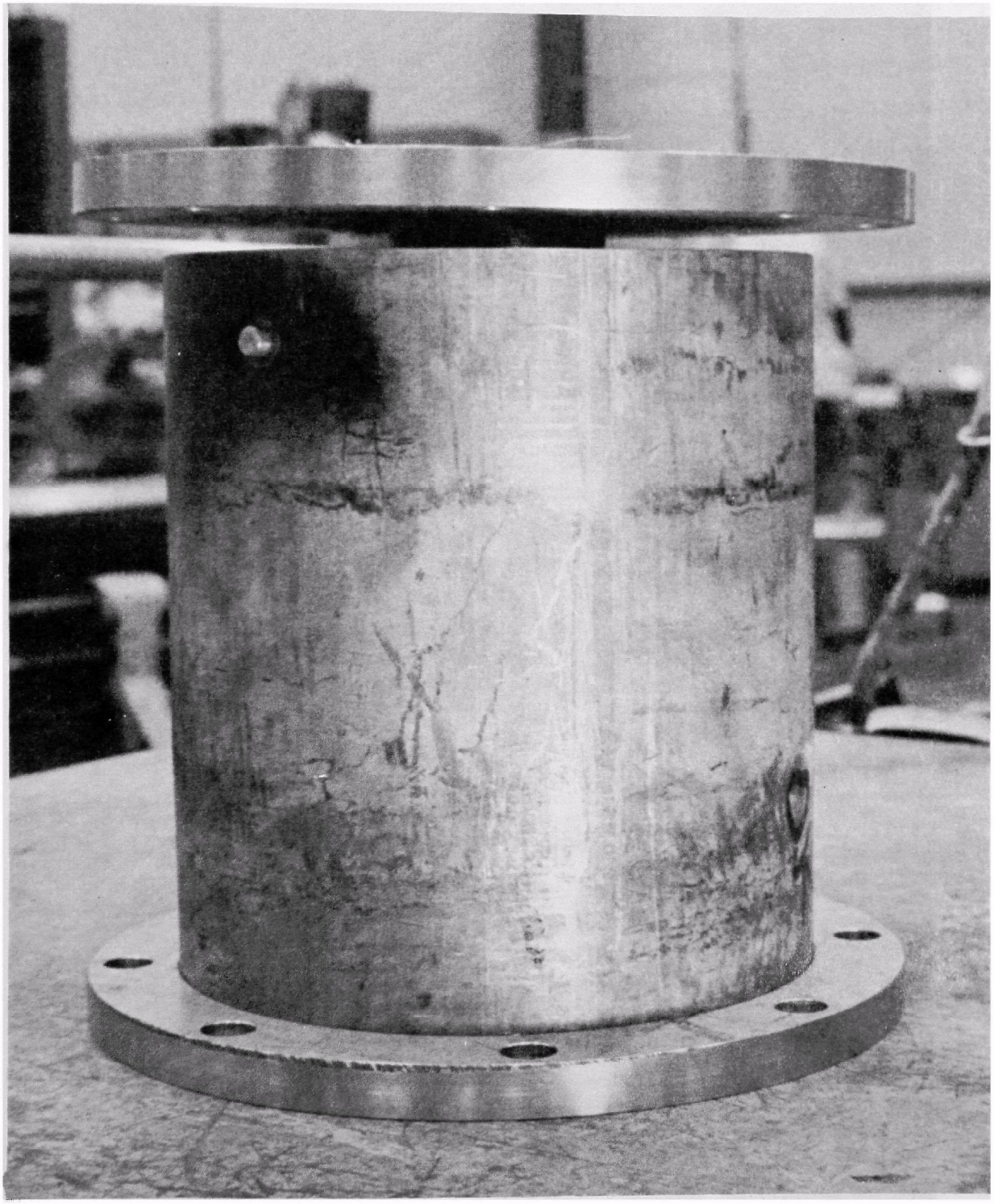

APPENDIX J-2

MODIFIED FILTER ELEMENT
FLUIDIZING GRID

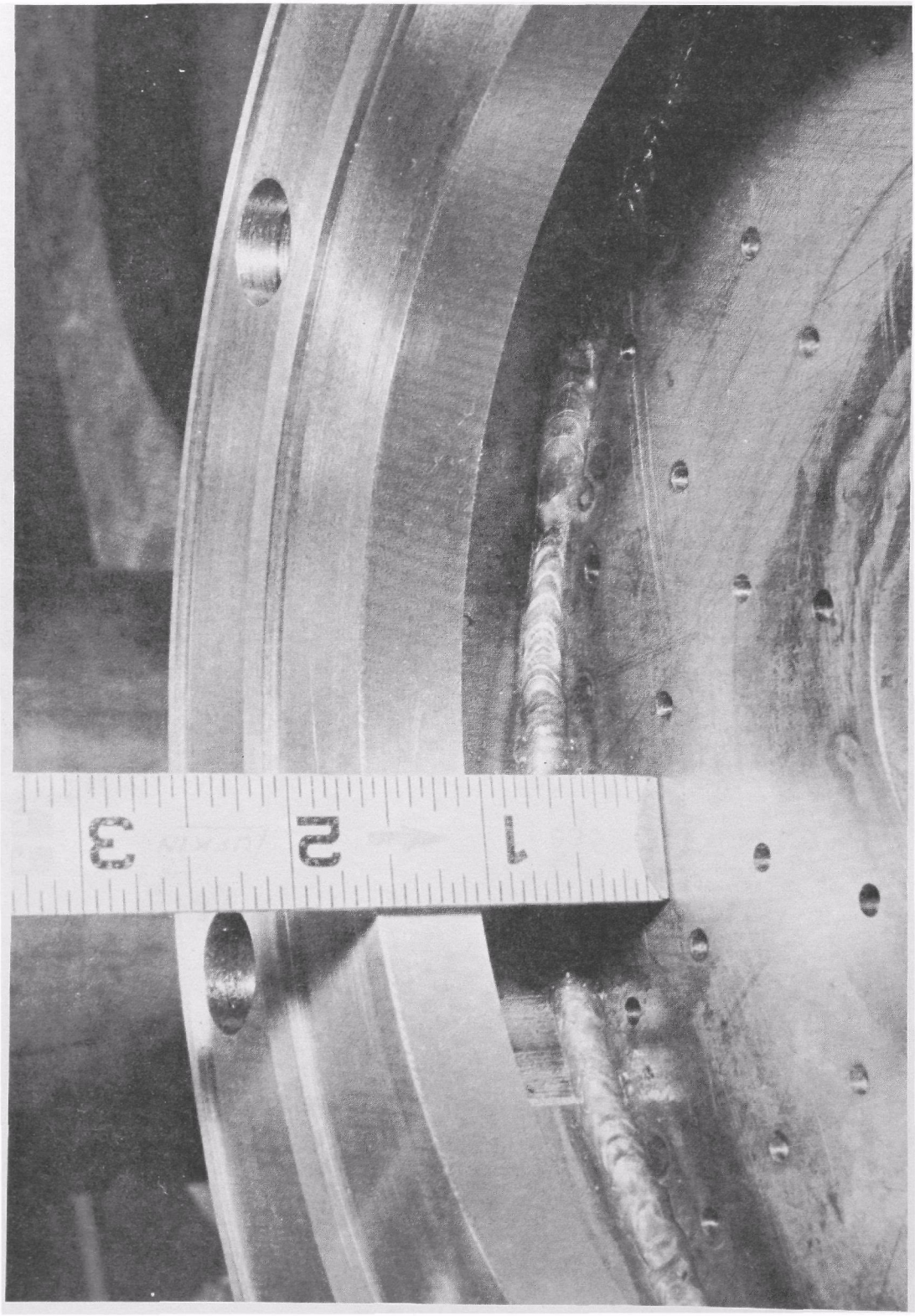

APPENDIX J-3

GBF PRESSURE VESSEL

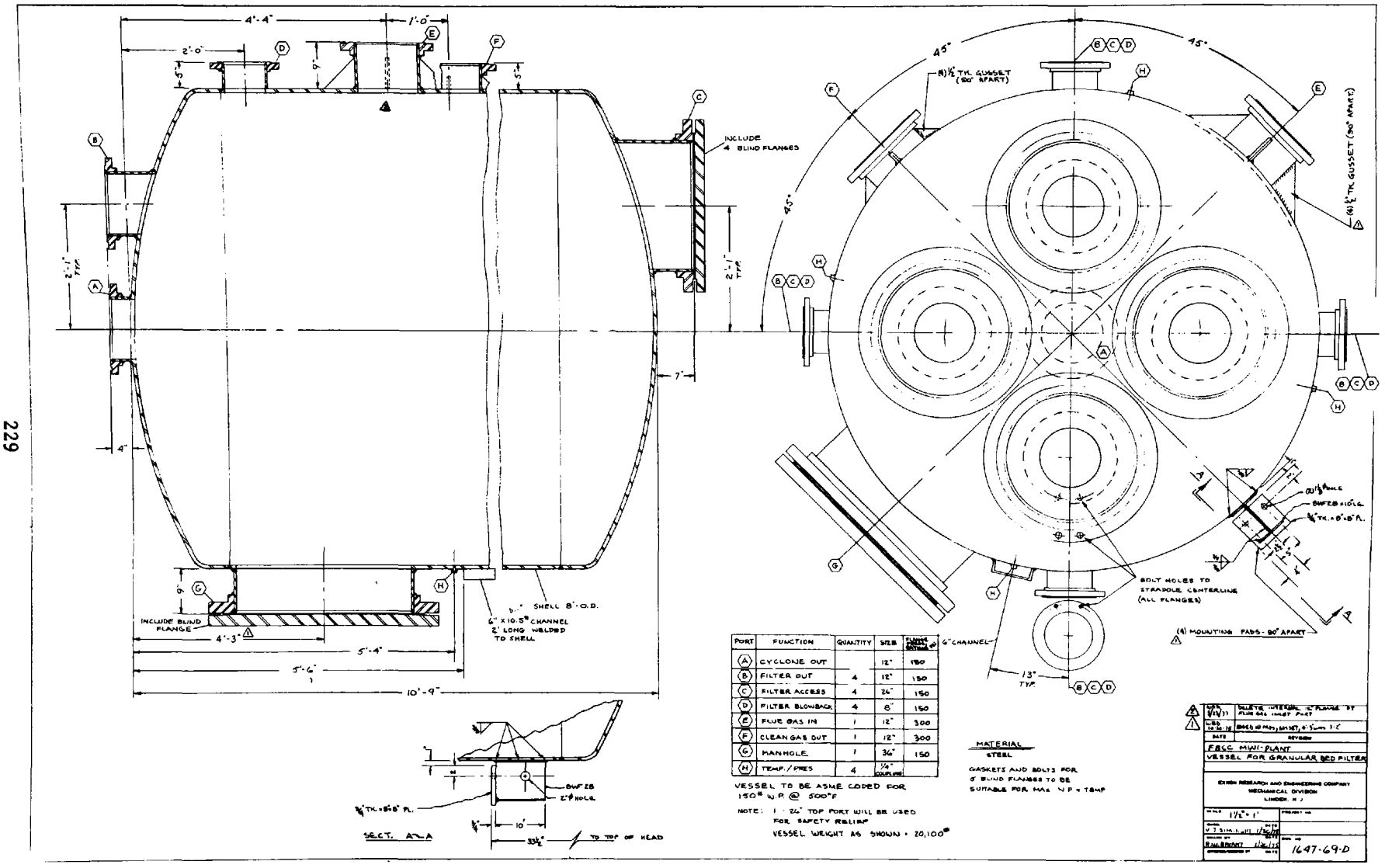

PORT	FUNCTION	QUANTITY	SIZE	FLANGE RATING & ORIENTATION
A	CYCLONE OUT		12"	150
B	FILTER OUT	4	12"	150
C	FILTER ACCESS	4	24"	150
D	FILTER BLOWBACK	4	8"	150
E	FLUE GAS IN	1	12"	300
F	CLEAN GAS OUT	1	12"	300
G	MANHOLE	1	36"	150
H	TEMP./PRES	4	1/4" COUPLING	

APPENDIX J-4

GBF PRESSURE VESSEL LINING

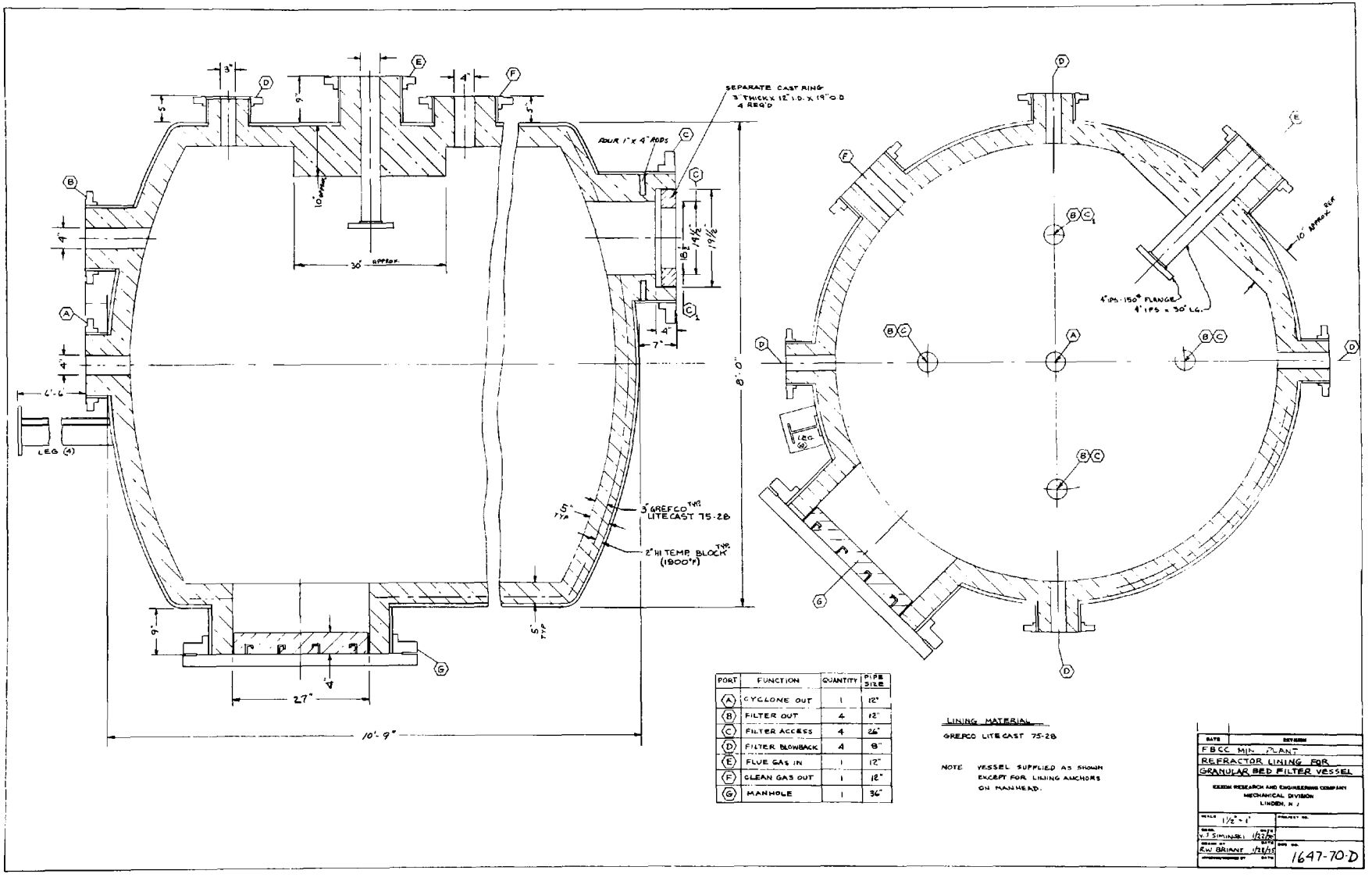

PORT	FUNCTION	QUANTITY	PIPE SIZE
A	CYCLONE OUT	1	12"
B	FILTER OUT	4	12"
C	FILTER ACCESS	4	26"
D	FILTER BLOWBACK	4	8"
E	FLUE GAS IN	1	12"
F	CLEAN GAS OUT	1	12"
G	MANHOLE	1	36"

APPENDIX J-5

FILTER PRESSURE VESSEL
(SIDE VIEW)

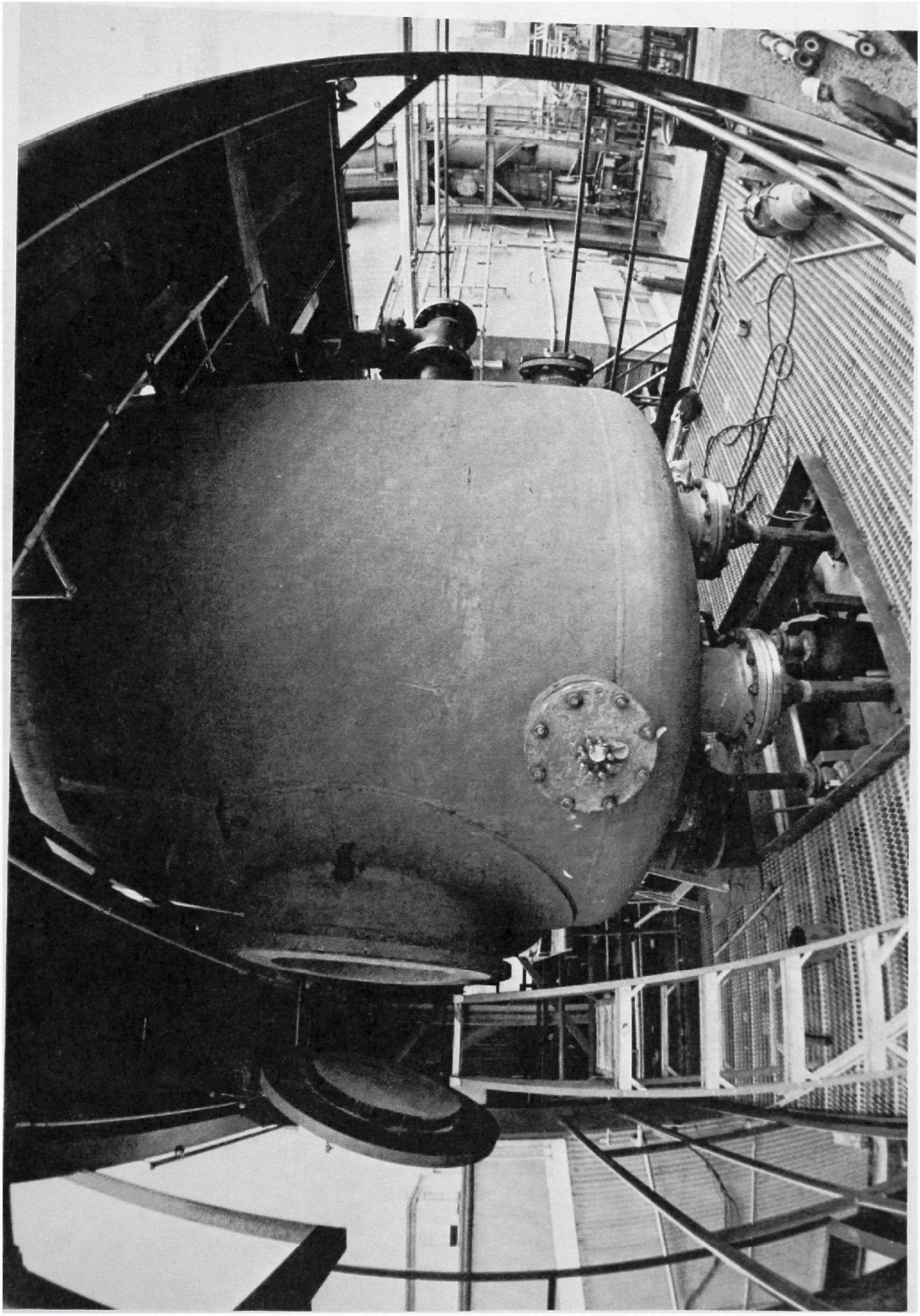

APPENDIX J-6

GBF PIPING ARRANGEMENT

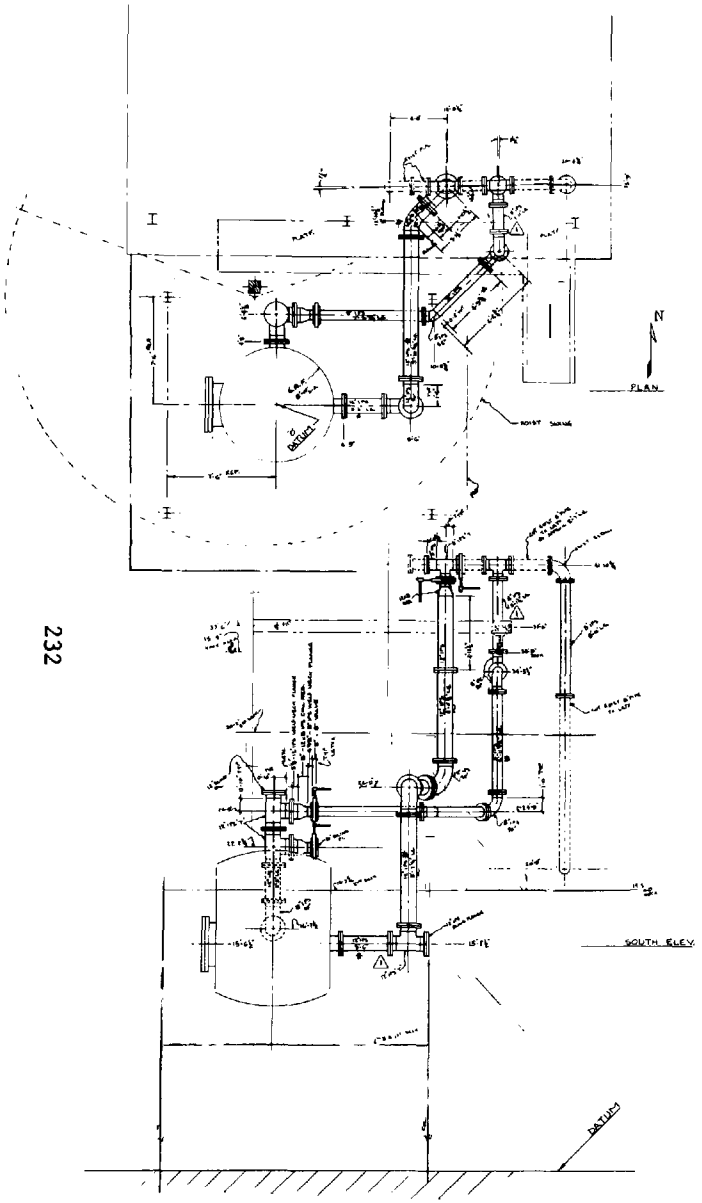

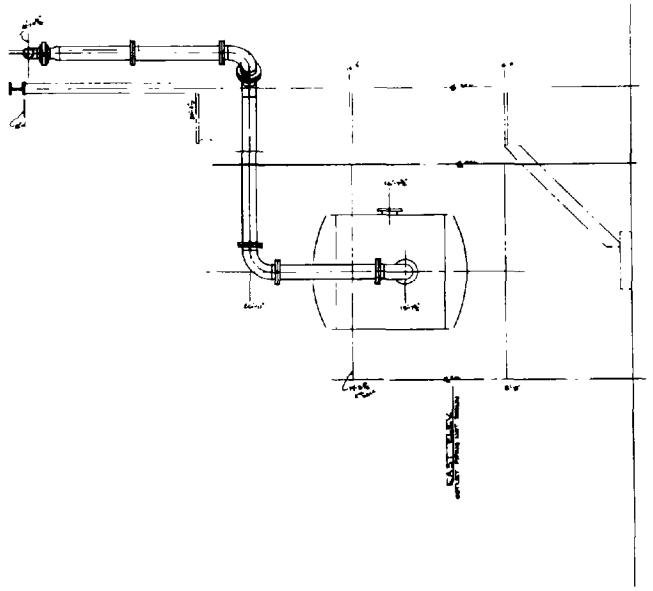

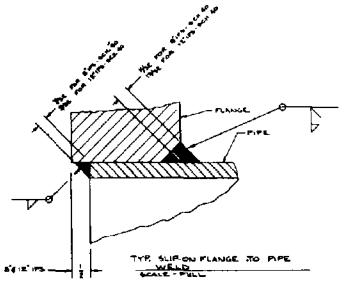

NOTE:-
1. PIPE LGTH SHOWN WITH * TO BE CHECKED BEFORE CUTTING IN FIELD
2. PIPE LGTH FROM FLANGE FACE TO FLANGE FACE UNLESS OTHERWISE NOTED.
3. MATL - FLANGES, FITTINGS & PIPE TO BE CARBON STL.
4. FLANGES - ANSI 150 RAISED FACE
5. FITTINGS & PIPE - SCHDLE 80
6. SLIP-ON FLANGES USED ON ALL PIPE CONN.
7. WELDING NECK FLANGES USED ON ALL FITTINGS
8. ALL ELBOWS TO BE LONG RADIUS.

PIPING	DIA.	
GRANULAR BED FILTER		
FBCC - MINI PLANT		

APPENDIX J-7

PREHEAT BURNER SYSTEM SCHEMATIC

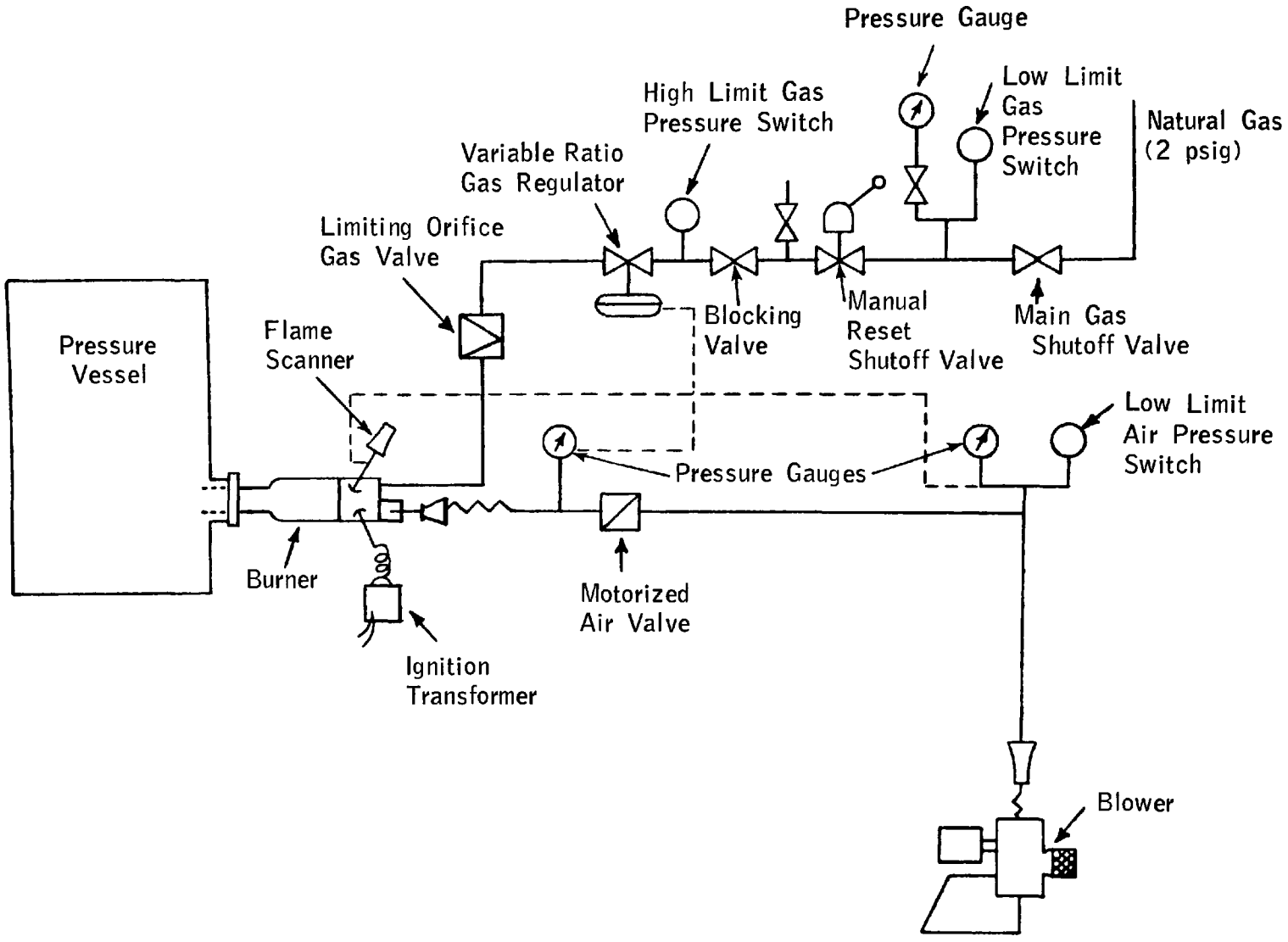

APPENDIX J-8

GRANULAR BED FILTER BLOW BACK SYSTEM FLOW SCHEMATIC

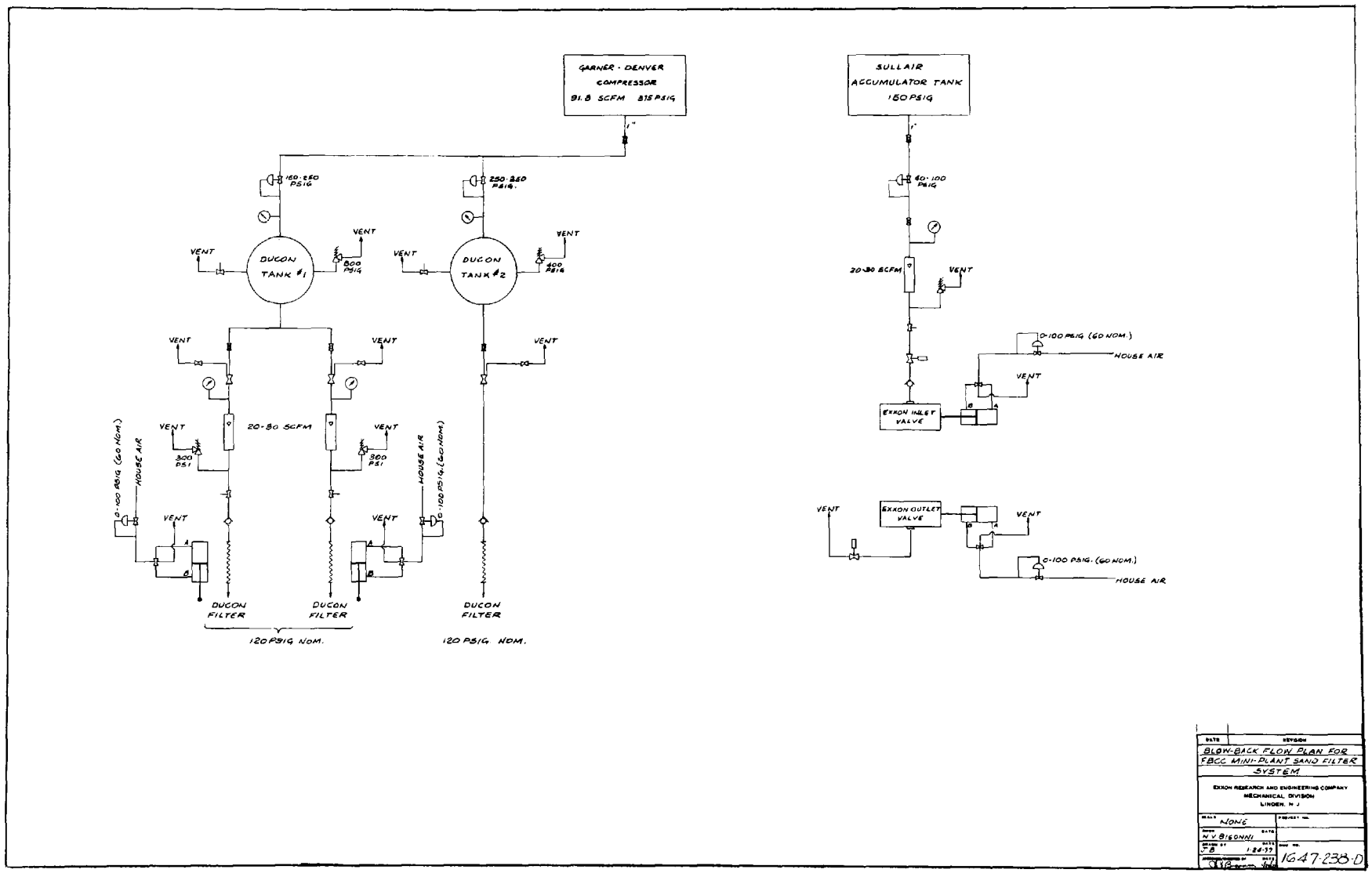

TECHNICAL REPORT DATA
(Please read Instructions on the reverse before completing)

1. REPORT NO. EPA-600/7-78-069	2.	3. RECIPIENT'S ACCESSION NO.
4. TITLE AND SUBTITLE Miniplant Studies of Pressurized Fluidized-bed Coal Combustion: Third Annual Report		5. REPORT DATE April 1978
		6. PERFORMING ORGANIZATION CODE
7. AUTHOR(S) R. C. Hoke, R. R. Bertrand, M. S. Nutkis, L. A. Ruth, M. W. Gregory, E. M. Magee, M. D. Loughnane, R. J. Madon, A. R. Garabrant, and M. Ernst		8. PERFORMING ORGANIZATION REPORT NO.
9. PERFORMING ORGANIZATION NAME AND ADDRESS Exxon Research and Engineering Company P.O. Box 8 Linden, New Jersey 07036		10. PROGRAM ELEMENT NO. EHE623A
		11. CONTRACT/GRANT NO. 68-02-1312
12. SPONSORING AGENCY NAME AND ADDRESS EPA, Office of Research and Development Industrial Environmental Research Laboratory Research Triangle Park, NC 27711		13. TYPE OF REPORT AND PERIOD COVERED Annual; 8/76 - 8/77
		14. SPONSORING AGENCY CODE EPA/600/13

15. SUPPLEMENTARY NOTES IERL-RTP project officer is D. Bruce Henschel, Mail Drop 61, 919/541-2825. EPA-600/7-76-011 and EPA-600/7-77-107 are earlier annual reports.

16. ABSTRACT The report presents further results of studies of the environmental aspects of the pressurized fluidized-bed coal combustion process, using the 218 kg coal/hr 'miniplant' continuous-combustion/sorbent-regeneration system (0.63 MW equivalent), and a 13 kg coal/hr bench-scale system. Previous combustion studies on the miniplant combustor were extended to investigate emissions of SO2, SO3, NOx, and particulates during combustion of a high-sulfur coal, and with the use of precalcined limestone as the SO2 sorbent. Percentage SO2 removals obtained with the high-sulfur coal were similar to earlier ones with intermediate-sulfur coal. Precalcined limestone proved to be as effective as dolomite (on a Ca/S molar basis) in removing SO2. The performance of the miniplant regenerator was demonstrated in an uninterrupted 125-hr run with continuous circulation of sorbent between the combustor and the regenerator. A granular bed filter for high temperature/pressure flue gas particulate removal was installed on the miniplant: initial shakedown was completed with a 24-hr continuous run. Sampling was completed on the miniplant combustor for comprehensive analysis of emissions.

17. KEY WORDS AND DOCUMENT ANALYSIS

a. DESCRIPTORS		b. IDENTIFIERS/OPEN ENDED TERMS	c. COSATI Field/Group	
Air Pollution	Limestone	Air Pollution Control	13B	08G
Coal	Sorption	Stationary Sources	21D	07D
Combustion	Regeneration	Particulate	21B	
Fluidized Bed	Sulfur Oxides			07B
Processing	Nitrogen Oxides		13H,07A	
Pressurizing	Dust			11G

18. DISTRIBUTION STATEMENT Unlimited	19. SECURITY CLASS *(This Report)* Unclassified	21. NO. OF PAGES 234
	20. SECURITY CLASS *(This page)* Unclassified	22. PRICE

EPA Form 2220-1 (9-73)