EPA

United States Environmental Protection Agency

Office of Reseach and Development

Industrial Environmental Research Laboratory
Research Triangle Park, North Carolina 27711

EPA-600/7-77-009

January 1977

PROCEDURES MANUAL FOR ENVIRONMENTAL ASSESSMENT OF FLUIDIZED-BED COMBUSTION PROCESSES

Interagency
Energy-Environment
Research and Development
Program Report

RESEARCH REPORTING SERIES

Research reports of the Office of Research and Development, U.S. Environmental Protection Agency, have been grouped into seven series. These seven broad categories were established to facilitate further development and application of environmental technology. Elimination of traditional grouping was consciously planned to foster technology transfer and a maximum interface in related fields. The seven series are:

1. Environmental Health Effects Research
2. Environmental Protection Technology
3. Ecological Research
4. Environmental Monitoring
5. Socioeconomic Environmental Studies
6. Scientific and Technical Assessment Reports (STAR)
7. Interagency Energy-Environment Research and Development

This report has been assigned to the INTERAGENCY ENERGY-ENVIRONMENT RESEARCH AND DEVELOPMENT series. Reports in this series result from the effort funded under the 17-agency Federal Energy/Environment Research and Development Program. These studies relate to EPA's mission to protect the public health and welfare from adverse effects of pollutants associated with energy systems. The goal of the Program is to assure the rapid development of domestic energy supplies in an environmentally--compatible manner by providing the necessary environmental data and control technology. Investigations include analyses of the transport of energy-related pollutants and their health and ecological effects; assessments of, and development of, control technologies for energy systems; and integrated assessments of a wide range of energy-related environmental issues.

REVIEW NOTICE

This report has been reviewed by the participating Federal Agencies, and approved for publication. Approval does not signify that the contents necessarily reflect the views and policies of the Government, nor does mention of trade names or commercial products constitute endorsement or recommendation for use.

This document is available to the public through the National Technical Information Service, Springfield, Virginia 22161.

EPA-600/7-77-009
January 1977

PROCEDURES MANUAL FOR ENVIRONMENTAL ASSESSMENT OF FLUIDIZED-BED COMBUSTION PROCESSES

by

H.I. Abelson and W.A. Löwenbach

The Mitre Corporation
Metrek Division
McLean, Virginia 22101

Contract No. 68-02-1859, Task 7
Program Element No. EHB536

EPA Project Officer: W.B. Kuykendal

Industrial Environmental Research Laboratory
Office of Energy, Minerals, and Industry
Research Triangle Park, NC 27711

Prepared for

U.S. ENVIRONMENTAL PROTECTION AGENCY
Office of Research and Development
Washington, DC 20460

ABSTRACT

This document describes recommended procedures for sampling and analysis, for eventual use by source testing contractors, in support of the environmental assessment of fluidized-bed combustion (FBC) technology. A phased strategy, involving two separate and distinct levels of sampling and analysis is employed. Proposed generic units and corresponding case study units for the following process configurations are addressed:

I. Atmospheric FBC of Coal.
II. Pressurized, Combined Cycle FBC of Coal.
III. Pressurized Combined Cycle FBC of Coal (Adiabatic Combustor).
IV. Chemically Active Fluid Bed (CAFB) Gasification of Residual Oil.

In addition, a compendium of method options describing the sampling and analytical state-of-the art is presented.

This report was submitted in fulfillment of Task Order No. 7 of Contract No. 68002-1859 by the MITRE Corporation, under the sponsorship of the U.S. Environmental Protection Agency. This report covers a period from September 1975 to November 1976, and work was completed as of November 1976.

CONTENTS

Abstract ii
Figures vi
Tables viii
Acknowledgement xi

Introduction 1

Chapter 1 - FBC Background 4
Process Descriptions and Flow Sheets 4
General Information 4
Category I - Atmospheric FBC of Coal 6
Generic 6
Case study - PER (Alexandria) Unit 9
Category II - Pressurized, Combined Cycle
FBC of Coal 9
Generic 9
Case Study - Exxon Miniplant 12
Category III - Pressurized, Combined Cycle
FBC of Coal (adiabatic combustor) 12
Generic 12
Case study - Combustion Power Co. PDU-400 .15
Category IV - Chemically Active Fluid Bed
(CAFB) Gasification of Residual Oil 15
Generic 15
Case study - Esso, Ltd., CAF B UNIT
(Abingdon, U.K.). 15
Sorbent Regeneration and Sulfur Recovery . .19
Introduction 19
Atmospheric FBC Systems (Category I) . . .19
Pressurized FBC Systems (Categories II
and III) 21
CAFB Systems (Category IV) 21
FBC System Operating Characteristics 24
Introduction 24
Fuel Types 24
Sorbent Types 24
Modes of Operation 25
Primary FBC System Variables 25
Combustor Steam Tube Arrangement 27

Chapter 2 - Sampling and Analysis Program Strategy 29
Introduction 29
A Phased Approach to Sampling and Analysis . . 29
Process Development and Environmental Assessment 30
Selection of FBC System Streams for Sampling . 36
Generic units 36
Case study units 40
Physical Characteristics of Sampled Streams . . 40
Areas of Analysis 45
Introduction 45
Organic compounds 45
Inorganic gases 50
Trace elements 51
Anions 51
Standard water analysis 51
Physical characterization of solids 53
Bioassay 53

Chapter 3 - Recommended Sampling and Analysis Procedures for FBC Processes 54
Introduction 54
General Sampling Considerations 54
Pre-test procedures 54
Sample size 55
Sample handling 55
Recommended Sampling Procedures for Generic Units 56
Introduction 56
Particulate sampling 56
Gas sampling 60
Liquid sampling 61
Solid sampling 65
Air-borne fugitive sampling 67
Flow measurement 102
Recommended Sampling Procedures for Case Study Units 103
Recommended Analytical Procedures 110
Introduction 110
Inorganic gas analysis 111
Organic analysis 124
Elemental analysis 142
Anion analysis 168
Standard water analysis 180
Fuel analysis 190
Physical characterization of solids 198

Chapter 4 - Procedures for Assessment of Water-Borne Fugitives from FBC Processes 202
Introduction 202
Generation and Transport of Leachates in the Environment 202
Sources of Water Bome Fugitives from Generic FBC Processes 204
Leaching Mechanisms and Transport Modeling . .206
Survey of Leachate Testing Techniques 210
Recommended Procedures for Level 1 Assessment .244
Recommended Procedures for Level 2 Assessment .244

Chapter 5 - Sampling and Analysis Costs 246
Introduction 246
Sampling Cost Data 247
Analytical Cost Data 249
Additional Costs 255
Assessment Costs for Generic FBC Processes . .255

References 257

Appendix - Compendium of Sampling and Analytical Method Options A1

LIST OF FIGURES

Figure Number		Page
1	Generic process flow sheet for Category I - Atmospheric FBC of coal	7
2	Generic coal preparation and sorbent preparation operations	8
3	Case study unit I - Pope, Evans and Robbins (Alexandria, VA) test system schematic	10
4	Generic process flow sheet for Category II - Pressurized, combined cycle FBC of coal	11
5	Case study unit II - EXXON Miniplant schematic	13
6	Generic process flow sheet for Category III - Pressurized, combined cycle FBC of coal (adiabatic combustor)	14
7	Case study unit III - Combustion Power Company PDU-400 pilot plant schematic	16
8	Generic process flow sheet for Category IV - CAFB gasification of residual oil	17
9	Case study unit IV - ESSO (Abindgon U.K.) CAFB pilot plant schematic	18
10	Generic sorbent regeneration and sulfur recovery operations for atmospheric FBC systems	20
11	Generic sorbent regeneration and sulfur recovery operations for pressurized FBC systems	22
12	Generic sorbent regeneration and sulfur recovery operations for CAFB residual oil gasification systems	23
13	Sampling and analysis - Progression from pilot to demonstration phase	37

LIST OF FIGURES (concluded)

Figure Number		Page
14	Influents and effluents - generic FBC processes	42
15	Areas of analysis - solid samples	46
16	Areas of analysis - liquid samples	47
17	Areas of analysis - gas samples	48
18	Areas of analysis - particulate samples	49
19	Occurrence frequency of elements in 13 raw coals as determined by spark-source mass spectrometry	52
20	Concentration range of elements in 13 raw coals analyzed by spark-source mass spectrometry	52
21	Sample handling and transfer - SASS nozzle, probe, cyclones, and filter	58
22	Sample handling and transfer - SASS nozzle, probe, cyclones, and filter (continued)	59
23	Sample handling and transfer - SASS XAD-2 Module	63
24	Sample handling and transfer - SASS impingers	64
25	Overall analytical scheme - Level 1	114
26	Overall analytical scheme - Level 2	116
27	Level 1 organic analysis scheme	125
28	Level 1 inorganic analysis scheme	143
29	Sample preparation for Level 1 elemental analysis	144
30	Sample preparation and analysis of Hg, Sb, and As - Level 1	146
31	Inorganic compound characterization scheme - Level 2	178
32	Schematic of infiltration/runoff problem	203
33	Analytical unit cost data - Level 1	250
34	Analytical unit cost data - Level 2	252

LIST OF TABLES

Table Number		Page
1	Stream Designations for Generic Units (Categories I through IV)	5
2	Example Values of Several Prime FBC System Variables	28
3	Characteristics of Level 1 and Level 2 Sampling and Analysis	31
4	Phases of Process Evolution - Characteristics and Sampling/Analysis Strategy	35
5	Stream Selection for Sampling and Analysis (Process Categories I through IV)	39
6	Non-Selected Stream Summary	41
7	Physical Characteristics of Sampled Streams	43
8	Sample Size Requirements - Level 1	55
9	SASS Train Impinger System Reagents	62
10	Preservation of Liquid/Slurry Samples	66
11	Summary of Recommended Sampling Procedures for Generic FBC Processes (Categories I through IV)	70
12	Summary of Recommended Sampling Procedures for Case Study Unit I (PER-Alexandria, Va.)	104
13	Summary of Recommended Sampling Procedures for Case Study Unit II (EXXON Miniplant)	106
14	Summary of Recommended Sampling Procedures for Case Study Unit III (CPC-PDU-400)	108

LIST OF TABLES (continued)

Table Number		Page
15	Summary of Recommended Procedures for Inorganic Gas Analysis	118
16	Summary of Recommended Procedures for Organic Analysis	130
17	Summary of Recommended Procedures for Elemental Analysis	150
18	Summary of Recommended Procedures for Anion Analysis	170
19	Summary of Recommended Procedures for Standard Water Analysis	182
20	Summary of Recommended Procedures for Fuel Analysis	192
21	Summary of Recommended Procedures for Physical Characterization of Solids	200
22	Summary of Generic FBC Streams with Potential Leaching Impact	207
23	Summary of Shake Test Techniques	212
24	The Saturation Test	216
25	Summary of Column Test Techniques	218
26	Summary of Field Test Cell Techniques	226
27	Summary of Current and Past Efforts in Leachate Testing	232
28	Sampling Cost Data	248
29	Site Preparation Cost Data	249
30	Analytical Cost Data	254
31	Total Assessment Costs for Generic FBC Processes	256

LIST OF TABLES (concluded)

Table Number		Page
A-1	Method Options for Particulate Sampling	A-2
A-2	Method Options for Gas Sampling	A-24
A-3	Method Options for Liquid Sampling	A-64
A-4	Method Options for Solid Sampling	A-68
A-5	Method Options for Air-borne Fugitive Sampling	A-76
A-6	Method Options for Inorganic Gas Analysis	A-82
A-7	Method Options for Organic Analysis	A-90
A-8	Method Options for Elemental Analysis - Spark Source Mass Spectrometry	A-98
A-9	Method Options for Elemental Analysis - Isotope Dilution Mass Spectroscopy	A-100
A-10	Method Options for Elemental Analysis - Neutron Activation Analysis	A-102
A-11	Method Options for Elemental Analysis - Instrumental Photon Activation Analysis	A-104
A-12	Method Options for Elemental Analysis - X-ray Fluorescence	A-106
A-13	Method Options for Elemental Analysis - Proton Induced X-ray Analysis	A-110
A-14	Method Options for Elemental Analysis - Optical Emission Spectroscopy	A-116
A-15	Method Options for Elemental Analysis - Atomic Absorbance, Atomic Fluorescence, Atomic Emission	A-118
A-16	Method Options for Anion Analysis	A-130
A-17	Method Options for Standard Water Analysis	A-134
A-18	Method Options for Fuel Analysis	A-138
A-19	Method Options for Physical Characterization of Solids	A-142
A-20	Method Options for Flow Measurement	A-148

ACKNOWLEDGMENTS

This work was conducted under the technical direction of Mr. William Kuykendal and administrative direction of Dr. L. Johnson, Project Officer at EPA's Industrial Environmental Research Laboratory, Research Triangle Park, North Carolina. The Environmental Planning and Engineering Department, METREK Division of The MITRE Corporation, McLean, Virginia, was responsible for the performance of this task. Dr. H. I. Abelson was the Project Manager.

Special credit is given to Mssrs. J. A. King, D. Martin, J. S. Gordon and Dr. H. Mahar of MITRE as well as to Mr. R. Tussey of Kenvirons, Inc., Frankfort, Kentucky, for their valuable assistance in preparing this document. Acknowledgement is also given to Mssrs. W. Kuykendal, D. B. Henschel, W. Steen, J. A. Dorsey and Dr. R. M. Statnick of EPA-IERL-RTP for their many helpful suggestions during the course of this effort as well as to Dr. J. M. Allen of Battelle Columbus Laboratories and Dr. C. A. Flegal of TRW, Redondo Beach, California, for their valuable comments and criticisms.

Finally, the many helpful suggestions from the following individuals are greatly appreciated: Dr. N. Schomaker and Mr. D. Sanning of EPA-MERL-Cincinnati; Mr. R. Stone of Ralph Stone and Co., Inc., Los Angeles, California; Dr. R. Hoke and Mr. M. Nutkis of EXXON Research and Engineering, Linden, New Jersey; Dr. J. Mahlock of USACE, Vicksburg, Mississippi; Mr. R. Chapman of EPA-IERL-Cincinnati, and, Drs. R. Rossi and J. Rossoff of The Aerospace Corp., El Segundo, California.

INTRODUCTION

NATIONAL AND EPA FLUIDIZED-BED COMBUSTION PROGRAMS

Fluidized-bed combustion (FBC) is an available technology which, when implemented on a commercial scale, can greatly increase the utility of coal, including high-sulfur coals and low-rank or problem fuels, as an environmentally acceptable source of energy. Therefore, a National FBC Research, Development and Demonstration Program has in recent years been instituted in the U.S. Energy Research and Development Administration. The intent of this multi-agency government and industry co-sponsored program is to advance FBC technology to a level of commercial acceptability such that combustion equipment vendors can satisfy marketplace demand with equipment that is capable of meeting user requirements and, at the same time, function in an environmentally acceptable manner.

One of the roles of EPA in the National FBC Program involves the planning and management of a comprehensive program to environmentally characterize this developing energy technology through the acquisition of necessary environmental data for all proposed FBC process configurations, over a full range of feed parameters and operating/design variables. It is intended that the data will be acquired on a suitable experimental scale such that the environmental impact of future commercial units can be assessed, and on a time schedule compatible with the hardware development schedule published in the National FBC Plan (as well as with the plant construction schedules on EPA's own oil gasification program). The need for a cost-and information-effective sampling and analysis program for environmental data acquisition has led to the generation of the present document.

OBJECTIVES AND SCOPE

The primary purpose of this document is to provide recommended procedures for sampling and analysis, for eventual use by source testing contractors, in support of the environmental assessment of FBC technology. Four different process configurations or categories, each a candidate for commercialization, are addressed in the present effort.

I. Atmospheric FBC of Coal
II. Pressurized, Combined Cycle FBC of Coal
III. Pressurized, Combined Cycle FBC of Coal (Adiabatic Combustor)
IV. Chemically Active Fluid Bed (CAFB) Gasification of Residual Oil

In each of these categories attention is focused on a proposed generic process configuration which is intended to be representative of a future

commercialized unit, (subject to our ability to forecast technological developments). To enable the near term implementation of an environmental assessment program for presently existing FBC facilities, procedures are, in addition, specified for a selected case study unit in each category. Since no commercial or demonstration units are presently in operation domestically or abroad, case study selection is limited to pilot facilities.

To enable the recommendation of sampling and analysis procedures appropriate to the environmental assessment of FBC technology, a comprehensive survey and subsequent evaluation of applicable sampling and analytical techniques, ranging from Federal Register methods through new techniques presently under development, were performed. The data gathered during this survey are included in the appendix of this document as a compendium of applicable method options. This compendium serves to identify the current sampling and analytical state-of-the-art.

To provide an environmental assessment program that is both cost-and information-effective, a phased strategy involving two separate and distinct levels of sampling and analysis is employed. A broad screening phase (Level 1) characterizes, in a semi-quantitative manner, the pollutant potential of all influents and effluents of a process. The Level 1 effort is followed by a second phase (Level 2), which is typified by the accurate, quantitative identification of specific pollutant classes/species in specific streams and designed on the basis of the Level 1 output. Two parallel sets of recommended sampling and analytical procedures corresponding to both assessment phases are therefore presented in this document. Estimates of assessment costs for each phase are also provided.

An "end-of-pipe" approach to sampling and analysis has been adopted for the present effort; considerations relating to the transformation, transport, and ultimate fate of pollutants discharged to the various media are, in general, outside the scope of effort. As an exception, however, coverage is given to methods for assessing the impact of leaching from FBC solid residues.

ORGANIZATION OF DOCUMENT

This document has been divided into five chapters and an appendix. The function of each document segment is discussed in the following paragraphs.

The intent of Chapter 1 is twofold; to provide the reader with some general background on fluidized-bed combustion technology and to describe the four FBC process configurations under consideration. Flow sheets for generic and case study units are presented and unit processes and streams are identified. In addition, a discussion of the primary operating and design variables associated with FBC systems, as well as the scope of this document with respect to these variables, is provided.

Chapter 2 is concerned with the overall strategy to be employed in designing a sampling and analysis program for environmental assessment. Specifically, the following topics are addressed: characteristics of

the Level 1 - Level 2 phased approach; selection of FBC system streams for sampling; physical conditions associated with selected streams (for case study as well as generic units), and; areas of analysis to be addressed.

Chapter 3, comprising the "heart" of the document, presents recommended procedures for multi-media sampling and analysis of the FBC processes under consideration, for both the Level 1 and Level 2 efforts. The intent of this chapter is to recommend and highlight procedures rather than to provide detailed sets of instructions for sampling and analytical personnel to follow. For convenient reference to the rather large volume of material included, procedures have been summarized in tabular form.

Recommended analytical procedures are independent of process category and, by in large, sample type (e.g., solid, liquid, etc.). Accordingly, they are presented by analysis area (e.g., elemental analysis, organic analysis, etc.).

Sampling procedures for generic units are identical in all process categories (with some exceptions for the CAFB process) and are summarized according to stream category. Analysis areas applicable to each of the stream categories are listed so as to direct the reader to the appropriate analytical procedures.

A separate summary of sampling procedures is provided on a stream-by-stream basis for each case study unit. In many instances, procedures recommended for the case study facilities are identical to their generic counterparts. Discussions of general sampling and analytical considerations are also provided in this chapter.

Chapter 4 is concerned with methods to assess the impact of leaching which can result from the subsurface disposal and outdoor storage of FBC solid residues and feeds. A review of available methods for leachate assessment, including shake, column, and field test cell techniques, as well as a survey of current and past efforts in leachate/runoff testing are provided. In addition, leachate testing procedures appropriate to the Level 1 and Level 2 efforts are recommended.

The intent of Chapter 5 is to provide a mechanism for estimating assessment program implementation costs. Specifically, total cost estimates for sampling and analysis of generic FBC processes are presented, both for Level 1 and Level 2, using methodology and unit cost data developed previously by EPA contractors.

Finally, the appendix to the present document is a tabular compilation of multi-media sampling and analytical method options, and their associated characteristics, that may have application in the environmental assessment of FBC and other technologies. The intent is to summarize pertinent characteristics, advantages, and disadvantages of each method option. Key references have been included for each technique.

CHAPTER 1

FBC BACKGROUND

INTRODUCTION

The intent of this chapter is to provide the reader with some general background relating to fluidized-bed combustion technology as well as to describe the FBC process configurations under consideration, for which sampling and analytical procedures will be specified.

PROCESS DESCRIPTIONS AND FLOW SHEETS

General Information

The generic process flow sheets presented here for the FBC configurations under consideration represent projected commercialized processes. Each flow sheet has been divided into "operation blocks" and is addressed mainly to source assessment requirements. With few exceptions, the operations are common to all four configurations. Differences in design and operating conditions will be considered only insofar as they may affect sampling and analysis procedures.

For convenience, a common stream numbering system has been employed for the four process configurations. A legend describing each numbered stream is provided in Table 1. It should be noted that the generic process flow sheets are not intended to be detailed. They depict only those streams and operation blocks that are relevant to an environmental assessment or basic to an overall process description. The same stream numbering system has been employed on the flow diagrams for the case study units. There, however, only those streams selected for sampling and analysis have been indicated by number.

The selection of existing FBC facilities for case studies was based on several factors; representativeness of anticipated commercialized units, size, accessibility, and present operational status of the facilities. In the case of two process categories (pressurized-adiabatic combustor and CAFB), selection was limited to a single facility. Brief discussions of the four generic process configurations, a comparison with the specific units selected for case studies, and key references are provided in the following sections.

TABLE 1. STREAM DESIGNATIONS FOR GENERIC UNITS (CATEGORIES I THRU IV)

STREAM NO.	DESIGNATION
1	Stack Gas
2	Particulate Removal Discard
3	Bed Solids Discard (not on CAFB unit)
4	Particulate Removal Discard--Regeneration Operations
5	Other Effluents from Regeneration and Sulfur Recovery Operations
6	Blowdowns from Steam Turbine Cycle
7	Blowdown from Water Treatment Operations
8	Product from Sulfur Recovery (Sulfur or Sulfuric Acid)
9	Raw Fuel to Preparation
10	Raw Sorbent to Preparation
11	Intake Water to Treatment
12	Air to Combustor/Gasifier
13	Air/Steam to Regenerator
14	Prepared Fuel Feed to Combustor/Gasifier
15	Prepared Fuel Feed to Regenerator (not present on CAFB unit)
16	Start-Up Fuel Feed
17	Prepared Sorbent Feed to Combustor/Gasifier
18	Bed Solids to Regenerator
19	Flue Gas to Particulate Removal (product fuel gas from CAFB gasifier)
20	Makeup Water to Steam Turbine Cycle
21	Recycle from Particulate Removal
22	Recycle from Regeneration and Sulfur Recovery
23	Gas to Gas Turbine Inlet (pressurized and pressurized-adiabatic combustor units only)
24	Gas to Waste Heat Boiler (pressurized-adiabatic unit only)
25	Air to Steam Generator (CAFB unit only)
26	Fuel Gas Feed to Conventional Steam Generator (CAFB unit only)
27	Steam Generator Flue Gas to Particulate Removal (CAFB unit only)
28	Particulate Removal Discard (CAFB unit only)

Category I - Atmospheric FBC of Coal

Generic--

A schematic flow sheet for a generic atmospheric FBC unit is presented in Figure 1. Detailed process descriptions, developmental history, and on-going as well as anticipated studies of atmospheric fluidized-bed combustion are discussed in references 240 and 138.

Briefly, atmospheric fluidized-bed combustion occurs in the temperature range of 788-843°C (1450-1550°F) with excess air values of 15-25 percent, at normal atmospheric pressure. Steam produced in tube bundles and/or water walls located within the fluidized region is converted to electrical energy in a conventional steam turbine cycle.

Flue gas emissions of SO_2 are substantially reduced by having a limestone sorbent serve as the non-combustible bed material. NO_x emissions are lower than EPA allowables due to the relatively low combustion temperatures. Most of the ash present in the coal feed is normally elutriated from the bed and must be removed (along with attrited limestone and other particulates) prior to the release of flue gas to the atmosphere. Since this ash may be high in carbon content, its direct disposal would result in a lowered combustion efficiency. To remedy this problem, the atmospheric unit will employ a carbon burnup cell (CBC), a separate high-temperature, high-excess-air bed to which the collected ash is fed and combusted. Products from the CBC would then undergo an additional particulate removal operation prior to flue gas release to the atmosphere. Alternatively, reinjection of collected ash back into the combustor may be adopted to improve combustion efficiency. It should be noted that the "particulate removal operation" blocks indicated in the generic flow sheets are general and may include combinations of cyclones, filters, baghouses, precipitators, and other devices. Normally, a cyclone or series of cyclones is employed initially to remove coarse particles from the flue gas while final cleanup is accomplished by other methods.

The generic units under consideration are intended to be representative of anticipated commercialized systems and, as such, it is projected that there will be on-site fuel preparation, sorbent preparation, and sulfur recovery operations.

For the coal-fired systems (Categories I, II, and III), fuel preparation operations involve drying, size reduction,and size classification. From an environmental point of view, these operations are similar to the ones found in conventional combustion systems. Sorbent preparation for the four process configurations consists of size reduction and classification of raw material and likewise poses no new problems.

Projected generic coal and sorbent preparation operations are shown schematically in Figure 2. Raw coal undergoes a drying and size reduction operation prior to injection into the combustor and regenerator. The oversized fraction from the coal size reduction operation is recycled back while the undersized fraction and fines remain with the combustor/regenerator

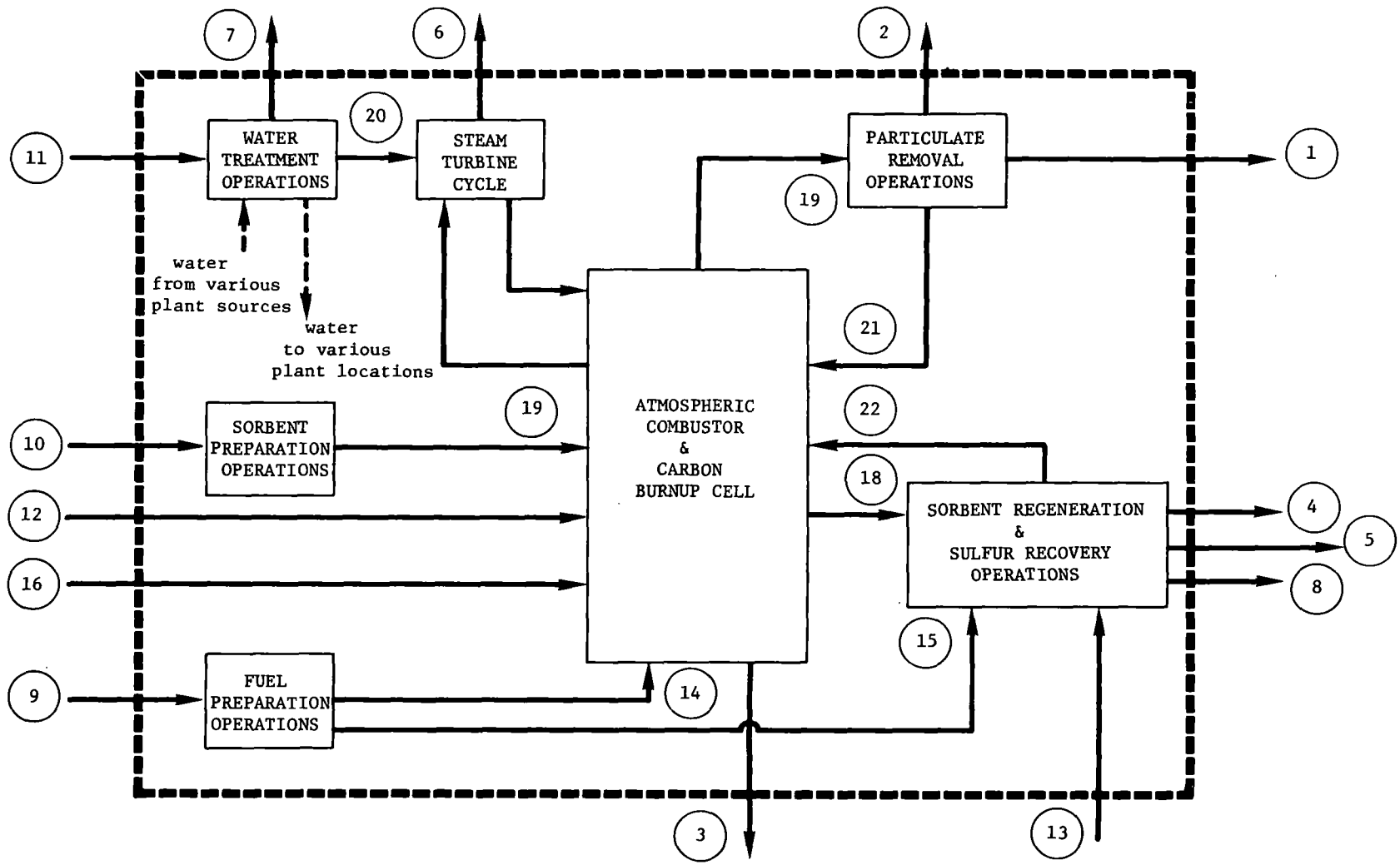

Figure 1. Generic process flow sheet for Category I—Atmospheric FBC of coal.

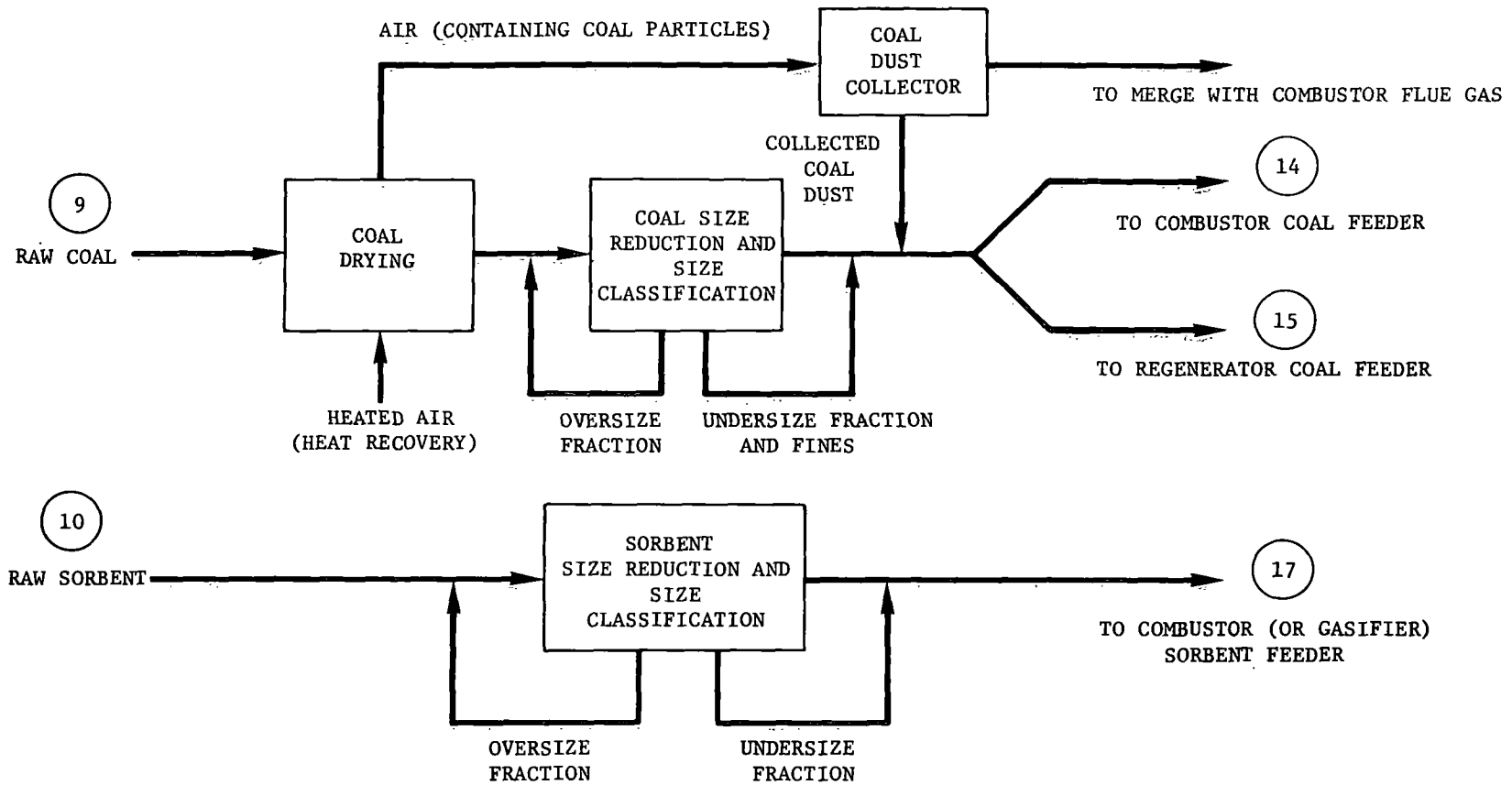

Figure 2. Generic coal preparation and sorbent preparation operations.

feed stream. An analogous situation occurs in the sorbent size reduction operation, as shown in the figure. The air exiting the coal drier contains entrained coal particles and is passed through a coal dust collector prior to merging with the combustor flue gas. The collected dust is routed to the combustor/regenerator feed stream. For the CAFB process (Category IV), maintaining the residual oil at a temperature suitable for transport to the gasifier constitutes the only fuel preparation operation. The coal and sorbent preparation operations as depicted in Figure 2 have no effluent waste streams associated with them.

It is anticipated that natural gas, propane, and distillate fuels will be employed for system start-up. No preparation operations are associated with these fuels.

Sorbent regeneration and sulfur recovery operations will be discussed in a later section.

Case Study - PER (Alexandria) Unit--

For FBC Category I, the Pope, Evans, and Robbins fluidized-bed module (FBM) pilot test system at Alexandria, Virginia, has been chosen for a case study in accordance with the selection bases outlined earlier. A schematic of this 0.5 MW unit is shown in Figure 3. Detailed descriptions of the FBM along with test data are provided in references 1 and 3.

Major deviations from the Category I generic unit include the absences of a sulfur recovery operation and steam turbine cycle (some steam is fed to a water heater, condensed and recycled to the boiler; the remainder is vented to the atmosphere). The regeneration operation built in 1971 is presently decommissioned (a once-through system is used). Coal size reduction is carried out at the facility while sorbent is purchased pre-sized and stored on site.

Category II - Pressurized, Combined Cycle FBC of Coal

Generic--

A schematic flow sheet for a generic, pressurized, combined-cycle unit is presented in Figure 4. Detailed process descriptions, developmental history, and on-going as well as anticipated studies on pressurized FBC units are discussed in references 108 and 177.

Combustion again occurs in a fluidized bed of sorbent, with excess air ranges similar to those found in the atmospheric boiler and at temperatures approximately 93°C (200°F) higher. Pressure within the combustor, however, is maintained at a design value of 4 to 10 atmospheres, resulting in a dramatic reduction in combustor size requirements and thus, combustor cost. In addition to the energy conversion achieved through a conventional steam turbine cycle driven by steam produced in the bed tubes, the hot high-pressure flue gas exiting from the combustor, after being cleansed of particulates,

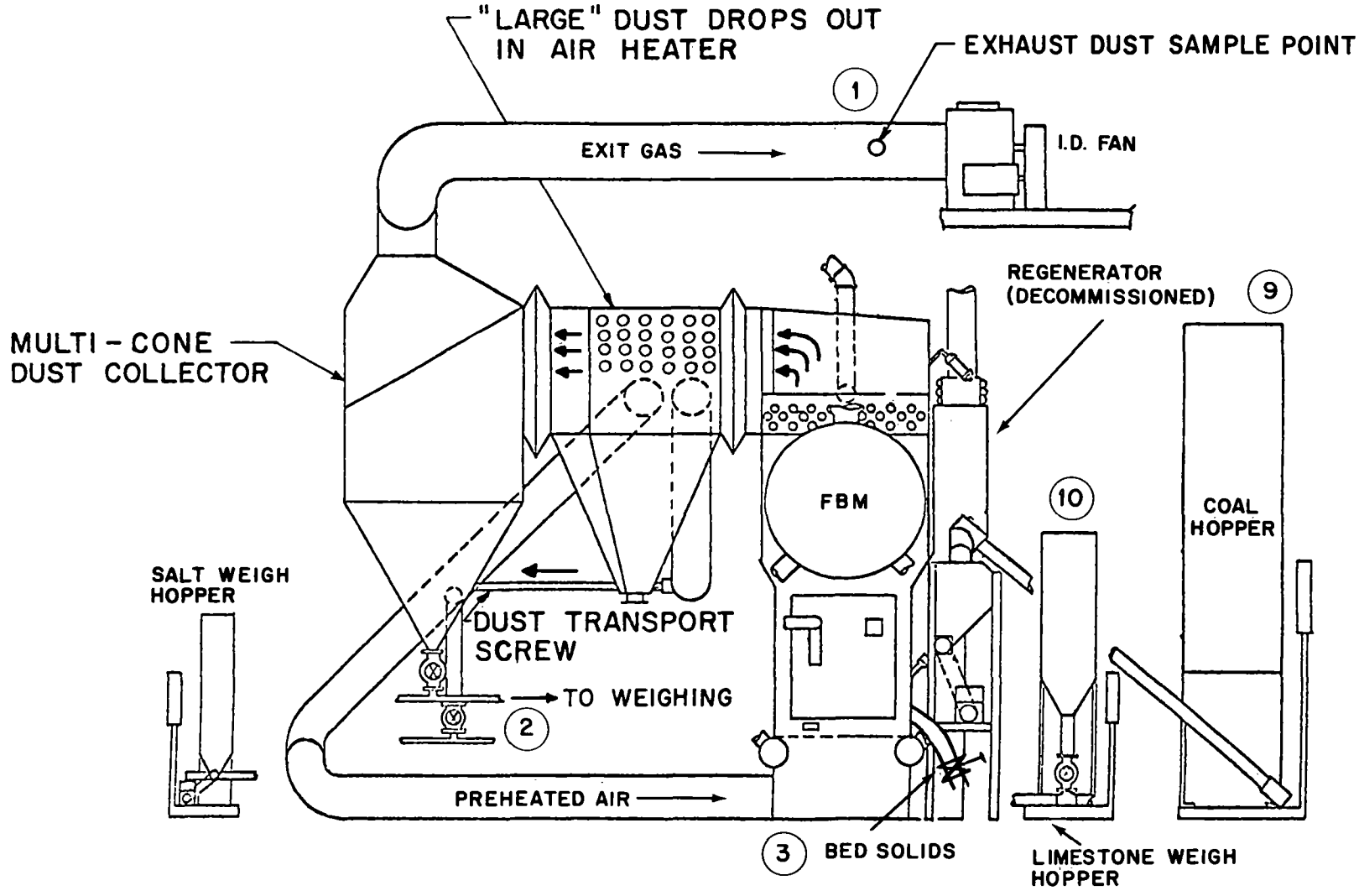

Figure 3. Case study unit I—Pope, Evans and Robbins (Alexandria, VA) test system schematic.

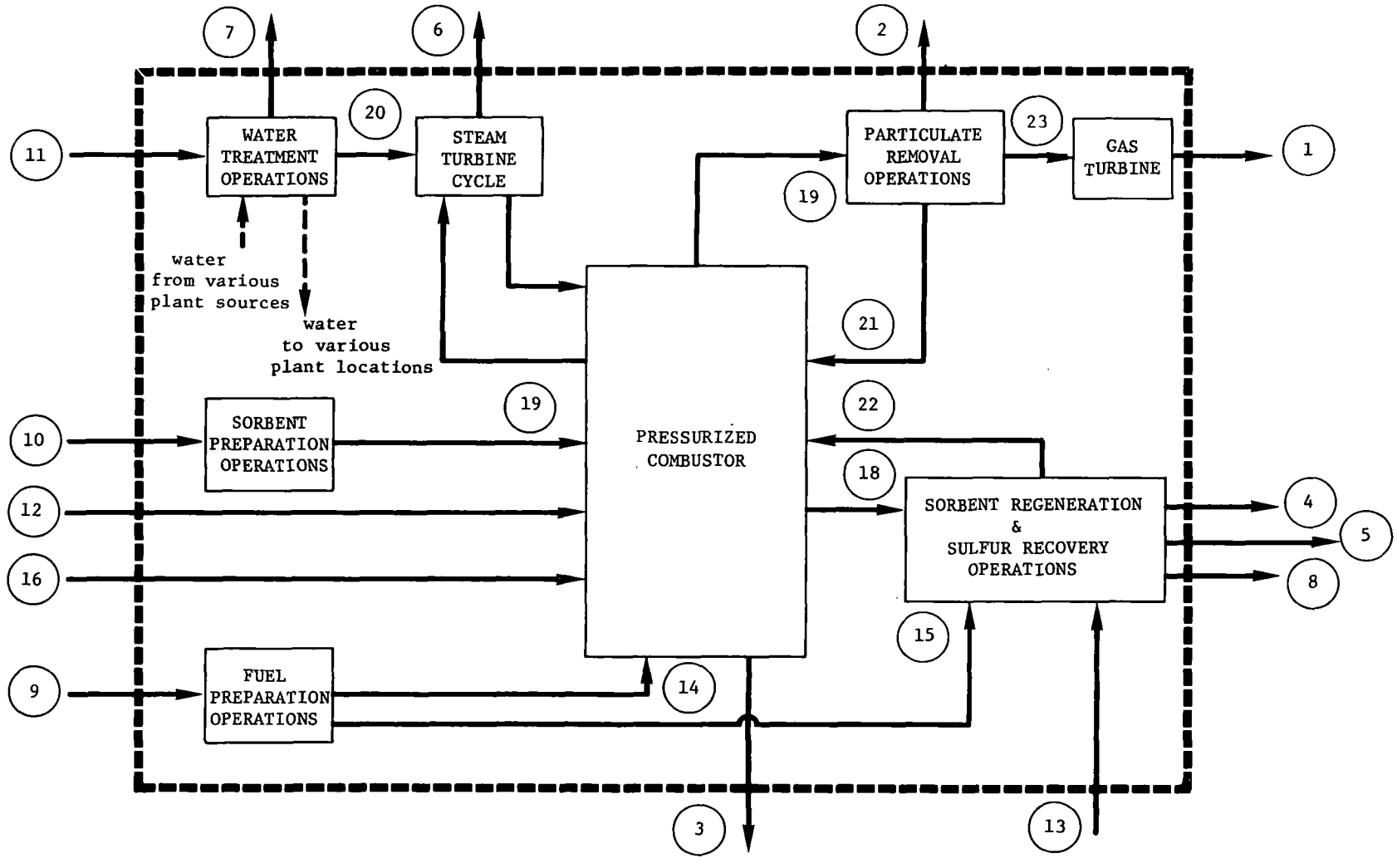

Figure 4. Generic process flow sheet for Category II—Pressurized, combined cycle FBC of coal.

is expanded through a gas turbine to generate additional power. The power output of a typical combined-cycle unit is anticipated to be 80 percent steam-turbine generated and 20 percent gas-turbine generated.

To maximize combustion efficiency, the larger ash particles removed by the first stage cyclones are recycled to the combustor. Fuel and sorbent preparation, the steam turbine cycle, and water treatment operations for the pressurized unit are similar to corresponding operations for the atmospheric FBC unit and require no further discussion. It is anticipated that dolomite will be used as a sorbent in the pressurized FBC systems. Since fuel and sorbent are injected into a pressurized combustion chamber (and regenerator), feed operations must necessarily be more complex. Sorbent regeneration and sulfur recovery operations will be considered in a later section.

Case Study - EXXON Miniplant--

For FBC Category II, the 630 kW Exxon R&E Miniplant, shown schematically in Figure 5, has been selected for a case study. This continuous pilot plant, which is based on Westinghouse specifications, is described in reference 157.

Major deviations from the Category II generic unit include the absences of a gas turbine (pressure reduction is accomplished in an orifice), a steam turbine cycle (steam is condensed and recycled to boiler), and a sulfur recovery operation. In addition, since feeds are purchased pre-sized and in bags, no fuel and sorbent preparation operations are located on site. For the generic unit, it is expected that coal will serve as both regenerator fuel and main fuel. The Miniplant currently employs natural gas to fire the regenerator.

Category III - Pressurized, Combined Cycle FBC of Coal (adiabatic combustor)

Generic--

A schematic flow sheet for a generic pressurized unit employing an adiabatic combustor is presented in Figure 6. Detailed process descriptions, developmental history, and on-going as well as anticipated studies of this FBC configuration are discussed in references 68 and 69.

In contrast with the pressurized unit of Category II, there are no steam generating tubes located within the combustor bed or walls. Temperatures remain within the 816-982°C (1500-1800°F) range but are controlled by means of high combustor air flows (around 300 percent excess air). A commercial design operating pressure of 4 atmospheres is projected. The higher air flow, lower pressure operation necessitates a combustor size larger than that for Category II. Primary power is generated by a gas turbine and secondary power by a low pressure steam turbine bottoming cycle. In this case, however, steam is produced through gas turbine exhaust-heat recovery in a waste heat boiler. Of the total power output, it is anticipated that 80 percent will be gas turbine-generated and 20 percent steam turbine-generated, the reverse situation of Category II.

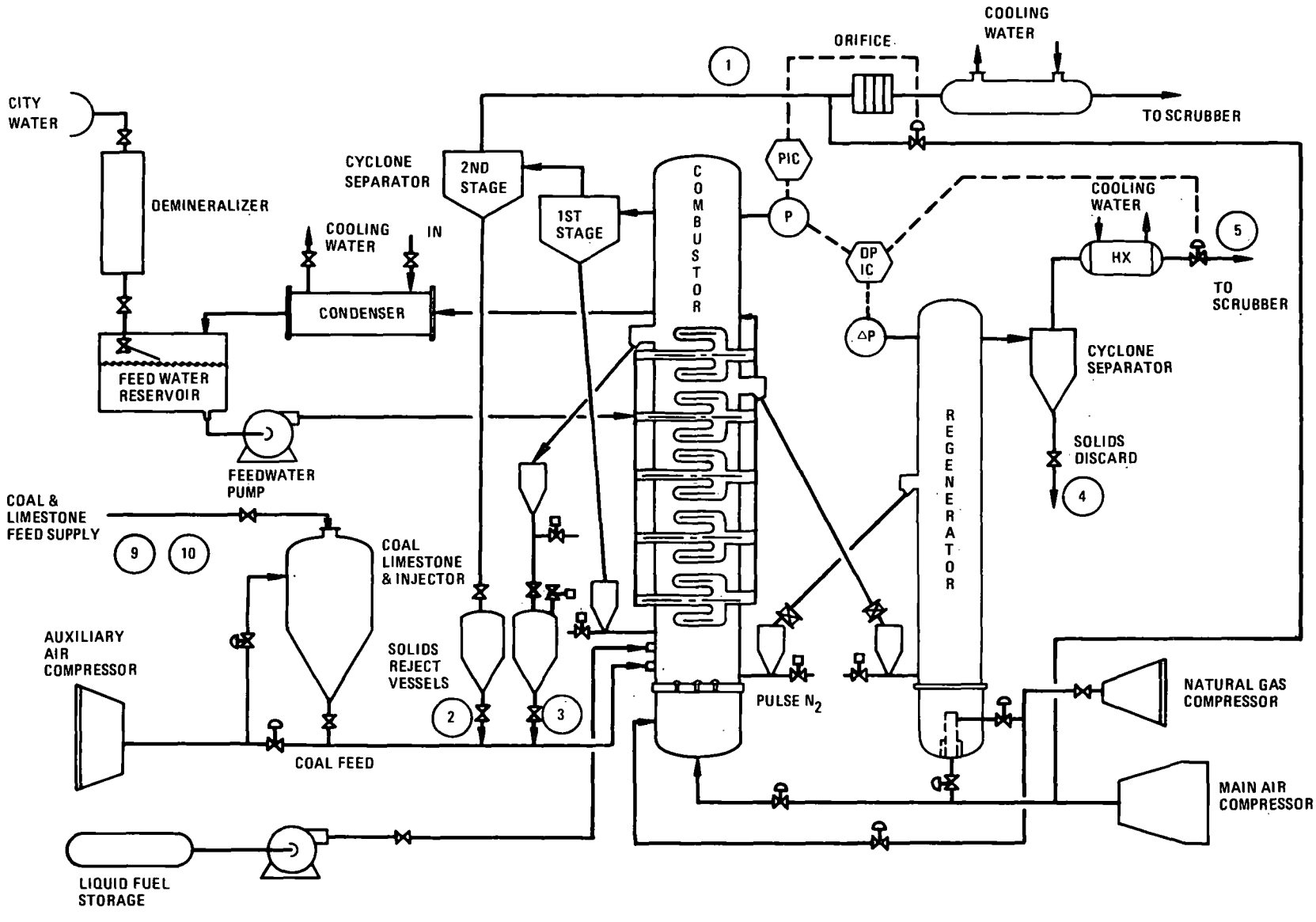

Figure 5. Case study unit II—EXXON Miniplant schematic.

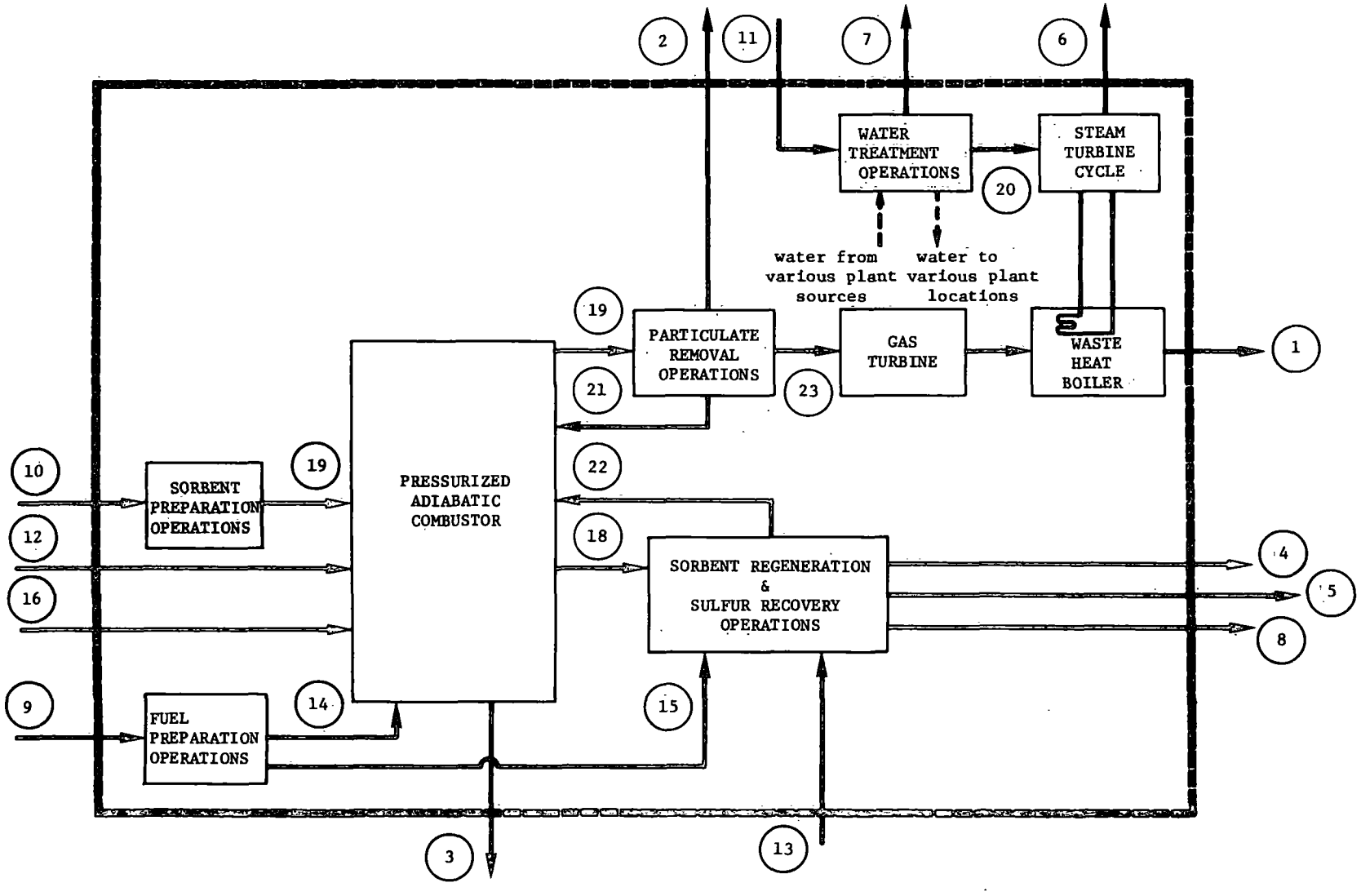

Figure 6. Generic process flow sheet for Category III—Pressurized, combined cycle FBC of coal (adiabatic combustor).

Other operations shown in the process flow sheet are similar to corresponding ones for Categories I and II. Regeneration and sulfur recovery operations will be discussed in a later section.

Case Study - Combustion Power Co. Process Development Unit (PDU-400)--

Combustion Power Company's PDU-400, the only presently existing facility in Category III, has been, of necessity, selected for a case study. A schematic of this 1 MW system is shown in Figure 7. Detailed descriptions and test data may be found in references 68 and 69.

Major deviations from the Category III generic unit include the absences of steam production (i.e., waste heat boiler and associated steam turbine cycle) as well as regeneration and sulfur recovery operations. Coal crushing is carried out at the facility while dolomite sorbent is purchased pre-sized and stored on site.

Category IV - Chemically Active Fluid Bed (CAFB) Gasification of Residual Oil

Generic--

The CAFB residual oil gasification process produces a clean, low-Btu fuel gas for firing in a conventional boiler and is most applicable to the electric utility industry as a retrofit to oil and gas-fired units. Energy conversion occurs in a conventional steam turbine cycle. A schematic flow sheet for a generic CAFB unit is shown in Figure 8. Detailed process descriptions, developmental history, and on-going as well as anticipated studies of CAFB systems are discussed in references 138 and 177.

Gasifier reactions occur in a fluidized bed of limestone sorbent at atmospheric pressure, within a temperature range of 843-899°C (1550-1650°F). Air flow to the bed is 20 percent of the stoichiometric value. Prior to firing in a conventional boiler, the low-sulfur product gas is cleansed of particulates (with some particulate recycle to the gasifier). Additional particulate removal operations are necessary on the flue gas exiting the boiler. Residual oil must be maintained at a temperature (approximately 93°C) suitable for transport from storage to gasifier but requires no additional preparation. Due to the high sulfide content of the bed solids, discard of solids from the gasifier would be an environmentally unsound practice and has been eliminated. The sorbent regeneration and sulfur recovery operations will be discussed in a subsequent section.

Case Study - Esso, Ltd., CAFB Unit (Abingdon, U.K.)--

The Esso Abingdon unit, the only CAFB facility presently in existence, has been, of necessity, selected for a case study. A process flow diagram of this 0.29 MW continuous pilot plant is shown in Figure 9. Descriptions of the facility can be found in references 74 and 75.

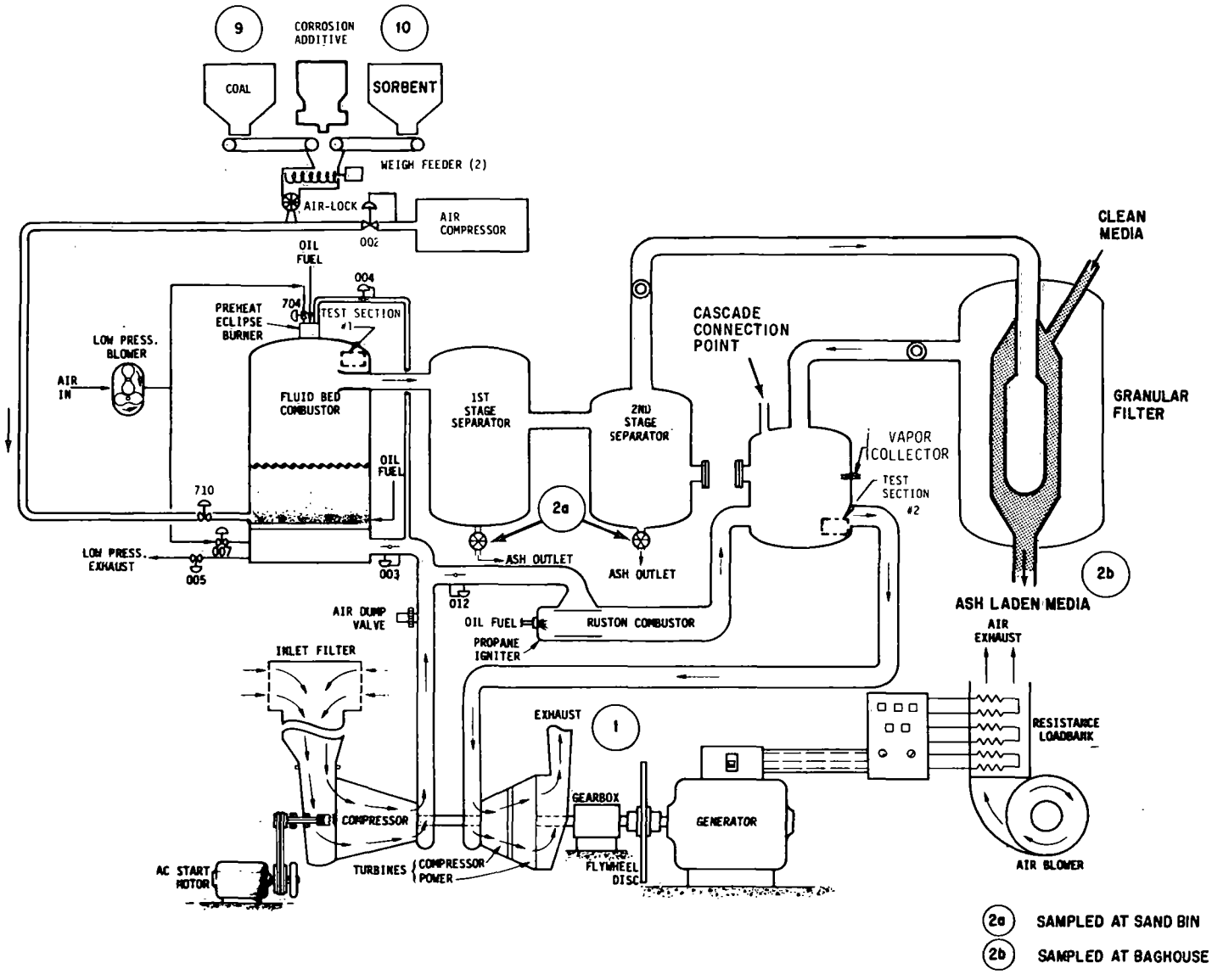

Figure 7. Case study unit III—Combustion Power Company PDU-400 pilot plant schematic.

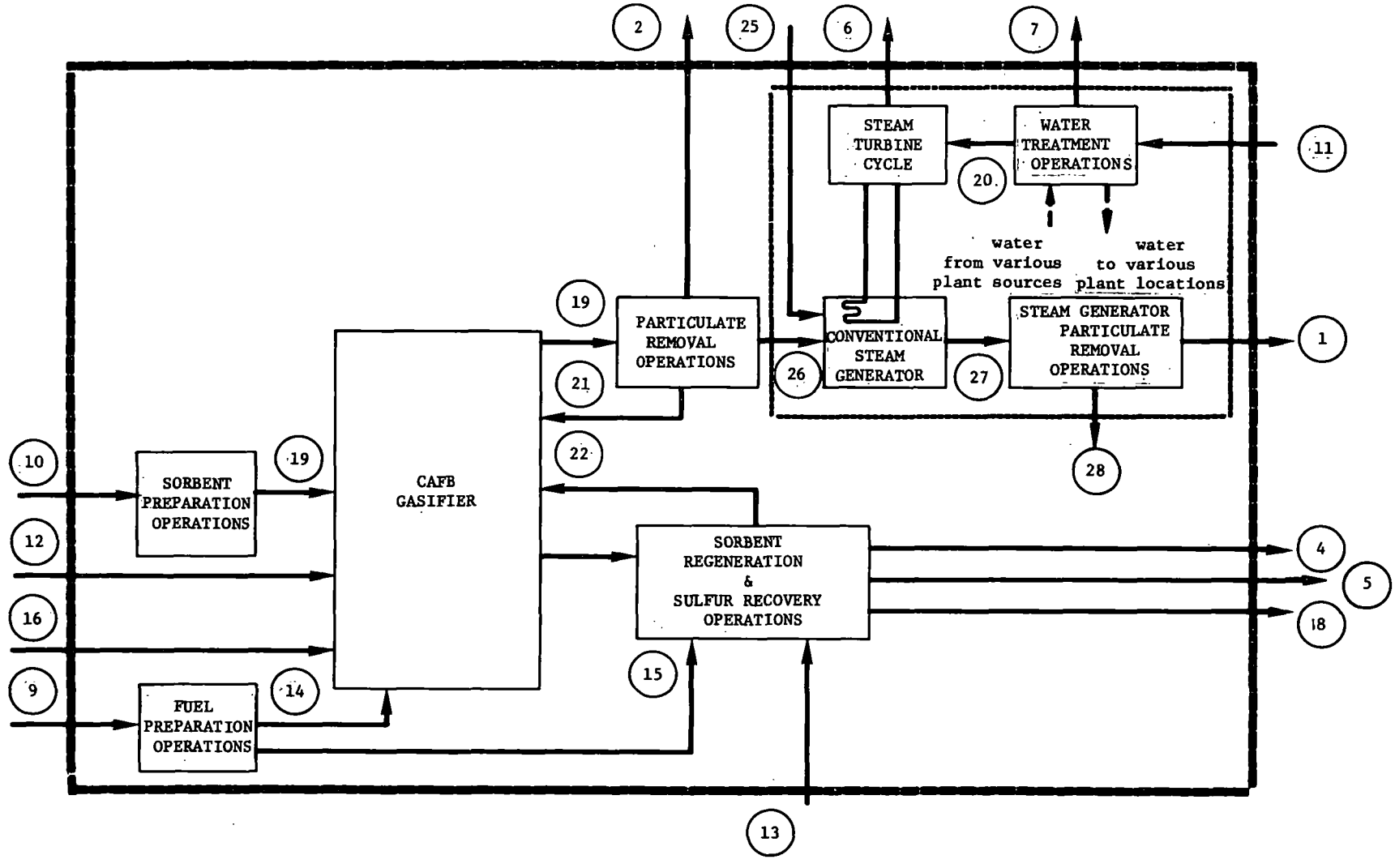

Figure 8. Generic process flow sheet for category IV-CAFB gasification of residual oil

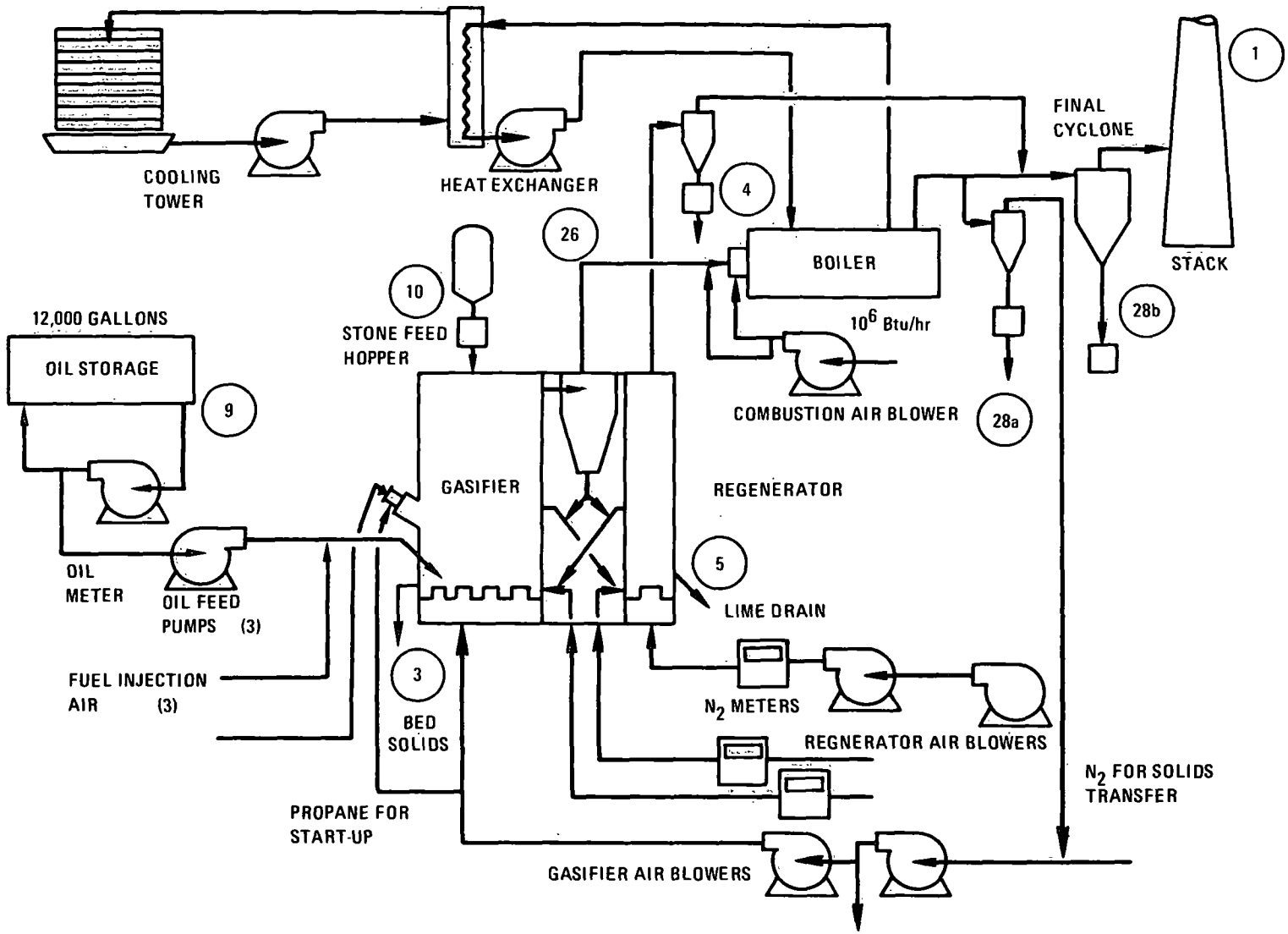

Figure 9. Case study unit IV—Esso (Abingdon U.K.) CAFB pilot plant schematic.

Major deviations from the Category IV generic unit include the absences of a sulfur recovery operation (SO_2-rich regenerator gas is released to the atmosphere) and a steam turbine cycle. Gasifier product gas fires a pressurized water boiler. The hot water is cooled by a secondary water circuit and then returned to the boiler. Heat is rejected from the secondary circuit by a cooling tower. Temperature control within the gasifier is facilitated (independent of air/oil ratio) by the recycling of boiler flue gas. Sorbent is purchased pre-sized, eliminating any preparatory operations.

SORBENT REGENERATION AND SULFUR RECOVERY

Introduction

Raw sorbent requirements and solids disposal difficulties can be largely reduced by employing a regeneration process where sulfated sorbent is withdrawn from the combustion bed, regenerated, and returned to the bed for reuse. The SO_2 (or H_2S)-rich gas produced in the regeneration process is subsequently fed to a conventional sulfur recovery operation where liquid sulfur or sulfuric acid is produced. Discussions of sorbent regeneration processes and alternatives may be found in references 138 and 177. The "sorbent regeneration and sulfur recovery operations" blocks shown in the generic process flow sheets (Figures 1, 4, 6, 8) will be considered in more detail in the following sections.

Atmospheric FBC Systems (Category I)

Employment of single-stage regeneration of limestone with subsequent sulfur recovery in a commercial sulfuric acid plant is projected for commercialized atmospheric FBC systems (i.e., Category I). A flow sheet of these operations, again addressing mainly source assessment requirements, is shown in Figure 10. Reference 275 provides descriptions and flow diagrams for the commercialized contact type sulfuric acid process.

In brief, partially sulfated sorbent undergoes decomposition in reducing gases at high temperature and atmospheric pressure:

$$CaSO_4 + \begin{bmatrix} CO \\ H_2 \end{bmatrix} \xrightarrow[\substack{1900\text{-}2000°F \\ (1038\text{-}1093°C)}]{} CaO + \begin{bmatrix} CO_2 \\ H_2O \end{bmatrix} + SO_2$$

Reducing gases are produced by combustion of coal in the fluidized-bed regenerator. The SO_2-rich regenerator off-gas is cleansed of particulates prior to being fed to the acid plant. Tail gas from the acid production process is recycled to the boiler combustion air supply.

As mentioned previously, the regeneration system on the PER Alexandria unit is presently decommissioned and will not be considered further.

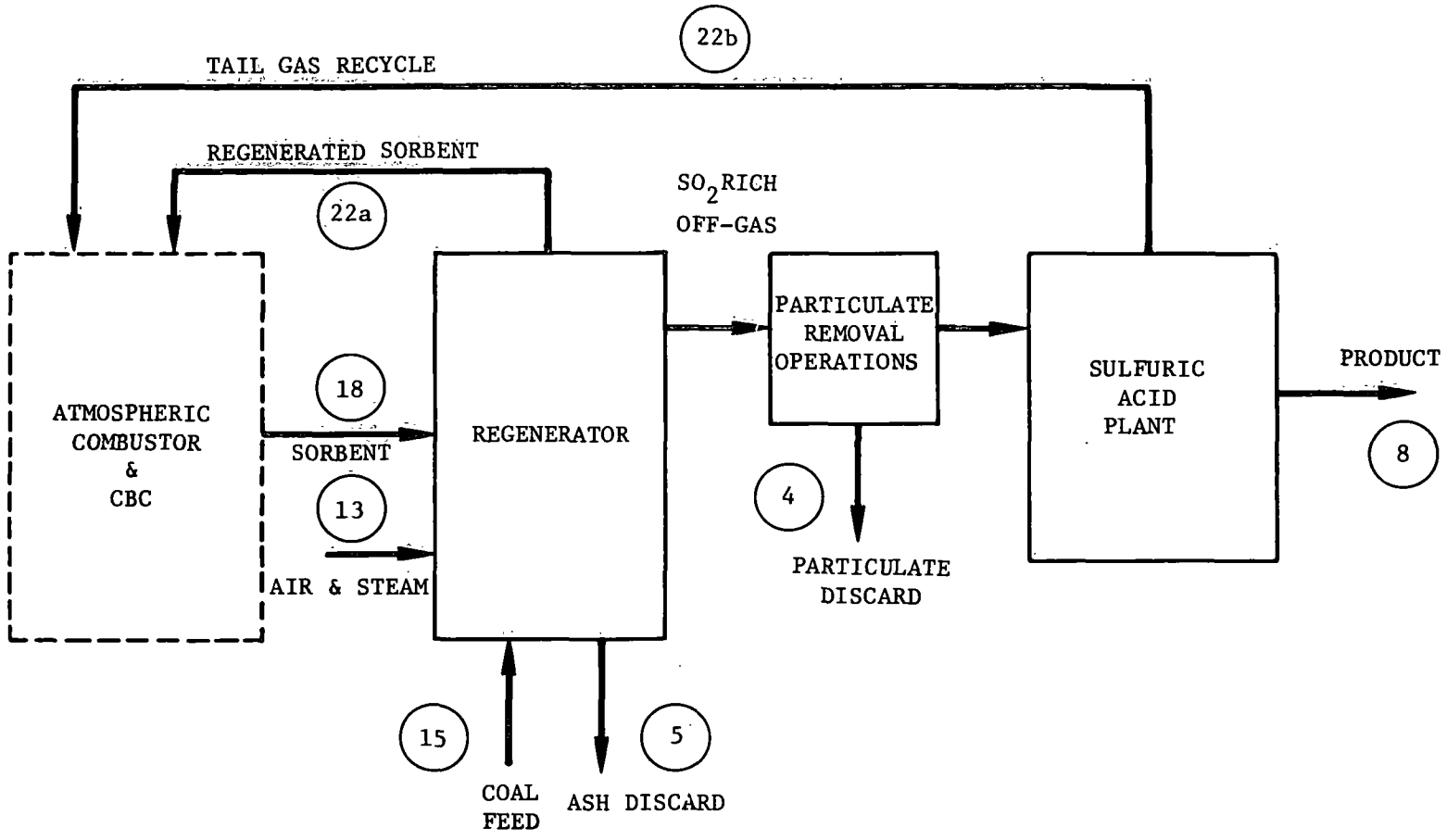

Figure 10. Generic sorbent regeneration and sulfur recovery operations for atmospheric FBC systems.

Pressurized FBC Systems (Categories II and III)

Employment of the Westinghouse two-stage dolomite regeneration process (see reference 177) with subsequent sulfur recovery in a conventional Claus plant is projected for commercialized pressurized FBC systems (i.e., Categories II and III). A flow sheet of these operations is shown in Figure 11. Reference 275 provides descriptions and flow diagrams for the Claus sulfur production process.

Sulfated dolomite reacts with reducing gases at elevated pressure (~8 atm) in the first stage fluid-bed regenerator to produce calcium sulfide:

$$CaSO_4 + \begin{bmatrix} 4H_2 \\ 4CO \end{bmatrix} \xrightarrow[(876°C)]{1500°F} CaS + \begin{bmatrix} 4H_2O \\ 4CO_2 \end{bmatrix}$$

Reducing gases are produced by a conventional gasification of coal with air and steam. The reduced solids are then fed to the second-stage fluid-bed regenerator where they are reacted at high pressure (~12 atm) with steam and CO_2 (obtained by stripping a flue gas side stream) to form calcium carbonate.

$$CaS + \begin{bmatrix} CO_2 \\ H_2O \end{bmatrix} \xrightarrow[(593°C)]{1100°F} CaCO_3 + H_2S$$

The H_2S-rich off-gas is cleansed of particulates and fed to the Claus plant. Tail gas from the sulfur recovery operation is recycled to the combustor air supply.

CPC's pressurized-adiabatic CPU-400 unit, as noted earlier, does not presently include a regeneration process. Exxon's Miniplant employs single-stage, pressurized regeneration (fired by natural gas) with no subsequent sulfur recovery. The SO_2-rich off-gases are sent to a scrubber after particulate removal and cooldown.

CAFB Systems (Category IV)

Employment of air-blown regeneration of limestone with subsequent sulfur recovery in an Allied Chemical SO_2 reduction plant is projected for commercialized CAFB systems (i.e., Category IV). Figure 12 indicates these operations. Reference 121 provides a description and flow diagram of the Allied Chemical process.

Sulfided stone produced in the gasifier is fed to a fluid-bed regenerator where it is contacted with preheated air. Reactions at 1093°C (2000°F) and atmospheric pressure result in the formation of calcium oxide, some calcium sulfate, and a gas of about 8 to 10 percent (volume) SO_2 which is cleansed of particulates prior to entering the sulfur plant. The H_2S-rich tail gas

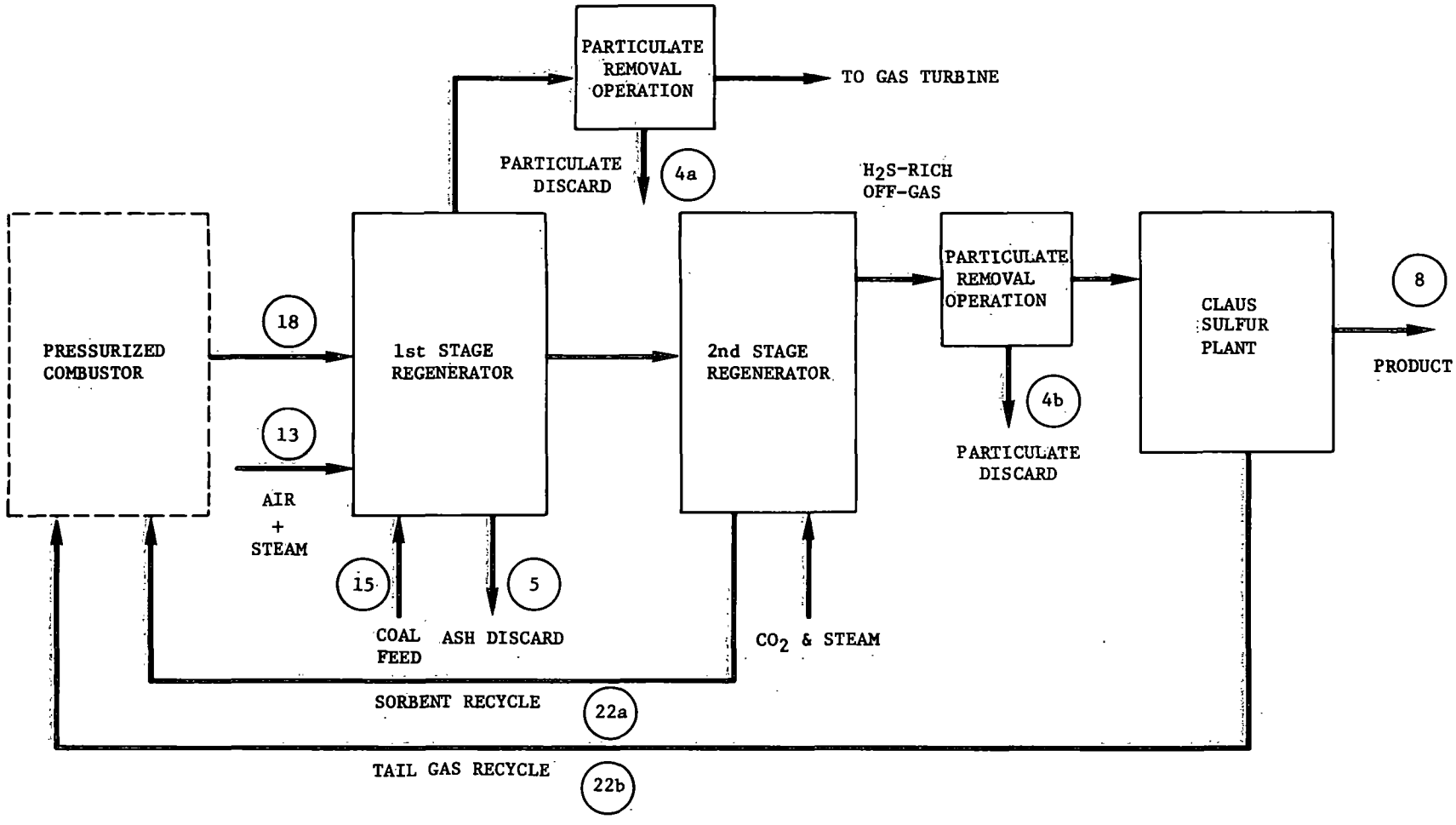

Figure 11. Generic sorbent regeneration and sulfur recovery operations for pressurized FBC systems.

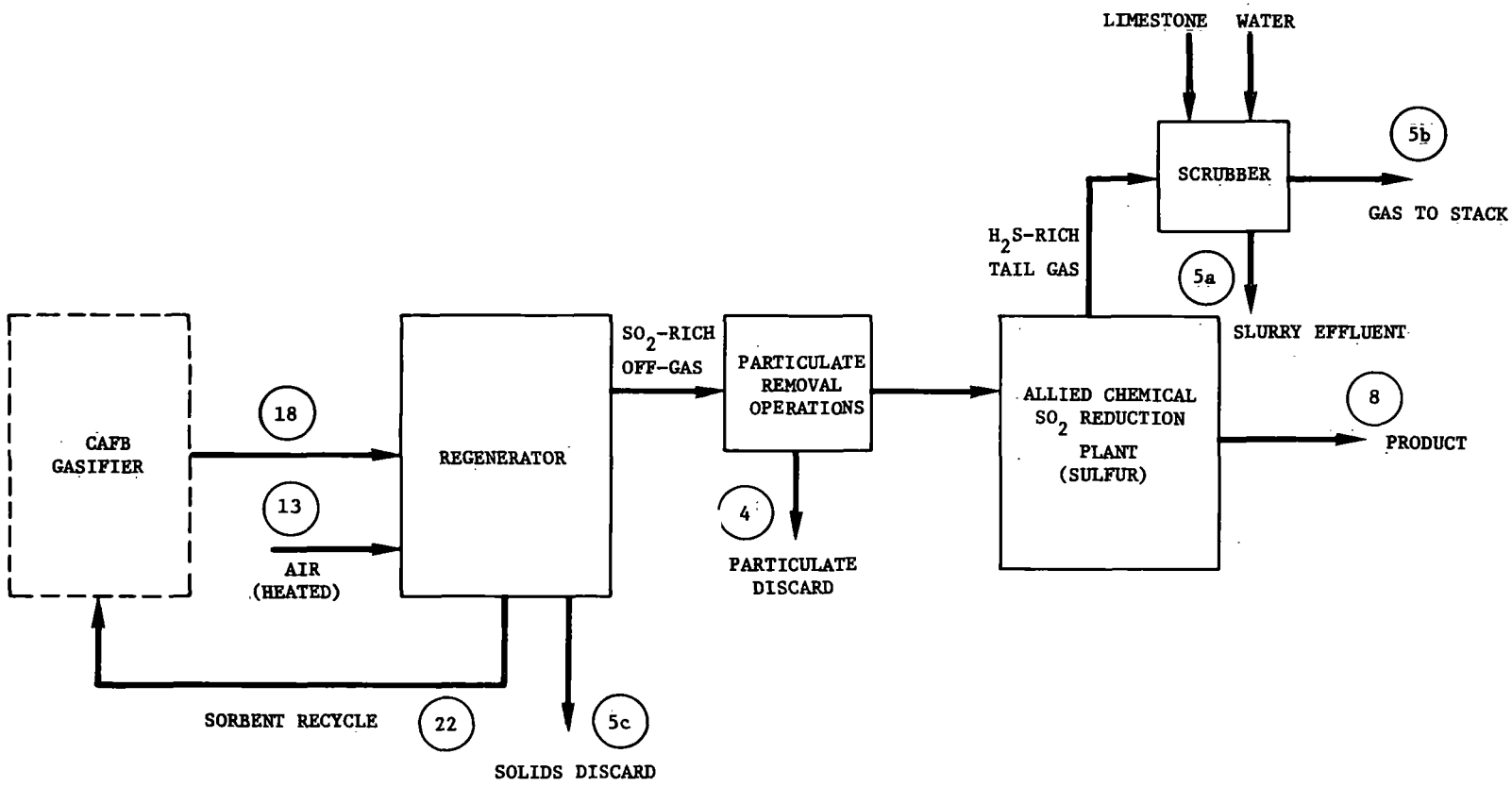

Figure 12. Generic sorbent regeneration and sulfur recovery operations for CAFB residual oil gasification systems.

from the sulfur recovery operation is sent to a scrubber before being released to the atmosphere. Bed solids are discarded from the regenerator since the sulfide content is relatively low at that point.

The Abingdon case study unit employs an air-blown limestone regeneration system with no associated sulfur recovery operation. The sulfur-rich regenerator off-gas, after being cleansed of particulates, is merged with the boiler flue gas as shown in Figure 9. Solids are withdrawn from the gasifier as well as from the regenerator.

FBC SYSTEM OPERATING CHARACTERISTICS

Introduction

This section presents a brief general discussion of the prime system variables, modes of operation, fuel and sorbent types, and other characteristics associated with FBC systems. In addition, the scope of the present study in regard to certain of these characteristics is defined.

Fuel Types

The primary fuel of interest in atmospheric and pressurized FBC systems is coal of all ranks and varieties including anthracite, bituminous, subbituminous, and lignite. For the CAFB oil gasification process, petroleum residual represents the primary fuel. In the coal-fired categories, secondary fuels of interest are coke breeze, gasification char, and spent shale. In certain plants, there is potential for use of supplemental fuels such as combustible solid waste (municipal and industrial) as well as waste oil from transportation and/or industrial sources. For purposes of the present study, only coal and petroleum residual (for the CAFB process) will be addressed as main fuels. It should also be noted that the sampling and analytical procedures to be specified are insensitive to coal variety.

For those coal-fired plants employing sorbent regeneration, the potential list of regenerator fuels includes coal, oil, and natural gas. Only coal will be considered for the generic units addressed in this study.

For use in system startup, natural gas, propane, and distillate fuels are expected to be employed for all process categories.

Sorbent Types

It is projected that commercialized atmospheric FBC systems will employ calcitic limestone as a sorbent while dolomite (i.e., dolomitic limestone) is planned for use in the pressurized FBC systems. Dolomite attrites more rapidly than limestone but calcines readily to MgO $CaCO_3$ at temperatures commonly found in pressurized FBC. The use of limestone in pressurized systems would require higher temperatures to achieve calcination and in addition, limestone dust may erode gas turbine blades more rapidly.

It is likely there will be considerable use of low quality limestone, high in SiO_2 and other inert matter, since an economic incentive exists to use stone local to a commercial plant site. Until a wider variety of stones is systematically tested in FBC units, no statement can be made concerning the impact of stone variety and quality on the effluents from an individual plant.

Modes of Operation

Operating modes of FBC units will cover the range typical of existing conventional boilers. These include:

1. Steady state;
2. Moderate increase in load;
3. Moderate decrease in load;
4. Rapid increase in load;
5. Rapid decrease in load;
6. Startup from cold start; and
7. Shutdown sequence.

The scope of the present effort limits consideration to the steady-state mode (within normal operating limits) and the moderate load increase/decrease modes only. The latter are typical of utility systems where the boiler is capable of rapid adjustments in steam delivery but turbine life considerations limit load changes to ± 1 percent per minute. Under this rate of load change, the system can be viewed as operating in a quasi-steady state. The rapid increases/decrease modes are more typical of industrial process steam generators or direct material heaters where a cyclic demand can occur in certain industries.

Primary FBC System Variables

The following comprise the primary design/operating variables associated with FBC systems:

Combustion temperature
Combustion pressure
Bed height
Fuel feed rate
Air flow rate
Sorbent feed rate
Superficial velocity
Ca/S mole ratio

During the sampling of FBC systems, values of the above items must be recorded in order that the resulting environmental data may be related back to the operating conditions of the process. Brief discussions of these variables, including example values, are presented in the following paragraphs.

Combustion Temperature--

The temperature in the combustor bed must meet the following requirements: it must be sufficiently high to allow calcination of fresh sorbent in a flue gas atmosphere and to allow sufficient coal burnup; it must be sufficiently low to promote favorable SO_x capture equilibria by lime. The effect of combustion pressure on bed temperature can be seen in the example values that follow:

Atmospheric FBC - 788-843°C (1450 to 1550°F)
CAFB (Abingdon) - 1 atm: 849°C (1560°F)
Pressurized (Miniplant) - 10 atm : 954°C (1750°F)
Pressurized (BCURA) - 5 atm: 888-895°C (1630 to 1745°F)
Pressurized Adiabatic Combustor (CPC) - 4 atm: 781°C (1438°F)

Combustion Pressure--

Tests have indicated that increased combustion pressure enhances SO_x absorption and burnup of reduced carbon species as well as reduction of NO_x emissions. These environmentally beneficial effects arise from chemical equilibrium relationships and increased gas reaction rates. The impacts of pressurization on plant cost, component reliability, control requirements, insurability, electricity cost and other factors of concern to a power company are controversial and must be resolved by demonstration plant project operations.

Bed Height--

With commercially available fans and blowers for atmospheric systems, static bed height is limited to about 3 feet (0.9 meters) (limestone) using currently conceived air distribution grids. Two feet (.06 meters) is a typical value. Excess bed depth, beyond actual requirements of coal combustion and heat transfer, is to be avoided since this increases the fan power drain with a resulting increase in boiler heat rate.

Bed expansion under load is a function of, among other things, the design of the combustor internals (e.g., steam tube bundles). For the generic pressurized FBC system, Westinghouse has specified expanded bed depths of 12 feet (3.65 meters). At the Exxon Miniplant, expanded bed depths of 3 to 7 meters have been used.

Fuel Feed Rate--

Fuel feed rate to the combustor correlates closely with heating value of the fuel and load on the unit. Rated and actual test values of fuel feed rates are shown in Table 2.

Combustor Air Flow Rate--

Air flow to the combustor correlates closely with load on the unit and excess air level. Air used for pneumatic transport of solids usually

comprises 6 to 7 percent of the total air flow. Rated and actual test values of air flow rates are shown in Table 2.

Sorbent Feed Rate--

Sorbent feed rate to the combustor in the absence of sorbent regeneration correlates closely with unit load, sorbent type (i.e., attrition rate), and fuel sulfur content (i.e., Ca/S mole ratio). Rated and actual test values of sorbent feed rates are shown in Table 2.

Superficial Velocity--

Design superficial velocity (U_s) of gas in the fluid bed is a design parameter impacting primarily on boiler size and cost, but also having effects on bed sulfur retention and other environmental matters. Due to elutriation, increasing the rated U_s generally increases the need for a carbon burnup cell, but reduces the cost and floor space required by the combustor. U_s is a major determinant of the smallest size particle that can be retained in the bed, and the largest particle size capable of being fluidized as bed material. Efficient burning of fine coal particles in the feed is therefore related to U_s. Rated and actual test values of superficial velocity are shown in Table 2.

Ca/S Mole Ratio--

Ca/S mole ratio correlates closely with sulfur capture performance of the bed, especially at higher superficial velocities where in-bed residence time is reduced and bubble phase transport is large. Excessively high Ca/S ratios result in greater fresh sorbent requirements, increased solid waste (i.e., spent sorbent), and a derating of the boiler (i.e., more heat required for calcination). Reduction of the Ca/S ratio can be achieved by pressurized operation and/or sorbent regeneration or additive utilization. Rated and actual test values of Ca/S ratios are shown in Table 2.

Combustor Steam Tube Arrangement

The design of steam tube arrays for fluidized-bed combustors is presently in a developmental stage. To date, atmospheric FBC units have been built with water walls only and with horizontal staggered tube arrays. Pressurized combined cycle units require more dense packing of tubes; horizontal and vertical arrays have been used. Tubes in specialized cells or applications may contain water, steam, boiling water/steam, air, or other fluids. Staggered horizontal tube arrays have been shown to affect fluidization favorably and bed mixing unfavorably. U.S. boiler practice favors 2" tubes; the BCURA and Exxon Miniplant units use 1" tubes. The ultimate form of final design practice in future commercial units is far from clear.

TABLE 2. EXAMPLE VALUES OF SEVERAL PRIME FBC SYSTEM VARIABLES

FBC UNIT	TYPE	POWER (MW EQUIVALENT)	FUEL FEED RATE KG/SEC (LB/HR)	COMBUSTER AIR FLOW RATE KG/SEC (LB/HR)	SORBENT FEED RATE KG/SEC (LB/HR)	SUPERFICIAL VELOCITY M/SEC (FT/SEC)	Ca/S MOLE RATIO
PER (Alexandria, VA)	Atmospheric	0.5	0.1008 (800)	0.4032-0.9198 (3200-7300)	0.0036-0.0252 (29-200)	2.103-4.48 (6.9-14.7)	2.2-2.7
Exxon Miniplant	Pressurized	0.63	0.0417* (331.01)	0.9084 (7210.87)	.0088 (70)	2.3 (7.546)	1.5-2
Combustion Power Co. PDU	Pressurized	1.0	0.3024 (2400)	10.16 (80,640)	0.0907 (720)	2.042 (6.7)	1.5-2
Esso, Ltd. (Abingdon, U.K.)	CAFB	0.29	0.0493 (391)	0.1579 (1253)	0.0042 (33)	1,219 (4)	1.0 (Regeneration)
Rivesville	Atmospheric	30	4.158 (30,000)	38.052 (302,000)	0.9828 (7800)	3.658 (12)	2-2.7
BCURA (2'x3')	Pressurized	0.5	0.0558-0.0583 (443-463)	0.6213-06745 (4931-5353)	0.0113-0.0173 (90-137)	0.6706-0.762 (2.2-2.5)	1.5-2.2
MERC	Atmospheric	6.0	0.5895 (4650)	6.3 (50,000)	0.1966 (1560)	2.134-4.572 (7-15)	0-7
Generic (Foster Wheeler)	Atmospheric	200	27.72 (200,000)	252 (2,000,000)	8.316 (60,000)	3.658 (12)	Not Available
Generic (Westinghouse)	Pressurized	300	27.177 (215,690)	294 (2,340,000)	6.006-18.018 (43,333-130,000)	1.71-2.74 (5.6-9)	1.0-1.2 (Regeneration)
Generic (Combustion Power Co.)	Pressurized Adiabatic	50	7.068-7.6734 (56,100-60,900)	230.4-382.3 (1,828,800-3,034,800)	3.153-3.425 (25,020-27,180)	2.134 (7)	2

* = Partial Load

CHAPTER 2

SAMPLING AND ANALYSIS PROGRAM STRATEGY

INTRODUCTION

This chapter is concerned with the overall strategy which will be employed in developing a sampling and analysis program for the FBC technology under consideration.

A phased measurement strategy involving two separate and distinct levels of sampling and analysis is introduced in the next section. Subsequent sections are concerned with: the selection of FBC system streams for sampling; physical characteristics of sampled streams for generic and case study units, and, areas of analysis.

A PHASED APPROACH TO SAMPLING AND ANALYSIS

Because of usual constraints on resource allocation, a sampling and analysis program must be designed to fulfill the goals of being both cost-effective and information-effective. A strategy in which each sample is directly analyzed for an entire spectrum of possible components, individually, is obviously information-effective, but prohibitively expensive. On the other hand, direct analysis of a sample for a limited list of components known to be harzardous is relatively inexpensive but not information-effective since the risk of bypassing unsuspected hazardous materials is greatly increased.

A program strategy representing a compromise between the above extremes employs a phased approach (see references 147 and 317) where two separate and distinct levels of sampling and analysis are utilized. A screening phase (Level 1) characterizes the pollutant potential of all influent and effluent streams of a process and has a broad range of applicability. In this phase, sampling and analysis is designed to determine, within broad general limits, the presence or absence, approximate concentrations, and associated emission rates of inorganic and organic stream components. Biotesting is limited to a determination of the cytotoxic and mutagenic potential of a sample. Most importantly, no assumptions need be made, a priori, regarding the nature of the constituents in any given stream.

Using the output of Level 1, priorities for additional testing can be established among streams within a given process and components within given streams, on the basis of pollution potential. In this manner, an optimized

Level 2 program can be planned and the appropriate resource allocation made. The goal of Level 2 analysis is the accurate, quantitative identification of specific components in selected streams (as dictated by the Level 1 output) and the determination of associated emission rates. Level 2 output provides data needed for requisite control technology development, health effect studies, and transport/fate analysis of pollutant emissions.

The sampling and analytical procedures specified in the present document for Level 1 environmental assessment are based on material contained in reference 147. Strict adherence to these procedures will be required of source testing contractors assigned to perform assessments on FBC facilities. In certain cases where this may prove to be impractical, a modified plan should be submitted by the contractor to the Project Office and the Process Measurements Branch, IERL-RTP, for approval prior to initiating the sampling effort.

The general characteristics of Level 1 and Level 2 sampling and analysis are summarized in Table 3. These characteristics are, of necessity, consistent with the goals of each level, as restated in the table. The issues addressed will be treated in more detail when procedures for Level 1 and Level 2 sampling and analysis of FBC processes are presented in the following chapter.

PROCESS DEVELOPMENT AND ENVIRONMENTAL ASSESSMENT

Ideally, the environmental assessment of a process should proceed in parallel with process development. This would allow for relative ease in process modifications as well as development lead time for control technology, should environmental factors warrant such action. The allocation of resources for environmental assessment at the various phases of process evolution should, again, reflect a balance between cost-effectiveness and information-effectiveness. For example, the expenditure of a relatively large fraction of the total allocated resources in the very early phases of process development is unjustified due to the generally low probability of commercial success. On the other hand, a delay in initiating environmental assessment until commercialization is imminent poses the risk of delaying plant operation (due to regulatory restraints, etc.) until suitable control technology has been developed.

Table 4 summarizes the sampling and analytical strategies as well as the process characteristics associated with each phase of the process evolutionary cycle.

During the research (i.e., bench) phase, almost no funds are expended for environmental assessment; general observations are made and some low level testing is done.

In the development (i.e., pilot) phase, the Level 1 effort entails the sampling of all influent and effluent streams and the subsequent screening for all pollutant classes. Depending on the size of the unit and the completeness of its process configuration, the sampling and analysis of fugitive emissions may also be required.

TABLE 3. CHARACTERISTICS OF LEVEL 1 AND 2 SAMPLING AND ANALYSIS

ISSUE	LEVEL 1	LEVEL 2
GENERAL		
• Goal	Characterization of the pollutant potential of influent and effluent streams of a process. Planning basis for Level 2 effort	Accurate quantitative identification of selected components in selected streams and determination of associated emission rates
• Streams considered	All process influents and effluents including airborne and waterborne fugitive emissions	Selected influents and effluents based on Level 1 output
• Pollutant classes/species considered	Broad screening for elements, organics, and selected anions	Selected pollutant classes/species based on Level 1 output
• Process operating condition	Steady-state representative condition	Steady-state representative condition
SAMPLING		
• Sampling techniques	Particulates: • Single point, isokinetic at cross-section point of average velocity • Convenient location, not in region of irregular flow	Particulates: • Full traverse of cross-section, isokinetic at each point • Specified distance from flow disturbances, as per EPA Method 1

TABLE 3. (Continued)

ISSUE	LEVEL 1	LEVEL 2
SAMPLING • Sampling techniques	Gases: • Convenient sampling site in unstratified location • Single point, grab (e.g., displacement bomb)	Gases: • Same sampling location as for particulates • Single point unless stratification exists (then, traverse required) • Individual trains for specific components (primarily Federal Register methods)
	Liquids: • Homogeneous - single point grab or tap • Heterogeneous - full stream cut grab at discharge or tap in well-mixed region of line	Liquids: • Homogeneous - single point grab or tap • Heterogeneous - automatic sampler (full steam cut operation)
	Solids: • Pile or open holding container-depth integrated grab • Stream discharge point - full steam cut grab • Belt conveyor - stopped belt (full stream cut)	• Pneumatic transport line - automatic sampler (e.g., Vezin type) • Belt conveyer - stopped belt (full stream cut)

TABLE 3. (Continued)

ISSUE	LEVEL 1	LEVEL 2
• Replications	None	Particulates: 3 minimum, separate analysis for each sampling Gas: compliance with Federal Register specifications Solids and liquids: 3 minimum, separate analysis for each sampling
ANALYTICAL		
• Sensitivity	Sufficient to insure detection of all class/species at trace levels	Sensitivity requirements will be determined by Level 1 output
• Accuracy	Target accuracy factor of ±2 on concentration	Target accuracy of ±10%
• Specificity	• Broad screening for inorganic gaseous species • Separation of organics into eight fractions on the basis of polarity • Elemental analysis • Selected anions from standard water analysis	• Selected inorganic gases based on Level 1 output • Identification of specific organic compounds from selected fractions • Selected species based on Level 1 output • Selected anions from Level 1 elemental and standard water analyses
• Physical characterization of solids and particulates	Morphology, sizing	More refined morphological and sizing determinations

TABLE 3. (Concluded)

ISSUE	LEVEL 1	LEVEL 2
BIOASSAY		
• Analyses performed	Cytotoxicity, mutagenicity	Cytotoxicity, mutagenicity, carcinogenicity
• Sample	Whole	Fractionated; specific components

TABLE 4. PHASES OF PROCESS EVOLUTION-CHARACTERISTICS AND SAMPLING/ANALYSIS STRATEGY

PROCESS PHASE	PROCESS CHARACTERISTICS	SAMPLING AND ANALYSIS - LEVEL 1	SAMPLING AND ANALYSIS - LEVEL 2
Research (Bench Scale)	• Use of pure (idealized) feeds. • Exploratory operation solely of key components of process configuration. • Generally low probability of successful commercialization. • Nominal instrumentation to provide key process and product characteristics. • Intermittent operational mode.	General Observation, Low Level Testing	
Development (Pilot)	• Larger scale, more complete process configuration than in research phase. • More representative feedstocks. • Fair probability of eventual commercialization. • Instrumentation of feed, product, and by-product streams and some intermediate streams. • Semi-continuous operational mode dependent on requisite process changes.	• All system influents and effluents. • All pollutant classes.	• Selected system influents and effluents (based on Level 1 pilot output). • Selected pollutant classes/species (based on Level 1 pilot output).
Demonstration	• Complete process configuration. • Representative feedstocks. • Excellent probability of commercial success. • Process measurements for quality control and process stability. • Operational mode consistent with obtaining economic quantities of products.	• All system influents and effluents as well as fugitive emissions. • All pollutant classes.	• Selected system influents and effluents (based on Level 1 demo output). • Selected pollutant classes/species (based on Level 1 demo. output).
Commercial	• Same configuration as in demonstration phase, but with potential further process improvements and possible scale-up. • Routine process stream monitoring.	• Same as for demonstration phase.	• Same as for demonstration phase.

The Level 1 output is then used to establish stream and stream component priorities for the Level 2 program. The outputs of the Level 2 effort, health effects studies, transport and fate analysis, and control technology development are integrated with the results of process optimization studies to ultimately produce a demonstration plant design.

The sampling and analysis strategy for the demonstration phase consists of a Level 1 screening for all pollutant classes in every influent and effluent stream (including fugitive emissions) followed by a Level 2 sampling of selected streams and analysis of selected stream components. As in the pilot phase, the Level 1 output is used to define the subsequent Level 2 effort. Figure 13 depicts the progression of sampling and analysis from the pilot to the demonstration phase as well as the areas of interaction between sampling and analysis, other environmental assessment areas, and process studies. It should be emphasized that the results of the Level 1 and Level 2 efforts at the pilot phase contribute to the generation of the demonstration plant design but do not directly provide a basis for planning the demonstration phase sampling and analysis effort.

If environmental assessment did, in fact, proceed in parallel with process development from bench scale to demonstration phase, the requirement for a comprehensive sampling and analysis program for commercialized units would not exist. Prior assessment results from the demonstration phase could be utilized and the monitoring of a few streams of key environmental interest using Level 2 methods would probably suffice. This represents an ideal situation however. For a variety of reasons, it is possible that environmental assessment may, in some instances, be initiated after process commercialization. In this case, a strategy identical to that employed for the demonstration phase would be applied to commercial units, as indicated in Table 3.

SELECTION OF FBC SYSTEM STREAMS FOR SAMPLING

Generic Units

As noted earlier, the generic units considered in this study are intended to be representative of anticipated commercialized (or demonstration) units. As such, sampling and analytical procedures for these units will be based on the above mentioned demonstration phase strategy.

Not having the benefit of Level 1 output to enable the prioritization (and possible subsequent elimination) of streams and stream components, the development of an optimized Level 2 program as part of the present effort is not feasible. Instead, Level 2 sampling and analytical procedures will be specified for <u>every</u> stream and <u>every</u> analysis area addressed in the Level 1 effort (i.e., no elimination of streams or stream components will be made).

Although Level 1 strategy requires that all influents to a process be sampled, cases can arise where certain influent streams may be eliminated from consideration (with prior approval by the Project Office) so that the

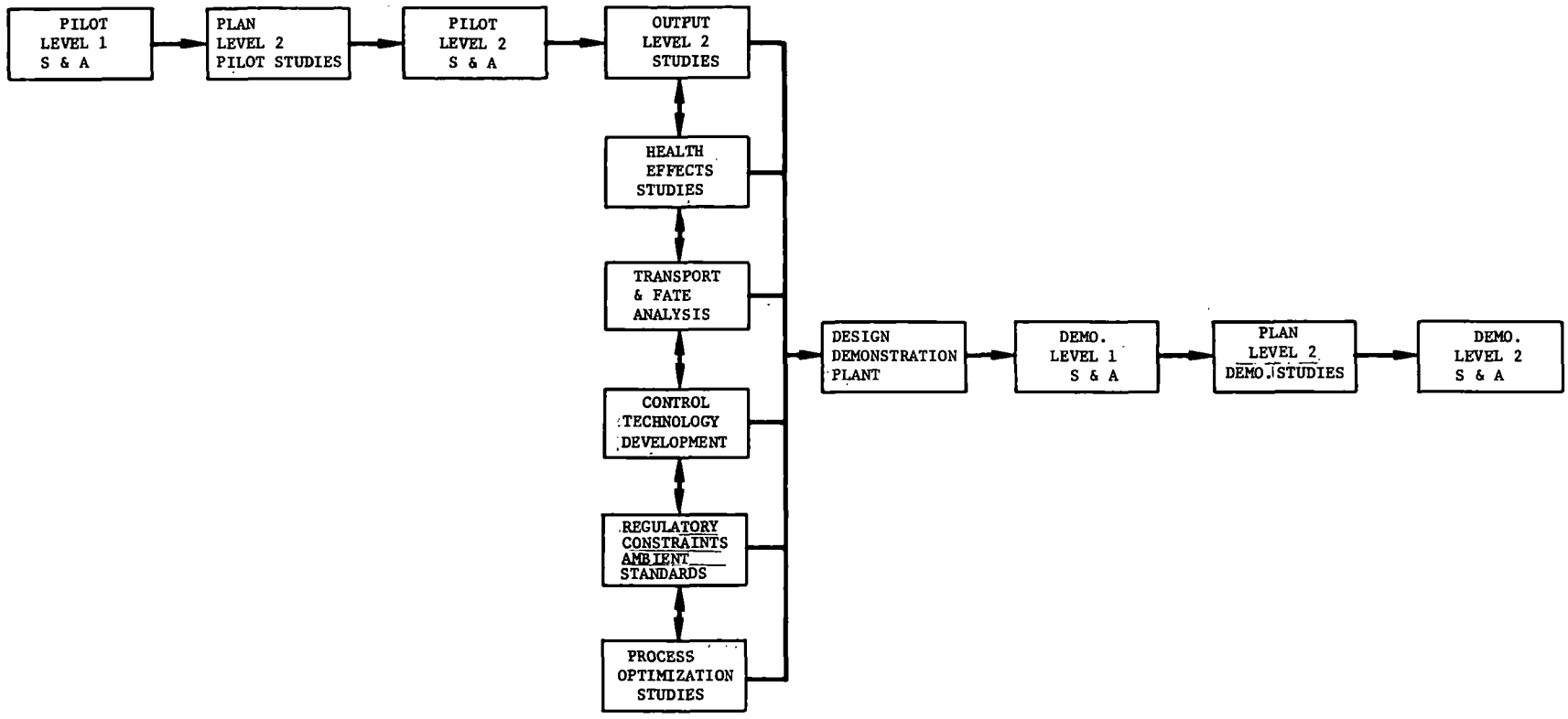

Figure 13. Sampling and analysis—progression from pilot to demonstration phase.

cost- and information-effectiveness of the program is maximized. "Clean intake air streams and "clean" intake water streams are such examples. The contractor must, however, at the time of assessment, evaluate each individual case before recommending that a stream be dropped from consideration. Blanket rejection of specific stream types (e.g., any intake water stream) should be avoided. For the generic FBC processes addressed in this document, the assumption has been made that all air and water intake streams originate from relatively clean sources and therefore do not require sampling. Similarly, since the use of clean start-up fuels (e.g., natural gas, propane, distillates) is anticipated for commercialized units, sampling is not planned for influent stream No. 16.

The sampling of internal process streams is, in general, excluded from the Level 1 and Level 2 strategies. Primary interest in these streams relates to process and control device evaluations. (Accidental discharge from within-process streams, while posing a hazard to the environment, will not be addressed within the present scope.) An exception to the internal stream exclusion is stream No. 26, the CAFB gasifier product. This stream, comprising the fuel feed to a retrofitted conventional steam power plant is of particular interest in environmental assessment.

The sampling of air-borne and water-borne fugitive emissions is an integral part of the environmental assessment of a process. For the air-borne category, the specific fugitive sources to be addressed in the present effort are storage piles of feed materials and solid residues that may be subjected to winds. Fugitives originating from vents, "loose" system components (e.g. seals, connections), careless materials handling, and other miscellaneous plant sources are site specific in nature and cannot be addressed in a generic context. Fugitive sampling procedures that are applicable to these sources will, however, be presented. In addition, it is assumed that appropriate control techniques will be employed in process operations such as coal and sorbent preparation to minimize or eliminate air-borne fugitives.

For the water-borne fugitive category, leaching from outdoor storage piles of feed and residual materials as well as from subsurface disposal sites (e.g., land fills) will be considered. No projections, however, will be made for the generic plants regarding disposal and storage methods to be employed or potential disposal and storage sites. (Other contractors are currently investigating these areas.) Emphasis will be focused on identifying laboratory and field techniques for obtaining leachate/runoff samples from solid residue and feed specimens. For purposes of the present document, all generic solid feed and solid residue streams will be considered for air-borne and water-borne fugitive sampling, as indicated in Table 5.

Table 5 provides a summary of generic streams selected for sampling and analysis at Level 1 and the environmental interest associated with

TABLE 5. STREAM SELECTION FOR SAMPLING AND ANALYSIS (PROCESS CATEGORIES I THRU IV)

STREAM NO.	STREAM DESIGNATION	ENVIRONMENTAL INTEREST
1*	Stack Gas	Key effluent
2*	Particulate Removal Discard	Key effluent, air-borne and water-borne fugitives
3*	Bed Solids Discard (not on CAFB unit)	Key effluent, air-borne and water-borne fugitives
4*+	Particulate Removal Discard--Regeneration Operations	Key effluent, air-borne and water-borne fugitives
5*+	Other Effluents from Regeneration and Sulfur Recovery Operations	Key effluent, air-borne and water-borne fugitives
6*	Blowdowns from Steam Turbine Cycle	Secondary effluent
7*	Blowdown from Water Treatment Operations	Secondary effluent
8	Product from Sulfur Recovery (Sulfur or Sulfuric Acid)	Process by-product (possible contamination)
9	Raw Fuel to Preparation	Key influent, air-borne and water-borne fugitives
10	Raw Sorbent/Additive to Preparation	Key influent, air-borne and water-borne fugitives
26	Fuel Gas Feed to Conventional Steam Generator (CAFB unit only)	CAFB product (fuel feed to conventional power plant)
28*	Particulate Removal Discard (CAFB unit only)	Key effluent, air-borne and water-borne fugitives

*Stream will undergo biological testing
+See Figures 10 thru 12.

each. Also indicated are those streams which have been selected for biological testing. (It should be noted that corresponding case study unit streams will be similarly sampled and analyzed.) A summary of the the "non-selected" generic streams and their primary sampling interest is presented in Table 6.

Figure 14 shows all influent and effluent streams associated with generic process categories I through IV and indicates those streams that will undergo Level 1 sampling and analysis. Included in the figure are fugitive sampling selections. It should again be emphasized that, for purposes of presenting Level 2 assessment procedures, all streams considered at Level 1 will have procedures specified for Level 2 as well. Actual selection of streams for the Level 2 sampling effort cannot be made, however, until the output of Level 1 assessment is available.

Case Study Units

The FBC units selected for case studies are pilot facilities. As discussed earlier, and as is evident by comparison of flow sheets for generic and case study units, certain operations associated with the generic (i.e., commercialized) processes are absent from the pilot process configurations. As a result, some generic streams selected for sampling have no counterpart in the case studies. From Table 7, a stream-by-stream comparison can be made for each process category.

PHYSICAL CHARACTERISTICS OF SAMPLED STREAMS

Assessment of the physical conditions present in streams selected for sampling is prerequisite to the development of sampling and analytical procedures. Two important parameters influencing technique selection are stream static pressure and temperature. For the range of system operating conditions under which sampling is planned, typical values of these parameters at proposed sampling sites are displayed in Table 7 for both the generic and case study units of each process category. Values for the case study units were derived from FBC literature, site visits, and contacts with principals at the sites. For the generic units, values were based in part on the literature and supplemented by engineering judgment.

For reasons of both thermal economy and personnel safety, it is anticipated that all high-temperature solid residue streams (e.g., particulate removal, bed solids) associated with the generic units will undergo cooldown to 93-149°C (200-300°F) prior to being discarded (and sampled). The method forecasted for solids cooldown is indirect heat exchange with an air or water coolant (not shown in the generic process flow sheets). Heat recovery with subsequent use of the coolant somewhere else in the process (e.g., preheated air to combustor) increases unit thermal efficiency. Additional solids cooldown occurs through heat losses in pipes and other system equipment. Solid residue transport is assumed to be accomplished pneumatically.

TABLE 6. NON-SELECTED STREAM SUMMARY

STREAM NO.	STREAM DESIGNATION	PRIMARY S&A INTEREST
11	Intake Water to Treatment	See pg. 36 discussion
12	Air to Combustor/Gasifier	See pg. 36 discussion
13	Air/Steam to Regenerator	See pg. 36 discussion
14	Prepared Fuel Feed to Combustor/Gasifier	Process evaluation
15	Prepared Fuel Feed to Regenerator (not on CAFB)	Regeneration evaluation
16	Start-Up Fuel Feed	See pg. 36 discussion
17	Prepared Sorbent/Additive Feed to Combustor/Gasifier	Process evaluation
18	Bed Solids to Regenerator	Regeneration evaluation
19	Flue Gas to Particulate Removal (Product fuel gas from CAFB gasifier)	Process evaluation, particulate removal evaluation
20	Makeup Water to Steam Turbine Cycle	Water treatment assessment
21	Recycle from Particulate Removal	Process evaluation
22	Recycle from Regeneration and Sulfur Recovery	Regeneration evaluation
23	Gas to Gas Turbine Inlet (pressurized and pressurized-adiabatic units only)	Gas turbine corrosion and erosion studies
24	Gas to Waste Heat Boiler (pressurized-adiabatic unit only)	Thermal economy evaluation
25	Air to Steam Generator (CAFB unit only)	See pg. 36 discussion
27	Steam Generator Flue Gas to Particulate Removal (CAFB unit only)	Particulate removal evaluation

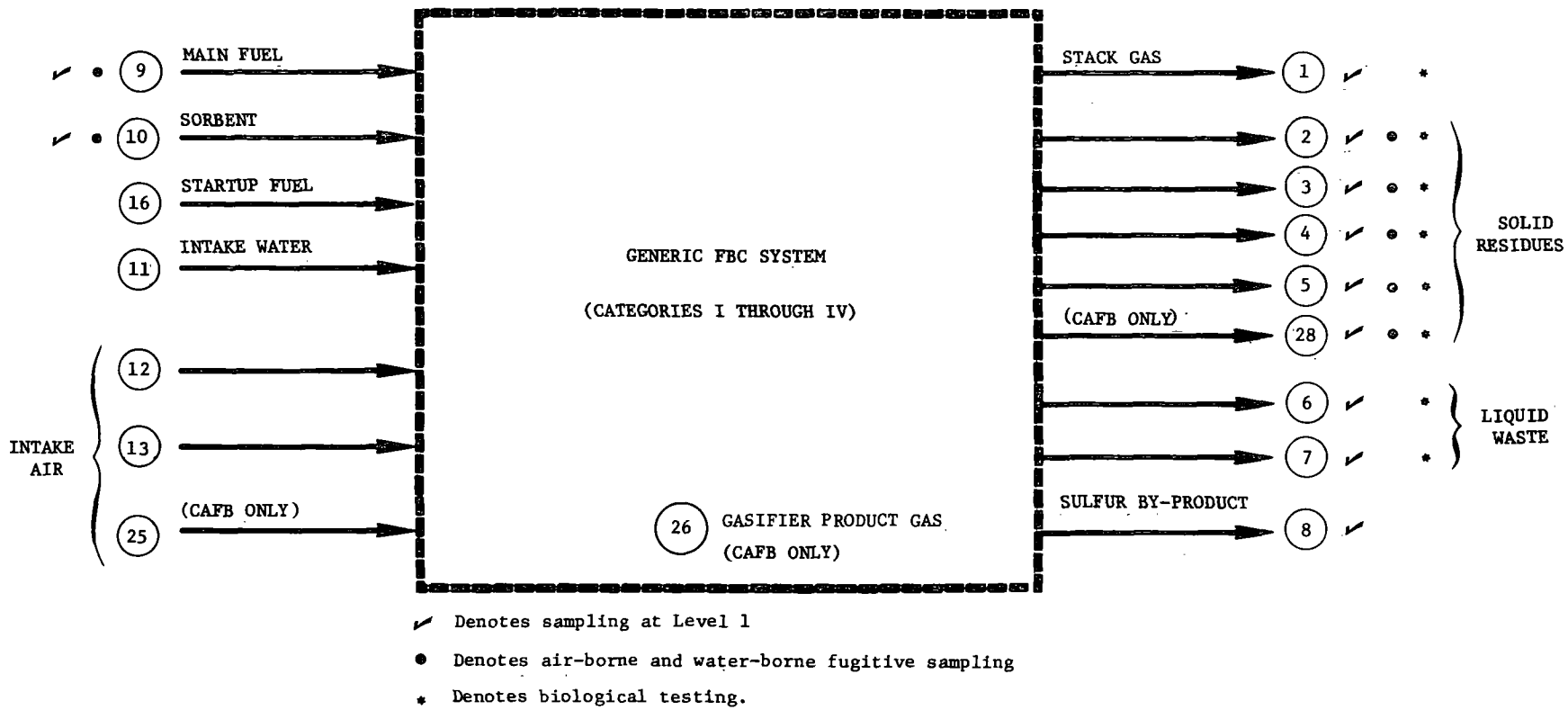

Figure 14. Influents and effluents—generic FBC processes.

TABLE 7. PHYSICAL CHARACTERISTICS OF SAMPLED STREAMS

STREAMS SELECTED FOR SAMPLING			CATEGORY I ATMOSPHERIC FBC OF COAL						CATEGORY II PRESSURIZED COMBINED CYCLE FBC OF COAL		
			GENERIC UNIT			POPE, EVANS & ROBBINS ALEXANDRIA UNIT			GENERIC UNIT		
STREAM NO.	STREAM DESIGNATION	PHYSICAL COMPOSITION	TEMP.	PRESS.	REMARKS	TEMP.	PRESS.	REMARKS	TEMP.	PRESS.	REMARKS
1	Stack gas	gas, particulates	240-300 F	atm		400-600 F	atm	Sample upstream of ID fan	275 F	atm	
2	Particulate removal discard	solid	200-300 F	atm		200-300 F	atm		200-300 F	atm	
3	Bed solids discard (not on CAFB unit)	solid	200-300 F	atm		1500 F	atm		200-300 F	atm	
4	Particulate removal discard —regeneration operations	solid	200-300 F	atm				Regenerator not functional	200-300 F	atm	
5	Other effluents from regeneration and sulfur recovery operations	see individual units	200-300 F	atm	Ash discard from regenerator				200-300 F	atm	Ash discard from regenerator
6	Blowdowns from steam turbine cycle	liquid	100 F	atm				Sampling not recommended	100 F	atm	
7	Blowdown from water treatment operations	liquid	ambient	atm					ambient	atm	
8	Product from sulfur recovery (sulfur or sulfuric acid)	liquid	100 F	atm	Sulfuric acid produced			No sulfur recovery operation	230 F	atm	Sulfur produced
9	Raw fuel to preparation	coal (I,II,III) residual oil (IV)	ambient	atm		ambient	atm		ambient	atm	
10	Raw sorbent to preparation	solid	ambient	atm		ambient	atm	Pre-sized sorbent purchased	ambient	atm	
26	Fuel gas feed to conventional steam generator (CAFB unit only)	gas, particulates									
28	Particulate removal discard (CAFB unit only)	solid									

TABLE 7. PHYSICAL CHARACTERISTICS OF SAMPLED STREAMS (CONCLUDED)

CATEGORY II			CATEGORY III						CATEGORY IV					
PRESSURIZED COMBINED CYCLE FBC OF COAL			PRESSURIZED COMBINED CYCLE FBC OF COAL (ADIABATIC COMBUSTOR)						CAFB RESIDUAL OIL GASIFICATION					
EXXON MINIPLANT			GENERIC UNIT			COMBUSTION POWER CO. PDU-400			GENERIC UNIT			EXXON, LTD. ABINGDON UNIT		
TEMP.	PRESS.	REMARKS	TEMP.	PRESS.	REMARKS	TEMP.	PRESS.	REMARKS	TEMP.	PRESS.	REMARKS	TEMP.	PRESS.	REMARKS
1500 F	10 atm	High pressure, high temp. sampling required	300 F	atm		940 F	atm	Turbine exhaust	300 F	atm		239 F	atm	
180-200 F	atm	Sample at lock hopper outlet	200-300 F	atm		400 F~2a 300 F~2b	atm	2a-1st and 2nd stage sep. discard to sand bin 2b-granular filter discard at baghouse	200-300 F	atm				Recycle to gasifier and regenerator
250 F	atm	Sample at lock hopper outlet	200-300 F	atm								100 F	atm	Samples taken under nitrogen —then cooled
120-150 F	atm	No lock hopper	200-300 F	atm				No regenerator on unit	200-300 F	atm		176 F	atm	
300-400 F	20-25 psig	Off-gas to scrubber	200-300 F	atm	Ash discard from regenerator				ambient 5a 170 F 5b 200-300 F 5c	atm	5a-slurry effluent from scrubber 5b-scrubbed gas to stack 5c-regen. solids discard	100 F	atm	Regen. solids discard samples taken as in stream 3
		No blowdowns	100 F	atm				No steam production	100 F	atm				
			ambient	atm					ambient	atm				
		No sulfur recovery operation	230 F	atm	Sulfur produced			No sulfur recovery operation	230 F	atm	Sulfur produced			
ambient	ambient	Pre-sized coal purchased	ambient	atm		ambient	atm				No preparation for residual oil	ambient	atm	No preparation for residual oil
atm	atm	Pre-sized sorbent purchased	ambient	atm		ambient	atm	Pre-sized sorbent purchased	ambient	atm		ambient	atm	Pre-sized sorbent purchased
									1550-1650 F	atm		1595 F	atm	
									200-300 F	atm		875 F ~ 30a 248 F ~ 30b	atm	

The only generic stream requiring high-temperature sampling (around 871°C) is the CAFB product gas (No. 26). As indicated in Table 7, each selected stream in every generic process category will be sampled at approximately atmospheric pressure. For the case study units, several instances are indicated where high-temperature and/or high pressure sampling will be required. In general, the physical conditions associated with the selected generic streams do not in themselves pose particular sampling difficulties.

AREAS OF ANALYSIS

Introduction

Figures 15 through 18 provide an overall view of the multi-media chemical and biological analyses associated with Level 1 and Level 2 assessment. Organic analyses, inorganic analyses, and bioassay are relevant to samples from all media. Additionally, physical characterization studies are performed on solid and particulate samples while aqueous liquid streams are subjected to further analyses to determine pH, dissolved and suspended solids, COD, BOD and other quantities. Leachates from solid samples also demand analytical concern. The special fuel analyses (e.g., ultimate and proximate) which are performed routinely during process operation have not been indicated in the figures but do form a part of the Level 1-Level 2 strategy.

It is of interest to examine the FBC process and, using theoretical principles, attempt to forecast the classes-species of pollutants which may be released to the environment during its operation. This task has already been performed by GCA Corporation (reference 123). In the paragraphs that follow, a brief discussion of potential pollutants, based on the GCA study and other information, is presented. The pollutants mentioned in this discussion should not be construed as representing the entire list of analytical concern in an environmental assessment. On the contrary, in the present strategy, all classes and species of pollutants are treated as potential stream constituents; only through the broad screening associated with Level 1 can certain classes/species be eliminated from further consideration.

Organic Compounds

Data on specific organic compounds emitted during fluidized-bed combustion are extremely rare. Analysis of flue gas is often limited to only CO, CO_2, O_2, SO_2, and NO_x. Occasionally total hydrocarbons (THC) are measured, generally by a flame ionization technique. While THC values may well be of use in measuring overall combustion efficiency, they are of relatively little help in predicting species concentrations, even though values for total hydrocarbons are typically reported in terms of methane.

Potentially, an extremely wide variety of organic compounds could form. Detailed kinetic or thermodynamic calculations are of limited value; both the identity of the true reacting species and the assumption of true equilibrium between reacting species are often speculative.

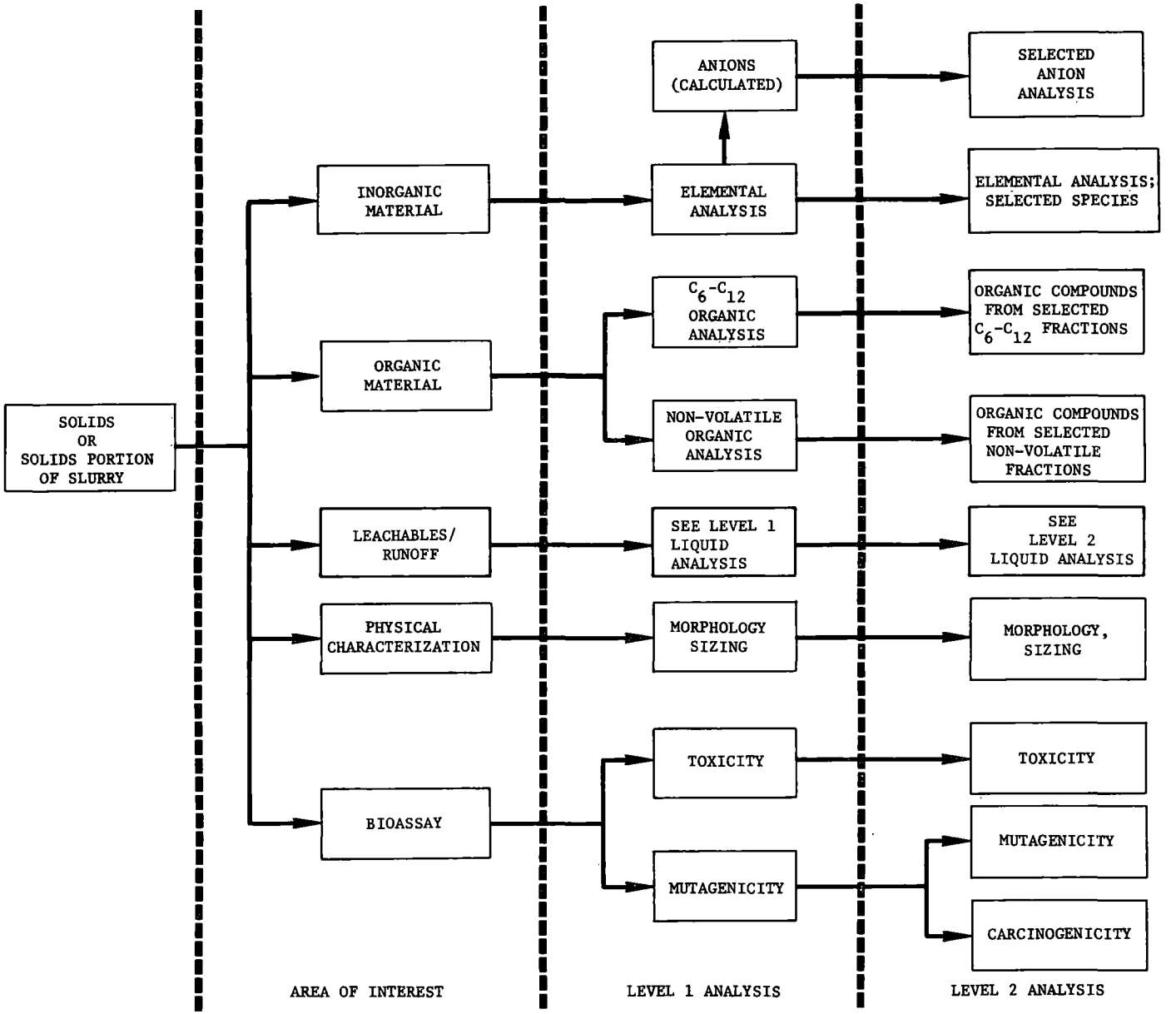

Figure 15. Areas of analysis—solid samples.

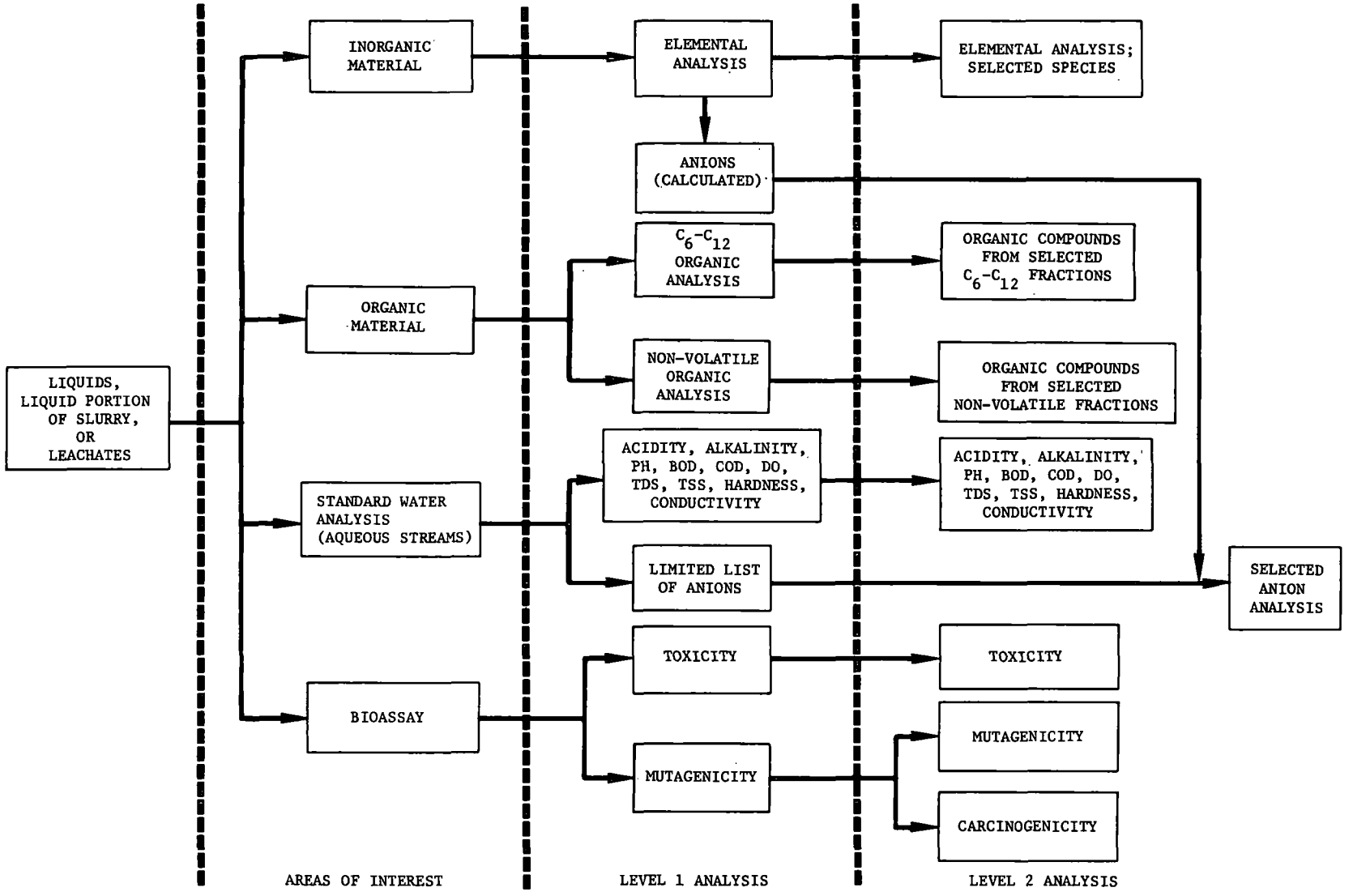

Figure 16. Areas of analysis—liquid samples.

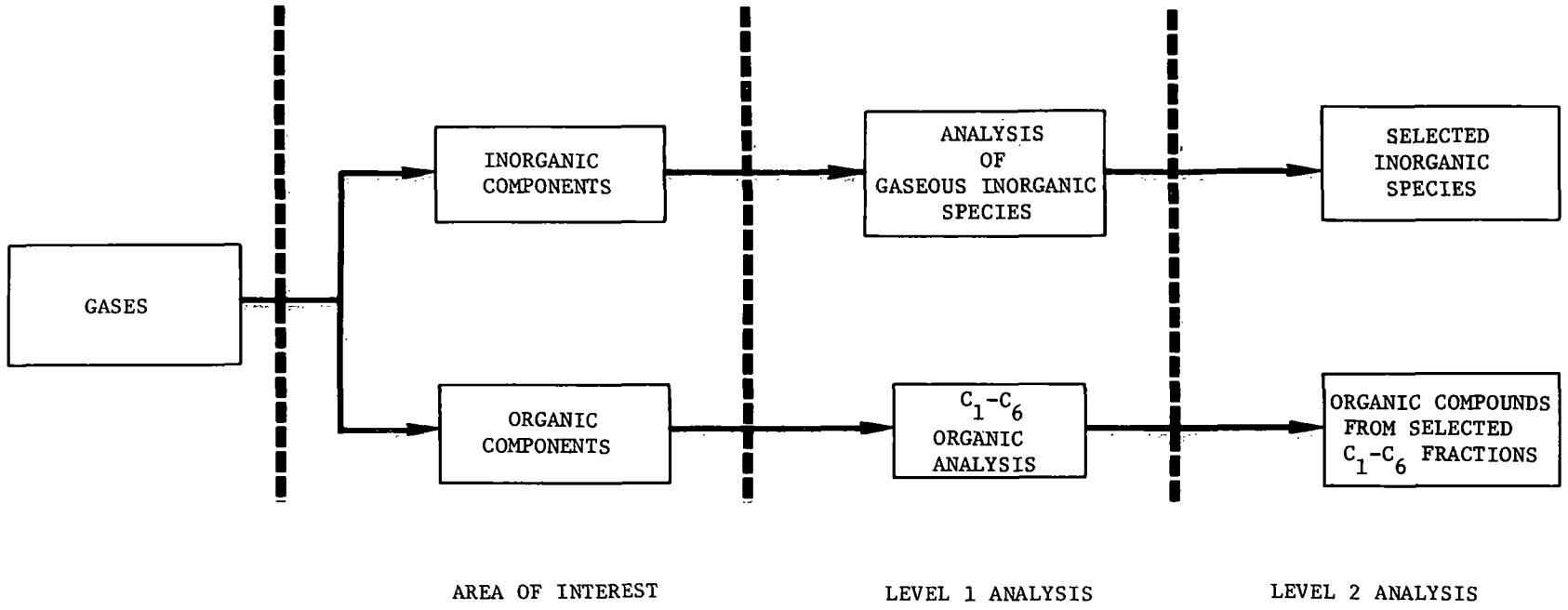

Figure 17. Areas of analysis—gas samples.

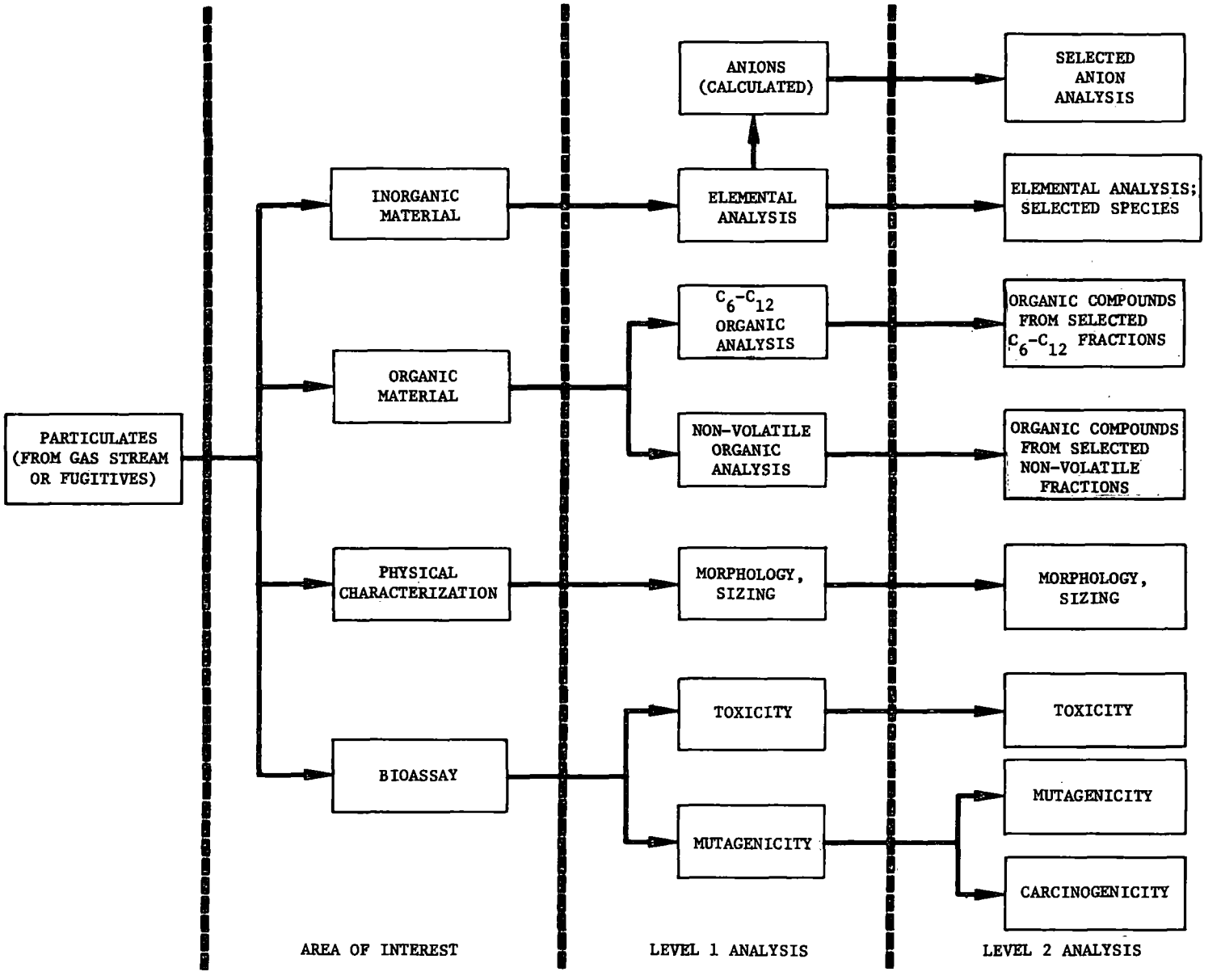

Figure 18. Areas of analysis—particulate samples.

Combustion is a combination of two competitive pathways: oxidative and pyrolytic. The oxidative pathway leads to partially oxidized products such as CO and fully oxidized products such as CO_2. The pyrolytic pathway leads to reduced species such as aromatics, and of greater concern, polycyclic aromatics such as benzo (α) pyrene. Pyrolytic reactions are important for an additional reason; the products of these reactions may play an important role in the formation and growth of particulate matter.

In brief, little may be predicted a priori about specific compound formation.

Inorganic Gases

Data on inorganic gaseous species is incomplete; typical stack gas analysis often consists of measuring only SO_2, NO_x (NO and NO_2), CO, CO_2, and O_2 concentrations. Occasionally, SO_2 may be measured for compliance testing. SO_2 is regarded as the single most hazardous pollutant by health authorities. Structural damage caused by SO_2-SO_3 corrosion is also well known, SO_2 is also a process parameter. Both NO_2 and NO are potential health hazards. Moreover, these species play important roles in smog formation under adverse conditions. The problem of CO emissions from combustion sources may be less significant than was originally thought according to recent studies at Argonne National Laboratories (reference 5). However, CO is still considered a potential health hazard. Neither carbon dioxide nor oxygen are considered to be pollutants, although steadily increasing CO_2 levels do pose certain environmental hazards. Both CO_2 and O_2 are, however, primary process control parameters. Another species of interest which relates to process control is H_2O in the stack gas.

There are, aside from the previously mentioned species, a number of other gaseous compounds which may be synthesized during the combustion process. While detailed calculations can be made, the numbers generated by such methods represent only trends or perhaps concentration ratios (generally the most common method is to minimize the chemical system's free energy, assuming equilibrium conditions--see reference 290).

The following list of inorganic gaseous species that may be present is not intended to be exhaustive or exclusive, but rather a framework in which analytical methods and conditions may be discussed later in the document: ammonia (NH_3), carbon dioxide (CO_2), carbon monoxide (CO), halogens, the hydrogen halides, hydrogen cyanide (HCN), hydrogen sulfide (H_2S), miscellaneous sulfur containing species (e.g., carbonyl sulfide (COS)), mercury (Hg), nitrogen oxides (NO_x), miscellaneous nitrogen containing species, oxygen (O_2), sulfur oxides (SO_x) and water vapor (H_2O).

Trace Elements

Virtually all elements below atomic number 92 are contained in at least trace amounts (<100 ppm) in coal and oil. Typical ranges of concentrations of trace elements for coals and oils are shown in Figures 19 and 20.

Trace elements from combustion processes may be emitted via various pathways. One primary mechanism of environmental release is via particulate emissions; recent investigations have shown that certain toxic elements are volatilized and preferentially concentrated in submicron sized particles (reference 194). A number of elements, for example mercury, cadmium, bromine, and iodine, are sufficiently volatile to be emitted in the gas phases in their elemental form. Compounds of a number of trace elements may react in the FBC process to form gaseous species of concern (an example is the reaction of nickel and carbon monoxide under suitable conditions to form nickel carbonyl, $Ni(CO)_4$). Trace elements may also be leached from solid residues and feeds and adversely impact water quality.

All areas of the ecological system are affected to varying extents by trace elements. Metals, in particular, are the most insidious pollutants because of their nonbiodegradable nature. Currently, only beryllium and mercury emissions are regulated by Federal Emission Standards. In general, however, only a few trace elements are completely nontoxic at any level (references 98, 267).

Seventy-six elements are considered at Level 1. To present a comprehensive treatment of level 2 analytical procedures these seventy-six elements will again be addressed at Level 2.

Anions

A variety of anions will be found in particulates, solid residues, and solid feeds as well as in leachates from these materials. In addition, certain anions are associated with water treatment and steam cycle blowdowns. The following list provides a framework in which Level 2 analytical methods can be discussed later in the document: arsenate and arsenite, bromide, carbonate and bicarbonate, chloride, cyanide, fluoride, iodide, nitrate, nitrite, phosphate, sulfide, sulfite, and sulfate. Level 1, elemental analysis will provide estimates of most anion concentrations. The estimation procedure assumes that each element capable of anion formation is present, in toto, in a single anionic form. These calculations will yield upper limits of anion concentrations but no information on specific species. Anions which are not analyzed in the above procedure, are analyzed as part of Standard Water Analysis.

Standard Water Analysis

These analyses are covered only as standard analytical procedures, i.e., either EPA or ASTM recommended methods. Analysis areas include selected

H ND																
Li 100	Be 100											B 100	C ND	N ND	O ND	F 100
Na 100	Mg 100											Al 100	Si 100	P 100	S 100	Cl 100
K 100	Ca 100	Sc 100	Ti 100	V 100	Cr 100	Mn 100	Fe 100	Co 100	Ni 100	Cu 100	Zn 100	Ga 100	Ge 100	As 100	Se 100	Br 100
Rb 100	Sr 100	Y 100	Zr 100	Nb 100	Mo 100	Tc Nd	Ru 0	Rh 0	Pd 0	Ag 92	Cd 92	In Stand- ard	Sn 100	Sb 92	Te 85	I 85
Cs 100	Ba 100	La 100	Hf 46	Ta 62	W 69	Re 0	Os 0	Ir 0	Pt 0	Au 0	Hg 38	Tl 31	Pb 100	Bi 31	Po ND	At ND
Fr ND	Ra ND	Ac ND	Ce 100	Pr 100	Nd 100	Pm ND	Sm 100	Eu 100	Gd 85	Tb 85	Dy 85	Ho 77	Er 77	Tm 0	Yb 62	Lu 38
			Th 92	Pu ND	U 92											

Figure 19. Occurrence frequency of elements in 13 raw coals as determined by spark-source mass spectrometry. All quantities in %. ND = not determined. O = checked but not detected.

H ND																
Li 4-163	Be 0.4- 3											B 1-230	C ND	N ND	O ND	F 1-110
Na 100- 1000	Mg 500- 3500											Al 3000- 23.000	Si 5000- 41,000	P 6-310	S 700- 10,000	Cl 10- 1500
K 300- 6500	Ca 800- 6100	Sc 3-30	Ti 200- 1800	V 2-77	Cr 26- 400	Mn 5-240	Fe 1400- 12,000	Co 1-90	Ni 3-60	Cu 3-180	Zn 3-80	Ga 0.03- 10	Ge 0.03- 1	As 1-10	Se 0.04- 03	Br 1-23
Rb 1-150	Sr 17- 1000	Y 3-25	Zr 28-300	Nb 5-41	Mo 1-5	Tc ND	Ru <0.1	Rh <0.1	Pd <0.1	Ag <0.01- 3	Cd <0.01- 0.7	In Stand- ard	Sn 1-47	Sb <0.1-2	Te <0.1- 0.4	I <0.1-4
Cs 0.2-9	Ba 20- 1600	La 0.3- 29	Hf <0.3- 4	Ta <0.1- 8	W <0.1- 0.4	Re <0.2	Os <0.2	Ir <0.2	Pt <0.3	Au <0.1	Hg <0.3- 0.5	Tl <0.1- 0.4	Pb 1-36	Bi <0.1- 0.2	Po ND	At ND
Fr ND	Ra ND	Ac ND	Ce 1-30	Pr 1-8	Nd 4-36	Pm ND	Sm 1-6	Eu <0.1- 0.4	Gd <0.1- 3	Tb <0.1- 2	Dy <0.1- 5	Ho <0.1 0.4	Er <0.1	Tm <0.1	Yb <0.1- 0.5	Lu <0.1- 0.3
			Th <0.1- 5	Pu ND	U <0.1- 1											

Figure 20. Concentration range of elements in 13 raw coals analyzed by spark-source mass spectrometry. All quantities in ppm wt. ND = not determined.

anions and eight additional measures of water quality: acidity, alkalinity, biochemical oxygen demand (BOD), conductivity, chemical oxygen demand (COD), dissolved oxygen, pH, and total dissolved and suspended solids. The selected species are: ammonia, carbonate, cyanide, nitrate, phosphate, sulfate and sulfite.

Physical Characterization of Solids

For solid and particulate samples, Level 1 procedures for physical characterization provide information on the following: size distribution, classification into general morphological types, and possible compound identification (by crystalline structure only). Level 2 physical characterization is an expansion and refinement of techniques used in Level 1. Of particular importance, however, is inorganic compound identification. Data from all phases of an analysis program (e.g., elemental and anion analysis, etc.) are combined to identify specific inorganic compounds, but methodology for this area is ill-defined and thus a complete analytical scheme is not presented in this document.

Bioassay

Biological testing, an integral part of phased environmental assessment, is planned for both the Level 1 and Level 2 efforts. In the former case, whole samples from selected generic FBC streams (see Table 5) will undergo bioassay to determine cytotoxicity and mutagenicity within broad limits. The results of the Level 1 testing, biological and chemical, will be utilized in establishing priorities and plans for further bioassay work at Level 2. The Level 2 effort will involve testing on fractionated samples or on specific components of a given sample and will be extended to include determinations of carcinogenic potential.

At present, specific biological test procedures have not been completely identified and, therefore, cannot be incorporated into the present document. Procedures for Level 1 bioassay will, however, be provided in a manual scheduled for issue in January 1977. It should be noted that the sample sizes specified in the next chapter may be modified when exact procedures for bioassay are defined.

CHAPTER 3

RECOMMENDED SAMPLING AND ANALYTICAL PROCEDURES FOR FBC PROCESSES

INTRODUCTION

This chapter presents recommended procedures for multi-media sampling and analysis of the FBC processes under consideration, using the phased assessment strategy outlined in Chapter 2. Both generic and case study units within each process category are addressed; emphasis, however, is focused on the former. For convenient reference to the large volume of material included, both sampling and analytical procedures for Level 1 and Level 2 have been summarized in tabular form.

The intent here is to recommend and highlight procedures rather than to provide detailed sets of instructions for sampling and analytical personnel to follow. Key references that provide detailed instructions have been listed in the summary tables. Additional data and references can be found in the compendium of sampling and analytical techniques presented in the Appendix.

In the following section, some general aspects of a sampling test plan are discussed.

GENERAL SAMPLING CONSIDERATIONS

Pre-Test Considerations

Before a detailed final sampling test plan can be devised and executed, certain preliminary tasks must be performed by the source testing contractor. A detailed discussion of these pre-test procedures is found in reference 147. Because of the typical complexity of an assessment sampling program (particularly for a demonstration or commercialized unit), a preliminary test plan should be prepared in advance of the pre-test site survey. To prepare this plan, relevant data concerning the facility assigned for testing should be gathered through contacts with plant personnel, literature, etc. Items of particular interest include:

1. Process flow sheets and descriptions;

2. Plant layout drawings;

3. Specifications on plant equipment;

4. Operating procedures;

5. Value ranges for operating parameters; and

6. Stream conditions (e.g., pressures, temperatures, flow rates).

In addition, results of tests on similar units (if available) should be studied to identify possible areas of commonality.

At the time of the pre-test site survey, suitability of the tentative sampling sites selected in the preliminary test plan, with regard to accessibility, Level 1 (or Level 2) location criteria, and safety requirements, should be verified. Appropriate modifications should be made if necessary. On the basis of the preliminary test plan and the pre-test site survey, a detailed final sampling plan can be formulated.

Prior to testing, sampling personnel should be briefed to acquaint them with new procedures that will be employed and plans to be followed in the event of test equipment failure or unexpected process variations during sampling.

Sample Size

Table 8 lists the minimum sample sizes required for Level 1 analysis according to sample type. Level 2 minimum sample sizes are dependent upon the pollutant concentrations determined from the Level 1 effort and cannot be specified a priori.

TABLE 8. SAMPLE SIZE REQUIREMENTS - LEVEL 1

Sample Type	Sample Quantity
Stack particulate	$30m^3$
Stack gas	3 liters
Fugitives (ambient air)	$480m^3$ (STP)
Liquid	10 liters
Solid	1 kg

Sample Handling

Since environmental assessment is concerned with the detection and quantification of pollutants which may be present in trace amounts, and since bioassay is an integral part of environmental assessment, it becomes extremely important that contamination and degradation of the sample does not occur. To minimize this possibility, the following precautions should be taken:

1. Sampling apparatus and sample containers must be constructed of biologically inert materials and must not appreciably alter the concentration of sample constituents by erosion, adsorption, or any other mechanism;

2. Adequate sample preservation techniques should be employed; and

3. Sampling equipment must be thoroughly cleaned before each use. Transfer of samples from sampling apparatus to containers must be performed in a consistent and careful manner in a clean environment. Sampling containers should be airtight.

RECOMMENDED SAMPLING PROCEDURES FOR GENERIC UNITS

Introduction

Recommended Level 1 and Level 2 sampling procedures for generic process Categories I through IV are summarized in Table 11. Included in the table are site preparation requirements, rationale for method selection, key references, and other relevant data. Because of the similarity of process configurations and the commonality both of streams selected for sampling and associated stream physical conditions, the procedures specified for Categories I through IV are, for the most part, identical. (Assessment of the CAFB process requires the sampling of four additional streams however).

Sampling procedures are summarized according to "stream category" rather than on a stream-by-stream basis. Use of the stream category subdivision enables the specification of a single sampling procedure for any group of generic streams having similar physical compositions, physical conditions, and site preparation requirements (e.g., solid residue streams at 200-300°F and atmospheric pressure). Certain FBC process streams, however, cannot be grouped in this manner, as is evident in Table 11. In the case of the stack gas stream, two separate categories (particulate and gaseous components) are employed to specify the two distinct types of sampling required.

To link generic sampling procedures with analytical procedures, and to direct the reader to the appropriate analytical tables, the analysis areas associated with each stream category are listed in the "Applicable Areas of Analysis" column of Table 11.

Particulate Sampling

Recommended Methods--

The sampling of particulates from stacks and other ducted gas streams represents one of the most costly and complex aspects of an assessment sampling program. For both Level 1 and Level 2 particulate sampling, use of

the Source Assessment Sampling System (SASS) is recommended. Selection rationale, site preparation requirements, and other considerations relating to the SASS train are provided in Table 11 under Stream Category F. More detailed discussions of the train can be found in Appendix Table A-1 as well as in the references listed there and in Table 11.

Sampling Location--

For Level 1 particulate sampling, a convenient, readily accessible sampling site (preferably an existing port) should be selected to minimize site preparation efforts and costs. For stack gas sampling, the selected site may be located in the stack or in the breeching. Regions where irregular flow patterns exist should, however, be avoided.

For Level 2 sampling, EPA Method 1 specifications for port placement and traverse point locations must be followed. Sampling sites should be located at least eight equivalent diameters downstream of any flow disturbance. For stack gas sampling, the erection of scaffolding may be required since sampling sites will be located up and on the stack.

The achievement of Level 2 accuracy goals requires that a full traverse be performed at isokinetic conditions. The SASS train is designed to operate at a pre-determined constant flow rate, which if changed, would alter the cut size of particulate captured by the train's cyclones. To maintain isokinetic conditions for a full traverse would entail a change of nozzles at each traverse point (a rather impractical procedure). An alternative involves locating the sampling site at a cross-section where the traverse point velocities do not vary more than 10 percent from a mean value. The SASS train would then provide conditions that are isokinetic within Level 2 accuracy limits. Another option is applicable to sampling locations where some traverse points (i.e., outlier points) have a velocity variation greater than 10 percent of a mean value. If the number of outlier points is small compared to the total number to be sampled, then nozzles may be changed at these points to maintain isokinetic conditions.

Sampling Procedure--

At Level 1, a velocity traverse is performed at the selected site and the average velocity is calculated. The cross-section point most nearly approximating the average velocity is selected as the sampling point and the proper nozzle size for isokinetic sampling is then chosen. Sampling extends for a time period required to obtain a specified sample quantity.

At Level 2, the sampling site is chosen in accordance with the previously discussed criteria. One of the above mentioned techniques for isokinetic sampling is selected and a traverse is then performed in accordance with EPA Method 1.

Sample Handling--

Procedures for sample handling and transfer from the SASS train nozzle, probe, cyclone, and filter are presented in Figures 21 and 22.

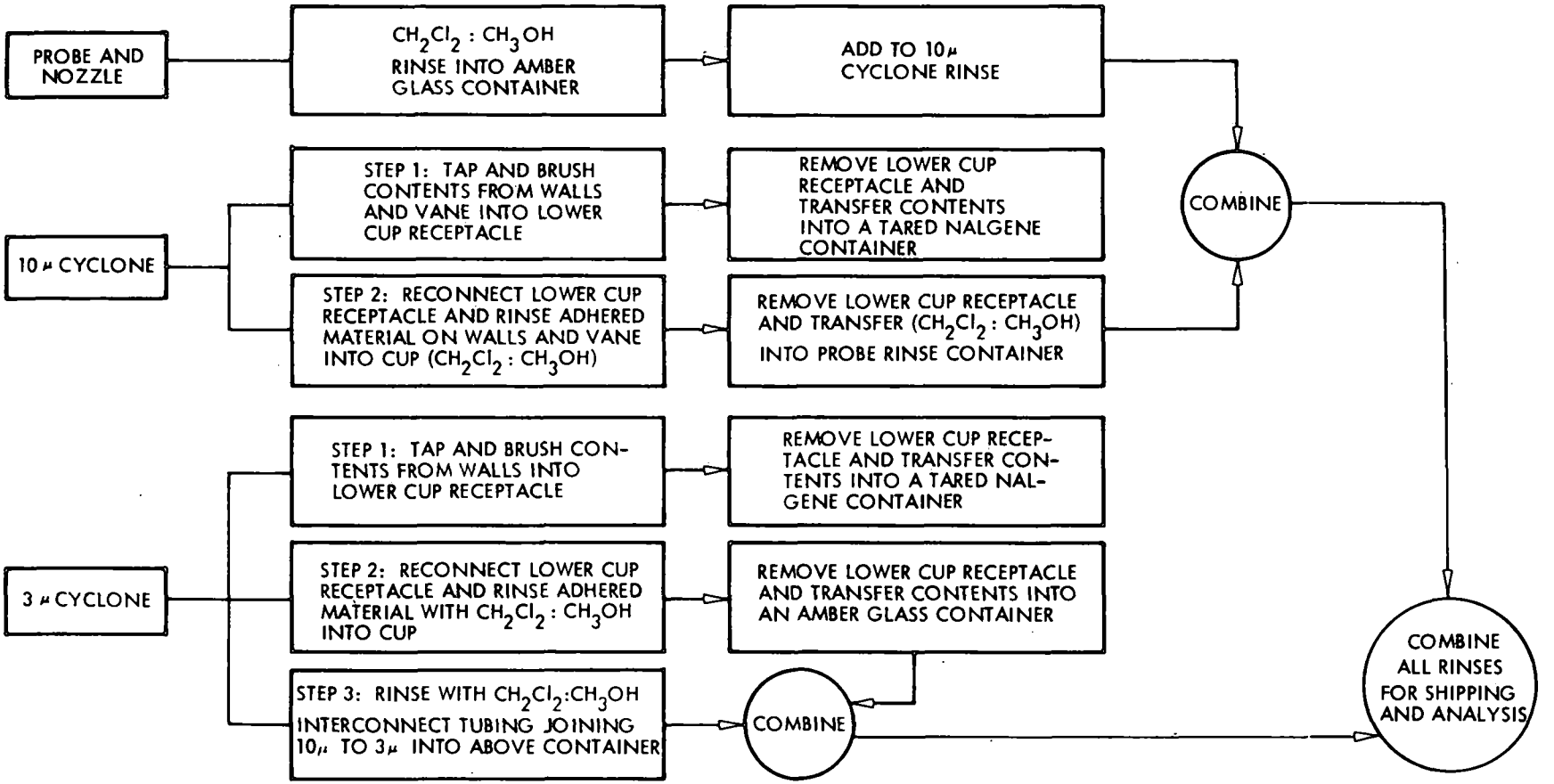

Figure 21. Sample handling and transfer- SASS nozzle, probe, cyclones and filter

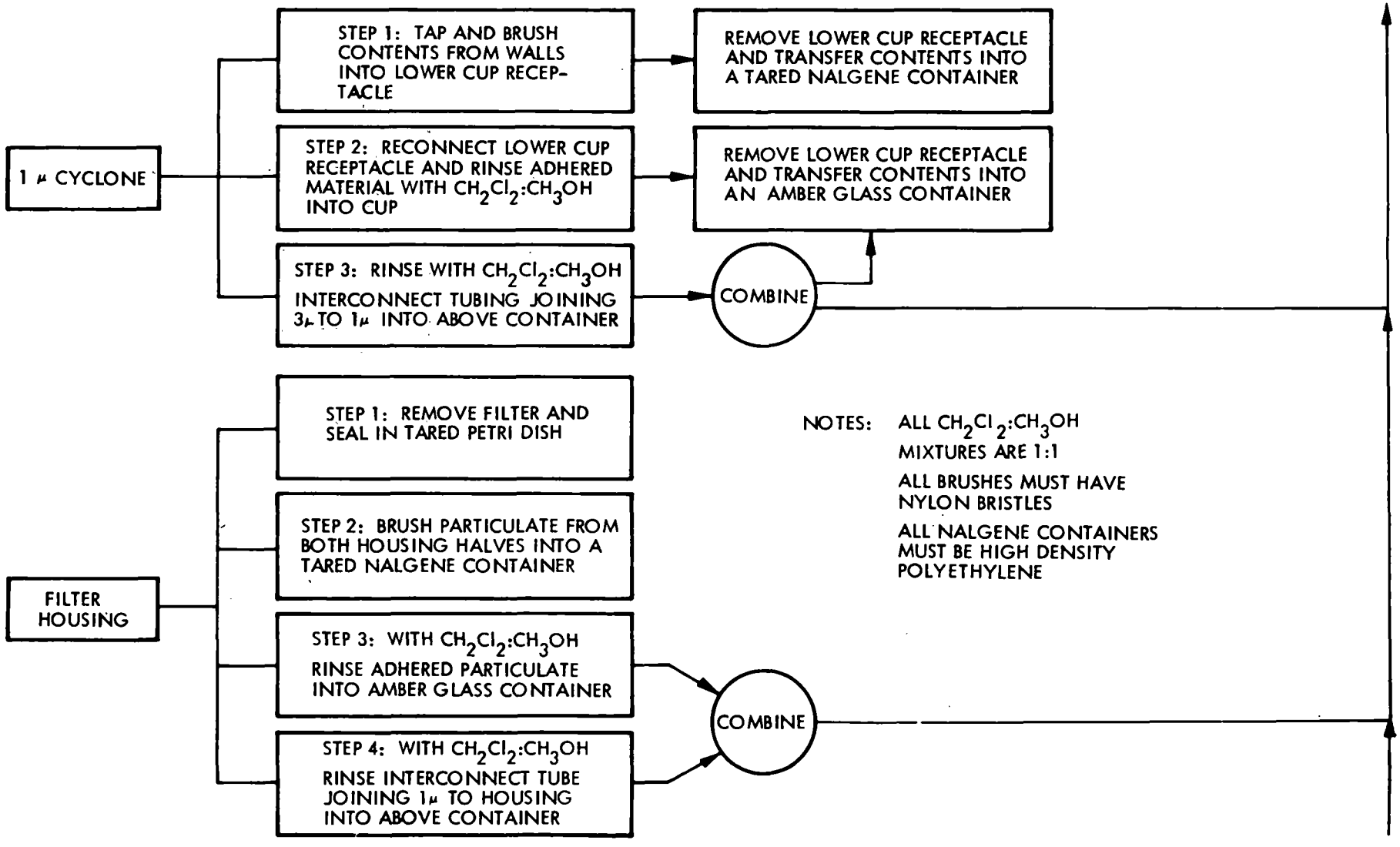

Figure 22. Sample handling and transfer- SASS nozzle, probe, cyclones and filter (continued)

Gas Sampling

Recommended Methods--

Recommended techniques for the sampling of gaseous components from stacks are specified in Table 11 under Stream Category E. (It should be noted that these methods are applicable to ducted gas streams in general.) Additional information on these techniques can be found in Appendix Table A-2 and in the references listed in Tables 11 and A-2.

For Level 1 gas sampling, use of a simple displacement gas bomb (a single point, manual method) is recommended.

For the Level 2 effort, two sampling options are recommended for most gases. In each case, the first option is a manual technique while the second option uses a continuous analyzing instrument and an extractive sampling procedure. It is expected that the second option would be selected if the equipment was already employed on site for monitoring purposes.

Techniques have been selected on the basis of proven field experience as well as for compliance with the goals of each strategy level. (An exception to the field experience criterion is the SASS train.)

Sampling Location--

For Level 1 gas sampling (as in the case of particulates), a convenient, readily accessible sampling site, preferably an existing port, should be selected. If stratification exists there, another location sufficiently downstream of any air inleakage point and in a well-mixed flow region, should be chosen. Stratification investigations at existing ports are performed using a portable O_2 analyzer. To locate new sampling ports, however, engineering judgment is used to predict the presence of stratification.

For cost-effectiveness, it is desirable that the Level 2 particulate sampling site be used for Level 2 gas sampling. If stratification does not exist at this location, single point sampling is satisfactory. If, however, an investigation indicates the presence of stratification, a sampling routine involving multi-point traversing must be designed. Techniques for performing stratification investigations are described in Appendix Table A-2. A detailed treatment of the stratification problem is provided in references 55, 77, 331, and 332.

Sampling Procedures--

A 3 liter simple displacement bomb is recommended for Level 1 gas sampling. Samples are extracted at a single point using a teflon line as a probe and a glass wool plug as a prefilter for particulates. Detailed discussions of gas bomb sampling techniques are found in references 13.6, 211, and 323.

Detailed procedures for each of the recommended Level 2 methods can be found in the references listed in Tables 11 and A-2.

SASS train impinger reagents are specified in Table 9 and apply to both Levels 1 and 2.

Sample Handling--

Because of possible sample instability, gas bomb samples acquired at Level 1 should be analyzed as soon as possible and must be stored away from direct sunlight and heat. Handling and transfer procedures for the impingers and XAD-2 modules of the SASS train are provided in Figures 23 and 24. References listed in Table 11 and A-2 should be consulted for sampling handling and transfer instructions for each of the recommended Level 2 techniques.

Liquid Sampling

Recommended Methods--

Recommended techniques for the sampling of liquids are specified in Table 11 under Stream Categories C and D. Appendix Table A-3 as well as the references listed there and in Table 11 offer more detailed discussions of these techniques.

For the liquid sulfur or sulfuric acid by-product (stream No. 8), tap sampling is recommended both for Level 1 and Level 2. Since these liquids are homogeneous in nature, a tap sample should be representative. Taps may be installed in either a discharge line or a holding tank, at any convenient location.

For the blowdown streams (stream No. 6 and 7), the possibility of high solids content (and thus, stratification) exists. If the discharge point of a blowdown stream is accessible, a full-stream cut technique using a dipper is recommended for Level 1 sampling. If this point is inaccessible, a tap should be installed in a well-mixed region of the blowdown line. Level 2 sampling requires the use of an automatic hi-volume sampler, also installed in a well-mixed region of the line.

Sampling Location--

Sampling location has been addressed in the above discussion.

Sampling Procedure--

For tap sampling, the maximum sampling rate recommended in ASTM procedures is 500 ml/minute. Tap installation specifications are also covered in the ASTM procedures.

When using a dipper for full-stream cut sampling of line discharge points, the dipper must not be allowed to overflow during sampling. If overflow does occur, a larger container should be used.

TABLE 9. SASS TRAIN IMPINGER SYSTEM REAGENTS

IMPINGER	REAGENT	QUANTITY	PURPOSE
#1	6 M H_2O_2	750 ml	Trap reducing gases such as SO_2 to prevent depletion of oxidative capability of trace element collecting impingers 2 and 3.
#2	0.2 M $(NH_4)_2S_2O_8$ +0.02 M $AgNO_3$	750 ml	Collection of volatile trace elements by oxidative dissolution.
#3	0.2 M $(NH_4)_2 S_2O_8$ +0.02 M $AgNO_3$	750 ml	Collection of volatile trace elements by oxidative dissolution.
#4	Drierite (Color Indicating)	750 g	Prevent moisture from reaching pumps.

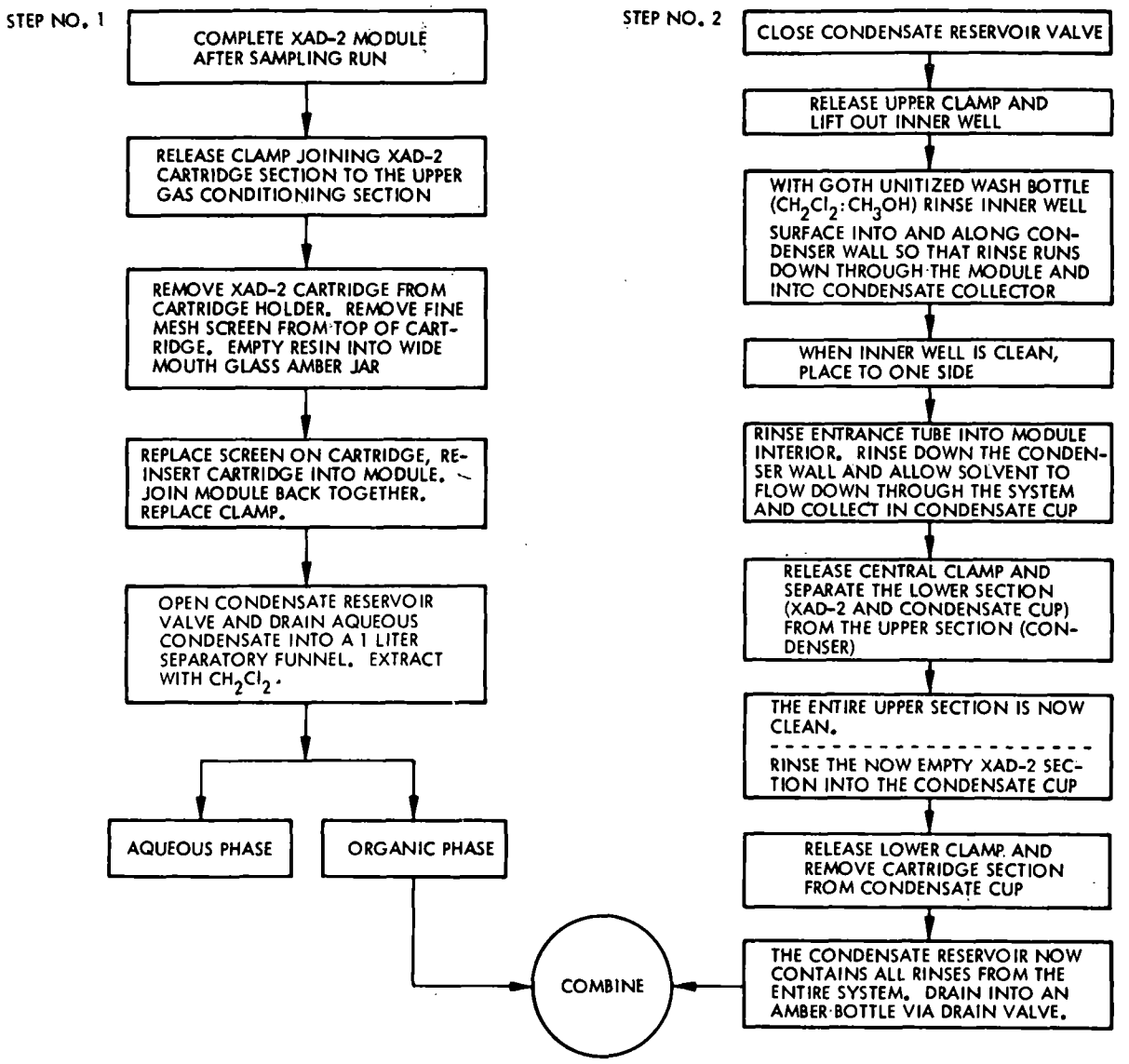

Figure 23. Sample handling and transfer— SASS XAD-2 module

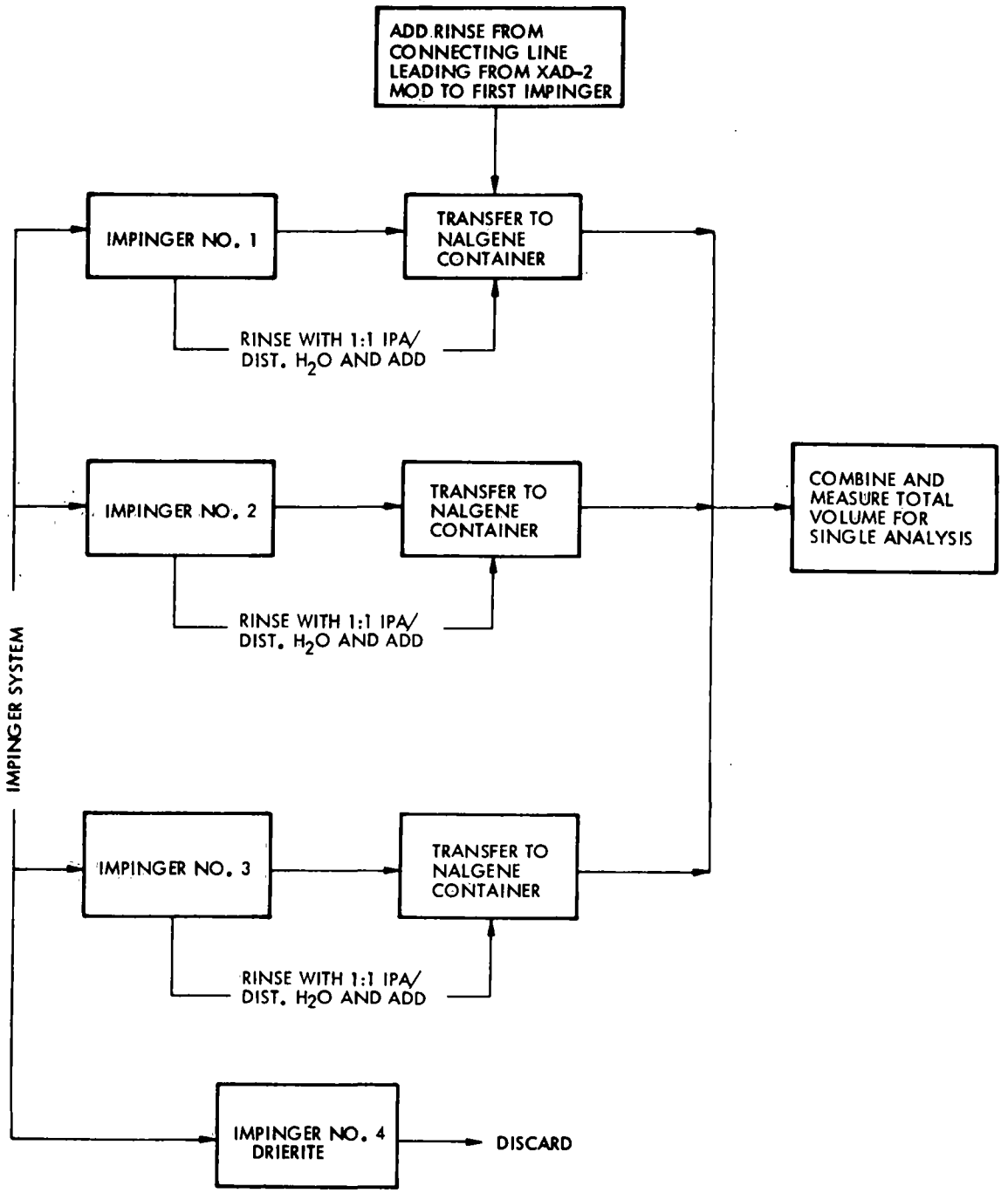

Figure 24. Sample handling and transfer— SASS impingers

The automatic high-volume sampler should be operated so that the intake velocity matches or exceeds the velocity of the stream at the sampling point.

Sample Handling--

Preservation and handling considerations for liquid/slurry samples are addressed in Table 10 and apply to Levels 1 and 2.

Organic samples should be placed in amber glass bottles for transfer. Bottles should be thoroughly cleaned before use (by washing with solutions of soap, tap water, and then distilled water) and then oven dried at a temperature of 40°C. Polyethylene or polypropylene bottles should be used for the aqueous portion of the liquid/slurry samples. Washing procedures involve a detergent wash with a distilled water rinse, followed by a 1 to 1 sulfuric and nitric acid wash.

Liquid samples (10 liters) are separated for subsequent analysis by the following scheme: one liter of the liquid sample is retained for BOD and COD analysis. (It is important this sample be transferred carefully to avoid air entrainment). The remaining nine liters are filtered under pressure; the solid portion is dried, weighed (total suspended solids) and preserved for later analysis. The filtrate is separated into an aqueous and organic fraction using a separatory funnel. The aqueous portion is extracted with methylene chloride to complete the separation of aqueous from organic material. These organic fractions are preserved for organic analysis. The remaining aqueous solution is divided into three portions; the first portion is acidified to pH<2, the second portion is left as is, and the third is adjusted to pH 8-12.

Solid Sampling

Recommended Methods--

Recommended techniques for the sampling of solid materials are specified in Table 11 under Stream Categories A and B. Appendix Table A-4 as well as the references listed there and in Table 11 provide more detailed discussions of these techniques.

Level 1 sampling of FBC solid residue streams should be performed by a simple grab technique where one shovelful of material is taken from the discharge point of a hopper or line. If a discharge point is not readily accessible, then the residue should be sampled from a pile or a container used for material storage or transport (e.g. railroad car). Depending on the density of the residual material, a pipeborer or an auger is employed.

For Level 2 sampling of solid residues, use of an automatic Vezin-type sampler, installed in a vertical section of a pneumatic transport line, is recommended (residues are assumed to be transported pneumatically in generic systems). If installation in a line is not practical, residues must be sampled from a pile or a container using a pipeborer or auger.

TABLE 10. PRESERVATION OF LIQUID/SLURRY SAMPLES

Analysis	Fraction	Preservation	Holding
Acidity	Untreated	Cool 4°C	24 hrs.
Alkalinity	Untreated	Cool 4°C	24 hrs.
Conductivity	Untreated	Cool 4°C	24 hrs.
BOD	Untreated	Cool 4°C	6 hrs.
COD	Acidify	H_2SO_4 to pH<2	7 days
Suspended Solids	Untreated	None Required	-
Total Dissolved Solids	Untreated	None Required	-
Hardness	Untreated	Cool 4°C	7 days
Water & HCl Leachable Anions	Basify	NaOH to pH12	Depends on Anion
Trace Cations	Acidify	HNO_3<2	38 days
pH	Untreated	-	Run immediately
Organic Material	Untreated	None Required	7 days
Methylene Chloride Extracts	Untreated	None Required	7 days
Cyanides	Untreated	Cool 4°C	Run immediately
Ammonia Nitrogen	Untreated	Cool 4°C	24 hrs.

For Level 1 and Level 2 sampling of the coal and sorbent feeds, a stopped-belt technique is recommended. (In generic units, solid feed materials are assumed to be transported from storage to size reduction operations by belt conveyor).

Sampling Location--

Sampling location has been addressed in the above discussion.

Sampling Procedures--

Level 1 sampling requires that only one increment be taken per sample except in the case where the simple grab technique is used for sampling piles of large aggregate material such as a coal. In this instance, four shovelfuls of material are collected from different portions of the pile.

In using a pipeborer or auger, care must be taken that the entire depth of the pile is sampled. If the pile is of such depth that this is not feasible, then an alternate technique must be used.

Level 2 stopped belt sampling entails the stopping of a belt conveyor every 10 to 15 minutes during the course of the test period. A full cross-sectional cut is taken from the belt by drawing a flat-edged shovel across it. For Level 1 sampling, the belt is stopped only once.

Sampling procedures for each Level 2 technique involve collecting a number of increments which are then subject to a size reduction operation such as riffling to produce a representative sample. ASTM procedures for determining the weight and number of increments should be followed (where applicable).

Sampling Handling-

Samples should be placed in polyethylene containers or bags for shipment. Containers must be air-tight.

Air-borne Fugitive Sampling

Recommended Methods--

Air-borne fugitive emission sources can be divided into three categories: diffuse wide-area sources, diffuse area sources, and specific point sources. For the first category (also called site sources), emissions are specific to a plant location but are due to the combination of many sources which produce a diffuse emission cloud over the entire plant area. The second category is characterized by a diffuse cloud over an area which can be related to a single specific source such as a coal pile. Specific point sources, the third category, are associated with a distinct plume (such as that from a vent) and normally can be enclosed (i.e., ducted) for sampling purposes.

For commercialized FBC units, it is anticipated that the total number of specific point sources will be small as a result of (projected) proper

design, maintenance, and operating practices. As discussed in Chapter 2, the only specific air-borne fugitive sources that are addressed in the present study are stockpiles of feed materials and solid residues that may be subjected to winds. (These sources belong to the diffuse area category.)

Recommended techniques for air-borne fugitive sampling are presented in Table 11 under Stream Category M. Additional information on these techniques may be found in Appendix Table A-5 as well as in the references listed there and in Table 11. The methods employed for sampling fugitive gases are essentially the same as those recommended for ducted gas streams (e.g., simple displacement bomb, gas specific trains, etc.).

A downwind technique employing a high-volume sampler is recommended for Level 1 (particulate) sampling of diffuse area sources (e.g., piles). Presently, a possible method which may be employed for Level 2 diffuse area sampling is an upwind-downwind technique developed by Midwest Research Institute, also employing a high-volume sampler. An XAD-2 absorber which is attached to the high-volume sampler is used to sample nonvolatile organics ($>C_7$).

If, during the pre-test site survey, specific point sources are identified, then plume sampling employing a SASS train and gas bomb is recommended for the Level 1 effort while quasi-stack sampling using the SASS and gas-specific trains is suggested for Level 2.

Finally, if the number of fugitive sources (diffuse area and specific point sources) at a particular site is large, the most cost-effective approach would be to sample the entire plant area as a diffuse wide-area source. At Level 1, an upwind-downwind technique using high-volume samplers and gas bombs is recommended. The Level 2 effort would involve a comparison of ambient background data with operating plant data gathered at the same sampling sites. If background data is unavailable, an upwind-downwind method should be employed.

Sampling Location--

For diffuse wide-area sampling, the number and placement of samplers is, in general, site specific. In the upwind-downwind method specified for Level 1, one sampler placed upwind and two or three samplers placed downwind of the site and removed from any specific sources should be sufficient.

For downwind sampling of diffuse area sources at Level 1, one high-volume sampler is placed directly in the emission cloud. In the Midwest Research upwind-downwind method for Level 2, samplers are mounted on a vertical tower in a grid arrangement. Tower placement is site specific.

For Level 1 sampling of specific point sources, sampling probes are placed directly in the plume, while in the Level 2 quasi-stack method, a duct is constructed around the source which is then sampled as a normal ducted stream.

Sampling Procedures--

Detailed sampling procedures for each of the recommended methods specified in Table 11 can be found in the references listed there and in Appendix Table A-5.

Sample Handling--

The filter of a high-volume sampler should be handled carefully during transfer to a Petri dish. The Petri dish should be sealed for shipment. Handling and transfer considerations for gas samples are the same as those discussed earlier under "Gas Sampling".

TABLE 11. SUMMARY OF RECOMMENDED SAMPLING PROCEDURES FOR GENERIC FBC PROCESSES (CATEGORIES I THROUGH IV)

STREAM CATEGORY	APPLICABLE STREAM NUMBERS	LEVEL 1				
		RECOMMENDED SAMPLING METHOD	SELECTION RATIONALE	SITE PREPARATION REQUIREMENTS	REFERENCES	REMARKS
A. Solid-Residues	2, 3, 4, 5 28 (CAFB)	Simple grab	Simple, inexpensive technique	None	297 8.33	For sampling site at discharge point of line or hopper. One shovelful is taken from the discharge point of a hopper or line. One kilogram is required for analysis.
		Pipeborer	This technique will eliminate bias caused by size segregation which may occur in the pile. Solids pile should be sampled if discharge point is not accessible.	None	297	For sampling site at a pile or container. One sample, at least one kilogram in weight, is taken.
		Auger	If material is too dense to permit the use of a pipeborer, an auger should be employed.	None	297	For sampling site at a pile or container. One sample, at least one kilogram in weight, is taken.
B. Raw Solid Feeds (Coal and Sorbent)	9, 10	Stopped belt sampling	Most representative sampling technique. Simple and inexpensive technique.	None		Selection assumes that raw feeds are transported by belt conveyor to size reduction operations. A single sample, at least 1 kg in weight, is taken. A flat-edged shovel is drawn straight across the belt to produce a full stream cut.

TABLE 11 (continued).

LEVEL 2					APPLICABLE AREAS OF ANALYSIS
RECOMMENDED SAMPLING METHOD	SELECTION RATIONALE	SITE PREPARATION REQUIREMENTS	REFERENCES	REMARKS	
Automatic, full stream cut, Vezin-type sampler.	Sampling device was selected due to its applicability of use in pneumatic transport lines. Cutter variables are determined by particle size and mass flow rates.	Installation of sampling equipment necessary in vertical section of pneumatic transport line. Installation of the devices should be eight pipe diameters downstream and two pipe diameters upstream of any flow disturbance.	297 8.33	For pneumatic transport line sampling. (Assumes that materials in question are conveyed by pneumatic transport).	Elemental analysis, Organic analysis, Anion analysis, Physical characterizations, Leachate testing
Pipeborer, auger	If sampling device cannot be installed in line, then pipeborer or auger should be used. See Level 1.	None	297	For sampling site at a pile or container. The number of increments is to be in accordance with ASTM specifications. Usually a minimum of 35 increments of 3 kg weight is required. The sample is then riffled to size required for analysis.	
Stopped belt sampling.	See Level 1. Human bias can be minimized by systematic sampling.	None		See Level 1. If transport is pneumatic, a Vezin sampler should be used. (See stream category A, Level 2). A minimum of 35 increments should be taken with a minimum weight	Elemental analysis, Organic analysis, (sorbent only) Fuel analysis (coal only), Anion analysis,

TABLE 11 (continued).

STREAM CATEGORY	APPLICABLE STREAM NUMBERS	LEVEL 1				
		RECOMMENDED SAMPLING METHOD	SELECTION RATIONALE	SITE PREPARATION REQUIREMENTS	REFERENCES	REMARKS
B. (cont.)	9,10					
		Auger	If conveyor is not accessible then the storage hopper should be sampled using an auger. An auger is used rather than a pipe-borer because of the density of the material. Simple and inexpensive technique.	None	297	For sampling site at a storage hopper or silo. One sample, at least one kilogram in weight, is taken.
		Simple grab	If the storage hopper is not accessible, then the coal or sorbent pile must be sampled directly. Simple and inexpensive technique.	None	297 8.33	For sampling site at a pile. Four shovelfuls from different sides of the pile are taken.
C. Blow-downs	6, 7	Dipper (full stream cut)	This method will eliminate possibility of sample bias which could be caused by stratification.	None	13.1 13.2 13.3 13.5	For sampling site at discharge point of blowdown. Care must be taken that the dipper does not overflow while the sample is being taken. A 10 liter sample volume is required for analysis.

TABLE 11 (continued).

LEVEL 2					APPLICABLE AREAS OF ANALYSIS
RECOMMENDED SAMPLING METHOD	SELECTION RATIONALE	SITE PREPARATION REQUIREMENTS	REFER-ENCES	REMARKS	
				of 3 kg for each increment. A sampling scheme (replication, sample size) can be determined from previous test runs. Access to the conveyor must be unhampered.	Physical characterization, Leachate testing
Automatic Hi-Volume Sampler.	This method has been shown to produce representative samples from high solids content streams.	Installation of sampling device in line is necessary. Sampler should be placed in a highly turbulent region of the transport line.		For sampling site in blowdown line. Sampling lines should be purged prior to the taking of each sample. Materials of construction should conform to ASTM standards. ASTM procedure for sampling water from boilers should be followed. The sampling velocity should match or exceed the stream velocity at the sampling point. Samples should be	Elemental analysis Organic analysis Anion analysis Standard water analysis

TABLE 11 (continued).

STREAM CATEGORY	APPLICABLE STREAM NUMBERS	LEVEL 1				
		RECOMMENDED SAMPLING METHOD	SELECTION RATIONALE	SITE PREPARATION REQUIREMENTS	REFERENCES	REMARKS
C. (cont.)	6,7					
		Tap	If access to the discharge point is restricted then this method must be employed.	Tap installed in well-mixed region (e.g., after pump, transition piece, elbow, etc.) of blowdown line.	13.1 13.2 13.3 13.5	For sampling site in blowdown line. Sample rate should be less than 500 ml/min. Apparatus should conform with requirements in ASTM 510. A 10 liter sample volume is required for analysis.
D. Liquid Sulfur/ Sulfuric Acid Product	8	Tap	Since these streams are homogeneous in nature, a tap sample should be representative.	Tap installed in product discharge line or in holding tank.	13.1 13.2 13.3 13.5	For sampling site in discharge line or tank. Tap materials of construction must be acid resistant and be able to withstand the temperature of the liquid sulfur. Sample rate should be less than 500 ml/min. A 10 liter sample volume is required for analysis.

TABLE 11 (continued).

LEVEL 2					APPLICABLE AREAS OF ANALYSIS
RECOMMENDED SAMPLING METHOD	SELECTION RATIONALE	SITE PREPARATION REQUIREMENTS	REFER-ENCES	REMARKS	
				taken on a time proportional basis.	
Tap	Same as Level 1.	Same as Level 1.	13.1 13.2 13.3 13.5	ASTM procedures for water sampling should be used to determine sampling rate based on Level 1 results.	

TABLE 11 (continued).

STREAM CATEGORY	APPLICABLE STREAM NUMBERS	LEVEL 1				
		RECOMMENDED SAMPLING METHOD	SELECTION RATIONALE	SITE PREPARATION REQUIREMENTS	REFERENCES	REMARKS
E. Stack Gas (Gaseous Components)	1					See text under "Gas Sampling" for sampling location and technique specifications for Level 1.
SO_2	1	Simple Displacement Bomb	Reasonable cost. Available trained operators. Allows for analysis of other gases. Uses standard apparatus. Reference method for CO, CO_2, O_2, H_2, N_2, CH_4. Can be used to sample high pressure, high temperature streams by means of side-split bleed stream and water cooled heat exchanger.		13.6 211 323	Gas displacement, liquid displacement or evacuated bomb techniques can be used. Requires rapid analysis. Glass-wool prefilter used. Distance from stack wall to bomb should be minimized to prevent condensation in sampling line. Gas displacement bombs should be purged with 10 liters of stack gas before the sample is taken.

TABLE 11 (continued).

LEVEL 2					APPLICABLE AREAS OF ANALYSIS
RECOMMENDED SAMPLING METHOD	SELECTION RATIONALE	SITE PREPARATION REQUIREMENTS	REFER-ENCES	REMARKS	
		Erection of scaffolding will normally be required.		See text under "Gas sampling" for sampling location and technique specifications for Level 2.	Inorganic gases, Organic analysis
Option 1 (Manual): EPA Method 6	Commonly recognized as a standard reference method that other methods are compared to.	Multiple stack (or duct) ports may be required for stratification investigations.	116	A combined SO_2-SO_3 train is recommended for this option.	Inorganic gases
Option 2 (Continuous): Performance Specification No. 2	A method for continuous measurement of SO_2 will probably be required as a part of EPA's New Source Performance Standards for FBC, if adopted. It is also desirable from the standpoint of noting SO_2 levels versus process changes. SO_2 is just one of several gases that will probably be measured on a continuous basis. A continuous system is less expensive over a long period if numerous measurements will be made.		114 (120, 107, 77)	A stratification investigation using any one of the concepts presented in the Gas Sampling Options Table in the Appendix should be conducted to design the extractive sample system. An extractive rather than an in-situ system is recommended for generic units. This allows the potential of continuous instrumental analysis for more gaseous pollutants that the in-situ devices will currently measure. The system can either be split-stream or on-line. Both should be evaluated for sample representativeness.	

TABLE 11 (continued).

STREAM CATEGORY	APPLICABLE STREAM NUMBERS	LEVEL 1				
		RECOMMENDED SAMPLING METHOD	SELECTION RATIONALE	SITE PREPARATION REQUIREMENTS	REFERENCES	REMARKS
E. (cont.)						
SO_3	1	SASS train	Order of magnitude determination can be made by analyzing impinger solutions, condensate trap, porous polymer adsorber and particulate.		321 (37, 95, 302, 279)	See discussion of SASS train under Steam Category F.
NO_x	1	Simple Displacement Bomb			13.6 211 323	See Simple Displacement Bomb discussion under SO_2.
H_2S	1	Simple Displacement Bomb			13.6 211 323	See Simple Displacement Bomb discussion under SO_2.

TABLE 11 (continued).

LEVEL 2					APPLICABLE AREAS OF ANALYSIS
RECOMMENDED SAMPLING METHOD	SELECTION RATIONALE	SITE PREPARATION REQUIREMENTS	REFERENCES	REMARKS	
Controlled Condensation (Goksoyr-Ross)	SO_3 specific. Short sample period. Simple analysis. Low concentration detection. Extensive application on combustion sources.	Only one port. Routine 15 amp power required. Small space requirement (one man plus equipment).	321 (37, 95, 302, 279)	NOTE: This is a "wet" technique. A continuous monitoring procedure is not available at this time for SO_3. Requires constant temperature water bath. See SO_2 Level 2 remarks.	Inorganic gases
Option 1 (Manual): EPA Method 7	Standard reference method.	See Level 1.	116	Sample is drawn into evacuated flask containing an oxidizing absorbent which consists of hydrogen peroxide in dilute sulfuric acid.	Inorganic gases
Option 2 (Continuous): Performance Specification No. 2			114 (120, 107)	See Performance Specification No. 2 discussion under SO_2.	
EPA Method 3	Sufficient accuracy for Level 2 requirements using simple, inexpensive equipment. Multi-gas sampling. Ease of integration with analytical procedure.	One port. Routine 15 amp power requirement. Small space requirement (one man plus equipment).	116	For H_2S: G/C flame photometric detection with adaptions for analysis.	Inorganic gases

TABLE 11 (continued).

STREAM CATEGORY	APPLICABLE STREAM NUMBERS	LEVEL 1				
		RECOMMENDED SAMPLING METHOD	SELECTION RATIONALE	SITE PREPARATION REQUIREMENTS	REFERENCES	REMARKS
E. (cont.)						
CO_2	1	Simple Displacement Bomb			13.6 211 323	See Simple Displacement Bomb discussion under SO_2

TABLE 11 (continued).

LEVEL 2					APPLICABLE AREAS OF ANALYSIS
RECOMMENDED SAMPLING METHOD	SELECTION RATIONALE	SITE PREPARATION REQUIREMENTS	REFERENCES	REMARKS	
Option 1 (Manual): EPA Method 3			116	See EPA Method 3 discussion under H_2S. For CO_2: GC or NDIR analysis.	Inorganic gases
Option 2 (Continuous): Performance Specification No. 3	Current EPA Reference Specification that is related back to Method 3. Allows use of either extractive or non-extractive continuous systems.		114 (107)	Conduct a stratification investigation to design system. Recommend using extractive sampling system which allows multi-gas instrumental analysis.	

TABLE 11 (continued).

STREAM CATEGORY	APPLICABLE STREAM NUMBERS	LEVEL 1				
		RECOMMENDED SAMPLING METHOD	SELECTION RATIONALE	SITE PREPARATION REQUIREMENTS	REFERENCES	REMARKS
E. (cont.)						
HCl	1	SASS Train			218 173 2	See SASS Train discussion under SO_3
HCN	1	Simple Displacement Bomb			13.6 211 323	See Simple Displacement Bomb under SO_2.
HF & F	1	SASS	Particulate fluoride will be routinely determined from the particulate			A specific method has not been written up.
CO	1	Simple Displacement Bomb			13.6 211 323	See Simple Displacement Bomb under SO_2.

TABLE 11 (continued).

LEVEL 2					APPLICABLE AREAS OF ANALYSIS
RECOMMENDED SAMPLING METHOD	SELECTION RATIONALE	SITE PREPARATION REQUIREMENTS	REFER-ENCES	REMARKS	
Impinger Train	Most accurate sampling and analysis technique. Rapid. Routine sampling train. Same train may be used for different gases by changing reagent. Commercially available.	One port. One man train operation. Routine 15 amp requirements.	311 13.8 196 152 166	Single point, manual method. Midget impingers operated in a fashion similar to EPA Method 6 for SO_2 (probe, heated impingers, pump, test meter, etc.) A specific method has not been written up. The train will have to be developed from reference information. For HCl use distilled H_2O in impingers for collection.	Inorganic gases
Impinger Train			261 152 166 311	See impinger train dicussion under HCl. For HCN: use either KOH or NaOH in impingers for collection.	Inorganic gases
Impinger Train	Gaseous HF and F are obtained. Particulate HF and F determined from particulate train. See Selection Rationale for HCl, Level 2.		261 204	See impinger train discussion under HCl. For HF and F: use distilled water in impingers for collection.	Inorganic gases
Option 1 (Manual): EPA Method 10	Manual method for Level 2. Acceptable accuracy, low cost, simple multi-gas sampling system.	Single port sampling. Small space requirements for one man operation. Normal 15 amp power required.	112 (99)	This is a grab, single point method that is acceptable for Level 2 sampling. Essentially an EPA Method 3 sampling system. Use stainless bellows pump if sample passes thru pump to bag.	Inorganic gases

TABLE 11 (continued).

STREAM CATEGORY	APPLI-CABLE STREAM NUMBERS	LEVEL 1				
		RECOMMENDED SAMPLING METHOD	SELECTION RATIONALE	SITE PREPARATION REQUIREMENTS	REFER-ENCES	REMARKS
E. (cont).						
CO (cont)	1					
O_2	1	Simple Displace-ment Bomb			13.6 211 323	See Simple Dis-placement Bomb discussion under SO_2.

TABLE 11 (continued).

LEVEL 2					APPLICABLE AREAS OF ANALYSIS
RECOMMENDED SAMPLING METHOD	SELECTION RATIONALE	SITE PREPARATION REQUIREMENTS	REFERENCES	REMARKS	
Option 2 (Continuous): EPA Method 10	Reference method. Continuous method for Level 2. Accurate, convenient system. Reasonable cost.	Same as above.	112 (94)	This is the continuous monitoring option for CO. The sampling and instrument set-up operation and specification are well defined. A stratification investigation should be conducted to verify single point probe sampling. Otherwise, multipoint sampling may be required. For generic units, sampling at least 8 diameters up the stack will be specified as a minimum. All particulate and gaseous sampling should be conducted at that same location. Extractive system recommended to facilitate multi-gas analysis.	Inorganic gases
Option 1 (Manual): EPA Method 3			116	See EPA Method 3 discussion under H_2S. For O_2: GC thermal conductivity analysis. An accurate calibration standard is required.	Inorganic gases
Option 2 (Continuous): Performance Specification No. 3		The number of ports required depends on results of a stratification investigation. The recommended location up the stack should only require single point sampling.	114 (101)	See Performance Specification No. 3 discussion under CO_2. For O_2: polarographic or paramagnetic instruments will meet specifications.	

TABLE 11 (continued).

STREAM CATEGORY	APPLICABLE STREAM NUMBERS	LEVEL 1				
		RECOMMENDED SAMPLING METHOD	SELECTION RATIONALE	SITE PREPARATION REQUIREMENTS	REFERENCES	REMARKS
E. (cont.)						
NH_3	1	Simple Displacement Bomb			13.6 211 323	See Simple Displacement Bomb discussion under SO_2
H_2O	1	EPA Method 4	A commonly used technique incorporated in a reference method. Simple, inexpensive, rapid, accurate, and applicable to wide range of concentrations.	Single port sampling. Small space requirements for one-man operation. Normal 15 amp power requirements.	116 70 50 281	Ice bath (approximately 0°C) condenses most moisture and dessicant collects remaining moisture down to relatively insignificant levels.
COS	1	Simple Displacement Bomb			13.6 211 323	See Simple Displacement Bomb Discussion under SO_2 Analyze immediately

TABLE 11 (continued).

LEVEL 2					APPLICABLE AREAS OF ANALYSIS
RECOMMENDED SAMPLING METHOD	SELECTION RATIONALE	SITE PREPARATION REQUIREMENTS	REFER-ENCES	REMARKS	
Kjeldahl (Nessler-ization)	A reference method for NH_3 in stack gas has not been adopted by EPA or ASTM. This EPA method for NH_3 in waste-water is sug-gested as an interim method. The sampling procedure is an impinger wet-chemical method. Ap-plies a com-monly used an-alytical pro-cedure. Accu-rate, inexpen-sive sampling procedure.	Single port sampling. Small space requirements for one-man operation. Normal 15 amp power require-ments.	216 278 287	Impingers contain 0.1N H_2SO_4.	Inorganic Gases
EPA Method 4			116 70 50 281	Same as Level 1. An NDIR may be used for low concentration moisture as an adapted continuous monitor. In general, a contin-uous instrument is not available for higher (10%) concen-trations of moisture. A commercially avail-able monitor is re-ported to handle up to 5% moisture (105). If installed and cali-brated with Method 4 for the anticipated range, it could be used for Level 2.	Inorganic Gases
EPA Method 3			116	See EPA Method 3 dis-cussion under H_2S. For COS: G/C flame photometric detection with adaptations for analysis. Analyze immediately	Inorganic Gases

TABLE 11 (continued).

STREAM CATEGORY	APPLI-CABLE STREAM NUMBERS	LEVEL 1				
		RECOMMENDED SAMPLING METHOD	SELECTION RATIONALE	SITE PREPARATION REQUIREMENTS	REFER-ENCES	REMARKS
E.(cont.)						
CS_2	1	Simple Displace-ment bomb			13.6 211 323	See Simple Dis-placement Bomb discussion under SO_2.
Hg	1	SASS Train			218 173 2	See SASS Train discussion under SO_3.
Volatile Organics (C_1-C_6)	1	Simple Displace-ment Bomb			13.6 211 323	See Simple Dis-placement Bomb discussion under SO_2.

TABLE 11 (continued).

LEVEL 2					APPLICABLE AREAS OF ANALYSIS
RECOMMENDED SAMPLING METHOD	SELECTION RATIONALE	SITE PREPARATION REQUIREMENTS	REFER-ENCES	REMARKS	
EPA Method 3		See Level 1.	116	See EPA Method 3 discussion under H_2S. For CS_2: G/C flame photometric detection with adaptions for analysis.	Inorganic Gases
Gold Amalgamation	Defacto reference method. Accurate for obtaining both gaseous and particulate Hg. Commonly applied and available sample train with special Hg adaption.	Traversing facilites required. Power required for pump and heating elements.	175 115 116	Reference (83) presents a technique of adapting EPA Method 5 (particulates) to collect Hg (gas and particulates). References (67) and (1) should be used for operational and instructions and reference (83) should be used for train setup and sample removal and analysis. A satisfactory, single write-up method does not exist for Hg at this time since Method 105 (67) is unacceptable in higher concentration SO_2 streams. Operations of the full Method 5 traverse train is specified here to obtain total (gaseous plus particulate) Hg emission rate information. NOTE: This particulate emission rate data may be compared with the SASS train for correlation.	Inorganic Gases
EPA Method 3		See Level 1.	116	See EPA Method 3 discussion under H_2S. For volatile organics: G/C flame ionization detection with adaptions for analysis.	Organic Analysis

TABLE 11 (continued).

STREAM CATEGORY	APPLICABLE STREAM NUMBERS	LEVEL 1				
		RECOMMENDED SAMPLING METHOD	SELECTION RATIONALE	SITE PREPARATION REQUIREMENTS	REFERENCES	REMARKS
Organics: Non-Volatile Hydrocarbons ($>C_6$)	1	SASS	The predominate reason for selecting this system for non-volatile hydrocarbons is that (1) it is a particulate train (much of these hydrocarbons will exist as particulates at stack conditions). (2) it is specially designed to cool the gases for additional condensation of these species for collection, and (3) it will collect those more volatile species on the XAD-2 adsorber. It is a multi-pollutant sampling system. See Stream Category F.	See Particulate Stream Category for site preparation requirements.	2 218 175	The SASS train (system) is discussed in more detail under Stream Category F. This recommended Level 1 particulate sampling system will also collect the non-volatile hydrocarbons. The species will be found condensed, with particulates, on the porous polymer adsorber and in the impingers. This is a state-of-the-art system that needs additional field testing to clarify performance and operating characteristics.

TABLE 11 (continued).

LEVEL 2					APPLICABLE AREAS OF ANALYSIS
RECOMMENDED SAMPLING METHOD	SELECTION RATIONALE	SITE PREPARATION REQUIREMENTS	REFERENCES	REMARKS	
SASS	See Level 1 discussion. This system provides the one-train capability of obtaining a representative sample of a wide range of organic material that can be analyzed using a promising combination of reference and recognized techniques with state-of-the-art adaptions.	See Level 1.	2 211 173	See Level 1. For sampling location and recommended technique, see text. This system is versatile in collecting simultaneously many organic materials that exist in various forms from solid to liquid to gas. It should be noted that other sampling methods are perhaps more efficient for some specific organics of interest. Prior to sampling the future generic facilities, the Level 1 evaluation should be consulted to identify those organics of interest and then a determination made as to the SASS in obtaining these select organics in the desirable manner. Other more complex techniques, including a Kaiser Tube for cryogenic collection of low molecular weight materials, may be required, separately or as an add-on to the SASS.	Organic Analysis

TABLE 11 (continued).

STREAM CATEGORY	APPLICABLE STREAM NUMBERS	LEVEL 1				
		RECOMMENDED SAMPLING METHOD	SELECTION RATIONALE	SITE PREPARATION REQUIREMENTS	REFERENCES	REMARKS
F. Stack Gas (Particulates)	1	SASS	This system will simultaneously collect and classify, in a previously unavailable manner, particulate and gaseous samples. The system can obtain a necessary quantity of sample for physical, chemical, and biological analysis in a reasonable period of time and is commercially available.	One port required. Power required for two pumps and heating elements. Oversized port or associated elements may be required to support train. More than normal space requirements for men and train. Field lab required for train cleanup.	2 218 173	See text under "Particulate Sampling for sampling location and technique specifications for Level 1. The SASS train is expected to provide the following information: 1. Particulate concentration. 2. Particle size distribution. 3. Non-volatile organic and inorganic concentrations. 4. Particulate for morphological analysis. A velocity profile must be determined at sampling location in accordance with EPA Methods 1 and 2 to convert concentrations to emission rates.

TABLE 11 (continued).

LEVEL 2					APPLICABLE AREAS OF ANALYSIS
RECOMMENDED SAMPLING METHOD	SELECTION RATIONALE	SITE PREPARATION REQUIREMENTS	REFER-ENCES	REMARKS	
SASS	See Level 1. The current equipment system can be combined with a location specification to provide mass emission rates that reflect representative sampling.	Erection of scaffolding will normally be required. More than one port required. Traversing facilities required. Power required for two pumps and heating elements. More than normal space requirements for men and train. Field lab required for cleanup.	2 218 173	See text under "Particulate Sampling" for sampling location and technique specifications for Level 2. Velocity profile is determined by EPA Method 1 and 2. A standard pitot should be used in place of the 'S' type tube. Level 1 results will dictate specific pollutants of interest for Level 2. Depending on the applicability of the SASS train as it evolves, some of these pollutants should, for specificity and accuracy, be sampled using a pollutant specific train rather than SASS. See Level 1.	Elemental analysis, Organic analysis, Anion analysis, Physical characterization.

TABLE 11 (continued).

STREAM CATEGORY	APPLICABLE STREAM NUMBERS	LEVEL 1				
		RECOMMENDED SAMPLING METHOD	SELECTION RATIONALE	SITE PREPARATION REQUIREMENTS	REFERENCES	REMARKS
G. CAFB Residual Oil Feed	9	Tap	Due to the homogeneous nature of the stream, a tap sample should be representative.	Tap must be installed in tank or transport line.	13.1 13.2 13.3 13.5	For sampling site at tank or transport line. A sample size of 1 liter is sufficient.
H. Scrubber Slurry Effluent	5a (CAFB only)	Grab, full stream cut	Due to the heterogeneous nature of a slurry, a full stream cut of the discharge should be made to obtain a representative sample.	None		For sampling site at discharge point of slurry line. A sample size of 10 liters is required. When the discharge point is not accessible a tap method should be used.
		Tap	When the discharge point is inaccessible tap sampling can be used. Due to the heterogeneous nature of the slurry, the tap must be installed in a well-mixed region of the line.	Tap must be installed in slurry line.	13.1 13.2 13.3 13.5	For sampling site in slurry line. A sample size of 10 liters is required.

TABLE 11 (continued).

LEVEL 2					APPLICABLE AREAS OF ANALYSIS
RECOMMENDED SAMPLING METHOD	SELECTION RATIONALE	SITE PREPARATION REQUIREMENTS	REFER-ENCES	REMARKS	
Tap	Same as for Level 1.	Same as for Level 1.	13.1 13.2 13.3 13.5	For sampling site at tank or transport line. Sample size and the number of sample increments are determined from Level 1 results and ASTM reference.	Elemental analysis Fuel analysis Anion analysis
Grab, full stream cut	Same as for Level 1.	None		For sampling site at discharge point of slurry line. Sample size and the number of sample increments are determined from Level 1 results and ASTM references.	Elemental analysis, Organic analysis, Anion analysis, Standard water analysis, Leachate testing.
Automatic High-Volume sampler	When the discharge point is inaccessible this method has been proven to provide representative samples for liquids with high solids contents.	Sampling line is installed in the slurry line.		For sampling site in the slurry line (at a well mixed region). Sample line intake velocity must match or exceed the stream velocity at the sampling point. Sample size and the number of sample increments are determined from Level 1 results and ASTM references.	

TABLE 11 (continued).

STREAM CATEGORY	APPLICABLE STREAM NUMBERS	LEVEL 1				
		RECOMMENDED SAMPLING METHOD	SELECTION RATIONALE	SITE PREPARATION REQUIREMENTS	REFERENCES	REMARKS
I. CAFB Gasifier Product Gas (gaseous components)	26 (CAFB only)	The temperature of Stream 26 is between 1550°F and 1650°F, which is high enough to require special sampling equipment. The attempt is to rely upon the same sampling methods that were specified for Stream Category E, but to employ, in addition, a high-temperature interface system. The particulates should be pre-filtered at a point in the train that is as cool as possible, yet above the moisture dew point. A commercial liquid-cooled probe (without an in-stack filter) could be used to initiate the cooling and should be followed by a filter. A 316 stainless steel, heated cyclone pre-filter should be used in heavy dust loading and followed by a quartz or glass wool plug. Automatic blow back is probably too complex an installment for filter cleaning. An alternate to this system would consist of an extra long stainless coil acting as an air cooler prior to the filters. Regardless of the selected system, the temperature should be monitored prior to the routine wet, grab, or continuous train. Carpenter 20 stainless steel is also preferred due to its chemical resistence. Reference (51).				
J. CAFB Gasifier Product Gas (Particulates)	26 (CAFB only)	A high-temperature, liquid-cooled probe is commercially available (58) to fit the SASS particulate monitoring system and its use is recommended for Level 1 and Level 2 sampling of Stream 28. The cooling component of the HTHP system may also be utilized.				
K. Tail Gas from Sulfur Recovery (gaseous components)	5b	The same sampling methods proposed for Stream Categories E and F should be used for Stream 5b. The stream characteristics (temperature, pressure, dust, loading, gas composition) will be very similar. One difference relative to sampling procedures should be noted. The moisture content and its form (droplets vs. vapor) downstream of the scrubber may require using multiple sampling procedures to insure that moisture in droplet form is not measured as vapor. Several test runs using both hot and cold pre-filters for the condenser method should verify the actual vapor content.				
L. Tail Gas from Sulfur Recovery (particulates)	5b					

TABLE 11 (continued).

LEVEL 2					APPLICABLE AREAS OF ANALYSIS
RECOMMENDED SAMPLING METHOD	SELECTION RATIONALE	SITE PREPARATION REQUIREMENTS	REFER-ENCES	REMARKS	
				See Level 1.	Same as for Stream Category E.
				See Level 1.	Same as for Stream Category F.
				See Level 1.	Same as Stream Category E.
				See Level 1.	Same as Stream Category F.

TABLE 11 (continued).

STREAM CATEGORY	APPLICABLE STREAM NUMBERS	LEVEL 1				
		RECOMMENDED SAMPLING METHOD	SELECTION RATIONALE	SITE PREPARATION REQUIREMENTS	REFERENCES	REMARKS
M. Airborne Fugitives						
Diffuse Wide Area Sources		Upwind-Downwind	This method is used when the number of point sources at a particular site are too numerous to sample individually.	None required.	73 176	The number of high-volume samplers necessary for sampling is plant-specific, but should be kept to a minimum. Gas bomb sampling is used to determine concentrations of volatile organics and inorganic gases. An Anderson single stage head will separate the particulates into two size fractions (cutoff point at 3.5μ). An XAD-2 adsorber which is attached to the high-volume sampler is used to sample non-volatile organics.

TABLE 11 (continued).

LEVEL 2					APPLICABLE AREAS OF ANALYSIS
RECOMMENDED SAMPLING METHOD	SELECTION RATIONALE	SITE PREPARATION REQUIREMENTS	REFER-ENCES	REMARKS	
Back-ground vs. Operating Plant	This method will indicate the total contribution of a plant to ambient background levels and can be used when the number of point sources at a particu-lar site are too numerous to sample in-dividually.	None required.		Ambient data gathered for an environmental impack statement can be used as back-ground data. When the plant is in oper-ation, the same samp-ling sites are used to measure the in-crease in particulates and gases over back-ground levels. High-volume samplers with fractionating Ander-son heads are used for particulate samp-ling. Volatile organics are sampled by means of gas bombs: less vola-tile hydrocarbons are measured with an XAD-2 adsorber which is attached to the high-volume sampler. In-organic gases can be sampled either manu-ally or continuously according to tech-niques outlined earlier (see Stream Category E). If ambient background date is not available, an upwind-downwind technique should be used. The sampling sites for such a technique are plant-specific.	Particu-lates: Elemental analysis, Organic analysis, Anion analysis, Physical character-ization Gases: Inorganic gases, Organic analysis

TABLE 11 (continued).

STREAM CATEGORY	APPLICABLE STREAM NUMBERS	LEVEL 1				
		RECOMMENDED SAMPLING METHOD	SELECTION RATIONALE	SITE PREPARATION REQUIREMENTS	REFERENCES	REMARKS
M. (cont.)						
Diffuse Area Sources (Aggregate piles)	2, 3, 4, 5, 9, 10, 28 (CAFB)	Downwind Sampling	This method is used for sampling specific sources which emit a diffuse emission cloud. Simpler and less expensive than plume sampling.	None required.	147	One sampler is placed downwind of the source and in the emission cloud. A high volume sampler with an attached Anderson head is used. An XAD-2 adsorber is attached to the high-volume sampler to obtain concentrations of non-volatile organics. Gas bombs are used to sample for volatile organics. and inorganic gases.
Specific Point Sources		Plume Sampling	This method is applicable to sampling specific point sources (e.g., vents) where the downwind sampling method is not applicable. (i.e., when a sampler can not be placed in emission cloud).	Scaffolding may be necessary. Power required for two pumps and heating elements. Field lab required for train cleanup.	147	The sampling techniques employed are an SASS train and gas bomb. Sampling probes must be placed in the plume.
N. Waterborne Fugitives						See Chapter 4 for discussion.

TABLE 11 (concluded).

LEVEL 2					APPLICABLE AREAS OF ANALYSIS
RECOMMENDED SAMPLING METHOD	SELECTION RATIONALE	SITE PREPARATION REQUIREMENTS	REFER-ENCES	REMARKS	
Upwind-Downwind: Midwest Research Method	Method can be used to accurately determine emission rates from piles and can determine the effects of loading and unloading operations on emissions.	Samplers mounted on vertical tower in grid arrangement.	73	High-volume samplers with fractionating Anderson heads are used. An XAD-2 adsorber attached to the sampler is used to sample for non-volatile organics. Volatile organics are sampled by means of gas bomb. Inorganic gases can be sampled either manually or continuously according to techniques outlined earlier. (See Stream Category E).	
Quasi-stack	This method will produce accurate emission rate data.	Traversing facilities may be required. Same as for Level 1.	176	The point source is hooded and a duct constructed. Sampling techniques include the SASS train and the gas specific trains outlined earlier (See Stream Category E). See Chapter 4 for discussion.	

Flow Measurements

Introduction--

Appendix Table A-20 presents a compilation of multi-media flow measurement techniques and their associated characteristics. This compilation includes devices which do not require permanent installation and that would normally be brought to the site by the sampling team, as well as permanently installed flow measurement devices that are employed primarily for process monitoring. Also included are methods to calculate or estimate flow rates. The techniques which have been recommended in the following paragraphs for Levels 1 and 2 assessment have been selected from the Table 20 compilation.

Gas Streams--

For Level 1 application, the "S"-type pitot tube is recommended for gas flow measurement while at Level 2, use of an ellipsoidal-nosed standard pitot tube is recommended because of its high accuracy and lower sensitivity to yaw. Traverse points for both Level 1 and Level 2 velocity determinations are selected in accordance with EPA Method 1. Pitot tubes are inserted into ports employed for sample acquisition.

In situations where a flow measurement device has already been installed in a gas duct or stack, in conjunction with a continuous pollutant monitoring system or for purposes of obtaining process data, the device may be employed for Level 1 flow determinations. At Level 2, however, where multi-point traversing is required to sample particulates (and also stratified gases), a device already installed may be employed only if it is designed for point velocity determinations (rather than for total flow measurement) and if, in addition, it meets Level 2 accuracy requirements.

To measure flow rates in conjunction with the quasi-stack method of sampling air-borne fugitives from specific point sources, use of a hot-wire anemometer may be required due to the normally low flow velocities encountered.

Liquid Streams--

For Level 1 determinations of flow rates in liquid streams, it is recommended that one of the following options be employed:

1) Estimation using pump characteristics and (where applicable) operating data, or any other estimation technique.

2) Flow measurement devices <u>already installed</u>

At Level 2, the selection of a suitable flow measurement technique is site specific. Previously installed equipment that meets the accuracy requirements of Level 2 may be utilized.

Solid Streams--

Flow rates in solids streams can be determined by equipment specifications and operating data or by solids weighing devices. For the former category, some measurable quantity such as the RPM of a screw feeder can be related to mass flow rate using calibration curves supplied by the manufacturer.

RECOMMENDED SAMPLING PROCEDURES FOR CASE STUDY UNITS

Recommended Level 1 and Level 2 sampling procedures for case study units I, II, and III are summarized on a stream-by-stream basis in Tables 12, 13, and 14, respectively. Recommendations are based, in part, on site inspection of the facilities and reflect the unit configurations at the time of inspection.

Since inspection of the ESSO CAFB pilot facility in Abingdon, U.K. (case study unit IV) was not made and unit data was limited, specific sampling procedures have not been recommended within this document. Streams selected for sampling, however, have been identified in Figure 9 and associated stream conditions are defined in Table 7. Until further data on this facility becomes available, the generic sampling procedures of Table 11 should serve as a guide.

To enable convenient comparison of sampling procedures for case study and generic units, a "Generic Stream Category" column has been included in Tables 12, 13, and 14 which serves to direct the reader to the appropriate sections of Table 11.

Since periodic modifications of equipment, process configuration, etc., are made at each case study facility, the source testing contractor, at the time of assessment, should review the sampling procedures recommended herein and submit procedure modifications, if required, to the EPA Project Office for approval.

TABLE 12. SUMMARY OF RECOMMENDED SAMPLING PROCEDURES FOR CASE STUDY UNIT I (PER-ALEXANDRIA, VA.)

STREAM NUMBER AND DESIGNATION	GENERIC STREAM CATEGORY	LEVEL 1	
		SAMPLING	SITE PREPARATION
2 Particulate Removal Discard	A	Drum contents, after mixing, should be sampled with a pipeborer or auger. A single increment of at least one kilogram is taken.	None required.
3 Bed Solids Discard	A	Same procedure as for Stream No. 2 above.	
9 Raw Coal Feed	B	A sampling port has been cut into the feed line. A sample can be taken by opening the port and collecting at least one kilogram while coal is being fed. Sample represents "as-fired" rather than raw coal.	None required.
10 Raw Sorbent Feed	B	A sample is obtained from the in-plant hopper with a pipeborer or auger. A single increment of at least one kilogram is taken.	None required.
1 Stack Gas (gaseous components and particulates)	E,F	The gas sampling methods recommended for generic units should be applied here.	Gas is exhausted to atmosphere by I.D. fan through a long duct. Existing ports (located on roof) meet Level 1 and Level 2 sampling location requirements.

TABLE 12 (concluded).

LEVEL 2		REMARKS
SAMPLING	SITE PREPARATION	
Entire residue generated during test period may be collected in drums and transported to a clean environment where the contents are then riffled to appropriate size. Alternatively, the drums may be sampled directly using a pipeborer or auger, with the number and size of increments chosen in accordance with ASTM procedures.	None required.	Particulates are pneumatically conveyed from the hopper to drums.
Stream No. 2 above.		The bed solids are gravity fed from the bed through a valve and short piece of tubing into a drum. The solids temperature is approximately 1500°F.
Sampling is performed in the same manner as in Level 1. Number and size of increments (minimum 3 kg) are determined on basis of Level 1 results. In no case should sample weight exceed more than a few percent of the feed rate in order to avoid process upset.		The coal is pneumatically transported from an outdoor crushing operation to an in-plant hopper. The coal is then transported by a screw conveyor to a second pneumatic line which feeds into the combustor.
The pneumatic lines cannot be sampled due to their small diameter. Since the sorbent is transported from storage to the in-plant hopper by bucket, one of every ten buckets should be taken as an increment. The sample can then be riffled to required size.	None required.	Sorbent is purchased pre-sized and stored in an outdoor shed from where it is bulk transported to an in-plant hopper. From the hopper, the material is pneumatically conveyed into the unit.
Gas sampling methods recommended for generic units should be applied here. For Level 2 assessment, existing continuous monitoring equipment may be employed if accuracy goals of Level 2 are met.	See Level 1 site preparation.	Stack gas monitoring primarily employing continuous analyzers is included as a part of case study unit operating procedure. The gaseous components normally monitored include O_2, CO_2, SO_2, NO_x, and CO.

TABLE 13. SUMMARY OF RECOMMENDED SAMPLING PROCEDURES FOR CASE STUDY UNIT II (EXXON MINIPLANT)

STREAM NUMBER AND DESIGNATION	GENERIC STREAM CATEGORY	LEVEL 1	
		SAMPLING	SITE PREPARATION
2 Particulate Removal Discard	A	Drum contents, after mixing, should be sampled with a pipeborer or auger. Alternatively, the carting vehicle may be sampled directly, again employing a pipeborer or auger. A single increment of at least one kilogram is taken.	None required.
3 Bed Solid Discard	A	Same alternatives as for Stream No. 2 above.	
4 Particlate Removal Discard - Regeneration	A	Same alternatives as for Stream No. 2 above.	
9 Raw Coal Feed	B	Coal should be transferred from sacks to a drum, mixed well, and sampled with a pipeborer or auger. A single increment of at least one kilogram is taken.	None required.
10 Raw Sorbent Feed	B	Same procedure as for Stream No. 9 above.	
1 Stack Gas (gaseous components and particulates)	E,F	The Aerotherm HTHP train should be employed for particulate sampling. Gas samples are withdrawn through a gas sampling line to a displacement bomb. A water-cooled heat exchanger is used for gas temperature reduction. Pressure reduction is accomplished by partial bleeding of the gas sampling line. Non-volatile organics are sampled by porous polymer adsorber attached to the gas sampling line.	Existing port locations can be used but port modifications will be required. A side-split bleed stream gas sampling line and a water-cooled heat exchanger must be installed.

TABLE 13 (concluded).

LEVEL 2		REMARKS
SAMPLING	SITE PREPARATION	
Entire residue generated during test period may be collected in drums and transported to a clean environment where the contents are then riffled to appropriate size. Alternatively, the drums or carting vehicle may be sampled directly using a pipeborer or auger, with the number and size of increments chosen in accordance with ASTM procedures.	None required.	Residue is gravity fed through pipe from second stage cyclone to a lock hopper. Periodically, the contents of hopper are discharged into drums or a carting vehicle (e.g. open truck).
Same alternatives as for Stream No. 2 above.		Solids are discharged from a lock hopper into drums or carting container as above.
Same alternatives as for Stream No. 2 above.		Periodically, residues are discharged directly from cyclone separator (through a valve) into drums or carting container.
Same as Level 1, but number and size of increments chosen in accordance with ASTM procedures.	None required.	Coal is purchased pre-sized and delivered in sacks.
Same procedure as for Stream No. 9 above.		Sorbent is purchased pre-sized and delivered in sacks.
Same as Level 1 for particulates and non-volatile organics. For gases, Level 2 techniques recommended in Table 11 should be employed after pressure and temperature reduction. Existing continuous monitoring equipment may be employed if accuracy goals of Level 2 are met.		The Miniplant process configuration does not include a gas turbine. Pressure reduction for the combustor effluent gas stream is accomplished by an orifice or valve. Existing ports for gas and particulate sampling are located upstream of the pressure reduction device, requiring sampling at ~10 atm and 1500°F. The Aerotherm HTHP, presently undergoing field testing at the Miniplant, is the only unit applicable for particulate sampling at these conditions.

TABLE 14. SUMMARY OF RECOMMENDED SAMPLING PROCEDURES FOR CASE STUDY UNIT III (CPC-PDU-400)

STREAM NUMBER AND DESIGNATION	GENERIC STREAM CATEGORY	LEVEL 1	
		SAMPLING	SITE PREPARATION
2a Particulate Removal Discard - at Sand Bin	A	Residue may be collected in drums and sampled with a pipeborer or auger after contents are well-mixed. Alternatively, the carting vehicle may be sampled directly, again employing a pipeborer or auger. A single increment of at least one kilogram is taken.	None required.
2b Particulate Removal Discard - at Baghouse	A	Drum contents, after mixing, should be sampled with a pipeborer or auger. A single increment of at least one kilogram is taken.	None required.
9 Raw Coal Feed	B	Stopped-belt sampling (of the belt conveyor) is recommended. A full-stream cut is taken by drawing a flat-edged shovel straight across the belt. A single increment of at least one kilogram is taken.	None required.
10 Raw Sorbent Feed	B	Samples should be taken from the hopper using a pipeborer or auger.	None required.
1 Stack Gas (gaseous components and particulates)	E,F		Existing ports located in one of the two turbine exhaust stacks are acceptable for Level 1 sampling. Scaffolding has already been erected.

TABLE 14 (concluded).

LEVEL 2		REMARKS
SAMPLING	SITE PREPARATION	
Entire residue generated during test period may be collected in drums and transported to a clean environment where the contents are then riffled to appropriate size. Alternatively, the drums or carting vehicle may be sampled directly using a pipeborer or auger, with the number and size of increments chosen in accordance with ASTM procedures.	None required.	Residues removed by the first and second stage cyclone separators are transported pneumatically to a sand bin. Periodically, the contents of the sand bin are discharged (through a valve) directly into an open truck and carted away. The sand bin is equipped with a cyclone. Venting is to the atmosphere (or to the baghouse).
Same alternatives as recommended from Stream 2a above.	None required.	Residues removed by the granular filter are transported pneumatically to a baghouse. The captured residue is discharged to a drum periodically. The baghouse is vented to the atmosphere.
Stopped-belt sampling as in Level 1. A gross sample of 35 increments of 3 kilograms each should be sufficient.	None required.	Raw coal is bulk transported from an outdoor storage pile to a bin and then discharged through a control valve to an open belt conveyor for transport to a crushing operation. To minimize fugitive coal dust, the bin and crushing operation are maintained under negative pressure. A Micro-Pul unit is used for filtration.
A pipeborer or auger can be employed to sample the hopper as in Level 1. The number and size of increments should be in accordance with ASTM procedures. Alternatively, an automatic Vezin sampler may be installed in a pneumatic sorbent transport line. This device produces a full stream cut.	None required for pipeborer or auger. Installation in line required if Vezin option is used.	Sorbent is purchased pre-sized and stored in a shed from where it is bulk transported to an open hopper. Sampling accessibility downstream of the hopper is limited (i.e. installation of a Vezin-type sampler in a pneumatic transport line would be required).
	Suitability of existing ports for Level 2 sampling can only be determined from Level 1 results.	See remarks and Level 1 and 2 sampling recommendations under Stream No. 1, Case Study Unit I (PER).

RECOMMENDED ANALYTICAL PROCEDURES

Introduction

Multi-media overviews of the recommended analytical schemes for Levels 1 and 2 are presented in Figures 25 and 26, respectively. Analytical procedures are independent of process category or whether a generic or case study unit is being considered. Furthermore, procedures for a particular analysis area (e.g., elemental analysis) are, by in large, independent of sample type (e.g., solid, liquid, etc.). Accordingly, analytical procedures are presented by major analysis area only, rather than on a process category and/or stream-by-stream basis. Any special considerations (e.g., sample handling and preparation) that relate to sample type or stream conditions are, however, addressed.

The Level 1 analytical scheme has broad screening capability and is designed to detect the following:

- Organic species in all influent and effluent streams;
- Inorganic elements in all influent and effluent streams;
- SO_2, NO_x, CO, O_2, CO_2, N_2, H_2S, COS, NH_3, HCN, and $(CN)_2$ in gaseous streams;
- pH, acidity, alkalinity, conductivity, BOD, COD, dissolved oxygen, dissolved solids, and suspended solids in aqueous streams in addition to inorganic elements; and
- Leachable cations and anions from samples which are solids (particulate matter from SASS, slurry solids, etc.).

The precision and accuracy goals for a Level 1 assessment are a factor of two to three for emission rates. To achieve this goal, analytical results must have an accuracy of -50 to +100 percent, assuming equal sampling accuracy.

The goal of Level 2 analysis is to provide a more accurate, quantitative identification of specific components in selected streams based on Level 1 output. As such, methods are chosen on an individual basis; in general, procedures are selected from standard EPA, ASTM, API, etc., methods which have an accuracy and/or precision or $\pm$ 10 percent or better. No general statement of Level 2 analytical accuracy can be made here as these requirements are dependent on overall Level 2 program goals.

Tables 15 through 21 provide summaries of recommended analytical procedures for Levels 1 and 2 according to the following major analysis areas:

1. Inorganic gas analysis (Table 15);
2. Organic analysis (Table 16);

3. Elemental analysis (Table 17);

4. Anion analysis (Table 18);

5. Standard water analysis (Table 19);

6. Fuel analysis (Table 20); and

7. Physical characterization of solids (Table 21).

Included in these tables are special sampling and analytical requirements, rationale for method selection, key references, and other pertinent data.

Inorganic Gas Analysis

Recommended procedures for inorganic gas analysis are presented in Table 15. Sample concentrations will range from ppb levels for sulfur compounds to several percent for carbon dioxide, oxygen and water in the stack gas. Because the stability of many samples, particularly those containing hydrogen sulfide and other sulfur species, is unknown (due to wall absorption or possible chemical reaction), GC analysis should be performed on site. At Level 1, this eliminates the shipping of a potentially large number of bulky sample containers and permits additional sampling if problems should arise.

Recent advances in gas chromatography have led to the development of sensitive and compact instruments that are practical for field applications. In addition, multidetector units such as those manufactured by Meloy, Beckman, Tracor and others expand the scope of analysis to include virtually all gaseous species without having a van full of different gas chromatographic units.

While a specific list of inorganic species and proposed conditions are shown in Table 15, this list does not exclude additional species which may be found. Indeed, it is not expected that the proposed set of conditions will be suitable for all mixtures and concentration ranges. When unique situations arise, appropriate analytical conditions should be selected and submitted to the project officer and PMB-IERL-EPA for approval.

Level 2 analytical methods are generally chosen from ASTM, EPA, API, etc. methods where possible. As such, these methods are designed for specific species analysis and often require the use of special sampling trains. Under certain circumstances, it is possible that Level 1 methods may be used for Level 2 analysis. If this is done, aside from meeting Level 2 accuracy requirements, the proposed GC procedure must be shown to be free from interferences (i.e., identical retention times) from other species. Additionally, continuous analytical methods (e.g., NDIR, UV, etc.) are also presented as Level 2 options as this equipment may be available at the site. If continuous monitoring equipment is used, calibration procedures should be consistent with Level 2 goals.

On-site sampling at Level 1 is done with an evacuated or a flow-through (for pressurized systems) three liter glass bomb. This vessel is returned to the mobile laboratory and attached to the gas chromatograph via an automatic gas sampling valve.

Two gases of environmental interest (NO and NO_2) are not measured routinely on a gas chromatograph. The Level 1 analysis of NO/NO_2 concentrations will be performed using the chemiluminescence method. Although this is a state-of-the-art analysis technique, it is substantially less labor-intensive than EPA Method 7. This method as adapted to Level 1 analysis involves admitting gas samples into a 3-liter evacuated flask. The sample is then transported to the instrument and analyzed. Because a major portion of the analysis time on the instrument involves calibration, it is recommended that only sufficient calibration to maintain a minimum accuracy of a factor of $\pm$ 2 (+100 percent, -50 percent) be performed. The Level 2 analysis of NO_x is performed by the phenol disulphuric acid procedure (EPA Method 7).

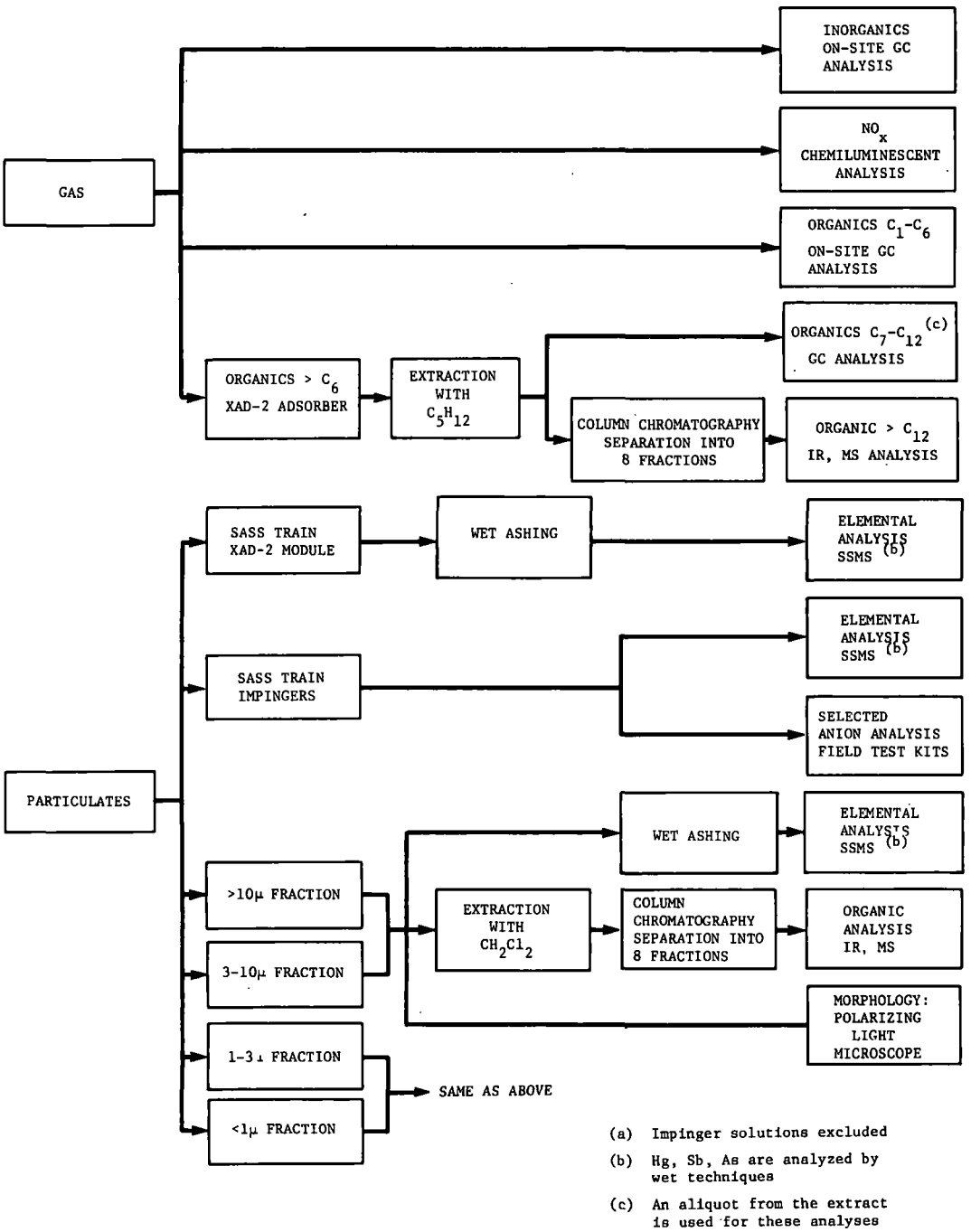

Figure 25. Overall analytical scheme-Level 1

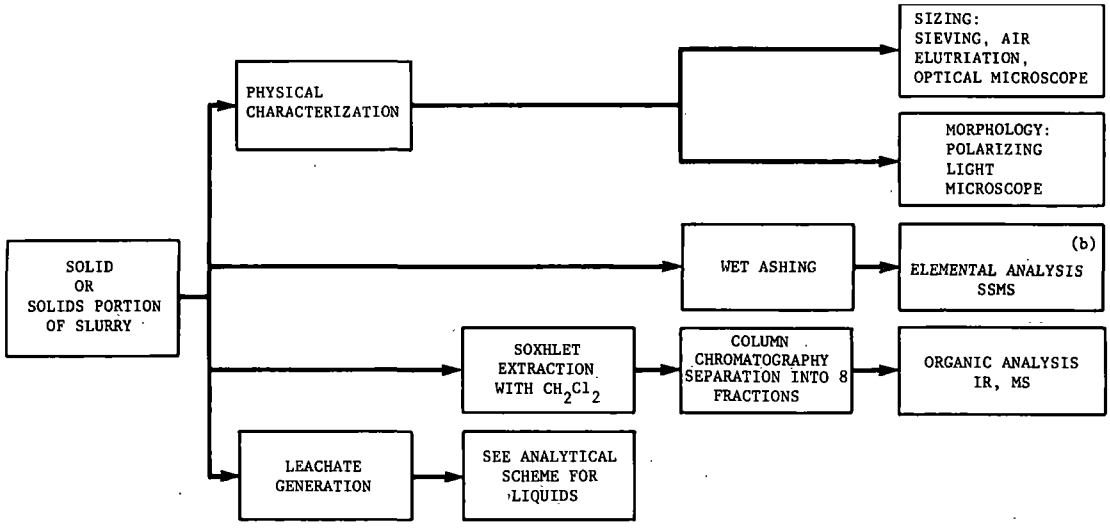

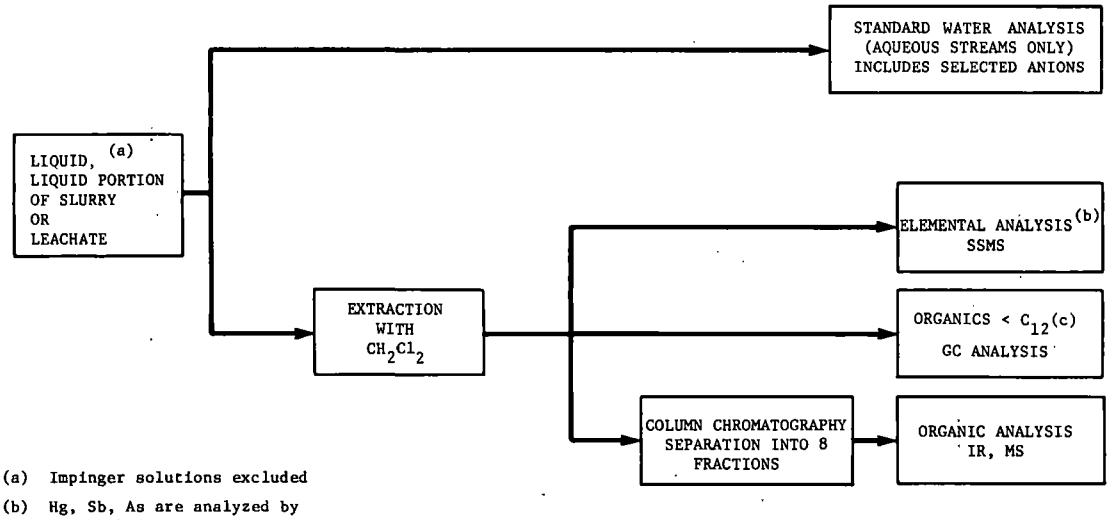

(a) Impinger solutions excluded

(b) Hg, Sb, As are analyzed by wet techniques

(c) An aliquot from the extract is used for these analyses

Figure 25. Overall analytical scheme-Level 1 (concluded)

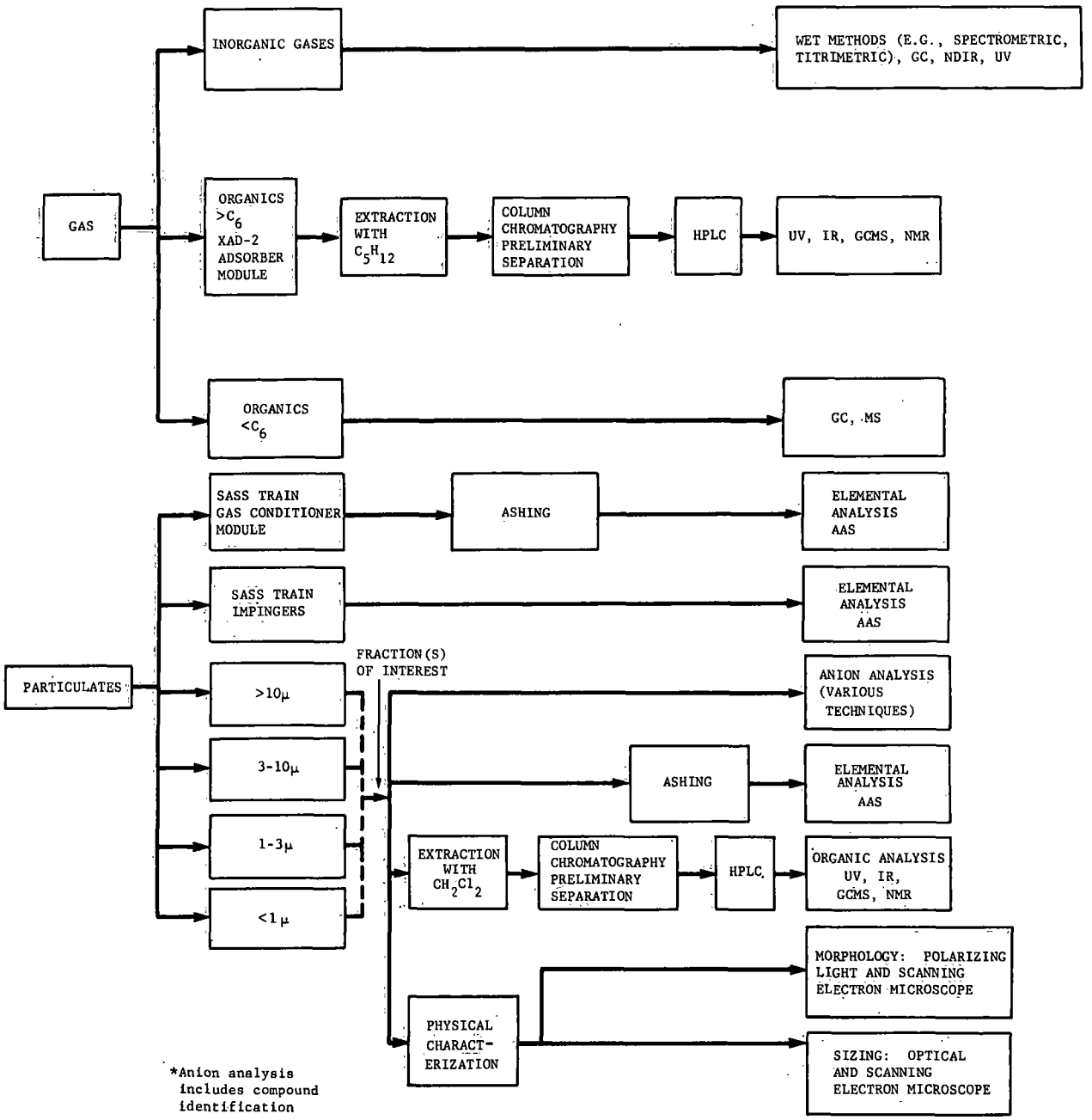

Figure 26. Overall analytical scheme-Level 2

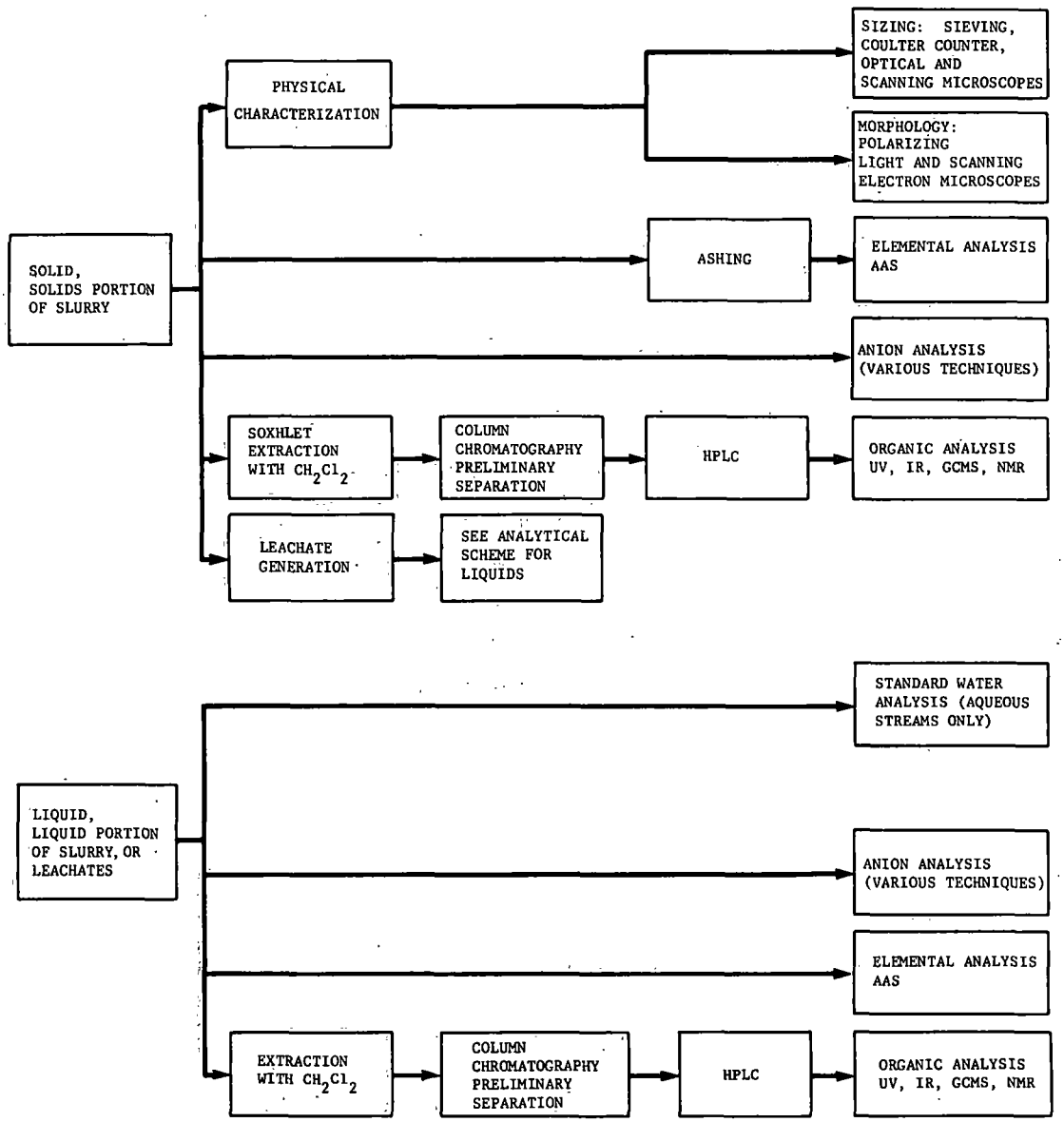

Figure 26. Overall analytical scheme-Level 2 (concluded)

TABLE 15. SUMMARY OF RECOMMENDED PROCEDURES FOR INORGANIC GAS ANALYSIS

ANALYSIS AREA	LEVEL 1			
	RECOMMENDED ANALYTICAL METHOD	SELECTION RATIONALE	SPECIAL SAMPLING AND ANALYTICAL REQUIREMENTS	REFERENCES
Ammonia	GC Thermal Conductivity Detector (TCD)	This method is rapid, accurate, simple, low cost and has multi-component capabilities.	Collection in a 3L gas bomb and analyzed on site. Column: 6'SS, Poropak Q, isothermal at 40°C.	13.4
Carbon Dioxide	GC* (TCD)	This method is rapid, accurate, simple, low cost and has multi-component capabilities.	Collection in a 3L gas bomb and analyzed on site. Column: 6'SS, Molecular Sieve 5A, isothermal at 40°C.	94
Carbon Monoxide	GC (TCD)	This method is rapid, accurate, simple, low cost and has multi-component capabilities.	Collection in a 3L gas bomb and analyzed on site. Column: 6'SS, Molecular Sieve 5A, isothermal at 40°C.	94
Halogens and Volatile Halides	SSMS	This method is suitable for the rapid routine measurement of Halogens and Volatile Halides.	These species may appear in particulates, XAD-2 trap and impingers.	
Hydrogen Chloride	See Halogens and Volatile Halides			
Hydrogen Cyanide (Cyandgen)	GC (TCD)	This method is rapid, accurate, simple, low cost and has multi-component capabilities.	Collection in a 3L gas bomb and analyzed on site. Column: 6'SS, Poropak Q, isothermal at 40°C.	8.32

* Detection limit for TC is ~ 25 ppm

TABLE 15 (continued).

LEVEL 2				REMARKS (LEVELS 1 & 2)
RECOMMENDED ANALYTICAL METHOD	SELECTION RATIONALE	SPECIAL SAMPLING AND ANALYTICAL REQUIREMENTS	REFERENCES	
Absorption/ Titration- (>1ppm) Colorimetric (0.05-1ppm)	Accurate, reasonably rapid technique.	Sample is buffered at pH 9.5 and distilled into a solution of boric acid. The ammonia in the distillate can be determined colorimetrically by nesslerization(MgI_2,KI,NaOH) or titrimetrically with H_2SO_4 using a mixed indicator (Methyl Red/Methylene Blue).		Certain amines may interfere. Concentration will determine analytical method. GC may also be used.
GC Non-Dispensive Infra-Red (NDIR)	As in Level 1.	As in Level 1. Water and particulates must be removed.	94	
GC NDIR	As in Level 1. EPA Reference Method.	An He ionization detector is required for concentrations below 25 ppm. Water and particulates must be removed. Chlorides cannot be accurately measured at Level 1 in particulates or XAD-2 trap because of sample dissolution procedure.	112, 94	NDIR detector limit is 10 ppm.
Absorption/ Titrimetric	Accurate, reasonably rapid technique.	Titration with Hg $(NO_3)_2$. Indicator; diphenylcarpazone and bromophenol blue.	8.9	Bromide and iodide interfere with SIE measurement.
Absorption/ Colorimetric/ Titrimetric	This method is suitable for the determination of soluble and insoluble cyanides in aqueous solution.	Absorption in 1N KOH; sample is acidified and distilled into 1.25 N NaOH. Colorimetric: reaction with chloramine T; color development with pyridine; pyrazolone reagent, measure at 629 nm. Titration: $AgNO_3$ with an appropriate indicator.	8.21	Titrimentric method is applicable to oyanide concentration of 1ppm; Colorimetric 0.05-1ppm. Fatty acids make endpoint determination difficult. Acidify with HOAC to pH 6 and extract with Heyane. Sulfides interfere but may be removed with Cd CO_3 as precipitate.
GC		See Level 1.		

TABLE 15 (continued).

ANALYSIS AREA	LEVEL 1			
	RECOMMENDED ANALYTICAL METHOD	SELECTION RATIONALE	SPECIAL SAMPLING AND ANALYTICAL REQUIREMENTS	REFERENCES
Hydrogen Fluoride (Fluorices)	See Halogens and Volatile Halides			
Hydrogen Sulfide	GC* (TCD/FPD)	This method is rapid, accurate, simple and has multi-component capabilities.	Collection in 3L gas bomb and analyzed on site. Column: acetone-washed teflon 18 in. x 1/8 in. O.D. column packed with 80/100 mesh acetone-washed Poropak QS; Column temperature programmed, start at 30°C, post-injection delay of 1 min. to 210°C at 40°/min. Alternate column: 6' glass, 3% OV-1 on chromosorb W, 100/120 mesh, isothermal at 60°.	87
Mercaptans	GC (TCD/FPD)	As above		87
Mercury	Flameless Atomic Absorption Spectroscopy (FAAS)	GC and SSMS are not suitable techniques for Hg analysis, FAAS Method provides accurate analysis of Hg.	Hg is absorbed in SASS train impingers. Hg may also be absorbed by the XAD-2 trap and on particulates. See Table 18: Mercury	175, 307
Nitrogen Oxides	Chemiluminescence	This method provides a reliable and rapid technique for the measurement of nitrogen oxides.	Sample is collected in 3L Bomb and analyzed on site. Calibration standard is required.	148

*Detection limit for FPD is 10 ppb.
A special teflon-coated and glass system is necessary for these analyses.

TABLE 15 (continued).

LEVEL 2				REMARKS (LEVELS 1 & 2)
RECOMMENDED ANALYTICAL METHOD	SELECTION RATIONALE	SPECIAL SAMPLING AND ANALYTICAL REQUIREMENTS	REFERENCES	
Absorption/Specific ION Electrode (SIE)	This method offers better accuracy and precision and ease of analysis than does the SPADNS Colorimetric Method.	Absorption in distilled water; pH buffered to 5.2-5.5; standard addition technique for analysis.		
GC Flame Photometric Detector (FPD)	As is in Level 1.	As in Level 1; Flame Photometric Detection.	87	A third column 1/8" x 11' teflon with expanded silica gel has been described by D. P. Manka, Instrumentation Technology 22, 45-9 (1975).
GC (FPD)	As in Level 1.	As above.	87	
FAAS - Gold Amalgamation Technique	As in Level 1.	Absorption on 10g gold chips; chips are transferred to furnace and measured by standard FAAS techniques.	175, 307	Method uses EPA isokinetic sampling train; mercury may also be collected on filter prior to impingers; these particulates are normally combined with impingers for analysis.
Phenol Di-Sulphonic Acid Method	This method provides an accurate measure of nitrogen oxides. Federal Register Method.	Absorption in 2L flask with 25ml of 0.1N H_2SO_4 in 0.1% H_2O_2. Spectrometric measurement at 430nm.	14	Total oxides of nitrogen are measured.
Chemiluminescent Measurement		An accurate calibration standard is required.	44	Chemiluminescent measurement is preferred for continuous measurement.

TABLE 15 (continued).

ANALYSIS AREA	LEVEL 1			
	RECOMMENDED ANALYTICAL METHOD	SELECTION RATIONALE	SPECIAL SAMPLING AND ANALYTICAL REQUIREMENTS	REFERENCES
Oxygen	GC (TCD)	GC provides a rapid, accurate, simple technique for oxygen measurement.	Sample is collected in a 3L Bomb and analyzed on site. Column: 6'SS, molecular sieve 5A, isothermal at 40°C.	94
Sulfur Compounds	GC (TCD/FPD)	See Hydrogen Sulfide.	See Hydrogen Sulfide.	87
Sulfur Dioxide	GC (TCD/FPD)	Gas chromatography is a rapid, accurate, simple technique for SO_2 measurement.	See Hydrogen Sulfide.	
Sulfur Trioxide	SSMS	This method is suitable for the rapid routine measurement of elemental sulfur	SO_3 may be found in XAD-2 trap, impingers, and with particulates.	
Water (as vapor)	GC (TCD)	GC provides a rapid and simple technique for measurement of water vapor.	Sample is collected in a 3L bomb and analyzed on site. Column: 6SS, molecular sieve 5A, isothermal at 40°C.	281

TABLE 15 (concluded).

LEVEL 2				REMARKS (LEVELS 1 & 2)
RECOMMENDED ANALYTICAL METHOD	SELECTION RATIONALE	SPECIAL SAMPLING AND ANALYTICAL REQUIREMENTS	REFERENCES	
GC Polarographic Paramagnetic	As in Level 1.	Sample from gas bomb. An accurate calibration standard is required.	94, 299, 158	Polarographic or paramagnetic methods may be used for continuous monitoring.
	See Hydrogen Sulfide.	See Hydrogen Sulfide.		
GC (TC/FPD) Absorption/ Titrimetric	These methods are all recognized as suitable techniques for SO_2 measurement.	As is Level 1. Absorption in 3% H_2O_2 titration with barium perchlorate and thorin indicator	87, 93	NDIR and UV methods may be used for continuous monitoring.
Controlled Condensation /Titrimetric	This method provides an accurate measure of SO_3. Other methods are subject to SO_2 being measured as SO_3.	Condensation of flue gas is controlled at 60 -90 C and collected on a glass frit; titration with barium perchlorate; thorin indicator.	93	SO_3 may be absorbed in 80% isopropanol - 20% water; however SO_2 may be oxidized to SO_3 under these conditions.
Condensation NDIR	As in Level 1.	Sample must be maintained above dewpoint.	281, 102	

Organic Analysis

The object of Level 1 procedures for organic analysis, is to provide an estimate of the predominant classes of organic compounds present in a given sample. From these results, environmentally significant fractions can be selected for Level 2 analysis and individual species identified and measured within the program goals.

Organic sample preparation techniques, as shown in Figure 27, vary with sample type. These techniques, for Level 1, consist of preliminary separations by gas and column chromatography prior to analysis. At level 2, the sample procedures are used to provide a crude separation of classes prior to sophisticated HPLC separations.

The low molecular weight C_1-C_6 hydrocarbons are determined by gas chromatography on site and require no preparation. Organic liquids, such as fuel oils, will not need pretreatment and are placed directly into the analysis scheme. However, the majority of the samples, including the SASS train components, aqueous solutions, and solids, require extraction with solvent prior to analysis. This is done to separate the organic portion of the sample from inorganic species and allow analysis to proceed without complication. Aliquots are taken from the organic extract or liquid for a direct GC and IR analysis of the C_7-C_{12} hydrocarbons. The IR analysis identifies functional groups in the sample. All functional groups identified in the "total sample" must be accounted for in subsequent analysis.

The sample extract or organic liquid is separated by column chromatography on silica gel, using a solvent gradient series, into eight fractions. Each fraction is weighed and analyzed by infrared spectroscope so that a distribution by class type can be determined. A low resolution mass spectrum (LRMS) is also obtained on all fractions which exceed the concentration threshold criteria in order to determine the principal compound types present in each fraction. For the sample streams identified in the Level 1 scheme (Figure 26), these concentrations, computed back to the source, are:

- Gas (particulate, sorbent trap, etc.) — 0.5 mg/m^3
- Solids — 1 mg/kg
- Solutions — 0.1 mg/l

Care must be taken in this computation to correct for those C_7-C_{12} compounds that were analyzed by GC and not lost in concentration steps.

It should be emphasized that sample contamination and solvent impurities are common problems in organic analysis. The best possible laboratory procedures must be used along with verified pure solvents. Blanks and controls should be run at each stage of the analysis scheme.

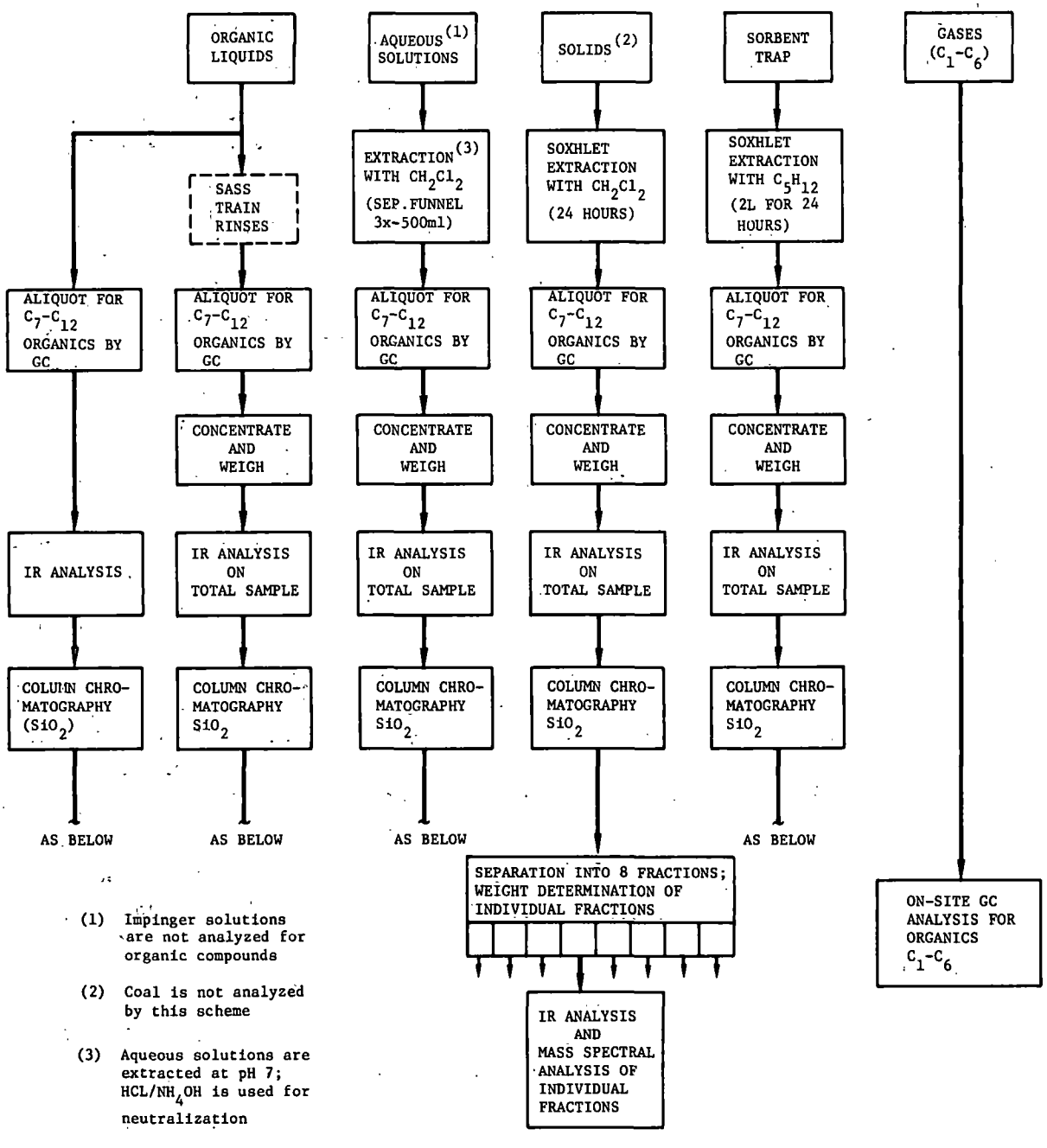

(1) Impinger solutions are not analyzed for organic compounds

(2) Coal is not analyzed by this scheme

(3) Aqueous solutions are extracted at pH 7; HCL/NH_4OH is used for neutralization

Figure 27. Level 1 organic analysis scheme

The following discussion presents procedures that are appropriate for most samples. The specific solvents indicated should be used where possible. In the case of unusual sample requirements, an alternate procedure should be selected and presented to the project officer and the Process Measurements Branch, IERL-RTP, for approval.

When possible, it is recommended to have at least 10 mg of sample for the gravimetric analysis. Prior to column chromatography, it is recommended that the solvent solutions be concentrated to 1 to 10 ml. The Kuderna-Danish apparatus is recommended for sample concentration of volumes less than one liter, and a rotary evaporator is recommended for volumes which exceed this amount.

Extraction of aqueous solutions should be carried out with methylene chloride using a standard separatory funnel fitted with a Teflon stopcock. If necessary, ammonium hydroxide or hydrochloric acid should be used to adjust the pH of the sample to pH 7 before extraction. Normally, three 500-ml methylene chloride extractions of 10-liter samples should be sufficient to extract.

All solid material with the exception of coal but including raw materials, cyclone, probe and filter particulate, and ash should be extracted for 24 hours with methylene chloride in a Soxhlet apparatus. The Soxhlet cup must be previously extracted in order to avoid contamination. The sample is covered with a plug of glass wool during the extraction to avoid carry-over of the sample.

A large Soxhlet extraction apparatus (dumping volume of approximately 1,500 ml) is used to extract the XAD-2 resin (~ 400 ml) after homogenization and removal of a 2 g portion for inorganic analysis, the resin is transferred to a previously cleaned extraction thimble and secured with a glass wool plug. Approximately 2 liters of n-pentane is added to the 3-liter reflux flask and the resin extracted for 24 hours. The reflux flask should be examined periodically to determine whether additional solvent is needed to replace that lost by volatilization.

The XAD-2 resin should not be extracted with methylene chloride because the compatibility of this resin with methylene chloride has not been fully evaluated.

If large quantities of polar materials are extracted, they may precipitate in the reflux flask near the completion of the extraction. Addition of cool methylene chloride to the flask, after extraction is complete, will simplify the subsequent transfer and analysis steps.

The chromatography/IR/LRMS procedure will provide reliable data on the compound types present in the samples for the relatively high boiling compounds. Unfortunately, the SASS train will not capture (and retain for analysis) the organic compounds with boiling points in the C_1-C_6 range (up to 70°C); the volatile materials in the C_7-C_{12} range (100-200°C) are lost to varying degrees in the sample concentration steps required for analysis. Consequently, separate gas chromatography procedures are used for the analysis of these two ranges of materials.

The on-site gas chromatographic requirements for analysis of the C_1-C_6 and volatile C_7-C_{12} gases is presented in detail in Table 16. For organic analysis the GC system should be calibrated for retention time and quantity with C_1-C_{12} n-paraffins. The GC system will simply be separating and analyzing mixtures of materials within a given boiling point range (and polarity in some cases). Since the chromatogram peaks will represent mixtures of materials present in a certain boiling range, rather than pure, individual compounds, it is recommended that material observed in the chromatogram be reported as present in boiling point ranges. If, from other information, the identity of specific chromotographic peaks can be ascertained, individual organic compounds may be assigned to these peaks provided the basis of assignment is clearly stated.

For extracted samples and neat organic liquids, additional problems occur from solvent interference and GC requirements. Even for the dilute sorbent trap extracts, a flame ionization detector is sufficiently sensitive to require only a one-microliter sample. The initial isothermal portion of the temperature program allows the solvent to elute prior to C_7 hydrocarbons. It will probably be necessary to prepare solutions of neat organic liquids to prevent overloading and degradation of the column.

A detailed procedure for the column chromatographic separation is given in Table 16 and in reference 147. All sample extracts and neat organic liquids are subjected to this procedure if the sample quantity is adequate. A sample of 100 mg is preferred but smaller quantities (> 15 mg) can be used. This separation procedure is not a high resolution technique and consequently there is overlap in class type between many of the fractions Fraction 1 contains alkanes and possibly some olefins. Fractions 2 through 4 contain predominantly aromatic species. The smaller aromatics (e.g., benzene, naphthalene) will tend to elute in the early fraction (2) while the larger aromatics (e.g., benzpyrene, etc.) will tend to elute in fractions 3 and 4. Some low polarity oxygen and sulfur containing species may also elute in Fraction 4 but most of these will not elute until addition of methanol.

Fractions 5 through 7 will contain polar species including phenols, alcohols, phthalates, amines, ketones, aldehydes, amides, etc. The distribution of class type between Fractions 5 through 7 will be a function of their polarity and affinity for the silica gel. Some weak acids may elute in Fraction 7.

Very polar species, primarily carboxylic acids and sulfonic acids, will elute in Fraction 8.

After each fraction is collected, it should be transferred to a tared aluminum micro weighing dish for evaporation and gravimetric analysis. Fraction 8 should be dried in a glass container because of its hydrochloric acid content. Each fraction is subsequently analyzed by IR and, when the quantity is sufficient, LRMS (Table 16).

The total sample extract, neat organic liquids, and the eight fractions obtained from the column chromatographic separation are analyzed by infrared (IR) spectrophotometry. IR spectra are obtained on KBr salt plates using methylene chloride to transfer the sample to the plates. A grating spectrophotometer should be used. Sample quantity is adjusted so that the spectra maxima and minima lie between about 10 and 90 percent transmission, respectively. These spectra are interpreted in terms of functional group types present in the samples.

Low resolution mass spectra (LRMS) are obtained on each of the eight fractions deemed to have sufficient quantity, in terms of source emissions. For the various samples these quantities are:

Gas - SASS train samples	0.5 mg/m^3
- Ambient air - particulate	1 ug/m^3
- Ambient air - sorbent trap	0.5 mg/m^3
Solids	1 mg/kg
Aqueous solutions	0.1 mg/l

The mass spectrometer should preferably have a resolution ($m/\Delta m$) of 1,000, a batch and direct probe inlet, a variable ionizing voltage source and electron multiplier detection. Volatile samples are analyzed by insertion in the batch inlet. It is anticipated, however, that most samples will be introduced via the direct insertion probe. A small quantity of sample is placed in the probe capillary and inserted into the cool source. The temperature is then programmed to vaporize the sample. Spectra are recorded periodically throughout this period. Spectra will normally be obtained at 70 ev ionizing voltage, but low voltage (~15 eV) or CIMS spectra, may yield more useful data in some cases.

Interpretation of the spectra is guided by knowledge of the separation scheme, the IR spectra, and other information about the source. Data are grouped by homologous series based on a most probable structure assignment. Molecular ion series and fragment ions help to identify compound classes (e.g., polynuclear aromatic hydrocarbons are characterized by intense double ionization). Compilations of reference spectra will be useful in spectra interpretation.

Without the benefit of Level 1, analysis (i.e., knowledge of stream composition) it is impossible to specify exact analytical conditions for Level 2 analysis. In general, Level 2 analysis is an extension of Level 1 separation techniques using GC and HPLC methods. A greater variety of methods are used for compound identification and quantification and include UV-visible spectroscopy, infrared spectroscopy, NMR spectroscopy, GC-mass spectroscopy, high resolution mass spectrometry, and gas chromatography.

Since Level 1 C_7-C_{12} GC procedures for volatile organic compounds are designed only to separate components by boiling point range, a high resolution SCOT column is used for initial compound identification; if specific classes of compounds are suspected, appropriate supports may be chosen from the listing in Table 16.

For non-volatile organic species, HPLC is used for initial separation; HPLC techniques include gel permeation chromatography (separation primarily by molecular weight) and subsequent separation of these fractions by bonded phase liquid chromatography (separation by chemical class). Where very polar organic species (e.g., ionic) have been identified from a Level 1 analysis, ion exchange chromatography can be used as a supplementary technique to bonded phase chromatography.

Once the species of interest have been separated, the aforementioned analytical techniques are used for specific compound identification either separately or in combination.

TABLE 16. SUMMARY OF RECOMMENDED PROCEDURES FOR ORGANIC ANALYSIS

ANALYSIS AREA	LEVEL 1			
	RECOMMENDED ANALYTICAL METHOD	SELECTION RATIONALE	SPECIAL SAMPLING AND ANALYTICAL REQUIREMENTS	REFERENCES
Volatile Organic Compounds: C_1-C_6 Range Range B.P. °C 1 -160/-100 2 -100/- 50 3 - 50/ 0 4 0/ 30 5 30/ 60 6 60/ 90	GC/Flame Ionization Detector (FID)	Gas chromatography provides a broad, rapid, relatively simple, and accurate method for the determination of volatile organics. The method is amenable to on-site analyses and is designed to separate and analyze mixtures of organic materials within a given boiling point range (polarity in some cases) rather than separate pure compounds.	For C_1-C_6 volatile organics, the sample is collected in a 3L glass vessel with a pyrex wool plug to remove particulates. Recommended Analysis Parameters: Column: Poropak Q, 100/120 mesh, 6' x 0.125" SS. Detector: Flame ionization. Temperature: 50°, isothermal. A temperature calibration curve is prepared from pure samples of C_1-C_6 n-parafins. Peaks observed in the chromatogram will generally represent mixtures of compounds within a given B.P. range rather than individual compounds. Unless additional evidence can be presented as to the specific identity or given peak, material and quantity should be reported as being present within a given range. Peak areas may be calculated by a variety of methods: peak height, triangulation, integration, etc.	147 (173)

TABLE 16 (continued).

LEVEL 2				REMARKS (LEVELS 1 & 2)
RECOMMENDED ANALYTICAL METHOD	SELECTION RATIONALE	SPECIAL SAMPLING AND ANALYTICAL REQUIREMENTS	REFERENCES	
GC (FID)	A rapid-relatively simple, accurate method of separation and analysis of organic compounds.	For C_1-C_2 volatile organics, the sample is collected in a 3L glass vessel with a pyrex wool plug to remoe particulates. Many types of columns may be used for analysis; for C_1-C_5 hydrocarbons only, the following analysis scheme is recommended: column: 8' x 1/8" o.d., s.s., 17% by weight β,β' oxydiproponitrile on 100-150 mesh activated alumina. Temperature: isothermal at 0°C. Automatic integration techniques should be used for quantification (disc type or electronic); for accurate quantification, detector response calibration is essential.	8.31 16 173 224 248 (7 830 9 32 53 71 110 111 169 180 187 195 198 210 222 278 288)	Gas chromatography is susceptable to interferences, i.e. identical retention times; e.g. 2, 2-dimethl propane and trans 2-butane have identical retention times under the conditions given.

TABLE 16 (continued).

ANALYSIS AREA	LEVEL 1			
	RECOMMENDED ANALYTICAL METHOD	SELECTION RATIONALE	SPECIAL SAMPLING AND ANALYTICAL REQUIREMENTS	REFERENCES
Organic Compounds: C_7-C_{12} Range Range B.P. °C 7 90/110 8 110/140 9 140/160 10 160/180 11 180/200 12 200/220	GC (FID)	As above. This GC system is designed to separate and analyze mixtures within given boiling point ranges (polarity in some cases) rather than separate pure compounds.	The C_7-C_{12} organic compounds may be found in the following areas: CH_2Cl_2/CH_3OH washes, CH_2Cl_2 extracts, C_5H_{12} extract of the XAD-2 sorbent trap, and neat organic liquids. All samples are analyzed BEFORE concentration. No preparation is needed for the neat organic liquids and washes. Aqueous solutions (10 L sample) are extracted 3X with 500 ml of CH_2Cl_2. Solids are extracted for 24 hours with CH_2Cl_2 in a soxhlet apparatus. The XAD-2 resin (after homogenization and removal of a 2g sample for inorganic analysis) is extracted for 24 hours with pentane in a large soxhlet extraction apparatus (dumping volume 1500 ml). Recommended analysis conditions: Column: 1.5% OV-101 (or SE-30) on gas chrom Q 100/120 mesh, 0.125" x 6'SS. Detector: FID Temperature: Programmed 50° isothermal for 5 min, then 10°C/min to 150°C. A temperature calibration curve is prepared from pure sample of C_7-C_{12} n-paraffins. As the number of possible compounds in these ranges is very large, material and quantity should be reported as being present within a given b.p. range. Specific compound identification should be supported by additional data.	147 (173)

TABLE 16 (continued).

LEVEL 2				REMARKS (LEVELS 1 & 2)
RECOMMENDED ANALYTICAL METHOD	SELECTION RATIONALE	SPECIAL SAMPLING AND ANALYTICAL REQUIREMENTS	REFERENCES	
GC (FID)	Gas chromatography provides a rapid and relatively simple, accurate method for the separation and quantification of organic compounds.	See Level 1 for sampling considerations and requirements. While no single column may be suitable for all organic compounds in this range, the following column and conditions are recommended for identification screening purposes: Column: SCOT OV 101 or OV 17, 100m, 0.4 mm I.D. Detector: FID Temperature: Programmed 2°C/Min, ambient to 300°C.	(15 10.1 10.2 63 91 139 172 212 224 236 264 278 286)	Supplemental analyses (IR, MS) may be necessary for compound identification; for a tabular presentation of these techniques see non-volatile organics - Level 2.
	Other columns of use for Particular Compounds are listed below:			
	Class of Compounds	Column Type		
	Acids C_1-C_9	Chromosorb 101		
	C_1-C_{18}	FFAP		
	Alcohols C_1-C_5	Poropack Q, Chromsorb 101		
	C_1-C_{18}	Silar 5CP, Carbowax 20M, FFAP		
	Polyalcohols	FFAP		
	Aldehydes C_1-C_5	Poropak N, DC-550 Ethofat		
	C_5-C_{18}	Carbowax 20M, Silar 5CP Poropak Q/PEI, Poropak R		
	*Amines	*Chromosorb 103, Penwalt 223		
	Amides	Versamid 900, Igepal CO-630		
	Esters	Poropak Q, Dinonylphthalate Chromosorb 101 or 102		
	Ethers	Carbowax 20M, Silar 5CP		
	Freons	Poropak Q, Chromosorb 103		
	Glycols	Chromosorb 107		
	Halides	OV-210, FFAP		
	Hydrocarbons C_5-C_{10}	OV-101, SE-30		
	Aromatic	Silar 5CP, Carbowax 20M		

TABLE 16 (continued).

ANALYSIS AREA	LEVEL 1			
	RECOMMENDED ANALYTICAL METHOD	SELECTION RATIONALE	SPECIAL SAMPLING AND ANALYTICAL REQUIREMENTS	REFERENCES
Non-Volatile Organic Compounds (B.P.>220°C)	Extraction and fractionation by column chromatography; class identification within each fraction using infrared spectroscopy (IR) and low resolution mass spectrometry (LRMS)* *LRMS is defined as a mass spectra with a resolution (M/ M) of 1000	Column chromatography is a low resolution technique intended to yield 8 fractions on the basis of class polarity; overlap of class type between many of the fractions is inevitable. IR analysis is used to identify functional groups present in each sample and fraction. When sample quantity is sufficient (referenced back to the source in terms of emission rates), LRMS is utilized in conjunction with IR analysis to aid in class identification.	Non-volatile organic compounds may be found in the following areas: Organic liquids (including washes), aqueous solutions, solids, and the XAD-2 sorbent trap. Organic liquid separation and analysis may be run neat. Washes (CH_2Cl_2/CH_3OH) are evaporated before separation and analysis. Aqueous solutions (10 L sample) are extracted 3X with 500 ml of CH_2Cl_2, evaporated and weighed before separation and analysis. Solids are extracted for 24 hours with CH_2Cl_2 in a soxhlet apparatus.[2] The extract is concentrated and weighed before separation and analysis. The XAD-2 resin (after homogenization and removal of a 2g sample for inorganic analysis) is extracted with pentane in a large soxhlet extraction apparatus (dumping volume 1500 ml). The extract is evaporated and weighed before separation and analysis.	147 (173)

TABLE 16 (continued).

LEVEL 2				REMARKS (LEVELS 1 & 2)
RECOMMENDED ANALYTICAL METHOD	SELECTION RATIONALE	SPECIAL SAMPLING AND ANALYTICAL REQUIREMENTS	REFERENCES	
	Olefins C_6 and greater POM Ketones Halogenated Aromatics Phenols	DC-550, DC-703 Dexsil 300, OV-101, SE-30 Poropak Q, Chromosorb 102, FFAP OV-101, OV-225, OV-1, OV-17, SE-30 OV-17, Silar 5CP, Carbowax 20M		
Complete coverage of all contemplated techniques is not possible. The following is a summary of applicable techniques taken from "Technical Manual for Analysis of Organic Materials in Process Streams" Batelle, Columbus Laboratories, March, 1976. This report should be consulted for further details of analysis.				
(HPLC) High Performance Liquid Chromatography		See Level 1 for discussion of sample considerations and requirements. Fractions from silica gel column may be analyzed individually if required.	173 (265) (62) (91)	Volatile and nonvolatile organic separation of wide variety of compounds; especially applicable to high molecular weight compounds and thermally sensitive compounds; small sample size requirement.
Gel Permeation Chromatography		20mg of sample/100 ml of column volume.	(181)	Separation by molecular weight. A common column packing is a styrenedivinyl benzene polymer; mobile phase must be compatible with support and detection system - low refractive index allows more sensitive detection with RI detector.
Bonded Phase Liquid Chromotography (Reverse)		Preparative columns can handle up to ~ 1g samples.	(181)	Separation by chemical class; class separation is achieved by performing gradient elution on a reversed phase column; solvents chosen for gradient elution must be compatible with detection system; microparticle (5-10).

TABLE 16 (continued).

ANALYSIS AREA	LEVEL 1			
	RECOMMENDED ANALYTICAL METHOD	SELECTION RATIONALE	SPECIAL SAMPLING AND ANALYTICAL REQUIREMENTS	REFERENCES
Non-Volatile Organic Compounds (B.P.>220 °C) (continued)				147 (173)

TABLE 16 (continued).

LEVEL 2				REMARKS (LEVELS 1 & 2)
RECOMMENDED ANALYTICAL METHOD	SELECTION RATIONALE	SPECIAL SAMPLING AND ANALYTICAL REQUIREMENTS	REFERENCES	
				reverse phase packing preferred; gradient elution is difficult with RI detection system.
Thin-layer Chromatography (TLC)		μg quantities of sample required for analysis. TLC support (SiO_2 & Al_2O_3) may need activitation by heating at 110°C for 1 hour.	(262) (140)	TLC data may give data which is directly applicable to HPLC. Color reagents may be used on plate directly for class identification.
Liquid-solid Chromatography		mg quantities of samples are necessary for analysis.	(172)	A useful technique for screening studies; elution from non-polar to polar order is solvents; a preprative method for rough class separation.
Ion-Exchange Chromatography		Preparative columns can handle up to 1g samples.	(173)	Separation of polar organic compounds. Used for separation of very polar organics; supplementary to reverse phase liquid chromatography; used after sequential analysis has identified an ionic fraction.
Dispersive IR		Thin film on crystal. For micro determination, micro-pressed disk or microfilm technique is used.	(271) (140)	Class identification by functional group; also useful for compound identification. Dispersive IR systems are widely available; average resolution should be 4 cm^{-1} over the spectral range of (3800 cm^{-1}-600 cm^{-1}); wavelength accuracy of ±10 cm^{-1} above 200 cm^{-1} and less than that below 2000 cm^{-1}. Wavelength readability should be better than 10 cm^{-1} at wavenumbers above.

TABLE 16 (continued).

ANALYSIS AREA	LEVEL 1			
	RECOMMENDED ANALYTICAL METHOD	SELECTION RATIONALE	SPECIAL SAMPLING AND ANALYTICAL REQUIREMENTS	REFERENCES
Non-Volatile Organic Compounds (B.P.>220°C) (Continued)			Samples are prepared for separation by evaporation on a Kuderna-Danish apparatus such that 20-500 mg of sample is obtained (100 mg is optimum). Samples are separated on a 200x10.5 mm glass column (teflon stoplock) packed with 6.0g of freshly activated (2HR at 110°C) silica gel (60/100 mesh, grade 950 - Fisher scientific). The evaporated sample is weighed in a glass weighing funnel and transferred quantitatively by mixing with 1g of activated silica gel and placing this onto the column via the weighing funnel. The funnel is rinsed with 5 ml of pentane to complete the transfer. The column is now eluted at 1 ml/min with the following eluants: Fraction Number — Eluant Composition — Volume Collected 1 — Pentane — 25 ml 2 — 20% CH_2Cl_2 in pentane — 10 ml 3 — 50% CH_2Cl_2 in pentane — 10 ml 4 — CH_2Cl_2 — 10 ml 5 — 5% CH_3OH in CH_2Cl_2 — 10 ml 6 — 20% CH_3OH in CH_2Cl_2 — 10 ml 7 — 50% CH_3OH in CH_2Cl_2 — 10 ml 8 — Conc. HCL/CH_3OH/CH_2Cl_2 (5:70:30) After each fraction is collected, it is transferred to a tared aluminum weighing dish (a glass container is used for evaporation of fraction 8) evaporated and weighed. The total sample and 8 fractions are analyzed by IR spectroscopy for functional groups present. Mass spectra are taken on each fraction which is deemed significant in terms of emissions; the criteria are:	147 (173)

TABLE 16 (continued).

LEVEL 2				REMARKS (LEVELS 1 & 2)
RECOMMENDED ANALYTICAL METHOD	SELECTION RATIONALE	SPECIAL SAMPLING AND ANALYTICAL REQUIREMENTS	REFERENCES	
			(140) 173 (271)	2000 cm^{-1} and better than 5 cm^{-1} below 2000 cm^{-1}.
Fourier Transform IR		Thin film on crystal/ KBr Pellet.	(140) 173 (271)	Greater sensitivity obviates need for micro techniques; accuracy and resolution as above; dedicated computer necessary but considered an advantage; a very useful screening technique.
GC-IR		Gas cell.		
NMR CW H^1		Dissolution in suitable solvent. ~ 10 mg sample is required.		Class identification/Compound identification - Micro techniques may extend range to 10-100 ng range; useful for functional group classification after "rough" separation has been made.
With CAT*				Sensitivity extended by a factor of 100.
NMR FT H^1		Dissolution in suitable solvent.	(140) 173 (271)	Fourier transform NMR is 100-100 X more sensitive than CW NMR; micro techniques may extend range 10-100 X lower; dedicated computer required.
NMR FT C^{13}		Dissolution in suitable solvent.	(140) 193 (291)	Large chemical shift range (600 ppm) as compared to H^1 NMR (20 ppm) which enhances effective resolution. Ability to identify functional carbons; most useful where IR and MS give relatively little information.

CAT = Computer Averaged Transients

TABLE 16 (continued).

ANALYSIS AREA	LEVEL 1			
	RECOMMENDED ANALYTICAL METHOD	SELECTION RATIONALE	SPECIAL SAMPLING AND ANALYTICAL REQUIREMENTS	REFERENCES
Non-Volatile Organic Compounds (B.P.>220°C) (continued)		Gas - (SASS Train) - 0.5 mg/m^3 (Ambient Air) - 1 g/m^3 Aqueous Solutions - 10 g/m^3 Solids 100 g/m^3 Volatile samples may be inserted into the gas inlet; less volatile samples are placed in the solid inlet probe. The probe is programmed up to vaporize the sample; spectra are recorded periodically. Spectra are obtained at 70eV ionizing voltage, but a lower ionizing voltage (~15eV) or a CI source, if available, may yield much useful information.		147 (173)

TABLE 16 (concluded).

LEVEL 2				REMARKS (LEVELS 1 & 2)
RECOMMENDED ANALYTICAL METHOD	SELECTION RATIONALE	SPECIAL SAMPLING AND ANALYTICAL REQUIREMENTS	REFERENCES	
UV-Visible Spectroscopy		Sample is dissolved in a suitable solvent (UV/VIS inactive in wavelength region of interest).	173 (271) (140)	Class Identification-Useful in identifying functional groups and certain types of compounds; sensitivities are generally higher in UV region. Used in conjunction with IR, NMR, and MS.
Mass Spectroscopy EI*		Several injection methods possible (probe insertion preferred); temperature programming of probe may give additional separation.	193 (271) (140)	Class Identification-Not a useful screening technique; computer access to a large data base is essential.
Mass Spectroscopy Chemical Ionization (CI)		Several injection methods possible (probe insertion preferred); temperature programming of probe may give additional separation.	173 (271) (140)	Compound Identification/Molecular Weight Determination; CH_4 and NH_3 are commonly used as ionizing gases; suitable standards are unavailable at this time for CIMS; of limited use as a screening technique.
GC-MS EI and CI		As in GC analysis.	173 (140) (271)	Compound Identification/Molecular Weight Determination - Dedicated mini-computer is essential for best results; quantification may be achieved by specific ion current integration or by total ion current comparison.

EI = Electron Impact

Elemental Analysis

Figure 28 provides an overview of the Level 1 inorganic analysis scheme. Recommended procedures for elemental analysis are presented in Table 17. Spark Source Mass Spectroscopy (SSMS) is recommended for screening purposes at Level 1, while a variety of techniques are used at Level 2.

Four specific groups of samples for inorganic element analysis result from a Level 1 sampling survey:

(1) XAD-2 trap;
(2) Aqueous samples;
(3) Organic samples (liquid or solid); and
(4) Particulate matter, including probe and cyclone washes and ash samples.

To analyze these samples by SSMS, two general conditions must be met:

(1) The sample, if it is not a conductor, must be placed into a conducting medium (graphite); and

(2) The sample must be as free as possible from organic matter which can complicate spectra interpretation.

In Figure 29, preparation procedures for each of the abovementioned sample types are indicated.

Aqueous samples are prepared by adding a small amount of the sample to powdered graphite and evaporating to dryness. (One ml of solution is needed to obtain a 1 $\mu g/\ell$ sensitivity assuming a basic SSMS sensitivity of 10^{-9}g.) The graphite is then pressed into an electrode. Particulate matter, ash, and fuel samples require reduction of organic matter by wet ashing in a Parr bomb over nitric acid; an aliquot of this sample is added to graphite, evaporated, and pressed into an electrode.

An analysis of the XAD-2 sorbent trap for trace elements is a unique problem because little is known about volatile element retention of the sorbent trap. Since absorption is not uniform throughout the length of the trap, the XAD-2 sorbent is first thoroughly mixed to ensure homogeneity, and then a 2 g portion of the sorbent is used for Parr bomb combustion over HNO_3. An aliquot of this sample is then formed into an electrode in the same manner as above.

Sample homogeneity is of the utmost importance for solid inorganic samples which are not dissolved prior to analysis. These samples should be reduced to less than 200 mesh in a micro-mill equipped with stellite blades. (Alternatively the sample may be ground with a boron carbide mortar and pestle.) The ground sample is blended with graphite (equal parts) and pressed into electrodes.

There are two general types of SSMS detection systems; photographic plate, and electrical detection. For Level 1 elemental analysis, the

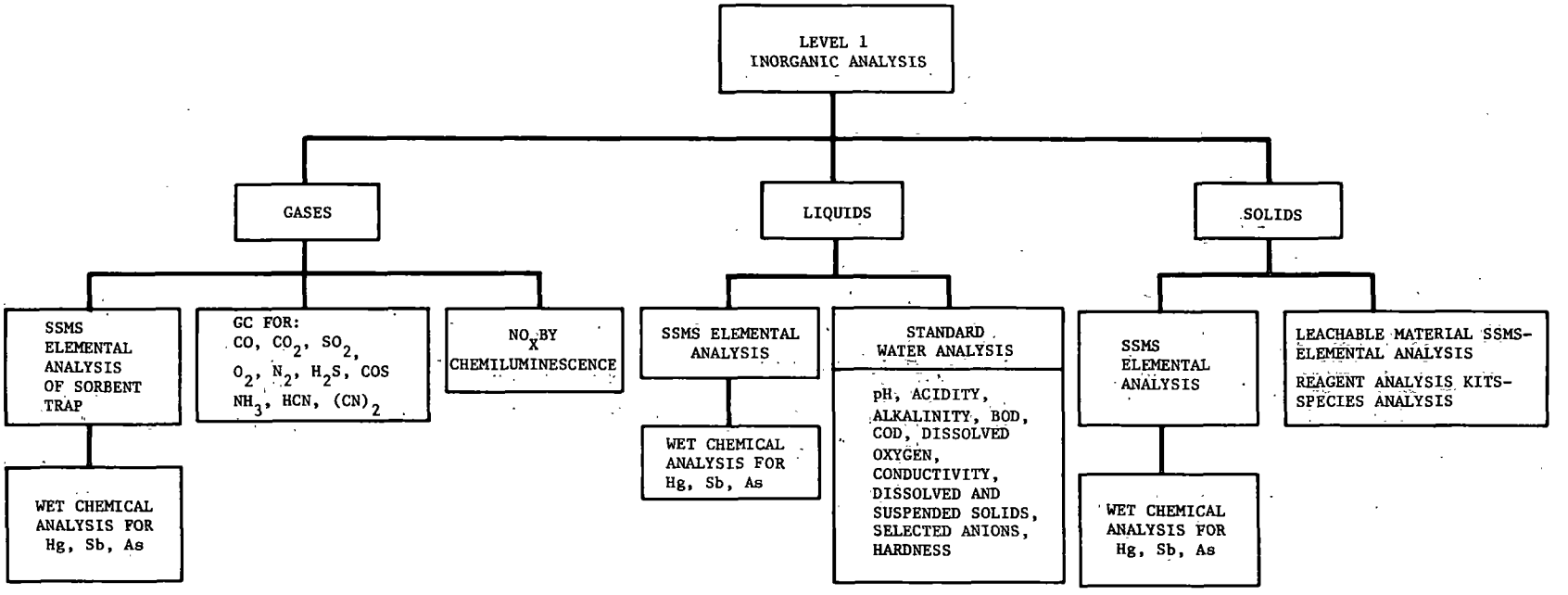

Figure 28. Level 1 inorganic analysis scheme

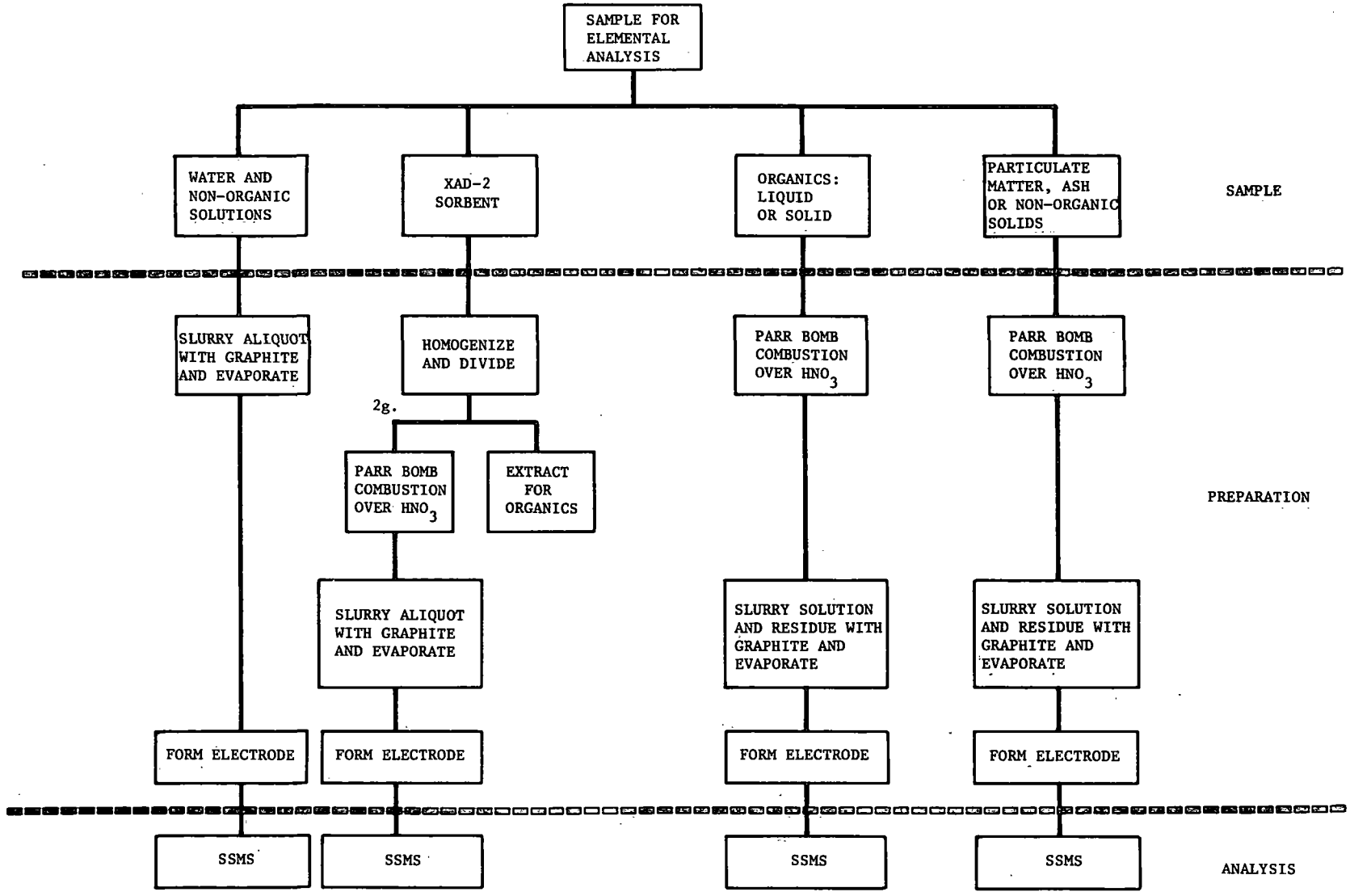

Figure 29. Sample preparation for Level 1 elemental analysis

photographic system using the "just disappearing line" technique is employed. To achieve the highest sensitivity, a series of exposures of the photoplate is made with the sample, and is compared to a series of exposures made with a reference sample. Precision and accuracy are highly dependent on spectral line widths and shapes. These parameters define optical densities which are converted to ion densities by means of calibration curves. A number of computer-oriented systems for the derivation and integration of ion intensity profiles have been developed for use in accurate and precise determinations.

While SSMS can, in theory, analyze any element, arsenic, antimony, and mercury are not determined reliably by SSMS; in addition, carbon, hydrogen, nitrogen, and oxygen are not commonly determined by SSMS. Thus, the former are determined by atomic absorption spectroscopy or wet techniques while the latter group is determined by combustion methods. Figure 30 summarizes the analytical scheme for arsenic, antimony and mercury. Since several additional sample preparation steps are included in this scheme, care must be taken to avoid contamination; blanks on all solutions, acids, and reagents must be run to insure accurate and reproducible results.

At Level 2, the analytical methods employed are more varied. While atomic absorption spectroscopy (either flameless or conventional) has been chosen for a majority of elements, it is not unreasonable that, depending on the total number of elements to be analyzed, SSMS might be used at Level 2. To achieve the high accuracy and precision which is required at Level 2, a spark source mass spectrometer employing ion sensitive multiplier phototubes as detectors, is required; with electrical detection, precision rivals that obtainable by any other analytical method.

If a small number of elements are to be determined, AAS is a more economical choice than SSMS; not only is AAS equipment commonly available in most laboratories; but, in general, the method combines high specification with high sensitivity. The use of a graphite furnace (flameless atomic absorption spectroscopy) can improve detection limits a thousand fold. (Other methods such as NAA, XRF, etc. can also be used where appropriate and if the required equipment is available.)

Another modification to AAS which has been found useful for arsenic, antimony, bismuth, germanium, tellurium, and tin is the hydride evolution technique. In this technique, volatile hydrides are generated and analyzed with a conventional AAS system. The advantages of the Hydride Evolution Technique are as follows: (1) practically all matrix effects are eliminated since matrix materials are left behind; (2) very efficient use is made of the sample as the entire amount of the element of interest present reaches the flame in a form very suitable for efficient atomization; (3) the method improves sensitivity by factors of 50 to 200.

Either specific procedures or relevant analytical conditions are given in Table 17; where specific procedures have not been given, they can be found in the references cited. (For general AAS procedures, see references 42 and 82.)

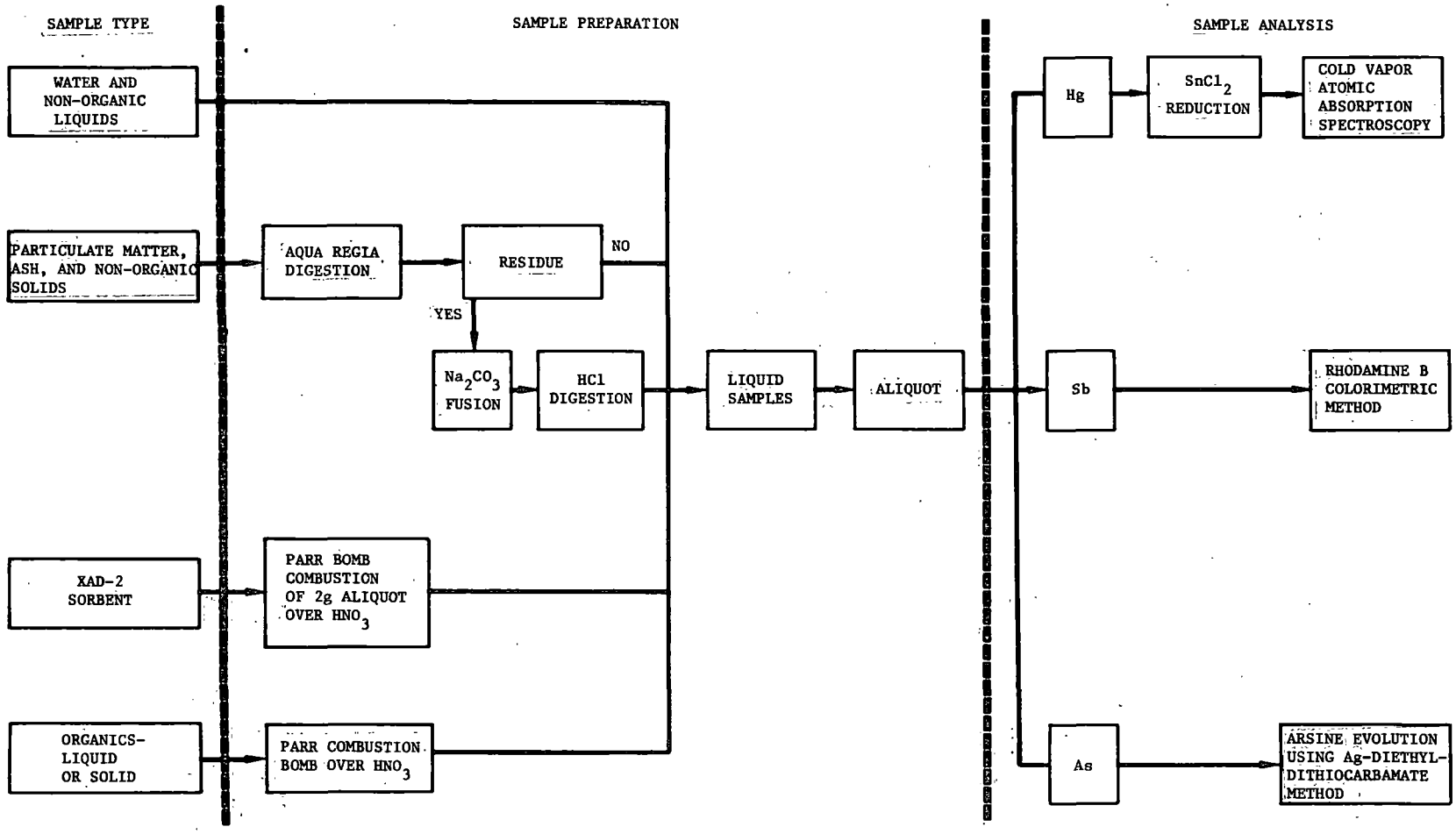

Figure 30. Sample preparation and analysis of Hg, Sb and As- Level 1

A variety of dissolution and ashing procedures are used and referred to within Table 17. These procedures are discussed below.

Dry ashing is the simplest prior treatment for samples containing organic material and may be used where high temperature ashing is suitable (as noted in Table 17). The general procedure is as follows:

An appropriate amount of sample (1-2 g, - 200 mesh) is weighed into a porcelain crucible and placed in a cold vented furnace. The furnace is brought to a temperature of 300°C for 0.5 hour, to 550°C for 0.5 hour, and to 850°C for 1.0 hour. The crucible is removed from the furnace, stirred, and returned to the furnace at 850°C for 1.0 hour with no venting.

The resultant ash is placed in a 100 ml teflon beaker containing 5 ml of HF (conc.) and 15 ml of HNO_3 (conc.), dissolved by gentle warming, and evaporated until just dry. Distilled water and 1 ml of HNO_3 (conc.) are added to dissolve the salts, and this solution is transferred to a 100 ml volumetric flask. Distilled water is added to adjust the volume to 100 ml. This solution is transferred to a polyethylene bottle and preserved as a stock solution.

The oxygen bomb combustion method, used for organic matrix reduction in Level 1 procedures, is as follows:

Approximately 1 g of -200 mesh sample is transferred to a clean combustion crucible and weighed to the nearest 0.1 mg. Ten milliliters of 10 percent HNO_3 is tranferred to a Parr bomb, the crucible placed in the electrode support of the bomb, and the fuse wire attached. The bomb is assembled and oxygen added to a pressure of 24 atm. (gage). The bomb is placed in the calorimeter (cold water in a large stainless steel beaker is also satisfactory) and the sample ignited using appropriate safety precautions ordinarily employed in bomb calorimetry work. After combustion, the bomb should be left undisturbed for 10 minutes to allow temperature equilibration and the absorption of soluble vapors. The pressure is released slowly and the contents transferred to a beaker. Any residue remaining can be brought into solution by fusion techiques.

Siliceous materials (e.g., coal ash) may be solubilized by a lithium tetraborate acid dissolution technique. The following method may be used:

One tenth g of sample is added to a plastic vial containing 1 g of preweighed lithium tetraborate. The vial is hand shaken to mix the material, and the contents are poured into a graphite crucible. The material is fused at 950°C for 15 min in a muffle furnace. The resulting bead is removed from the furnace and can either be stored in the original vial or immediately solubilized. The bead is transferred to a Teflon beaker containing 5 ml of 3N HCl, 2 ml of 2N HNO_3 and 10 ml of water. (Teflon is used to eliminate sodium contamination.) The material is then boiled until completely dissolved and immediately filtered into a 50 ml volumetric flask. Hot filtration is required to prevent solid materials from crystallizing out of solution before dilution and to remove carbon particles that result

from fusion in graphite crucibles. The sample is then diluted to volume, shaken, and then further diluted as required to bring the element concentration to within range of the working curve of interest.

A final method which has been found to be very effective for the dissolution of silicate minerals is described by Bernas (reference 36).

Fifty mg of a representative -150 mesh size sample portion is transferred into a Teflon decomposition vessel. Aqua regia (0.5 ml) is added and the sample swirled to insure thorough wetting. Hydrofluoric acid (3 ml-48 percent) is added and the vessel sealed. The crucible is placed in a drying oven for 30 to 40 minutes at 110°C. After cooling to ambient temperature, the decomposed sample solution is transferred to a polystyrene Spex vial (50 ml). Care should be taken to quantitatively transfer any precipitated metal fluorides which may have formed. The final volume should not exceed 10 ml. Boric acid (1.8 g) is added and stirred with a Teflon stirring bar to hasten the reaction. Upon addition of 5 to 10 ml of distilled water, any precipitated metal fluorides will dissolve. The solution is transferred to a 100-ml volumetric flask, adjusted to volume, and stored in a polyethylene container. The sample solution should not remain in contact with glass for longer than 2 hours.

A large number of abbreviations and notations are used within Table 17 for brevity. Those abbreviations, by columns, are:

- Recommended Analytical Method - Level 1

  SSMS - Spark Source Mass Spectrometry

- Recommended Analytical Method - Level 2

  AAS - Atomic Absorption Spectroscopy
  FAAS - Flameless Atomic Absorption Spectroscopy
  HE - Hydride evolution technique
  SIE - Specific Ion Electrode

- Special Sampling and Analytical Requirements - Level 2

  The format used for AAS entries is - sample dissolution method, oxidant and fuel type, analytical wavelength, and recommended slit setting.

- Remarks

  Detection limits (intended to be representative, not "world's records") are reported within parentheses and are in $g\ ml^{-1}$. Where FAAS and HE methods are appropriate, their detection limits are also listed.

  NRL-Non-Resonance Lines which are suitable for background interference correction with a deuterium lamp.

TABLE 17. SUMMARY OF RECOMMENDED PROCEDURES FOR ELEMENTAL ANALYSIS

ANALYSIS AREA	LEVEL 1			
	RECOMMENDED ANALYTICAL METHOD	SELECTION RATIONALE	SPECIAL SAMPLING AND ANALYTICAL REQUIREMENTS	REFERENCES
Aluminum	Spark Source Mass Spectrometry (SSMS)	See introduction for SSMS selection rationale (applies to all elements listed below where SSMS has been selected).	Additional general SSMS references: (129, 145, 149, 213, 229, 249).	3 147 (325)
Antimony	Rhodamine B	SSMS does not provide reliable data within the accuracy limits of Level 1.	Organic samples and XAD-2 sorbent (2g) are wet ashed by O_2 combustion in a Parr bomb over HNO_3. Particulates, ash and inorganics are digested with aqua regia, the residue fused with Na_2CO_3 and then digested with HCl. Liquid samples are analyzed as received. All samples, prior to SSMS analysis, are slurried with graphite, evaporated, and briquetted to form the electrode.	325
Arsenic	Silver Diethyl-Dithiocarbamate-Arsine Evolution Method	SSMS does not provide reliable data with the accuracy limits of Level 1.		337
Barium	SSMS			3 147 (325)
Beryllium	SSMS			3 147 (325)
Bismuth	SSMS			3 147 (325)
Boron	SSMS			3 147 (325)

TABLE 17 (continued).

LEVEL 2				REMARKS (LEVELS 1 & 2)
RECOMMENDED ANALYTICAL METHOD	SELECTION RATIONALE	SPECIAL SAMPLING AND ANALYTICAL REQUIREMENTS	REFERENCES	
Atomic Absorption Spectroscopy (AAS)	See introduction for AAS selection rationale (applies to all elements listed below where AAS has been selected).	Wet ashing; N_2O-C_2H_2 flame, 3093 A, Slit 2 A	42 82 280 (239)	(0.1-AAS, $1x10^{-6}$-FAAS)* Zn, Ca, Cu, Fe, alkalai and alkaline earth metal interferences are reported.
AAS Hydride Evolution Technique (HE)	Relatively matrix-independent as compared to conventional AAS.	O_2 bomb combustion; HF/HNO_3 dissolution. Hydride is generated by $TiCl_3$-Mg method; air-C_2H_2 flame, 2175 A, Slit-7 A.	26 (124)	Rhodamine B spectrometric method is suitable for Level 2. Flameless HE technique is essentially matrix-independent. (0.03-AAS, 0.004-HE, $5x10^{-6}$-FAAS).
AAS Hydride Evolution Technique	Relatively matrix-independent as compared to conventional AAS.	O_2 bomb combustion; HF/HNO_3 dissolution. Hydride is generated by $TiCl_3$-Mg method; air-C_2H_2 flame, 1937 A, Slit-7 A.	26 (124)	Silver diethyldithio carbamate method is suitable for Level 2. Flameless HE technique is essentially matrix-independent. (0.03-AAS, 0.004-HE, $8x10^{-6}$-FAAS).
AAS		Wet ashing; HF/HNO_3 dissolution. N_2O-C_2H_2 flame, 5536 A Slit-40 A.	42 82 280 (239)	(0.02-AAS, $6x10^{-6}$-FAAS) Dry ashing is acceptable. Al, Si, alkalai and alkaline earth metal interferences are reported.
AAS		Wet ashing; N_2O-C_2H_2 flame, 2349 A, Slit-20 A.	42,82 280 (239)	(0.002-AAS, $3x10^{-8}$-FAAS).
AAS		Wet ashing; air-C_2H_2 flame, 2231 A, Slit-7 A.	42 82 280 (239)	(0.04-AAS, $4x10^{-6}$-FAAS) Dry ashing is acceptable. Ca, Mg, Na, K molecular interferences are reported.
AAS		Wet ashing; N_2O-C_2H_2 flame, 2497 A, Slit-2 A.	42 82 280 (239)	(3-AAS, $2x10^{-4}$-FAAS) The carminic acid method is also an acceptable method for Level 2 (0.005).
				* Detection limits in ppm.

TABLE 17 (continued).

ANALYSIS AREA	LEVEL 1			
	RECOMMENDED ANALYTICAL METHOD	SELECTION RATIONALE	SPECIAL SAMPLING AND ANALYTICAL REQUIREMENTS	REFERENCES
Bromine	SSMS			3 147 (325)
Cadmium	SSMS			3 147 (325)
Calcium	SSMS			3 147 (325)
Carbon	Combustion Gravimetric	Carbon is generally not analyzed by SSMS. Combustion is a rapid, low cost technique which is in wide use.	See Level 2	8.4
Cesium	SSMS			3 147 (325)
Chlorine	SSMS		Chlorine is not measured in particulate, ash, and inorganic samples because of dissolution procedure.	3 147 (325)
Chromium	SSMS			3 147 (325)

TABLE 17 (continued).

LEVEL 2				REMARKS (LEVELS 1 & 2)
RECOMMENDED ANALYTICAL METHOD	SELECTION RATIONALE	SPECIAL SAMPLING AND ANALYTICAL REQUIREMENTS	REFERENCES	
Spectrometric	This method is an accurate reproducible and fairly rapid technique which is in common use in organic analysis.	Combustion with O_2 bomb, Eschka mixture and $(NH_4)\ CO_3$. Spectrometric measurement at 515 nm.	8.19	See Table 19: Bromide
AAS		Wet ashing; air-C_2H_2 flame, 2288 A. Slit-7 A.	42,82, 280 (239)	(0.001-AAS, $8x10^{-8}$-FAAS) Fe molecular interference is reported (2321 A NRL).
AAS		Wet ashing; air-C_2H_2 flame, 4227 A, Slit-20 A.	42,82, 280 (239)	(0.002-AAS, $4x10^{-2}$-FAAS) Dry ashing is acceptable. SO_4^{-2}, PO_4^{-3}, Al, Si, Na, K interferences are reported. Sr buffer reduces interferences.
Combustion Gravimetric	This method is an accurate rapid and reproducible technique. ASTM method.	Absorbent may be sodium or potassium hydroxide impregnated in an inert carrier of 8-20 mesh. Soda lime may also be used.	8.4	
AAS		High temperature ashing; HF/HNO_3 dissolution; air-C_2H_2 flame, 8521 A Slit-40 A.	42,82, 280 (239)	0.05-AAS, $4x10^{-7}$-FAAS) Dry ashing is acceptable alkalai metal ionization interferences are reported.
Combustion Titrimetric	This method is an accurate, rapid, and reproducible technique. ASTM method.	O_2 bomb combustion with $(NH_4)_2\ CO_3$ or Eschka mixture.	8.9	Potentiometric titration may distinguish between Cl^-, Br^-, I^-. See Table 19: Chloride
AAS		Wet ashing; air-C_2H_2 flame, 3579 A, Slit-2 A.	42,82, 280 (239)	(0.002-AAS, $2x10^{-6}$-FAAS) Fe chemical interference is reported. NH_4Cl buffer is used to eliminate interference.

TABLE 17 (continued).

ANALYSIS AREA	LEVEL 1			
	RECOMMENDED ANALYTICAL METHOD	SELECTION RATIONALE	SPECIAL SAMPLING AND ANALYTICAL REQUIREMENTS	REFERENCES
Cobalt	SSMS			3 147 (325)
Copper	SSMS			3 147 (325)
Dysprosium	SSMS			3,147, (325)
Erbium	SSMS			3,147, (325)
Europium	SSMS			3,147, (325)
Fluorine	SSMS			3 147 (325)
Gallium	SSMS			3,147, (325)
Gadolinium	SSMS			3,147, (325)
Germanium	SSMS			3,147, (325)
Gold	SSMS			3,147, (325)

TABLE 17 (continued).

LEVEL 2				REMARKS (LEVELS 1 & 2)
RECOMMENDED ANALYTICAL METHOD	SELECTION RATIONALE	SPECIAL SAMPLING AND ANALYTICAL REQUIREMENTS	REFER-ENCES	
AAS		Wet ashing; air-C_2H_2 flame, 2407 A, Slit-2 A.	42 82 280 (239)	(0.002-AAS, $2x10^{-6}$-FAAS) Dry ashing is acceptable. Ca, Mg, K, Na molecular interferences are reported (2384 A, 2389 A-NRL).
AAS		Wet ashing; air-C_2H_2 flame, 3248 A, Slit-7 A.	42,82, 280 (239)	(0.004-AAS) $6x10^{-7}$-FAAS) Ca, Na, K molecular interferences are reported (2961 A-NRL).
AAS		Wet ashing; N_2O-C_2H_2 flame, 4212 A, Slit-2 A.	42,82, 280 (239)	(0.4-AAS; 0.007-FAAS)
AAS		Wet ashing; N_2O-C_2H_2 flame, 4008 A, Slit-2 A.	42,82, 280 (239)	(0.1-AAS)
AAS		Wet ashing; N_2O-C_2H_2 flame, 4594 A, Slit-2 A.	42,82, 280 (239)	(0.2-AAS, 0.02-FAAS)
Combustion /SIE	This method is an accurate, reproducible, fairly rapid, and simple technique for the measurement of fluorine.	Quartz sample holder; absorption by IN NaOH in bomb; plastic ware is used throughout analysis.	303 26	SIE procedure is more accurate than distillation-colorimetric procedure.
AAS		High temperature ashing; HF/HNO_3 dissolution air-C_2H_2 flame, 2874 A, Slit-20 A.	42,82, 280 (239)	(0.05-AAS, $4x10^{-4}$-FAAS) Al molecular interference is reported.
AAS		Wet ashing N_2O-C_2H_2 flame, 3684 A, Slit-2 A.	42,82, 280 (239)	(4-AAS)
AAS		O_2 bomb combustion over HNO_3; wet ashing; N_2O-C_2H_2 flame, 2652 A, Slit-2 A.	42,82, 280 (239)	(0.1-AAS, $3x10^{-6}$-FAAS) Presence of excess chloride tends to increase losses.
AAS		Wet ashing; N_2O-C_2H_2 flame, 2428 A, Slit-20 A.	42,82, 280 (239)	(0.02-AAS, $1x10^{-6}$-FAAS) Fe and Ca molecular interferences are reported.

TABLE 17 (continued).

ANALYSIS AREA	LEVEL 1			
	RECOMMENDED ANALYTICAL METHOD	SELECTION RATIONALE	SPECIAL SAMPLING AND ANALYTICAL REQUIREMENTS	REFERENCES
Hafnium	SSMS			3 147 (325)
Holmium	SSMS			3,147, (325)
Hydrogen	Combustion	Hydrogen is not commonly analyzed by SSMS. ASTM method.	See Level 2	8.4
Indium	SSMS			3,147, (325)
Iodine	SSMS			3,147, (325)
Iridium	SSMS			3,147, (325)
Iron	SSMS			3,147, (325)
Lanthanum	SSMS			3,147, (325)
Lead	SSMS			3,147, (325)

TABLE 17 (continued).

LEVEL 2				REMARKS (LEVELS 1 & 2)
RECOMMENDED ANALYTICAL METHOD	SELECTION RATIONALE	SPECIAL SAMPLING AND ANALYTICAL REQUIREMENTS	REFERENCES	
AAS		$Li_2B_4O_7$ fusion; HCl HNO_3 dissolution; N_2O-C_2H_2 flame 3073 A, Slit-2 A.	42 82 208 (239)	(15-AAS) Wet ashing is acceptable.
AAS		Wet ashing; air-C_2H_2 flame, 4104 A, Slit-2 A.	42,82 208 (239)	(0.3-AAS)
Combustion	This method is an accurate, rapid, and reproducible technique. ASTM method.	Absorbent is anhydrous $Mg(ClO_4)_2$ of 8-45 mesh size.		Sample should be dried at 104-110°C or moisture will be included in hydrogen value. This method will include water of hydration of inorganic compounds in the value of hydrogen reported.
AAS		$Li_2B_4O_7$ fusion; HCl HNO_3 dissolution; air-C_2H_2 flame, 3039 A, Slit- 7A.	42,82, 208 (239)	(0.03-AAS, $4x10^{-7}$-FAAS) Dry ashing is acceptable.
Combustion Spectrometric	This method is an accurate reproducible and fairly rapid technique which is in common use in organic analysis.	Combustion with O_2 bomb. Spectrometric method; measure at 45 nm.	8.19	See Table 19: Iodide
AAS		Wet ashing; N_2O-C_2H_2 flame, 2640 A, Slit-2 A.	42,82 208 (239)	(1-AAS)
AAS		Wet ashing; air-C_2H_2 flame; 2483 A, Slit-2 A.	42,82, 208 (239)	(0.004-AAS, $1x10^{-5}$-FAAS) Ca (molecular) and Si (chemical) interferences are reported. (2511 A-NRL).
AAS		Wet ashing; N_2O-C_2H_2 flame, 5501 A, Slit-4 A.	42,82 208 (239)	(2-AAS)
AAS		Wet ashing; air-C_2H_2 flame, 2833 A, Slit-20 A.	42,82, 208 (239)	(0.01-AAS, $2x10^{-6}$-FAAS) Al, Th, Zr (chemical) and Ca, Mg, K, Na (molecular) interferences are reported (2203-NRL).

TABLE 17 (continued).

ANALYSIS AREA	LEVEL 1			
	RECOMMENDED ANALYTICAL METHOD	SELECTION RATIONALE	SPECIAL SAMPLING AND ANALYTICAL REQUIREMENTS	REFERENCES
Lithium	SSMS			3,147, (325)
Lutetium	SSMS			3,147, (325)
Magnesium	SSMS			3,147, (325)
Manganese	SSMS			3,147, (325)
Mercury	FAAS (Cold Vapor technique)	SSMS does not provide reliable data within the accuracy limits Level 1.	Organic samples and XAD-2 sorbent (2g) are wet ashed by O_2 combustion in a Parr bomb over HNO_3. Particulates, ash, and inorganics are digested with aqua regia, the residue fused with Na_2CO_3 and then digested with HCl. Liquids are analyzed as received.	175 307
Molyboenum	SSMS			3,147, (325)
Neodymium	SSMS			3,147, (325)
Nickel	SSMS			3,147, (325)

TABLE 17 (continued).

LEVEL 2				REMARKS (LEVELS 1 & 2)
RECOMMENDED ANALYTICAL METHOD	SELECTION RATIONALE	SPECIAL SAMPLING AND ANALYTICAL REQUIREMENTS	REFER-ENCES	
AAS		Wet ashing; air-C_2H_2 flame, 6708 A, Slit-40 A.	42,82, 280 (239)	(0.001-AAS, $3x10^{-6}$-FAAS) Sr chemical interference is reported.
AAS		Wet ashing; N_2O-C_2H_2 flame, 3312 A, Slit-7 A.	42,82, 280 (239)	(3-AAS)
AAS		Wet ashing; air-C_2H_2 flame, 2852 A, Slit-20 A.	42,82, 280 (239)	(0.003-AAS, $4x10^{-8}$-FAAS) Dry ashing acceptable Al, Si, P, SO_4^{-2} chemical interferences are reported; La, Sc, or Ni buffer reduces interference.
AAS		Wet ashing; air-C_2H_2 flame, 2795 A, Slit-7 A.	42,82, 280 (239)	(0.0008-AAS, $2x10^{-7}$-FAAS) Cr (molecular) and Si (chemical) interferences are reported. Chemical interference reduced with Ca buffer.
FAAS		As in Level 1. 2795 A Argon carrier.	175 307	(0.5-AAS, $2x10^{-5}$-FAAS)
AAS		$Li_2B_4O_7$ fusion; HCl-HNO_3 dissolution; N_2O-C_2H_2 flame, 3133 A Slit-2 A.	42,82, 280 (239)	(0.03-AAS, $3x10^{-6}$-FAAS) Wet ashing is acceptable. Fe, Sr, Mn, Ca, and $Al(NO_3)_3$ chemical interferences are reported. Fe and Mn interferences may be eliminated with NH_4Cl buffer.
AAS		Wet ashing; N_2O-C_2H_2 flame, 4634 A, Slit-2 A.	42,82, 280 (239)	(1-AAS) Pr spectral interference reported at 4925 A.
AAS		Wet ashing; air-C_2H_2 flame, 2320 A, Slit-2 A.	42,82, 280 (239)	(0.005-AAS, $9x10^{-6}$-FAAS) Dry ashing is acceptable. Ca molecular interference is reported (2328 A NRL).

TABLE 17 (continued).

ANALYSIS AREA	LEVEL 1			
	RECOMMENDED ANALYTICAL METHOD	SELECTION RATIONALE	SPECIAL SAMPLING AND ANALYTICAL REQUIREMENTS	REFERENCES
Niobium	SSMS			3,147, (325)
Nitrogen	Combustion Titrimetric /Spectro-metric	Nitrogen is not commonly analyzed by SSMS; combustion is a rapid, low cost technique in wide use.	See Level 2	
Osmium	SSMS			3,147, (325)
Oxygen	Combustion	Oxygen is not commonly analyzed by SSMS; combustion is a rapid, low cost technique in wide use.	See Level 2	186
Palladium	SSMS			3,147, (325)
Phosphorus	SSMS			3,147, (325)
Platinum	SSMS			3,147, (325)
Potassium	SSMS			3,147, (325)

TABLE 17 (continued).

LEVEL 2				REMARKS (LEVELS 1 & 2)
RECOMMENDED ANALYTICAL METHOD	SELECTION RATIONALE	SPECIAL SAMPLING AND ANALYTICAL REQUIREMENTS	REFERENCES	
AAS		Wet ashing; N_2O-C_2H_2 flame, 3344 A, Slit-2 A.	42 82 280 (325)	(5-AAS)
Kjeldahl digestion followed by Spectrometric or Titrimetric procedure	This method is an accurate and reproducible technique which is in common use. ASTM method.	Digestion with Hg (catalyst) and H_2SO_4. CrO_3 is useful also in digestion procedure. NH_3 is generated by zinc addition and is distilled into H_2SO_4. The H_2SO_4 is back titrated.	84	Other digestion catalysts are suggested in the reference. See reference for spectrometric method.
AAS		Dry ashing; air-C_2H_2 flame, 2909 A, Slit-2 A.	42 82 280 (325)	(1-AAS)
Combustion	This method is an accurate and reproducible technique which is used in organic analysis.	Combustion and conversion to CO.	186	
AAS		Wet ashing; air-C_2H_2 flame, 2476 A, Slit-2 A.	42 82 280 (325)	(0.01-AAS, $4x10^{-6}$-FAAS)
Combustion Spectrometric/ Titrimetric	This method is an accurate and reproducible technique which is in common use. ASTM method.	Wet ashing with HF and HNO_3 followed by fusion with Na_2CO_3. PO_4^{-3} is precipitated with molybdate solution; the ppt is dissolved in excess NaOH and back titrated. Colorimetric technique is based on formation of ammonium phosphomolybdate-vanadate and is measured at 400 nm.	8.38	
AAS		$Li_2B_4O_7$ fusion; HCl HNO_3 dissolution, air C H flame, 2659 A, Slit-2 A.	42 82 280 (325)	(0.05-AAS, $1x10^{-5}$-FAAS) wet ashing is acceptable. Pd, Rh, Au, Ir, Ru, Os, and Na chemical interferences are reported. Interferences may be reduced with Cu buffer.
AAS		Wet ashing; air-C_2H_2 flame, 7655 A, Slit-13 A.	42 82 280 (325)	(0.003-AAS, $4x10^{-5}$-FAAS) Dry ashing is acceptable. Na ionization interference is reported.

TABLE 17 (continued).

ANALYSIS AREA	LEVEL 1			
	RECOMMENDED ANALYTICAL METHOD	SELECTION RATIONALE	SPECIAL SAMPLING AND ANALYTICAL REQUIREMENTS	REFERENCES
Praseodynium	SSMS			3,147, (325)
Rhenium	SSMS			3,147, (325)
Rhodium	SSMS			3,147, (325)
Rubidium	SSMS			3,147, (325)
Ruthenium	SSMS			3,147, (325)
Samarium	SSMS			3,147, (325)
Scandium	SSMS			3,147, (325)
Selenium	SSMS			3,147, (325)
Silicon	SSMS			3,147, (325)
Silver	SSMS			3,147, (325)

TABLE 17 (continued).

LEVEL 2				REMARKS (LEVELS 1 & 2)
RECOMMENDED ANALYTICAL METHOD	SELECTION RATIONALE	SPECIAL SAMPLING AND ANALYTICAL REQUIREMENTS	REFERENCES	
AAS		Wet ashing; N_2O-C_2H_2 flame, 4951 A, Slit-2 A.	42 82 280 (239)	(10-AAS).
AAS		Wet ashing; N_2O-C_2H_2 flame, 3460 A, Slit-2 A.	42 82 280 (239)	(1-AAS).
AAS		Wet ashing; air-C_2H_2 flame, 3435 A, Slit-2 A.	42 82 280 (239)	(0.02-AAS, $8x10^{-6}$-FAAS). Na, Pt, Pd, Au, Ir, Ru, and Os interferences are reported.
AAS		Wet ashing; air-C_2H_2 flame, 7800 A, Slit-40 A.	42 82 280 (239)	(0.005-AAS, $1x10^{-6}$-FAAS). Dry ashing is acceptable. Na and K ionization interferences are reported.
AAS		Dry ashing; air-C_2H_2 flame, 3499 A, Slit-7 A.	42 82 280 (239)	(0.3-AAS).
AAS		Dry ashing; N_2O-C_2H_2 flame, 4297 A, Slit-2 A.	42 82 280 (239)	(5-AAS).
AAS		Dry ashing; N_2O-C_2H_2 flame, 3912 A, Slit-7 A.	42 82 280 (239)	(0.2-AAS)
AAS Hydride Evolution Technique	Relatively matrix-independent as compared to conventional AAS.	Parr oxygen bomb combustion at 4 atm. by HCl/HNO_3. Hydride is generated by $TiCl_3$ - Mg method. Ar-H_2 entrained air-flame, 1960 A, Slit-20 A.	26 (124)	(0.1-AAS, 0.002-HE, $9x10^{-6}$-FAAS). Cu chemical interference is reported.
AAS		Wet ashing; N_2O-C_2H_2 flame, 2516 A, Slit-2 A.	42 82 280 (239)	(0.1-AAS, $5x10^{-8}$-FAAS).
AAS		Wet ashing; air-C_2H_2 flame, 3281 A, Slit-7 A.	42 82 280 (239)	(0.001-AAS, $1x10^{-7}$-FAAS). Dry ashing is acceptable. Th chemical interference is reported.

TABLE 17 (continued).

ANALYSIS AREA	LEVEL 1			
	RECOMMENDED ANALYTICAL METHOD	SELECTION RATIONALE	SPECIAL SAMPLING AND ANALYTICAL REQUIREMENTS	REFERENCES
Sodium	SSMS		Sodium is not measured in particulate, ash, and inorganic solid samples because of fusion procedure.	3,147, (325)
Strontium	SSMS			3,147, (325)
Sulfur	SSMS			3 147 (325)
Tantalum	SSMS			3 147 (325)
Tellurium	SSMS			3 147 (325)
Terbium	SSMS			3,147, (325)
Thallium	SSMS			3,147, (325)
Thulium	SSMS			3,147, (325)
Tin	SSMS			3 147 (325)

TABLE 17 (continued).

LEVEL 2				REMARKS (LEVELS 1 & 2)
RECOMMENDED ANALYTICAL METHOD	SELECTION RATIONALE	SPECIAL SAMPLING AND ANALYTICAL REQUIREMENTS	REFERENCES	
AAS		Wet ashing; air-C_2H_2 flame, 5890 A, Slit-4 A.	42 82 280 (239)	(0.0008-AAS, $1x10^{-7}$-FAAS). Dry ashing is acceptable.
AAS		Wet ashing; air-C_2H_2 flame, 4607 A, Slit-13 A.	42 82 280 (239)	(0.005-AAS, $1x10^{-6}$-FAAS). Dry ashing is acceptable. Al and P (chemical) and Na and K (ionization) interferences are reported. Chemical interferences may be reduced with a La buffer. Ionization interferences level off above 100 ppm Na or K.
Combustion Gravimetric	Sulfur is determined indirectly by AAS. This method is an accurate and reproducible technique which is in common use.	Sample is combusted under 20-30 atm. O_2; Sulfur is determined as $BaSO_4$ gravimetrically.		Eshka Fusion method is also acceptable. Bomb washing may come directly from calorific value determination.
		Wet ashing; N_2O-C_2H_2 flame, 2715 A, Slit-2 A.		(3-AAS). Dry ashing is acceptable.
AAS Hydride Evolution Technique	Relatively matrix-independent as compared to conventional AAS.	Wet ashing; Hydride is generated by $NaBH_4$ method. Air-C_2H_2 flame, 1960 A, Slit-20 A.	26 (124)	(0.05-AAS, 0.004-HE, 0.003-FAAS) Cu chemical interference is reported.
		Wet ashing; air-C_2H_2 flame, 4326 A, Slit-2 A.		(0.05-AAS, $1x10^{-6}$-FAAS).
		Wet ashing; air-C_2H_2 flame, 2768 A, Slit-20 A.		(0.02-AAS, $1x10^{-6}$-FAAS).
		Wet ashing; air-C_2H_2 flame, 4106 A.		(1-AAS).
AAS Hydride Evolution Technique	Relatively matrix-independent as compared to conventional AAS.	Wet ashing; Hydride is generated by $TiCl_3$-- Mg method; air-C_2H_2 flame, 2246 A, Slit-7 A.	26 (124)	(0.05-AAS, 0.004-HE, 0.0003-FAAS). Dry ashing is acceptable. Na and PO_4^{-3} chemical interferences are reported.

TABLE 17 (continued).

ANALYSIS AREA	LEVEL 1			
	RECOMMENDED ANALYTICAL METHOD	SELECTION RATIONALE	SPECIAL SAMPLING AND ANALYTICAL REQUIREMENTS	REFER-ENCES
Titanium	SSMS			3,147, (325)
Tungsten	SSMS			3,147, (325)
Uranium	SSMS			3,147, (325)
Vanadium	SSMS			3,147, (325)
Ytterbium	SSMS			3,147, (325)
Yttrium	SSMS			3,147, (325)
Zinc	SSMS			3,147, (325)
Zirconium	SSMS			3,147, (325)

TABLE 17 (concluded).

LEVEL 2				REMARKS (LEVELS 1 & 2)
RECOMMENDED ANALYTICAL METHOD	SELECTION RATIONALE	SPECIAL SAMPLING AND ANALYTICAL REQUIREMENTS	REFERENCES	
AAS		Wet ashing; N_2O-C_2H_2 flame, 3643 A, Slit-2 A.	42,82, 280 (239)	(0.1-AAS, $4x10^{-5}$-FAAS)
AAS		Wet ashing; N_2O-C_2H_2 flame, 4009 A, Slit-2 A.	42,82, 280 (239)	(3-AAS). $Li_2B_4O_7$ fusion is acceptable.
AAS		Wet ashing; N_2O-C_2H_2 flame, 3514 A, Slit-21 A.	42,82, 280 (239)	(30-AAS).
AAS		Wet ashing; N_2O-C_2H_2 flame, 3184 A, Slit-2 A.	42,82, 280 (239)	(0.02-AAS, $3x10^{-6}$-FAAS).
AAS		Wet ashing; N_2O-C_2H_2 flame, 3988 A, Slit-2 A.	42,82, 280 (239)	(0.04-AAS).
AAS		Wet ashing; N_2O-C_2H_2 flame, 4077 A, Slit-2 A.	42,82, 280 (239)	(0.3-AAS).
AAS		Wet ashing; Air-C_2H_2 flame, 2138 A, Slit-20 A.	42,82, 280 (239)	(0.001-AAS, $3x10^{-8}$-FAAS). Fe, Al, Na, K, Mg, Ca molecular interferences are reported. No suitable NRL for compensation has been found.
AAS		Dry ashing; $Li_2B_4O_7$ fusion; HCL HNO_3 dissolution, N_2O-C_2H_2 flame, 3601 A, Slit-2 A.	42,82, 280 (239)	(5-AAS).

Anion Analysis

Recommended procedures for anion analysis are presented in Table 18. The list within this table does not pretend to cover all possible anions but, rather, is intended to present a survey of analytical methods for the more common anions.

At Level 1, anion analysis is accomplished by SSMS with the exception of those species which are analyzed within the Standard Water Analysis procedures (Table 19). The former procedure presupposes that each element capable of anion formation is present, in toto, in a single anionic form; thus this can yield only upper limits on anion concentrations.

Analysis at Level 2, in addition to anions, includes inorganic compound identification. As such, these analyses provide information needed for Level 2 characterization. A proposed scheme for inorganic compound characterization is presented in Figure 31 and includes analysis by X-ray diffraction, electron microscopy, differential scanning colorimetry, ESCA, etc.

Because methodology for inorganic component identification is still somewhat ill-defined, specific methodology is not presented within this document.

At Level 2, analytical methods for specific anions are chosen from either Standard Methods, ASTM, or EPA approved procedures.

TABLE 18. SUMMARY OF RECOMMENDED PROCEDURES FOR ANION ANALYSIS

ANALYSIS AREA	LEVEL 1			
	RECOMMENDED ANALYTICAL METHOD	SELECTION RATIONALE	SPECIAL SAMPLING AND ANALYTICAL REQUIREMENTS	REFER-ENCES
Ammonia	Color-imetric	Rapid and simple method.	As specified by reagent test kit.	
Arsenate/ Arsenite	SSMS	Elemental analysis provides upper con-centration limit for anions. SSMS has multicomponent capability.	Aqueous samples: slurry with graphite and briquette. Solid samples: see elemental analysis.	
Bromide	SSMS	As for arsenate	As for arsenate	
Carbonate (Bicarbonate)	Titri-metric	Method provides a rapid, and simple analysis technique.	As specified by reagent test kit.	

TABLE 18 (continued).

LEVEL 2				REMARKS (LEVELS 1 & 2)
RECOMMENDED ANALYTICAL METHOD	SELECTION RATIONALE	SPECIAL SAMPLING AND ANALYTICAL REQUIREMENTS	REFERENCES	
Colorimetric (0.05-1 ppm) Titrimetric 1.0-25 ppm)	Method provides an accurate technique for analysis of ammonia in water. EPA method.	Sample is buffered at pH 9.5 and distilled into a solution of boric acid. The ammonia in the distillate can be determined colorimetrically by nesslerization (HgI_2, KI, NaOH) or titrimetrically with H_2SO_4 using a mixed indicator (methyl red/methylene blue).	8.43	Volatile organic alkaline compounds may cause an off color in the nesslerization procedure.
Spectrometric	Method provides an accurate, fairly rapid technique for measuring arsenic. ASTM method.	25 ml of sample is acidified with HCl, mixed with KI and $SnCl_2$. 3 g of zinc are added and the arsine generated is bubbled thru a silver diethyldithiocarbamate-pyridine solution. Absorbance is measured at 540 nm within 30 minutes.	8.40	Measurement of arsenic by AAS is also an acceptable technique and may be subject to fewer interferences.
Titrimetric	Method provides an accurate, fairly rapid technique for measuring bromide. ASTM method.	Sufficient NaCl is added to 100ml of the sample to produce a 3g chloride content. KClO is added to oxidize bromide to bromine (excess is destroyed with $NaCHO_2$). KI is added and liberated I_2 is titrated with 0.01N $Na_2S_2O_3$.	8.19	This method measures bromide and iodide: thus, this method is to be used in conjunction with iodide determination. Fe^{+2}, Mn^{+2} interfere, but may be removed by treatment with CaO.
Titrimetric	Method provides an accurate technique for measuring total carbonate present. ASTM method.	Apparatus is described in reference. CO_2 is liberated by acidifying and heating the sample in a closed system. CO_2 is absorbed in a barium hydroxide solution. Excess barium hydroxide is titrated with 0.04 N HCl.	8.10	Sulfides, (H_2S) interfered but are removed by scrubbing with an iodine solution; other interferences are removed by scrubbing with chromic acid. From pH measurement H_2CO_3, HCO_3^-, CO_3^{-2} concentrations may be estimated.

TABLE 18 (continued).

ANALYSIS AREA	LEVEL 1			
	RECOMMENDED ANALYTICAL METHOD	SELECTION RATIONALE	SPECIAL SAMPLING AND ANALYTICAL REQUIREMENTS	REFER-ENCES
Chloride	SSMS	As for arsenate.	As for arsenate.	
Cyanide	Color-imetric	Method provides a rapid, simple analysis technique.	As specified by reagent test kit.	
Fluoride	SSMS	As for arsenate	As for arsenate.	
Iodide	SSMS	As for arsenate.	As for arsenate.	

TABLE 18 (continued).

LEVEL 2				REMARKS (LEVELS 1 & 2)
RECOMMENDED ANALYTICAL METHOD	SELECTION RATIONALE	SPECIAL SAMPLING AND ANALYTICAL REQUIREMENTS	REFERENCES	
Titrimetric	Method provides an accurate technique for measuring chloride content of industrial waste water. ASTM method.	50 ml sample is titrated with 0.025 N silver nitrate to a potassium chromate endpoint. Sulfites are oxidized to sulfates by H_2O_2 addition.	8.9	Phosphates (>250ppm) interfere. Iodine and bromide may also interfere with visual endpoint; potentiometric titration may solve this problem.
Titrimetric/ Spectrometric	Method provides an accurate technique for measuring cyanide. ASTM method.	500 ml of sample is refluxed under acidic conditions with $CuCl_2$. HCN liberated is absorbed in NaOH. Titration: titration with $AgNO_3$ to rhodanine endpoint. Spectrometric: neutralize absorption solution with acetic acid to pH 6.5 - 8.0 0.2 ml of chloramine T solution is added. Absorbance measured at 620 nm after 20 minutes.	8.32	Titration method applies when cyanide concentration >1ppm; spectrometric method for <1ppm.
Specific Ion Electrode (SIE)	Method provides an accurate, rapid, simple technique for analysis or fluoride.	pH is adjusted to 5.2 - 5.5 with 0.5 N H_2SO_4. CO_2 is removed by heating on a hot water bath. Buffer is added (pH 6.3, 1M sodium citrate - citric acid - 0.2 M KNO_3) and fluoride is measured by known addition method.	303 260	SIE is more accurate and simpler than distillation - spectrometric method (SPADNS).
Spectrometric	Method provides an accurate technique for analysis of iodide. ASTM method.	Iodide is determined by oxidation to iodate by oxidation with saturated bromine water in acid solution. Excess bromine is destroyed by addition of solium formate. Sample is titrated with 0.01 N sodium thiosulfate solution.	8.19	Effects of Fe^{+3}, Mn^{+2}, and organic matter are removed by treatment with CaO. This method is used in conjunction with bromide determination.

TABLE 18 (continued).

ANALYSIS AREA	LEVEL 1			
	RECOMMENDED ANALYTICAL METHOD	SELECTION RATIONALE	SPECIAL SAMPLING AND ANALYTICAL REQUIREMENTS	REFER-ENCES
Nitrate	Color-imetric	Method provides a rapid and simple analysis technique.	As specified by reagent test kit.	
Nitrite	Color-metric	Method provides a rapid, simple analysis technique.	As specified by reagent test kit.	
Ortho-Phosphate	Color-imetric	Method provides a rapid, simple analysis technique.	As specified by reagent test kit.	
Sulfide	SSMS	As for arsenate.	As for arsenate.	

TABLE 18 (continued).

LEVEL 2				REMARKS (LEVELS 1 & 2)
RECOMMENDED ANALYTICAL METHOD	SELECTION RATIONALE	SPECIAL SAMPLING AND ANALYTICAL REQUIREMENTS	REFERENCES	
Spectrometric.	Method provides an accurate technique for analysis of nitrate. ASTM method.	5 ml of sample is mixed with brucine-sulfanilic acid solution then mixed with 10 ml of 15.6 M H_2SO_4. Color is developed for 10 ± 1 minutes in a dark area; absorbance is measured at 410 nm.	8.14	Color does not follow Beer-Lambert relation; however, plotting absorbance vs. concentration yields a smooth curve. Turbid or colored samples interfere, but may be removed by filtration and treatment with Al_2O_3 and activated carbon.
Spectrometric	Method provides an accurate technique for analysis of nitrite. ASTM method.	pH is adjusted to 7 with CH_3COOH. If sample has appreciable color, filter with $Al(OH)_3$ gel. EDTA is added to complex cations. 2 ml of sulfanilic acid solution and 2 ml of α naphthylamine hydrochloride are added to the sample, solution is buffered at ph 2.0 - 2.5 with $Na_2C_2H_3O_2$ solution, allowed to stand 30 minutes, and absorbance measured at 515 nm.	8.22	Mercury (II) causes high results while copper (II) catalyzes the decomposition of the diazonium salt and thus leads to low results. Certain bacteria utilize nitrites in their metabolism. Storage at low temperature minimizes this effect.
Spectrometric	Method provides an accurate technique for analysis of phosphate.	If pH > 7, sample is neutralized with H_2SO_4. Molybdate reagent and stannous chloride reagent are added. Absorption is measured at 690 nm between 10-12 minutes after reagent addition.	8.12	Color intensity is time and temperature dependent. Solution may be extracted with benzene-isobutanol solvent to remove interferences and increase sensivity.
Titrimetric	Method provides a rapid and accurate technique for measurement of sulfide.	Sample is acidified and stripped with an inert gas and collected in a zinc acetate solution. Iodine solution is added to collection vessels, acidified with HCl and back titrated with 0.025 N sodium thiosulfate solution.	8.37	

TABLE 18 (continued).

ANALYSIS AREA	LEVEL 1			
	RECOMMENDED ANALYTICAL METHOD	SELECTION RATIONALE	SPECIAL SAMPLING AND ANALYTICAL REQUIREMENTS	REFER-ENCES
Sulfite	Color-imetric	Method provides a rapid, simple analysis technique.	As specified by reagent test kit.	
Sulfate	Turbid-imetric/ Color-imetric	Method provides a rapid, simple analysis technique.	As specified by regeant test kit.	

TABLE 18 (concluded).

LEVEL 2				REMARKS (LEVELS 1 & 2)
RECOMMENDED ANALYTICAL METHOD	SELECTION RATIONALE	SPECIAL SAMPLING AND ANALYTICAL REQUIREMENTS	REFER-ENCES	
Titri-metric	Method provides a rapid and accurate technique for measurement of sulfite. ASTM method.	Air is excluded while sample is being taken by use of apparatus described in reference. HCl, KI and KIO_3 are added. Excess iodine chloride formed is titrated with 0.01 N $Na_2S_2O_3$ using a dead stop end-point -indicating apparatus.	8.23	Starch indicator may be used.
Gravi-metric	Method provides an accurate technique for measurement of sulfate. ASTM method.	Sample is filtered, pH adjusted to 4.5 with HCl, hot $BaCl_2$ added, allowed to stand for 2 hours, filtered and ignited at 800°C.	8.13	A titrimetric method may also be used using $BaCl_2$, titrating in an alcoholic solution to a thorin end-point.

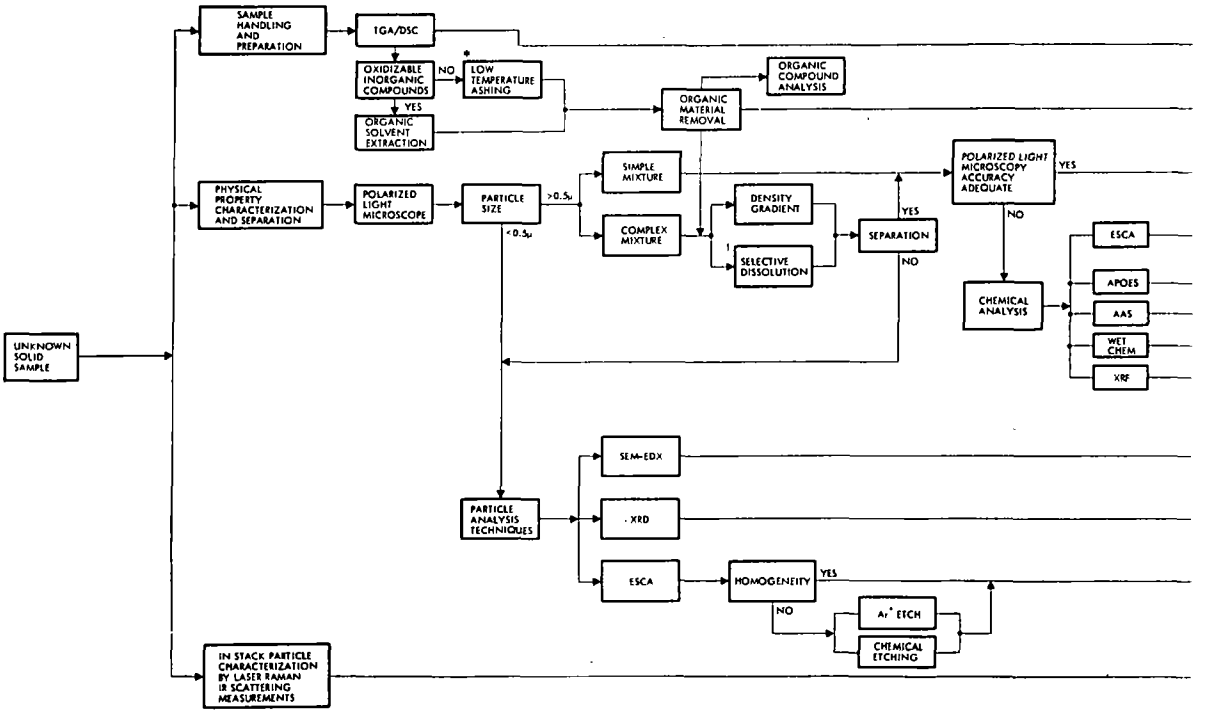

Figure 31. Inorganic compound characterization scheme-Level 2

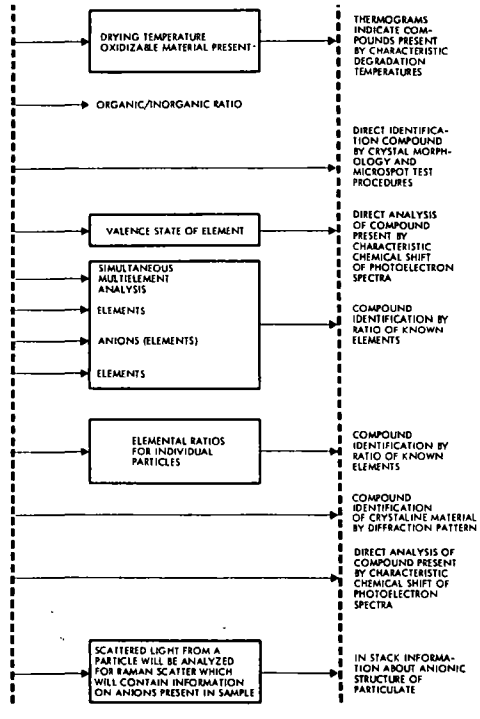

Figure 31 (Concluded)

Standard Water Analysis

In addition to organic analysis (Table 16) and elemental analysis (Table 17) all aqueous samples are analyzed for the following parameters or species by the procedures given in Table 19:

- Acidity/Alkalinity
- Ammonia
- BOD
- Carbonate
- COD
- Conductivity
- Cyanides
- DO
- Nitrate/Nitrite
- pH
- Phosphate
- Sulfate
- Sulfite
- Total dissolved and suspended solids

For Level 1 analysis, determinations can be performed in the field or laboratory using reagent test kits, although practical considerations will usually dictate that all analyses except BOD, COD, and suspended solids be done in the field. These kits, manufactured by Hach or Bausch and Lomb, use procedures that usually follow a modified and simplified version of standard methods. The reagents are encapsulated and stored in small plastic pillows in pre-measured quantities. Upon addition of the reagent or reagents to the sample, component concentrations are determined colorimetrically or turbidimetrically using reference color discs or portable photometers. In some cases endpoint titrations are used. Although they are not as accurate as the standard laboratory procedures, they have sufficient accuracy to satisfy Level 1 objectives.

At Level 2, all analysis are performed in a laboratory using either Standard Methods, ASTM or EPA procedures to provide increased reliability and accuracy consistent with Level 2 goals.

TABLE 19. SUMMARY OF RECOMMENDED PROCEDURES FOR STANDARD WATER ANALYSIS

ANALYSIS AREA	LEVEL 1			
	RECOMMENDED ANALYTICAL METHOD	SELECTION RATIONALE	SPECIAL SAMPLING AND ANALYTICAL REQUIREMENTS	REFER-ENCES
Acidity	Titration/ Visual Endpoint	Rapid and simple method.	Analysis within 24 hours. As specified by reagent test kit.	
Alkalinity	Titri-metric Visual Endpoint	Rapid, simple method.	As specified by reagent test kit.	
Ammonia	Color-imetric	Rapid and simple method.	As specified by reagent test kit.	
Biological Oxygen Demand (BOD)	Titri-metric	EPA method.	Incubation of sample for 5 days in darkness at 20°C. Reduction of dissolved oxygen content gives BOD.	337
Carbonate	Titri-metric	Rapid and simple method	As specified by reagent test kit.	

TABLE 19 (continued).

LEVEL 2				REMARKS (LEVELS 1 & 2)
RECOMMENDED ANALYTICAL METHOD	SELECTION RATIONALE	SPECIAL SAMPLING AND ANALYTICAL REQUIREMENTS	REFERENCES	
Titration/ Electrometric Endpoint	Accurate method. ASTM method.	100 ml sample is titrated with 0.02N NaOH and endpoint is determined potentiometrically.	8.15	
Titrimetric Visual Endpoint	Rapid, accurate, simple method. ASTM method.	A 100 ml solution is titrated with 0.02N HCl (H_2SO_4) to phenolphthalein endpoint. Strontium chloride is added to precipitate carbonates.	8.15	Organic matter. aluminates, and silicates which are not precipitated by strontium chloride, interfere.
Colorimetric/ (0.05-1 ppm) Titrimetric (1.0-25 ppm)	Method provides an accurate technique for analysis of ammonia in water. EPA method.	Sample is buffered at pH 9.5 and distilled into a solution of boric acid. The ammonia in the distillate can be determined colorimetrically by nesslerization (HgI_2, KI, NaOH) or titrimetrically with H_2SO_4 using a mixed indicator (methyl red/methylene blue).	13.11	Volatile organic alkaline compounds may cause an off color in the nesslerization procedure.
Titration	As in Level 1.	As in Level 1.	337	
Titrimetric	Method provides an accurate technique for measuring total carbonate.	Apparatus is described in reference. CO_2 is liberated (by acidifying and heating the sample in a closed system) and absorbed in a barium hydroxide solution. Excess barium hydroxide is titrated with 0.04 N HCl.	8.12	Sulfides (H_2S) interfere but are removed by scrubbing with an iodine solution; other interferences are removed by scrubbing with chromic acid. H_2CO_3, HCO_3^-, CO_3^{-2} may be estimated from pH measurement.

TABLE 19 (continued).

ANALYSIS AREA	LEVEL 1			
	RECOMMENDED ANALYTICAL METHOD	SELECTION RATIONALE	SPECIAL SAMPLING AND ANALYTICAL REQUIREMENTS	REFERENCES
Chemical Oxygen Demand (COD)	Titration	Rapid and simple method. EPA method.	A 50 ml sample is oxidized with 0.250N $K_2Cr_2O_7$ under acidic conditions. The sample is titrated with 0.250 N ferrous ammonium sulfate with phenanthroline ferrous sulfate indicator.	8.20
Conductivity	Electrometric	Rapid and simple method	Analyze within 24 hours	337
Cyanides	Colorimetric	Rapid and simple method	As specified by reagent test kit.	
Dissolved Oxygen	Electrometric	Rapid and simple method	Sample should be analyzed within 6 hours.	13.12 13.13
Hydrazine (in water)				
Nitrate	Colorimetric	Rapid and simple method	As specified by reagent test kit.	

TABLE 19 (continued).

LEVEL 2				REMARKS (LEVELS 1 & 2)
RECOMMENDED ANALYTICAL METHOD	SELECTION RATIONALE	SPECIAL SAMPLING AND ANALYTICAL REQUIREMENTS	REFER-ENCES	
Titration	As in Level 1.	As in Level 1	8.20	Fe^{+2}, NO_2^-, SO_3^{-2}, S^{-2} and halides are measured by this technique in addition to organic compounds.
Electro-metric	As in Level 1.	As in Level 1.	337	
Colori-metric (0.05-1 ppm) Titri-metric (1 ppm)	Method provides an accurate technique for analysis of cyanides in water. EPA method.	Sample is distilled into 1.25 N NaOH. Colorimetric: reaction with chloramine T. Color development with pyridine. Pyrazolone reagent; measurement 620 nm. Titration: $AgNO_3$ with an appropriate indicator.	8.32	Fatty acids make endpoint determi-nation difficult. Acidify with HOAc to pH 6 and extract with hexane. Sulfides interfere but may be removed with $CdCO_3$ as ppt.
Electro-metric	As in Level 1.	As in Level 1.	13.12 13.13	
Spectro-metric	Rapid and accurate method.	A sample (containing 0.2-5.0 g N_2H_4) is acidified with IN HCl; p-dimethyl-amino benzaldehyde is added and absorbance is measured at 458 nm.	8.24	Sample should be analyzed as quickly as possible as N_2H_4 undergoes auto-oxidation. Method is used for boiler blowdown analysis.
Spectro-metric	Method provides an accurate technique for analysis of nitrate. ASTM method.	5 ml of sample is mixed with brucine-sulfanilic acid solution and mixed with 10 ml of 15.6 M H_2SO_4. Color is developed for 10 ±1 minutes in a dark area; absorbance is measured at 410 nm.	8.14	Absorbance does not follow Beer-Lambert relation; however, plotting absorbance vs. concentration yields a smooth curve. Turbid or colored samples interfere, but may be removed by filtration and treatment with Al_2O_3 and activated carbon.

TABLE 19 (continued).

ANALYSIS AREA	LEVEL 1			
	RECOMMENDED ANALYTICAL METHOD	SELECTION RATIONALE	SPECIAL SAMPLING AND ANALYTICAL REQUIREMENTS	REFER-ENCES
Nitrite	Colori-metric	Rapid and simple method	Analyze as quickly as possible. As specified by reagent test kit.	
Total Dissolved and Suspended Solids	Filtra-tion/ Drying	Rapid and simple method. ASTM method.	Sample is filtered thru a filtering crucible. Extractable material is removed by washing with solvent. Filtered material is dried at 180°C and weighed. Dissolved matter is determined by evapor-ation of filtrate (100°C), drying at 180°C and weighing.	8.16 8.29
pH	Colori-metric	Rapid and simple method.	Analyze immediately.	
Ortho-phosphate (Total)	Colori-metric	Rapid and simple method.	As specified by reagent test kit.	

TABLE 19 (continued).

LEVEL 2				REMARKS (LEVELS 1 & 2)
RECOMMENDED ANALYTICAL METHOD	SELECTION RATIONALE	SPECIAL SAMPLING AND ANALYTICAL REQUIREMENTS	REFERENCES	
Spectrometric	Method provides an accurate technique for analysis of nitrite. ASTM method.	pH is adjusted to 7 with CH_3COOH. If sample has appreciable color, filter with $Al(OH)_3$ gel. EDTA is added to complex cations. 2 ml of sulfanilic acid solution and 2 ml of α naphylamine hydrochloride are added to the sample, solution is buffered at pH 2.0-2.5 with $Na_2C_2H_3O_2$ solution, allowed to stand 30 minutes, and absorbance measured at 515 nm.	8.22	Mercury (II) causes high results while copper (II) catalyzes the decomposition of the diazonium salt and thus leads to low results. Certain bacteria utilize nitrites in their metabolism. Storage at low temperature minimizes this effect.
Filtration/ Drying	As in Level 1.	As in Level 1.		Extractable material should be analyzed for organics. See Organic Analysis, Table 17.
Electrometric	Rapid and simple method.	pH is measured with glass electrode system.		
Gravimetric	Accurate method for determination of total phosphate. ASTM referee method.	Sample is pretreated with KNO_3, boiled for 1 minute and filtered. Polyphosphates are converted to orthophosphates by boiling sample with HNO_3 for 30 minutes. Phosphate is first precipitated as ammonium molybdophosphate, redissolved in NH_4OH, precipitated as magnesium ammonium phosphate and ignited.	8.12	Principally applied to boiler blowdown analysis.

TABLE 19 (continued).

ANALYSIS AREA	LEVEL 1			
	RECOMMENDED ANALYTICAL METHOD	SELECTION RATIONALE	SPECIAL SAMPLING AND ANALYTICAL REQUIREMENTS	REFER-ENCES
Sulfate	Turbi-metric	Rapid and simple method.	As specified by reagent test kit.	
Sulfite	Colori-metric	Rapid and simple method where sulfite concen-tration is above 3ppm.	Analyze as quickly as possible. As specified by reagent test kit.	

TABLE 19 (concluded).

LEVEL 2				REMARKS (LEVELS 1 & 2)
RECOMMENDED ANALYTICAL METHOD	SELECTION RATIONALE	SPECIAL SAMPLING AND ANALYTICAL REQUIREMENTS	REFER-ENCES	
Gravi-metric	Method provides an accurate technique for measurement of sulfate. ASTM method.	Sample is filtered, pH adjusted to 4.5 with HCl, hot $BaCl_2$ added, allowed to stand for 2 hours, filtered and ignited at 800°C.	8.13	A titrimetric method may also be used using $BaCl_2$, tit-rating in an alcoholic solution, to a thorin end-point.
Titration/ Potentio-metric Endpoint	Accurate method for determination of sulfite. ASTM referee method.	Air is excluded while sample is being taken. To 500 ml of sample, 5 ml HCL, 5 ml KI solution and 5 ml of KIO_3 solution are added. Excess iodine chloride is titrated with 0.01N $Na_2S_2O_3$ using a dead-stop titrator.	8.23	Principally applied to bioler blow-down analysis.

Fuel Analysis

Table 20 summarizes recommended procedures for the analysis of fuels. These procedures are taken directly from ASTM methods.

Proximate and ultimate coal analysis data will normally be obtained as part of process operating practice, and thus, an additional determination is unnecessary at Level 1 or Level 2.

TABLE 20. SUMMARY OF RECOMMENDED PROCEDURES FOR FUEL ANALYSIS

ANALYSIS AREA	LEVEL 1			
	RECOMMENDED ANALYTICAL METHOD	SELECTION RATIONALE	SPECIAL SAMPLING AND ANALYTICAL REQUIREMENTS	REFERENCES
I. Coal:				
Moisture	Gravimetric	Rapid, accurate, simple method. ASTM method.	1g of sample is dried at 104-110°C for 1 hour and weighed.	8.4
Ash	Combustion	Rapid, accurate, simple method. ASTM method.	Dried coal sample heated at 750°C to a constant weight.	8.4
Volatile Matter	Combustion (Controlled)	Rapid, accurate, simple method. ASTM method.	1g of sample is placed in Pt crucible with cover in oven at 950° ±20°C. After rapid initial discharge of volatiles has subsided, crucible is heated for 7 more minutes, cooled and weighed.	8.4
Fixed Carbon	By difference	Rapid, accurate, simple method. ASTM method.	Fixed carbon, % = 100 - (moisture % + ash % + volatile matter %).	8.4
Sulfur	Combustion	Rapid, accurate, simple method. ASTM method.	Sulfur is determined from bomb washings from oxygen bomb calorimeter following calorimetric determination. NH_4OH is added, and solution boiled and filtered. Saturated bromine water is added, solution is acidified with HCl; $BaCl_2$ is added and pt ignited at 925°C to a constant weight.	8.4
Heating Value	Combustion	Rapid, accurate, simple method. ASTM method.	1g of coal is combusted in a bomb under 20-30 atm of oxygen. Bomb washings are titrated with standard base to determine correction factor.	8.4
Carbon	Combustion	Method is accurate, rapid, and simple. ASTM method.	0.2g of coal is combusted in stream of oxygen at 850°-900°C in a combustion train. CO_2 formed is absorbed in soda lime and weighed.	8.4

TABLE 20 (continued).

LEVEL 2				REMARKS (LEVELS 1 & 2)
RECOMMENDED ANALYTICAL METHOD	SELECTION RATIONALE	SPECIAL SAMPLING AND ANALYTICAL REQUIREMENTS	REFER-ENCES	
Gravi-metric	As in Level 1.	As in Level 1.		Moisture, ash, volatile matter, fixed carbon, heating value, and sulfur comprise a proximate analysis.
Combustion	As in Level 1.	As in Level 1.		
Combustion	As in Level 1.	As in Level 1.		Crucible cover should fit tightly.
Combustion	As in Level 1.	As in Level 1.		
Combustion	As in Level 1.	As in Level 1.		Bomb washing method.
Combustion	As in Level 1.	As in Level 1.		Washings are used for sulfur analysis. Corrections are made for nitrogen and sulfur contents.
Combustion	As in Level 1.	As in Level 1.		Carbon, hydrogen, nitrogen and oxygen comprise an ultimate analysis. SO_2 which is formed is absorbed on CuO, $PbCrO_4$ or silver.

TABLE 20 (continued).

ANALYSIS AREA	LEVEL 1			
	RECOMMENDED ANALYTICAL METHOD	SELECTION RATIONALE	SPECIAL SAMPLING AND ANALYTICAL REQUIREMENTS	REFERENCES
Hydrogen	Combustion	Method is accurate, rapid, and simple. ASTM method.	0.2g of coal is combusted in stream of oxygen at 850°-900°C in a combustion train. H_2O formed is adsorbed on $Mg(ClO_4)_2$ and weighed.	8.4
Nitrogen	Kjeldahl-Gunning Method	Accurate method for determination of nitrogen. ASTM method.	Nitrogen in converted to ammonium salts by digestion with hot H_2SO_4 (and a catalytic amount of Hg) for several hours. Zinc is added and a solution of K_2S in NaOH is added. The mixture is distilled into 0.2 $(NH_4)_2SO_4$ and back titrated to a methyl red end point with 0.02 NaOH.	8.4
Oxygen	Difference		Oxygen, % = 100 - (% Hydrogen, % carbon, % nitrogen, % sulfur, % moisture, % ash).	8.4
Trace Elements	SSMS	See Elemental Analysis Table.	See Elemental Analysis, Table 18.	
II. Residual Oil				
H_2O and Bituminous Material	Distillation	This method provides a rapid, and simple technique for determination of H_2O and bituminous material in residual oil. ASTM method.	A sample is weighed to ± 1% and transferred to a Dean-Stark apparatus. Sample is distilled and water is measured in trap.	8.19
Ash	Combustion	This method provides an accurate, rapid, and simple technique for measurement of ash content of residual oil. ASTM method.	100g of sample is combusted in an open crucible or evaporating dish. Carbonaceous residue is ashed at 775°C, cooled, and weighed.	8.8
Heating Value	Combustion	Method provides a rapid and simple method for determination of heating value of residual oil.	Sample is combusted in O_2 bomb with 1 ml of H_2O and under 30 atm. Contents of bomb are titrated to determine a correction factor.	8.5

TABLE 20 (continued).

LEVEL 2				REMARKS (LEVELS 1 & 2)
RECOMMENDED ANALYTICAL METHOD	SELECTION RATIONALE	SPECIAL SAMPLING AND ANALYTICAL REQUIREMENTS	REFER-ENCES	
Combustion	As in Level 1.	As in Level 1.		
Kjeldahl-Gunning Method	As in Level 1.	As in Level 1.		
Difference	As in Level 1.	As in Level 1.		
FAAS/AAS	See Elemental Analysis, Table 18.	See Elemental Analysis, Table 18.		
Distill-ation	As in Level 1.	As in Level 1.		
Combustion	As in Level 1.	As in Level 1.		Ash sample may be analyzed for trace elements.
Combustion	As in Level 1.	As in Level 1.		

TABLE 20 (continued).

ANALYSIS AREA	LEVEL 1			
	RECOMMENDED ANALYTICAL METHOD	SELECTION RATIONALE	SPECIAL SAMPLING AND ANALYTICAL REQUIREMENTS	REFER-ENCES
Sulfur	Bomb Washing Method	Method provides a rapid and accurate method for determination of sulfur content of residual oil	Bomb washings from heating value determination are acidified with HCl; saturated bromine water is added and the solution is boiled. $BaCl_2$ is added, solution is filtered, precipitate ignited at 925°C.	8.5 8.20
Trace Elements	SSMS	See Elemental Analysis Table.	See Elemental Analysis, Table 18.	

TABLE 20 (continued).

LEVEL 2				REMARKS (LEVELS 1 & 2)
RECOMMENDED ANALYTICAL METHOD	SELECTION RATIONALE	SPECIAL SAMPLING AND ANALYTICAL REQUIREMENTS	REFER-ENCES	
Bomb Washing Method	As in Level 1.	As in Level 1.		
FAAS/AAS	See Elemental Analysis, Table 18.	See Elemental Analysis, Table 18.		

Physical Characterization of Solids

Recommended procedures for physical characterization of solids are given in Table 21. Both Level 1 and Level 2 analysis consist of particulate sizing and morphological studies. At Level 1 sizing is accomplished by dry sieving, centrifugal elutriation, or optical microscopy; morphological analysis is performed using a polarizing light microscope. Level 2 procedures rely on wet sieving, the Coulter Counter, and scanning electron microscopy for size analysis. Both polarized light and scanning electron microscopy are used in combination for particulate morphology determination at Level 2.

TABLE 21. SUMMARY OF RECOMMENDED PROCEDURES FOR PHYSICAL CHARACTERIZATION OF SOLIDS

ANALYSIS AREA	LEVEL 1			
	RECOMMENDED ANALYTICAL METHOD	SELECTION RATIONALE	SPECIAL SAMPLING AND ANALYTICAL REQUIREMENTS	REFERENCES
Sizing	Dry sieving, centrifugal elutriation (e.g. Bahco)	Relatively simple and inexpensive.	During and after sampling, care must be taken that agglomeration and attrition are minimized. In reducing a gross sample for analysis, special concern should be given to the representativeness of the sample to be analyzed.	8.3 287 338 50
	Optical microscope	Most applicable device for sizing of fine particles.	Particles must be dispersed on the slide in a random manner without causing shattering of the particles. Agglomerated particles should be deflocculated.	287 338 50
Morphology	Polarizing light microscope	Standard tool for particle identification.	Same as for optical microscope.	147

TABLE 21 (concluded).

LEVEL 2				REMARKS (LEVELS 1 & 2)
RECOMMENDED ANALYTICAL METHOD	SELECTION RATIONALE	SPECIAL SAMPLING AND ANALYTICAL REQUIREMENTS	REFER-ENCES	
Wet sieving and Coulter Counter	The two analysis methods used in series can be performed relatively quickly and will give results accurate to 0.3μ.	Same as for Level 1.	8.3 287 338 50	General: The devices chosen are applicable to solids ranging in size from raw coal to powders. If the material is composed entirely of fine particles, however, the optical microscope should be used. Level 2: An orientation correction factor must be applied to the Coulter Counter when fibrous particles are present. Also, the length to diameter ratio for other particles must be near unity. If a Coulter Counter or other accurate automatic devices are not available, then an optical microscope can be used.
Scanning electron microscope	Has a greater range than an optical microscope and more depth than a normal electron microscope.	Methods of collection usually employed to minimize handling are membrane filters, and thermal and electrical precipitators. Other collection techniques can be used with a subsequent decrease in particle representativeness.	287 338 50	Level 1: Photomicron should be taken in the field. Level 2: This method can also be used for morphology.
Scanning electron microscope.			287 338 50	See discussion of scanning electron microscope above. The scanning electron microscope should be used in conjunction with the polarizing light microscope for particle identification.

CHAPTER 4

PROCEDURES FOR ASSESSMENT OF WATER-BORNE FUGITIVES FROM FBC PROCESSES

INTRODUCTION

The intent of this chapter is to provide a mechanism for the environmental assessment of water-borne fugitives from FBC processes. Specifically, the impact on ground and surface water quality of leachate generated as a result of subsurface disposal and outdoor storage of FBC solid residues (and feeds) is of concern here. Other fugitives from miscellaneous plant sources (e.g. leaks, spills, etc.), that ultimately become water-borne, are site specific and cannot be addressed in a generic context. Because of (projected) proper plant design, maintenance, and operating practices, these sources are expected to have a minimal impact on water quality.

GENERATION AND TRANSPORT OF LEACHATES IN THE ENVIRONMENT

Leachate is liquid which has contacted solid material and has extracted and/or suspended constituents from it. (Whenever water comes into direct contact with solid materials, the potential for leaching exists.) Many species exist in solid materials which may be readily soluble in water. Still others may be solubilized by the action of leachate upon them.

Transport of leachate occurs via two primary mechanisms--runoff (i.e., overland flow), and percolation (e.g. through soils). These mechanisms, as they relate to the burial of solid residues (e.g., landfill) and the outdoor storage of solid feeds and/or residues, are illustrated in Figure 32. Runoff, typically characterized by relatively high flow rates (as governed by site topography) and short contact times (hours or, at most, a few days), is the principal transport mode for suspended solids. Percolation, on the other hand, is characterized by significantly lower flow rates (governed by material permeability) and much longer contact times with solid material. Species transport by this mode occurs primarily in solution. Interflow, as shown in Figure 32, occurs when water first infiltrates and percolates through a solid material and later re-emerges to become surface runoff. This phenomenon is principally associated with storage piles, but under certain geological and hydrological conditions may be associated subsurface disposal.

Precipitation is the principal contributor to leachate generation, whatever the transport mechanism. Other potential contributors include the infiltration of ground and/or surface waters into the site, as well as the initial moisture content of the solid material. For properly sited and designed disposal and storage areas (e.g., with drainage away from the

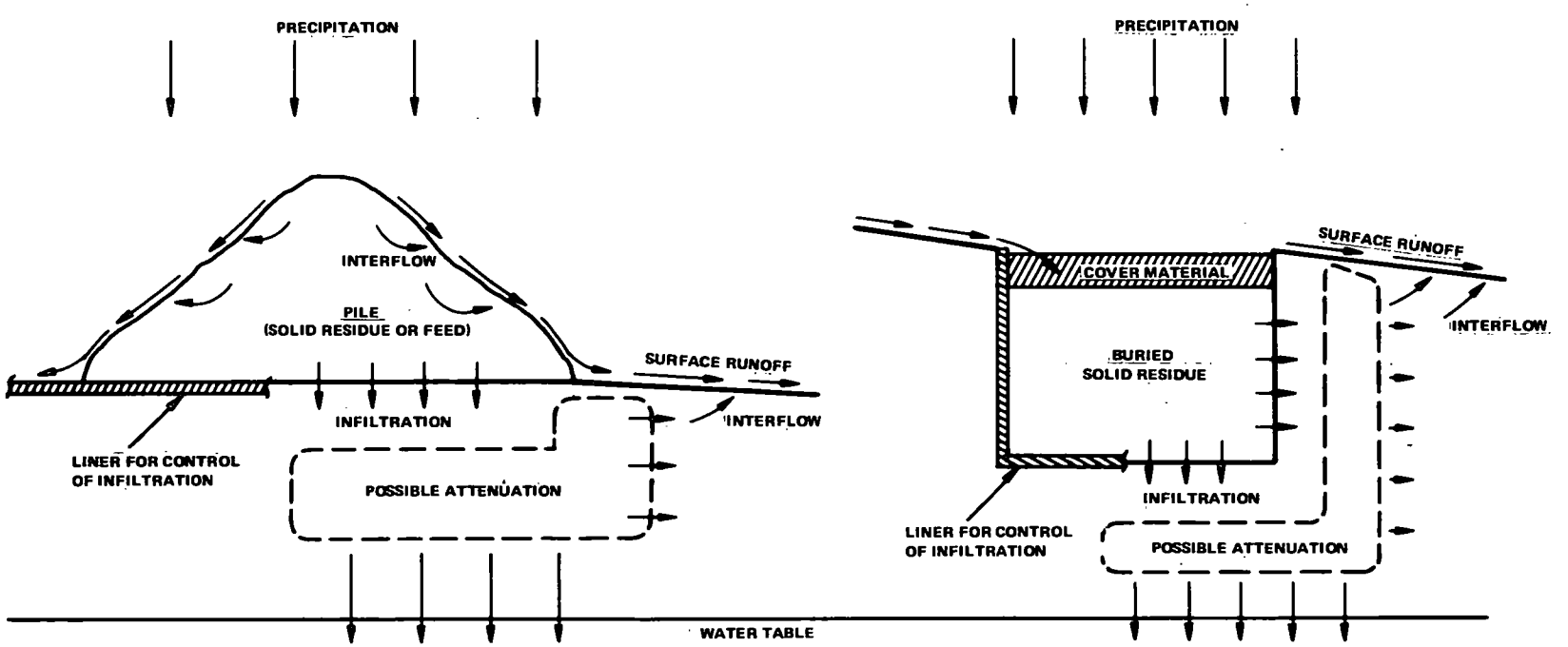

Figure 32. Schematic of infiltration/runoff problem

site), the former factor should be negligible. (In addition, judicious site design should minimize or eliminate percolation of leachate into surrounding soils.) Although the total quantity (and rate) of leachate transported into the surrounding environment will be minimized through proper site selection and design, higher concentrations of pollutants are expected in the leachate. The lower transport rates, however, should allow for greater attenuation and possibly total degradation by natural mechanisms.

Since the generation and transport of leachate is site specific, any procedure to estimate leachate quantity and quality requires knowledge of topographical, geological, hydrological, climatological, and meteorological data (see reference 54). Various methods have been employed to estimate quantity of leachate generated. One such procedure, a calculation technique which has been used with some success in field studies, is the water balance method (see reference 122). (An alternative experimental procedure is the construction of lined field test cells--see Tables 26 and 27).

Briefly, the water balance method is based upon a one-dimensional flow model and conservation of mass relationships between precipitation, evapotranspiration (i.e., the transport of water from the earth back to the atmosphere), surface runoff, and field moisture storage. The influent to the field is assumed to originate totally from precipitation. Of the total incident precipitation, a portion will evaporate back to the atmosphere (or be transpired by vegetative cover, if any), some may be transported away from the site as runoff, a part will infiltrate and recharge the site to field capacity*, or, for a site which has already attained field capacity, will become downward percolation. Once field capacity is attained and downward percolation begins, the amount of leachate produced can be calculated by the following relationship:

Mass flow of leachate produced	=	Mass flow of incident precipitation	
- Mass flow of water runoff from site		-	Mass flow of water "lost" through evapotranspiration.

Knowledge of the total amount of leachate generated, together with experimental data from leachate quality tests, can be used to assess the impact of raw material storage and solid residue disposal on ground and surface water quality.

SOURCES OF WATER-BORNE FUGITIVES FROM GENERIC FBC PROCESSES

In terms of potential leachate sources, coal-fired FBC systems are somewhat similar to conventional coal-fired power plants. Sources associated with FBC power generation include:

*"Field capacity" is defined as the maximum moisture content which a soil (or solid material) can retain in a gravitational field without producing continuous downward percolation.

(1) Coal storage piles;

(2) Sorbent storage piles;

(3) Spent sorbent;

(4) Fly ash;

(5) Deposited drift from cooling towers; and

(6) Deposited blowdown from steam vents.

Only points (2) and (3) are unique to FBC technology; points (5) and (6), while potential contributors to water-borne fugitives, are site specific and will not be considered further. (For a further discussion of these points, see reference 54).

Coal-fired plants usually keep several months supply of coal in outdoor storage. Storage piles and handling facilities are quite large and may cover several acres, particularly where a plant is located near a coal mine. (A 100-day supply of coal for a 635 MW FBC plant is equivalent to 500,000 tons.)

A major impact of coal storage piles is the generation of "acid mine drainage". This condition develops in coal* from the oxidation of metallic sulfides (MS) to sulfuric acid by the following mechanism:

$$MS \quad M^{+2}_{(aq)} + S^{-2}_{(aq)}$$

$$S^{-2} + H_2O \rightleftharpoons HS^- + OH^-$$

$$HS^- + 2\ O_2 \rightarrow SO_4^{-2} + H^+$$

Sulfuric acid leaches heavy metals which then are transported to the environment in a biologically active state. Runoff from coal piles can also contain large quantities of iron and magnesium, both as dissolved species or suspended solids; aluminum, sodium, and manganese are also present, although in somewhat lower concentrations. Runoff problems have been minimized, in some cases, by isolating the coal on special vinyl liners and channeling the runoff to one area where it can be treated before discharge to the environment.

*The susceptibility of coal to this reaction depends upon the physical form in which pyrite crystals occur in the coal. If the pyrite is highly crystallized (with crystals or 5 microns or larger), it is less susceptible to producing an acid leachate than if the pyrite crystals are small (less than 1 micron) and disseminated through the coal (reference 259).

Runoff and percolation associated with sorbent storage piles is similar to that occurring naturally in geological formations of limestone and dolomite. As such, relatively little adverse impact on water quality (aside from increased hardness) may be expected.

Spent sorbent will be a major by-product of electric power generation by FBC technology and, as such, has potential for a large environmental impact. If a sorbent regeneration process is used, spent sorbent disposal problems and fresh sorbent requirements may be reduced substantially. The gross composition and quantity of solid waste produced by a typical FBC power plant may be calculated from the stoichiometry of the SO_2 sorption reaction. As an example, for a once-through system (i.e., without regeneration) using dolomite, with 90 percent removal of SO_2 and a feed rate of two moles of calcium per mole of sulfur, the reaction is:

$$MgCO_3 \quad CaCO_3 + 0.5\ SO_2 + 0.225\ O_2 = 0.45\ CaSO_4 +$$

$$MgO + 0.55\ CaCO_3 + 1.45\ CO_2 + 0.05\ SO_2$$

From the above equation, for every pound of sulfur fed, 11.53 pounds of dolomite are required and 3.38 pounds of calcium sulfate and 5.96 pounds of magnesium oxide plus calcium carbonate are produced. Using the above example, the annual quantity of spent sorbent for a 635 MW FBC plant burning 3 percent sulfur coal at a Ca/S ratio of 2.0 (with no regeneration) is calculated to be 475,000 tons. In addition, the spent sorbent will contain some ash from the coal and, more importantly, contain significant quantities of trace elements, many of which could adversely impact water quality.

Fly ash is another major by-product of the FBC process; a 635 MW FBC plant buring 12 percent ash coal will produce 165,000 tons of fly ash annually. In addition to significant quantities of trace elements, both from the coal and attrited bed material, fly ash may contain absorbed high molecular weight organic compounds.

The potential leaching impacts associated with generic FBC process streams are summarized in Table 22. (It should be noted that FBC solid residues may be disposed of or utilized directly, or may undergo further treatment prior to disposition to render them environmentally acceptable.)

LEACHING MECHANISMS AND TRANSPORT MODELING

All solid materials, both residues and feeds, associated with FBC processes may be characterized as an insoluble matrix interspersed with soluble and semi-soluble compounds and voids filled with either air or a liquid. After an initial wash which removes loose particles from the surface, these materials are regarded as being both chemically and physically stable. Semi-soluble compounds would include inorganic species such as $CaSO_4$, $CaSO_3$, $Ca(OH)_3$, and $MgCO_3$, as well as other species whose solubility products dictate that a solid phase will exist when the sample is water-saturated. Soluble species will

TABLE 22. SUMMARY OF GENERIC FBC STREAMS WITH POTENTIAL LEACHING IMPACT

Stream Number	Stream Designation	Potential Environmental Impact
2	Particulate removal discard	Trace element release; organic compounds
3	Bed solids discard	Trace element release
4	Particulate removal discard--regeneration operations	Trace element release; organic compounds
5	Other effluents from regeneration and sulfur recovery operations	Trace element release
9	Raw coal	Trace element release ("acid mine drainage")
10	Raw sorbent	Trace element release
28	Particulate removal discard (CAFB unit only)	Trace element release

include Na_2CO_3, $MgSO_4$, NaCl, $CaCl_2$, etc.; the solubility limits of these species and their concentrations in the sample allow for complete solubilization in the liquid-filled interstitial volume under saturation conditions.

Clearly the semi-soluble species will behave differently than the highly soluble components under different experimental conditions. Due to common ion effects, the highly soluble species will control the initial solubilization process. Furthermore, the problem cannot be discussed solely from a total dissolved solids standpoint; individual species must be considered separately.

The principal concern of leachate assessment is not simply which pollutants are released to the environment but, rather, the rate at which these pollutants are released. Because the kinetic rate expression for leaching is extremely difficult to write from purely theoretical considerations, this data is best obtained experimentally (see Tables 23-26 for experimental design). Once a leaching rate is known, various modeling techniques may be used to describe the transport of this leachate into the surrounding media.

Modeling techniques generally consist of solving a mass transport equation using different initial conditions (see reference 202). For mass transport where diffusion is rate limiting, the general form (for one-dimensional flow) is:

$$\frac{\partial c}{\partial t} = D_e \frac{\partial^2 c}{\partial x^2} + K \ (c_s - c) \qquad (1)$$

Where: c = Concentration of species leached

t = Time

D_e = Effective diffusivity

K = Dissolution rate constant

c_s = Concentration of species at saturation

x = Space coordinate

This equation has been examined for use in leachate tests for radioactive materials and shows promise for application.

An alternative model, used to describe solute movement through permeable media, may be employed. This model (in one dimension) is:

$$\frac{\partial c}{\partial t} = D \frac{\partial^2 c}{\partial x^2} - V \frac{\partial c}{\partial x} + \rho/\theta \frac{dq}{dt} \qquad (2)$$

c = Concentration of species leached

t = Time

D = Diffusion constant

V = Advective velocity

x = Space coordinate

ρ = Bulk density

θ = Pore ratio

dq/dt = Rate of leaching of the species from the material

The difference between this and the previous model is that advective flow is assumed to be significant. This will be true if the permeability of the medium surrounding the leached material is high.

The various parameters which affect shake test and column test design are described in Tables 23, 24, 25. Tests to determine the physical properties of solid materials subject to leaching must also be performed. These properties include:

(1) Size analysis;

(2) Specific gravity of the solids;

(3) Bulk density;

(4) Dry density;

(5) Water content;

(6) Porosity/void ratio; and

(7) Permeability.

Appropriate methods for determination of these properties may be found in reference 313.

SURVEY OF LEACHATE TESTING TECHNIQUES

In Tables 23 through 26, a summary of laboratory and field techniques applicable to leachate assessment are presented. Shake and column tests as well as field cell techniques are addressed. Variations within each of these methods are delineated. In Table 27, a summary of current and past efforts in leachate testing by various governmental agencies and private firms is presented.

TABLE 23. SUMMARY OF SHAKE TEST TECHNIQUES

METHOD	VARIABLES	DESCRIPTION	REFERENCES
Shake Test		A solid from which a leachate is to be generated is agitated with an eluant under specific conditions which relate to site specific parameters.	131 178 193 202 203 259 334 336
	Eluant	Solid materials are leached in the environment either by direct precipitation or by surface runoff generated from precipitation. Eluant composition will, in part, determine the leachate mechanism.	
	1) pH	The sample can be shaken at various pH's to simulate a range of possible natural eluants.	
	2) Dielectric Constant	The dielectric constant is related to the solvating power of the eluant. The dielectric constant increases with addition of ionic species. Polar substances become more soluble with increasing dielectric constant, while non-polar substances become less soluble.	
	3) Eh (Aerobic/Anaerobic Conditions)	Eh is the oxidative or reductive capacity of the eluant and provides a frame of reference within which redox and hydrolysis reactions of different metals maybe compared.	
	4) Organic Constituents	Organic constituents will affect the complexing ability of the eluant. Furthermore, these compounds may react with the waste to produce new pollutants.	
	4) Total Acidity/ Alkalinity	Total acidity/alkalinity together with pH define the buffering capacity of the eluant.	

TABLE 23. (continued).

ADVANTAGES	DISADVANTAGES	REMARKS
This test is comparatively rapid and simple to perform. Equipment requirements are minimized and are commonly available. This test is relatively inexpensive and may provide a mechanism for a worst case analysis.	This procedure does not furnish results which can be readily interpreted as steady state or rate related data. Data is provided only in terms of the concentration of species in the leachate. The relationship between environmental factors which control leaching in the field and variables within the shake test is difficult to define.	A worst case analysis is defined here as the maximum concentrations at which pollutants are likely to be released to the environment. No estimation of made of either dilution or attenuation effects. Level 1 tests are designed to screen and semi-quantitatively measure all potential pollutants. The shake test, as a worst case analysis, is suitable as a Level 1 assessment procedure.
Simulation of natural conditions.	Actual eluant may be difficult to access and reproduce under shake test conditions.	Eluant composition is the most important factor controlling the leaching mechanism. The following parameters define eluant characteristics.
A range of possible field conditions as well as extremes can be simulated.	Reaction mechanism may change with pH.	The pH of the natural eluant is controlled primarily by dissolved CO_2. Acids and bases, buffered suitably, may be used to control pH of laboratory eluant.
Natural eluants contain dissolved species which determine the eluants solvating ability.	Estimation and determination of the dielectric constant of natural leachate may be difficult.	Dielectric constant and thus the solvating ability of the system is determined by the choice of eluant composition, (e.g. organic vs inorganic acids, etc.)
Eh (related to dissolved oxygen concentration) in part determines the aerobic and anaerobic condition under which a material is leached. Aerobic or anaerobic conditions may dictate the reaction mechanism.	Eh of the eluant in a natural environment maybe difficult to assess accurately and will change with eluant concentrations.	Eh is a function of pH. The Eh of rainwater is typically 0.4-0.6 volts. Air must be excluded from reaction vessel to maintain negative Eh values (anaerobic conditions).
Natural eluants will contain a variety of organic compounds.	Individual organic compounds within the eluant maybe difficult to identify and measure quantitatively.	Organic constituents in the eluant principally from surface runoff, infiltration thru soils, and the leaching of organic constituents within the residue itself.
Natural eluants are likely to be buffered.		A wide variety of buffers is possible. A particular buffering system must be selected with care.

TABLE 23 (continued).

METHOD	VARIABLES	DESCRIPTION	REFERENCES
Shake Test (cont.)	Eluant (cont.)		
	6) Temperature	The temperature at which the test is conducted will affect the solubility of potentially leached materials. Temperature may change the overall leaching mechanism.	
	7) Total Volume	Total volume will determine, in part, amounts of species which will be leached.	
	8) Cycles	The saturated eluant may be filtered from the solid and fresh eluant added to the system.	
	Test Duration	A test maybe conducted for varying periods of time. A single test duration maybe up to 96 hours.	
	Particle Size	A sample maybe finely ground prior to a test, thereby increasing the surface area exposed to the eluant.	
	Agitation Methods		
	1) Shaking Method	A wrist action shaker is commonly used for agitation.	
	2) Stirring	Magnetic stirrers have been used to effect mixing.	
	3) Compressed Gas Agitation	Compressed gas maybe used to agitate a mixture.	

TABLE 23. (concluded).

ADVANTAGES	DISADVANTAGES	REMARKS
Temperature control is desirable to approximate natural conditions and to insure reproducibility within a series of tests.	Temperatures significantly above or below ambient field conditions will affect laboratory leachate quality. Ambient temperatures may vary widely within a waste disposal site.	The temperature at which a test is conducted may affect reaction rates significantly; temperature during a test should be approximately the same as expected at field conditions. Temperature maybe controlled by placement of the test vessel in a constant temperature environment (e.g. an incubator).
By increasing eluant volume, saturation equilibria maybe avoided. Species which would normally appear in the leachate only after long periods of time maybe detected (and measured) relatively quickly.	This process may lead to a large overestimation of actual pollutant concentrations.	
Eluant changes are designed to represent the time dependent release of pollutants until a steady-state condition is reached.	The conditions reached in this test may never be realized under natural conditions.	
Establishment of chemical equilibria within a system is a function of time.	System equilibrium represents a worst case.	Minimum test duration is determined by experimental evaluation of species concentration versus time by periodic withdrawal of sample aliquots.
Dissolution of a solid is limited in part by the surface area of the solid. By increasing the surface area of a sample, the dissolution rate is increased, thus equilibration within the system is reached sooner and test duration is accordingly shortened.	Increasing the dissolution rate may seriously overestimate potential pollutant release to the environment.	Particle size reduction is a physical process and thus cannot affect the overall leaching mechanism.
Shaking rate is easily controlled. This equipment is common to most laboratories.	More expensive than other methods.	
Stirring rate is easily controlled. This equipment is common to most laboratories.	Stirring is a somewhat less efficient method of agitation than is shaking.	
Useful for control of aerobic or anaerobic conditions. No power requirement.		Aerobic conditions maybe simulated by O_2 or air agitation; anaerobic conditions maybe simulated by using an inert gas.

TABLE 24. THE SATURATION TEST

METHOD	VARIABLES	DESCRIPTION	REFERENCES
Saturation Test		A saturated paste is made by mixing the test media with an eluant. The paste is filtered and the filtrate analyzed.	43
	Eluant	Distilled water is commonly used. Natural eluants (i.e. rainwater or surface runoff water) and synthetic eluants can also be used.	
	Eluant Volume	Eluant volume is variable. The eluant is added to the media with continual mixing until a saturated paste is obtained.	

TABLE 24 (concluded).

ADVANTAGES	DISADVANTAGES	REMARKS
The inherent water retention characteristics of the media are considered in this test.	It is difficult to obtain an extract at field water content; procedures using higher liquid/solid ratios depart from actual field conditions.	This method has been used to estimate the available salt content of soils but may be applicable to other media. An estimate of disposal site field capacity can be made with method.
Natural eluants will represent actual leaching process more accurately.	Distilled water is not representative of natural eluant.	The primary difference between shake and saturation tests is the high solid to eluant ratio of the latter. Thus, only the most soluble species will control the saturation test equilibrium. Test results may represent the initial leachate composition.
The quantity of eluant required to mix a media to a paste is related to field water content.	The inherent reproducibility of this volume is less than for other tests. By minimizing eluant volume, saturation effects are maximized.	The absolute and relative amounts of species are influenced by the water content of which the extract is made. Clearly, not all species may be leached under these condition.

TABLE 25. SUMMARY OF COLUMN TEST TECHNIQUES

METHOD	VARIABLES	DESCRIPTION	REFERENCES
Column Test		A material to be leached is placed in a column and eluted with an appropriate solvent under specific conditions which relate to site specific parameters.	131 178 202 203 257 259
	Eluant	Wastes are leached in the environment either by direct precipitation or by surface runoff generated from precipitation. Eluant composition will, in part, determine the leachate mechanism.	
	1) pH	The sample maybe leached at a number of different pH's to simulate possible field conditions.	
	2) Dielectric Constant	The dielectric constant is related to the solvating power of the eluant. The dielectric constant increases with addition of ionic species. Polar substances become more soluble with increasing dielectric constant, while non-polar substances become less soluble.	
	3) Eh (Aerobic/Anaerobic Conditions)	Eh is the oxidative or reductive capacity of the eluant and provides a frame of reference within which redox and hydrolysis reactions of different metals may be compared.	
	4) Organic Constituents	Organic constituents will affect the complexing ability of the eluant. Furthermore, these compounds may react with the waste to produce new pollutants.	
	5) Total Acidity/ Alkalinity	Total acidity/alkalinity together with pH define the buffering capacity of the eluant.	

TABLE 25 (continued).

ADVANTAGES	DISADVANTAGES	REMARKS
This test may, if carefully designed, provide data which can be related to the rate of pollutant release to the environment. The test may also be used to measure the ion exchange capabilities of soils for attenuation studies. The test is inexpensive in its simpler forms and utilizes commonly available equipment.	Test durations tend to be rather long (months-years) because of flow rates through the column, in simulation of natural infiltration rates, are very small. Relationships between environmental factors which control leaching in the field and variables of a column test are difficult to define; results concerning rate data must be interpreted with extreme caution.	Column tests are the most widely used methods for leachate generation. With proper design, column tests are suitable methods of leachate generation for a Level 2 assessment.
Simulation of natural conditions. Composition of actual eluant at specific site should be determined.	Actual eluant maybe difficult to assess and reproduce under column test conditions.	Eluant composition is the most important factor controlling the leachate mechanism. The following parameters define leachate characteristics.
A range of possible field conditions as well as extremes can be simulated.	Reaction mechanism may change with pH.	The pH of the natural eluant is controlled primarily by dissolved CO_2.
Natural eluants contain dissolved species which determine the eluants solvating ability.	Estimation and determination of the dielectric constant of natural leachate maybe difficult.	Dielectric constant, and thus the solvating ability of the system, is determined by the choice of eluant (e.g. organic vs inorganic acids).
Eh (related to dissolved oxygen concentration) determines in part the aerobic or anaerobic condition under which a material is leached. Aerobic or anaerobic conditions may dictate the reaction mechanism.	Eh of the eluant in a natural environment maybe difficult to assess accurately and will change with eluant concentrations.	Eh is a function of pH. The Eh of rainwater is typically 0.4-0.6 volts. Air must be excluded from reaction vessel to maintain negative Eh values (anaerobic conditions).
Organic composition of the eluant will affect the reaction mechanism and thus the transport mechanism.	Individual organic compounds within the eluant may be difficult to identify and measure quantitatively.	Organic constituents in the eluant originate principally from surface runoff, infiltration through soils, and the leaching of organic constituents within the residue itself.
Natural eluants are likely to be buffered.		A wide variety of buffers is possible. A particular buffering system must be selected with care.

TABLE 25 (continued).

METHOD	VARIABLES	DESCRIPTION	REFERENCES
Column Test (cont.)	Eluant (cont.)		
	6) Temperature	The temperature at which the test is conducted will affect the solubilities of leached materials. Temperature may change overall leachate mechanism.	
	7) Total Volume	Total eluant volume is related to the total influx of precipitation and/or surface runoff at a particular site. Total volume will determine, in part, amounts of species which will be leached.	
	Compaction of Sample	Flow rate through a porous medium is dependent on permeability. Amount of sample compaction will affect the permeability.	
	Particle/Column Diameter Ratio	The largest particle size will determine the minimum volume element which is representative of the field site.	
	Flow Rate	Residence time within a medium will be controlled by flow rate.	
	1) Constant Head	Flow rate is proportional to head. Hydraulic head is the potential energy per unit weight of a fluid and includes pressure head and elevation head (head due to gravity). Only elevation head is relevant to free flow systems. A constant head system requires a constant eluant level above the column.	
	2) Falling Head	In a falling head system, no effort if made to maintain a constant eluant level. Flow rate will decrease with falling head (other variables kept constant).	

TABLE 25 (continued).

ADVANTAGES	DISADVANTAGES	REMARKS
Temperature control is desirable to approximate natural conditions and to insure reproducibility within a series of tests.	Temperatures significantly above or below ambient field conditions will affect leachate quality. Ambient temperatures may vary widely within the disposal site.	The temperature at which a test is conducted may affect reaction rates significantly; temperature during a test should be approximately the same as expected at field conditions.
Approach to equilibrium, or the attainment of a steady-state condition is time dependent. Species concentrations are normally measured as a function of total eluant volume.		
The simulation of the permeability of the natural medium will help approximate natural conditions and flow rates.	Reproducing field conditions (i.e. compaction and permeability values) within a laboratory column is difficult.	
Proper selection will minimize scale effects.	A small column diameter with respect to particle size, will not in general, be representative of flow through a larger volume.	This variable is difficult to relate to laboratory tests. D/d ratios are most important where the media is inhomogeneous (e.g. municipal landfills, etc.). The quantitative relationship between flow rate and leachate quality is difficult to define.
Simulation of infiltration rates under field conditions by control of flow rate within a column provides a method to control the mean residence time of the eluant. Careful control of flow rates are necessary to insure test and reproducibility.	Estimation of flow rates under field conditions is difficult. Low flow rates imply long time periods for leachate collecti from a column test.	Flow rates along with eluant composition are the two factors which have the greatest influence on the generation of leachates from a column test. Diffusion, for a chemically fixed sample, maybe simulated by packing a more permeable media, such as glass beads, around the test media.
Under saturated flow conditions, a constant head system implies a constant flow rate (assuming hydraulic conductivity is constant).	Leaching is more effective under saturated flow conditions and leads to overestimation of species concentrations. Constant flow rates will rarely be realized under field conditions. Construction of a constant head system is more complex than a falling head system.	The theory of saturated flow leaching is better understood than that for unsaturated leaching.
A falling head system may represent actual field conditions more closely than a constant head system. Rapid infiltration of precipitation and/or runoff with subsequent attainment of field capacity is simulated. A falling head system is easily constructed.	Reproducibility of falling head tests is inherently less than that for constant head tests.	

TABLE 25 (continued).

METHOD	VARIABLES	DESCRIPTION	REFERENCES
Column Test: Attenuation Studies		Attenuation studies attempt to describe the interaction of leachates with surrounding soils. Soil attenuation, as it occurs in the real world, is a complex phenomenon involving at least three major elements: 1) Soil adsorption and desorption which determines the underlying pattern. 2) Porous flow and diffusion which produce a dispersion of the pollutants. 3) Water infiltration and evaporation, which determines the amount of movement of a chemical.	131 143 335 336
	Soil Characteristics	Soils characteristics will define the sorption mechanism.	
	1) pH	Soil systems have varying buffering capacities.	
	2) Chemical Exchange Capability	Soils have differing ion exchange capabilities.	
	3) Conductivity	Soil conductivity will depend on moisture content and dissolved solids concentrations.	
	4) Surface Area	Surface areas of soils depend on individual soil types and composition.	
	5) Permeability	Flow condition at the system boundary is controlled by soil permeability.	
	Soil Composition	Different soil types have different attenuation capacities which vary with composition.	
	6) Total Acidity/ Alkalinity	Total acidity/alkalinity together with pH define the buffering capacity of the eluant.	

TABLE 25 (continued).

ADVANTAGES	DISADVANTAGES	REMARKS
The eventual disposal site for most solid wastes is the soil. Interaction of leachate and evaluation of pollutant release rates to the ground water after passing through soils is the major goal of water-borne fugitive assessment. Data from column methods which measure the relative rates of ion migration through soils, i.e., attenuation studies, can be used in computer simulation of leachate impact from waste sites.	Attenuation studies are subject to the same limitations as discussed for leachate generation by column tests. In particular, quantitative interpretation of extraction data must be made cautiously.	Leachate generation and attenuation studies maybe performed within the same test. This is done by putting the soil to be studied at the bottom of the column and placing a suitable amount of material to be leached above the soil layer. Standard column procedures may then be used to evaluate leachate attenuation. Attenuation studies may also be conducted with only soils placed in a column using either a synthetic or natural leachate.
Characterization allows evaluation of pollutant attenuation versus an individual soil properties. pH of the soil will effect the sorption mechanism, e.g., the chemical exchange capacity.		For a complete discussion of eleven soils and their properties with regard to attenuation studies (see Reference).
Exchange capabilities define the total system capacity for sorption.	Exchange capabilities should be measured for all ions to be considered. Individual exchange capabilities may be difficult to directly relate to overall attenuation.	Exchange capabilities may be measured using 1 M ammonium acetate.
Conductivity is related to the moisture capacity of the soil and thus to transport properties.		
Surface areas relate to absorption capacity, exchange sites, and permeability of soils. By measurement of soil permeability, intermittent effects such as ponding, may be evaluated. The least permeable media will control steady state flow.		Surface areas are commonly measured by gas (usually N_2) absorption techniques.
Composition will define soil chemistry. Soils are buffered systems.	Complete analysis of a soil is expensive.	

TABLE 25 (continued).

METHOD	VARIABLES	DESCRIPTION	REFERENCES
Column Test Attenuation Studies (cont.)	Soil Composition (cont.)		
	1) Composition by Mineral Type	Individual minerals have differing attenuation capabilities.	
	2) Elemental Analysis	Elemental analysis will, in part, define soil chemistry and characteristics.	
	3) Total Organic Content	Organic compounds in soils may complex or react with leachate constituents.	
	Eluant	For column tests leachates maybe generated in the laboratory or natural leachate maybe used.	
	1) Natural Eluant	Soil sorption studies maybe conducted with or without in situ generation of leachate; a"natural" leachate is used in either case.	
	2) Synthetic Eluant	Soil sorption studies may be conducted using a synthetic leachate; i.e., a material which has been spiked with pollutants of interest.	
	3) Temperature	The temperature at which attenuation studies are conducted will affect sorption mechanism and thus sorption and desorption rates.	
	4) Flow Rate	Residence time within a medium is controlled by flow rate. Flow rate is dependent on driving force (e.g., head) and system resistances (e.g., permeability, drain valve opening, etc.).	

TABLE 25 (concluded).

ADVANTAGES	DISADVANTAGES	REMARKS
Classification of soils by mineral content is useful for comparison of gross attenuation characteristics.		Classification should include percentage of sand, silt and clay. Predominate clay minerals should be identified.
Chemical analysis can identify ion exchanging species.	Complete chemical analysis may be quite expensive and unnecessary.	See Elemental Analysis Tables in Chapter 3 for applicable analytical techniques. Iron and manganese oxides are important parameters for defining attenuation capabilities of soils.
The actual amount of leaching in soils is a function of the total organic content of the soil.		
If properly designed, in situ generation of a leachate may represent field conditions.	Total simulation of all field conditions are difficult in a laboratory environment.	
Determination of natural leachate attenuation is a major environmental assessment goal.	Collection of a natural leachate in sufficient quantity maybe difficult and expensive. Preservation of natural leachate may present special problems.	A "natural" leachate is,by definition, site specific.
Synthetic leachates may be made easily and inexpensively. Leachate analysis is greatly simplified.	Synthetic leachates may not reproduce actual sorption phenomena accurately.	Such studies may be used to predict relative ion mobilities on different soils.
Temperature control is desirable to approximate natural conditions and insure test reproducibility.	Temperatures at sorption sites may be difficult to measure.	
Attenuation is an equilibrium process. Pollutant migration thru a column is a function of flow rate. Column flow rates should approximate natural flow conditions.	Flow rates at disposal sites may be difficult to measure.	Either a constant or variable head system may be used. (See the previous discussion under column tests). Sorption/desorption equilibria, i.e., ion migration rates, will probably be overestimated under saturated flow conditions.

TABLE 26. SUMMARY OF FIELD TEST CELL TECHNIQUES

METHOD	VARIABLES	DESCRIPTION	REFERENCES
Field Test Cells		Field test cells are scale models of waste disposal sites employed to evaluate leachate generation from solid wastes and the impact of such leachates on ground water quality. Alternatively field test cells may be large columns or other devices (lined with an inert material) which are installed at the disposal site and exposed to actual field conditions for the evaluation of liners as control devices as well as leachate generation.	257 257.1 335
	Lined Test Cell	A wide range of materials are potentially useful as barriers for the impoundment and the subsequent collection of leachates. Only those liners which are impermeable and non-reactive are useful for leachate collection. Test cells are modeled to reproduce actual site conditions (i.e. compaction of the waste depth of the waste, composition of the waste, etc.).	

TABLE 26 (continued).

ADVANTAGES	DISADVANTAGES	REMARKS
The leachate generated from such cells is done under natural conditions (temperature, rainfall, etc.). Scale effects of leachate generation (in theory at least) are minimal for field test data. The leachate generated under "natural conditions" is attenuated under actual conditions.	Field test cells are ~~very~~ expensive to construct and monitor. Continuous in situ sampling capability is required. Placement and maintenance of such sampling devices is inconvenient. Field test cell evaluation studies are lengthy (i.e., months to years).	Field test cell design is dependent on a variety of factors: media homogeneity, media size, media availability, etc. Sample collection devices are of several general types: liners which collect the total leachate, lysimeters which collect a portion of the leachate at a specific point, and wells which are designed to assess infiltration of leachate into ground water. Each method has definite advantages and limitations and is discussed below. Under certain circumstances (e.g. where the test cell is being evaluated in a dry climate) water may be added to simulate disposal in areas with higher precipitation rates or accelerated leachate generation.
Since the total leachate sample is collected, an empirical relationship may be derived between total precipitation, runoff, and infiltration and leachate generation.	Interaction between leachate and the surrounding environment is limited. Impoundment of leachate may increase residence time and thus affect species concentrations. Liner defects will develop with time and allow interaction with the surrounding environment and lead to unknown sample losses. Improper leachate collection (e.g. allowing an anaerobic leachate to become aerobic) may change leachate properties.	Liners which are potentially useful for total collection studies, are usually synthetic polymeric membranes. These liners may be either reinforced or unreinforced. Typical liners are as follows (reference): Butyl rubber Ethylene propylene rubber (EPDM) Chlorosulfonated polyethylene (Hypalon) Chlorinated polyethylene (CPE) Elasticized polyolefin (3110) Polybutylene (PB) Polychloroprene (Neoprene) Polyester elastomers Polyethylene (PE) Polyvinyl chloride (PVC) Liners may be protected from physical damage by a protective layer of an inert material such as sand.

TABLE 26 (continued).

METHOD	VARIABLES	DESCRIPTION	REFERENCES
Field Test Cells (cont.)			
	Unlined Test Cell	Unlined test cells are cells in which the leachate is allowed to interact with surrounding media. While this definition precludes impermeable liners, clay and/or soil liners may be used for attenuation studies under field conditions. Test cells are designed to reproduce actual site condition (i.e. compaction of the waste, depth of the waste, composition of the waste, etc.).	
	Collection Devices	A variety of methods may be used for collecting leachate and monitoring seepage from a disposal site. The following is a short summary of the procedures.	
	1) Deep wells	Ground water wells--domestic or agricultural. Equipment: electrical conductivity meter.	
	2) Shallow observation wells	Shallow wells with perforated casings, gravel backfilled. Possible equipment: electrical conductivity meter.	
	3) Auger	Hand or power augered holes (usually following soil sampling). Equipment: auger.	
	4) Soil sampling	Soil sampling to incremental depths pending textural changes. Equipment: auger.	
	5) Infiltrometers	Plastic covered ring infiltrometers 22.0 - 61 cm (9 - 24in.) diameter, double or single, manometer equipped. Equipment: special driving hammer.	

TABLE 26 (continued).

ADVANTAGES	DISADVANTAGES	REMARKS
Interaction between waste residue and the environment is not limited. Unlined cells permit monitoring of horizontal pollutant gradients (i.e. diffusion studies).	Collection of leachate is difficult; an underdrain leachate collection system is not feasible within unlined cell and lysimeters must be used.	Lysimeters are installed at different depths to collect leachate and determine the velocity of pollutant migration to the ground water table.
If large cells are constructed (e.g. 30 m x 30 m x 10 m) in the vicinity of the plant, not only is a partial disposal site provided but actual disposal site impact may be evaluated in the areas where residues are likely to be ultimately disposed.	Total leachate generation is difficult to evaluate. Once a unlined cell is in operation, control of pollutant release is extremely difficult and the effects may be long term.	Wells may be installed upstream and downstream of ground water flow and additionally thru the test cell to determine the effect on ground water quality. For either lined or unlined cells, meteorological phenomenon (e.g. temperature, total precipitation, etc.) and conditions within the test cell (temperature, moisture content, gas production, etc.) should be monitored so that leachate generation may be related to environmental conditions. These methods have been applied to pond seepage detection, but are applicable for monitoring liquid infiltration or seepage studies in general.
Records easily available, history may be traced.	After-the-fact method. Wells too far away or absent.	Monitoring quality for back-up data and possible changes in quality for nearby areas.
Quantity and quality can be monitored, fairly inexpensive, low maintenance, permanent installation.	Suitable for monitoring water table conditions only--unsaturated flow cannot be detected.	Detection of lateral water movement from areas over restricting substrata.
Quantity and quality can be monitored, inexpensive.	Difficult to maintain, unsaturated flow cannot be detected.	Preliminary soil investigation of all sites; determination of seepage in and adjacent to sites.
Minimum equipment required, offers wide range of quality and moisture monitoring.	Expensive laboratory analyses, requires repetitive and background sampling.	Measurement of soil profile moisture and its quality in all sites when necessary.
Fairly easy to monitor, inexpensive, no special maintenance required, permanent.	Requires some expertise for installations; chance of errors--short circuiting, evaporation losses, and erroneous measurement.	Measurement of infiltration both inside and outside sites.

TABLE 26 (continued).

METHOD	VARIABLES	DESCRIPTION	REFERENCES
Field Test Cells (cont.)	Collection Devices (cont.)		
	6) Piezometers	6.35 - 9.52 mm (1/4 - 3/8 in.) metal pipe, perforated at end. Equipment: driving hammers, rivets, rods, pump, tubing, soundbell.	
	7) Gypsum blocks (Bouyoucos blocks)	Unit: gypsum, nylon, or fiberglass blocks; plate electrode. Other equipment: resistance meter.	
	8) Lysimeter	Porous ceramic device. Equipment: vacuum pumps, lines, etc.	
	9) Neutron probe	Neutron scattering moisture meter: includes radioactive source, transmission lines, counter. Other equipment: dummy probe, access tubes, etc.	
	10) Remote sensing	Infrared photographic detection of changes in the radient energy status of a discharge area.	
	11) Salinity sensors	Salinity sensing device to detect dynamic changes in salt concentration in the soil profile.	

TABLE 26 (concluded).

ADVANTAGES	DISADVANTAGES	REMARKS
Very inexpensive, simple to install, easy to read, no special maintenance or calibration required, both quality and quantity of special zones can be determined.	Measures only saturated zones, relies on impervious subsoil conditions, cannot determine unsaturated flow.	Detection and measurement of moisture movement under ponds overlying restricting layers.
Easy to install, easy to monitor, very little maintenance required.	Not capable of measuring quality or quantity of seepage, calibration required--low sensitivity in moist and wet range. Subject to deterioration.	Detection of changes in soil moisture under sites.
Samples can be obtained easily, rather inexpensive, low maintenance, permanent installation	Measures best under saturated conditions--normally measures in the "available moisture" range, depth limited.	Detection of seepage quality over a wide moisture range.
High reliability, access tubes permanent, good for frequent checking.	Very elaborate and expensive, requires special expertise, frequent calibration, special access holes, high maintenance, does not detect quality, requires special storage and licensing by AEC.	Detection of vertical moving moisture fronts under and surrounding sites.
Monitor at anytime without prior notice, permanent record, interpretation easily delineated.	Expense not well established subject to weather interferences, does not give quantity or quality of drainage water.	Detection of changes in the growth rate of plants in and around a discharge area as compared to native areas.
Simple to set up and operate. Quick response to new equilibrium conditions.	Initial expense is high. Does not measure quantity and individual ions.	Quick detection method of changes in salt concentration in the soil profile.

TABLE 27. SUMMARY OF CURRENT AND PAST EFFORTS IN LEACHATE TESTING

AGENCY/FIRM (REFERENCES)	METHOD	DESCRIPTION	REMARKS
The Aerospace Corporation (257)	Column	One hundred gram samples are packed into 4cm glass columns through which 3.6 liters of distilled deionized water is eluted. A set of three columns is prepared for each material to be leached. Unbuffered leach eluants are adjusted to pH 4, 7 and 9 with either HCl or NaOH. Eluant and leachate were allowed to interact with air so as to simulate aerobic conditions. A similar procedure is used for leaching experiments which simulate anaerobic conditions. The eluant and leachate are protected from interaction with the atmosphere; only an eluant of pH 7 is used. Leachate so generated is analyzed periodically (750ml increments). Samples were ground to a uniform size in an attempt to maximize surface area.	This test has been used for the testing of raw FGD sludges. For FGD sludges (and perhaps for other media) it is convenient to perform analyses as a function of pore volume displacements. (Analysis is performed at first, second, third pore volume displacements and then on the 15th, 30th and 60th pore volume displacement.) Pore volume may be calculated from the mass and volume of each packed column. Elements and species monitored were: As, Be, Cd, Cr, Cu, Pb, Hg, Se, Zn, Cl^-, F^-, SO_3^{-2}, SO_4^{-2}, pH and TDS. No mention of flow rate and/or control is made (FGD sludges are rather impermeable and presumably this controls flow rate - a constant head of about 72" W.C. is used.) Differences are noted between aerobic and anaerobic columns. Aerobic leachate is always found to be acidic while anaerobic leachates are basic. Lead concentration (50th pore volume) is is significicantly higher under anaerobic conditions.
	Field Test Cells	No specific test method has been recommended; however, a complete analysis of test cell design, liners and monitoring equipment is presented.	Field test cells are in the form of lined and unlined ponds. See table 26 for field test cell design, liner materials and monitoring equipment.
EPA (IERL-RTP)	Shake Test	A slurry is prepared using from 2 to 4 parts distilled-deionized water to 1 part solid. This slurry is shaken continuously for 72 hours at room temperature. The slurry is filtered. The above steps are repeated ten times and the leachate from the filtration is analyzed for each repetition.	Mention of this test does not imply current endorsement of this method by EPA. Experience has shown that some species are released immediately from the waste while others are released in the later leachings. The effect of pH on leachability may be determined by adjusting the pH of the slurry to the desired range and following the aforementioned procedures for each pH

TABLE 27 (continued).

AGENCY/FIRM (REFERENCES)	METHOD	DESCRIPTION	REMARKS
EPA (IERL-RTP) (cont.)	Shake Test (cont.)		condition which is considered. A similar test has been used by IERL-New Jersey. A liquid to solid ratio of 2.5 is used and samples are agitated for 24 hours using a Burrell Shaker. The Department of Army uses a similar test; liquid to solid ratios of from 4:1 to 1:1 are used. Shake time is 72 hours. The above steps are repeated 7 times.
EPA (MERL-Department of the Army) (131)	Column Test (Attenuation)	Columns are prepared from 37 mm I.D. glass tubing with a 8 mm diameter tip on the bottom. Glass wool is placed over the bottom hole and covered with washed quartz sand. One hundred grams of waste is packed into the column (~10-13 cm depth). The waste is covered with sand and a thin layer of glass wool and then fitted with a stopper containing a 3 way stopcock which allows either sampling the leachate or directing the leachate on an upflow path into a soil column. The soil column may be prepared (typically) by packing 160g of -20 mesh soil to a density of 1.5 g/cc (~10cm depth). Leachate is analyzed at increments of 2 pore volume displacements.	An upflow arrangement is used to maintain saturation flow, to minimize channeling, and permit better flow control at low flow rates (0.5-1.5 pore volumes per day). A 84" W.C. head pressure was used. Leachate and attenuation studies from four industrial wastes (Ni-Cd battery, electroplating, water base paint, and inorganic pigment wastes) were evaluated using this technique. After completion of each leaching experiment, the soil column was divided into four equal sections and lg samples of each section analyzed. An attempt was made to maintain equal flow rates in all columns.
EPA (MERL)	Shake Test	A liquid to solid ratio of ~5 to 1 (50-100g sample) is used initially. The sample is shaken continuously until saturation (equilibrium) is reached and then analyzed. A fresh sample is extracted at higher liquid to solid ratios (e.g. 10:1, 15:1, 20:1 etc.) until saturation phenomena does not control leachate composition. Eluant may be	This test has evolved from a series of informal discussions with MERL personnel. See Table 24 for a more complete discussion of eluant composition and general test considerations. Leached solid (from which leachate has been generated) should also be analyzed for the same elements and species (where applicable) as the leachate.

TABLE 27 (continued).

AGENCY/FIRM (REFERENCES)	METHOD	DESCRIPTION	REMARKS
EPA (MERL) (cont.)	Shake Test (cont.)	distilled deionized water but better is an eluant which resembles natural rainwater (i.e. deionized water saturated with CO_2 and O_2 at STP). Temperature should be controlled to approximate natural environment. Sample may be finely ground to shorten test period.	Mention of this test does not imply current endorsement of this method by EPA.
EPRI (334)	Shake Test (Solubility Test)	A sample is stirred for 24 hours with deionized water in a closed container. A 5 to 1 liquid/solid ratio is used. After filtering with a porous membrane filter, the leachate may be analyzed. The effect of pH is evaluated by varying pH between 7.5 and 13 using a carbonate buffering system. The kinetics of leachate generation may be evaluated using procedures similar to the above. Ninety-six hours of contact time were used to insure equilibrium and the mixtures were sampled at 2, 5, 10, 60, 480, 1445 and 2880 minutes.	This test has been used for the evaluation of leachate from bottom and precipitator ash. Column sorption tests are performed using these leachates. Relatively small soil columns are used (height 4cm, width 3.5 cm). The columns are attached to a vacuum system which is used to regulate flow.
Chemfix (131)	Column Method	One hundred grams of material to be leached are placed in a glass chromatography column (40mm x 600 mm) containing one inch of glass wool at the bottom. The material to be leached is compacted in the column. Distilled water is used as the eluant (for ease of reproductibility). The remaining eluant fills the upper portion of the column. Eluant flow is approximately 1 ml/min. Leachate is normally collected in 100 ml portions and subsequently analyzed. Eight portions (i.e. 800ml) simulates roughly 25 inches of ground water passing thru the material in the field.	This test was developed to evaluate leachate from chemically fixed wastes. This test has been well tested and successfully correlated with actual samples taken from materials tested in the field. While only distilled water was used as an eluant, other eluants could easily be used (e.g. rainwater).

TABLE 27 (continued).

AGENCY/FIRM (REFERENCES)	METHOD	DESCRIPTION	REMARKS
IUCS	Shake Test	A sample (5-10g) to be leached is shaken for varying times. An initial liquid to solid ratio of approximately 4 to 1 is used and subsequently increased until the solution is no longer saturated. Using this liquid to solid ratio (at which saturation does not occur), a fresh sample is shaken for 48 hours and the leachate filtered and analyzed. This sequence is repeated five times.	Kinetic data may be obtained by more frequent analysis (e.g. 1, 2, 4, 8, etc. hours) of the unsaturated leachate. The first value obtained from the "unsaturation leachate test" has been suggested as representative of runoff liquors: the fifth test is suggested as representative of steady state leaching. Sample is rinsed prior to analysis. Rinse is not analyzed.
Princeton Aqua Science (336)	Column Test (Attenuation Studies)	Two column sizes have been used, a small column (2.25" x 36") and a large column (18" x 72"). Each column is treated with silica grease to minimize seepage of eluant along the walls (i.e. minimize wall effects). A soil column is obtained by driving the column into the ground to the required depth (~2-3'). Soil columns are typically loaded with 6" and 12" waste layers (equivalent to loadings of 700 and 1400 tons/acre). A soil column without waste is used as a control. Distilled-deionized water is added over a period of four weeks during which leachate is collected. (For the small column 3.2 liters roughly represent 49" of rainfall.)	These tests were designed to evaluate leachate and runoff from incinerator ash residue. This test generates a raw leachate in situ and measures leachate output after attenuation by a soil. Use of the small column is preferred from a convenience standpoint. The leachate was analyzed for 38 chemical constituents. Aerobic and/or anaerobic conditions were not specifically maintained.
(336)	Shake Test	Fifty grams of ash is placed into each of 3 Erlenmeyer flasks with 500 ml of distilled-deionized water. The pH of each flask is adjusted to pH 5, 7 and 8.5 respectively. The flasks are placed on a shaker for ten days and the pH is adjusted daily with either H_2SO_4 or NaOH.	This test is designed to simulate worst probable runoff conditions. A worst case analysis is obtained by using a lower liquid to solid ratio (i.e. 500g of solid to 500ml of water). Other pH's used in the study are pH 3, 5, 7 and 9.

TABLE 27 (continued).

AGENCY/FIRM (REFERENCES)	METHOD	DESCRIPTION	REMARKS
Princeton Aqua Science (cont.)	Shake Test (cont.)	After 10 days, the flasks are removed from the shaker and the ash allowed to settle. Both supernatant and residue are analyzed.	
Ralph Stone Inc. (335)	Column Test	Five hundred of each residue and stratographic materials are placed in PVC columns (20cm x 3.0m). Distilled water is passed through these samples at the rate of 100ml per day. Water is added at the rate of 7.5 liter every other day. Lysimeters are placed at various levels in the columns; lysimeter and drain samples are collected every other day. No attempt was made to control the head or the specific temperature at which the leachate is generated. Prior to the loading of the residue on the column, water was added to the columns at the rate of several liters per day for several weeks. This establishes column background value for all constituents.	These studies are designed to evaluate leachate and runoff environmental impact from disposition of fly ash and spent bed material from FBC processes in a variety of situations. Residues from the PER, EXXON miniplant, ESSO-England, and CPU-400 units are in the process of being evaluated. A variety of stratographic materials (bituminous coal, dolomite, limestone, claystone, #16 sandstone, #60 sandstone, granite material, p-gravel were used to simulate disposal sites. Residues were tested with pyritic tailings to evaluate the effect of the residue on the production of acid mine drainage. Analytical values generally reach a constant value by the fifteenth week of continuous leaching. At this point the more soluble components have been leached, leaving slowly leaching compounds behind. Residues are analyzed for acid, base and water soluble constituents by shaking each with distilled water, 0.1N HCl and 0.1N NaOH.
(335)	Field Test Cells	Wells are installed upstream and downstream of the groundwater flow and an additional well sunk in the test cell to determine the effects on ground water quality. Three lysimeters at different depths are also installed to collect leachate. A series of gas and temperature probes are installed within the test cell. Provisions are also made to evaluate media settling rates.	For test cell construction details, see reference. If, from hydrological studies conducted at the test site, ground water contamination is not possible, only lysimeters are used to monitor and collect leachates. The design of the test cell is determined by several factors, including residue availability. Initial plans are to use small test cells (0.9m x 0.9m x 0.3m). Large cells (30m x 30m x 10m) provide a test of actual disposal impacts in the area where residues are likely to be disposed.

TABLE 27 (continued).

AGENCY/FIRM (REFERENCES)	METHOD	DESCRIPTION	REMARKS
TRC (54)	Runoff Sampling	A weighed portion of the material to be tested is placed in a container with a known volume of distilled water. The resulting mixture is allowed to stand for three days and is then filtered thru a membrane filter (0.3μ). The filtrate is analyzed for species of interest. The media is reweighed and mixed with the same volume of water and the process repeated a number of times. A high liquid to solid ratio (~10 to 1) is used.	Runoff is presumed to be the primary mechanism of waterborne pollutant transport. This test is designed to evaluate leachate potential from material storage piles (e.g. coal, fly ash, etc.). Test data cannot be directly correlated with actual precipitation data, quantity of runoff, and the transport of runoff.
(54)	Runoff Sampling-Field Test Method	Samples are collected by a series of plug collectors (see reference for design. These samplers are driven into the ground at selected locations where runoff will occur (e.g. the base of piles, gullies, etc.). Samplers are changed at regular intervals during a storm. The volume collected in each sampler is recorded and relevant analyses are performed. A gross estimate of flow is made from a knowledge of the total rainfall and soil permeability.	This method is proposed by TRC as a Level 1 method for runoff assessment. This method includes estimating the quantity and measuring the quality of runoff by collection of representative samples. During storms, rainfall intensity and duration should be monitored.
Waterway Experimental Station (WES) (202) (203)	Shake Test	A 1:4 mixture of material and water is prepared. The water used should be saturated prior to the test with CO_2 (pH 4.7). This slurry is then shaken on a wrist action shaker for 1 hour. The sample is centrifuged for 30 minutes at 2500 rpm then filtered using a 0.45μ filter. The leachate is subsequently analyzed for desired constituents.	This test was utilized as a rapid leach test for fixed and raw FGD sludges.

TABLE 27 (continued).

AGENCY/FIRM (REFERENCES)	METHOD	DESCRIPTION	REMARKS
Waterway Experimental Station (WES) (cont.) (173)	Shake Test (Modified Elutriate Test)	A representative sample from the disposal site water column should be collected and analyzed. Sediment samples are taken with a grab sampler or corer and should be representative of the sediment. A mixture of sediment (150ml) and disposal site water (2850 ml) is placed in a 6 liter Erlenmeyer flask (20:1 liquid to solid ratio). A porous diffusion tube is inserted almost to the bottom of the flask such that the mixture is agitated vigorously by a compressed gas for 30 minutes. The flasks are swirled manually at 10 minute intervals to insure complete mixing. After agitation, the mixture is allowed to sit for 60 minutes and is then filtered (0.45μ). This elutriate is analyzed for desired constituents.	This test was designed as a rapid elutriate test for dredged sediments. The test provides information on the chemical compounds released to the water column during disposal of hydraulically dredged material. This test is normally run in triplicate. Aerobic and anaerobic conditions may be simulated by using either oxygen (aerobic) or an inert gas (anaerobic) to mix the samples.
(202) (203)	Column Test	The leaching columns are four inches in diameter (I.D.) and designed to contain a sample volume of ~0.35 cubic feet. The inlet port is ~1" above the top of the sample to maintain a fluid head of that height. Columns are capped with Parafilm to minimize air contamination. Leachate is collected at the bottom of the column and regulated by a stop cock to maintain a fluid velocity of roughly $1x10^{-5}$cm/sec. A three inch layer of polypropylene pellets is placed at the bottom of the column to retard movement of suspended solids from the columns. Prior to loading the columns, all materials were washed with detergent followed by a rinse with dilute HCl. The entire apparatus was pre-leached with deionized water for one week	This leaching test is designed to measure the rate of pollutant migration (from fixed or raw FGD sludges) into an aqueous medium, and is intended to represent field conditions as closely as possible. Concepts for the initial design of this system were extracted in part from a proposed standard method for leachate testing of immobilized radioactive waste solids developed by the International Atomic Energy Agency. A velocity of $1x10^{-5}$cm/sec corresponds approximately to the permeability thru a very fine sand. Boric acid is used to buffer the leaching fluid at a pH of 7.5 - 8.0; boric acid was chosen because of its relative inertness and is used in low concentration so as not to affect the leaching properties of the samples.

TABLE 27 (continued).

AGENCY/FIRM (REFERENCES)	METHOD	DESCRIPTION	REMARKS
Waterways Experimental Station (WES) (cont.) (202)	Column Test (cont.)	at the design flow rate. The samples are weighed, loaded into the columns and initially filled from the bottom with leaching fluid to minimize air entrapment. Two buffered leaching solutions are used – pH 4.5-5.0 and pH 7.5-8.0. Columns are fed from a constant head reservoir. Columns are run in triplicate. Sampling for leachates is conducted over a one year period. Twelve samples are analyzed at total elapsed times of 7, 14, 21, 28, 42, 56, 86, 116, 146, 206, 266 and 356 days. Weekly measurement of temperature, pH, conductivity, and volume of leachate collected, is performed. At the conclusion of the test, the leached media may be analyzed. Columns were packed according to recommendations of chemical fixation processors. No attempt was made to maximize surface area.	Carbon dioxide is used to buffer the leaching fluid to a pH of 4.5-5.0. This should be representative of rainwater which assumes an acidic pH due to its reaction with carbon dioxide. The two leaching fluids represent both sides of the pH scale and should provide some concept of the pH effect on leaching. All materials used for leach fluid distribution are polypropylene or teflon. Mass transport theory specifies a diffusion mechanism between the material surface and the leaching solution. While other reactions may occur (i.e. attenuation), the data as evaluated by laboratory procedures, represent an "effective" diffusivity for a given pollutant. Behavior of these systems are characterized by a stable, monotonically decreasing leach rate which approaches some limiting value. In this sense, the initial leaching period is more critical than the later stages of leaching and is best followed by a logarithmic sampling procedure.
Westinghouse (178)	Shake Test	Deionized water (250ml) is mixed with the spent stone (25g) in a 500 ml flask. The mixture is agitated for 24 hours using an automatic shaker (Eberbach) at 70 excursions per minute at room temperature. This supernatant is filtered (Whatman No. 42 paper) and the filtrate analyzed. This test has been conducted with samples as received and with samples which are finely ground. Shaking may be conducted under aerobic (air atmosphere) or anaerobic conditions (inert atmosphere). Shaking versus non shaking	This test has been used as a rapid test for the evaluation of waterborne pollutant release from FBC spent sorbent. This test has been applied to residues from pressurized and atmospheric FBC units (PER, Westinghouse and Esso Mimiplant units). Similar test results were obtained despite variations in media surface area (i.e. grinding of the sample prior to shake test) and reaction conditions (aerobic and anaerobic atmospheres). Leachates are analyzed for 31 trace elements, pH, specific conductance, and sulfate.

TABLE 27 (continued).

AGENCY/FIRM (REFERENCES)	METHOD	DESCRIPTION	REMARKS
Westinghouse (cont.) (178)	Shake Test (cont.)	procedures have been evaluated.	The following was determined from leach tests on spent FBC residue: (1) Calcium and sulfate dissolution plateaued at concentrations limited by calcium sulfate solubility; (2) The equilibrium calcium and sulfate concentrations were high and exceed current water quality criteria; (3) There was negligible dissolution of magnesium ions; (4) Insignificant amounts of heavy metal ions were leached; (5) The leachates were alkaline (pH 10.6-12.1). Runoff leachates (similar to a column test) show a gradual decrease in pH with the amount of eluant.
	Runoff Test	Deionized water was dripped onto 25 g of spent stone which was manually packed into a cylindrical column (11mm x 213mm). Successive 250ml leachates were collected and analyzed. Flow was controlled by media permeability.	
Roy R. Weston, Inc. (259)	Shake Test	The coal sample is shaken with three solutions - an acidic solution (pH 3,9), a neutral solution (pH 7,1), and a basic solution (pH 10). The procedure is as follows: (1) Samples are dried to a constant weight at 105°C. (2) Twenty grams af the sample are placed in 100ml of water and the pH adjusted to the desired value (HCl and NaOH are used). (3) The mixture is then transferred to a shaker table, which is set at the maximum shake rate for 30 minutes. (4) The supernatant is filtered and the filtrate analyzed for the desired constituents.	This test has been used to assess the environmental impact of leachate generation from coal piles. The results from the test are suggested to represent worst case levels of leachate quality. The results of these shake tests for coal from the Decker Coal Mine are as follows: (1) Acidic conditions - initial pH 3.9 final pH 9. Heavy metal concentrations were negligible (well below proposed EPA standards in 1973). (2) Neutral conditions - initial pH 7.1 final pH 8.5. Again heavy metal concentrations were negligible. (3) Basic conditions: initial pH 10.0, final pH 9.4. Heavy metal concentrations were negligible.
(259)	Column Test	A column (4" I.D. x 36") was packed with coal in 6" layers, ten tamps per layer, yielding a total packed depth of 2.5 feet. A small air pump was connected to the bottom of the test column and air was slowly pumped through the column. 500ml of distilled water was then poured onto the column.	This test is designed to model coal stock pile conditions and possible sulfuric acid production (acid mine drainage) under oxidative conditions. Only leachate pH and volume were measured. Initial leachate pH was determined to be pH 8.5; pH decreased to a final value of pH 8.0.

TABLE 27 (continued).

AGENCY/FIRM (REFERENCES)	METHOD	DESCRIPTION	REMARKS
Roy R. Weston, Inc. (cont.) (259)	Column Test (cont.)	The water percolated through the coal column and collected in a flask, and after measuring the volume pH, the leachate was poured onto the column again (volume was made up to 500ml by adding distilled water). This procedure was repeated a total of 8 times.	The susceptability of coal to oxidation of pyrites to sulfuric acid appears to be a function of the physical form in which pyrite crystals occur in coal.
Illinois State Geological Survey (143)	Attenuation Studies	To evaluate the potential of clay materials for attenuating the various chemical constituents of landfill leachate, leachate was passed through laboratory columns that contained various mixtures of calcium saturated clays and washed quartz sand. Clays used in this study were: kaolinite, montmorillonite, and illite. These clays were purified and the clay minerals present identified by X-ray diffraction techniques. In addition to chemical analysis, exchangeable cations, cation exchange capacity, carbon content, and surface areas were determined for all clays. Leachate used in this study was collected from a sanitary landfill; the collected leachate was stored at 3-5°C and maintained under anaerobic conditions. The leachate was analyzed for chemical constituents. Columns were constructed of 2-inch acrylic tubing. To simulate field conditions, the leachate containers and columns were protected from light. The sand grams were coated with various percentages of clays and uniformly packed in columns (30-40cm depth). The columns were packed to bulk densities approximating natural conditions (~1.8g/cc).	Clay minerals were chosen for study because earth materials containing one or more of these minerals can generally be obtained locally for landfill liners. In addition to clay columns, a column of 100% sand was used as a control. The leachate used in this study was compared to 20 other leachates and found to be reasonably representative, with the exception of phosphate and sulfate which were abnormally low. Chloride, sodium, and water-soluble organic compounds (COD) were poorly attenuated; K, NH_4, Mg, Si, and Fe were moderately attenuated. Heavy metals, such as Pb, Hg, and Zn were strongly attenuated by even small amounts of clay. Of the three clays used in the study, montmorillonite had the highest attenuation capability, followed by illite and then kaolinite. Attenuation was a function of the CEC of the clay mineral, the initial exchangeable cations on the clay, the chemical composition of the leachate, and the pH of the leachate. In this study, precipitation and/or a filtration mechanism appears to be the cause of complete attenuation of heavy metals. This is consistent with analysis of the sectioned columns and the fact that no difference in attenuation was found among the three clays.

TABLE 27 (continued).

AGENCY/FIRM (REFERENCES)	METHOD	DESCRIPTION	REMARKS
Illinois State Geological Survey (cont.)	Attenuation Studies (cont.)	Flow rates were designed to simulate the slow (2 pore volumes per month), saturated, anaerobic flow of leachate. Leachate was passed through the columns for periods of between 6 and 10 months. After leaching of approximately 15 pore volumes was completed, the clay mineral columns were sectioned and the contents analyzed to determine the vertical distribution of chemical constituents in each column.	
University of Ottawa (131)	Attenuation Studies	For each waste, five reactors are placed in series and each prepared by loading with 200g of air-dry soil, bringing the soil to "field capacity" through the addition of ground water, purging the reactor with nitrogen, and sealing from the environment. In the sequence of five reactors per soil, 200ml of liquid waste was added to the first reactor and mixed. The liquid, after chemical equilibration in the reactor had been reached, was then drained from the soil and was passed on to the next of the five reactor in series. An aliquot of the filtrate was taken for chemical analysis following drainage from the first, third, and last reactor. Subsequently, a total of five portions, each of 200ml volume, of groundwater was passed through the five reactor series to evaluate the desorption of contaminants attenuated. The chemical data describing the changes in contaminant concentration during the migration of the liquid waste and desorption water through the dispersed soil reactors were used to calculate: (1) The net attenuation of each contaminant by all processes, including dilution.	The traditional approach to contaminant attenuation with soils has involved soil column experimentation. This method was used to evaluate the attenuation of two liquid industrial wastes in soils using a dispersed soil methodology. Three soils were used in this study. The liquid waste and desorption water, upon being mixed with the moist sample, is diluted initially by the soil moisture. In a field situation, diffusion and dispersion would result in a similar effect; however, the magnitude of the effect would be less. Dispersed soil data is corrected to account for this difference by an empirical factor, F_E(0.71 for this study). The following contaminants were studied: V, TOC, S_2O_3, CNS, Na, Pb, Cd, and Fe. Conclusions reached by this study are: (1) Dilution is an important mechanism for all contaminants. (2) Desorption was exhibited by all contaminants studied and was most prominent for those attenuated primarily by a dilution mechanism. (3) Attenuation data collected from dispersed soil experimentation can be used to project

TABLE 27 (concluded).

AGENCY/FIRM (REFERENCES)	METHOD	DESCRIPTION	REMARKS
University of Ottawa (cont.)	Attenuation Studies (cont.)	(2) The net attenuation, minus the effect of dilution, and (3) The net desorption for each contaminant.	soil water concentrations in a field situation by the use of a correction factor, F_E. (4) The zone of influence of the disposal operations is closely related to the waste-loading. It is postulated that the past practice of waste disposal in small sites may account for the limited environmental impact measured to date.
University of Arizona 131	Attenuation Studies	Ten sorbed trace elements (As, Cd, Cf, Cu, Hg, Ni, Pb, Se, V, Zn) were extracted from soil columns which had been leached with a natural leachate individually spiked with each element. Trace element concentrations were from 70 to 120 ppm. A leaching rate of 1/2 to 1 pore volume per day was continued for ~30 days. Eleven soils representing the seven most prominent orders were used. At the conclusion of the leaching, the soil columns (5x10cm) were segmented into 1 cm sections. Each section was dried and extracted with 0.1 N HCl and water. Two grams of the dried soil were shaken with 20 ml of extractant, centrifuged, and filtered. Both the filtrate and residue were analyzed and a material balance calculated. The effect of solution flux was studied by adding the leachates at various constant flow rates using peristaltic pumps.	Actual mechanisms of sorption and desorption of trace elements on soils have not been identified. This fact, coupled with demonstrations that soils can release pollutants when leached with various solutions, indicates the permanence of land disposal is unknown. A method to evaluate the permanence of ion attenuation is to relate it to extraction efficiency. Natural leaching is best simulated by a mild extractant (e.g., water). Extraction with a harsher reagent provides information as to ionic movement in the soil. Relatively large quantities of sorbed material were extracted with 0.1 N HCl. Furthermore, the more coarse-textured the soil (e.g., sandy soils), the greater the extraction efficiency. The order of extractability with water was: V>Se>As≥Cr>Zn>Ni>Cd>Hg>Cu>Pb. Total amounts of the sorbed ion extracted by water were low, usually less than 3% of the total absorbed. Most of the ion was absorbed on the top 10% of the soil column; thus, the percent extracted does not represent the potential for ion migration because the ions would be re-adsorbed as they move down the column.

RECOMMENDED PROCEDURES FOR LEVEL 1 ASSESSMENT

For Level leachate assessment, use of the shake test is recommended. This method is inexpensive, rapid and will provide a leachate of "worst case" quality. To estimate the quantity of leachate generated the water balance method should be employed. (Note that the water balance method requires a site survey of topographical, geological, hydrological, climatological, and meteorological conditions.) The following general procedure is proposed:

A 10 gm sample (ground to 100/200 mesh) is shaken with 250 ml of eluant at a constant temperature using a wrist-action shaker set at the maximum rate for 48 hours. The mixture is filtered and both the filtrate and residue are analyzed by Level 1 procedures (see Figure 25 and relevant tables in Chapter 3.)

The eluant should simulate natural conditions. This may be done by saturating distilled, deionized water with carbon dioxide under ambient conditions. (An alternative is the use of plain distilled-deionized water.) The solid to liquid ratio has been arbitrarily set at 25:1; what is important, however, is that species saturation not be reached. Thus, this ratio should be confirmed experimentally and adjusted accordingly, if necessary.

The temperature at which this test is conducted should be selected to represent the mean temperature to which the leached material would be exposed. It should be cautioned that wide variations in test temperature may have an unpredictable effect on leachate quality; certain species (e.g., $CaSO_4$, $CaCO_3$, etc.) are more soluble while others (e.g., $MgCO_3$, $MgSO_4$) are less soluble as temperature decreases. As part of a Level 1 leachate assessment, the physical properties of test media should be defined. These properties include particle size analysis, specific gravity, bulk density, dry density, water content, porosity/void ratio, and permeability. Suitable methods are found in reference 313.

Level 1 runoff assessment may be made in the field by collecting runoff in plug collectors. (Plug collector design is discussed in reference 54.) Collectors are driven into the ground at selected locations where runoff will occur, such as at the base of material storage piles, and in natural gullies and channels. During a storm, the collectors are changed at regular intervals (dependent on storm intensity). The volume collected in each plug is recorded and a Level 1 analysis performed on each sample. A gross estimate of flow is made from the amount of total precipitation and the soil permeability in the area between the sampling plug and the receiving water. At this time, a suitable laboratory procedure for runoff assessment cannot be recommended here.

RECOMMENDED PROCEDURES FOR LEVEL 2 ASSESSMENT

Field test cell techniques and column tests are suggested as options for Level 2 assessment. The former, being exposed to actual rather than a simulated field environments, represent leachate quantity and quality more

accurately. Major disadvantages associated with field test cells, however, are the lengthy test periods required, and the expense of construction and monitoring. Column tests, while suffering from the disadvantage of having to simulate field conditions, have the significant advantages of relatively short test periods (typically 1-2 years) and relatively low construction costs. (Advantages and disadvantages of both methods are discussed at greater length in Tables 25 and 26.)

The specific objectives of each particular Level 2 assessment of leaching will determine the design parameters and procedures for either test. Issues germane to Level 2 assessment include:

- Attenuation of the leachate (including attenuation as a control method, e.g., clay liners);
- Disposal site selection;
- Disposal method selection (e.g., landfill, ocean dumping, etc.); and
- Necessity for further treatment prior to disposal/utilization.

Because each issue will dictate the ultimate assessment procedure, and each use may be different, only general guidelines for Level 2 test design can be presented within this document. With proper selection of test variations within Tables 25 and 26, a procedure to assess water-borne fugitive impact for each site can be designed.

Leachate generation and monitoring for either field test cells or column tests should not be terminated until steady-state conditions are reached. For column tests, past experience with FGD sludges indicates that test durations of one to two years may be expected; field test cells, depending on local site conditions, will require longer (order of magnitude) test periods.

For column tests, eluant composition should simulate natural conditions. A satisfactory synthetic eluant may be prepared by saturating distilled-deionized water with carbon dioxide and oxygen under ambient conditions. The temperature at which leaching is conducted should be held constant and should reproduce expected field conditions. Sample compaction and permeability should also be representative of field conditions. Flow rate through the column, which is a function of these parameters, should be maintained constant. As actual field flow is difficult to assess, an arbitrary flow rate of 1×10^{-5} cm/sec, corresponding to the flow through very fine sand, may be used.

To estimate total leachate production, the water balance method may be used. All leachate, whether generated from field test cells or column tests, should be analyzed by Level 2 analytical techniques (see Figure 26 and relevant tables). All solid materials to be tested will be physically characterized by Level 2 procedures and, in addition, the physical properties listed in the preceding Level 1 discussion will be determined. Plug collectors may again be used for runoff collection for Level 2 assessment.

CHAPTER 5

SAMPLING AND ANALYSIS COSTS

INTRODUCTION

The intent of this chapter is to provide a mechanism for estimating assessment program implementation costs. Specifically, estimates of the total costs for sampling and analysis of the four generic FBC systems under consideration are presented, both for Level 1 and Level 2, using methodology developed previously by EPA contractors (references 148 and 317).

Costs associated with the following areas have been excluded from the overall sampling and analytical cost estimates:

1) Biological testing;
2) Sampling of air-borne fugitives;
3) Sampling of water-borne fugitives; and
4) Standard fuel analysis (i.e., ultimate, proximate).

As noted in Chapter 2, biological testing procedures have not been completely identified at this time and thus, costs associated with bioassay cannot be defined. Because of the site specific (and plant design specific) nature of air-borne fugitive emissions, no rational cost estimate for fugitive sampling could be developed for the generic FBC systems. Methodology for the sampling of water-borne fugitives has not been finalized at this time (see Chapter 4 discussion), which precludes the presentation of meaningful cost data. Finally, results of standard fuel analyses are assumed to be available as part of the process operating data.

The primary sources of unit cost data presented in this chapter are references 148 and 317. It should be noted that the costs provided in these references were generated in 1975 and may not represent costs prevailing at the time of publication of the present document. Specific costs for sampling rely principally on data obtained from commercial organizations routinely engaged in source sampling. Analytical costs are based on commercial quotes whenever possible. Estimates for semi- and non-routine analyses were provided by various sources including EPA (various branches), EPA contractors (SRI, BMI, MRI, RADIAN), academic sources, and various commercial testing laboratories. Capital costs are not considered in the development of overall estimates, based on the assumption that all required sampling and analytical equipment is available.

The differences that are evident in the Level 1 and Level 2 unit cost data reflect the different goals associated with each assessment phase. Level 1 is a survey phase in which all system influents and effluents are screened under the following general guidelines:

1) Sampling is done from a conveniently available location such that a reasonably characteristic sample may be obtained;

2) No replications are planned for either sampling or analysis; and

3) Chemical analysis is semi-quantitative and limited to elemental analysis, class identification for organic compounds, identification of inorganic gases, and field tests for various water quality parameters.

The goal of the Level 2 effort is a more accurate, quantitative identification of specific components in selected streams and the determination of associated emission rates. Sampling procedures are, in general, refinements of those used in Level 1. Chemical analysis is expanded to include identification of specific inorganic and organic compounds and a more complete physical characterization of solids. Finally, replication in both sampling and analysis is done.

As discussed in Chapter 2, the design of an optimized Level 2 program is based on results obtained from the Level 1 effort. Not having the benefit of Level 1 output, the following assumptions have been made to enable the development of an overall sampling and analysis cost estimate for Level 2.

1) Each stream addressed in Level 1 would again be considered at Level 2 (i.e., no stream elimination); and

2) A complete analysis will be made at Level 2 for each stream considered (i.e., no elimination of stream components).

Obviously, since this represents a "worst case" situation, the figure derived should be regarded as an upper bound rather than an actual total cost for Level 2.

SAMPLING COST DATA

The basic sampling strategy, for costing purposes, has been organized around four* general sampling categories that are associated with FBC and other technologies. Of these four categories, the sampling of particulates from ducted gas streams (e.g., stacks) requires the greatest effort, estimated at 12 man-hours and 64 man-hours, respectively, for Levels 1 and 2. For each of the remaining three categories (liquid, solid, and ducted gas sampling), sample acquisition time is estimated at one or two man-hours at Level 1 and one and one-half man-days at Level 2. The estimates include equipment preparation at the site, equipment operation, dissassembly, and clean up time. Level 2 values include an allowance for sample replication time. At Level 1, samples are taken without replication or compositing. To

*As mentioned previously, sampling of air-borne and water-borne fugitives has not be costed.

assign a cost to these procedures, it has been assumed that one man-day of fully burdened labor, including $70 per diem and other general direct costs, is equal to $250.

A summary of sample acquisition times and associated costs is presented below, according to sample type.

TABLE 28. SAMPLE ACQUISITION COST DATA

Sample Type	Man-hours		Cost (10^3 $)	
	Level 1	Level 2	Level 1	Level 2
Particulate	12	64	.375	2.0
Gas	2	12	.063	.375
Liquid or Slurry	1	12	.032	.375
Solid	1	12	.032	.375

The costs associated with sampling site preparation are a function of specific plant design. Therefore, for generic systems, rough estimates, at best, can be assigned to these costs. For Level 1, it is assumed that sampling access is available at convenient stream locations. An overall charge of $250 per stream (for all stream types) is assessed to account for nominal site preparation such as cutting sampling ports, installation of taps for liquid sampling, providing electricity, etc.

Level 2 site preparation charges become a function of stream type and are higher than their Level 1 counterparts due to the added costs of installing generally more sophisticated sampling equipment in an optimum location. For example, Level 2 site preparation costs may involve erection of complex scaffolding, cutting additional ports for traversing, installation of mechanical samplers for solids, and the use of automatic liquid stream samplers, etc.

Implicit in the site preparation cost figures for Level 1 and Level 2 is that no special provisions for sampling (e.g., ports) have been incorporated into the overall design. As such, the site preparation cost figures should be regarded as upper bound values.

Level 1 and Level 2 site preparation costs are summarized below according to sample type:

TABLE 29. SITE PREPARATION COST DATA

Sample Type	Cost (10^3 $)	
	Level 1	Level 2
Particulate	.25	25.0
Gas	.25	8.0
Liquid or Slurry	.25	2.5
Solid	.25	10.0

ANALYTICAL COST DATA

The multi-media overall analytical schemes for Levels 1 and 2, introduced in Chapter 3, are repeated here in Figures 33 and 34 with unit costs for each analysis area superimposed. It should be re-emphasized that a complete analysis on all stream samples is assumed at Level 2. "Complete analysis" implies that each analytical area indicated in Figure 34 for a given media is addressed and, where applicable, that all components screened within a given analysis area at Level 1 are again investigated, individually, at Level 2. In terms of analytical costs per stream at Level 2, this of course represents a "worst case" or upper bound.

Each analysis area shown in Figures 33 and 34 has been assigned a unit cost and is discussed briefly in the following paragraphs.

At Level 1, Spark Source Mass Spectroscopy with photo-plate detection is employed for elemental analysis. Seventy-six elements are scanned at a cost of $125 per sample. A number of elements (antimony, arsenic, carbon, hydrogen, mercury, nitrogen, and oxygen) are not satisfactorily measured by SSMS and are analyzed by wet chemical procedures at a cost of $100 per sample. Atomic Absorption Spectroscopy is the recommended technique for elemental analysis at Level 2. Since "complete analysis" has been assumed for Level 2 costing purposes, however, this corresponds to the analysis of 76 elements. The use of AAS for each element in this case would be prohibitively expensive. SSMS with an ion-PMT detector would be a more economical choice which would still satisfy Level 2 requirements. The cost per sample for elemental analysis using this technique is $400.

Organic analysis at Level 1 consists of physical separation of organic samples into eight fractions on the basis of polarity, followed by characterization by functional group analysis using IR spectroscopy at a cost of $250 per sample. Organic analysis at Level 2 may entail separation of each of the initial eight fractions into as many as 50 fractions using High-Performance Liquid Chromatography, with subsequent determination of specific compounds within each fraction by suitable techniques (e.g., GC, GCMS, NMR, etc.). The total cost for Level 2 organic analysis based on eight initial fractions, each of which is then separated into approximately 50 additional fractions, is $4000 per sample (i.e., $500 per fraction).

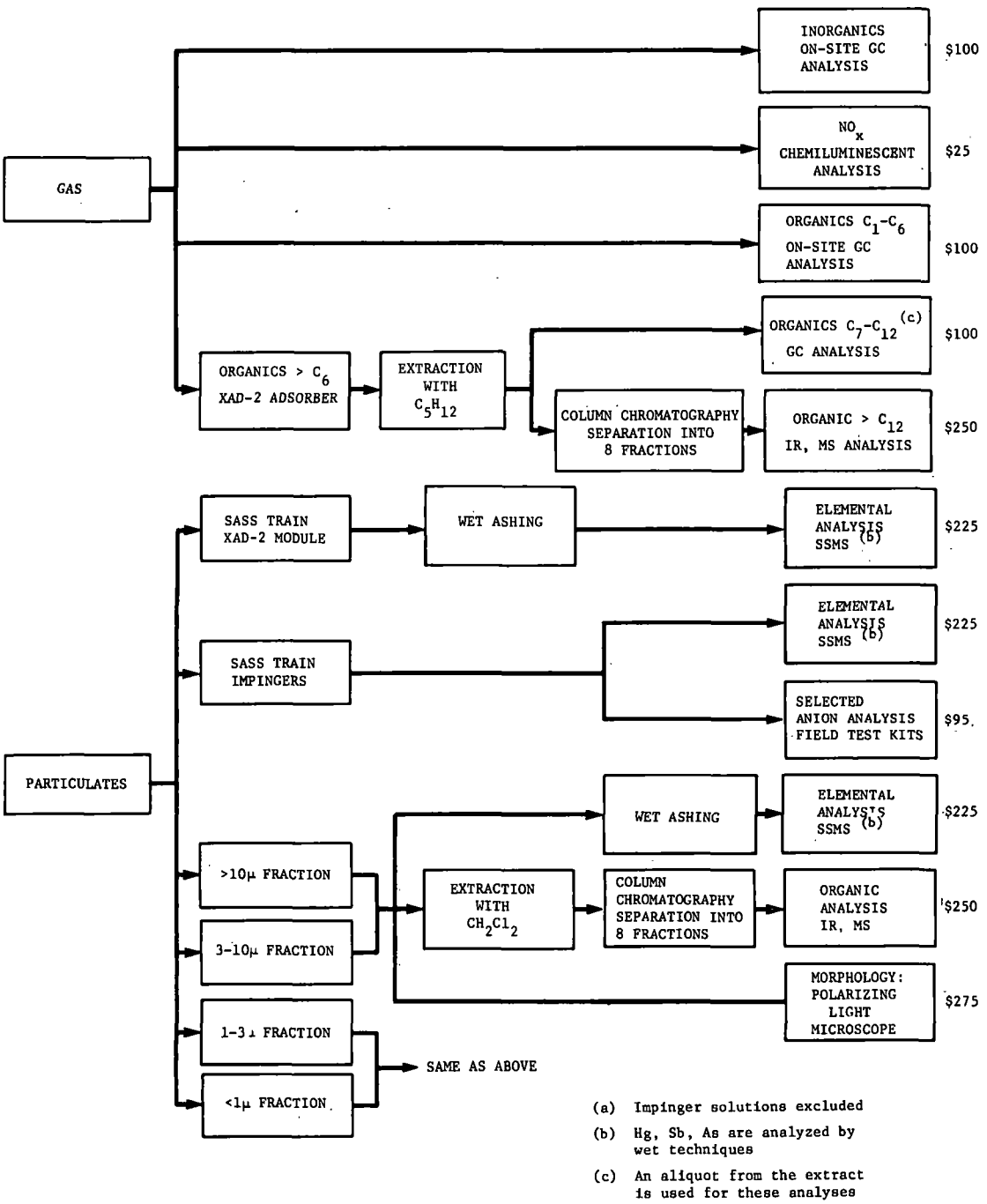

Figure 33. Analytical unit cost data-Level 1

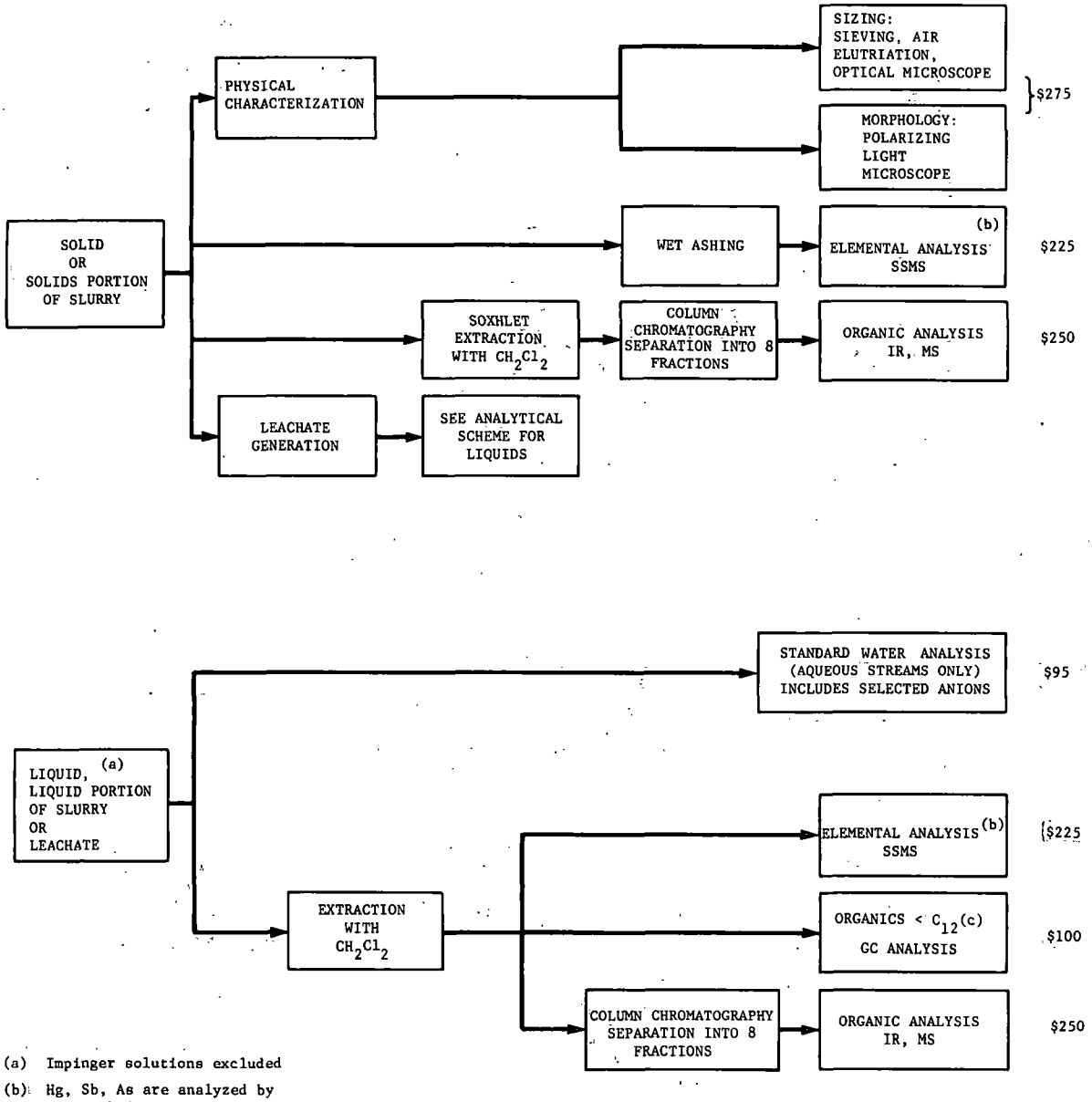

(a) Impinger solutions excluded

(b) Hg, Sb, As are analyzed by wet techniques

(c) An aliquot from the extract is used for these analyses

Figure 33. Analytical unit cost data-Level 1 (concluded)

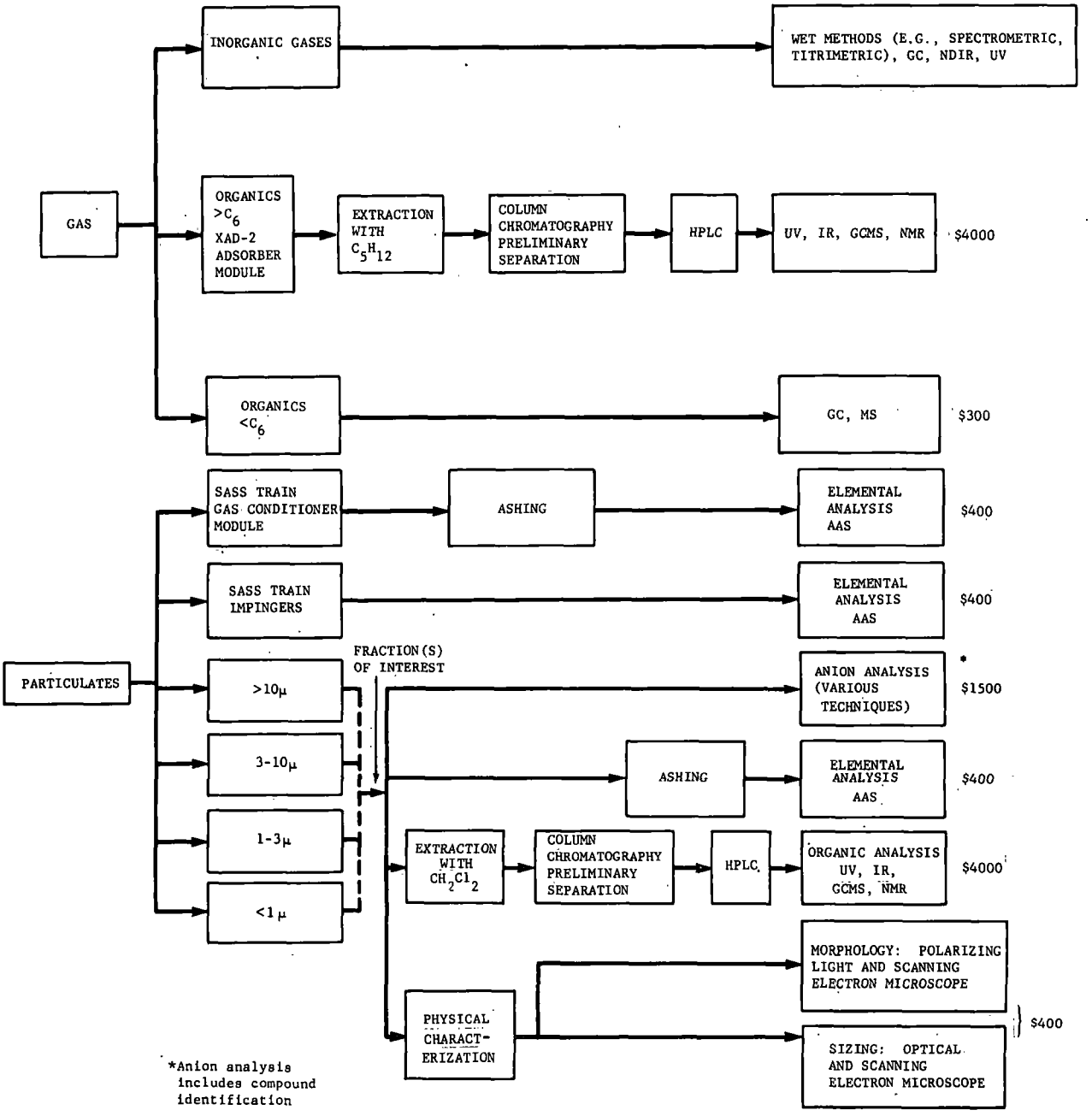

Figure 34. Analytical unit cost data-Level 2

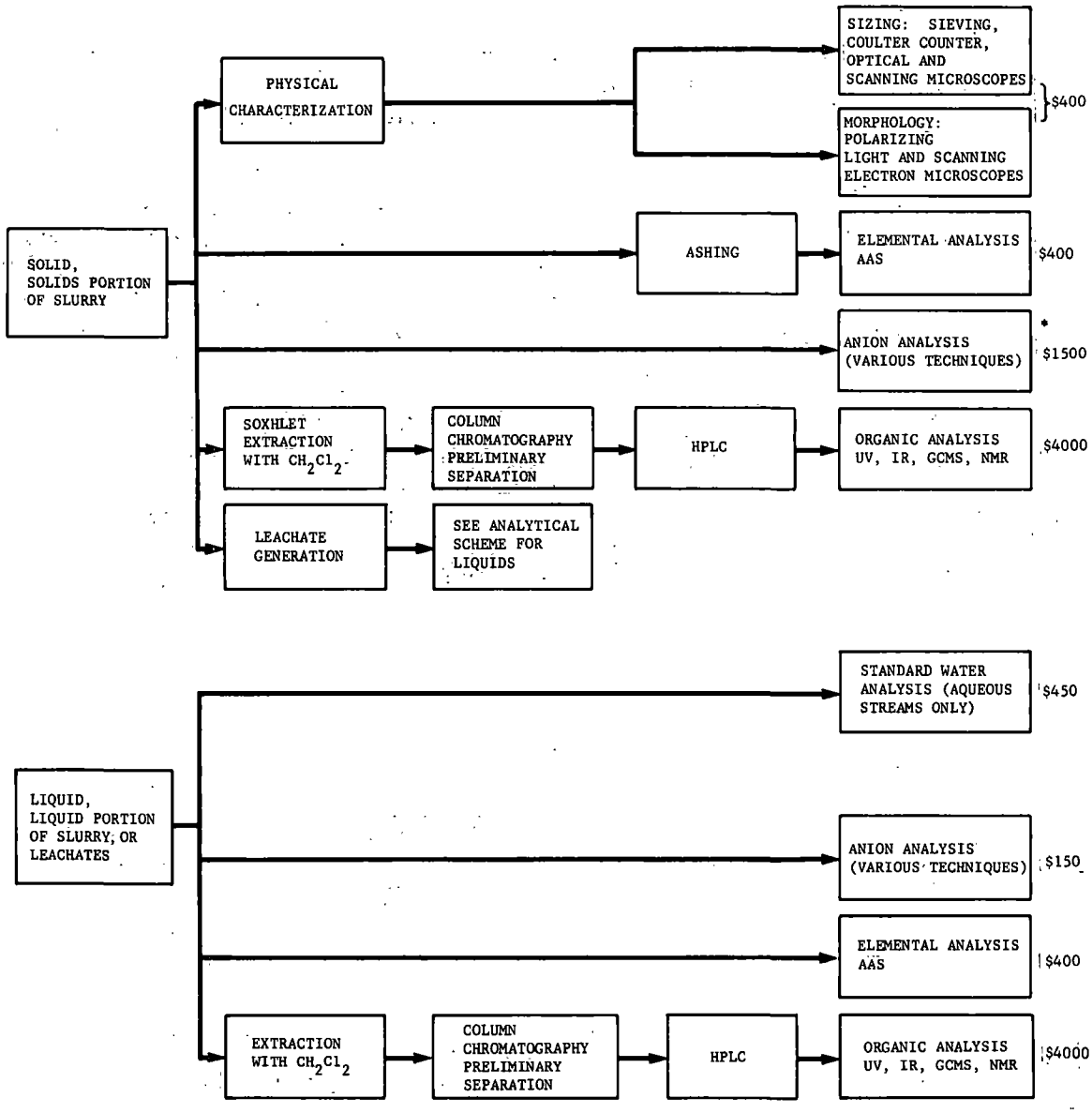

Figure 34. Analytical unit cost data-Level 2 (concluded)

Gaseous samples are analyzed for inorganic components (except NO_x) and organic components ($<C_6$) using on-site gas chromatography. The cost per sample for each type of analysis (i.e., inorganic and organic) is estimated at $100. Level 1 NO_x analysis by chemiluminescence is estimated to cost $25 per sample. At Level 2, analysis for the inorganic and organic components considered at Level 1 would be accomplished by a variety of techniques, including gas chromatography. The estimated cost for each type of analysis (i.e., inorganic and organic) is $300 per sample.

At Level 1, anions are analyzed (indirectly) using output from the SSMS elemental analysis which was previously costed. Anion analysis at Level 2 is accomplished by various techniques at an estimated cost of $150 per sample.

As indicated in Figures 33 and 34, aqueous liquid samples undergo a standard water quality analysis at Levels 1 and 2. The Level 1 analysis is performed on-site using field equipment while at Level 2 the analysis is performed in a commercial laboratory to achieve increased reliability and accuracy. The Level 1 and Level 2 costs are estimated at $95 and $450 per sample, respectively.

Level 1 morphological examination of collected particulate will include microscopic examination of shape, size distribution, and surface features at a cost of $275 per sample. Level 2 physical characterization is expanded and refined to include sizing by sieve analysis and air elutriation techniques (e.g., Coulter Counter). Morphological data are obtained using optical and scanning electron microscope methods as well as polarizing light microscopy. Level 2 physical characterization costs are estimated at $400 per sample.

A summary of analytical costs by sample type, for Levels 1 and 2, is presented below. These costs are based on the overall analytical schemes of Figures 33 and 34 and the aforementioned unit cost data.

TABLE 30. ANALYTICAL COST DATA

Sample Type	Cost (10^3 $)	
	Level 1	Level 2*
Particulate	2.045	26.000
Gas	0.575	4.600
Liquid (or liquid portion of slurry)	0.670	5.000
Solid (or solid portion of slurry)	0.750	6.300

*assumes "complete analysis" at Level 2

ADDITIONAL COSTS

In addition to the costs incurred for sample acquisition, sampling site preparation and analysis, the following costs must also be included in an overall estimate:

1) Travel expenses for the sampling crew;

2) Equipment preparation and freight charges; and

3) Report preparation.

Travel expenses for each sampling crew member are based on a $300 round trip airfare (1500 miles one-way) and 16 hours travel time at $250 per man-day. It is assumed that the crew required for the Level 1 and Level 2 efforts consists of 6 men and 11 men, respectively, bringing the total travel expense to $4800 for Level 1 and $8800 for Level 2.

Equipment preparation and freight charges are estimated at $200 and $1000, respectively, for Levels 1 and 2.

The cost of reporting results is estimated at $250 for each level, assuming that 40 man-hours of senior professional time are required (the equivalent of $1500) along with an additional $1000 of computation time.

A summation of the three aforementioned costs for each assessment phase yields total additional costs of $7500 for Level 1 and $12,300 for Level 2.

ASSESSMENT COSTS FOR GENERIC FBC PROCESSES

The total costs of Level 1 and Level 2 assessment are presented in Table 32 for each generic process category. These values have been calculated by multiplying the sampling plus analysis unit cost for each stream (or sample) type by the number of streams sampled of that type, summing the resulting products, and adding on the additional costs described earlier.

It should be noted that the total cost estimates reflect the exclusions and the Level 2 assumptions discussed in the introduction to this chapter.

The Level 1 and Level 2 assessment costs for process categories I through III are $21.6 K and $212.6 K, respectively, while for Category IV values of $43.1 K and $377.4 K have been estimated.

TABLE 31. TOTAL ASSESSMENT COSTS FOR GENERIC FBC PROCESSES

STREAM TYPE	NUMBER OF SAMPLED STREAMS		UNIT COST* PER STREAM (10^3\$)		TOTAL COSTS CATEGORIES I-III (10^3\$)		TOTAL COSTS CATEGORY IV (10^3\$)	
	CATEGORIES I-III	CATEGORY IV	LEVEL 1	LEVEL 2	LEVEL 1	LEVEL 2	LEVEL 1	LEVEL 2
Ducted Gas (particulates)	1	3	2.670	53.000	2.670	53.000	8.010	159.000
Ducted Gas (gaseous components)	1	3	.888	12.975	.888	12.975	2.664	38.925
Liquid	1	1	.952	7.875	.952	7.875	.952	7.875
Liquid (high solids content) or Slurry	2	3	1.702	14.175	3.404	28.350	5.106	42.525
Solid	6	7	1.032	16.675	6.192	100.050	7.224	116.725
				Sums	14.106	200.250	35.582	360.050
				Additional Costs	7.5	12.3	7.5	12.3
				TOTALS	21.606	212.550	43.082	377.350

*unit cost is sum of site preparation, sampling and analysis costs.

REFERENCES

1. Acurex Aerotherm, "High Volume Stack Sampler--HVSS," sales literature, Mountain View, California, March 1976.

2. Acurex Corporation, "Source Assessment Sampler Preliminary Information," sales document, Aerotherm Division.

3. Ahearn, Arthur J., editor, Trace Analysis by Mass Spectrometry, Academic Press, New York, 1972.

4. Air Pollution Control Office, "Air Quality Criteria for Nitrogen Oxides," U.S. Environmental Protection Agency, Publication AP-84, January 1971.

5. American Chemical Society, Chemistry in 1972, American Chemical Society, Washington, D.C., 1973.

6. American Public Health Association Intersociety Committee, "Methods of Air Sampling and Analysis," 1972.

7. American Society for Testing and Materials, "Compilation of Gas Chromatographic Data," ASTM Committee E-19m ASTM Data Series

8. American Society for Testing and Materials, Gaseous Fuels; Coal and Coke, Part 19, Philadelphia, 1972.

8.1	D95
8.2	D129
8.3	D197
8.4	D271
8.5	D280
8.6	D346
8.7	D410
8.8	D482
8.9	D512
8.10	D513
8.11	D514
8.12	D515
8.13	D516
8.14	D992
8.15	D1007
8.16	D1069
8.17	D1126
8.18	D1179
8.19	D1246
8.20	D1252
8.21	D1253
8.22	D1254

8.23 D1339
8.24 D1385
8.25 D1551
8.26 D1552
8.27 D1756
8.28 D1757
8.29 D1888
8.30 D1946
8.31 D1946
8.32 D2036
8.33 D2234
8.34 D2361
8.35 D2492
8.36 D2576
8.37 D2579
8.38 D2795
8.39 D2908
8.40 D2972
8.41 D2972
8.42 E11
8.43 D431

9. American Society for Testing and Materials, "Instrumentation for Monitoring Air Quality," ASTM Special Technical Publication 555, no year given.

10. American Society for Testing and Materials, Petroleum Products--Fuels, Solvents, Burner Fuel Oils, Lubricating Oils, Cutting Oils, Lubricating Greases, Hydraulic Fluids, Part 17, Philadelphia, 1972.

10.1 D2267
10.2 D2427

11. American Society for Testing and Materials, Petroleum Products--Measurements and Sampling, Liquified Petroleum Gases, Light Hydrocarbons, Plant Spray Oils, Aerospace Materials, Sulfonates, Crude Petroleum, Petrolatum, Wax, Graphite, Part 18, Philadelphia, 1972.

12. American Society for Testing and Materials, "Project Threshold," Progress Report, February 1973.

13. American Society for Testing and Materials, Water: Atmospheric Analysis, Part 23, Philadelphia, 1972.

13.1 D510
13.2 D860
13.3 D1192

13.4 D1426
13.5 D1496
13.6 D1605
13.7 D2009
13.8 D2036
13.9 D2928
13.10 D3226
13.11 D1426
13.12 D889
13.13 D1589

14. American Society for Testing and Materials, Water; Atmospheric Analysis, Part 23, Standard D1608-60, Philadelphia, 1975.

15. American Society for Testing and Materials, Water; Atmospheric Analysis, Part 23, Standard D2682-71, Philadelphia, 1975.

16. American Society for Testing and Materials, Water; Atmospheric Analysis, Part 23, Standard D2820-69T, Philadelphia, 1975.

17. American Society of Mechanical Engineers, "Determining Dust Concentration in a Loss Stream," Power Test Code 17," 1957.

18. American Society of Mechanical Engineers, Power Test Code 4.2 - Coal Pulverizers, Book C6, 1969.

19. American Society of Mechanical Engineers, Power Test Code 18 - Determining the Properties of Fine Particulate Matter, Book D30, 1965.

20. Anbar, Michael and Gilbert A. St. John, "Field Ionization-Field Desorption Source for Nonfragmenting Mass Spectrometry," Analytical Chemistry 48 (1): 198-203, January 1976.

21. Anderson, D. H., J. H. Evans, J. J. Murphy, and W. W. White, "Determination of Mercury by a Combustion Technique Using Gold as a Collector," Analytical Chemistry 43 (11): 1511-1512, September 1971.

22. Anderson 2000, In., Advertising Literature, Atlanta, Georgia.

23. Angino, E. E., and G. K. Billings, Atomic Absorption Spectrometry in Geology, Elsevier Publishing Co., New York, 1967.

24. Archer, J. S., "On-Line Analysis of Wet Combustion Gases by Gas Chromatography," J. of the Inst. of Fuel, Feb. 1970.

25. Arthur D. Little Co., "Development of Methods for Sampling and Analysis of Particulate and Gaseous Fluorides from Stationary Sources", NTIS order #PB213313, November 1972.

26. Babu, Suresh P., Trace Elements in Fuel - Advances in Chemistry Series No. 141, American Chemical Society, Washington, D. C., 1975.

27. Bache, Carl A., and Donald J. Lisk, "Gas Chromatographic Determination of Organic Mercury Compounds by Emission Spectrometry in a Helium Plasma - Application to the Analysis of Methylmercuric Salts in Fish", Analytical Chemistry 43(7) 950-952, June 1971.

28. Beckman Instrument Company, "Sales Literature on Model 86S Infrared Analyzer".

29. Bailey Meter Company, "Bailey Receiver-Recorder and Plug-In Modules", Bailey Products Specification E12-5, 1958.

30. Bankert, S. F., S. D. Bloom, and G. D. Sauter, "Trace Element Analysis in Water by Proton Activation", Analytical Chemistry 45 (4): 692-697, April 1973.

31. Basu, P. K., et al, "A Three-Column, Three-Detector Gas Chromatographic Method for the Single-Sample Analysis of a Mixture of S_1Cl_4, Cl_2, AR, N2, Co and CO_2", J. of Chrom, Sci., Vol. 10, 479-480, July 1972.

32. Battelle Columbus Laboratories, "Chemical Composition of Particulate Air Pollutants from Fossil-Fuel Combustion Sources", March 19, 1976.

33. Beckman Instruments, Inc., "Process Infrared Analyzer Beckman Model 864", Product Information Bulletin 4129C, Process Instruments Division.

34. Bee, R. et al., "Coke Oven Charging Emission Control Test Program - V.II-Supporting Appendices", MITRE Corp., July 1974.

35. Begroche, C. and T. H. Risby, "Determination of Metals in Atmospheric Particulates Using Low Volume Sampling and Flameless Atomic Absorption Spectrometry", Analytical Chemistry 47 (7): 1014-1045, June 1975.

36. Bernas, B., "Dissolution Procedure for Silicate Minerals", Analytical Chemistry 40 (7): 1682-1686, July 1968.

37. Berger, A. W., et al, "Review and Statistical Analysis of Stock Sampling Procedures for the Sulfur and Nitrogen Oxides in Fossil Fuel Combustion", pages 70-73, Presented at Annual Meeting of the Air Pollution Control Association, 1970.

38. Bethea, Robert M., "Comparison of Hydrogen Sulfide Analysis Techniques", Journal of the Air Pollution Control Association 23 (8): 710-713, August 1973.

39. Bethea, Robert M. and M. C. Meador, "Gas Chromatographic Analysis of Reactive Gases in Air", Journal of Chrom. Sci., Vol. 7, 655-664, November 1969.

40. Bethea, Robert M., "Improvements in Colorimetric Analysis of Chlorine and Hydrogen Fluoride by Syringe - Sampling Technique," Environmental Science and Technology, 8(6): 587-588, June 1974.

41. Bigg, E. K., A. Ono, and Judith A. Williams, "Chemical Tests for Individual Submicron Aerosol Particles", Atmospheric Environment (G. Britain) 8: 1-13, 1974.

42. Billings, Charles E., Anthony M. Sacco, Wayne R. Matson, Reginaly M. Griffin, William R. Coniglio, and Robert A. Harley, "Mercury Balance on a Large Pulverized Coal-Fired Furnace", Journal of the Air Pollution Control Association 23 (9): 773-777, September 1973.

43. Black, C. A., editor, Methods of Soil Analysis, Part 2, Chemical and Microbiological Properties, American Society of Agronomy, Inc., Madison, Wisconsin, 1965, pp. 933-958.

44. Black, Francis M., and Sigsby, John E., "Chemiluminescent Method for NO and NO_x (NO + NO_x) Analysis", Environmental Science and Technology 8 (2): 149-151, February 1974.

45. Black, Marilyn S. and Robert E. Sievers, "Environmental Analysis Problems Created by Unexpected Volatile Beryllium Compounds in Various Samples", Analytical Chemistry 45(a): 1773-1775, August 1973.

46. Bogen, J., "Trace Elements in Precipitation and Cloud Water in the Area of Heidelberg, Measured by Instrumental Neutron Activation Analysis", Atmospheric Environment (G. Britain) 8:835-844, 1974.

47. Bond, Richard G., and Conrad P. Straub, Handbook of Enviornmental Control Volume 7: Air Pollution, CRC Press, Cleveland, 1972.

48. Bonbel, R. W., "A High Volume Stack Sampler", Air Pollution Control Association Journal, 21 (12), December 1971.

48. Bonbel, R. W., "A High Volume Stack Sampler," Air Pollution Control Association Journal, 21 (12), December 1971.

49. Bonbel, R. W., et al., "Particulate Sampling Has Gone Automatic," Air Pollution Control Association Journal, June 1975.

50. Benchley, D. L., C. D. Turkey, and R. F. Yzrmac, Industrial Source Sampling, Ann Arbor Science Publishers, Inc., 1974.

51. Bretthaver, Erich W., A. Alan Moghissi, Susan S. Snyder, and Neil W. Mathews, "Determination of Submicrogram Amounts of Mercury by the Oxygen Bomb Combustion Method," Analytical Chemistry 46 (3): 445-446, March 1974.

52. Brink, J. A., et al., "Particle Size Measurements with Cascade Impactors," In 65th Annual Meeting of American Institute of Chemical Engineers, New York, November 1972.

53. Brocco, D., V. Depalo, and M. Possanzini, "Improved Chromatographic Evaluation of Alkanes in Atmospheric Dust Samples," Chromatog., Vol. 86, No. 1, 234-238, November 1973.

54. Brookman, Gordon T., "Evaluation of Water-Borne Fugitive Emissions," Draft Copy, The Research Corporation, 1976.

55. Brooks, E. F., et al., "Continuous Measurement of Total Gas Flow Rate From Stationary Sources," TRW System Group, EPA 650/12-75-020.

56. Brooks, E. F., et al., "Continuous Measurement of Total Gas Flow Rate from Stationary Sources," TRW System Group, EPA 650/12-75-020, February 1975.

57. Bruner, Fabrizio, Arnaldo Liberti, Massimiliano Possanzini, and Ivo Allegrini, "Improved Gas Chromatographic Method for the Determination of Sulfur Compounds at the PPB Level in Air," Analytical Chemistry 44 (12): 2070-2074, October 1972.

58. Bunch, E. E., and D. A. Gryvnak, "Infrared Gas Filter Correlation Instrument for in-situ Measurement of Gaseous Pollutants," Philco-Ford Corp., EPA-165/012-74-094, December 1974.

59. Business Week, "Measuring Stack Gas Pollutants on the Spot," June 1, 1974.

60. Byers, R. L. and B. B. Crocker, Stack Samplings and Monitoring, American Institute of Chemical Engineers, New York, 1972.

61. Cambi, F., "Sampling, Analysis, and Instrumentation in the Field of Air Pollution," World Health Organization Monograph Series #46, Geneva, 1961.

62. Chandler, C. D., H. M. McNair, "High Pressure Liquid Chromatography Equipment," Journal of Chrom. Sci., Vol. 11, 468-475, September 1973.

63. Chau, A. S. Y. and R. C. J. Sampson, "Electron Capture Gas Chromatographic Methodology for the Quantitation of Polychlorinated Biphenyls: Survey and Compromise," Environmental Letters, 8 (2), 89-101, 1975.

64. Chain, E. S. K., and Foppe B. Dewalle, "Compilation of Methodology for Measuring Pollution Parameters of Landfill Leachate," University of Illinois Department of Civil Engineering, EPA-600/3-75-011, October 1975.

65. Chilov, S., "Determination of Small Amounts of Mercury," Talanta (Kodak) 22: 205-232, January 1975.

66. Chun, Kyong C., and James E. Quon, "Capacity of Ferric Oxide Particles to Oxidized Sulfur Dioxide in Air," Environmental Science and Technology, Vol. 7, No. 6, pp. 532-538, June 1973.

67. Colket, Meredity B., Naegeli, David W., Dryer, Frederick L., and Glassman, Irvin, "Flame Ionization Detection of Carbon Oxides and Hydrocarbon Oxygenates," Environmental Science and Technology 8 (1): 43-44, January 1974.

68. Combustion Power Company, Inc., "CPU-400 Coal Combustion Hot Corrosion Test Program," Combustion Power Company, Inc., Menlo Park, Ca., ERDA E (49-18) - 1536, TR 75-9-122, October, 1975.

69. Combustion Power Company, Inc., "Energy Conversion from Coal Utilization CPU-400 Technology," Combustion Power Company, Inc., Menlo Park, Ca., TR-75-105.

70. Cooper, H. B. H., Jr., and A. T. Resszno, Jr., "Source Testing for Air Pollution Control," Environmental Science Services, 1971.

71. Cooper, John C., Birdseye, Harvey E., and Donnelly, Russell, Jr., "Cryogenic Separation of Methane from Other Hydrocarbons in Air," Environmental Science and Technology 8(7): 671-673, July 1974.

72. Coulson, D. C., et al., "Survey of Manual Methods of Measurements of Asbestos, Beryllium, Lead, Cadmium, Selenium, and Mercury in Stationary Source Emissions," Stanford Research Institute, September 1973.

73. Cowherd, C., et al., "Development of Emission Factors for Fugitive Dust Sources," Midwest Research Institute, EPA-450/3-74-037, June 1974.

74. Craig, J. W. T., G. L., Johnes, Z. Kowszun, G. Moss, J. H. Taylor, and D. E. Tisdall, "Chemically Active Fluid-Bed Process for Sulphur Removal During Gasification of Heavy Fuel Oil - Second Phase," Esso Research Centre, Abingdon, Berkshire, England, NTIS Publication No. PB-240 632, November 1974.

75. Craig, J. W. T., G. L. Johnes, G. Moss, J. H. Taylor, "Study of Chemically Active Fluid Bed Gasifier for Reduction of Sulphur Oxide Emissions," Esso Research Centre, Abingdon, Berkshire, England, February 1971.

76. Craig. N. L., A. B. Harker and T. Novakov, "Determination of the Chemical Status of Sulfur in Ambient Pollution Aerosols by X-Ray Photoelectron Spectroscopy," Atmospheric Environment 8:15-21, 1974.

77. Crawford, A. R., et al., "Determination of the Magnitude of SO_2, NO, CO_2 and O_2 Stratification in the Ducting of Fossil Fuel Fired Power Boilers," Exxon Research and Engineering, June 1975.

78. Crittenden, Barry D. and Ronald Long, "Diphenylene Oxide and Cyclopentacenaphtylenel(s) in the Ducting of Fossel Fuel Fired Power Boilers," Exxon Research and Engineering, June 1975.

79. Cropper, F. R., and Kaminsky, S., "Determination of Toxic Organic Compounds in Admixture in the Atmosphere by Gas Chromatography," Analytical Chemistry, Vol. 35, No. 6, pp. 735-743, May 1963.

80. Dams, R., J. A. Robbins, K. A. Rahn, and J. W. Winchester, "Non-Destructive Neutron Activation Analysis of Air Pollution Particulates," Analytical Chemistry 42 (8): 861-866, July 1970.

81. Davison, Richard L., David F. S. Natusch, John R. Wallace, and Charles A. Evans, Jr., "Trace Elements in Fly Ash-Dependence of Concentration on Particle Size," Environmental Science and Technology ((13): 1107-1113, December 1974.

82. Dean, J. A. and Rains, T. C., Flame Emission and Atomic Adsorption Spectrometry, Vol. 2, Components and Techniques, Marcel Dekker, Inc., N. Y., 1971.

83. Debrun, J. L., J. N. Barradon, and p. Benaben, "Irradiation of Elements from Z=3 to Z=42 with 10-MeV Protons and Application to Activation Analysis," Analytical Chemistry 48 (1): 167-172, January 1976.

84. Dee, A. Martens, H. H., Merrill, C. I., Nakamura, J. T., "New Manual Method for Nitrogen Oxides Emission Measurement," Analytical Chemistry 45 (8): 1477-1481, July 1973.

85. Demski, R. J., R. B. Sneddend, and A. R. Curio, "Bureau of Mines Test of Fluidized-Bed Combustor," Pope, Evans and Robbins, Alexandria, Va., March 1973.

86. Denton, H., B. L. Sharp, and T. S. West, "A Stable d.c. Capillary ARC Plasma for Solution Analysis," Talanta (Great Britain) 22: 379-386, 1975.

87. de Souza, T. L. C., D. C. Lane, and S. P. Bhatia, "Analysis of Sulfur-Containing Gases by gas-Solid Chromatography on a Specially Treated Porapak Q5 Column Packing," Analytical Chemistry 47 (3): 543-545, March 1975.

88. Devaux, P., Guiochon, G., "Determination of the Optimum Operating Conditions of the Electron Capture Detector," Journal of Chrom. Sci., Vol. 8, pp. 502-508, September 1970.

89. Dewey, C. F., Jr., R. D. Kamm, and C. E. Hackett, "Acoustic Amplifier for Detection of Atmospheric Pollutants," Applied Physics Letters 23 (11): 633-635, December 1973.

90. Domsky, Irving I. and John A. Perry, editors, Recent Advances in Gas Chromatography, Marcel Dekker, Inc., New York, 1971.

91. Dong, Michael, David C. Locke, and Edward Ferrand, "High Pressure Liquid Chromatographic Method for Routine Analysis of Major Parent Polycyclic Aromatic Hydrocarbons in Suspended Particulate Matter," Analytical Chemistry 48 (2): 368-372, Feburary 1976.

92. Dorsey, James A., et al., "Source Sampling Technique for Particulate and Gaseous Fluorides," Air Pollution Control Association Journal, 18 (1), pp. 12-14, 168.

93. Driscoll, John N. and Peter Warneck, "The Analysis of PPM Levels of Gases in Air by Photoionization Mass Spectrometry," Journal of the Air Pollution Control Association 23 (19): 858-863, October, 1973.

94. Driscoll, John N., Flue Gas Monitoring Techniques: Manual Determination of Gaseous Pollutants, Ann Arbor Science Publishers, 1974.

95. Driscoll, J. N., et al., "Improved Chemical Methods for Sampling and Analysis of Gaseous Pollutants from the Combustion of Fossil Fuels - V.1. - Sulfur Oxides," Walden Research Corp., June 1971.

96. Driscoll, J. N., et al., "Validation of Improved Methods for Sulfur Oxide Emission Measurements from Stationary Sources," EPA-Ra-72-105, 1972.

97. Duff, E. J. and J. L. Stuart, "The Successive Determination of Chloride, Flouride and Sodium in Single Samples of Orthophosphate Minerals by Means of Ion-Sensitive Electrodes," Talanta (Great Britain) 22: 823-826, 1975.

98. Dulka, Joseph J., Terence H. Risby, "Ultratrace Metals in Some Environmental and Biological Systems," Anal. Chem. V. 48, p. 640A, 1976.

99. DuPont Instrument, "DuPont 411 Photometric Analyzer for Measuring NO_x (NO and NO_2) or SO_2," Product Information Bulletin 411-A.

100. DuPont Company, "Model 460 SO_2- NO_x Analyzer," Sales Literature.

101. DuPont Instruments, "461 NO_x Analyzer System," Product Information Bulletin 461-A.

102. DuPont Instruments, "Model 400 Photometric Analyzer Product Information Sheet," Bulletin 5A.

103. DuPont Instruments, "Moisture Analyzer Type 26-321A," Product Information Bulletin 26321x.

104. Edwards, John B., Combustion: The Formation and Emission of Trace Species, Ann Arbor Science Publishers, Inc., Ann Arbor.

105. Environmental Data Corporation, "Sales Literature," Minrovia, Ca.

106. Environmental Protection Agency, "Monitoring Instrumentation for the Measurement of Sulfur Dioxide in Stationary Source Emissions," February 1973.

107. Environmental Protection Agency, "Performance Specifications for Stationary-Source Monitoring Systems for Gases and Visible Emissions, EPA-650/2-74-013, January 1974.

108. Advanced Process Section (OR&M) Position Paper, "Pressurized Fluidized-Bed Combustion of Coal," Environmental Protection Agency, Raleigh, N. C., June 1972.

109. Estep, Patricia A., John J. Kovach, and Clarence Karr, Jr., "Quantitative Infrared Multicomponent Determination of Minerals Occurring in Coal," Analytical Chemistry 40 (2): 358-363, February 1968.

110. Ettre, L. S., Open Tubular Columns in Gas Chromatography, Plenum Press, New York, 1965.

111. Feairheller, W. R., et al., "Technical Manual for Process Sampling Strategies for Organic Materials," Monsanto Research Corporation, EPA-600/2-76-122, April 1976.

112. Federal Register, "Air Programs: Standards of Performance for New Stationary Sources," V. 39, No. 47, March 8, 1974.

113. Federal Register, "Continuous Monitoring - Comment Summary," V. 39, No. 177, September 11, 1974.

114. Federal Register, "Emission Monitoring, Standards for New Stationary Sources," V. 40, No. 194, October 6, 1975.

115. Federal Register, "Regulation 8823," V. 38, April 6, 1973.

116. Federal Register, "Standards of Performance for New Stationary Sources," V. 36, No. 247, December 23, 1971.

117. Federal Register, "Standards of Performance for New Stationary Sources," Vol. 39, No. 201, October 16, 1974.

118. Federal Register, "Standards of Performance for New Stationary Sources," Vol. 39, No. 47, March 8, 1974.

119. Federal Register, "Standards of Performance for New Stationary Sources, Proposed Rule for Primary Aluminum Plants," Vol. 39, No. 206, October 23, 1974.

120. Federal Register, "Stationary Sources, Proposed Emission Monitoring and Performance Testing Requirements," Vol. 39, No. 177, September 11, 1974.

121. Fedorak, J. C., and W. D. Hunter, "Development and Commercialization of SO_2 Reduction Technology," European Commission for Economics of the UN Seminar on Control of Emissions from the Non-Ferrous Metallergical Industries, October 1972.

122. Fenn, D. G., et al., Use of the Water Balance Method for Predicting Leachate Generation From Solid Waste Dispoal Sites," Environmental Protection Agency, 1975.

123. Fennelly, Paul R., et al., "Preliminary Environmental Assessment of Coal-Fired Fluidized Bed Combustion," GCA Corporation, November, 1975.

124. Fiorino, John A., John W. Jones, and Stephen G. Capar, "Sequential Determination of Arsenic, Selenium, Antimony, and Tellurium in Foods via Rapid Hydride Evolution and Atomic Absorption Spectrometry," Analytical Chemistry 48 (1): 120-125, January 1976.

125. Flegla, Carl, et al., "Approved Procedures for Process Measurements - Traces of Inorganic Materials," TRW Systems Group, February 1975.

126. Forest, Joseph, and Leonard Newman, "Ambient Air Monitoring for Sulfur Compounds," Journal of the Air Pollution Control Association 23 (9): 761-767, September 1973.

127. Frant, Martin, S, "Detecting Pollutants With Chemical Sensing Electrodes," Environmental Science and Technology 8 (): 225-228, March, 1974.

128. Frechette, Michael W., James L. Fasching, and Douglas M. Rosie, "Evaluation of Substrates for Use on a Piezoelectric Detector for Sulfur Dioxide," Analytical Chemistry 45 (9): 1765-1766, August 1973.

129. Friedel, R. A., Editor, Spectrometry of Fuels, Plenum Press, New York, 1970.

130. Fritz, J. S., and Story, J. N., "Chromatographic Separation of Metal Ions on Low Capacity, Macroreticular Resins," Journal of Anal. Chem., Vol. 46, No. 7, pp. 85-829, June 1974.

131. Fuller, Wallace H., editor, "Residual Management by Land Disposal," Proceedings of the Hazardous Waste Research Symposium Held at University of Arizona, Tucson, Arizona, February 2-4, 1976.

132. Fyock, D. H., et al., "Test of the Environmental Research and Technology Stack Gas Analyzer at the Conemaugh Generating Station," paper 75-606, presented at Air Pollution Control Association Annual Meeting, 1975.

133. Genetelli, E. J., and J. Cirello, "Gas and Leachate from Landfills Formation, Collection, and Treatment," from Proceedings of a Research Symposium held at Rutgers University, March 25-26, 1975, EPA-600/9-76-004, March 1976.

134. Gilfrich, J. V., P. G. Burkhalter, and L. S. Birks, "X-Ray Spectrometry for Particulate Air Pollution - A Quantitative Comparison of Techniques," Analytical Chemistry 45 (12): 2002-2009, October 1973.

135. Glauque, Robert D., Lilly Y. Goda, and Noel E. Brown, "Characterization of Aerosols in California by X-Ray-Induced X-Ray Flourescence Analysis," Environmental Science and Technology 8 (5): 436-440, May 1974.

136. Goksogr, H. and K. Ross, "The Determination of Sulfur Trioxide in Flue Gases," J. Inst. Fuel, Vo. 35, p. 177, 1962.

137. Golembeski, T. "Determination of Sub Microgram Amounts of Selenium in Rocks by Atomic-Absorption Spectroscopy," Short Communications, p. 547-549, December 1974.

138. Gordon, J. S., R. D. Glenn, S. Ehrlich, R. Ederer, V. W. Bishop, and A. K. Scott, "Study of the Characterization and Control of Air Pollutants From a Fluidized-Bed Boiler - The SO_2 Acceptor Process," Pope, Evans and Robbins, Inc., Alexandria, Va., NTIS order No. PB-229 242, EPA-R2-72-021.

139. Gough, T. A., and E. A. Walker, "The use of Pyrolysis and Hydrogenation in the Gas Chromatography of Aliphatic Hydrocarbons," Journal of Chrom. Sci., Vol. 8, pp. 134-137, March 1970.

140. Gouw, T. H., Guide to Modern Methods of Instrumental Analysis, Wiley Interscience, New York, 1973.

141. Gray, Donald M., editor, Handbook on the Principles of Hydrology, National Research Council of Canada, 1970.

142. Greer, David G. and Bydalek, Thomas J., "Response Characterization of the Melpar Flame Photometric Detector for Hydrogen Sulfide and Sulfur Dioxide," Environmental Science and Technology 7(2): 153-155, February 1973.

143. Griffen, Robert A., et al., "Attenuation of Pollutants in Municipal Landfill-Leachate by Passage Through Clay," Illinois State Geological Survey, September 1975.

144. Grosjean, Daniel, "Solvent Extraction and Organic Carbon Determination in Atmospheric Particulate Matter: The Organic Extraction - Organic Carbon Analyzer (OE-OCA) Technique," Analytical Chemistry: 47(6): 797-805, May 1975.

145. Guidoboni, Bernard J., "Determination of Trace Elements in Coal and Coal Ash by Spark Source Mass Spectrometry," Analytical Chemistry 45 (7): 1275-1277, June 1973.

146. Gunther, F. A., and R. C. Blinn, Analysis of Insecticides and Acaricides, Interscience Publishers, Inc., New York, 1955.

147. Hamersma, J. W., S. L. Reynold, and R. F. Maddalone, "IERL-RTP Procedures Manual: Level of Environmental Assessment," TRW Systems Group, EPA-600/2-76-160a, June 1976.

148. Hamersma, J. W., and S. L. Reynolds, "Field Test Sampling/ Analytical Strategies and Implementation Cost Estimates: Coal Gasification and Flue Gas Desulfurization," TRW Systems Group, EPA-600/ 2-76-093b, April 1976.

149. Hamilton, E. I., and M. J. Minski, "Spark Source Mass Spectrometric Sensitivity Factors for Elements in Different Metrices," International Journal of Mass Spectrometry and Ion Physics 10, p. 77, 1972.

150. Hammerle, R. H., R. H. Marsh, K. Rengan, R. D. Giauque and J. M. Jaklevic, "Test of X-Ray Fluorescence Spectrometry as a Method for Analysis of the Elemental Composition of Atmospheric Aerosols," Analytical Chemistry 45 (11): 1939-1940, September 1973.

151. Hankison Corporation, "Multi-Stream Refrigerated Gas Dryer-Sales Information," Canonsburg, Pa.

152. Hanson, N. W. D., et al., editors, "The Determination of Toxic Substances in Air," W. Heffner and Sons, Ltd., Cambridge, England, 1965.

153. Harris, D. T., and W. J. Keffe, "Wastewater Sampling Methodologies and Flow Measurement Techniques," Environmental Protection Agency, EPA-907-74-005, June 1974.

154. Hatch, W. Ronald, and Welland L Ott., "Determination of Sub-Microgram Quantities of Mercury by Atomic Absorption Spectrophotometry," Analytical Chemistry 40 (14): 2085-2087, December 1968.

155. Hems, R. V., and Adams, J. B., "The Determination of Nitrogen, Oxygen and Sulfur Dioxide by Automated Gas Chromatography," Journal of Chrom. Sci., Vol. 10, pp. 467-477, July 1972.

156. Hodges, C. T., and R. F. Matson, "Gas Chromatographic Separation of Carbon Dioxide, Carbon Oxysulfide, Hydrogen Sulfide, Carbon Disulfide, and Sulfur Dioxide," Analytical Chemistry 37 (8): 1065-1066, July 1965.

157. Hoke, R. C., L. A. Ruth, H. Shaw, "Combustion and Desulfurization of Coal in a Fluidized Bed of Limestone," Combustion, p. 6-12, January 1975.

158. Holtzman, Jordan L., "Calibration of the Oxygen Polarography by the Depletion of Oxygen with Hypoxanthine-Xanthine Oxidase-Catalase," Analytical Chemistry 48(1): 229-230, January 1976.

159. Homolya, James B., "Current Technology for Continuous Monitoring of Gaseous Emissions," Journal of the Air Pollution Control Association 25 (8): 809-813, August 1975.

160. Huillet, F. Dale, "The Monitoring of SO_2, NO, CO, and Opacity with an In-Stack Dispersive Spectrometer," Scott Paper Co., Everett, Washington, 1975.

161. Humprey, Ray E., and Stanley W. Sharp, "Polarographic Determination of Chloride, Cyanide, Flouride, Sulfate, and Sulfite Ions by an Amplification Procedure Employing Metal Iodates," Analytical Chemistry 48(1): 222-223, January 1976.

162. Hurtubise, R. J., et al., "Instrumentation for Thin-Layer Chromatography," Journal of Chrom. Sci., Vol. 11, pp. 476-491, September 1973.

163. Huygen, C., "A Simple Photometric Determination of Sulphuric Acid Aerosol," Atmospheric Environment, Great Britain 9: 315-319, 1975.

164. Industrial Research Institute, "An Information Search and an Evaluation of Factors Affecting Stack Sampling," University of Windsor, September 1970.

165. International Atomic Energy Agency, "Analytical Techniques for Determining Levels and Fates of Trace Elements in a Fossil Fuel Steam Plant. Comparative Studies of Food and Environmental Proceedings Series," pp. 455-470; 489-496, Vienna, 1974.

166. Jacobs, M. B., The Annalytical Toxicology of Industrial Inorganic Poisions, Interscience Publishers, Inc., New York, 1967.

167. Jaye, F. C., "Monitoring Instrumentation for the Measurement of Sulfur Dioxide in Stationary Source Emissions," TRW Systems Group, NTIS Order No. PB-220 202/6, February 1973.

168. Jeffery, P.G., and P. J. Kipping, "Gas Analysis by Gas Chromatography," Pergamon Press, New York, 1964.

169. Jerman, R. I., and l.R. Carpenter, "Gas Chromatographic Analysis of Gaseous Products from the Pyrolysis of Solid Municipal Waste," Journal of Gas Chrom., Vol. 6, pp. 298-301, May 1968.

170. Jimenez, Alvarex, J. A. Parex-Bustamante, and F. Burriel Marti, "Selective and Sensitive Complexometric Determination of Calcium and Magnesium in Dolomites Using "Palladiazo" as a Metallochromic and an Adsorption Indicator Simultaneously," Analytical Chemistry 47 (3): 512-515, March 1975.

171. Johansson, Thomas B., Rene E. Van Grieken, J. William Nelson, and John W. Winchester, "Elemental Trace Analysis of Small Samples by Proton Induced X-Ray Emission," Analytical Chemistry 47 (6)855-860, May 1975.

172. Jones, P. W., et al., "Efficient Collection of Polycyclic Organic Compounds From Combustion Effluents," Battelle Columbus Laboratories, August 1975.

173. Jones, P. W., et al., "Technical Manual for Analysis of Organic Materials in Process Streams," Battelle Columbus Laboratories, January 1976.

174. Jonke, A. A., et al., "Trace-Element Mass Balances Around a Bench-Scale Combustor," Presented at the Fourth International Conference on Fluidized-Bed Combustion, MITRE Corporation, McLean, Va., December 9-11, 1975.

175. Kalb, G. W., and Charles Baldeck, "The Development of the Gold Amalgamation Sampling and Analytical Procedure for Investigation of Mercury in Stack Gases," Tradet, Inc., June 1972.

176. Kalka, P. W., "Technical Manual for the Measurement of Fugitive Emissions - Upwind - Downwind Sampling Method for Industrial Fugitive Emissions," Draft, Research Corp. of New England, December 1975.

177. Keairns, D. L., et al., "Evaluation of the Fluidized Bed Combustion Process V. 1 - Pressurized-Bed Combustion Process Development and Evaluation," Westinghouse Research Laboratories, Pittsburg, Pa., NTIS

178. Keairns, D. L., et al., "Fluidized Bed Coal Combustion Development," Westinghouse Research Laboratories, Pittsburg, Pa., EPA-650650/2-75-027c, September, 1975.

179. Kim, A. G., and Douglas, L. J., "Gas Chromatographic Method for Analyzing Gases Associated with Coal," Bureau of Mines Report of Investigations No. 7903, 1974.

180. Kim, A. G., and Douglas, I, J., "A Gas Chromatographic Method for Analyzing Mixtures of Hydrocarbon and Inorganic Gases," Journal Chromatographic Sci., Vol. 11, No. 12, ppp. 615-617, December 1973.

181. Kirkland, J. J., editor, Modern Practice of Liquid Chromatography, Wiley-Interscience, New York, 1971.

182. Kirsten, Wolfgang J., "Micro, Ultramicro, and Trace Determination of Flourine," Analytical Chemistry 48 (1): 84-87, January 1976.

183. Kneebone, Barbara M., and Freiser, Henry, "Determination of Nitrogen Oxides in Ambient Air Using a Coated-Wire Nitrate Ion Selective-Electrode," Analytical Chemistry 45 (3): 449-452, March 1973.

184. Kreuzer, L. B., "Laser Optoacuoustic Spectroscopy - New Technique of Gas Analysis," Analytical Chemistry 46 (2): 239-244, February 1974.

185. Krost, K. J., Hodgeson, J. A., and Stevens, R. K., "Flame Chemiluminescence Detection of Nitrogen Compounds," Analytical Chemistry 45 (11): 1800-1804, September 1973.

186. Kuch, A. J., Andreatch, A. J., and Mohns, J. P., "Microdetermination of Oxygen in Organic Compounds Using Nondispersive Infrared Absorptionmetry," Analytical Chemistry 39 (11): 1249-1254, September 1967.

187. Kruas, Mecislav, Ryska, Miroslav, and Mostecky, Jiri, "Analysis of Saturated Hydrocarbons by Field Ionization Mass Spectrometry," Analytical Chemistry 48 (1): 196-198, January 1976.

188. Landstrom, D. K., "Preliminary Report on Environmental Considerations of Fluidized Bed Combustion (FBC)," Battelle, Columbus Laboratories, October 1, 1975.

189. Lao, R. C., R. S. Thomas, H. Oja, and L. Dubois, "Application of a Gas Chromatograph - Mass Spectrometer - Data Processer Combination to the Analysis of the Polycyclic Aromatic Hydrocarbon Content of Airborne Pollutants," Analytical Chemistry 45 (6): 908-915, May 1973.

190. Lapson, W. F, et al., "The Development and Application of a High Sampling Train for Particulate Measurements of Stationary Sources," Presented at 67th Annual Meeting of the Air Pollution Control Association, pp. 74-189, 1974.

191. Leahy, D., R. Siegel, P. Klotz, and L. Newman, "The Separation and Characterization of Sulfate Aerosols," Atmospheric Environment (Great Britain) 9: 219-229, 1975.

192. Lear Siegler, Inc., "Sales Literature - Model SM 800," Environmental Technology Division, 1976.

193. Lee, G. Fred, et al., "Research Study for the Development of Dredged Material Disposal Criteria," Institute for Environmental Sciences, University of Texas at Dallas, November 1975.

194. Lee, R. E., Jr., and D. J. Von Lehamden, "Trace Metal Pollution in the Environment," Air Pollution Control Association Journal, Vol. 23, p. 853, 1973.

195. Leitch, R. E., and J. J. Destefano, "Chromatographic Support Materials and Liquid Phases," Journal of Chrom. Sci., Vol. 11, pp. 105 - 166, March 1973.

196. Leithe, W., The Analysis of Air Pollutants, Ann Arbor Science Publishers, 1971.

197. LeRoy, V. M., and A. J. Lincoln, "Spectrochemical Method for the Determination of 36 Elements in Industrial Effluent," Analytical Chemistry 46 (3): 369-373, March 1974.

198. Linch, A. L., Evaluation of Ambient Air Quality by Personnel Monitoring, CRC Press, Cleveland, 1974.

199. Longbottom, James E., "Inexpensive Mercury - Specific Gas Chromatographic Detector," Analytical Chemistry 44 (6): 1111-1112, May 1972.

200. Los Angeles County Air Pollution Control District, "Source Testing Manual," November 1965.

201. Maahs, H. G., "Interference of O_2, CO_2, and H_2O on the Analysis for Oxides of Nitrogen by Chemiluminescence," NTIS Publication N 75-28164/2GA, August 1975.

202. Mahloch, S. L., and D. E. Averett, "Pollutant Potential of Raw and Chemically Fixed Hazardous Industrial Wastes and Flue Gas Desulfurization Sludges," Interim Report, U. S. Army Engineer Waterways Experiment Station, January 1975.

203. Mahloch, J. L., D. E. Averett, and M. J. Bartons, Jr., "Pollutant Potential of Raw and Chemically Fixed Hazardous Industrial Wastes and Flue Gas Desulfurization Studies," U.S. Army Engineer Waterways Experiment Station, EPA-600/2-76-182, July 1976.

204. Marshall, B. S., and R. Wood, "A Simple Field Test for the Determination of Hydrogen Fluoride in Air," Analyst V. 93, p. 821, 1968.

205. Mascini, Marco, and Aldo Napoli, "Response of Cyanide Ion Selective Membrane Electrodes in the Presence of Metal Ions," Analytical Chemistry 46 (3): 447-449, March 1974.

206. Matousek, J. P., and K. G. Brodie, "Direct Determination of Lead Airborne Particulates by Nonflame Atomic Absorption," Analytical Chemistry 45 (9): 1606-1613, August 1973.

207. McCain, J. D., et al., "Field Measurements of Particle Size Distribution with Inertial Size Devices," Southern Research Institute, EPA-650/120-73-035, October 1973.

208. McGinley, J. R., and E. A. Schweikert, "Multielement Charged Particle Activation Analysis with X-ray Counting," Analytical Chemistry 48 (2): 419-435, February 1976.

209. McKee, Herbert C., John H. Margenson, and Thomas W. Stanley, "Collaborative Testing of Methods to Measure Air Pollutants," Journal of the Air Pollution Control Association 23 (10): 870-875, October 1973.

210. McNair, H. M., and C. D. Chandler, "Gas Chromatography Equipment," Journal of Chrom. Sci., Vol. 11, pp. 454-467, September 1967.

211. McNulty, K. J., et al., "Investigation of Extractive Sampling Interface Parameters," ABCOR, Inc., Walden Research Division, Cambridge, Mass., October 1974.

212. Mieure, J. P., and M. W. Dietrich, "Determination of Trace Organics in Air and Water," Journal of Chrom. Sci., Vol. 11, pp. 559-569, November 1973.

213. Millet, E. J., et al., "The Computer Evaluation and Interpretation of Photographically Recorded Spark Mass Spectra," International Journal of Mass Spectrometry and Ion Physics 13, 1-25 (1974).

214. Milton Ray Company, "Model 621A.38:30 Orsat with SO_2 Option," sales literature, Hays-Republic Division, Michigan City, Indiana.

215. Milton Ray Company, "Sales Literature on In-Stack Filters," Hays-Republic Division.

216. The MITRE Corporation, "Compedium of Analytical Methods," April 1973.

217. The MITRE Corporation, "National Fluidized-Bed Combustion Program - Volume III - State-of-the-Art Report," M-75-58, December 1974.

218. Monsanto Research Corporation, "Technical Manual for Process Sampling Strategies for Organic Materials," Januar 1976.

219. Montaser, Akbar, S. R. Goode, and S. R. Crouch, "Graphite Braid Atomizer for Atomic Absorption and Atomic Flourescence Spectrometry," Analytical Chemistry 46 (4): 599-601, April 1974.

220. Morrow, N. L., et al., "Sampling and Analyzing Air Pollution Sources," Chem. Eng. 79 (2):94, 1972.

221. MSA Air Pollution Instrumentation, "Product Information Sheet Bulletin No. 0700-9," MSA Instrument Division.

222. MSS Information Corporation, "Detection and Control of Air Polution," 1974.

223. Mulik J. D., et al., "An Analytical System Designed to Measure Multicycle Malodorous Compounds in Kraft MIlls," presented at TAPPI Meeting, Boston, Mass., 1971.

224. Nadden, N., et al., "Basic Liquid Chromatography," Varian Aerography, Walnut Creek, Ca., 1972.

225. Nader, John S., "Developments in Sampling and Analysis Instrumentation for Stationary Sources," Journal of the Air Pollution Control Association 23 (7): 587-591, July 1973.

226. Natusch, D. F. S., J.R. Sewell, and R. L. Tanner, "Determination of Hydrogen Sulfide in Air - An Assessment of Impregnated Paper Tape Methods," Analytical Chemistry 46 (3): 410-415, March 1974.

227. Novak, J., et al., "Chromatographic Method for the Concentration of Trace Impurities in the Atmosphere and Other Gases," Analytical Chemistry, Vol. 37, No. 6, pp. 660-666, May 1965.

228. Obermiller, E. L., "Gas Chromatographic Separation of Nitrogen, Oxygen Argon, Carbon Monoxide, Carbon Dioxide, Hydrogen Sulfide and Sulfur Dioxide," Journal of Gas Chrom., Vol., 6, pp. 446-447, August 1968.

229. Ogata, Koreichi, and Teruo Hayakawa, editors, Recent Developments in Mass Spectroscopy, University Park Press, Baltimore, 1971.

230. Okabe, Hideo, Paul L. Splitstone, and Joseph J. Ball, "Ambient and Source SO_2 Detector Based on a Flourescence Method," Journal of the Air Pollution Control Association 23 (6), June 1973.

231. Pall Trinity Corporation, "Sales Information for Dryers and Filters," Vauxhall, New Jersey.

232. Patterson, Ronald K., "Automated Pregl-Dumas Technique for Determining Total Carbon, Hydrogen, and Nitrogen in Atmospheric Aerosols," Analytical Chemistry 45 (3): 605-609, March 1973.

233. Pecsar, R. E., C. H. Hartmann, "Automated Gas Chromatographic Analysis of Sulfur Pollutants," Journal of Chrom. Sci., Vol. 11, pp. 491-502.

234. Perma Pure Dryer, "Sales Information and Instruction and Operation Manual," Oceanport, New Jersey.

235. Perry, Robert H., and Cecil H. Chilton, editors, Chemical Engineers Handbook, 5th Edition, McGraw-Hill, New York, 1973.

236. Perry, S. C., et al., Practical Liquid Chromatography, Plenum Press, New York, 1972.

237. Pilat, M.S., "Submicron Particle Sizing with Cascade Impactors," In: 66th Annual Meeting of the Air Pollution Control Association, June 1973.

238. Pinta, M., Detection and Determination of Trace Elements, 2nd edition., Ann Arbor Science, Ann Arbor, 1970.

239. Pinta, M., and C. Riandei, "Matrix Effects Upon the Quantitative Analysis of Trace Elements by Atomic Absorption Spectroscopy," Cold Regions Research and Engineering Lab., July 1973.

240. Pope, Evans and Robbins Incorporated, "Multicell Fluidized-Bed Boiler Design, Construction and Test Program," PER-570-74, August 1974.

241. Postinger, J. V., et al., "Instrumentation for Monitoring Specific Particulate Substances in Stationary Source Emissions," Monsanto Research Corp., EPA R2-73-252, September 1973.

242. Purdue, Larry J., Richard E. Enrione, Richard J. Thompson, and Barbara A. Bonfield, "Determination of Organic and Total Lead in the Atmosphere by Atomic Absorption Spectrometry," Analytical Chemistry 45 (3): 527-530, March 1973.

243. Quereshi, Mohsin, K. G. Varshney, and R. P. S. Rajput, "Chromatography of 49 Metal Ions on Stannic Antimonate Papers in Dimethyl Sulfoxide-Nitric Acid Systems and Aqueous Nitric Acid Systems."

244. Rader Pneumatics, "Rader Hi-Volume Stack Samples," sales literature, October 1975, Portland, Oregon.

245. Rankin, John M., "Fluorometric Determination of Selenium in Water with 2, 3-Diaminopthalene," Environmental Science and Technology, January 1973.

246. Rantz, W. E., and J. B. Wong, "Impaction of Dust and Smoke Particles," Ind. and Eng. Chem., 50(4), April 1958.

247. Ranweiler, Lynn E., and Jarvis L. Moyers, "Atomic Absorption Procedure for Analysis of Metals in Atmospheric Particulate Matter," Environmental Science and Technology 8 (2): 152-156, February 1974.

248. Raymond, Alain, and Guiochon, Georges, "Gas Chromatographic Analysis of C_8 - C_{18} Hycrocarbons in Paris Air," Environmental Science and Technology 8 (2): 143-48, February 1974.

249. Reed, Rowland I., editor, Modern Aspects of Mass Spectrometry, Plenum Press, New York, 1968.

250. Reiszner, Kenneth D., and Phillip W. West, "Collection and Determination of Sulfur Dioxide Incorporating Permeation and West Gaeke Procedure," Environmental Science and Technology 7 (6): 526-532, June 1973.

251. Research Appliance Company, "Automated Stack Monitor-Bulletin 2412," Gibsonia, Pa.

252. Robertus, Robert, and Michael J. Schaer, "Portable Continuous Chromatographic Coulometric Sulfur Emission Analyzer," Environmental Science and Technology 1 (9): 849-852, September 1973.

253. Robinson, J. W., and Reid, W. M., "Detection and Determination of Sulfuric Acid Aerosols, Environmental Letters 8 (4), p. 361-369, 1975.

254. Robinson, J. W., P. J. Slevin, G. D. Hindman, and D. K. Wolcott, "Non-Flame Atomic Absorption in the Vacuum Ultraviolet Region: the Direct Determination of Mercury in Air at the 184.9 NM Resonance Line," Analytica Chimica Acta (Netherlands) 61: 431-439, 1972.

255. Romovacek. I., and Jaroslav Kubat, "Characterization of Coal Substance by Pyrolysis-Gas Chromatography," Analytical Chemistry 40(7): 1119-1126, June 1968.

256. Ronweiler, Lynn E., and Jarvis L. Moyers, "Atomic Absorption Procedure for Analysis of Metals in Atmospheric Particulate Matter," Environmental Science and Technology, 8(2): 152-156, February 1974.

257. Rossoff, J., et al., "Disposal of By-Products from Nonregenerable Flue Gas Desulfurization Systems," Interim Report, Aerospace Corp., EPA-650/2-74-37-b, June 1976.

258. Rovillard, E. A., "Determination of the Particle Content of Flowing Gass - An Annotated Bibliography," Council for Scientific and Industrial Research, Pretoria, South Africa, NTIS order NO. PB211, 203, May 1972.

259. Roy F. Weston, Inc., "Preliminary Environmental Report - Coal Transhipment Facility Superior, Wisconsin, " Roy F. Weston, Inc., April 1974.

260. Ruch, R. R., J. H. Gluskoter, and N. F. Shimp, "Occurrence and Distribution of Potentially Volatile Trace Elements in Coal," Environmental Geology Notes, No. 72, August 1974.

261. Ruch, W. E., Quantitative Analysis of Gaseous Pollutants, Ann Arbor - Humphrey Science Publishers, Ann Arbor, 1970.

262. Sawicki, E., T. W. Stanley, S. McPherson, M. Morgus, "Use of Gas Liquid and Thin Layer Chromatography in Characterizing Air Pollutants by Fluorimetry," Talanta, International Journal of Anal. Chemistry, 13, 619-629, 1966.

263. Scheide, Eugene P., and John K. Taylor, "Piezoelectric Sensor for Mercury in Air," Environmental Science and Technology 8(13): 1097-1099, December 1974.

264. Schiller, Joseph E., and Curtis L. Knudson, "Sampling System for Mass Spectrometry of High Boiling Mixtures Using Gas Chromatography - Mass Spectrometry," Analytical Chemistry 48 (z): 453-454, February 1976.

265. Schmit, J.A., et. al., "Applications of High Speed Reversed-Phase Liquid Chromatography," Journal of Chrom. Sci., Vol. 9, pp. 645-650, November 1971.

266. Schneider, Carl R., and Freund, Harry, "Determination of Low Level Hydrocyanic Acid in Solution Using Gas - Liquid Chromatography," Analytical Chemistry 34(1): 69-74, January 1962.

267. Schroeder, H.D., The Poisons Around Us: Toxic Metals in Food, Air and Water, Indiana University Press, Bloomington, Indiana, 1974.

268. Schuessler, P.W.H., "Apparatus For Determining Sulfur in Organic Compounds by Means of Gas Chromatography," Journal of Chrom. Sci., pp. 763-764, December 1969.

269. Seeley, J.L., and R.K. Skogerboe, "Combined Sampling - Analysis Method for the Determination of Trace Elements in Atmospheric Particulates," Analytical Chemistry 46(3): 415-421, March 1974.

270. Shea, E.P., "Source Test Report," Midwest Research Institute, January 1973.

271. Shell Development Co., "Determination of Sulfur Dioxide and Sulfur Trioxide in Stack Gases," Emeryville Method, Series 4 S16159, 1959.

272. Shendrikar, A.D., and James P. Lodge, Jr., "Microdetermination of Ammonia by the Ring Oven Technique and its Application to Air Pollution Studies," Atmospheric Environment 9: 431-435, October 1974.

273. Shilman, Ayner, "The Analysis of Trace Amounts of Carbon Monoxide," Environmental Letters 6(2), 149-150, 1974.

274. Shendrikar, A.D., and Philip W. West, "Determination of Selenium in the Smoke from Trash Burning," Environmental Letters 5(1), 29-35, 1973.

275. Shreve, R. Norris, Chemical Process Industries, McGraw-Hill, New York, 1967.

276. Siemer, Duane, and Ray Woodriff, "Application of the Carbon Rod Atomizer to the Determination of Mercury in the Gaseous Products of Oxygen Combustion of Solid Samples," Analytical Chemistry 46(4): 597-598, April 1974.

277. Silverstein, R.M., et. al., Spectrometric Identification of Organic Compounds, John Wiley and Sons, New York, 1967.

278. Sittig, Marshall, Pollution Detection and Monitoring Handbook, Noyes Data Corporation, London, England, 1974.

279. Skotnick, Peggy A., Alfred G. Hopkins, and Chris W. Brown, "Identification and Determination of Sulfur Trioxide in Sulfur Dioxide by Raman Spectrometry," Analytical Chemistry 45(13): 2291-2292, November 1973.

280. Slavin, W., Atomic Absorption Spectroscopy, Interscience Books, New York, 1968.

281. Smith, F., Denny W. Wagoner, and A. Carl Nelson, Jr., "Guidelines for Development of Q.A. V.III-Determination of Moisture in Stack Gases," Research Triangle Institute, EPA 650/4-74-005-c, August 1974.

282. Smith, K.A., and R.J. Dowdell, "Gas Chromatographic Analysis of the Soil Atmosphere: Automatic Analysis of Gas Samples for O2, N2, AR, CO2, N2O, and C1-C4 Hydrocarbons," Journal of Chrom. Sci., Vol. II, pp. 655-658, December 1973.

283. Smith. W.B., et.al., "Anderson Filter Substrate Weight Loss," Southern Research Institute, EPA-650/12-75-022, February 1975.

284. Smith, W.B., et.al., "Particulate Sizing Techniques for Control Device Evaluation," Southern Research Institute, EPA-650/12-74-102a, October 1974.

285. Smith, W.B., et.al., "Particulate Sizing Techniques for Control Device Evaluation," Southern Research Institute, EPA-650/12-74-102a, August 1975.

286. Snyder, L.R., et.al., Introduction to Modern Liquid Chromatography, Wiley-Interscience, New York, 1974.

287. Stern, A.C., Air Pollution: V.II-Analysis, Monitoring, and Surveying, Academic Press, New York, 1968.

288. Stevens, R.K., et.al., Analytical Methods Applied to Air Pollution Measurements, Ann Arbor Science, 1974.

289. Stevens, R.K., J.D. Mulik, A.E. O'Keefe, and K.J. Krost, "Gas Chromatography of Reactive Sulfur Gases in Air at the Parts-per-Billion Level," Analytical Chemistry 43(7): 827-831, June 1971.

290. Stinnett, James, Douglas P. Harrison, and Ralph W. Pike, "Fuel Gasification," Environmental Sci. Technology, Vol. 8, pp. 441-444, May 1974.

291. Struble, D.L., "Quantitative Determination of Elemental Sulfur By GLC With an Electron Capture or a Flame Photometric Detector," Journal of Chrom, Sci., Vol. 10, pp. 57-59, January 1972.

292. Sugimae, Akiyoshi, "Emission Spectrographic Determination of Trace Elements in Airborne Particulate Matter," Analytical Chemistry, 46(8): 1123-1125, July 1974.

293. Sussman, M.V., "Continuous Chromatographic Monitoring of Gas Streams, Final Report," Journal of Chrom. Sci., Vol. 12, pp. 91-96, February 1974.

294. Swansiger, J.T., et.al., "Liquid Coal Compositional Analysis by Mass Spectrometry," Journal of Anal. Chem., Vol. 46, No. 6, pp. 730-734, May 1974.

295. Swift, W.M., et.al., "Trace-Element Mass Balances Around a Bench-Scale Combustor," In: Fourth International Conference on Fluidized-Bed Combustion, McLean, Va., December 9-11, 1975.

296. Syty, Augusta, "Determination of Sulfur Dioxide by Ultraviolet Absorption Spectrometry," Analytical Chemistry 45(9): 1744-1746, August 1973.

297. Toggert, A.F., Handbook of Mineral Dressing, John Wiley and Sons, Inc., New York, 1945.

298. Talmi, Yair, and V.E. Norvell, "Determination of Arsenic and Antimony in Environmental Samples Using Gas Chromatography with a Microwave Emission Spectrometric System," Analytical Chemistry 47(9): 1510-1516.

299. Taylor Analytical Instrument Division, "Servomex Industrial Flue Gas Oxygen Analyzer Type OA. 269," Product Information Sheet, File 18-2A.

300. Texas Gulf Sulfur Company, "Analysis of Sulfur," 1959.

301. Thermo Electron Corporation, "Chemiluminescent Gas Analyzers," Product Information Bulletin TE2-73, Environmental Instruments Department.

302. Thermo Electron Corporation, "SO_2 Pulsed Fluorescent Analyzer Model 40," Environmental Instrument Department.

303. Thomas, Josephus Jr., and Harold J. Gluskoter, "Determination of Flouride in Coal with the Flouride Ion - Selective Electrode," Analytical Chemistry 46(a): 1321-1323, August 1974.

304. Thomas, Robert F., and Robert L. Booth, "Selective Electrode Measurement of Ammonia in Water and Wastes," Environmental Science and Technology 7(6): 523-525, June 1973.

305. TRW Systems Group, "Final Report for Process Measurements Development - Particulate Sulfate Emission," March 1975.

306. TRW Systems Group, "Interim Report for Fabrication and Calibration of Series Cyclone Sampling Train," April 1975.

307. TRW Systems Group, "Procedures for Process Measurements - Trace Inorganic Materials," July 1975.

308. TRW Systems Group, "Tentative Procedures for Sampling and Analysis of Coal Gasification Processes," March 1975.

309. TRW Systems Group, "Technical Manual for Process Stream Volumetric Flow Measurement and Gas Sample Extraction Methodology," November 1975.

310. Tussey, R.C., Jr., and W.H. Maxwell, "Cat-Ox Demonstration Particulate Study, Electrostatic Precipitator Evaluation, Manual Gas Mass Sampling Analysis," Midwest Research Institute, October 1974.

311. Tussey, R.S., Jr., et.al., "Testing Services for the Coke Oven Charging Demonstration Program," Midwest Research Institute, March 1974.

312. Tussey, R.C., Jr., "Unreported Test Data (location 3) Velocity Profits, Baseline Measurement Test Results for the Cat-Ox Demonstration Program," Midwest Research Institute, November 1971.

313. United States Army Corps of Engineers, "Engineering and Design Laboratory Soils Testing," EM 1110-2-1906, November 30, 1970.

314. Valentour, James C., Vijay Aggarwal, and Irving Sunshine, "Sensitive Gas Chromatographic Determination of Cyanide," Analytical Chemistry 46 (7): 924-925, June 1974.

315. Vassos, B.H., R.F. Hirsch, and H. Letterman, "X-Ray Microdetermination of Chromium, Cobalt, Copper, Mercury, Nickel, and Zinc in Water Using Electrochemical Preconcentration," Analytical Chemistry 45(4): 792-794, April 1973.

316. Vitez, Vela, "Trace Elements in Flue Gases and Air Quality Criteria," Power Engineering 80(1): 56-60, 1976.

317. Vlahakis, J., and H. Abelson, "Environmental Assessment Sampling and Analytical Strategy Program," The MITRE Corp., M 76-35, May 1976.

318. Von Lehmden, Darryl J., Robert H. Jungers, and Robert E. Lee, Jr., "Determination of Trace Elements in Coal, Fly Ash, Fuel Oil, and Gasoline - A Preliminary Comparison of Selected Analytical Techniques," Analytical Chemistry 46(2): 239-245, February 1974.

319. Walter, R.L., R.D. Willis, W.F. Gutknecht, and J.M. Joyce, "Analysis of Biological, Clinical, and Environmental Samples Using Proton-Induced X-Ray Emission," Analytical Chemistry 46(7): 843-855, June 1974.

320. Weissberger, Arnold, and Bryant W. Rossiter, editors, Physical Methods of Chemistry; Part IIID Optical, Spectroscopic and Radioactivity Methods, Wiley Interscience, New York, 1972.

321. West, Philip W., and J. Jaime Chiang, "Spectrophotometric Determination of Atmospheric Acidity by Means of the Displacement of the Equilibrium of Acid Base Indicators," Journal of the Air Pollution Control Association 24(7): 671-673, July 1974.

322. West, T.S., editor, Physical Chemistry, Series 1, Vols. 12 and 13, University Park Press, London, 1973.

323. White, A. and L.M. Beddows, "The Choice of Sampling Tube Material in the Determination of Nitrogen Oxide Concentration in Products of Combustion," J. Appl. Chem. Biotech., 23, p. 759-767, October 1973.

324. Willard, Hobard H., et.al., Instrumental Methods of Analysis, D. Van Nostrand Company, Inc., Princeton, New Jersey, 1965.

325. Winefordner, J.D., editor, Trace Analysis-Spectroscopic Methods for Elements, John Wiley and Sons, New York, 1976.

326. Winer, Arthur M., John W. Peters, Jerome P. Smith, and James M. Pitts, Jr., "Response of Commercial Chemiluminescent NO-NO_2 Analyzers to Other Nitrogen-Containing Compounds," Environmental Science and Technology 8(13): 1118-1121, December 1974.

327. Wronski, Mieczyslaw, "Thiomercurimetric Determination of Carbon Disulphide, Carbonyl Sulphide, Thiols and Hydrogen Sulphide by use of 1,3-Diaminopropane and Tributyltin Chloride," Talanta (Great Britain) 22: 425-429, 1975.

328. Young, Marilou, John N. Driscoll, and Kimball Mahoney, "Potentiometric Determination of Sulfur Dioxide in Flue Gases with an Ion Selective Lead Electrode," Analytical Chemistry 45(13): 2283-2284, November 1973.

329. Yowe, John H. and Henry J. Koch, editors, Symposium on Trace Analysis, Chapter 13, page 346-398, John Wiley and Sons, Inc., New York, 1957.

330. Zafiriou, Oliver C., "Improved Method for Characterizing Environmental Hydrocarbons by Gas Chromatography," Analytical Chemistry 45(6): 952-956, May 1973.

331. Zakak, A., et.al., "Procedures for Measurements in Stratified Gases V.I," Walden Research Division, EPA 650/12-74-086a, September, 1974.

332. Zakak, A., et.al., "Procedures for Measurement in Stratified Gases V.II," Walden Research Division, EPA 650/12-7-086b, September, 1974.

333. Zoller, Wolto, and G.E. Gordon, "Instrumental Photon Activation Analysis of Atmospheric Particulate Material," Analytical Chemistry 45(8): 1481-1490, July 1973.

334. Weir, A., S.T. Carlisle, and J. Norris, "The Environmental Effects of Trace Elements in the Pond Disposal of Ash and Flue Gas Desulfurization Sludge," Electric Power Research Institute Research Project 202, September 1975.

335. Stone, Ralph, "Environmental Assessment of Residues from the Fluidized Bed Combustion of Coal and the Gasification of High Sulfur Fuel Oils," Monthly Progress Reports, January - July, 1976.

336. King, J., R. Barbaro, and E. Genetelli, "Characterization and Applications of Residue from RESCO Refuse-to-Energy System using the Wheelabrator/Von Roll Design, Phase II Report - Leachate Characterization," Science Communications, Inc., November 1975.

337. American Public Health Association, Standard Methods for the Examination of Waste and Wastewater, 13th Edition, American Public Health Association, 1971.

APPENDIX

COMPENDIUM OF SAMPLING AND ANALYTICAL METHOD OPTIONS

This appendix is a compilation of multi-media sampling and analytical method options, and their associated characteristics, that may have application in the environmental assessment of FBC and other technologies. The options considered range from Federal Register methods through new techniques presently under development. To conveniently display the large volume of material included and to simplify comparison of the various techniques, a tabular presentation is used.

The intent here is to summarize pertinent characteristics, advantages, and disadvantages of each method rather than to present detailed procedures. (Additional data may be found in the references provided). Each option is, in addition, classified as being suitable for Level 1 and/or Level 2 application.

It should be noted that the methods recommended in Chapter 3 for the Level 1 and Level 2 assessment of FBC systems have been selected from the present compilation.

In the following tables, method options for sampling are presented according to sample type, as indicated below:

Particulates	(Table A-1)
Gases	(Table A-2)
Liquids	(Table A-3)
Solids	(Table A-4)
Air-borne Fugitives	(Table A-5)

Analytical method options are delineated by major analysis area as follows:

Inorganic gas analysis	(Table A-6)
Organic analysis	(Table A-7)
Elemental analysis	(Tables A-8 through A-15)
Anion analysis	(Table A-16)
Standard water analysis	(Table A-17)
Fuel analysis	(Table A-18)
Physical characterization of solids	(Table A-19)

In addition, multi-media flow measurement options are presented in Table A-20.

TABLE A-1. METHOD OPTIONS FOR PARTICULATE SAMPLING

INTEREST AREA	METHOD OPTION	REFERENCES	METHOD ADVANTAGES
I. Total concentration and mass emission. Low sample rate.	EPA Method 5	116, 281, 32	(a) More or less recognized nationally as the standard method for testing. (b) Utilizes reasonably defendable sampling point traverse system based on flow disturbance (EPA Methods 1, 2). (c) Simultaneous measurement of moisture (EPA Method 4) to give on-line isokinetic sampling conditions. (d) Utilization of cyclone as a pre-filter allows sampling in high dust loading and moisture laden streams. (e) An in-stack impactor can be added to the probe for particle size measurement. (f) The method attempts to control the temperature of the dust laden gas sample and employs in-line glass condensers; thus slight adaptations would allow the collection of volatile organics and inorganics without contamination.
	ASTM D2928-71	13.8, 12	(a) Less cumbersome due to fewer simultaneous operating systems than EPA Method 5. (b) Simpler probe and support system since nonheated and no simultaneous measurement of velocity. (c) See (a) in EPA Method 5 above. (d) Allows discretion relative to sample collectors and number of sampling points.

TABLE A-1 (continued).

METHOD DISADVANTAGES	APPLICABLE STRATEGY LEVEL	REMARKS
		The following methods allow the measurement of both concentration and mass emission rate using a sampling rate of less than 2.5 cpm.
(a) Fails to measure particulate mass in the stack that can be directly compared with ambient High-Volume mass. Other chemical reactions, condensation and evaporation (sulfate) can change the physical state of particulate prior to ambient measurement. (b) The captured particulate is maintained at an elevated temperature (320°F) for the duration of the test. This allows re-evaporation of some volatile constituents. (c) A manual method requiring field handling of fragile equipment precisely positioned and maintained in a hostile environment. (d) Under high SO_2 concentration conditions (3 percent sulfur fuel), filterable aerosols may be forced from gaseous SO_3, thus introducing a potential error in measurement (32). (e) Requires a glass probe up to a specific temperature and a probe length which requires excessive care to prevent breakage.	1 and 2	Particulate defined as material collected prior to and on a fiber-glass filter media at 320°F. Isokinetic sampling. Sampling rate is approximately 1.0 scfm. Method 5 trains are commercially available from several companies. Method involves simultaneous determination of stack gas volumetric flow rate and particulate mass concentration, which allows calculating particulate mass emission rate.
(a) Separate measurement of sample rate and velocity under the assumption of insignificant change in gas flow rate can produce error in isokinetic sampling rate. (b) Allows different collectors (filter media) depending on sampling conditions, resulting in a varying collection efficiency, particularly with fine particles (<3μm). (c) Allows considerable discretion relative to number of sample points in larger ducts. (d) Care required to prevent condensate (unheated probe) from flowing back into filter during handling. (e) Generally allows more discretion to the user of the method than EPA Method 5, which could result in variability in emission measurements depending on user. (f) See (c) in EPA Method 5 above.	1 and 2	Particulate defined as material (dry plus aerosol) collected in-the-stack at stack temperature and pressure after oven drying overnight at 102°C. Fundamental difference between EPA Method 5 and ASTM is that the latter train collects the particulate using an in-stack thimble and filter while the EPA train collects the particulate using an out-of-stack cyclone and filter. Isokinetic sampling. Sampling rate is approximately 1-2 cfm. Trains are commercially available.

TABLE A-1 (continued).

INTEREST AREA	METHOD OPTION	REFERENCES	METHOD ADVANTAGES
I. (cont.)	ASTM D2928-71 (cont.)		
	ASME PTC-27	17	(a) See, a, c, d, and e in ASTM D2928-71. (b) Offers comments and observations on many questions from experience; however, does not specify exact procedures to be followed under different circumstances.
	Western Precipitation WP-50	70, 164	
	Los Angeles County	70, 164	
	San Francisco Bay Area	70, 164	
	B.C.U.R.A.	70, 164	

TABLE A-1 (continued).

METHOD DISADVANTAGES	APPLICABLE STRATEGY LEVEL	REMARKS
(g) The captured particulate is maintained at stack conditions longer than would occur naturally, thus potentially allowing a change in characteristics as indicated in EPA Method 5 (a) above.		
(a) See (a), Method 5 (b) Allows considerable discretion relative to the number of sample points in large ducts. Number of points depends on range of velocity at that location with up to 20 points needed in large ducts. (c) Allows different collectors (cloth bags, paper or alundum thimbles) which results in a varying collection efficiency depending on particle size. (d) Particles smaller than 1 micron are not sampled by definition.	1 and 2	Particulate defined as "dust". Gas-borne solid matter larger than 1μm (micron) mean diameter collected in <u>or</u> out of the stack. Minimum tip diameter of 1/4 inch. Isokinetic sampling. 10 minute sampling at each point and 2 circuits of the points. The collection efficiency is stated to be 99.0 percent for size of dust encountered.

TABLE A-1 (continued).

INTEREST AREA	METHOD OPTION	REFERENCES	METHOD ADVANTAGES
II. Size distribution. Low sampling rate; in-situ impactors.			
	Anderson Models II and III	207, 284 283, 285, 22	(a) Extensive data collected by users on many source types allows relative comparison of data. (b) Fits standard particulate sampling equipment. (c) Allows isokinetic sampling by changing inlet nozzle diameter. (d) Stainless steel construction allows insertion into high temperature gas streams. (e) Since EPA has not adopted a size distribution method (not a part of existing emission or ambient standards), this impactor, and the following ones have more or less been adopted by the testing community. (f) Commercially available. (g) Options include pre-separator glass fiber substrates. (13) A backup filter can be added. (h) A calibrated, modified pre-separator is available for unit. (13)
	University Washington Mark III	207, 284, 283, 285, 237	
	Monsanto Brink	207, 284, 283, 285, 52	
	Environmental Research Corporation TAG-	207	

TABLE A-1 (continued).

METHOD DISADVANTAGES	APPLICABLE STRATEGY LEVEL	REMARKS
		The following presents a discussion of impactors. They are devices rather than methods per se. Their use in conjunction with mass sampling equipment allows determination of particle size distribution by mass, or aerodynamic size distribution.
(a) Reported particle bounce off and re-entrainment. Upper limit to approximately 10 m/sec to prevent this (285). (b) Tends to overload when used in higher particulate loading situations (e.g., control device inlet). (c) Electrostatic effects on bare plates may be substantial (285). (d) Collection plates are massive relative to material collected, resulting in slight loss of sensitivity. Substrates are available, but sulfate uptake on substrate may cause error (207, 285). (e) Cannot be used for isokinetic total mass measurement at different duct cross-section velocity points since it must be maintained at constant velocity. (f) Lacks good calibration under conditions appropriate for field sampling (202). (g) Requires "immediate" weighing after 24 hours dessication to prevent loss (283). (h) Due to size, frequently cannot be located in gas flow.	1 and 2	Samples at less than 1.0 cfm. Separates 0.3 to 20 microns with 9 collection plates with multi-jets. Wall losses may explain part of the difference between EPA Method 5 mass emission and impactor measurements (284). Generally, impactors are very sensitive to overloading. The sample duration must be carefully determined depending on mass loading in the gas stream. Impactors, when mounted outside the stack, may be inaccurate due to probe wall losses (207). Generally, impactors rely on theory of impaction developed by Rantz and Wong (246).
(a) See (a), (b), (c), (d), (e), and (h) for Anderson. (b) Built-in filter holder.	1 and 2	Samples at less than 1.2 cfm. Separates 0.2 to 20 microns with 8 stages with multi-jets.
(a) Cannot be easily added to a mass sampling train. (b) Requires modification for in-stack use. (c) Low sample rate requires very long periods to obtain a sample in low loading situations. (d) Due to low flow rate and minimum sample tip diameter, often cannot sample isokinetically. (e) See (b), (c), (e), (f), and (h) for Anderson.	1 and 2	Samples at approximately 0.1 to 0.25 cfm. Separates 0.3 to 3 microns with 5 stages. A silicone grease substrate has been used expensively with this unit to prevent re-entrainment. Grease blowoff, however, can occur at velocities greater than 65 m/sec (284). Very similar to Anderson unit with appropriate advantages and disadvantages.

TABLE A-1 (continued).

INTEREST AREA	METHOD OPTION	REFERENCES	METHOD ADVANTAGES
II. (cont.)	MRI Model 1502 Impactor	305	
III. Size distribution. Low sample rate cyclones.	SRI Chang T2A SRI 5-1	285	(a) A cyclone system allows the collection of significantly more mass for analysis by the appropriate size fraction. (b) Cyclone performance is independent of orientation. (c) An in-stack system that can be used in 6-inch ports. (d) Can be added to a typical, commercially available test train to obtain the sample. (e) Cyclones have been calibrated using laboratory aerosols. (f) Stainless steel construction allows high temperature sampling.
IV. Size distribution. High sample rate cyclones.	SRI Aerotherm H.V.S.S.	285, 308, 306	(a) A 3 cyclone sizing system that is added to the probe of a commercially available isokinetic "Method 5 Type" particulate sampler. (b) A high flow rate sampling system that takes less time per run to obtain sufficient mass of sample for physical, chemical, and biological characterization.

TABLE A-1 (continued).

METHOD DISADVANTAGES	APPLICABLE STRATEGY LEVEL	REMARKS
(a) A cyclone "cut" point is directly dependent on sample flow rate. Thus, a constant rate is required to maintain calibration. Isokinetic sampling requires changing train characteristics to maintain constant flow rate (i.e., probe tip diameter or stack sample points for each significant change in velocity). (b) Extreme care required in cleaning cyclones and totally removing the sample. Difficult to visually determine whether all the sample has been removed from hidden corners of cyclones. (c) Not commercially available yet. (d) Due to practical handling problems in changing probe tips at each traverse point in a stack with varying velocity profile, it is difficult to obtain total mass emission rate and size distribution with this system.	1 and 2	Three cyclone arrangement with cut points of approximately 0.5μm, 0.9μm, and 2.6μm and a flow rate of 1 acfm with particle density of 1.35 gm/cm^3. A backup filter is also used. Uses 10 different nozzles to allow isokinetic sampling for stack velocities between 10 and 100 feet per second. This sampling system is not a method per se; rather, it is an experimental assembly of particulate sizing components (cyclones) designed to provide data of interest. The system has not been adopted by EPA.
(a) In its current configuration, the first cyclone (<10μm) is rather large and cumbersome for typical stack testing. (b) This state-of-the-art experimental system looks promising; however, it requires additional calibration and refinement to avoid excessive wall losses.	1 and 2	Three cyclone arrangement with cuts to provide (1) <10μm, (2) 3-10μm, and (3) 1-3μm, at 5.0 scfm, with capacity for collection of large quantities. This is a state-of-the-art experimentally developed system that is not a method per se. The 3 cyclones are being developed by IERL-EPA as a part of a combined high sample rate particulate system ("High Volume Sampling System") (306).

TABLE A-1 (continued).

INTEREST AREA	METHOD OPTION	REFERENCES	METHOD ADVANTAGES
V. Particulate sulfate concentration, mass emissions, and size distribution.			
	EPA Method 8	305, 116	(a) This is one of the reference methods for H_2SO_4 mist sampling. (b) Utilizes reasonably defendable sampling point traverse system based on flow disturbance. (EPA Methods 1 and 2.) (c) Simultaneous measurement of moisture (EPA Method 4) and velocity (EPA Methods 1 and 2) to give data validation of isokinetic sampling. (d) Proved to be the "most efficient in the pilot studies in the field" (305). (e) Probably the best method for adaptation and ultimate application as sulfate sampling system. (f) When used to traverse the stack, will provide both concentration and emission data.
	EPA Aerotherm H.V.S.S.	305	(a) A high volume sampling system (5 acfm) very similar to the EPA Method 5 train. (b) Stainless steel and lexan construction with inside of filter housing coated with teflon. (c) Since the filter is operated hot, moisture does not plug the filter. (d) See (b), (c), and (f) above.
	MRI Model 1502 Impactor	305	(a) Provides particle size distribution data in addition to sulfate concentration data simultaneously. (b) This unit, during the study, "provided excellent results on sulfate particle size distribution" (305).

TABLE A-1 (continued).

METHOD DISADVANTAGES	APPLICABLE STRATEGY LEVEL	REMARKS
		Other particulate sampling trains like those identified in this table can be used to obtain a sample for sulfate analysis. Three "particulate type" sampling trains were investigated in a study (305) to determine the utility of each for sampling sulfate particulate matter emissions from flue gas desulfurization control systems.
(a) Probably fails to measure sulfate in the stack that can be directly compared to ambient sulfate measurements due to evaporation/condensation processes. (b) The impinger solution (isopropanol) was found to absorb SO_2, thus rendering sulfate data as suspect. (c) Inadequate for ammonium compounds. (d) New filter material needed with low sulfate blank. (e) The ambient temperature filter allows blowthrough of particulate (305).	1 and 2	This method is specifically for H_2SO_4 mist sampling. As with any selective method, its use for other purposes, such as sulfate sampling, will require adaptation. The disadvantages cited should be viewed as recommended adaptations as opposed to weaknesses of the method.
(a) See (a), (c), and (d) above. (b) The "pre-cooler" scrubs SO_2.	1 and 2	The train was essentially set up in a particulate collection operating mode, that is, with water in the impingers for ultimate collection of sulfates.
Characteristic of impactors in that they are calibrated for only one flow rate. A traverse cannot be done isokinetically.	1 and 2	The Meteorology Research, Inc. (MRI) device is a cascade impactor designed for particulate size distribution. It is used here to determine ability to size particulate and aerosol sulfates. The train consisted of the Aerotherm probe, the MRI impactor in the heated cyclone-filter oven and then the Aerotherm coolers, etc. The MRI unit was maintained at stack temperature.

TABLE A-1 (continued).

INTEREST AREA	METHOD OPTION	REFERENCES	METHOD ADVANTAGES
VI. Trace inorganic material concentration and mass emissions.	EPA Aerotherm H.V.S.S.	307	(a) Basically relies on components of a commercially available sampling system. (b) The unit is very similar to EPA Method 5. Thus, it may be accepted as a reference in the future. (c) See advantages (b), (c), (d), and (e) under EPA Method 5. (Section I of the table.) (d) High sampling rate (to 6 scfm). (e) Impingers are rugged lexam construction. (f) Capable of horizontal and vertical sampling. (g) Well-packaged unit for shipment. (h) Appears to offer an effective sampling system relatively free of contaminating components and capable of collecting both vaporous (or fine particulate As, Hg, Sc, Sb, F, Cl), and non-volative trace materials (Ba, B, Be, Ca, Cd, Cn, Cr, Cu, Mn, Ni, NO_3, Pb, PO_4, S, SO_4, Sr, V, Zn). (i) Since it relies on a basic commercial system, it can be adapted to provide samples by size fraction.
	EPA Method 5	116, 100 238	(a) Relies on an established method of measuring mass concentration and emissions. (b) Could be adapted to provide samples by size fraction. (c) Extensive data have been collected using this method. The number and type of inorganic materials varys. (d) Unofficial procedures of sample removed and cleanup have been drafted for inhouse and contractor use that require nitric acid cleaning of portions of the sample train and storage bottles. (35)

TABLE A-1 (continued).

METHOD DISADVANTAGES	APPLICABLE STRATEGY LEVEL	REMARKS
		The following presents results of a study to "present procedures and methods for sampling and analysis--for trace inorganic materials" (307).
(a) Stainless steel connectors are possible source of Ni and Cr sample contamination. (b) Heated teflon (filter housing coating) may cause particulate sample alteration. (c) Time consuming to clean gas cooling coils between runs. (d) Larger and heavier than standard particulate testing equipment. (e) Due to size and weight, difficult for traversing. (f) The Kapton probe liner film appears to require extreme care and patience in inserting into the probe. (g) Ammonium persulfate impinger solution must be prepared immediately prior to a test run.		The basic train consists of an Aerotherm high-volume sampler with a polymer film probe liner, ultraclean filter material and a special sequential exidative scrubbing solution for the inpingers. NOTE: Other non-contaminating sampling systems, including an adopted version of EPA Method 5, may be employed for trace material sampling, in addition to this unit.
(a) Potential sample contamination from being exposed to stainless steel probe tip and probe. (b) High and variable background concentration in filter media (typically fiberglass), depending on inorganic material. (c) Fine particulate and vaporous inorganic material collection efficiency is variable and generally unknown.		Not a method of sampling trace inorganic material per se. Just the application of best available tools. NOTE: Other Method 5 type sampling trains can be used. The materials of construction govern the type and amount of potential contamination.

TABLE A-1 (continued).

INTEREST AREA	METHOD OPTION	REFERENCES	METHOD ADVANTAGES
VI. (cont.)	EPA Method 104 (Beryllium)	115	(a) Essentially the same train as Method 5. (b) Isokinetic sampling. (c) Has been extensively tested by EPA. (d) Allows some flexibility for filter location in train to account for higher temperature sources.
	EPA Method 105 (Mercury)	115	(a) Essentially the same train as Method 5. (b) Isokinetic sampling for accuracy.
	SRI MA #6 (Mercury)		(a) Essentially uses the Method 5 type train to isokinetically collect particulates and gaseous Hg. (b) Accurate for concentrations up to 0.05 0.05 $\mu g/ft^3$. (c) Excellent method writeup addressing accuracy, precision, stability, etc. (d) Precision at 5% for 100 ft^3 sample.
	Gold Amalgamation (Mercury)	175	(a) Associated accuracy of Method 5 train to measure total pollutant emissions isokinetically. (b) More or less has replaced EPA Mthood 105 for high SO_2 concentration streams.
	SRI MA #5 (Selenium)	72	(a) Well defined and specified procedures. (b) Analytical accuracy at ±14% up to 2$\mu g/ft$. (c) Associated accuracy and acceptance of Method 3 type train.
	SRI MA #3 (Lead)	72	(a) Well defined and specified procedures (b) Associated accuracy and acceptance of Method 5 type train. (c) Routine sampling period of approximately 2 hours.

TABLE A-1 (continued).

METHOD DISADVANTAGES	APPLICABLE STRATEGY LEVEL	REMARKS
(a) Required using millipore filter which is relatively more difficult to handle. (b) Requires extensive acid washing of train components prior to sampling. (c) See EPA Method 5 for other disadvantages.	1 and 2	EPA Methods 103 (not included in this table) and 104 are specific methods for Beryllium sampling and analysis to determine compliance with EPA hazardous emission standards. Method 103 is a screening method that does require full duct traverse sampling. Method 104 is a full duct traverse method.
(a) Serious interference in high concentration SO_2 gas streams (loss O ICl).	1 and 2	This method is not recommended for Hg sampling and analysis.
(a) Designed for chloralkali plants and non-ferrous metal smelters. (b) The sample volume should be limited to 10 ft^3 when sampling high concentration (7%) SO_2 sources. (c) Needs additional field testing.	1 and 2	An adapted version of EPA Method 105 consisting of a probe, pyrolysis furnace, solid scrubber, and impingers containing ICl. Applicable for particulate and gaseous Hg.
(a) Maximum sampling period of 5-10 minutes (method too sensitive). (b) Procedure requires further refinement. (c) Requires several tests to first find the range of Hg concentration and then the actual concentration. (d) Can <u>not</u> ship samples back to lab for analysis.	1 and 2	A modified version of EPA Method 5 designed to collect particulate and gaseous Hg by utilizing two impingers containing 10 grams of gold chips to collect Mg vapor as an amalgam. The second amalgamator is a backup to the first.
(a) Method requires further field testing. (b) Interference from hypochloride or Sn (II) and possibly nitrate ion in excess. (c) Unused filter should be saved for blank determination. (d) Leaching of filter may be required prior to use.	1 and 2	A modified version of EPA Method 5 designed to collect particulate and gaseous selenium (excluding H_2Se).
(a) Organic matter can interfere with Pb analysis--can be removed with low temperature activated oxgen ashing. (b) Analyze blank filters for Pb. (c) Requires further field testing.	1 and 2	A modified version of EPA Method 5 designed to collect particulate and gaseous lead. AA analysis. Use glass fiber filter for nitric acid extraction. Nitric acid in impingers.

TABLE A-1 (continued).

INTEREST AREA	METHOD OPTION	REFERENCES	METHOD ADVANTAGES
VI. (cont.)			
	SRI MA #4 (Cadmium)	72	(a) Well defined and specified procedures. (b) Associated accuracy and acceptance of Method 5 type train. (c) Routine sampling period of approximately 2 hours.
	SRI MA #1 (Asbestos)	72	(a) Well defined and specified procedures with backup references. (b) Can use low temperature oxidation of some interfering (i.e., visual confusion) fibers and then recollect on another nuclepore filter. (c) Allows preparation of photomicrograph for visual characterization of genrral particulate sample.

TABLE A-1 (continued).

METHOD DISADVANTAGES	APPLICABLE STRATEGY LEVEL	REMARKS
(a) Several interferences overcome by adding EDTA. (b) Potential important interference from NaCl. (c) Requires further field testing. (d) Leaching of filter required.	1 and 2	A modified version of EPA Method 5 designed to collect particulate and gaseous cadmium.
(a) At least 10% of collected material must be chrsotile asbestos. (b) Very difficult to identify specific fibers and is a very tedious and time consuming task to manually-visually perform the work. (c) Major errors arise from particulate counting--experienced counter should keep errors ≤10%. (d) Very difficult to transfer particles to microscope grid for counting. (e) Trial and error in obtaining optimum amount of sample.	1 and 2	Particulate collected on a nuclepore membrane filter at rate of 0.1 cfm. Collected materials transferred to electron microscope grid for visual identification, sizing and counting. Use standard reference samples of asbestos from the International Union Against Cancer (IUAC).

TABLE A-1 (continued).

INTEREST AREA	METHOD OPTION	REFERENCES	METHOD ADVANTAGES
VII. Total concentration and mass emission. High sample rate.	EPA Aerotherm H.V.S.S.	190, 1	(a) Commercially available. (b) Developed under funding from EPA and used as a starting system to further develop refined sampling systems for sulfates, organics, particle size distribution, and trace inorganics, as previously discussed in this table. It has also been adapted to simultaneously collect particulate mass samples by three cut sizes (cyclones) followed by total adsorption of volatile organics, and a collector for trace elements; thus encompassing in one sampling system, a refined method of collecting bast amounts of data during one isokinetic measurement. (It should be noted that mass emissions based on traversing is still a limitation when the 3 cyclones are used.) (c) Highly researched and tested unit is well constructed. (d) Wide range of optional equipment available.
	Rader	244, 114, 48	(a) Samples at a very high flow rate (10-20 cfm). (b) Can be hand held. (c) Uses the same filter as is used in ambient high-volume samplers which is the reference EPA ambient method. (d) Has been adopted as a standard method for sampling cyclones in Oregon (49). (e) Due to the higher sample rate, requires significantly less time to obtain a sample. This may be important in very low concentration sources. (f) Has been automated to electronically total the sample flow and maintain the unit at isokinetic conditions. Thus, it is the only commercially available automatic isokinetic sampler.

TABLE A-1 (continued).

METHOD DISADVANTAGES	APPLICABLE STRATEGY LEVEL	REMARKS
(a) Relatively expensive compared to routine Method 5 type equipment (approximately $9000 versus $4000). (b) The equipment is much heavier and harder to handle. (c) Stainless steel construction can be a source of contamination for some tests. (d) Uses Lexan impingers instead of glass (glass is available as an option). (e) Time consuming to clean cooling coils (prior to impingers for condensation efficiency) if impinger wash is desired.		This unit essentially meets the specification of EPA Method 5 with the exception that the probe and filter holder are constructed of stainless steel instead of glass and the flow rate is much higher. The unit is currently being evaluated by EPA for approximate equivalency and a statement is expected by mid-1976.
(a) Can only be used in ambient temperature sources. (b) Saturated gas streams can easily plug the filter. (c) Oversized ports are required for in-stack use. (d) The unit is not directly comparable to EPA Method 5.		This unit was recently improved and is now automatic. It is primarily designed to sample ambient temperature sources since it does not contain impingers for moisture measurement. This is not a method per se. It is a tool to sample gas streams for particulates.

TABLE A-1 (continued).

INTEREST AREA	METHOD OPTION	REFERENCES	METHOD ADVANTAGES
VIII. Simultaneous organic and trace inorganic materials, total concentration, size distribution	SASS	2	(a) In one sampling system an isokinetic particulate sample is classified into three calibrated size fractions in which each can be analyzed for organics and trace inorganic materials; non-condensed organics, including POM pollutants, are collected on porous polymer adsorbent, and; fine particulates and volatile inorganic species (e.g., Hg) are collected in a glass impinger train. (b) Most, if not all, of the system components are commercial available (1, 2). (c) Highly researched and extensively funded to develop a unit approaching "best available," utilizing space age technology. (d) The three sizing cyclones will handle inlet and outlet particulate size from normally encountered control equipment. (e) High-volume sample rate will allow sample collection in shorter period.

TABLE A-1 (continued).

METHOD DISADVANTAGES	APPLICABLE STRATEGY LEVEL	REMARKS
(a) The system is very expensive ($15,000-$25,000). (b) This constant flow rate system is not designed to allow continuous isokinetic traversing of a duct or stack. (c) Due to (b) above, selection of a single point in the stack for a representative sample is required. (d) The system may still require refinements to condense moisture without excessive pressure drop. (e) Currently two pumps due to pressure drop through the many components are required. (f) More complex temperature and moisture regulation due to high flow rate (up to 6 cfm) is required. (g) This new system has not been extensively field tested. EPA is in the process of awarding a contract to have it tested.	1 and 2	This system is a state-of-the-art, highly sophisticated, manual-type particulate sampling train essentially based on the HVSS system. It is expected to be commercially available in mid-1976. An isokinetic traverse can be performed by changing nozzles at each traverse point. Another technique involves locating a sampling site where traverse point velocities do not vary more than 10% from a mean volume (i.e., flat profile). This eliminates the need for nozzle changing and still provides essentially isokinetic conditions. A third option combines aspects of the above two options (see text).

TABLE A-1 (continued).

INTEREST AREA	METHOD OPTION	REFERENCES	METHOD ADVANTAGES
IX. Total Concentration and size distribution. High temperature, high pressure systems (HTHP).	HTHP (Aerotherm)		(a) Satisfies safety concerns. (b) Will traverse 50 inches mechanically against high pressure in 2-1/2 minutes, and has an automatic brake. (c) Utilizes a "scalping" cyclone in-situ. (d) Secondary particulate collection is by a Mark III University of Washington impactor which also provides size distribution data. (See earlier discussion of Mark III.) (e) Utilizes complex temperature--controlling coolant system that appears to be well designed and allows for thermal expansion yet properly colls the sample.

TABLE A-1 (concluded).

METHOD DISADVANTAGES	APPLICABLE STRATEGY LEVEL	REMARKS
(a) Just a design at this stage that needs extensive field testing. (b) Not commercially available. (c) Extremely expensive.		A new class of particulate and gaseous sampling instrumentation is being developed to handle measurement problems associated with new energy related processes, including coal gasification, combined cycle power plants, and fluidized bed combustion. High temperature--high pressure involves temperatures up to 2000°F and pressures up to 100 atmospheres. This write-up presents preliminary information from a project funded by EPA to develop HTHP sampling instrumentation. This system is scheduled to be field demonstrated at the Exxon "Mini-plant" at Linden, N.J.

TABLE A-2. METHOD OPTIONS FOR GAS SAMPLING

INTEREST AREA	METHOD OPTION	REFERENCES	METHOD ADVANTAGES
I. Sample Acquisition and Conditioning Systems for Continuous Instrumental Analysis			
Acquisition: Probe Location	Performance Specification No. 2	114, 120, 107, 77	(a) Written to provide guidance for both extractive and non-extractive (in-situ) sampling. (b) The number of sample points and location is dependent on the upstream distance to an air in-leakage device or measured stratification profile. (c) Represents the first regulatory agency attempt to define sampling techniques for potentially stratified gases. (d) The total sampling and analysis system has been demonstrated in place to be comparable with reference methods. (e) Based on extensive field testing.
	Stratification Investigation. Pollutant Ratio Concept	331, 332, 55, 77	(a) Preferred over multi-point sample extraction (331). (b) Simple system relying on a single probe; proportional sampling is now required. (c) Since spatial average concentrations agree with flow-proportional average concentrations, then concentration and flow data can be taken independently and still be used to accurately determine species mass emissions (55). (d) Can be applied to both circular and rectangular ducts.

TABLE A-2 (continued).

METHOD DISADVANTAGES	APPLICABLE STRATEGY LEVEL	REMARKS
		Acquisition and conditioning of stack gases by removing particulate and moisture and controlling sample temperature is a necessary step prior to sample sensing (analysis) using most continuous monitoring instruments that require sample extraction and transport to the instrument. Instruments have been developed to monitor selected gases in-situ, in the stack (non-extractive). However, they do not monitor the wide range of gases of interest in fluidized bed combustion. They are discussed herein by specific gas monitored. Manual sampling methods incorporate conditioning as an integral part of the sample train. Proper, non-interfering sample acquisition and conditioning appears to be the weakest link in the system to continuously monitor many pollutant gases of interst (106).
(a) Tends to specify desirable characteristics of results rather than provide clear cut examples and procedures of obtaining those results. (b) Primarily designed for SO_2 and NOx from power plant combustion sources with known stratification causing processes (e.g., pre-heater). (c) Does not address merging of two or more different gas streams. (d) Specifies sampling at "average" concentration yet does not fully define term. (e) Requires "multi-point" probe in one instance yet fails to specify number of points.	2	Continuous stack gas monitoring systems have traditionally consisted of a single in-stack filter (single point sampling) for sample extraction and transport to an analytical instrument. If the one sample point in the duct cross-section is sufficiently downstream from a gas mixing device such as a fan, the single point will be representative. If gas stratification exists, several sample points in the cross-section may be sampled simultaneously or a different location in the ductwork may be selected. Performance Specification No. 2 (PS2) allows single point, multi-point, cross-stack, etc., depending on distance downstream from a disturbance and existence of stratification.
(a) Consists of a simplified field tested concept that is incomplete as a method which can be applied to other general situations.	1	Emissions of the tracer gas selected should be theoretically predictable to enable comparison with measured emissions (i.e., CO_2 for combustion processes). Several recent extensive studies have been conducted to determine the extent of gas stratification and the effect on measurement techniques (331, 332, 55, 77). Some of the measurement techniques include static pressure null probes, thermal null probes, several continuous automatic sample rate adjustment

TABLE A-2 (continued).

INTEREST AREA	METHOD OPTION	REFERENCES	METHOD ADVANTAGES
Acquisition: Probe Location (cont.)	Pollutant Ratio Concept. (cont.)		
	Stratification Investigation Row Average Concept	55, 77, 331, 332, 309	(a) Has been field tested and results look promising (55). (b) Local duct geometry can usually be examined to select a row that will be in the direction of highest stratification (for which the technique works best). (c) Presents a specific description of the method, thus eliminating different interpretations of the techniques and subsequently, non-comparable results (55). (d) Reported higher accuracy and hardware simplicity (55). (e) The row sample points can easily be incorporated in a single multi-port probe. (f) An Ellison Annubar, which is a commercially available multi-port probe, can be used (309).
	Stratification Investigation. "Inner 50%" Concept	77	(a) Based on extensive field testing of a broad representative group of boilers with characteristic duct-stack configurations. (b) Considerably advances the state of knowledge of actual stratification conditions. Narrows the cross-sectional area of concern to the inner 50%.

TABLE A-2 (continued).

METHOD DISADVANTAGES	APPLICABLE STRATEGY LEVEL	REMARKS
		devices, multi-point probe arrays, annubars, and constantly traversing probes (332). An extensive review of these techniques is beyond the scope of this study. Monitoring at the stack rather than in a duct is preferred for uniform conditioning (77). One investigator (331) recommended the discussed pollutant ratio technique. It should be noted that extensive testing and development is still required to present commercially marketable reference method type samplers for application in a stratified gas stream. Each system must be designed for a specific location due to site condition variability.
(a) Main problem is a lack of predictability (b) Requires preliminary survey traversing to select optimum system. (c) System hardware is not commercially available. (d) Requires additional field testing. (e) Care required in probe (multi-point) port sizing to insure desired flow into probe.	2	See above for general comments on stratification investigations. The row average technique was initially developed as a velocity (flow rate) measurement technique. It consists of extracting continuous samples from several selected points (ports) on a particular traverse or "row" across the cross-section. Primarily for rectangular ducts.
(a) Still does not provide a clear method of conducting a stratification investigation and subsequent selection of a valid number of representative sample points.	2	This writeup discusses findings of an entensive field evaluation of gas stratification (77). Conclusions included: (1) sampling confined to traversing the inner 50% of the duct will allow a determination of the flue gas composition which is very close to the actual composition; (2) single point sampling is inappropriate for obtaining representative gas samples; (3) recommended multi-point sampling within the

TABLE A-2 (continued).

INTEREST AREA	METHOD OPTION	REFERENCES	METHOD ADVANTAGES
Acquisition: Probe Location (cont.)	"Inner 50%" Concept (cont.)		
	Stratification Investigation. "Tangential" Concept	309	(a) Follows directly from accepted (Method 5) procedures used for manual sampling. (b) Flow-proportional sampling is not required; same sample rate at each selected point.
Acquisition: Particulate Separation	In-Stack, On-Line Filtering	106, 215, 77, 231, 211	(a) Most commonly applied method of removing particulate using a filter in the stack. (b) Extensive experience for process monitoring in the larger process industries. (c) Typically stainless steel or ceramic construction; thus, resistant and reasonably inert relative to sample contamination. (d) Structurally strong to withstand vacuum sampling and high pressure blowback at high temperature. (e) Commercially available with varying porosity to provide necessary particulate removel without high pressure drop. (f) Can be installed in a heated chamber outside the stack to provide access (less desirable due to particulate buildup in probe). (g) Multiple in-stack units can be designed to provide simulated traverse sampling.

TABLE A-2 (continued).

METHOD DISADVANTAGES	APPLICABLE STRATEGY LEVEL	REMARKS
		inner 50% of the duct; each point representing an equal area (a minimum of 3 points). Seven different fossil fuel-fired utility boilers were tested. Results of "in-stack" tests as opposed to "in-duct" tests indicate that stack conditions are extremely uniform and are preferred (77). SO_2, NO, CO_2, O_2 concentration profiles as well as velocity and temperature profiles were obtained.
(a) Still requires traversing investigation and then design and selection of a representative number of sample points.	2	Primarily for multi-point gas sampling in a circular duct or stack. Consists of a technique of properly selecting a number of points and the associated location from which continuous gas samples may be extracted.
(a) The sample is exposed to a more concentrated particulate cake on the filter surface that could result in increased losses by adsorption. (b) Requires additional plumbing and controls to provide blowback gases. (c) Care required to prevent breaking ceramic filters. (d) Requires backup instrument air compressors with associated cleaners for secured continuous operation.	1 and 2	Basically consists of a simple probe with an attached sintered filter and a compressed gas (dry plant instrument air) system for timed blowback to periodically clean the filter of particulate buildup. The entire gas sample flow is delivered to the analysis instrument, thus making it "on-line" filter. This system is essentially the "external" filtering system described in (211). Associated with extractive sampling systems. May be applied in the stack to remove larger particulate and is frequently followed with additional filters (before the instruments) to remove finer particulate. A different type of in-stack filter referred to as the "internal" system has been tested (211). This system consists of a sintered type filter that may be packed with glass wool, and is essentially the old Alundum Thimble System, used traditionally to obtain particulate emission data. This system, however, requires manual filter cleaning since blowback systems would destroy the glass wool packing and may not properly "clean" the filter. The performance period, however, may approach that of the external filter

TABLE A-2 (continued).

INTEREST AREA	METHOD OPTION	REFERENCES	METHOD ADVANTAGES
Acquisitions: Particulate Separation (cont.)	In-Stack, On-Line Filtering (cont.)		
Acquisition Diverted Stream	Large Volume Subsequent Splitting	106, 241	(a) Convenient to install, check, and maintain several connected sample lines. (b) Allows short sample lines to analysis instrument and direct access to the filter for checkout. (c) The high velocity fan required to deliver the diverted stream provides excellent mixing and a uniform sample in the manifold. (d) Has been extensively used in the process industry evaluation; thus, various filters, conditioners, etc., are commercially available to build the system.
Conditioning Moisture Control	Dilution	251, 223	(a) Immediately prevents sulfur oxides from being exposed to moisture which could result in losses of sample (b) Usually results in simultaneous temperature control of sample gases. (c) Commercially available probes.
	Condensation	151, 211, 231	(a) Commercially available and is typically part of a total system for stack-gas monitoring (100). (b) A knock out trap condenser is very simple and inexpensive. (c) Usually results in simultaneous temperature control.

TABLE A-2 (continued).

METHOD DISADVANTAGES	APPLICABLE STRATEGY LEVEL	REMARKS
		in some applications. The elimination of backflushing saves cost and maintenance problems, a definite plus for this system.
(a) An efficient high horse power blower is required to insure that velocity in pipes and manifold is high enough to prevent particulate buildup. (b) The transfer pipe is reasonably large (3 inches plus), thus requiring external structural support and additional heating capability. (c) Subject to single point (cross-section) sampling errors due to stratification in the stack.	2	Basically consists of a piping system for drawing a high flow, high temperature, diverted portion of the stack gas down to a manifold which can in turn be sampled in a more convenient manner. The high flow rate prevents particulate settling and a return line redeposits the gas stream downstream from the diverted sample point. A filtering system similar to that described above is still required.
(a) Requires large volumes of dry instrument gas which is relatively expensive. (b) Requires monitoring of the dilution flow rate for concentration correction. (c) Generally, a more complicated system than condensation.	2	Basically consists of adding, under controlled conditions, dry instrument gas that mixes with the sample stream resulting in a lower dew point and typically lower gas temperature.
(a) Care and maintenance is required to install and operate a condenser to prevent uncontrolled condensation. The condenser must be tuned relative to the specific stack moisture conditions to insure adequate sample line heating and insulation prior to condensation. Wintertime wind chill factors should be considered in designing heating requirements.	2	The temperature limitations of the analytical instrument governs the type of condensation system selected. Likewise, the amount of moisture in the gas stream and the gas dewpoint influence selection. The simplest condensation option consists of a knockout trap that is temperature controlled (between stack temperature and 400°F if sample lines are Teflon). The trap is preferably located outside but near the stack. The other system involves a refrigeration type unit that that removes all moisture down to or below approximately ambient temperature. The gases are then slightly reheated for analysis.

TABLE A-2 (continued).

INTEREST AREA	METHOD OPTION	REFERENCES	METHOD ADVANTAGES
Conditioning Moisture Control (cont.)	Permeation Distillation	234, 77, 211	(a) Commercially available. (b) No moving parts or electrical connections; thus, explosion proof. (c) Can be mounted horizontally or vertically when purchased as a coil. (d) Has been extensively applied to sampling systems associated with auto emissions monitoring. (e) Can be operated under high pressure conditions (to 100 psig sample pressure). (f) Reasonable efficiency and capacity to handle high moisture conditions for typical sampling systems (up to 6 scfh). (g) No possibility of sample loss by solution in liquid condensate.
	Dessication	278, 231 211	(a) Commercially available (b) "Indicators" available to illustrate saturation, thus necessary disposal. (c) Highly efficient.

TABLE A-2 (continued).

METHOD DISADVANTAGES	APPLICABLE STRATEGY LEVEL	REMARKS
(a) Requires a continous purge of dry plant instrument air or N_2. (b) Particulates and condensable oil vapors must be removed prior to drying (oil mist and vapors degrade the drying ability). (c) Performance as a function of temperature has not been fully evaluated. (Normally operates at ambient.) (d) May require additional heating of sample gas to prevent condensation. (e) Permeation, or sample loss by other very low concentration gases of interest, may occur - extensive test information not available. (f) Particulate plugging seems to be the biggest problem (106).	2	Consists of a bundle of tubes that are permeable to water vapor and are enclosed in a shell. A continuous purge of either recycled dried gas product or other dry instrument air (or N_2) removes the permeated water vapor. The tubes are constructed of a proprietory material. Vacuum purge used when sample gas has 5% or more water vapor by volume.
(a) Saturates easily, thus requiring frequent maintenance. (b) SO_2 loss on some dessicant materials has been reported (106).	1 and 2	Essentially a granular material that adsorbs moisture.

TABLE A-2 (continued).

INTEREST AREA	METHOD OPTION	REFERENCES	METHOD ADVANTAGES
II. Acid Gas Sampling SO_2	EPA Method 6	116	(a) More or less recognized nationally as a standard method for testing. (b) Adaptable to different types of sources with a reasonably wide range of gas concentrations, even with high particulate concentrations. (c) The method is reasonably explicit regarding exactly where in the process stream or duct cross-section that sample will be collected, the volume required for a sample, the exact train configuration, and how the sample will be recovered and stored. (d) Units are commercially available from several manufacturers.
	EPA Performance Specification No. 2	114, 120, 107	(a) The measurement system described (a set of criteria as opposed to a specific vendor product) has been field tested on several processes and has been satisfactorily xemonstrated. (b) The system (sampling interface analyzer, and data recorder) is directly compared in the stack with the EPA Reference Method (Method 6) prior to acceptance. Thus continuous data can be compared with batch reference data. (c) Performance Specifications are provided; thus, varying and innovative instrument procedure can be used instead of specifying any one manufacturer's type of instrument. Both extrative and non-extractive procedures are allowed. (d) The system analyzer could be installed to service more than one stack source. (e) The non-extractive system can operate at relatively high stack temperatures since the sample does not have to be conditioned for transport and analysis.
	EPA Method 3 (Integrated Grab)	116	(a) The simplest, most convenient, least time consuming form of sampling is the grab sample. In this case the grab is an integrated sample over a controlled period of time. The container is a flexible inert bag which can be easily transported to a field location for Orsat analysis, or, in this case, SO_2 analysis.

TABLE A-2 (continued).

METHOD DISADVANTAGES	APPLICABLE STRATEGY LEVEL	REMARKS
(a) A manual method requiring field handling of fragile equipment (glassware, motors, pumps, etc.) precisely positioned and maintained in a frequently hostile environment. (b) The method specifies a single point (in the duct cross-section) sampling approach. This could result in errors if gas stratification exists (due to air leakage, etc.) even though sample location criteria have been satisfied pursuant to Method 1. (c) The short test time of the method (20 minutes for each sample) could result in inaccurate measurements for processes that have short term or erratic changes in SO_2 concentration.	1 and 2	The minimum sample time is 20 minutes and a minimum volume is 0.75 standard ft.^{3}. Two samples will constitute one run, to be collected at 1-hour intervals. Method yields SO_2 concentration which must be combined with stack gas flow rate (Method 2) to obtain SO_2 mass emission rate.
(a) Frequently relies on manufacturer's instructions which are too vague. (b) The weakest part of the extraction sampling system is the sampling interface. Theoretically, the zero and span calibration gas should be inserted into the system at the probe tip to determine the performance of the total system. However, for practicality it is inserted at a convenient point as close to the sampling interface as possible. This can result in reduced sample (i.e., wall) losses and an inaccurate calibration. (c) Typically a single point (in the cross-section) sampling system that could be seriously influenced by stratification and erratic profiles.	2	This continuous measurement system was developed to allow more or less continuous observations of the compliance of emissions with applicable New Source Performance Standards. This system may well become, with the corresponding monitoring of gas flow, a source of data for "Principal Evidence" regarding compliance with standards. Basically requires a sampling system capable of monitoring emission levels within 20% with a confidence level of 95% (116).
(a) Method 3 pulls the sample through the pump and then discharges into a bag. In order to use the system to extract samples for analysis of gases like SO_2 which are not specified in the method, the train should be evaluated to determine the effect of the condenser.	1	This EPA Reference Method for extracting an integrated or grab sample is primarily designated to obtain a sample for analysis of CO_2, excess air, and dry molecular weight. In this case an Orsat analyzer is employed for concentration measurement good to the nearest 0.1 percent. It is identified here for Level 1 sampling of SO_2 and other reactive gases and is a reference method of "grabbing" a sample.

TABLE A-2 (continued).

INTEREST AREA	METHOD OPTION	REFERENCES	METHOD ADVANTAGES
SO_2 (cont.)	EPA Method 3 (cont.)		(b) The sample period can be anywhere from 30 seconds to several hours, depending on bag size and sample rate. (c) The system can be easily adapted to obtain a sufficiently large sample of gas for analysis of many species (for detection level work)
	Detection Tube	196, 198	(a) This gas sampling and analysis tool is probably the simplest, most inexpensive, and most convenient system for obtaining approximate concentration of many gases including SO_2. (b) A direct reading of the gas concentration is obtained. (c) The sampling instrument is light-weight and easily hand-held.
	Hays-Republic Orsat	214	(a) Contained in a basic Orsat package, thus providing one instrument for multiple gases. (b) Inexpensive sampling system.
	Simple Displacement Bomb (ASTM 1605-60)	13.6, 211, 323	(a) Very simple, inexpensive technique for obtaining a sample up to 3 liters in size. (b) Little site preparation necessary. (c) Reference method for carbon dioxide, carbon monoxide, methane, oxygen, hydrogen and nitrogen.

TABLE A-2 (continued).

METHOD DISADVANTAGES	APPLICABLE STRATEGY LEVEL	REMARKS
(b) Wall losses on the sampling lines and bag may be significant; however, for detection as opposed to quantification, this method is probably the best. (c) Depending on the gas of interest, sample loss due to reaction condensation can occur in the condenser.		
(a) By its inherent nature of being quick (a sample can be obtained in a matter of minutes), direct reading, etc., the method is not particularly accurate in representing an average concentration of the gas in the stack. (b) The tool is short and hand-held, making it difficult to obtain readings at large ports with negative pressure and to get stack gas as opposed to dilution air. (c) Many of the tubes for specific gases have been developed for the mid-concentration range (for use with personnel monitors). Stack concentrations may exceed the limit of the tubes. (d) Many of the detection tubes are subject to interference; thus, judgment is required in selecting tubes and evaluating results.	1	A typical instrument consists of a hand pump to obtain a sample of approximately 100 ml which is drawn through a small glass tube filled with an indicating reaction chemical. The physical length of a discoloration indicates the specific gas concentration. Specific tubes are available for 80 or more pollutants. Shelf life can be extended up to one or two years by storage at or below 25°C (198).
Limited accuracy.	1	Essentially consists of a tube (similar to detection tubes) where a sample is drawn through and the length of a stain indicates the gas concentration. Can read to nearest 100 ppm.
(a) Small sample size. (b) Sample loss on walls of container. (c) Analysis for reactive gases must be performed quickly. (d) Should not be stored in direct sunlight.	1	Bomb techniques include air displacement and evacuated flask technique. Can be used to sample high-pressure, high temperature lines by use of a water-cooled heat exchanger.

TABLE A-2 (continued).

INTEREST AREA	METHOD OPTION	REFERENCES	METHOD ADVANTAGES
SO_2 (cont.)	Other Continuous Systems		
	EPA Method 12	117	
	Cross-Stack In-situ (Type I)	288, 132	(a) Does not require extracting, conditioning, and transporting the sample. (b) Involves a unit placed on opposite sides of stack or duct cross-section path that measures the integrated average gas concentration over that "path." (c) Also measures Co, CO_2, NO. (d) Overcomes gas stratification problems associated with single-point sampling systems by measuring over a "path" in the stack or duct cross-section. (e) The response time is very short and almost instantaneous (132). (f) Will probably meet or exceed EPA continuous monitoring specifications (114). (g) Insensitive to alignment.

TABLE A-2 (continued).

METHOD DISADVANTAGES	APPLICABLE STRATEGY LEVEL	REMARKS
		Part I of this table presents techniques of extracting and transferring a continuous sample to a selected instrument. Once a stack gas has been extracted and conditioned, it may be analyzed for any number of specific constituent gases by selecting the proper instrument. The appropriate instrument for each pollutant gas of interest is presented in the "Inorganic Gas Analysis" table in the appendix.
		See Performance Specification No. 2 above for advantages and disadvantages. Method 12 is not a method per se but is a specification of measurement and instrument characteristics that are determined by comparing continuous measurements with manual (Method 8) results. (Probe tips are side-by-side in the stack.) The zero and calibration drift is based on a percent of the "emission standard" instead of "span" as in Performance Specification No. 2.
(a) Relatively expensive; approximately $30,000 to $50,000 installed for multi-gas. (b) The system is located entirely on the stack, requiring service and maintenance on the stack. (c) Stack gas temperature limitation of 600°F (132). (d) Ambient temperature limitation of 105°F (132). (e) Gas stratification problems are not entirely eliminated--they are minimized relative to single point sampling. Adequate mixing is still necessary upstream of the path to insure a representative sample at the path. (f) The stack-instrument interface "window" must be maintained clean. (g) See (e) below.		Two types of cross-stack in-situ systems are available. Type I is a non-dispersive infrared instrument often called a correlation spectrometer (132).

TABLE A-2 (continued).

INTEREST AREA	METHOD OPTION	REFERENCES	METHOD ADVANTAGES
SO_2 (cont.)	Cross-Stack In-Situ (Type II)	105, 59, 288, 58, 160	(a) Same as (a) and (b) for Type I. (b) Also measures CO, CO_2, NO, hydrocarbons and opacity. Expect applicability in near future for NO_2, H_2S, SO_3, HCl, Cl_2 (288). (c) Very short response time, as in Type I. (d) Will probably meet EPA specifications, as in Type I. (e) Overcomes gas stratification problems, as in Type I. (f) Very high reliability - up to 98% (160). (g) Has been compared favorably with EPA Method 7 (288). (h) Excellent discrimination against other stack gases (58).
	In-situ Non-Extractive	192	(a) Commercially available (192). (b) Meets EPA specifications for monitoring specifications for SO_2 and NO (114, 120). (c) Well constructed for permanent installation. (d) Reported high degree of interference rejection, exceptionally long operational period, and high reliability (192). (e) Simultaneous temperature measurement for automatic adjustment. (f) Particulate interference problems apparently negligible using non-reactive ceramic filter with aerodynamic deflector. Reported 3 to 19 months maintenance-free probes. (g) Can be used as a portable instrument. (h) Integral data system available.
SO_3	Controlled Condensation (Goksoyr-Ross)	37, 95, 136, 32, 96	(a) Well researched, applied, and evaluated technique of collecting SO_3. (b) Reasonably accurate with few interferences. (c) Flow rates of up to 20 liters per minute still result in good collection efficiency.

TABLE A-2 (continued).

METHOD DISADVANTAGES	APPLICABLE STRATEGY LEVEL	REMARKS
(a) Also relatively expensive. (b) Also located on the stack, requiring effort to service in a frequently cold, windy environment. (c) Requires an in-stack alignment tube. (d) Moisture interference when measuring NO (62). (e) The system must be committed to only one source and cannot be time-shared between several sources at same location. (f) More complex calibration equipment required than for extractive analyzers (160).	2	Type II is an absorption spectroscopy system (105, 288). The Type II absorption spectroscopy technique is implemented by dispersive gas cell correlation and derivative spectroscopy (288).
(a) Single point in-stack sampling; thus, concerned with stratification. (b) On-the-stack mounting requires on-the-stack service and maintenance. (c) A different probe utilizing an air-purge blowback is required for "wet, sticky, particulates" from sources like a scrubber outlet (192). (d) Extensive performance data unavailable at this time. (e) Response time could be a problem since diffusion through a filter is required and a rapid driving force, compared to the extractive system, is not utilized.	2	This is a specific commercially available unit. It is not a method per se. An in-situ single point system for SO_2 and NO using second derivative spectroscopic technique. A porous filter is exposed to stack gases. The sample gases diffuse through the filter for sensing. The sample is not extracted through the filter. The sensor (light absorption) is located in the filter cavity. Primarily designed to meet EPA specifications to monitor NO/SO_2 only. A different unit will monitor O_2.
(a) Care required in handling glassware and maintaining water bath temperature; otherwise SO_2 is oxidized, leading to high SO_3 values. (b) Not a method per se, just a writeup of a technique that can be used. (c) Requires complex plumbing for field work. (d) Not commercially available.	2	The method consists of drawing a hot stack gas sample through a glass spiral in a controlled temperature water bath that selectively passes SO_2 but condenses SO_3 on a glass frit. An EPA method has not been adopted for SO_3. EPA Method 8 for H_2SO_4 mist measures free mist and converts SO_3 to a mist to be combined with the free mist.

TABLE A-2 (continued).

INTEREST AREA	METHOD OPTION	REFERENCES	METHOD ADVANTAGES
SO_3 (cont.)	Los Angeles County	60	
	Shell-Thornton Cell	220, 32, 271	
NO_x	EPA Method 7	116	(a) More or less recognized nationally as a standard method. (b) Commercially available unit that is reasonably inexpensive. (c) The method is reasonably explicit regarding exactly where in the process stream (Method 1) and duct cross-section samples will be collected, the exact train configuration, and how the sample will be recovered and stored.
	EPA Specification No. 2	114, 120, 102	(a) See discussion under SO_2. Same advantages (a through f). In (f) the comparable EPA method is Method 7.
	Other Continuous Systems		
	Detection Tube	196, 198	
	Simple Displacement Bomb	13.6, 211, 323	

TABLE A-2 (continued).

METHOD DISADVANTAGES	APPLICABLE STRATEGY LEVEL	REMARKS
	1 and 2	
	1 and 2	The controlled condensation method above was first described in this Shell report (271). The advantages and disadvantages are thus described under that method discussion.
(a) A manual method requiring field handling of fragile equipment (glassware, meters, pumps, etc.) precisely positioned and maintained in a frequently hostile environment. (b) The method specifies a single point (in the duct cross-section) sampling approach. This could result in errors if gas stratification exists. (c) The batch nature of this method and the short sample period (less than a few seconds) could be heavily influenced by erratic processes or stratification leaks. (d) The precision and reproducibility are constant down to about 100 ppm NO_x. The method begins to yield low results below this concentration.	1 and 2	This method consists of grabbing a sample in an evacuated 2 liter flask containing an absorbing solution. The sampling location shall be the same as for SO_2 (Method 6) sampling. Four samples shall be taken at 30 minute intervals. Method 7 is also applied to nitric acid plants.
(a) See discussion under SO_2. Same disadvantages (a through c).	2	See discussion under SO_2.
		Part I of this table presents techniques of extracting and transferring a continuous sample to a selected instrument. Once a stack gas has been extracted and conditioned, it may be analyzed for any number of specific constituent gases by selecting the proper instrument. The appropriate instrument for each pollutant gas of interest is presented in the "Inorganic Gas Analysis Options" table in the appendix.
	1	See Detection Tubes discussion under SO_2.
(a) NO_2 very soluble in water. (b) Wall losses can be considerable (possible total loss of sample) (211). (c) To reduce losses, nylon, EVA, and PVC tubing or containers should not be used (323).	1	See Simple Displacement Bomb discussion under SO_2.

TABLE A-2 (continued).

INTEREST AREA	METHOD OPTION	REFERENCES	METHOD ADVANTAGES
NO_x (cont.)	ASTM D1608-60	14	(a) Wide applicable concentration range (up to several thousand ppm). (b) Very similar to EPA Method 7 (evacuated flask). (c) Supported by extensive field testing. (d) Reasonably simple sampling train that does not require extensively trained operators.
	Cross-Stack In-Situ	105, 59, 288, 132, 160	
	In-Situ Non-Extractive	192	
H_2S	EPA Method 11	112	(a) Reasonably simple sampling train consisting of midget impingers. (b) Can be used on pressurized ducts. (c) Based on techniques extensively developed in refinery industry.
	Detection Tube	196, 198	
	EPA Method 3	116	Use Tedlar or Teflon bag.
	ASTM D2725-70	311, 270	Test method for H_2S in natural gas.
	Simple Displacement Bomb	13.6, 211, 323	
CO_2	EPA Method 3	116	
	EPA Performance Specification No. 3	114, 107	(a) Reasonable specifications attainable using numerous available commercial instruments. (b) First and only writeup of a continuous system. (c) Long term unattended operation period.

TABLE A-2 (continued).

METHOD DISADVANTAGES	APPLICABLE STRATEGY LEVEL	REMARKS
(a) Requires handling glassware near the stack port. (b) Requires an overnight absorption period prior to analysis. However, method prescribes manner of obtaining results after 2 hours (results 3% low). (c) Interferences from inorganic nitrates, nitrites, organic nitrogen. (d) SO_2 may consume part of absorbing solution leaving inadequate amount for NO_x. (e) Role of some constituents of combustion as interfering substances has not been thoroughly investigated.	1 and 2	
Measures NO only.	2	See Cross-Stack In-Situ discussion under SO_2.
Measures NO only.		See In-Situ Non-Extractive discussion under SO_2.
(a) Caution required to thoroughly mix cadmium hydroxide absorbing solution. (b) Standard disadvantages associated with midget bubbler wet chemical methods. (c) Handling concentrated acids.	1 and 2	Analysis titration should be conducted at sampling location. Titration should never be made in direct sunlight.
	1	See Detection Tubes discussion under SO_2.
	1 and 2	See Method 3 discussion under SO_2.
Questionable applicability above 50 ppm (101) or 23 mg/m^3.	1 and 2	Use neutral $CdSO_4$ solution in place of zinc acetate absorbing solution. Methylene Blue Method. See Simple Displacement Bomb discussion under SO_2. See Method 3 discussion under SO_2.
(a) The specification does not address sampling interface problems. (b) Need for in-stack calibration hasn't been fully researched.	1 and 2	This is not a method per se. It is a set of instrument and sampling system performance specifications.

TABLE A-2 (continued).

INTEREST AREA	METHOD OPTION	REFERENCES	METHOD ADVANTAGES
CO_2 (cont.)	EPA Performance Specification No. 3 (cont.)		(d) Address sampling location and potential stratification.
	Detection Tube	196, 198	
	Simple Displacement Bomb	13.6, 211, 323	
	Cross-Stack In-Situ	105, 59, 288, 132, 160	
HCl	Impinger Train	216, 70, 196, 166, 152	(a) Low to high concentration range. (b) Reasonable accuracy (±10%). (c) Method using distilled H_2O in impingers, few interferences (166).
	Detection Tube	196, 198	
	Simple Displacement Bomb	13.6, 211, 323	
	EPA Method 3		
	Cross-Stack In-Situ	288	The only method for continuous measurement of HCl.
	Intersociety Committee (Reference Method 201)	6	Reference method with proper writeup specifying exact procedures, accuracy, required apparatus, etc.
	ASTM D2036-72	13.7, 311	(a) Reference method by ASTM. (b) Extensive experience in applying method to various situations.
HCN	Detection Tube	196, 198	
	Simple Displacement Bomb	13.6, 211, 323	
	EPA Method 3	116	

TABLE A-2 (continued).

METHOD DISADVANTAGES	APPLICABLE STRATEGY LEVEL	REMARKS
	1	See discussion of Detection Tubes under SO_2.
	1	See discussion of Simple Displacement Bomb under SO_2.
		Basic Orsat analysis.
	2	See Cross-Stack In-Situ discussion under SO_2.
(a) Typical midget impinger train sampling situation requiring handling glassware and wet chemicals in the field.	1 and 2	Sample drawn through sodium hydroxide (8).
(b) Interference from silver salts (216).		Halide interferences in method (152).
(c) May suffer from interference from sulfate or chloride ions in particulates (70).		
	1	Range from 2 ppm to 2% by volume (198).
		See Detection Tubes discussion under SO_2.
	1 and 2	See Simple Displacement Bomb discussion under SO_2.
	1 and 2	See Method 3 discussion under SO_2.
Needs additional refinement before commercially available.	2	See Cross-Stack In-Situ discussion under SO_2.
Sulfate interferences (can be corrected for).	1 and 2	Reference impinger method
(a) Wet chemical method requires use of highly toxic reagents.	2	Two impingers in series each with 15 ml 0.5N KOH (311).
(b) Requires adoption of a "water" method for sampling.		ASTM method for cyanides in water.
	1	Range from low ppm to 2% by volume (198).
		See Detection Tubes discussion under SO_2.
	1	See Simple Displacement Bomb discussion under SO_2.
	1 and 2	See Method 3 discussion under SO_2.

TABLE A-2 (continued).

INTEREST AREA	METHOD OPTION	REFERENCES	METHOD ADVANTAGES
HF & F	EPA Method 13A	119, 25, 92	(a) Isokinetic sampling for particulate and gaseous total fluoride emissions using established Method 5 type train. (b) Three percent relative standard deviation from replicate inter-laboratory determination study with range of 39 to 350 mg/l. (c) Reasonably stable sample. (d) Stainless steel probe. (e) Routine Method 5 type train operation. (f) Automatically obtains necessary data to calculate fluoride emissions.
	EPA Method 13B	119, 25, 92	(a) Isokinetic sampling for particulate and gaseous total fluoride emissions using established Method 5 type train. (b) Accuracy reported to be 1-5 percent (electrode measurements). (c) Routine Method 5 type train operation. (d) Routine sample removal and cleanup.
	Detection Tube	196, 198	
	Los Angeles County	200	
	Wet Chemical	261, 204	(a) Could be adapted for a wet chemical method of sampling. (b) Applicable above 1 ppm.

TABLE A-2 (continued).

METHOD DISADVANTAGES	APPLICABLE STRATEGY LEVEL	REMARKS
(a) Fluorocarbons such as freons not quantitatively collected. (b) Chloride ion interference. (c) See particulate sampling table for general Method 5 disadvantages. (d) Sensitivity not determined.	1 and 2	SPADNS Zirconium Lake Method. Fluoride determined instead of HF. Covers range from 0-1.4 g/ml fluoride. Filter inserted either prior to first impinger or after third. Whatman type filter required. Method designed for testing Primary Aluminum plants.
(a) Fluorocarbons such as freons not quantitatively collected. (b) Sensitivity not determined. (c) During lab analysis, Al in excess of 300 mg/l and silicon dioxide in excess of 300 mg/l will prevent complete recovery of fluoride. (d) Temperature change in sample will significantly affect electrode response. (e) Glass probe required. (f) Gas reaction with glass probe may be incomplete if probe becomes coated with particulate.	1 and 2	Specific Ion Electrode Method. Fluorides determined instead of HF. Covers range of 0.02-2000 mg/ml. Same sample train as Method 13A. Method designed for testing Primary Aluminum plants. HF and F_2 react with heated glass probe to form gaseous silicon tetrafluoride which hydrolyzes in the water impingers to form fluosilicic acid and insoluble orthosilicic acid.
	1	See Detection Tubes discussion under SO_2. 1.5 to 15 ppm range.
	1 and 2	Caustic solution impinger train.
(a) Requires field updating for current stack sampling in the presence of many other gases that could interfere. (Aluminum sulfate and phosphate (204).)	1 and 2	Impinger train containing zirconium oxychloride octahydrate-salochrone cyrhine R solution. Spectrophoto analysis. Specific for HF.

TABLE A-2 (continued).

INTEREST AREA	METHOD OPTION	REFERENCES	METHOD ADVANTAGES
III. Inorganic Gas Sampling			
CO	EPA Method 10	112, 94	(a) Can use silica gel to remove moisture (need to correct sample gas volume). (b) Grab sampling allowed. (c) Either continuous or manual methods can be used.
	Detection Tube	196, 198 94	
	Simple Displacement Bomb	13.6, 211, 323	
	Reduction Methods	94	
	Oxidation Methods	94	
	Complexation Methods	94	Simple, reasonably quick measurement technique.
	Cross-Stack In-Situ	281, 132	
O_2	Performance Specification No. 3	114, 107	Polaragraphic or paramagnetic as discussed in (4 and 5) may be used if meet specifications.
	Detection Tubes	196, 198	
	Simple Displacement Bomb	13.6, 211, 323	
	EPA Method 3	116	

TABLE A-2 (continued).

METHOD DISADVANTAGES	APPLICABLE STRATEGY LEVEL	REMARKS
(a) H_2O interference. (b) Does not address gas stratification in the continuous mode (weakness of a single point sampling).	1 and 2	Integrated grab sample technique <u>or</u> continuous sampling. Analysis using NDIR. Use condenser for moisture removal in continuous sampling. Use Ascarite to remove CO_2 prior to NDIR.
Major interfering gases include CO_2, SO_2, and NO_2.	1	See Detection Tubes discussion under SO_2.
	1	See Simple Displacement Bomb discussion under SO_2.
	1 and 2	This includes other wet chemical techniques and reduction techniques. CO has a very low solubility in aqueous solutions. (Also too low in organic solvents). Method essentially requires grab sampling as described in EPA Method 10.
	1 and 2	Methods utilize catalytic conversion of CO to CO_2.
Typical precision is reading (in%) ±0.3. Low volume measurement.	1 and 2	Well known Orsat technique involving selective scrubbing by a liquid reagent.
	1 and 2	See Cross-Stack In-Situ discussion under SO_2.
	1 and 2	See CO_2 discussion.
	1	See Detection Tubes discussion under SO_2.
	1	See Simple Displacement Bomb discussion under SO_2.
(a) Orsat analysis technique limited to 0.3% precision.	1	See Method 3 discussion under SO_2.

TABLE A-2 (continued).

INTEREST AREA	METHOD OPTION	REFERENCES	METHOD ADVANTAGES
O_2 (cont)	Paramagnetic	70, 196	(a) An instrumental technique that has been used on combustion sources for many years. (b) Reasonably selective technique.
	Polarometric	196	(a) An instrumental technique that has been used on combustion sources for many years. (b) Good for low concentration ranges. (c) Less expensive than paramagnetic and more rugged. (d) Accuracy of 0.2-0.5 vol. % in 0-25% range.
NH_3	Kjeldahl Method (Nesslerization)	61, 287, 216, 278, 196	(a) Precision approximately $\pm$2%. (b) This is the most common primary method used to sample and analyze for ammonia. (c) Gives both particulate (if penetrate filter) and gaseous NH_3. (d) Can use commercially available midget impinger sampling systems. (a) Common and familiar sampling equipment.
	Indophenol Blue Technique	278, 196	(a) See above. (b) Advantage over Nessler reagent when determining low NH_3 concentrations in that H_2S does not interfere (196). (c) Detection limit and reproducibility correspond to Nessler reaction.
	ASTM D1426-71		

TABLE A-2 (continued).

METHOD DISADVANTAGES	APPLICABLE STRATEGY LEVEL	REMARKS
(a) NO and NO_2 also magnetic but effect is probably on order of 0.2 percent oxygen by volume.	1 and 2	An instrumental technique that could be used to satisfy Performance Specification No. 3 Relies on the magnetic susceptibility of oxygen. Requires appropriate sample point selection and stratification investigation for emission measurements.
(a) Less accurate than paramagnetic (196).	1 and 2	An instrumental technique that could be used to satisfy Performance Specification No. 3. Requires appropriate sample point selection and stratification investigation for emission measurements.
(a) Interference from certain amines and calcium in excess of 250 mg/1. (b) Routine problems associated with handling glassware and reagent chemicals in the field (i.e., wet chemical method). (c) May need to add potassium permanganate to H_2SO_4 to eliminate H_2S and formaldehyde from reacting with Nessler reagent (196).	1 and 2	Standard impinger collection in 0.1N H_2SO_4. To insure distinct end-point, the indicator solution should be added to the boric acid solution immediately prior to use. A continuous ambient type monitor using this technique was developed and used by EPA. Primarily for stack concentration ranges.
(a) See above. (b) Potential interference from formaldehyde, nitrite, sulfite (196).	1 and 2	Collected the same way as above, then reacted with alkaline phenol and sodium hypochlorite and adsorbents measured on a Colorimeter. The "Non-Referee" method presented here is an analysis technique similar to the Nesslerization technique. Thus, the sampling procedure here is to collect in an impinger train. This method is for NH_3 in water and only addresses analytical issues. Use Kjeldahl for sampling.

TABLE A-2 (continued).

INTEREST AREA	METHOD OPTION	REFERENCES	METHOD ADVANTAGES
NH_3 (cont.)	Detection Tube	196, 198	Very simple; easy to use.
	Simple Displacement Bomb	13.6, 211, 323	
H_2O	EPA Method 4	116, 70, 50	(a) Reasonably simple for accuracy obtained. (b) Very simple analysis (volume measurement and silica gel weighing). (c) Applicable to very low to very high moisture streams by varying sample time. (d) Commercially available or easy and inexpensive to construct. (e) Extensively evaluated for quality assurance.
	Adsorption	116, 70, 50	(a) Very simple technique--can sample large or small volumes depending on moisture content. (b) Commercially available and inexpensive. Indicators available to indicate saturation. (c) Extensively used in industry for manual and automatic collection.
	Wet and Dry Bulb Temperature	70	(a) Reasonably simple manual technique. (b) Some units are commercially available. (c) Acceptable technique below 212°F.
	Detection Tube	196, 198	
	NDIR	25	One of the better techniques for continuously monitoring moisture in stack gas.

TABLE A-2 (continued).

METHOD DISADVANTAGES	APPLICABLE STRATEGY LEVEL	REMARKS
Careful selection to avoid interferences.	1	From ppm to 10% volume range. See Detection Tubes discussed under SO_2.
	1	See Simple Displacement Bomb discussed under SO_2.
(a) Requires handling wet chemical-type glassware (i.e., manual method). (b) Problems if gas stream is saturated and laden with moisture droplets that could penetrate the filter. (c) Note color of condensate. In some gas streams, other gases may also condense out giving erroneous results	1 and 2	Moisture is condensed and determined volumetrically. Since this train also includes silica get prior to the pump, this method is a combination of condensation and adsorption. Condensation generally applies to ≤1% moisture.
(a) Care required to avoid loss of condensate prior to absorbent if cooling gas required. (b) May also collect some organics (a dark color on the surface indicates organic collection). (c) Limited to 300°F (50).	1 and 2	Procedure is to draw a volume of gas through a tube of adsorbent like silica gel and weigh for collected moisture. Essentially a dessication technique. Remove particulates prior to absorption.
(a) Difficult to judge wet bulb temperature with confidence that equilibrium has been reached (above 212°F the wick dries out). (b) Particulates on wet bulb can cause errors after a period of buildup. (c) Practically limited to 212°F.	1 and 2	Essentially consists of two temperature measurements. Requires using psychometric charts.
	1	See Detection Tubes discussion under SO_2.
(a) The concentration range is limited to 0-5%. (b) Usually applied to ppm range concentrations.	2	Continuous measurement of moisture is a complicated task due to the usual wide range in stack gas concentrations and the continuous maintenance problems associated with uncontrolled condensation prior to the sensor. Typically, the stack temperature is too high to maintain in a heat-traced sample line up to an NDIR to get continuous readings prior to any moisture condensing out.

TABLE A-2 (continued).

INTEREST AREA	METHOD OPTION	REFERENCES	METHOD ADVANTAGES
H_2O (cont.)	EPA Method 3	116, 196, 94	
	Cryogenic Absorbing	196	(a) Probable complete collection of COS at cyrogenic temperatures.
	Simple Displacement Bomb	116	
CS_2	EPA Method 3		
	Simple Dispacement Bomb	13.6, 211, 323	
	Detection Tube	196, 198	
	Wet Chemical	166, 94, 261, 146, 152	(a) Sampling contractors are familiar with and routinely use wet chemical techniques. Thus, this method could easily be incorporated in a multi-gas sample train. (b) Range of one method allows determination down to a few ppm (146). Impinger train (with analysis on spectrophotometer) also pre-scrubs to remove H_2S. (c) Range of another method is about 5-50 ppm (152) but requires passing gas through lead acetate paper to remove H_2S prior to collection

TABLE A-2 (continued).

METHOD DISADVANTAGES	APPLICABLE STRATEGY LEVEL	REMARKS
(a) Difficult determination in presence of H_2S, CO_2, CS_2.	1 and 2	COS is odorless and highly toxic (196). See Method 3 under SO_2 discussion. Gas chromatographic analysis (196).
(a) Not a method per se, just a specified technique familiar to most GC operators. The sampler must complete the train design. (b) Routine difficulty in obtaining and operating a field cryogenic sampling operation at the stack. More difficult than routine wet chemical sampling.	1 and 2	Few methods are presented in the literature that specifically apply to COS. This is not a method per se but another technique of obtaining a sample for GC analysis that involves passing the sample over silica gel at -78°C for a preliminary concentration (196).
	1	See Simple Displacement Bomb discussion under SO_2.
	1 and 2	See Method 3 discussion under SO_2. See COS above. A primary method of collecting a sample for gas chromatographic analysis.
	1	See Simple Displacement Bomb discussion under SO_2. Applied to concentrations up to 60 ppm (198). See Detection Tubes discussion under SO_2.
(a) Wet chemical impinger trains are more difficult to handle and operate in the field than automatic instruments (not available in this case). (b) Care to select a train to address H_2S interference. (c) Method as described in may not be sensitive for ambient concentration levels 2-3 ppm.	1 and 2	Several wet chemical techniques are presented in the literature (146, 152, 166). CS_2 is not very soluble in aqueous solutions but soluble in many organic solvents (94). The usual problem of single point sampling should be addressed by conducting a gas stratification investigation.

TABLE A-2 (continued).

INTEREST AREA	METHOD OPTION	REFERENCES	METHOD ADVANTAGES
CS_2 (cont.)	Wet Chemical (cont.)		(d) Another method (166) allows determination of H_2S, CS_2 and methyl mercaptan in one simple train.
Hg			
IV. Organic Gases	SASS	218, 173, 2	(a) Most important advantage is that the sampling system isokinetically collects particulates (for organic analysis) and gaseous organics simultaneously. (b) The train is designed to collect both both volatile and non-volatile organics simultaneously. (c) A reported advantage of the system is the high sample rate and thus shorter sampling periods. A definite and more significant advantage is the ability of the train to simultaneously collect many pollutants. (d) Describes adsorption trap system for a full range of typical stack temperatures.
	Hot Integrated Grab	311, 34	(a) Confidence in collection of more volatile organics. (b) By operating a one bag system, it is reasonably easy to obtain a sample.
	Integrated Grab Sampling	116	(a) Eliminates concern for loss of low molecular weight materials. (b) On-site GC can be used for quick and convenient field analysis.

TABLE A-2 (continued).

METHOD DISADVANTAGES	APPLICABLE STRATEGY LEVEL	REMARKS
	1 and 2	See "Particulate Sampling Options" table.
(a) Low molecular weight materials may penetrate the adsorption trap. (b) A serious weakness is that the system has not been field tested and some of the components are not commercially available. (c) Isokinetic sampling; however, at this date the system cannot traverse for mass emission rate due to constant flow requirement for cyclones (particle sizing portion). (d) A.D. Little quartz filters (or equivalent) are recommended but may not be available.	1 and 2	See SASS discussion in "Particulate Sampling Options" table. Teflon coating for filter holder should not be used. Requires water-cooled probe for high temperature stacks.
(a) Cumbersome field instrument, primarily designed for special situation sampling. (b) Possible organic material loss mechanisms include collection on quartz wool and condensation on bag walls. Material collected on quartz wool may be subsequently analyzed.	1 and 2	System consists of a heated particulate filter (quartz wool) followed by a short heat traced teflon line leading to a four compartment bag. Each compartment has a capacity of one cubic foot and is made of teflon. The compartments are activated for preset time periods of equal duration to obtain equal emission segments during a short period (up to six minutes total). The system is maintained at 300°F during transport to the field lab and manifold sample for extraction. Only used for THC, CO, and CH_4 in the field.
(a) Reactions may occur on walls or in condenser. (b) Bag leakage.	1 and 2	EPA Method 3 sample train (also a part of EPA Method 10). Appropriate method for certain classes of organics, depending on volatility.

TABLE A-2 (continued).

INTEREST AREA	METHOD OPTION	REFERENCES	METHOD ADVANTAGES
Organic Gases (cont.)	Solvent Scrubbing	218	Can be combined with a Method 5 particulate train to simultaneously volatile and non-volatile organics. Organic material is extracted from the absorbing solution with a suitable solvent.
	Condensation	218	(a) Simple technique unless attempting to collect specific species using complex temperature programming procedures. (b) Used for both ambient and source emission monitoring. (c) Commonly applied technique. (d) A wide range of organics may be collected.
	Porous Polymer Adsorbents	218	(a) Water vapor is not strongly adsorbed. High humidity streams may be sampled. (b) A variety of adsorbent materials are available--(selective sampling is possible). (c) Porous polymers can be used up to temperatures of 300°C.
	Chemical Substrate Adsorption	218	(a) Activated charcoal adsorbs a broad range of organics. (b) Technique is used by NIOSH. (c) Reasonably simple technique.

TABLE A-2 (continued).

METHOD DISADVANTAGES	APPLICABLE STRATEGY LEVEL	REMARKS
(a) Solvent selection may be difficult; the sample should: (1) be easily removed without sample loss, (2) be safe, (3) not react with the system, and (4) not be found in the system. (b) Subsequent evaporation of solvent results in sample concentration. (c) Difficult to collect low boiling point materials.	1 and 2	Not a highly refined method and thus not generally recommended.
(a) Collection efficiencies vary with substance being collected. (b) Condensed water may plug trap and react with absorbed organics. (c) Cryogenic trapping requires special equipment.	1 and 2	Not a recommended technique.
(a) Needs additional field verification. (b) Some adsorbents are expensive. (c) Usually low sample rate due to pressure drop through adsorber. (d) Higher molecular weight compounds are more readily adsorbed than low molecular weight compounds. (e) Solvent extraction is required.	1 and 2	Potentially the best method for collection (and concentration) of organics. A porous polymer adsorbent is specified as part of the SASS train
(a) Sample recovery may be incomplete. (b) Charcoal may act as a catalyst. (c) Desorption (by heating) may affect chemical changes (e.g., thermally allowed rearrangements). (Pyrolysis may occur.)	1 and 2	Silica gel and activated carbon are commonly used.

TABLE A-2 (continued).

INTEREST AREA	METHOD OPTION	REFERENCES	METHOD ADVANTAGES
Organic Gases (cont.)	Detection Tube	196, 198	Inexpensive and commonly used.
	Battelle Adsorbent	218	(a) Uses Method 5 train design. (Isokinetic sampling is used.) (b) Primarily designed to sample Polycyclic Organic Material (POM). (c) The adsorbent trap is designed to be an integral part of a Soxhlet extraction apparatus. (d) Validation studies have been conducted.
	Kaiser Tube	218	(a) Efficient collection of low molecular weight materials is possible. (b) Kaiser tube is reasonably simple.

TABLE A-2 (concluded).

METHOD DISADVANTAGES	APPLICABLE STRATEGY LEVEL	REMARKS
(a) Interferences are common, i.e., detection tubes lack selectivity. (b) Detection tubes are available only for a limited number of specific compounds.	1	See Detection Tubes discussion under SO_2.
(a) Requires controlled temperature water bath for absorber. (b) Some water vapor is also condensed in cooler. (c) Needs additional field testing. (d) Aqueous SO_2 may react with and thus alter the collected material (218).	1 and 2	Essentially a Method 5 type train; i.e., the absorber is placed after the filter and before the impingers. Appears to be an excellent system based on limited studies.
(a) System operates at -160°C. Cryogenic equipment is required. (b) Needs extensive field testing. (c) Difficult to collect samples isokinetically (combined system).	1 and 2	Consists of a polymer packed tube cooled to -160°C; designed to sample low molecular weight materials.

TABLE A-3. METHOD OPTIONS FOR LIQUID SAMPLING

INTEREST AREA	METHOD OPTION	REFERENCES	METHOD ADVANTAGES
I. Stationary and Partial Stream Cut Sampling	Dipper	13.1, 13.2, 13.3, 13.5	(a) Can be used for slurry sampling. (b) No site preparation. (c) Simple and inexpensive method.
	Tap	13.1, 13.2, 13.3, 13.5	(a) Can be used for slurry sampling in well-mixed flow regions. (b) Representative sampling of liquid streams having a small solids content (i.e., less than 5% by weight). (c) Simple and relatively inexpensive.
	Thief	13.1, 13.2, 13.3, 13.5	(a) Determination of stratification of constituents possible. (b) By sampling at different depths of a tank or open channel, a mean concentration of pollutants can be determined. (c) No site preparation. (d) Simple and inexpensive.
	Continuous		(a) Continuous operation. (b) Free from human factor bias. (c) Various types commercially available. (d) Rapid short-term fluctuations that may be overlooked by automatic samplers are accounted for.
	Automatic		(a) Automatic operation (b) Free from human bias. (c) Various types available. (d) Can be set to take flow-proportional samples. (e) High-volume samplers have been shown to produce the most representative samples of all in-line automatic samplers for streams with significant levels of large, suspended materials.

TABLE A-3 (continued).

METHOD DISADVANTAGES	APPLICABLE STRATEGY LEVEL	REMARKS
(a) Bias of sample possible from stratification effects. (b) Bias possible from human factor	1	For sampling homogeneous liquids at open tanks, ponds, open channel streams and discharge points of lines. Heterogeneous streams (i.e., those containing appreciable solids or non-miscible liquids) can be sampled only at well-mixed regions in open channels or at discharge points of lines.
(a) Tap must be installed. (b) Bias possible from human factor.	1 and 2	For homogeneous liquids, a tap can be installed in tank or line in any convenient location. For heterogeneous liquids, tap must be installed in well-mixed region of line. Bias from human factor can be minimized by tap sampling a small amount of liquid continuously during the entire test period rather than a large volume over a short period of time.
Bias possible from human factor.	1 and 2	Applicable for open tank or open channel sampling of heterogeneous liquids.
(a) Clogging of intake lines is usually frequent for slurry streams. (b) Installation and maintenance necessary.	1 and 2	Applicable to in-line sampling of liquids.
(a) Sample can be biased by not taking a full stream cut--this bias would be prevalent for the solids materials or non-miscible liquid components. (b) Installation and maintenance necessary.	2	

TABLE A-3 (continued).

INTEREST AREA	METHOD OPTION	REFERENCES	METHOD ADVANTAGES
II. Full Stream Cut Sampling	Dipper	13.1, 13.2, 13.3, 13.5	(a) Stratification effects are minimized or eliminated from sample. (b) Can be used for slurry sampling. (c) No site preparation. (d) Simple and inexpensive.
	Automatic Vezin Sampler	13.1, 13.2, 13.3, 13.5	(a) Automatic operation. (b) Without human factor bias.
	Automatic Straight Line Sampler	13.1, 13.2, 13.3, 13.5	(a) Motion of sampler through stream gives most representative sample of any automatic full stream cut type. (b) Same as (a) and (b) for Vezin sample.
III. Methods Applicable to Organic Pollutants	Carbon adsorption--Chloroform Extraction	111	(a) Automatic or continuous sampling. (b) Can quantify trace organic pollutants in liquid stream without the necessity of large sample quantities.
	Carbon Adsorption--Carbon Alcohol Extraction	111	(a) Same as (a) and (b) for Chloroform Extraction. (b) Greater extraction efficiency than chloroform.
	Other Adsorption Methods		Should have greater collection and extraction efficiencies than carbon adsorption methods

TABLE A-3 (concluded).

METHOD DISADVANTAGES	APPLICABLE STRATEGY LEVEL	REMARKS
(a) Access to discharge point of line is key limiting factor. (b) Possible bias from human factor.	1 and 2	Stratification effects are minimized with full stream cut techniques. Applicable for sampling at discharge points of lines or sampling open channels.
(a) Not as accurate as a straight-line sampler. (b) Installation and maintenance necessary.		Applicable only to in-line sampling. The sampler should be calibrated against the full stream cut grab.
(a) Can be used only at discharge point (b) Requires more maintenance than Vezin Sampler.		Same calibration as for Vezin sampler.
(a) For short-term tests a high sampling flow rate (greater than 0.25 gpm) is required. High flow rates, however, would tend to plug the adsorber column if the stream has high suspended solids, resulting in decreased adsorbing efficiency. (b) All organic components are not extracted. (c) Chloroform is a carcinogen.		Can be used to sample for organics in liquids from tanks, ponds, open channels, or lines by using appropriate sampling device. Can be used in conjunction with other sampling options. Due to the questionable efficiencies of extractive techniques, this method cannot be used to accurately quantify mass emission rates.
Same as (a), (b), and (c) for Chloroform Extraction.		Same as for Chloroform Extraction.
Have not yet been field tested.		Same as for Chloroform Extraction. Some materials being investigated are polyurethane foam, XAD-2 resin, and other porous polymers.

TABLE A-4. METHOD OPTIONS FOR SOLID SAMPLING

INTEREST AREA	METHOD OPTION	REFERENCES	METHOD ADVANTAGES
I. Stationary Sampling			
	Simple Grab	297	(a) Readily and quickly performed. (b) Special equipment unnecessary. (c) Small amount of material involved. (d) No site preparation is required. (e) Simple and inexpensive.
	Coning and Quartering	297, 8.6, 8.7, 8.33	(a) Readily performed. (b) Less chance of size segregation than with simple grab.
	Pipeborer	297	(a) Readily and quickly performed. (b) Representative sample with regard to size segregation. (c) Thief-type pipeborer is available to sample at different levels of container. (d) Site preparation not required.
	Auger	297	(a) Same as (a), (b), and (d), for pipeborers. (b) Can be utilized for denser materials than pipeborers can. (c) Can be machine driven.

TABLE A-4 (continued).

METHOD DISADVANTAGES	APPLICABLE STRATEGY LEVEL	REMARKS
		Samples taken from stationary sources are usually not as representative as those taken from other source categories (e.g., lines, conveyors, etc.)
(a) Bias from size segration in pile. (b) Bias from small sample size. (c) Bias from human factor possible.	1	Pile or container sampling only. Method consists of taking several shovelfuls of material from various parts of the pile or container. A minimum of four shovelfuls should be taken.
(a) Time-consuming operation. (b) Bias from size segration still possible. (c) Bias from human factor possible. (d) Large gross sample required. (e) To minimize contamination of sample, clean surface and area required. (f) Moisture loss possible due to amount of handling.	1	Coning and Quartering is a sample reduction technique which is used in conjunction with various grab sampling techniques
(a) When used to sample sacks or drums, the containers should be well mixed prior to sampling to avoid cross-sectional variation. (b) Useful only for fine, dry material. (c) Slot width should be large compared with material particle size. (d) To assure representative sampling of piles, more than one sample must be taken and then riffled to size required for analysis.	1 and 2	Option applicable only to pile or container sampling where the material to be sampled is of a powdery nature.
(a) Same as (a) and (d) for pipeborer.	1 and 2	Sampling option applicable only to pile or container. Material can be of a granular nature.

TABLE A-4 (continued).

INTEREST AREA	METHOD OPTION	REFERENCES	METHOD ADVANTAGES
II. Partial Stream Cut Sampling			
	Grab	297, 8.7	(a) Readily and quickly performed when accessibility to belt on discharge point of stream is unhampered. (b) No site preparation is required. (c) Simple and inexpensive.
	Riffler	297, 8.33, 235	(a) Material can be fed manually or continously to riffler. (b) Can be used as final step in sampling methodology for sample reduction. (c) Various types available, including Jones, flat, and bank types. (d) Human bias eliminated when operated in continuous mode.
	Whistle Pipe	297, 235	Same as (a), (b) and (d) for riffler.

TABLE A-4 (continued).

METHOD DISADVANTAGES	APPLICABLE STRATEGY LEVEL	REMARKS
		Partial stream cut samples are not as representative as full stream cut or stopped belt samples.
(a) Bias can result from cross-sectional variations in the stream. (b) Bias from human factor possible.	1	Samples can be taken from discharge point of solids stream or from moving belt or ladder conveyor. In sampling at the discharge point, a container is moved through a portion of the falling stream. The sampling container should have an opening of at least three times the diameter of the largest particle. Motion through the part of the stream to be sampled should be uniform and repeatable. In sampling from a belt conveyer, a portion of the solid stream is diverted into the container. In most cases, if partial stream cut, manual grab sampling is possible, then so is the more representative manual full stream cut sampling options. For this reason, it is recommended that full steam cut sampling be used whenever a choice is possible.
(a) Bias possible due to cross-sectional variations in the stream. (b) Distortion of the dividing edges occurs with use, resulting in sample bias. (c) Excessively damp material or foreign objects could clog sampler. (d) Damp, fine material could stick to edges of sampler, biasing the result. (e) For continuous sampling, installation of device necessary.	1	Samples can be taken continuously from a moving stream by diverting a portion of the stream into the sampler. Samples can also be taken by grab techniques and then fed into the riffler for sample reduction.
Same as for riffler.	1	Same as for riffler.

TABLE A-4 (continued).

INTEREST AREA	METHOD OPTION	REFERENCES	METHOD ADVANTAGES
III. Full Stream Cut Sampling			
	Fractional Shoveling	297, 8.7	(a) Readily and quickly performed. (b) Applicable to larger lots than coning and quartering. (c) Can be more reliable than coning and quartering. (d) No site preparation is required. (e) Simple and inexpensive.
	Grab	297, 8.7, 8.33	(a) Readily and quickly performed. (b) No site preparation is required. (c) Simple and inexpensive.
	Pneumatic Samplers	125	(a) Automatic operation available with pheumatic or auger types of discharge. (b) Can be used for pneumatic transport lines or any enclosed solid stream.
	Rotating Samplers (arc, oscillating and swinging types)	297, 8.7, 235, 125	(a) Automatic operation. (b) Various types available including Vezin, Chas. Snyder, Snyder, and Brunton. (c) Provide representative samples. (d) Easy accessibility for repair. (e) Small headroom requirements for Brunton type. (f) Stainless steel construction available. (g) Vezin type sampler can be used in pneumatic conveying lines.

TABLE A-4 (continued).

METHOD DISADVANTAGES	APPLICABLE STRATEGY LEVEL	REMARKS
(a) Should not be used when lumps of material greater than two inches in diameter are present. (b) Due to size segregation, can be inaccurate when only a portion of a pile is taken. (c) Bias from human factor possible.	1	Should be used only when other full stream cut sampling options not available. Method can be utilized whenever shoveling is used to convey material. One shovelful is taken as a sample increment periodically.
(a) Bias from human factor possible. (b) Can be used only where a container can be moved through falling stream or belt discharge. (c) For repeatability, sample must be taken with a smooth, uniform motion for all increments. (d) Sampling container must be held at right angles to the stream.	1 and 2	Samples taken at discharge point of solids stream. This method should be employed only when sample is gathered under the supervision of an experienced tester to minimize bias from human factor.
(a) One point, non-isokinetic sampling would result in bias. (b) Installation necessary. (c) Calibration procedure with stopped belt sampling should be performed before being employed. (d) Sampling container must be held at right angles to the stream.	1 and 2	For sampling pneumatic transport line or enclosed solid stream. While recommended for use for trace sampling of solids in reference 3, it has not been field tested extensively enough for use without a calibration procedure based onparticle size and mass flow rate.
(a) Damp or foreign material can clog samplers. (b) Maintenance required. (c) Sampler takes more material from the edges of the stream cross-section than from the center. (d) Not as representative a sample as with straight line sampler. (e) Some types such as the Vezin have relatively large headroom requirements. (f) Installation is required.	1 and 2	Samples taken at point where solids stream is freely falling vertically in vertical section of transport line. Sample scoops should be deep enough to prevent small particle elutriation or splatter. Speed and frequency of the cutting device are the principle variables in sampler operations. Should be calibrated against stopped belt technique. Cutter openings should be three times the diameter of the largest piece of material sampled. Speed of cutter should be low enough to prevent segregation or rejection due to disturbing the stream.

TABLE A-4 (continued).

INTEREST AREA	METHOD OPTION	REFERENCES	METHOD ADVANTAGES
III. (cont.)			
	Straight Line Samplers	297, 8.33, 235, 125	(a) Same as (a), (c), and (f) for rotating samplers. (b) Sampling device spends equal time in each portion of the stream, making straight line samplers the most representative of all automatic samplers.
	ASTM Pulverized Coal Sampler	8.3	(a) Provides means of sampling in pneumatic lines with minimum amount of equipment.
	ASME Pulverized Coal Sampler	18	(a) Same as (a) for ASTM sampler. (b) Rugged construction.
IV. Stopped Belt Sampling			
	Grab	8.33	(a) Highest reliability of all sampling methods. (b) Readily and quickly performed.

TABLE A-4 (concluded).

METHOD DISADVANTAGES	APPLICABLE STRATEGY LEVEL	REMARKS
(a) More maintenance is required than for rotating samplers. (b) Installation is required.	1 and 2	Same as for Rotating Samplers. Samples taken at point where solids are freely falling from discharge point of bin, conveyor, etc.
(a) Limited to material in size range of pulverized coal (60-90% through 200 mesh). (b) Sampling is non-isokinetic and bias can occur. (c) Vacuum bag could break under high pressure. (d) Ports in line necessary.	1 and 2	For sampling in pneumatic lines only. Should be used only when sampling in pneumatic line is necessary and Vezin or pneumatic sampler is uncalibrated. Method entails performing a traverse over the conduit cross-section.
(a) Could probably be modified to include material of 1/4 inch size but may be impractical depending on port size necessary. (b) Same as (b) for ASTM sampler. (c) Compressed air used for aspiration.	1 and 2	Same as for ASTM sampler.
(a) Requires stopping of conveyor every 10 to 15 minutes during test period. (b) Bias from human factor possible, but can be reduced by systematic sampling.	1 and 2	Sample taken from stopped belt. Preferred technique. Care should be taken that fines are brushed away from the conveyor into the sampling container along with the larger pieces of material.

TABLE A-5. METHOD OPTIONS FOR AIR-BORNE FUGITIVE SAMPLING

INTEREST AREA	METHOD OPTION	REFERENCES	METHOD ADVANTAGES
Fugitive Particulates: Diffuse Area Sources			
	Emission Factor Method	73, 176	(a) Rough but adequate estimate of emission rate. (b) Sampling not required.
	Downwind	147	Simple and inexpensive method for sampling specific sources such as piles, which have a diffuse emission cloud.
	Upwind - Downwind: Midwest Research Institute Method	73	(a) Wind activated hi-volume samplers are utilized. (b) Samplers are mounted on a vertical tower in a grid arrangement to determine emissions from specific loading or unloading operations. (c) Particle size measurements can be performed by attaching an Anderson impactor to the hi-volume samplers, or by microscopic examination of the filter.
	Upwind - Downwind: The Research Corporation of New England Methodology	176	Standard diffusion analysis is used in conjunction with high-volume sampling to produce emission rates for the source.

TABLE A-5 (continued).

METHOD DISADVANTAGES	APPLICABLE STRATEGY LEVEL	REMARKS
		Diffuse area source sampling is concerned primarily with aggregate piles and other fugitive sources whose emission rate is controlled largely by meterological conditions such as rainfall and windspeed. Techniques can also be applied on a plant wide basis.
Emission factors may not be available for the source under consideration or may not be relatable to certain meterological conditions prevalent at the site.	1	Applicable to any source where emission factors exist.
(a) Must be placed into emission cloud area for accurate results. (b) Non-isokinetic sampling.	1	Most applicable to sources having high density fugitive cloud emission. Not applicable to emissions on a plant wide basis. For accurate quantitative results, a more sophisticated method must be used.
(a) Sampling rates are pre-set to isokinetic conditions for specific wind velocities. Inaccurate when the wind speed varies during the course of the test. (b) Results from specific samplers are integrated over the length and height of the pile in question. This may be an inaccurate method. (c) Particles are subject to re-entrainment from the impactor surface due to their dry nature and may bias the particle size measurement.	2	Applicable for emissions from both diffuse area and specific point sources. The source should be sampled during high and low wind velocity periods such that an estimation may be made of a high and low emission rate. If enough data is available, the development of an emission factor equation should be attempted.
Non-isokinetic sampling.	1 and 2	Applicable for emissions from both diffuse area and specific point sources.

TABLE A-5 (continued).

INTEREST AREA	METHOD OPTION	REFERENCES	METHOD ADVANTAGES
Fugitive Particulates: Diffuse Area Sources (cont.)			(b) Various particulate sampling devices can be used, including filter impactor, piezoelectric techniques, etc. (c) Particle size measurements can be performed with an Anderson impactor or by microscopic examination of the filter.
	Background Operating Plant Method		(a) Most accurate measure of difference between ambient background and source contribution.
Fugitive Particulates: Specific Point Sources			
	Quasi-Stack	176	(a) Most accurate sampling technique where point source can be hooded. (b) Particle size and mass emission measurements can be made directly.
	Roof-Monitor	176	(a) Can be used to sample multiple point sources located within a single structure where the emissions exit from the structure through roof, door, windows, etc. (b) Same as for (b) for Quasi-Stack.

TABLE A-5 (continued).

METHOD DISADVANTAGES	APPLICABLE STRATEGY LEVEL	REMARKS
(b) Diffusion equation assumes a Caussian distribution in both vertical and horizontal direction. (c) Particle resuspension is not assumed. (d) No provision for individual sampling of aggregate loading or unloading is made. (e) Variations of wind speed and direction would interfere with the accuracy of the results.		Since the various sampling devices other than filter impaction have not been extensively field tested, they should not be used without on-site calibration with hi-volume samplers.
(a) Time involved is usually twice that of other techniques. (b) For accuracy, similar meterological conditions should prevail for both sampling periods.	2	Ambient data gathered during an evironmental impact study can be used for the background data or an existing plant operation should be halted and any aggregate piles wetted and covered. Applicable for determination of diffuse or multi-point fugitive sources on a plant-wide basis.
(a) Applicable only where hooding is possible. (b) Low grain-loading and possible low velocities would present a problem if a conventional Method 5 train were used. (c) Where many point sources are to be tested, hooding and testing each individual one would be an expensive and time-consuming operation. (d) The hood must be carefully designed such that all particulate is collected.	2	Should be used when emissions are from specific point source only. To increase accuracy, as many tests as possible should be performed. For this reason, due to the fact that a low grain-loading is anticipated, an isokinetic hi-volume sampler is recommended, such as the one developed by Radar Pneumatic. If however, particle size measurements are to be performed, then the SASS train should be used.
(a) Cannot be used to isolate single point emissions. (b) Same as (b) for Quasi-Stack. (c) For cost-effectiveness, this method should be applied only when all emissions exit through one opening.	2	Same as for Quasi-Stack.

TABLE A-5 (continued).

INTEREST AREA	METHOD OPTION	REFERENCES	METHOD ADVANTAGES
Fugitive Particulates: Specific Point Sources (cont.)			
	Plume Sampling	147	(a) Particle size and mass emission measurements can be made directly.
Fugitive Gases			

TABLE A-5 (concluded).

METHOD DISADVANTAGES	APPLICABLE STRATEGY LEVEL	REMARKS
(a) Testing many point sources would be an expensive and time consuming operation.	1	This method consists of sampling a fugitive plume with an SASS train by placing the nozzle directly into the plume and sampling isokinetically. The methods employed for sampling fugitive gases are essentially the same as those identified for ducted gases (see Gas Sampling Options table).

TABLE A-6. METHOD OPTIONS FOR INORGANIC GAS ANALYSIS

ANALYSIS AREA	METHOD OPTION	DETECTION LIMIT	SPECIAL ANALYTICAL CONSIDERATIONS
Ammonia	Gas Chromatography (GC)	25ppm	Poropak Q-column packing; gas bomb.
	Colorimetric	25 ppm	Absorption in 1N H_2SO_4
	Colorimetric	25 ppm	Absorption in 1N H_2SO_4
	Titrimetric	25 ppm	Absorption in 1N H_2SO_4
	Colorimetric	1 ppb	Sample on filter paper treated with oxalic acid.
	Specific Ion Electrode (SIE)	1 ppm	Absorption with 1N H_2SO_4.
Carbon Dioxide	Non-dispersive Infra-red (NDIR)	10 ppm	Remove H_2O particulates.
	Thermal Conductivity	25 ppm	Remove particulates.
	Gas Absorption		Absorption in 6 M NaOH.
	GC	25 ppm	Gas bomb; molecular sieve column.
Carbon Monoxide	NDIR	10 ppm	Water removal.
	GC	25 ppm	Gas bomb; molecular sieve column.
	Colorimetric	1 ppm	Absorption train.
Chlorine	Colorimetric	1 ppm	Train constructed of glass, SS, or teflon. Upper concentration limit of 10 ppm.
	Colorimetric	1 ppm	Train constructed of glass, SS, or teflon. Upper concentration limit of 50 ppm.
	Colorimetric	1 ppm	Train constructed of glass, SS, or teflon. Upper concentration limit of 300 ppm.
	GC	1 ppb	Gas bomb.
Hydrogen Chloride	Titrimetric Potentiometric	1 ppm	Impinger train. Upper concentration limit of 100 ppm.
	Colorimetric	1 ppm	Impinger train. Upper concentration limit of 10 ppm.
	Dispersive IR	0.5 ppm	Remove H_2O.
	SIE	1 ppm	Impinger train.

TABLE A-6 (continued).

INTERFERENCES	REFERENCES	APPLICABLE STRATEGY LEVEL	REMARKS
Specific		1 and 2	
Fe^{+2}, Cr^{+2}, Mn^{+2}, Cu^{+1}, Cu^{+2}.	13.4	1 and 2	100% sampling efficiency assumed.
Ca^{+2}, Mg^{+2}, FE^{+2}, Fe^{+3}, S^{-2}, amines, ketones, aldehydes, alcohols.	216	1 and 2	
Amines, Ca^{+2}.	13.4	1 and 2	Kjeldahl method.
Formaldehyde.	272	1 and 2	Ring Oven technique.
	304	1 and 2	Calibration by known addition method.
H_2O	33,221	1 and 2	
Gases with high TC.	94	1 and 2	
Other acid gases.	94	1	
Specific.	94	1 and 2	
H_2O.	94	1 and 2	Suitable for continuous monitoring.
Specific.	94, 67	1 and 2	Detection limit is detector dependent.
Specific.	94, 273	1 and 2	
Halides, CN^-, NO_2^-.	8.21	1 and 2	Mercuric Thiocyanate method.
Chlorides.	8.21	1 and 2	Colidine method.
Chlorides.	40	1 and 2	
Specific.	31	1 and 2	Electron capture detector.
Specific.	8.9	1 and 2	Chloride is a common contaminent; use deionized water in analysis.
Halides, cyanides, nitrites.	8.32	1 and 2	
CO_2, H_2O.	221	1 and 2	Suitable for continuous monitoring. For low concentration detection, long path length required.
Halides	97	1 and 2	Calibration can reduce interferences.

TABLE A-6 (continued).

ANALYSIS AREA	METHOD OPTION	DETECTION LIMIT	SPECIAL ANALYTICAL CONSIDERATIONS
Hydrogen Cyanide	Potentiometric	1 ppm	Impinger train.
	GC	1 ppm	Impinger train.
	GC	25 ppm	Gas bomb, Poropak Q column.
	Colorimetric	1 ppm	Impinger train.
Hydrogen Fluoride	SIE	1 ppm	Impinger train.
	Colorimetric	1 ppm	Impinger train.
Hydrogen Sulfide	GC	1ppb	Gas bomb.
	Paper tape	10 ppb	Paper must be kept moist; sensitive to light. Upper concentration limit of 50 ppm.
	Colorimetric	1 ppm	Use restricted opening bubbler.
	Titrimetric	1 ppm	Impinger train.
	Colorimetric	1 ppb	Impinger train.
	Potentiometric	1 ppm	Impinger train.
	Fluorescent	1 ppb	Collection on tape.
Mercury	AA/FAAS	1 ppb	Absorption using impinger train with ICl. Pyrex glass, teflon, or polycarbonate containers required. Sample acidified to pH_2 for storage.
	GC	1 ppm	
	Atomic Fluorescence	1 ppb	Absorption using impinger train.
	FAAS	1 ppb	Sample passed thru carbon column at 1350°C.
	FAAS	1 ppb	Absorption on iodine impregnated charcoal.
	FAAS/Gold Amalgam	1 ppb	Absorption using a wire or chips.
	Cold Vapor	1 ppb	Mercury is converted to Hg^{+2}.
	Colorimetric	1 ppm	Mercury must be +2 state.
	Titrimetric	1 ppm	Mercury must be +2 state/oxidation. Upper concentration limit of 100 ppm.

TABLE A-6 (continued).

INTERFERENCES	REFERENCES	APPLICABLE STRATEGY LEVEL	REMARKS
H_2S.		1 and 2	
SCN^-.	266, 314	1 and 2	Applied to biological samples and water analysis.
Specific.		TRW	
Sulfide oxidants.	832	1 and 2	
OH^-.	303	1 and 2	
Many cations, Cl^-	216	1 and 2	Temperature control required during analysis.
Specific.	38, 87, 142	1 and 2	Flame photometric detector.
RSH, NH_3.	38, 226	1	$AgNO_3$, $HgCl_2$, $Ag(CN)_2^-$, $Pb(OAc)_2$ tested. $AgNO_3$ best.
SO_2RSH.		1 and 2	Rarely used. Lacks sensitivity. SO_2 interference may be removed with $FeCl_3$.
RSH.	11	1 and 2	Sample must be analyzed immediately.
SO_2, RSH.	11	1 and 2	
RSH, HCW.	38	1 and 2	
RSH.	38	1 and 2	
SO_2.	65,263,27,21, 199,154,276,51, 42,175,72	1 and 2	SO_2 interfers seriously; method considered unsatisfactory.
Specific.	27	1 and 2	Useful for determination of organomercury compounds.
CO, N_2.	277, 65, 154	1 and 2	Direct determination in air unsatisfactory. (CO and N_2 quench signal.)
		1 and 2	Measured at 184.9 nm.
Negligible.	154	1 and 2	Charcoal used to concentrate mercury and remove possible interferences.
	175, 307	1 and 2	Current EPA method.
H_2O vapor.	65	1 and 2	Water vapor interference may be removed by heating cell or drying agents.
	65	1 and 2	A variety of methods are possible; see reference for discussion.
	65	1 and 2	A variety of methods are possible; see reference for discussion.

TABLE A-6 (continued).

ANALYSIS AREA	METHOD OPTION	DETECTION LIMIT	SPECIAL ANALYTICAL CONSIDERATIONS
Mercury (cont.)	Polarographic	1 ppm	Mercury must be +2 state/oxidation.
	Piezoelectric	1 ppb	Mercury must be in elemental form.
Miscellaneous Sulfur Compounds (RSH, RSR, COS, CTC)	GC	1 ppb	Bomb sample, Poropak QS column.
	Titrimetric	1 ppm	Absorption using impinger train.
Nitrogen Oxides	NDIR	5 ppm	Dry sample.
	Colorimetric-	1 ppm	Dilution of sample is required for analysis of high levels of NO_2.
	Chemiluminescent	1 ppm	Particulate removal.
	Paramagnetic	10 ppm	Particulate removal.
	SIE	1 ppm	
	Electrochemical	20 ppb	Method is rate of flow dependent.
	UV	1 ppm	Particulate removal.
	Gas Chromatography (GC)	10 ppb	Gas bomb. Quantitative recovery from column is difficult at low concentration levels.
	Phenol Disulfonic Acid (PDS)	1 ppm	
	Fluorescence	1 ppb	Dilution necessary.
Oxygen	Paramagnetic	0.01%	Particulate removal.
	GC	25 ppm	Gas bomb.
	Combustion	0.01%	SO_2, acid gas removal.
	Polarographic	%	Acid gas removal with $Cr_2O_7^{-2}$.
Sulfur Dioxide	Titrimetric	1 ppm	Special train and impingers required.
	NDIR	5 ppm	Sample should be dry.
	Fluorescent	1 ppb	Sample should be dry. Sample dilution is necessary for high (>100 ppm) concentrations.

TABLE A-6 (continued).

INTERFERENCES	REFERENCES	APPLICABLE STRATEGY LEVEL	REMARKS
	65	1 and 2	a variety of methods are possible; see reference for discussion.
Chlorine, water, particulates.	263	1 and 2	Water, chlorine, and particulates may be removed with filter and trap. Suitable for continuous monitoring.
Specific for individual components.	87	1 and 2	Different columns described; for most sensitive detection, FPD used.
HCN.	327	1 and 2	Method depends on relative decomposition rates of COS and CS_2 for separation; RSH and H_2S trapped prior to COS and CS_2 but may be analyzed.
Aromatic HC, CO_2, H_2O.	33, 221, 216	2	Suitable for continuous analysis. NO specific.
		2	NO_2 specific.
PAN, NH_3, HC.	326, 44, 185, 302, 201	2	NO_x and NO measured. Continuous.
Other paramagnetic species, e.g. O_2.	197, 278	1 and 2	NO and NO_2 measured.
HCl, HF, CO, SO_2.	84, 183	1 and 2	Interferences may be removed by precipitation.
H_2S.	146	1 and 2	NO_2 specific.
Specific.	101, 99, 102	2	Continuous. NO specific.
Specific.		1 and 2	To achieve lower limits, an ionization detector or flame chemiluminescent detector may be used.
Water, particulates.	14	2	
HC.	38	2	NO specific.
Other paramagnetic gases, e.g. NO.	299	1 and 2	Suitable for continuous monitoring.
Specific.	155, 282	1 and 2	
CO, HC.	29	1 and 2	
Specific.	158	1 and 2	
Particulate matter.	89,159,228,39, 293,24,216,278, 93,225,184	1 and 2	Barium-Thorin method.
Aromatics, H_2O, CO_2.	33, 221	1 and 2	Suitable for continuous monitoring.
Aromatics.	302, 230	1 and 2	Suitable for continuous monitoring.

TABLE A-6 (continued).

ANALYSIS AREA	METHOD OPTION	DETECTION LIMIT	SPECIAL ANALYTICAL CONSIDERATIONS
Sulfur Dioxide (cont.)	UV	1 ppm	Sample should be dry.
	Electro-chemical trans-ducers	1	Method is flow rate dependent.
	CG	1 ppb	Gas bomb.
	Potentio-metric		Gas bomb.
	Colorimetric	10 ppb	Sample aspirated thru Tetrachloromercurate.
	Colorimetric	10 ppb	Filtration required.
	H_2O_2 Titri-metric	10 ppb	
	Piezo-electric	2 ppm	Particulate removal.
	Conducto-metric	1 ppm	Sample conditioning.
Sulfur Dioxide	Correlation Spec.	10 ppm	Sample conditioning.
	Second Derivative Spectroscopy	100 ppb	Sample conditioning.
Sulfur Trioxide	Titrimetric	1 ppm	Special train and impingers required.
	Spectro-photometric	1 ppb	Glass fibre filters acid washed.
	Coulometric	<1 ppb	Glass fiber filters acid washed.
	Flame-photometric	<1 ppb	Glass fiber filters acid washed.
	Raman Spectroscopy		Gas bomb.
Water Vapor	Condensation	0.1%	Sample at 0.075. Heat sample line to pre-vent condensation.
	NDIR	25 ppm	Sample kept above dew point.

TABLE A-6 (concluded).

INTERFERENCES	REFERENCES	APPLICABLE STRATEGY LEVEL	REMARKS
Specific.	296, 102	1 and 2	Suitable for continuous monitoring.
NO, H_2S.	148	1 and 2	Suitable for continuous monitoring; slow response.
Specific.	156, 57, 289, 87,233, 228	1 and 2	Flame photometric detector.
Specific.	216, 328	1 and 2	
NO_2.	278, 93, 216	1 and 2	NO_2 may be prevented from interfering by sulfuric acid addition.
NO_2, H_2S, O_3, CH_3SH, C_2H_4	252	2	Interferences may be removed by scrubbers. Suitable for continuous monitoring with dilution.
Acids, bases, particulates.	216	1	All acidic and basic gases interfere.
NO_2, particulates.	128	1 and 2	High NO_2 level causes extensive fatigue.
Strong acid gases.	148	1 and 2	2 minute analysis time. Continuous.
Specific.	126, 167	1 and 2	Continuous.
Specific.	167	1 and 2	Continuous.
Moisture.	271	1 and 2	Barium-Thorin method.
(NH_4), SO_4.	321, 216	1 and 2	
(NH_4), SO_4.	163, 253	1 and 2	
(NH_4), SO_4.	279, 216, 163	1 and 2	
		1 and 2	Method may be applicable to measurement at low ppm levels. May be suitable for continuous analysis.
Particulates.	281	1	Federal Register Method 4.
Specific.	221	1 and 2	Suitable for continuous monitoring.

TABLE A-7. METHOD OPTIONS FOR ORGANIC ANALYSIS

ANALYSIS AREA	METHOD OPTION	DETECTION LIMIT	SPECIAL ANALYTICAL CONSIDERATIONS
I.			
Volatile[1] Organic Compounds	Gas Chromatography (GC)	Detector Dependent	On site sampling with use of bag or bomb. Typical sample injection volume for liquids is 1-10μl; for gases 1-50ml. The following list is a general guide to GC columns useful in organic analysis.
General	GC with Thermal Conductivity Detector (FID)	0.1%	Species / Column
			Acids C_1-C_9 — Chromosorb 101
			C_1-C_{18} — FFAP
	GC with Flame Ionization Detector (FID)	1 ppm	Alcohols C_1-C_5 — Poropak Q, Chromosorb 101
			C_1-C_{18} — Silar 5CP, Carbowax 20M, FFAP
			Polyalcohols — FFAP
Nitrogen, Sulfur, or Phosphorous containing	GC with Flame Photometric Detector	10 ppb	Aldehydes C_1-C_5 — Poropak N, DC-550, Ethofat
			C_5-C_{18} — Carbowax 20M, Silar 5CP
Low Molecular Weight Gases	GC with Helium Ionization	10 ppb	Amines — Poropak Q/PEI, Poropak R
			Chromosorb 103, Pennwalt 223
			Amides — Versamid 900, Igepal CO-630
Specific Gases	GC with Coulometric Detector	1 ppm	Esters — Poropak Q, Dinonylphthalate
			Chromosorb 101 or 102
Halogens, Nitrates and Conjugated Carbonyls	GC with Electron Capture (H^3 or Ni^{63})		Ethers — Carbowax 20M, Silar 5CP
			Freons — Poropak Q, Chromosorb 102
			Glycols — Chromosorb 107
[1]Volatile at about 400°C or less.			Halides — OV-210, FFAP
			Hydrocarbons C_5-C_{10} — OV-101, SE-30
			Aromatic — Silar 5CP, Carbowax 20M
			Olefins C_6 and greater — DC-550, DC-703
			POM — Dexsil 300, OV-101, SE-30
			Ketones — Poropak Q, Chromosorb 102, FFAP
			Pesticides — OV-101, OV-225, OV-1, OV-17, SE-30
			Phenols — OV-17, Silar 5CP, Carbowax 20M

TABLE A-7 (continued).

INTERFERENCES	REFERENCES	APPLICABLE STRATEGY LEVEL	REMARKS
Generally quite specific with proper column selection	173,216,111,278,148, 32,198,222,9,288, 140,4,330,16,8.30,71, 248,187,172,63,53,180, 10.2,10.1,8.31,330, 180,212,169,277	1 and 2	Technique applied widely to all types of organic analysis; portable instruments are available for on site stack gas analysis; most commonly used technique for quantification in organic chemical analysis.
Sensitivity is limited.	88,39,227,79,168,7, 265,110,90,162,262, 195,62,210,268,291, 181,224,236,286,139, 181,286,236,224,179	1 and 2	Response is linear over a moderate range of concentration; responds to all compounds; most widely used detector; non-destructive; temperature limit is 450C.
No response to a number of low molecular weight gases, e.g. air, H_2O.			Destructive. Widest linear range of operation gas supply (H_2O and O_2) required; temperature limit of 400°C.
Selective for nitrogen, sulfur, and phosphorous containing species.		1 and 2	Destructive. Detector may also be used in FID mode as a nonselective detector. Temperature limit of 300°C.
Columns are generally limited to active solids.		1 and 2	Non-destructive. Detection limit is dependent on column bleed. Usually used to measure low molecular weight gases; temperature limit of 100°C.
Selective detector depending on titrant.	268, 291	1 and 2	No calibration required for direct quantitative results; detector may be non-selective if all effluents are combusted; destructive.
Selective for electrophiles.	63,88	1 and 2	Non-destructive. Sensitive to water; temperature limit for H^3 is 225°C; temperature limit for Hi^{63} is 350° C; small linear range.

TABLE A-7 (continued).

ANALYSIS AREA	METHOD OPTION	DETECTION LIMIT	SPECIAL ANALYTICAL CONSIDERATIONS
II.			
Volatile and Non-Volatile Organic	(HPLC) High Performance Liquid Chromatography	Detector Dependent	Sample from extraction of adsorbent trap, filters, probe and "rough" class separation by liquid chromatography column.
Separation by Molecular Weight	Gel Permeation Chromatography	RI*-1μg UV-10^{-9}g	~20mg of sample/100 ml of column volume.
Separation by Chemical Class	Bonded Phase Liquid Chromatography (Reverse)	RI-1mg UV-10^{-9}g	Preparative columns can handle up to 1g samples.
	Thin-layer Chromatography (TLC)	μg Range	μg quantities of samples required for analysis. TLC supports (SiO_2 and Al_2O_3); generally need activation by heating at 110°C for 1 hour.
	Liquid-solid Chromatography	RI-1μg UV-10^{-9}g	mg quantities of samples are necessary for analysis.
Separation of Polar Organic Compound	Ion-Exchange Chromatography	RI-1 g UV-10^{-9}g	Preparative columns can handle up to 1g samples.
III.			
Class Identification by Functional Group-Compound Identification	Dispersive	μg Range	Thin film on crystal/for micro determination; micro-pressed disk, or micro-film technique.
		* Refractive Index Detector	

TABLE A-7 (continued).

INTERFERENCES	REFERENCES	APPLICABLE STRATEGY LEVEL	REMARKS
System dependent.	15,189, 91, 144,295,62	2	Separation of wide variety of compounds, especially applicable to high molecular weight compounds and thermally sensitive compounds; small sample size requirement.
Molecular weight differences of 15% can be distinguished.		2	Most common column packing is a styrene-divinyl benzene polymer; mobile phase must be compatible with support and detection system - low refractive index allows more sensitive detection with RI detector.
Rough class separations may be achieved.	265	2	Class separation is achieved by performing gradient elution on a reversed phase column. Solvents chosen for gradient elution must be compatible with detection system; microparticle (5-10μ) reverse phase packing preferred. Gradient elution difficult with RI detection system.
Two dimensional TLC possible.	162, 262	1 and 2	TLC data may give data which is directly applicable to HPLC. Color reagents may be used on plate directly for class identification.
Rather tedious. Difficulty in separating homologous series.		1	A useful technique for screening studies; elution order is non-polar to polar solvents; a preparative method for rough class separation.
Limited use for complex mixtures.		1 and 2	Used for separation of very polar organic compounds; supplementary to reverse phase liquid chromatography; used after sequential analysis has identified an ionic fraction.
H_2O generally not suitable as solvent.	277	1 and 2	Dispersive IR systems are widely available; average resolution of 4 cm^{-1} over the spectral range (3800 cm^{-1} - 600 cm^{-1}); wavelength accuracy of ± 10 cm^{-1} above 2000 cm^{-1} (less than that below 2000 cm^{-1}). Wavelength readability should be better than 10 cm^{-1} at wave numbers above 2000 cm^{-1} and better than 5 cm^{-1} below 2000 cm^{-1}.

TABLE A-7 (continued).

ANALYSIS AREA	METHOD OPTION	DETECTION LIMIT	SPECIAL ANALYTICAL CONSIDERATIONS
Functional group Identification (cont.)	Fourier Transform IR	10-100 ng	Thin film on crystal/KBr Pellet.
	GC-IR	0.4 g/peak	Gas cell.
IV.			
Class Identification Compound Identification	Nuclear Magnetic Resonance (NMR) CW H^1	~1mg	Dissolution in suitable solvent.
	With CAT*	~10μg	Dissolution in suitable solvent.
	NMR Fourier Transform (FT) H^1	10μg	Dissolution in suitable solvent.
	NMR FT C^{13}	1mg	Dissolution in suitable solvent.
	*Computer Averaged Transients		
V.			
Class Identification	UV-Visable Spectroscopy (200-1000 nm)	Varies Widely; 10^{-2}-10^{-5} Molar	Sample is dissolved in a suitable solvent (UV/VIS inactive).
VI.			
Compound Identification	Mass Spectroscopy (MS) Electron Impact (EI)	100-1000 μg; compound dependent	Several injection methods possible (probe insertions preferred); temperature programming of probe may give additional separation.

TABLE A-7 (continued).

INTERFERENCES	REFERENCES	APPLICABLE STRATEGY LEVEL	REMARKS
H_2O generally not suitable as solvent. Limited by sample volatility.		1 and 2	Greater sensitivity obviates need for micro techniques; accuracy and resolution as above, dedicated computer necessary but considered an advantage; a very useful screening technique.
Proton containing solvents; paragmagnetic materials.	277	2 2 2	Micro techniques may extend range down to 10-100 ng range; useful for functional group classification after "rough" separation has been made. Computer of average transients extends sensitivity 100X. Fourier transform NMR is 100-1000 X more sensitive than CW NMR; micro techniques may extend range 10-100 X lower; dedicated computer required.
Solvent should contain no carbon or only one type of carbon.		2	Large chemical shift range (600ppm) as compared to H^1 NMR (20ppm) which enhances effective resolution. Ability to identify functional carbons; most useful where IR and MS give relatively little information.
Sensitivity may be limiting factor.	277	1 and 2	Useful in identifying functional groups and certain types of compounds; sensitivities are generally higher in UV region used in conjunction with IR, NMR and MS.
Limited by sample volatility.	277, 20, 264	2	Not a useful screening technique; computer access to a large data base is essential.

TABLE A-7 (continued).

ANALYSIS AREA	METHOD OPTION	DETECTION LIMIT	SPECIAL ANALYTICAL CONSIDERATIONS
Compound Identification/ Molecular Weight	Mass Spectroscopy Chemical Ionization (CI)	10-100 μg; compound dependent	Several injection methods possible (probe insertion preferred); temperature programming of probe may give additional separation.
Compound Identification/ Molecular Determination	GC-MS EI and CI	10-100 μg; compound dependent	As in GC analysis.

TABLE A-7 (concluded).

INTERFERENCES	REFERENCES	APPLICABLE STRATEGY LEVEL	REMARKS
Limited by sample volatility.		2	CH_4 and NH_3 are commonly used as ionizing gases; suitable standards are unavailable at this time for CIMS; of limited use as screening technique.
Limited by sample volatility.		1 and 2	EI analyses have extensive data files but are of limited value for CI analysis. Dedicated minicomputer is essential for best results; quantification may be achieved by specific ion current integration or by total ion current.

TABLE A-8. METHOD OPTIONS FOR ELEMENTAL ANALYSIS - SPARK SOURCE MASS SPECTROMETRY

ANALYSIS AREA	METHOD OPTION	DETECTION LIMIT	SPECIAL ANALYTICAL CONSIDERATIONS
Elemental Analysis: All elements are, in theory, able to be analyzed by this technique. Elements preceeding lithium are not commonly analyzed by SSMS.	Spark Source Mass Spectrometry (SSMS)	Limit of detection may be calculated as $W(g)=(8.3 \times 10^{-13})M/A$ where M=gram atomic weight of an isotope and A=relative abundance of an isotope. Experimental detection limits.	Method is able to analyze mg quantities of materials but for precise results the sample must be homogenous at submicron particle sizes. Sample may be ashed prior to analysis as a concentration technique. Volatile elements require low temperature or wet ashing procedures. Samples must be conducting; non conducting samples may be powdered and blended with graphite or metal powder and briquetted into the shape of electrodes.

		Absolute (ng)	
Ar	Mn	0.03	0.05
Ag	Mo	0.2	0.3
Al	N	0.02	0.01
As	Na	0.06	0.02
Au	Ne	0.2	0.02
B	Nb	0.01	0.08
Ba	Nd	0.2	0.4
Be	Ni	0.008	0.07
Bi	O	0.2	0.01
Br	Os	0.1	0.4
C	P	0.01	0.03
Ca	Pb	0.03	0.3
Cd	Pd	0.3	0.3
Ce	Pr	0.1	0.1
Cl	Pt	0.04	0.5
Co	Rb	0.05	0.1
Cr	Re	0.05	0.2
Cs	Rh	0.1	0.09
Cu	Ru	0.08	0.03
Dy	S	0.5	0.03
Er	Sb	0.5	0.2
Eu	Sc	0.2	0.04
F	Se	0.02	0.1
Fe	Si	0.05	0.03
Ga	Sm	0.09	0.5
Gd	Sn	0.5	0.3
Ge	Sr	0.02	0.09
H	Ta	0.0008	0.2
Ho	Tb	0.003	0.1
Hf	Te	0.4	0.2
Hg	Ti	0.6	0.2
He	Tl	0.1	0.1
I	Tm	0.1	0.2
Ir	V	0.3	0.04
K	W	0.04	0.5
Kr	Xe	0.1	0.4
La	Y	0.1	0.07
Li	Yb	0.006	0.5
Lu	Zn	0.1	0.1
Mg	Zr	0.03	0.1

TABLE A-8 (concluded).

INTERFERENCES	REFERENCES	APPLICABLE STRATEGY LEVEL	REMARKS
Spectral overlap: Molecular ions composed of more than one element may be detected; inorganic species of the type, MO^+, MOH^+, MO_2^+, are likely to be formed; polyatomic species may be also be formed. Common inorganic interferences are: $^{23}Na_2^+$(46), $^{31}P^{16}O^+$(47), $^{12}C_4^+$(48), $^{12}C_3^{13}C^+$(49), $^{39}K^{16}O^+$(55), $^{40}Ca^{16}O^+$(56), $^{12}Cs^+$(60), $^{31}P_2^+$(62), $^{32}S_2^+$(64), $^{56}Fe^{16}O^+$(72), $^{40}Ca^{32}S^+$(72), $^{40}Ca^{16}O_2^+$(72). Organic components present in a sample may greatly complicate spectra interpretation because of extensive molecular ion formation.	145, 249, 229, 149, 129, 213, 260, 329, 320, 324, 295, 238, 307	Level 1 (Photoplate Detection) Level 2 (PMT Detection)	SSMS is most useful quantitatively in the range of 1-1000 ppm although range extends from ppb (ideal conditions-monoisotopic) to %. Precision and complexity of spectral analysis for trace elements of interest is, by in large, a function of the complexity of the matrix material being analyzed. Complex matrices imply the following classification of trace elements that may be detected by SSMS: a) Monoisotopic trace elements which, in the absence of gross interferences (i.e., presence of a doublet), can be used to obtain upper limits of their concentration. b) Multi-isotopic elements for which interference can be detected for all isotopes buy may be determined by examining isotopic ratios. These values may represent only upper limits of concentration. c) Multi-isotopic elements for which isotopic ratios are maintained for at least two isotopes, which allows for the dependable determination of concentration. Elements for which no lines are detected permit calculation of an upper limit. A mass spectrometer with sufficient resolving power (6000) may remove many interferences; resolution however decreases with atomic weight; two types of detectors are in common use - photoplate (simultaneous quantitative determination of elements) and electrical detection (photomultiplier type). SSMS as a Level 2 technique depends heavily on the availability of good quantitative standards in a suitable matrix. Independent analysis may be used to establish sensitivity factors and perhaps secondary standards.

TABLE A-9. METHOD OPTIONS FOR ELEMENTAL ANALYSIS - ISOTOPE DILUTION MASS SPECTROSCOPY

ANALYSIS AREA	METHOD OPTION	DETECTION LIMIT	SPECIAL ANALYTICAL CONSIDERATIONS
Elemental Analysis: Any element which has either two or more naturally occuring stable isotopes or a long-lived isotope on the mass spectrometer time scale. H V Bd Gd He Cr Ag Dy Li Fe Cd Er Be Ni In Yb B Cu Sn Lu C Zn Sb Hf N Ga Te W O Ge I Re Ne Se Xe Os Mg Br Cs Ir Si Kr Ba Pt S Rb La Hg Cl Sr Ce Tl Al Zr Nd Sb Ca Mo Pm Th Ti Te Sm U K Ru Eu Ru Mn Ta Ho Elements which are not determined by this technique are as follows: (1) Na, Sc, Co, As, Y, Tb, Tm (2) F, P, Pr, Au Group (1) has isotopes with half-lives longer than 70 days which could be used under certain circumstances.	Isotope Dilution Mass Spectroscopy (IDMS)	IDMS is inherently on the same order of sensitivity as SSMS. Sample preparation usually includes preconcentration procedures which can improve detection limits 100%. See preceeding SSMS table.	All chemicals used must have impurity levels well below the levels being measured. Preparation of the spike is usually accomplished by dissolving accurately weighed mg quantities of the spike isotope and diluting to volume. The sample is weighed and then dissolved in a suitable solution. The spike solution must be added as early as conveniently possible; subsequent step must insure that the sample and spike are mixed thoroughly and in the same chemical form. Once equilibrium is established among the isotopes, quantitative recovery of the element is no longer necessary, although a high recovery is usually desirable to maintain high sensitivity. Spike size should be adjusted such that the final isotopic ratio is close to unity. The simplest technique is evaporation of some of the solution onto the electrodes, but relatively poor detection limits are obtained. Electro deposition has been used with success as a preconcentration step.

TABLE A-9 (concluded).

INTERFERENCES	REFERENCES	APPLICABLE STRATEGY LEVEL	REMARKS
This technique is subject to very few interferences and few sources of bias since complete sample recovery is unnecessary. Interference from isotopes or multiply-charged species can usually be calculated or avoided by suitable isotope selection. This technique is essentially free of any matrix effects.	26, 318	2	IDMS complements conventional SSMS. The latter first identifies the elements and their approximate concentrations and then IDMS is used to determine accurately those elements of particular interest. The use of the isotope dilution technique generally increases the number of steps and the amount of time needed for a mass spectrometric analysis (5 samples for 6 elements in 10-15 man days). Only one or at most several elements may be determined simultaneously by isotope dilution techniques. The time per element could be reduced substantially if the technique were put on a production basis and if several elements were determined simultaneously using a single mixed spike solution. Isotope dilution SSMS provides precise absolute analyses for specific elements over a very wide range of concentrations without the need for standards. A major use for ID-SSMS is the preparation of SRM's.

TABLE A-10. METHOD OPTIONS FOR ELEMENTAL ANALYSIS - NEUTRON ACTIVATION ANALYSIS

ANALYSIS AREA	METHOD OPTION	DETECTION LIMIT	SPECIAL ANALYTICAL CONSIDERATIONS
Elemental Analysis: The following list is abridged due to space limitations. For a complete listing of the elements, their reactions, potential interfering elements, and estimated detection limits, see reference pg. 284-327.	Neutron Activation Analysis (NAA)	Range is from detection limit to %. Detection limit is in µg and is for slow (thermal) neutrons	Samples must be removed and introduced to the reactor in a reproducible manner. Sample size is on the order of 100-500 mg. Direct analysis may be performed on filter media. Glass fiber filters are not appropriate because of high trace metal concentrations. Polystyrene filters have been used for sampling; Whatman 41 filter paper has been suggested as being an appropriate media also. Quartz and polyethylene vials and polycarbonate bags have been used as irradiation containers. The general experimentation method in a typical activation analysis can be broken down into the following steps: (1) Irradiation of weighed sample and standard for a suitable time. (2) Dissolution of the sample and standard and addition of a known weight of the element being determined as a carrier of the small amount of analyte irradiated. (3) Treatment of the sample such that the carrier and analyte element are in the same chemical form. (4) Isolation of the element from other radionuclides by chemical separations. (5) Determination of the chemical yield of step 4. (6) Comparison of the activities of the sample and standard under identical conditions, making corrections where needed for decay, self absorption, etc. (7) Determination of the radio chemical purity of the isolated active compound. Under favorable conditions, steps 2-5 can be omitted and the mass of analyte calculated from the ratio of the activities.
Al		0.04	
S		25.0	
Ca		1.0	
Ti		0.2	
V		0.001	
Cu		0.05	
Na		0.2	
Mg		3.0	
Cl		0.5	
Mn		0.003	
Br		0.02	
Tn		0.0002	
I		0.1	
K		0.075	
Ta		--	
Zn		0.2	
Br		0.025	
As		0.04	
Ga		0.01	
Sb		0.03	
La		0.002	
Sm		0.00005	
Eu		0.0001	
W		0.005	
Au		0.001	
Se		0.003	
Cr		0.02	
Fe		1.5	
Co		0.002	
Ni		1.5	
Ba		0.1	
Se		0.01	
Ag		0.1	
Sr		--	
Ce		0.02	
Hg		0.01	
Th		0.003	

TABLE A-10 (concluded).

INTERFERENCES	REFERENCES	APPLICABLE STRATEGY LEVEL	REMARKS
See references: Interferences include both nuclides which may interfere in diode measurement and possible interfering nuclear reactions which produce nuclides of interest.	32, 318, 46		Method is, for a number of elements, non-destructive and quite rapid. If high neutron fluxes or nuclear reactors are used, NAA is an extremely sensitive method; no blanks due to chemical reagents are needed. High resolution Ge (Li) detectors allow a wide variety of isotopes to be counted simutaneously. The system is amenable to computer interface and can be almost completely automated. For a number of elements, e.g., Cl, Br, Na, Zn, the sensitivity is limited by the purity of the filter media. For about 15 elements the sensitivity is limited by the matrix composition. Abundant elements such as Si, Al, and Br give rise to a large amount of radioactivity and other elements may be difficult to detect in their presence. Mercury is particulary sensitive to interference and radiochemical separation may be necessary to achieve the lower limits of detection. Two types of detectors are commonly used: Ge(Li) and NaI(Tl). Radiochemical separations are necessary for many elements if a NaI(Tl) is the only detector available. In general, chemical separations may improve the sensitivity of a number of elements, e.g., Cu, Zn, Ga, As, Se, Ce, Sm, Eu, W, Au, Hg. Analysis time delays fall into three time periods: 1-15 min., 20-30 hrs., 20-30 days. Analysis is generally limited to approximately 30 elements for a given sample due to interference effects. The most generally useful and readily available source for high sensitivity in the determination of trace elements is the nuclear reactor (10^{15}-10^{18} neutrons $M^{-2}s^{-1}$). A major advantage of this source is that only one nuclear reaction (R(n,)P) usually occurs and the cross-section for the reaction is usually quite high.

TABLE A-11. METHOD OPTIONS FOR ELEMENTAL ANALYSIS - INSTRUMENTAL PHOTON ACTIVATION ANALYSIS

ANALYSIS AREA	METHOD OPTION	DETECTION LIMIT	SPECIAL ANALYTICAL CONSIDERATIONS
Elemental Analysis:	Instrumental Photon Activation Analysis (IPAA)	Detection limits in mg:	Sampling considerations are similar to NAA. Sample may be irradiated in polyethylene bag or filter media may be pelletized for irradiation.
Na		2	
Cl		0.4	
Ca		30	
Ti		0.9	
Cr		4.5	
Ni		0.05	
Zn		3	
As		0.2	
Br		30	
Zn		0.2	
Sb		0.3	
I		0.2	
Ce		0.4	
Pb		12	

TABLE A-11 (concluded).

INTERFERENCES	REFERENCES	APPLICABLE STRATEGY LEVEL	REMARKS
^{27}Al, ^{24}Mg, ^{25}Mg ^{39}K ^{50}Ti ^{50}V, ^{45}Sc ^{54}Fe, ^{56}Fe ^{79}Br ^{141}Pr	32, 319, 80, 333, 318	1,2	IPAA is a nondestructive method of analysis which is directly complementary to NAA; Ti, Ni, As, I are comparatively easy to analyze (interference free) as compared to NAA. Sensitivity is considerably less than NAA. Blank corrections for filter media may be necessary

TABLE A-12. METHOD OPTIONS FOR ELEMENTAL ANALYSIS - X-RAY FLUORESCENCE

ANALYSIS AREA	METHOD OPTION	DETECTION LIMIT	SPECIAL ANALYTICAL CONSIDERATIONS
Elemental Analysis:	X-ray Fluorescence (XRF)	Detection limits in μg except where noted.	X-ray intensities depend on the matrix composition; in addition, fluorescence intensities are highly matrix-dependent. Different particle sizes can have a significant effect on fluorescence intensities. It is most important that standards and sample be controlled carefully as to minimize differences in chemical form and physical nature.
The following is a list of elements for which detection limits have been reported.			Virtually any type of solid or liquid sample may be easily prepared for analysis; however, the above criteria must be met to insure reasonably accurate and precise analysis.
Aluminum		.5	There are five common methods used for quantification in XRF: (1) Absolute calculation method; (2) Direct comparison with suitable standards; (3) Standard addition methods; (4) standard dilution methods; and (5) internal standardization methods.
Arsenic		0.1	
Barium		0.1	
Bromine		100ng/cm^2	
Bismuth		0.6	Other quantification methods, used somewhat less frequently are: thin film method; x-ray scatter standardization; experimental correction and absorption-enhancement effects; and mathematical correction of absorption-enhancement effects. Sensitivity falls off rather rapidly below mangeese (atomic number 25) with an air path; potassium (Z=13) with a helium path; and aluminum (Z=13) with a vacuum path. The detection limit for a sodium (Z=11) is only 0.1% for a sample in a vacuum path instrument. Furthermore, rather long counting times (2-30 minutes) may be required to achieve any of these detection limits. The following must be kept constant if accurate quantitative results are to be obtained: (1) The source intensity; (2) Geometric factors, including the angles between the exciting x-ray beam and sample surface, the absorption path length, the atmosphere around the sample, and the angle between the measured fluorescence x-rays and the detector; and (3) the constancy of the detector system.
Calcium		0.1	
Cadmium		0.4	
Cerium		0.2	
Cobalt		0.05	
Chromium		0.00006	
Cesium		0.2	
Cooper		0.00002	
Europium		0.7	
Gallium		0.01	
Gold		0.001/cm^2	
Indium		.1	
Iron		0.009	
Lanthanum		0.1	
Lead		0.0003	
Manganese		0.0002	Calibration curves for heavy elements in a matrix of light elements may produce a curve which is concave or even parallel to the concentration axis (e.g., lead in glass) making any analysis impossible. (This effect can be corrected, however).
Mercury		0.2	
Molybdenum		0.07	
Neodynium		0.3	

TABLE A-12 (continued).

INTERFERENCES	REFERENCES	APPLICABLE STRATEGY LEVEL	REMARKS
Spectral interferences are intimately related to the resolving power of the instrument. Different crystals have different resolving capabilityes in wave-length-- ispersive systems and in energy dispersive systems. Resolving power may be defined as: $R = \frac{W_{\frac{1}{2}}}{V_{av}}$ Where $W_{\frac{1}{2}}$ is defined as full width at half maximum (in keV) and vaV is the average pulse height (in keV). For a wave-length dispersive spectrometer, the resolving power is approximately 230. For an energy dispersive system, the resolving power is ~12 with proportional detectors and ~40 with semiconductive detectors (Geli or Sili SiLi). The most common spectral interferences originate from three sources: (1) First order transitions of the same series from elements adjacent to the analyte species in atomic number; (2) First order transi- of different series, i.e., the L series of A interfering with the K series of B; and (3) First order transitions of the analyte species with higher order transitions of matrix elements.	325, 98	1 and 2	Two types of x-ray spectrometers are in common use; wave length dispersing spectrometers and energy dispersive spectrometers. Energy dispersive systems offer a number of advantages over wave-length dispersive systems. The most obvious advantage is the rapid, simultaneous analysis of many elements. The radiation path length is also reduced so that a greater flux of x-rays can be directed onto the sample; this allows the use of radiactive isotones as sources which in turn makes small portable XRF units a reality. A major disadvantage of energy dispersive systems is the loss of resolving power as compared to wave length dispersive systems. Components for the two systems are the same except that for energy dispersive systems pulse height analysis is required and radioactive isotopes rather than x-ray tubes can be used. Detection limit is directly related to time of counting; since there is no sample consumption, measurement time is not sample limited and counting times of several minutes are not uncommon.

TABLE A-12 (continued).

ANALYSIS AREA	METHOD OPTION	DETECTION LIMIT	SPECIAL ANALYTICAL CONSIDERATIONS
Elemental Analysis:	X-Ray Fluorescence (cont.)		
Nickel		0.06	
Phosphorus		0.001	
Potassium		0.5	
Rhodium		100	
Rubidium		0.003	
Samarium		4	
Scandium		0.4	
Selenium		$0.02/cm^2$	
Silicon		170ppm	
Strontium		0.00007	
Sulfur		$8ng/cm^2$	
Tellurium		0.1	
Terbium		200	
Thorium		7	
Tin		4ppm	
Titanium		0.001	
Uranium		0.00002	
Vanadium		$17ng/cm^2$	
Ytterbium		7	
Yttrium		0.22	
Zinc		0.00004	
Zirconium		0.00002	

TABLE A-12 (concluded).

INTERFERENCES	REFERENCES	APPLICABLE STRATEGY LEVEL	REMARKS

TABLE A-13. METHOD OPTIONS FOR ELEMENTAL ANALYSIS - PROTON INDUCED X-RAY ANALYSIS

ANALYSIS AREA	METHOD OPTION	DETECTION LIMIT	SPECIAL ANALYTICAL CONSIDERATIONS
Elemental Analysis:	Proton Induced X-ray Analysis (PIXA) 20 Mev proton activation.	Detection limits in μg and are theoretical	Powder speciments, as a rule, present the greatest problems. Sample should be ground to a size of <10 μ and followed by briquetting. Samples may be fluxed and converted to a glass to reduce sample inhomogeniety. For solution work, concentration onto filter paper discs is useful. Sample size is in the range of 1-50 mg. If analysis will take place on filter media, the use of thin membrane filter media is recommended.
^{56}Fe		1.1×10^{-2}	
^{69}Ga		4.0×10^{-1}	
^{75}As		1.9×10^{-2}	
^{76}Se		2.6×10^{-2}	
^{85}Rb		4.4×10^{-2}	
^{94}Mo			
^{94}Mo		4.2×10^{-3}	
^{94}Mo			
^{94}Mo		1.0×10^{-4}	
^{103}Rh		3.4×10^{-4}	
^{102}Pd		2.8×10^{-1}	
^{104}Pd			
^{107}Ag		1.1×10^{-2}	
^{110}Cd		1.0×10^{-1}	
^{110}Cd			
^{111}Cd		5.8×10^{-4}	
^{112}Cd			
^{113}In		8.6×10^{-2}	
^{115}In		2.3×10^{-2}	
^{118}Sn			
^{119}Sn		3.2×10^{-4}	
^{120}Sn			
^{121}Sb		2.4×10^{-1}	
^{133}Cs		4.5×10^{-3}	
^{139}La		5.8×10^{-1}	
^{140}Ce		2.2×10^{-3}	
^{142}Ce		7.8×10^{-4}	
^{141}Pr		1.5×10^{-4}	
^{151}Eu		6.6×10^{-4}	
^{153}Eu		8.6×10^{-3}	
^{155}Gd		2.1×10^{-4}	
^{156}Gd		2.1×10^{-4}	
^{160}Dy		4.3×10^{-3}	
^{161}Dy		4.3×10^{-3}	

TABLE A-13 (continued).

INTERFERENCES	REFERENCES	APPLICABLE STRATEGY LEVEL	REMARKS
See References	32, 315, 135, 208, 83, 171, 134, 150, 318, 30	1	Accuracy is dependent on suitable choice of standards in a matrix which is as similar to the sample matrix as possible. PIXA is a comparative technique and thus it is necessary that calibration standards and samples to be analyzed are presented to the spectrometer in an identical and reproducible way. Sample must be homogenous as a penetration depth of 1-100 μ occurs; surface heterogeneity effects are most critical for long wavelength radiation and thus particular care must be taken in sample preparation with lighter elements such as F, Na, Mg, Al, and Si. A method of particular use in the trace analysis of powders is the "spiking" method which can reduce matrix effects. Analysis is rapid, on the order of minutes.

TABLE A-13 (continued).

ANALYSIS AREA	METHOD OPTION	DETECTION LIMIT	SPECIAL ANALYTICAL CONSIDERATIONS
Elemental Analysis:	PIXA - 20 MeV (cont.)		See previous comments.
^{165}Ho		3.5×10^{-2}	
^{165}Ho		3.0×10^{-4}	
^{166}Er		1.5×10^{-4}	
^{167}Er		1.5×10^{-4}	
^{168}Er		1.5×10^{-4}	
^{175}Lu		3.3×10^{-4}	
^{177}Hf		2.1×10^{-4}	
^{178}Hf		1.3×10^{-3}	
^{179}Hf			
^{182}W		1.6×10^{-4}	
^{183}W			
^{190}Os		5.6×10^{-4}	
^{191}Ir		1.6×10^{-3}	
^{191}Ir		8.2×10^{-4}	
^{194}Pt		1.4×10^{-3}	
^{197}Au		7.7×10^{-3}	
^{203}Tl		7.3×10^{-3}	
^{204}Pb		2.6×10^{-2}	
^{79}Br		1.0×10^{-4}	
^{81}Br		2.2×10^{-4}	
^{102}Pd		4.5×10^{-3}	
^{121}Sb		2.6×10^{-2}	
^{113}Ca		3.2×10^{-3}	
^{132}Ba		5.7×10^{-4}	
^{160}Dy		1.1×10^{-2}	
^{163}Dy		6.4×10^{-2}	
^{203}Tl		1.1×10^{-4}	
^{203}Tl		3.1×10^{-4}	

TABLE A-13 (continued).

INTERFERENCES	REFERENCES	APPLICABLE STRATEGY LEVEL	REMARKS
	32, 318	1.	

TABLE A-13 (continued).

ANALYSIS AREA	METHOD OPTION	DETECTION LIMIT	SPECIAL ANALYTICAL CONSIDERATIONS
Elemental Analysis:	PIXA 10 Mev Proton Activation	Detection limit in ppb Dependent on radioisotope	
Li		24	
B		190	
S		22	
Ca		10-3000	
Ti		9	
V		43	
Cr		1-1200	
Fe		61	
Ni		5-150	
Cu		3-400	
Zn		6	
Ga		4	
Ge		5	
As		40	
Se		1-40	
Br		5-10	
Rb		1	
Sr		1-1000	
Y		2	
Zr		2-2000	
Nb		30-40	
Mo		5-40	

TABLE A-13 (concluded).

INTERFERENCES	REFERENCES	APPLICABLE STRATEGY LEVEL	REMARKS
			10 Mev proton induced x-ray analysis is able to analyze the lighter elements and is thus complementary to 20 Mev PIXA

TABLE A-14. METHOD OPTIONS FOR ELEMENTAL ANALYSIS - OPTICAL EMISSION SPECTROSCOPY

ANALYSIS AREA	METHOD OPTION	DETECTION LIMIT	SPECIAL ANALYTICAL CONSIDERATIONS
Elemental Analysis:	Optical Emission Spectroscopy:		Because typical sample size is ~10-50 mg, the sample must be homogeneous. Sample homogeniety may be attained by wet (chemical) ashing or grinding the sample to fine powder. Wet ashing may also improve detection limits by concentrating the sample. The DC arc source commonly uses a cup electrode into which the sample is placed. Plasma sources generally will accept either liquid or solid samples.
Li, Na, Cu, Ag	DC Arc Source (AC Spark Source)	1 ppm	
Be, B, Mg, Al,		1-10ppm	
K, Ca, Sc, Ti,		"	
V, Cr, Mn, Fe,		"	
Co, Ni, Zn, Ga,		"	
Ge, Rb, Sr, Y,		"	
Zr, Mo, Ru, Rh,		"	
Pd, Cd, In, Sn,		"	
Ca, Ba, La, Au,		"	
Tl, Pb, Pr, Nd,		"	
Eu, Tb, Dy, Ho,		"	
Er, Tm, Yb, Lu,		"	
F, Si, P, As,		10-100ppm	
Sb, Bi, Nb, Hf,		"	
Ta, W, Re, Os,		"	
Ir, Pt, Hg, Th,		"	
U		"	
	RF Plasma Torches	Values in μg	
Ag		0.0001	
Al		0.001	
Au		0.001	
Ba		0.0001	
Bi		0.0005	
Ca		0.001	
Cd		0.00001	
Co		0.004	
Cr		0.001	
Eu		0.0002	
Fe		0.01	
Ga		0.001	
Hg		0.00001	
I		0.05	
In		0.001	
Li		0.00005	
Mg		0.0001	
Mn		0.001	
Ni		0.003	
P		0.01	
Pb		0.001	
S		0.01	
Si		0.05	
Sr		0.0002	
Te		0.001	
Ti		0.005	
Tm		0.004	
V		0.002	
W		0.7	
Y		0.0006	
Yb		0.0002	
Zn		0.00001	

TABLE A-14 (concluded).

INTERFERENCES	REFERENCES	APPLICABLE STRATEGY LEVEL	REMARKS
Generally emission lines may be found which are free of spectral interferences		1,2	OES is most effective in the ppm to ~1% range. Detection limits are highly matrix dependent. Analytical accuracy is dependent on the choice of suitable standards in a matrix which is as close as possible to the matrix being analyzed. The precision which may be achieved is concentration dependent; at lowest limits of detection, precision decreases greatly. Precision also suffers at high end of concentration range. At the high temperatures present at the electrodes, formation of compounds such as oxides, carbides, and nitrides may cause large changes in vaporization behavior. Reactions may also occur in the discharge zone which decrease the free atom concentration and lower the intensity of atomic lines. DC arc sources are reproducible within ±20% and as such are best suited to qualitative or semiqualitative analyses.

TABLE A-15. METHOD OPTIONS FOR ELEMENTAL ANALYSIS - ATOMIC ABSORBANCE, ATOMIC FLUORESCENCE, ATOMIC EMISSION

ANALYSIS AREA	METHOD OPTION	DETECTION LIMIT	SPECIAL ANALYTICAL CONSIDERATIONS
Elemental Analysis:	AA, FAAS, AF, AE	All values in ppm unless otherwise noted (1% absorption)	Wavelengths in Angstroms. Second entry refers to Flameless Atomic Fluorescence. Fuel in all cases is acetylene, C_2H_2. Oxidant is either nitrous oxide or air: N = Nitrous oxide A = Air as oxidant
Aluminum	AA	0.1	3962 (N)
	FAAS	1×10^{-12} g	3962
	AF	0.1	3962
	AE	0.005	3962
Antimony	AA	0.03/0.004	2175 (A)
	FAAS	5×10^{-12} g	2175
	AF	0.04	2315/231/5
	AE	20	2598
Arsenic	AA	0.03/0.004	1937 (A)
	FAAS	8×10^{-12} g	1937
	AF	0.1	1937
	AE	50	2350
Barium	AA	0.02	5536 (N)
	FAAS	6×10^{-12} g	5536
	AF		
	AE	0.001	5336
Beryllium	AA	0.002	2349 (N)
	FAAS	3×10^{-12} g	2349
	AF	0.008	2349/234/9
	AE	0.1	2349
Bismuth	AA	0.04	2231 (A)
	FAAS	4×10^{-12} g	2231
	AF	0.005	2231/3068
	AE	2	2231
Boron	AA	3	2497 (N)
	FAAS	2×10^{-10} g	2497
	AF		
	AE	3	5180
Cadmium	AA	0.001	2228 (A)
	FAAS	8×10^{-13} g	2228
	AF	0.000001	2228
	AE	2	3261
Calcium	AA	0.002	4227 (N or A)
	FAAS	4×10^{-13}	4227
	AF	0.02	4227/3247
	AE	0.001	4277
Cesium	AA	0.05	8521 (A)
	FAAS	2×10^{-11} g	8521
	AF		
	AE	0.5	8521

AA = Atomic Absorbance
FAAS = Flameless Atomic Absorbance
AF = Atomic Fluorescence
AE = Atomic Emission

TABLE A-15 (continued).

INTERFERENCES	REFERENCES	APPLICABLE STRATEGY LEVEL	REMARKS
Interferences apply only to AA and AF. (C) = Chemical interference (M) = Molecular interference (I) = Ionization interference			
Zn, Ca, Cu, Fe (C); Alkaline earth metals (I)	292, 269, 197,	2	Graphite furnace
Cu (C)	124	2	For lower detection limit analyzed as hydride Graphite furnace $2x10^{-10}$ g/Filament Atom Reservoir (FAR).
	124	2	For lower detection limit analyze as hydride Carbon rod
Al, Si (C); Alkalai and alkaline earth metal (I)	318, 307	2	Graphite furnace
		2	Carbon rod $4x10^{-9}$ g/Pt loop
Ca, Mg, Na, K (M)		2	Carbon rod $1.0x10^{-11}$ g/FAR
			Graphite furnace
Fe (M)		2	2321 A (NRL)* Graphite furnace/carbon rod $1x10^{-15}$ g/FAR
SO_4^{-2}, PO_4^{-3}, Al, Si (C), Na, K (I)		2	Interference may be reduced with Sr. buffer Carbon rod $2x10^{-10}$/Pt loop
Alkali metals (I)		2	Carbon rod
			* (NRL) - Non resonance line suitable for molecular interference correction with deuterium lamp.

TABLE A-15 (continued).

ANALYSIS AREA	METHOD OPTION	DETECTION LIMIT	SPECIAL ANALYTICAL CONSIDERATIONS
Chromium	AA	0.002	3579 (A)
	FAAS	2×10^{-12} g	3579
	AF	0.0015	3759
	AE	0.005	4254
Cobalt	AA	0.002	2407 (A)
	FAAS	2×10^{-12} g	2407
	AF	0.0015	2407/2407
	AE	0.05	3454
Copper	AA	0.004	3247 (A)
	FAAS	6×10^{-13} g	3247
	AF	0.001	3247
	AE	0.01	3247
Dysprosium	AA	0.4	4217 (N)
	FAAS	7×10^{-10} g	4217
	AF		
	AE	0.07	4046
Erbium	AA	0.1	4008 (N)
	FAAS		
	AF		
	AE	0.001	
Europium	AA	0.2	4591 (N)
	FAAS	0.02	4594
	AF		
	AE	0.0006	4594
Gallium	AA	0.05	2874 (A)
	FAAS	4×10^{-8} g	2874
	AF	0.01	4872/4172
	AE	0.01	4172
Gadolinium	AA	4	3684 (N)
	FAAS		
	AF		
	AE	2	4402
Germanium	AA	1	2652 (N)
	FAAS	3×10^{-12} g	
	AF	0.1	2652
	AE	0.5	2652
Gold	AA	0.02	2428 (N)
	FAAS	1×10^{-12} g	2428
	AF	0.005	2676/2676
	AE	4	2676
Hafnium	AA	15	3073 (N)
	FAAS		
	AF		
	AE		
Holmium	AA	0.3	4104 (N or A)
	FAAS		
	AF		
	AE	0.02	4054
Indium	AA	0.03	3039 (N or A)
	FAAS	4×10^{-13} g	
	AF	0.1	4511
	AE	0.005	4511
Iridium	AA	1	2640 (N)
	FAAS		
	AF		
	AE	30	3801
Iron	AA	0.004	2483 (A)
	FAAS	1×10^{-11} g	2483
	AF	0.003	2483/2483
	AE	0.05	3720

TABLE A-15 (continued).

INTERFERENCES	REFERENCES	APPLICABLE STRATEGY LEVEL	REMARKS
Fe (C)		2	Interference may be reduced with NH_4Cl Graphite furnace/carbon rod
Ca, Mg, K, Na (M)		2	2384 A, 2389 A (NRL) Graphite furnace $2x10^{-11}$ g/FAR
Ca, Na, K (M)		2	2961 A (NRL) Graphite furnace $2x10^{-12}$/FAR
		2	
		2	Carbon rod
AL (C)	32		Carbon rod $1x10^{-9}$ g/FAR
	32, 197	2	
Fe, Ca (M)		2	Graphite furnace $4x10^{-12}$ g/FAR
		2	
		2	
		2	
Ca (M); Si (C)		2	2511 A (NRL) Carbon rod/graphite furnace $2.0x10^{-12}$ g/FAR

TABLE A-15 (continued).

ANALYSIS AREA	METHOD OPTION	DETECTION LIMIT	SPECIAL ANALYTICAL CONSIDERATIONS
Lanthanum	AA	2	3928 (N)
	FAAS		
	AF		
	AE	0.1	4418 (LaO)
Lead	AA	0.01	2833 (A)
	FAAS	3×10^{-12}g	2833
	AF	0.01	4058/4058
	AE	0.2	4058
Lithium	AA	0.001	6708 (A)
	FAAS	3×10^{-12}g	6708
	AF		
	AE	0.00003	6708
Lutetium	AA	3	3312 (N)
	FAAS		
	AF		
	AE	1	4519
Magnesium	AA	0.003	2852 (A)
	FAAS	4×10^{-14}g	2852
	AF	0.002	2852/2852
	AE	0.005	2852
Manganese	AA	0.003	2795 (A)
	FAAS	4×10^{-13}g	2795
	AF		2795/2795
	AE	0.005	4031
Mercury	AA	0.5	2537 (A)
	FAAS	2×10^{-11}g	2537
	AF	0.0002	2537/2537
	AE	40	2537
Molybdenum	AA	0.03	3133 (N)
	FAAS	3×10^{-12}g	3133
	AF	0.5	3133
	AE	0.1	3903
Neodymium	AA	2	4925 (N)
	FAAS		
	AF		
	AE	0.2	2925
Nickel	AA	0.005	2320 (N)
	FAAS	9×10^{-12}g	2320
	AF	0.002	2320/2320
	AE	0.6	3415
Niobium	AA	5	4059 (A)
	FAAS		
	AF		
	AE	1	4059
Osmium	AA	1	2909 (A)
	FAAS		
	AF		
	AE		
Palladium	AA	0.01	2746 (A)
	FAAS	4×10^{-12}g	2746
	AF	0.04	3405
	AE	0.2	3635

TABLE A-15 (continued).

INTERFERENCES	REFERENCES	APPLICABLE STRATEGY LEVEL	REMARKS
		2	
Al, Th, Zr (C); Ca, Mg, K, Na (I)	242, 206	2	2203 A (NRL) Carbon rod 1.5×10^{-11} g/FAR
Sr (C)		2	Concentrations 5 ppm Carbon rod
Al, Si, P, SO_4^{-2} (C)		2	Interference eliminated with a La, Se, or Ni buffer Carbon rod 1×10^{-12} g/FAR
Cr (M); Si (C)		2	Chemical interference may be reduced with Ca buffer Carbon rod 5×10^{-12} g/FAR
		2	Carbon rod 1×10^{-9}/Pt loop
Fe, Sr, Mn, Ca, Al, NO_3^- (C)		2	Fe and Mn interference may be eliminated with NH_4Cl Carbon rod
Pr (S)		2	4634 A line is less sensitive but interference free
Ca (M)		2	2328 A (NRL) Graphite furnace/carbon rod 5×10^{-12} g/FAR
	32	2	
		2	
		2	Carbon rod

TABLE A-15 (continued).

ANALYSIS AREA	METHOD OPTION	DETECTION LIMIT	SPECIAL ANALYTICAL CONSIDERATIONS
Phosphorus	AA	20	1783 (A)
	FAAS		
	AF		
	AE	200	5400
Platinum	AA	0.05	2659 (A)
	FAAS	1×10^{-11} g	2659
	AF	0.15	2659
	AE	0.2	2659
Potassium	AA	0.003	7665 (A)
	FAAS	4×10^{-11} g	7665
	AF		
	AE	0.0005	7665
Praseodynium	AA	10	4951 (N)
	FAAS		
	AF		
	AE	10	4951
Rhenium	AA	1	3461 (N)
	FAAS		
	AF		
	AE	0.02	3461
Rhodium	AA	0.02	3435 (A)
	FAAS	8×10^{-12} g	3435
	AF		
	AE	0.02	3435
Rubidium	AA	0.005	7800 (A)
	FAAS	1×10^{-12} g	7800
	AF		
	AE	0.001	7800
Ruthenium	AA	0.3	3499 (A)
	FAAS		
	AF		
	AE	0.02	3728
Samarium	AA	5	4297 (N)
	FAAS		
	AF		
	AE	0.2	4760
Scandium	AA	0.2	3918 (N)
	FAAS		
	AF		
	AE	0.03	4020
Selenium	AA	0.1/0.002	1961 (A)
	FAAS	9×10^{-12} g	1961
	AF	0.04	1961
	AE		
Silicon	AA	0.1	2516 (N)
	FAAS	5×10^{-14} g	2516
	AF	0.6	2040
	AE	5	2516
Silver	AA	0.001	3281 (N)
	FAAS	1×10^{-13} g	3281
	AF	0.001	3281/3281
	AE	0.02	3281
Sodium	AA	0.0008	5890 (A)
	FAAS	1×10^{-13} g	5890
	AF		
	AE	0.0005	5890

TABLE A-15 (continued).

INTERFERENCES	REFERENCES	APPLICABLE STRATEGY LEVEL	REMARKS
		2	
Pd, Rh, Au, Ir, Ru, Os, Na (C)		2	Chemical interferences may be eliminated with Cu buffer Carbon rod
Na (I)		2	Carbon rod
		2	
		2	
Na, Pt, Pd, Au, Ir, Ru, Os		2	
Na, K (I)		2	Carbon rod
		2	
		2	
		2	
Cu (C)	254, 124, 137	2	For lower detection limit analyze as hydride Carbon rod
			Graphite furnace
Th (C)		2	Carbon rod $1x10^{-12}$ g/FAR
		2	Carbon rod

TABLE A-15 (continued).

ANALYSIS AREA	METHOD OPTION	DETECTION LIMIT	SPECIAL ANALYTICAL CONSIDERATIONS
Strontium	AA	0.005	4607 (A)
	FAAS	1×10^{-12} g	4607
	AF	0.03	4607
	AE	0.0002	4607
Tantalum	AA	5	2715 (N)
	FAAS		
	AF		
	AE	5	4813
Tellurium	AA	0.05	2143 (A)
	FAAS	3×10^{-9} g	
	AF	0.0005	2143
	AE	200	2383
Terbium	AA	0.05	4327 (A)
	FAAS	1×10^{-12} g	4327
	AF		
	AE	0.4	4319
Thalium	AA	0.02	2768 (A)
	FAAS	1×10^{-12} g	2768
	AF	0.008	3776/3776
	AE	0.002	3776
Thulium	AA	1	4106 (A)
	FAAS		
	AF		
	AE	0.02	3718
Tin	AA	0.02	2246 (A)
	FAAS	3×10^{-10} g	2246
	AF	0.05	3034
	AE	0.3	2840
Titanium	AA	0.1	3643 (N)
	FAAS	4×10^{-5} g	3643
	AF	4	3199
	AE	0.2	3998
Tungsten	AA	3	4009 (N)
	FAAS		
	AF		
	AE	0.5	4009
Uranium	AA	30	3585 (N)
	FAAS		
	AF		
	AE		
Vanadium	AA	0.02	3184 (N)
	FAAS	3×10^{-12} g	3184
	AF	0.07	3184
	AE	0.01	4379
Ytterbium	AA	0.04	3988 (N)
	FAAS		
	AF		
	AE	0.0002	3988
Yttrium	AA	0.3	4078 (N)
	FAAS		
	AF		
	AE	0.4	3621
Zinc	AA	0.001	2138 (A)
	FAAS	3×10^{-14} g	2138
	AF	0.00002	2138/2138
	AE	50	2138

TABLE A-15 (continued).

INTERFERENCES	REFERENCES	APPLICABLE STRATEGY LEVEL	REMARKS
Al, P (C); Na, K (I)	32	2	Chemical interferences may be eliminated with a La buffer. Ionization interference levels off above 100 ppm Na or K Carbon rod
Cu (C)	124	2	For lower detection limit analyze as hydride
		2	Carbon rod 5×10^{-11} g/FAR
Na, PO_4^{-3} (C)		2	Carbon rod
		2	
		2	
		2	
		2	Carbon rod
		2	
		2	
Fe, Al, Na, K, Mg, Ca (M)		2	Graphite furnace 4×10^{-14} g/FAR

TABLE A-15 (continued).

ANALYSIS AREA	METHOD OPTION	DETECTION LIMIT	SPECIAL ANALYTICAL CONSIDERATIONS
Zirconium	AA	5	3601 (N)
	FAAS		
	AF		
	AE	3	3601

TABLE A-15 (concluded).

INTERFERENCES	REFERENCES	APPLICABLE STRATEGY LEVEL	REMARKS
		2	

TABLE A-16. METHOD OPTIONS FOR ANION ANALYSIS

ANALYSIS AREA	METHOD OPTION	DETECTION LIMIT	SPECIAL ANALYTICAL CONSIDERATIONS
AsO_4^{-3}	Colorimetric	1 ppm	Heating reaction improves accuracy.
AsO_3^{-3}	GC	1 ppb	H_2O must be removed.
Br^-	SIE	1 ppm	
Br^- See I^- (Titrimetric)	Titrimetric	>50 ppm	Bromide and iodide are determined together. Bromide is calculated as the difference between combined bromide and iodide determination and iodide determination.
Cl^-	SIE	1 ppm	
	Polarographic	2 ppm	
	Titrimetric Potentiometric	1 ppm	Mercuric or silver nitrate titrant.
	Colorimetric	1 ppm	
CN^-	SIE	1 ppm	
	Polarographic	2 ppm	
	Colorimetric	<1 ppm	Chloramine T procedure.
	Titrimetric	>1 ppm	
CO_3^-	Gravimetric	>100 ppm	1g sample required
F^-	SIE	1 ppm	
	Colorimetric	0.1 ppm	
	Colorimetric	0.05 ppm	
	Polarographic	2 ppm	
I^-	Colorimetric	1 ppb	
	SIE	1 ppm	
	Titrimetric	>50 ppm	
NH_4^+	Titrimetric	>1 ppm	

TABLE A-16 (continued).

INTERFERENCES	REFERENCES	APPLICABLE STRATEGY LEVEL	REMARKS
N/A	8.40	1 and 2	As evolved as AgH_3.
None cited.	298	1 and 2	As evolved as $Ø_3As$
S^{-2}, I^-, CN^-.	97	1 and 2	
Fe, Mn, Organic matter.	8.9	2	Interferences are removed by realtion with CaO. See also Iodide, Titrimetric.
S^{-2}, CN^-, I^-, Br^-, SCN^-	97	1 and 2	
		2	Determined simultaneously with CN^-, F^-, SO_3^{-2}, SO_4^{-2}.
CrO_4^{-2}, Fe^{+3}, SO_3^{-2}.	161	1 and 2	Chloride can be determined in all concentrations.
	161	2	Thiocyanate system measured colorimetrically.
S^{-2}, I^-	205	1 and 2	Interference can be removed with lead carbonate.
	161	2	Determined simultaneously with Cl^-, F^-, SO_3^{-2}, SO_4^{-2}.
S^{-2}, oxidizing substances.	8.32	1 and 2	Distillation removes interferences. Organic compounds may be removed by extraction.
S^{-2}, oxidizing substances	8.32	1 and 2	Distillation removes interferences. Organic compounds may be removed by extraction.
	8.10	2	
OH^-, Al^{+3}, Fe^{+3}	182, 303,97	1 and 2	
		1 and 2	Spadns method; distillation removes most interferences.
Al^{+3}	818	2	Alizarin complexone method.
	161	2	Determined simultaneously with Cl^-, CN^-, SO_3^{-2}, SO_4^{-2}.
Hg (>0.1 ppm), oxidring agents.	216	2	Reducing agents interfere but are removed by treatment with $KMnO_4$.
Br^-, Cl^-.		1 and 2	
Fe, Mn, organic matter		2	Interferences are removed by reaction with CaO.
Distillation procedure		1 and 2	

TABLE A-16 (continued).

ANALYSIS AREA	METHOD OPTION	DETECTION LIMIT	SPECIAL ANALYTICAL CONSIDERATIONS
NH_4^+	Colorimetric	0.05 ppm	Distillation and nesslerization procedure.
NO_3^-	Colorimetric	0.1 ppm	Temperate control during analysis is essential.
	Colorimetric	10 ppm	
NO_3^-/NO_2^-	Colorimetric	0.05 ppm	Sample is not stable.
	Colorimetric	0.05 ppm	Sample is not stable.
NO_2^-	Colorimetric	0.05 ppm	Sample is not stable.
NO_3^-	SIE	1 ppm	
PO_4^{-3}	Colorimetric	1 ppm	Temperature and final acid strength influence color.
	Colorimetric	0.01 ppm	Refrigerate sample at 4°C.
	Colorimetric	0.01 ppm	Refrigerate sample at 4°C.
S^{-2}	Titrimetric	1 ppm	Minimize contact with air.
	SIE	>10 ppm	
SO_3^{-2}	Polarographic	2-50 ppm	
SO_4^{-2}	Polarographic	2-50 ppm	
	Gravimetric	100 ppm	Ignition of precipitate at 800°C.
	Turbidometric	10 ppm	

TABLE A-16 (concluded).

INTERFERENCES	REFERENCES	APPLICABLE STRATEGY LEVEL	REMARKS
Volatile organic compounds.		1 and 2	Organic compounds may cause off colors.
Dissolved organic matter oxidizing and reducing substances.		2	Brucine Sulfate method.
Cl^-, NO_2^-		2	PDS method; Chloride may be removed with Ag_2SO_4.
Ammonia primary amines Hg, Cu		2	Cadmium-Copper reduction technique; NO_3^- and NO_2^- determined separately.
Cl^-, PO_4^{-3}, S^{-2}, NH_4^-, Mn, Ca, Fe^{+2}.		2	Hydrazine reduction method.
OH^-, strong oxidizing or reducing agents.		2	Diazotization procedure.
Cl^-, Br^-, I^-.		2	
Fe^{+2}, Sn^{+2}, I_2, $Cr_2O_7^{-2}$		2	Dichromate may be volatilized as $CrCl_3$ with $HClO_4$.
N/A		2	Stannous Chloride method.
Fe		2	Ammonium Molybdate-Pottassium Antimonyl Tartrate method.
SO_3^{-2}, other reduced sulfur compounds.		2	Zinc Acetate-Iodine procedure.
Bg^{+2}.		2	
N/A		2	Determined simultaneously with Cl^-, CN^-, F^-, SO_4^-.
N/A		2	Determined simultaneously with Cl^-, CN^-, F^-, SO_3^-.
SO_3^{-2}, NO_3^-, SiO_2, Suspended matter.		2	Time consuming but accurate.
Color or suspended matter.		2	A fairly rapid method.

TABLE A-17. METHOD OPTIONS FOR STANDARD WATER ANALYSIS

ANALYSIS AREA	METHOD OPTION	DETECTION LIMIT	SPECIAL ANALYTICAL CONSIDERATIONS
Acidity	Titrimetric		
Alkalinity	Titrimetric		
Ammonia	Colorimetric		Distillation into boric acid solution concentration range, 0.05-1 ppm.
	Titrimetric		Distillation into boric acid solution concentration range 1 ppm.
Biological Oxygen Demand	Titrimetric		Compounds which are oxidized by O_2.
Carbonate	Titrimetric		Evolution apparatus required is described in reference.
	Electrometric/ Colorimetric		pH measurement.
COD	Titrimetric		Dichromate method.
Conductivity	Electrometric		Sample should be analyzed within 24 hours.
Cyanide	Colorimetric		Distillation into NaOH; chloramine T method.
	Titrimetric		Distillation into NaOH; titration with $AgNO_3$.
Dissolved Oxygen	Electrometric		Sample should be analyzed within 6 hours.
Hardness	Gravimetric		Values are reported in equivalents per million.
	Titrimetric		Values are reported in equivalents per million.
Hydrazine	Spectrometric		Sample should be analyzed as quickly as possible.
Nitrate	Spectrometric		Absorbance does not follow Beer-Lambert relation.
Nitrate/ Nitrite	Spectrometric		NO_3^- is reduced to NO_2^- and analyzed as for nitrate.
Nitrite	Spectrometric		Sample should be analyzed as soon as possible. Sulfanilic acid - diazotization method.
	Titrimetric		Permanganate titration.

TABLE A-17 (continued).

INTERFERENCES	REFERENCES	APPLICABLE STRATEGY LEVEL	REMARKS
Suspended solids.	8.15	1 and 2	Various and point methods may be used.
Suspended solids.		1 and 2	Various end point methods may be used.
Volatile alkaline organic compounds.		1 and 2	
		1 and 2	
Incubation for 5 days at 20°C.		1 and 2	
Sulfides.		1 and 2	Sulfides are removed by scrubbing with iodine solution. Other interferences are removed by scrubbing with chromic acid.
Compounds which affect pH value other than carbonate.		1	An estimation procedure for H_2CO_3, HCO_3^-, CO_3^{-2}.
Compounds which are oxidized by dichromate anion.	8.20	1 and 2	Fe^{+2}, NO_2^-, SO_3^{-2}, Cl^-, Br^-, I^- as well as organic compounds are measured.
		1 and 2	
Sulfides, fatty acids.		1 and 2	Sulfide interference removed by $CdCO_3$ precipitation. Fatty acids are removed by extraction with hexane.
Sulfides, fatty acids.		1 and 2	
		1 and 2	
	8.17	2	Gravimetric method is referred method.
Numerous and varied.	8.17	1	See reference for list of interference.
Compounds which are able to oxidize N_2H_4.		1 and 2	Hydrazine undergoes auto-oxidation easily.
Turbidity, colored samples.		1 and 2	
Turbidity, Fe, Cu, organic oils and greases.		1 and 2	
Amines, reducing species.		1 and 2	For a complete discussion of interferences see reference.
Reducing agents.		1 and 2	

TABLE A-17 (continued).

ANALYSIS AREA	METHOD OPTION	DETECTION LIMIT	SPECIAL ANALYTICAL CONSIDERATIONS
Particulate & Dissolved Matter	Filtration and drying		
pH	Colorimetric		Test paper.
	Electrometric		Glass electrode measurement.
Phosphate	Gravimetric		Sample must contain >10 mg phosphate.
	Spectrometric		Sample concentration, 5-10 ppm.
	Spectrometric		Sample concentration, 2-25 ppm.
	Spectrometric		Sample concentration, 1-2 ppm.
Sulfate	Gravimetric		Barium chloride precipitation.
	Turbidimetric		
	Titrimetric		Thorin indicator.
Sulfite	Titrimetric	0.1-6 ppm	
	Titrimetric	>6 ppm	
	Titrimetric	>3 ppm	

TABLE A-17 (concluded).

INTERFERENCES	REFERENCES	APPLICABLE STRATEGY LEVEL	REMARKS
Numerous and varied.	8.16, 8.29	1 and 2	See reference for list of interferences. Solids may be submitted for trace analysis.
		1	
		1 and 2	
See reference, PO_3^{-3}.		2	
See reference, S^{-2}.		1	Amino reduction method; orthophosphate and total phosphate determined.
See reference, Fe^{+3}, color.		1	Only orthophosphate determined. Molybdo yanado-phosphate method.
See reference, CrO_4^{-2}, NO_3^-, O_2.		1	Ortho & total phosphate determined; stannous chloride reduction method.
SO_3^{-2}, S^{-2}, turbidity.		2	
Turbidity, dark coloration of sample.		1 and 2	
SO_3^{-2}, K^+, Fe^{+2}, Al^{+3}, PO_4^{-3}, F^-, NO_3^-.		1 and 2	Cation interference may be removed by ion exchange column.
See reference. S^{-2}, heavy metal ions, NO_2^-.	8.23	2	Dead stop titration technique. Referee method.
See reference. S^{-2}, Fe^{+2}, NO_2^-, Co, Cu.	8.23	2	Dead stop titration technique. Referee method.
See reference. S^{-2}, Fe^{+2}, NO_2^-, Cu, Co.	8.23	2	Visual end point. Non-referee method.

TABLE A-18. METHOD OPTIONS FOR FUEL ANALYSIS

ANALYSIS AREA	METHOD OPTION	DETECTION LIMIT	SPECIAL ANALYTICAL CONSIDERATIONS
I. COAL:			
Moisture	Drying Oven		Coal to pass 60 mesh sieve.
Ash	Combustion		Coal to pass 60 mesh sieve.
* Volatile Matter	Combustion		Coal to pass 60 mesh sieve.
Fixed Carbon	Combustion		Coal to pass 60 mesh sieve.
Sulfur	Bomb Washing Method		Coal to pass 60 mesh sieve.
Sulfur	Eschka Method		Coal to pass 60 mesh sieve.
Sulfur	Sodium Peroxide Method		Coal to pass 60 mesh sieve.
Sulfur	Gravimetric		Coal to pass 60 mesh sieve.
Forms of Sulfur	Gravimetric		Coal to pass 60 mesh sieve.
	Titrimetric		Coal to pass 60 mesh sieve.
Phosphorus	Titrimetric		Coal to pass 60 mesh sieve.
Carbon	Combustion		Coal to pass 60 mesh sieve.
** Hydrogen	Combustion		Coal to pass 60 mesh sieve.
Nitrogen	Kjeldahl Gunning-Method		Coal to pass 60 mesh sieve.
Oxygen	By difference		Coal to pass 60 mesh sieve.
Carbon Dioxide	Acid Decomposition		Coal to pass 60 mesh sieve.
SiO_2	Spectrometric		Coal to pass 60 mesh sieve.
Al_2O_3	Spectrometric		Coal to pass 60 mesh sieve.
Fe_2O_3	Spectrometric		Coal to pass 60 mesh sieve.
TiO_2	Spectrometric		Coal to pass 60 mesh sieve.
P_2O_5	Spectrometric		Coal to pass 60 mesh sieve.

* Proximate Analysis.
** These analyses plus sulfur comprise an ultimate analysis.

TABLE A-18 (continued).

INTERFERENCES	REFERENCES	APPLICABLE STRATEGY LEVEL	REMARKS
	8.4	1 and 2	
	8.4	1 and 2	
	8.4	1 and 2	Various method options are described within test.
	8.4	1 and 2	
	8.4	1 and 2	
	8.4	1 and 2	
	8.4	1 and 2	Not commonly used.
	8.28	1 and 2	Standard method for Sulfur in Ash.
	8.35	1 and 2	Distinguishs between sulfate sulfur, pyritic sulfur, and organic sulfur; organic sulfur is determined by difference.
	8.35	1 and 2	
Titanium	8.4	1 and 2	Alternate procedure described for P analysis where Ti is known to be low.
	8.4	1 and 2	
	8.4	1 and 2	
	8.4	1 and 2	Alternate methods are described.
	8.4	1 and 2	
	8.27	1 and 2	Test is for carbonates in coal.
	8.38	2	
	8.38	2	
	8.38	2	
	8.38	2	
	8.38	2	

TABLE A-18 (continued).

ANALYSIS AREA	METHOD OPTION	DETECTION LIMIT	SPECIAL ANALYTICAL CONSIDERATIONS
COAL (cont.)			
CaO	Titrimetric		Coal to pass 60 mesh sieve.
MgO	Titrimetric		Coal to pass 60 mesh sieve.
Na_2O	Flame Photometric		Coal to pass 60 mesh sieve.
K_2O	Flame Photometric		Coal to pass 60 mesh sieve.
Heating Value	Combustion		Coal to pass 60 mesh sieve.
II.			
RESIDUAL OIL:			
H_2O and Bituminous Materials	Distillation		~15-20 ml of sample required.
Sulfur	Bomb Method		~1 g sample required.
Sulfur	Quartz Tube Method		~1 g sample required.
Sulfur	High Temperature Method		~1 g sample required.
Heating Value	Combustion		Combustion in O_2 bomb with 1 ml of H_2O under 30 atm. of O_2.

TABLE A-18 (concluded).

INTERFERENCES	REFERENCES	APPLICABLE STRATEGY LEVEL	REMARKS
	8.38	2	
	8.38	2	
	8.38	2	
		2	
		1 and 2	
	8.1	2	Dean-Stark distillation apparatus.
	8.2	1 and 2	Gravimetric determination.
Organic nitrogen compounds.	8.25	1 and 2	Phosphorus and organo-metallic compounds may also interfere. Chlorine may also be measured by this test procedure.
Organic nigrogen compound.	8.26	1 and 2	Titrimetric method. Nitrogen compounds when present in concentrations above 0.1% may interfere. Chlorine in concentrations above 1% will interfere.
		1 and 2	

TABLE A-19. METHOD OPTIONS FOR PHYSICAL CHARACTERIZATION OF SOLIDS

ANALYSIS AREA	METHOD OPTION	DETECTION LIMIT	ADVANTAGES/ DISADVANTAGES
Particle Sizing			
	Dry Sieving	to 74μ	Attrition may take place if sieving operation is prolonged. Timing of operation has been standardized by ASTM for coal. Other interferences include moisture content, relative humidity, electrostatic properties.
	Wet Sieving	to 37μ	Same as for dry sieving with the exception that agglomerating particles are tested in a more representative manner by wet sieving.
	Micromesh	to 5μ	Agglomeration of fine particles sever due to electrostatic causes.
	Membrane Sieving	to 37μ	Applicable only to liquid suspensions. Multiple backwashings required.
	Incremental Sedimentation	to 2μ	Adequate dispersion of the particles in suspension is essential. Convective disturbances and evaporative effects must be minimized.
	Bulk Sedimentation	to 0.1μ	Same as for incremental sedimentation method except that, in some cases, air is the settling medium and evaporative effects do not apply.
	Centrifugal Sedimentation	to 0.1μ	Same as for incremental sedimentation.
	Air Elutriation	to 1μ	Agglomeration effects due to electrostatic attraction is the prime interference. Particle attrition is also common. Cut fractions contain a large amount of undersized particles.
	Liquid Elutriation	to 2μ	Electrostatic effects are minimized.

TABLE A-19 (continued).

SPECIAL CONSIDERATIONS	REFERENCES	APPLICABLE STRATEGY LEVEL	REMARKS
During and after sampling, care must be taken to minimize agglomeration and attrition. In reducing a gross sample for analysis, special concern should be given to the representativeness of the sample to be analyzed.	8.3, 8.7, 8.42 8.41, 287	1	Can be used as a first step in sizing.
Same as for Dry Sieving.	287, 338	1	Same as for Dry Sieving.
Agglomeration effects can be minimized by preconditioning dust and pans to 50 - 75% relative humidity.	338	2	Applicable Level 2 technique when preceded by Dry or Wet Sieving
Same as for Dry Sieving	338	2	Same as for Micromesh
Same as for Dry Sieving	338		Determines equivalent particle diameter. Examples of specific types of incremental sedimentation analysis techniques are pipet, diver, hydrometer, and photo-extinction. Usually associated with a liquid medium.
Same as for Dry Sieving	338, 50	2	Lower limit given applies only to Beta or piezoelectric techniques.
Same as for Dry Sieving	287, 338, 50	2	Since a sedimentation and dispersing liquid are both utilized in this technique, care must be taken that only a small density difference exists. This would prevent particle entrapment at the interface between the liquids.
Same as for Dry Sieving	287, 338, 50	2	
Same as for Dry Sieving	287, 50	2	For more representative results, each fraction can be resuspended and the process repeated several times.

TABLE A-19 (continued).

ANALYSIS AREA	METHOD OPTION	DETECTION LIMIT	ADVANTAGES/ DISADVANTAGES
Particle Sizing (cont.)			
	Centrifugal Elutriation	to 2μ	Attrition is the prime limitation.
	Centrifugal	to 0.025μ	Attrition is prime limitation.
	Coulter Counter	to 0.03μ	An orientation correction factor must be applied when fibrous particles are present. Also the length to diameter ratio for other particles must be near unity. The device is automatic and relatively quick, especially when compared to sedimentation techniques which can take up to 60 hours for the smaller size particles.
	Optical Microscope	to 0.4μ	There are no interferences with this technique if proper precautions are taken. Accurate size determination is most dependent on the skill of the microscopist.
Morphology			
	Polarizing Light Microscope		Particle identification is dependent upon the number of characteristics (i.e., color, shape, cleavage) determined and the skill and experience of the microscopist.
	Electron Microscopy	to 0.001μ	Sample exposure to heat and vacuum in the microscope must be taken into account when interpreting the results. Transfer of electrostatic charge to the beam could cause a rupture of the substrate or particle migration.

TABLE A-19 (continued)

SPECIAL CONSIDERATIONS	REFERENCES	APPLICABLE STRATEGY LEVEL	REMARKS
Same as for Dry Sieving	287, 338, 50, 19	2	The most common commercially available centrifugal eluctriator is the Bahco micro-particle classifier. This is the standard method of particulate sizing specified in the ASME Power Test Code. The Bahco must be calibrated against optical methods.
Same as for Dry Sieving	287, 338, 50	1	Various models are commercially available. Calibration against optical methods must be performed.
Same as for Dry Sieving	287, 50		Calibration is against monodispersed particles of known diameter. Particle diameter should be no more than 30% of the aperture diameter.
Particles must be dispersed on the slide in a random manner without causing shattering of the particles. Agglomerated particles should be deflocculated.		1 and 2	A photomicograph taken in the field would minimize any handling or storage interference.
Same as for Optical Microscope	147	1 and 2	This instrument is the standard tool for for identification of particles down to 0.5μ in diameter. Level 1 analysis is limited to gross identification by shape, cleavage, structure and color characteristics. Level 2 analysis involves the determination of as many characteristics as are necessary. to provide a comprehensive particles identification.
Methods commonly used for the collection of submicron particles include membrane filters, thermal precipitators and electrostatic precipitators. These	287, 338, 50	2	Applicable to Level 2 sizing and morphology when the polarizing light microscope does not provide sufficient information.

TABLE A-19 (continued).

ANALYSIS AREA	METHOD OPTION	DETECTION LIMIT	ADVANTAGES/ DISADVANTAGES
Morphology (cont.)			
	Scanning Electron Microscopy	to o.001μ	Same as for Electron Microscopy
	Electron Microprobe		Can be used to identify the chemical nature of individual particles.

TABLE A-19 (concluded).

SPECIAL CONSIDERATIONS	REFERENCES	APPLICABLE STRATEGY LEVEL	REMARKS
methods are employed since handling of the collected sample is minimized. Since in many cases these techniques are not available for sampling, interferences from breaking and agglomeration will occur.			
Same as for Electron Microscopy	287, 338, 50	2	Allows for greater details in particle morphology analysis.
The mounting of the sample is a critical step in this procedure.		2	If the Polarizing Light and Electron Microscopes fail to provide enough information, this technique can be used.

TABLE A-20. METHOD OPTIONS FOR FLOW MEASUREMENT

METHOD	DESCRIPTION	APPLICABLE MEDIA
Standard Pitot Tube	A pressure probe method. Point velocity determination. Differential pressure (stagnation minus static) at a point in duct or stack is sensed by pitot tube connected to a pressure transducer (e.g., manometer) and then related to the velocity at that point. A transverse is performed with points selected according to FPA method 1. Flow rate is determined from resulting velocity profile. Effect of compressibility is usually handled through use of a correction factor. This is a manual traverse method and is not ordinarily used for continuous monitoring systems.	Gas or Liquid
"S" Type Pitot Tube	A pressure probe method (see Standard Pitot Tube discussion). Point velocity determination.	Gas or Liquid
Hastings Raydist Flare Gas Flow Probe	A pressure probe method. Point velocity determination. Probe is variation of pitot tube with two openings at probe tip which are connected together by an internal stainless steel tube. A portion of this tube is heated and thermo-electric sensors measure temperature gradients along the wall of the tube, external to the flow stream. Purge gas is injected into the tubing in an arrangement which forms a pneumatic bridge. At zero velocities the bridge is balanced. As flow across the tip occurs, the differential pressure developed unbalances the bridge	Gas

TABLE A-20 (continued).

ADVANTAGES	DISADVANTAGES	REMARKS
a) 0.5% accuracy from 1.1 to 60.9 m/sec. b) Less sensitive to probe orientation than "S" type pitot tube. c) Not readily clogged in high particulate, high moisture gas streams for short time periods. d) Stainless steel construction. e) Can be water-cooled to withstand temperatures up to 2000°F. f) Relatively inexpensive. g) May be used for liquids.	a) Lower differential pressure than "S" type. b) When used in conjunction with a long sampling probe it is difficult to insert the assembly into the duct. c) Must obtain alignment of probe axis with flow direction (i.e., yaw sensitivity).	A port must be cut into duct or stack. Size of port is primarily determined by probe assembly diameter. This is the most accurate method for point velocity determinations. Since ellipsoidal nose tube is more accurate than hemispherical type, its use is preferred.
a) 0.5% accuracy from 2.7 to 30.9 m/sec. b) Higher differential pressure than standard pitot tube. c) Greater resistance to clogging in high particulate - high moisture streams than standard pitot tube. d) Same as d), e), f), and g) for Standard Pitot Tube. e) Recommended in EPA Method 2. f) No insertion problem as with standard pitot. g) Bi-directional - will show effect of reversal in flow.	High yaw sensitivity.	Port must be cut into duct, as with standard pitot tube. Due to the availability of electronic pressure tranducers, the advantage of the "S" pitot in having a higher differential pressure is reduced.
a) Corrosion and abrasion effects negligible. b) Since air is continuously exhausting through the two holes in the probe tip, clogging is almost impossible. c) Can operate in gas streams up to 315°C.	a) Accuracy not better than 4.8% of reading for range of 2.74 to 30.48 m/sec. b) High sensitivity at low velocities accentuates zero drift. c) Must be isolated from vibrations.	Port must be cut into duct to accommodate device. Accuracy inadequacies make this device unacceptable for use unless other options are unavailable. Sensitivity to vibrations would indicate that single point probe or rake must be used rather than a reciprocating traversal mechanism.

TABLE A-20 (continued).

METHOD	DESCRIPTION	APPLICABLE MEDIA
Hastings (cont)	and the sensors measured the shift in temperature gradients along the heated portion of the tube. The sensor output voltage is related to the gas velocity by a calibration curve.	
Ellison Annubar	A pressure probe method. Pressure velocity averaging. The stagnation pressure is sensed by four upstream holes opening into the probe body while the static pressure is sensed by a single hole facing downstream and located in the center of the probe.	Gas
Fluid Drag Meter	Uses a bonded strain gauge bridge to translate deflection due to fluid forces on target disc into an electrical signal proportional to the square of the flow rate. Point velocity determination.	Gas or Liquid
Hot-Wire Anenometer	Point velocity determination. A short length of fine platinum wire is mounted at the end of a probe and heated by electric current. The electrical resistance of the wire is a function of its temperature. Flow of a gas around the hot wire cools it, changing its resistance. By holding either the voltage or current across or through the wire constant, the change in amperes or voltage, respectively, becomes a function of gas velocity. Probe is connected to a Wheatstone bridge. Traverse across duct to obtain velocity profile from which volume flow rate can be determined.	Gas
Hot-Film Probe	Point velocity determination. Variation of Hot-Wire Anenometer. A thin electrically conducting film is coated on insulator located at probe tip. Film acts as resistance.	Gas or Liquid

TABLE A-20 (continued).

ADVANTAGES	DISADVANTAGES	REMARKS
a) 7.2% accuracy for flow (i.e., entire cross-section). This is comparable to using a 1% accurate point sensor and row averaging concept. b) Corrosion and abrasion effects are negligible due to stainless steel construction. c) Relatively inexpensive compared to point sensor array.	a) Must be constructed for specific location since length of device and positioning of high pressure ports are duct specific. b) Rear orifice is subject to clogging.	Installed in line. Can be used in both circular and rectangular ducts although greater calibration factor variation can be expected for rectangular case. Holes in annubar are located according to specific duct dimensions.
a) 1% accuracy from 2.7 to 30.48 m/sec. b) Resistant to chemical attack if internal purge is used. c) Bi-directional. d) Can be used for continuous monitoring applications. e) Can operate in gas streams up to 260°C.	a) Sensitive to orientation in duct. b) Two probes are necessary to cover velocity range of 1.5 to 38 m/sec.	A port must be cut into duct to accommodate device. This is the most accurate method for point velocity determinations, readily applicable to continuous monitoring situations. The probe is attached to an automatic reciprocating traversal mechanism to obtain measurements at various points. This is less expensive than employing a multiple sensor rake.
a) Very quick response to velocity changes (low thermal inertia). b) Device is very small. c) Can be used to obtain velocities near walls.	a) Calibration is complicated (done by placement in stream of same gas of known velocity). b) Very delicate device. c) Cannot be used successfully with liquids.	Port must be cut into duct to accommodate device. Best practical method for measuring turbulent fluctuations at a point. Complete commercial setups available.
a) Can be used for liquids. b) More durable than Hot-Wire device (suitable for high velocity liquid flows).	Same as a) for Hot-Wire Anenometer.	See Hot-Wire Anenometer.

TABLE A-20 (continued).

METHOD	DESCRIPTION	APPLICABLE MEDIA
Venturi Meter	An obstruction device. Acts as an obstacle placed in path of flowing fluid causing localized changes in velocity and, concurrently pressure changes. Pressure differential between inlet and minimum area (throat) section of device is measured by taps located in wall and connected to a pressure transducer (e.g., manometer). Differential pressure is then related to ideal velocity and volume flow rate. A portion of the pressure drop becomes irrecoverable because of friction and turbulent losses. Actual volume flow rate is obtained by multiplying ideal flow rate by an empirical coefficient which depends on flow Reynolds number and duct geometry as well as on characteristics of device. The effect of compressibility is handled through use of a theoretical expansion factor.	Gas or Liquid
Flow Nozzle	An obstruction device (see Venturi Meter discussion).	Gas or Liquid
Orifice Meter	An obstruction device (see Venturi Meter discussion). The effect of compressibility is handled through use of an experimentally determined expansion factor. Several possible pressure tap locations can be used (e.g., in flanges, at vena contracta, etc.).	Gas or Liquid

TABLE A-20 (continued).

ADVANTAGES	DISADVANTAGES	REMARKS
a) Most accurate of all obstruction devices (1% of total flow). b) No solids accumulation occurs. c) Pressure recovery greater than for other flow obstruction devices (i.e., less head loss). d) Suitable for continuous flow measurements. e) Can be installed in any pipe orientation as long as it is completely filled with fluid. f) Can be used for gases. g) Good resistance to abrasion.	a) More expensive than other obstruction devices. b) Requires more space than other obstruction devices. c) More difficult to install than other obstruction devices.	A major disadvantage of obstruction devices is that pressure drop varies as the square of the flow rate; thus, for use over a wide range of flow rates, pressure-measuring equipment of very wide range is required, usually resulting in poorer accuracy at the low flow rates.
a) 3-4% accuracy. b) Same as d), e), f), and g) under Venturi Meter. c) Requires less space than Venturi Meter. d) Less expensive than Venturi Meter. e) Can be installed at discharge point.	a) Lower pressure recovery than Venturi Meter. b) Relatively difficult to install properly.	Installed in line. See Venturi Meter discussion.
a) 2-3% accuracy. b) Same as d), e), and f) under Venturi Meter. c) Least expensive of all obstruction devices. d) Least space requirement of all obstruction devices (may often be installed between existing pipe flanges). e) Simpler installation than other obstruction devices.	a) Poorest pressure recovery of all obstruction devices b) Especially susceptible to inaccuracies resulting from wear and abrasion. c) Lower accuracy than other obstruction devices. d) Lower physical strength than other obstruction devices (may be damaged by pressure transients, solids).	See Venturi Meter discussion. Installed in line. Should only be used in streams of low solids content. Same location requirements as Venturi Meter and Flow Nozzle. Various types of orifices (e.g., sharp edge, square edge, etc.) are available.

TABLE A-20 (continued).

METHOD	DESCRIPTION	APPLICABLE MEDIA
Rotameter	A liquid flow meter operating on the physical principal of fluid drag. Flow enters the bottom of a tapered vertical tube causing a bob or "float" to nose upward. For a given rate of flow, the float assumes a position in tube where the drag forces are just balanced by the weight and buoyancy forces. Through careful design, effects of changing viscosity or density may be minimized. The position of the bob in the tube is taken as an indicator of volume flow rate. Meter is installed vertically.	Liquid
Turbine Meter	This meter uses the principle that the change in momentum in a flow through a set of curved vanes causes a torque to be exerted on the vanes. As fluid moves through the meter, it causes rotation of a small turbine wheel. A permanent magnet housed in the wheel hub rotates with the wheel, yielding a varying magnetic field which is detected by a reluctance pickup in the meter casing. The frequency of magnetic pulses indicates the flow rate.	Gas or Liquid
Magnetic Flow Meters	A noncontacting rate meter based on Faraday's law of induced voltage. A short section of fluid conduit is subjected to transverse magnetic flux. Fluid motion induces voltage proportional to fluid velocity, which is picked up by electrodes placed in conduit walls. For fluids which are only slightly electrically conductive (e.g., water), conduit is made of glass or other non-conducting material. Alternating magnetic field is used for amplification since output voltage is low.	Liquid
Ultrasonic Flow Meter	A noncontacting rate meter employing ultrasonic waves. Similar piezoelectric or magnetostrictive transducers are placed externally on the conduit a few inches apart. One serves as a 100-KHz energy source and the other as a pickup. As the wave travels from source to pickup, its normal velocity in stationary fluid	Liquid

TABLE A-20 (continued).

ADVANTAGES	DISADVANTAGES	REMARKS
a) 1-2% accuracy. b) Meter indication is essentially linear with flow rate. c) Pressure loss fixed at all flow rates. d) Condition of flow readily visible. e) Many corrosive fluids can be handled without complication. f) Capacity can be changed easily by changing bob and/or tube.	a) Relatively expensive b) Must be installed in vertical position. c) Bob not visible when opague fluids are used. d) Cannot be used for liquids carrying large percentages of suspended solids.	Installed in line.
a) Accuracies ± 1/2% within specific flow range. b) Good transient response.	a) Bearing maintenance required. b) Reduced accuracy at low rates. c) Liquid must be "clean" (i.e., very low solids contents.	Installed in line. Available sizes from 1/8" to 8" (line diameter).
a) 1% accuracy for flow velocities of 1-10 m/sec with increasing accuracy at higher velocities. b) Output signal can be converted to volume or mass flow rates. c) Can be used for high solids contents streams. d) No resulting head loss; totally unobstructed flow. e) Output is independent of temperature, viscosity, density, or turbulence. f) Can be used for continuous monitoring.	a) Expensive. b) Liquid must be at least slightly electrically conductive. c) Cleaning electrode assemblies may be required.	Installed in line. No location requirements. For liquids with conductivity values of 0.1 to 5 micro-Mhos a special signal converter is needed. Extensively used for slurry streams.
a) 2% accuracy. b) No site preparation. c) Can be used to measure actual mass flow rate by deter-	a) Expensive. b) Temperature sensitive.	No site preparation required.

TABLE A-20 (continued).

METHOD	DESCRIPTION	APPLICABLE MEDIA
Ultrasonic Flow Meter (cont)	will be either increased or decreased by fluid velocity, depending on the relative motions. To minimize errors, the functioning of the two transducers is reversed 10 times per second so that that phase shifts due to both addition and subtraction of velocities are employed. Relative phase shift is used to measure flow rate.	
Positive Displacement Meter	*A displacement method.* For the nutating disk type, the fluid enters the meter and strikes a disk which is eccentrically mounted. The disk wobbles about its vertical axis and the fluid moves through the meter. The volumetric flow is proportional to the number of times the disk wobbles in a given period of time. For the rotary-vane type, a fixed amount of fluid is trapped in a section of a rotating eccentric drum, the rotations of which are proportional to flow.	*Gas or* Liquid
Estimation Using Pump Characteristics and Operating Data	Estimation method. Horsepower, head, or rpm readouts for pump can be related to flow rate (i.e., capacity using equipment performance curves supplied by manufacturer.	Liquid
Estimation by Equipment Specifications and Operating Data	Estimation method. Some measurable quantity such as rpm of a screw feeder, feeder table speed of a pulverizer, etc., can be related to mass flow rate using calibration curves supplied by manufacturer.	Solid
Estimation by Tank Level Change	Estimation method. A stop watch is used to record the time for a given tank level change. An average volume flow rate can then be calculated.	Liquid
Calculation by Trajectory Method	Calculation method. By measuring the position of a point on the trajectory of the free jet downstream from the pipe exit, the exit velocity may be determined (if air resistance is neglected by the following relation: $Q = \frac{1800\ A\ X}{(Y)^{\frac{1}{2}}}\ \frac{Gal}{Min}$ (Water only.)	Liquid

TABLE A-20 (continued).

ADVANTAGES	DISADVANTAGES	REMARKS
mining liquid density through acoustical impedence technique. d) Can be used for continuous monitoring. e) No resulting head loss; totally unobstructed.		
a) 1% accuracy. b) Direct flow measurement.	a) Usually limited to clean liquid streams. b) If used for slurry applications, the solids would damage the seals around the blades.	Installed in line.
Simple; involves no flow measurement equipment.	Not accurate.	A number of readings should be taken over the time period of interest to maximize accuracy.
a) Simple; involves no flow measurement equipment. b) Commonly used method. c) Accuracy of 1-2% claimed by manufacturers.	Not accurate.	A number of readings should be taken over the time period of interest to maximize accuracy.
Simple; involves no flow measurement equipment.	a) Will provide only average value of volume flow rate over time period (not useful for transient flow rate determinations).	Applicable only when a tank discharges or receives total flow from or into a line during selected time period. Requires provision for observing tank level changes.
a) Simple; involves no flow measurement equipment. b) Can be used for full or partially filled pipes. c) Accurate for rough flow measurements (i.e., about 10-20% accuracy) of water discharges.	Pipe discharge must be horizontal.	

TABLE A-20 (continued).

METHOD	DESCRIPTION	APPLICABLE MEDIA
Estimation by Trajectory Method (Cont)	Where A = Cross-sectional area of liquid in pipe (in square feet). X = Distance between end of pipe and vertical gage measured parallel to the pipe (in feet). Y = Vertical distance from water surface at discharge end of pipe and intersection of water surface with vertical gage (in feet).	
Direct Weighing	Method consists of collecting all of discharge over a measured period of time. The discharge can then be weighed or the volume measured and the volumetric or mass flow rate determined.	Liquid or Solid
Solids Weighing Devices	The weight of a belt, hopper, etc., is monitored by measuring the total weight of equipment and material and zeroing the gage at the reading of the equipment alone. Basic techniques include: the unevenly balanced scale, the spring-balanced scale, pneumatic load cell, hydraulic load cell, and the strain gage load cell.	Solid

TABLE 20 (concluded).

ADVANTAGES	DISADVANTAGES	REMARKS
Simple and inexpensive.	a) Accuracy limited by number of observations. b) Must be able to collect all of discharge for unit period of time.	No site preparation.
a) 1-3% accuracy. b) Commonly used. c) Zero point calibration can be performed during plant shutdown. d) Can be used for continuous monitoring.	a) Expensive. b) Frequent recalibration usually necessary.	Permanent installation. Bins, hoppers, and belt feeders are usually equipped with such devices when accurate process control is required.

TECHNICAL REPORT DATA
(Please read Instructions on the reverse before completing)

1. REPORT NO. EPA-600/7-77-009	2.	3. RECIPIENT'S ACCESSION NO.
4. TITLE AND SUBTITLE Procedures Manual for Environmental Assessment of Fluidized-Bed Combustion Processes		5. REPORT DATE January 1977
		6. PERFORMING ORGANIZATION CODE
7. AUTHOR(S) H. I. Abelson and W. A. Löwenbach		8. PERFORMING ORGANIZATION REPORT NO.
9. PERFORMING ORGANIZATION NAME AND ADDRESS The Mitre Corporation Metrek Division McLean, Virginia 22101		10. PROGRAM ELEMENT NO. EHB536
		11. CONTRACT/GRANT NO. 68-02-1859, Task 7
12. SPONSORING AGENCY NAME AND ADDRESS EPA, Office of Research and Development Industrial Environmental Research Laboratory Research Triangle Park, NC 27711		13. TYPE OF REPORT AND PERIOD COVERED Task Final; 9/75-11/76
		14. SPONSORING AGENCY CODE EPA-ORD

15. SUPPLEMENTARY NOTES IERL-RTP Project Officer for this document is W. B. Kuykendal, 919/549-8411 Ext 2557, Mail Drop 62.

16. ABSTRACT The document describes recommended procedures for sampling and analysis, for eventual use by source testing contractors, in support of the environmental assessment of fluidized-bed combustion (FBC) technology. The phased strategy involves two distinct levels of sampling and analysis. The document addresses proposed generic units and corresponding case study units for the following process configurations: (I) Atmospheric FBC of coal; (II) Pressurized, combined-cycle FBC of coal; (III) Pressurized, combined-cycle FBC of coal (adiabatic combustor); and (IV) Chemically active fluid bed (CAFB) gasification of residual oil. It includes a compendium of method options, describing the sampling and analytical state-of-the-art.

17. KEY WORDS AND DOCUMENT ANALYSIS

a. DESCRIPTORS	b. IDENTIFIERS/OPEN ENDED TERMS	c. COSATI Field/Group
Air Pollution	Air Pollution Control	13B
Fluidized Bed Processing	Stationary Sources	13H, 07A
Combustion	Environmental Assessment	21B
Sampling		14B
Analyzing	Source Testing	
Coal		21D
Residual Oils		

18. DISTRIBUTION STATEMENT Unlimited	19. SECURITY CLASS *(This Report)* Unclassified	21. NO. OF PAGES 455
	20. SECURITY CLASS *(This page)* Unclassified	22. PRICE

EPA Form 2220-1 (9-73)