EPA

United States Environmental Protection Agency

Office of Reseach and Development

Industrial Environmental Research Laboratory
Research Triangle Park, North Carolina 27711

EPA-600/7-77-022

March 1977

FILTER CAKE REDEPOSITION IN A PULSE-JET FILTER

Interagency
Energy-Environment
Research and Development
Program Report

RESEARCH REPORTING SERIES

Research reports of the Office of Research and Development, U.S. Environmental Protection Agency, have been grouped into seven series. These seven broad categories were established to facilitate further development and application of environmental technology. Elimination of traditional grouping was consciously planned to foster technology transfer and a maximum interface in related fields. The seven series are:

1. Environmental Health Effects Research
2. Environmental Protection Technology
3. Ecological Research
4. Environmental Monitoring
5. Socioeconomic Environmental Studies
6. Scientific and Technical Assessment Reports (STAR)
7. Interagency Energy-Environment Research and Development

This report has been assigned to the INTERAGENCY ENERGY-ENVIRONMENT RESEARCH AND DEVELOPMENT series. Reports in this series result from the effort funded under the 17-agency Federal Energy/Environment Research and Development Program. These studies relate to EPA's mission to protect the public health and welfare from adverse effects of pollutants associated with energy systems. The goal of the Program is to assure the rapid development of domestic energy supplies in an environmentally--compatible manner by providing the necessary environmental data and control technology. Investigations include analyses of the transport of energy-related pollutants and their health and ecological effects; assessments of, and development of, control technologies for energy systems; and integrated assessments of a wide range of energy-related environmental issues.

REVIEW NOTICE

This report has been reviewed by the participating Federal Agencies, and approved for publication. Approval does not signify that the contents necessarily reflect the views and policies of the Government, nor does mention of trade names or commercial products constitute endorsement or recommendation for use.

This document is available to the public through the National Technical Information Service, Springfield, Virginia 22161.

EPA-600/7-77-022
March 1977

FILTER CAKE REDEPOSITION IN A PULSE-JET FILTER

by

David Leith and Melvin W. First

Harvard School of Public Health
665 Huntington Avenue
Boston, Massachusetts 02115

Grant No. R801399
Program Element No. EHE624

EPA Project Officer: James H. Turner

Industrial Environmental Research Laboratory
Office of Energy, Minerals, and Industry
Research Triangle Park, NC 27711

Prepared for

U.S. ENVIRONMENTAL PROTECTION AGENCY
Office of Research and Development
Washington, DC 20460

ABSTRACT

To the extent that collected dust redeposits rather than falls to the hopper, pulse-jet filter cleaning is ineffective. dust tracer techniques were used to measure the amount of redeposition in a pilot scale pulse-jet filter. A mathematical model based on experimental results was developed to describe dust transfer from bag to bag, redeposition on the pulsed bag itself, and migration to the dust hopper.

At conventional filtration velocities, most of the dust freed from the bag by a cleaning pulse was found to redeposit rather than fall to the dust hopper. At high filtration velocities, redeposition became more pronounced. At a sufficiently high filtration velocity, redeposition may become total. As a result, no dust will fall to the hopper, the dust cake will continue to increase in thickness, and pressure drop will increase without limit as long as constant filtration velocity can be maintained.

At a filtration velocity of 5 cm/s, 38% of the dust freed from a bag by a cleaning pulse was found to redeposit on the pulsed bag, 25% redeposited upon each neighboring bag, and 12% fell to the dust hopper. At a filtration velocity of 15 cm/s, 83% of freed dust redeposited on the pulsed bag, 11% on each neighboring bag, and only 1% fell to the hopper.

As a result of this work, it is clear that reasonable pressure drop can be achieved at high velocity only when there is a reduction in filter cake redeposition. Although filter performance depends upon more parameters than were examined here, the trend of increasing redeposition with increasing velocity may persist regardless of the dust, fabric, or filter configuration used. The internal components of a pulse-jet fabric filter as well as the characteristics of the cleaning pulse can be adjusted or arranged to minimize redeposition. Work on these and other ideas is proceeding.

This report was submitted in fulfillment of Grant No. R801399 by the President and Fellows of Harvard University under the sponsorship of the U.S. Environmental Protection Agency. This report covers the period from February 1, 1976 through July 31, 1976.

CONTENTS

Abstract ii

Figures and Tables iv

List of Symbols v

Acknowledgement vi

1. Introduction 1

2. Conclusions 2

3. Recommendations 3

4. Experimental Procedures 4

Background 4

Equipment 7

Procedure 12

5. Mathematical Modeling Procedures 13

Form of the Model 13

6. Results and Discussion 18

7. Discussion 23

8. Current Program 25

References 27

Appendix 28

References for Appendix 32

FIGURES AND TABLES

Figure		Page
1	Pressure drop vs. filtration velocity from Bakke(1) for 15 oz wool felt, talc dust at 23 g/m^3. . . .	5
2	Pressure drop vs. filtration velocity, from present experiments.	6
3	Schematic representation of fabric filter equipment.	8
4	Cumulative size distributions by count, untagged and tagged fly ash.	9
5	Photograph of turntable-pneumatic dust feeder, showing dust storage can atop vibrating trough feeder, turntable with scraper blade, aspirator with pressure gauge and regulator, and gas inlet duct. .	10
6	Location of tagged dust feeder ring.	11
7	Schematic of pathways followed by freed dust after pulsation of (a) bag 1, (b) bag 2, (c) bag 3. .	15
8	Tag concentration vs. number of pulses following application of tagged dust. Velocity, 5 cm/s. .	19
9	Tag concentration vs. number of pulses following application of tagged dust. Velocity, 10 cm/s.	20
10	Tag concentration vs. number of pulses following application of tagged dust. Velocity, 15 cm/s.	21

Table		Page
1	Transfer Parameters.	17

LIST OF SYMBOLS

C_1	-- matrix defined by Equation 5
C_2	-- matrix defined by Equation 9
C_3	-- matrix defined by Equation 10
D	-- vector defined by Equation A4
h(t)	-- tagged dust falling to the hopper between time t-1 and time t
K_1	-- fraction of dust freed by a cleaning pulse which redeposits on the pulsed bag itself
K_2	-- fraction of dust freed by a cleaning pulse which redeposits on each of two neighboring bags
K_3	-- fraction of dust freed by a cleaning pulse which falls to the hopper
$m_i(t)$	-- mass of tagged dust in bag i at time t
M(t)	-- matrix defining amount of dust on each bag at time t
p	-- parameter
p*	-- estimated value of a parameter
SS	-- residual error
t	-- time
v	-- variable
v_o	-- observed value of a variable
v*	-- estimated value of a variable
η	-- random multiplicative factor, see Equation A2

ACKNOWLEDGEMENT

Buffalo Forge Co., Buffalo, New York kindly supplied the venturis, bag support cages, bags, pulse valves, and timer used in this project. Their assistance is gratefully acknowledged.

SECTION 1

INTRODUCTION

Fabric filters are the most efficient industrial dust collectors for fine particle emissions and yet their operation is poorly understood. Knowledge of the means by which particles pass through, collect in, and are cleaned from a fabric filter is essential if high velocity filtration technology is to proceed rationally and if successful models for predicting filter performance at high as well as conventional velocity are to be developed.

Pulse-jet fabric filters have been used frequently in recent years, in part because they operate at higher superficial filtration velocities (air to cloth ratios) than do filters cleaned by other methods. Because the required size and first cost of filters decrease as velocity increases, it is tempting to increase filtration velocity still further. The objective is to increase filtration velocity while keeping the pressure drop reasonably low, maintaining collection efficiency, and sustaining bag life. In this report, the relationship between high filtration velocity and filter cake redeposition is discussed. Redeposition, which is aggravated at high velocities, must be minimized if reasonable pressure drop is to be maintained.

SECTION 2

CONCLUSIONS

This study, utilizing a pulse-jet fabric filter containing three 11.4 cm diameter by 244 cm long polyester needled felt bags, has determined the extent and effect of filter cake redeposition. At conventional filtration velocities such as 5 cm/s, over 80 per cent of the dust freed by a cleaning pulse redeposited on the pulsed bag itself or on a neighboring bag. At higher filtration velocities, such as 15 cm/s, redeposition became more of a problem as 99 per cent of the freed dust redeposited.

At conventional velocities, most of the redeposition occured upon bags near the pulsed bag. At high velocity, most of the redeposition occured on the pulsed bag itself.

At high filtration velocities, a small rise in velocity has been found by us and by others to cause an increase in pressure drop which is much larger than expected. As velocity is increased beyond this point, pressure drop appears to increase without limit. Such increases in pressure drop at high velocity may be caused by increased redeposition of the filter cake. As velocity increases, gas flowing toward the bags drags agglomerates freed by the cleaning pulses toward the bags and does not allow them to fall to the dust collection hopper. At a sufficiently high velocity, no dust may be able to escape from the bag surface and redeposition may become total. At this point, pressure drop increases without limit as the filter cake becomes thicker and thicker.

SECTION 3

RECOMMENDATIONS

Filter cake redeposition must be overcome for high velocity fabric filtration to become feasible and a continuing effort should be made in this direction.

The tests reported here reflect filter construction and cleaning procedures typical of those currently used in industry. Innovative modifications are needed to minimize the filter cake redeposition problem.

A gas inlet near the top of the filter housing (rather than from below) is thought to be helpful for sweeping the dust cleaned from the bags toward the hopper rather than holding it the filter bag section where redeposition occurs. Increased spacing between the bags should help prevent redeposition on the pulsed bag. Shorter bags may reduce redeposition although the industry trend is toward larger bags. Modification of the magnitude and form of the cleaning pulses may minimize redeposition without using additional compressed air. Finally, modifications to the interior of the filter such as downward directed compressed air jets, baffles between the bags, or other devices may help alleviate the redeposition problem although they would make the filter more complex to fabricate or operate.

The effect of these modifications must be considered in terms of their potential to minimize redeposition and pressure drop as well as their effects on collection efficiency, bag life, operating cost, filter size, and first cost.

A solution to the redeposition problem will provide dividends both by reducing the pressure drop across pulse-jet filters operated at conventional filtration velocities and by making more feasible the application of low cost, high velocity pulse-jet filters in the future. These matters should form the basis for a continuing research effort.

SECTION 4

EXPERIMENTAL PROCEDURES

BACKGROUND

Evidence suggests that pressure drop increases ever more rapidly with filtration velocity until a limiting value is reached, beyond which velocity cannot be increased regardless of the pressure drop employed. Figure 1, a plot of pressure drop against filtration velocity from Bakke(1) illustrates this point as for all operating conditions pressure drop increased dramatically with increased filtration velocity until a limiting value was reached asymptotically. Figure 2 is a plot of pressure drop against filtration velocity taken from data obtained in the present study. For these data, the amount of dust fed between pulses was kept constant by pulsing the filters proportionately more often as the velocity was increased. Again, pressure drop was found to increase rapidly. Before pulse-jet filters can be adapted to operation at higher filtration velocities, it is necessary to identify and overcome those factors which cause excessive pressure drop.

Dennis and Wilder(2) have stated that during cleaning, the filter cake separates from a pulse-jet-cleaned felt as agglomerates of about 100 μm diameter. Ideally, the filter cake will fall into the dust collection hopper en masse. Actually, some of the cake may redeposit upon the same bag from which it came, or upon neighboring bags. To the extent that filter cake redeposition takes place, pulse-jet cleaning is ineffective.

Cinephotographic observations of the dust cloud produced during pulse-jet cleaning indicate that 100 μm agglomerates are blown from the fabric surface with an initial velocity of about 200 cm/s, which is sufficient to project them from 4 to 8 cm in a quiescent gas(3). Although the gas within the filter housing is not quiescent, the distance the agglomerates might be projected is comparable to the distance between bags hung side by side. A 100 μm particle has a terminal settling velocity of about 50 cm/s and so would take several seconds to fall under gravity to the dust collection hopper from a point of removal at the top or middle of a bag 244 cm tall. During this time, it seems reasonable that the agglomerate could redeposit.

There is reason to suspect that redeposition becomes greater

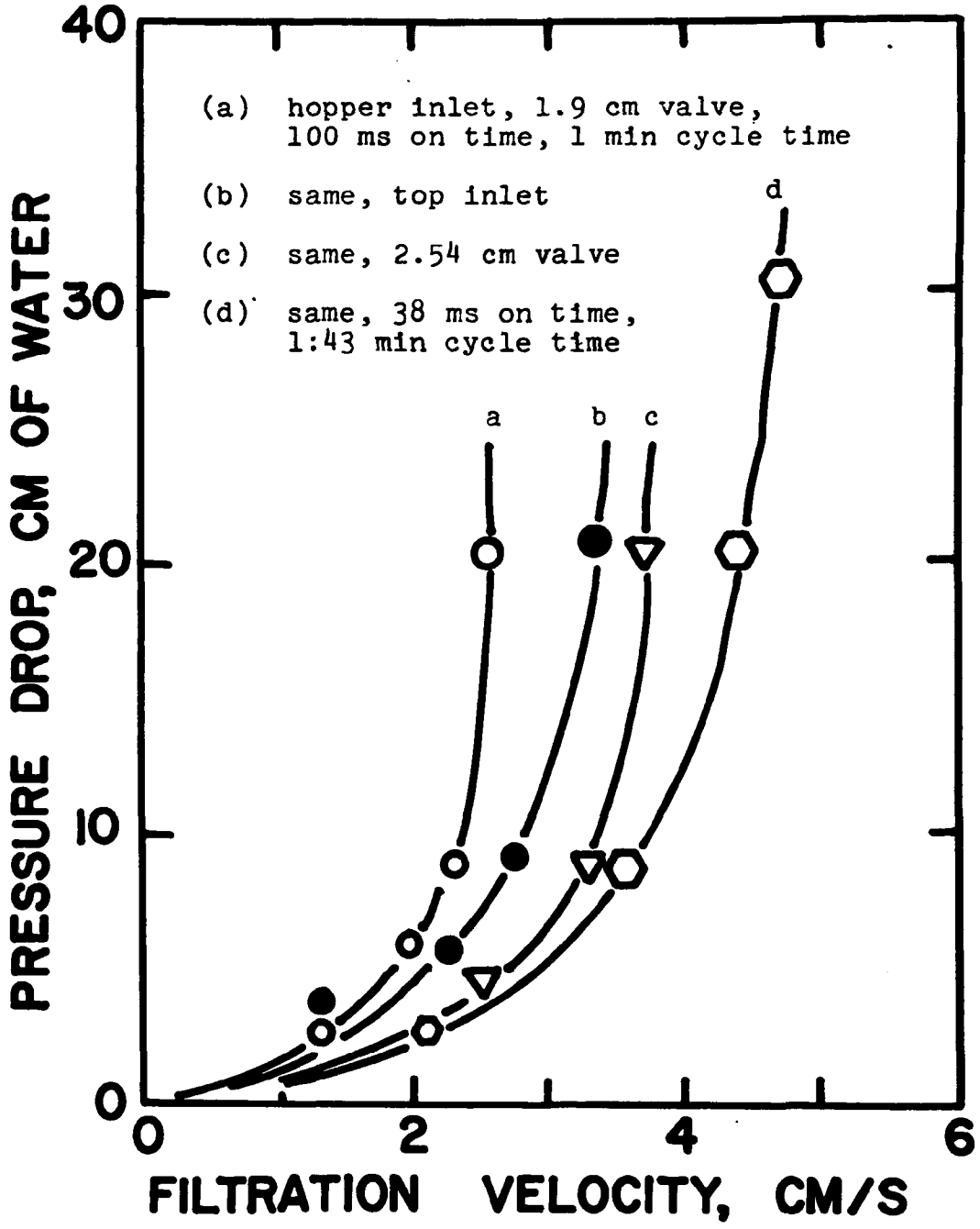

Figure 1. Pressure drop vs. filtration velocity from Bakke[1] for 15 oz wool felt, talc dust at 23 g/m^3.

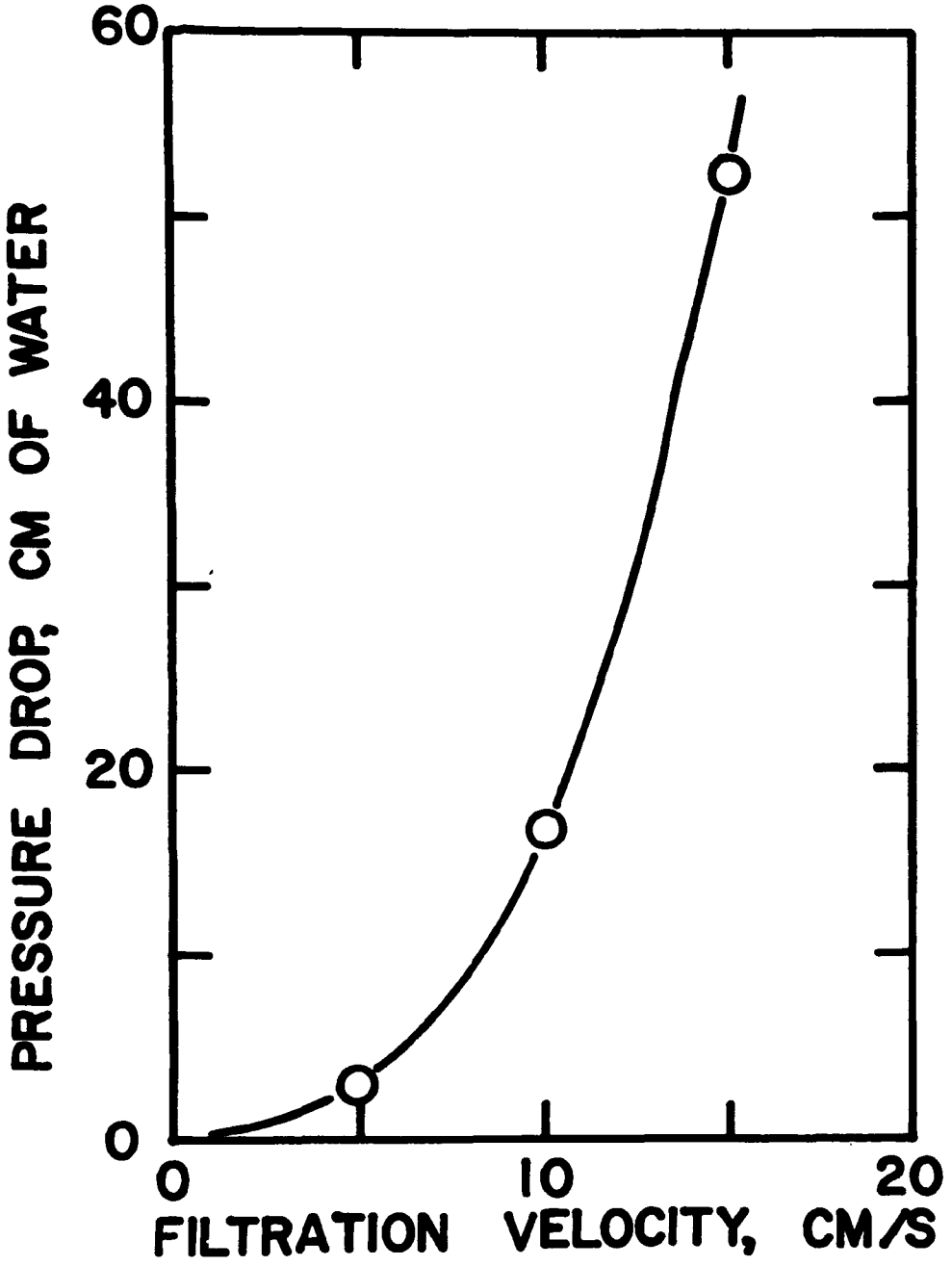

Figure 2. Pressure drop vs. filtration velocity for present experiments.

as filtration velocity increases. Higher gas velocity toward a bag should help drag dust cake agglomerates back toward the bag and not allow them to fall unhindered into the hopper. Some fabric filters have gas inlets located near the bottom of the filter housing to allow coarse particles to fall directly into the dust hopper, and in these, the direction of bulk gas flow is upward. Unless the filter bags are spaced further apart as filtration velocity increases, the upward gas velocity through the housing increases and tends to hold up the cake agglomerates for redeposition rather than allowing them to fall freely to the dust hopper.

When redeposition occurs, the thickness of the dust deposit on the filter bags increases and pressure drop rises. If redeposition is extensive, pressure drop increases substantially. As velocity increases, a point is reached where the filter cake can no longer fall to the hopper. When this occurs, pressure drop does not stabilize, but continues to increase without limit.

The present work was undertaken to determine the extent to which filter cake redeposition occurs and its dependence on superficial filtration velocity. The ultimate goal is to make higher velocity fabric filtration feasible by developing methods for minimizing redeposition.

EQUIPMENT

A three bag pulse-jet fabric filter was designed and fabricated for use in this study. The filter contained three needled felt polyester bags of industrial size arranged in a row; each bag was 11.4 cm in diameter and 244 cm tall. The bags were supplied by Summit Filter Co., Summit, N.J., had a permiability of 15 cm/s (30 cfm/ft^2) at 1 cm (1/2 inch) of water pressure drop, and had no surface treatment. The ratio of bag cross sectional area to housing cross sectional area was about 1 to 5, a somewhat smaller ratio than is found in industrial units where bags are usually packed as closely as possible. The gas entered through a 20 cm diameter duct with centerline 25 cm below the top of the housing. A pyrimidal hopper, with walls inclined 40° from the vertical, funneled collected dust into a dust collection vial. The front of the filter housing was 0.64 cm thick safety glass covered with 0.95 cm thick clear acrylic plastic, to permit observation of the filtration and cleaning processes. A drawing of the apparatus is given in Figure 3. For all experiments, pulse pressure was fixed at 7 atmospheres (100 psig), pulse frequency was one pulse per bag per minute, with pulse valve electrical on time of 75 milliseconds.

Fly ash, collected from a coal burning utility boiler by electrostatic precipitation, was used as a test dust for all experiments; its size distribution is shown in Figure 4. Figure

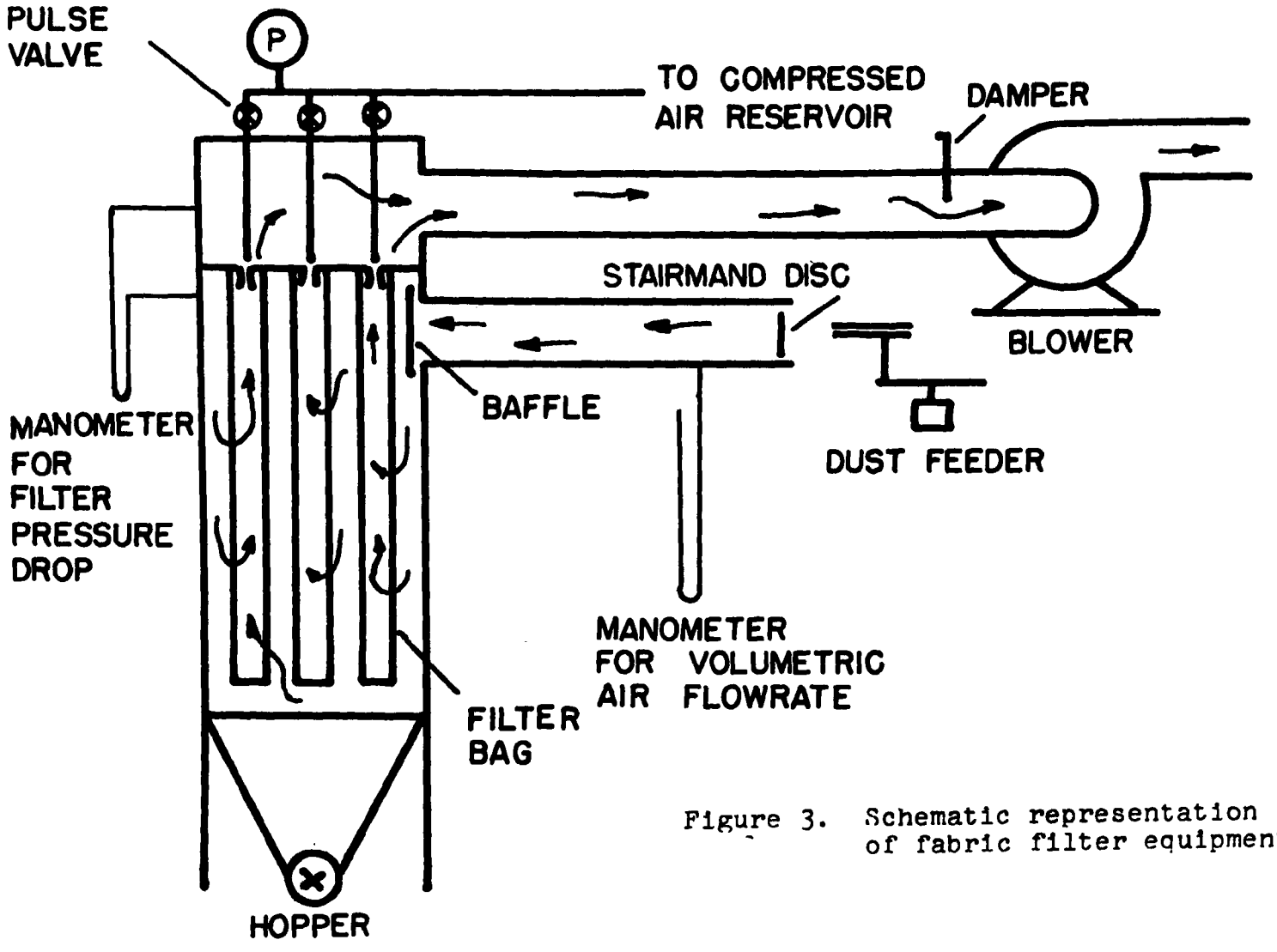

Figure 3. Schematic representation of fabric filter equipment.

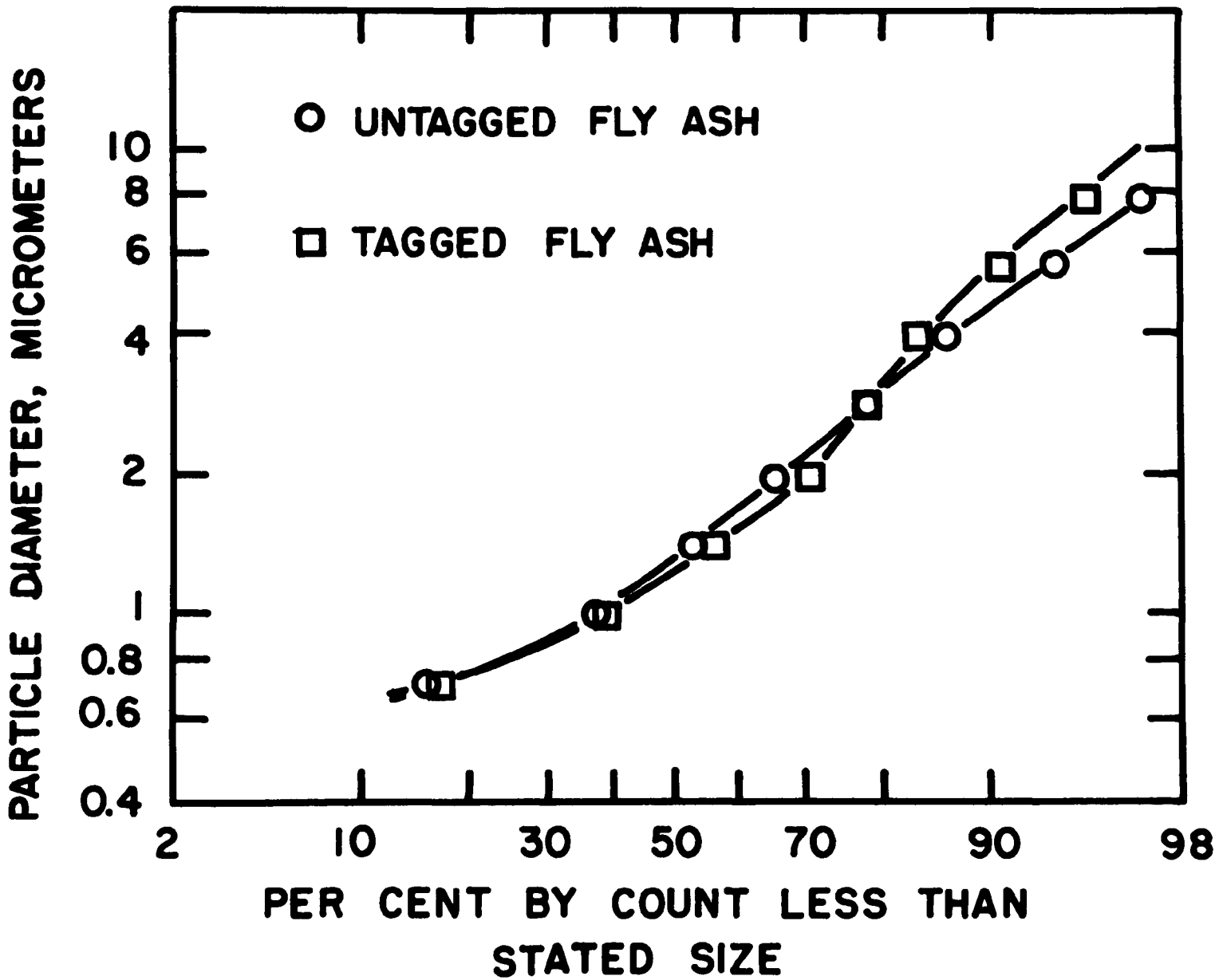

Figure 4. Cumulative size distributions by count, untagged and tagged fly ash.

5 is a photograph which shows the dust feeder and its relationship to the gas inlet duct. The aerosol passed a Stairmand disc(6) to mix the particles thoroughly with the gas stream, past an inlet baffle, and into the fabric filter. The pressure drop across the Stairmand disc was monitored and used to measure the volumetric flow rate of gas. From the filter, cleaned gas passed a flow regulator, through a radial blade fan, acoustic muffler, and into a waste air system.

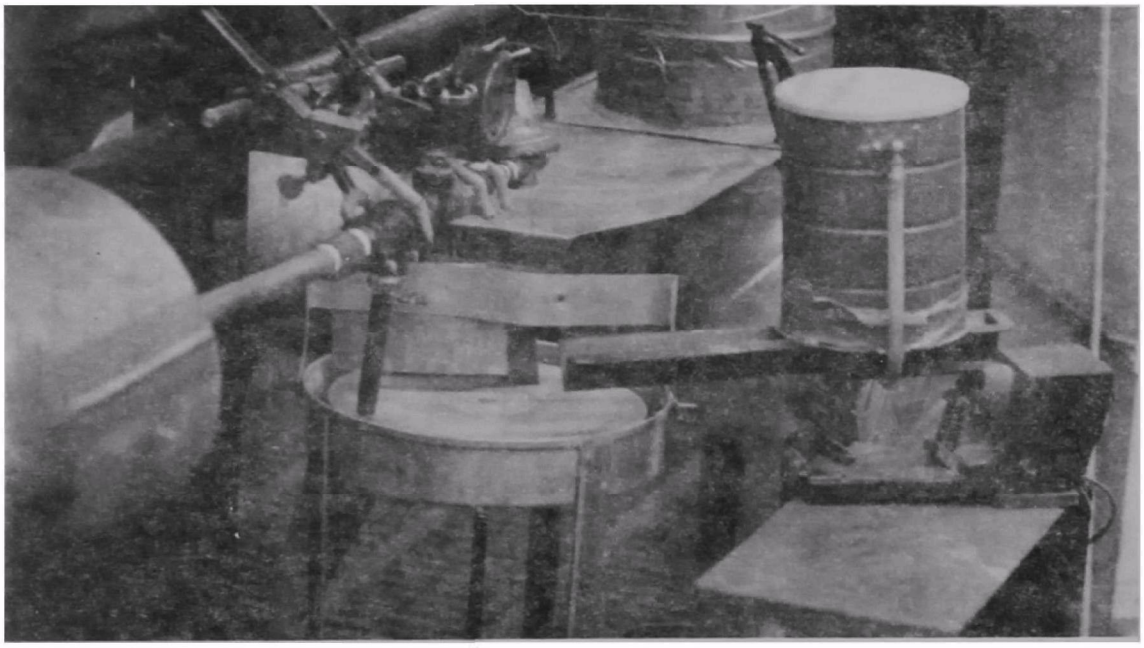

Figure 5. Photograph of turntable-pneumatic dust feeder, showing dust storage can atop vibrating trough feeder, turntable with scraper blade, aspirator with pressure gauge and regulator, and gas inlet duct.

The experimental method to be described required a chemically tagged dust as well as untagged dust. Fly ash was tagged by dissolving uranine in water, adding fly ash, and evaporating the water to produce a dust tagged 0.5% by weight with the dye. The size distribution of the tagged dust is also shown in Figure 4.

Tagged dust was aerosolized by an NBS dust feeder(5) and fed to a 0.64 cm OD tube formed into a closed ring, which passed around the center bag 60 cm from its top as shown in Figure 6. The ring had perforations at interior, radial positions to allow the tagged fly ash to flow toward that band on the center bag which was within the ring. The NBS dust feeder could be turned

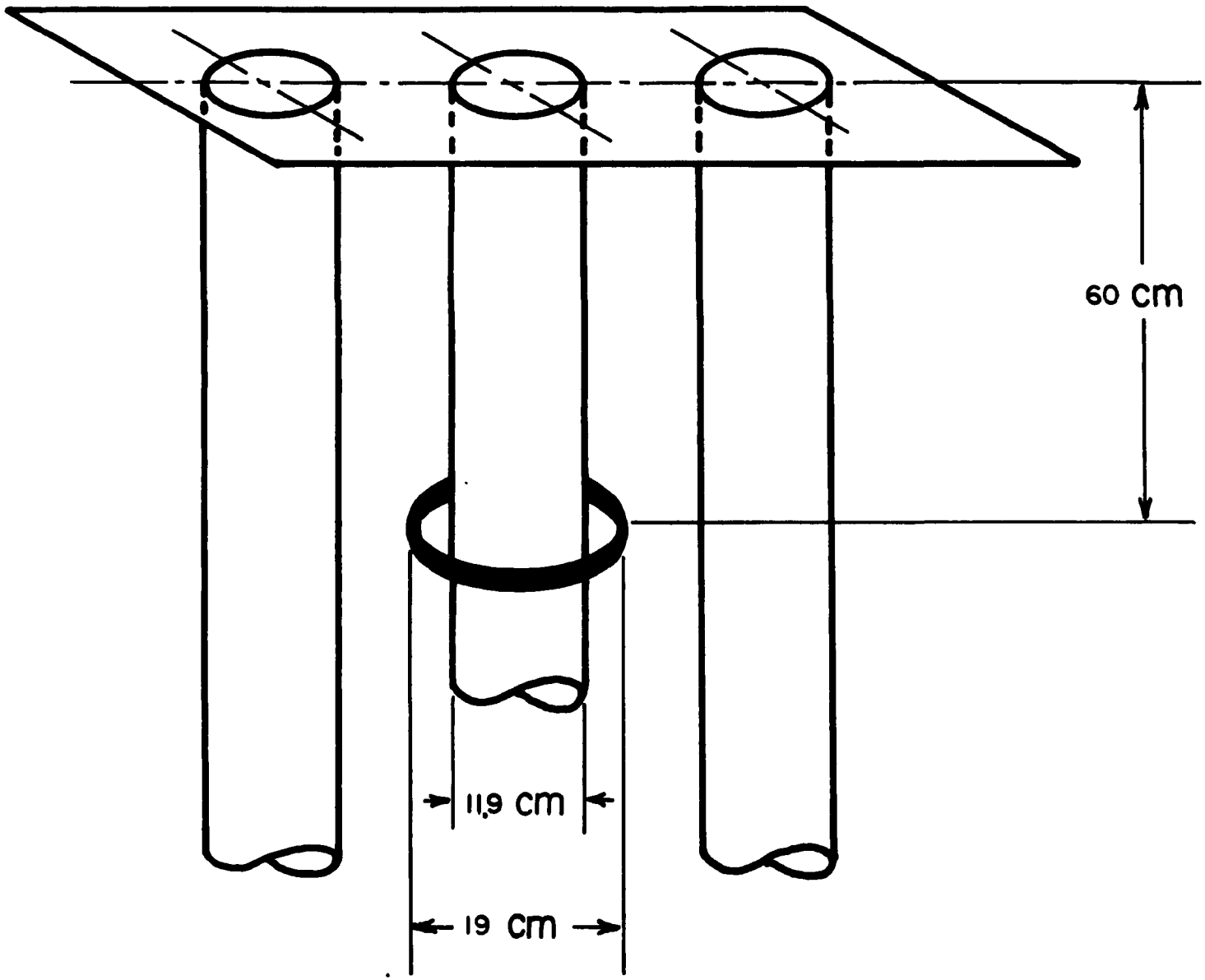

Figure 6. Location of tagged dust feeder ring.

on and off independently of the pneumatic aspirator which fed untagged fly ash to all three bags.

PROCEDURE

Experiments were performed at superficial filtration velocities of 5, 10, and 15 cm/s through the filter bags. For each experiment, the system was brought to a pressure drop equilibrium while operating at a fixed filtration velocity and while feeding untagged fly ash to the inlet air stream at a fixed rate.

The center bag was conditioned with uranine tagged fly ash by feeding this dust through the ring for a one minute interval between pulses of the center bag. Meanwhile, and throughout the rest of each experiment, untagged fly ash was fed into the inlet gas stream for collection on all three bags.

Dust freed from a bag by a cleaning pulse is representative of the dust on the bag at that time. Freed dust falling into the hopper was collected in a plastic vial which was replaced following each cleaning pulse, and labeled to identify the time it was collected and the bag from which the dust in it came. In this way, samples of the dust on each of the three bags were obtained from the time the tagged dust was fed.

The filter cake at a particular site on a bag may be thought of as composed of "primary" particles collected at that site by the filtration of dirty gas passing through the bag and "secondary", filter cake particles, previously deposited at that site or elsewhere. The primary and secondary particles make up the filter cake which is dislodged during the next cleaning pulse and it can, in turn, fall to the hopper, migrate to an adjacent bag, or redeposit at the same or a different site on the same bag.

To the extent that uranine tagged "secondary" fly ash particles are replaced by untagged "primary" particles, the filter is "washed clean". By monitoring the uranine concentration in the dust which falls to the hopper following each pulse, the degree to which fly ash migrates to adjacent bags and to the hopper can be determined using an appropriate mathematical model. The dust freed from a well conditioned fabric during cleaning is thought to have little interaction with the residual dust locked within the fabric structure.(2)

Dust samples collected from the hopper were analyzed for uranine by mixing with 15 ml of water, centrifuging to remove suspended fly ash, and measuring fluorescence with a Photovolt Multiplier Fluorescence Unit (Model 54). With care, uranine concentrations as low as 10^{-10} g/ml of water can be measured using this technique(7).

SECTION 5

MATHEMATICAL MODELING PROCEDURES(10)

FORM OF THE MODEL

A mathematical model was developed to relate to uranine concentration in the collected dust to fly ash migration between bags, to redeposition on the pulsed bag itself, and to migration to the dust hopper from where it is removed from the system. The assumption was made that a cleaning pulse blows all the dust deposit from the bag into the air within the filter housing.

The fraction of dust freed from the pulsed bag which redeposits upon the pulsed bag itself was assumed constant from bag to bag and was called K_1. The fraction of freed dust which migrates to and redeposits upon each neighboring bag was assumed constant and called K_2, and the fraction falling to the hopper was called K_3. From the housing air, most dust will redeposit on the pulsed bag itself, migrate to and redeposit upon a neighboring bag, or fall to the dust hopper and be removed from the system. However, some of the dust in the housing air penetrates through the filter cloth and leaves in the cleaned air stream, and some could deposit upon the chamber walls. The fraction of freed dust which penetrates through the filter was called K_4, and the fraction which deposits upon the chamber walls was called K_5.

Because all freed dust must redeposit, fall to the hopper, penetrate through the filter, or deposit on the chamber walls, the sum of the fractions of total freed dust which follow each path must equal unity.

$$K_1 + 2K_2 + K_3 + K_4 + K_5 = 1 \qquad (1)$$

The factor 2 appears before K_2 because dust can redeposit upon two neighboring bags in the three bag system.

Little dust penetrates in a normal fabric filter; efficiency is close to 100%. The fraction of freed dust which penetrates the filter, K_4, can be assumed to be zero without introducing a substantial error. Observation of the interior walls of the filter housing through its transparent front indicated that little dust was sticking to the smooth sheet metal walls. For the purpose of analysis, the fraction of freed dust which deposited on the housing walls, K_5, was also assumed to be zero. Rearrangement of

Equation 1, after deletion of factors K_4 and K_5, yields an expression for K_3 (the fraction of freed dust which falls to the hopper) as a function of K_1 and K_2 (the fractions which redeposit on the pulsed and neighboring bags).

$$K_3 = 1 - K_1 - 2K_2 \tag{2}$$

This process is shown schematically in Figure 7.

In the mathematical model, time zero was taken as the instant at which the tagged dust feed to a section of the central bag was discontinued. After the first pulse:

$$m_1(1) = K_1\ m_1(0) \tag{3a}$$

$$m_2(1) = m_2(0) + K_2\ m_1(0) \tag{3b}$$

$$m_3(1) = m_3(0) + K_2\ m_1(0) \tag{3c}$$

Here, $m_i(t)$ is the mass of tagged dust on bag i at time t, and the interval between pulses is arbitrarily set at 1 unit. Bag 1 is the center bag, to which tagged fly ash was applied. Bags 2 and 3 are the adjacent bags to the left and right of the center bag. In matrix form,

$$M(1) = C_1\ M(0) \tag{4}$$

where

$$C_1 = \begin{bmatrix} K_1 & 0 & 0 \\ K_2 & 1 & 0 \\ K_2 & 0 & 1 \end{bmatrix} \tag{5}$$

$$M(t) = \begin{bmatrix} m_1(t) \\ m_2(t) \\ m_3(t) \end{bmatrix} \tag{6}$$

Similar equations express the transfer of mass after pulses in bags 2 and 3.

$$M(2) = C_2\ M(1) \tag{7}$$

$$M(3) = C_3\ M(2) \tag{8}$$

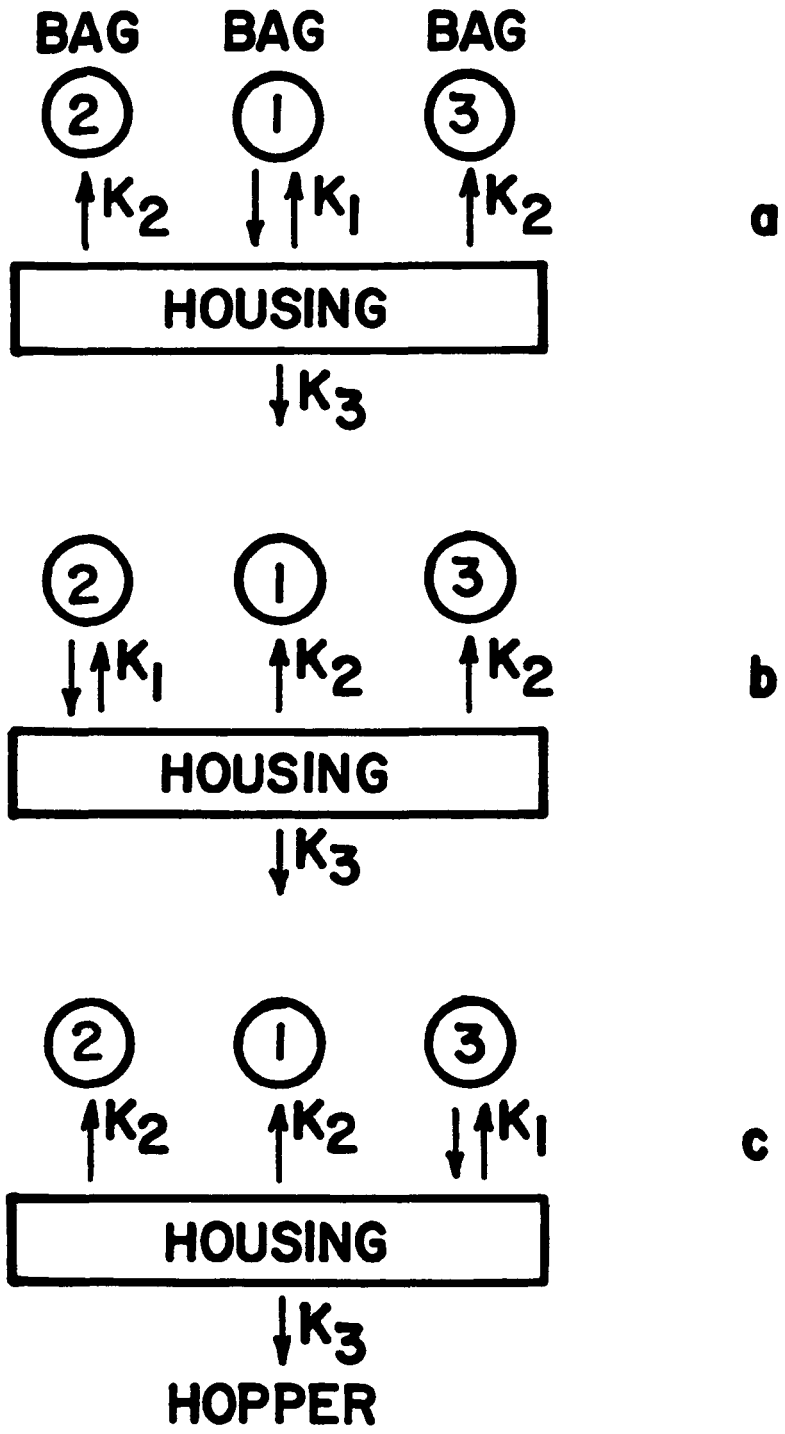

Figure 7. Schematic of pathways followed by freed dust after pulsation of (a) bag 1, (b) bag 2, (c) bag 3.

where

$$C_2 = \begin{bmatrix} 1 & K_2 & 0 \\ 0 & K_1 & 0 \\ 0 & K_2 & 1 \end{bmatrix} \tag{9}$$

$$C_3 = \begin{bmatrix} 1 & 0 & K_2 \\ 0 & 1 & K_2 \\ 0 & 0 & K_1 \end{bmatrix} \tag{10}$$

The tagged fly ash collected in the hopper after time t is h(t). For the first three pulses the appropriate values of h(t) are:

$$h(1) = K_3\ m_1(0) \tag{11}$$

$$h(2) = K_3\ m_2(1) \tag{12}$$

$$h(3) = K_3\ m_3(2) \tag{13}$$

After the third bag was cleaned, the cycle of pulses was repeated without addition of more uranine so that:

$$M(4) = C_1\ M(3) \tag{14}$$

$$M(5) = C_2\ M(4) \tag{15}$$

$$M(6) = C_3\ M(5) \tag{16}$$

$$M(7) = C_1\ M(6) \tag{17}$$

$$\ldots ,$$

and

$$h(4) = K_3\ m_1(3) \tag{14}$$

$$h(5) = K_3\ m_2(4) \tag{15}$$

$$h(6) = K_3\ m_3(5) \tag{16}$$

$$h(7) = K_3\ m_1(6)$$

$$\ldots ,$$

The data consisted of the time series h(1), h(2), ... , to which it was necessary to fit values of K_1, K_2, and a mass scaling parameter, $m_1(0)$. This was done independently for filtration velocities of 5, 10, and 15 cm/s so that the effect of velocity on the

parameters K_1, K_2, and K_3 could be observed.

The Gauss-Newton procedure was used for fitting the parameters. It is a least squares method for non-linear models, described in the Appendix. Logarithms of the data were taken before fitting. A computer program was written in FORTRAN which calculated best fit values for the transfer parameters K_1 and K_2. Table 1 lists the values of these parameters.

TABLE 1. TRANSFER PARAMETERS*

Filtration Velocity, cm/s	K_1	K_2	K_3
5	0.38±0.16	0.25±0.09	0.12±0.21
10	0.75±0.03	0.07±0.02	0.11±0.04
15	0.83±0.03	0.08±0.02	0.01±0.04

K_1 = Fraction of dust freed by a cleaning pulse which redeposits on the pulsed bag itself.

K_2 = Fraction of dust freed by a cleaning pulse which redeposits on each of two neighboring bags.

K_3 = Fraction of dust freed by a cleaning pulse which falls to the hopper ($K_3 = 1 - K_1 - 2K_2$).

* Listed uncertainties are one standard error of the estimate.

SECTION 6

RESULTS AND DISCUSSION

Figure 8 is a plot of the uranine tag concentration in the fly ash falling to the hopper against pulses since the application of tagged dust at a filtration velocity of 5 cm/s. Figures 9 and 10 are similar plots for filtration velocities of 10 and 15 cm/s. The solid lines in all three plots are the mathematical model's predictions using the transfer parameters listed in Table 1.

Figure 8, the concentration vs. pulses plot for filtration velocity of 5 cm/s, shows that the uranine tagged dust concentration on the bags decreases rapidly after the tagged dust feed is discontinued. Even at this moderate filtration velocity, however, the data in Table 1 show that redeposition is substantial. Transfer parameter K_1, the fraction of dust freed from the pulsed bag which redeposits on the pulsed bag itself, was found to be 0.38. The fraction of freed dust which redeposits on each of the two neighboring bags, K_2, was found to be 0.25 or a total of 0.50 for the two neighboring bags together. Adding the fraction of the freed dust which redeposited on the pulsed bag itself to the fraction which redeposited on each of the two other bags gives a total fractional redeposition of 0.88. Even at this modest filtration velocity, the majority of the dust freed from the bag by a cleaning pulse was found to redeposit somewhere within the filter system. At the 5 cm/s velocity, the fraction of dust freed from the bags which fell to the hopper, K_3, was found by difference to be 0.12.

At a filtration velocity of 10 cm/s, tagged dust reaches the dust hopper from the filter bags more slowly, as can be seen in Figure 9, the plot of tag concentration vs. pulses after tagged dust feed has ceased. Table 1 shows significant differences in the values of transfer parameters from those found at 5 cm/s. At 10 cm/s, the fractional redeposition on the pulsed bag itself, K_1, was 0.75, a substantial increase, whereas fractional redeposition on each of the two neighboring bags, K_2, decreased to 0.07. The fraction of freed dust which fell to the dust hopper with each pulse, K_3, decreased slightly, to 0.11.

At the 15 cm/s filtration velocity, established trends continued. The fraction of freed dust which redeposited on the pulsed bag, K_1, was found to be 0.83, and fractional redeposition on each of the neighboring bags, K_2, was 0.08. The total fractional redeposition at this high filtration velocity was found to be 0.99,

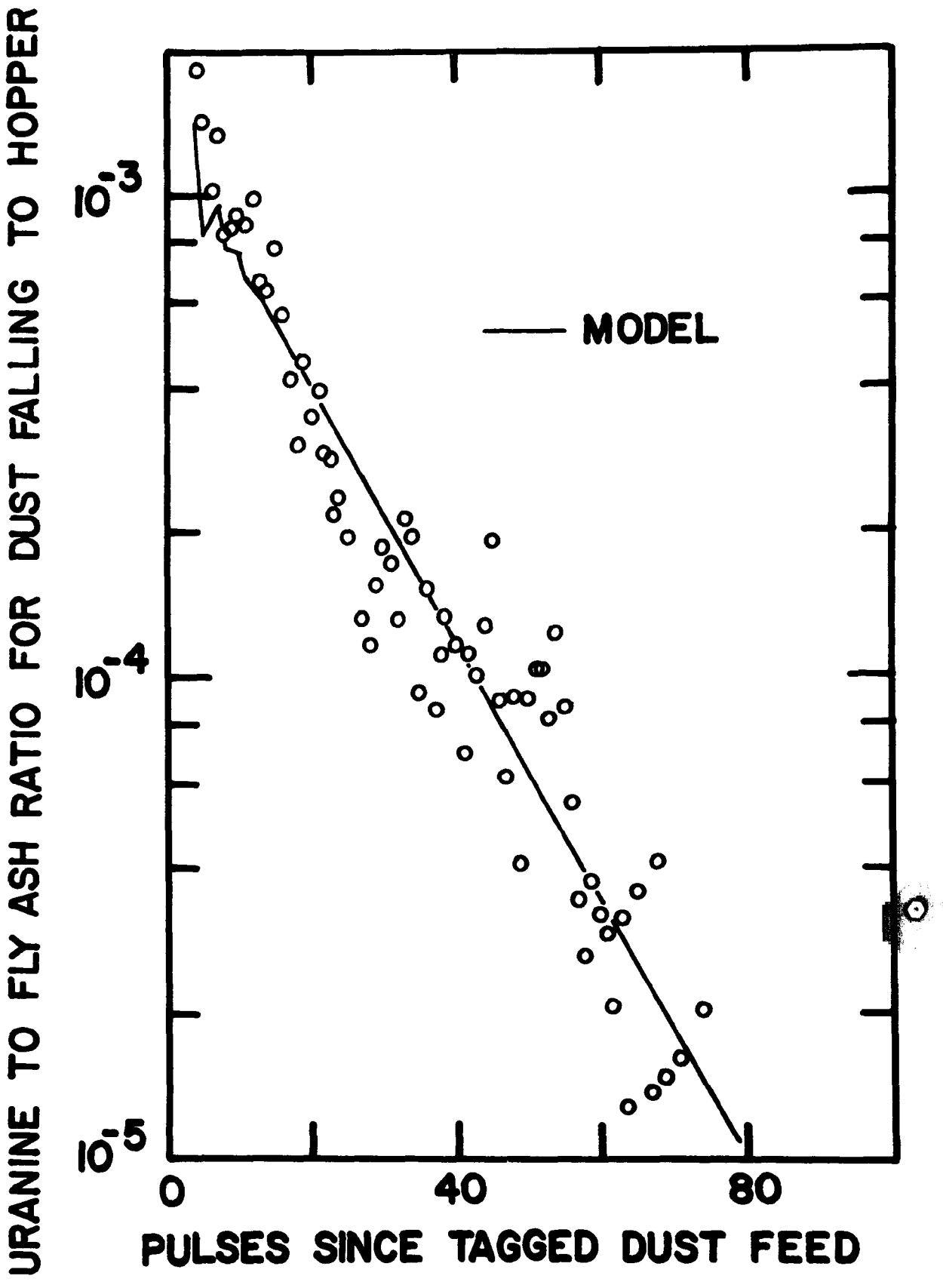

Figure 8. Tag concentration vs. number of pulses following application of tagged dust. Velocity, 5 cm/s.

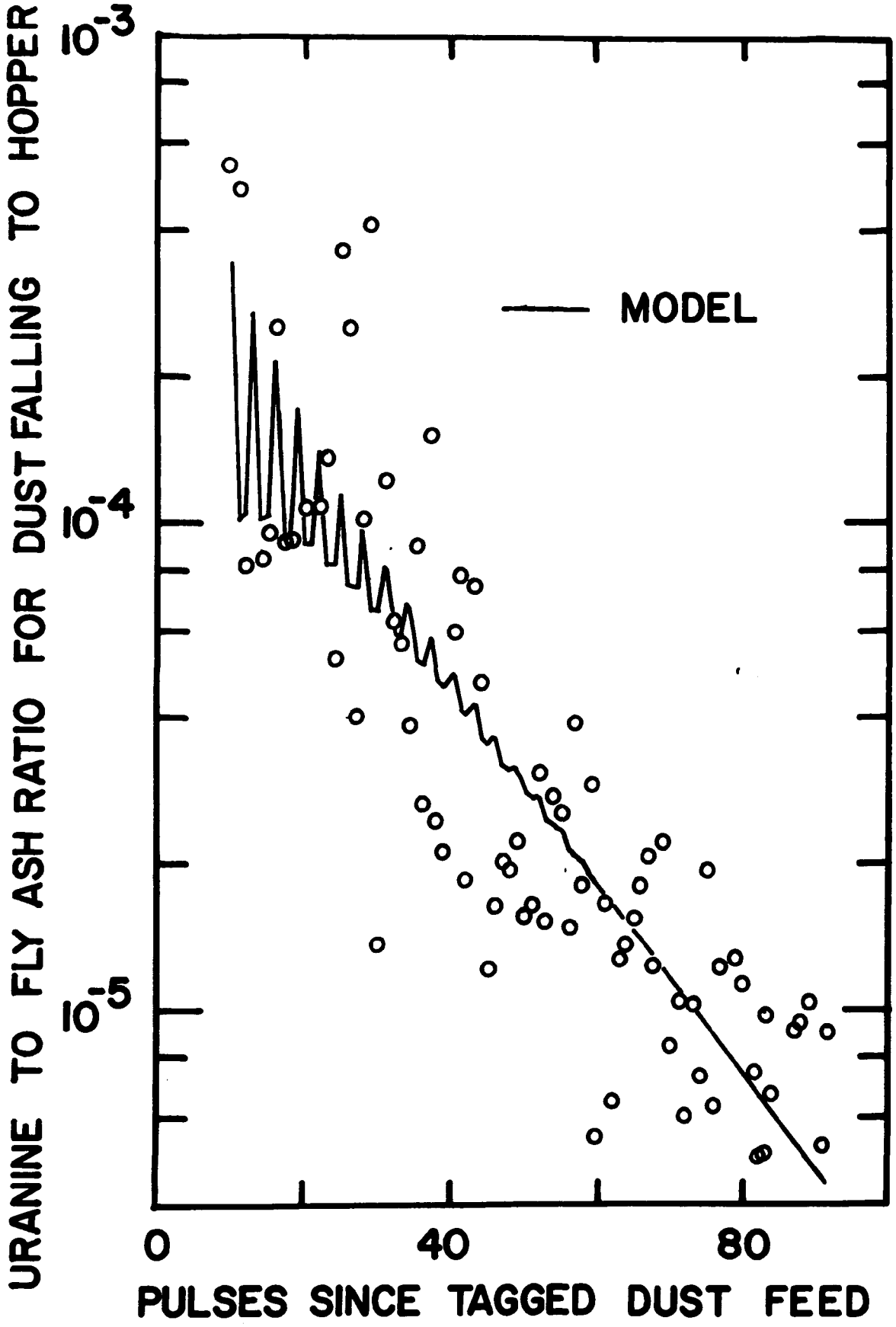

Figure 9. Tag concentration vs. number of pulses following application of tagged dust. Velocity, 10 cm/s.

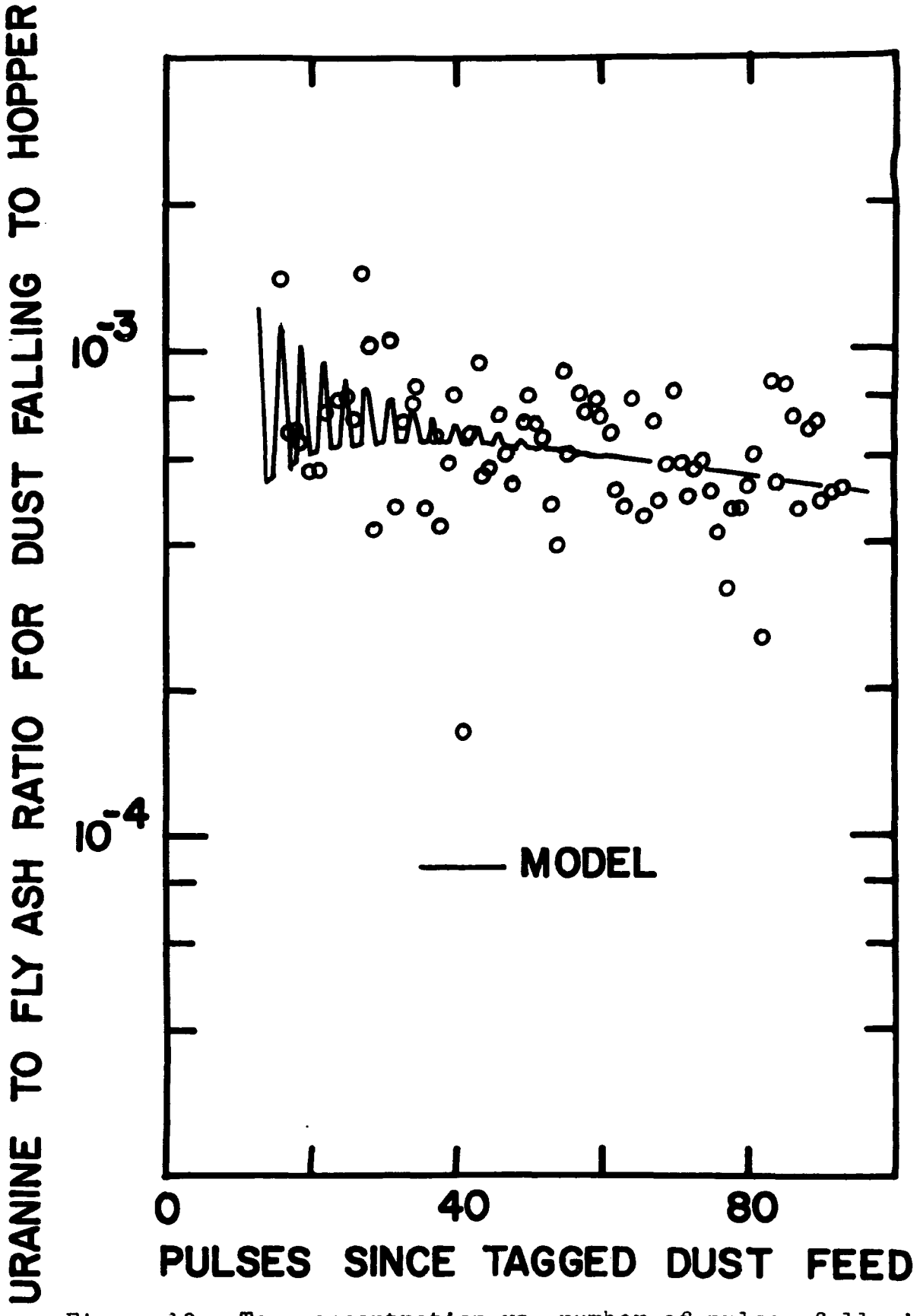

Figure 10. Tag concentration vs. number of pulses following application of tagged dust. Velocity, 15 cm/s.

leaving only 0.01 to fall into the dust hopper. The slow rate at which tagged dust washed from the filter can be seen in Figure 10, the plot of tagged dust concentration vs. pulses since the application of tagged dust at this velocity. Tag concentration decreases very gradually with cleaning pulses, which reflects the high amount of redeposition and the slow rate at which dust fell to the hopper.

The computer simulation model predicts oscillating values for the tag concentration in the dust falling to the hopper. The peaks of the oscillations are concentration of tagged dust from the bag to which the uranine tagged dust was fed initially. The lower values of the oscillations are tag concentrations on each of the two other bags.

At all filtration velocities, the oscillations which the model predicts center around straight lines on the semi-log plots of tagged dust concentration vs. pulses since tagged dust feed. A straight line on such a plot would correspond to a uniform concentration of uranine tag on all filter bags(11). The magnitude and persistence of the oscillations indicate the degree to which complete mixing of the dust within the system fails to occur due to low transfer of dust from bag to bag as quantified by K_2, the fraction of freed dust which redeposits upon each of the neighboring bags with each cleaning pulse.

At the 5 cm/s filtration velocity, the value of K_2, was found to be relatively high. As a result, the tag concentration on the three bags evened out rapidly, because of the substantial interchange of dust from bag to bag in the filter system as the bags were cleaned. Figure 8, the plot of tag concentration vs. number of pulses following application of tagged dust since tagged dust feed for the 5 cm/s filtration velocity, shows that the oscillations in the model prediction damp out rapidly as the tagged dust distributed itself rapidly throughout the system. Figure 8 also shows that the tag concentration declined quickly with cleaning pulses, as is reflected in the large value for K_3, the fraction of freed dust which falls to the hopper with each cleaning pulse.

By comparison, the model predicts substantially different behavior for the system at the 15 cm/s filtration velocity. Here, oscillations are greater, persist for a longer time, and result from a smaller value for K_2, the fraction of freed dust which redeposits on neighboring bags. The exchange of dust from bag to bag with cleaning pulses is less pronounced at the higher filtration velocity. Also, at the higher velocity, the rate at which tagged dust concentration decreased over time and cleaning pulses is low. This reflects the slow rate at which the tagged dust is "washed" from the filter bags, as a comparatively small fraction, K_3, of the freed dust fell to the hopper with each cleaning pulse.

SECTION 7

DISCUSSION

The effect of high filtration velocity on the performance of the pulse-jet filter is now clearer. Even at a conventional filtration velocity such as 5 cm/s, the data shown in Table 1 indicate that most of the dust freed from the bag by a cleaning pulse redeposits rather than falls to the dust hopper. Minimizing redeposition, therefore, is important even when operating the filter at conventional velocities.

As filtration velocity increases, the redeposition problem becomes even more important. The fraction of freed dust which redeposits on the pulsed bag itself increases from 0.38 to 0.83 as filtration velocity increases from 5 to 15 cm/s. At the same time, the fraction of dust which redeposits on neighboring bags decreases from 0.25 to 0.08. What is more important, from the standpoint of cleaning the bags adequately, is that the total fractional redeposition increases from 0.88 to 0.99 as filtration velocity increases from 5 to 15 cm/s. The fraction which falls to the dust hopper, the complement of the fraction which redeposits, decreases from 0.12 to 0.01. Increasing velocity leads to less effective cleaning of the bags.

At conventional velocities, dust cake agglomerates may be projected far into the dirty gas stream. However, at high filtration velocities, the agglomerates may have difficulty in traveling far from the filter bag surface, as the high velocity of the filtering gas sweeps dust back onto the bag. As filtration velocity increases, redeposition is primarily upon the pulsed bag itself, rather than on neighboring bags. As redeposition increases, the filter cake becomes thicker, a smaller fraction of the dust cake falls to the hopper, and pressure drop increases. At a sufficiently high filtration velocity, redeposition may become total, and no dust may fall to the hopper. At this point, the dust cake will continue to increase in thickness, and pressure drop will increase without limit, at least as long as constant filtration velocity can be maintained. In this way, redeposition may account for the exceptionally rapid increases in pressure drop with filtration velocity shown in Figures 1 and 2.

The results described here must be taken in the context of the experimental apparatus used. Although commercial pulse-jet components were employed throughout, the three bag unit tested here was smaller than a commercial unit and had a different geo-

metry. Additionally, the three bags used here were pulsed-cleaned one by one causing 33% of the total bags to be pulsed at a time. Large industrial units with many bags have a lower ratio, cleaning from 5% to 20% of the bags at one time. As a result, each unpulsed bag in the three bag experimental unit had to handle 50% more air during cleaning than it would handle during the time between pulses. For an industrial unit, each filtering bag handles only 5% to 25% more air. For this reason, dust migration to neighboring bags may have been exaggerated in the experiments.

The experimental filter had a minimum fabric to fabric distance of about twelve centimenters, whereas the spacing between bags in an industrial pulse-jet filter is minimized to conserve filter floor space, and may be as little as five centimeters. Because migration to neighboring bags should increase if the bags are close together, the experiments may have underestimated the amount of dust migration to neighboring bags which occurs in a full scale filter.

The net effect of a higher pulsed bag ratio and greater bag spacing in the experimental filter is unknown. However, the enhanced redeposition upon neighboring bags caused by increased pulse ratio, and the decreased redeposition upon neighboring bags caused by increased bag spacing in the experimental filter should balance somewhat.

Because the experimental filter had only three bags, most of the fabric faced housing walls rather than additional bag surfaces as would be the case in an industrial filter. The walls may reflect dust onto the pulsed bag, rather than allow it to migrate to a neighboring bag or to the dust hopper. These experiments may, therefore, have overestimated self-redeposition.

Effects of scale in pilot plant experiments such as these can never be entirely overcome, although they can be minimized by careful experimental design. As this program continues, it may become necessary to conduct experiments on apparatus with more bags if potential scale up problem bias experimental results and cannot be overcome in other ways. This may require experiments with operating filters in the field. The results reported here should be interpreted with caution; quantitative results should not be applied to pulse-jet filters different from the one tested. However, the trends reported here should be useful in interpreting pulse jet behavior in full scale units and assist in optimizing filter performance.

SECTION 8

CURRENT PROGRAM

The performance of a pulse-jet filter will depend upon more parameters than those discussed here. Dust characteristics including particle dize, fabric material and construction, gas properties including humidity and temperature, bag length, and spacing, and other variables may all influence redeposition and filter behavior.

Pulse pressure, duration, and form should have a strong effect on redeposition and cleaning effectiveness. Pressure influences bag acceleration(2), which may affect the distance which dust cake agglomerates travel from the fabric surface. Pulse duration may affect redeposition in that a longer pulse allows a longer time for freed dust to fall toward the dust hopper before filtration air sweeps back through the fabric and pulse form may affect redeposition as well. A rapid increase in pressure at the beginning of the cleaning pulse may be important to maximize outward bag acceleration, and for this reason quick opening valves are used in a pulse-jet filter. However, a gradual reduction in pressure at the end of the cleaning pulse should prolong pulse duration without the consuming of excessive amounts of compressed air, and may ease the fabric back to its supporting cage gently. This should also tend to prolong bag life. Quick opening valves also close quickly, and do not provide these benefits. Modifications to standard pulse valves to combine quick opening with gradual closing may help minimize redeposition while maximizing cleaning effectiveness.

The current experiments were conducted with a filter designed to replicate current industrial practice, although current filters are not designed for operation at the high velocities intended in this program. One goal of this program is to identify modifications to current filter designs which permit effective high velocity operation. On the basis of the experiments reported here, appropriate modifications can begin to be identified. A gas inlet near the top of the filter housing should help sweep dust cleaned from the bags toward the hopper rather than hold it up for redeposition upon neighboring bags, whereas shorter bags should reduce the opportunities for redeposition upon the pulsed bag itself. Changes in the size and form of the cleaning pulse may have an important effect on bag cleanaility and redeposition at high velocity as discussed above.

Modification such as these, to the filter housing, to bag

length and spacing, and to the nature of the cleaning pulse, hold promise for the reduction of redeposition and should be effective whatever fabric and dust are used. In addition, some fabrics may have advantage over others for particular applications. Identification of the most effective fabric for each pulse-jet application will multiply the benefits of structure and operational modifications.

These ideas and others form the basis for a program currently underway to investigate redeposition further and eliminate it as a problem in high velocity filtration. It is anticipated that additional reports will be issued in which current progress will be reported.

REFERENCES

1. E. Bakke, "Optimizing Filtration Parameters," J. Air Poll. Control Assoc., 24:1150 (1974).

2. R. Dennis and J. Wilder, Fabric Filter Cleaning Studies, EPA Report EPA-650/2-75-009, Research Triangle Park, N.C., 1975.

3. N. A. Fuchs, The Mechanics of Aerosols, Pergamon, New York, p. 78, 1964.

4. M. W. First, L. Silverman, R. Dennis, G. A. Johnson, A. T. Rossano, Jr., R. Moschella, C. E. Billings, E. Berly, S. Friedlander, and P. Drinker, Air Cleaning Studies Progress Report for Feb. 1, 1950 - Jan. 31, 1951, AEC Report No. NYO-1581, April, 1952.

5. L. Silverman and C. E. Billings, "Methods of Generating Solid Aerosols," J. Air Poll. Control Assoc. 6:76 (1956).

6. C. J. Stairmand, "Sampling Gas-Borne Particles," Engineering, p. 41 (August 22, 1941).

7. W. A. Burgess, L. Silverman, and F. Stein, "A New Technique for Evaluating Respirator Performance," Am. Ind. Hyg. Assoc. J., 22:422 (1961).

8. D. G. Stephan, G. W. Walsh, and R. A. Herrick, "Concepts in Fabric Air Filtration," Am. Ind. Hyg. Assoc. J., 21:1 (1960).

9. C. E. Billings and J. Wilder, Handbook of Fabric Filter Technology, N.T.I.S. Report PB-200 648, 5285 Port Royal Rd., Springfield, Va., 1970.

10. H. Feldman, Harvard School of Public Health, assisted with the formulation of the mathematical model and with programing described in this section and in the Appendix.

11. D. Leith and M. W. First, "Filter Cake Redeposition in a Pulse-Jet Fabric Filter," paper 76-31.4 presented at the 69th Annual Meeting of the Air Pollution Control Association, Portland (1976).

APPENDIX

The Gauss-Newton fitting procedure takes a known functional relationship among variables (v), parameters (p), and time (t), and fits it to a set of observed variables (v_o) by adjustment of the parameters. In the present case the variable is the tagged dust collected, h(t), and the parameters are K_1, K_2, and $m_1(0)$. Their functional relationship is given in detail at the end of this section.

The procedure is begun by making an estimate, p*, for each parameter, p. These estimates give rise, via the known functional relationship, to estimated variables, v*, which ideally will coincide with the observations, v_o. At this point partial derivatives, $(\partial v/\partial p)^*$, can also be calculated by the functional relationship; the role of these quantities will be made clear momentarily.

Usually, the agreement of v* with v_o is unsatisfactory and the estimates for parameters K_1, K_2, and $m_1(0)$ must be adjusted to produce a better fit. The Gauss-Newton method does this by local linerization of the functional relationship, as expressed by a first-order, multidimensional Taylor series expansion:

$$\log v = \log v^* + \sum \frac{1}{v^*}\left(\frac{\partial v}{\partial p}\right)^* \Delta p \tag{A1}$$

where $\Delta p = p - p^*$, and the summation runs over the set of parameters p. By this equation the difference between the "true" v and its current estimate v* is "blamed" on errors in the various parameters, in proportion to their effect on v.

The reason for expanding log v instead of v will now be explained. The best simple model of measurement error in tracer studies is that the observed activity v_o differs from its "true" value by an unknown, random multiplicative factor η:

$$v_o = \eta v. \tag{A2}$$

Thus log v can be rewritten as log v_o - log η and Equation A1 can be rewritten so that the only unknown quantities are the random errors η and the parameter errors Δp:

$$\log \frac{v_o}{v^*} = \sum \frac{1}{v^*}\left(\frac{\partial v}{\partial p}\right)^* \Delta p + \log \eta. \tag{A3}$$

Letting v and η range over each observation, a matrix equation can be written:

$$\mathbf{D} = \mathbf{D}\,[\Delta p] + [\log \eta]. \tag{A4}$$

Thus $\mathbf{D}$ is a vector of length equal to the number of data points, with elements v_o/v^*, while $\mathbb{D}$ is a matrix of breadth equal to the number of parameters and length equal to the number of data points, with elements $(1/v^*)(\partial v/\partial p)^*$.

Our goal now is to "eliminate" the unknown random error η, and we accomplish this by a minimization step, as follows. The residual error arising from the choice of p^* is

$$SS^* = \mathbf{D}'\mathbf{D}. \tag{A5}$$

if the parameter estimates were perfect, Δp would be zero and SS^* would reach its minimum value, the unknown error of measurement:

$$SS^* = [\log n]'[\log n]. \tag{A6}$$

Applying the least-squares criterion, the values of p which minimize SS are sought as a "best" model. It follows directly from Equation A3 that the appropriate choice of Δp is

$$[\Delta p] = (\mathbb{D}'\mathbb{D})^{-1}\mathbb{D}'\mathbf{D}. \tag{A7}$$

These Δp values are used to correct the current estimates p^*, ostensibly obtaining least-squares values for the "true" p. However, because of the truncation of the Taylor series, these results are not exact. The farther p^* lies from p, the more the truncated Taylor series is in error. Therefore, the new parameter values must be taken merely as improved estimates, and the procedure repeated until all Δp are near zero. At that point SS^* has presumably reached SS, and the procedure ends.

Under the assumption that the measurement error η is lognormally distributed, the statistical properties of the parameter estimates can be approximated as follows. After convergence, the matrix $(\mathbb{D}'\mathbb{D})^{-1}$ is multiplied by SS (the final SS^*) and divided by the degrees of freedom, df (number of observations minus the number of fitted parameters). The diagonal elements of the resulting matrix are approximate variances of the parameters, and the off-diagonal elements are the covariances(1). These quantities indicate the range the parameters would cover if the experiment and fit were repeated with different sets of random error, taken from the same distribution ($\log \eta$ of mean zero, variance SS/df).

Note that since the matrix $\mathbb{D}'\mathbb{D}$ is positive-definite, and symmetric, its inversion, Equation A7, can be accomplished with high efficiency by the Cholesky decomposition(2).

Marquardt(3) suggested enhancing the diagonal of $\mathbb{D}'\mathbb{D}$ before inversion, by a variable factor $1+\varepsilon$. The larger ε is, the more the method behaves like the method of steepest descent(3), and the less susceptible it is to the erratic behavior sometimes seen in the early stages of Gauss-Newton fitting. Powers of 10 are used

here for ε, starting at 10^{-2}. At each iteration, if SS decreases with the corrected parameters, ε is divided by 10. If SS increases, the parameter corrections are rejected and recalculated with ε multiplied by 10. An optimal ε is not sought at each iteration, as suggested by Fletcher and Shrager(4), for as Marquardt has stated(3) "such a strategy would inherit many of the properties of steepest descent; e.g., rapid initial progress followed by progressively slower progress."

Numerical differentiation might be used to calculate $(\partial v/\partial p)^*$; one could apply the calculation of v^* iteratively, perturbing each unknown parameter in turn. The analytical method is far more efficient in this application, however, since the partial derivatives can be computed in parallel with the variables, without iterating, as shown below.

The functional relationship between $h(t)$ and the parameters K_1, K_2, and $m_1(0)$ can be written recursively, with $\bar{m}(t)$ as intermediary:

$$\bar{m}(0) = \begin{bmatrix} m_1(0) \\ 0 \\ 0 \end{bmatrix} \tag{A8}$$

$$\bar{m}(t) = C_i \bar{m}(t-1), \tag{A9}$$

where $t = 1,2,3,4,\ldots$, and i = remainder when t is divided by 3.

$$h(t) = (1-K_1-2K_2)m_i(t-1). \tag{A10}$$

The derivatives are then defined recursively by differentiation of the above:

$$\frac{\partial \bar{m}(0)}{\partial K_j} = \begin{bmatrix} 0 \\ 0 \\ 0 \end{bmatrix}, \text{ and } \frac{\partial \bar{m}(0)}{\partial m_1(0)} = \begin{bmatrix} 1 \\ 0 \\ 0 \end{bmatrix} \tag{A11}$$

$$\frac{\partial \bar{m}(t)}{\partial K_j} = \frac{\partial C_i}{\partial K_j}\bar{m}(t-1) + C_i \frac{\partial \bar{m}(t-1)}{\partial K_j} \text{ and}$$

$$\frac{\partial \bar{m}(t)}{\partial m_1(0)} = C_i \frac{\partial \bar{m}(t-1)}{\partial m_1(0)} \tag{A12}$$

$$\frac{\partial h(t)}{\partial K_j} = -jm_i(t-1) + 1-K_1-2K_2)\frac{\partial m_i(t-1)}{\partial K_j} \text{ and}$$

$$\frac{\partial h(t)}{\partial m_1(0)} = (1-K_1-2K_2)\frac{\partial m_1(t-1)}{\partial m_1(0)} \tag{A13}$$

where $j = 1,2$. The terms $\frac{\partial C_i}{\partial k_j}$ are simple constant matrices; for example,

$$C_2 = \begin{bmatrix} 1 & K_2 & 0 \\ 0 & K_1 & 0 \\ 0 & K_2 & 1 \end{bmatrix} \tag{A14}$$

so that

$$\frac{\partial C_2}{\partial K_2} = \begin{bmatrix} 0 & 1 & 0 \\ 0 & 0 & 0 \\ 0 & 1 & 0 \end{bmatrix} \tag{A15}$$

The other derivatives appearing on the right sides of these equations are the results of earlier calculations; i.e., left sides of the same equations for smaller t.

REFERENCES FOR APPENDIX

1. M. Berman, E. Shahn, and M. F. Weiss, "The Routine Fitting of Kinetic Data to Models: A Mathematical Formalism for Digital Computers," Biophys. J. 2:275 (1962).

2. G. E. Forsythe, and C. B. Moler, Computer Solution of Linear Algebraic Systems, Prentice-Hall, Englewood Cliffs, N.J., (1967).

3. D. W. Marquardt, "An Algorithm for Least Squares Estimation of Non-Linear Parameters," J. Soc. Indust. Appl. Math. 11: 431 (1963).

4. J. E. Fletcher and R. I. Shrager, A User's Guide to Least-Squares Model Fitting, Division of Computer Research and Technology, National Institutes of Health, Bethesda, M.D. (1968).

TECHNICAL REPORT DATA
(Please read Instructions on the reverse before completing)

1. REPORT NO. EPA-600/7-77-022	2.	3. RECIPIENT'S ACCESSION NO.
4. TITLE AND SUBTITLE Filter Cake Redeposition in a Pulse-Jet Filter		5. REPORT DATE March 1977
		6. PERFORMING ORGANIZATION CODE
7. AUTHOR(S) David Leith and Melvin W. First		8. PERFORMING ORGANIZATION REPORT NO.
9. PERFORMING ORGANIZATION NAME AND ADDRESS Harvard School of Public Health, 665 Huntington Avenue, Boston, Massachusetts 02115		10. PROGRAM ELEMENT NO. EHE624
		11. CONTRACT/GRANT NO. Grant R801399
12. SPONSORING AGENCY NAME AND ADDRESS EPA, Office of Research and Development, Industrial Environmental Research Laboratory, Research Triangle Park, NC 27711		13. TYPE OF REPORT AND PERIOD COVERED Final; 2/76-1/77
		14. SPONSORING AGENCY CODE EPA/600/13

15. SUPPLEMENTARY NOTES IERL-RTP project officer for this report is J.H. Turner, Mail Drop 61, 919/549-8411 Ext 2925.

16. ABSTRACT The report gives results of a pilot-scale study of pulse-jet filter cleaning, a process that is ineffective to the extent that collected dust redeposits, rather than falling to the hopper. Dust tracer techniques were used to measure the amount of redeposition. A mathematical model based on experimental results was developed to describe dust transfer from bag to bag, redeposition on the pulsed bag, and migration to the hopper. At conventional filtration velocities (5 cm/s), most of the dust freed from the bag by the cleaning pulse was found to redeposit (38% on the cleaned bag and 50% on the two neighboring bags) rather than fall to the hopper. At high velocities (15 cm/s), redeposition was more pronounced, 83% on the cleaned bag and 16% on the neighboring bags. At a sufficiently high velocity, redeposition may become total: no dust will fall into the hopper, the dust cake will continue increasing in thickness, and the pressure drop will increase without limit as long as constant velocity is maintained. The study indicates that reasonable pressure drop can be achieved at high velocity only when there is a reduction in filter cake redeposition. Although filter performance depends on more parameters than were examined, the trend of increasing redeposition with increasing velocity may persist regardless of the dust, fabric, or filter configuration.

17. KEY WORDS AND DOCUMENT ANALYSIS

a. DESCRIPTORS		b. IDENTIFIERS/OPEN ENDED TERMS	c. COSATI Field/Group	
Air Pollution	Caking	Air Pollution Control	13B	07A
Dust Filters	Fabrics	Stationary Sources	13K	11E
Dust	Filtration	Particulate	11G	07D
Pulsation		Pulse-Jet Cleaning		
Jets		Redeposition	20D	
Cleaning		Fabric Filters	13H	
		Baghouses		

18. DISTRIBUTION STATEMENT Unlimited	19. SECURITY CLASS *(This Report)* Unclassified	21. NO. OF PAGES 39
	20. SECURITY CLASS *(This page)* Unclassified	22. PRICE

EPA Form 2220-1 (9-73)