EPA U.S. Environmental Protection Agency
Office of Research and Development
Industrial Environmental Research Laboratory
Research Triangle Park, North Carolina 27711

EPA-600/7-77-030
March 1977

ALTERNATIVES TO CHLORINATION FOR CONTROL OF CONDENSER TUBE BIO-FOULING

Interagency
Energy-Environment
Research and Development
Program Report

RESEARCH REPORTING SERIES

Research reports of the Office of Research and Development, U.S. Environmental Protection Agency, have been grouped into seven series. These seven broad categories were established to facilitate further development and application of environmental technology. Elimination of traditional grouping was consciously planned to foster technology transfer and a maximum interface in related fields. The seven series are:

1. Environmental Health Effects Research
2. Environmental Protection Technology
3. Ecological Research
4. Environmental Monitoring
5. Socioeconomic Environmental Studies
6. Scientific and Technical Assessment Reports (STAR)
7. Interagency Energy-Environment Research and Development

This report has been assigned to the INTERAGENCY ENERGY-ENVIRONMENT RESEARCH AND DEVELOPMENT series. Reports in this series result from the effort funded under the 17-agency Federal Energy/Environment Research and Development Program. These studies relate to EPA's mission to protect the public health and welfare from adverse effects of pollutants associated with energy systems. The goal of the Program is to assure the rapid development of domestic energy supplies in an environmentally-compatible manner by providing the necessary environmental data and control technology. Investigations include analyses of the transport of energy-related pollutants and their health and ecological effects; assessments of, and development of, control technologies for energy systems; and integrated assessments of a wide range of energy-related environmental issues.

REVIEW NOTICE

This report has been reviewed by the participating Federal Agencies, and approved for publication. Approval does not signify that the contents necessarily reflect the views and policies of the Government, nor does mention of trade names or commercial products constitute endorsement or recommendation for use.

This document is available to the public through the National Technical Information Service, Springfield, Virginia 22161.

EPA-600/7-77-030
March 1977

ALTERNATIVES TO CHLORINATION FOR CONTROL OF CONDENSER TUBE BIO-FOULING

by

H.H.S. Yu, G.A. Richardson, and W.H. Hedley

Monsanto Research Corporation
1515 Nicholas Road
Dayton, Ohio 45407

Contract No. 68-02-1320
Program Element No. EHE624

EPA Project Officer: Fred Roberts

Industrial Environmental Research Laboratory
Office of Energy, Minerals, and Industry
Research Triangle Park, N.C. 27711

Prepared for

U.S. ENVIRONMENTAL PROTECTION AGENCY
Office of Research and Development
Washington, D.C. 20460

CONTENTS

Figures v

Tables iv

1 Summary 1

2 Conclusions 5

3 Current Practices 10

3.1 Current Chlorination Practices 10

3.1.1 Once-Through Cooling with Marine Waters 11

3.1.2 Closed-Cycle Cooling Using Cooling Towers with Marine Waters for Makeup 11

3.1.3 Once-Through Cooling with Fresh Waters 12

3.1.4 Closed-Cycle Cooling Using Cooling Towers with Fresh Water for Makeup 12

3.2 Types of Cooling Systems and Schematic Flow Diagrams 13

3.3 Seasonal Operating Variables 16

3.4 Chlorine Residual Emissions 18

3.5 Points of Emission 24

3.6 Cost of Current Practices 28

4 Assessment of Alternative Methods 31

4.1 On-Line Mechanical Cleaning 31

4.1.1 Amertap Sponge Ball System 31

4.1.2 M.A.N. Brush System 33

4.1.3 Hot Water Backflush System 33

4.1.4 Economics of Mechanical Cleaning of Condensers 33

4.2 Chemical Treatments 37

4.2.1 Ozone (O_3) 39

4.2.2 Bromine (Br_2) 44

4.2.3 Bromine Chloride (BrCl) 47

4.2.4 Iodine (I_2) 49

CONTENTS (continued)

4.2.5 Chlorine Dioxide (ClO_2) 50

4.2.6 Hypochlorites (HOCl, MOCl) 52

4.2.7 Other Chemicals 52

4.2.8 Controlled-Release Pesticides 54

4.3 Physical-Chemical Methods of Treatment 58

4.3.1 Ultraviolet Radiation 58

4.3.2 Gamma Radiation 59

4.3.3 Electron Beam Radiation 60

4.4 More Efficient Methods of Present Chemical Application 60

4.4.1 Serial Dosing Near the Inlet of the Condenser 60

4.4.2 Addition of Dechlorination Chemicals 62

4.4.3 Blowdown Timing Control 63

4.4.4 Chlorination by Feedback Control of Residuals 63

4.5 Other Information 63

References 65

Bibliography 68

FIGURES

Number		Page
1	Schematic of nuclear and fissil fuel powerplants.	15
2	Schematic flow diagram of wet cooling system (fresh water or marine water).	17
3	Typical points of chlorine application and discharge for once-through (or open) cooling system.	20
4	Typical points of chlorine application and discharge for a recirculating (or closed) cooling system.	22
5	Concentration of total residual chlorine in cooling-tower blowdown versus time.	23
6	Hypothetical 1,000 MW powerplant water flows (600,000 gpm) (flows shown in units of 1,000 liters/min).	26
7	Costs of operation, maintenance, and chemical additions of a once-through cooling system (1972 dollars).	29
8	Schematic arrangement of Amertap tube cleaning system.	32
9	Schematic of M.A.N. system reverse flow piping.	34
10	Tube cleanliness versus cost of reduced generating efficiency.	37
11	Distribution of chemicals added to cooling-water systems.	38
12	Rate of decomposition of ozone.	40
13	Behavior of ozone in saturated solutions at atmospheric pressures. (An S value of 0.2 is assumed.)	41
14	Schematic cross section of condenser tubes.	56

TABLES

Number		Page
1	Summary of Alternatives to Chlorination of Power-plant Cooling Water	4
2	Current Applicability of Various Bio-Fouling Control Techniques	9
3	Use of Various Types of Cooling	14
4	Closed or Recirculating Cooling Systems	16
5	Breakdown on Chlorine Usage for Different Types of Cooling Systems (1970)	27
6	Comparative Capital Costs of Condenser Cleaning Systems	34
7	Comparative Annual Costs	34
8	Operating Costs of Ozonating Plants with No Pretreatment	43
9	Comparison of Ozone Doses Reported in Water and Wastewater Treatment	44

SECTION 1

SUMMARY

A majority of power plants in the United States are using chlorine to control biological fouling in their cooling systems, particularly in the condenser tubes. The use of chlorine has raised questions regarding the toxicity of chlorinated effluents on aquatic organisms in the receiving water. In 1972, the reported usages of chlorine for power plant cooling water treatment alone was 28,600 tons (compared with 256 tons of chlorine for boiler feedwater treatment).

Although other varieties of biocides (e.g., chlorinated phenols, acroleins, quaternary ammonium compounds, bromine, etc.) are employed to control biological fouling in cooling water systems, chlorine is the most widely used because it is usually the most economical method of treatment. Chlorination can be applied constantly in low concentrations or intermittently in higher concentrations as a shock treatment, although intermittent treatment is not effective with organisms such as mussels and barnacles that can rapidly close their shells when conditions are unfavorable and then open them up when conditions improve.

Current chlorination practice is to provide adequate free chlorine residual (e.g., 0.5 ppm to 1.0 ppm) at the outlet side of the condenser. Recent research has indicated that this free chlorine could react with a variety of organic compounds to form carcinogenic compounds, which are of great concern if they enter public drinking-water systems.

To protect both the public and aquatic life, the Environmental Protection Agency has established allowable concentrations of free chlorine in new-plant effluents as an average of 0.2 mg/l during a maximum of 2 hours a day (aggregate) and a maximum, during these periods, of 0.5 mg/l.[1] In California, this limit has been set at only 0.1 mg/l in undiluted effluent.[2] Other states are also enacting similar or more stringent criteria.

---

[1]Permissible Chlorine Concentrations in Effluents from New Sources. Federal Register. Vol. 39, October 8, 1974.

[2]Collins, H. F. Sewage Chlorination Versus Toxicity--A Dilemma. Journal of the Environmental Engineering Division Proc. ASCE, 99, No. EE6, 761-72(1973), December.

The State of California document entitled Water Quality Control Plan for Ocean Water of California established the allowable total chlorine residuals in discharge from ocean plants as a daily average of 1 mg/l and a maximum of not more than 2 mg/l for 10% of the time. In the mean time, the total chlorine residual shall not exceed 0.006 mg/l after three- to five-fold dilution in the receiving body of water (personal communication with David Deckman, California State Water Resource Control Board, Sacramento, California, 916-322-4561). In southern California, the total chlorine residuals allowed by the local authorities at the discharge end of the condenser are only half of the above numbers.

In the state of Maryland, the allowable total chlorine residuals vary with the type of receiving body of water. For the effluent discharging to brackish water, the maximum total allowable chlorine residual is 0.5 mg/l, while the maximum after mixing is 0.02 mg/l for trout streams and 0.05 mg/l for other streams (personal communication with William Chicca, Industrial Permit Section, Maryland Water Resource Administration, Annapolis, Maryland, 301-269-3821).

In the state of Illinois, there is no state regulation on chlorine discharge (personal communication with Jeffrey Mill, Permit Section, Division of Water Pollution Control, Illinois EPA, Springfield, Illinois, 217-782-6171).

The EPA has also suggested that continuous exposure of the aquatic community to chlorine compounds, including chloramines, should not exceed 0.002 mg/l.[3] Chlorination programs to achieve no discharge of total residual chlorine from recirculating cooling water systems have been determined to be not fully demonstrated and therefore cannot be generally applied by 1983.[4]

To decrease passage of ecologically harmful effluents to receiving waters, viable alternatives to current chlorination practices are needed. Examples of alternative methods include:

- Use of other chemicals
- More efficient methods of chemical application
- Physical-chemical treatment
- On-line mechanical cleaning, etc.

It should be emphasized that the reasons for chlorinating a cooling tower circuit are precisely the same as those for a

---

[3]Environmental Studies Board, National Academy of Sciences, Water Quality Criteria 1972, EPA-R3-73-033.

[4]Nichols, C. R. Development Document for Effluent Limitations, Guidelines, and New Source Performance Standards for the Steam Electric Power Generation Point Source Category. U.S. Environmental Protection Agency, NTIS PB 240 853, October 1974. 771 pp.

once-through cooling system; namely, to control slime growth in the condenser tubes, not to control algae growth on the tower structure.

The problem with many of the alternative methods discussed in this report is the lack of a field test that readily establishes the efficiency of the processes.

When considering the alternatives to the use of chlorine (or hypochlorite) in cooling water treatment, power plants are presently left with a limited selection, especially where units that are already in operation must be included. Effective manual cleaning is costly and nearly impossible. Mechanical cleaning systems are relatively expensive, are impossible to retrofit in some instances, and may often be inadequate without additional chlorination. Ozonation is unproven for power plant cooling water treatment and is high in both capital and operating costs. Dechlorination with sulfur dioxide would result in an additional chemical feed system to maintain and possible deoxygenation of receiving waters. Use of bromine chloride may be a viable alternative to chlorine, but further R&D is needed. The technical, environmental, and cost aspects of these alternatives to the use of chlorine in powerplant cooling water treatment are summarized in Table 1.

TABLE 1. SUMMARY OF ALTERNATIVES TO CHLORINATION OF POWERPLANT COOLING WATER

Treatment alternative	Technical feasibility: Once-through Fresh	Technical feasibility: Once-through Marine	Technical feasibility: Closed cycle Fresh	Technical feasibility: Closed cycle Marine	Environmental effects	Engineering problems	Costs: Relative costs: Capital	Costs: Relative costs: Operation	Costs: Relative costs: Chemical	Costs: Dollar costs: c/m^3 (c/1,000 gals)	Costs: Dollar costs: c/kg (c/lb)	Comments
Chemical treatment												
Chlorine (Cl_2)	E	E	E	E	Cl_2 residuals	None	Base	Base	Base	0.08 (0.3)	15.4 to 17.6 (7 to 8)	Still needed in the future
Bromine (Br_2)	P	P	P	P	None	Corrosive	L	L	M			BrCl is better than Br
Bromine chloride (BrCl)	E	E	E	E	Minimal	None	L	L	M		55 (25)	Pilot tested, but need more R&D
Iodine (I_2)	P	P	N	N	None	None	L	L	M		264 (120)	Poor algicide; used in swimming pools
Ozone (O_3)	E	E	P	P	None	Corrosive	H	H	H	0.08[0.3(electron)] 0.8[3.0(corona)]	to 15.4 to 27.5 (7 to 12.5)	Lab scale; used in waste and drinking waters
Chlorine dioxide (ClO_2)	P	P	P	P	Chlorite	Explosive, volatile, photodecomposition	L	L	H		660 (300)	Only cost effective for water with excessive O_2 demand
Hypochlorite	P	P	P	P	Cl_2 residuals	None	M	M	M	0.08 (0.3)	33 (15)	Not better than Cl_2
Controlled-release pesticides	P	P	E	E	Biocide residuals	None	L	L	L			More R&D needed, high initial chemical application cost, low maintenance cost
On-line mechanical cleaning												
Sponge rubber balls (Amertap)	E	E	E	E	None	Some fouling	M	M	L			Practiced in some plants, but all systems are not capable of being converted to mechanical cleaning. Elimination of Cl_2 discharge
Brush device	P	P	P	P	None	Plugging, grooving	M	M	L			
Hot water backflush	E	P	E	P	Periodic thermal discharge	None	M	M	L			
Physical-chemical treatment												
Ultraviolet radiation	E	E	E	E	Radiation exposure	May need pretreatment	H	H	L		13.2 (6)	Only pilot scale in water and wastewater treatments. Costs are very expensive.
Gamma radiation	P	P	P	P	Radiation leakage	Need radiation shield	H	H	L		18,326 (8,330)	
Improved methods of chemical application												
Dosing at inlet of condensers, serially	E	E	E	E	Minimal	None	L	L	L			Limited usage in power plants, but the technology is available. Cl_2 discharge can be controlled to 0.2 mg/l. Costs are negligible.
Dechlorination	E	E	E	E	Minimal	None	L	L	L			
Chlorination by feedback control of residuals	E	E	E	E	Minimal	None	L	L	L			
Blowdown timing control	E	E	E	E	Minimal	None	L	L	L			

N - Not applicable
E - Excellent
P - Partially applicable

H - High (>10 times over Cl_2)
M - Median
L - Low (comparable to Cl_2)

SECTION 2

CONCLUSIONS

From work on this task, it is concluded that:

a. Because of its cost effectiveness, chlorination of cooling waters (in both recirculating and nonrecirculating (once-through) cooling systems) is presently the most widely used technique to control biofouling of condenser tubes.

b. The newly established allowable concentrations of free chlorine in new-plant effluents could be achieved by means of currently available techniques. By employing more efficient methods of chemical application, total chlorine residuals can be cut to well below present levels.

c. There are several methods for control of cooling water biofouling which use chlorine and which are more efficient and cause fewer problems than continuous chlorination. These include

- Dosing near the inlet of condenser, serially
- Addition of dechlorination chemicals
- Blowdown timing control
- Chlorination by feedback control of chlorine residuals

Use of one or a combination of the above control techniques would make chlorination systems more complicated and may require some modifications while having an important compensation: The total amount of chlorine used and discharged chlorine residuals would be reduced to the practical minimum without impeding the control of biofouling of condenser tubes and other parts of cooling water circuits. The size of the chlorination system in terms of chlorine feed rate would be reduced by a factor of two, three, or six depending on the number of parallel condensers serving the power plant.

d. There are several viable alternative methods of reducing the total residual chlorine in condenser cooling water systems. These include chemical treatment with other less harmful chemicals and use of on-line mechanical means of cleaning condenser tubes. Mechanical cleaning is employed in some plants, but its practicability depends on the design configuration of the existing process piping and structures involved at the particular plant. Not all existing power plants can be retrofitted with mechanical cleaning techniques. Mechanical cleaning of condenser tubes, which is widely used in Europe, deserves to be pursued more actively in the United States, especially for those power plants using cooling water with high chlorine demands.

e. Chlorine may still be required, used, and discharged from systems using mechanical cleaning of condenser tubes because biological control may also be needed for other parts of the cooling system or for control of hard-shelled organisms in marine water circuits.

f. Several other chemicals are potentially attractive alternatives to chlorine, such as bromine chloride (BrCl), ozone (O_3), and chlorine dioxide (ClO_2). The chemical cost of bromine chloride is about three times that of chlorine, and the cost of ozonation is reported to be two to ten times higher than that of chlorination. Chlorination is currently much cheaper than ozonation in both capital and operating costs. However, it should be emphasized that the costs of cooling water treatment are a very small part of total power production costs. Therefore, it is conceivable that the environmental considerations might outweigh economic considerations if these chemicals do offer advantages over chlorine gas in powerplant cooling water treatment.

g. The high cost of ozonation, poor ozone transfer efficiency, lack of residual protection against downstream contamination for the cooling tower, and lack of field demonstration probably are reasons why ozonation has not been practiced in powerplant cooling water systems in the past. In view of the more rigorous criteria proposed for residual chlorine content in discharging waters in the future, now is an opportune time for field testing of ozonation for treatment of cooling water. A breakthrough in ozone production technology is required, however, before ozonation can compete economically with other methods. A new, high-volume, electron-beam, ozone generator is now expected to produce ozone for about 10 cents/lb, compared with about 16 cents/lb to 20 cents/lb for chlorine. Although ozone is quite effective in the disinfection of water, the applicability of

ozone for the bio-fouling control of powerplants is yet to be field demonstrated.

h. Bromine chloride has been little used until very recently owing to the lack of commercial availability and handling technology. Potential ecological and cost advantages may be gained by substituting bromine chloride for chlorine. Products of chlorobromination of water containing ammonia or organic nitrogen are more easily degraded and less obnoxious than their chlorinated analogs; e.g., chloramines. The predominant products formed from several competitive reactions of BrCl in water are innocuous chloride and bromide salts. In addition to the fast decay feature, BrCl is less hazardous to marine life than chlorine, while still exhibiting biocidal activity.[5] Although encouraging results were obtained by field testing at the Public Service Electric and Gas Company, New Jersey, further research is required.

i. The chemical cost of chlorine dioxide is very high; hence, it is not a good candidate for general-purpose cooling water treatment. However, since it does not react with ammonia, nitrogenous compounds, or most organic impurities before oxidizing them, and since its efficiency is not impared in a high-pH (e.g., pH between 6 and 10) environment, chlorine dioxide could be considered cost-effective for treatment of cooling water which has an excessive chlorine demand, such as secondary-treated sewage effluent used as powerplant makeup water. Some facts regarding the toxicity of chlorite ion and chlorate, which are formed by disproportionation of chlorine dioxide, are known,[6] but further field testing and demonstration are needed.

j. Use of controlled-release pesticides in nonheat-transfer surfaces of powerplant cooling systems for biofouling control is a future possibility. The practice would allow economy in application, and it would reduce potential hazards stemming from accumulating pesticides in the environment at a rate higher than that of their natural degradation. the basic idea is to regulate the effects of the pesticide or other agent so that the effects will be felt over a long period of time at a safe level. For example, one of the approaches is the

---

[5]Mills, J. F. The Chemistry of Bromine Chloride in Wastewater Disinfection. (Presented at American Chemical Society Meeting). Chicago, Illinois, August 1973.

[6]Weber, W. J., Jr. Physicochemical Processes for Water Quality Control. Wiley-Interscience, New York, New York. 640 pp.

incorporation of active agents as pendent groups on the backbone polymer chain. A number of pesticides have been incorporated in vinyl-type monomers and then polymerized. Also, by chemically incorporating two or more organometallic groups along the polymer chain, antifouling activity can be broadened considerably. The Navy's work on static testing of acrylic paint containing organotin compounds shows that such an acrylic coating (<8 mils thick) is effective up to 4 1/2 years. Use of coatings for the repulsion of organisms from marine surfaces would be particularly attractive for surfaces such as piping, cooling tower packing, and condenser headers, where there is no heat transfer. Use of the plastic condenser tubes would, however, require substantial design changes. Further development would be needed because plastics are inefficient heat transfer media compared to metal. Establishing the practical feasibility of the controlled-released pesticides technique for use in powerplant cooling systems would require considerable research and development work.

k. Use of radiation techniques (e.g., gamma radiation, UV radiation) for treatment of powerplant cooling water is not considered cost-effective at present, nor is it likely to be in the near future. Radiation techniques lack the ability to provide any residual disinfecting capacity in other parts of the cooling system. High-volume river waters and other sources of high turbidity and organic and iron content usually cannot be treated effectively with UV radiation. However, use of nuclear reactor wastes (instead of gamma radiation from pure isotopes, such as cobalt-60) might reduce the operating cost of cooling-water treatment drastically, making radiation treatment competitive with other methods in the future.

l. The development of smooth plastic surfaces that would not be fouled by microorganisms without using any chemicals or pesticides may be possible. Based on some other experience (personal communication with Dr. E. G. Young, Central Research Department, DuPont Co., Wilmington, Delaware) on the desalination membrane program, the surfaces could simply be kept clean by occasional flushing.

m. Current applicability of various bio-fouling control techniques for existing plants or future new plants are listed in Table 2. Some of the available control techniques are not easily applied to existing powerplants because they require extensive modification of installed equipment before they can be implemented.

TABLE 2. CURRENT APPLICABILITY OF VARIOUS BIO-FOULING CONTROL TECHNIQUES

Treatment alternative	Old plant	New plant
Chlorination		
Dosing near the inlet of condenser, serially	Yes or no[a]	Yes
Addition of dechlorination chemicals	Yes	Yes
Blowdown timing control (closed cycle)	Yes	Yes
Chlorination by feedback control of chlorine residuals	Yes	Yes
Mechanical cleaning[b]	Yes or no[a]	Yes
Other alternative chemicals[c]	-[c]	-[c]

[a]Not applicable to all plants due to design limitations of existing plants.

[b]Chlorine may still be required.

[c]Requires further field testing and demonstration.

SECTION 3

CURRENT PRACTICES

3.1 CURRENT CHLORINATION PRACTICES

Chlorine is easily the most versatile, the most widely employed, and in most instances, the most economical chemical for control of biofouling in cooling waters. In 1972, 25,909 metric tons (28,565 short tons) of chlorine were used in treating the cooling water for steam electric power plants. This averages to approximately 0.84 metric ton (0.92 short ton) of chlorine per 10 MW of capacity. Presently, chlorine is the overwhelming choice in the United States for treatment of cooling water.

The average chlorine residual employed in cooling water systems is 0.5 to 1.0 mg/l (ppm), which will control most microorganisms.[4] However, to be effective, the chlorine must exist as free available chlorine (HOCl) and not as combined chlorine (chloramines or organic chloramines). The combined chlorine is less efficient and slower in providing biological control in high-volume cooling systems than is free available chlorine.

Herein lies the difficulty. While chlorination is usually a satisfactory method overall for control of bio-fouling, biological growths will gradually build up even when a free chlorine residual is maintained. In such cases, it is necessary either to increase the chlorine shock treatment time or the free chlorine residual, or to use another bio-fouling control agent. Since liquid chlorine is the cheapest source of chlorine, the shock treatment time of the chlorine and/or the chlorine residual are usually increased. As a result, chlorine residuals have a greater chance of reaching the aquatic environment, in which they are toxic. Additionally, if the cooling water has a high chlorine demand, chloramines, which are considered as toxic as free chlorine, reach the aquatic environment.

While some of the free available chlorine is claimed to be aerated from the cooling water in passing over a tower or spray pond, it has been shown that the amount of free available chlorine is reduced by sunlight but not by volatilization. Unless rigid control of chlorine residuals is maintained, free available chlorine can reach the aquatic environment through either a closed or a once-through system.

The chloramines that are formed from water with a high chlorine demand may also be discharged to the aquatic environment. The higher chloramines (dichloramine and nitrogen trichloride) can be removed by aeration. Monochloramine, the most predominant species, is not subject to consequential losses by aeration. Thus, it is discharged to the aquatic environment where it is toxic to marine life.

Current chlorination practices are discussed briefly in this section in order to provide a guideline or data base for proposed alternatives, which will be discussed in the next section.

3.1.1 Once-Through Cooling with Marine Waters[7]

Bio-fouling of marine cooling water circuits is controlled by two simultaneous "types" of chlorination: continuous and intermittent. Continuous, low-level chlorination is used to control the hard-shelled organisms. Intermittent chlorination is used to control the "soft forms" and is usually applied ahead of the bar racks. Gaseous chlorine is introduced in continuous chlorination to give a free residual chlorine of 0.25 to 0.50 mg/l (ppm) at the condenser tailpipes. In intermittent chlorination, which is universal, gaseous chlorine is introduced to give 1.0 mg/l (ppm) free residual chlorine at the end of 1 hour contact time.

Clean seawater has a 10-minute chlorine demand of approximately 1.5 mg/l (ppm). Average seawater has a chlorine demand of 2 to 3 mg/l (ppm). This value is somewhat higher if the seawater is contaminated with sewage.

Continuous chlorination is usually terminated when the water temperature drops below 4°C (40°F). In the latitudes corresponding to upper New England and the far Pacific Northwest, chlorination is discontinued on the average from November 15 to June 10; in the latitudes of southern New England--New York City--northern New Jersey area, the average is December 15 to April 1. The bio-fouling problem is continuous and serious in the South Atlantic and Gulf coastal waters because the temperature there remains above 4°C (40°F), and the marine fouling organisms grow the year around.

3.1.2 Closed-Cycle Cooling Using Cooling Towers with Marine Waters for Makeup[7,8]

Experience with recirculating salt water systems is limited. Bio-fouling is usually controlled by continuous, low-level chlorination of the makeup water and standard intermittent chlorination of

---

[7]White, G. C. Handbook of Chlorination. Van Nostrand Reinhold Company, New York, New York, 1972.

[8]Nester, D. M. Saltwater Cooling Tower. Chemical Engineering Progress. 67(7):49-51, 1971.

the recirculating water as in the case of the once-through cooling with marine waters. The total amount of chlorine used in intermittent chlorination of recirculating salt water will be less than that used for a recirculating fresh-water system.

It has been suggested that the makeup water to a salt-water cooling tower should be chlorinated continuously to produce a total residual chlorine level of 0.1 to 0.2 mg/l (ppm). However, it has been reported[8] that free residual chlorine levels as high as 1 to 2 mg/l(ppm) were not effective against all forms of marine life in salt-water cooling towers.

3.1.3 Once-Through Cooling with Fresh Waters[4,7,9]

Data based on experience with existing facilities indicates that the average chlorine treatment for once-through, fresh-water cooling circuits is from two to three cycles per day. The duration of the cycle is 30 minutes to 60 minutes to achieve a 0.5 mg/l (ppm) free chlorine residual in the condenser tailpipes. In warm climates, the chlorine cycle frequency is constant (three times per day). In cold climates, the frequency is two cycles per day in the winter and three cycles per day in the summer.[7] A treatment duration of between 5 minutes and 2 hours in also reported.[4]

In the newer systems, chlorination is conducted over a period of 15 minutes to 30 minutes to produce a residual of 1 mg/l (ppm) or more at the condenser inlet. Four 30-minute periods a day is not an ususual program. Dosage is controlled by maintaining a residual level at the condenser tailpipes of about 0.5 mg/l (ppm).

Operating data on six typical powerplant chlorination once-through cooling systems was reported as follows: 1.52 to 7.00 mg/l (ppm) chlorine dose gave 0.03 to 1.20 mg/l (ppm) free chlorine and 0.82 to 2.20 mg/l (ppm) total chlorine in the discharge and 0.00 to 0.70 mg/l (ppm) free chlorine and 0.10 to 1.20 mg/l (ppm) total chlorine in the effluent. Chlorine treatments varied from one to five times a day for 20 minutes to 2 hours.[9]

3.1.4 Closed-Cycle Cooling Using Cooling Towers with Fresh Water for Makeup[4,7]

Data gathered on existing facilities indicates that the average fresh-water powerplant cooling tower system uses two treatments per day, each treatment being approximately 10 minutes longer than the turnover time with the chlorine feed adjusted to produce a free residual chlorine level of 0.5 mg/l (ppm) in the cooling water returned to the top of the tower (or at the condenser tailpipes). For most cooling systems, two chlorination cycles per day

---

[9]Baker, R., and S. Cole. Residual Chlorine: Something New to Worry About. Industrial Water Engineering, March/April, 1974.

is adequate. In some cases, three cycles per day may be required depending on the ambient temperatures and water quality.

Experience has dictated that the chlorination cycle in closed systems with cooling towers should be at least long enough for one complete turnover. The turnover times for the various common tower designs differ so that each cycle has to be tailored to the specific turnover time.

Some companies believe that the chlorine dose should be sufficient to produce a 1.0 mg/l (ppm) free residual chlorine going to the top of the tower. This residual may dissipate in 1 to 4 hours depending on the tower design. Generally these power companies chlorinate once daily until a free residual of 1 mg/l (ppm) of chlorine is maintained for 4 hours in the cooling water returned to the top of the tower.

Although intermittent chlorination is the most common, several power companies use continuous chlorination. This is based on the premise that a continuous low level of chlorine residual in the system is as effective as an intermittent high level. The free residual chlorine levels used in the continuous chlorination of closed systems ranges from 0.30 to 0.5 mg/l (ppm) at the top of the tower.

3.2 TYPES OF COOLING SYSTEMS AND SCHEMATIC FLOW DIAGRAMS[10]

Steam electric powerplants, using either nuclear or fossil fuel, rely on cooling systems to discharge the vast amounts of waste heat released from condensing steam. On the average, more than one-half of the heat input is discharged to the cooling water in the condensing process (33% of the heat input goes to electricity, and the remainder goes to the stack and within the plant). The heat added to the water must then be dissipated by some cooling method. Table 3 shows the extent to which various types of cooling were used by the 695 plants in the United States in 1972.[10]

As indicated in the table, the majority of the plants providing the major share of steam-electric capacity employed once-through cooling using either fresh or saline water. However, there is an increasing trend away from once-through cooling toward the use of cooling ponds, cooling towers, and combined systems. Essentially all towers were of the evaporative type, and little use has been made of nonevaporative (dry) cooling towers.

The total average withdrawal rates for cooling purposes in 1972 were reported to be:[10]

---

[10]Steam-Electric Plant Air and Water Quality Control Data. Summary Reports, Federal Power Commission, FPC-S-246, March 1975. 170 pp. and FPC-S-233, July 1973. 165 pp.

TABLE 3. USE OF VARIOUS TYPES OF COOLING[10]

Type of cooling	Percent of total number of plants				Percent of total installed capacity			
	1969	1970	1971	1972	1969	1970	1971	1972
Once-through, fresh	49.8	49.4	48.1	47.2	50.5	50.1	47.7	45.4
Once-through, saline	18.9	18.5	18.1	17.3	23.5	22.8	21.5	20.9
Cooling ponds	5.4	5.7	6.0	6.3	5.9	6.7	7.3	8.0
Cooling towers	17.2	17.5	18.1	18.6	10.9	11.2	12.9	13.4
Combined systems	8.7	8.9	9.7	10.6	9.2	9.2	10.6	12.3
TOTAL	100.0	100.0	100.0	100.0	100.0	100.0	100.0	100.0

Fresh water: 5,170 m^3/s (182,558 cfs)
Saline water: 2,130 m^3/s (75,136 cfs)

The freshwater withdrawal rate is equivalent to about 10% of the average annual runoff of all streams in the continental United States. The freshwater consumption rate (due to evaporation) is estimated at 1.56% of the withdrawal rate, 80.5 m^3/s (2,843 cfs) in 1972.

Schematic diagrams using nuclear and fossil-fuel energy of steam-electric powerplants are shown in Figure 1. Typical condensers (heat exchangers) contain from 5,000 tubes to 50,000 tubes 2.2 cm (7/8 in.) or 2.54 cm (1 in.) O.D. by 6 meters to 18 meters (20 feet to 60 feet) long. Tube material may be stainless steel or brass alloys, such as admiralty brass, aluminum brass, aluminum bronze, arsenical copper, 90/10 or 70/30 cupro-nickel. The tubes may be arranged in one housing or shell or, because of size, may be arranged in from two shells to six shells for very large units. In the larger units, each shell may be considered as a condenser.

Steam exhausted from the turbine flows and condenses around the tubes, while cooling water flows through the tubes extracting heat from the tube walls which interface with steam. The overall cleanliness of the tube surfaces is critically important to the efficiency of the condenser and, hence, to the efficiency of the powerplant. Waterside resistance (consisting of laminar liquid film and fouling of tube walls) accounts for most of the total resistance to the heat transfer of a tube.

Powerplant cooling-water systems are broadly divided into two main types--once-through and recirculating--using either fresh waters or marine waters. In the once-through system, cooling water makes one pass through the heat exchanger. No evaporation takes place, and water temperature is increased by about 11°C (20°F). The present trend is toward the more complex recirculating type, a

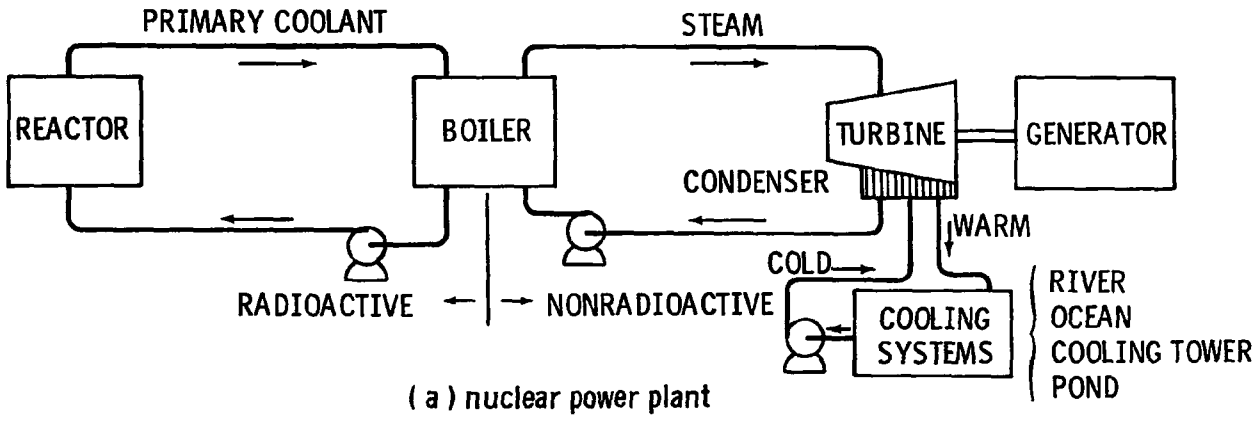

(a) nuclear power plant

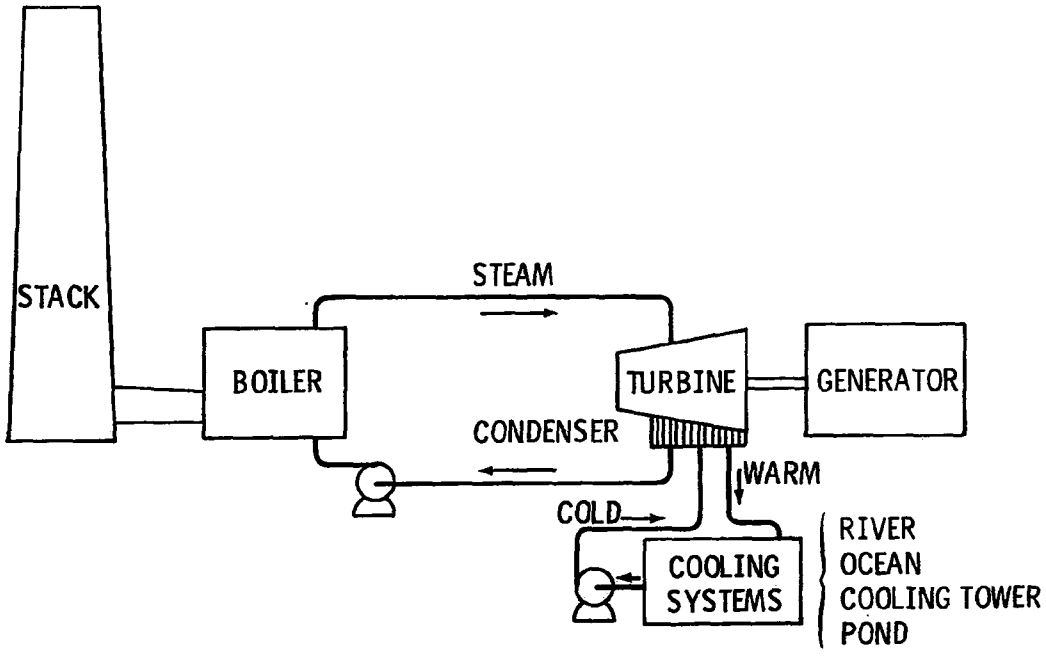

(b) fossil fuel power plant

Figure 1. Schematic of nuclear and fossil fuel powerplants.

cooling tower or spray pond cools the water by evaporation. The only water losses are from evaporation, windage, and blowdown. A closed-recirculating (dry) system avoids water losses by using an air-cooled radiator.

Figures 2-a, 2-b, 2-c, and 2-d show a wet-type cooling water concept of a large, steam, power-generating station utilizing cooling towers as a helper system. Such a system can be valved so as to provide the following modes of operation: (a) open cycle (Figure 2-a), (b) helper cycle (Figure 2-b), (c) partial recirculation (Figure 2-c), (d) closed cycle (Figure 2-d).

A variety of cooling systems (closed or recirculating) are being used by modern powerplants as listed in Table 4.

TABLE 4. CLOSED OR RECIRCULATING COOLING SYSTEMS

1.	Cooling ponds or lakes
2.	Spray-augmented ponds
3.	Canals with powered spray modules
4.	Rotating spray system
5.	Wet tower, natural draft, crossflow
6.	Wet tower, natural draft, counterflow
7.	Wet tower, mechanical forced draft
8.	Wet tower, mechanical induced draft, crossflow
9.	Wet tower, mechanical induced draft, counterflow
10.	Dry tower, direct
11.	Dry tower, indirect
12.	Combined wet-dry mechanical draft tower

3.3 SEASONAL OPERATING VARIABLES[4,7,11]

Cooling-water temperature exerts a considerable influence on activity of microbiological growth and the chlorine dose needed to achieve a certain level of disinfection.

The effectiveness of chlorine in disinfecting certain cold natural waters (e.g., in the Pacific Northwest and Alaska) is lower. Below water temperatures of between 8°C and 12°C, the disinfecting action of chlorine is dependent only on the diffusion of chlorine through the cell walls of the mircoorganism since normal metabolic pathways are generally considered to be closed. The empirical temperature expression (for the rates of diffusion/or chemical reaction) is useful for relating temperature with disinfection rate

[11]Reid, L. C., Jr., and D. A. Carlson. Chlorine Disinfection of Low Temperature Waters. Journal of the Environmental Engineering Division, Proceedings of the American Society of Civil Engineers. 100(EE2):339-351, April 1974.

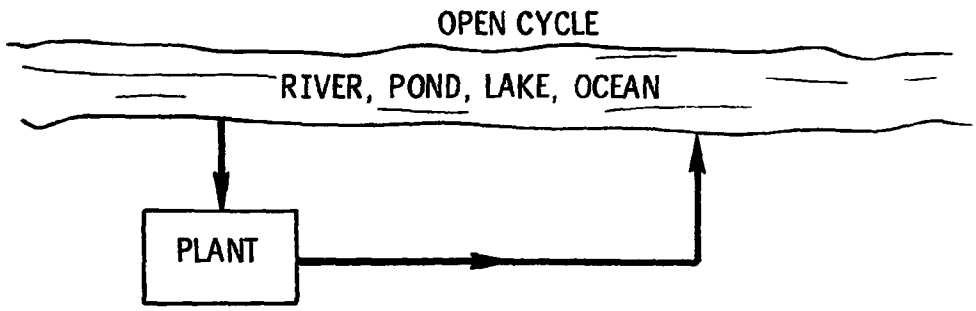

(a) open cycle straight-through cooling water system.

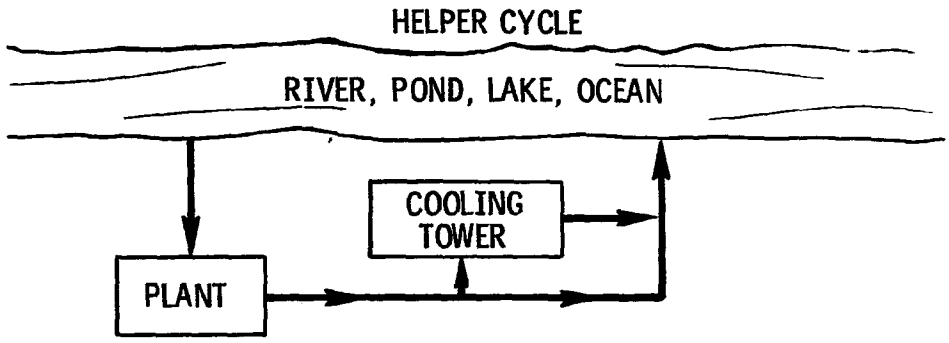

(b) helper cycle straight-through cooling water system.

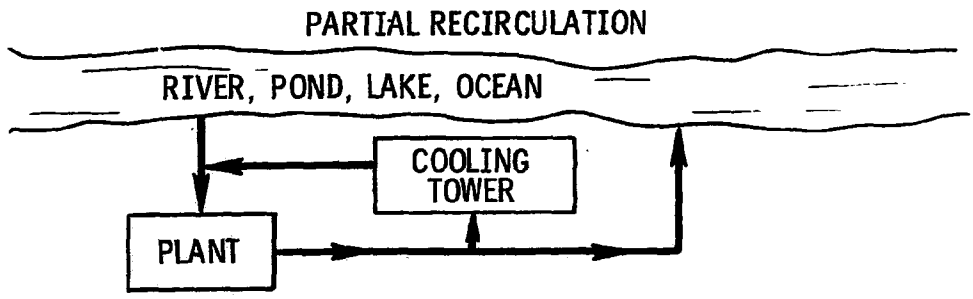

(c) partial recirculation of straight-through cooling water system.

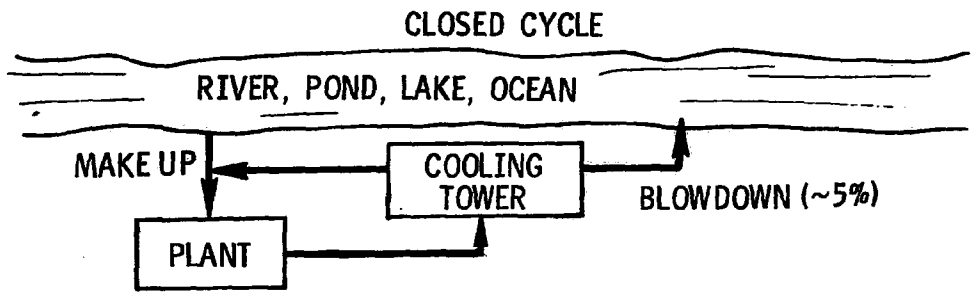

(d) closed cycle of cooling water system.

Figure 2. Schematic flow diagram of wet cooling system (fresh water or marine water).

$$k_T = k_{20}\beta^{(T-20)} \quad (1)$$

where k_T is the rate constant for temperature T, k_{20} is the rate constant for 20°C, and β is an impirical constant.

It should be pointed out that the magnitude of bio-fouling is a primary function of both chlorine demand and water temperature. The chlorine demand varies widely throughout the United States. It can be as low as 2 mg/l (ppm) and as high as 15 mg/l (15 ppm). In warm climates, the chlorine cycle frequency remains constant the year around, but in cold climates, the frequency is two cycles per day in the winter and three in the summer for fresh water. The duration of the cycle is from 30 minutes to 60 minutes, depending upon the organism resistance. For a waterway that freezes over in the winter, the chlorine demand will rise, owing to the buildup of ammonia in the water. The ice cover prevents the aeration of ammonia. For example, at Duluth, Minnesota, the St. Louis River has a chlorine demand of 3 to 4 mg/l (ppm) in the summer and 15 mg/l (ppm) in the winter. It should also be emphasized that while algae grow slowly in wintertime in these areas, the slimes on the condenser tube do grow, and it is only this growth that is of any concern in the chlorination program.

Artificial lakes also undergo a chlorine demand change with time. In the initial stages, these lakes may have chlorine demands as high as 6 to 10 mg/l (ppm), tapering off to 2 or 3 mg/l (ppm) after 4 or 5 years.

A clean seawater with a chlorine demand of only 1.5 mg/l (ppm) will support the growth of mussels, bryozoa, barnacles, sponges, and slimes so long as the temperature is above 4°C (40°F). For control of hard-shelled organisms, continuous low-level [0.25 to 0.5 mg/l (ppm)] chlorination should begin during the growing season when the water temperature rises above 4°C (40°F). The soft-form organisms can be controlled by intermittent chlorination every 8 hours to a 1.0 mg/l (ppm) residual at the end of 1 hour contact time.

3.4 CHLORINE RESIDUAL EMISSIONS

Consideration must be given to the possible environmental effects of the chlorine residual in the discharge from condensers or blowdown from tower systems in the receiving streams. There is considerable doubt as to how far downstream the residual will persist since it will not only dissipate by dilution, but it will also be subject to the high chlorine demands usually found in the receiving waters, such as river or lake bottoms. The most effective method is to arrange the piping system so that condensers can be chlorinated individually and so that each condenser discharge will be diluted by the others not undergoing the chlorination cycle.

At those powerplants where once-through cooling is used (Figure 3), chlorine is usually added to the cool water withdrawn from an ocean, lake, river, estuary, or ground water source to minimize biological fouling. Chlorine is applied one or more times a day over a period long enough to produce a residual chlorine of about 1 mg/l (ppm) or more at the condenser inlet. Frequency of the dose and duration of the chlorination cycle is variable, depending on water quality and temperature. Dosage is controlled by maintaining a residual level at the condenser outlet at a level of about 0.5 mg/l (ppm).

The chlorine demand of cooling waters varies from site to site and depends upon the source of cooling water and ambient conditions. It can be as low as 2 mg/l (ppm) and as high as 15 mg/l (ppm).[7] The popular definition of the term "chlorine demand" is that it is the difference between dose and residual. To have meaning, it must be properly expressed in terms of type of residual, temperature, pH, and time of contact between dosing and residual measurement. It is the time element that is so frequently overlooked and that poses a problem in very short, time-of-contact situations in once-through condenser cooling systems. In freshwater circuits (Figure 3-b), it is impossible to carry free chlorine through a condenser by putting the points of chlorine application as close to the condenser water box as possible. Less chlorine is used due to short residence time (30 seconds to 1 minute) which is insufficient for the breakpoint reaction to take place between the chlorine and the ammonia or other organic compounds.

Often, sampling and accurate residual determination may consume much more time than actual contact time. The time interval between application and sampling may be in the range of 20 seconds to 30 seconds when chlorine is applied just ahead of the condensers (Figure 3-b) to 3 minutes to 5 minutes when it is applied at the intake. This error probably accounts for many powerplants using a larger dosage than necessary in their cooling water.

Substantial savings in chlorine dosage can be achieved by application as near the condenser inlet as possible while maintaining control levels necessary to maintain cleanliness of condensers. This in turn results in residual chlorine consisting to some major degree of hypochlorous acid, a form most easily reduced to chloride by demand of water from adjacent condenser units. For the past 25 years, with few exceptions, condenser cooling water has been chlorinated at the intake structure (instead of condenser inlet) without taking advantage of dilution effects in the discharge canal(s). Generally, new condensers are served by 2 to 6 cooling water flows, with the chlorine control system designed to treat the unit flows one at a time in sequence. Thus, the chlorine residual in the discharged water will be diluted by a factor of 1, 3, or 5 depending on the system design.

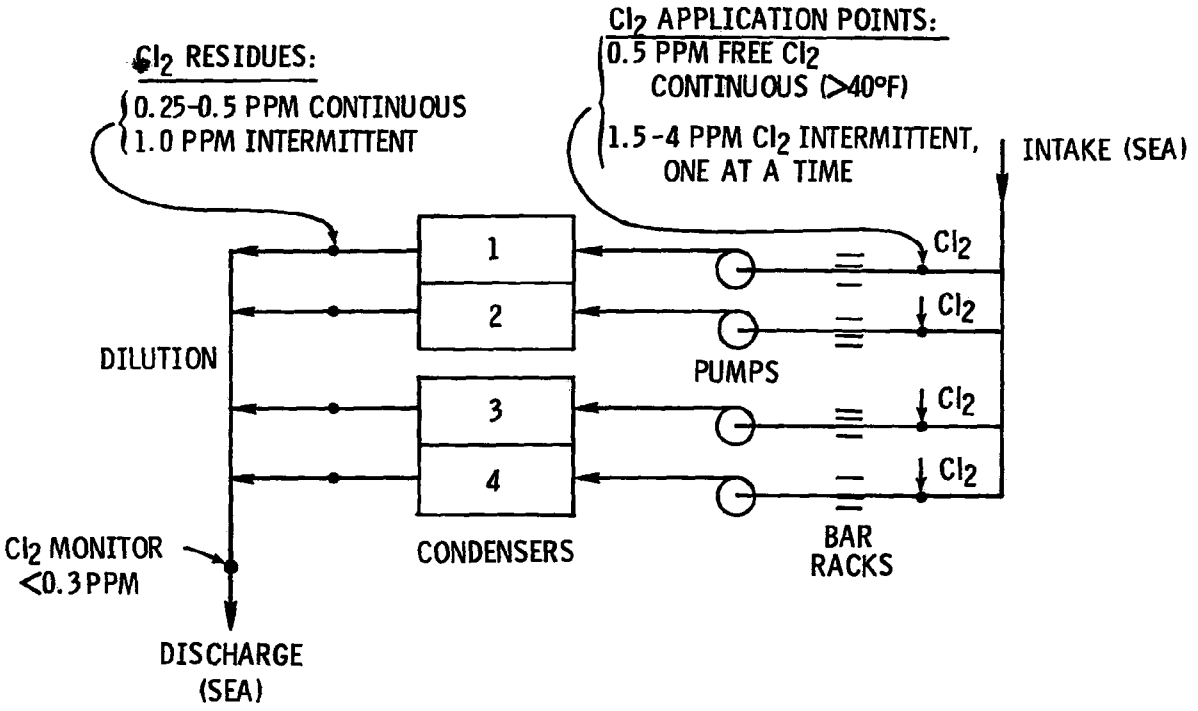

(a) once-through, marine water

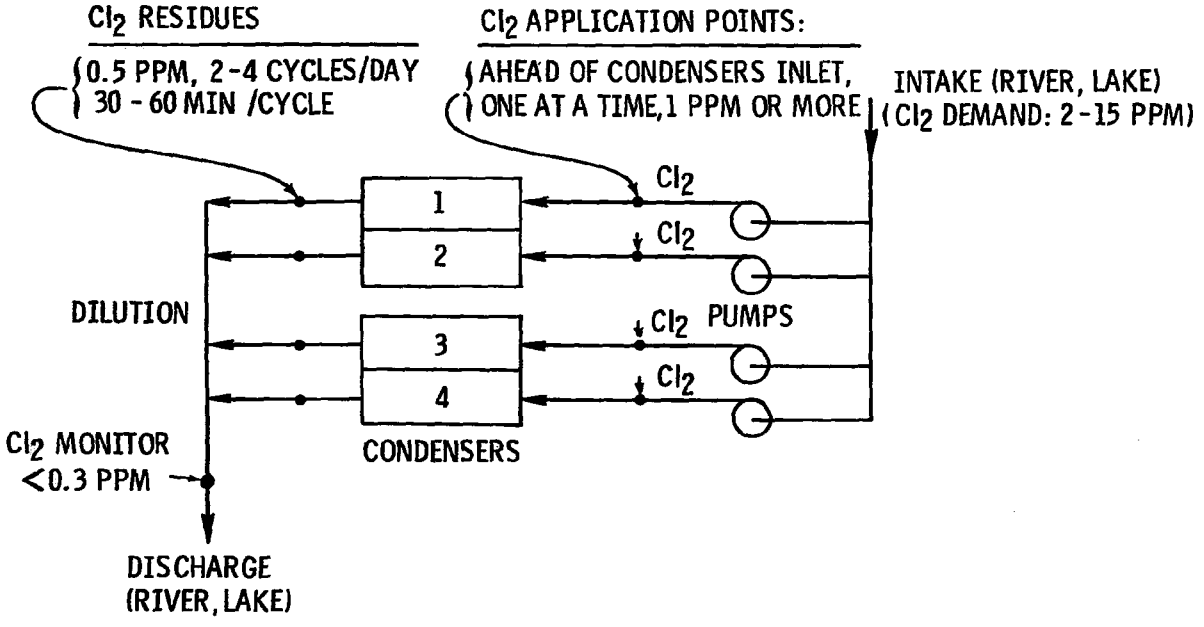

(b) once-through, fresh water

Figure 3. Typical points of chlorine application and discharge for once-through (or open) cooling system.

The average chlorine treatment for freshwater circuits in powerplants is from 2 to 4 cycles per day. The duration of the cycle is from 30 to 60 minutes depending on the organisms's resistance. However, saltwater circuits must be chlorinated ahead of the bar racks to prevent fouling from marine organisms (see Figure 7-a). The hard-shelled, more resistant marine organisms are most effectively controlled by continuous, low-level chlorination [0.25 to 0.5 mg/l (ppm) free chlorine residue at the condenser tailpipes] during the growing season when the seawater temperature rises above 4°C (40°F). The soft forms are controlled by intermittent chlorination of a 1.0 mg/l (ppm) residual at the end of 1 hour of contact time.

The average seawater has 10 minutes chlorine demand of about 1.5 to 3 mg/l (ppm); it is relatively clean compared to average freshwater.

The current trend in the United States is away from large, open, once-through cooling-water systems (e.g., Figure 3) except those involving manmade lakes built for that purpose. With closed, recirculating evaporative cooling systems (e.g., Figure 4), the dissolved solids become increasingly concentrated and thus require continuous blowdown. When operating as a closed cycle, both sides of the condenser could be chlorinated simultaneously without fear of too high a residual reaching the receiving waters. The only chlorine going to the receiving water would be the residual in the blowdown. The blowdown might be 5% of the recirculating rate. In a tower circuit, a maximum 1.0 mg/l (ppm) free chlorine is the upper limit because of possible wood deterioration at higher levels over prolonged periods of time. The residual may disappear in less than one hour on a bright, sunny day with an induced draft tower. In some hyperbolic, natural draft tower systems, it may require up to 4 hours before a 1.0 mg/l (ppm) free residual will deteriorate to 0.1 mg/l (ppm) as the result of the lack of sunlight in this tower design. Figure 5 shows a typical total residual chlorine in cooling-tower blowdown for the unit which is chlorinated four times a day. At peak values, as much as 65% of the total residual chlorine was free available chlorine, declining gradually and disappearing when the total dropped to approximately 0.2 mg/l. The factors involved in the decay rate of the recirculated cooling water after the chlorinated cycle is ended are:

- Blowdown
- Evaporation loss
- Light catalyzed decomposition of free chlorine
- Chlorine demand of the system
- Recirculation rate
- Chlorine demand of the makeup
- Atmospheric contamination
- Decomposition products of basin sediment deposits

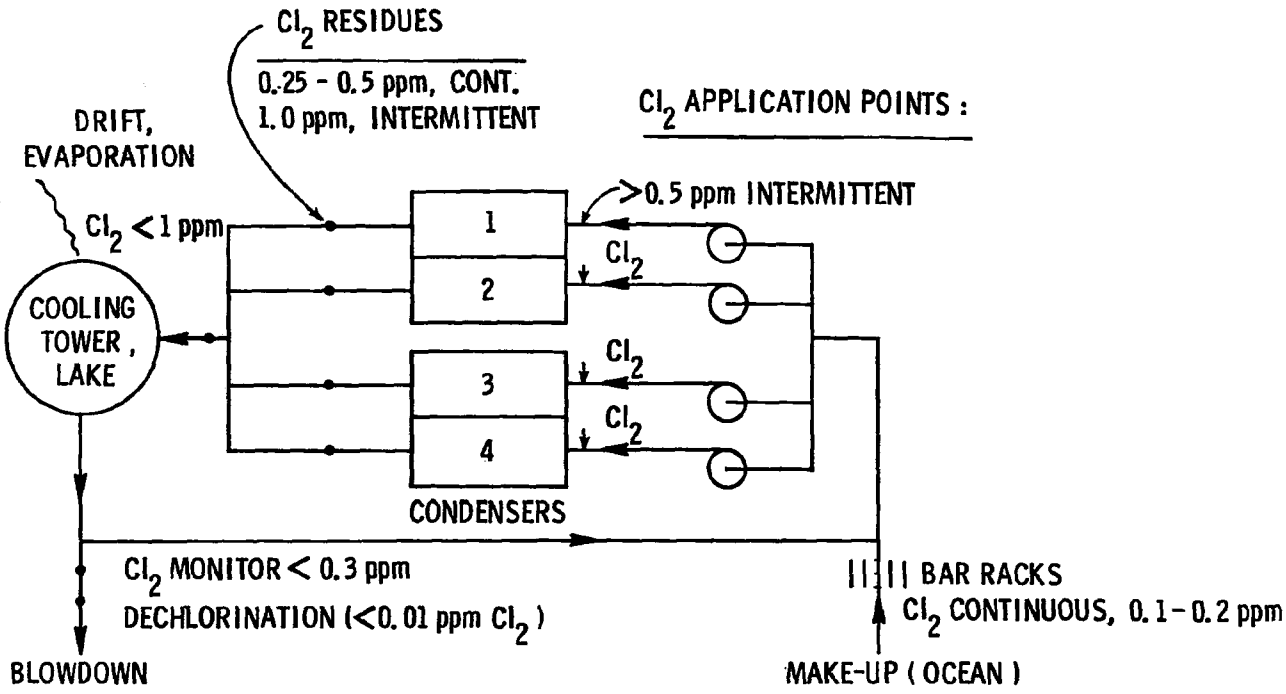

(a) recirculating, marine water

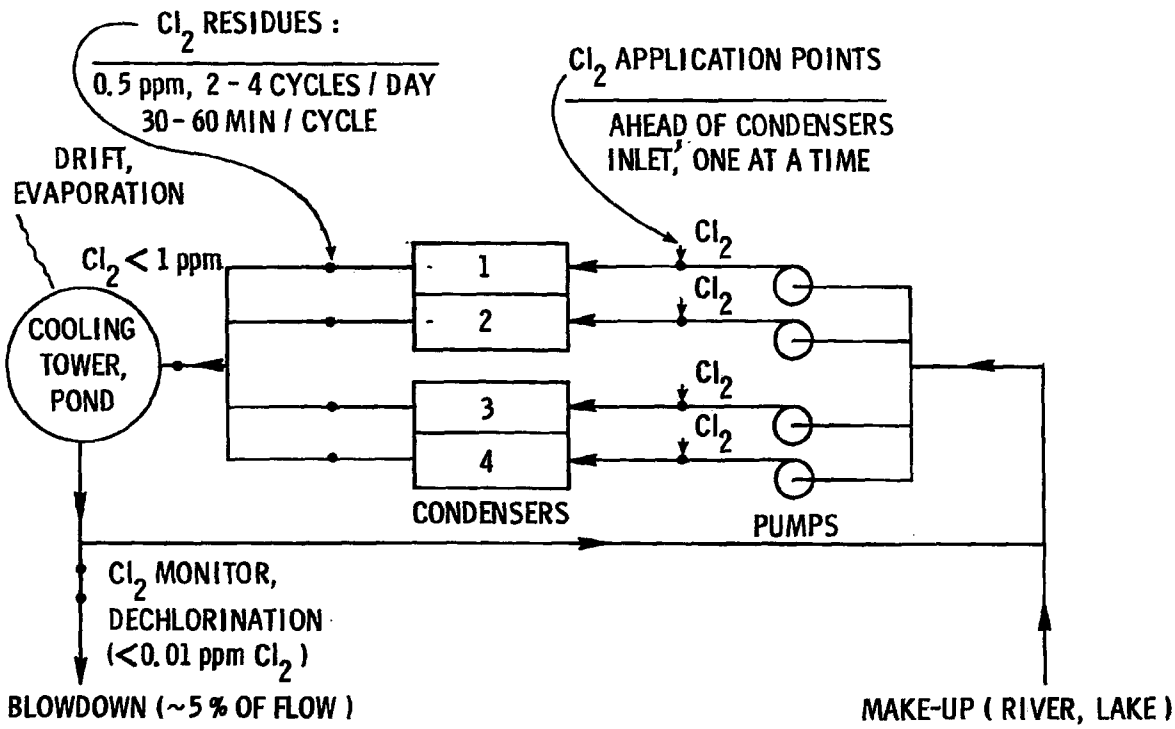

(b) recirculating, fresh water

Figure 4. Typical points of chlorine application and discharge for a recirculation (or closed) cooling system.

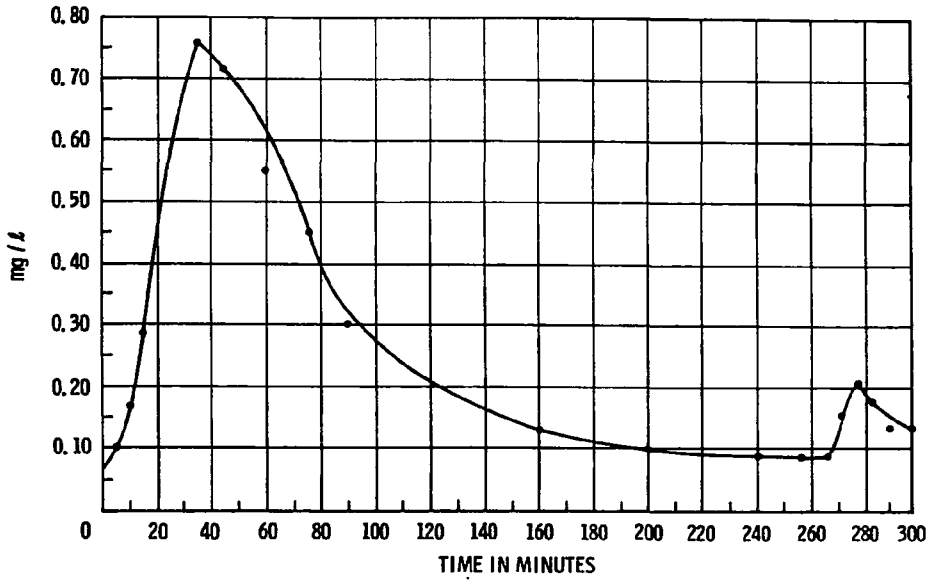

Figure 5. Concentration of total residual chlorine in cooling-tower blowdown versus time.[4]

One of these, evaporative losses, has been cited as a possible air pollution problem. The volatility of chloramines has long been known to exceed that of free available chlorine. This is particularly true of nitrogen trichloride and, to a slightly lesser degree, dichloramine. In fact, aeration is frequently used to remove these compounds following breakpoing chlorination. The most predominant species, monochloramine, is much less subject to loss. Free available chlorine is subject to reduction by sunlight but not by volatilization. Thus it would appear that evaporative losses of all combined chlorine species, which could be expected to be nearly all monochloramines in a cooling tower and subsequent air contamination, are not factors of consequence.

If the blowdown is returned directly to the receiving water, there are several alternatives.

- Close the blowdown valve during the chlorination cycles (i.e., during the period of high, total-residual chlorine as shown in Figure 5) and set suitable time-delay controls to match the time-residual characteristics of the system.

- Practice controlled chemical dechlorination of the blowdown in synchronism with the chlorination program controls and with time delay.

- Practice split-stream chlorination (splitting the condenser flow into separate streams which are chlorinated one at a time).

- Mix the blowdown with another stream which has a high chlorine demand.

Dechlorination of residual chlorine in cooling-tower blowdown with automatic addition of sodium bisulfite at the discharge channel is currently being planned at new powerplants with a sensitivity of about 0.01 mg/l (ppm) residual chlorine in the discharge stream.

It should be emphasized that the reasons for chlorinating a cooling tower circuit are precisely the same as those for a once-through cooling system: to control slime growths in the condenser tubes, not to control algae growth on the tower structure. Algae (which are very resistant organisms) are of significance in cooling-water treatment. Few algae can be controlled with less than 1.0 mg/l (ppm) free chlorine residual and 1 to 2 hours contact time when treated intermittently. The algae growths are subject to change throughout the year (season to season). The length of the chlorination cycle should be at least long enough for one complete turnover of cooling water. Present turnover rates in both the induced draft and hyperbolic tower system are on the order of 15 minutes to 20 minutes.

Other technologies potentially available for recirculating cooling-water systems are split-stream chlorination, blowdown retention, and intermittent discharge programmed with intermittent chlorination.

3.5 POINTS OF EMISSION

Points of emission of residual chlorine depend on the cooling system employed. In recirculating cooling systems (Figure 4), emissions are mainly from blowdown and wind drift. Water drift losses from cooling towers and spray are a function of wind speed and droplet size. Depending on the cooling method employed, drift losses can range from as low as 0.002% of the cooling flow ("salt-water" cooling towers) to as high as 5% of the cooling flow (spray pond). Drift loss is an important consideration when siting a powerplant in an estuarine environment. In addition to residual chlorine carried by mist droplets, the impact of salt deposition from brackish drift loss on the land surrounding a powerplant site can be quite significant.

The volatility of chloramines has long been known to exceed that of free available chlorine. This is particularly true of nitrogen trichloride and, to a slightly lesser degree, dichloramine. The most predominant species, monochloramine, is much less volatile than either of these compounds and is therefore much less subject to loss. It would appear that evaporative losses of combined chlorine, which could be expected to be nearly all monochloramine in a cooling tower, and the possible resulting air contamination are not significant. Free available chlorine is subject to reduction by sunlight but not by volatilization.[4]

Blowdown from cooling towers is taken from the tower basin ahead of the point of chlorine application, but this is not the case for many existing cooling tower systems. If blowdown is used to sluice ash, the chlorine residual is lost in the ash pond. Similarly, a holding pond could accomplish the same result if the time of retention is long enough. At the very least, a holding pond smooths out the peak levels of residual chlorine and reduces the level to one which can be easily eliminated by controlled chemical dechlorination. As discussed in the previous section, if blowdown is returned directly to the receiving body of water, there are several alternatives to minimize the direct discharge of residual chlorine.

In once-through cooling systems (Figure 3), any total residual chlorine is discharged directly to a receiving body of water, such as a river, lake, or ocean. To minimize the level of residual chlorine in the effluent, it is logical to select points of chlorine application and design the control system to take maximum advantage of dilution effects in discharge canals. Substantial reduction of total chlorine residual can be achieved by chlorine application as near the condenser water-box inlet as possible. The short time of contact minimizes both the chlorine dose required and the level of combined chlorine residual in the water as it passes through the condenser. Also, since a large percentage of the total chlorine residual in the condenser during each treatment is free HOCl, the duration of each treatment can also be reduced. Combined with the chlorine control system designed to treat the condenser flows one at a time in sequence, the substantial reduction on the total chlorine residual can be achieved in newer powerplants using a once-through cooling system. For a marine-water, once-through cooling system, in addition to cyclic shock treatment of chlorine, the continuous low level of chlorination is needed for the control of hard-shelled organisms when the water temperature rises above 4°C (40°F), resulting in continuous emissions of low-level, total chlorine residual. Removal of low-level chlorine residual by chemical treatment (e.g., dechlorination) is available but is not generally practical because of the additional costs involved to treat the large volumes of water involved in a once-through system.

It should be emphasized that the discharge of cooling water is often combined with other sources of wastewaters (e.g., boiler blowdown, ash-pond overflow, etc.) before being discharged to the receiving body of water, such as a river. Typical examples are shown in Figure 6 for a simplified hypothetical case for a recirculating cooling-water system. When the cooling-tower blowdown water-flow rate is comparable to other sources of wastewaters, the concentration of the residual chlorine emission in the final discharge stream may be quite different from that of cooling-water blowdown.

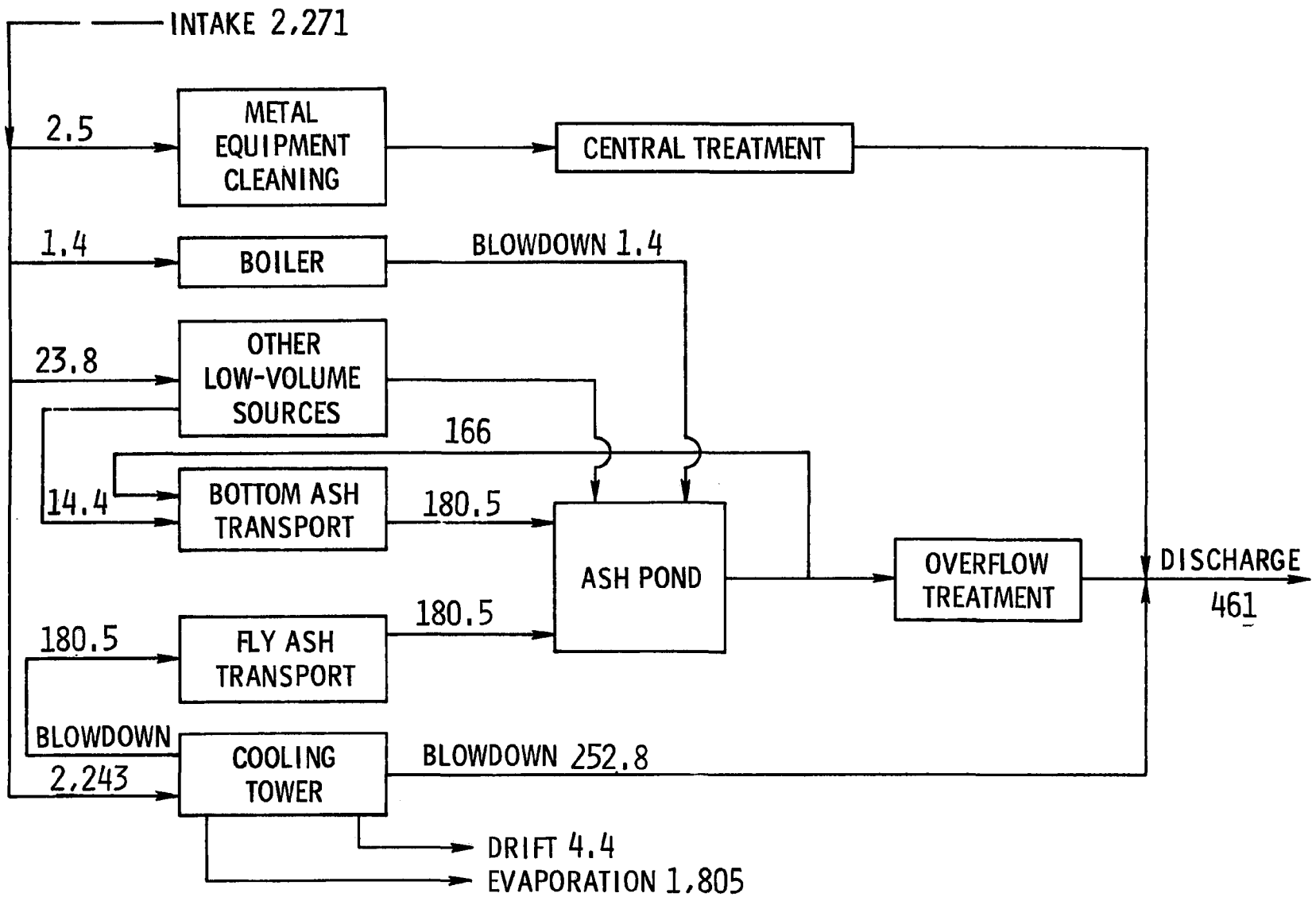

Figure 6. Hypothetical 1,000 MW powerplant water flows (600,000 gpm) (flows shown in units of cubic meters/min).

As noted in an earlier section, the total average withdrawal rates of cooling water for the total U.S. steam-electric powerplants (283,411 MW) are 5,170 m^3/s (182,558 cfs) for fresh water and 2,130 m^3/s (75,136 cfs) for saline water in 1972. The reported chlorine additive used for the prevention of biological fouling of condenser tubes is 25,909 metric tons (28,565 short tons) for the same year. To show the pattern of chlorine usage, more detailed breakdowns on the consumption of chlorine for different types of cooling systems are shown in Table 5.[10] (Note: Powerplants with mixed cooling systems are not included.)

TABLE 5. BREAKDOWN ON CHLORINE USAGE FOR DIFFERENT TYPES OF COOLING SYSTEMS (1970)[10]

System	Capacity		Cl_2			Cl_2/MW	
	MW	%	Metric tons	Short tons	%	Metric tons	Short tons
Once-through cooling (fresh)	132,000	54.0	8,980	9,880	42.8	0.068	0.075
Once-through cooling (saline)	57,800	23.7	8,890	9,780	42.3	0.154	0.169
Cooling ponds	14,800	6.1	489	538	2.3	0.033	0.036
Cooling towers	28,000	11.5	1,540	1,690	7.3	0.055	0.060
Combinations	11,500	4.7	1,110	1,220	5.3	0.095	0.105

It is interesting to see (Table 3, 1970) that nearly 70% of the powerplants in the United States use once-through cooling systems. Both freshwater and saline-water systems consume about equal tonnage of chlorine despite the fact that saline-water systems account for only about 30% of once-through systems. On a megawatt basis, a saline-water system consumes 0.150 metric ton (0.167 short ton) Cl_2/MW per year versus 0.068 metric ton (0.075 short ton) Cl_2/MW per year for fresh water. This shows that more than twice the amount of chlorine is consumed for a saline-water system as for a freshwater system with the same electric generating capacity. This is expected from the fact that there is a greater variety of marine organisms (with high-life forms such as mussels and barnacles) which requires continuous, low-level chlorination for control of bio-fouling in seawater. This, in turn, means that there would be more residual chlorine discharged to the receiving body of water for the powerplant using once-through marine water instead of fresh water. However, this does not necessarily imply that the residual chlorine concentration would be higher for marine-water discharge than that of fresh water.

Chlorination programs to achieve no discharge of total residual chlorine from recirculating cooling-water systems have been determined to be not fully demonstrated and therefore cannot be generally applied by 1983.[4]

In view of the current best control technology available, free available chlorine discharges in both recirculating and once-through cooling-water systems are limited to average quantities reflecting a concentration of 0.2 mg/l (ppm) during a maximum of 2 hours per day (aggregate) and a maximum of 0.5 mg/l (ppm). These limits can be achieved by means of available feedback control systems presently in use.

3.6 COST OF CURRENT PRACTICES

The treatment technology for once-through condenser cooling-water systems consists of maintaining the residual chlorine in the effluent below an established limit by controlling the chlorine added to the system. The capital costs involved consist of the cost of a residual chlorine analyzer and feedback controls to adjust the feed rate. The installed cost of a residual chlorine analyzer and control equipment is estimated to be about $5,000 regardless of size of unit (based on 1973 dollars).[4]

Besides the installed cost of chlorination equipment, costs of maintenance, operation, and chemical treatment must be considered. Figure 7 shows the variation in the costs with powerplant capacity and once-through cooling flow.[12] It is interesting to note that the cost of chemical treatment is only a small fraction of the total operation and maintenance costs. Chemical treatment of recirculating cooling-water systems would be less costly, and the pollution potential of residual bisulfite chemicals added would be less significant than with once-through cooling-water systems due to the smaller wastewater volumes requiring treatment.

The average rate of cooling-water use is 0.028 m^3/s to 0.042 m^3/s (1.0 cfs to 1.5 cfs) per MW of installed powerplant capacity.[2,4] Therefore, from Figure 7, annual total operation, maintenance, and chemical cost of a once-through cooling system for a 1,000 MW powerplant in 1971-1972 was approximately $50,000.

The total operating expenses for cooling-water facilities in 1972 for all of the U.S. powerplants were reported[7] to be $35.4 million for operation and maintenance and $7.0 million for chemical additives. Chlorine accounts for most of the chemical additives consumed. Assuming fixed charges of 15% on capital costs of cooling-

---

[12]Daugard, S. J., and T. R. Sundaram. Review of the Engineering Aspects of Powerplant Discharges. Hydronautics, Inc., Laurel, Maryland. Prepared for Maryland Department of Natural Resources, U.S. Environmental Protection Agency, Washington, D. C., NTIS PB 235 783, October 1973. 115 pp.

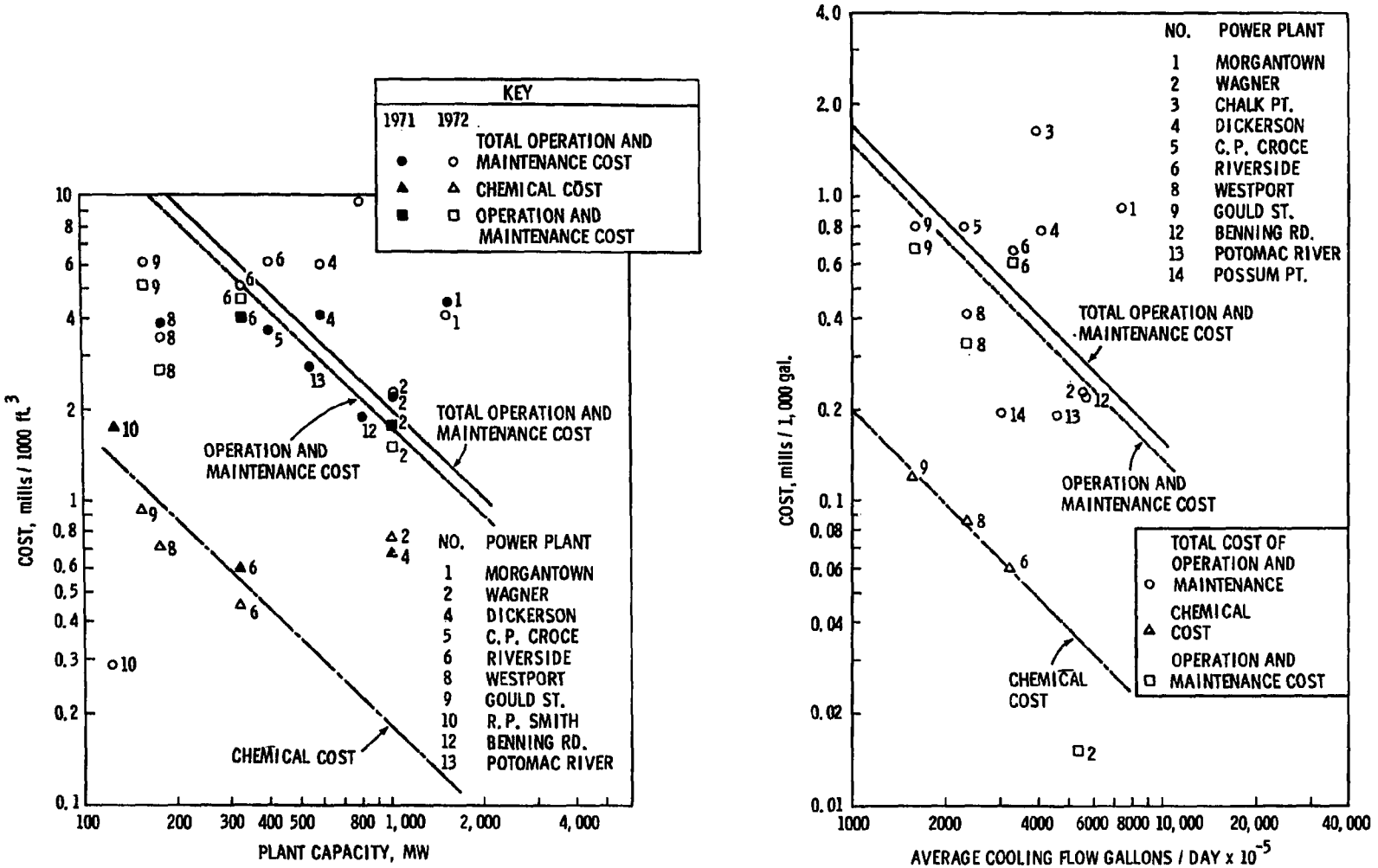

(a) once through cooling system operation and maintenance cost vs. the plant capacity.

(b) total cost of operation and maintenance and chemical additions of a once-through cooling system vs. cooling flow per day.

Figure 7. Costs of operation, maintenance and chemical additions of a once-through cooling system (1972 dollars).[12]

water facilities of $1,336 (1970), the total expenses for the year would amount to $242.8 million. This is equivalent to approximately 0.22 mill per kilowatt hour for the total generation of 1.412 trillion kilowatt hours. Considering the fact that the nation's total steam-electric generating capacity is 309,861 MW in 1972, the average yearly operation and maintenance cost and chemical additives cost for a 1,000 MW powerplant in 1972 are as follows:

Operation and maintenance	$114,000
Chemical additives	22,600
TOTAL	$136,600

This national-average cost reflects all types of cooling systems (once-through fresh, once-through saline, cooling ponds, cooling towers, combined systems), and it is about two and one-half times higher than the cost shown in Figure 6, which represents cost figures for the Maryland region only.

For reference, the unit costs of the various types of cooling systems as reported for 1972 are shown in the following tabulation:[10]

Type of cooling	Capital cost/kW
Once-through, fresh	$5.06
Once-through, saline	5.00
Cooling ponds	9.31
Cooling towers	7.03

SECTION 4

ASSESSMENT OF ALTERNATIVE METHODS

Various chemicals have been used to reduce fouling and restore tube cleanliness. Acid cleaning is limited to once a year or less. Fouling can severely affect condenser performance between cleanings. The use of chlorine is being cut back in many regions by government regulations due to environmental considerations.

4.1 ON-LINE MECHANICAL CLEANING

Equipment for automatic on-line mechanical cleaning of condenser tubes is manufactured primarily by the Amertap Corporation and by the M.A.N. Corporation of West Germany. By far, most of the successful installations in U.S. powerplants have been supplied by Amertap. In principle, each of the two systems maintains condenser-tube cleanliness while in operation by mechanical means rather than chemical means. Some powerplants also use supplemental chlorination together with a mechanical cleaning system. Although chlorination may not be needed for mechanical cleaning of condensers, chlorine or an equivalent biocide is certainly needed to prevent excessive growths on the cooling-tower deck and tower fill for recirculating cooling systems. If the growths are allowed to proliferate on the decks, the distribution orifices may become plugged and cause flooding. Excessive growths on the fill decrease tower efficiency.

4.1.1 Amertap Sponge Ball System[4,13]

The basic principle of the Amertap system is to circulate oversized sponge-rubber balls through the condenser tubes with the cooling water. These balls, after travelling through the length of the tubes, are collected at the discharge piping in a basket arrangement and then repumped continuously to the inlet. This constant rubbing action keeps the walls clean and virtually free from deposits of all types. Thus, suspended solids are kept moving and are not allowed to settle. Bacterial fouling is removed quickly. The number of balls in the system is approximately 10% of the number of tubes in the condenser. Each tube receives a ball on the average of every 5 minutes with a normal circulation time per ball of 20 seconds to 30 seconds.[4] A schematic arrangement of the Amertap system is shown in Figure 8. There are about 2,000 installations of sponge-rubber cleaning systems in Europe, and about 200

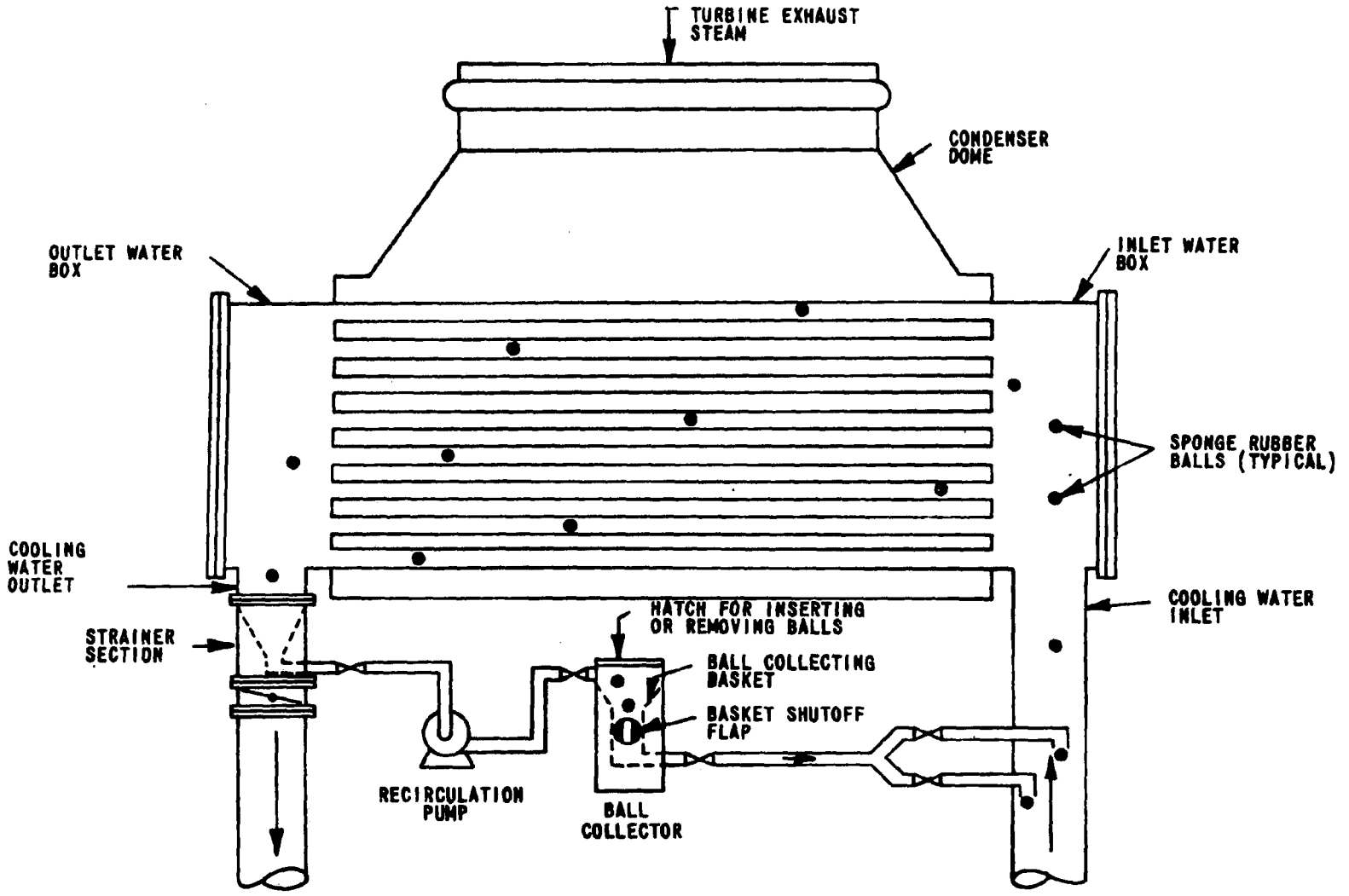

Figure 8. Schematic arrangement of Amertap tube cleaning system.[4]

in the United States. All have achieved a good record of success in maintaining condenser efficiency and reliability.[13]

4.1.2 M.A.N. Brush System

The M.A.N. system for on-line mechanical cleaning uses a brush device about 5 mm long, sized to pass through the condenser tubes intermittently by reversing the flow of condenser cooling water each time. Reversing of cooling water forces the brushes through the tubes to a plastic cage at the opposite end. When the cooling-water flow is returned to the normal direction, the brushes are forced to their normal resting position in the cages at the outlet ends of the tubes. Recycling can be set up automatically for whatever frequency of backwash is desired. Twice daily is normal. The M.A.N. system is reported to be less reliable and tends to become fouled by leaves, twigs, and even an occasional fish. In some cases, severe grooving of tubes was found.[4] A schematic diagram of the reverse flow piping arrangement of the M.A.N. system is shown in Figure 9.

4.1.3 Hot Water Backflush System[7]

Another method which has been tried with varying degrees of success in marine-water cooling systems is periodic backflushing of condensers with hot water. The Southern California Edison Company has incorporated duplicate intakes in several of its coastal plants, so that the intake and discharge canals can be used alternately. Current practice is to reverse the canals every 5 weeks and to raise the water temperature of the discharge water to 49°C (120°F) for 1 hour after reversing the canals. Since mussels are very sensitive to heat, they either die or attempt to move, and in doing so, they are washed out to sea. The heat differential must be at least 28°C (50°F) to be effective. Since heat treatment will not affect slime growths, intermittent chlorination must still be practiced at plants using heat treatment for control of mussel growths. Slime in saltwater sets up corrosion concentration cells rapidly, and this will bore a hole in the condenser tubes very quickly.

4.1.4 Economics of Mechanical Cleaning of Condensers[4]

Comparative capital costs of the Amertap system and the M.A.N. system are shown in Tables 6 and 7. The costs shown are additional costs to those that would be required for conventioal chemical conditioning. The costs are revised from the costs reported for a 675 MW[4] powerplant by applying the following cost factors:

---

[13]Kern, W. I. Continuous Tube Cleaning Improve Performance of Condensers and Heat Exchangers. Chemical Engineering. 83(22):139-144, October 1975.

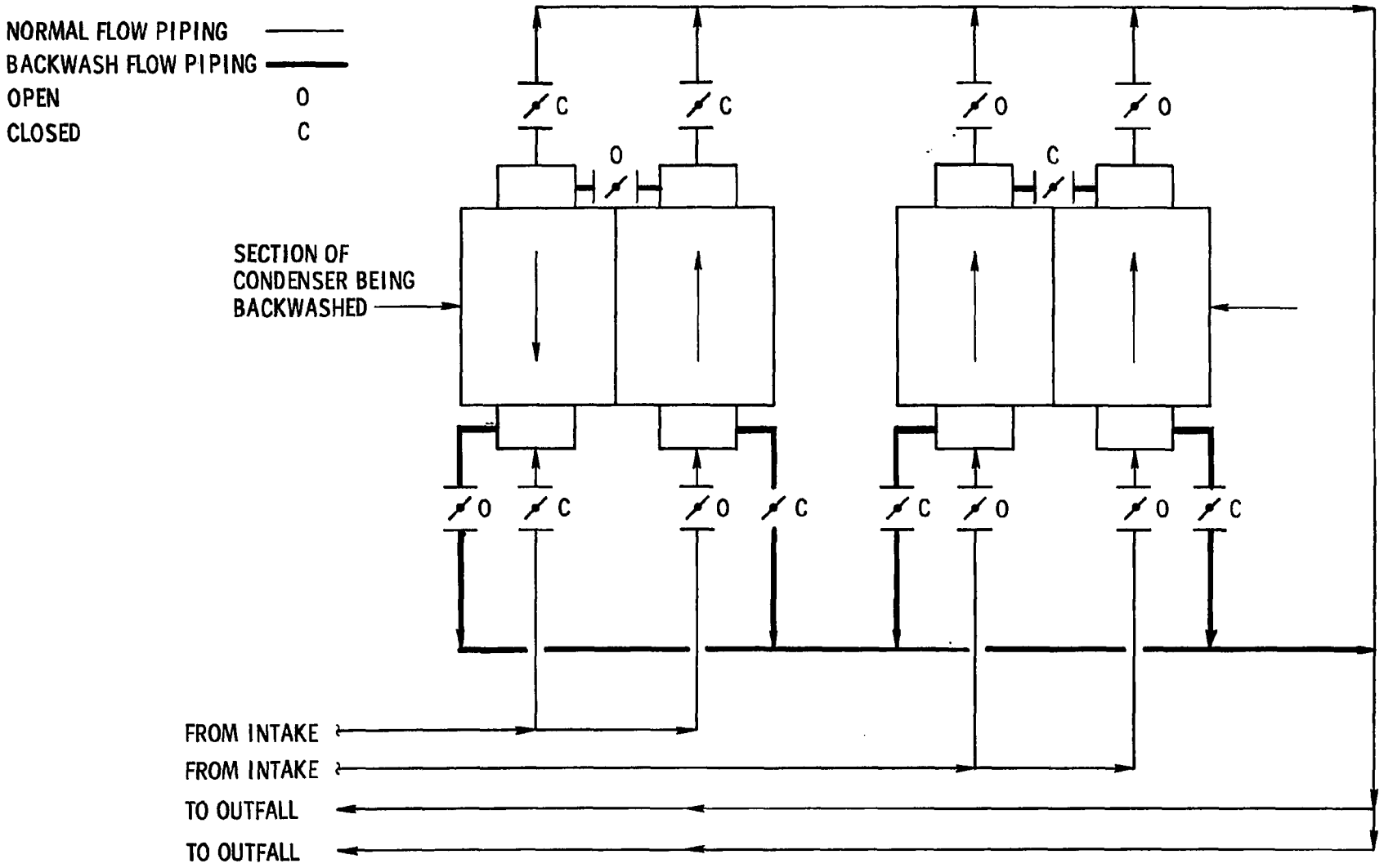

Figure 9. Schematic of M.A.N. system reverse flow piping.[4]

TABLE 6. COMPARATIVE CAPITAL COSTS[a] OF CONDENSER CLEANING SYSTEMS[4]

	Amertap system, $	M.A.N. system, $
M.A.N. system, baskets and brushes	-	95,000
Amertap system	210,000	
Tubing	Base	1,300
Tube sheet machining	Base	49,000
Backwash piping and valves	Base	141,000
Miscellaneous piping and valves	13,000	Base
Controls	46,000	8,000
Mechanical construction	45,000	16,000
Electrical construction	29,000	4,000
General construction	11,000	Base
SUBTOTAL	355,000	214,000
Indirect costs at 16%	57,000	34,000
Comparative capital costs[a]	412,000	250,000

[a]Costs shown are increases (or decreases) from the capital costs of a conventional chemical cleaning system. Costs are for a 1,000 MW generating unit to be installed in 1979, operating with an open recirculating cooling system using mechanical draft cooling towers.

TABLE 7. COMPARATIVE ANNUAL COSTS[a4]

	Conventional chemical treatment, $	Amertap system, $	M.A.N. system, $
Annual costs of operation[a]			
Manual brush cleaning of tubes	7,400	-	-
Chemicals	34,000	30,000	30,000
M.A.N. system brushes	-	-	23,700
Amertap balls	-	28,000	-
Demand and energy costs	Base	9,600	17,900
Comparative costs of operation	41,000	67,400	71,300
Total annual costs[a]			
Fixed charges	Base	69,300	42,200
Costs of operation	41,400	67,400	71,300
Comparative total annual costs	41,400	136,700	113,500
Differential total annual costs	Base	95,300	72,100

[a]Costs are for a 1,000 MW generating unit to be installed in 1979, operating with an open recirculating cooling system using mechanical draft cooling towers. Annual fixed charge rate is 15.0%.

Capital costs for 1,000 MW plant

$$= (1{,}000/675)^{0.7} \text{ (cost for 675 MW plant)}$$

Operating cost for 1,000 MW plant

$$= (1{,}000/675) \text{ (cost for 675 MW plant)}$$

The costs in Table 6 are for a 1,000 MW generating unit to be installed in 1979 which will be equipped with an open recirculating cooling system using mechanical-draft cooling towers. Table 7 shows the comparative cost of operation and total annual costs for the same 1,000 MW generating unit. The demand and energy costs reflect increased circulating water pumping costs for the mechanical systems due to friction of the plastic cages of the M.A.N. system and of the strainers of the Amertap system. For the Amertap system, they also reflect the cost of operating the small pumps that recirculate the balls. The annual fixed-charge rate is assumed to be 15.0%.[4]

Costs of operation shown in Table 7 are based on all cleaning systems maintaining the same degree of cleanliness. It is expected that the Amertap system can maintain tube cleanliness at about 95% if placed in service when the condenser tubes are new and that the M.A.N. system would not be able to maintain the cleanliness level as high as the Amertap system. The M.A.N. system operates intermittently, while the Amertap system is a continuous-cleaning system.[4]

As tube cleanliness decreases, the condenser pressure increases, which causes the turbine heat rate to increase and the generating capability to decrease. Figure 10 shows the tube cleanliness factor plotted against the annual cost of increased fuel and reduced capability for a 1,000 MW unit. The unit is assumed to operate at an annual capacity factor of 86.5%, fuel is evaluated at a price of 47.5 cents/10^3 Megajoules (45 cents/10^6 Btu), and generating capacity is evaluated at an annual cost of $20.80 kW. The costs plotted in Figure 10 are additional costs as the cleanliness factor decreases from 100%, which reflects the cleanliness of new clean tubes.[4]

The comparative annual costs shown in Table 6 and in Figure 10 can be used to determine whether or not a mechanical cleaning system such as the Amertap or the M.A.N. system can be economically justified. For a 1,000 MW unit, neither a M.A.N. system with a cleanliness factor of 90% nor an Amertap system with a cleanliness factor of 95% could be justified unless the cleanliness factor with conventional chemical conditioning is less than 80%. This conclusion applied only to the case reported here since it is dependent on such parameters as generator size, capacity factor, and the fuel cost. It does serve as a general indication of the amount of improvement in the cleanliness factor that must be achieved in order to justify an on-line mechanical cleaning system. However, it should be emphasized that the increased cost is an insignificant part of the total operation and maintenance costs, and the

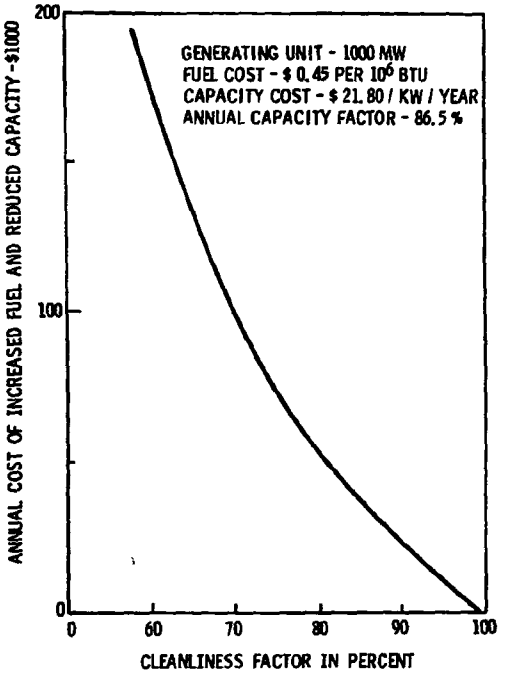

Figure 10. Tube cleanliness versus cost of reduced generating efficiency.[4]

advantage of a nonpolluting mechanical cleaning system must not be ignored.

4.2 CHEMICAL TREATMENTS[10,13]

Powerplants employ a variety of chemicals in their cooling water systems in order to prevent fouling. While chlorine is most commonly used, other chemicals used are a variety of biocides, caustic soda, alum, sodium dichromate, sulfuric acid, calcium hypochlorite, phosphate, and lime. The type and quantity of chemicals used in any cooling method are of considerable concern since most of these chemicals will ultimately find their way into a water body. Typical distribution of different chemicals used in a powerplant cooling system for the Maryland region is shown in Figure 11.[13] Total tonnages of the principal cooling-water chemical additives used in the U.S. in 1972 and reported by the Federal Power Commission[10] are as follows (excluding the states of Montana, Alaska, Hawaii, Idaho, Vermont, and Oregon, from which no data were available):

Phosphate, tons/yr	752.75
Lime	16,838.49
Alum	1,685.53
Chlorine	28,564.68

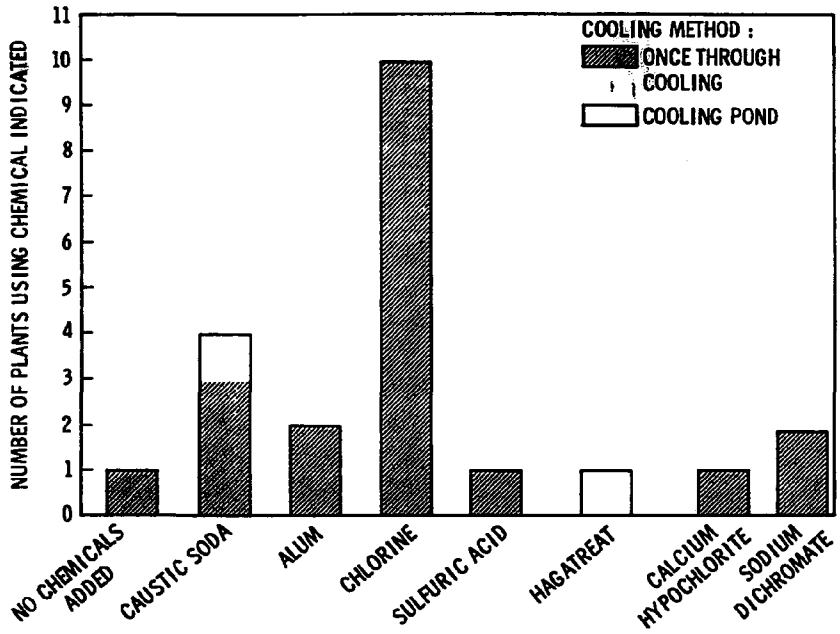

Figure 11. Distribution of chemicals added to cooling-water systems.[12]

Chlorine is the chemical used in the largest amount, and it amounts to a national average of about 0.1 ton/yr MW of installed capacity considering the total steam-electric generating capacity of 309,861 MW. As discussed in previous sections, other potential alternative chemicals that may be used to replace chlorine are ozone, bromine, bromine chloride, chlorine dioxide, etc. Ozone is the nearest competitor to chlorine as a water disinfectant.

Economics has been a primary factor in the use of chlorine in the treatment of cooling systems in the United States. It is the least expensive of the effective biocides. Potentially effective and feasible biocides have been eliminated from use in cooling-water systems solely on the basis of economics.

The effect of these chemicals and their potential residuals is of great concern since most of them will ultimately find their way to the environment. As in any industrial-scale operation, cost will remain a primary factor, but the cost in dollars must now be balanced by compatibility with the environment. Thus the most desirable control will be the one that is the least expensive in terms of a combination of cost and versatility and that will also result in the lowest residuals entering the environment.

There are a number of potential chemicals and several methods that can be used to control bio-fouling of powerplant condenser tubes. Some are obviously unacceptable and can be eliminated immediately because they either change the form of the pollution and do not solve the pollution problem, or they create more problems than they solve. Nevertheless, all alternatives except the oxidizable

and nonoxidizable biocides (organic compounds) are assessed in this section. Those that are the most feasible will be assessed for potential application to control bio-fouling in powerplant condenser tubes. All chemical agents are not equally economical and efficient.

4.2.1 Ozone (O_3)

In the past, one of the strongest criticisms against ozonation has been its operational costs. Confusion has been caused by reports showing a wide variance in cost analysis of ozonation. Ozonation is favored over chlorination as a disinfectant for a number of reasons:

- It requires shorter contacting time.
- It requires a lower concentration; e.g., 0.024 to ∿0.45 mg/l (ppm) O_3 residual needed for disinfection in contrast to 0.5 to ∿1.0 mg/l (ppm) of chlorine residual.
- It produces no pollutants in freshwater; in seawater, it will oxidize bromide ion to bromine.
- It reduces color, odor, BOD, and COD.
- It produces no harmful by-products and inorganic salts.

Ozone is an unstable gas; its half-life ranges from 20 minutes to 30 minutes. Since its half-life is so short, residual O_3 dissipates quickly in the ozonated effluent, thus providing no residual protection against downstream contamination by microorganisms. Therefore, ozone could provide protection against bio-fouling for condensers for a once-through cooling system, but it might not be adequate for simultaneous protection of cooling towers for a closed-cycle cooling system without additional chlorination.

It has been found[14] that ozone requires approximately 5 minutes of contact as compared to 30 minutes for chlorine. The rate of decomposition is not appreciable over short contact times. Figure 12 shows the decomposition of ozone with respect to time. Ozone decomposed 1.44% and 6.25% over periods of 2 minutes and 4 minutes, respectively.

Ozone is a very powerful oxidizing agent. It readily destroys bacteria and organic matter, but it also corrodes metals, disintegrates rubber, and attacks all plant life. Another serious drawback is the interference by iron and manganese. Ozonation in the presence of either of these metallic ions in water will produce precipitates, scums, and coloration of water. (Note: A similar iron and manganese problem occurs with chlorination.)

---

[14]Majumdar, S. B., and O. J. Sproul. Technical and Economic Aspect of Water and Wastewater Ozonation: A Critical Review. Water Research, 8:253-260, 1974.

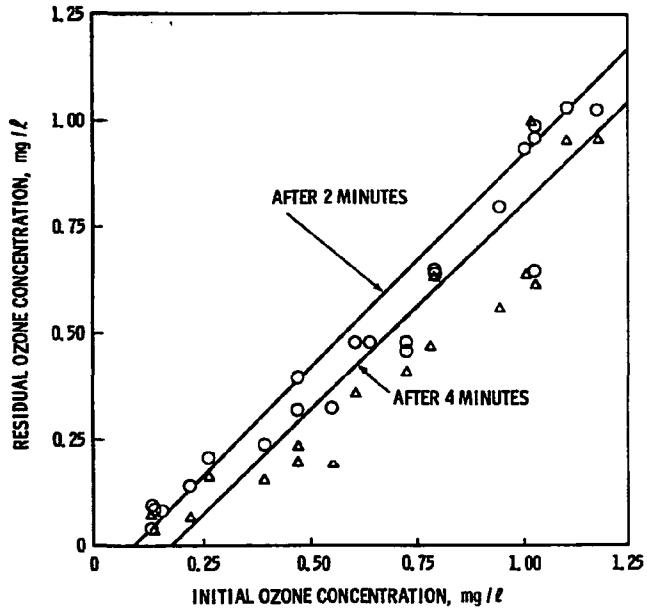

Figure 12. Rate of decomposition of ozone.[14]

Ozone does not undergo dissociation with pH in water as does chlorine, with the resulting loss in disinfection efficiency; nor does it react with ammonia to form a less efficient disinfectant like a chloramine. The solubility of ozone in water is a limiting factor that greatly affects the process of ozonation. The amount of ozone that will dissolve in water is dependent on temperature and pressure. A physical relationship between the concentration of ozone in air and that in water is expressed by:[7]

$$C_{water} = S \cdot C_{air} \qquad (2)$$

where C_{water} = ozone concentration in water g/m^3 of water

C_{air} = ozone concentration in air, g/m^3 of air

S = distribution coefficient = $0.588 - 0.0212t + 0.000191t^2$

t = temperature, °C

Figure 13 shows the typical behavior of ozone in saturated solutions at atmospheric pressure. An increase in the S factor at lower temperatures indicates that application of ozone is more effective in a colder climate, although growth of microorganisms is less at colder water temperatures. The concentration of ozone in the air is important because of the low solubility of ozone in water. Increasing the concentration will increase the efficiency of the process. In present practice, ozone is generated on site at concentrations varying from 10 g/m^3 to 20 g/m^3 of air, which is about 100,000 times above the human tolerance level. It should be emphasized that the amount of ozone absorbed by a particular water is a

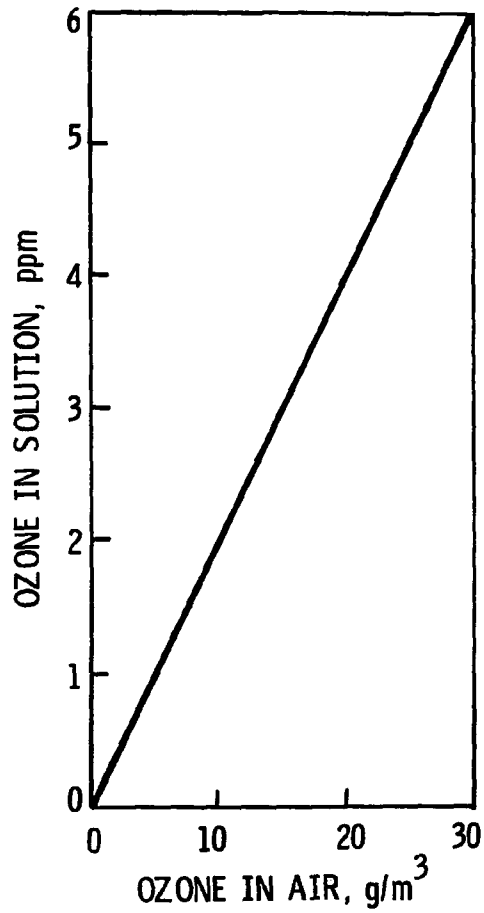

Figure 13. Behavior of ozone in saturated solutions at atmospheric pressures. (An S value of 0.2 is assumed.)

From Handbook of Chlorination by Geo. Clifford White, copyrighted 1972, Litton Educational Publishing, Inc. Reprinted by permission of Van Nostrand Reinhold Company.

function of organic content, which determines the ozone demand and not the distribution coefficient alone.

The most difficult engineering problem encountered in ozonator designs is that of efficient mixing in water. In recent designs, ozonized air (at a slightly positive pressure of 1.2×10^5 Pa (1.2 atm) in contrast to 6.8×10^4 Pa (10 in. Hg) vacuum for a chlorinator) is applied to the point of application by means of an injector system similar to the chlorinator injector system. The proper mixing at the point of application has long been recognized as one of the most important factors contributing to the overall efficiency of the process. Similar to a chlorinator, a minor flow of water pulls ozonized air into the injector and discharges this air-water mixture to the total cooling-water flow entering the condensers. Entrapment of air bubbles in the condenser chamber must be prevented. Also, emission of excess ozone in the air must be minimized. Efficient absorption and mixing of ozone in high-volume cooling water is difficult to achieve because of the short rise time of an air-water mixture from diffuser orifices to the water surface. For a large-volume water flow, it is possible to achieve better results by two points of application in series using an injector system. The limiting factor in a single-stage operation is the gas-transfer efficiency of the injection system and not the oxidation reactions of ozone. It is not possible to accurately dose a variable flow of water with the present ozonators because it is difficult to produce ozone proportionally to a flow rate of water.

Similar to current chlorination practice, shock treatment by ozone several times a day for a period of about 30 minutes to 60 minutes may be sufficient to prevent bio-fouling of condensers in a once-through cooling system, but further field testing and demonstration is needed to verify that this is effective. For closed recirculating systems, additional ozonation of cooling water prior to entering the cooling tower may be needed due to the fleeting existence of an ozone residual. For cooling systems using marine water, continuous ozonation (or chlorination) ahead of the bar racks will probably still be required. Ozonation of a powerplant cooling system has not been reported. However, ozonation followed by chlorination is used in may plants for potable water and wastewater disinfection. It should be emphasized that most waters and wastewaters will have a higher ozone demand on a mg/l basis than the chlorine demand to accomplish the same degree of disinfection.

The high cost of ozonation and the lack of residual protection against downstream contamination in the cooling tower probably are reasons why ozonation is not widely practiced in the United States for either water or wastewater disinfection. There have been conflicting reports regarding capital and operating costs of an ozonation plant. This is because the cost of ozonation is a function of plant size, place of manufacture, and the quantity and quality of water to be treated. Typical costs of ozonating plants (water treatment) with no pretreatment are shown in Table 8:[14]

TABLE 8. OPERATING COSTS OF OZONATING PLANTS WITH NO PRETREATMENT

Plant capacity: [x 3.8 x 10^3 m^3/day (10^6 gal/day)]	1	10	100
Type of plant:	ozone	ozone	ozone
Capital cost, $:	202,000	1,080,000	7,460,000
Operating cost, $ [x 3.8 x 10^3 m^3/day (10^6 gal/day)]			
Amortization (15 yr at 4%)	49.60	26.50	18.31
Power	36.00	28.80	21.60
Labor	25.60	2.60	0.50
Maintenance	1.80	1.00	0.67
Oxygen	24.00	17.80	8.00
TOTAL, $ [x 3.8 x 10^3 m^3/day (10^6 gal/day)]	137.00	76.70	49.08
Operating cost, $ [3.8 m^3/day (10^3 gal/day)]	0.137	0.777	0.043

Extrapolation of these costs to ozonation of 3.8 x 10^6 m^3/day (10^9 gal/day), which is about equivalent to a cooling-water flow rate of a 1,000 MW powerplant, gives:

Capital cost: $9,850,000
Operating cost: $8.7/$10^3$ m^3/day ($33/$10^6$ gal/day)

The operating cost amounts to $12 million a year. Of course, for powerplant cooling-water treatment, the dosage needed and ozonation period are completely different from that of the water-treatment plant as shown in the preceding Table 8. A water-treatment plant requires a continuous high dosage of ozone, while a cooling-water system requires ozonation for only a few hours a day and probably at lower ozone dosage. However, a continuous low-level ozonation is required for marine waters.

In a comparative cost analysis of ozonation versus chlorination of microstrained secondary effluent, it was reported[15] that chlorination would be much cheaper than ozonation. At an electrical cost of 0.8¢/kWh, the operating cost for ozonation was given as 0.46¢/m^3 (1.74¢/1,000 gal), while the comparable cost for chlorine disinfection was given as 0.07¢/m^3 (0.25¢/1,000 gal) treated. The ratio is almost 7:1 in favor of chlorine, without considering capital costs or maintenance cost. In another perspective, it is

[15]Kinman, R. N. Water and Wastewater Disinfection with Ozone: A Critical Review. CRC Critical Review in Environmental Control, January 1975. p. 141.

indicated that 3.0 mg/l (ppm) chlorine would accomplish the same disinfection as the 6.0 mg/l (ppm) ozone. Ozone will always have a higher demand than chlorine under the same conditions. This is because ozone is such a powerful oxidizing agent that it will attack and degrade almost any organic matter, whereas chlorine will attack or oxidize only active organic materials or compounds that are readily substituted. A conventional corona-discharge ozone system requires 18 to 22 kWh/kg (8 to 10 kWh/lb) of ozone produced, while a newer electron beam system requires only 6.6 to 11 kWh/kg (3 to 5 kWh/lb).

Ozone dose requirement varies with water sources. Table 9 shows the comparison of ozone doses reported in water and wastewater treatment.[16] It shows that it requires 2 mg/l (ppm) to 4 mg/l (ppm) ozone dosage for disinfection of surface waters depending on quality of waters.

An EPA study shows capital and operating costs for ozonation at 0.8¢/m^3 (3¢/1,000 gal) of water disinfected. It is reported that a newer electron-beam ozone system would lower the cost to 0.24¢/m^3 (0.9¢/1,000 gal).[17] A new disinfection system, which generates ozone from untreated air with a high-volume, electron-beam generator to treat 1 million gal/day, is scheduled to be onstream by April 1977. The system is expected to produce ozone for about 10¢/lb compared with about 16¢/lb to 20¢/lb for chlorine.[18,19]

In view of this improvement in the economics of ozonation, it could be feasible for use in full-scale powerplant cooling-water treatment systems in the future. Canada is currently building the world's largest water-treatment plant [2.27 x 10^6 m^3/day (600 x 10^6 gal/day)] which uses ozone. Although ozone may be effective for the disinfection of water and wastewater, many obstacles remain in the application of ozone to cooling water systems; ozone is simply too new, too untried in the control of bio-fouling of the powerplant condensers.

4.2.2 Bromine (Br_2)

Bromine is probably the least efficient germicide of the halogens. It is hazardous to handle and requires high dosages as a disinfectant compared with chlorine. In the past, the use of bromine has been limited in practice to swimming pools, with a usual bromine

---

[16]McCarthy, J. J., and C. H. Smith. A Review of Ozone and Its Application to Domestic Wastewater Treatment. Journal of AWWA, p. 718-725, December 1974.

[17]A Refreshing Change for Water. Chemical Week, June 16, 1976, p. 29.

[18]Technology Concentrates. Chemical & Engineering News, 54:17, November 22, 1976.

[19]Technology Newsletter. Chemical Week. 119:75, November 24, 1976.

TABLE 9. COMPARISON OF OZONE DOSES REPORTED IN WATER AND WASTEWATER TREATMENT[16]

Dose, mg/l	Contact time, min	Water/wastewater treated	Objective or result
0.5 to 1	5 to 10	Good quality ground water	Disinfection
2 to 3	5 to 10	Good quality surface water	Disinfection
3 to 4	5 to 10	Poor quality surface water with filtration	Disinfection
1.5 to 2	Not given	Treated water	Disinfection
2 to 5	5	Treated water	Disinfection
10 to 100	Not given	Primary wastewater and stormwater overflow	Treatment
>50	Not given	Secondary wastewater effluent	Potable quality
15	22	Secondary wastewater effluent	Disinfection <200 fecal coliforms/100 ml
82	75	Lime-clarified raw wastewater	COD reduction 55 mg/l to 35 mg/l
15	5	Secondary wastewater effluent	F-2 virus destruction
6	Not given	Secondary wastewater effluent	Oxidation of naturally occuring cyanide
7 to 11	Not given	Secondary wastewater effluent	Oxidation of naturally occuring phenol
5	1.6	Tertiary wastewater effluent	Complete bacterial disinfection
5	<1	Secondary wastewater effluent	Disinfection <1,000 coliforms/100 ml
550	90	Innoculated raw wastewater	Sterility
92	30	Innoculated autoclaved wastewater	Sterility

Reprinted from Journal American Water Works Association, Volume 66, by permission of the Association. Copyrighted 1974 by the American Water Works Association, Inc., 6666 West Quincy Avenue, Denver, Colorado, 80235.

residual of 1 mg/l (ppm) to 2 mg/l (ppm). This level of residual compares to 0.4 mg/l (ppm) of chlorine to achieve the same quality pool water.

It is interesting to note that bromides are present in seawater to the extent of approximately 70 mg/l (ppm), which is significant. The current practice of chlorinating cooling water will convert the bromides to hypobromous acid as follows:

$$HOCl + Br^- \rightarrow HOBr + Cl^-, \; k_o = 2.95 \times 10^3 \; l/mol\text{-}s \qquad (3)$$

Also, chlorination in the presence of bromides will result in a combination of free and combined chlorine and bromine residuals if ammonia or nitrogenous material is present.

Bromine, like chlorine, reacts with ammonia to form bromamines, but the bromamines are better disinfectants, approaching free chlorine and free bromine in this respect. However, the bromamines are unstable, decomposing rapidly into components that do not have disinfecting power.[7] In low-quality surface water, on a dosage basis, chlorine is far superior to bromine because much of the bromine is utilized in satisfying the halogen demand, and a residual is difficult to maintain for a significant amount of time to protect downstream equipment. However, in comparing the efficiency of chlorine and bromine as disinfectants, since the degree of disinfection varies with temperature and pH as well as concentration of the disinfectant, time of contact, and other factors, it is necessary to compare these agents under a variety of conditions that may exist in cooling-water systems. For example, the effectiveness of chlorine increases with decreasing pH, while bromine is more effective at a high pH. Bromine, unlike chlorine, is an effective disinfectant (HOBr) at pH values near 9. Although combined chemical species are produced when waters containing organic amines or ammonia are treated with either chlorine or bromine, the chloramines have been shown to be ineffective as disinfectants for cysts, bacteria, and viruses. Bromine, on the other hand, is available for disinfection of bacteria and viruses whether it exists as free bromine or as mono- or dibromamine.[20] The extensive studies on the halogens as algicides documents the superiority of bromine for a number of species of algae.[21] However, the effectiveness of bromine for controlling bio-fouling in cooling-water systems is not known. In the past, the use of bromine has been limited in practice to swimming pools and portable water treatment.[7]

---

[20]Taylor, D. G., and J. D. Johnson. Kinetics of Viral Inaction by Bromine. Presented before the Division of Water, Air, and Waste Chemistry, American Chemical Society, Dallas, Texas, April 1973.

[21]Kott, Y. Effect of Halogens on Algae. Water Research. 3(4): 256-271, 1969.

Although the cost of bromine is presently twice the cost of chlorine, the use of bromine chloride to generate free bromine in water is feasible at a lower cost. Bromine is unique in being the only nonmetallic element which is liquid at ordinary temperatures. Liquid bromine is corrosive, attacking iron, steel, cast iron, stainless steel, and copper, either wet or dry. Nickel and monel resist dry bromine and are used for shipping containers. Other nickel alloys, including the hastelloys, are less suitable. Tantalum is resistant to bromine, wet or dry, up to 149°C (300°F). Bromine handled in lead, nickel, or monel containers must be dry (less than 0.003% moisture) and must be protected from ordinary air, from which it can readily absorb enough moisture to make it severely corrosive to these materials.

4.2.3 Bromine Chloride (BrCl)

Bromine chloride has been little used until very recently due to its lack of commercial availability and handling technology. BrCl is more active than either chlorine or bromine as a bactericide or viricide in water, and it is less corrosive and more safe to handle than bromine or chlorine. It has been reported that important cost and ecological advantages can be gained by substituting bromine chloride for either bromine or chlorine.[5]

Bromine chloride exists in equilibrium with molecular chlorine and bromine. Commercially available bromine chloride is a liquid containing about 20% molecular bromine and chlorine. Its high reactivity and fast equilibration result in the formation of products almost exclusively from the reaction of BrCl. Bromine chloride appears to hydrolyze exclusively to hypobromous acid (HOBr). Any hydrobromic acid (HBr) formed by hydrolysis of dissociated bromine would quickly be oxidized by hypochlorous acid (HOCl) to hypobromous acid. (The hypochlorous acid is formed by hydrolysis of dissociated chlorine.)

In water treatment, the halogen demand of the water must be satisfied before reliable disinfection residuals can be obtained. Because of their higher oxidation potentials, bromine species are much less stable than chloramine. It is reported that the products of chlorobromination of water are more easily degraded and less obnoxious than their chlorinated analogs.[5] The brominated derivatives are more readily degraded photochemically and biologically. The predominant products formed from several competitive reactions of BrCl in water are the innocuous chloride and bromine salts.[5]

Some properties of bromine chloride resemble those of bromine, while others are unique. Both bromine chloride and bromine yield hypobromous acid as their major hydrolysis product:

$$BrCl + H_2O \rightarrow HOBr + HCl \qquad (4)$$

$$Br_2 + H_2O \rightarrow HOBr + HBr \quad (5)$$

With respect to efficient usage of bromine, bromine chloride is an economical method of using bromine. The byproducts of bromine chloride substitution reactions consist almost entirely of HCl, whereas a majority of uses of elemental bromine result in a hydrogen bromide byproduct. This results in a 50% waste of the total bromine used. However, it must be remembered that half of the bromine-chloride molecule is also "wasted" because it is converted to hydrogen chloride.

Despite the possible advantages of bromine chloride over chlorine in cooling-water treatment, bromine chloride has never been tested in a full-scale facility partly due to lack of handling and storage technology and partly due to the unwillingness of the industry to try new chemicals in the past. The chemical cost of bromine chloride is about 55¢/kg (25¢/lb) in tank-car load quantities in contrast with 15.4¢/kg (7¢/lb) for chlorine (personal communication with Dana Martin, Dow Chemical Co., Midland, Michigan).

The installation of bromine-chloride feeding facilities (which are currently under development by producers of BrCl) for use in the treatment of cooling water is expected to cost much more than present chlorination facilities. At normal temperatures, dry gaseous or liquid bromine chloride is noncorrosive toward most materials of construction. Wet bromine chloride is corrosive toward common construction metals; however, tantalum, nickel-molybdenum alloy, lead, silver, and platinum are resistant, as are such nonmetallic materials as glass, ceramics, and certain plastics. It is possible to feed bromine chloride at a precisely controlled rate since it can be withdrawn from storage vessels in liquid form.

In the summer of 1974, the Public Service Electric and Gas Company field-tested bromine chloride at their Marion Generating Station on the Hackensack River at Jersey City, New Jersey. The preliminary test results showed that:[22]

- Bromine chloride has the same capacity to maintain the condenser cleanliness in tidal water when injected at a frequency of 3 times per day for a 20-minute cycle at a rate high enough to attain 0.5 mg/l free bromine chloride. However, it should be noted that BrCl is being tested on a continuous basis rather than as a shock treatment.

- The bromine chloride feed rate was generally higher than (possibly due to its high reactivity) or at least equal to that of chlorine to attain the 0.5 mg/l free halogen residual at the condenser outlet.

---

[22]Wackenhuth, E. C., and G. Levine. An Investigation of Bromine Chloride as a Biocide in Condenser Cooling Water. Presented at 35th Annual Meeting of the International Water Conference, Pittsburgh, Pennsylvania, October 29-31, 1974.

- The extent and rate of decay for the total BrCl residual was, on the average, greater than that for the total residual of chlorine for the first minute after the injection. The decay rates were approximately the same (or slightly higher) after 3 minutes using a 1:1 dilution.

- The BrCl residuals were significantly lower in the plant effluent with river dilution.

- BrCl supplies are limited now, and the cost of the chemical is about three times that of chlorine.

- The results were encouraging, but Public Service Electric recommended that further research be performed.

Potamic Electric Power Company (PEPCO) at Morgantown is field-testing bromine chloride in their once-through cooling system.

4.2.4 Iodine (I_2)

Iodine has been used to a limited extent in the disinfection of water and in swimming pools, but it has not proven satisfactory in cooling-water systems. The use of iodine as a disinfectant for water has been recognized for a long time, but it has never generated enough interest to displace the popular use of chlorine. The high cost of iodine is the main reason for its limited use. Iodination can be used where chlorination or more complete treatment of water is either not possible or impractical.

Elemental iodine (I_2) and hypoiodous acid (HOI) are two of the most powerful disinfecting agents among iodine species. At pH 8, the effective chlorine germicide HOCl is present at a level of 21.5%, while the ineffective hypochlorite ion is present at a 78.5% level. With iodine, however, the ineffective hypoiodite ion is present at only a 0.005% level, with elemental iodine at 12%, and hypoiodous acid at 88%. Therefore, the formation of the ineffective hypoiodite ion can be ignored. It is less dependent on pH, temperature, time of contact, and nitrogenous impurities than chlorine. However, the upper limit for iodine is pH 8 because higher pH values produce the ineffective iodate and tri-iodide ions.

Iodine is superior to chlorine in swimming-pool applications because iodine will not react with nitrogenous compounds found in swimming-pool waters. However, in a closed recirculating cooling-water system, the primary advantage of iodine becomes a disadvantage because the iodine will not react with nitrogenous compounds found in cooling waters as does chlorine, and it cannot destroy these compounds, which serve as nutrients for algae. Iodine is a notoriously poor algicide, making algae control very difficult, especially in cooling-tower application.[7]

The cost of iodination is also an important factor against its use since iodine is at least an order of a magnitude more expensive than chlorine. It is too expensive to be used on a continuous basis; e.g., a once-through cooling system. More iodine than chlorine on a weight basis is required to achieve the same rate of disinfection of water. However, iodine will not form compounds with nitrogenous material, so it does not have the potential for discharging toxic materials into a receiving body of water.

4.2.5 Chlorine Dioxide (ClO_2)

Chlorine dioxide is being used successfully to assist chlorination in the control of wastes resulting from the raw water being contaminated with phenolic substances and algae. Chlorine dioxide will not react with ammonia or nitrogenous compounds, and its efficiency is not impaired (as is that of HOCl) by a high pH environment. Many other contaminants that will consume chlorine may not react with chlorine dioxide, making it a superior choice in some cases.

Chlorine dioxide is extremely soluble in water (five times the solubility of chlorine), but, paradoxically, it is extremely volatile and can be easily removed from aqueous solutions by a minimum of aeration. The gas explodes when its temperature is raised, when it is exposed to light, or when it is allowed to come into contact with organic substances. The exposure of the gas or aqueous solution to light results in photochemical decomposition.

Chlorine dioxide must be generated and used onsite. For cooling-water applications, there are two easily controlled methods of generating chlorine dioxide in water solution. The first method, referred to as "chlorine generation," utilizes a standard gas chlorinator. The two-step reaction is:

$$Cl_2 + H_2O \rightarrow HOCl + HCl$$

$$HOCl + HCl + 2\ NaClO_2 \rightarrow 2\ ClO_2 + 2\ NaCl + H_2O \qquad (6)$$

The second method, referred to as "3-Pump Generation," can be used when gaseous chlorine is unavailable. This method uses

---

[23]Wheeler, G. L., and F. Yau. Chlorine Dioxide: A Selective Oxidant for Industrial Wastewater Treatment. Paper Presented on Industrial Conference & Exposition, Houston, Texas, March 30 to April 1, 1976.

[24]Rauh, J. S. Chlorine Dioxide, A Cooling Water Microbiocide. Presented at the Annual Meeting Water and Wastewater Equipment Manufacturers Association, Houston, Texas, April 1976.

[25]Ward, W. J. Chlorine Dioxide, A New Development in Effective Microbio Control. Annual Meeting Coding Tower Institute, Houston, Texas, January 19-21, 1976.

hypochlorite and acid as the source of hypochlorous acid. The two-step reaction is shown below.

$$2\ NaOCl + H_2SO_4 \rightarrow 2\ HOCl + Na_2SO_4$$

$$H_2SO_4 + 2\ HOCl + 4\ NaCLO_2 \rightarrow 4\ ClO_2 + Na_2SO_4 + 2\ NaCl + H_2O \quad (7)$$

In both cases, the first reaction step provides hypochlorous acid in a water stream which carries the reactants to a generator column.

Although chlorine dioxide is readily soluble in water, it does not react chemically with water as does chlorine. It does not belong to the family of "available chlorine" compounds, but its oxidizing power is referred to as having an "available chlorine" content of 263%. However, the oxidizing capacity of chlorine dioxide is not fully realized in water-treatment practice because the majority of its reactions with substances in water cause reduction to chlorite, which may be toxic to humans. Therefore, in actual waterworks practice, chlorine probably is the better oxidant except under conditions where bad taste and odor are problems.

While the disinfecting power of chlorine dioxide is unaffected over a wide range of pH (e.g., pH 6 to 10), its efficiency is reduced at lower water temperatures; e.g., <4°C (40°F). Waters having a chlorine demand from substances other than ammonia nitrogen will display a chlorine dioxide demand, with a tendency to consume proportionally greater amounts of chlorine dioxide. Chlorine is an excellent microbiocide under the right conditions. The advantage of chlorine dioxide is that it offers greater efficiency in those cases where chlorine is adversely affected by conditions existing in the water to be treated.

Currently, field trials of chlorine dioxide are underway at two utilities. A utility on the east coast (PSG&E) uses tidal river water on a once-through basis, and chlorine dioxide is fed for 10 minutes each 24 hours on one of four large surface condensers. The other utility is a west-coast municipal station using secondary treated sewage effluent as makeup to a recirculating cooling system served by a cooling tower. No results are as yet available from the tests (personal communication with William J. Ward, Director, Technology & Support, Olin Water Services, Kansas City, Kansas).

The chemical cost of chlorine dioxide is from $2.00/lb to $4.00/lb depending on the quantity used (as quoted by Olin Water Services). Because of its high cost and its predominant formation of chlorite, chlorine dioxide could be considered cost-effective for the treatment of powerplant cooling water with excessive chlorine demand; e.g., water with high ammonia-nitrogen compound loadings or high alkalinity.

4.2.6 Hypochlorites (HOCl, MOCl)

The application of hypochlorite in water treatment achieves the same result as does that of chlorine gas. The active ingredient is hypochlorous acid (HOCl), which is formed by the hydrolysis of the hypochlorite ion (OCL^-). The only difference between the reactions of hypochlorites [NaOCl or $Ca(OCl)_2$] and chlorine gas is the side reaction of the end products. The reaction with the hypochlorites increases the hydroxyl ion concentration by the formation of sodium hydroxide or calcium hydroxide; the reaction with chlorine gas and water increases the H^+ ion concentration by the formation of hydrochloric acid. Hypochlorite solutions will raise the pH environment significantly, while aqueous solutions of chlorine gas will lower the pH significantly.

There are conflicting views on the disinfection efficiency of chlorine gas versus hypochlorites. The undesirable side reactions occurring in the lower pH environment of chlorine gas solution is the formation of organic chloramines, which have little or no germicidal efficiency but still appear as part of the total chlorine residual. In practical application, the aqueous solution of chlorine gas is predominantly undissociated hypochlorous acid with some molecular chlorine. It has a pH of about 2 at the point of application. Hypochlorite solutions are buffered to pH 11, and at this level, the active ingredient is the hypochlorite ion. However, as soon as the hypochlorite solution becomes diluted with water, it approaches the pH of the wastewater, and hydrolysis occurs resulting in the formation of HOCl.

Based on the quantity of available chlorine, the chemical cost of the hypochlorite is at least double that of liquid chlorine.[7] The metering and feeding equipment for chlorine gas is more expensive than that for hypochlorite, but the expense of storage facilities for hypochlorite is far greater and more than offsets the equipment difference. Maintenance of a hypochlorite system requires more man-hours than does the gas system.

4.2.7 Other Chemicals

4.2.7.1 Acids and Bases--

Inorganic acids and bases become toxic to microorganisms at pH values below 3 and above 11. The toxicant appears to be the hydrogen ion (acid solution) or hydroxide ion (basic solution). It is not common practice to treat cooling waters by addition of acids or basis because of the severe corrosion that would result, and for other reasons. Acids or basis are usually used to adjust the pH for other toxicants, such as chlorine.

4.2.7.2 Quaternary Ammonium Compounds--

Quaternary ammonium compounds are well-known bacteriocides but are ineffective against fungi and spores. They are absorbed by organic matter in water, and they volatilize over a cooling tower,

resulting in loss of effectiveness. They are effective wetting agents and have been used in recirculating cooling systems with partial success. In use they are prone to cause foaming. They are most efficient in slug addition. They would not be feasible in a once-through system. Their effectiveness is questionable in a recirculating system.

4.2.7.3 Chlorinated Phenols--
Chlorinated phenols are used for industrial microbiological control. They are widely used in recirculating water systems primarily for control of organisms that attack wooden cooling towers. However, they are not easily biodegraded and are toxic to fish and animals. They have been eliminated on this basis.

4.2.7.4 Fluorine--
Elemental fluorine is the most powerful of all oxidizing agents. Its capability of oxidizing water ($F_2 + H_2O \rightleftarrows 2\ HF + \frac{1}{2}\ O_2$) renders it unfeasible for use in cooling-water systems. It is also extremely corrosive.

4.2.7.5 Hydrogen Peroxide--
Hydrogen peroxide, in a thermodynamic sense, in a stronger oxidizing agent than oxygen, but it is only a moderately active biocide. The amounts required and the contact time are inordinate. Even though hydrogen peroxide is a strong oxidant, it has proven to be a poor disinfectant.[6] Three to four hours is considered the shortest practical time period for peroxide disinfection with concentrations of 1.5% to 5%. Additionally, many bacteria contain the enzyme catalase, which converts hydrogen perioxide to water and oxygen. Organisms capable of producing catalase are therefore able to avoid destruction to the extent that their enzyme production can decompose the applied peroxide. In wastewater treatment, hydrogen peroxide is also an excellent source of dissolved oxygen, which furthers the activity of aerobic organisms in wastes and selectively attacks the anaerobic organisms and the filamentous bacteria. Although hydrogen peroxide is valued for its ability to oxidize a number of toxic and noxious substances and wastewater treatment byproducts, hydrogen peroxide is probably not a very suitable agent for disinfection of water on a large-scale basis, such as for use in controlling bio-fouling in cooling systems. Further research is needed, however, before ruling it out for all cooling-water applications.

4.2.7.6 Heavy Metals--
Silver, copper, mercury, cobalt, and nickel deomonstrate significant bactericidal properties. Silver has been used to a limited extent in the treatment of drinking water, but it has not proven satisfactory in cooling-water systems with respect to economics and efficacy.

Copper salts are toxic to aquatic organisms and can be eliminated on this basis. Although copper salts are toxic to bacteria, their

effect is negated by other ions in the water, and they are usually sensitive to pH. Copper-based biocides have been slug-fed in the past to control algae in the cooling tower. Ordinarily, other agents are required in combination with copper for complete control of bio-fouling.

Organic mercurials are extremely effective biocides. More volatile mercurials have been developed to retain their bactericidal properties while reducing their toxicity. These compounds, however, can be aerated over a cooling tower and would enter the atmosphere. Additionally, they would be present in the spray from a cooling tower or system, and there is danger of human contact. The organic mercurials can be eliminated on the basis of their toxicity.

4.2.7.7 Potassium Permanganate--
Potassium permanganate is a powerful oxidizing agent and is an effective biocide for controlling a wide spectrum of algae and microorganisms including the slime-forming organisms. The slime formers grow in any climate and require constant control. Permanganate could be a potential candidate for cooling systems. However, it acts on all oxidizable material with formation of a manganese dioxide sludge, which presents a removal problem. Further research and field testing are needed on using permanganate for controlling condenser-tube bio-fouling.

4.2.8 Controlled-Release Pesticides

A new approach to controlling marine fouling is to use biological repellents on the marine surfaces, applied either in the form of a coating or contained within a plastic matrix. For example, B. F. Goodrich's "Nofoul" rubber sheet, which contains 6% bis (tri-n-butyltin) oxide in neoprene rubber, is successfully used in submerged marine structures to control fouling by barnacles and other marine organisms.[26] Others include use of the controlled insecticide release from hydrophobic polymer films, use of chloropyrifos in polyvinyl chloride, or additional polymerization of organometallic monomers with unsaturated comonomers, etc. The basic idea is to regulate the effects of a pesticide or other agent so that they will be felt over a long period of time at a safe level. The practice allows economy in application and reduces potential hazards stemming from accumulation of pesticides in the enviornment at a rate higher than that of their natural degradation.

One of the problems with incorporating pesticides in polymer matrices has been the high proportion of inert polymer required when the release mechanism is simple diffusion from the matrix. One of the newer approaches to designing controlled-release systems is

---

[26]Controlled-Release Pesticides Set for Growth. Chemical and Engineering News, 53:19, September 1975.

the incorporation of active agents as pendent groups on the backbone of a polymer chain, with concentration of the active pesticide as high as 90%.

A number of pesticides have been incorporated in vinyl-type monomers and then polymerized. Also, by chemically incorporating two or more organometallic groups along the polymer chain, antifouling activity can be broadened considerably. Use of controlled-release pesticides may be the way to minimize emissions of pesticides without shocking the environment.

At Southern California Edison, a 3-mil thick epoxy coating (without pesticide, epoxy supplied by Engard Coating Corporation, 15541 Commerce Lane, Huntington Beach, California 92649, 214-431-6553) is presently being applied to the water pump, water box, tube sheet, and to the first 6-inch length of the condenser tube entrance section, mainly for erosion and corrosion protection. The expected life of the coating is about 1-1/2 to 2 years (shorter life if chemical cleaning is used) (personal communication with Heinz Holl, Southern California Edison, 213-598-6631). Also a 2 to 3 mils thick epoxy coating (trade name: SPECOAT) was applied *in-situ* by a patented process to the full 60-foot length of leaky condenser tubes in one condenser by Specialties Engineering Corporation (4600 Worth Street, Los Angeles, California 90063) eleven years ago. The protective coatings were guaranteed for one year by Specialties Engineering Corporation but the condenser is still in service today (personal communication with Jack Monday, president of Specialties Engineering Corporation, 213-263-4151). Mr. Monday acknowledges that epoxy has a much lower thermal conductivity compared to bare metal tube, but he claims that the glass-like smooth epoxy surface reduces friction, enabling more water to flow through the treated tubes with the same pressure drop, thus compensating for some of the loss. In addition, any marine growth is much easier to flush clean from epoxy-coated condenser surfaces. In view of the success of this coating, it is possible that other antifouling coatings of similar thickness (less than 3 mils) incorporating controlled-release pesticides could be developed. Further research and development work is needed to investigate this approach.

At Southern California Edison bio-fouling is controlled by shock treatment with hypochlorite for a period of about 15 minutes for 4 times a day. During treatment, the total chlorine residual is maintained below 0.5 ppm at the condenser exit as required by EPA guidelines (personal communication with John Davis, Southern California Edison, 213-430-0561). The growth of mussels is controlled by heat treatment of the condensers; e.g., raising the cooling-water temperature by 4°C (40°F) by recirculating the cooling water for a period of 2 hours every 2 months. In addition to bio-fouling control, manual mechanical tube cleaning by passing rubber balls

through the tubes is performed as a regular maintenance procedure for preventing scale formation.

The controlled-release pesticides may be used either by coating the water-side condenser tube surfaces with a controlled-release pesticide compound or making the condenser tubes of modified plastic. However, the poor thermal conductivity of plastic materials may hinder performance of condensers and may require enormous-size condensers to do the same job. One approach to reduce the size of condensers may be to use thin-walled, small hollow tubes, but clogging or plugging by other foreign materials would create other problems.

To assess the effect of thermal conductivity of tube materials, the thermal transmittance U of the condenser can be written as (see Figure 14):

$$U = \frac{1}{\frac{r_3}{h_{water} r_1} + \frac{r_3}{k_1} \ln \frac{r_2}{r_1} + \frac{r_3}{k_2} \ln \frac{r_3}{r_2} + \frac{1}{h_{steam}}} \qquad (8)$$

where r_1 = condenser tube I.D.

$r_2 - r_1$ = coating thickness

r_3 = condenser tube O.D.

h_{water} = water side film heat transfer coefficient

h_{steam} = steam side film heat transfer coefficient

k_1 = thermal conductivity of coating material

k_2 = thermal conductivity of condenser tube

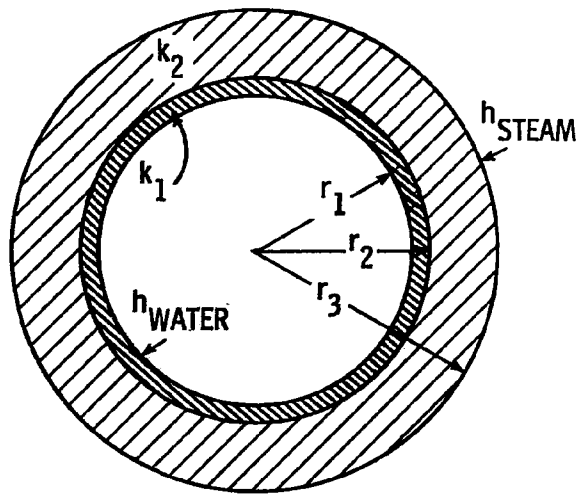

Figure 14. Schematic cross section of condenser tubes.

Each term in the denominator represents the thermal resistances of water-side film, coating, tube wall, and steam-side film. Among the four terms, the last term connected with condensation heat-transfer coefficient is negligible compared with other terms due to the extremely large h_{steam}. If the water-side controlled-release pesticide coating is thin [e.g., 0.762×10^{-2} cm (3 mils)], and if we assume condenser tube I. D. of 1.905 cm (3/4 in.) and wall thickness of 0.16 cm (1/16 in.), the second term (thermal resistance of the coating) and the third term would be equal in magnitude if the thermal conductivity of the tube wall material is about 20 times that of the coating; i.e., $20\ k_1 = k_2$). In general, the thermal conductivity of polymer coatings is one to two orders of magnitude smaller than that of metals, which means that the thermal resistance of the coating cannot be ignored even if the coating is only 3 mils thick.

Next the case of a metal tube heat exchanger with no coating is considered. Equation 8 then becomes

$$U = \frac{1}{\frac{r_2}{h_{water} r_1} + \frac{r_2}{k_1} \ln \frac{r_2}{r_1} + \frac{1}{h_{steam}}} \tag{9}$$

If the water-side film resistance ($r_2/h_{water} r_1$) and the tube wall resistance ($r_2/r_1 \ln r_2/r_1$) are both divided by the outer tube radius, r_2, their relative magnitudes can be compared.

For a 1.905 cm (3/4 in.) I. D. tube and a 0.16 cm (1/16 in.) tube wall thickness, the two terms become

$$\frac{1}{h \ \frac{3}{4} \cdot \frac{1}{12}} = \frac{16}{h}$$

$$(= 0.016 \text{ if } h = 1{,}000 \text{ btu/hr/ft}^2/°\text{F}) \tag{10}$$

$$\frac{1}{k} \ln \frac{\frac{3}{4} + \frac{1}{16}}{\frac{3}{4}} = \frac{0.08}{k}$$

$$(= 0.0016 \text{ if } k = 50 \text{ Btu/hr/ft/°F}) \tag{11}$$

From this it is clear that for turbulent waterflow inside metal tubes [$h \cong 5{,}000$ kg-cal/hr/m^2/°C (1,000 Btu/hr/ft^2/°F) and $k \cong 50$ to 500 kg-cal/hr/m^2/°C (10 to 100 Btu/hr/ft/°F)], the water-side film resistance is almost one order of magnitude greater than the tube-wall resistance. However, if a plastic tube heat exchanger (with controlled-release pesticides) is used instead of a metal tube, the tube wall resistance term would be increased by two

orders of magnitude under the same configuration. Adoption of a thinner wall and a smaller tube diameter could offset the increase in the tube wall thermal resistance of the plastic heat exchanger while maintaining tube rigidity. Much more research and development work is needed in developing a practical plastic heat exchanger for powerplant condenser use.

Using controlled-release pesticides in nonheat-transfer surfaces, such as in recirculating cooling-tower systems, bar racks, screens, or concrete canals, is a completely different story. Hot water is cooled by evaporative cooling and does not involve conductive heat transfer. Use of controlled-release pesticides, either in the form of a coating or the structural member itself, would certainly minimize bio-fouling of cooling towers. The U.S. Navy has successfully static-tested a variety of coatings (e.g., acrylic base) with organometallic groups (e.g., organotin) on marine surfaces for the prevention of marine organism growths. The Navy predicts that the coating (<8 mils thick) would be effective for 5 years on a ship hull. The cost of antifouling coatings is $60/gal to $100/gal (personal communication with Eugene Fischer, U.S. Navy, Annapolis, Maryland).

4.3 PHYSICAL-CHEMICAL METHODS OF TREATMENT

Radiation treatment of waters is one way to overcome the problems associated with effluent cleanup due to the gradual tightening of water quality standards. It is believed, however, that the cost for radiation treatment will be much higher than that for conventional systems, depending on the methods of treatment employed. Radiation treatments also provide no post-treatment protection against recontamination of treated waters. The use of radiation treatment for powerplant cooling water is not cost-effective at present due to lack of field-testing experience and its inability to control bio-fouling of cooling towers for closed recirculating cooling systems without additional chemical treatment.

In addition to the economic factors, the forms of radiation which can be seriously considered may conveniently be grouped into two classes:

- Gamma rays and x-rays
- Beta particles and accelerated electrons

There are other physical-chemical methods of treatment (e.g., electrodialysis, reverse osmosis, freezing, etc.) being considered for water treatment, but these are not applicable to powerplant cooling-water treatment because of their high cost.

4.3.1. Ultraviolet Radiation

The radiation energy of ultraviolet rays can be used to destroy microorganisms. In order to kill, the electromagnetic waves of

ultraviolet must actually strike the organism. The germicidal effect of ultraviolet energy is thought to be associated with its absorption by various organic molecular components essential to the functioning of cells, producing a progressive lethal biochemical change.

The ultraviolet treatment does not change the water chemically; nothing is added except energy, which produces heat and results in a slight temperature rise in the treated water. The only radiant energy that can be effective in killing bacteria is that which reaches the bacteria, so that the water must be free of any particles that would act as a shield. This is one of the main disadvantages of the ultraviolet process; other disadvantages are lack of field testing and its inability to provide any residual disinfecting capacity.

Effective disinfection of water requires ultraviolet radiation (2537A) at a dosage of 2,500 to 440,000 microwatt-second/cm^2, depending on the type or organisms, at all points throughout the water depth, which, in turn, limits the processing of a large volume of deep-flowing cooling water. However, it is not known whether ultraviolet could effectively destroy all of the microorganisms in cooling water because there is a consensus that ultraviolet radiation will not kill any organisms that can be seen with the naked eye.

At present the application of this process is limited to small water supplies and certain special situations where other methods are not considered feasible. Based on present technology, the ultraviolet process is impractical for powerplant cooling-water treatment because of the cost of the equipment and the power requirements for operating the germicidal lamp. The cost of the electric current to operate the lamp is many times that of sufficient chlorine to do the same job.[15] Furthermore, most river waters and other sources of high turbidity and organic and iron content usually cannot be disinfected at designed capacity.

4.3.2 Gamma Radiation

Gamma radiation has the capacity to destroy microorganisms. It is expensive, however, and this coupled with the care required in applying this method for disinfection purposes would seem likely to restrict its use at present. Some day nuclear reactor wastes might be employed for disinfection rather than pure isotopes, such as cobalt-60 or cesium-137. This could reduce costs significantly.

For example, the first commercial operation using gamma radiation to treat sewage was initiated in West Germany in 1973. The facility, designed to use either cobalt-60 or cesium-137, provided 120,000 curies to treat a daily throughput of up to 30 m^3. The radioisotope is encapsulated in a double-walled, corrosion-resistant steel pipe 8 meters underground. Currently, there is

considerable debate as to whether radioactive isotopes will emerge as the preferred method of water treatment. The main disadvantages of radioisotopes, such as cobalt-60, are the hazards inherent in handling large amounts of radioactive material, shortage of material for wide-spread use, and the high initial and replacement costs compared with conventional cooling-water treatment. As an example, the initial cost for the source (10 megacuries of cobalt-60) to supply 150 kW of gamma radiation would be $5 million, and the annual replenishment cost (at 12% per year) would be about $620,000.[27] Up to 1.14×10^3 m^3 (300,000 gallons) of sludge can be treated daily. The replenishment cost adds approximately $5 per 3.8 m^3 (1,000 gallons) to the operation without considering capital, operating, and maintenance costs.

The use of radiation for destruction of bacteria has been extensively studied in other areas of technology; e.g., sterilization of food products. The sterilizing dose is generally accepted as 2.5 mr (millirads), which will handle the most resistant species, the spore-forming organisms.[28] In spite of optimistic predictions, a realistic figure for radiation-treatment costs is 2.2¢/mr-kg (1¢/mr-lb).[18] Thus, if wastewater requires a dose of 1 mr to achieve the desired objective, the cost will be $83/3.8 m^3 (1,000 gallons) (in 1971 dollars)! Against this, the existing proven technology can completely renovate municipal wastewater to drinking-quality water for about $0.60/3.8 m^3 (1,000 gallons) (1971 dollars). In view of its prohibitive cost, a major breakthrough is needed before radiation treatment of cooling waters will become economically feasible.

4.3.3 Electron Beam Radiation

A pilot 50 kW high-energy electron-beam source is now being used to treat sewage and wastewater at Boston's Metropolitan District Commission Plant. The accelerator provides ionization equivalent to 3.5 million curies of cobalt-60 or 16 million curies of cesium-137. Up to 380 m^3 (100,000 gal)/day of sludge will flow in a thin, wide stream under a beam of electrons that swings back and forth across the moving stream. The electrons provide a radiation dose of about 400,000 rads, enough to destroy pathogenic organisms present in the sludge. An electron accelerator requires running and maintenance costs, and it does consume large amounts of electricity continuously. At least two accelerators would be needed to provide continuous service if one failed.

---

[27] Irradiation of Sewage Gains Adherents. Chemical and Engineering News, (53):30, August 1975.

[28] Ballantine, D. S. Potential Role of Radiation in Wastewater Treatment. Isotopes and Radiation Technology, 8(4):415-420, Summer, 1971.

Technically, electron-beam radiation is feasible for preventing bio-fouling of condensers, but it is expensive and does not provide post-treatment protection of cooling-water systems against downstream contamination; e.g., algae growth in cooling tower. Other treatments, such as chemical treatment (e.g., slow-release biocide in the cooling tower), must be applied simultaneously for the successful operation of the entire cooling system.

4.4 MORE EFFICIENT METHODS OF PRESENT CHEMICAL APPLICATION

In Section 3, more efficient methods of present chemical application are discussed. The advanced application techniques are being considered in some of the newer powerplants, but they are not practiced in older powerplants due to design limitations in retrofitting or the lack of need in the past. Established allowable free-chlorine concentration limitations of an average 0.2 mg/l and a maximum of 0.5 mg/l in effluents (by EPA) are only for new powerplants.

4.4.1 Serial Dosing Near the Inlet of the Condenser

As discussed earlier in Section 3, for once-through cooling systems, substantial reduction in chlorine-residual emissions and savings in chlorine dosages can be achieved by designed chlorine application as near the condenser inlet as possible without any loss in condenser performance. This is possible due to the short contact time (20 seconds to 30 seconds) of the waterflow through the condensers and due to the fact that most of the added chlorine still exists as free chlorine (HOCl), instead of less-effective chloramines formed later on. Often, sampling and accurate free-chlorine residual determination may consume much more time than the actual contact time, thus resulting in using a larger dosage than necessary in the cooling water of many powerplants.

It is reported[4] that some powerplants employing once-through cooling-water systems treat the multiple condensers one at a time, and discharge from the unit is diluted by that from the other condensers not being chlorinated, resulting in the discharge of negligible residual chlorine to the receiving water. The effect of dilution and exertion of chlorine demand by the unchlorinated water (from the condensers not being treated at the time) occurs almost simultaneously.

For the past 25 years, with few exceptions, condenser cooling water has been chlorinated at the intake structure, instead of at the condenser inlet. The chlorine solution piping system is as uncomplicated as possible, often being limited to a simple chlorine feed control. For marine-water cooling systems, because of the growth of shelled organisms, the chlorination equipment and the diffuser are located ahead of the bar racks, generally several hundred feet from the condensers.

Generally, most new condensers are served by at least two cooling-water flows; six are not uncommon. Therefore, if the points of chlorine application are redesigned and relocated in the piping system just ahead of the inlet water boxes, and if the chlorine control system is designed to treat the unit flows one at a time in sequence, the chlorine residual in the emerged discharged water would be diluted by factors of two, three, or six depending on the system design. However, by doing so, the long cooling-water lines ahead of the condensers and the intake structure would not be protected in terms of organic fouling or Bryozoa and shelled organisms if brackish water or seawater is used without additional low-level, continuous chlorination ahead of the bar racks.

Mechanically or electrically, the chlorination system would become more complicated, but with compensations. The size of the chlorination system in terms of the chlorine feed rate would be reduced by a factor of two, three, or six. This saving in cost would probably be offset by that for additional solution piping and controls. However, the total amount of chlorine used and discharged chlorine residuals would be reduced to the practical minimum for the particular plant and units. This improved chemical application system is particularly beneficial to once-through cooling systems, but the split-stream chlorination of the condenser flow should also be practiced with recirculating systems with cooling towers.

4.4.2 Addition of Dechlorination Chemicals

Since the current trend in the United States is toward recirculating cooling-water systems with minimum water intake or discharge to the environment, the control of blowdown (which amounts to as high as 5% of the cooling flow) would become increasingly important.

Dechlorination of the residual chlorine in the cooling-tower blowdown with automatic addition of dechlorination chemicals can remove all or part of the total combined chlorine residual. This treatment is accomplished by the addition of sulfur dioxide or other sulfur-bearing compounds, such as sodium sulfite or sodium metabisulfite; activated carbon is also helpful. A dechlorination facility is being installed in a nuclear powerplant employing cooling towers currently under construction.[4] Whenever residual chlorine is present in the discharge channel, sodium bisulfate will be added in the last chamber of the dilution structure. The addition of bisulfite must be controlled automatically using a chlorine analyzer with the sensitivity of about 0.01 ppm residual chlorine.

When sulfur dioxide or related compounds are used, the first reaction is to instantaneously remove the free chlorine (HOCl). The next reaction is the removal of monochloramine, followed by dichloramine, nitrogen trichloride, and, finally, the poly-N-chloro compounds. The total overall reaction time to remove all of these compounds is never more than a few minutes. The chemical

reaction involved in dechlorination amounts to the conversion of all of the positive chlorine atoms to the negative chloride atoms, such as:

$$SO_2 + H_2O \rightarrow H_2SO_3 + HOCl \rightarrow H_2SO_4 + HCl \quad (12)$$

$$NH_2Cl + H_2SO_3 + H_2O \rightarrow NH_4HSO_4 + HCl \quad (13)$$

$$Na_2SO_3 + Cl_2 + H_2O \rightarrow Na_2SO_4 + 2\ HCl \quad (14)$$

$$C + 2\ Cl_2 + 2\ H_2O \rightarrow CO_2 + 4\ HCl \quad (15)$$

The reaction of sulfur dioxide with both free- and combined-chlorine residuals is nearly instantaneous, provided there is adequate mixing and rapid contact between them. The speed of the sodium sulfite reaction is similar to that of sulfur dioxide--a matter of seconds for completion.

Although dechlorination will remove available free and combined chlorine, it will not detoxify chlorinated organics (e.g., chlorophenols) with the exception of organic chloramines. This would not pose any problem, since cooling water usually does not contain appreciable amounts of phenolics as does wastewater.

From an engineering standpoint, the handling of sulfur dioxide is similar to that of chlorine. Equipment used to meter SO_2 is identical in all aspects to that for metering chlorine. Therefore, any sulfonator can be used interchangeably between chlorine and sulfur dioxide. The notable difference between sulfur dioxide and chlorine gas is in the vapor pressure. This difference is important in the withdrawal and handling of the sulfur-dioxide supply system. Because of possible liquefaction, sulfur-dioxide cylinders and the sulfonator should be heat traced and insulated. The control of sulfur dioxide to provide the residual in the effluent acceptable to aquatic life can be accomplished by means of automatic chlorine residual control instrumentation. Approximately 1 mg/l (ppm) of sulfur dioxide is required to remove 1 mg/l (ppm) chlorine residual.

To minimize the requirement of dechlorination, excess total residual chlorine discharge can be minimized by monitoring free available chlorine concentrations in the discharge stream and providing feedback control on dechlorination. This type of control system is not in general use in powerplants at this time but is common practice in municipal sewage treatment plants.

4.4.3 Blowdown Timing Control

Blowdown from many recirculating cooling-tower systems is continuous. The curve in Figure 5 shows a typical concentration of total residual chlorine in cooling-tower blowdown versus time, indicating the cyclic nature of shock treatment and decaying chlorine residuals. By monitoring the residual chlorine in the effluent, it is possible to schedule blowdown only at such times when the

residual chlorine is below the established limit. Typical automatic blowdown-control equipment costs for a 1,000 MW fossil-fuel plant are estimated to be $7,300 including installation (1973 dollars).[4]

4.4.4 Chlorination by Feedback Control of Residuals

To minimize the discharge of excess chlorine residuals, technology is currently available for feedback control of chlorination systems. By monitoring free-available chlorine discharge in once-through cooling systems, the chlorinator can be automatically controlled to within the guidelines and limitations. However, it is yet to be proved that powerplants operating under these guidelines are capable of controlling bio-fouling of their condensers. If this cannot be done with conventional chlorination, some other alternatives discussed in this report might be needed for the control of condenser bio-fouling.

4.5 OTHER INFORMATION

A significant number of other references containing valuable information relative to bio-fouling control for condensers have been published. A number of these are listed in the bibliography of this report.

REFERENCES

1. Permissible Chlorine Concentrations in Effluents from New Sources. Federal Register. Vol. 39, October 8, 1974.

2. Coolins, H. F. Sewage Chlorination Versus Toxicity--A Dilemma. Journal of the Environmental Engineering Division Proc. ASCE, 99, No. EE6, 761-72(1973), December.

3. Environmental Studies Board, National Academy of Sciences, Water Quality Criteria 1972, EPA-Re-73-033.

4. Nichols, C. R. Development Document for Effluent Limitations, Guidelines, and New Source Performance Standards for the Steam Electric Power generation Point Source Category. U.S. Environmental Protection Agency, NTIS PB 240 853, October 1974. 771 pp.

5. Mills, J. F. The Chemistry of Bromine Chloride in Wastewater Disinfection. (Presented at American Chemical Society Meeting). Chicago, Illinois, August 1973.

6. Weber, W. J., Jr. Physicochemical Processes for Water Quality Control. Wiley-Interscience, New York, New York. 640 pp.

7. White, G. C. Handbook of Chlorination. Van Nostrand Reinhold Company, New York, New York, 1972.

8. Nester, D. M. Saltwater Cooling Tower. Chemical Engineering Progress. 67(7):49-51, 1971.

9. Baker, R., and S. Cole. Residual Chlorine: Something New to Worry About. Industrial Water Engineering, March/April, 1974.

10. Steam-Electric Plant Air and Water Quality Control Data. Summary Reports, Federal Power Commission, FPC-S-246, March 1975. 170 pp. and FPC-S-233, July 1973. 165 pp.

11. Reid, L. C., Jr., and D. A. Carlson. Chlorine Disinfection of Low Temperature Waters. Journal of the Environmental Engineering Division, Proceedings of the American Society of Civil Engineers. 100(EE2):339-351, April 1974.

12. Daugard, S. J., and T. R. Sundaram. Review of the Engineering Aspects of Power Plant Discharges. Hydronautics, Inc., Laurel, Maryland. Prepared for Maryland Department of Natural Resources, U.S. Environmental Protection Agency, Washington, D. C., NTIS PB 235 783, October 1973. 115 pp.

13. Kern, W. I. Continuous Tube Cleaning Improve Performance of Condensers and Heat Exchangers. Chemical Engineering. 83(22):139-144, October 1975.

14. Majumdar, S. B., and O. J. Sproul. Technical and Economic Aspect of Water and Wastewater Ozonation: A Critical Review. Water Research, 8:253-260, 1974.

15. Kinman, R. N. Water and Wastewater Disinfection with Ozone: A Critical Review. CRC Critical Review in Environmental Control, January 1975. p. 141.

16. McCarthy, J. J., and C. H. Smith. A Review of Ozone and Its Application to Domestic Wastewater Treatment. Journal of AWWA, p. 718-725, December 1974.

17. A Refreshing Change for Water. Chemical Week, June 16, 1976, p. 29.

18. Technology Concentrates. Chemical & Engineering News, 54:17, November 22, 1976.

19. Technology Newsletter. Chemical Week. 119:75, November 24, 1976.

20. Taylor, D. G., and J. D. Johnson. Kinetics of Viral Inaction by Bromine. Presented before the Division of Water, Air and Waste Chemistry, American Chemical Society, Dallas, Texas, April 1973.

21. Kott, Y. Effect of Halogens on Algae. Water Research. 3(4):256-271, 1969.

22. Wackenhuth, E. C., and G. Levine. An Investigation of Bromine Chloride as a Biocide in Condenser Cooling Water. Presented at 35th Annual Meeting of the International Water Conference, Pittsburgh, Pennsylvania, October 29-31, 1974.

23. Wheeler, G. L., and F. Yau. Chlorine Dioxide: A Selective Oxidant for Industrial Wastewater Treatment. Paper Presented on Industrial Conference & Exposition, Houston, Texas, March 30 to April 1, 1976.

24. Rauh, J. S. Chlorine Dioxide, A Cooling Water Microbiocide. Presented at the Annual Meeting Water and Wastewater Equipment Manufacturers Association, Houston, Texas, April 1976.

25. Ward, W. J. Chlorine Dioxide, A New Development in Effective Microbio Control. Annual Meeting Coding Tower Institute, Houston, Texas, January 19-21, 1976.

26. Controlled-Release Pesticides Set for Growth. Chemical and Engineering News, 53:19, September 1975.

27. Irradiation of Sewage Gains Adherents. Chemical and Engineering News, (53):30, August 1975.

28. Ballantine, D. S. Potential Role of Radiation in Wastewater Treatment. Isotopes and Radiation Technology, 8(4):415-420, Summer, 1971.

BIBLIOGRAPHY

Aquafine Electronic Water Sterilization. Publication of Aquafine Corporation, Burbank, California.

Albright, J. C. Liquid Bromine Removes Obstinate Algae from 10,000 gpm Tower for $2.10/day. Petroleum Processing, 421-422, May 1948.

Augenstein, H. W. Use of Chloride Dioxide to Disinfect Water Supplies. Journal of AWWA, 716-717, December 1974.

Beauchamp, R. S. A. The Use of Chlorine in the Cooling Water System of Coastal Power Station. Central Electric Research Laboratory, Leatherhead, Surrey, England.

Bellar, T. A., and J. J. Lightenberg. The Occurrence of Organohaides in Chlorinated Drinking Waters. Journal of AWWA, 703-706, December 1974.

Bromine Chloride Handbook. The Dow Chemical Company, Inorganic Chemicals Department, Midland, Michigan.

Bromine Chloride--An Improved Treatment for Wastewater and Cooling Water. Dow Chemical Company, Inorganic Chemicals Department, Midland, Michigan.

Brooke, M. Cooling Water Treatment, Dollars and Sense. Presented at the 22nd Annual Conference of the National Association of Corrosion Engineers, Miami Beach, Florida, April 18-20, 1966.

Brooks, W. B. Sea Water as an Industrial Cooling. Presented at Cooling Tower Institute Meeting, New York, New York, June 26-28, 1967.

Capper, C. B. Fouling of Heat Exchangers from Cooling Water and Process Materials. Effluent and Water Treatment Journal, 14(6):309-314, 1974.

Chlorination Guide. Bulletin 4004-1, Capital Controls Company, Colmar, Pennsylvania.

Chet, I., P. Asketh, and R. Mitchell. Repulsion of Bacteria from Marine Surfaces. Applied Microbiology, 30(6):1043-1045, December 1975.

Cole, S. A. Experimental Equipment for Feeding Bromine Chloride. Presented at 35th Annual Meeting of the International Water Conference, Pittsburgh, Pennsylvania, October 29-31, 1974.

Converting Sewage Sludge into Safe Fertilizer. Industrial Research, 13, May 1975.

Cooling Water, Its Fundamentals. Publication of Wright chemical Corporation, Acme Station, Riegelwood, North Carolina, January 1971.

Cottier, D. A. Ozone Disinfection of Water and Wastewater. Presented at 1st Southwestern Ohio Conference on Energy and Environment, AIChE, Houston Woods State Park, Ohio, October 25, 1973.

Cubisino, A. R. Cooling Water Treatment Specification. Presented at Cooling Tower Institute Meeting, New Orleans, Louisiana, January 29-31, 1968.

Culp, R. L. Breakpoint Chlorination for Virus Inactivation. Journal of AWWA, 699-703, December 1974.

Diaper, E. W. J. Disinfection of Water and Wastewater Using Ozone. Presented before the Division of Environmental Chemistry, American Chemical Society, Chicago, Illinois, August 26-31, 1973.

Donohue, J. M. Cooling Water Treatment--Where Do We Stand? Materials Protection and Performance, 11(6):19-23, 1972.

Donohue, J. M., and C. V. Sarno. Pollution Abatement Pressures Influence Cooling Water Conditioning. Presented at International Corrosion Forum, St. Louis, Missouri, March 20-24, 1972.

Evan, F. L. III, ed. Ozone in Water and Wastewater Treatment. Ann Arbor Science Publishing, Inc., Ann Arbor, Michigan, 1972. 185 pp.

Farber, A. L. Water Pollution Abatement Brings New Idea to the Cooling Water Industry. Presented at 55th Cooling Tower Institute Conference, New Orleans, Louisiana, January 24-26, 1972.

Fontana, M. G., and R. D. Greene. Corrosion Engineering. McGraw-Hill Book Company, New York, New York, 1967. p. 282-287.

Forbes, M. C. The Relationship of Cooling Tower Operation. Presented at Annual Meeting Cooling Tower Institute, Houston, Texas, January 23, 1967.

Freedman, A. J., and J. E. Shannon. Modern Alkaline Cooling Water Treatment. Industrial Water Engineering, 31-34, January/ February 1973.

Gomella, C. Ozone Practices in France. Journal of American Water Works Association, 64(1):39-45.

Havers, W. W. Biocide Application in Cooling Towers. Presented at the Annual Meeting of the Cooling Tower Institute, Houston, Texas, January 22-25, 1967.

Hedgepeth, L. L. Industrial Wastes, 1957 Industrial Wastes Forum, Solving the Cooling Tower Blowdown Pollution Problem. Sewage & Industrial Wastes, 30(4):541-544, 1958.

Hoehn, R. C. Comparative Disinfection Methods. Journal of AWWA, 302-308, June 1976.

Hollingshad, W. R. Fundamentals of Corrosion in Cooling Water Systems, Presented at Annual Meeting of the Cooling Tower Institute, New Orleans, Louisiana, January 24-26, 1972.

Huff, C. B., H. F. Smith, W. B. Boring, and N. A. Clarke. Study of Ultraviolet Disinfection of Water and Factors in Treatment Efficiency. Public Health Reports, 80(8):695-704, 1967.

Industrial Wastewater Treatment, A Guidebook to Hydrogen Peroxide for Industrial Wastes. Publication of FMC Corporation, Industrial Chemical Division, Philadelphia, Pennsylvania.

Johnson, J. D., ed. Disinfection Water and Wastewater. Ann Arbor Science Publisher, Inc., Ann Arbor, Michigan, 1975. 425 pp.

Johnson, J. D., and R. Overby. Bromine and Bromamine Disinfection Chemistry. Journal of the American Society of Civil Engineers, EE3, 371-373, June 1973.

Johnson, J. D., and R. Overby. Bromine and Bromamine Disinfection Chemistry. In: Proceedings of the American Society of Civil Engineers, Journal of the Sanitary Engineering Division, SA5: 617-628, October 1971.

Kabler, P. W., N. A. Clarke, G. Berg, and S. L. Chang. Viricidal Efficiency of Disinfectants in Water. Public Health Reports, 76(7):565-570, 1961.

Katzenelson, E., B. Kletter, and H. I. Shuval. Inactivation Kinetics of Viruses and Bacteria in Water by Use of Ozone. Journal of AWWA, 725-729, December 1974.

Keller, J. W., R. A. Morin, and T. J. Schaffernoth. Ozone Disinfection Pilot-Plant Studies at Laconia, N. H. Journal of AWWA, 730-733, December 1974.

Kelly, B. J. Bio-Control and the Environment. Presented at International Corrosion Forum, St. Louis, Missouri, March 20-24, 1972.

Kelly, B. J. Microbiological Control Treatment and the Environment. Nalco Reprint 199, Nalco Chemical Company, Chicago, Illinois.

Kelly, B. J., and P. R. Puckorius. Waterside Fouling and Scaling of Heat Exchange Equipment. Presented at North Central Regional Conference, National Association of Corrosion Engineers, Kansas City, Kansas, October 2, 1963.

Kinman, R. N., and R. F. Layton. New Method for Water Disinfection. Journal of AWWA, 298-302, June 1976.

Kott, Y. K., G. Hershkovitz, A. Shemtom, and J. B. Sless. Algicidal Effect of Bromine and Chlorine on Chlorella Pyrenoidosa. Applied Microbiology, 11(1):8-11, 1966.

Lambert, J. L., and L. R. Fina. A New Type of Disinfectant for Water Supplies. NTIS PB 205 883. Kansas Water Resources Research Institute, Kansas State University, Manhattan, Kansas, 1971.

Levi, E. J. New Developments in Basics of Cooling-Water Treatment. Chemical Engineering, 88-92, June 10, 1974.

Maguire, J. J., W. H. Betz, and L. D. Betz. Biological Fouling in Recirculating Cooling Water Systems. Industrial and Engineering Chemistry, 48(12):2162-2167, 1956.

Majumdar, S. B. Technical and Economic Aspects of Water and Wastewater Ozonation: A Critical Review. Water Research, 8:253-260.

Majumdar, S. B., and S. I. Glassman. Ozonation--A Viable Treatment for Circulating Cooling Water Systems. Proceedings of the American Power Conference, 36:759-766, 1974.

McClanahan, M. A. Recycle, What Disinfectant for Safe Water Then. Presented before Division of Environmental Chemistry, American Chemical Society, Chicago, Illinois, September 1973.

McCoy, J. W. The Chemical Treatment of Cooling Water. Chemical Publishing Company, New York, New York, 1974. 237 pp.

McDermott, J. H. Virus Problems and Their Relation to Water Supplies. Presented at the Virginia Sect. Meeting on October 25, 1973. Journal of AWWA, 693-698, December 1974.

Mills, J. F. Bromine Chloride, An Alternate to Chlorination. Reprint of Halogens Research Laboratory, The Dow Chemical Company, Midland, Michigan.

Mills, J. F. The Disinfection of Sewage by Chlorobromination. Presented before the Division of Water, Air, and Waste Chemistry, American Chemical Society, Dallas, Texas, April 1973.

Mills, J. F., and B. D. Oakes. Bromine Chloride: Less Corrosive than Bromine. Chemical Engineering, 102-106, August 6, 1973.

A Miracle Maze that Purifies. Business Week, 120, March 22, 1976.

Motley, F. W., and T. C. Hoppe. Cooling Tower Design Criteria and Water Treatment. Presented at the Cooling Tower Institute Meeting, Aspen, Colorado, June 22-24, 1970.

Mytelka, A. I. Radiation Treatment of Industrial Wastewaters: An Economic Analysis. Isotopes and Radiation Technology, 8(4):444-449, Summer 1971.

Nebal, C., N. A. Forde, and H. J. O'Neill. Ozone Disinfection of Water and Wastewater. CTFA Cosmetic Journal, 4(1):26-27.

New Phenols Look Shipshape as Biocides. Chemical Week, 67-70, April 28, 1976.

Nordell, F. Water Treatment for Industrial and Other Uses. Reinhold Publishing Corporation, New York, New York, 1961.

Nuclear Power in the South, A Report of the Southern Governor's Task Force for Nuclear Power Policy. Presented at 1970 Southern Governor's Conference, September 22, 1970.

Olivieri, V. P., C. W. Kruse, Y. C. Hsu, A. C. Griffiths, and K. Kawata. The Comparative Mode of Action of Chlorine, Bromine, and Iodine of F_2 Bacterial Virus. Presented before the Division of Environmental Chemistry, American Chemical Society, Chicago, Illinois, August 26-31, 1973.

Palin, A. T. Analytical Control of Water Disinfection with Special Reference to Differential DPD Methods for Chlorine, Chlorine Dioxide, Bromine, Iodine, and Ozone. Journal of Institute of Water Engineering, 28(33):139-155, 1974.

Palin, A. T. Water Disinfection--Chemical Aspects and Analytical Control. Presented before the Division of Environmental Chemistry, American Chemical Society, Chicago, Illinois, August 26-31, 1973.

Phenols in Refinery Wastewater Can Be Oxidized with Hydrogen Peroxide. The Oil and Gas Journal, 84-86, January 20, 1975.

Power-Generation Systems, Energy Systems Engineering. The Editors of Power, McGraw-Hill Book Company, New York, New York.

Presnell, M. W., and J. M. Cummins. Effectiveness of Ultra-Violet Radiation Units in the Bactericidal Treatment of Seawater. Water Research, 6:1203-1212, 1972.

Ralston, P. H. Inhibiting Water-Formed Deposits with Threshold Compositions. Paper No. 43, Presented at International Corrosion Forum, St. Louis, Missouri, March 20-24, 1972.

Rosen, H. M. Economical Wastewater Disinfection with Ozone. Presented before the Division of Environmental Chemistry, American Chemical Society, Chicago, Illinois, August 26-31, 1973.

Rosen, H. M. Generation and Application of Ozone in Water Treatment Facilities. Journal of New England Water Works Association, 88(2):168-187, 1974.

Rosenblatt, D. H. Some Reactions of Chlorine and Oxy-Chlorine Species with Organic Compounds in Aqueous Media. Presented before the Division of Environmental Chemistry, American Chemical Society, Chicago, Illinois, August 1973.

Saguinsin, J. L., and J. C. Morris. The Chemistry of Aqueous Nitrogen Trichloride. Presented at Division of Environmental Chemistry, American Chemical Society, Chicago, Illinois, August 29, 1973.

Shair, S. Microbiocide Treatment of Recirculating Cooling Water. Industrial Water Engineering, 26-30, January 197?.

Smith, R., R. G. Eilers, and W. F. McMichael. Cost of Alternative Processes for Wastewater Disinfection. Reprint EPA, Cincinnati, Ohio, 1974.

Smith, J. E., and J. L. McVey. Virus Inactivation by Chlorine Dioxide and Its Application to Storm Water Overflow. Presented before the Division of Environmental Chemistry, American Chemical Society, Chicago, Illinois, August 26-31, 1973.

Sneed, M. C., J. L. Maynard, and R. C. Brasted. Comprehensive Inorganic Chemistry, Volume III. D. Van Nostrand Company, Inc., New York, New York, 1954. p. 193-195.

Soilo, F. W., H. F. Mueller, and T. E. Larson. Bromine Disinfection of Wastewater Effluents. Presented before the Division of Environmental Chemistry, American Chemical Society, Chicago, Illinois, August 26-31, 1973.

Stringer, R. P., W. N. Cramer, and C. W. Kruse. Bromine, Chlorine, and Iodine Compared as Disinfectants for Amoebic Cysts. Presented before the Division of Environmental Chemistry, American Chemical Society, Chicago, Illinois, August 1973.

Sun, W., L. W. Little, and J. D. Johnson. Wastewater Disinfection of Trickling Filter Effluent with Bromine and Chlorine. Presented before the Division of Environmental Chemistry, American Chemical Society, Chicago, Illinois, September 1973.

Suratt, W. B., G. K. Hart, and E. N. Sieder. Development of Plastic Heat Exchangers for Sea Solar Power Plants, Final Report for the National Science Foundation Research Applied to National Needs. NSF/RANN/AER74-13030A01/FR/75/1, DSS Engineers, Inc., Ft. Lauderdale, Florida, March 1975.

Thornley, J. L. Water Treatment for Cooling Towers. Presented at Bi-Annual Meeting, The Cooling Tower Institute, Los Angeles, California, June 24-26, 1968.

Troscinski, E. S., and R. G. Watson. Controlling Deposits in Cooling-Water Systems. Chemical Engineering, 125-132, March 9, 1970.

Twitchell, S. B. Water Quality Criteria and the Industrial Water Treatment Program. 9th Annual Liberty Bell Corrosion Course, Course IV, 1971.

White, G. C. Disinfection: Present and Future. Journal of AWWA, 689-692, December 1974.

Willa, J. Application Techniques for Treating Cooling Towers with Polychlorophenates. Presented at the Annual Meeting of the Cooling Tower Institute, Houston, Texas, January 25-27, 1965.

Wilson, H. O. Costs for Alternate Methods of Wastewater Disinfection. Presented at the Chlorine Residual Policy Seminar Held at the Engineering Society of Baltimore, Maryland, November 14, 1974.

Young, R. A., P. N. Cheremisinoff, and S. M. Feller. Tertiary Treatment: Advanced Wastewater Techniques. Pollution Engineering, 26-33, April 1975.

Zimmie, W. E. A New Method of Chemical Cleaning of the Water Side of Process Equipment. Presented at Cooling Tower Institute, New York, New York, June 17, 1964.

TECHNICAL REPORT DATA
(Please read Instructions on the reverse before completing)

1. REPORT NO. EPA-600/7-77-030	2.	3. RECIPIENT'S ACCESSION NO.
4. TITLE AND SUBTITLE Alternatives to Chlorination for Control of Condenser Tube Bio-Fouling		5. REPORT DATE March 1977
		6. PERFORMING ORGANIZATION CODE
7. AUTHOR(S) H.H.S. Yu, G.A. Richardson, and W.H. Hedley		8. PERFORMING ORGANIZATION REPORT NO. MRC-DA-638
9. PERFORMING ORGANIZATION NAME AND ADDRESS Monsanto Research Corporation 1515 Nicholas Road Dayton, Ohio 45407		10. PROGRAM ELEMENT NO. EHE624
		11. CONTRACT/GRANT NO. 68-02-1320
12. SPONSORING AGENCY NAME AND ADDRESS EPA, Office of Research and Development Industrial Environmental Research Laboratory Research Triangle Park, NC 27711		13. TYPE OF REPORT AND PERIOD COVERED Final; 4-10/76
		14. SPONSORING AGENCY CODE EPA/600/13

15. SUPPLEMENTARY NOTES IERL-RTP project officer for this report is Fred Roberts, EPA/ERL, Corvallis, OR 97330, 503/757-4715.

16. ABSTRACT The report gives results of a study of methods used to reduce free-chlorine residuals in power plant effluents. Most U.S. power plants use chlorine (28,600 tons in 1972) to control biological fouling in their cooling systems, particularly in their condenser tubes. Using chlorine raises many questions regarding the toxicity of chlorinated compounds which may enter public drinking-water systems or harm aquatic organisms in the receiving water. The report considers viable alternatives to current chlorination practices used to decrease passage of ecologically harmful effluents to receiving waters. Alternative methods include: use of other chemicals (BrCl, ClO2, O3, controlled-release pesticides); more efficient methods of chemical application (serial dosing near the condenser inlet, adding dechlorination chemicals, blowdown timing control, chlorination by residuals feedback control); on-line mechanical cleaning (sponge ball system, brush system, hot water backflush system); and physical/chemical treatment. Information on advantages, disadvantages, costs, and applicability for retrofit or new installations of these methods is presented. Promising approaches to reducing free-chlorine residuals in power plant effluents are available.

17. KEY WORDS AND DOCUMENT ANALYSIS

a. DESCRIPTORS		b. IDENTIFIERS/OPEN ENDED TERMS	c. COSATI Field/Group	
Water Pollution	Chlorination	Water Pollution Control	13B	07C,07B
Electric Power Plants		Stationary Sources	10B	
Cooling Systems	Aquatic Biology	Biological Fouling	13A	08A,06C
Condenser Tubes	Toxicity		09A	06T
Fouling Prevention	Potable Water		13H,13J	08H
Fouling	Pesticides			06F

18. DISTRIBUTION STATEMENT Unlimited	19. SECURITY CLASS *(This Report)* Unclassified	21. NO. OF PAGES 80
	20. SECURITY CLASS *(This page)* Unclassified	22. PRICE

EPA Form 2220-1 (9-73)