EPA U.S. Environmental Protection Agency
Office of Research and Development

Industrial Environmental Research
Laboratory
Research Triangle Park, North Carolina 27711

EPA-600/7-77-125b
November 1977

ENVIRONMENTAL ASSESSMENT DATA BASE FOR LOW/MEDIUM-BTU GASIFICATION TECHNOLOGY: Volume II. Appendices A-F

Interagency
Energy-Environment
Research and Development
Program Report

RESEARCH REPORTING SERIES

Research reports of the Office of Research and Development, U.S. Environmental Protection Agency, have been grouped into seven series. These seven broad categories were established to facilitate further development and application of environmental technology. Elimination of traditional grouping was consciously planned to foster technology transfer and a maximum interface in related fields. The seven series are:

1. Environmental Health Effects Research
2. Environmental Protection Technology
3. Ecological Research
4. Environmental Monitoring
5. Socioeconomic Environmental Studies
6. Scientific and Technical Assessment Reports (STAR)
7. Interagency Energy-Environment Research and Development

This report has been assigned to the INTERAGENCY ENERGY-ENVIRONMENT RESEARCH AND DEVELOPMENT series. Reports in this series result from the effort funded under the 17-agency Federal Energy/Environment Research and Development Program. These studies relate to EPA's mission to protect the public health and welfare from adverse effects of pollutants associated with energy systems. The goal of the Program is to assure the rapid development of domestic energy supplies in an environmentally--compatible manner by providing the necessary environmental data and control technology. Investigations include analyses of the transport of energy-related pollutants and their health and ecological effects; assessments of, and development of, control technologies for energy systems; and integrated assessments of a wide range of energy-related environmental issues.

REVIEW NOTICE

This report has been reviewed by the participating Federal Agencies, and approved for publication. Approval does not signify that the contents necessarily reflect the views and policies of the Government, nor does mention of trade names or commercial products constitute endorsement or recommendation for use.

This document is available to the public through the National Technical Information Service, Springfield, Virginia 22161.

EPA-600/7-77-125b
November 1977

ENVIRONMENTAL ASSESSMENT DATA BASE FOR LOW/MEDIUM-BTU GASIFICATION TECHNOLOGY: Volume II. Appendices A-F

by

E.C. Cavanaugh, W.E. Corbett,
and G.C. Page

Radian Corporation
8500 Shoal Creek Boulevard
Austin, Texas 78758

Contract No. 68-02-2147, Exhibit A
Program Element No. EHE623A

EPA Project Officer: William J. Rhodes

Industrial Environmental Research Laboratory
Office of Energy, Minerals, and Industry
Research Triangle Park, N.C. 27711

Prepared for

U.S. ENVIRONMENTAL PROTECTION AGENCY
Office of Research and Development
Washington, D.C. 20460

CONTENTS

APPENDICES		Page
APPENDIX A	COAL GASIFICATION OPERATION	A-1
	Wellman-Galusha Gasifier	A-15
	Lurgi Gasifier	A-25
	Woodall-Duckham/Gas Integrale Gasifier	A-37
	Chapman (Wilputte) Gasifier	A-47
	Riley Morgan Gasifier	A-57
	Pressurized Wellman-Galusha (MERC) Gasifier	A-67
	GFERC Slagging Gasifier	A-78
	BGC/Lurgi Slagging Gasifier	A-89
	Foster Wheeler/Stoic Gasifier	A-101
	Winkler Gasifier	A-109
	Koppers-Totzek Gasifier	A-121
	Bi-Gas Gasifier	A-132
	Texaco Gasifier	A-144
	Coalex Gasifier	A-154
APPENDIX B	GAS PURIFICATION OPERATION	B-1
	Rectisol Process	B-2
	Selexol Process	B-12
	Purisol Process	B-16
	Estasolvan Process	B-20
	Fluor Solvent Process	B-24

CONTENTS (Continued)

APPENDICES		Page
APPENDIX B: (Cont'd.)	MEA (Monoethanolamine) Process	B-28
	MDEA (Methyldiethanolamine) Process	B-32
	DEA (Diethanolamine) Process	B-36
	DIPA (Diisopropanolamine) Process	B-40
	DGA (Diglycolamine) Process	B-44
	Benfield Process	B-48
	Sulfinol Process	B-53
	Amisol Process	B-58
APPENDIX C:	AIR POLLUTION CONTROL	C-1
	Claus Process	C-2
	Stretford Process	C-13
	Beavon Process	C-22
	SCOT (Shell Claus Offgas Treating) Process	C-29
	Direct-Flame Afterburners	C-35
	Catalytic Afterburners	C-43
	Carbon Adsorption	C-51
APPENDIX D:	WATER POLLUTION CONTROL	D-1
	Flocculation-Flotation	D-2
	Oil-Water Separators	D-6
	Filtration	D-14
	Phenosolvan	D-18
	Adsorption of Dissolved Organics	D-23

CONTENTS (Continued)

APPENDICES		Page
APPENDIX D: (Cont'd.)	Biological Oxidation of Dissolved Organics...	D-29
	Acid Gas Stripping.....	D-36
	Acid Gas Stripping (WWT).....	D-40
	Forced Evaporation.....	D-45
	Evaporation Pond.....	D-51
APPENDIX E:	SOLID WASTE CONTROL.....	E-1
	Sanitary Landfill.....	E-2
APPENDIX F:	REFERENCES FOR VOLUME II.....	F-1

APPENDIX A

COAL GASIFICATION OPERATION

Table A-1. SUMMARY OF PROMISING COAL GASIFIERS

Gasifier	Pressure	Bed (Type)	Gasification Media	Gas/Solid Flow	Development Status	Commercial Applications	Number in Operation	Acceptable Coal Types
Chapman (Wilputte)	atmospheric	gravitating	steam plus air, or steam plus oxygen	countercurrent	commercially available (since 1945)	production of low-Btu fuel gas	2 present 10 inactive	all types operated with air or oxygen
Woodall-Duckham/ Gas Integrale	atmospheric	gravitating	steam plus air, or steam plus oxygen	countercurrent	commercially available (since 1940)	•low-Btu fuel gas •oxygen-blown synthesis gas	•low-Btu gas: 72 present •synthesis gas: 8 present	various types operated with air or oxygen
CFERC Slagging	high	gravitating	steam plus oxygen	countercurrent	pilot plant (reactivated 1976)	none		lignite, lignite char, bituminous char
Riley Morgan	atmospheric	gravitating	steam plus air, or steam plus oxygen	countercurrent	commercially available pilot plant (since 1975)	none		lignite, anthracite, caking and noncaking bituminous
Winkler	atmospheric	fluidized	steam plus air, or steam plus oxygen	countercurrent	commercially available (since 1926)	•synthesis gas •water gas	•synthesis gas: 6 present 8 past •water gas: 23 past	several types operated with O_2
Texaco	high	entrained	steam plus air, or steam plus oxygen	co-current	pilot plant	synthesis		lignite and bituminous coal
Pressurized Wellman-Galusha	high	gravitating	steam plus air	countercurrent	pilot plant (since 1958)	none		caking and noncaking coals

(continued)

Table A-1. SUMMARY OF PROMISING COAL GASIFIERS

(continued)

Gasifier	Pressure	Bed (Type)	Gasification Media	Gas/Solid Flow	Development Status	Commercial Applications	Number in Operation	Acceptable Coal Types
Koppers-Totzek	atmospheric	entrained	steam plus O_2	co-current	commercially available (since 1952)	synthesis gas	39 present	all types
BGC/Lurgi Slagging	high	gravitating	steam plus O_2	countercurrent	pilot plant (1955-64) demonstration plant (1976)	none		•noncaking and weakly caking bituminous •low and high ash •low and high fusion temp.
Lurgi	high	gravitating	steam plus air, or steam plus O_2	countercurrent	commercially available (since 1936)	•medium-Btu town gas •synthesis gas •medium-Btu fuel gas	•town gas- 39 present •synthesis gas: 22 present •fuel gas- 5 present	various types
Foster Wheeler/ Stoic	atmospheric	gravitating	steam plus air, or steam plus O_2	countercurrent	pilot plant (under construction)	firing boilers for space heating		caking
Bi-Gas	high	entrained (two stage)	steam plus O_2	two stage	pilot plant (since 1976)	none		•lignite •subbituminous •bituminous
Wellman-Galusha	atmospheric	gravitating	steam plus air, or steam plus O_2	countercurrent	commercially available (since 1941)	•low-Btu fuel gas •synthesis gas •others	•fuel gas- 8 present •synthesis gas undetermined •others - 150 past	•bituminous •anthracite •charcoal •coke
Coalex	atmospheric	entrained	air plus additive	co-current	commercially available pilot plant (since 1976)	•low-Btu fuel gas	1 under construction	all types

Table A-2. SUMMARY OF GASIFIER OPERATING PARAMETERS (cont'd)

Gasifier	OPERATING PARAMETER RANGES				NORMAL OPERATING PARAMETERS			
	Gas Outlet Temperature °K (°F)	Maximum Coal Bed Temperature °K (°F)	Gasifier Pressure MPa (psia)	Coal Residence Time in Gasifier (hrs)	Gas Outlet Temperature °K (°F)	Maximum Coal Bed Temperature °K (°F)	Gasifier Pressure MPa (psia)	Coal Residence Time in Gasifier (hrs)
Chapman (Wilputte)	810 (1000) to 920 (1200)	∿1310 (∿1900)	0.101 (14.7)	2	840 (1050)	1310 (1910)	0.101 (14.7)	2
Woodall-Duckham/Gas Integrale	DNA	DNA	0.101 (14.7)	several	top 395 (250) side 920 (1200)	1480 (2200)	0.101 (14.7)	several
GFERC Slagging	360 (185) to 845 (700)	∿1645 (∿2500)	0.66 (95) to 2.9 (415)	0.25 to 0.75	480 (400)	∿1645 (∿2500)	0.66 (95) to 2.9 (415)	0.25 to 0.75
Riley Morgan	840 (1050) to 895 (1150)	1255 (1800) to 1365 (2000)	0.101 (14.7)	2-9	860 (1090)	1255 (1800) to 1365 (2000)	0.101 (14.7)	2-9
Winkler	865 (1100) to 1060 (1450)	1090 (1500) to 1255 (1800)	0.101 (14.7)	1-2	980 (1300)	1090 (1500) lignite to 1255 (1800) other	0.101 (14.7)	1-2
Texaco	480 (400) to 535 (500)	1255 (1800) to 2090 (3300)	1.5 (215) to 8.4 (1215)	several seconds	480 (400)	1535 (2300)	2.5 (365)	several seconds
Pressurized Wellman-Galusha	755 (900) to 920 (1200)	1590 (2400) to 1645 (2500)	0.103 (15) to 2.1 (300)	∿2	920 (1200)	1590 (2400) to 1645 (2500)	0.69 (100) to 1.3 (195)	∿2

DNA - Data not available

(continued)

Table A-2. SUMMARY OF GASIFIER OPERATING PARAMETERS

(continued)

Gasifier	OPERATING PARAMETER RANGES				NORMAL OPERATING PARAMETERS			
	Gas Outlet Temperature °K (°F)	Maximum Coal Bed Temperature °K (°F)	Gasifier Pressure MPa (psia)	Coal Residence Time in Gasifier (hrs)	Gas Outlet Temperature °K (°F)	Maximum Coal Bed Temperature °K (°F)	Gasifier Pressure MPa (psia)	Coal Residence Time in Gasifier (hrs)
Koppers-Totzek	1755 (2700) to 1785 (2750)	2090 (3300) to 2200 (3500)	0.101 (14.7)	∿1 second	1755 (2700)	2200 (3500)	0.101 (14.7)	∿1 second
BGC/Lurgi Slagging	470 (390) to 1070 (1470)	>1535 (>2300)	2.1 (300) to 2.8 (400)	10 to 15 minutes	620 (660) to 720 (840)	>1535 (>2300)	2.1 (300)	10 to 15 minutes
Lurgi	645 (700) to 865 (1100)	1255 (1800) to 1695 (2500)	2.1 (300) to 3.2 (465)	∿1	730 (850)	1255 (1800) to 1695 (2500)	3.0 (435) (O_2) 2.1 (300) (air)	∿1
Foster Wheeler/ Stoic	top 395 (250) side 920 (1200)	∿1480 (∿2200)	0.101 (14.7)	several	top 395 (250) side 920 (1200)	∿1480 (∿2200)	0.101 (14.7)	several
Bi-Gas	1020 (1375) to 1455 (2160)	1755 (2700) to 1920 (3000)	1.6 (235) to 10.4 (1515)	3 to 22 seconds	1200 (1700)	1755 (2700)	8.1 (1175)	Stage I 2 seconds Stage II 6 seconds
Wellman-Galusha	700 (800) to 1090 (1500)	1590 (2400)	0.101 (14.7)	2-9	860 (1088)	1590 (2400)	0.101 (14.7)	2-9
Coalex	1200 (1700) to 1220 (1740)	1365 (2000)	0.101 (14.7)	DNA	1200 (1700) to 1220 (1740)	1365 (2000)	0.101 (14.7)	DNA

DNA - Data not available

Table A-3. SUMMARY OF GASIFIER MATERIAL REQUIREMENTS

Gasifier	Coal Feedstock Type	Coal Feedstock Size mm(in)	Coal Feedstock Rate g/sec-m^2 (lb/hr-ft^2)	Coal Pretreatment	Steam (kg/kg coal)	Oxygen (kg/kg coal)	Air (kg/kg coal)	Quench Water Makeup m^3/kg coal (gal/lb coal)
Chapman (Wilputte)	all types	<102(4)	43.6(32)	crushing and sizing	DNA	DNA	DNA	DNA
Woodall-Duckham/ Gas Integrale	•lignite •bituminous	6.4 to 38.1 (0.25 to 1.5)	100(74)	crushing and sizing; partial oxidation may be required for strongly caking coals	0.25	DNA	2.3	DNA
GFERC Slagging	•bituminous char •lignite char •lignite	6.4 to 19 (0.25 to 0.75)	262 to 1288 (193 to 947)	crushing and sizing; drying to less than 35% moisture	0.30 to 0.46	0.48 to 0.55	NA	DNA
Riley Morgan	•anthracite •bituminous - caking - noncaking	3.2(0.125) to 51(2.0)	47 to 204 (35 to 150)	crushing and sizing	∿0.6	DNA	∿2.7	DNA
Winkler	•lignite •subbituminous •weakly caking bituminous	<9.53(0.38)	177 to 191 (130 to 140)	crushing; drying to less than 30% moisture for lignite, to less than 18% for higher ranking coals; partial oxidation may be needed	0.2-0.3 (O_2 blown) 0.2(air blown)	0.5	2.5	DNA
Texaco	•lignite •bituminous	70% less than 0.074 (0.003)	∿408(300)	crushing, pulverizing, slurry preparation	0.1 to 0.6	0.6 to 0.9	DNA	DNA
Pressurized Wellman-Galusha	all types	usually 50% less than 12.7(0.5)	99 to 228 (73 to 168)	crushing and sizing; no predrying is necessary	0.32 to 0.7 (air-blown)	DNA	2.3 to 4.1	DNA

(continued)

Table A-3. SUMMARY OF GASIFIER MATERIAL REQUIREMENTS (cont'd)

Gasifier	Coal Feedstock Type	Coal Feedstock Size mm(in)	Coal Feedstock Rate g/sec-m^2 (lb/hr-ft^2)	Coal Pretreatment	Steam (kg/kg coal)	Oxygen (kg/kg coal)	Air (kg/kg coal)	Quench Water Makeup m^3/kg coal (gal/lb coal)
Koppers-Totzek	all types	70% to 90% less than 0.074(0.003)	431 to 734 (317 to 540)	pulverizing; drying to approximately 1-8% moisture	0.14 to 0.59	0.73 to 0.95	NA	DNA
BGC/Lurgi Slagging	all types	13 to 51 (0.5 to 2.0)	702 to 1958 (516 to 1440)	crushing and sizing; drying to less than 20% moisture	0.29 to 0.31	0.48 to 0.53	NA	DNA
Lurgi	all types	3.2 to 38.1 (0.125 to 1.5)	136 to 544 (100 to 400)	crushing and sizing; drying to less than 35% moisture; partial oxidation may be required for strongly caking coals	1.01 to 3.24 (O_2 blown) 0.6 (air blown)	0.23 to 0.61	1.3 to 1.9	3.3×10^{-4} (0.04) (O_2 blown)
Foster Wheeler/ Stoic	•lignite •subbituminous •noncaking bituminous	19.0 to 38.1 (0.75 to 1.5)	408 to 8160 (300 to 6000)	crushing and sizing; partial oxidation may be required for strongly caking coals	0.37	NA	2.13 lb/coal	DNA
Bi-Gas	all types	70% less than 0.074 (0.003)	~4080 (3000)	crushing, pulverizing, slurry preparation	0.4 to 1.35	0.5 to 0.64	~3.1	DNA
Wellman-Galusha	•anthracite •bituminous •coke	•anthracite: 7.9-14.3 (.31-.56) •bituminous: 26-51(1-2)	10-134(8-99)	crushing and sizing	airblown: .4 O_2 blown: DNA	DNA	3.5	DNA
Coalex	all types	<0.074 (0.003)	DNA	pulverizing	DNA	NA	2.7 to 6.1	DNA

DNA - data not available
NA - not applicable

Table A-4. SUMMARY OF GASIFIER UTILITY REQUIREMENTS

	Chapman (Wilputte)	Woodall-Duckham Gas Integrale	GFERC Slagging	Riley Morgan	Winkler	Texaco	Pressurized Wellman-Galusha
Boiler Feedwater m^3/kg coal (gal/ton coal)	DNA	2.75×10^{-4} (66)	DNA	DNA	8.26×10^{-4} (198)	DNA	DNA
Cooling Water m^3/kg coal (gal/ton coal)	DNA	DNA	DNA	DNA	DNA	DNA	DNA
Electricity	DNA	DNA	DNA	DNA	DNA	DNA	DNA
Basis: •Oxidant •Coal Type	DNA	•Air Blown •Pittsburgh #8	DNA	DNA	•O_2 Blown •Illinois #6	DNA	DNA
HHV joule/kg (Btu/lb)	DNA	3.19×10^7 (13860)	DNA	DNA	2.88×10^7 (12530)	DNA	DNA

(continued)

Table A-4. SUMMARY OF GASIFIER UTILITY REQUIREMENTS (continued)

	Koppers-Totzek	BGC/Lurgi Slagging	Lurgi	Foster Wheeler Stoic	Bi-Gas	Wellman-Galusha	Coalex
Boiler Feedwater m^3/kg coal (gal/ton coal)	2.0×10^{-3} (480)	DNA	2.42×10^{-3} (580)	DNA	DNA	4.2×10^{-4} (100)	DNA
Cooling Water m^3/kg coal (gal/ton coal)	DNA	DNA	DNA	DNA	DNA	5.8×10^{-2} (14000)	DNA
Electricity	DNA	DNA	DNA	DNA	DNA	DNA	DNA
Basis: •Oxidant •Coal Type	•O_2 Blown •Eastern Coal	DNA	•O_2 Blown •Pittsburgh #8	DNA	DNA	•Air Blown •Bituminous or Anthracite	DNA
HHV joule/kg (Btu/lb)	2.91×10^7 (12640)	DNA	3.43×10^7 (14900)	DNA	DNA	3.2×10^7 (14000)	DNA

DNA = data not available

Table A-5. SUMMARY OF GASIFIER EFFICIENCY AND GAS PRODUCTION RATE

	Chapman (Wilputte)	Woodall-Duckham Gas Integrale	GFERC Slagging	Riley Morgan	Winkler	Texaco	Pressurized Wellman-Galusha
Gasifier Efficiency							
Cold Gas (%)[1]	DNA	77	85	64-68	55-72	77	79
Overall Thermal (%)[2]	DNA	88	DNA	71-78	69	DNA	DNA
Reference Temp. °K (°F)	DNA	300 (80)	DNA	DNA	300 (80)	DNA	DNA
Gas Production Rate Nm^3/kg coal (scf/lb coal)							
Oxygen Blown	1.95 (33)	DNA	1.4-1.9 (24-33)	1.94 (32.8)	1.33-1.62 (22.5-27.5)	DNA	NA
Air Blown	1.77-3.54 (30-60)	DNA	NA	3.47 (58.9)	DNA	DNA	2.7-4.7 (46-79)
Expected Turndown Ratio[3]	DNA	$\frac{100}{25}$	DNA	DNA	$\frac{100}{25}$	$\frac{100}{15}$	$\frac{100}{25}$

(continued)

Table A-5. SUMMARY OF GASIFIER EFFICIENCY AND GAS PRODUCTION RATE (continued)

	Koppers Totzek	BGC/Lurgi Slagging	Lurgi	Foster Wheeler Stoic	Bi-Gas	Wellman-Galusha	Coalex
Gasifier Efficiency							
Cold Gas (%)[1]	75	83	63-80	DNA	69	75	DNA
Overall Thermal (%)[2]	68	DNA	76	89	65	81	90
Reference Temp. °K (°F)	300 (80)	DNA	300 (80)	DNA	DNA	300 (80)	DNA
Gas Production Rate Nm^3/kg coal (scf/lb coal)							
Oxygen Blown	1.47-1.92 (25-32.5)	2.03-2.14 (34.4-36.2)	0.77-2.5 (13-42)	NA	1.33-1.62 (22.5-27.5)	DNA	NA
Air Blown	NA	NA	DNA	3.24 (54.8)	DNA	1.24-4.48 (21-76)	DNA
Expected Turndown Ratio[3]	100/60 (2 headed) 100/30 (4 headed)	DNA	100/25	100/20	100/50	100/25	DNA

[1]Cold Gas Efficiency = $\frac{\text{[Product Gas Energy Output]}}{\text{[Coal Energy Input]}} \times 100$

[2]Overall Thermal Efficiency = $\frac{\text{[Total Energy Output (product gas, hydrocarbons, and steam)]}}{\text{[Total Energy Input (coal, electric power, and steam)]}} \times 100$

The useful overall thermal efficiency of a gasifier may vary from the ranges given depending upon the ability of the integrated system to use the energy contained in by-product hydrocarbons and waste steam.

[3]Expected Turndown Ratio = $\frac{\text{[Full Capacity Output]}}{\text{[Minimum Sustainable Output]}}$

DNA = Data Not Available

NA = Not Applicable

Table A-6. SUMMARY OF GASIFIER RAW PRODUCT GAS COMPOSITION

	Chapman (Wilputte)	Woodall-Duckham Gas Integrale	CFERC Slagging	Riley Morgan	Winkler	Texaco	Pressurized Wellman-Galusha
Coal Type	unspecified	Bituminous	Lignite w/slag	Subbituminous	Subbituminous	Bituminous	Subbituminous
HHV J/NM³ (Btu/scf)	6.33×10^6 (170)	1.04×10^7 (280)	1.28×10^7 (345)	5.7×10^6 (153)	1.0×10^7 (270)	9.4×10^6 (253)	5.6×10^6 (150)
Gasification Media	steam/air	steam/O_2	steam/O_2	steam/O_2	steam/O_2	steam/O_2	steam/air
CO (% Vol)	22.7	37.5	58.4	23.5	37.0	37.6	16.0
H_2 (% Vol)	16.6	38.4	30.1	16.4	37.0	39.0	19.0
$C_2H_4 + C_2H_6$ (% Vol)	PR	0.4	0.8	0.35	ND	ND	0.3
CH_4 (% Vol)	3.6	3.5	4.8	1.7	3.0	0.5	3.5
CO_2 (% Vol)	5.9	18.0	5.7	7.3	20.0	20.8	12.6
N_2 + Ar (% Vol)	51.0	2.2	ND	50.62	3.0	0.6	48.4
O_2 (% Vol)	0.2	ND	0.2	ND	ND	NP	ND
H_2S (% Vol)	ND	ND	PR	0.12	PR	1.5	0.2
COS + CS_2 (% Vol)	ND	ND	ND	PR	ND	ND	PR
Mercaptans (% Vol)	ND	ND	ND	ND	ND	ND	ND
Thiophenes (% Vol)	ND	ND	ND	ND	ND	ND	ND
SO_2 (% Vol)	ND	PR	ND	ND	ND	ND	ND
H_2O (kg/kg coal)	PR	PR	PR	PR	PR	PR	PR
Tar (kg/kg coal)	ND	} .075	1.4×10^{-2}	PR	NP	ND	3.4×10^{-2}
Tar Oil (kg/kg)	ND		5.9×10^{-2}	PR	NP	NP	PR
Crude Phenols (%V)	PR	PR	PR	PR	ND	NP	PR
NH_3 (% Vol)	PR	PR	ND	PR	ND	ND	PR
HCN (% Vol)	PR	ND	ND	PR	ND	ND	ND
Particulates* (kg/kg coal)	PR	PR	PR	PR	PR	PR	1.7×10^{-2}
Trace Elements	PR	PR	PR	PR	PR	PR	PR

(continued)

Table A-6. SUMMARY OF GASIFIER RAW PRODUCT GAS COMPOSITION (cont'd)

	Koppers-Totzek	BGC/Lurgi Slagging	Lurgi	Foster Wheeler Stoic	Bi-Gas	Wellman-Galusha	Coalex
Coal Type	Bituminous	Bituminous w/slag	Bituminous	unspecified	Bituminous	Bituminous	unspecified
HHV J/NM^3 (Btu/scf)	1.1×10^7 (290)	1.39×10^7 (374)	1.11×10^7 (298)	5.7×10^6 (153)	1.3×10^7 (350)	6.3×10^6 (168)	4.9×10^6 (133)
Gasification Media	steam/O_2	steam/O_2	steam/O_2	steam/air	steam/O_2	steam/air	air/ additive
CO (% Vol)	52.35	61.3	17.3	24.11	40.6	28.6	20.7
H_2 (% Vol)	35.66	28.05	39.1	3.11	22.5	15.0	10.8
$C_2H_4 + C_2H_6$ (% Vol)	ND	8.10	0.7	1.92	ND	PR	ND
CH_4 (% Vol)	PR		9.4	ND	14.3	2.7	0.5
CO_2 (% Vol)	10.0	2.55	31.2	3.69	12.9	3.4	4.4
N_2 + Ar (% Vol)	1.12	ND	1.2	40.41	0.6	50.3	62.8
O_2 (% Vol)	ND	ND	ND	ND	ND	ND	0.8
H_2S (% Vol)	0.82	1.2×10^{-2}**	1.1	0.04	1.3	PR	PR
COS + CS_2 (% Vol)	0.05	9.8×10^{-4}***	5.4×10^{-4}***	ND	PR	PR	PR
Mercaptans (% Vol)	ND	ND	PR	ND	ND	PR	ND
Thiophenes (% Vol)	ND	ND	PR	ND	ND	PR	ND
SO_2 (% Vol)	PR	ND	PR	ND	ND	PR	PR
H_2O (kg/kg coal)	PR	PR	PR	0.43	PR	PR	PR
Tar (kg/kg coal)	ND	7.3×10^{-2}	3.8×10^{-2}	3.7×10^{-2}	NP	0.06	ND
Tar Oil (kg/kg)	ND	PR	3.5×10^{-2}	3.1×10^{-2}	NP	PR	ND
Crude Phenols (% Vol)	ND	PR	PR	ND	ND	PR	ND
NH_3 (% Vol)	<0.2	PR	4.0×10^{-5}***	ND	PR	PR	PR
HCN (% Vol)	PR	ND	6.2×10^{-5}***	ND	ND	PR	PR
Particulates* (kg/kg coal)	0.06	1.1×10^{-2}	5.6×10^{-3}	5.3×10^{-2}	PR	PR	PR
Trace Elements	PR	PR	PR	PR	PR	PR	PR

* = (coal fines, ash)

** = (kg/kg coal)

PR = component is probably present, amount not determined

ND = presence of component not determined

NP = component is probably not present

Table A-7. SUMMARY OF GASIFIER ADVANTAGES AND LIMITATIONS

Gasifier	Capacity	Ability To Handle Caking Coals w/o Pretreatment	Temperature Control	Refractory Problems	By-Product Tar Formation	Ability to Extract Ash Low in Carbon	Ability to Consume Fine Carbon Particles	Bed Type
Chapman (Wilputte)	low	DNA	DNA	DNA	yes	DNA	poor	gravitating
Woodall-Duckham Gas Integrale	DNA	poor	good	DNA	yes	good	poor	gravitating
GFERC Stagging	high	moderate	DNA	moderate	yes	good	good	gravitating
Riley Morgan	low	good	DNA	DNA	yes	DNA	moderate to poor	gravitating
Winkler	low	poor to moderate	good	good	probably not	poor	good	fluidized
Texaco	DNA	good	DNA	DNA	probably not	good	excellent	entrained
Pressurized Wellman-Galusha	low to moderate	good	DNA	DNA	yes	poor to moderate	moderate to poor	gravitating
Koppers-Totzek	DNA	good	DNA	DNA	probably not	poor to moderate	excellent	entrained
BGC/Lurgi Slagging	high	good	DNA	moderate	yes	good	good	gravitating
Lurgi	moderate	good to moderate	DNA	good	yes	moderate	DNA	gravitating
Foster Wheeler Stoic	DNA	poor	DNA	DNA	yes	moderate	poor	gravitating
Bi-Gas	high	good	poor	poor	probably not	good	excellent	entrained
Wellman-Galusha	low	good (requires use of agitator)	DNA	DNA	yes	good	poor	gravitating
Coalex	DNA	good	DNA	DNA	probably not	good	excellent	entrained

DNA - data not available

Wellman-Galusha Gasifier

GENERAL INFORMATION

Process Function - Atmospheric coal gasification in a gravitating bed by injection of steam plus air or steam plus oxygen with countercurrent gas/solid flow.

Development Status - Commercially available since 1941.

Licensor/Developer - McDowell Wellman Engineering Company
113 St. Clair Avenue, N.E.
Cleveland, Ohio 44114

Commercial Applications -

- Production of low-Btu fuel gas: 8 gasifiers currently in operation in the United States.
- Production of synthesis gas: undetermined number of gasifiers currently operating in Spain, Taiwan, and Cuba.
- Other applications: 150 gasifiers have been installed worldwide in the past 35 years. Exact locations and uses are uncertain.

Applicability to Coal Gasification - Proven commercial gasifier which can accept bituminous, anthracite, charcoal, or coke and which can be operated with air or oxygen. Glen-Gery Brick Company, Reading, PA, operates 6 gasifiers with anthracite coal and air. Bituminous coal gasification with oxygen has not been commercially demonstrated.

PROCESS INFORMATION

Equipment (Refs. 1, 2) -

- Gasifier construction: vertical, cylindrical steel vessel.
- Gasifier dimensions: 0.5 to 3.0 meters (1.5 to 10.0 ft) in diameter.

- Bed type and gas flow: gravitating bed; continuous countercurrent gas flow, vertical gas outlet near the outer rim of the top of the gasifier.

- Heat transfer and cooling mechanism: direct gas/solid heat transfer; water jacket provides gasifier cooling.

- Coal feeding mechanism: continuous feeding via multiple feed pipes through the top of the gasifier; two-stage coal hopper; slide valves allow isolation of the bottom hopper which supplies the feed pipes.

- Gasification media introduction: continuous blowing of steam plus air or oxygen at the bottom of the coal bed through a slotted ash extraction grate.

- Ash removal mechanism: eccentrically rotating slotted grate at the bottom of the coal bed; cone shaped ash hopper collects the ash for intermittent dumping.

- Special features:

  - Cyclone at gas outlet removes entrained coal dust from the product gas; cyclone can be flooded with water to act as a shut off valve.

  - Vaporization of water in gasifier steam jacket provides 100% of air saturation steam or 25% of oxygen-blown steam requirements.

  - Rotating, slotted ash grate which is eccentrically mounted in order to break up the dry ash and force it through the slots.

  - Rotating, water-cooled agitator which spirals vertically below the surface of the coal bed to retard channeling and to maintain a uniform bed, especially with caking coals; agitator provides a 25% increase in throughput rate over non-agitated Wellman-Galusha gasifiers (agitator optional).

<u>Flow Diagram</u> - See Figure 1.

<u>Operating Parameter Ranges</u> (Refs. 3, 4) -

- Gas outlet temperature: 700 to 1090°K (800 to 1500°F).

- Maximum coal bed temperature: approximately 1590°K (2400°F)

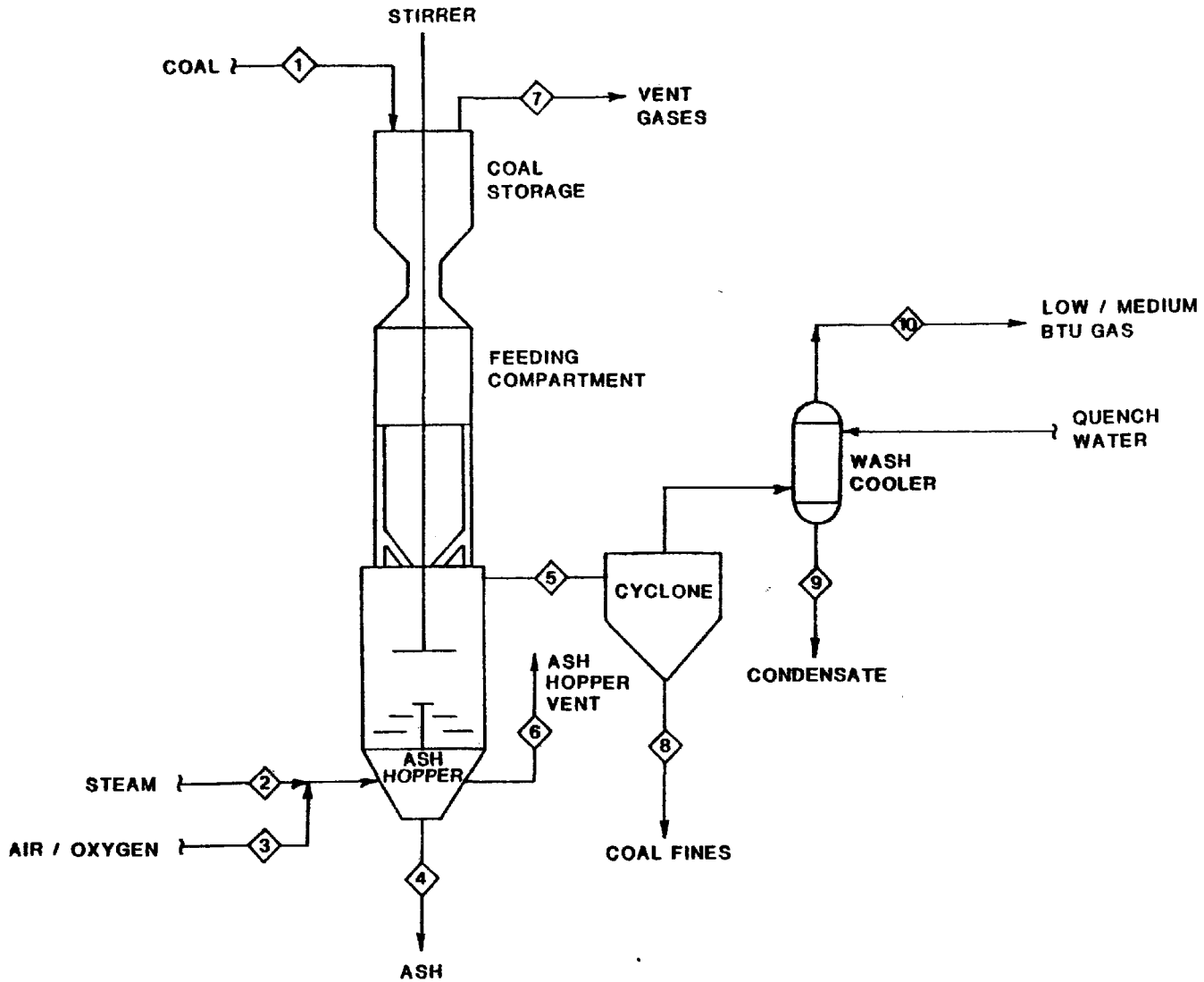

Figure 1. Wellman-Galusha Gasifier.

- Gasifier pressure: atmospheric
- Coal residence time in gasifier: approximately 2 to 9 hours.

Normal Operating Parameters (Refs. 5, 6) -

- Gas outlet temperature: 860°K (1088°F)
- Maximum coal bed temperature: 1590°K (2400°F)
- Gasifier pressure: atmospheric
- Coal residence time in gasifier: approximately 2 to 9 hours.

Raw Material Requirements (Refs. 7, 8) -

- Coal feedstock requirements:
  - Type: anthracite, bituminous, coke
  - Size: 7.9 to 14.3 mm (0.31 to 0.56 in.) for anthracite; 26 to 51 mm (1 to 2 in.) for bituminous.
  - Rate: 10 to 134 g/sec-m^2 (8 to 99 lb/hr-ft^2)
  - Pretreatment required: crushing and sizing.
- Steam requirements:
  - Airblown operation: 0.4 kg/kg coal.
  - Oxygen blown operation: data not available.
- Oxygen requirements: data not available.
- Air requirements: 3.5 kg/kg coal.
- Quench water make-up requirements: data not available.

Utility Requirements (Ref. 9) - Basis: Approximate values for bituminous or anthracite coal feed for air blown operation.

- Boiler feedwater: 6.3×10^{-3} m^3/kg coal (0.75 gal/lb coal) for cooling of gasifier jacket; 4.2×10^{-4} m^3/kg coal (0.05 gal/lb coal) net gasifier jacket consumption.

- Cooling water: 8.3×10^{-4} m^3/kg coal (0.1 gal/lb coal) for agitator cooling only. 5.8×10^{-2} m^3/kg coal (7.0 gal/lb coal) for indirect gas cooling only.

- Electricity: data not available.

Process Efficiency (Ref. 10) - Basis: air-blown operation; quenched and cooled product gas; bituminous coal feed with HHV = 3.22×10^7 joule/kg (14,000 Btu/lb); reference temperature = 300°K (80°F).

- Cold gas efficiency: 75%

$$[=] \frac{[\text{Product gas energy output}]}{[\text{Coal energy input}]} \times 100$$

- Overall thermal efficiency: 81%

$$[=] \frac{[\text{Total energy output (product gas + by-products + steam)}]}{[\text{Total energy input (coal + electricity)}]} \times 100$$

Expected Turndown Ratio (Ref. 11) - 100/25

$$[=] \frac{[\text{Full capacity output}]}{[\text{Minimum sustainable output}]}$$

Gas Production Rate: Airblown: 2.12×10^{-2} to 3.2×10^{-2} $Nm^3/sec\text{-}m^2$ (265 to 400 $scf/hr\text{-}ft^2$);

1.24 to 4.48 Nm^3/kg coal (21 to 76 scf/lb coal)

PROCESS ADVANTAGES

- Coal type: gasifier can be operated with anthracite, bituminous, charcoal or coke. The use of an optional coal bed agitator allows gasification of caking coals.

- Gasification media: gasifier can be operated with air or oxygen.

- Start-up considerations: gasifier can be started up in about 4 hours; gasifier can be maintained in a standby condition with a few minutes of air blowing once a day.

- Reactor size: small reactor size may be advantageous for small scale industrial applications.

- Development status: gasifier has been operated commercially for many years.

PROCESS LIMITATIONS

- Process efficiency: maintaining the coal bed temperature below the ash fusion temperature limits the maximum process efficiency.
- By-products produced: by-products require additional processing for recovery.
- Environmental considerations: process condensate and by-products require additional processing for environmental acceptability.
- Operating pressure: low operating pressure may limit utilization possibilities.
- Reactor size: limited reactor size may necessitate use of multiple units in parallel for large installations.

INPUT STREAMS (Refs. 12, 13)

- Coal (Stream No. 1):

	Bituminous	Anthracite
- Type:	Bituminous	Anthracite
- Size:	32 to 51 mm (1.25 to 2.0 in.)	9 to 14 mm (0.3 to 0.6 in.)
- Rate:	121 g/sec-m^2 (89 lb/hr-ft^2)	39 g/sec-m^2 (29 lb/hr-ft^2)
- Composition:	Data not available	Data not available
- HHV (Dry):	3.2×10^7 joule/kg (14,000 Btu/lb)	3.1×10^7 joule/kg (13,500 Btu/lb)
- Swelling number:	Data not available	Data not available
- Caking Index:	Data not available	Data not available

• Steam (Stream No. 2):	∿0.4 kg/kg coal	∿0.4 kg/kg coal
• Oxygen (Stream No. 3):	Not applicable	Not applicable
• Air (Stream No. 3):	∿3.5 kg/kg coal	∿3.5 kg/kg coal

DISCHARGE STREAMS AND THEIR CONTROL (Refs. 14, 15)

The Wellman-Galusha gasifier will produce the following discharge streams. Stream numbers refer to Figure 1.

Gaseous Discharge Streams -

- Low/medium-Btu gas (Stream No. 10)
- Coal bin gas (Stream No. 7)
- Ash hopper gas (Stream No. 6)

Liquid Discharge Streams -

- Process condensate and gas quenching liquor (Stream No. 9)

Solid Discharge Streams -

- Ash (Stream No. 4)
- Coal fines (Stream No. 8)

The following text discusses the compositions of these discharge streams and the control methods which can be used to treat them, using as a basis the INPUT STREAM data given above and the following gasifier conditions:

• Coal type:	Bituminous	Anthracite
• Gasifier pressure: MPa (psia)	0.101(14.7)	0.101(14.7)
• Steam/air: kg/kg	0.114	0.114
• Gas outlet temperature °K (°F)	Data not available	
• Gas production rate: Nm^3/kg coal (scf/lb coal)	Data not available	

Low/Medium-Btu Gas (Stream No. 10) - The composition of the low/medium-Btu gas from the Wellman-Galusha gasifier will be dependent on the nature of the coal feed, gasifier operating conditions, and the gas cooling operations applied to the raw gas stream. The compositions given below list the components in the raw gas (Stream No. 5) for bituminous and anthracite coal feedstocks. This gas stream may contain significant amounts of H_2S, organic sulfur compounds,

CO_2, heavy hydrocarbons, and water which may require removal prior to utilization of the gas. Processes that can be used to remove these contaminants are described in the acid gas removal section.

Component	Coal Type: Bituminous Component Vol%	Coal Type: Anthracite Component Vol%
CO_2	28.6	27.1
H_2	15.0	16.6
CH_4	2.7	0.5
C_2H_4	PR	PR
C_2H_6	PR	PR
CO_2	3.4	3.5
N_2+Ar	50.3	56.8
O_2	ND	ND
H_2S	PR	PR
COS + CS_2	PR	PR
Mercaptans	PR	PR
Thiophenes	PR	PR
SO_2	PR	PR
H_2O	PR	PR
Naphthas	PR	PR
Tar (kg/kg coal)	(0.06)	ND
Tar Oil	PR	PR
Crude Phenols	PR	ND
NH_3	PR	PR
HCN	PR	PR
Particulates (coal fines, ash)	PR	PR
Trace elements	PR	PR
HHV (Dry basis):	6.3×10^6 (168) joule/Nm^3 (Btu/scf)	5.4×10^6 (146) joule/Nm^3 (Btu/scf)
Gasification media:	Steam/air	Steam/air

ND = presence of component not determined

PR = component is probably present, amount not determined

Component volume % is given on a relative basis to all other components that have a value for volume % listed.

Coal Bin Gas (Stream No. 7) - This gaseous discharge stream is created when the slide valves at the bottom of the coal feed hopper open to allow the coal feed to enter the gasifier. A small amount of raw product gas from the gasifier fills the space in the hopper as the coal is discharged. When the slide valves at the top of the coal feed hopper

open to admit another charge of coal, this gas can escape to the atmosphere through the feed bin. The composition of this stream should be similar to the raw gas (Stream No. 5), although some constituents may condense or be adsorbed on the surface of the coal feed. In order to prevent the release of these components to the atmosphere, this stream may be collected using hoods and then incinerated or recycled to the raw gas (Stream No. 5) or air intake (Stream No. 3).

Ash Hopper Gas (Stream No. 6) - This gas stream is discharged when the ash hopper is opened in order to dump accumulated ash. This gas stream could potentially contain any of the components found in the raw gas (Stream No. 5). Under normal operating conditions, this stream would consist mainly of steam plus air or oxygen, with traces of particulate and volatile material from the ash. If the ash is quenched prior to being dumped from the hopper, this gas stream could also contain any volatile compounds in the quench water. If any of these hazardous components are present in significant concentrations in this gas stream, it would be necessary for the ash hopper gas to be collected and then either recycled, incinerated, or passed through a scrubber prior to discharge.

Process Condensate and Gas Quenching Liquor (Stream No. 9) - If a direct quench is used, this stream will be composed mostly of water. The other components in this stream will be the constituents of the raw gas (Stream No. 5) which condense or dissolve in the quench water. The components most likely to be present in this stream are:

- H_2O
- Tar
- Tar oil
- Naphthas
- Crude phenols
- Particulates (coal fines, ash)
- NH_3
- H_2S
- Organic sulfur compounds
- Thiocyanates
- HCN
- Trace elements

The amounts of these components will be dependent on the raw gas composition and the gas cooling or quenching processes used. Processes that can be used to remove these contaminants are described in the water pollution control section.

Ash (Stream No. 4) - This stream will be composed mainly of the mineral matter present in the feed coal with approximately 0.1% unreacted carbon. The exact composition of

the ash is dependent on the composition of the feed coal and the gasifier operating conditions. If the ash is quenched, other constituents from the quench water may be present in this stream. The ash from the gasifier is a solid waste product which requires ultimate disposal. Methods that can be used for ash disposal are described in the solid waste treatment section.

Coal Fines (Stream No. 8) - If a cyclone is used for particulate removal, this stream will be composed of small, hot particles of coal, ash and tar which are removed from the raw gas (Stream No. 5). Any of the heavy solid or liquid constituents present in the raw gas could potentially be present in this stream. These coal fines may be sent to disposal with the gasifier ash (Stream No. 4), recycled to the gasifier coal feed (Stream No. 1) in a briquette form, or they may be burned as a fuel, depending on their carbon content.

REFERENCES NOT CITED

L-860 Mudge, L. K., et al., The Gasification of Coal. Energy Program Report. Richland, WA, Battelle Pacific Northwest Labs., 1974.

L-1436 Howard-Smith, I., and G. J. Werner, Coal Conversion Technology. Park Ridge, NJ, Noyes Data Corp., 1976.

L-1445 Hall, E. H., et al., Fuels Technology. A State-of-the-Art Review. Report No. PB-242 535, EPA-650/2-75-034, EPA Contract No. 68-02-1323, Task 14. Columbus, OH, Battelle Columbus Labs., April 1975.

L-1924 Hamilton, G. W., "Gasification of Solid Fuels", Cost Engineering 8 4-11 (4 July 1963).

Lurgi Gasifier

GENERAL INFORMATION

Process Function - High pressure coal gasification in a gravitating bed by injection of steam plus air or steam plus oxygen with countercurrent gas/solid flow.

Development Status - Commercially available since 1936.

Licensor/Developer - Lurgi Mineralöltechnik GmbH
American Lurgi Corporation
377 Rt. 17 South
Hasbrouck Heights, New Jersey

Commercial Applications (Ref. 16) -

- Production of medium-Btu town gas: 39 gasifiers currently in operation.
- Production of synthesis gas: 22 gasifiers currently in operation.
- Production of medium-Btu fuel gas: 5 gasifiers currently in operation.

Applicability to Coal Gasification - Proven commercial gasifier which can accept various types of coal feedstocks, and which can be operated with air or oxygen. Largest installation is at Sasolburg, South Africa; no commercial installations are located in the United States.

PROCESS INFORMATION

Equipment (Refs. 17, 18, 19, 20, 21) -

- Gasifier construction: vertical, cylindrical steel pressure vessel.

- Gasifier dimensions:

  - 2.5 to 3.8 m (8.3 to 12.4 ft) in diameter

  - 2.1 to 3.0 m (7 to 10 ft) coal bed depth

  - 5.8 m (19 ft) approximate overall height of gasifier

- Bed type and gas flow: Gravitating bed; continuous countercurrent gas flow; lateral gas outlet near the top of the gasifier.

- Heat transfer and cooling mechanism: Direct gas/solid heat transfer; water jacket provides gasifier cooling.

- Coal feeding mechanism: Intermittent, pressurized lock hopper at the top of the gasifier which dumps the coal onto a rotating, water-cooled coal distributor.

- Gasification media introduction: Continuous injection of steam plus air or oxygen at the bottom of the coal bed through a slotted ash extraction grate.

- Ash removal mechanism: Rotating, slotted grate at the bottom of the coal bed; refractory lined, pressurized lock hopper collects the ash and dumps it intermittently.

- Special features:

  - Direct quench gas scrubber and cooler which knocks out particulates, tars, oils, phenols and ammonia is attached to the gasifier at the gas outlet.

  - Gasifier water jacket supplies approximately 10 percent of the required gasification steam.

  - Rotating coal distributor provides uniform coal bed depth.

  - Tar injection nozzle at the top of the gasifier permits recycle of by-product tar which also helps to reduce coal fines carryover in the product gas (optional feature).

  - Rotating, water cooled coal bed agitator aids the gasification of strongly caking coals (optional feature).

Flow Diagram - See Figure 1.

Operating Parameter Ranges (Ref. 22) -

- Gas outlet temperature: 644 to 866°K (700 to 1100°F).
- Maximum coal bed temperature: 1255 to 1644°K (1800 to 2500°F).
- Gasifier pressure: 2.1 to 3.2 MPa (300 to 465 psia)
- Coal residence time in gasifier: approximately one hour.

Normal Operating Parameters (Refs. 23, 24, 25)

- Gas outlet temperature: 727°K (850°F)
- Maximum coal bed temperature: 1255 to 1644°K (1800 to 2500°F).
- Gasifier pressure:
  - Oxygen-blown operation - 3.0 MPa (435 psia)
  - Air-blown operation - 2.1 MPa (300 psia)
- Coal residence time in gasifier: approximately one hour.

Raw Material Requirements (Refs. 26, 27, 28, 29, 30, 31)

- Coal feedstock requirements:
  - Type: All types; strongly caking coals require agitator and/or increased steam rate.
  - Size: 3.2 to 38.1 mm (0.125 to 1.5 in); coal is usually fed in two size ranges; coal with up to 10% below 3.2 mm (0.125 in) can be gasified.
  - Rate: 136 to 544 g/sec-m^2 (100 to 400 lb/hr-ft^2).
  - Pretreatment required: crushing and sizing; drying to less than 35% moisture; partial oxidation may be required for strongly caking coals in gasifiers without agitators.

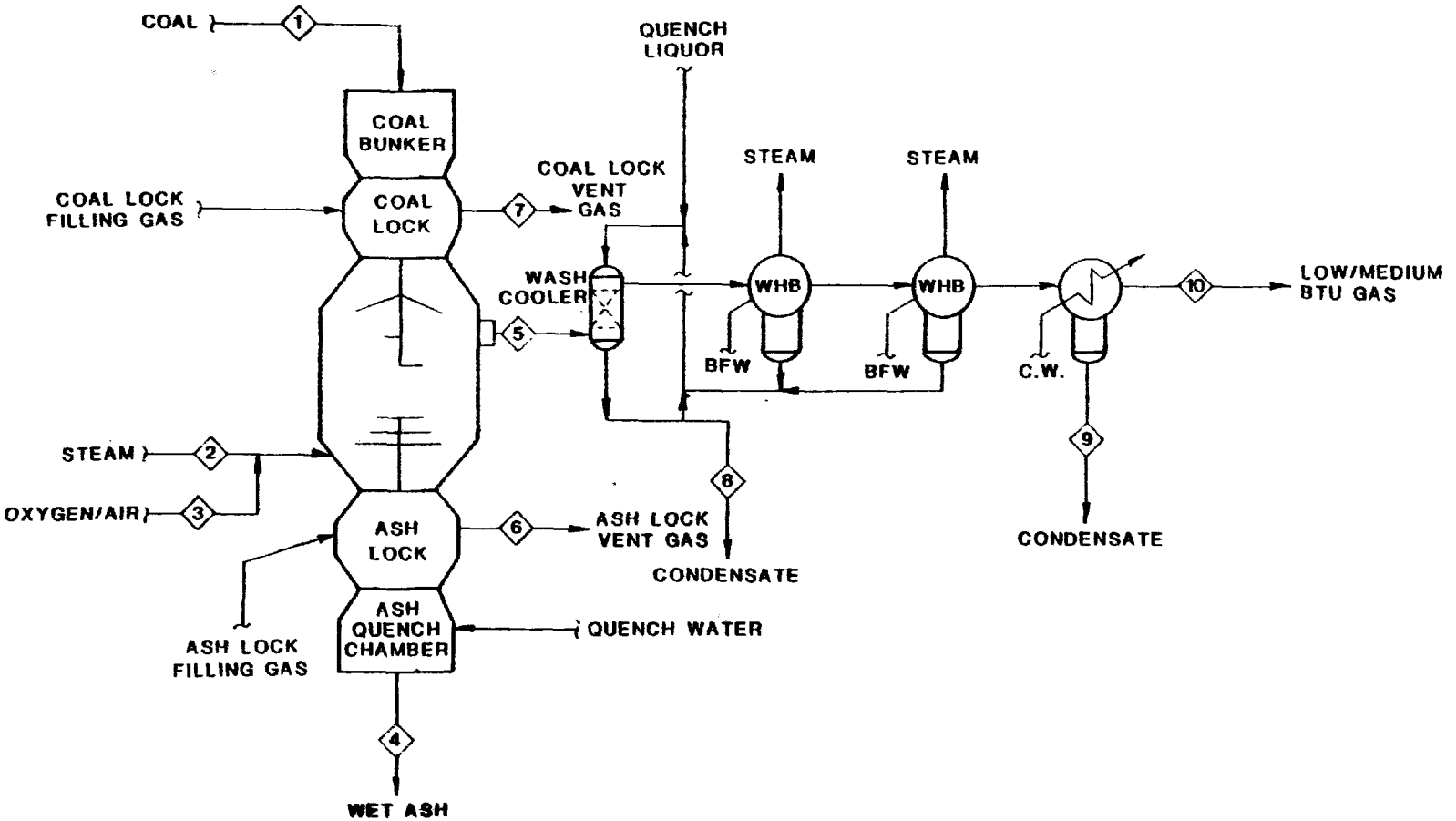

Figure 1. Lurgi Gasifier

- Steam requirements:
  - Oxygen-blown operation - 1.01 to 3.24 kg/kg coal
  - Air-blown operation - 0.6 kg/kg coal
- Oxygen requirements: 0.23 to 0.61 kg/kg coal as pure oxygen
- Air requirements: 1.3 to 1.9 kg/kg coal
- Quench water makeup requirements: Oxygen-blown operation: approximately 3.3×10^{-4} m^3/kg coal (0.04 gal/lb coal).

Utility Requirements (Ref. 32) - Basis: Oxygen-blown operation; Pittsburgh #8 coal, HHV = 3.43×10^7 joule/kg (14,900 Btu/lb)

- Boiler feedwater: 2.42×10^{-3} m^3/kg coal (580 gal/ton coal)
- Cooling water: Data not available.
- Electricity: Data not available.

Process Efficiency (Refs. 33, 34) - Basis: Oxygen-blown operation; quenched and cooled product gas; subbituminous coal feed HHV (dry) = 19.3×10^6 joule/kg (8380 Btu/lb); reference temperature =300°K (80°F).

- Cold gas efficiency: 63% to 80%

$$[=] \frac{[\text{Product gas energy output}]}{[\text{Coal energy input}]} \times 100$$

- Overall thermal efficiency: 76%

$$[=] \frac{[\text{Total energy output (product gas + HC by-products + steam)}]}{[\text{Total energy input (coal + electric power)}]} \times 100$$

Expected Turndown Ratio (Ref. 35) - 100/25

$$[=] \frac{[\text{Full capacity output}]}{[\text{Minimum sustainable output}]}$$

Gas Production Rate (Refs. 36, 37) - Oxygen-blown: 0.11 to 1.0 $Nm^3/sec\text{-}m^2$ (1375 to 12,500 scf/hr-ft^2); 0.77 to 2.5 Nm^3/kg coal (13 to 42 scf/lb coal).

PROCESS ADVANTAGES

- Coal type: Gasifier can accept caking and non-caking coals.
- Gasification media: Gasifier can be operated with air or oxygen
- Operating pressure: High-pressure operation favors the formation of methane in the gasifier and reduces product gas transmission costs. High pressure may also be advantageous for combined-cycle or synthesis gas utilization.
- Development status: Gasifier has been operated commercially for many years.
- Reactor size: Small reactor size may be advantageous for small-scale industrial applications.

PROCESS LIMITATIONS

- Coal type: Caking coals reduce throughput rate and increase steam consumption which also increases the amount of liquid waste to be treated.
- Process efficiency: Maintaining the coal-bed temperature below the ash fusion temperature limits the maximum process efficiency.
- By-products produced: By-products require additional processing for recovery.
- Environmental considerations: Process condensate and by-products require additional processing for environmental acceptability.
- Steam conversion: Maintaining a low coal bed temperature results in low steam conversion.
- Reactor size: Limited reactor size may necessitate use of multiple units in parallel for large installations.

INPUT STREAMS (Refs. 38, 39)

- Coal: (Stream No. 1)

	Montana Subbituminous A	Illinois No. 6 High Volatile C Bituminous	New Mexico Subbituminous C
- Type:			
- Size: mm (in)	6.4 to 31.8 (0.25 to 1.25)	6.4 to 31.8 (0.25 to 1.25)	2.0 to 44.4 (0.08 to 1.75)
- Rate: $g/sec\text{-}m^2$ ($lb/hr\text{-}ft^2$)	140 (103)	131 (96)	337 (248)
- Composition:			
Volatile matter	29.2%	34.7%	31.0%
Moisture	24.7%	10.2%	16.4%
Ash	9.7%	9.1%	17.8%
Sulfur (dry basis)	1.45%	3.13%	0.63%
- HHV: J/kg (Btu/lb)	2.63×10^7 (11,436)	2.94×10^7 (12,770)	2.03×10^7 (8838)
- Swelling number:	0	3	2
- Caking index:	0	15	0
• Steam: (Stream No. 2)	1.9 kg/kg DAF coal	1.9 kg/kg DAF coal	0.965 kg/kg DAF coal
• Oxygen: (Stream No. 3)	0.4 kg/kg DAF coal	0.4 kg/kg DAF coal	NA
• Air: (Stream No. 3)	NA	NA	1.99 kg/kg DAF coal

DISCHARGE STREAMS AND THEIR CONTROL

The Lurgi gasifier will produce the following discharge streams. Stream numbers refer to Figure 1.

Gaseous Discharge Streams -

- Low/medium-Btu gas (Stream No. 10)
- Coal lock gas (Stream No. 7)
- Ash lock gas (Stream No. 6)

Liquid Discharge Streams -

- Process condensate and gas quenching liquor (Stream No. 8 and 9)
- Ash quench water (Stream No. 4)

Solid Discharge Streams -

- Ash (Stream No. 4)

The following text discusses the compositions of these discharge streams, using as a basis the INPUT STREAM data given above and the following gasifier conditions:

• Coal type:	Subbituminous A	High Volatile C Bituminous	Subbituminous C
• Gasifier pressure:	2.65 MPa (385 psia)	2.59 MPa (375 psia)	2.07 MPa (300 psia)
• Steam/O_2 (kg/kg):	5.13	5.5	NA
• Steam/air (kg/kg):	NA	NA	0.485
• Gas outlet temperature:	654°K (718°F)	881°K (1126°F)	Data not available
• Gas production rate: Nm^3/kg coal	2.08	2.17	3.10
(scf/lb coal)	(35.3)	(36.8)	(52.5)

Low/Medium-Btu Gas (Stream No. 10) - The composition of the low/medium-Btu gas from the Lurgi gasifier will be dependent on the composition of the coal feed, gasifier operating conditions, and the gas cooling operations applied to the raw gas stream. The compositions given below list the components in the raw gas (Stream No. 5) for subbituminous and bituminous coal feedstocks. Because this gas stream contains significant amounts of H_2S, organic sulfur compounds, CO_2, heavy hydrocarbons and water, further treatment may be required prior to utilization of the gas. Processes that can be used to remove these contaminants are described in the acid gas removal section.

Component	Coal Type: Subbituminous A Component Vol%	High Volatile C Bituminous Component Vol%	Subbituminous C Component Vol%
CO	15.1	17.3	17.4
H_2	41.1	39.1	23.3
CH_4	11.2	9.4	5.1
C_2H_4 / C_2H_6	0.5	0.7	0.63
CO_2	30.4	31.2	14.8
N_2+Ar	1.2	1.2	38.5
O_2	ND	ND	ND
H_2S	0.5	1.1	0.23
COS + CS_2 (kg/kg coal)	(9.2×10^{-4})	(5.4×10^{-4})	PR
Mercaptans	PR	PR	PR
Thiophenes	PR	PR	PR
SO_2	PR	PR	PR
H_2O	PR	PR	PR
Naphthas (kg/kg coal)	(8.6×10^{-3})	(1.0×10^{-2})	(1.6×10^{-2})
Tar (kg/kg coal)	(3.0×10^{-2})	(3.8×10^{-2})	PR
Tar Oil (kg/kg coal)	(3.2×10^{-2})	(3.5×10^{-3})	PR
Crude Phenols	PR	PR	PR
NH_3 (kg/kg coal)	(2.0×10^{-6})	(4.0×10^{-6})	PR
HCN (kg/kg coal)	(6.0×10^{-6})	(6.2×10^{-5})	PR
Particulates (coal fines, ash) (kg/kg coal)	(3.7×10^{-2})	(5.6×10^{-3})	PR
Trace elements	PR	PR	PR
HHV (dry basis):	1.14×10^7 J/Nm^3 (307 Btu/scf)	1.11×10^7 J/Nm^3 (298 Btu/scf)	7.28×10^6 J/Nm^3 (195 Btu/scf)
Gasification media:	Steam/oxygen	Steam/oxygen	Steam/air

ND = presence of component not determined

PR = component is probably present, amount not determined.

Component volume % is given on a relative basis to all other components that have a value for volume % listed.

Coal Lock Gas (Stream No. 7) - The composition of this gas stream will be determined by the mode of pressurizing the coal lock. Various operating procedures and sources of pressurizing gas could be used. Prior to dumping the coal from the lock into the gasifier, the lock may be pressurized to the gasifier operating pressure with a stream of cooled raw gas or with a vent stream from an acid gas removal or oxygen production process. If the pressurizing gas is added continuously as the coal dumps into the gasifier, the gas remaining in the lock will have approximately the same composition as the pressurizing gas. If no gas is added as the coal is dumped, raw gas from the gasifier will back-flow into the lock as the coal falls into the gasifier, and the gas remaining in the lock will be composed of pressurizing gas and raw gas from the gasifier. If no pressurizing gas is used, the lock will fill with raw gas as the coal is dumped into the gasifier, and the gas remaining in the lock will be composed of raw gas. For any of these procedures, as raw gases pass countercurrently through the incoming coal and into the lock, tars, oils, water and other constituents of the raw gas may condense or be adsorbed on the surface of the coal feed. In addition to the components in the raw gas (Stream No. 5) and the lock filling gases, the coal lock gas may also contain entrained coal fines. The gas which remains in the lock after depressurization will be displaced by the incoming coal charge. In order to prevent the release of this stream to the atmosphere, this stream may be recycled to the raw gas stream or it may be incinerated in a flare or boiler. If gaseous contaminants in this stream are relatively low in concentration, the stream may be passed through wet cyclones to remove particulates, and then vented to the atmosphere.

Ash Lock Gas (Stream No. 6) - The composition of this gas stream will be determined by the mode of pressurizing the ash lock. The ash lock may be pressurized with steam prior to opening the top valve to admit ash from the gasifier, or the top valve may be opened without pressurizing the ash lock. In either case, gases from the gasifier can flow into the coal lock as it fills with ash. The ash in the lock may be cooled with a water spray, or the ash may be discharged from the lock into a quench bath. This contact of the hot ash and water can generate steam and ash dust, any unburned char can react with the steam, and any organic contaminnats in the quench water can be thermally cracked. These reactions contribute to the composition of the gas stream which is released when the ash lock is depressurized. This stream is usually passed through steam condensers which remove some of the particulates. The gas may be treated further in cyclones, or it may be vented directly or incinerated. The gases which are emitted as the ash is dumped from the lock may be collected by hoods and ducts and

may be treated by the methods described above for treating the coal lock gas.

Process Condensate and Gas Quenching Liquor (Stream Nos. 8 and 9) - These liquid streams are composed of the raw gas scrubbing liquor plus raw gas condensate from waste heat boilers and indirect coolers. They contain approximately 95% water. Other components of these streams will be the constituents of the raw gas (Stream No. 5) which condense or dissolve in the quench water. The components most likely to be present in this stream are:

H_2O	NH_3
Tar	H_2S
Tar oil	Organic sulfur compounds
Naphthas	Thiocyanates
Crude phenols	HCN
Particulates (coal fines and ash)	Trace elements

The amounts of these components will be dependent on the raw gas composition and the gas quenching and cooling processes used. Processes that can be used to remove these contaminants are described in the water pollution control section.

Ash Quench Water (Stream No. 4) - The ash from a Lurgi gasifier is usually transported by means of a sluice trough which also serves to cool the hot ash. The composition of this stream will be dependent on the source of the water used to sluice the ash. Generally, the gas quenching liquor is used to cool and transport the ash. Blowdown streams from other process units may also be used. In addition to the components present in these input streams, the ash sluice water will also contain any of the components in the ash lock gas which condense as the ash lock is depressurized plus suspended ash particles. This quench water may be recycled to the water pollution control processes described in Appendix D, or it may be sent to disposal in evaporation ponds. This evaporation can result in atmospheric emission of the volatile components contained in the ash quench water.

Ash (Stream No. 4) - The ash is composed of the mineral matter in the feed coal with approximately 5% unreacted carbon. The exact composition of the ash is dependent on the composition of the feed coal and the gasifier operating conditions. The ash can be separated from the ash sluice water by the suspended solids removal processes described

in the water pollution control section. The ash itself is a solid waste product which requires ultimate disposal. Methods that can be used for ash disposal are described in the solid waste treatment section.

REFERENCES NOT CITED

L-966 Ricketts, T. S., "The Operation of the Westfield Lurgi Plant and the High-Pressure Grid System", Inst. Gas Eng. J. 3 563-88 (October 1963).

L-1024 Sherwin, Martin B., and Marshall E. Frank, Chemicals from Coal and Shale - an R & D Analysis for National Science Foundation. Final Report. Report No. PB-243 393, NSF Grant No. NSF-EN-43237. New York, NY, Chem Systems, Inc., July 1975.

L-1436 Howard-Smith, I., and G. J. Werner, Coal Conversion Technology. Park Ridge, NJ, Noyes Data Corp., 1976.

L-1984 Ricketts, T. S., "Modern Methods of Gas Manufacture Including the Lurgi Process", J. Inst. Fuel 37 (283), 328-41 (1964).

L-5772 Yugoslavia Lurgi Gasification Complex, "Information on Gas Production by Gasification of "KOSOVO" Lignite in Yugoslavia Using the "LURGI" Process", Attachment #2. Kosovo, Yugoslavia, 1976.

Woodall-Duckham/Gas Integrale Gasifier

GENERAL INFORMATION

Process Function - Atmospheric coal gasification in a gravitating bed by injection of steam plus air or steam plus oxygen with countercurrent gas/solid flow.

Development Status - Commercially available since 1940.

Licensor/Developer - Woodall-Duckham (USA) Limited
1910 Cochran Road
Pittsburgh, Pennsylvania 15220

Commercial Applications -

- Production of low-Btu fuel gas: 72 gasifiers currently in operation.
- Production of oxygen-blown synthesis gas: 8 gasifiers currently in operation.
- Production of town gas with cyclic operation: 49 gasifiers currently in operation.

Applicability to Coal Gasification - Proven commercial gasifier which can accept various types of coal feedstocks and can be operated with air or oxygen. Largest installation is in Czechoslovakia.

PROCESS INFORMATION

Equipment (Refs. 40, 41, 42) -

- Gasifier construction: Vertical, cylindrical steel vessel with refractory lining in the upper two-thirds of the gasifier.
- Gasifier dimensions: 3.7 meters (12 ft) in diameter

- Bed type and gas flow: Gravitating bed, continuous countercurrent gas flow; two lateral gas outlets near the top of the gasifier which discharge gas from different zones of the coal bed.

- Heat transfer and cooling mechanism: Direct gas/solid heat transfer, water jacket provides cooling for the bottom third of the gasifier.

- Coal feeding mechanism: Buffer hopper and lock hopper feed the coal intermittently to the top of the bed via a coal distributor.

- Gasification media introduction: Continuous injection of steam plus air or oxygen at the bottom of the coal bed through a slotted ash grate.

- Ash removal mechanism: Rotating slotted grate at the bottom of the coal bed.

- Special features:

  - Internal gasifier baffles permit separation of the product gas into a clear, tar-free side gas stream and a top gas stream which contains volatiles and tar.

  - Gasifier steam jacket provides 100% of gasification steam for air-blown operation; additional steam is required for oxygen-blown operation.

  - Poke holes at the top and side of the gasifier permit introduction of steam lances or poke rods.

  - For caking coals: clear gas outlet is at the top in order to heat walls and prevent sticking of coal in distillation zone.

  - For noncaking coals: clear gas outlet is lower, near the top of the gasification zone.

<u>Flow Diagram</u> - See Figure 1.

<u>Operating Parameter Ranges</u> (Refs. 43, 44) -

- Gas outlet temperature: Data not available.

- Maximum coal bed temperature: Data not available.

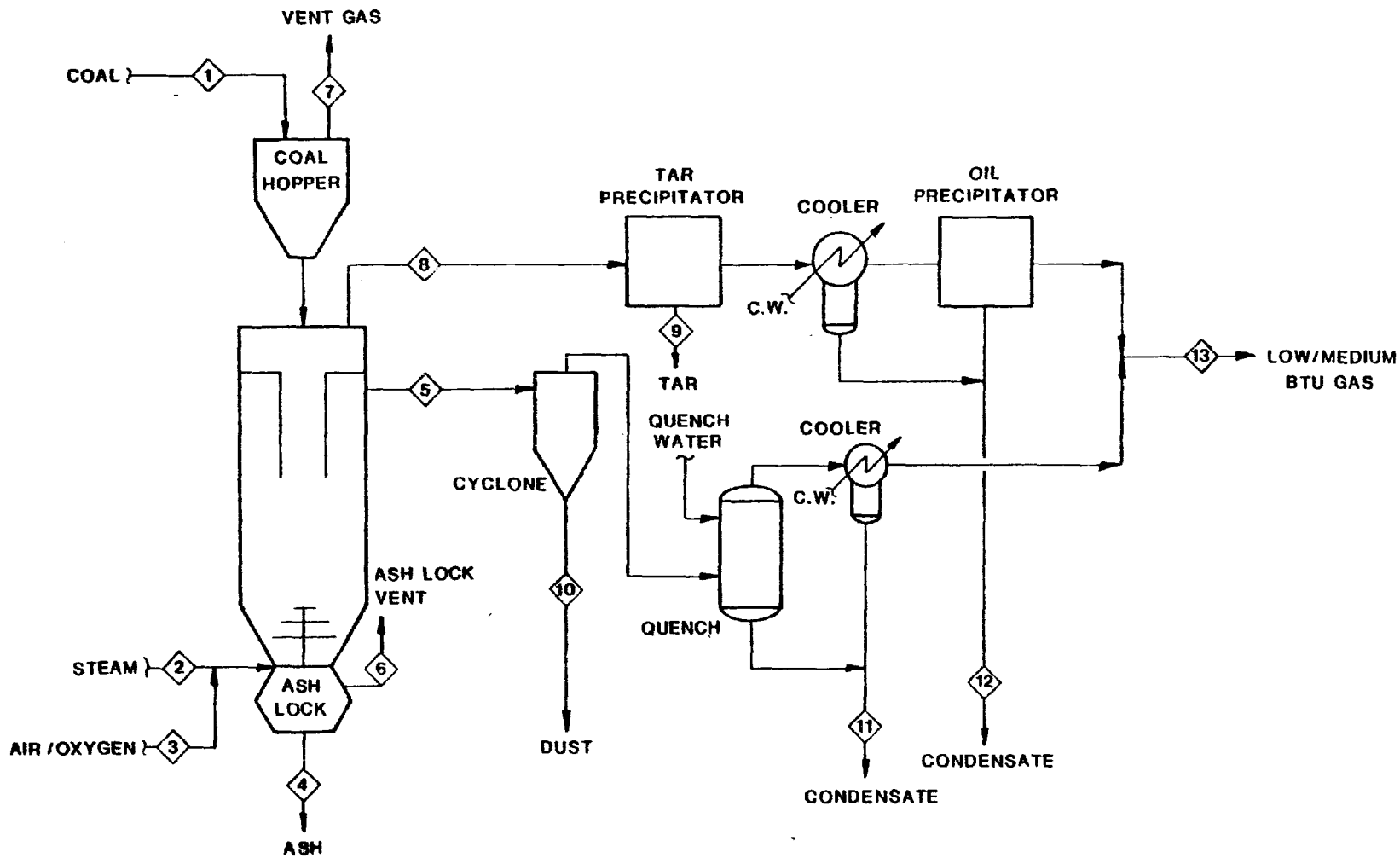

Figure 1. Woodall-Duckham/Gas Integrale Gasifier

- Gasifier pressure: Atmospheric.
- Coal residence time in gasifier: Several hours.

Normal Operating Parameters (Ref. 45) -

- Gas outlet temperature: 394°K (250°F) at top gas outlet
  922°K (1200°F) at side gas outlet
- Maximum coal bed temperature: 1477°K (2200°F)
- Gasifier pressure: Atmospheric.
- Coal residence time in gasifier: Several hours.

Raw Material Requirements (Refs. 46, 47) -

- Coal feedstock requirements:
  - Type: Lignite, bituminous.
  - Size: 6.4 to 38.1 mm (0.25 to 1.5 in); coal is usually fed in two size ranges.
  - Rate: 100 g/sec-m^2 (74 lb/hr-ft^2).
  - Pretreatment required: Crushing and sizing; drying is not required; partial oxidation may be required for strongly caking coals with a free swelling index greater than 2.5.
- Steam requirements, air-blown operation: 0.25 kg/kg coal.
- Oxygen requirements: Data not available.
- Air requirements: 2.3 kg/kg coal.
- Quench water makeup requirements: Data not available.

Utility Requirements (Ref. 48) - Basis: Air-blown operation Pittsburgh #8 coal, HHV (dry) = 3.19×10^7 joule/kg (13,860 Btu/lb).

- Boiler feedwater: 2.75×10^{-4} m^3/kg coal (66 gal/ton coal)
- Cooling water: Data not available.
- Electricity: Data not available.

Process Efficiency (Ref. 49) - Basis: Air-blown operation; quenched and cooled product gas; coal type not specified; reference temperature = 300°K (80°F).

- Cold gas efficiency: 77%

$$[=] \frac{[\text{Product gas energy output}]}{[\text{Coal energy input}]} \times 100$$

- Overall thermal efficiency: 88%

$$[=] \frac{[\text{Total energy output (product gas + HC by-products + steam)}]}{[\text{Total energy input (coal + electric power)}]} \times 100$$

Expected Turndown Ratio (Ref. 50) - 100/25

$$[=] \frac{[\text{Full capacity output}]}{[\text{Minimum sustainable output}]}$$

Gas Production Rate - Data not available.

PROCESS ADVANTAGES

- Coal types: predrying of the feed coal is not required.
- Gasification media: can be operated with air or oxygen.
- By-products produced: two-stage gas production allows relatively simple by-product recovery.
- Environmental considerations: two-stage operation may require no direct water quenching of the gas streams which limits the volume of wastewater requiring further processing.
- Start-up considerations: gasifier can be started up in 24 hours and can be placed in a standby condition with a minimal air supply.
- Process efficiency: although maximum process efficiency is limited by maintaining a coal bed temperature below the ash fusion temperature, the two-stage operation of the gasifier yields a fairly high thermal efficiency.
- Reactor size: small reactor size may be advantageous for small-scale industrial utilization.

- Development status: gasifier has been operated commercially for many years.

PROCESS LIMITATIONS

- Coal types: gasifier requires a coal with a free swelling index of less than 2.5.
- Environmental considerations: process condensate and by-products require additional processing; poke holes may be a source of emissions of raw product gas.
- Operating pressure: product gas may require compression for transmission or utilization in combined-cycle applications.
- Process efficiency: maintaining the coal bed temperature below the ash fusion temperature limits the maximum process efficiency.
- Reactor size: limited reactor size may necessitate use of multiple units in parallel for large installations.

INPUT STREAMS (Ref. 51) -

• Coal (Stream No. 1):		
- Type:	High volatile C bituminous	High volatile C bituminous
- Size:	6.35 to 38.1 mm (0.25 to 1.5 in)	6.35 to 38.1 mm (0.25 to 1.5 in)
- Rate:	Data not available	Data not available
- Composition:	Data not available	Data not available
- HHV: joule/kg (Btu/lb)	2.97×10^7 (12,900)	2.97×10^7 (12,900)
- Swelling number:	Less than 2.5	Less than 2.5
- Caking index:	Data not available	Data not available
• Steam (Stream No. 2):	Data not available	Data not available
• Oxygen (Stream No. 3):	Data not available	NA
• Air (Stream No. 3):	NA	Data not available

DISCHARGE STREAMS AND THEIR CONTROL

The Woodall-Duckham/Gas Integrale gasifier will produce the following discharge streams. Stream numbers refer to Figure 1.

Gaseous Discharge Streams -

- Low/medium-Btu gas (Stream No. 13)
- Coal hopper vent gas (Stream No. 7)
- Ash lock gas (Stream No. 6)

Liquid Discharge Streams -

- Process condensate (Stream Nos. 11 & 12)
- Tar (Stream No. 9)

Solid Discharge Streams -

- Ash (Stream No. 4)
- Dust (Stream No. 10)

The following text discusses the compositions of these discharge streams, using as a basis the INPUT STREAM data given above and the following gasifier conditions:

• Coal type:	High volatile C bituminous	High volatile C bituminous
• Gasifier pressure:	Atmospheric	Atmospheric
• Steam/O_2:	Data not available	NA
• Steam/air:	NA	Data not available
• Gas off-take temperature:	Data not available	Data not available
• Gas production rate:	Data not available	Data not available

Low/Medium-Btu Gas (Stream No. 13) - The composition of the low/medium-Btu gas from the Woodall-Duckham/Gas Integrale gasifiers will be dependent on the composition of the coal feed, gasifier operating conditions, and the processing operations applied to the top gas and side gas streams. The compositions given below list the components in the combined top gas (Stream No. 8) and side gas (Stream No. 5) streams

for bituminous coal feedstock. Because this gas stream contains significant amounts of H_2S, organic sulfur compounds, CO_2, hydrocarbons and water, further treatment may be required prior to utilization of the gas. Processes that can be used to remove these contaminants are described in the acid gas removal section.

	Coal type	
	High volatile C bituminous	High volatile C bituminous
Component	Component Vol %	Component Vol %
CO	37.5	28.3
H_2	38.4	17.0
CH_4	3.5	2.7
*C_2H_4	0.4	0.3
C_2H_6	ND	ND
CO_2	18.0	18.0
N_2+Ar	2.2	47.2
O_2	ND	ND
H_2S	ND	ND
COS + CS_2	ND	ND
Mercaptans	ND	ND
Thiophenes	ND	ND
SO_2	PR	PR
H_2O	PR	PR
Naphthas	PR	PR
Tar, Tar Oil (kg/kg coal)	(0.075)	(0.075)
Crude Phenols	PR	PR
NH_3	PR	PR
HCN	ND	ND
Particulates (coal fines, ash)	PR	PR
Trace elements	PR	PR

* Originally reported as "Illuminants," which may include other light olefins.

HHV (dry basis):	1.04×10^7 J/Nm^3 (280 Btu/scf)	6.52×10^6 J/Nm^3 (175 Btu/scf)
Gasification media:	Steam/O_2	Steam/air

ND = presence of component not determined

PR = component is probably present, amount not determined

Component volume % is given on a relative basis to all other components that have a value for volume % listed.

Coal Hopper Vent Gas (Stream No. 7) - This gaseous discharge stream is created when the valve at the bottom of the coal feed hopper opens to allow the coal feed to enter the gasifier. The raw gas in the top of the gasifier fills the feed hopper as the coal is discharged into the gasifier. When the valve at the top of the hopper opens to admit a new charge of coal, the raw gas in the hopper is displaced up through the surge hopper and potentially into the atmosphere. The composition of this stream should be similar to the top gas (Stream No. 8), although some constituents may condense or be adsorbed on the surface of the coal feed. In order to prevent the release of these components to the atmosphere, this stream may be collected by hoods and then incinerated or recycled to the raw gas or air intake.

Ash Lock Gas (Stream No. 6) - This gas stream is discharged when the ash lock hopper is opened to dump accumulated ash. This stream could potentially contain any of the components in the raw gas (Stream Nos. 5 and 8). Under normal operating conditions, this stream will consist mainly of steam plus air or oxygen, with traces of particulate and volatile material from the ash. If the ash is quenched prior to being dumped from the hopper, this gas stream could contain any volatile compounds in the quench water. If any of these hazardous components are present in significant concentration in this gas stream, it would be necessary for the ash hopper gas to be collected and then either recycled, incinerated, or passed through a scrubber prior to discharge.

Process Condensate (Stream Nos. 11 & 12) - This stream is composed of the compounds in the top gas stream which condense in the gas cooler or precipitate from the oil precipitator, plus the compounds in the side gas stream which condense in the gas cooler. The components most likely to be present in this stream are:

- H_2O
- Tar
- Tar Oil
- Naphthas
- Crude Phenols
- Particulates (coal fines, ash)
- NH_3
- H_2S
- Organic Sulfur Compounds
- Thiocyanates
- HCN
- Trace elements

The amounts of these components will be dependent on the composition of the top gas (Stream No. 8) and side gas (Stream No. 5) and the tar and dust removal processes used upstream of the gas cooling processes. If a direct quench scrubber is used to cool the raw gas streams, this stream will be much larger in total volume, and any components in the quench water would be present in the process condensate

stream. Processes that can be used to remove these contaminants are described in the water pollution control section.

Tar (Stream No. 9) - This stream is composed of the droplets of tar and oil which are removed from the top gas stream by the electrostatic precipitator. The compounds which make up these tars and oils will be determined by the composition of the feed coal and the operating conditions in the gasifier. In addition to tars and oils, this stream may also contain water, particulates, phenols, or any of the components in the raw top gas (Stream No. 8). The tars and oils in this stream may be separated from the water, phenols, particulates, or other contaminants in order to recover then as by-products. The tar may be relatively free of contaminants, in which case it could be utilized as a by-product without additional treatment. Processes which can be used to separate tar and oils from aqueous and solid contaminants are described in the water pollution control section.

Ash (Stream No. 4) - The ash is composed of the mineral matter in the feed coal with approximately 1% unreacted carbon. The exact composition of the ash is dependent on the composition of the feed coal and the gasifier operating conditions. If the ash is quenched prior to discharge from the ash lock hopper, other constituents from the quench water may be present in this stream. The ash from the gasifier is a solid waste product which requires ultimate disposal. Methods that can be used for ash disposal are described in the solid waste treatment section.

Dust (Stream No. 10) - This stream is composed of fine particulates of coal and ash which are removed from the side gas stream in the cyclone. Any of the heavy solid or liquid constituents present in the raw side gas may be present in this stream. The collected dust may be sent to disposal with the gasifier ash, or it may be recycled to the gasifier coal feed, possibly in a briquette form.

REFERENCES NOT CITED

L-1436 Howard-Smith, I., and G. J. Werner, Coal Conversion Technology. Park Ridge, NJ, Noyes Data Corp., 1976.

Chapman (Wilputte) Gasifier

GENERAL INFORMATION

Process Function - Atmospheric coal gasification in a gravitating bed by injection of steam plus air or steam plus oxygen with countercurrent gas/solid flow.

Development Status - Commercially available since 1945.

Licensor/Developer - Wilputte Corporation
152 Floral Avenue
Murray Hill, New Jersey 07974

Commercial Applications - Production of low-Btu fuel gas:

- 2 gasifiers currently in operation
- 10 gasifiers currently inactive

Applicability to Coal Gasification - Proven commercial gasifier which can accept all types of coal and which can be operated with air or oxygen. U.S. Army ammunition plant at Kingsport, Tennessee operates gasifiers with bituminous coal and air. Lignite feed or operation with oxygen has not been commercially demonstrated.

PROCESS INFORMATION

Equipment -

- Gasifier construction: Vertical, cylindrical steel vessel with refractory lining
- Gasifier dimensions:
  - 3.1 meters (10 ft.) in diameter
  - approximately 0.7 meters (28 in) bed depth
- Bed type and gas flow: Gravitating bed, continuous countercurrent gas flow; lateral gas outlet near top of the gasifier.

- Heat transfer and cooling mechanism: Direct gas/solid heat transfer; water jacket provides gasifier cooling.

- Coal feeding mechanism: Semi-continuous rotary hopper which is an integral part of the top of the gasifier.

- Gasification media introduction: Continuous blowing of steam plus oxygen or steam saturated air at the bottom of the coal bed through a tuyere in the center of the ash grate.

- Ash removal mechanism: Rotating slotted grate and water sealed ash pan at the bottom of the coal bed; a stationary ash plow removes the ash from pan and discharges it into an ash trough. New designs may incorporate dry seal ash pans.

- Special features:

  - Tar liquor sprays and direct quench scrubbers cool the product gas and knock out tars, oils, phenols, and ammonia.

  - Rotating agitator which "floats" on the coal bed provides even coal feed distribution and prevents caking.

  - Tar recycle injection at the top of the gasifier provides direct utilization of by-product tar and reduces coal fines carryover (optional).

  - Poke holes at the top of the gasifier permit introduction of steam lances for removal of tar deposits and for breaking up clinkers

<u>Flow Diagram</u> - See Figure 1.

<u>Operating Parameter Ranges</u> -

- Gas outlet temperature: 910 to 922°K (1000 to 1200°F)

- Maximum coal bed temperature: approximately 1310°K (1900°F)

- Gasifier pressure: Atmospheric

- Coal residence time in gasifier: Approximately 2 hours

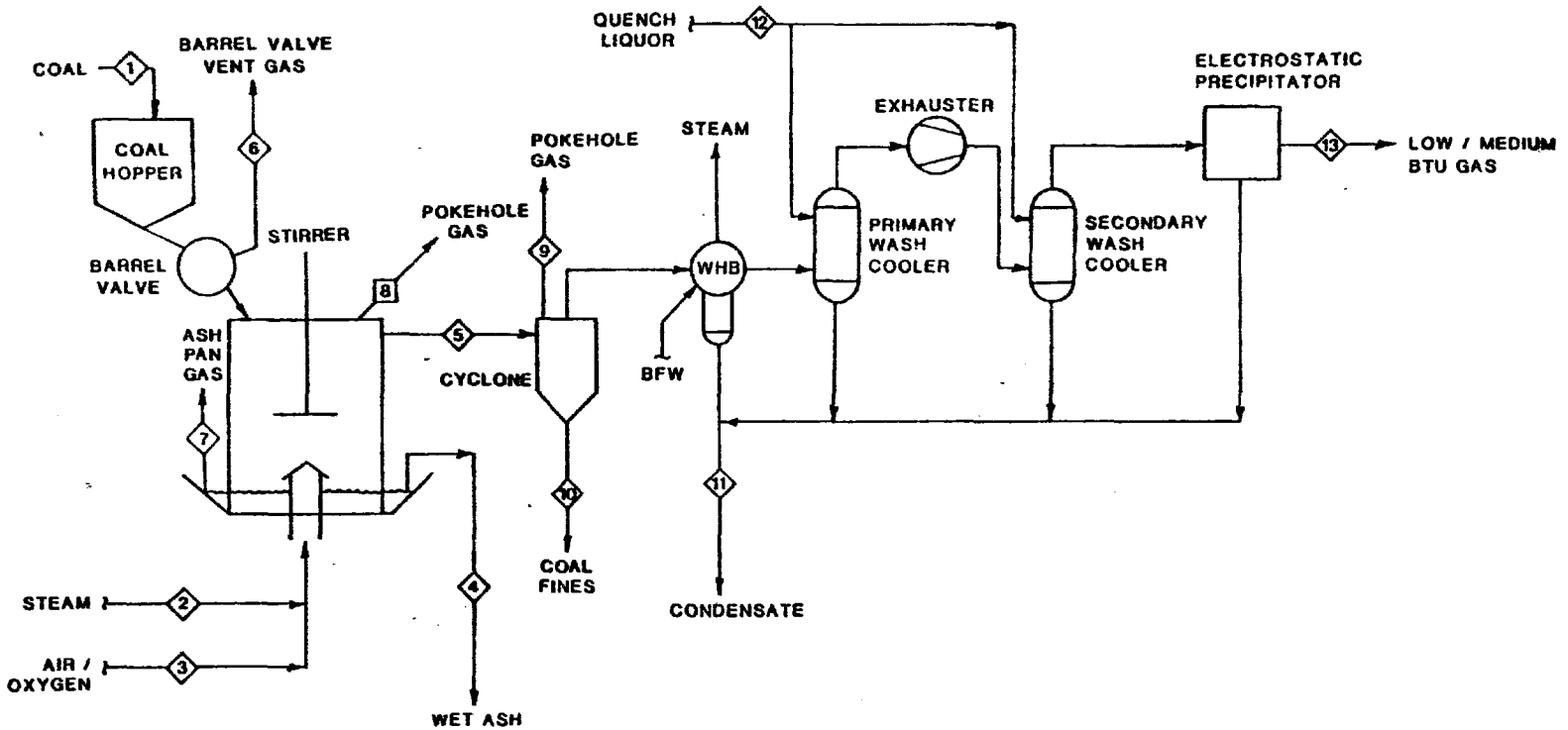

Figure 1. Chapman (Wilputte) Gasifier

Normal Operating Parameters -

- Gas outlet temperature: 894°K (1050°F)
- Maximum coal bed temperature: 1310°K (1900°F)
- Gasifier pressure: Atmospheric
- Coal residence time in gasifier: Approximately 2 hours

Raw Material Requirements - (Refs. 52, 53, 54)

- Coal feedstock requirements:
  - Type: All types
  - Size: Less than 102 mm (4 in)
  - Rate: 43.6 g/sec-m^2 (32 lb/hr-ft^2)
  - Pretreatment required: Crushing and sizing
- Steam requirements: Data not available.
- Oxygen requirements: Data not available
- Air requirements: Data not available.
- Quench water make-up requirements: Data not available.

Utility Requirements - Data not available.

Process Efficiency - Data not available.

Expected Turndown Ratio - Data not available.

Gas Production Rate - 0.15 to 0.31 Nm^3/sec-m^2 (1910 to 3820 scf/hr ft^2); air blown: 1.77 to 3.54 Nm^3/kg coal (30 to 60 scf/lb coal); Oxygen blown: 1.95 Nm^3/kg coal (33 scf/lb coal)

PROCESS ADVANTAGES

- Coal type: gasifier can accept all types of coal.
- Gasification media: gasifier can be operated with air or oxygen.

- Steam production: gasifier steam jacket provides 100% of steam requirement for air blown operation.
- Reactor size: small reactor size may be advantageous for small scale industrial application.
- Development status: gasifier has been operated commercially for many years.

PROCESS LIMITATIONS

- Coal type: No commercial gasifiers are currently operating with caking bituminous coal or lignite.
- Gasification media: Operation with oxygen has not been commercially demonstrated.
- By-products produced: By-products produced require additional processing for recovery.
- Environmental considerations: process condensate and by-products require additional processing for environmental acceptability; emissions from poke holes and ash pan may be difficult to contain and control.
- Operating pressure: Low operating pressure may be a disadvantage for certain types of utilization technologies or for transmission by pipeline.
- Reactor size: Limited reactor size may necessitate use of multiple units in parallel for large installations.

INPUT STREAMS

- Coal (Stream No. 1):
  - Type: Data not available
  - Size: Less than 102 mm (4in.)
  - Rate: 43.6 g/sec-m^2 (32 lb/hr-ft^2)
  - Composition: Data not available
  - HHV: Data not available

- Swelling number: Data not available
- Caking index: Data not available

- Steam (Stream No. 2): Data not available
- Oxygen (Stream No. 3): Data not available
- Air (Stream No. 3): Data not available

DISCHARGE STREAMS AND THEIR CONTROL

The Chapman (Wilputte) gasifier will produce the following discharge streams. Stream numbers refer to Figure 1.

Gaseous Discharge Streams

- Low/medium-Btu gas (Stream No. 13)
- Barrel valve vent gas (Stream No. 6)
- Poke hole gases (Stream Nos. 8 & 9)
- Ash pan gas (Stream No. 7)

Liquid Discharge Streams

- Process condensate and gas quenching liquor (Stream No. 11)

Solid Discharge Streams

- Ash (Stream No. 4)
- Coal fines (Stream No. 10)

The following text discusses the compositions of these discharge streams, using as a basis the INPUT STREAM data given above, and the following gasifier conditions:

- Coal type: Data not available.
- Gasifier pressure: Atmospheric
- Steam/O_2 (kg/kg): NA
- Steam/air (kg/kg): Data not available

- Gas off-take temperature °K(°F): 839 (1050)
- Gas production rate Nm^3/kg coal (scf/lb coal): Data not available.

Low/Medium Btu Gas (Stream No. 13) - The composition of the low/medium-Btu gas from the Chapman (Wilputte) gasifier will be dependent on the composition of the coal feed, gasifier operating conditions, and the gas cooling operations applied to the raw gas stream. The composition given below lists the components in the raw gas (Stream No. 5). The coal feed type is not specified, and therefore this composition should be considered as an approximation. Because this gas stream contains significant amounts of H_2S, organic sulfur compounds, CO_2, heavy hydrocarbons, and water further treatment may be required prior to utilization of the gas. Processes that can be used to remove these contaminants are described in the acid gas removal section.

Component	Unspecified Coal type Component Vol %
CO	22.7
H_2	16.6
CH_4	3.6
C_2H_4	PR
C_2H_6	PR
CO_2	5.9
N_2 + Ar	51.0
O_2	0.2
H_2S	ND
COS + CS_2	ND
Mercaptans	ND
Thiophenes	ND
SO_2	ND
H_2O	PR
Naphthas	PR
Tar	ND
Tar Oil	ND
Crude Phenols	PR
NH_3	PR
HCN	PR
Particulates (coal fines, ash)	PR
Trace elements	PR
HHV (dry basis):	6.33×10^6 (170) joule/Nm^3 (Btu/scf)

Gasification media: Steam/air

ND = presence of component not determined
PR = component is probably present, amount not determined

Component volume % is given on a relative basis to all other components that have a value for volume % listed.

Barrel Valve Vent Gas (Stream No. 6) - This gaseous discharge stream is created as the coal feeding barrel valve rotates and dumps a charge of coal into the gasifier. A small amount of raw gas from the gasifier fills the space in the feeder as the coal is discharged, and when the barrel valve rotates to accept a fresh charge of coal, the raw gas is displaced from the barrel valve by the incoming coal and is discharged through a vent. The composition of this stream should be similar to the raw gas (Stream No. 5), although some constituents may condense or be absorbed on the surface of the coal feed. In order to prevent the release of these components to the atmosphere, this stream may be collected and recycled to the raw gas stream or air intake, or it may be incinerated.

Poke Hole Gases (Stream No. 8 & 9) - These gaseous discharge streams are created when the poke holes at the top of the gasifier or at the top of the cyclone are opened. The poke holes are opened periodically to permit the introduction of steam lances which are used to remove tars which have accumulated on the walls of the gasifier or the cyclone. If the coal feed does not form tars as it is gasified, this operation may not be required, and these discharge streams would not be present. When the poke holes are open, the poke hole gases will be composed of the constituents in the raw gas (Stream No. 5) plus steam from the lances, plus entrained particles of coal and tar. These streams may be collected by hoods and then passed through steam condensers to knock out water and condensables. This condensate stream would require additional treatment, and it could be combined with the process condensate and gas quenching liquor (Stream No. 11). The gases passing through the condenser could be recycled to the raw gas stream or incinerated.

Ash Pan Gas (Stream No. 7) - This gaseous discharge stream is the result of evaporation of suspended or dissolved components in the ash pan water seal. Any of the components in the raw gas (Stream No. 5) plus any components present in the water input to the ash pan may be present in this stream. In addition, some entrained ash particulates may be present in this stream. In new gasifier designs with

dry ash pan seals, this stream would be replaced by an ash hopper vent stream which could contain components from the raw gas plus ash particles. This stream may be small enough in magnitude to permit direct venting to the atmosphere or it may be collected by hoods and then incinerated in a flare or boiler.

Process Condensate and Gas Quenching Liquor (Stream No. 11) - This liquid stream is composed of the raw gas scrubbing liquor plus raw gas condensate from the waste heat boiler and electrostatic precipitator. This stream will be composed mostly of water, plus the constituents in the raw gas (Stream No. 5) which condense or dissolve in the quench water. The components most likely to be present in this stream are:

- H_2O
- Tar
- Tar oil
- Naphthas
- Crude phenols
- Particulates (coal fines, ash)
- NH_3
- H_2S
- Organic sulfur compounds
- Thiocyanates
- HCN
- Trace elements

Processes that can be used to remove these contaminants are described in the water pollution control section.

Ash (Stream No. 4) - This solid stream will be composed mainly of the mineral matter present in the coal feed. The exact composition of the ash is dependent on the composition of the feed coal and the gasifier operating conditions. The ash may also contain any of the components present in the water seal. The ash from the gasifier is a solid waste product which requires ultimate disposal. Methods that can be used for ash disposal are described in the solid waste treatment section.

Coal Fines (Stream No. 10) - If a cyclone is used for particulate removal, this stream will be composed of small, hot particles of coal, ash and tar which are removed from the raw gas (Stream No. 5). Any of the heavy solid or liquid constituents present in the raw gas could potentially be present in this stream. These coal fines may be sent to disposal with the gasifier ash, or they may be recycled to the gasifier coal feed, possibly in a briquette form. Depending on their carbon content, the coal fines may be burned as a fuel.

REFERENCES NOT CITED

L-9032 U.S. Army Environmental Hygiene Agency, Air Pollution Engineering Source and Ambient Sampling. Survey No. 21-032-71/72, Holston Army Ammunition Plant, Kingsport, TN, 3 May - 30 June 1971, 15 August - 4 September 1971. Edgewood Arsenal Maryland, 18 September 1972.

Riley Morgan Gasifier

GENERAL INFORMATION

Process Function - Atmospheric coal gasification in a gravitating bed by injection of steam plus air or steam plus oxygen with countercurrent gas/solid flow.

Development Status - Pilot plant since 1975.

Licensor/Developer - Riley Stoker Corporation
P.O. Box 547
Worcester, Massachusetts 01613

Commercial Applications - None. The gasifier is a modified version of the Morgan gas producer. Numerous Morgan gas producers were operated commercially in the past.

Applicability to Coal Gasification - Gasifier has been successfully operated using anthracite, noncaking bituminous, and caking bituminous coals with steam plus air. The gasifier at the pilot plant is a commercial-size unit. Operation with oxygen has not been demonstrated in the commercial-size unit. The pilot plant unit is located in Worcester, MA.

PROCESS INFORMATION

Equipment (Refs. 55, 56) -

- Gasifier construction: rotating, vertical, cylindrical steel vessel with refractory lining.
- Gasifier dimensions: 3.2 m (10.5 ft) in diameter
  2.0 m (6.5 ft) bed depth
- Bed type and gas flow: gravitating bed; continuous countercurrent gas flow; vertical gas outlet at the top of the gasifier.
- Heat transfer and cooling mechanism: direct gas/solid heat transfer; water jacketed barrel, head, and ash pan provide gasifier cooling.

- Coal feeding mechanism: semi-continuous twin lock hoppers at the top of the gasifier.

- Gasification media introduction: continuous injection of steam plus air/oxygen at the bottom of the coal bed through a blast hood distributor.

- Ash removal mechanism: helical ash plow at the bottom of the gasifier which can be intermittently engaged in order to push the ash outward radially and upward over the edge of the ash pan and into a water-sealed hopper.

- Special features:

  - Water-cooled bed leveller arms at the top of the gasifier provide a uniform coal bed.

  - Water-cooled agitator moves vertically and radially through the bed to reduce caking and to provide uniform pressure drop.

  - Gasifier barrel and ash pan rotate while the head remains stationary.

Flow Diagram - See Figure 1.

Operating Parameter Ranges (Ref. 57) -

- Gas outlet temperature: 839 to 894°K (1050 to 1150°F)

- Maximum coal bed temperature: 1255 to 1367°K (1800 to 2000°F)

- Gasifier pressure: atmospheric

- Coal residence time in gasifier: 2 to 9 hours

Normal Operating Parameters (Ref. 58) -

- Gas outlet temperature: 861°K (1090°F)

- Maximum coal bed temperature: 1255 to 1365°K (1800 to 2000°F)

- Gasifier pressure: atmospheric

- Coal residence time in gasifier: 2 to 9 hours

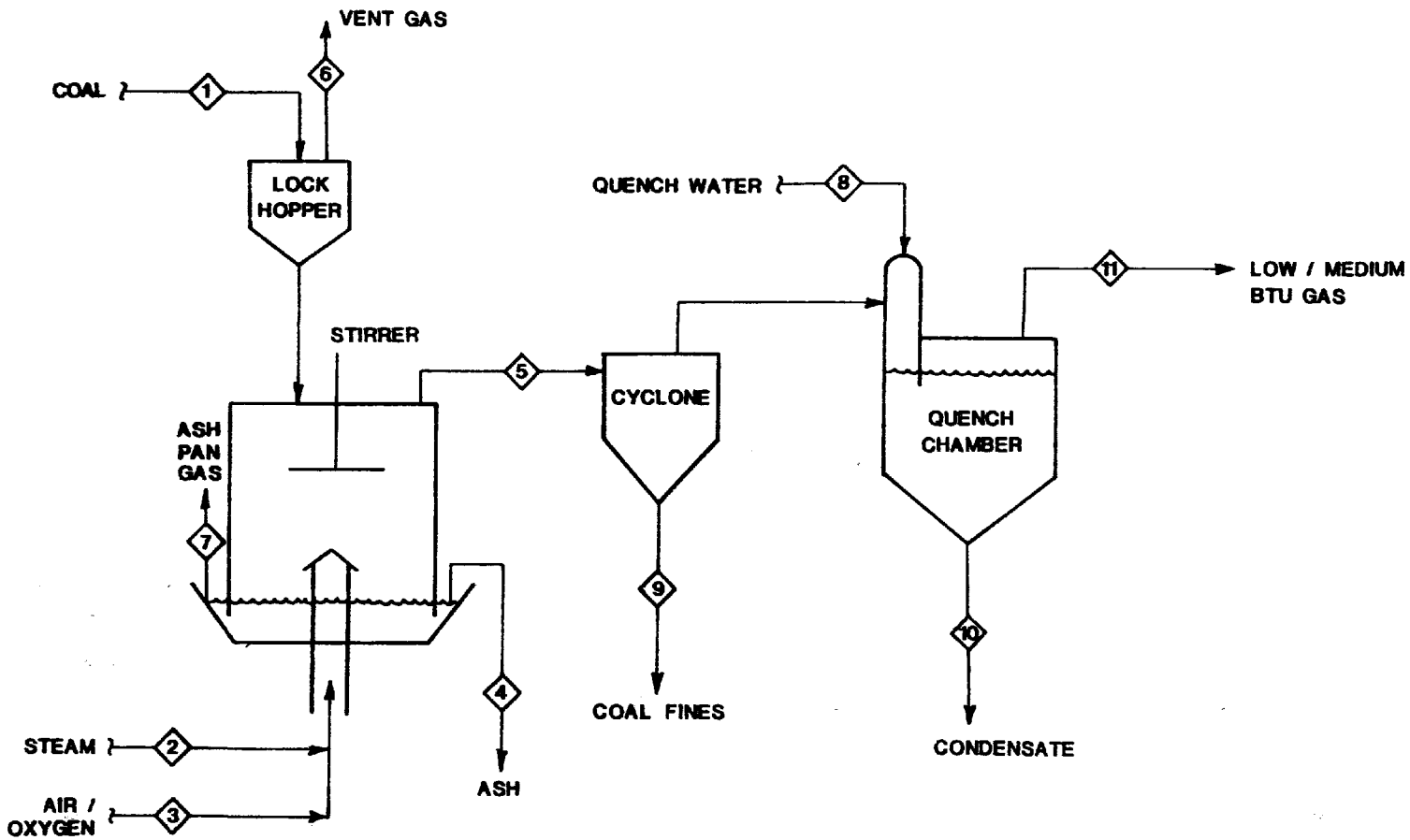

Figure 1. Riley Morgan Gasifier

Raw Material Requirements (Refs. 59, 60) -

- Coal feedstock requirements:
  - Type: anthracite, bituminous, caking bituminous
  - Size: 3.2 to 51 mm (0.125 to 2.0 in)
  - Rate: 47 to 204 g/sec-m^2 (35 to 150 lb/hr-ft^2)
  - Pretreatment required: crushing and sizing
- Steam requirements: Air-blown operation: ∿0.565 kg/kg coal
- Oxygen requirements: Data not available
- Air requirements: ∿2.741 kg/kg coal
- Quench water makeup requirements: Data not available

Utility Requirements - Data not available.

Process Efficiency (Ref. 61) - Basis: Air-blown operation; quenched and cooled product gas; high volatile bituminous coal; HHV (dry) = 3.22×10^7 joule/kg (14,000 Btu/lb).

- Cold gas efficiency: 64% to 68%

$$[=] \frac{[\text{Product gas energy output}]}{[\text{Coal energy input}]} \times 100$$

- Overall thermal efficiency: 71% to 78%

$$[=] \frac{[\text{Total energy output (product gas + HC by-products + steam)}]}{[\text{Total energy input (coal + electric power)}]} \times 100$$

Expected Turndown Ratio - Data not available.

Gas Production Rate -

- Air-blown: 0.41 Nm^3/sec-m^2 (5107 scf/hr-ft^2); 3.47 Nm^3/kg coal (58.9 scf/lb coal)
- Oxygen blown: 0.38 Nm^3/sec-m^2 (4812 scf/hr-ft^2); 1.94 Nm^3/kg coal (32.8 scf/lb coal).

PROCESS ADVANTAGES

- Coal type: Gasifier can be operated with bituminous or anthracite coal. The coal bed agitator allows gasification of caking coals.
- Gasification media: Gasifier can be operated with air or oxygen.
- Reactor size: Small reactor size may be advantageous for small-scale industrial applications.
- Development status: Commercial-size gasifier has been operated for several years.

PROCESS LIMITATIONS

- Process efficiency: Maintaining the coal bed temperature below the ash fusion temperature limits the maximum process efficiency.
- By-products produced: By-products require additional processing for recovery.
- Environmental considerations: Process condensate and by-products require additional processing.
- Operating pressure: Low operating pressure may be a disadvantage for certain types of utilization technologies or for gas transmission by pipeline.
- Reactor size: Limited reactor size may necessitate use of multiple units in parallel for large installations.

INPUT STREAMS (Ref. 62)

- Coal (Stream No. 1):

- Type:	Anthracite	High volatile A bituminous	Medium volatile bituminous
- Size: mm (in)	6.4 to 31.8 (0.25 to 1.25)	6.4 to 31.8 (0.25 to 1.25)	6.4 to 31.8 (0.25 to 1.25)

- Composition:			
Volatile matter	3.6%	30.8%	21.4%
Moisture	3.6%	5.5%	7.1%
Ash	8.0%	7.1%	5.0%
Sulfur (dry basis)	0.8%	0.8%	0.7%
- HHV (as received): J/kg (Btu/lb)	2.6×10^7 (11,430)	3.1×10^7 (13,405)	3.2×10^7 (13,830)
- Swelling number:	0	6	8.5
- Caking index:	-Data not available-		

• Steam (Stream No. 2):	Data not available	0.56 kg/kg coal	Data not available
• Oxygen (Stream No. 3):	NA	NA	NA
• Air (Stream No. 3):	Data not available	2.74 kg/kg	Data not available

DISCHARGE STREAMS AND THEIR CONTROL

The Riley Morgan gasifier will produce the following discharge streams. Stream numbers refer to Figure 1.

Gaseous Discharge Streams -

- Low/medium-Btu gas (Stream No. 11)
- Coal lock gas (Stream No. 6)
- Ash pan gas (Stream No. 7)

Liquid Discharge Streams -

- Process condensate and gas quenching liquor (Stream No. 10)

Solid Discharge Streams

- Ash (Stream No. 4)
- Coal fines (Stream No. 9)

The following text discusses the compositions of these discharge streams, using as basis the INPUT STREAM data given above, and the following gasifier conditions:

• Coal type:	Anthracite	High volatile A bituminous	Medium volatile bituminous
• Steam/O^2 (kg/kg):	NA	NA	NA
• Steam/air (kg/kg):	0.21	0.17	0.19
• Gas off-take temperature °K (°F)	Data not Available	861 (1090)	Data not Available
• Gas production rate:	-Data not available-		

Low/Medium-Btu gas (Stream No. 11) - The composition of the low/medium-Btu gas from the Riley Morgan gasifier will be dependent on the composition of the coal feed, gasifier operating conditions, and the gas cooling operations applied to the raw gas stream. The compositions given below list the components in the raw gas (Stream No. 5) for bituminous and anthracite coal feedstocks. Because this gas stream contains significant amounts of H_2S, organic sulfur compounds, CO_2, heavy hydrocarbons and water, further treatment may be required prior to utilization of the gas. Processes that can be used to remove these contaminants are described in the acid gas removal section.

Component	Coal Type: Subbituminous A Component Vol %	Lignite Component Vol %	Subbituminous Component Vol %
CO	22.7	21.0	23.5
H_2	16.6	17.92	16.4
CH_4	0.25	2.0	1.7
C_2H_4 / C_2H_6	ND	0.45	0.35
CO_2	9.1	8.85	7.3
N_2+Ar	51.26	49.62	50.62
O_2	ND	ND	ND
H_2S	0.09	0.16	0.12
COS + CS_2	PR	PR	PR
Mercaptans	ND	ND	ND
Thiophenes	ND	ND	ND
SO_2	ND	ND	ND
H_2O (kg/kg coal)	PR	(0.322)	PR
Naphthas	ND	PR	PR
Tar (kg/kg coal)	ND	(0.037)	PR
Tar Oil (kg/kg coal)	ND	(0.040)	PR

Crude Phenols	PR	PR	PR
NH_3	PR	PR	PR
HCN	ND	PR	PR
Particulates (coal fines, ash) (kg/kg coal)	PR	(0.007)	PR
Trace elements	PR	PR	PR
HHV (dry basis): joule/Nm^3	4.85×10^6	5.81×10^6	5.70×10^6
(Btu/scf)	(130)	(156)	(153)
Gasification media:	Steam/air	Steam/air	Steam/air

ND = presence of component not determined

PR = component is probably present, amount not determined

Component volume % is given on a relative basis to all other components that have a value for volume % listed.

Coal Lock Gas (Stream No. 6) - This gaseous discharge stream is created when the valve at the bottom of the coal feed hopper opens to allow the coal feed to enter the gasifier. The raw gas in the top of the gasifier fills the feed hopper as the coal is discharged into the gasifier. When the valve at the top of the coal feed hopper opens to admit a new charge of coal, the raw gas in the hopper is displaced up through the coal feed pipe and potentially into the atmosphere. The composition of this stream should be similar to the raw gas (Stream No. 5), although some constituents may condense or be adsorbed on the surface of the coal feed. In order to prevent the release of these components to the atmosphere, this stream may be collected by hoods and then it may be incinerated or recycled to the raw gas stream or air intake.

Ash Pan Gas (Stream No. 7) - This gaseous discharge stream is the result of evaporation of suspended or dissolved components in the ash pan water seal. Any of the components in the raw gas (Stream No. 5) plus any components present in the water input to the ash pan may be present in the stream. In addition, some entrained ash particulates may also be present in this stream. This stream may be small enough in magnitude to permit direct venting to the atmosphere or it may be collected by hoods and then incinerated in a flare or boiler.

Process Condensate and Gas Quenching Liquor (Stream No. 10) - The gas quenching and cooling separations shown in Figure 1 are not currently in operation at the Riley Morgan pilot plant. The raw gas (Stream No. 5) is passed through a cyclone for particulate removal and is flared. Figure 1 shows the gas quenching and cooling operations proposed by Riley Morgan. The liquid stream produced by these operations will be composed of the raw gas scrubbing liquor plus the components in the raw gas (Stream No. 5) which condense or dissolve in the quench water. Some of the particulates and tar droplets will be removed by the cyclone prior to gas quenching and cooling. The components most likely to be present in this stream are:

- H_2O
- Tar
- Tar Oil
- Naphthas
- Crude Phenols
- Particulates (coal fines, ash)
- NH_3
- H_2S
- Organic Sulfur Compounds
- Thiocyanates
- HCN
- Trace Elements

The amounts of these components will be dependent on the raw gas composition and the gas quenching or cooling processes used. Processes that can be used to remove these contaminants are described in the water pollution control section.

Ash (Stream No. 4) - This solid stream will be composed mainly of the mineral matter present in the coal feed. The exact composition of the ash is dependent on the composition of the feed coal and the gasifier operating conditions. The ash may also contain any of the components present in the ash pan seal water. The ash from the gasifier is a solid waste product which requires ultimate disposal. Methods that can be used for ash disposal are described in the solid waste treatment section.

Coal Fines (Stream No. 9) - If a cyclone is used for particulate removal, this stream will be composed of small, hot particles of coal, ash and tar which are removed from the raw gas (Stream No. 5). Any of the heavy solid or liquid constituents present in the raw gas could potentially be present in this stream. These coal fines may be sent to disposal with the gasifier ash, or they may be recycled to the gasifier coal feed, possibly in a briquette form. Depending on their carbon content, the coal fines may be burned as a fuel.

REFERENCES NOT CITED

L-2137 Rawdon, A. H., R. A. Lisauskas and S. A. Johnson, "NO_x Formation in Low and Intermediate BTU Coal Gas Turbulent-Diffusion Flames", Presented at the NO_x Control Technology Seminar, sponsored by Electric Power Research Inst., San Francisco, CA, 5-6 February 1976.

L-6044 Walsh, Thomas F., "The Riley-Morgan Gasifier", Presented at the Third Annual International Conference on Coal Gasification and Liquefaction, School of Engineering, University of Pittsburgh, Pittsburgh, PA, 3-5 August 1976.

Pressurized Wellman-Galusha (MERC) Gasifier

GENERAL INFORMATION

Process Function - Atmospheric and high pressure coal gasification in a gravitating bed by injection of steam plus air with countercurrent gas/solid flow.

Development Status - Pilot plant since 1958.

Licensor/Developer - U.S. Energy Research and Development Administration
Morgantown Energy Research Center
P.O. Box 880
Morgantown, West Virginia 26505

Commercial Applications - None; gas produced is used for analysis and is flared.

Applicability to Coal Gasification - Gasifier has been operated successfully with caking and non-caking coals. The only operational unit is located at the Morgantown Energy Research Center.

PROCESS INFORMATION

Equipment (Refs. 63, 64, 65) -

- Gasifier construction: vertical, cylindrical steel pressure vessel with refractory lining in the upper portion of the gasifier.
- Gasifier dimensions:
  - 1.1 meters (3.5 ft.) in diameter
  - 1.8 to 2.1 meters (6 to 7 ft.) coal bed depth
  - 7.3 meters (24 ft.) approximate overall height
- Bed type and gas flow: gravitating bed; continuous countercurrent gas flow; vertical gas outlet at the top of the gasifier.

- Heat transfer and cooling mechanism: direct gas/solid heat transfer; water jacket around the bottom 1.5 meters (5 ft.) of the gasifier provides cooling of the gasifier.

- Coal feeding mechanism: two intermittent pressurized lock hoppers which feed coal to opposite sides of the top of the gasifier, below the gas outlet.

- Gasification media introduction: continuous injection of steam plus air at the bottom of the coal bed through a slotted ash extraction grate.

- Ash removal mechanism: eccentrically rotating slotted grate at the bottom of the coal bed; pressurized lock hopper collects the ash and dumps it intermittently.

- Special features:

  - Rotating, water cooled agitator which spirals vertically below the surface of the coal bed to prevent channeling and to maintain a uniform bed.

  - Rotating, slotted ash grate which is eccentrically mounted in order to break up the dry ash and force it through the slots.

Flow Diagram - See Figure 1.

Operating Parameter Ranges (Refs. 66, 67) -

- Gas outlet temperature: 755 to 922°K (900 to 1200°F)

- Maximum coal bed temperature: 1589 to 1644°K (2400 to 2500°F)

- Gasifier pressure: 0.1 to 2.1 MPa (15 to 300 psia)

- Coal residence time in gasifier: Approximately 2 hours.

Normal Operating Parameters (Ref. 68) -

- Gas outlet temperature: 922°K (1200°F)

- Maximum coal bed temperature: 1589 to 1644°K (2400 to 2500°F)

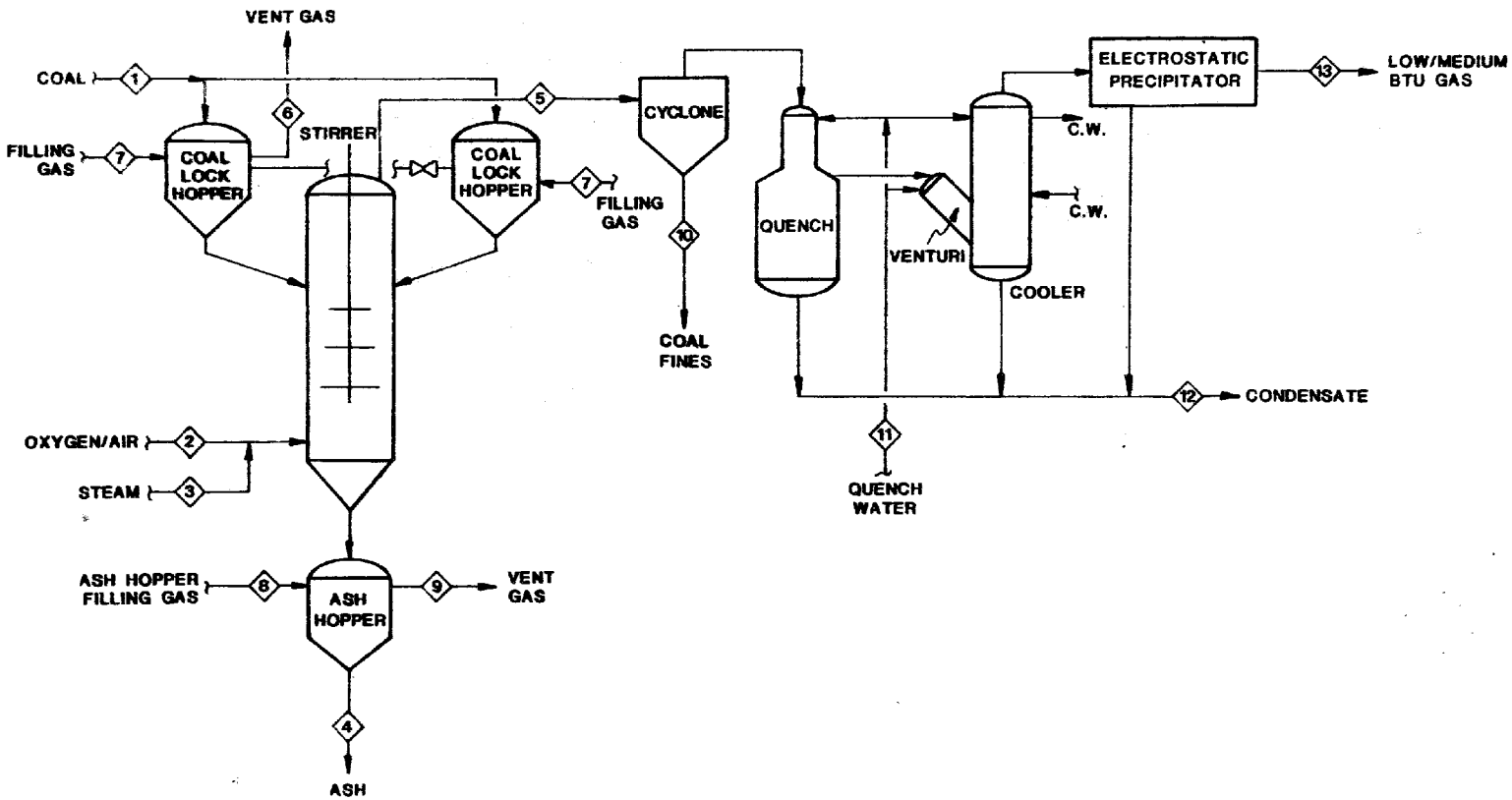

Figure 1. Pressurized Wellman-Galusha (MERC) Gasifier

- Gasifier pressure: 0.69 to 1.3 MPa (100 to 195 psia)
- Coal residence time in gasifier: Approximately 2 hours.

Raw Material Requirements (Refs. 69, 70) -

- Coal feedstock requirements:
  - Type: all types
  - Size: usually 50% less than 12.7 mm (0.5 in.); run-of-mine coal has been successfully gasified.
  - Rate: 99 to 228 g/sec-m^2 (73 to 168 lb/hr-ft^2)
  - Pretreatment required: crushing and sizing; no predrying is necessary.
- Steam requirements:
  - Air-blown operation - 0.32 to 0.7 kg/kg coal
- Oxygen requirements: Data not available.
- Air requirements: 2.3 to 4.1 kg/kg coal
- Quench water make-up requirements: Data not available.

Utility Requirements - Data not available.

Process Efficiency (Ref. 71) - Basis: Air-blown operation; quenched and cooled product gas; subbituminous coal feed HHV (dry) = 2.05 x 10^7 joule/kg (8900 Btu/lb); reference temperature = 300°K (80°F).

- Cold gas efficiency: 79%

$$[=] \frac{[\text{Product gas energy output}]}{[\text{Coal energy input}]} \times 100$$

- Overall thermal efficiency: Data not available.

$$[=] \frac{[\text{Total Energy output (product gas + HC by-products + steam)}]}{[\text{Total energy input (coal + electric power)}]} \times 100$$

Expected Turndown Ratio (Ref. 72) - 100/25

$$[=] \quad \frac{[\text{Full capacity output}]}{[\text{Minimum sustainable output}]}$$

Gas Production Rate (Ref. 73) - Air-blown: 0.32 to 0.77 $Nm^3/sec\text{-}m^2$ (4030 to 9600 $scf/hr\text{-}ft^2$); 2.7 to 4.7 Nm^3/kg coal

PROCESS ADVANTAGES

- Coal type: Gasifier can accept caking and non-caking coals.
- Operating pressure: High pressure operation favors the formation of methane in the gasifier and reduces product gas transmission costs. High pressure operation may also be advantageous for combined cycle or synthesis gas utilization.
- Feed size: Gasifier has been operated with run-of-mine coal.

PROCESS LIMITATIONS

- Gasification media: Gasifier operation with oxygen has not been demonstrated.
- Process efficiency: Maintaining the coal bed temperature below the ash fusion temperature limits the maximum process efficiency.
- By-products produced: By-products in the product gas stream require additional processing if they must be removed from the product gas prior to utilization.
- Environmental considerations: By-products and process condensates which may be removed from the product gas stream require additional treatment to insure environmental acceptability.
- May require N_2 for pressurizing gas.

INPUT STREAMS (Refs. 74, 75, 76)

- Coal (Stream No. 1):

	New Mexico subbituminous A	Pittsburgh high volatile A bituminous
- Type:		
- Size: mm (in)	<38.1 (1.5)	19 to 31.8 (0.75 to 1.25)
- Rate: $g/sec\text{-}m^2$ ($lb/hr\text{-}ft^2$)	211 (155)	253 (186)
- Composition:		
Volatile Matter	31.3 %	35.1 %
Moisture	8.8 %	1.1 %
Ash	24.2 %	8.7 %
Sulfur (dry basis)	1.1 %	2.7 %
Volatiles	31.3 %	35.1 %
- HHV: Joule/kg (Btu/lb)	2.05×10^7 (8900)	3.16×10^7 (13750)
- Swelling number:	2	8
- Caking index:	Data not available	Data not available

• Steam (Stream No. 2):	0.68 kg/kg coal	0.4 kg/kg coal
• Oxygen (Stream No. 3):	NA	NA
• Air (Stream No. 3):	2.31 kg/kg coal	3.02 kg/kg coal

DISCHARGE STREAMS AND THEIR CONTROL

The Pressurized Wellman-Galusha (MERC) gasifier will produce the following discharge streams. Stream numbers refer to Figure 1.

Gaseous Discharge Streams

- Low/medium-Btu gas (Stream No. 13)
- Coal lock gas (Stream No. 6)
- Ash lock gas (Stream No. 9)

Liquid Discharge Streams

- Process condensate and gas quenching liquor (Stream No. 12)

Solid Discharge Streams

- Ash (Stream No. 4)
- Coal fines (Stream No. 10)

The following text discusses the compositions of these discharge streams, using as a basis the INPUT STREAM data given above, and the following gasifier conditions:

• Coal type:	Subbituminous A	High Volatile A Bituminous
• Gasifier pressure: MPa (psia)	1.5 (220)	1.14 (165)
• Steam/O_2:(kg/kg)	NA	NA
• Steam/air: (kg/kg)	0.29	0.12
• Gas outlet temperature °K (°F)	Data not available	828 (1030)
• Gas production rate: Nm^3/kg coal (scf/lb coal)	2.77 (46.9)	3.80 (64.4)

Low/Medium-Btu Gas (Stream No. 13) - The composition of the low/medium-Btu gas from the Pressurized Wellman-Galusha (MERC) gasifier will be dependent on the composition of the coal feed, gasifier operating conditions and the gas cooling operations applied to the raw gas stream. The compositions given below list the components in the raw gas (Stream No. 5) for subbituminous and bituminous coal feedstocks. Because this gas stream may contain significant amounts of H_2S, organic sulfur

compounds, CO_2, heavy hydrocarbons, and water, further treatment may be required prior to utilization of the gas. Processes that can be used to remove these contaminants are described in the acid gas removal section.

	Coal Type	
	Subbituminous A	High Volatile A bituminous
Component	Component Vol%	Component Vol%
CO	16.0	21.6
H_2	19.0	18.7
CH_4	3.5	2.9
C_2H_4 / C_2H_6	0.3	0.2
CO_2	12.6	7.3
N_2 + Ar	48.4	48.9
O_2	ND	ND
H_2S	0.2	0.4
COS + CS_2	PR	PR
Mercaptans	ND	ND
Thiophenes	ND	ND
SO_2	ND	ND
H_2O (kg/kg coal)	(0.64)	(0.32)
Naphthas	PR	PR
Tar (kg/kg coal)	(.034)	(.026)
Tar Oil	PR	PR
Crude Phenols	PR	PR
NH_3	PR	PR
HCN	ND	ND
Particulates (coal fines, ash) (kg/kg coal)	(.017)	(3.5×10^{-3})
Trace elements	PR	PR
HHV (dry basis) : joule/Nm^3 (Btu/scf)	5.6×10^6 (150)	6.1×10^6 (164)
Gasification media:	Steam/air	Steam/air

ND = presence of component not determined.
PR = component is probably present, amount not determined.

Component volume % is given on a relative basis to all other components that have a value for volume % listed.

Coal Lock Gas (Stream No. 6) - The composition of this gas stream will be determined by the mode of pressurizing the coal lock and the composition of the pressurizing gas used. Prior to dumping the coal from the lock into the gasifier, the lock is pressurized by opening a valve which connects the two coal locks. The second lock, which contains raw gas and nitrogen at the gasifier operating pressure, is depressurized as it fills the first lock with gas. The valve is closed and the first lock is brought up to the gasifier operating pressure by the addition of nitrogen. When the coal is dumped from the lock into the gasifier, raw gas will back-flow into the lock. The process is repeated as the empty lock is depressurized to pressurize the full lock. After the empty lock is opened to admit a fresh charge of coal, the gases remaining in the lock will be displaced by the incoming coal. The displaced coal lock gas will contain components in the raw gas (Stream No. 5), plus nitrogen, plus entrained coal particles. In order to prevent the release of these components to the atmosphere, this stream may be recycled to the raw gas stream or air intake or it may be incinerated in a flare or boiler. If gaseous contaminants in this stream are relatively low in concentration the stream may be passed through wet cyclones to remove particulates and then vented to the atmosphere.

Ash Lock Gas (Stream No. 9) - The ash lock gas composition will vary, depending on the operating procedure used to pressurize the ash lock. If steam is used to pressurize the lock, the ash lock gas will be composed mostly of steam with lesser amounts of the components in the raw gas (Stream No. 5). If the lock is not pressurized prior to admitting ash from the gasifier, the ash lock gas will be composed mostly of raw gas (Stream No. 5) which enters the lock as the lock opens. Depending on the method of ash removal, additional components may be present in the ash lock gas. If the ash is quenched with water, ash dust will be entrained in the steam formed from cooling the ash. Some non-condensable gases may be generated by reaction between unburned char and steam or by thermal cracking of organic constituents in the quench water. This stream may be passed through steam condensers to knock out condensables and some particulates. The gas may be treated further in cyclones, or it may be vented directly or incinerated. The gases which are emitted as the ash is dumped from the lock may be collected by hoods and incinerated or vented to the atmosphere after passing the gas through a wet cyclone to remove entrained particulates.

Process Condensate and Gas Quenching Liquor (Stream No. 12) - The gas quenching and cooling operations shown in Figure 1 are not currently in operation at the MERC pilot plant. The raw gas (Stream No. 5) is passed through a cyclone for particulate removal and is flared. The gas quenching and cooling operations shown in Figure 1 will be installed at the MERC pilot plant in the future. The liquid stream produced by these operations will be composed of the raw gas scrubbing liquor plus raw gas condensate from the indirect cooler and electrostatic precipitator. This stream will contain any of the components in the raw gas (Stream No. 5) which condense or dissolve in the quench water. Some of the particulates and tar droplets will be removed by the cyclone prior to gas quenching and cooling. The components most likely to be present in this stream are:

- H_2O
- Tar
- Tar oil
- Naphthas
- Crude phenols
- Particulates (coal fines, ash)
- NH_3
- H_2S
- Organic sulfur compounds
- Thiocyanates
- HCN
- Trace elements

The amounts of these components will be dependent on the raw gas composition and the gas cooling or quenching processes used. Processes that can be used to remove these contaminants are described in the water pollution control section.

Ash (Stream No. 4) - This solid stream will be composed mainly of the mineral matter present in the feed coal with approximately 5% to 15% unreacted carbon. The exact composition will depend on the feed coal and the gasifier operating conditions. If the ash is quenched, other constituents from the quench water may be present in this stream. The ash from the gasifier is a solid waste product which requires ultimate disposal. Methods that can be used for ash disposal are described in the solid waste treatment section.

Coal Fines (Stream No. 10) - This solid stream is composed of small, hot particles of coal, ash, and tar which are removed from the raw gas (Stream No. 5). Any of the heavy solid or liquid constituents present in the raw gas could potentially be present in this stream. These coal fines may be sent to disposal with the gasifier ash, or they may be recycled to the gasifier coal feed, possibly in a briquette form. Depending on their carbon content, the coal fines may be burned as a fuel.

REFERENCES NOT CITED

L-727 Katz, Donald L., et al., Evaluation of Coal Conversion Processes to Provide Clean Fuels. Final Report. Report No. EPRI 206-0-0, PB-234 202 & PB-234 203. Ann Arbor, MI, Univ. of Michigan, Col. of Engineering, 1974.

L-4526 Gillmore, Donald W., and Neil H. Choates, "Behavior of Caking Coals in Fixed-Bed Gasifiers", in Proceedings of the Coal Agglomeration and Conversion Symposium, Morgantown, WV, 5-6 May 1975. Morgantown, WV, West Virginia Geological and Economic Survey, April 1976. pp. 195+.

L-4896F Lewis, P. S., et al., Bituminous Coal Gasified in a Stirred-Bed Producer. Report No. MERC/RI-75/1. Morgantown, WV, Morgantown Energy Research Center, ERDA, June 1975.

L-5063 Liberatore, A. J., and D. W. Gillmore, Behavior of Caking Coals in Fixed-Bed Gasifiers. Report No. CONF-750868-1. Morgantown, WV, Morgantown Energy Research Center, 1975.

L-5283 Ayer, Franklin A., comp., Symposium Proceedings: Environmental Aspects of Fuel Conversion Technology, II, Hollywood, FL, December 1975. Report No. EPA-600/2-76-149, EPA Contract No. 68-02-1325, Task 57. Research Triangle Park, NC, Industrial Environmental Research Lab., Office of Energy, Minerals and Industry, June 1976.

L-5688 Gillmore, G. W., and N. H. Coates, Behavior of Caking Coals in Fixed-Bed Gasifiers. Report No. CONF-750870-1. Morgantown, WV, Morgantown Energy Research Center, 1975.

GFERC Slagging Gasifier

GENERAL INFORMATION

Process Function - High pressure coal gasification in a gravitating bed by injection of steam plus oxygen with countercurrent gas/solid flow.

Development Status - Pilot plant operated 1958 to 1965; reactivated in 1976.

Licensor/Developer - U.S. Energy Research and Development Administration
Grand Forks Energy Research Center
Grand Forks, North Dakota

Commercial Applications - None; gas produced from one unit is used for analysis and is flared.

Applicability to Coal Gasification - Gasifier has been operated successfully with lignite, lignite char and bituminous char. The only operational unit is located at the Grand Forks Energy Research Center.

PROCESS INFORMATION

Equipment (Refs. 77, 78) -

- Gasifier construction: vertical, cylindrical steel pressure vessel with refractory lining.
- Gasifier dimensions:
  - 0.4 meters (16.6 in.) in diameter
  - 1.8 to 4.6 meters (6 to 15 ft.) coal bed depth
  - 12.0 meters (39.3 ft.) approximate overall height
- Bed type and gas flow: gravitating bed, continuous countercurrent gas flow, lateral gas outlet near the top of the gasifier.

- Heat transfer and cooling mechanism: direct gas/solid heat transfer, water jacket provides gasifier cooling.

- Coal feeding mechanism: intermittent pressurized lock hopper which is an integral part of the top of the gasifier.

- Gasification media introduction: continuous injection of steam plus oxygen through tuyeres at the sides of the bottom of the gasifier.

- Ash removal mechanism: tap hole in the conical bottom of the gasifier which drains the slag into a water quench bath and slag lock. Intermittent discharge of the contents of the slag lock provides slag removal.

- Special features:

  - Direct quench gas scrubbing cooler knocks out particulates, tar, oils, phenols, and ammonia at the gas outlet.

  - Side stream sample line at the top of the gasifier allows raw product gas analysis.

Flow Diagram - See Figure 1.

Operating Parameter Ranges (Ref. 79) -

- Gas outlet temperature: 358 to 644°K (185 to 700°F)

- Maximum coal bed temperature: approximately 1644°K (2500°F), depending on the ash fusion temperature of the feed coal

- Gasifier pressure: 0.66 to 2.9 MPa (95 to 415 psia)

- Coal residence time in gasifier: Approximately 15 to 45 minutes

Normal Operating Parameters (Ref. 80) -

- Gas outlet temperature: 477°K (400°F)

- Maximum coal bed temperature: Approximately 1644°K (2500°F) depending on the ash fusion temperature of feed coal.

- Gasifier pressure: 0.66 to 2.9 MPa (95 to 415 psia)

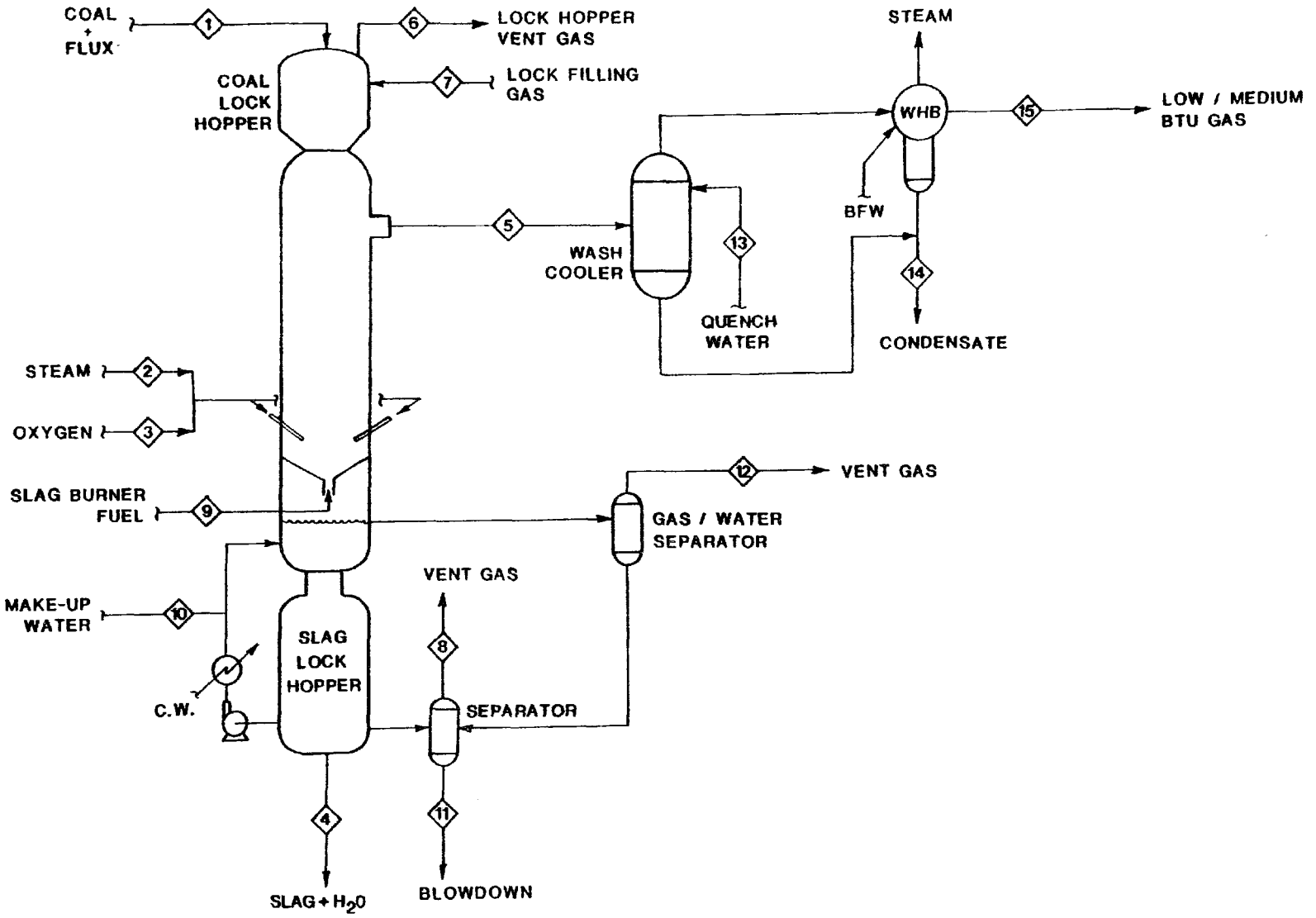

Figure 1. GFERC SLAGGING GASIFIER

- Coal residence time in gasifier: Approximately 15 to 45 minutes.

Raw Material Requirements (Ref. 81, 82, 83) -

- Coal feedstock requirements:
  - Type: Bituminous char, lignite char, or lignite
  - Size: 6.4 to 19 mm (0.25 to 0.75 in.)
  - Rate: 262 to 1288 g/sec-m^2 (193 to 947 lb/hr-ft^2)
  - Pretreatment required: Crushing and sizing; drying to less than 35% moisture.
- Steam requirements: 0.30 to 0.46 kg/kg coal
- Oxygen requirements: 0.48 to 0.55 kg/kg coal
- Air requirements: NA
- Quench water make-up requirements: Data not available.

Utility Requirements - Data not available.

Process Efficiency (Ref. 84) - Basis: oxygen-blown operation; quenched and cooled product gas; lignite coal feed HHV (dry) = 1.82×10^7 joule/kg (7920 Btu/lb); reference temperature = 300°K (80°F).

- Cold gas efficiency: 85%

$$[=] \quad \frac{[\text{Product gas energy output}]}{[\text{Coal energy input}]} \times 100$$

- Overall thermal efficiency: Data not available

$$[=] \quad \frac{[\text{Total energy output (product gas + HC by-products + steam)}]}{[\text{Total energy input (coal + electric power)}]} \times 100$$

Expected Turndown Ratio - Data not available

Gas Production Rate - oxygen blown: 0.53 to 2.1 Nm^3/sec-m^2 (6566 to 26060 scf/hr-ft^2); 1.4 to 1.9 Nm^3/kg DAF coal (24 to 33 scf/lb DAF coal).

PROCESS ADVANTAGES

- Process efficiency: slagging operation increases process efficiency and throughput rate over fixed-bed non-slagging operations.
- Steam consumption/conversion: operation at slagging temperatures reduces steam consumption and increases steam conversion.
- Environmental considerations: lower steam consumption reduces the volume of liquid wastes requiring treatment.
- Operating pressure: high pressure operation favors the formation of methane in the gasifier and reduces gas transmission costs. High pressure is advantageous for utilization of the gas as a synthesis gas or in combined cycle applications.
- Fuel size: coal fines may be injected into the gasifier through the steam/O_2 tuyeres.
- Reactor size: small reactor size may be advantageous for small scale industrial applications.

PROCESS LIMITATIONS

- Coal types: caking coals may require pretreatment; coals with low ash content or high percentages of refractory type ash may require addition of ash fluxing agents.
- Gasification media: operation with steam plus air will not provide hot enough temperatures for slagging operation.
- By-products produced: by-products require additional processing for recovery.
- Environmental considerations: process condensate and by-products require additional processing for environmental acceptability.
- Reactor size: limited reactor size may necessitate use of multiple units in parallel for large installations.
- Development status: gasifier has only been operated on a pilot plant scale.

INPUT STREAMS (Refs. 85, 86) -

- Coal (Stream No. 1)

- Type:	Steam Dried Baukol-Noonan Lignite A	Baukol-Noonan Lignite A	Velva Lignite A
- Size: mm (in)	6.4 to 19 (0.25 to 0.75)	6.4 to 19 (0.25 to 0.75)	6.4 to 19 (0.25 to 0.75)
- Rate: $g/sec\text{-}m^2$ ($lb/hr\text{-}ft^2$)	510 (375)	1695 (1247)	1322 (972)
- Flux added:	Lignite slag 0.2 kg/kg coal	Lignite slag 0.06 kg/kg coal	None
- Composition:			
Volatile matter	37.0%	29.1%	28.8%
Moisture	11.9%	29.1%	35.2%
Ash	9.0%	6.5%	3.5%
Sulfur (Dry basis)	1.2%	0.4%	0.21%
- HHV: J/kg (Btu/lb)	2.7×10^7 (11,540)	1.82×10^7 (7,930)	1.66×10^7 (7,210)
- Swelling number:	0	0	0
- Caking index:	0	0	0

• Steam (Stream No. 2)	0.33 kg/kg DAF coal	0.30 kg/kg DAF coal	0.30 kg/kg DAF coal
• Oxygen (Stream No. 3)	0.52 kg/kg DAF coal	0.48 kg/kg DAF coal	0.49 kg/kg DAF coal
• Air (Stream No. 3)	NA	NA	NA

DISCHARGE STREAMS AND THEIR CONTROL

The GFERC Slagging Gasifier will produce the following discharge streams. Stream numbers refer to Figure 1.

Gaseous Discharge Streams

- Low/medium-Btu gas (Stream No. 15)
- Coal lock gas (Stream No. 6)
- Slag quench vent gas (Stream No. 12)
- Slag lock gas (Stream No. 8)

Liquid Discharge Streams

- Process condensate and gas quenching liquor (Stream No. 14)
- Slag quench blowdown (Stream No. 11)

Solid Discharge Streams

- Slag slurry (Stream No. 4)

The following text discussed the compositions of these discharge streams, using as a basis the INPUT STREAM data given above, and the following gasifier conditions:

• Coal type:	Lignite A	Lignite A	Lignite A
• Gasifier pressure: MPa (psia)	0.66 (95)	2.86 (415)	2.86 (415)
• Steam/O^2: (kg/kg)	0.63	0.63	0.63
• Steam/air: (kg/kg)	NA	NA	NA
• Gas outlet temperature: °K (°F)	358 (185)	450 (350)	450 (350)
• Gas production rate: Nm^3/kg coal (scf/lb coal)	1.75	1.76	1.72

Low/Medium-Btu Gas (Stream No. 15) - The composition of the low/medium-Btu gas from the GFERC Slagging Gasifier will be dependent on the composition of the coal feed, gasifier operating conditions, and the gas cooling operations applied to the raw gas stream. The compositions given below list the components in the raw gas (Stream No. 5) for lignite coal feed at different pressures, and with different amounts of flux added to the coal feed. Because this gas stream contains significant amounts of H_2S, organic sulfur compounds, CO_2, heavy hydrocarbons and water, further

treatment may be required prior to utilization of the gas. Processes that can be used to remove these contaminants are described in the acid gas removal section.

Component	Coal type/flux Lignite A/slag Component Vol%	Lignite A/slag Component Vol%	Lignite A/none Component Vol%
CO	58.4	57.7	56.0
H_2	30.1	28.4	28.8
CH_4	4.8	6.4	6.9
*C_2H_4	0.5	0.5	0.5
C_2H_6	0.3	0.3	0.2
CO_2	5.7	6.5	7.4
N_2 + Ar	ND	ND	ND
O_2	0.2	0.2	0.2
H_2S (kg/kg coal)	PR	(1.9×10^{-3})	(1.5×10^{-3})
COS + CS_2 (kg/kg coal)	ND	(1.3×10^{-4})	(1.3×10^{-4})
Mercaptans (kg/kg coal)	ND	(8.5×10^{-5})	(8.5×10^{-5})
Thiophenes	ND	ND	ND
SO_2	ND	ND	ND
H_2O	PR	PR	PR
Naphthas	PR	PR	PR
Tar (kg/kg coal)	(1.4×10^{-2})	(1.7×10^{-2})	(1.2×10^{-2})
Tar Oil (kg/kg coal)	(5.9×10^{-2})	(5.6×10^{-2})	(4.0×10^{-2})
Crude Phenols	PR	PR	PR
NH_3	ND	ND	ND
HCN	ND	ND	ND
Particulates (coal fines, ash)	PR	PR	PR
Trace elements	PR	PR	PR
HHV (Dry basis): J/Nm^3 (Btu/scf)	1.28×10^7 (345)	1.32×10^7 (353)	1.31×10^7 (352)
Gasification media:	Steam/O_2	Steam/O_2	Steam/O_2

* Originally reported as "Illuminants", which may include other light olefins.

ND = presence of component not determined.
PR = component is probably present, amount not determined.

Component volume % is given on a relative basis to all other components that have a value for volume % listed.

Coal Lock Gas (Stream No. 6) - The composition of this gas stream will be determined by the mode of operation of the coal lock. Prior to dumping the coal from the lock into the gasifier, the lock is pressurized to the gasifier operating pressure with a stream of cooled raw gas. If the pressurizing gas is added continuously as the coal dumps into the gasifier, the gas remaining in the lock will have approximately the same composition as the pressurizing gas. If no gas is added as the coal is dumped, raw gas from the gasifier will back-flow into the gasifier, and the gas remaining in the lock will be composed of pressurizing gas and raw gas from the gasifier. As raw gases from the gasifier pass countercurrently through the incoming coal and into the lock, tars, oils, water and other constituents of the raw gas may condense or be absorbed on the coal feed. In addition to the components in the raw gas (Stream No. 5) and the lock filling gases (Stream No. 7), the coal lock gas may also contain entrained coal fines. As the coal lock is depressurized, the gas in the lock is recycled to the raw gas stream. The gas which remains in the lock after depressurization will be displaced by the incoming coal charge. In order to prevent the release of this gas stream to the atmosphere, it may be collected by hoods and incinerated in a flare or boiler.

Slag Quench Vent Gas (Stream No. 12) - The composition of this gas stream will be determined by the mode of operation of the slag tap. If the slag is tapped intermittently by inducing slag flow with a slag burner as shown in Figure 1, the slag quench vent stream will be created when slag is drained from the gasifier by swinging the slag burner aside and by opening the slag quench vent to create a positive pressure differential across the slag tap hole. The slag quench vent will be composed of combustion products, raw gas from the gasifier, steam, entrained slag particles, and any volatile components in the slag quench make-up water (Stream No. 10). This gas stream may be first passed through a cyclone to remove particulates, or it may be incinerated directly in a flare or boiler. If the slag is tapped continuously, slag quench vent stream would not be present.

Slag Lock Gas (Stream No. 8) - This gas stream is created when the slag lock is depressurized in order to discharge the slag slurry. This stream may contain components in the raw gas from the gasifier which have dissolved in the slag quench water, steam, entrained slag particles, and any volatile components in the slag quench make-up water (Stream No. 10). Depending on the composition of the slag lock gas, it may be first passed through a cyclone to

remove particulates and then vented to the atmosphere or it may be incinerated in a flare or boiler.

Process Condensate and Gas Quenching Liquor (Stream No. 14) - This liquid stream is composed of the raw gas scrubbing liquor plus raw gas condensate from the waste heat boiler. This stream will be composed of water plus the constituents of the raw gas (Stream No. 5) which condense or dissolve in the quench water. The components most likely to be present in this stream are:

- H_2O
- Tar
- Tar oil
- Naphthas
- Crude phenols
- Particulates (coal fines and ash)
- NH_3
- H_2S
- Organic sulfur compounds
- Thiocyanates
- HCN
- Trace elements

The amounts of these components will be dependent on the raw gas composition and the gas quenching and cooling processes used. Processes that can be used to remove these contaminants are described in the water pollution control section.

Slag Quench Blowdown (Stream No. 11) - This liquid stream will be composed of the slag quench water which is removed from the slag lock prior to removal of the slag slurry. This stream will also contain condensate from the slag quench vent gas/liquid separator. The slag quench blowdown may contain any of the components present in the raw gas from the gasifier (Stream No. 5) or in the quench water make-up (Stream No. 10). This stream may also contain suspended slag particles. The concentrations of contaminants in this stream will determine the control technology used to control this stream. This stream may be sent to disposal in evaporation ponds which will result in emission to the atmosphere of all volatile components in the stream.

Slag Slurry (Stream No. 4) - The slag slurry contains slag particles and slag quench water. The slag quench water in the slurry will have the same composition as the slag quench blowdown (Stream No. 11). The slag is composed of the mineral matter in the feed coal with approximately 1% unreacted carbon plus any ash fluxing agents added to the feed coal. The exact composition of the slag is dependent on the composition of the feed coal and fluxing agent (if used) and the gasifier operating conditions. The suspended

solids removal processes described in Appendix D can be used to dewater the slag slurry. The recovered water could be recycled to the process condensate and gas quenching liquor (Stream No. 14). The dewatered slag or slag slurry is a solid waste product which requires ultimate disposal. Processes that can be used for slag slurry disposal are described in the solid waste treatment section.

REFERENCES NOT CITED

L-1744 Gronhovd, G. H., et al., Slagging Fixed-Bed Gasification of North Dakota Lignite at Pressures to 400 PSIG. U.S. Bur. Mines, Rep. Invest. No. RI-7408, NTIS Report No. PB-193 207. Washington, DC, U.S. Bur. Mines, July 1970.

L-5407 Seamans, Robert C., et al., Fossil Energy Program Report 1975-1976. Report No. ERDA 76-10. Washington, DC, Energy Research & Development Admin., 1976.

BGC/Lurgi Slagging Gasifier

GENERAL INFORMATION

Process Function - High-pressure coal gasification in a gravitating bed by injection of steam plus oxygen with countercurrent gas/solid flow.

Development Status - Pilot plant operation: 1955 to 1964. Demonstration plant operation started in 1976.

Licensor/Developer - British Gas Corporation
59 Bryanston St.
Marble Arch
London W-1

Lurgi Mineralöltechnik GmbH
P.O. Box 119181
Bockheimer Landstrasse 42
D-6 Frankfurt (Main), Germany

Commercial Applications - None; gas produced is used for analysis and is flared.

Applicability to Coal Gasification - Gasifier has been operated successfully with noncaking and weakly caking bituminous coals. Successful operation has been maintained using coals with high and low ash content, and coals with high and low ash fusion temperatures. Development work is currently being conducted at the Westfield Development Centre, Westfield, Scotland. Previous development work was conducted at the Midlands Research Station, Solihull, England.

NOTE: No operating data are currently available for the new demonstration-scale unit at Westfield. Therefore all information presented below pertains to the pilot-scale gasifier at Solihull, unless otherwise noted.

PROCESS INFORMATION

Equipment (Refs. 87, 88) -

- Gasifier construction: Vertical, cylindrical steel pressure vessel with refractory lining in the lower half of the gasifier.

- Gasifier dimensions: 0.9 m (3 ft) in diameter
  3.1 m (10 ft) coal bed depth
  2.8 m (9.25 ft) in diameter (Westfield gasifier)

- Bed type and gas flow: Gravitating bed; continuous countercurrent gas flow; lateral gas outlet near the top of the gasifier.

- Heat transfer and cooling mechanism: Direct gas/solid heat transfer; water jacket provides gasifier cooling.

- Coal feeding mechanism: Intermittent, pressurized lock hopper at the top of the gasifier which dumps the coal onto a rotating, water-cooled coal distributor. Coal fines can be injected into the combustion zone through the steam/oxygen tuyeres.

- Gasification media introduction: Continuous injection of steam plus oxygen through tuyeres in the sides of the bottom of the gasifier.

- Ash removal mechanism: Tap hole in the conical bottom of the gasifier which drains the slag into a water quench bath and slag lock. Intermittent discharge of the slag lock provides slag removal.

- Special features:

  - Direct quench gas scrubber and cooler knocks out particulates, tars, oils, phenols, and ammonia at the gas outlet.

  - Rotating coal distributor provides uniform coal bed composition.

  - Rotating, water-cooled coal bed agitator aids the gasification of strongly caking coals.

  - Plunger type tar scraper prevents plugging of the gas outlet from tar condensation.

  - Sampling ports at the side of the gasifier permit measurements of temperatures and gas compositions in the gasifier.

<u>Flow Diagram</u> - See Figure 1.

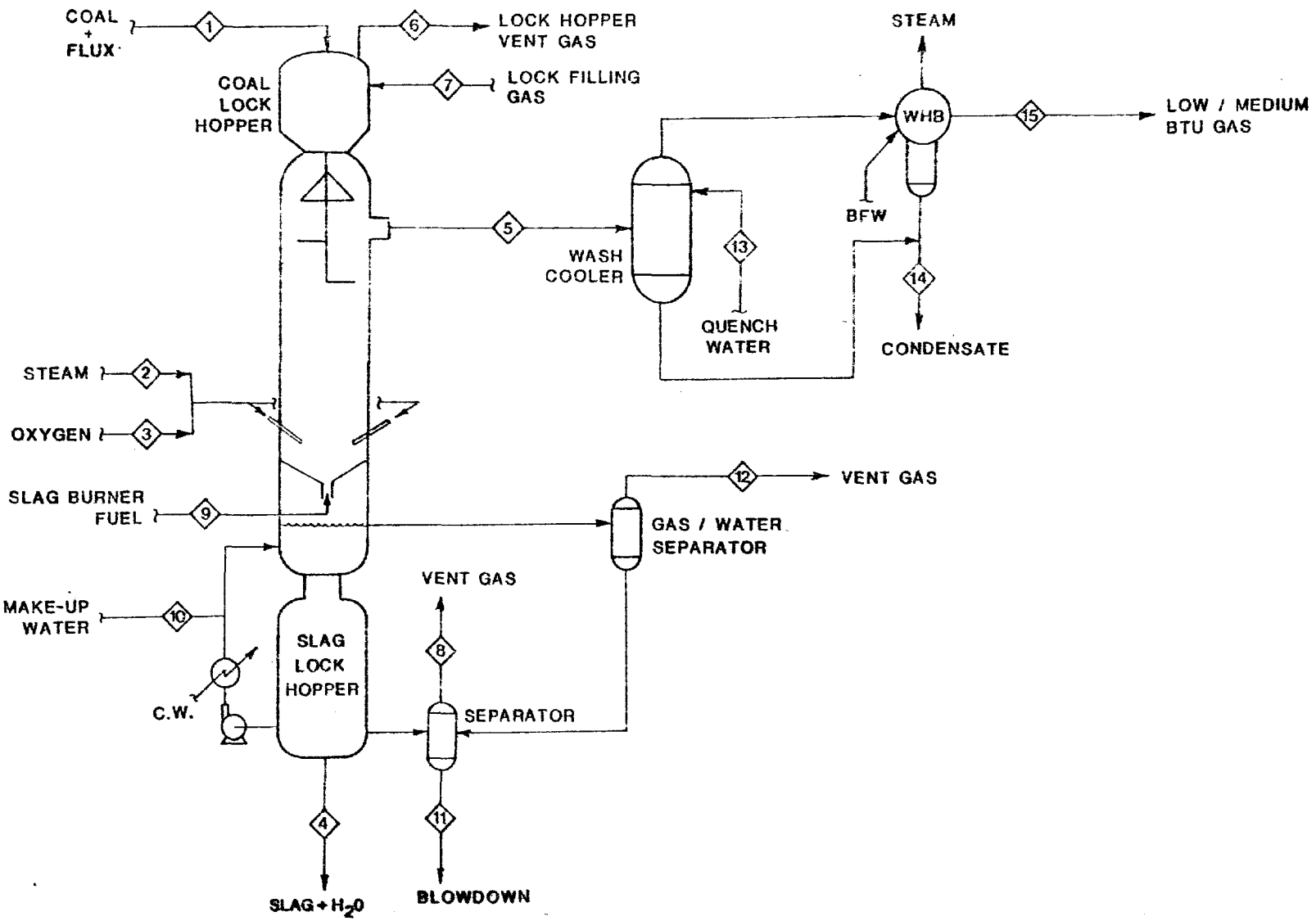

Figure 1. BGC/Lurgi Slagging Gasifier

Operating Parameter Ranges (Refs. 89, 90) -

- Gas outlet temperature: 473 to 1073°K (390 to 1470°F)
- Maximum coal bed temperature: Greater than 1533°K (2300°F), depending on the ash fusion temperature of the feed coal.
- Gasifier pressure: 2.07 to 2.76 MPa (300 to 400 pisa)
- Coal residence time in gasifier: Approximately 10 to 15 minutes.

Normal Operating Parameters (Ref. 91) -

- Gas outlet temperature: 623 to 723°K (660 to 840°F)
- Maximum coal bed temperature: Greater than 1533°K (2300°F), depending on the ash fusion temperature of the feed coal.
- Gasifier pressure: 2.07 MPa (300 psia)
- Coal residence time in gasifier: Approximately 10 to 15 minutes.

Raw Material Requirements (Ref. 92) -

- Coal feedstock requirements:
  - Type: All types: strongly caking coals require agitator.
  - Size: 13 to 51 mm (0.5 to 2.0 in)
  - Rate: 702 to 1958 g/sec m^2 (516 to 1440 lb/hr ft^2)
  - Pretreatment required: Crushing and sizing; drying to less than 20% moisture.
- Steam requirements: 0.29 to 0.31 kg/kg coal.
- Oxygen requirements: 0.48 to 0.53 kg/kg coal.
- Air requirements: Not applicable.
- Quench water makeup requirements: Data not available.

Utility Requirements - Data not available.

Process Efficiency (Ref. 93) - Basis: Oxygen-blown operation; quenched and cooled product gas; bituminous coal feed; reference temperature = 300°K (80°F).

- Cold gas efficiency: 83%

$$[=] \frac{[\text{Product gas energy output}]}{[\text{Coal energy input}]} \times 100$$

- Overall thermal efficiency: Data not available.

$$[=] \frac{[\text{Total energy output (product gas + HC by-products + steam)}]}{[\text{Total energy input (coal + electric power)}]} \times 100$$

Expected Turndown Ratio - Data not available

$$[=] \frac{[\text{Full capacity output}]}{[\text{Minimum sustainable output}]}$$

Gas Production Rate - Oxygen blown: 3.5 to 5.1 $Nm^3/sec\text{-}m^2$ (43,600 to 45,600 scf/hr-ft); 2.03 to 2.14 Nm^3/kg DAF coal (34.4 to 36.2 scf/lb DAF coal).

PROCESS ADVANTAGES

- Coal type: Gasifier can accept caking and noncaking coals.
- Process efficiency: Slagging operation increases process efficiency and throughput rate over fixed-bed nonslagging operation.
- Steam consumption/conversion: Operation at slagging temperatures reduces steam consumption and increases steam conversion.
- Environmental considerations: Lower steam consumption reduces the volume of liquid wastes requiring treatment.
- Operating pressure: High-pressure operation favors the formation of methane in the gasifier and reduces gas transmission cost. High pressure is advantageous for utilization of the gas as a synthesis gas or in a combined cycle.

- Fuel size: Coal fines may be injected into the gasifier through the steam/O_2 tuyeres.

- Reactor size: Small reactor size may be advantageous for small-scale industrial applications.

PROCESS LIMITATIONS

- Coal types: Coals with low ash content or with a high percentage of refractory type ash may require addition of ash fluxing agents.

- Gasification media: Operation with steam plus air will not provide hot enough temperatures for slagging operation.

- By-products produced: By-products require additional processing for recovery.

- Environmental considerations: Process condensate and by-products require additional processing for environmental acceptability.

- Reactor size: Limited reactor size may necessitate use of multiple units in parallel for large installations.

- Development status: Gasifier has only been operated on a pilot-plant scale.

INPUT STREAMS (Ref. 94) -

- Coal (Stream No. 1):

- Type		Donisthorpe weakly caking bituminous	Donisthorpe weakly caking bituminous	Newstead bituminous
- Size:	mm (in)	25.4 to 38.1 (1.0 to 1.5)	25.4 to 38.1 (1.0 to 1.5)	25.4 to 50.8 (1.0 to 2.0)
- Rate:	$g/sec\text{-}m^2$ $(lb/hr\text{-}ft^2)$	1333 (980)	1952 (1436)	1262 (928)
- Flux added:	kg/kg coal	bituminous slag 0.06	none	dolomite 0.02

- Composition:			
Volatile matter	- Data not available -		
Moisture	12.7%	13.8%	12.6%
Ash	7.4%	5.6%	7.6%
Sulfur (dry basis)	1.45%	1.3%	0.7%
- HHV:	- Data not available -		
- Swelling number:	- Data not available -		
- Caking index:	- Data not available -		
• Steam (Stream No. 2): kg/kg DAF coal	0.29	0.29	0.31
• Oxygen (Stream No. 3): kg/kg DAF coal	0.48	0.48	0.53
• Air (Stream No. 3):	NA	NA	NA

DISCHARGE STREAMS AND THEIR CONTROL

The BGC/Lurgi slagging gasifier will produce the following discharge streams. Stream numbers refer to Figure 1.

Gaseous Discharge Streams -

- Low/medium-Btu gas (Stream No. 15)
- Coal lock gas (Stream No. 6)
- Slag quench vent gas (Stream No.12)
- Slag lock gas (Stream No. 8)

Liquid Discharge Streams -

- Process condensate and gas quenching liquor (Stream No. 14)
- Slag quench blowdown (Stream No. 11)

Solid Discharge Stream -

- Slag slurry (Stream No. 4)

The following text discusses the compositions of these discharge streams, using as a basis the INPUT STREAM data given above and the following gasifier conditions:

• Coal type:	Donisthorpe bituminous	Donisthorpe bituminous	Newstead bituminous
• Gasifier pressure: MPa (psia)	2.07 (300)	2.07 (300)	2.07 (300)
• Steam/O_2: kg/kg	0.61	0.61	0.59
• Steam/air: kg/kg	NA	NA	NA
• Gas outlet temperature: °K (°F)	- Data not available -		
• Gas production rate: Nm^3/kg coal (scf/lb coal)	2.03 (34.4)	1.96 (33.2)	2.14 (36.2)

Low/Medium-Btu Gas (Stream No. 15) - The composition of the low/medium-Btu gas from the BGC/Lurgi slagging gasifier will be dependent on the composition of the coal feed, gasifier operating conditions, and the gas cooling operations applied to the raw gas stream. The compositions given below list the components in the raw gas (Stream No. 5) for bituminous coal feed with different amounts of flux added to the coal feed. Because this gas stream contains significant amounts of H_2S, organic sulfur compounds, CO_2, heavy hydrocarbons and water, further treatment may be required prior to utilization of the gas. Processes that can be used to remove these contaminants are described in the acid gas removal section.

Coal Lock Gas (Stream No. 6) - The composition of this gas stream will be determined by the mode of pressurizing the coal lock. Various operating procedures and sources of pressurizing gas could be used. Prior to dumping the coal from the lock into the gasifier, the lock may be pressurized to the gasifier operating pressure with a stream of cooled raw gas or with a vent stream from an acid gas removal or oxygen production process. If the pressurizing gas is added continuously as the coal dumps into the gasifier, the gas remaining in the lock will have approximately the same composition as the pressurizing gas. If no gas is added as the coal is dumped, raw gas from the gasifier will back-flow

Low/Medium-Btu Gas Component	Coal Type/Flux: Donisthorpe Bituminous/Slag Component Vol %	Donisthorpe Bituminous/None Component Vol %	Newstead Bituminous/Dolomite Component Vol %
CO	61.3	60.85	60.55
H_2	28.05	28.1	28.65
CH_4, C_2H_4	7.65	7.7	7.25
*C_2H_6	0.45	0.55	1.05
CO_2	2.55	2.7	2.35
N_2+Ar	ND	ND	ND
O_2	ND	ND	ND
H_2S (kg/kg DAF coal)	(1.2×10^{-2})	PR	(7.4×10^{-3})
COS + CS_2 (kg/kg DAF coal)	(9.8×10^{-4})	PR	PR
Mercaptans	ND	ND	ND
Thiophenes	ND	ND	ND
SO_2	ND	ND	ND
H_2O	PR	PR	PR
Naphthas	PR	PR	PR
Tar (kg/kg DAF coal)	(7.3×10^{-2})	PR	(6.9×10^{-2})
Tar Oil	PR	PR	PR
Crude Phenols	PR	PR	PR
NH_3	PR	PR	PR
HCN	ND	ND	ND
Particulates (coal fines, ash) (kg/kg DAF coal)	(1.1×10^{-2})	(2.3×10^{-2})	(9.6×10^{-3})
Trace elements	PR	PR	PR

*Originally reported as CnHm which may also contain other light olefins.

HHV (dry basis): J/Nm^3 (Btu/scf)	1.39×10^7 (374)	(1.40×10^7) (375)	1.41×10^7 (379)
Gasification Media:	Steam/O_2	Steam/O_2	Steam/O_2

ND = presence of component not determined

PR = component is probably present, amount not determined

NP = component is probably not present

Component volume % is given on a relative basis to all other components that have a value for volume % listed.

into the lock as the coal falls into the gasifier, and the gas remaining in the lock will be composed of pressurizing gas and raw gas from the gasifier. If no pressurizing gas is used, the lock will fill with raw gas as the coal is dumped into the gasifier, and the gas remaining in the lock will be composed of raw gas. For any of these cases, as raw gases pass countercurrently through the incoming coal and into the lock, tars, oils, water and other constituents of the raw gas may condense or be adsorbed on the coal feed. In addition to the components in the raw gas (Stream No. 5) and the lock filling gases (Stream No. 7), the coal lock gas stream may also contain entrained coal fines. In order to prevent the release of these contaminants to the atmosphere, this stream may be recycled to the raw gas stream or it may be incinerated in a flare or boiler. If gaseous contaminants in this stream are relatively low in concentration, the stream may be passed through wet cyclones to remove particulates, and then vented to the atmosphere. The gas which remains in the lock after depressurization will be displaced by the incoming coal charge. This gas can be controlled by the same methods described above, but hoods and vent fans would be required to collect the gas.

Slag Quench Vent Gas (Stream No. 12) - The composition of this gas stream will be determined by the mode of operation of the slag tap. If the slag is tapped intermittently by inducing slag flow with a slag burner as shown in Figure 1, the slag quench vent stream will be created when slag is removed from the gasifier by swinging the slag burner aside and by opening the slag quench vent to create a positive pressure differential across the slag tap hole. For this case, the slag quench vent stream will be composed of combustion products, raw gas from the gasifier, steam, entrained slag particles, and any volatile components in the slag quench makeup water (Stream No. 10). If the slag is tapped continuously, a slag quench vent stream would not be present. This gas stream may be first passed through a cyclone to remove particulates, or it may be incinerated directly in a flare or boiler.

Slag Lock Gas (Stream No. 8) - This gas stream is created when the slag lock is depressurized in order to discharge the slag slurry. This stream may contain components in the raw gas from the gasifier which have dissolved in the slag quench water, steam, entrained slag particles, and any volatile components in the slag quench makeup water (Stream No. 10). Depending on the composition of the slag lock gas, it may be first passed through a cyclone to remove particulates and then vented to the atmosphere or it may be incinerated in a flare or boiler.

Process Condensate and Gas Quenching Liquor (Stream No. 14) - This liquid stream is composed of the raw gas scrubbing liquor plus raw gas condensate from the waste heat boiler. This stream will be composed of water plus the constituents of the raw gas (Stream No. 5) which condense or dissolve in the quench water. The components most likely to be present in this stream are:

- H_2O
- Tar
- Tar Oil
- Naphthas
- Crude Phenols
- Particulates (coal fines and ash)
- NH_3
- H_2S
- Organic sulfur compounds
- Thiocyanates
- HCN
- Trace Elements

The amounts of these components will be dependent on the raw gas composition and the gas quenching and cooling processes used. Processes that can be used to remove these contaminants are described in the water pollution control section.

Slag Quench Blowdown (Stream No. 11) - This liquid stream will be composed of the slag quench water which is removed from the slag lock prior to removal of the slag slurry. This stream will also contain condensate from the slag quench vent gas/liquid separator. The slag quench blowdown may contain any of the components present in the raw gas from the gasifier or in the quench water makeup (Stream No. 10). This stream may also contain entrained slag particles. The concentrations of contaminants in this stream will determine the control technology used to control this stream. This stream may be sent to disposal in evaporation ponds which will result in emissions to the atmosphere of all volatile components in the stream.

Slag Slurry (Stream No. 4) - The slag slurry contains slag particles and slag quench water. The slag quench water in the slurry will have the same composition as the slag quench blowdown (Stream No. 11). The slag is composed of the mineral matter in the feed coal with approximately 1% unreacted carbon plus any ash fluxing agents added to the feed coal. The exact composition of the slag is dependent on the composition of the feed coal and fluxing agents (if used) and the gasifier operating conditions. The suspended solids removal processes described in Appendix D can be used to dewater the slag slurry. The recovered water could be recycled to the process condensate and gas quenching liquor. The dewatered slag or slag slurry is a solid waste product which requires ultimate disposal. Processes that

can be used for slag slurry disposal are described in the solid waste treatment section.

REFERENCES NOT CITED

L-6 Stukel, James, Michael Rieber and Shao Lee Soo, Flue Gas Desulfurization and Low-Btu Gasification. A Comparison. Appendix G. Report No. PB-248 064, NSF/RA/N-75/037G, NSF Grant No. NSF-GI-35821. Urbana-Champaign, IL, Illinois Univ., Center for Advanced Computation, May 1975.

L-1984 Ricketts, T. S., "Modern Methods of Gas Manufacture including the Lurgi Process", J. Inst. Fuel 37 (283), 328-41 (1964).

L-7971 Bituminous Coal Research, Inc., Gas Generator Research and Development, Survey and Evaluation, Phase 1, Volume I. Report No. PB-234 523, OCR-20, Int. 1, Vol. 1, OCR Contract No. DI-14-01-0001-324. Monroeville, PA, August 1965.

L-8583 American Gas Association, Proceedings of the Seventh Synthetic Pipeline Gas Symposium, Chicago, IL, 27-29 October 1975. Arlington, VA, 1976.

Foster Wheeler/Stoic Gasifier

GENERAL INFORMATION

Process Function - Atmospheric coal gasification in a gravitating bed by injection of steam plus air with countercurrent gas/solid flow.

Development Status - Demonstration plant construction to begin in 1977.

Licensor/Developer - Foster Wheeler Energy Corp.
110 South Orange Avenue
Livingston, New Jersey 07039

Commercial Applications - Gasifier will be used to fire existing boilers for space heating at the University of Minnesota's Duluth campus. (Gasifier design is based on the Stoic gasifier which has been in commercial operation for many years.)

Applicability to Coal Gasification - The Stoic gasifier is a proven commercial gasifier which can be operated with noncaking coals. Largest installations of Stoic gasifiers are in South Africa.

PROCESS INFORMATION

Equipment (Ref. 95) -

- Gasifier construction: vertical, cylindrical steel vessel with refractory lining in the upper two thirds of the gasifier.
- Gasifier dimensions: 3.0 m (10 ft) in diameter
- Bed type and gas flow: gravitating bed, continuous countercurrent gas flow; two lateral gas outlets near the top of the gasifier which discharge gas from different zones of the coal bed.

- Heat transfer and cooling mechanism: direct gas/solid heat transfer; water jacket provides cooling for the bottom third of the gasifier.

- Coal feeding mechanism: semi-continuous rotary hopper at the top of the gasifier.

- Gasification media introduction: continuous blowing of steam plus air at the bottom of the coal bed through a slotted ash grate.

- Ash removal mechanism: a slotted grate at the bottom of the coal bed removes the ash and dumps it into a water sealed ash pan; an ash elevator picks up the ash and ejects it from the gasifier.

- Special features:

  - Internal gasifier baffles permit separation of the product gas into a clear, tar-free side gas stream and a top gas stream which contains volatiles and tars.

  - Poke holes at the top and at the sides of the gasifier permit introduction of steam lances or poke rods.

Flow Diagram - See Figure 1.

Operating Parameter Ranges (Ref. 96) -

- Gas outlet temperature: ∿394°K (250°F) at top gas outlet
  ∿922°K (1200°F) at side gas outlet

- Maximum coal bed temperature: ∿1477°K (2200°F)

- Gasifier pressure: Atmospheric

- Coal residence time in gasifier: Several hours

Normal Operating Parameters (Ref. 97) -

- Gas outlet temperature: ∿394°K (250°F) at top gas outlet
  ∿922°K (1200°F) at side gas outlet

- Maximum coal bed temperature: ∿1477°K (2200°F)

- Gasifier pressure: Atmospheric

- Coal residence time in gasifier: Several hours

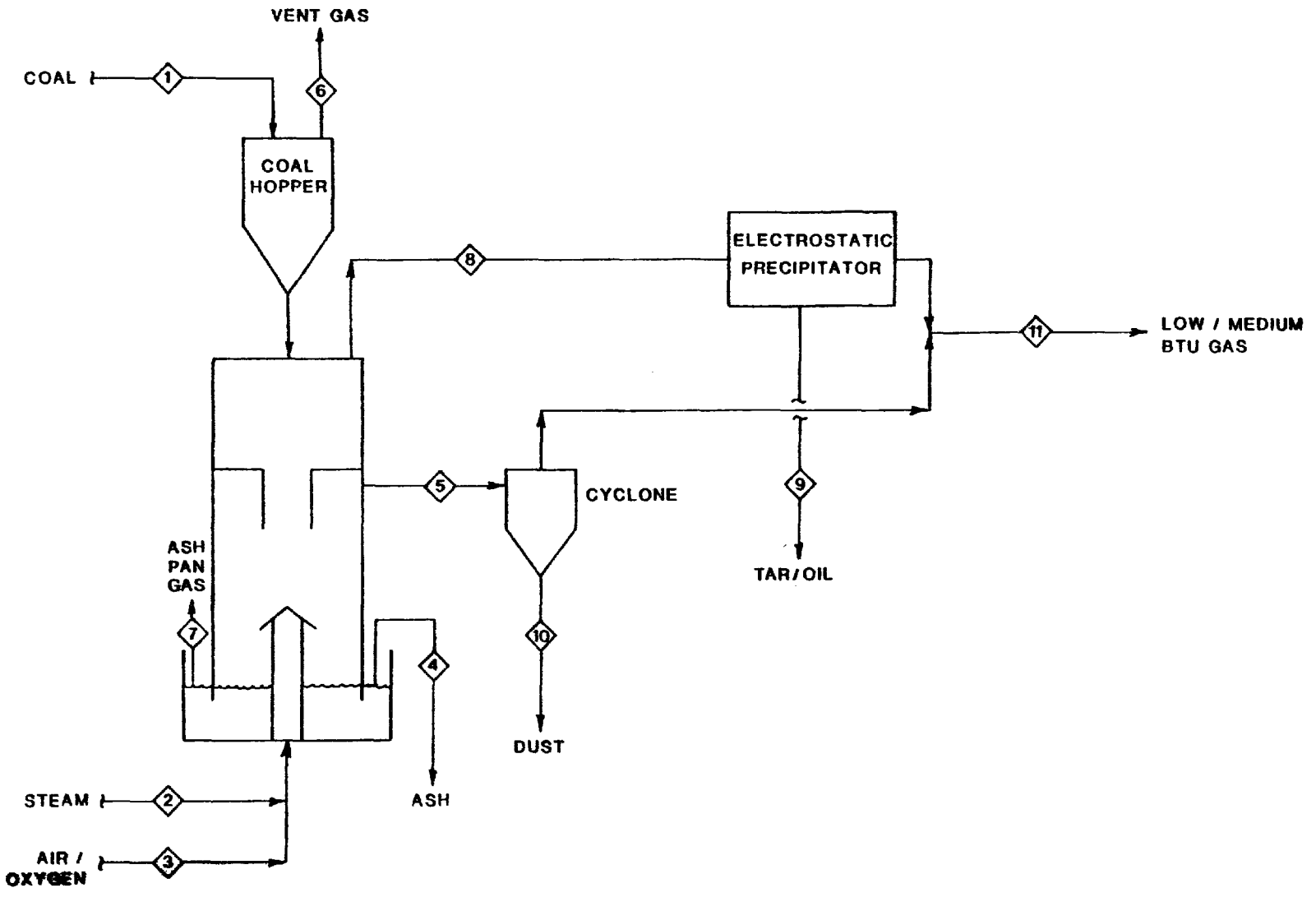

Figure 1. Foster Wheeler/Stoic Gasifier

Raw Material Requirements (Ref. 98) -

Coal feedstock requirements:

- Type: lignite, subbituminous, noncaking bituminous
- Size: 19 - 38 mm (0.75 to 1.5 in)
- Rate: 103 g/sec-m^2 (76.4 lb/hr-ft^2)
- Pretreatment required: Crushing and sizing; partial oxidation may be required for strongly caking coals.

- Steam requirements: 0.37 kg/kg coal
- Oxygen requirements: Not applicable
- Air requirements: 2.13 kg/kg coal
- Quench water make-up requirements: Not applicable

Utility Requirements - Data not available.

Process Efficiency - Data not available.

Expected Turndown Ratio - 100/20 with automatic control
100/5 with manual control

$$= \frac{[\text{Full capacity output}]}{[\text{Minimum sustainable output}]}$$

Gas Production Rate - 3.24 Nm^3/kg coal (54.8 scf/lb coal)

PROCESS ADVANTAGES

- By-products produced: two-stage gas production allows relatively simple by-product recovery.
- Environmental considerations: two stage operation requires no direct water quenching of the gas streams which limits the volume of wastewater requiring further processing.
- Start-up considerations: gasifier can be started up in 24 hours and can be placed in a standby condition with a minimal air supply.

- Process efficiency: although maximum process efficiency is limited by maintaining a coal bed temperature below the ash fusion temperature, the two-stage operation of the gasifier should yield a fairly high thermal efficiency.

- Reactor size: small reactor size may be advantageous for small-scale industrial applications.

PROCESS LIMITATIONS

- Coal types: gasifier requires non-caking coal feed.

- Environmental considerations: process condensate and by-products require additional processing; poke holes may be a source of emissions of raw product gas.

- Operating pressure: product gas may require compression for transmission or utilization in combined-cycle applications.

- Process efficiency: maintaining the coal bed temperature below the ash fusion temperature limits the maximum process efficiency.

- Reactor size: limited reactor size may necessitate use of multiple units in parallel for large installations.

INPUT STREAMS

- Coal: (Stream No. 1)

  - Type: Elkol, Wyoming Subbituminous A

  - Size: mm 19 - 38
    (in) (0.75 - 1.5)

  - Rate: Data not available

  - Composition:

Volatile matter	32.7%
Moisture	18.8%

Ash	5.4%
Sulfur (dry basis)	0.5%
- HHV: J/kg	2.4×10^7
(Btu/lb)	(10,259)
- Swelling number:	< 2.7
- Caking index:	Data not available

- Steam: (Stream No. 2) 0.37 kg/kg coal
- Oxygen: (Stream No. 3) Not applicable
- Air: (Stream No. 3) 2.13 kg/kg coal

DISCHARGE STREAMS AND THEIR CONTROL

The Foster Wheeler/Stoic gasifier will produce the following discharge streams. Stream numbers refer to Figure 1.

Gaseous Discharge Streams

- Low/medium-Btu gas (Stream No. 11)
- Coal hopper vent gas (Stream No. 6)
- Ash pan gas (Stream No. 7)

Liquid Discharge Streams:

- Tar/oil (Stream No. 9)

Solid Discharge Streams:

- Ash (Stream No. 4)
- Dust (Stream No. 10)

The following text discusses the compositions of these discharge streams, using as a basis the INPUT STREAM data given above and the following gasifier conditions:

- Coal type: Subbituminous
- Gasifier pressure: Atmospheric
- Steam/O_2: Not applicable
- Steam/air: (kg/kg) 0.17

  Gas outlet temperature °K (°F):

  - 394 (250) at top gas outlet
  - 922 (1200) at side gas outlet

  Gas production rate: 3.24 Nm^3/kg coal (54.8 scf/lb coal)

Low/Medium-Btu Gas (Stream No. 11) - The composition of the low/medium-Btu gas from the Foster Wheeler/Stoic gasifier will be dependent on the composition of the coal feed, gasifier operating conditions, and the processing operations applied to the top gas and side gas streams. No quantitative data is currently available pertaining to the composition of the gas produced by the Foster Wheeler/Stoic gasifier. The components in the combined top gas (Stream No. 8) and side gas (Stream No. 5) from the Woodall-Duckham/Gas Integrale gasifier and from the Foster Wheeler/Stoic gasifier are probably similar in occurence and concentration, due to design and operating characteristic similarities between the gasifiers with airblown operation. Because the low/medium-Btu gas stream contains significant amounts of H_2S, organic sulfur compounds, CO_2, hydrocarbons, and water, further treatment may be required prior to utilization of the gas. Processes that can be used to remove these contaminants are described in the acid gas removal section.

Coal Hopper Vent Gas (Stream No. 6) - This gaseous discharge stream is created when the valve at the bottom of the coal feed hopper opens to allow the coal feed to enter the gasifier. The raw gas in the top of the gasifier fills the feed hopper as the coal is discharged into the gasifier. When the valve at the top of the hopper opens to admit a new charge of coal, the raw gas in the hopper is displaced up through the coal hopper and potentially into the atmosphere. The composition of this stream should be similar to the top gas (Stream No. 8), although some constituents may condense or be adsorbed on the surface of the coal feed. In order to prevent the release of these components to the atmosphere, this stream may be collected by hoods and then incinerated or recycled to the raw gas or air intake.

Ash Pan Gas Stream No. 7) - This gaseous discharge stream is the result of evaporation of suspended or dissolved components in the ash pan water seal. Any of the components in the raw gases (Stream Nos. 5 & 8) plus any components present in the water input to the ash pan may be present in this stream. This stream may be small enough in magnitude to permit direct venting to the atmosphere or it may be collected by hoods and then incinerated in a flare or boiler.

Oil (Stream No. 9) - This stream is composed of the droplets of tar and oil which are removed from the top gas stream by the electrostatic precipitator. The compounds which make up these tars and oils will be determined by the composition of the feed coal and the operating conditions in the gasifier. In addition to tars and oils, this stream may also contain water, particulates, phenols, or any of the components in the raw top gas (Stream No. 8). The tars and oils in this stream may be separated from the water, phenols, particulates, or other contaminants in order to recover them as by-products. The tar may be relatively free of contaminants, in which case it could be utilized as a by-product without additional treatment. Processes which can be used to separate tar and oils from aqueous and solid contaminants are described in the water pollution control section.

Ash (Stream No. 4) - This solid stream will be composed mainly of the mineral matter present in the coal feed with approximately 9% unreacted carbon. The exact composition of the ash is dependent on the composition of the feed coal and the gasifier operating conditions. The ash may also contain any of the components present in the ash pan seal water. The ash from the gasifier is a solid waste product which requires ultimate disposal. Methods that can be used for ash disposal are described in the solid waste control section.

Dust (Stream No. 10) - This stream is composed of fine particulates of coal and ash which are removed from the side gas stream in the cyclone. Any of the heavy solid or liquid constituents present in the raw side gas may be present in this stream. The collected dust may be sent to disposal with the gasifier ash, or it may be recycled to the gasifier coal feed, possibly in a briquette form.

Winkler Gasifier

GENERAL INFORMATION

Process Function - Atmospheric coal gasification in a fluidized bed by injection of steam plus air or oxygen with co-current and countercurrent gas/solid flow.

Development Status - Commercially available since 1926.

Licensor/Developer - Davy Powergas
P.O. Drawer 5000
Lakeland, Florida 33803

Commercial Applications -

- Production of synthesis gas: 6 gasifiers currently in operation; 7 other gasifiers operated in the past.
- Production of water gas: 23 gasifiers operated in the past.

Applicability to Coal Gasification - Proven commercial gasifier which can accept several types of coal and which can be operated with air or oxygen. Largest operating installation is at Madras, India; no commercial installations are located in the United States.

PROCESS INFORMATION

Equipment (Refs. 99, 100) -

- Gasifier construction: vertical, cylindrical steel pressure vessel with refractory lining.
- Gasifier dimensions:
  - 5.5 meters (18 ft) inside diameter
  - 22.9 meters (75 ft) approximate overall height
- Bed type and gas flow: fluidized bed; continuous gas flow which is both co-current and countercurrent due to action in the fluidized bed and disengaging space; vertical gas outlet at the top of the gasifier.

- Heat transfer and cooling mechanism: direct gas/solid heat transfer; internal radiant boiler section at the top of the gasifier provides cooling above the disengaging space.

- Coal feeding mechanism: continuous screw feeder injects the coal at the sides of the bottom part of the gasifier.

- Gasification media introduction; continuous injection of steam plus air or oxygen through several nozzles at the sides of the gasifier which are located at several levels in the fluidized bed and also in the disengaging space above the bed.

- Ash removal mechanism: 30% of the ash settles out of the fluidized bed and is removed from the gasifier by a screw conveyor. The remainder of the ash, which is entrained in the product gas, is removed by cyclones, wet scrubbers, and electrostatic precipitators.

- Special features:

  - Internal radiant boiler above the disengaging zone solidifies ash particles and cools the product gas.

  - Internal radiant boiler and external waste heat boilers provide 100% of gasification steam requirements.

  - Gasification media injection in the disengaging space facilitates gasification of unconverted carbon entrained in the product gas stream.

Flow Diagram - See Figure 1.

Operating Parameter Ranges (Refs. 101, 102, 103) -

- Gas outlet temperature: 867 to 1060°K (1100 to 1450°F)

- Maximum coal bed temperature: 1089 to 1256°K (1500 to 1800°F)

- Gasifier pressure: atmospheric

- Coal residence time in gasifier: 1 to 2 hours

Normal Operating Parameters (Ref. 104) -

- Gas outlet temperature: 978°K (1300°F)

- Maximum coal bed temperature: 1089°K (1500°F) for lignite
  1256°K (1800°F) for hard coals

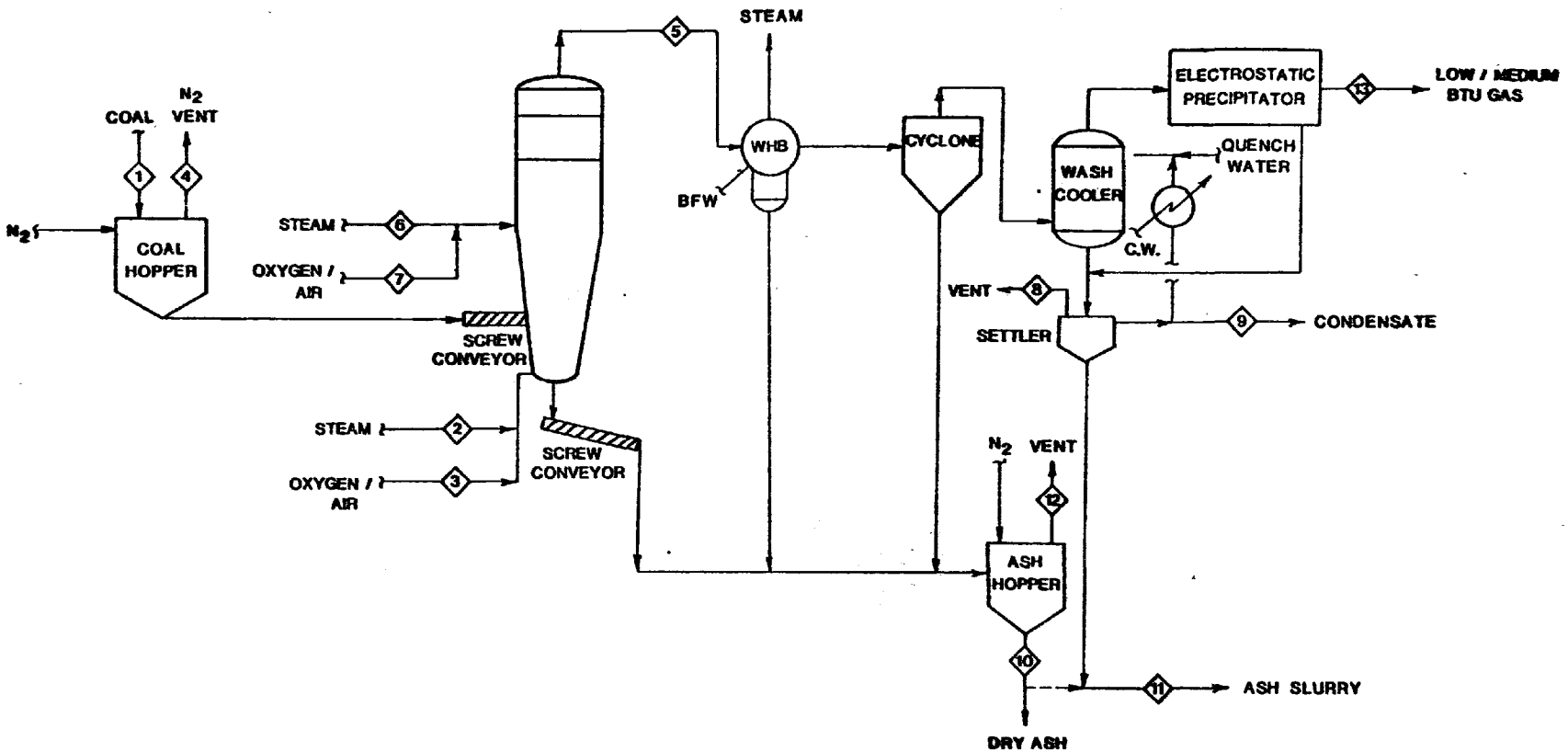

Figure 1. Winkler Gasifier

- Gasifier pressure: atmospheric
- Coal residence time in gasifier: 1 to 2 hours

Raw Material Requirements (Refs. 105, 106, 107, 108, 109, 110) -

- Coal feedstock requirements:
  - Type: lignite, subbituminous, weakly caking bituminous.
  - Size: less than 9.53 mm (0.38 in)
  - Rate: 177 to 191 g/sec-m^2 (130 to 140 lb/hr-ft^2)
  - Pretreatment required: crushing to desired size; drying to less than 30% moisture for lignites; higher rank coals require drying to less than 18% moisture; strongly caking coals may require partial oxidation pretreatment
- Steam requirements:
  - Oxygen-blown operation - 0.2 to 0.3 kg/kg DAF coal
  - Air blown operation - 0.2 kg/kg coal
- Oxygen requirements: 0.5 kg/kg DAF coal
- Air requirements: 2.5 kg/kg coal
- Quench water make-up requirements: data not available

Utility Requirements (Refs. 111, 112, 113) - Basis: Oxygen-blown operation; Illinois #6 coal, HHV = 2.88 x 10^7 joule/kg (12530 Btu/lb)

- Boiler feed water: 8.26 x 10^{-4} m^3/kg coal (198 gal/ton coal)
- Cooling water: Data not available.
- Electricity: Data not available.

Process Efficiency (Refs. 114, 115) - Basis: Oxygen-blown operation; quenched and cooled product gas; Illinois #6 high volatile bituminous coal HHV (dry) = 2.88 x 10^7 joule/kg (12530 Btu/lb); reference temperature - 300°K (80°F)

- Cold gas efficiency: 55% to 72%

$$[=] \frac{[\text{Product gas energy output}]}{[\text{Coal energy input}]} \times 100$$

- Overall thermal efficiency 69%

$$[=] \frac{[\text{Total energy output (product gas + HC by-products + steam)}]}{[\text{Total energy input (coal + electric power)}]} \times 100$$

Expected Turndown Ratio - 100/25

$$[=] \frac{[\text{Full capacity output}]}{[\text{Minimum sustainable output}]}$$

Gas Production Rate - 216 to 1757 $Nm^3/hr\text{-}m^2$ (750 to 6100 $scf/hr\text{-}ft^2$); 1.33 to 1.62 Nm^3/kg coal (22.5 to 27.5 scf/lb coal).

PROCESS ADVANTAGES

- Coal type: Gasifier can accept all types of coals; strongly caking coals may require pretreatment.
- Gasification media: Gasifier can be operated with air or oxygen.
- Environmental considerations: The absence of tars, oils, and naphthas in the raw gas simplifies control technology requirements.
- Start up considerations: The gasifier can be shut down in a few minutes; even after several days the gasifier can be re-started instantly.
- Fuel bed stability: The uniform temperature and composition of the fluidized bed provide stable operating conditions.
- Development status: Gasifier has been operated commercially for many years.

PROCESS LIMITATIONS

- Coal types: Strongly caking coals may require partial oxidation pretreatment; less reactive coals decrease thermal efficiency and carbon conversion.

- Process efficiency: Efficiency is limited due to large amount of unconverted coal which leaves the gasifier; higher temperatures decrease efficiency due to sensible heat losses.

- By-products produced: The large amount of unreacted coal in the char can be burned as a by-product, but if a suitable use is not available, the efficiency of the overall process is greatly reduced.

- Operating pressure: Low operating pressure may be a disadvantage for transmission of the product gas or utilization in combined cycle applications.

- Ash carryover: Separation of high temperature char particles from the raw gas stream may be an operating problem.

INPUT STREAMS -

- Coal (Stream No. 1):

- Type:	Subbituminous A	Lignite	Subbituminous
- Size: mm (in)	<9.53 (0.38)	<8.0 (0.31)	<9.53 (0.31)
- Rate: g/sec-m^2 (lb/hr-ft^2)	DNA	191 (140)	DNA
- Composition:			
Volatile matter	DNA	37%	39%
Moisture	16%	4.2%	3%
Ash	19%	33.1%	24%
Sulfur (dry basis)	DNA	1.0%	DNA
- HHV: joule/kg (Btu/lb)	2.44×10^7 (10,600)	DNA	DNA
- Swelling number:	DNA	0	DNA
- Caking index:	DNA	0	DNA

• Steam (Stream No. 2): kg/kg coal	∿0.2	∿0.2-0.3	∿0.2-0.3
• Oxygen (Stream No. 3): kg/kg coal	NA	∿0.5	∿0.5
• Air (Stream No. 4): kg/kg coal	∿2.5	NA	NA

DISCHARGE STREAMS AND THEIR CONTROL

The Winkler gasifier will produce the following discharge streams. Stream numbers refer to Figure 1.

Gaseous Discharge Streams

- Low/medium-Btu gas (Stream No. 13)
- Coal bin nitrogen vent (Stream No. 4)
- Dry ash bin nitrogen vent (Stream No. 12)
- Ash slurry settler vent (Stream No. 8)

Liquid Discharge Streams

- Process condensate and gas quenching liquor (Stream No. 9)

Solid Discharge Streams

- Dry Ash (Stream No. 10)
- Ash slurry (Stream No. 11)

The following text discusses the compositions of these discharge streams, using as a basis the INPUT STREAM data given above, and the following gasifier conditions:

• Coal type:	Subbituminous A	Lignite	Subbituminous
• Gasifier pressure:	Atmospheric	Atmospheric	Atmospheric
• Steam/O_2: (kg/kg)	NA	∿0.5	∿0.5
• Steam/air: (kg/kg)	∿0.08	NA	NA

• Gas outlet temperature		DNA	
• Gas production rate: Nm^3/kg DAF coal (scf/lb DAF coal)	DNA	0.75 (12.7)	DNA

Low/Medium-Btu Gas (Stream No. 13) - The composition of the low/medium-Btu gas from the Winkler gasifier will be dependent on the composition of the coal feed, gasifier operating conditions, and the gas cooling operations applied to the raw gas stream. The compositions given below list the components in the raw gas (Stream No. 5) for lignite and subbituminous coal feedstocks. Because this gas stream contains significant amounts of H_2S, organic sulfur compounds, CO_2, and water further treatment may be required prior to utilization of the gas. Processes that can be used to remove these contaminants are described in the acid gas removal section.

Coal Bin Nitrogen Vent (Stream No. 4) - This gas stream contains the nitrogen which is used to blanket the coal dust feed bins in order to prevent explosions of the fine coal particles. This stream will also contain entrained coal dust particles. These particles can be removed with filters, cyclones, or scrubbers prior to venting the nitrogen to the atmosphere.

Dry Ash Bin Nitrogen Vent (Stream No. 12) - This gas stream contains the nitrogen which is used to blanket the dry ash bin in order to prevent further reaction or combustion of the char in the ash. This stream will also contain entrained ash particulates plus some raw product gas or gases evolved from the hot char. The entrained ash particulates in this gas stream can be removed with filters, cyclones, or scrubbers. If there are significant concentrations of raw gas (Stream No. 5) or gas evolved from the hot char in this stream, these contaminants may be controlled by recycling the stream to the raw gas, or by incinerating the stream in a flare or boiler, although the nitrogen content of the stream may eliminate this option due to NO_x formation or non-flammability

Ash Slurry Settler Vent (Stream No. 8) - This gas stream may contain any of the components in the raw gas (Stream No. 5) which dissolve or condense in the direct contact scrubber/cooler. The ash which is washed out of the raw gas stream is separated from the quench liquor in a settler. The dissolved or condensed components from the raw gas stream

Low/Medium-Btu Gas Component	Coal Type: Subbituminous A Component Vol %	Lignite Component Vol %	Subbituminous Component Vol %
CO	22.0	35.5	37.0
H_2	14.0	40.0	37.0
CH_4	1.0	2.8	3.0
C_2H_4	ND	ND	ND
C_2H_6	ND	ND	ND
CO_2	7.0	19.9	20.0
N_2 + Ar	56.0	1.8	3.0
O_2	ND	ND	ND
H_2S	PR	PR	PR
COS + CS_2	ND	ND	ND
Mercaptans	ND	ND	ND
Thiophenes	ND	ND	ND
SO_2	ND	ND	ND
H_2O	PR	PR	PR
Naphthas	NP	NP	NP
Tar	NP	NP	NP
Tar Oil	NP	NP	NP
Crude Phenols	ND	ND	ND
NH_3	ND	ND	ND
HCN	ND	ND	ND
Particulates (coal fines, ash)	PR	0.46 kg/kg coal DAF	PR
Trace Elements	PR	PR	PR
HHV (Dry basis): J/Nm^3 (Btu/scf)	4.66×10^6 (125)	1.01×10^7 (272)	1.0×10^7 (270)
Gasification media:	Steam/air	Steam/O_2	Steam/O_2

ND = presence of component not determined

PR = component is probably present, amount not determined

NP = component is probably not present

Component volume % is given on a relative basis to all other components that have a value for volume % listed.

that evaporate from the quenching liquor are removed from the settler through the vent. This vent stream may also contain entrained droplets of gas quenching liquor (Stream No. 9) or ash slurry (Stream No. 11). The solid and liquid contaminants in this stream can be removed with filters, cyclones, or scrubbers. If there are significant concentrations of contaminants from the raw gas (Stream No. 5) in this stream, they may be controlled by recycling the stream to the raw gas, or by incinerating the stream in a flare or boiler.

Process Condensate and Gas Quenching Liquor (Stream No. 9) - This liquid stream is composed of the raw gas scrubbing liquor plus raw gas condensate from the direct contact scrubber/cooler. The ash which is washed out of the raw gas stream is separated from the quench liquor in a settler, but some ash particles may be carried along in this blowdown stream. The other components in this stream will be the constituents of the raw gas (Stream No. 5) which condense or dissolve in the quench liquor. The components most likely to be present in this stream are:

- H_2O
- Particulates (coal fines, char)
- NH_3
- H_2S
- Trace elements

Processes that can be used to remove these contaminants are described in the water pollution control section.

Dry Ash (Stream No. 10) - This stream is composed of the larger ash particles formed in the gasifier which were heavy enough to fall to the bottom of the gasifier and into the screw conveyor plus the ash particles which were removed from the raw gas (Stream No. 5) in the waste heat boiler and in the cyclone. The ash will consist of the mineral matter present in the coal feed with 10% to 30% unreacted carbon. The exact composition of the ash is dependent on the composition of the feed coal and the gasifier operating conditions. The dry ash may contain enough unreacted carbon to be utilized as a salable by-product. The char in the ash may be burned as a fuel or may be used as an adsorbent similar to activated charcoal. If the dry ash is a solid waste product, it may be combined with the ash slurry (Stream No. 11) prior to ultimate disposal. Processes that can be used for ash disposal are described in the solid waste treatment section.

Ash Slurry (Stream No. 11) - This stream contains the ash particles which were not removed from the raw gas (Stream No. 5) in the waste heat boiler or in the cyclone. The ash particles are washed out of the raw gas stream in the direct contact scrubber/cooler and the ash is separated from the quench liquor (Stream No. 9) in a settler. The bottom product removed from the settler is the ash slurry (Stream No. 11) which contains approximately 25% to 35% solids. The liquid portion of the slurry is composed of the process condensate and gas quenching liquor (Stream No. 9). The ash in the slurry will consist of the mineral matter present in the feed coal with 10% to 30% unreacted carbon. The suspended solids removal processes described in Appendix F can be used to dewater the ash slurry. The recovered water could be recycled to the process condensate and gas quenching liquor (Stream No. 9). The dewatered ash or ash slurry is a waste product which requires ultimate disposal. The ash slurry may be combined with the dry ash (Stream No. 10) prior to disposal. Processes that can be used for ash slurry disposal are described in the solid waste treatment section.

REFERENCES NOT CITED

L-245 Bodle, W. W., and K. C. Vyas, "Clean Fuels from Coal - Introduction to Modern Processes", in Clean Fuels From Coal, Symposium Papers, Chicago, IL, September 1973. Chicago, IL, Inst. of Gas Technology, December 1973.

L-693 Institute of Gas Technology, Clean Fuels From Coal, Symposium Papers, Chicago, IL, 10-14 September 1973. Chicago, IL, December 1973.

L-708 Jahnig, C. E., Evaluation of Pollution Control in Fossil Fuel Conversion Processes. Gasification, Section 8: Winkler Process. Final Report. Report No. EPA-650/2-74-009j, EPA Contract No. 68-02-0629. Linden, NJ, Exxon Research & Engineering Co., September 1975.

L-727 Katz, Donald L., et al., Evaluation of Coal Conversion Processes to Provide Clean Fuels. Final Report. Report No. EPRI 206-0-0, PB-234 202 & PB-234 203. Ann Arbor, MI, Univ. of Michigan, Col. of Engineering, 1974.

L-860 Mudge, L. K., et al., The Gasification of Coal. Energy Program Report. Richland, WA, Battelle Pacific Northwest Labs., 1974.

L-1436 Howard-Smith, I., and G. J. Werner, Coal Conversion Technology. Park Ridge, NJ, Noyes Data Corp., 1976.

L-1597 Newman, L. I., Oxygen Gasification Processes in Germany. Tech. Pub. No. 2116. Washington, DC, U.S. Bur. Mines, November 1946.

L-5283 Ayer, Franklin A., comp., Symposium Proceedings: Environmental Aspects of Fuel Conversion Technology, II, Hollywood, FL, December 1975. Report No. EPA-600/2-76-149, EPA Contract No. 68-02-1325, Task 57. Research Triangle Park, NC, Industrial Environmental Research Lab., Office of Energy, Minerals and Industry, June 1976.

L-7888 Bertrand, R. R., et al., Trip Report: Four Commercial Gasification Plants. Research Triangle Park, NC, EPA, Office of Research & Development, 1975.

Koppers-Totzek Gasifier

GENERAL INFORMATION

Process Function - Atmospheric pressure coal gasification in an entrained bed by injection of coal plus steam plus oxygen with co-current gas/solid flow.

Development Status - Commercially available since 1952.

Licensor/Developer - Koppers Company, Inc.
Koppers Building
Pittsburgh, Pennsylvania 15219

Commercial Applications -

- Production of synthesis gas: 43 gasifiers currently in operation.

Applicability to Coal Gasification - Proven commercial gasifier which can accept all types of coal feedstocks. Largest installation is at Johannesburg, South Africa; no commercial installations are located in the United States.

PROCESS INFORMATION

Equipment (Refs. 116, 117, 118) -

- Gasifier construction: Horizontal ellipsoidal, double walled steel vessel with refractory lining. The two-headed gasifier has two heads shaped as truncated cones mounted on either end of the ellipsoid. The four-headed gasifier resembles two intersecting ellipsoids with heads at the ends of the ellipsoids oriented 90° apart.

- Gasifier dimensions:

	Two-headed gasifier	Four-headed gasifier
- Internal diameter of ellipsoid	3.1 - 3.7 m (10 - 12 ft)	4.0 m (13 ft)
- Internal diameter at the end of truncated cone head	1.8 - 2.4 m (6 - 8 ft)	-
- Approximate overall length of each ellipsoid	7.6 m (25 ft)	7.6 m (25 ft)
- Internal volume	28.3 m^3 (1000 ft^3)	59.4 m^3 (2100 ft^3)

- Bed type and gas flow: Entrained bed; continuous co-current gas flow; vertical gas outlet at the top of the gasifier in the center of the ellipsoid.

- Heat transfer and cooling mechanism: Direct gas/solid heat transfer; double walled gasifier acts as a water jacket to provide gasifier cooling.

- Coal feeding mechanism: Continuous screw conveyor feeds the pulverized coal to mixing nozzles at the ends of the gasifier heads; the coal is entrained in a premixed stream of steam and oxygen and the mixture is injected into the gasifier through sets of two adjacent burners.

- Gasification media introduction: Continuous injection of steam plus oxygen, with entrained coal feed, through sets of two adjacent burners at the ends of the truncated cone heads of the gasifier. Injection speeds are above the speed of flame propagation to prevent flashback.

- Ash removal mechanism: Approximately 50% of the ash flows down the gasifier walls as molten slag and drains into a slag quench tank where circulating water causes it to shatter into a granular form; a conveyor lifts the slag granules out of the quench tank. The remainder of the ash leaves the gasifier as fine slag particles, entrained in the exit gas, which are quenched and solidified at the gasifier exit by water sprays. The slag granules are removed from the product gas stream by a washer cooler and disintegrator scrubbers. The slag is removed from the water as a sludge by a clarifier.

- Special features:
  - Direct water sprays and washer cooler solidify and remove entrained slag from the product gas.
  - Gasifier water jacket generates low-pressure steam for gasification.
  - Coal screw feeder provides continuous coal feed.
  - Slag quench tank solidifies the slag to permit removal by a belt conveyor.

Flow Diagram - See Figure 1.

Operating Parameter Ranges (Refs. 119, 120, 121, 122, 123) -

- Gas outlet temperature: 1756 to 1783°K (2700 to 2750°F)
- Maximum coal bed temperature: 2089 to 2200°K (3300 to 3500°F)
- Gasifier pressure: Atmospheric
- Coal residence time in gasifier: Approximately one second

Normal Operating Parameters (Refs. 124, 125, 126) -

- Gas outlet temperature: 1756°K (2700°F) prior to water spray.
- Maximum coal bed temperature: 2200°K (3500°F)
- Gasifier pressure: Atmospheric
- Coal residence time in gasifier: Approximately one second

Raw Material Requirements (Refs. 127, 128, 129) -

- Coal feedstock requirements:
  - Type: All types
  - Size: 70% to 90% less than 0.074 mm (0.003 in)
  - Rate: 431 to 734 g/sec-m^2 (317 to 540 lb/hr-ft^2)

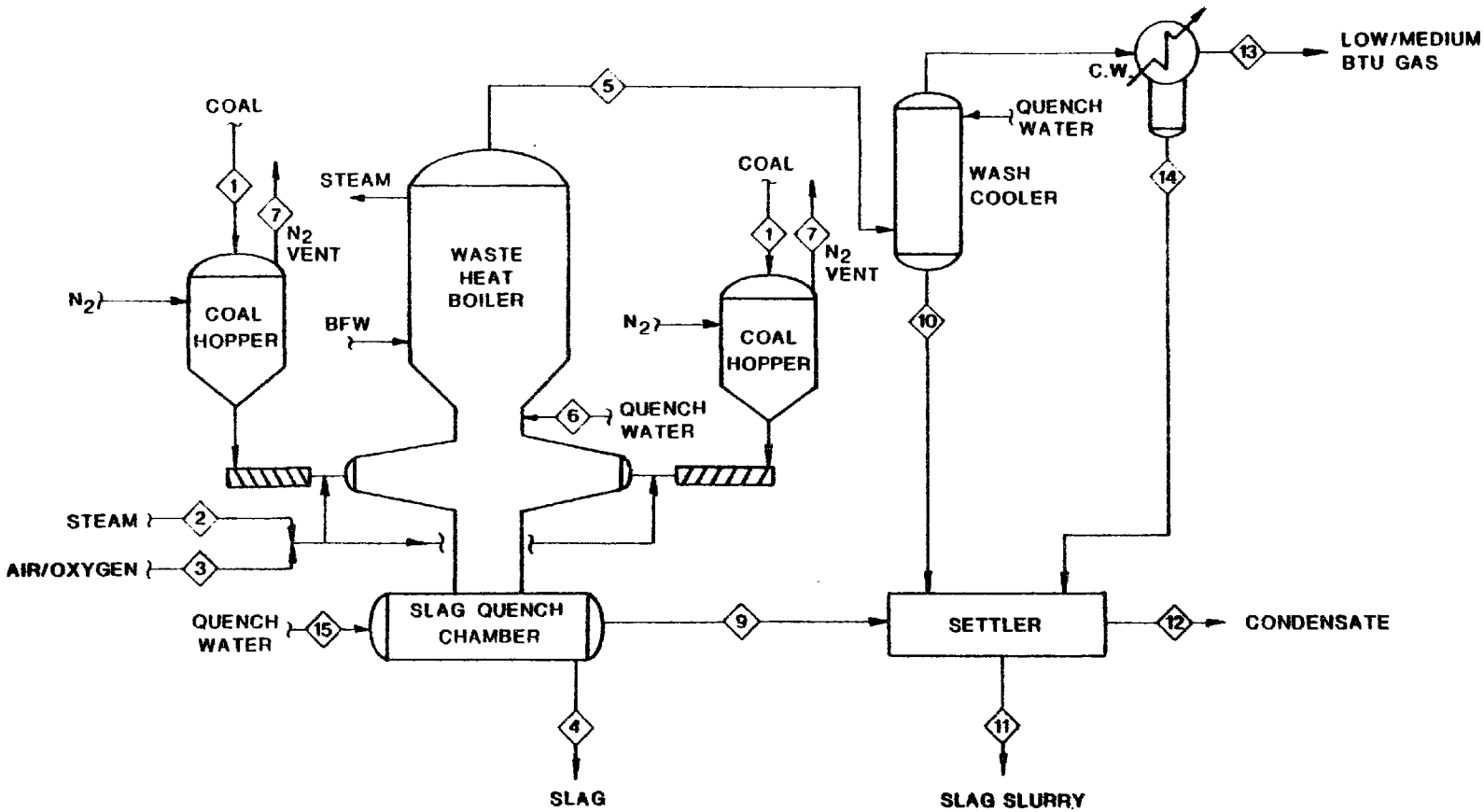

Figure 1. Koppers-Totzek Gasifier

- Pretreatment required: Pulverizing; drying to approximately 1% to 8% moisture. For coals with a very high ash fusion temperature, fluxing agents may be added to the coal feed to lower the ash fusion temperature.

- Steam requirements: 0.14 to 0.59 kg/kg coal
- Oxygen requirements: 0.73 to 0.95 kg/kg coal, as 98% oxygen.
- Air requirements: Not applicable.
- Quench water makeup requirements: Data not available.

Utility Requirements (Ref. 130) - Basis: Oxygen-blown operation; Eastern coal, HHV = 2.91×10^7 joule/kg (12,640 Btu/lb)

- Boiler feedwater: $2.0 \times 10^{-3} m^3$/kg coal (480 gal/ton coal)
- Cooling water: Data not available.
- Electricity: Data not available.

Process Efficiency (Ref. 131) - Basis: Oxygen-blown operation; quenched and cooled product gas; Eastern U.S. bituminous coal HHV (dry) = 2.91×10^7 joule/kg (12,640 Btu/lb); reference temperature = 300°K (80°F).

- Cold gas efficiency: 75%

$$[=] \frac{[\text{Product gas energy output}]}{[\text{Coal energy input}]} \times 100$$

- Overall thermal efficiency: 68%

$$[=] \frac{[\text{Total energy output (product gas + HC by-products + steam)}]}{[\text{Total energy input (coal + electric power)}]} \times 100$$

Expected turndown ratio - 100/60 for two-headed gasifier
100/30 for four-headed gasifier

$$= \frac{[\text{Full capacity output}]}{[\text{Minimum suitable output}]}$$

Gas Production Rate - Oxygen-blown: 1.47 to 1.92 Nm^3/kg coal (25 to 32.5 scf/lb coal) (Ref. 132).

PROCESS ADVANTAGES

- Coal type: Gasifier can accept all types of coal.
- By-products: No by-products, except sulfur, which require additional processing are produced.
- Environmental considerations: The absence of tars, oils, naphthas and phenols in the raw gas simplifies control technology requirements.
- Start-up consideration: Gasifier can be started in 30 minutes and can be shut down instantly, and restarted in 10 minutes.
- Feed size: Gasifier uses pulverized fuel, which eliminates rejection of fine coal particles.
- Development status: Gasifier has been operated commercially for many years.

PROCESS LIMITATIONS

- Gasification media: Operation with steam plus air requires high air preheat and dilutes the product gas with nitrogen; thus, this mode of operation is not economical.
- Process efficiency: High temperature of exit gases and slag requires heat recovery in order to maintain satisfactory thermal efficiency.
- Operating pressure: Low operating pressure may be a disadvantage for transmission of the product gas or utilization in combined-cycle applications.
- Ash carryover: Separation of high-temperature slag particles from the raw gas stream may be an operating problem

INPUT STREAMS (Refs. 133, 134) -

- Coal (Stream No. 1):

- Type:	Lignite A	High volatile B bituminous	High volatile C bituminous
- Size:	70% <200 mesh	70% <200 mesh	70% <200 mesh
- Rate:	- Data Not Available -		
- Composition:			
Volatiles -	- Data Not Available -		
Moisture -	8%	2%	2%
Ash -	12.7%	10.2%	13.7%
Sulfur (dry basis) -	1.5%	2.5%	1.1%
- HHV: joule/kg (Btu/lb)	2.31×10^7 (10,050)	2.99×10^7 (13,000)	2.91×10^7 (12,640)
- Swelling number:	0	- Data Not Available -	
- Caking index:	0	- Data Not Available -	

• Steam (Stream No. 2): kg/kg DAF coal	0.141	0.412	0.405
• Oxygen (Stream No. 3): kg/kg DAF coal	0.731	0.860	0.849

- Air: Not applicable

DISCHARGE STREAMS AND THEIR CONTROL

The Koppers-Totzek gasifier will produce the following discharge streams. Stream numbers refer to Figure 1.

Gaseous Discharge Streams -

- Low/medium-Btu gas (Stream No. 13)
- Coal bin nitrogen vent (Stream No. 7)

Liquid Discharge Streams -

- Process condensate and gas quenching liquor (Stream No. 12).

Solid Discharge Streams -

- Slag (Stream No. 4)
- Slag slurry (Stream No. 11)

The following text discusses the compositions of these discharge streams, using as a basis the INPUT STREAM data given above and the following gasifier conditions:

	Lignite A	High volatile B bituminous	High volatile C bituminous
• Coal type:			
• Gasifier pressure	Atmospheric	Atmospheric	Atmospheric
• Steam/O_2 (kg/kg)	0.193	0.479	0.477
• Gas off-take temp.	- Data Not Available -		
• Gas production rate: Nm^3/kg DAF coal (scf/lb DAF coal)	1.62 (27.4)	2.02 (34.3)	1.98 (33.5)

Low/Medium-Btu Gas (Stream No. 13) - The composition of the low/medium-Btu gas from the Koppers-Totzek gasifier will be dependent on the composition of the coal feed, gasifier operating conditions, and the gas cooling operations applied to the raw gas stream. The compositions given below list the components in the raw gas (Stream No. 5) for lignite and bituminous coal feedstocks. Because this gas stream contains significant amounts of H_2S, organic sulfur compounds, CO_2, and water, further treatment may be required prior to utilization of the gas. Processes that can be used to remove these contaminants are described in the section on acid gas removal.

Component	Coal type: Lignite A Component Vol %	B bituminous Component Vol %	C bituminous Component Vol %
CO	56.87	52.35	52.51
H_2	31.30	35.66	35.96
CH_4	PR	PR	PR
C_2H_4	ND	ND	ND
C_2H_6	ND	ND	ND
CO_2	10.0	10.0	10.0
N_2+Ar	1.18	1.12	1.15
O_2	ND	ND	ND
H_2S	0.60	0.82	0.36
COS + CS_2	0.05	0.05	0.02
Mercaptans	ND	ND	ND
Thiophenes	ND	ND	ND
SO_2	PR	PR	PR
H_2O	PR	PR	PR
Naphthas	ND	ND	ND
Tar	ND	ND	ND
Tar Oil	ND	ND	ND
Crude Phenols	ND	ND	ND
NH_3	<0.2	<0.2	<0.2
HCN	PR	PR	PR
Particulates (coal fines, ash) (kg/kg DAF coal)	(0.08)	(0.06)	(0.08)
Trace elements	PR	PR	PR
HHV (dry basis): joule/Nm^3	1.1×10^7	1.1×10^7	1.1×10^7
(Btu/scf)	(290)	(290)	(290)
Gasification Media:	Steam/O_2	Steam/O_2	Steam/O_2

ND = presence of component not determined

PR = component is probably present, amount not determined

Component volume % is given on a relative basis to all other components that have a value for volume % listed.

Coal Bin Nitrogen Vent (Stream No. 7) - This gas stream contains the nitrogen which is used to blanket the coal feed bins in order to prevent explosions of the fine coal particles. This stream will also contain entrained coal dust particulates, which can be removed with filters, cyclones, or scrubbers prior to venting the nitrogen to the atmosphere.

Process Condensate and Gas Quenching Liquor (Stream No. 12) - This liquid stream is composed of the raw gas scrubbing liquor plus raw gas condensate from waste heat boilers and indirect gas coolers. The overflow from the slag quench tank (Stream No. 9) is also added to this stream. The slag particles which are removed from the raw gas stream in the wash cooler are separated from the process condensate in a settling tank, but some slag particles may be carried along in the process condensate stream. The other components in this stream will be the constituents of the raw gas (Stream No. 5) which condense or dissolve in the quench liquor. The components most likely to be present in this stream are:

- H_2O
- Particulates (coal fines, slag)
- NH_3
- H_2S
- Trace elements

Processes that can be used to remove these contaminants are described in the water pollution control section.

Slag (Stream No. 4) - This stream is composed of the larger slag particles formed in the gasifier which are heavy enough to fall to the bottom of the gasifier and into the slag quench tank. The slag particles consist of the mineral matter present in the feed coal with 5% to 55% unreacted carbon. The slag may also contain any components present in the slag quench water (Stream No. 15) or in the raw gas (Stream No. 5). The exact composition of the slag is dependent on the composition of the feed coal and the gasifier operating conditions. The slag is a solid waste product which requires ultimate disposal. In some instances, the granular slag may be a salable by-product. Processes that can be used for slag disposal are described in the solid waste treatment section.

Slag Slurry (Stream No. 11) - This stream contains the smaller slag particles which are carried out of the gasifier in the raw gas (Stream No. 5). The slag particles are removed from the product gas stream in the direct quench wash cooler. The slag slurry is separated from the process condensate and gas quenching liquor (Stream No. 12) in a settling tank.

The slag particles in this stream will have approximately the same composition as the slag (Stream No. 4) described above. The slag slurry may also contain any of the components present in the raw gas (Stream No. 5), the process condensate and gas quenching liquor (Stream No. 12), or the slag quench overflow (Stream No. 9). The slag slurry is a waste product which requires ultimate disposal. Processes that can be used for slag slurry disposal are described in the solid waste treatment section.

REFERENCES NOT CITED

L-394 Corey, Richard C., "Coal Technology", in Riegel's Handbook of Industrial Chemistry, Seventh edition, James A. Kent, ed., New York, NY, Van Nostrand Reinhold, 1974. (pp. 23-61)

L-693 Institute of Gas Technology, Clean Fuels From Coal, Symposium Papers, Chicago, IL, 10-14 September 1973. Chicago, IL, December 1973.

L-727 Katz, Donald L., et al., Evaluation of Coal Conversion Processes to Provide Clean Fuels. Final Report. Report No. EPRI 206-0-0, PB-234 202 & PB-234 203. Ann Arbor, MI, Univ. of Michigan, Col. of Engineering, 1974.

L-755 Koppers Engineering & Construction, "Gasification Plants Using the K-T Process", Company Brochure, Pittsburgh, PA. undated.

L-811 Magee, E. M., C. E. Jahnig and H. Shaw, Evaluation of Pollution Control in Fossil Fuel Conversion Processes. Gasification, Section 1: Koppers-Totzek Process. Final Report. Report No. PB-231 675, EPA-650/2-74-009a, EPA Contract No. 68-02-0629. Linden, NJ, Esso Research & Engineering Co., 1974.

L-1436 Howard-Smith, I., and G. J. Werner, Coal Conversion Technology. Park Ridge, NJ, Noyes Data Corp., 1976.

L-1445 Hall, E. H., et al., Fuels Technology. A State-of-the-Art Review. Report No. PB-242 535, EPA-650/2-75-034, EPA Contract No. 68-02-1323, Task 14. Columbus, OH, Battelle Columbus Labs., April 1975.

L-1710 Personal Communications

Bi-Gas Gasifier

GENERAL INFORMATION

Process Function - High-pressure, two-stage coal gasification in an entrained bed by injection of oxygen plus steam and char in the lower stage and injection of steam plus coal in the upper stage of the gasifier.

Development Status - Pilot plant start-up activities began in August 1976.

Licensor/Developer - Bituminous Coal Research, Inc.
350 Hochberg Road
Monroeville, Pennsylvania 15146

Commercial Applications - None; gas is used for process analysis.

Applicability to Coal Gasification - The gasifier concept has been tested in a small-scale process development unit and has been operated successfully with lignite, subbituminous, and bituminous coal feed at elevated temperatures and pressures. Operation with air instead of oxygen has not been demonstrated. The pilot plant is located at Homer City, Pennsylvania.

PROCESS INFORMATION

Equipment (Refs. 135, 136) -

- Gasifier construction: vertical, cylindrical steel pressure vessel which consists of three stages, with refractory lining in the upper two stages.
- Gasifier dimensions:
  - 0.9 meters (3 ft.) inside diameter of refractory sections
  - 1.5 meters (5 ft.) inside diameter of pressure shell

- 4.0 meters (13 ft.) height of the bottom (slag) zone
- 1.8 meters (6 ft.) height of the middle (char) zone
- 4.3 meters (14 ft.) height of the top (coal) zone

• Bed type and gas flow: entrained bed of coal and char; continuous concurrent gas flow; vertical gas outlet at the top of the gasifier.

• Heat transfer and cooling mechanism: direct gas/solid heat transfer; vertical water tubes in the walls of the upper two stages provide gasifier cooling.

• Coal feeding mechanism: slurry injection with steam through nozzles in the upper stage of the gasifier.

• Gasification media introduction: continuous injection of steam plus oxygen plus char in the lower stage of the gasifier.

• Ash removal mechanism: slag particles fall into a quench tank in the bottom of the gasifier. The slag is removed through a lock hopper.

• Special features:

- Slurry feeding mechanism eliminates any moisture content restrictions for coal feed.
- Char cyclone removes entrained char particles from the raw gas and recycles the char to the gasifier to improve carbon conversion.
- Two-stage gasifier maximizes methane production in the gasifier.

Flow Diagram - See Figure 1.

Operating Parameter Ranges (Ref. 137) -

• Gas outlet temperature: 1019 to 1456°K (1375 to 2160°F)

• Maximum coal bed temperature: 1755 to 1922°K (2700 to 3000°F)

• Gasifier pressure: 1.62 to 10.4 MPa (235 to 1515 psia)

• Coal residence time in gasifier: 3 to 22 seconds

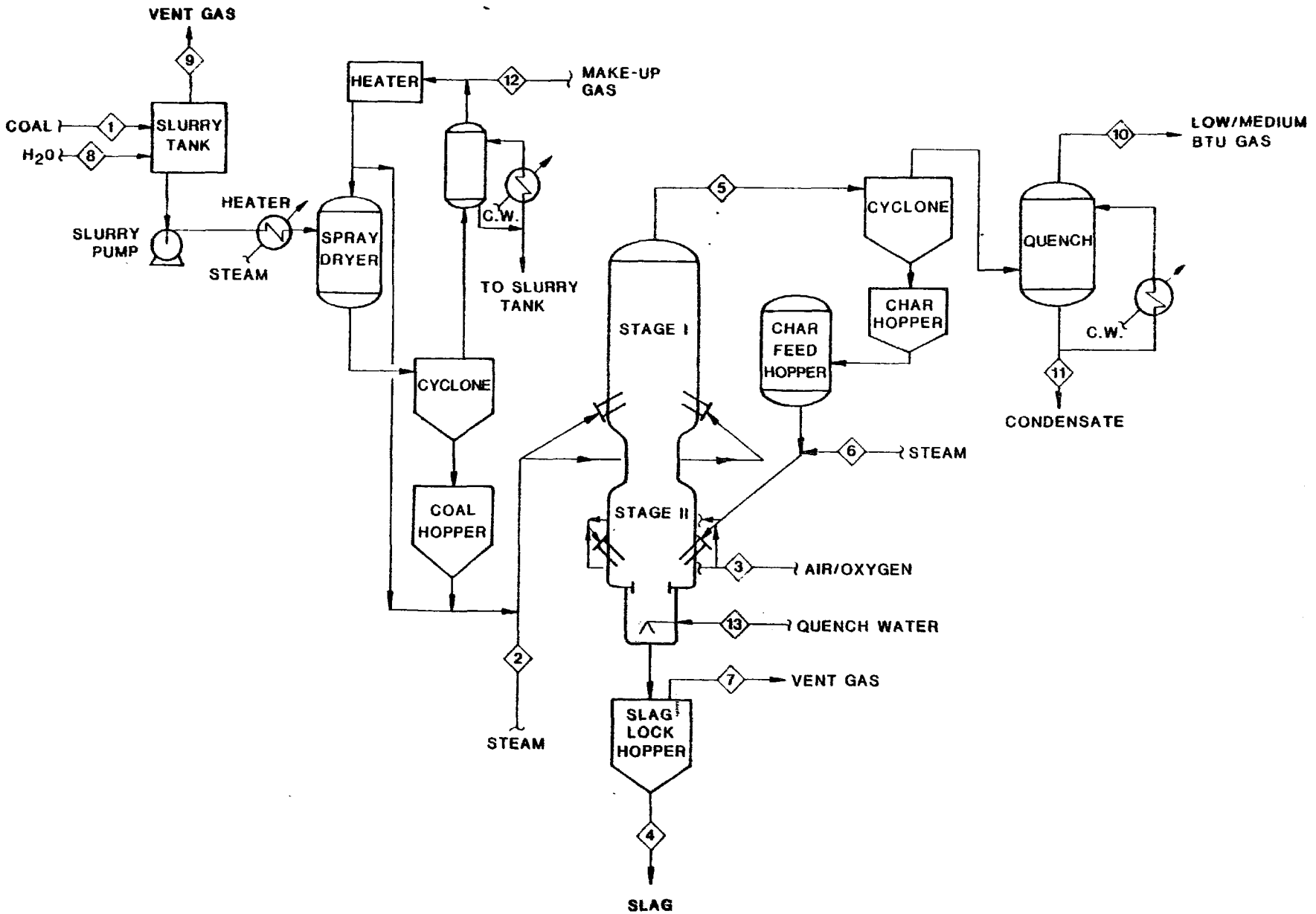

Figure 1. Bi-Gas Gasifier

Normal Operating Parameters (Refs. 138, 139) -

Gas outlet temperature: 1200°K (1700°F)

Maximum coal bed temperature: 1755°K (2700°F)

Gasifier pressure: 8.1 MPa (1175 psia)

Coal residence time in gasifier: Stage I - 2 seconds
Stage II - 6 seconds

Raw Material Requirements (Refs. 140, 141, 142, 143) -

- Coal feedstock requirements:
  - Type: all types
  - Size: 70% less than 0.074 mm (0.003 in.)
  - Rate: ∿4080 g/sec-m^2 (3000 lb/hr-ft^2)
  - Pretreatment required: crushing, pulverizing, slurry preparation
- Steam requirements: 0.4 to 1.35 kg/kg coal
- Oxygen requirements: 0.5 to 0.64 kg/kg coal
- Air requirements: ∿3.1 kg/kg coal
- Quench water make-up requirements: Data not available.

Utility Requirements - Data not available.

Process Efficiency (Ref. 144) - Basis: oxygen-blown operation; quenched and cooled product gas; reference temperature = 300°K (80°F)

- Cold Gas Efficiency: 69%

$$[=] \quad \frac{[\text{Product gas energy output}]}{[\text{Coal energy input}]} \times 100$$

- Overall thermal efficiency: 65%

$$[=] \quad \frac{[\text{Total energy output(product gas+HC by-products+steam)}]}{[\text{Total energy input(coal + electric power)}]} \times 100$$

Expected Turndown Ratio (Ref. 145) - 100/50

$$[=] \quad \frac{[\text{Full capacity output}]}{[\text{Minimum sustainable output}]}$$

Gas Production Rate (Ref. 146) - Oxygen blown: 6.4 $Nm^3/sec\text{-}m^2$ (79580 $scf/hr\text{-}ft^2$); 1.33 to 1.62 Nm^3/kg coal (22.5 to 27.5 scf/lb coal).

PROCESS ADVANTAGES

- Coal type: Gasifier can accept all types of coal.
- Gasification media: Gasifier can be operated with air or oxygen.
- By-products: No by-products which require additional processing are produced.
- Environmental considerations: The absence of tars, oils, naphthas and phenols in the raw gas simplifies control technology requirements.
- Operating pressure: Pressurized operation will be an advantage for gas transmission by pipeline and utilization as a synthesis gas or combined-cycle fuel.
- Carbon conversion: Cyclone char recycle system permits almost 100% carbon conversion.
- Feed size: Gasifier uses pulverized fuel, which eliminates rejection of fine coal particles.

PROCESS LIMITATIONS

- Coal type: Coals with low ash content or a high percentage of refractory type ash may require addition of ash fluxing agents.
- Gasification media: Pressurized operation with air has not been demonstrated.
- Utilization considerations: Gasifier is designed to maximize methane formation in the gasifier which may not be advantageous for all utilization applications.

- Start-up considerations: The fuel-rich, high-pressure environment in the gasifier will require start-up using pyrophoric materials.

- Process control: The low system heat capacity and available reaction capacity will necessitate sensitive feed control and automatic, interlocked shutdown control.

- Char recycle: Separation of large amounts of high temperature char from the high-pressure gas stream and metering of the recycled char feed may present operating problems.

- Development status: Pilot-plant operations started in 1976.

INPUT STREAMS (Ref. 147, 148) -

- Coal (Stream No. 1):

- Type:	Western Kentucky #11 Bituminous	Illinois #6 Bituminous
- Size: mm (in)	70% less than 0.074 (0.03)	70% less than 0.074 (0.03)
- Rate:	Data not available	Data not available
- Flux added:	Data not available	Data not available
- Composition:		
Volatile matter	42.5%	Data not available
Moisture	1.3%	4.2%
Ash	7.2%	8.7%
Sulfur (dry basis)	7.9%	3.9%
- HHV J/kg (Btu/lb):	3.1×10^7 (13,285)	2.8×10^7 (12,200)
- Swelling number:	Data not available	Data not available
- Caking index:	Data not available	Data not available

• Steam (Stream Nos. 2 & 6):	0.47 kg/kg coal	0.57 kg/kg coal
• Oxygen (Stream No. 3):	0.57 kg/kg coal	Not applicable
• Air (Stream No. 3):	Not applicable	3.1 kg/kg coal
• Transport Gas (Stream No. 12):		
- Rate: Nm^3/kg coal (scf/lb coal)	0.39 (6.56)	0.23 (3.96)
- Composition:		

Component	Component Vol%	Component Vol%
CO	44.0	19.6
H_2	24.4	14.1
CH_4	15.6	3.9
CO_2	14.0	6.5
N_2 + Ar	1.0	49.1
H_2O	-	6.7
NH_3	-	0.1
H_2S	1.0	-

- HHV J/Nm^3 (Btu/scf):	Data not available	5.52×10^6 (148)

DISCHARGE STREAMS AND THEIR CONTROL

The Bi-Gas gasifier will produce the following discharge streams. Stream numbers refer to Figure 1 .

Gaseous Discharge Streams

- Low/medium-Btu gas (Stream No. 10)
- Slurry preparation vent gas (Stream No. 9)
- Slag lock gas (Stream No. 7)

Liquid Discharge Streams

- Process condensate and gas quenching liquor (Stream No. 11)
- Slag slurry (Stream No. 4)

Solid Discharge Streams

- Slag slurry (Stream No. 4)

The following text discusses the compositions of these discharge streams, using as a basis the INPUT STREAM data given above, and the following gasifier conditions:

• Coal type:	Western Kentucky #11 Bituminous	Illinois #6 Bituminous
• Gasifier pressure: MPa (psia)	8.07 (1170)	3.14 (455)
• Steam/O_2 (kg/kg):	0.82	Not applicable
• Steam/air (kg/kg):	Not applicable	0.18
• Gas outlet temperature:	1200 (1700)	1255 (1800)
• Gas production rate: Nm^3/kg coal (scf/lb coal)	2.33 (39.5)	4.56 (77.3)

Low/Medium-Btu Gas (Stream No. 10) - The composition of the low/medium-Btu gas from the Bi-Gas gasifier will be dependent on the composition of the coal feed, the composition and amount of transport gas, the gasifier operating conditions, and the gas cooling operations applied to the raw gas stream. The compositions given below list the components in the raw gas (Stream No. 5) for bituminous coal feedstock with air- and oxygen-blown operation. Because this gas stream may contain significant amounts of H_2S, organic sulfur compounds, CO_2, and water, further treatment may be required prior to utilization of the gas. Processes that can be used to remove these contaminants are described in the acid gas removal section.

Component	Coal type: Western Kentucky #11 Bituminous Component Vol%	Coal type: Illinois #6 Bituminous Component Vol%
CO	40.6	18.1
H_2	22.5	13.1
CH_4	14.3	3.6
C_2H_4	ND	ND
C_2H_6	ND	ND
CO_2	12.9	8.3
N_2 + Ar	0.6	45.8
O_2	ND	ND
H_2S	1.3	0.5
COS + CS_2	PR	0.1
Mercaptans	ND	ND
Thiophenes	ND	ND
SO_2	ND	ND
H_2O	7.7	10.2
Naphthas	NP	NP
Tar	NP	NP
Tar Oil	NP	NP
Crude Phenols	ND	ND
NH_3	PR	0.4
HCN	ND	ND
Particulates (coal fines, ash)	PR	PR
Trace Elements	PR	PR
HHV (Dry basis): J/Nm^3 (Btu/scf)	1.30×10^7 (350)	5.29×10^6 (142)
Gasification media	Steam/O_2	Steam/Air

ND = Presence of component not determined.
PR = Component is probably present, amount not determined.
NP = Component is probably not present.

Component volume % is given on a relative basis to all other components that have a value for volume % listed.

Slurry Preparation Vent Gas (Stream No. 9) - This gaseous discharge stream will be composed of water and fine coal particles which become airborne due to agitation of the slurry in the preparation tank. Any volatile components in the water used to prepare the slurry (Stream No. 8) may also be present in the vent gas stream. The coal fines in this stream can be removed with filters, cyclones, or scrubbers. If any volatile components are present in this

stream, they can be controlled by incineration of the stream in a flare or boiler.

Slag Lock Gas (Stream No. 7) - This gaseous discharge stream is created when the slag lock is depressurized in order to discharge the accumulated slag. This stream may contain any of the components in the raw gas (Stream No. 5) which dissolve in the quench water, plus any volatile components in the slag quench water (Stream No. 13), plus entrained slag particles. Depending on the composition of the slag lock gas, it may be first passed through a cyclone to remove particulates and then vented to the atmosphere or it may be incinerated in a flare or boiler.

Process Condensate and Gas Quenching Liquor (Stream No. 11) - This liquid stream is composed of the raw gas scrubbing liquor plus raw gas condensate from the scrubbing cooler. This stream will be composed of water plus the constituents of the raw gas (Stream No. 5) which condense or dissolve in the quench water. The components most likely to be present in this stream are:

- H_2O
- Particulates (char fines, ash)
- NH_3
- H_2S
- Organic sulfur compounds
- Thiocyanates
- HCN
- Trace elements

The amounts of these components will be dependent on the raw gas composition and the gas quenching and cooling processes used. Processes that can be used to remove these contaminants are described in the water pollution control section.

Slag Slurry (Stream No. 4) - This stream will contain liquid and solid components. The liquid in this stream will be composed of the slag quench water (Stream No. 13) plus any components from the raw gas in the gasifier which dissolve in the quench water. The solids in this stream will be slag particles which consist of the mineral matter present in the feed coal with a small amount of unreacted carbon. The exact composition of the slag is dependent on the composition of the feed coal and the gasifier operating conditions. Processes described in the suspended solids removal section can be used to dewater the slag slurry. The recovered water could be recycled to the process condensate and gas quenching liquor (Stream No. 11). The dewatered slag or slag slurry is a solid waste product which requires ultimate disposal. Methods that can be used for slag slurry disposal are described in the solid waste treatment section.

REFERENCES NOT CITED

L-98 American Gas Association, Proceedings of the Fifth Synthetic Pipeline Gas Symposium, Chicago, IL, October 1973. Washington, DC, 1973.

L-227 Bituminous Coal Research, Inc., Gas Generator Research and Development, Bi-Gas Process, Annual Report, June 1974 - June 1975. Report No. FE-1207-1, ERDA Contract No. E(49-18)-1207. Monroeville, PA, August 1975.

L-245 Bodle, W. W., and K. C. Vyas, "Clean Fuels from Coal - Introduction to Modern Processes", in Clean Fuels From Coal, Symposium Papers, Chicago, IL, September 1973. Chicago, IL, Inst. of Gas Technology, December 1973.

L-613 Grace, R. J., and E. K. Diehl, "Environmental Aspects of the Bi-Gas Process", in Symposium Proceedings: Environmental Aspects of Fuel Conversion Technology, St. Louis, MO, May 1974. Report No. EPA-650/2-74-118, EPA Contract No. 68-02-1325, Task 6. Research Triangle Park, NC, Research Triangle Inst., EPA, October 1974. (pp. 131-34).

L-693 Institute of Gas Technology, Clean Fuels From Coal, Symposium Papers, Chicago, IL, 10-14 September 1973. Chicago, IL, December 1973.

L-706 Jahnig, C. E., Evaluation of Pollution Control in Fossil Fuel Conversion Processes. Gasification, Section 5: Bi-Gas Process. Final Report. Report No. PB-243 694, EPA-650/2-74-009g, EPA Contract No. 68-02-0629. Linden, NY, Exxon Research & Engineering Co., May 1975.

L-1256 Grace, R. J., R. A. Glenn and R. L. Zahradnik, "Gasification of Lignite by BCR Two-Stage Super-Pressure Process", Ind. Eng. Chem., Process Des. Develop. 11(1), 95-102 (1972).

L-1635 American Gas Association, Proceedings of the Sixth Synthetic Pipeline Gas Symposium, Chicago, IL, October 1974. Washington, DC, 1974.

L-1915 Glenn, R. A., "Status of the BCR Two-Stage Super-Pressure Process", Presented at the Third Synthetic Pipeline Gas Symposium, Chicago, IL, 17-18 November 1970.

L-1920 Grace, R. J. and R. L. Zahradnik, "Bi-Gas Program Enters Pilot Plant Stage", Presented at the Fourth Synthetic Pipeline Gas Symposium, Chicago, IL, 30-31 October 1972.

L-5449 Bituminous Coal Research, Inc., Gas Generator Research and Development - Bi-Gas Process. Report No. FE-1207-9, ERDA Contract No. E(49-18)-1207. Monroeville, PA, January 1976.

L-8584 American Gas Association, Proceedings of the Fourth Synthetic Pipeline Gas Symposium, Chicago, IL, 30-31 October 1972. Arlington, VA, 1972.

L-9092 Miles, John M., "Status of the Bi-Gas Program. Part I. Pilot Plant Activities", Presented at the Eighth Synthetic Pipeline Gas Symposium, Chicago, IL, 18-20 October 1976.

Texaco Gasifier

GENERAL INFORMATION

Process Function - High-pressure coal gasification in an entrained bed by injection of oxygen or air and coal plus steam with co-current gas/solid flow.

Development Status - Pilot plant.

Licensor/Developer - Texaco Development Corporation
135 East 42nd Street
New York, New York 10017

Commercial Applications - A gasifier of similar design was operated from 1956 to 1958 by Olin Mathieson Co. at Morgantown, West Virginia to produce synthesis gas.

Applicability to Coal Gasification - The gasifier has been operated successfully with lignite and bituminous coals. Operation with air instead of oxygen has not been demonstrated. The pilot plant is located at Texaco's Montebello Research Laboratory at Montebello, California.

PROCESS INFORMATION

Equipment (149, 150, 151) -

- Gasifier construction: vertical, cylindrical steel pressure vessel with refractory lining.
- Gasifier dimensions: (Projected commercial-size gasifier)
  - 2.7 meters (9 ft.) outside shell diameter
  - 4.6 meters (15 ft.) approximate overall height
- Bed type and gas flow: Entrained bed; continuous co-current downward gas flow; lateral gas outlet near the middle of the gasifier, at the top of the slag quench chamber.

- Heat transfer and cooling mechanism: Direct gas/solid heat transfer; water jacket at the top of the gasifier provides cooling of the burner section.

- Coal feeding mechanism: Continuous injection of a slurry of pulverized coal and water at the top of the gasifier.

- Gasification media introduction: Continuous injection of pre-heated oxygen or air at the top of the gasifier.

- Ash removal mechanism: A slurry of slag and water is pumped out of the slag quench chamber.

- Special features:

  - Gas quenching and cooling and slag removal are accomplished simultaneously in the slag quench chamber.

  - Slurry feeding mechanism eliminates any moisture content restrictions for coal feed.

Flow Diagram - See Figure 1.

Operating Parameter Ranges (Refs. 152, 153, 154, 155, 156) -

- Gas outlet temperature: 478 to 533°K (400 to 500°F)

- Maximum coal bed temperature: 1256 to 2089°K (1800 to 3300°F)

- Gasifier pressure: 1.48 to 8.38 MPa (215 to 1215 psia)

- Coal residence time in gasifier: Several seconds.

Normal Operating Parameters (Refs. 157, 158) -

- Gas outlet temperature: 478°K (400°F)

- Maximum coal bed temperature: 1533°K (2300°F)

- Gasifier pressure: 2.5 MPa (365 psia)

- Coal residence time in gasifier: Several seconds.

Raw Material Requirements (Refs. 159, 160, 161) -

- Coal feedstock requirements:

  - Type: lignite, bituminous

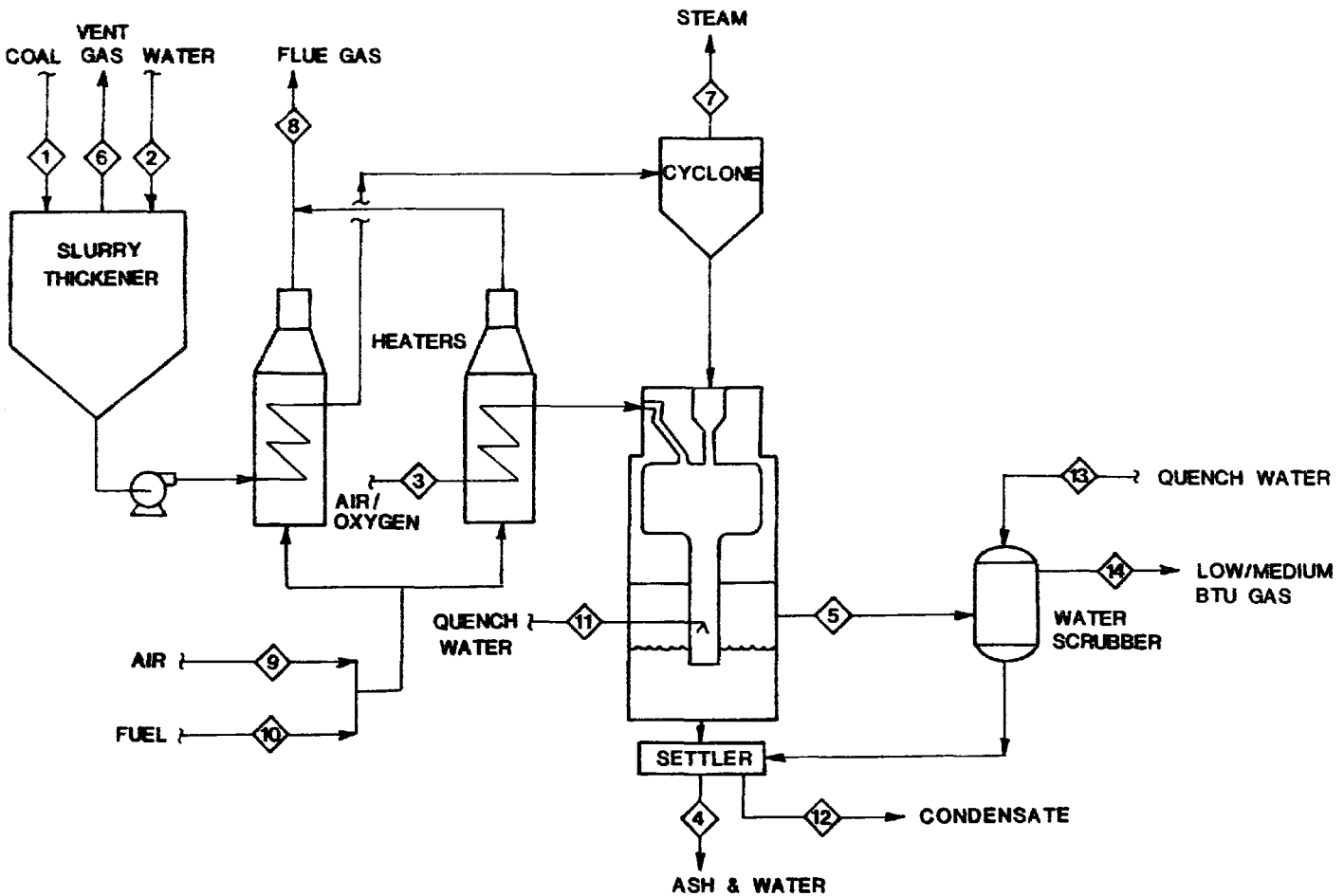

Figure 1. Texaco Gasifier

- Size: 70% less than 0.074 mm (0.003 in)
- Rate: $\sim$410 g/sec-m^2 (300 lb/hr-ft^2)
- Pretreatment required: crushing, pulverizing, slurry preparation.

- Steam requirements: 0.1 to 0.6 kg/kg coal
- Oxygen requirements: 0.6 to 0.9 kg/kg coal
- Air requirements: Data not available.
- Quench water make-up requirements: Data not available.

Utility Requirements - Data not available.

Process Efficiency - Basis: oxygen-blown operation; quenched and cooled product gas; reference temperature = 300°K (80°F)

- Cold gas efficiency: 77%

$$[=] \frac{[\text{Product gas energy output}]}{[\text{Coal energy input}]} \times 100$$

- Overall thermal efficiency: data not available.

$$[=] \frac{[\text{Total energy output (product gas + HC by-products + steam)}]}{[\text{Total energy input (coal + electric power)}]} \times 100$$

Expected Turndown Radio (Ref. 162) - 100/15

$$[=] \frac{[\text{Full capacity output}]}{[\text{Minimum sustainable output}]}$$

Gas Production Rate - Data not available

PROCESS ADVANTAGES

- Coal type: Gasifier can accept all types of coal feedstocks.
- Gasification media: Gasifier can be operated with air or oxygen.
- By-products produced: No by-products which require additional processing are produced.

- Environmental considerations: The absence of tars, oils naphthas and phenols in the raw gas simplifies control technology requirements.

- Operating pressure: Pressurized operation will be an advantage for gas transmission by pipeline and utilization as a synthesis gas or combined-cycle fuel.

- Feed mechanism: Slurry feeding allows use of any coal without drying.

- Feed size: Gasifier used pulverized fuel, which eliminates rejection of fine coal particles.

PROCESS LIMITATIONS

- Gasification media: Pressurized operation with air has not been commercially demonstrated.

- Process efficiency: High temperature of exit gases and slurry requires heat recovery in order to maintain satisfactory thermal efficiency.

- Ash carryover: Large amounts of high-temperature slag in the raw product gas may cause operation problems in the waste heat boiler.

INPUT STREAMS (Refs. 163, 164) -

- Coal (Stream No. 1):

- Type:	Illinois #6 High Volatile C Bituminous	Illinois #6 High Volatile C Bituminous
- Size: mm (in)	70% <0.074 (.003)	70% < .074 (.003)
- Rate:	Data not available	Data not available
- Composition:	Data not available	Data not available
- HHV: (dry) J/kg (Btu/lb)	3.02×10^7 (13,000)	Data not available

- Swelling number:	Data not available	Data not available
- Caking index:	Data not available	Data not available
• Steam: (Stream No. 2): kg/kg coal	∿0.15	∿0.15
• Oxygen (Stream No. 3):	∿0.75	Not applicable
• Air (Stream No. 3):	Not applicable	Data not available

DISCHARGE STREAMS AND THEIR CONTROL

The Texaco gasifier will produce the following discharge streams. Stream numbers refer to Figure 1.

Gaseous Discharge Streams -

- Low/medium-Btu gas (Stream No. 14)
- Slurry preparation vent gas (Stream No. 6)
- Slurry steam purge (Stream No. 7)
- Preheater flue gases (Stream No. 8)

Liquid Discharge Streams -

- Process condensate and gas quenching liquor (Stream No. 12)

Solid Discharge Streams -

- Slag slurry (Stream No. 4)

The following text discussed the compositons of these discharge streams, using as a basis the INPUT STREAM data given above and the following gasifier conditions:

• Coal type:	High Volatile C Bituminous	Data not available
• Gasifier pressure: MPa (psia)	2.5 (365)	1.55 (225)
• Steam/O_2 (kg/kg):	0.2	Data not available
• Steam/Air (kg/kg):	Not applicable	Data not available

- Gas outlet temperature °K (°F): 506 (450) Data not available

- Gas production rate: Nm^3/kg coal (scf/lb coal) Data not available Data not available

Low/Medium-Btu Gas (Stream No. 14) - The composition of the low/medium-Btu gas from the Texaco gasifier will be dependent on the composition of the coal feed, gasifier operating conditions, and the gas cooling operations applied to the raw gas stream. The compositions given below list the components in the raw gas (Stream No. 5) for oxygen- and air-blown operation. Because this gas stream contains significant amounts of H_2S, organic sulfur compounds, CO_2, and water, further treatment may be required prior to utilization of the gas. Processes that can be used to remove these contaminants are described in the acid gas removal section.

	Coal Type	
	High Volatile C Bituminous	Data Not Available
Component	Component Vol %	Component Vol %
CO	37.6	27.5
H_2	39.0	25.3
CH_4	0.5	0.5
C_2H_4	ND	ND
C_2H_6	ND	ND
CO_2	20.8	1.0
N_2 + Ar	0.6	37.2
O_2	NP	ND
H_2S	1.5	ND
COS + CS_2	ND	ND
Mercaptans	ND	ND
Thiophenes	ND	ND
SO_2	ND	ND
H_2O	PR	8.5
Naphthas	ND	ND
Tar	NP	NP
Tar Oil	NP	NP
Crude Phenols	ND	ND
NH_3	ND	ND
HCN	ND	ND
Particulates (coal fines, ash)	PR	PR
Trace Elements	PR	PR

HHV (Dry basis) Joule/Nm^3 (Btu/scf)	9.4×10^6 (253)	6.52×10^6 (175)
Gasification Media:	Steam/O_2	Steam/Air

ND = presence of component not determined

PR = component is probably present, amount not determined

NP = component probably not present

Component volume % is given on a relative basis to all other components that have a value for volume % listed.

Slurry Preparation Vent Gas (Stream No. 6) - This gaseous discharge stream will be composed of water and fine coal particles which become airborne due to the agitation of the slurry in the preparation tank. Any volatile components in the water used to prepare the slurry (Stream No. 2) may also be present in the vent gas stream. The coal fines in this stream can be removed with filters, cyclones, or scrubbers. If any hazardous volatile components are present in this stream, they can be controlled by incineration of the stream in a flare or in the preheater furnaces.

Slurry Steam Purge (Stream No. 7) - This gaseous discharge stream is composed of steam plus entrained coal fines. This stream is the off-gas from the cyclone which is used to adjust the steam/coal ratio in the slurry feed to the gasifier. Since the slurry is heated to 533°K (500°F) upstream of the cyclone, this stream may also contain some of the volatile matter in the coal feed or in the slurry preparation water (Stream No. 2). A potential control technology for this stream would be to recycle it to the coal slurry preparation. If this stream were to be discharged to the atmosphere instead of being recycled, the coal fines could be removed with filters, cyclones, or scrubbers.

Preheater Flue Gases (Stream No. 8) - This gaseous discharge stream is composed of the combustion products from the direct-fired coal slurry and oxygen or air preheaters. The composition of this stream will be dependent on the composition of the fuel (Stream No. 10) and the operating conditions in the preheaters. The components most likely to be present in this stream are:

- CO_2
- H_2O
- CO
- SO_x
- NO_x

If the fuel used is coal, this stream may also contain fly ash particles. The process that can be used to remove these contaminants are described in the air pollution control section.

Process Condensate and Gas Quenching Liquor (Stream No. 12) - This liquid stream will be composed of the ash quench water plus the raw gas scrubbing liquor, plus raw gas condensate from the waste heat boiler. Slag particles which are removed from the raw gas in the gasifier quench section, the waste heat boiler, and the raw gas scrubber are separated from the process condensate and gas quenching liquor in a settler. Some slag particles may be carried along in the process condensate stream. The other components in this stream will be the constituents of the raw gas in the gasifier which condense or dissolve in the quench liquor plus any components present in the quench water makeup (Stream Nos. 11 & 13). The components most likely to be present in this stream are:

- H_2O
- Particulates (coal fines, slag)
- NH_3
- H_2S
- Trace elements

Most of this stream will probably be recycled to the slag quench or raw gas scrubber, with a small blowdown discharge stream. The process that can be used to remove the contaminants in this stream are described in the water pollution control section.

Slag Slurry (Stream No. 4) - This stream contains the slag which is separated from the process condensate and gas quenching liquor (Stream No. 12) in the settler. The slag particles will consist of the mineral matter present in the feed coal with approximately 2% unreacted carbon. The slag slurry may also contain any of the components present in the raw gas (Stream No. 5) or in the process condensate and gas quenching liquor (Stream No. 11). The suspended solids removal processes described in Appendix D can be used to dewater the slag slurry. The recovered water could

be recycled to the process condensate and gas quenching liquor (Stream No. 12). The dewatered slag or slag slurry is a solid waste product which requires ultimate disposal. Processes that can be used for slag slurry disposal are described in the solid waste treatment section.

Coalex Gasifier

GENERAL INFORMATION

Process Function - Atmospheric pressure, slagging ash coal gasification in an entrained bed by injection of air plus a solid additive with co-current gas/solid flow.

Development Status - Pilot plant since 1976.

Licensor/Developer - Inex Resources, Inc.
7475 W. Fifth Ave.
Lakewood, Colorado 80226

Commercial Applications - None; one commercial scale (60×10^6 Btu/hr) producer is being designed for a sugar beet manufacturer.

Applicability to Coal Gasification - The gasifier has been operated successfully with various types of coal feedstocks. The Coalex pilot plant (2.5×10^6 Btu/hr) is located at the Inex Resources Test Facility in Wheat Ridge, Colorado. The cost of producing a 150 Btu/scf product gas with this system is estimated by Inex to be approximately $2.50 per 10^6 Btu.

PROCESS INFORMATION

Equipment -

- Gasifier construction: vertical, cylindrical steel vessel.
- Gasifier dimensions: data not available.
- Bed type and gas flow: entrained - bed, continuous co-current gas flow; vertical gas outlet through the top of the gasifier.
- Heat transfer and cooling mechanism: direct gas/solid heat transfer; specific cooling technique used is the steam generated from the ash quench.

- Coal feeding mechanism: continuous injection of pulverized coal entrained in air at the top of the gasifier.

- Gasification media introduction: continuous injection of air with suspended coal and additive particles at the top of the gasifier. Steam is generated by vaporizing water from the ash quench tank.

- Ash removal mechanism: slag quench tank and slurry pump at the bottom of the gasifier.

- Special features:

  - Chemical additive removes sulfur compounds from the product gas. Sulfur removal ranges between 89 to 99+% have been achieved (Ref. 165).

  - Chemical additive reduces the ash fusion temperature thereby, allowing the ash to be removed as slag.

  - A precombustion chamber is required to preheat the coal/air/additive feed before it enters the reactor.

Flow Diagram - See Figure 1.

Operating Parameter Ranges -

- Gas outlet temperature: 1200 to 1220°K (1700 to 1740°F)

- Maximum coal bed temperature: Approximately 1370°K (2000°F).

- Gasifier pressure: Atmospheric.

- Coal residence time in gasifier: Data not available.

Normal Operating Parameters -

- Gas outlet temperature: 1200 to 1220°K (1700 to 1740°F)

- Maximum coal bed temperature: Approximately 1370°K (2000°F), depending on the ash fusion temperature of the feed coal.

- Gasifier pressure: Atmospheric.

- Coal residence time in gasifier: Data not available.

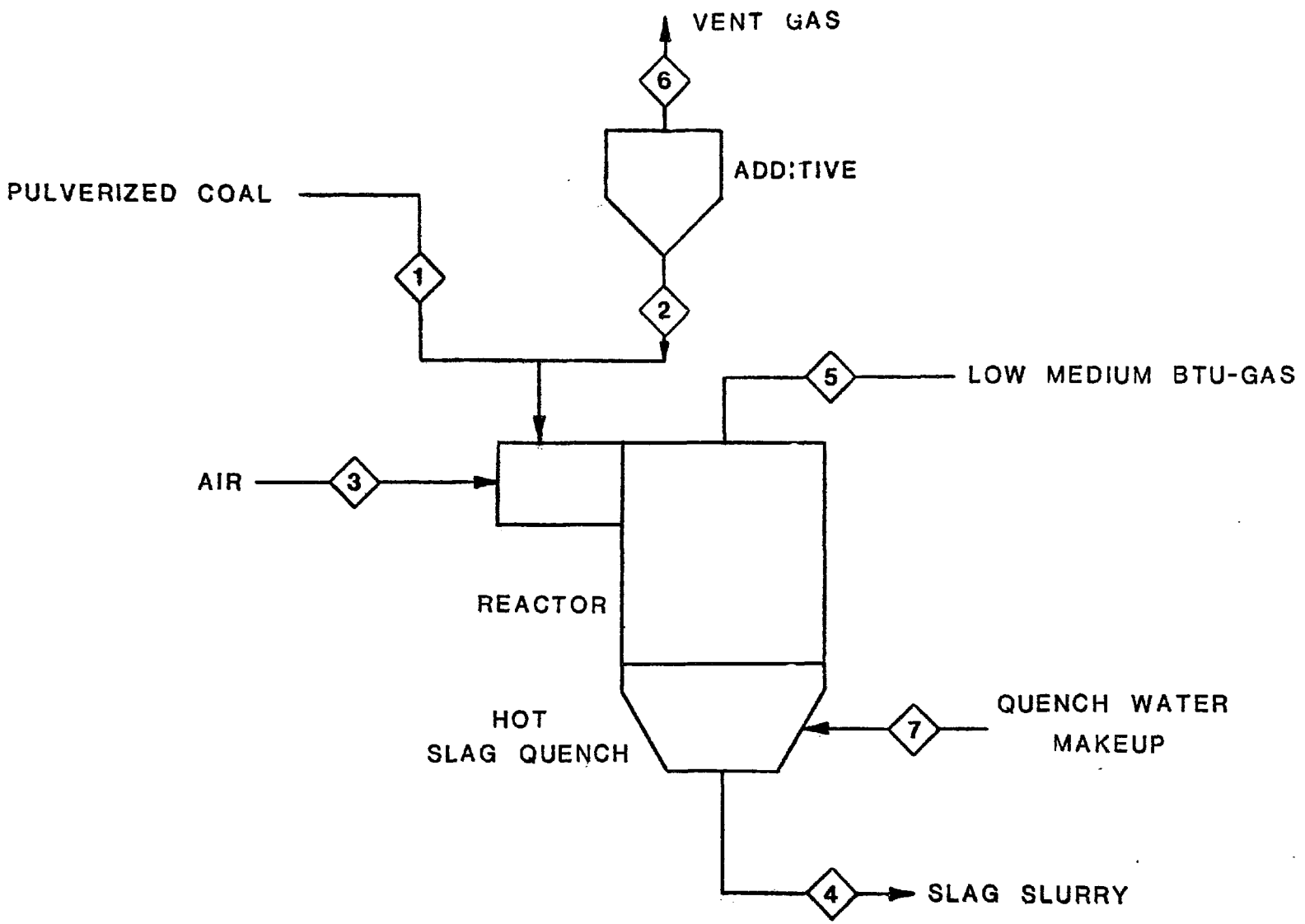

Figure 1. Coalex Gasifier

Raw Material Requirements -

- Coal feedstock requirements:
  - Type: All types (lignite has not yet been tested in the pilot plant).
  - Size: Less than 0.07 mm (0.003 in)
  - Rate: Data not available.
  - Pretreatment required: Crushing and pulverizing.
- Additive requirements: Depends upon the sulfur content of the coal and the ash fusion temperature.
- Steam requirements: Steam is generated by vaporizing the water in the slag quench tank.
- Oxygen requirements: Not applicable.
- Air requirements: 2.7 to 6.1 kg/kg coal
- Ash quench water make-up requirements: Data not available.

Utility Requirements - Data not available.

Process Efficiency -

- Basis: Pilot plant data on several unreported coal types.
- Overall thermal efficiency: 88 to 93%

$$[=] \quad \frac{[\text{Energy output with (product gas + HC by-products + steam)}]}{[\text{Energy input with (coal + electric power)}]} \times 100$$

Expected Turndown Ratio - Data not available.

Gas Production Rate - Gasifier can be designed to produce between 20×10^6 and 250×10^6 Btu/hr of low-Btu gas.

PROCESS ADVANTAGES

- Coal type: gasifier can accept all types of coals.
- Environmental considerations: the absence of tars and oils in the raw gas simplifies control technology

- HHV: Joule/kg (Btu/lb) — 2.7×10^7 (11,877)
- Swelling number: Data not available
- Caking index: Data not available

- Steam — Data not available
- Oxygen — Not applicable
- Air (Stream No. 3) — 6.1 kg/kg coal
- Additive (Stream No. 2) — Data not available

DISCHARGE STREAMS AND THEIR CONTROL

The Coalex Gasifier will produce the following discharge streams. Stream numbers refer to Figure 1.

Gaseous Discharge Streams

- Low-Btu gas (Stream No. 5)
- Additive hopper vent gas (Stream No. 6)

Liquid Discharge Streams

- Slag slurry (Stream No. 4)

Solid Discharge Streams

- Slag slurry (Stream No. 4)

The following text discusses the compositions of these discharge streams, using the basis given above as INPUT STREAMS, and the following gasifier conditions:

- Coal type: Data not available
- Gasifier pressure: Atmospheric
- Steam/O_2: (kg/kg) Data not available
- Steam/air: (kg/kg) Data not available

- Gas outlet temperature: °K(°F) — 1210 (1710)
- Gas production rate: Nm^3/kg coal (scf/lb coal) — Data not available

Low-Btu Gas (Stream No. 5) - The composition of the low-Btu gas from the Coalex Gasifier will be dependent on the composition of the coal and additive feeds, and gasifier operating conditions. The composition given below lists the components present in the raw gas (Stream No. 5) for a typical coal feedstock. Because this gas stream may contain significant amounts of H_2S, organic sulfur compound, CO_2, and water, further treatment may be required prior to utilization of the gas. The acid gas removal processes that can be used to remove those contaminants are described in Appendix B.

Component	Component Vol%
CO	20.7
H_2	10.8
CH_4	0.5
C_2H_4	ND
C_2H_6	ND
CO_2	4.4
N_2 + Ar	62.8
O_2	0.8
H_2S	PR
COS + CS_2	PR
Mercaptans	ND
Thiophenes	ND
SO_2	PR
H_2O	PR
Naphthas	ND
Tar	ND
Tar Oil	ND
Crude Phenols	ND
NH_3	PR
HCN	PR
Particulates (coal fines, ash)	PR
Trace elements	PR

HHV (Dry basis): J/Nm^3 (Btu/scf)	4.9×10^6 (133)
Gasification media	Air plus additive

ND = presence of component not determined
PR = component is probably present, amount not determined
NP = component is probably not present

Component volume % is given on a relative basis to all other components that have a value for volume % listed.

Additive Hopper Vent Gas (Stream No. 6) - This stream may contain entrained particles of additives and coal. However, the additive feed hopper is normally closed during gasifier operation; therefore, emissions from this source should be minimal.

Slag Slurry (Stream No. 4) - This stream contains the slag which is removed from the gasifier by means of an internal quench bath. The slag particles will consist of the mineral matter present in the feed coal, some unreacted carbon and additive, and compounds formed by reactions of the chemical additive and raw gas constituents. The liquid portion of this stream will contain any components present in the quench water make-up (Stream No. 7) and possibly dissolved gases. The suspended solids removal processes described in Appendix D can be used to dewater the slag slurry and the recovered water could be recycled to the quench water make-up stream. The dewatered slag or slag slurry is a solid waste which requires ultimate disposal. The solid waste treatment processes that can be used for slag slurry disposal are described in Appendix E.

APPENDIX B

GAS PURIFICATION OPERATION

Rectisol I Process

GENERAL INFORMATION

Process Function - Physical absorption of acid gases (CO_2, H_2S, COS, CS_2, mercaptans, etc.) using methanol as a sorbent.

Development Status - Commercially available.

Licensor/Developer - Lurgi Mineralöltechnik GmbH
American Lurgi Corporation
377 Rt. 17 South
Hasbrouck Heights, New Jersey

Commercial Applications -

- Purification of low/medium-Btu gas produced in coal gasification plants
- Carbon dioxide removal and drying for ammonia synthesis gas
- Carbon dioxide removal from a low-temperature fraction-action unit feed gas
- Carbon dioxide and water removal from a feed gas to an LNG plant

Applicability to Coal Gasification - The Rectisol I process is a proven acid gas removal process for low/medium-Btu gas produced in gasification plants in the following locations:

- Sasolburg, South Africa
- Westfield, Scotland
- Pristina, Yugoslavia

PROCESS INFORMATION

Equipment - Absorbers, flash towers, distillation columns

Flow Diagram - See Figure 1.

Control Effectiveness - Product gas concentrations of less than 1 ppmv of sulfur and CO_2

Operating Parameter Ranges - 210 to 240°K (-80 to -80°F); 2.07 to 6.89 MPa (300 to 1000 psia)

Normal Operating Parameters - 230°K (-50°F); 294 MPa (425 psia)

Raw Material Requirements - 2.4 gmole/sec (19.2 lbmole/hr) of makeup methanol solvent based on 9480 gmole/sec (75,180 lbmole/hr) product medium-Btu gas (440 Btu/scf)

Utility Requirements - Based on 9480 gmole/sec (75,180 lbmole/hr) of medium-Btu (440 Btu/scf) product gas.

- Cooling = 124 MJ/sec (422 x 10^6 Btu/hr)
- Steam (sat'd, 100 psig) = 97 MT/hr (107 short tons/hr)
- Steam (750°F, 550 psig) = 103 MT/hr (113 short tons/hr)
- Electricity (including refrigeration) = 9550 kW

PROCESS ADVANTAGES

Solvent
- Good selectivity between acid gases and product gases (see Figure 2)
- Low freezing point
- Chemical stability
- Unlimited solubility in water
- Inexpensive

Process
- Proven acid gas removal process
- Operates at high pressures
- Product gas having less than 1 ppmv sulfur and CO_2 can be produced

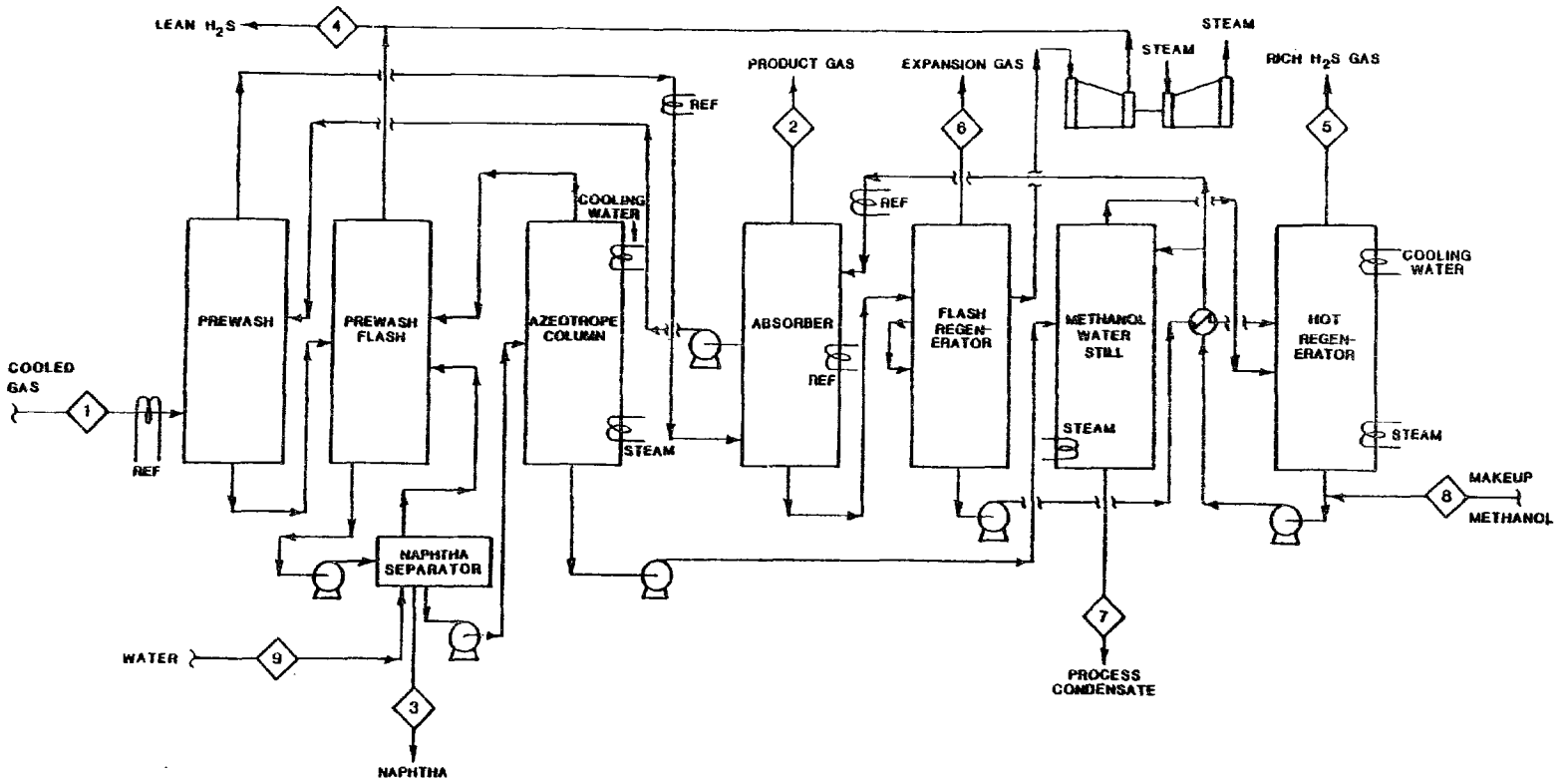

Figure 1. Typical flow diagram - Rectisol acid gas removal process

PROCESS LIMITATIONS

Solvent - Retains heavy hydrocarbons (C_3^+) (see Figure 2)
- Solvent losses may be high and create problems in subsequent sulfur recovery processes

Process - High utility requirements for refrigeration
- Does not selectively remove H_2S/CO_2 which will limit its use in combined-cycle systems
- Operates at high pressures which may limit its use with atmospheric pressure gasifiers

INLET GAS STREAM

Typical Flow - 13,500 gmole/sec (106,800 lbmole/hr) from 24 oxygen-blown Lurgi gasifiers

Typical Composition -

Component	Vol %	Component	Vol %
CO_2	27.9	$C_2H_4+C_2H_6$	1.0
CO	20.2	N_2+Ar	0.3
CH_4	11.1	H_2	38.9
H_2S	0.4	Naphtha	0.2
COS	<0.1		

DISCHARGE STREAMS

The Rectisol I process has both gaseous and liquid discharge streams. These discharge streams are:

- Gas
  - Product gas (Stream No. 2)
  - Lean H_2S flash gas (Stream No. 4)
  - Rich H_2S gas (Stream No. 5)
  - Expansion gas (Stream No. 6)
- Liquid
  - Process condensate (Stream No. 7)
  - Naphtha (Stream No. 3)

The following text discusses the compositions of these streams, using the Inlet Gas Stream composition given above as a basis.

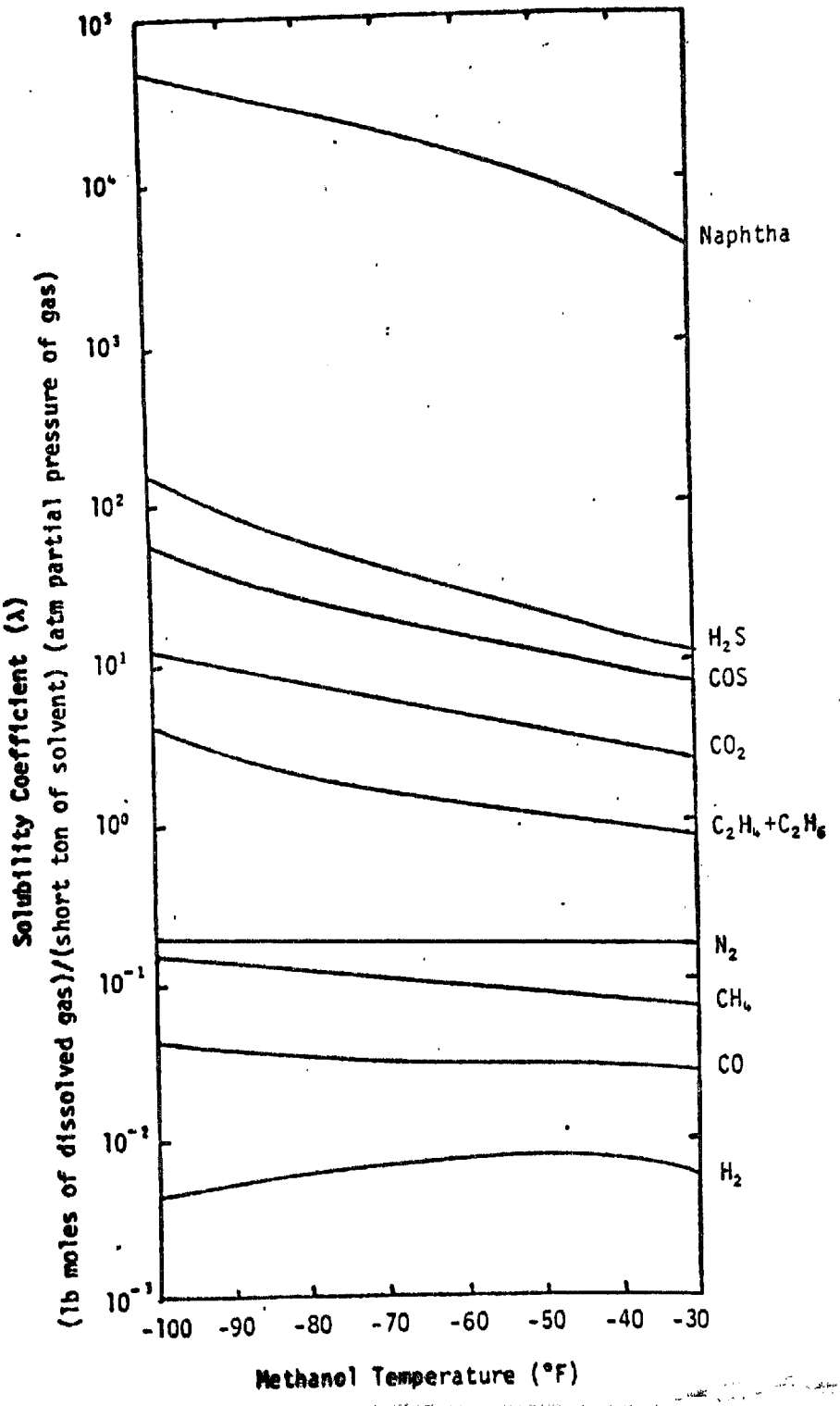

Figure 2. Published Lurgi data on the solubility of gases in methanol at a gas partial pressure of 1 atm (Ref. 166).

Product Gas - The product gas exiting the Rectisol I process is mainly comprised of CO, H_2, CH_4, C_2H_4, and C_2H_6. Small amounts of CO_2, H_2S, COS, and organic sulfur will also be present in this stream. The amounts of these components will vary depending on the product gas specifications. A typical product gas composition is as follows:

Component	Vol %	Component	Vol %
CO_2	3.1	H_2	63.5
H_2S	trace	CH_4	14.9
C_2H_4	0.5	C_2H_6	0.7
CO	16.9	N_2+Ar	0.4

Lean H_2S Flash Gas - The lean H_2S flash gas is the combined flash gases from the prewash flash and the main flash regenerator. These gases are mainly comprised of CO_2 with small amounts of CO, H_2, CH_4, C_2H_4, C_2H_6, H_2S, COS, and other organic sulfur compounds. The amounts of these minor gases depend on the inlet gas composition and the main absorber operating parameters such as temperature, pressure, and methanol flow rate. A typical composition of the lean H_2S flash gas is shown below:

Component	Vol %	Component	Vol %
CO_2	97.5	H_2	0.4
H_2S	0.8	CH_4	0.6
C_2H_4	0.2	C_2H_6	0.3
CO	0.2	N_2+Ar	trace

Rich H_2S Gas - The off-gases from the hot regenerator are comprised primarily of CO_2, CO, H_2, CH_4, H_2S, COS, and other organic sulfur compounds. This stream may also contain substantial amounts of methanol, depending upon the overhead temperature and pressure of the hot regenerator. The effect of these parameters on the mole fraction of methanol in this gas stream is illustrated in Figure 3. A typical overhead hot regenerator gas composition is shown below:

Component	Vol %	Component	Vol %
CO_2	78.8	H_2	trace
H_2S	12.6	CH_4	trace
C_2H_4	trace	C_2H_6	trace
CO	trace	N_2+Ar	trace
COS	trace	Methanol	8.6

Further treatment of this stream is necessary because of the high concentrations of H_2S and methanol.

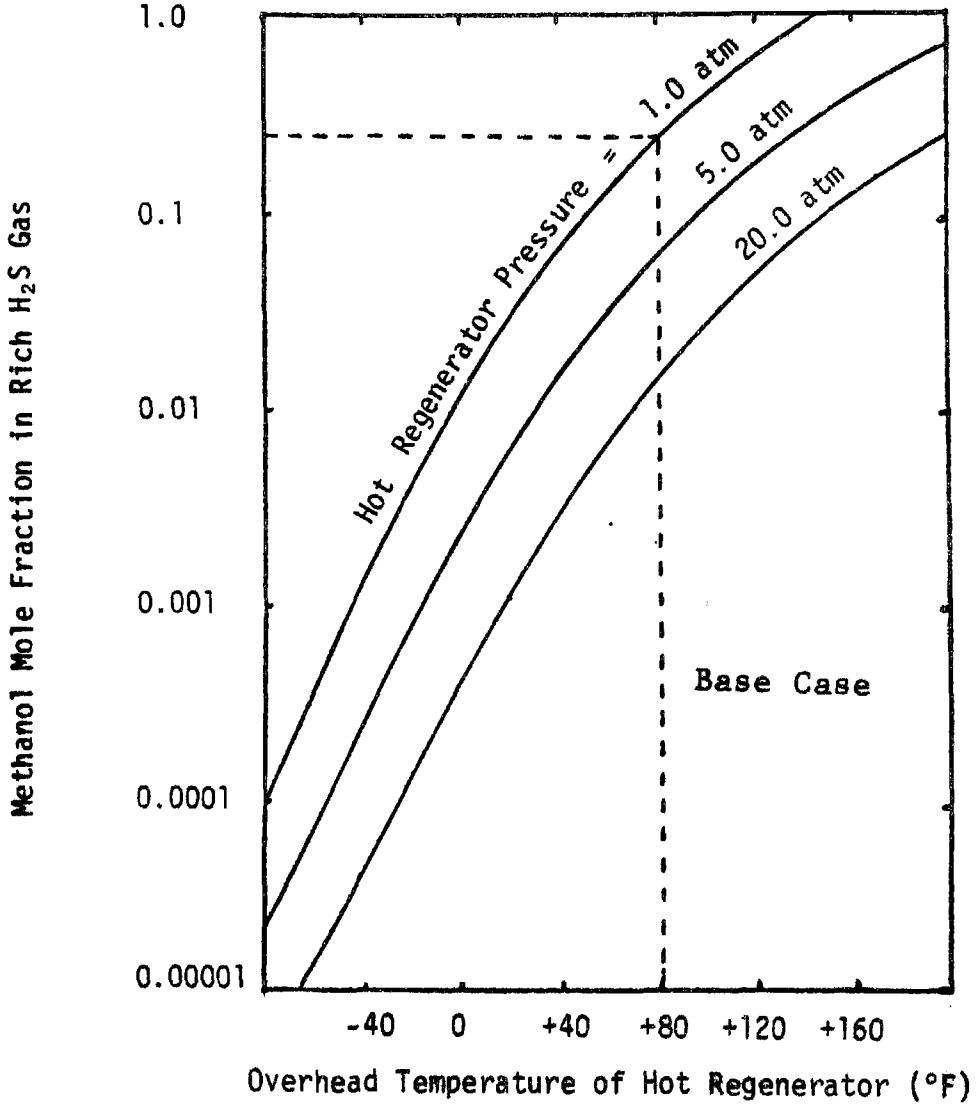

Figure 3. Effect of hot regenerator overhead temperature and pressure on methanol mole fraction in rich H_2S gas.

Expansion Gas - The gases released during the first stage of flash regeneration are comprised of CO_2, CO, CH_4, C_2H_4, C_2H_6, H_2, and N_2 and Ar, with trace amounts of H_2S, COS, and other organic sulfur compounds. The amount of each of these constituents in the expansion gas depends upon the flash pressure and the concentration of each component in the methanol feed to the flash regenerator. A typical composition of the expansion gas stream is shown below:

Component	Vol %	Component	Vol %
CO_2	31.1	CO	12.6
H_2S	trace	H_2	18.6
C_2H_4	1.6	CH_4	33.4
C_2H_6	2.4	N_2+Ar	0.3
COS	trace		

Since this gas stream contains such high concentrations of desirable gases, it is normally combined with product gases exiting the Rectisol I process.

Process Condensate - The bottoms stream from the methanol/water still consists primarily of water with trace amounts of phenols, cyanides, ammonia, sulfides, and hydrocarbons such as naphthas and methanol. This water, which ultimately ends up as process condensate blowdown, comes from the water absorbed by the methanol from the inlet gas and the water added to the naphtha/methanol separator. A typical composition of the contaminants in this effluent stream is shown below (Ref. 167):

Component	ppm (weight)
Phenol	18
Cyanide (as CN)	10.4 (includes thiocyanate)
Ammonia (as N)	42
Sulfides (as S)	trace

Because of these contaminants, this effluent stream must be treated before discharge.

Naphtha By-Product - The by-product naphtha stream consists mainly of C_6 to C_8 (predominantly aromatic) hydrocarbons removed in the prewash column. Some of the major and minor compounds which are expected to be in this stream are listed below (Ref. 168):

Major Components (>10% each)	Minor Components (<10% each)
Paraffins and Olefins	Thiophenes
Benzene	Styrene
Toluene	Ethyl Toluene
Xylenes - Ethyl Benzene	Indane
Trimethyl Benzenes	Indene
	Naphthalene
	Benzofuran

Fugitive Emissions - Fugitive air and liquid emissions from the Rectisol I acid gas removal process arise from leaks around pump seals, valves, flanges, etc. High pressures like those encountered in this process enhance fugitive leaks from equipment. These fugitive emissions could contain any of the various components found in the process streams.

DISCHARGE STREAMS AND THEIR CONTROL

The following discharge streams from the Rectisol I process require further treatment:

- Lean H_2S flash gas
- Rich H_2S gas
- Process condensate

The following text discusses why further treatment is necessary and the types of control devices that can be used to treat these streams.

Lean H_2S Flash Gas - Since this gas stream contains significant amounts of H_2S, organic sulfur, and hydrocarbons, it needs to be treated before it is discharged to the atmosphere. The control technologies that can be used to control these sulfur emissions include a Stretford process and/or a tail gas treating process (Beavon, SCOT, etc.). Incineration can be used to control the hydrocarbon emissions. Data sheets for these control processes are presented in Appendix C.

Rich H_2S Gas - The off-gases from the hot regenerator contain H_2S, organic sulfur compounds, methanol, and other hydrocarbons. Techniques that can be used to control these sulfur emissions include a Claus process followed by a Stratford and/or a tail gas treating process. Hydrocarbons can be controlled by incineration. The presence of hydrocarbons, including methanol, can result in lower H_2S removal efficiencies in the Claus process due to the formation of organic sulfur compounds. These compounds must then be treated by a tail gas treating process. Data sheets for the Claus, Stretford, and tail gas treating processes are presented in Appendix C.

Process Condensate - Expected contaminants in the process condensate stream include phenols, cyanides, ammonia, hydrocarbons, sulfides, etc. This stream requires treatment to reduce the concentrations of these components before it can be recycled or disposed of. The wastewater treatment processes which can be used to treat this stream are discussed in Appendix D.

Selexol Process

GENERAL INFORMATION

Process Function - Physical absorption of acid gases (H_2S, CO_2, COS, etc.) using Selexol solvent (polyethylene glycol dimethyl ether).

Development Status - Commercially available.

Licensor/Developer - Allied Chemical Corporation
Gas Purification Department
P.O. Box 1013 R
Morristown, New Jersey

Commercial Applications - CO_2 removal from natural gas.

Applicability to Coal Gasification - Technically feasible.

PROCESS INFORMATION

Equipment - Absorbers, flash vessels, stripping columns,

Flow Diagram - See Figure 1.

Control Effectiveness - Can reduce acid gas concentrations to 1 ppmv H_2S, 1 ppmv COS, 1 ppmv mercaptan, CO_2 to any desired level.

Operating Parameter Ranges -

- Temperature - 265 - 310°K (20 - 100°F)
- Pressure - 3.5-6.9 MPa (500-1000 psia)

Normal Operating Parameters -

- Temperature - 277°K (40°F)
- Pressure - 6.9 MPa (1000 psia)

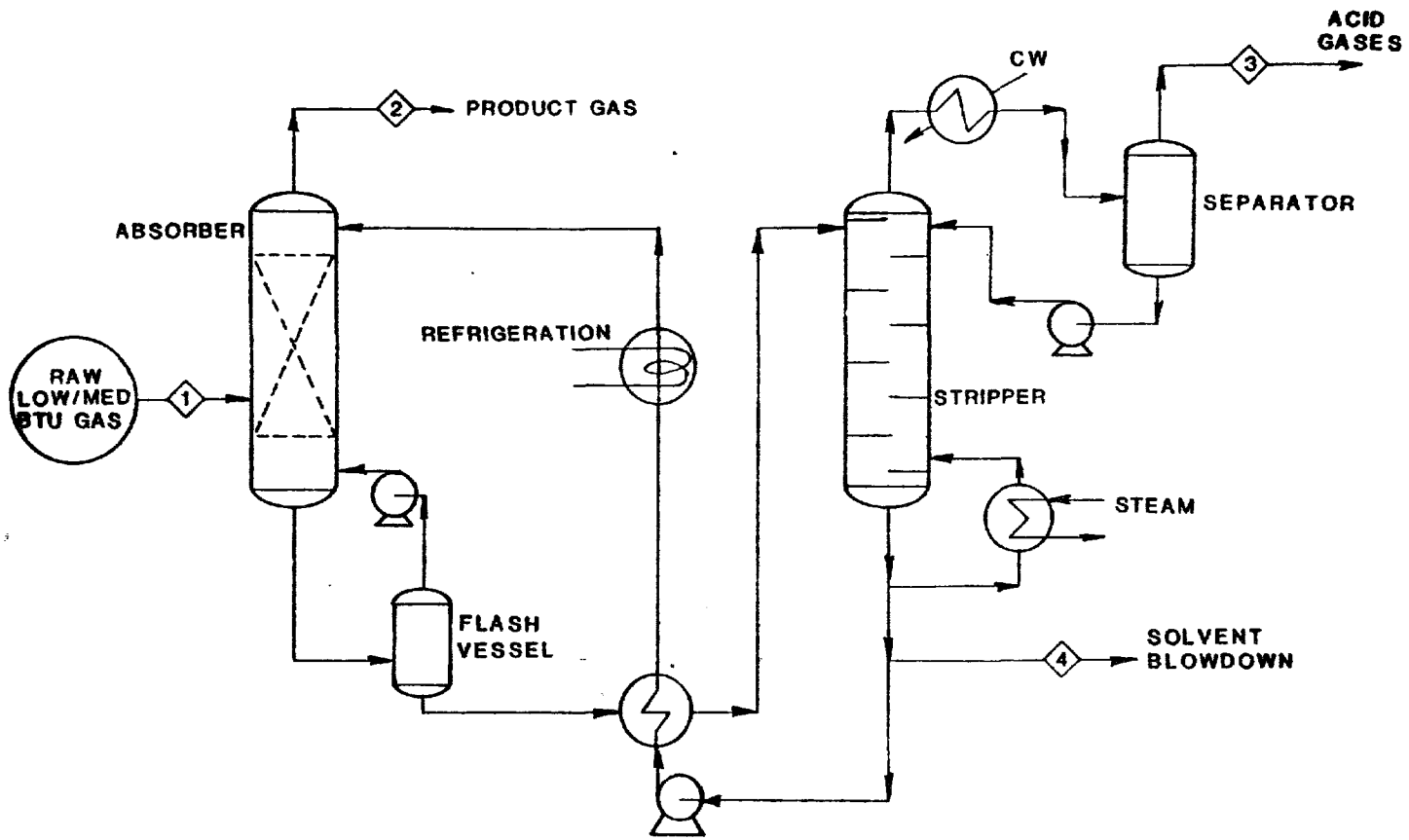

Figure 1. Typical flow diagram - Selexol Acid Gas Removal Process.

Raw Material Requirements - Selexol solvent makeup - 0.23 kg/28,300 Nm^3 (0.5 lb/10^6 scf) gas at 3.5 MPa (500 psia).

Utility Requirements - Basis: 28,300 Nm^3 (10^6 scf) of feed gas at 3.5 MPa (500 psia); feed gas composition of 0.5 vol % H_2S and 35 vol % CO_2. (Ref. 169)

- Steam - 1362 kg (3000 lb)
- Cooling Water - 132 m^3 (35,000 gal)
- Electrical Power - 3.2 x 10^9 joule (900 kWh)

PROCESS ADVANTAGES

- Low solvent vapor pressure minimizes solvent loss.
- Regeneration can be accomplished by flashing, inert gas stripping and/or heat regeneration.
- Relatively noncorrosive system.

PROCESS LIMITATIONS

- Expensive solvent.
- Absorbs heavier hydrocarbons (C_3^+).
- Not effective at low pressures.
- Not designed to treat gas with low acid gas concentrations.

INLET GAS STREAM

Typical Flow - 33 Nm^3/sec (100 x 10^6 scf/d) of raw natural gas (Ref. 170).

Typical Composition -

Component	Vol %	Component	Vol %
CO_2	43.0	C_3H_8	0.1
CH_4	55.7	N_2	0.6
C_2H_6	0.6	H_2S	60 ppmv

DISCHARGE STREAMS

The Selexol process has both gaseous and liquid discharge streams. These discharge streams are:

- Gas
  - Product gas (Stream No. 2)
  - Acid gas (Stream No. 3)
- Liquid
  - Blowdown solvent (Stream No. 4)

The following text discussed the compositions of these streams, using the Inlet Gas Stream composition given above as a basis.

Product Gas - The product gas stream exiting a Selexol unit in a natural gas plant is composed primarily of methane with smaller amounts of CO_2, N_2, C_2H_6, C_3H_8 and traces of H_2S. The amounts of these components will vary depending on the feed gas composition and the process operating conditions. A typical product gas composition is as follows:

Component	Vol %	Component	Vol %
CO_2	2.8	C_3H_8	0.1
CH_4	95.3	N_2	1.0
C_2H_6	0.8	H_2S	5.4 ppmv

Acid Gas - The acid gas stream produced during solvent regeneration is composed primarily of CO_2, H_2S, organic sulfur, and hydrocarbons. The concentrations and amounts of each of these components will depend upon the feed gas composition and the process operating conditions. This stream will require treatment to control emissions of sulfur compounds and possibly hydrocarbons.

Solvent Blowdown - This stream will be composed primarily of solvent with traces of solvent degradation products and other components scrubbed from the process gas stream. The disposition of this stream (further treatment to recover solvents, incineration, etc.) will be determined by the nature of the impurities present.

Purisol Process

GENERAL INFORMATION

Process Function - Physical absorption of acid gases (H_2S, CO_2, and organic sulfur) using N-methyl pyrrolidone as a sorbent.

Development Status - Commercially available.

Licensor/Developer - Lurgi Gesellschaft für Wärme und Chemotechnik m.b.H.
American Lurgi Corporation
377 Route 17
Hasbrouck Heights, NJ

Commercial Applications -

- Purification of natural gas
- Purification of hydrogen-rich gas streams

Applicability to Coal Gasification - Technically feasible.

PROCESS INFORMATION

Equipment - Absorbers, stripping column, flash vessels.

Flow Diagram - See Figure 1.

Control Effectiveness - Can reduce acid gas concentrations to 2 ppmv H_2S and 10 ppmv CO_2.

Operating Parameter Ranges -

- Temperature - 311 - 317°K (100 - 110°F)

Normal Operating Parameters -

- Temperature: 311°K (100°F)
- Pressure: 6.9 MPa (1000 psia)

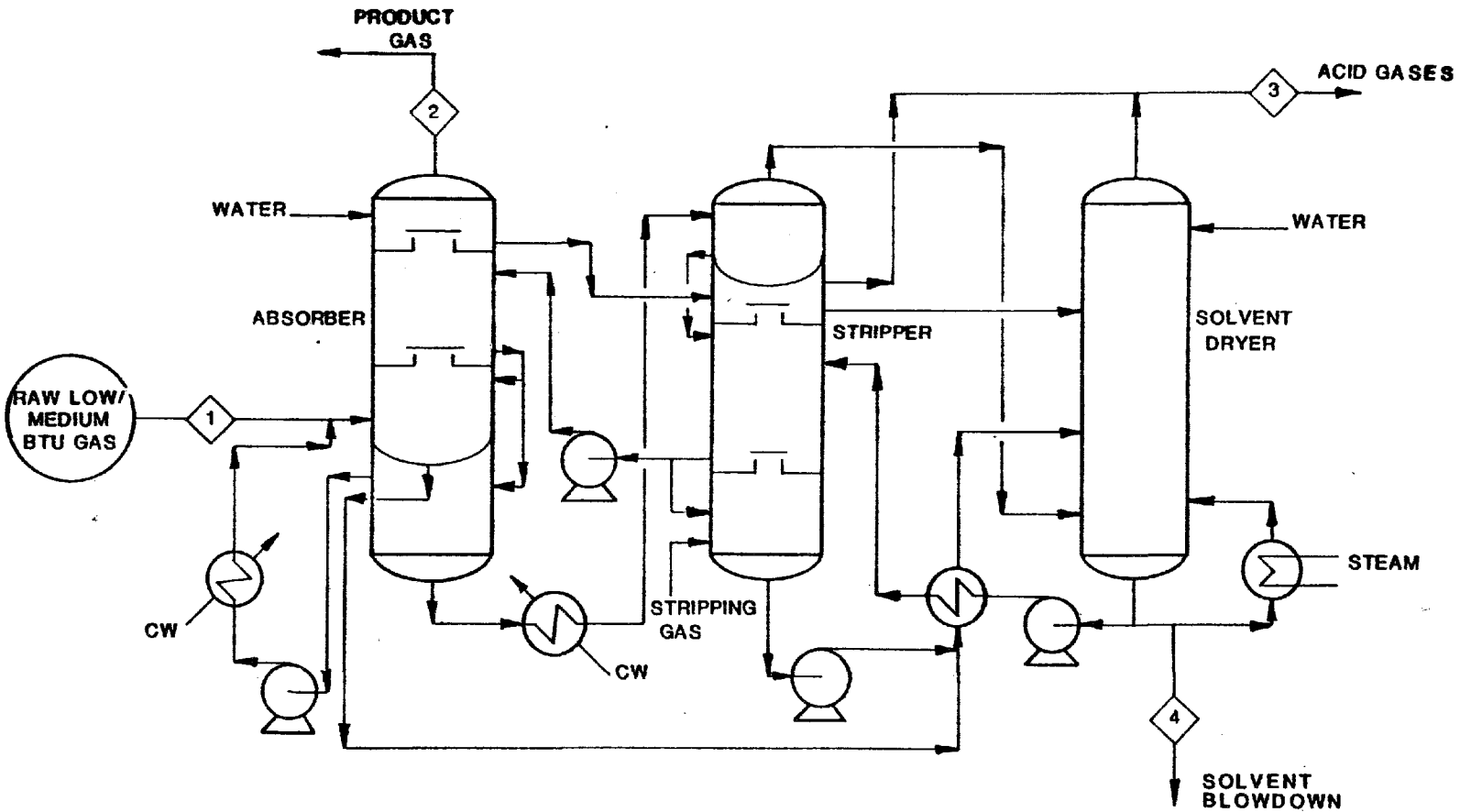

Figure 1. Typical flow diagram - Purisol Acid Gas Removal Process.

Raw Material Requirements - N-methyl pyrrolidone makeup - 0.95 Kg (2.1 lb) per 28,300 Nm^3 (10^6 scf) gas at 7.4 MPa (1070 psia) (Ref. 171).

Utility Requirements - Basis: per 28,300 Nm^3 (10^6 scf) gas at 7.4 MPa (1070 psia) containing 6 vol % H_2S and 15 vol % CO_2 (Ref. 172).

- Steam - 1418 kg (3125 lb)
- Electricity - 9.5 x 10^8 joule (264 kWh)
- Cooling Water - 50 m^3 (13,300 gal)

PROCESS ADVANTAGES

- Low solvent vapor pressure minimizes solvent loss
- Regeneration can be accomplished by flashing, inert gas stripping and/or heat regeneration
- Relatively noncorrosive system

PROCESS LIMITATIONS

- Absorbs heavier hydrocarbons (C_3^+)
- Not effective at low pressure

INLET GAS STREAM

Basis - Typically the inlet gas is high-pressure natural gas stream with a composition such as that shown below:

Component	Vol %
CO_2	15.0
H_2S	6.0
CH_4	75.0
N_2	4.0

DISCHARGE STREAMS

The Purisol process has both gaseous and liquid discharge streams. These discharge streams are:

- Gas
  - Product gas (Stream No. 2)
  - Acid gas (Stream No. 3)
- Liquid
  - Solvent blowdown (Stream No. 4)

The following text discusses the compositions of these streams, using the Inlet Gas Stream composition given above as a basis.

Product Gas - The product gas stream is composed primarily of methane and CO_2 with small amounts of N_2 and almost no H_2S. Typical Purisol product gas composition is as follows:

Component	Vol %
CO_2	13.6
H_2S	2 ppm
CH_4	82.0
N_2	4.4

Acid Gas - The acid gas stream produced during solvent regeneration is composed primarily of CO_2, H_2S, organic sulfur, and hydrocarbons. The concentrations and amounts of each of these components will depend upon the feed gas composition and the process operating conditions. This stream will require treatment to control emissions of sulfur compounds and possibly hydrocarbons.

Solvent Blowdown - This stream will be composed primarily of solvent with traces of solvent degradation products and other components scrubbed from the process gas stream. The disposition of this stream (further treatment to recover solvents, incineration, etc.) will be determined by the nature of the impurities present.

Estasolvan Process

GENERAL INFORMATION

Process Function - Physical absorption of acid gases (H_2S, CO_2, and organic sulfur) using tributyl phosphate as a sorbent.

Development Status - Commercially available.

Licensor/Developer - Institut Francais du Petrole
Friedrich Uhde, GmbH

Commercial Applications -

- Desulfurization of natural gas
- Desulfurization and liquid hydrocarbon recovery from natural gas

Applicability to Coal Gasification - Technically feasible.

PROCESS INFORMATION

Equipment - Absorbers, flash vessels, stripping columns.

Flow Scheme - See Figure 1.

Control Effectiveness - Can reduce H_2S content in product gas to less than 3 ppmv, CO_2 content to less than .25 vol%.

Operating Parameters Ranges -

- Temperature - 300°K (85°F)
- Pressure - Up to 6.9 MPa (1000 psia)

Normal Operating Parameters -

- Temperature - 300°K (85°F)
- Pressure - 6.9 MPa (1000 psia)

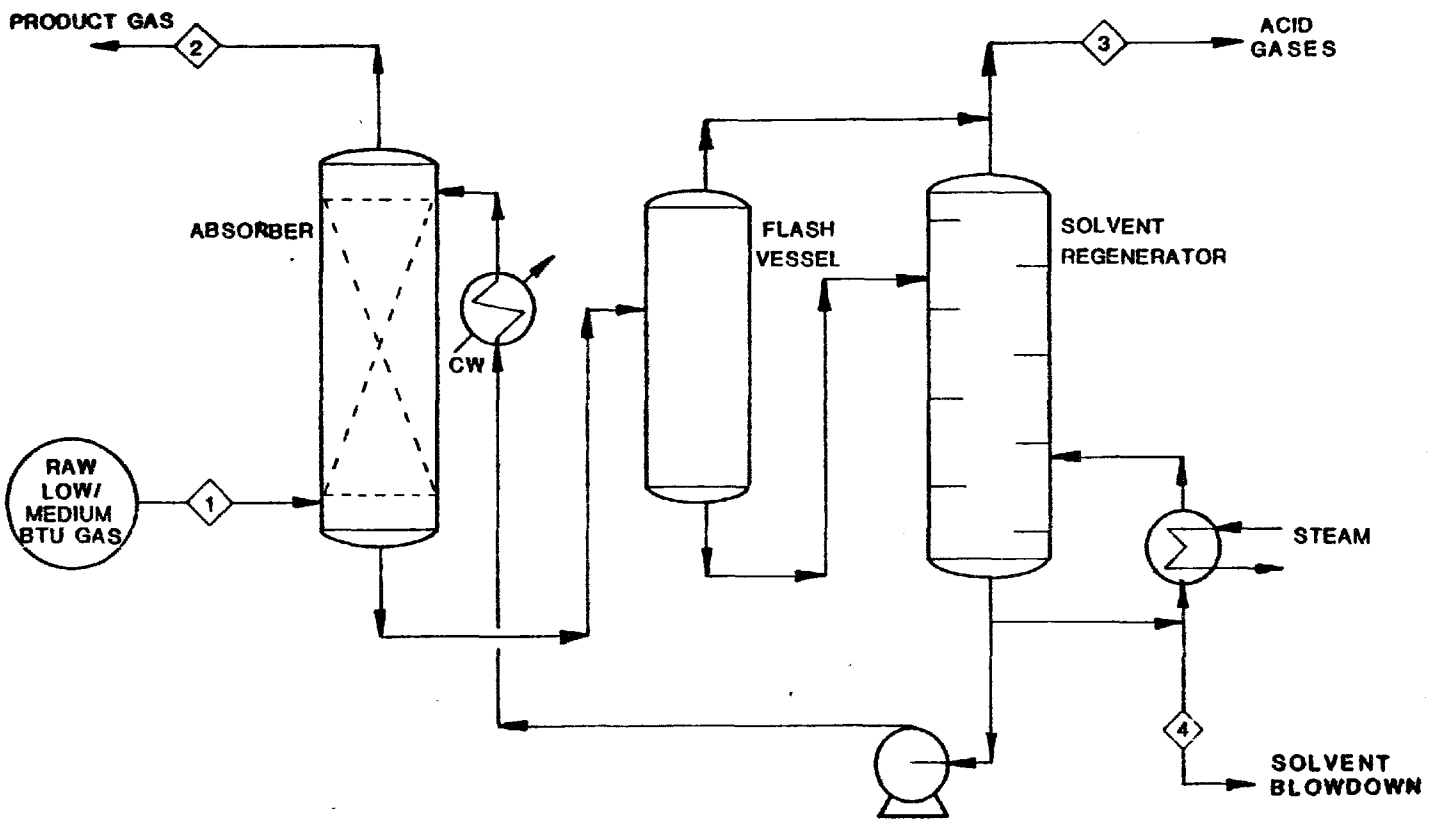

Figure 1. Typical flow diagram - Estasolvan Acid Gas Removal Process.

Raw Material Requirements - Tributyl phosphate solvent makeup.

Utility Requirements - Basis: 28,300 Nm^3 (10^6 scf) at 6.9 MPa (1000 psia) (Ref. 173).

- Steam - 1.26 kg/s (5 ton/h)
- Electricity - 1.6 x 10^9 joule (438 kWh)
- Cooling Water - 56 m^3 (15,000 gal)

PROCESS ADVANTAGES

- Low solvent vapor pressure minimizes solvent loss
- Regeneration can be accomplished by flashing, inert gas stripping and/or heat regeneration

PROCESS LIMITATIONS

- Not effective at low pressures
- Absorbs heavier hydrocarbons (C_2+)

INLET GAS STREAMS

Typical Composition - (raw natural gas; (Ref. 174)

Component	Vol %	Component	Vol %
H_2S	10.0	N_2	7.5
COS	500 mg/Nm^3	CH_4	75.5
RSH	1500 mg/Nm^3	C_2+	trace
CO_2	7.0		

DISCHARGE STREAMS

The Estasolvan process has both gaseous and liquid discharge streams. These discharge streams are:

- Gas
  - Product gas (Stream No. 2)

- Acid gas (Stream No. 3)

- Liquid

  - Solvent blowdown (Stream No. 4)

The following text discusses the compositions of these streams, using the Inlet Gas Stream composition given above as a basis.

Product Gas - The product gas contains almost no sulfur compounds and heavier hydrocarbons; CO_2 can also be removed if desired. A typical Estasolvan process product gas composition is as follows:

Component	Vol %	Component	Vol %
H_2S	< 3 ppmv	N_2	8.0
COS	< 6 mg/Nm^3	CH_4	85.6
RSH	< 50 mg/Nm^3	C_2+	-
CO_2	6.4		

Acid Gas - This stream can be treated in a Claus unit to recover elemental sulfur. The tail gas from the Claus unit can be treated to further reduce sulfur emissions using any one of several tail gas treating processes. A typical acid gas stream composition is given below:

Component	Vol %
H_2S	85.75
COS RSH	0.65
CO_2	11.40
CH_4	2.20

Solvent Blowdown - This stream will be composed primarily of solvent with traces of solvent degradation products and other components scrubbed from the process gas stream. The disposition of this stream (further treatment to recover solvents, incineration, etc.) will be determined by the nature of the impurities present.

Fluor Solvent Process

GENERAL INFORMATION

Process Function - Physical absorption of acid gases (H_2S, CO_2, and organic sulfur) using propylene carbonate as a sorbent.

Development Status - Commercially available.

Licensor/Developer - Fluor Engineers and Constructors, Inc.
Subsidiary of Fluor Corporation
Los Angeles, California

Commercial Applications -

- Seven natural gas cleanup installations.
- One ammonia production installation.
- Two hydrogen production installations.

Applicability to Coal Gasification - Technically feasible.

PROCESS INFORMATION

Equipment - Absorbers, flash vessels, stripping columns.

Flow Diagram - See Figure 1.

Control Effectiveness - Can reduce H_2S level in product gas to less than 4 ppmv and CO_2 level to less than 0.3 vol % (Ref. 175).

Operating Parameter Ranges -

- Temperature - Ambient temperature or lower.
- Pressure - 5.9-6.9 MPa (850-1000 psia)

Normal Operating Parameters

- Temperature - 300°K (80°F)
- Pressure - 6.9 MPa (1000 psia)

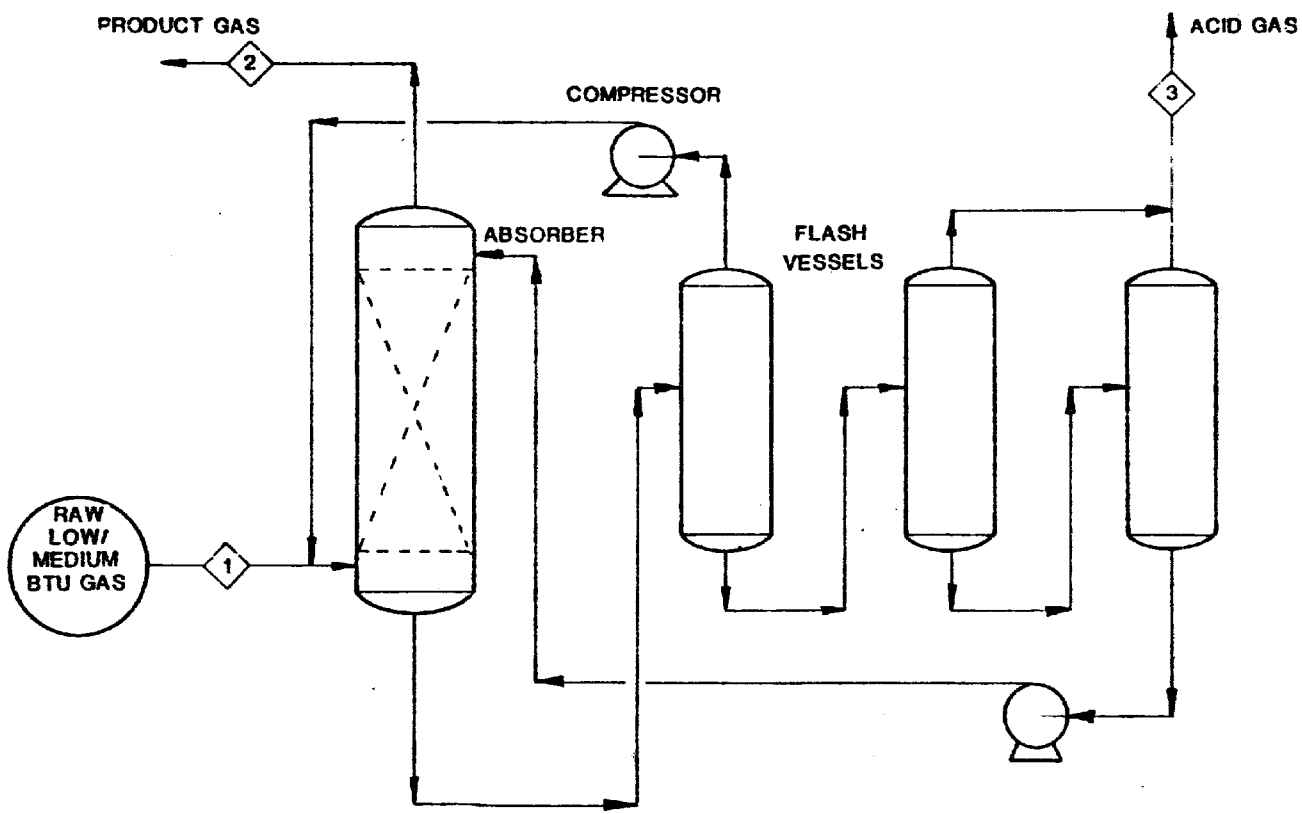

Figure 1. Typical flow diagram - Fluor Solvent Acid Gas Removal Process.

Raw Material Requirements - Propylene carbonate solvent makeup.

Utility Requirements - Data not available.

PROCESS ADVANTAGES

- Low solvent vapor pressure minimizes solvent loss.
- Regeneration can be accomplished primarily by flashing.
- Relatively noncorrosive system.

PROCESS LIMITATIONS

- Absorbs heavier hydrocarbons (C_3^+).
- Primarily for treating high-pressure gases with high-H_2S concentrations.

INLET GAS STREAM

The inlet gas stream (Stream No. 1) to this process in a coal gasification plant will contain varying amounts of CO, CO_2, H_2, CH_4, N_2, H_2S, COS, NH_3, H_2O, C_2^+ hydrocarbons, and perhaps other components (e.g. trace elements).

DISCHARGE STREAMS

The Fluor Solvent process has both gaseous and liquid discharge streams. These discharge streams are:

- Gas
  - Product gas (Stream No. 2)
  - Acid gas (Stream No. 3)
- Liquid
  - Solvent blowdown (Stream No. 4)

Although no quantitative information on these streams could be found, each of these streams is qualitatively discussed in the following text.

Product Gas - The product gas stream will contain very small amounts of sulfur compounds and CO_2. It will be composed primarily of CO, H_2, and N_2 with smaller amounts of CH_4 and H_2O.

Acid Gas - The acid gas stream produced during solvent regeneration is composed primarily of CO_2, H_2S, organic sulfur, and hydrocarbons. The concentrations and amounts of each of these components will depend upon the feed gas composition and the process operating conditions. This stream will require treatment to control emissions of sulfur compounds and possible hydrocarbons.

Solvent Blowdown - This stream will be composed primarily of solvent with traces of solvent degradation products and other components scrubbed from the process gas stream. The disposition of this stream (further treatment to recover solvents, incineration, etc.) will be determined by the nature of the impurities present.

MEA (Monoethanolamine) Process

GENERAL INFORMATION

Process Function - Chemical absorption of acid gases (H_2S, CO_2, and organic sulfur) using MEA as a sorbent.

Development Status - Commercially available.

Licensor/Developer - Not applicable.

Commercial Applications - Widely used to remove H_2S and CO_2 from refinery gas.

Applicability to Coal Gasification - Technically feasible.

PROCESS INFORMATION

Equipment - Absorbers, distillation columns.

Flow Diagram - See Figure 1.

Control Effectiveness - Can reduce H_2S content in treated gas to less than 1 ppmv, CO_2 to less than 0.1 vol%.

Operating Parameter Ranges -

- Temperature - 311 - 322°K (100 - 120°F)
- Pressure - Not highly pressure sensitive.

Utility Requirements - Basis: 33 Nm^3/s (100 x 10^6 scf/d) of gas, composition - 90 vol % CH_4, 5 vol % CO , and 5 vol % H_2S, with 4 ppmv H_2S and 0.1 vol % CO_2 in product gas (Ref. 176).

- Steam - 144 kg/m^3 solvent (1.2 lb/gal)

PROCESS ADVANTAGES

- Low solvent cost.

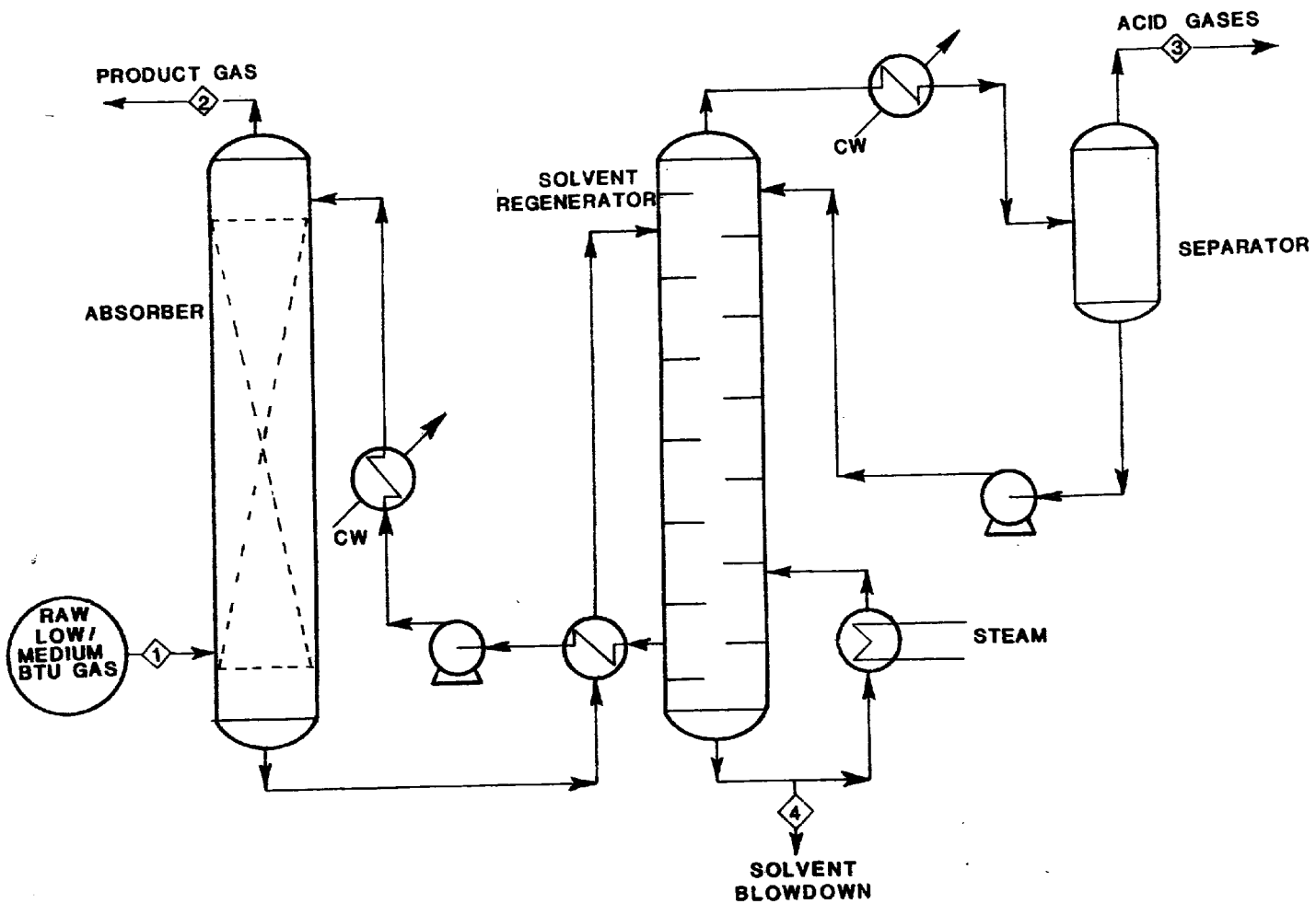

Figure 1. Typical flow diagram - MEA Acid Gas Removal Process (Ref. 177).

- High capacity for acid gases (low solvent circulation rates).
- Not pressure sensitive

PROCESS LIMITATIONS

- Forms nonregenerable compounds as a result of reaction with organic sulfur.
- Requires steam regeneration.
- Corrosion and foaming problems.
- High solvent vapor pressure can cause excessive solvent losses.

INLET GAS STREAM

Typical Composition - (raw natural gas; Ref. 178)

Component	Vol %	Component	Vol %
N_2	0.5	iC_4	0.1
CO_2	1.9	nC_4	0.2
H_2S	0.6	iC_5	0.1
C_1	92.9	nC_5	0.1
C_2	2.2	C_6+	0.7
C_3	0.7		

DISCHARGE STREAMS

The MEA process has both gaseous and liquid discharge streams. These discharge streams are (Ref. 179):

- Gas
  - Product gas (Stream No. 2)
  - Acid gas (Stream No. 3)
- Liquid
  - Solvent blowdown (Stream No. 4)

The following text discusses the composition of these streams, using the Inlet Gas Stream composition given above as a basis.

Product Gas - The product gas contains very small amounts of sulfur compounds and almost no CO_2. Typical composition is as follows:

Component	Vol %	Component	Vol %
N_2	0.6	iC_4	0.1
CO_2	trace	nC_4	-
H_2S	4 ppmv	iC_5	0.1
C_1	95.9	nC_5	0.1
C_2	2.2	C_6+	0.2
C_3	0.1		

Acid Gas - The acid gas stream produced during solvent regeneration is composed primarily of CO_2, H_2S, organic sulfur, and hydrocarbons. The concentrations and amounts of each of these components will depend upon the feed gas composition and the process operating conditions. This stream will require treatment to control emissions of sulfur compounds and possibly hydrocarbons.

Solvent Blowdown - This stream will be composed primarily of solvent with traces of solvent degradation products and other components scrubbed from the process gas stream. The disposition of this stream (further treatment to recover solvents, incineration, etc.) will be determined by the nature of the impurities present.

MDEA (Methyldiethanolamine) Process

GENERAL INFORMATION

Process Function - Chemical absorption of acid gases (H_2S, CO_2, and organic sulfur) using MDEA as a sorbent.

Development Status - Commercially available.

Licensor/Developer - Dow Chemical Co.
Patent Department
Freeport, Texas

Commercial Applications - Has been widely used in refinery gas cleanup applications.

Applicability to Coal Gasification - Technically feasible.

PROCESS INFORMATION

Equipment - Absorbers, stripping columns.

Flow Diagram - See Figure 1.

Control Effectiveness - Can reduce H_2S level in product gas to 4 ppmv, CO_2 level to 10 vol %.

Operating Parameter Ranges -

- Temperature - 300 - 316°K (80 - 110°F)

Normal Operating Parameters -

- Temperature - 314°K (105°F)
- Pressure - 0.4 MPa (60 psia)

Raw Material Requirements - MDEA solvent makeup-0.23 kg/28,300 Nm^3 of natural gas (0.5 lb/10^6 scf).

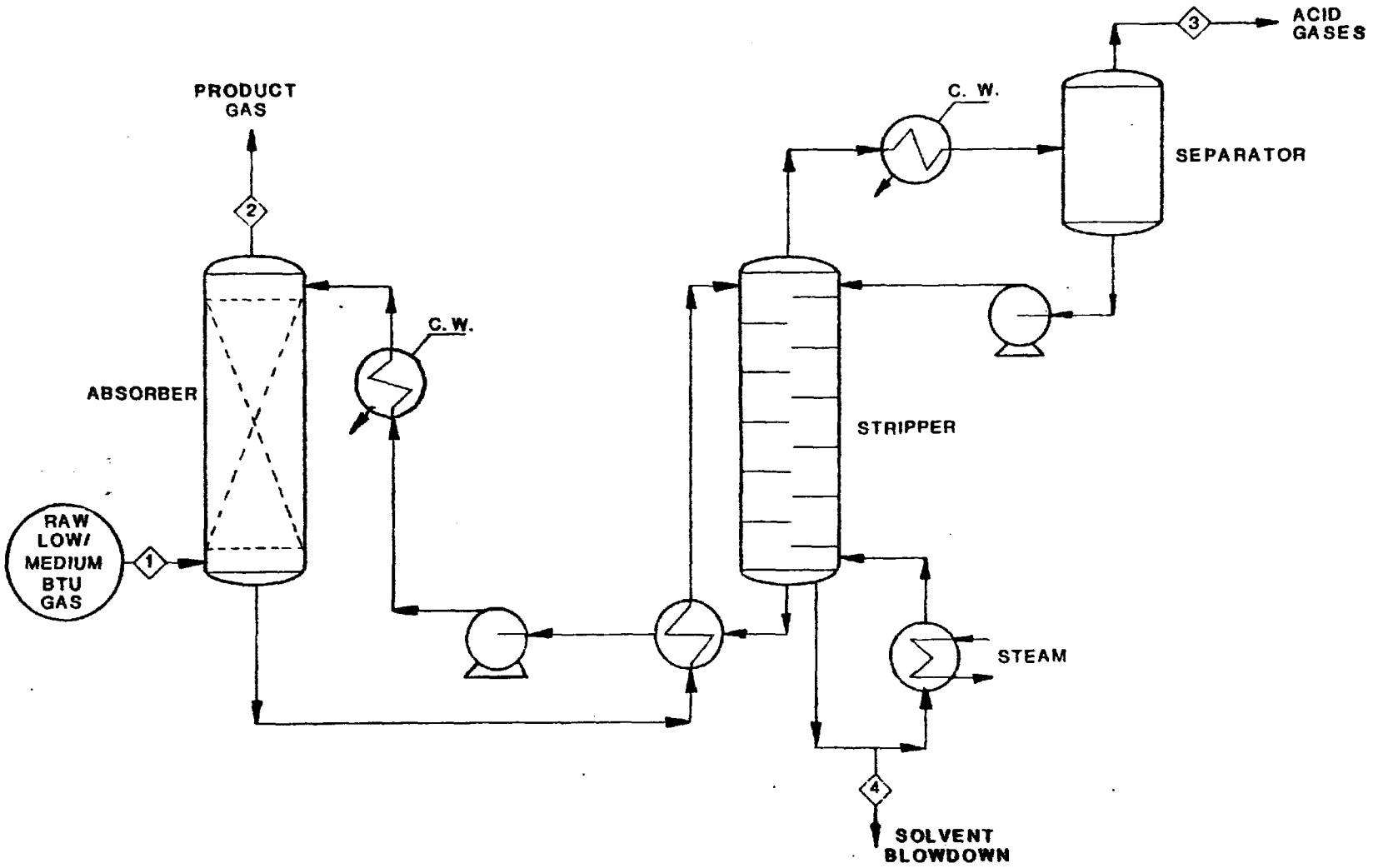

Figure 1. Typical flow diagram - MDEA Acid Gas Removal Process.

Utility Requirements - Basis: Per 28,300 Nm^3 (10^6 scf) gas at 314°K (105°F) and 0.4 MPa (60 psia). Feed gas composed of 0.6 vol % H_2S and 10 vol % CO_2 with 50 ppmv H_2S and 3.3 vol % CO_2 in treated gas. (Ref. 180)

- Steam - 4858 kg (10,700 lb)
- Cooling Water - Data not available.
- Electrical Power - 5.4×10^7 joule (15 kwh)

Basis: As above but to meet 965 ppmv H_2S and 7.3 vol % CO_2 in treated gas.

- Steam - 2270 kg (5000 lb)
- Cooling Water - Data not available.
- Electrical Power - 2.9×10^7 joule (8 kwh)

PROCESS ADVANTAGES

- Can be operated over a wide range of pressures
- Removes most organic sulfur compounds without degrading.
- Chemically stable solvent

PROCESS LIMITATIONS

- Does not remove mercaptans
- Relatively noncorrosive system

INLET GAS STREAM

The inlet gas stream (Stream No. 1) to this process in a coal gasification plant will contain varying amounts of CO, CO_2, H_2, CH_4, N_2, H_2S, COS, NH_3, H_2O, C_2+ hydrocarbons, and perhaps other components (e.g., trace elements).

DISCHARGE STREAMS

The MDEA process has both gaseous and liquid discharge streams. These discharge streams are:

- Gas
  - Product gas (Stream No. 2)
  - Acid gas (Stream No. 3)
- Liquid
  - Solvent blowdown (Stream No. 4)

Although no quantitative information on these streams could be found, each of these streams is qualitatively discussed in the following text.

Product Gas - The product gas stream will contain very small amounts of sulfur compounds and CO_2. It will be composed primarily of CO, H_2, and N_2 with smaller amounts of CH_4 and H_2O.

Acid Gas - The acid gas stream produced during solvent regeneration is composed primarily of CO_2, H_2S, organic sulfur, and hydrocarbons. The concentrations and amounts of each of these components will depend upon the feed gas composition and the process operating conditions. This stream will require treatment to control emissions of sulfur compounds and possibly hydrocarbons.

Solvent Blowdown - This stream will be composed primarily of solvent with traces of solvent degradation products and other components scrubbed from the process gas stream. The disposition of this stream (further treatment to recover solvents, incineration, etc.) will be determined by the nature of the impurities present.

DEA (Diethanolamine) Process

GENERAL INFORMATION

Process Function - Chemical absorption of acid gases (H_2S, CO_2, and organic sulfur) using DEA as a sorbent.

Licensor/Developer - Ralph M. Parsons (SNPA-DEA Process)
617 W. Seventh Avenue
Los Angeles, California

Commercial Applications -

- Removing H_2S and CO_2 from raw natural gas.

Applicability to Coal Gasification - Technically feasible.

PROCESS INFORMATION

Equipment - Absorbers, distillation columns.

Flow Diagram - See Figure 1.

Control Effectiveness - Can reduce acid gas concentrations to less than 3 ppmv H_2S and 500 ppmv CO_2 (Ref. 181).

Operating Parameter Ranges - Data not available.

Normal Operating Parameters - Data not available.

Raw Material Requirements - DEA solvent makeup.

Utility Requirements - Data not available.

PROCESS ADVANTAGES

- COS does not degrade the solvent.
- Solvent has lower vapor pressure than MEA.

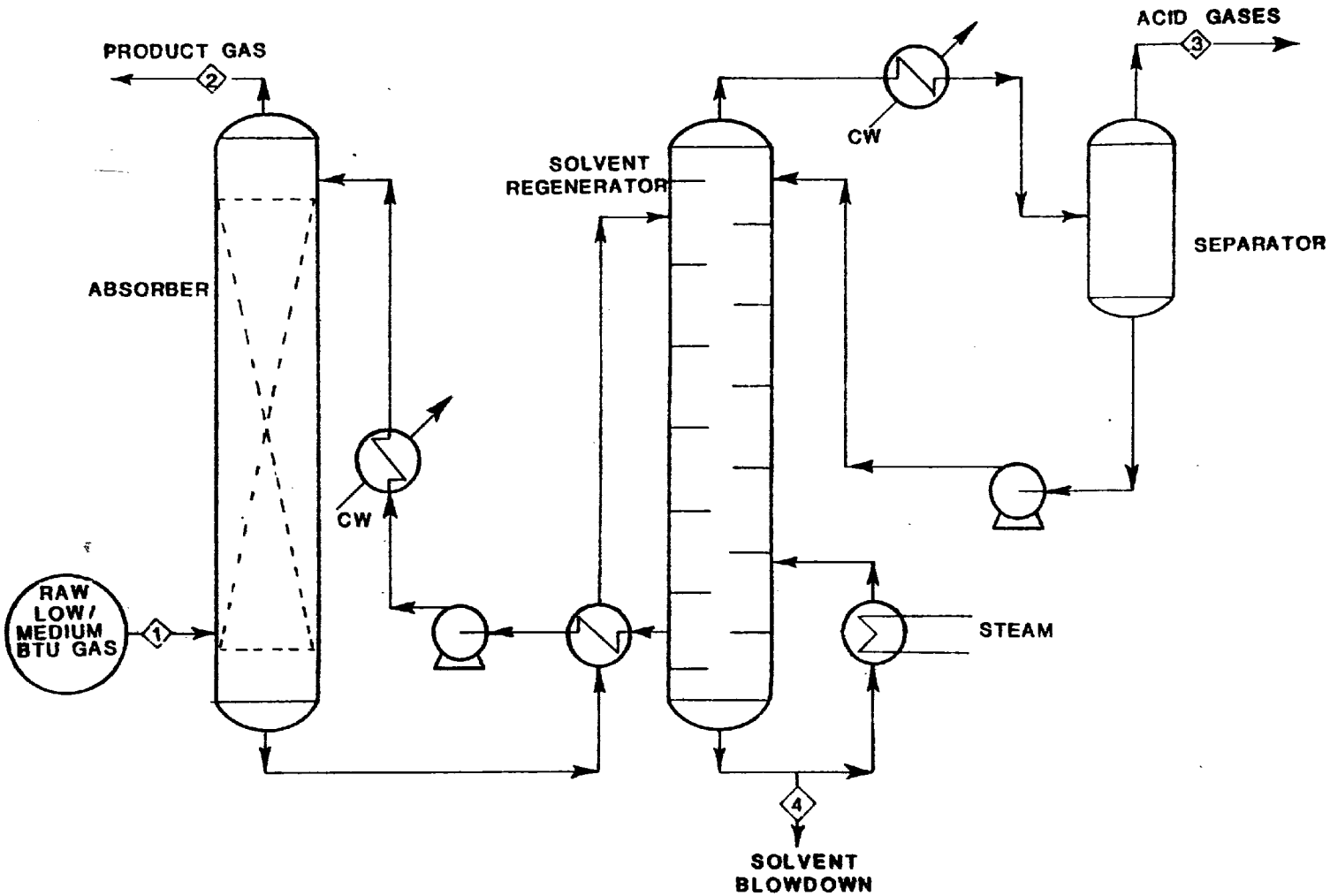

Figure 1. Typical flow diagram - DEA Acid Gas Removal Process.

PROCESS LIMITATIONS

- Not effective at low pressures.
- Requires filtration to remove fine particulates which cause foaming.

INLET GAS STREAMS

- The inlet gas stream (Stream No. 1) to this process in a coal gasification plant will contain varying amounts of CO, CO_2, H_2, CH_4, N_2, H_2S, COS, NH_3, H_2O, C_2+ hydrocarbons, and perhaps other components (e.g., trace elements).

DISCHARGE STREAMS

- The DEA process has both gaseous and liquid discharge streams. These discharge streams are:
  - Gas
    - Product gas (Stream No. 2)
    - Acid gas (Stream No. 3)
  - Liquid
    - Solvent blowdown (Stream No. 4)

Although no quantitative information on these streams could be found, each of these streams is qualitatively discussed in the following text.

Product Gas - The product gas stream will contain very small amounts of sulfur compounds and CO_2. It will be composed primarily of CO, H_2, and N_2 with smaller amounts of CH_4 and H_2O.

Acid Gas - The acid gas stream produced during solvent regeneration is composed primarily of CO_2, H_2S, organic sulfur, and hydrocarbons. The concentrations and amounts of each of these components will depend upon the feed gas composition and the process operating conditions. This stream will require treatment to control emissions of sulfur compounds and possibly hydrocarbons.

Solvent Blowdown - This stream will be composed primarily of solvent with traces of solvent degradation products and other components scrubbed from the process gas stream. The disposition of this stream (further treatment to recover solvents, incineration, etc.) will be determined by the nature of the impurities present.

DIPA (Diisopropanolamine) Process

GENERAL INFORMATION

Process Function - Chemical absorption of acid gases (H_2S, CO_2, and organic sulfur) using DIPA as a sorbent.

Development Status - Commercially available.

Licensor/Developer - Shell Development Company (ADIP Process)
One Shell Plaza
P. O. Box 2463
Houston, Texas 77001

Commercial Applications -

- Removal of acid gases from natural gas, refinery gas, synthesis gas or LPG.

Applicability to Coal Gasification - Technically feasible.

PROCESS INFORMATION

Equipment - Absorbers, flash towers, distillation columns.

Flow Diagram - See Figure 1.

Control Effectiveness - Can reduce H_2S content in synthesis gas (0.5 MPa) to less than 100 ppmv; in natural gas (6.9 MPa) to 5 ppmv.

Operating Parameter Ranges -

- Temperature - 310°-333°K (100°-140°F)
- Pressure - 0.1-6.9 MPa (15-1000 psia)

Normal Operating Parameters -

- Temperature - 310°K (100°F)
- Pressure - 1.9 MPa (270 psia)

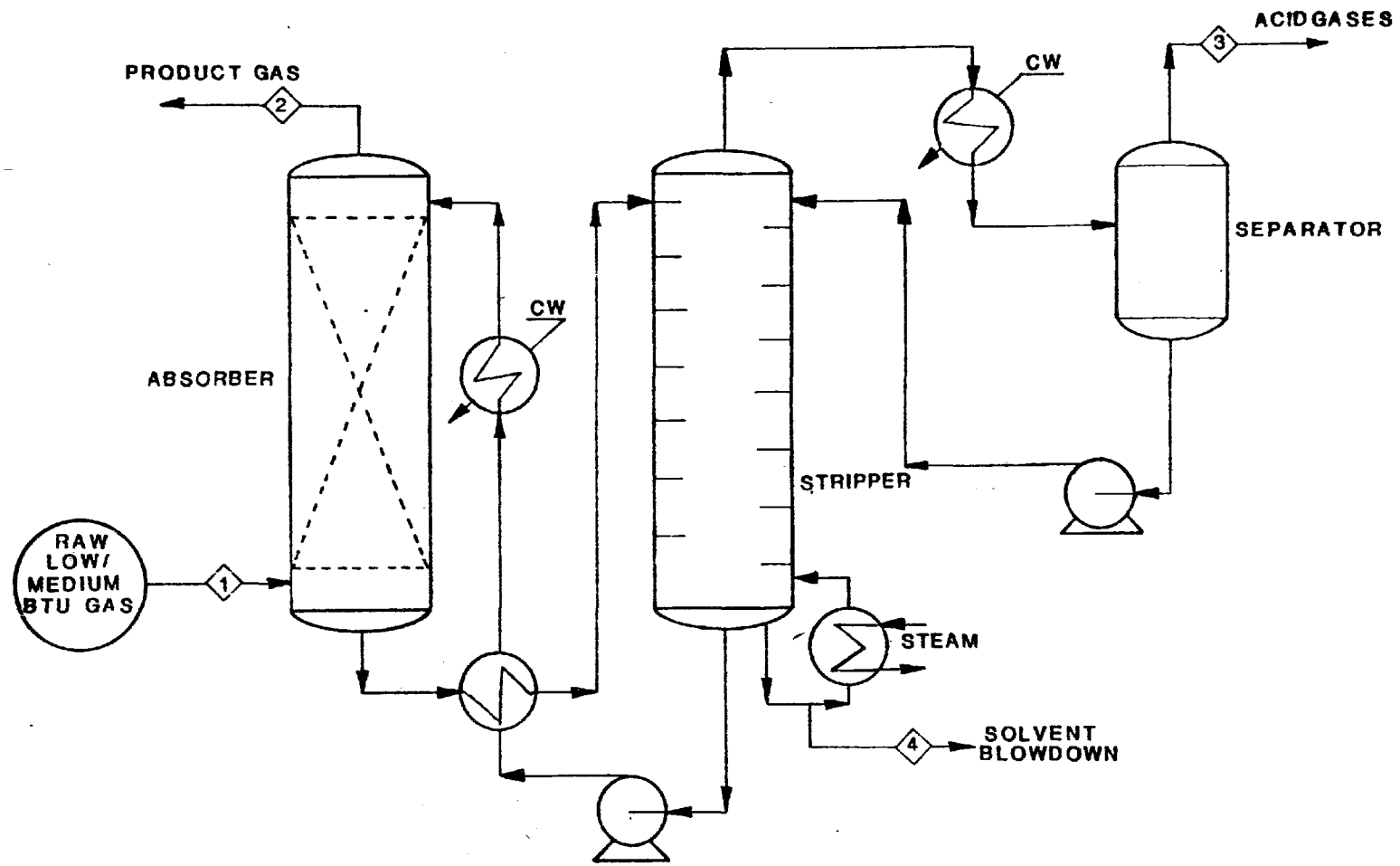

Figure 1. Typical flow diagram - ADIP (DIPA) Acid Gas Removal Process.

Raw Material Requirements - DIPA solvent makeup: 0.8 g/sec per 28,300 Nm (10^6 scf) of gas at 1.9 MPa (270 psia) (Ref. 182).

Utility Requirements - Basis: Per 28,300 Nm^3 (10^6 scf) of gas at 1.9 MPa (270 psia). Feed gas composed of 10 vol % H_2S and 2.5 vol % CO_2 with 2 ppmv H_2S and 0.2 vol % CO_2 in treated gas (Ref. 183).

- Steam - 10,000 kg (22,000 lb)
- Cooling Water - Data not available.
- Electrical Power - 3.1 x 10^8 joule (85 kWh)

PROCESS ADVANTAGES

- DIPA solvent is noncorrosive.
- Solvent is not degraded by COS.
- Low steam consumption.

PROCESS LIMITATIONS

- High pressure needed to meet extremely low H_2S levels (5 ppmv).

INLET GAS STREAMS

The inlet gas stream (Stream No. 1) to this process in a coal gasification plant will contain varying amounts of CO, CO_2, H_2, CH_4, N_2, H_2S, COS, NH_3, H_2O, C_2 + hydrocarbons, and perhaps other components (e.g., trace elements).

DISCHARGE STREAMS

The DIPA process has both gaseous and liquid discharge streams. These discharge streams are:

- Gas
  - Product gas (Stream No. 2)
  - Acid gas (Stream No. 3)

Liquid

- Solvent blowdown (Stream No. 4)

Although no quantitative information on these streams could be found, each of these streams is qualitatively discussed in the following text.

Product Gas - The product gas stream will contain very small amounts of sulfur compounds and CO_2. It will be composed primarily of CO, H_2, and N_2 with smaller amounts of CH_4 and H_2O.

Acid Gas - The acid gas stream produced during solvent regeneration is composed primarily of CO_2, H_2S, organic sulfur, and hydrocarbons. The concentrations and amounts of each of these components will depend upon the feed gas composition and the process operating conditions. This stream will require treatment to control emissions of sulfur compounds and possibly hydrocarbons.

Solvent Blowdown - This stream will be composed primarily of solvent with traces of solvent degradation products and other components scrubbed from the process gas stream. The disposition of this stream (further treatment to recover solvents, incineration, etc.) will be determined by the nature of the impurities present.

DGA (Diglycolamine) Process

GENERAL INFORMATION

Process Function - Chemical absorption of acid gases (H_2S, CO_2, and organic sulfur) using DGA as a sorbent.

Development Status - Commercially available.

Licensor/Developer - Jefferson Chemical/Fluor
(Economine process)
Austin, Texas.

Commercial Applications -

- Several in use in refineries to purify sour gas.

Applicability to Coal Gasification - Technically feasible.

PROCESS INFORMATION

Equipment - absorbers, stripping columns.

Flow Diagram - See Figure 1.

Control Effectiveness - Can reduce H_2S content in product gas to less than 4 ppmv, CO_2 content to less that 0.01 vol %.

Operating Parameter Ranges -

- Temperature - 305°-325°K (90°-130°F)

Normal Operating Parameters -

- Temperature - 305°K (90°F)
- Pressure - Not pressure sensitive

Raw Material Requirements - DGA solvent makeup.

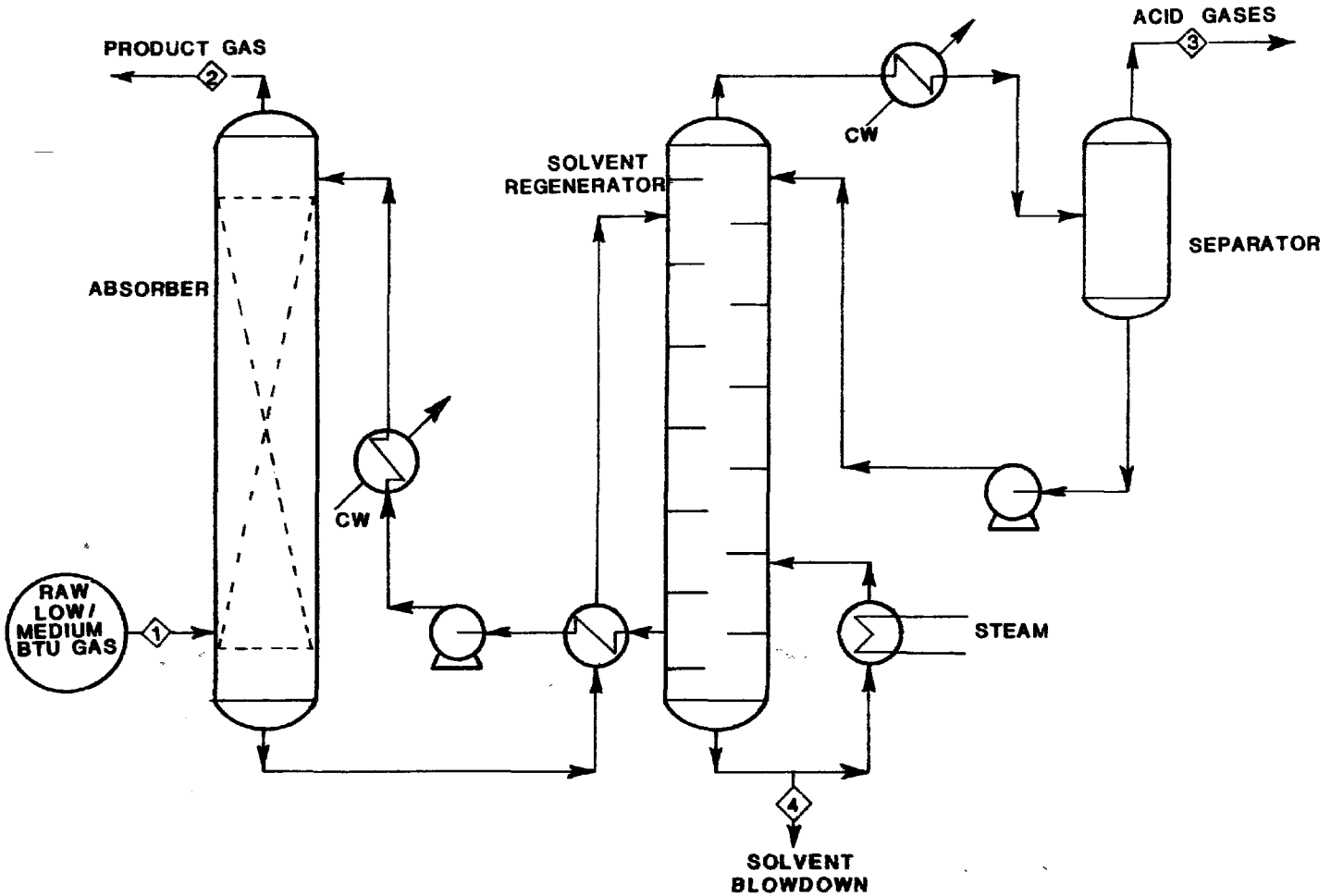

Figure 1. Typical flow diagram - DGA Acid Gas Removal Process (Ref. 184)

Utility Requirements - Basis: 33 Nm^3/s (100 x 10^6 scf/d) at 305°K (90°F). Feed gas composed of 5% H_2S, 5% CO_2.

- Steam - 22 kg/s (177,000 lb/hr)
- Electricity - data not available
- Cooling Water - data not available

PROCESS ADVANTAGES

- Low absorption of heavy hydrocarbons.

PROCESS LIMITATIONS

- Forms nonregenerable compounds with organic sulfur compounds
- Requires a minimum of 1.5 to 2.0 percent acid gases in feed gas

INLET GAS STREAM

Typical Composition-(Raw natural gas; Ref. 185)

Component	Vol %
CH_4	90
H_2S	5
CO_2	5

DISCHARGE STREAMS

The DGA process has both gaseous and liquid discharge streams. These discharge streams are:

- Gas
  - Product gas (Stream No. 2)
  - Acid gas (Stream No. 3)

- Liquid

  - Solvent Blowdown (Stream No. 4)

The following text discusses the compositions of these streams, using the Inlet Gas Stream composition given above as a basis.

Product Gas - Treated natural gas meets pipeline specifications of 4 ppmv H_2S and .3 vol % CO_2. Typical DGA product gas composition is as follows:

Component	Vol %
CH_4	99.99
H_2S	4 ppmv
CO_2	0.01

Acid Gas - The acid gas stream produced during solvent regeneration is composed primarily of CO_2, H_2S, organic sulfur, and hydrocarbons. The concentrations and amounts of each of these components will depend upon the feed gas composition and the process operating conditions. This stream will require treatment to control emissions of sulfur compounds and possibly hydrocarbons.

Solvent Blowdown - This stream will be composed primarily of solvent with traces of solvent degradation products and other components scrubbed from the process gas stream. The disposition of this stream (further treatment to recover solvents, incineration, etc.) will be determined by the nature of the impurities present.

Benfield Process

GENERAL INFORMATION

Process Function - Chemical absorption of acid gases (H_2S, CO_2 and organic sulfur) using hot potassium carbonate as a sorbent.

Development Status - Commercially available.

Licensor/Development - The Benfield Corporation
615 Washington Road
Pittsburgh, PA 15228

Commercial Applications -

- Removal of CO_2, H_2S, and COS from sour natural gas.

Applicability to Coal Gasification - The Benfield process is a proven acid gas removal process for low/medium-Btu gas produced in gasification plants in the following locations:

- Westfield, Scotland

PROCESS INFORMATION

Equipment - Absorbers, distillation columns.

Flow Diagram - See Figure 1.

Control Efficiencies - Can reduce H_2S and COS level in product gas to 2 ppmv, CO_2 to 0.01%.

Operating Parameter Ranges -

- Temperature - up to 410°K (280°F)
- Pressure - 0.7 to 13.8 MPa (100-2000 psia)

Normal Operating Parameters -

- Temperature - 395°K (250°F)
- Pressure - 4.2 MPa (615 psia)

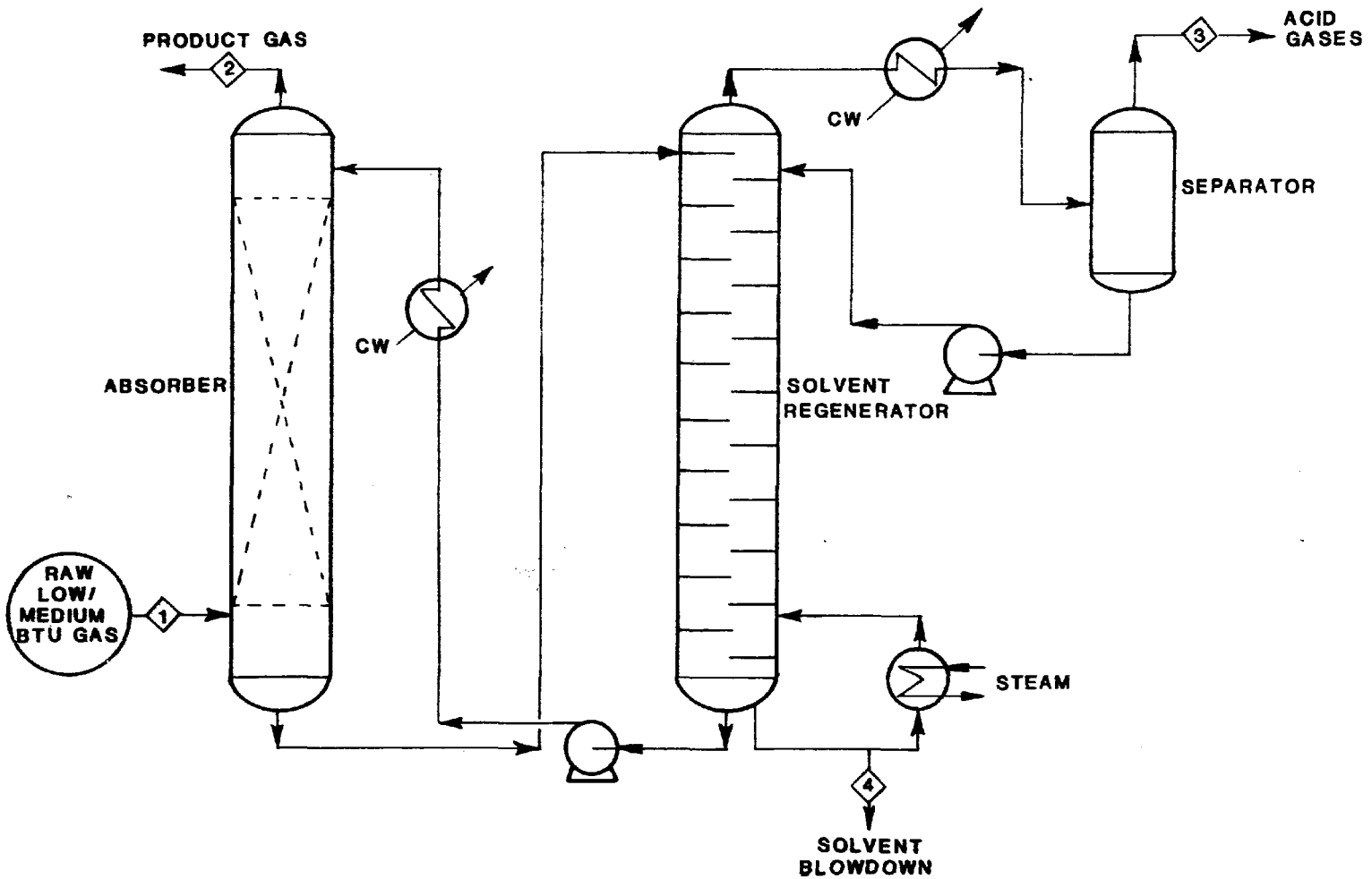

Figure 1. Typical flow diagram - Benfield Acid Gas Removal Process

Raw Material Requirements - Potassium carbonate solvent makeup.

Utility Requirements - Basis: Per 28,300 Nm^3 (10^6 scf) of gas at 395°K (250°F) and 4.2 MPa (615 psia). Feed gas composition of 1.5 vol % H_2S, 5.4 vol % CO_2, with 2 ppmv H_2S and 0.01 vol % CO_2 in product gas (Ref. 186).

Steam - 7128 kg (15,700 lb)

Cooling Water - 114 m^3 (30,000 gal)

Electrical Power - 5.0 x 10^8 joule (138 kWh)

Basis: Per 28,300 Nm^3 (10^6 scf) of gas at 395°K (250°F) and 4.2 MPa (615 psia). Feed gas composition of 45 vol % CO_2 with 0.1 vol % CO_2 in product gas (Ref. 187).

Steam - 17,300 kg (38,200 lb)

Cooling Water - 114 m^3 (30,000 gal)

Electrical Power - 2.6 x 10^9 joule (735 kWh)

PROCESS ADVANTAGES

- Removes organic sulfur and hydrogen cyanide.
- Can be operated selectively with respect to H_2S and CO_2 removal.

PROCESS LIMITATIONS

- If operated selectively, the CO_2- rich stream will contain sufficient H_2S to require further control.

INLET GAS STREAM

Typical composition of product gas from an air-blown Lurgi gasifier (Ref. 188).

Component	Vol %	Component	Vol %
CO_2	9.5	H_2S	0.4
CO	18.4	COS	0.1
H_2	13.1	NH_3	0.1
CH_4	3.4	H_2O	2.7
N_2	52.3		

DISCHARGE STREAMS

The Benfield process has both gaseous and liquid discharge streams. These discharge streams are:

- Gas
  - Product gas (Stream No. 2)
  - Rich H_2S gas (Stream No. 3)
- Liquid
  - Solvent blowdown (Stream No. 4)

Along with these discharge streams there will be fugitive emissions. The following text discusses the compositions of these streams, using the Inlet Gas Stream composition given above as a basis.

Product Gas - the product gas stream contains small quantities of pollutants such as H_2S, COS and NH_3. These can be removed to almost any level desired. A typical product gas composition is given below.

Component	Vol %	Component	Vol %
CO_2	7.2	H_2S	51 ppmv
CO	18.4	COS	25 ppmv
H_2	13.1	NH_3	0.1
CH_4	3.4	H_2O	5.7
N_2	52.3		

Rich H_2S Gas - The rich H_2S gas stream produced during solvent regeneration is composed primarily of CO_2, H_2S, COS, and H_2O. A typical composition is shown below:

Component	Vol %
CO_2	76.2
H_2S	13.1
COS	3.2
H_2O	7.5

Solvent Blowdown - This stream will be composed primarily of solvent with traces of solvent degradation products and other components scrubbed from the process gas stream. The disposition of this stream (further treatment to recover solvents, incineration, etc.) will be determined by the nature of the impurities present.

Sulfinol Process

GENERAL INFORMATION

Process Function - Combination chemical/physical absorption of acid gases (H_2S, CO_2, and organic sulfur) using a sulfolane/DIPA solvent.

Development Status - Commercially available.

Licensor/Developer - Shell Development Company
One Shell Plaza
P.O. Box 2463
Houston, Texas

Commercial Applications -

- Removal of H_2S and CO_2 from natural gas.
- Purification of refinery gases, synthesis gases, LNG feedstocks, and hydrogen.

Applicability to Coal Gasification - Technically feasible.

PROCESS INFORMATION

Equipment - Absorbers, flash vessel, stripping column.

Flow Diagram - See Figure 1.

Control Effectiveness - Can reduce acid gas concentrations to <1 ppmv H_2S; CO_2 to <50 ppmv and H_2S+COS to <2 ppmv.

Operating Parameter Ranges -

- Temperature - 311°-325°K (100°-125°F)

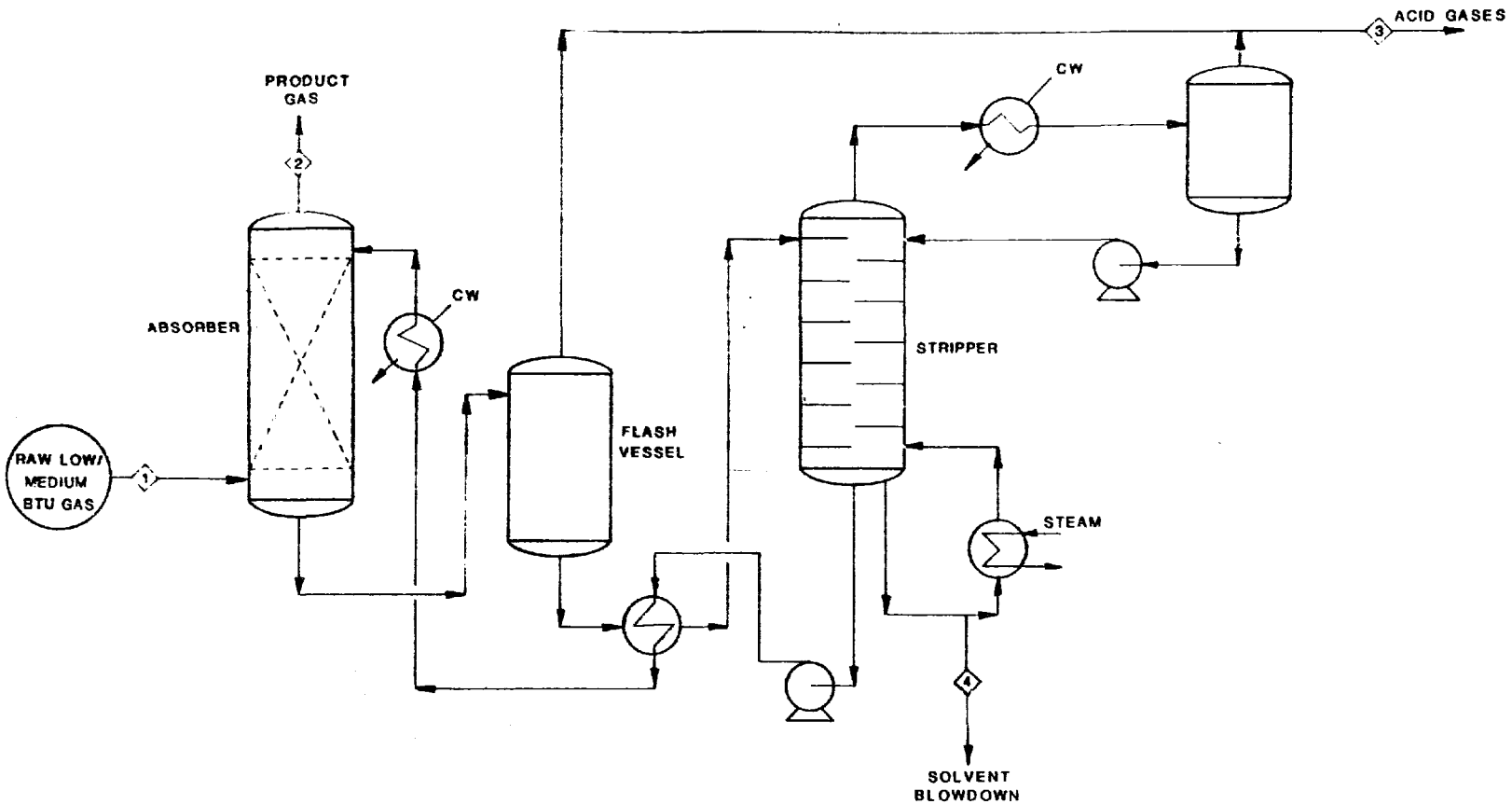

Figure 1. Typical flow diagram - Sulfinol Acid Gas Removal Process

Normal Operating Parameters -

- Temperature - 295°K (72°F)
- Pressure - 2.7 MPa (400 psia)

Raw Material Requirements - Solvent makeup: less than 16 kg sulfinol/28,300 Nm^3 CO_2 (35 lb/10^6 scf).

Utility Requirements - Basis: per 28,300 Nm^3 (10^6 scf) of gas at 2.7 MPa (397 psia) and 295°K (72°F). Feed gas composed of 0.46 vol % H_2S and 4.9 vol % CO_2.

- Steam - 454 kg (10,000 lb)
- Electricity - 2.2 x 10^8 joule (60 kWh)

PROCESS ADVANTAGES

- Low corrosion and foaming problems.
- Low heat capacity of solvent.
- Little degradation by organic sulfur compounds.
- Lower circulation rates than typical amine process.
- Lower steam requirements than typical amine process.
- Low vapor pressure limits evaporation loss.

PROCESS LIMITATIONS

- Expensive solvent.
- Some hydrocarbons are soluble.

INLET GAS STREAM

Typical Flow - 33 Nm^3/sec (100 x 10^6 scf/d) of raw natural gas (Ref. 189).

Typical Composition

Component	Vol %	Component	Vol %
H_2S	20.1	C_2	2.0
CO_2	2.0	C_3	1.7
N_2	1.4	C_4	1.1
C_1	71.5	C_5+	0.2
COS	155 ppmv	RSH	>100 ppmv

DISCHARGE STREAMS

The Sulfinol process has both gaseous and liquid discharge streams. These discharge streams are:

- Gas
  - Product gas (Stream No. 2)
  - Acid gas (Stream No. 3)
- Liquid
  - Solvent blowdown (Stream No. 4)

The following text discusses the compositions of these streams, using the Inlet Gas Stream composition given above as a basis.

Product Gas - The product gas stream is composed primarily of CH_4 with small amounts of CO_2, H_2S, and organic sulfur compounds. A typical composition is as follows:

Component	Vol %
CH_4	99.0+
H_2S	<4 ppmv
CO_2	<1.0
COS+RSH	<15 ppmv

Acid gas - The acid gas stream produced during solvent regeneration is composed primarily of CO_2, H_2S, organic sulfur, and hydrocarbons. The concentrations and amounts of each of these components depend upon the feed gas composition and product gas specification. This steam will require control for sulfur compounds and possibly hydrocarbons.

Solvent Blowdown - This stream will be composed primarily of solvent with traces of solvent degradation products and other components scrubbed from the process gas stream. The disposition of this stream (further treatment to recover solvents, incineration, etc.) will be determined by the nature of the impurities present.

Amisol Process

GENERAL INFORMATION

Process Function - Combination physical/chemical absorption of acid gases (H_2S, CO_2 and organic sulfur) using methanol and DGA (Diglycolamine) as a sorbent.

Development Status - Commercially available.

Licensor/Developer - Lurgi Mineralötechnik GmbH
American Lurgi Corporation
377 Rt 17 South
Hasbrouck Heights, New Jersey

Commercial Applications -

- Removal of H_2S and CO_2 from an ammonia and methanol plant.

Applicability to Coal Gasification - Technically feasible.

PROCESS INFORMATION

Equipment - Absorber, stripping columns, flash vessels.

Flow Diagram - See Figure 1.

Control Effectiveness - Can reduce acid gas concentrations to less than 0.1 ppm sulfur compounds and less than 5 ppm CO_2.

Normal Operating Parameters -

- Temperature - 305°K (90°F)
- Pressure - 1.4 MPa (200 psia)

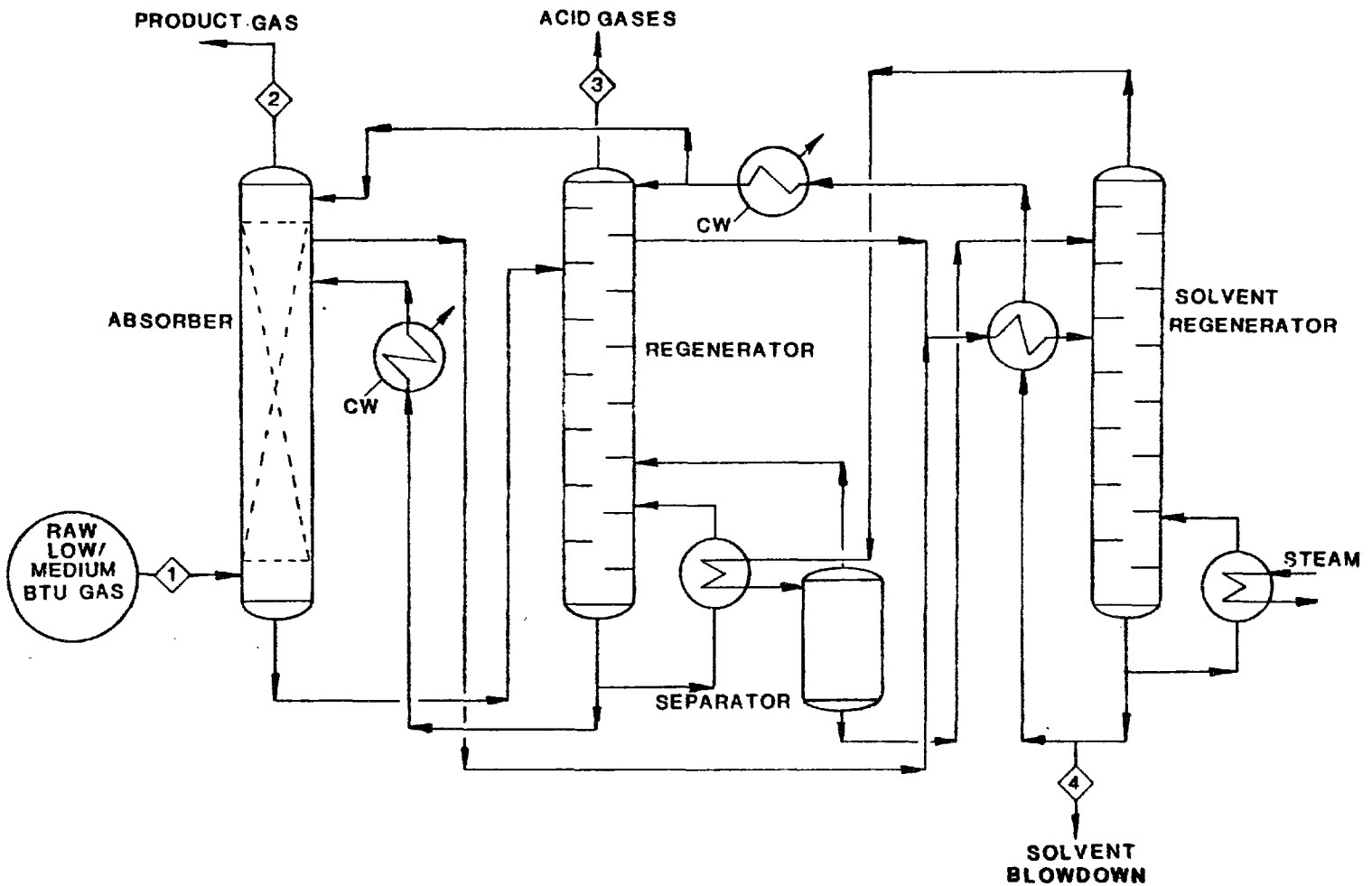

Figure 1. Typical flow diagram - Amisol Acid Gas Removal Process

Raw Material Requirements - Amisol solvent makeup: 160 kg/1000 Nm^3 gas (Ref. 190).

Utility Requirements - Data not available.

PROCESS ADVANTAGES

- Can be regenerated by simple flashing to meet less stringent product specifications.

PROCESS LIMITATIONS

- Must have significant acid gas partial pressure in feed gas to be economical.

INLET STREAMS

Basis - Inlet gas produced from residual oil by pressure gasification (Ref. 191).

Composition -

Component	Vol %	Component	Vol %
CO_2	6.6	H_2	47.6
H_2S	0.38	N_2	0.2
COS	152 ppm	CH_4	0.3
CO	44.9		

DISCHARGE STREAMS

The Amisol process has both gaseous and liquid discharge streams. These discharge streams are:

- Gas
  - Product gas (Stream No. 2)
  - Regenerator off gas (Stream No. 3)

Liquid

- Solvent Blowdown (Stream No. 4)

The following text discusses the compositions of these streams, using the Inlet Gas Stream composition given above as a basis.

Product Gas - The product gas stream contains practically no sulfur compounds and very little CO_2. The typical composition is shown below:

Component	Vol %
H_2S	0.3 ppm
COS	0.1 ppm
CO_2	10 ppm
H_2	51.3
CO	48.2

Regenerator Offgas -The typical composition of the offgas produced during flash and subsequent hot water regeneration is shown below.

Component	Vol %
H_2S	4.4
COS	0.15
CO_2	90.7
H_2	2.4
CO	2.3

Solvent Blowdown - This stream will be composed primarily of solvent with traces of solvent degradation products and other components scrubbed from the process gas stream. The disposition of this stream (further treatment to recover solvents, incineration, etc.) will be determined by the nature of the impurities present.

APPENDIX C

AIR POLLUTION CONTROL

Claus Process

GENERAL INFORMATION

Process Function - The Claus process is a catalytic oxidation process for recovering elemental sulfur from gas streams containing H_2S.

Development Status - Commercially available.

Licensor/Developer - Ralph M. Parsons (and others)
617 W. Seventh Avenue
Los Angeles, California

Commercial Applications - Control of sulfur emissions and recovery of elemental sulfur from gas streams containing high concentrations (at least 10-15%) of hydrogen sulfide. Typical feed gases for a Claus unit are the acid gases stripped from regenerable liquids used for purifying sour gases.

Applicability to Coal Gasification - The Claus process has not been used in a coal gasification plant. However, if a selective acid gas removal process is used in a coal gasification plant, the Claus process should be suitable for treating the rich H_2S stream generated by the acid gas process.

PROCESS INFORMATION

Equipment - Reaction furnace, sulfur condensers, reheaters, catalytic converters, waste heat boiler.

Flow Diagram - There are two variations of the Claus process: the split stream and the partial combustion process. Figure 1 is a simplified flow scheme which shows the major features of both of these process options. In the partial combustion process, all of the feed gas is directed to the reaction furnace, wherein enough oxygen (as air) is introduced to oxidize one-third of the H_2S to SO_2. It is at this point that any hydrocarbons or CO_2 present in the feed gas may react with the H_2S-rich vapors to form COS and CS_2. In the split stream process, only one-third of the feed gas is directed to the

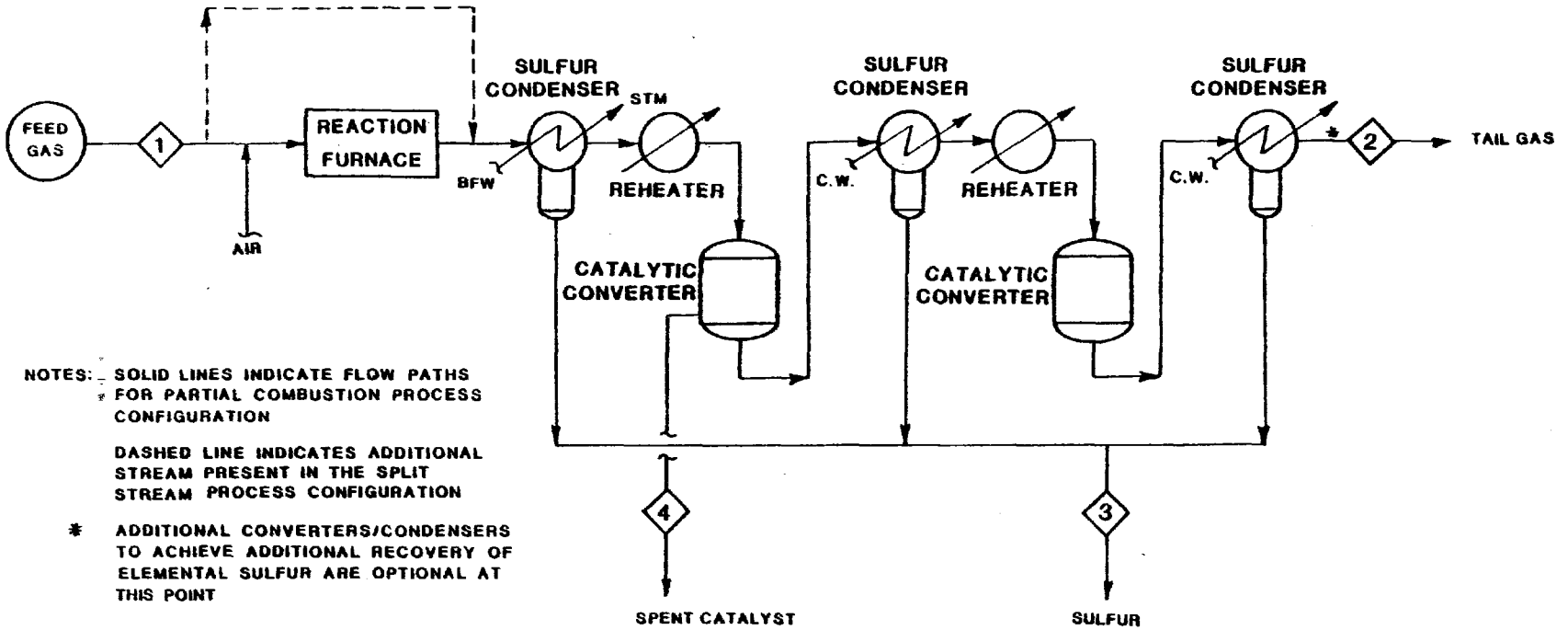

Figure 1. Typical flow diagram - Claus Sulfur Recovery Process

reaction furnace where the H_2S is combusted completely to form SO_2. Since complete combustion of this stream takes place in the split stream version of this process, all hydrocarbons are destroyed and organic sulfur formation is minimized. The reaction furnace effluent is then recombined with the bypass stream. Further processing steps are identical in both variations of this process.

Sulfur Conversion Effectiveness - Elemental sulfur is produced in the Claus process by the oxidation-reduction reaction shown in Reaction 1.

$$2H_2S + SO_2 \rightleftharpoons 2H_2O + 3/e\ S_e + 54.5\ \text{Mjoule} \qquad (1)$$

As mentioned previously, the SO_2 may be formed either by partial combustion of the entire feed gas stream or by complete combustion of one-third of the feed. Reaction 2 shows this oxidation reaction while Reaction 3 shows the overall Claus reaction.

$$H_2S + 3/2\ O_2 \rightarrow SO_2 + H_2O + 247\ \text{Mjoule} \qquad (2)$$

$$3H_2S + 3/2\ O_2 \rightleftharpoons 3H_2O + 3/e\ S_e + 302\ \text{Mjoule} \qquad (3)$$

Since Reaction 1 is reversible, equilibrium considerations limit the conversion of H_2S to sulfur, with lower temperatures favoring the product side as illustrated in Figure 2. Because of the exothermic nature of the Claus reaction, thermal constraints limit the amount of conversion which can be achieved in a single reactor. Thus, when high sulfur conversion values are desired, a series of reactors and sulfur condensers must be used. With this approach, the sulfur condensers serve the dual purpose of lowering the gas temperature (which shifts the equilibrium of Reaction 1 to the right) and removing product sulfur from the gas phase (which lowers the sulfur back pressure). The reheaters shown in Figure 1 are necessary to raise the converter gas feed temperature above the sulfur dew point so that the bauxite catalyst at the reactor inlet does not become fouled with sulfur. A theoretical optimum temperature profile for a partial combustion Claus process employing four catalytic converters is shown in Figure 3. The theoretical conversion efficiency for this temperature profile is 99.5% (see Figure 4).

In actual practice, efficiencies of only 90-95% are normally achieved. This is mainly because of the inability to control the 2:1 ratio of H_2S to SO_2 required by the oxidation-reduction reaction shown in Reaction 1. This can be caused by the presence of oxidizable compounds such as ammonia or

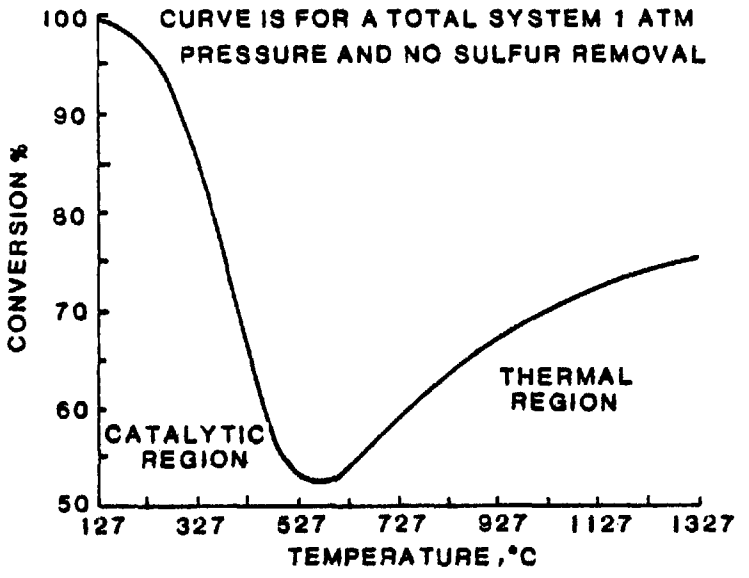

Figure 2. Theoretical conversion of H_2S to sulfur vapor (Ref. 192)

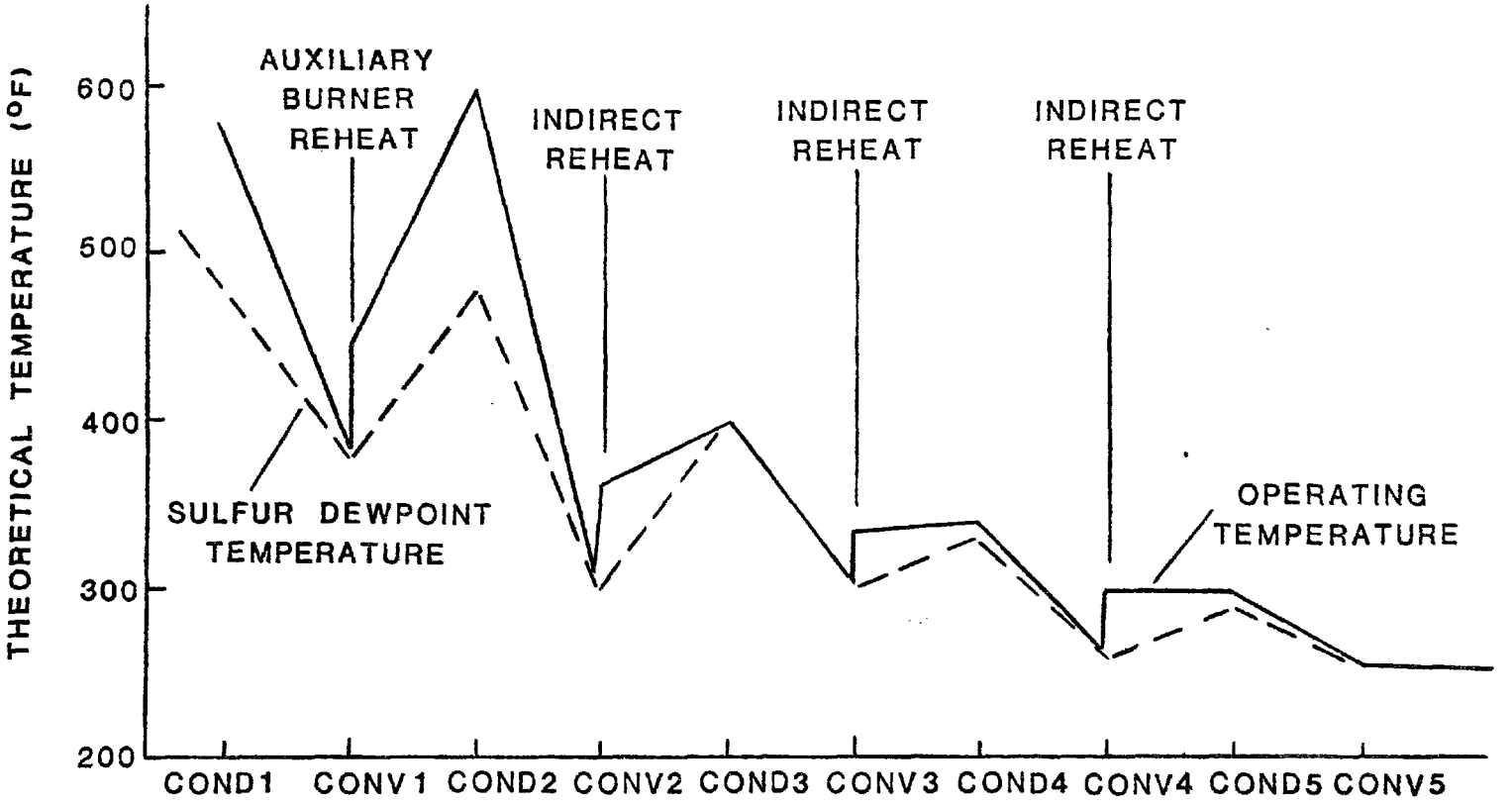

Figure 3. Theoretical optimum Claus plant temperature profile (Ref. 193).

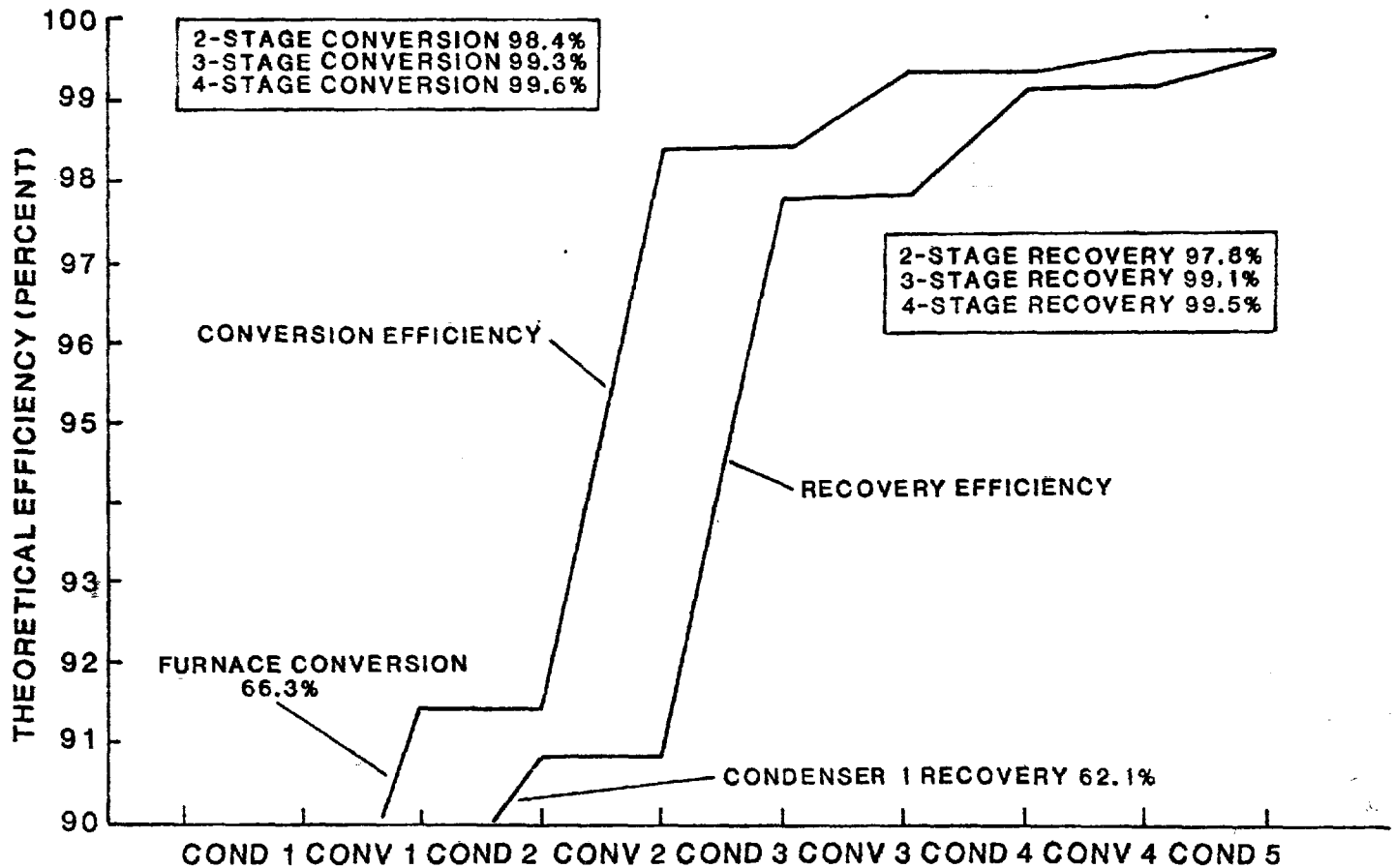

Figure 4. Theoretical optimum Claus plant conversion and recovery efficiencies (Ref 194).

hydrocarbons in the feed gas. Additional factors which may lower the sulfur conversion efficiency are:

- Portions of the feed gas sulfur may be in the form of organic sulfur compounds, such as COS and CS_2, which are not readily converted to sulfur in the Claus process.

- Hydrocarbons and CO_2 present in the feed gas may react with vapor phase sulfur or H_2S to form COS and CS_2.

While COS and CS_2 can be hydrogenated or hydrolyzed to H_2S by Claus catalysts (see Figures 5 and 6), high conversions occur only at temperatures above 640°K (700°F) (Ref. 195). At these temperatures the main Claus reaction, Equation 1, has an unfavorable equilibrium position (see Figure 2 - 640°K = 367°C). To overcome this drawback and yet convert most of the COS and CS_2 to H_2S, the first catalytic reactor in a Claus unit is often operated around 560-640°K (550-700°F) while the remaining reactors are operated at significantly lower temperatures (see Figure 3).

The operating temperature for a Claus plant, and hence its sulfur recovery efficiency, will be, among other things, dictated by the feed gas composition, the availability of a tail gas cleanup process capable of removing COS and CS_2 (i.e., it may not be necessary to remove these species in the Claus unit), and process economics.

Operating Parameter Ranges (Refs. 196, 197, 198) -

- Temperature:

  - Reaction furnace - 1370-1920°K (2000-3000°F)

  - Catalytic converters - 400-650°K (260-710°F)

- Pressure: 0.1-0.2 MPa (15-30 psia)

Raw Material and Utility Requirements - Basis: recovery of 0.454 kg (1 lb) of sulfur from an inlet gas stream containing 40% H_2S and 60% CO_2 (Refs. 199, 200).

- Catalyst (typically bauxite)

- Air

- Boiler feed water: 0.003 m^3 (0.75 gal)

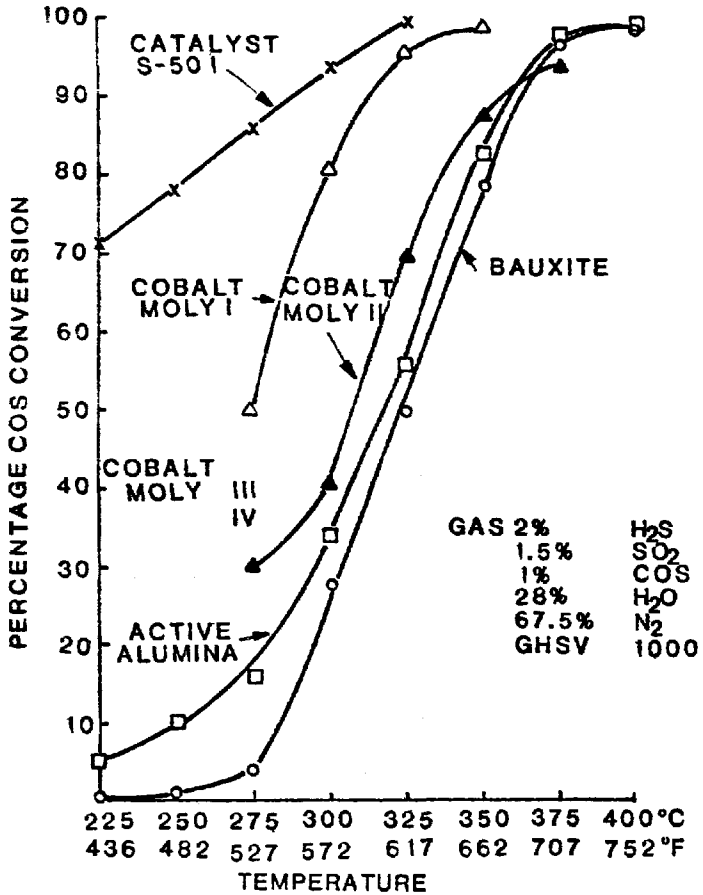

Figure 5. Conversion of COS to H_2S over sulfated catalysts (Ref. 201)

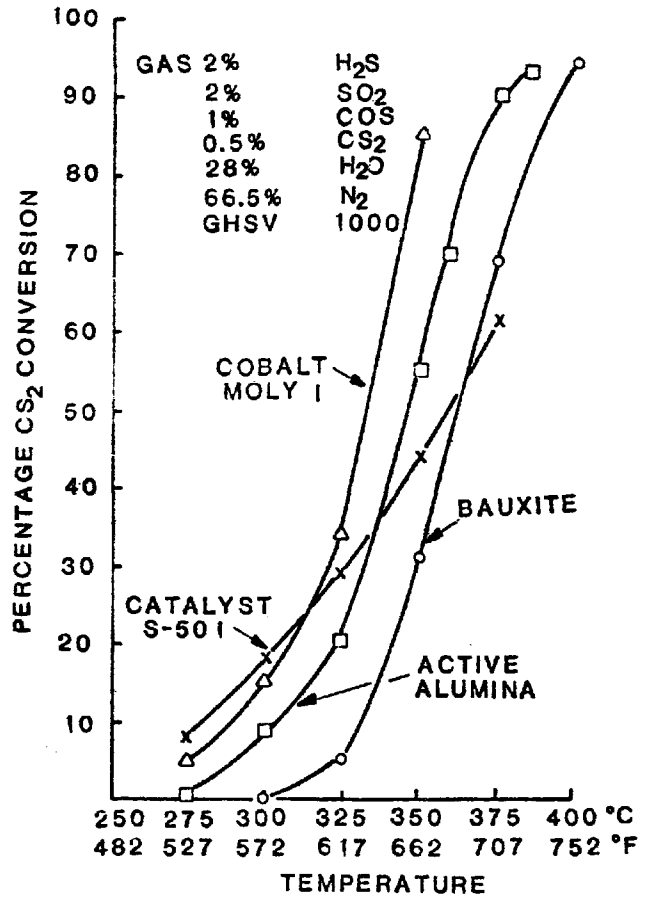

Figure 6. Conversion of CS_2 to H_2S over sulfated catalysts (Ref. 202)

- Electric power: 0.04 kWh
- Cooling water duty: 6.7×10^5 joule (640 Btu)

By-Products or Utility Credits -

- Elemental Sulfur
- Steam: 2.7 Kg (6.06 lb)

PROCESS ADVANTAGES

- A commercially proven process for bulk H_2S removal.
- Produces high-purity readily salable elemental sulfur.
- Split stream process configuration destroys one-third of any organic sulfur compounds and hydrocarbons present in the feed gas. The reduction in hydrocarbons also reduces potential for forming organic sulfur compounds in downstream processing equipment.

PROCESS LIMITATIONS

- Requires a feed stream containing at least 10-15% H_2S to be economical.
- Equilibrium considerations limit process from being a "final" sulfur control process; therefore, a tail gas cleanup process is required for removal of residual sulfur compounds.
- Hydrocarbons and CO_2 in the feed gas enhance the formation of organic sulfur compounds which are not readily converted to elemental sulfur.
- Carbonaceous matter, trace elements and high concentrations of ammonia (>3%) in the feed gas may cause catalyst deactivation and/or may form solids which can cause equipment fouling problems (Ref. 203).
- Corrosion can be a problem, especially in the sulfur condensers (Ref. 204).
- The use of too little or too much air in the reaction furnace will decrease the sulfur removal effectiveness.

INLET GAS STREAM

Basis - The feed gas to a Claus unit is composed of H_2S and other components removed in an acid gas removal system. The composition of a Claus plant feed gas, typical of those generated in the coking industry, is shown below (Ref. 205):

Component	Vol %	Component	Vol %
H_2S	75.11	SO_2	0.05
CO_2	18.20	Hydrocarbons	2.07
HCN	0.45	N_2	3.41
CS_2	0.29	Ar	0.07
COS	not reported	H_2	0.33

DISCHARGE STREAMS AND THEIR CONTROL

The Claus process generates gaseous, liquid and solid discharge streams. These discharge streams are:

- Air Emissions:
  - Tail gas (Stream No. 2)
- Liquid Effluents:
  - By-product sulfur (Stream No. 3)
- Solid Wastes:
  - Spent catalyst (Stream No. 4)

The following text discusses the compositions of these streams using the INLET GAS STREAM composition given above as a basis.

Tail Gas - The Claus unit tail gas, which contains significant quantities of sulfur species such as H_2S, SO_2, COS and CS_2, requires further treatment before discharge. There are many processes commercially available that are capable of removing these residual sulfur compounds from the Claus unit tail gas. A typical Claus unit tail gas composition is shown below:

Component	Vol %	Component	Vol %
H_2S	0.22	SO_2	0.13
CO_2	11.57	Hydrocarbons	not reported
HCN	0.0	N_2	86.18
CS_2	0.11	Ar	1.22
COS	0.15	H_2	0.42

By-Product Sulfur - The elemental sulfur by-product generated by the Claus unit is typically of a salable quality (99+% pure). Carbon is the most frequent contaminant present in the sulfur by-product, but if the Claus unit is operated within its design limits, carbon contamination is not a problem.

Spent Catalyst - Bauxite is the most commonly used Claus catalyst. It is subject to thermal and hydrothermal aging as well as poisoning by ammonia, carbonaceous matter and sulfur. To reduce deactivation from sulfur poisoning, the catalytic converters are operated above the sulfur dew point of the gas. However, sulfur may still be retained on the catalyst surface due to adsorption. Because of the presence of ammonia, carbon and/or sulfur compounds on the spent catalyst, it may require treatment prior to disposal.

Stretford Process

GENERAL INFORMATION

Process Function - Sulfur recovery process; based upon the liquid phase oxidation of H_2S to elemental sulfur in an alkaline solution of metavanadate and anthraquinone disulfonic acid (ADA) salts.

Development Status - Commercially available.

Licensor/Developer - Peabody Engineered Systems
39 Maple Tree Avenue
Stamford, Connecticut

Commercial Applications -

- Removing H_2S from natural gas.
- Purifying coke oven gas.
- Purifying producer gas.

Applicability to Coal Gasification - The Stretford process should be a technically feasible process for removing H_2S from:

- The tail gases from an acid gas removal process
- Process vent gases
- Other gaseous streams containing H_2S.

PROCESS INFORMATION

Equipment - Absorber, oxidation tank, surge tank, and elemental sulfur recovery equipment.

Flow Diagram - Figure 1 is a simplified flow scheme for the Stretford process. The overall process reaction is represented by Equation 1.

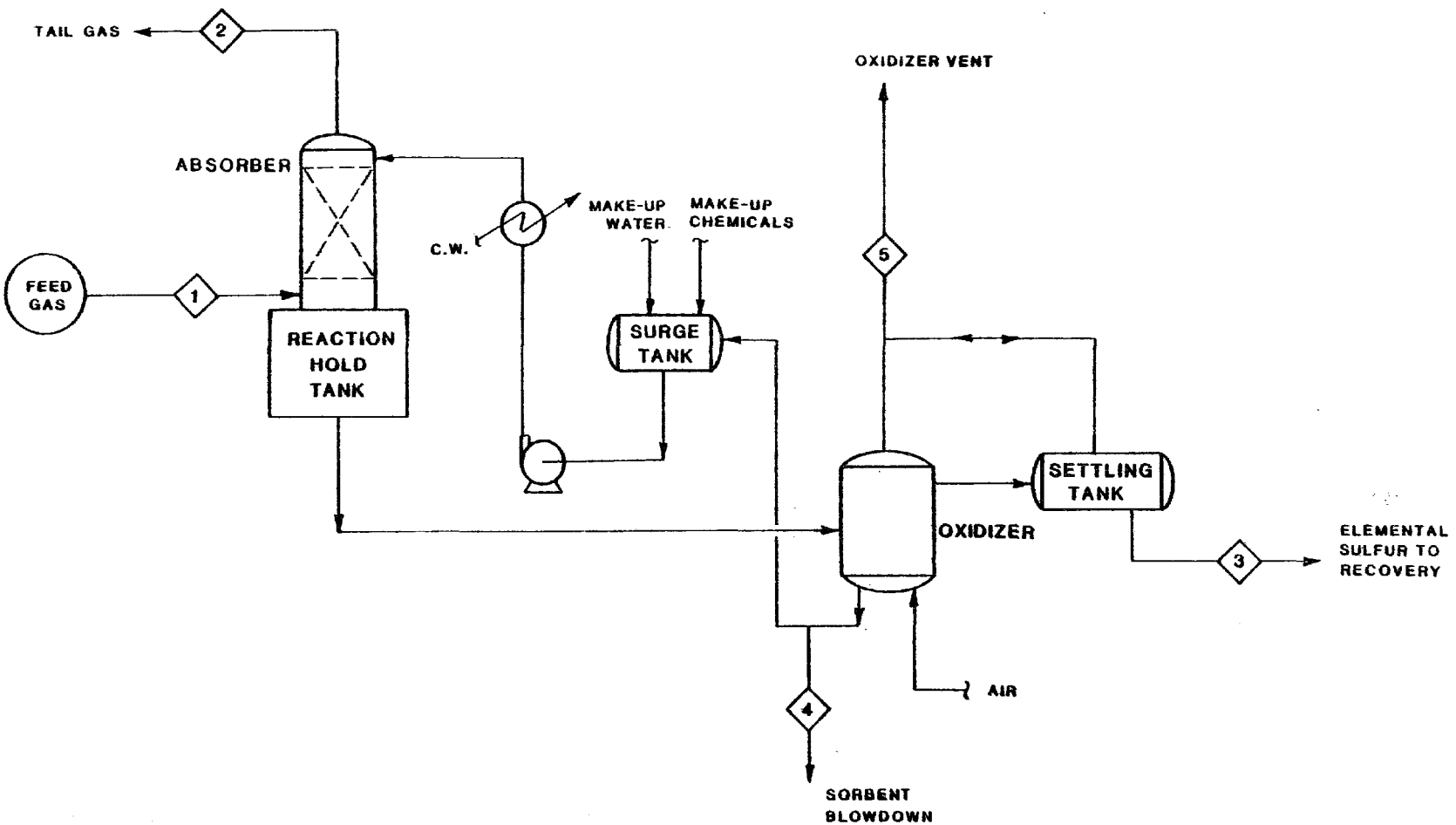

Figure 1. Typical flow diagram - Stretford Sulfur Recovery Process

$$2H_2S + O_2 \rightarrow 2S + 2H_2O \quad (1)$$

However, the process actually utilizes the following reaction sequence:

- Absorber

$$H_2S + Na_2CO_3 \rightleftharpoons NaHS + NaHCO_3 \quad (2)$$

- Reaction Hold Tank

$$4NaVO_3 + 2NaHS + 2H_2O \rightleftharpoons Na_2V_4O_9 + 2S + 4NaOH \quad (3)$$

$$Na_2V_4O_9 + 2NaOH + H_2O + 2ADA \rightleftharpoons 4NaVO_3 + 2ADA\ (reduced) \quad (4)$$

- Oxidation Tank

$$2ADA\ (reduced) + O_2 \rightleftharpoons 2ADA + 2H_2O \quad (5)$$

The rate of absorption of H_2S is pH dependent, which in turn is strongly influenced by the CO_2 content of the feed gas (see Figure 2). Complexing agents such as sodium potassium tartrate or citric acid are sometimes used to prevent vanadium deposition in systems operating beyond their design H_2S removal levels. Solubilized iron with Bellasol S.C.S. or EDTA may also be present in the Stretford solution to speed up the reoxidation of some unwanted colored by-products (Ref. 206).

Several side reactions which form nonregenerable compounds are possible in a Stretford unit. If the sodium hydrosulfide contacts absorbed oxygen in either the absorber or in the oxidation tank (implying the system is removing H_2S at levels above design), sodium thiosulfate will form according to the following reaction:

$$2NaHS + 2O_2 \rightarrow Na_2S_2O_3 + H_2O \quad (6)$$

Since the amount of dissolved O_2 is dependent upon the pH of the liquor, the rate of Reaction 6 is also dependent upon pH and will decrease as pH decreases (see Figure 3). Any hydrogen cyanide present in the feed gas will form sodium thiocyanate via the overall reaction shown in Reaction 7.

$$HCN + NaHS + 1/2O_2 \rightarrow NaCNS + H_2O \quad (7)$$

Any SO_2 present in the feed gas will also be absorbed and eventually oxidized to form sulfate. These unwanted by-products can build up without harm to the process chemistry, but they must eventually be purged from the system to avoid precipitation problems.

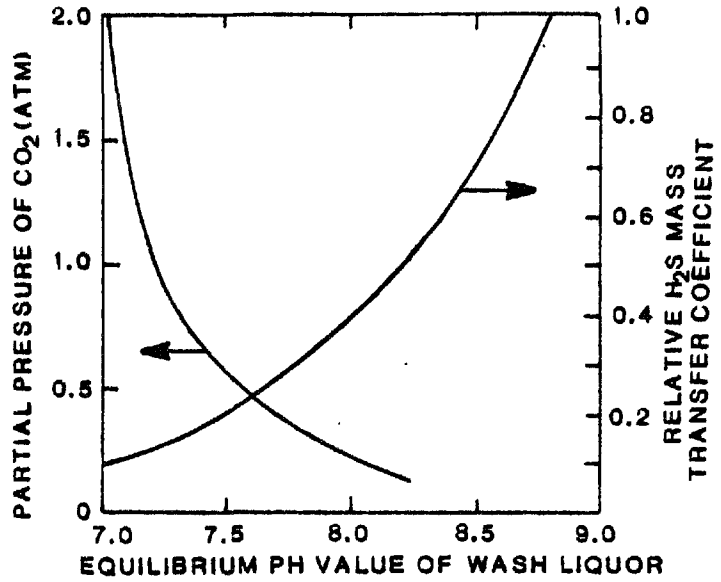

Figure 2. Effect of CO_2 on Stretford operation (Ref. 207)

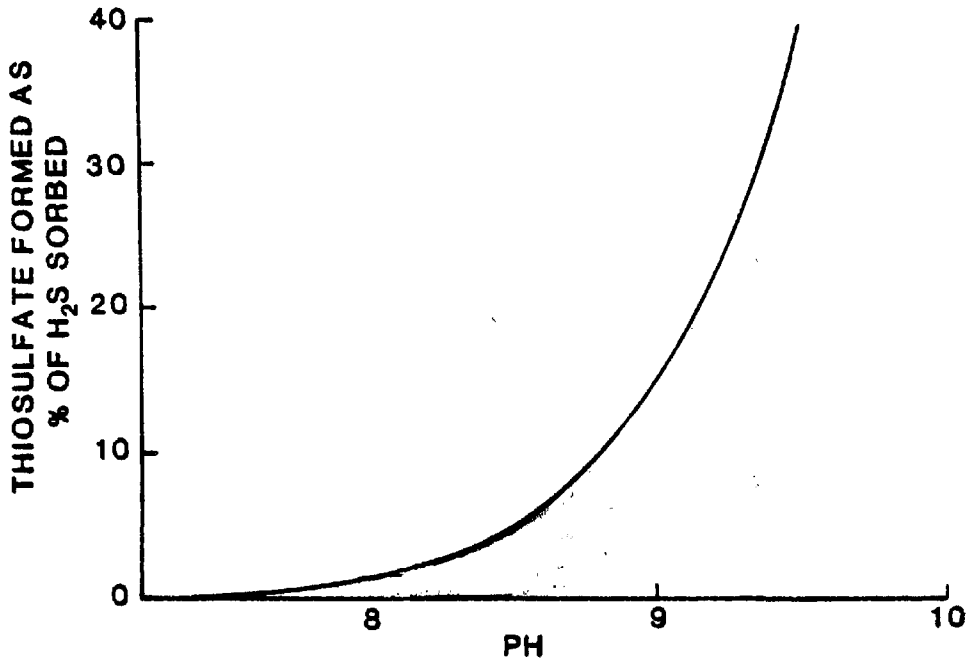

Figure 3. Effect of pH on thiosulfate formation in a Stretford unit (Ref. 208)

Control Effectiveness - The Stretford process can reduce the H_2S content of a gas to less than 1 ppmv. However, organic sulfur compounds (COS, CS_2, thiophenes, etc.) are not removed at all except for minor portions of methyl mercaptans (Ref. 209). Essentially all HCN and SO_2 are removed, but in a nonregenerable fashion, forming thiocyanate and sulfate, respectively.

Operating Parameter Ranges (Ref. 210) -

- Temperature: 300-322°K (80-120°F)
- Pressure:
  - Absorber: 0.1-6.9 MPa (15-1000 psia)
  - Oxidation tank: 0.1 MPa (15 psia)
- pH: 8.5-9.5

Raw Material and Utility Requirements - Basis: Treatment of 28,300 Nm^3 (10^6 scf) of gas containing 0.74 vol % H_2S and 30 ppmv HCN (Refs. 211, 212).

- Chemicals:
  - ADA 0.73 Kg (1.6 lb)
  - $NaVO_3$ 0.44 Kg (1.0 lb)
  - Na_2CO_3 9.6 Kg (21 lb)
- Cooling water duty - 3.6×10^9 joule (3.4×10^6 Btu)
- Electric power - 278 kWh
- Makeup water

PROCESS ADVANTAGES

- Can reduce the H_2S content of a gas to less than 1 ppmv.
- Extremely flexible process, capable of high turndown ratios.
- A properly designed system has low makeup chemical requirements.

- Low maintenance requirements.
- Not pressure sensitive.

PROCESS LIMITATIONS

- Does not remove organic sulfur compounds, except for minor quantities of methyl mercaptans.
- High CO_2 concentrations in the feed gas can cause the system to operate at lower pH's, reducing the efficiency of the process.
- Generally not economical for treating very large volumes of gas, due to equipment size considerations.
- If system becomes overloaded, i.e., H_2S removal rate is greater than the design rate, the undesirable side reaction forming nonregenerable thiosulfate (Reaction 6) can become significant causing excessive scrubbing liquor blowdown rates to be required.
- Not usually economical for treating gas streams containing greater than 15 percent H_2S (Ref. 213).

INLET GAS STREAM

The feed gas to a Stretford unit usually contains less than 15 percent H_2S. A typical feed gas generated by a non-selective acid gas removal process is shown below (Ref. 214):

Component	Vol %	Component	Vol %
CO_2	96.0	CH_4	0.53
H_2S	0.74	C_2H_4	0.22
COS	77 ppmv	C_2H_6	0.30
CS_2	2 ppmv	H_2	0.43
HCN	30 ppmv	H_2O	1.6
CO	0.17		

DISCHARGE STREAMS AND THEIR CONTROL

The Stretford process has both air and liquid discharge streams. These discharge streams are:

- Air Emissions
  - Tail gas (Stream No. 2)
  - Oxidizer vent (Stream No. 5)
- Liquid Effluents
  - Sorbent blowdown (Stream No. 3)
  - By-product sulfur (Stream No. 4)

The following text discusses the compositions of these streams, using the INLET GAS STREAM composition given above as a basis.

Tail Gas - The treated gas from a Stretford unit can be essentially free of H_2S but will contain all of the organic compounds present in the feed gas. In addition, no HCN, SO_2, NH_3 and heavy hydrocarbons are normally present in the treated gas. There are several organic sulfur control processes capable of treating the Stretford tail gas. However, if these species are present in significant quantities, common practice is to convert them to H_2S, e.g., in a Holmes-Maxted, Carpenter-Evans, or British Gas Council unit, prior to their being treated in the Stretford unit. A typical tail-gas composition is given below (Ref. 215):

Component	Vol %	Component	Vol %
CO_2	94.0	CH_4	0.52
H_2S	8 ppmv	C_2H_4	0.22
COS	75 ppmv	C_2H_6	0.29
CS_2	2 ppmv	H_2	0.42
HCN	0	H_2O	4.32
CO	0.16		

Oxidizer Vent - The oxidizer vent consists mainly of O_2, N_2, water vapor and small amounts of CO_2 stripped from the scrubbing liquor. However, if ammonia is present in the feed gas, it will be absorbed with the H_2S, stripped out in the oxidizer, and leave with the vent gases.

Solvent Blowdown Stream - The sorbent blowdown stream is necessary to prevent an excessive buildup of nonregenerable by-products in the recirculating liquors. These by-products include thiosulfates, thiocyanates and sulfates. The purge may be withdrawn continually or the system may be allowed to build up very high concentrations of salts and then be completely discarded. A typical sorbent blowdown stream composition, based on a continual blowdown, is given below (Ref. 216):

Component	wt %	Component	wt %
H_2O	80.0	$NaVO_3$	0.7
$Na_2S_2O_3$	10.8	ADA	1.1
NaCNS	4.4	$NaHCO_3 + Na_2CO_3$	3.0

Several methods are being developed to recover the vanadium present in the blowdown stream, but at the present time, operational data on these processes are not available. Because of the presence of vanadium compounds, ADA, thiocyanates in the blowdown stream, it must be directed to the water pollution control operation for treatment before being discharged or reused.

By-Product Sulfur - The sulfur product from the Stretford process is nominally 99.5% sulfur with small amounts of components such as vanadium salts, sodium thiocyanate and sodium thiosulfate being present as impurities.

Beavon Process

GENERAL INFORMATION

Process Function - The Beavon process is a tail gas cleanup process based on the catalytic conversion of sulfur species to H_2S (via hydrogenation and hydrolysis) followed by recovery of the H_2S as elemental sulfur in a Stretford unit.

Development Status - Commercially available.

Licensor/Developer - Ralph M. Parsons
617 W. Seventh Avenue
Los Angeles, California

Commercial Applications -

- Claus unit tail gas treatment.

Applicability to Coal Gasification - The Beavon process has been shown to be a technically feasible process for treating the tail gas from a Claus unit. The Beavon process should be suitable for treating the tail gas from a coal gasification Claus unit.

PROCESS INFORMATION

Equipment - Burner, catalytic reactor, coolers, absorber, oxidation tank, surge tank.

Flow Diagram - Figure 1 is a simplified flow scheme of the Beavon process. Sulfur species are converted to H_2S in the catalytic reactor via the following reactions.

$$S + H_2 \rightleftharpoons H_2S \quad (1)$$

$$SO_2 + 3H_2 \rightleftharpoons H_2S + 2H_2O \quad (2)$$

$$COS + H_2O \rightleftharpoons H_2S + CO_2 \quad (3)$$

$$CS_2 + 2H_2O \rightleftharpoons 2H_2S + CO_2 \quad (4)$$

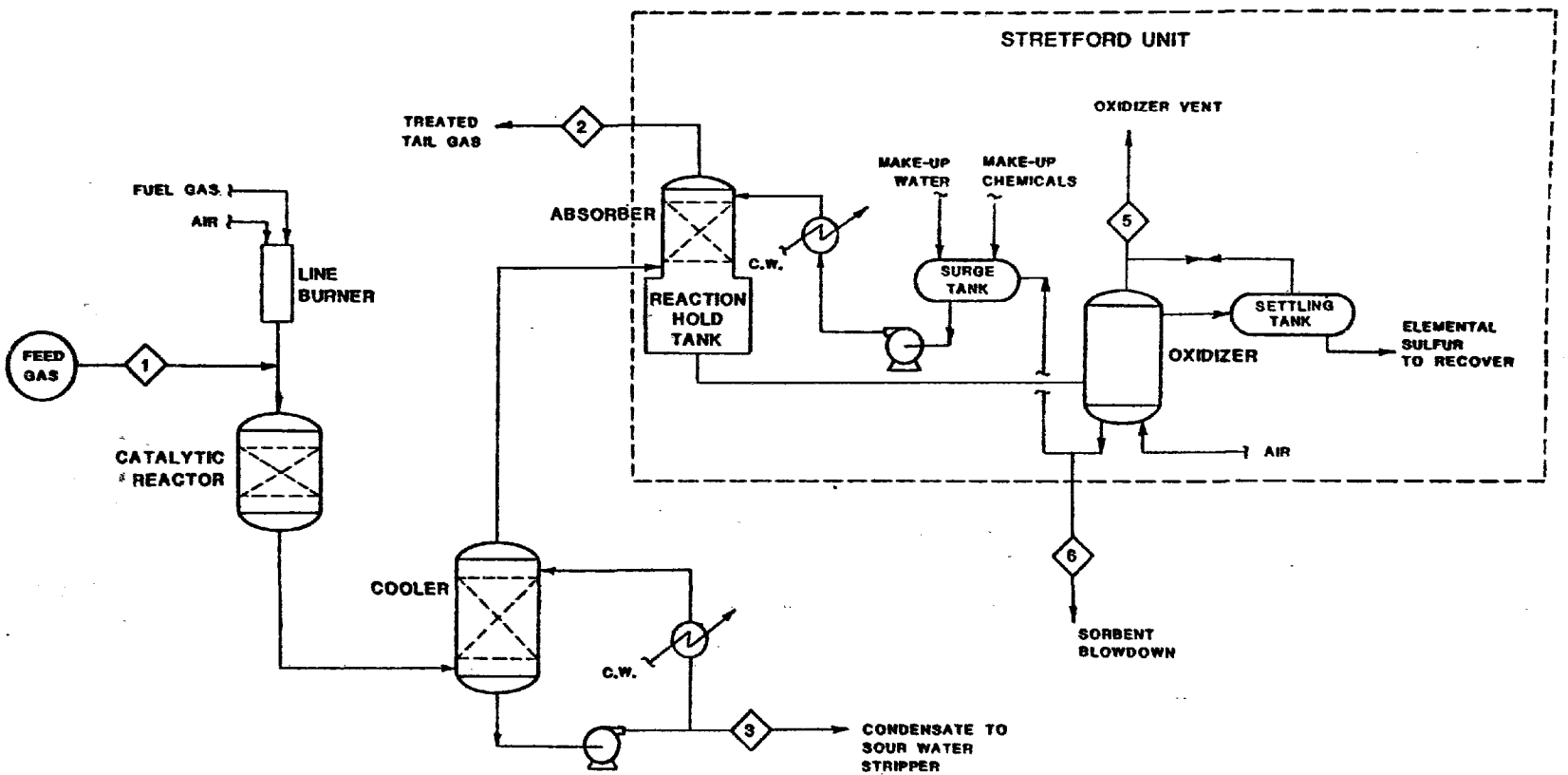

Figure 1. Typical flow diagram - Beavon Tail Gas Treating Process

The hydrogen for Reactions 1 and 2 can be supplied by substoichiometric combustion of fuel gas (which also supplies heat for the above reactions), if sufficient hydrogen is not present in the feed gas. After being cooled, the converted gases are treated in a Stretford unit for recovery of the H_2S as elemental sulfur (See Fact Sheet for Stretford Process for details of this portion of the Beavon Process). No undesirable side reactions occur in the catalytic converter. Since trace elements are normally not present in the Claus tail gas, the catalyst should remain active for extended periods of time (Ref. 217).

Control Effectiveness - The effectiveness of the Beavon process for removing sulfur species is dependent upon two factors: 1) the conversion efficiencies obtained in the catalytic reactor and 2) the removal efficiency of the Stretford unit. The equilibrium constants for Reactions 1 and 2 are very high and hence essentially complete conversion of S and SO_2 occurs. The extent of hydrolysis of COS and CS_2 is also very high as illustrated in Figures 2 and 3. Normally less than 100 ppmv of non-H_2S sulfur compounds are present in the reactor effluent (Ref. 218). The Stretford process is capable of reducing the H_2S content of a gas to less than 1 ppmv. Therefore, the Beavon process should be able to produce a treated gas with less than 100 ppmv of total sulfur species and less than 1 ppmv of H_2S.

Operating Parameter Ranges (Refs. 219, 220) -

- **Temperature:**
  - 560-670°K (550-750°F) Catalytic (hydrogenation) reactor
  - 300-322°K (80-120°F) (Stretford)
- **Pressure: Atmospheric**

Raw Material and Utility Requirements - Basis: Treatment of the tail gas from a 1.05 kg/s (100 tpd) Claus sulfur plant (Ref. 221):

- Electrical power: 283 kW
- Fuel gas: 0.04 Nm^3/s (125 x 10^3 scf/d)
- Boiler feed water: 0.0005 m^3/s (12 x 10^3 gal/d)

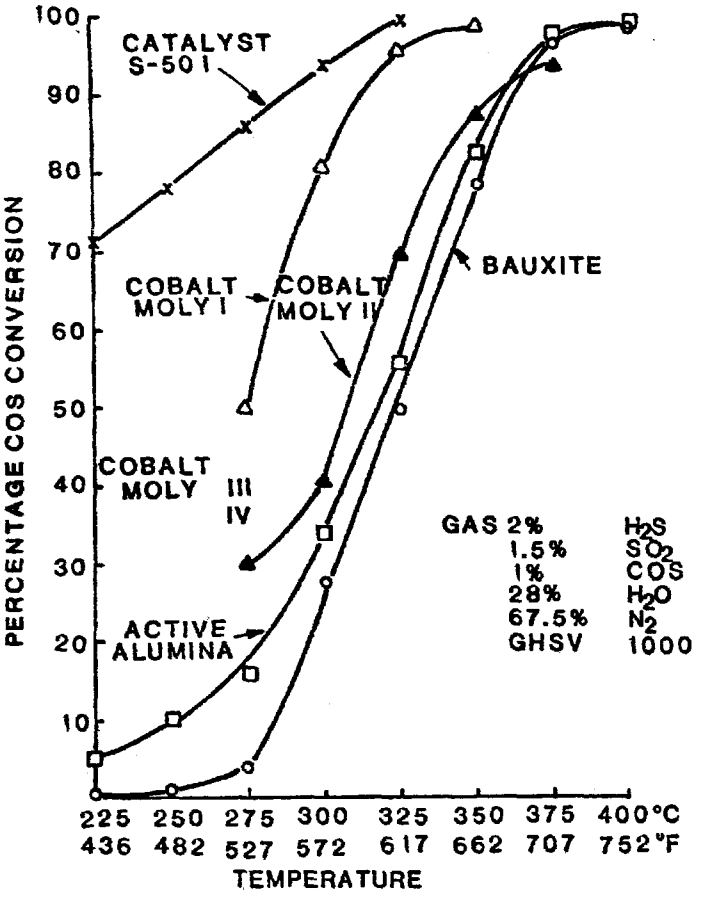

Figure 2. Conversion of COS to H_2S over sulfated catalysts (Ref. 222)

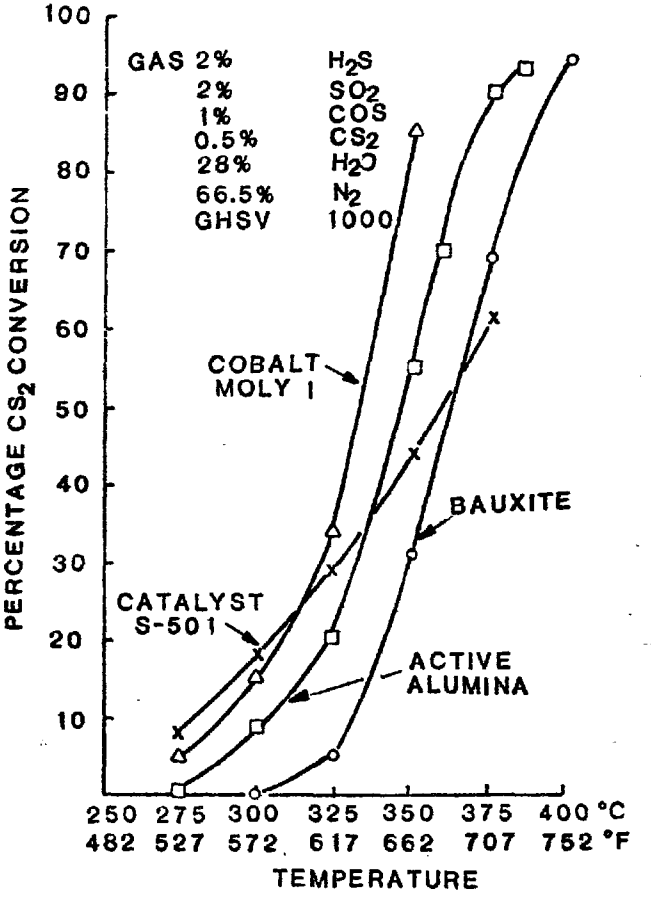

Figure 3. Conversion of CS_2 to H_2S over sulfated catalysts (Ref. 223)

- Makeup chemicals for Stretford unit (see Stretford Process fact sheet)
- Cooling water
- Makeup water

Utility Credits and By-products (Ref. 224):

- Steam 0.3 kg/s (2500 lb/hr)
- Sulfur from Stretford unit

PROCESS ADVANTAGES

- Recovers organic sulfur compounds and SO_2 as elemental sulfur.
- Can utilize existing Stretford plant, if available.

PROCESS LIMITATIONS

- Data not available on catalytic reactor section (See Fact Sheet on Stretford process for limitations on the sulfur recovery section).
- Requires some type of fuel gas to supply heat and to produce a reducing gas for the catalytic reactor.

INLET GAS STREAM

The composition of a typical Claus tail gas which may be treated in a Beavon unit is as follows (Ref. 225):

Component	Vol %	Component	Vol %
H_2	2.5	S	0.7
CO	1.0	H_2S	2.0
CO_2	10.0	SO_2	1.0
N_2	56.2	COS	0.3
H_2O	26.0	CS_2	0.3

DISCHARGE STREAMS AND THEIR CONTROL

The Beavon process has both air and liquid discharge streams. These discharge streams are:

- Air Emissions
  - Treated tail gas (Stream No. 2)
  - Oxidizer vent (Stream No. 5)
- Liquid Effluents
  - By-Product sulfur (Stream No. 4)
  - Stretford sorbent blowdown (Stream No. 6)
  - Condensate (Stream No. 3)

The following text discusses the compositions of these streams, using the INLET GAS STREAM composition given above as a basis.

Treated Tail Gas - The treated gas from the Beavon process can contain less than 1 ppmv H_2S. A typical treated gas composition is as follows:

Component	Vol %	Component	Vol %
H_2	varies	S	-
CO	0.2	H_2S	-
CO_2	14.2	SO_2	-
N_2	80.8	COS	<250 ppm
H_2O	5.0	CS_2	-

Oxidizer Vent - The oxidizer vent contains N_2, O_2, H_2O and CO_2. If NH_3 is present in the feed gas to the Beavon unit it will be removed in the H_2S absorber, stripped out by the air in the oxidizer, and exit with the vent gases.

By-Product Sulfur - The by-product sulfur stream is normally at least 99.5% pure sulfur, with the main impurities being chemicals present in the Stretford solution such as meta-vanadate, anthraquinone disulfonic acid (ADA), carbonate, bicarbonate, thiosulfate and thiocyanate salts.

Stretford Sorbent Blowdown - This stream contains high concentrations of salts such as $Na_2S_2O_3$, NaCNS, $NaVO_3$, ADA, $NaHCO_3$ and Na_2CO_3. The Stretford Process Fact Sheet gives further details on this discharge stream.

Condensate Stream - The condensate stream will contain dissolved H_2S. However, if this component is stripped out, the water should be suitable for reuse (Ref. 226).

SCOT (Shell Claus Offgas Treating) Process

GENERAL INFORMATION

Process Function - The SCOT process is a tail gas cleanup process based on the catalytic conversion of sulfur species (COS, CS_2, SO_2, S, etc.) to H_2S (via hydrogenation and hydrolysis) followed by removal and recovery of the H_2S in an alkanolamine scrubbing system.

Development Status - Commercially available.

Licensor/Developer - Shell Development Co. (USA)
One Shell Plaza
P.O. Box 2463
Houston, Texas 77001

Commercial Applications -

- Claus unit tail gas treatment.

Applicability to Coal Gasification - The SCOT process has been shown to be a technically feasible process for treating the tail gas from a Claus unit. The SCOT process should be suitable for treating the tail gas from a coal gasification plant Claus unit or Stretford unit.

PROCESS INFORMATION

Equipment - Catalytic reactor, cooler, absorber, stripper.

Flow Diagram - Figure 1 is a simplified flow scheme of the SCOT process. In this process, sulfur species are converted to H_2S in the catalytic reactor via the following reactions.

$$S + H_2 \rightleftharpoons H_2S \quad (1)$$

$$SO_2 + 3H_2 \rightleftharpoons H_2S + 2H_2O \quad (2)$$

$$COS + H_2O \rightleftharpoons H_2S + CO_2 \quad (3)$$

$$CS_2 + 2H_2O \rightleftharpoons 2H_2S + CO_2 \quad (4)$$

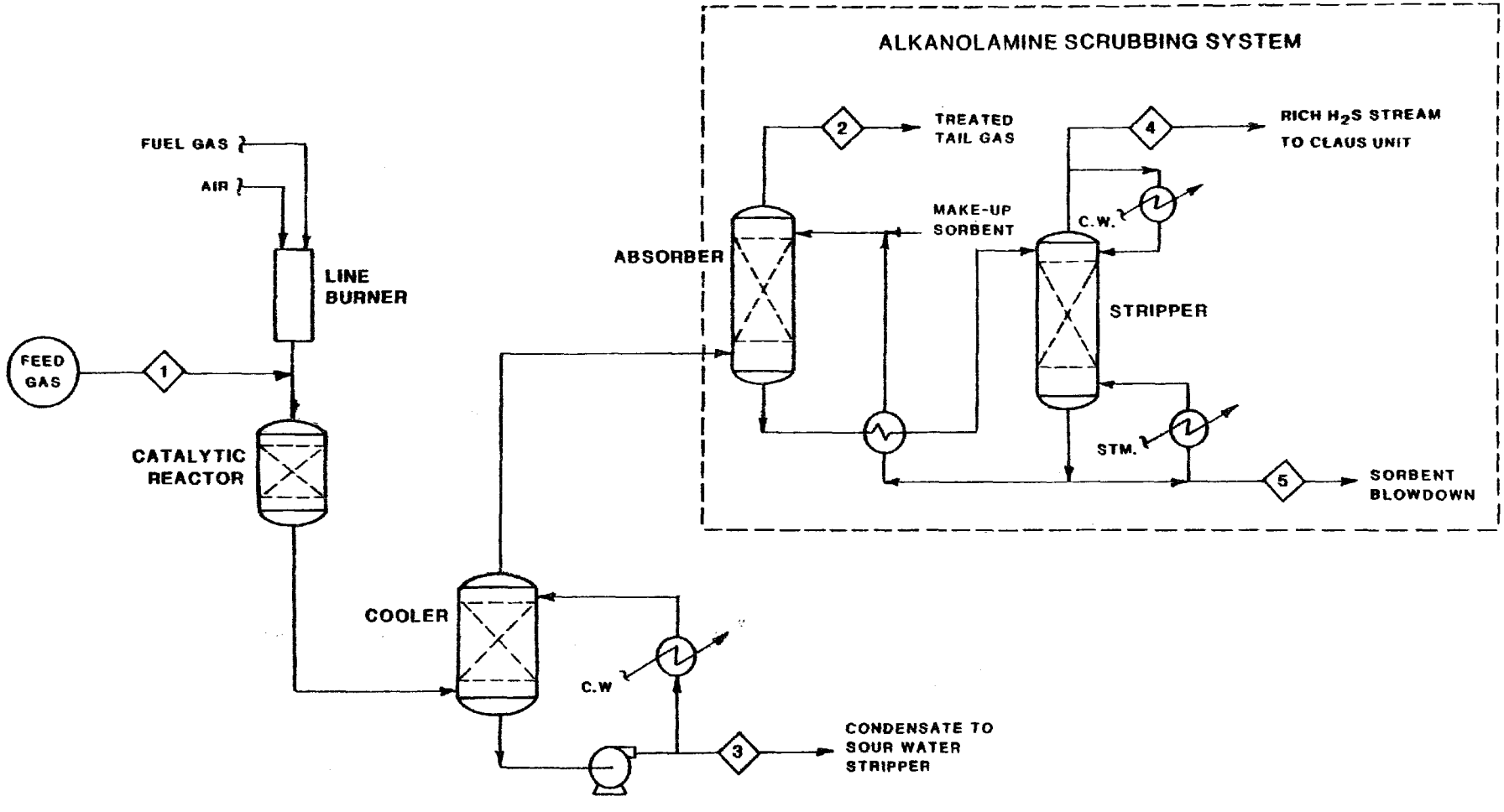

Figure 1. Typical flow diagram - Scot Tail Gas Treating Process

The hydrogen for Reactions 1 and 2 can be supplied by substoichiometric combustion of a light hydrocarbon (which also supplies heat for the above reactions), if sufficient hydrogen is not present in the feed gas. After being cooled, the converted gases are sent to an alkanolamine scrubbing unit for removal of the H_2S which can be subsequently recovered and recycled to the Claus unit.

Control Effectiveness - The effectiveness of the SCOT process for removing sulfur species is dependent upon two factors: 1) the conversion efficiencies obtained in the catalytic reactor and 2) the removal efficiency of the alkanolamine unit. The equilibrium constants for reactions 1 and 2 are very high and hence essentially complete conversion of S and SO_2 occurs. The extent of hydrolysis of COS and CS_2 is also very high, as illustrated in Figures 2 and 3. Normally, less than 100 ppmv of non-H_2S sulfur compounds are present in the reactor effluent. The alkanolamine process is capable of reducing the H_2S content of a gas to less than 10 ppmv. Therefore, the SCOT process should be able to produce a treated gas with around 100 ppmv or less of total sulfur species and less than 10 ppmv of H_2S. However, reported data indicate 200-500 ppmv is a more typical concentration level for the sulfur species in the treated tail gas (Ref. 227, 228).

Operating Parameter Ranges (Ref. 229) -

- Temperature:
  - Catalytic reactor: around 575°K (575°F)
  - Absorber: 290-310°K (60-100°F)
  - Stripper: around 395°K (250°F)
- Pressure: Atmospheric

Raw Material and Utility Requirements - Basis: removal of 0.45 Kg (1 lb) of sulfur (Ref. 230).

- Steam: 5.2 kg (11.4 lb)
- Cooling water: 0.39 m^3 (103 gal)
- Electric power: 0.042 kWh
- Fuel gas: 4.6×10^6 joule (4.4×10^3 Btu)
- Makeup alkanolamine

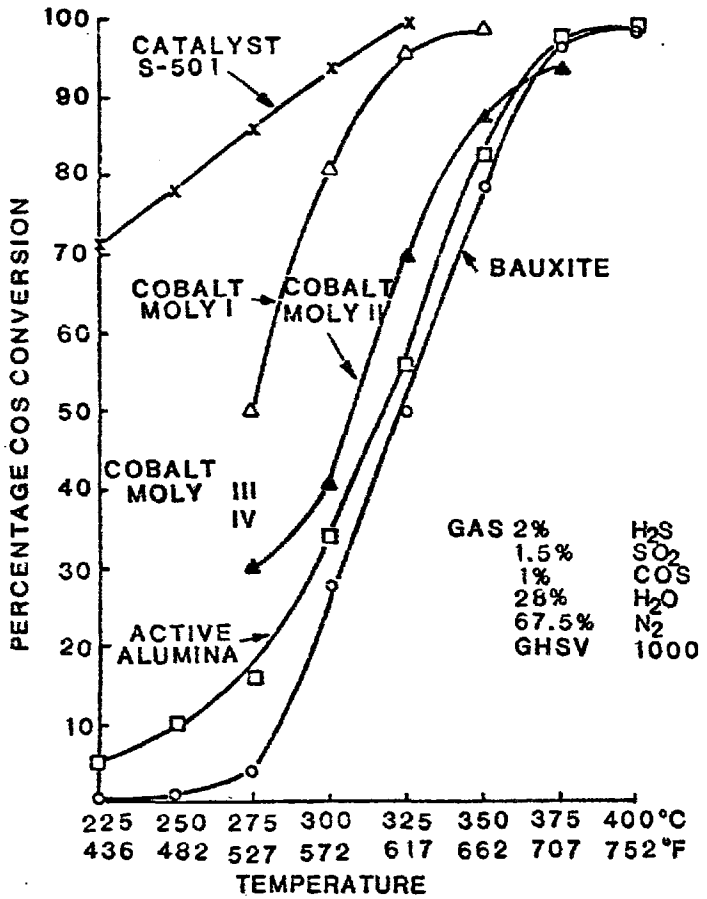

Figure 2. Conversion of CO_2 to H_2S over sulfated catalysts (Ref. 231)

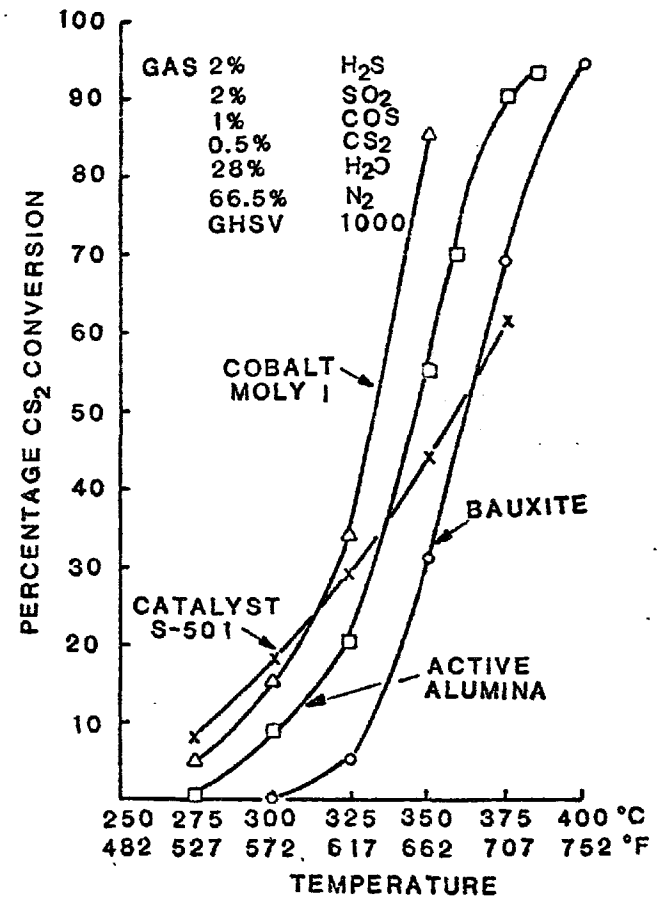

Figure 3. Conversion of CS_2 to H_2S over sulfated catalysts (Ref. 232)

02-1261-1

PROCESS ADVANTAGES

- Utilizes proven sulfur recovery equipment.
- System should be capable of higher removal efficiencies if desirable.

PROCESS LIMITATIONS

- Requires some type of fuel gas to supply heat and to produce a reducing gas for the catalytic reactor.

INLET GAS STREAM

The composition of a typical Claus plant tail gas which may be treated in a SCOT unit is (Ref. 233):

Component	Vol %	Component	Vol %
H_2S	.85	CO	.22
SO_2	.42	CO_2	2.37
S	.05	H_2	1.6
COS	.05	H_2O	33.1
CS_2	.04	N_2	61.3

DISCHARGE STREAMS AND THEIR CONTROL

The SCOT process has both air and liquid discharge streams. These discharge streams are:

- Air Emissions
  - Treated tail gas (Stream No. 2)
  - Rich H_2S stream (Stream No. 4)
- Liquid Effluents
  - Process condensate (Stream No. 3)
  - Sorbent blowdown (Stream No. 5)

The following text discusses the compositions of these streams using the INLET GAS STREAM composition given above as a basis.

Treated Tail Gas - The tail gas is normally fed to an incinerator to convert all remaining sulfur compounds to SO_2. A typical tail gas composition is as follows (Ref. 234).

Component	Vol %	Component	Vol %
H_2S	.03	CO	-
SO_2	-	CO_2	3.05
S	-	H_2	.96
COS	10 ppm	H_2O	7.0
CS_2	1 ppm	N_2	90.0

Rich H_2S Stream - The rich H_2S stream generated by the alkanolamine stripper is normally recycled to the Claus unit for sulfur recovery. This stream will also contain some CO_2, with the amount depending upon the alkanolamine system used.

Process Condensate - The condensate stream will contain dissolved H_2S. However, if this component is stripped out, the water should be suitable for reuse (Ref. 235).

Sorbent Blowdown - The sorbent blowdown stream contains primarily H_2O, alkanolamine and alkanolamine degradation products. Although the flow rate of this stream should be minimal, this stream would normally be directed to the water pollution control operation for treatment.

Direct-Flame Afterburners

GENERAL INFORMATION

Process Function - Hydrocarbon control device which converts combustible materials to CO_2 and H_2O through direct combustion.

Development Status - Commercially available.

Licensor/Developer - Not applicable.

Commercial Applications -

- Widely used in various industries to control hydrocarbon emissions from operations involving solvents, oil, and grease.

Applicability to Coal Gasification - Catalytic afterburners should be a feasible process for controlling hydrocarbon emissions in the tail gases from sulfur recovery processes, streams produced by acid gas removal systems during regeneration or other waste streams containing hydrocarbons.

PROCESS INFORMATION

Flow Diagram - See Figure 1.

Control Effectiveness - Dependent upon flame temperature and other factors. See Figure 2 and Tables 1 and 2.

Operating Parameter Ranges -

- Temperature - See Table 3.
- Pressure - Atmospheric

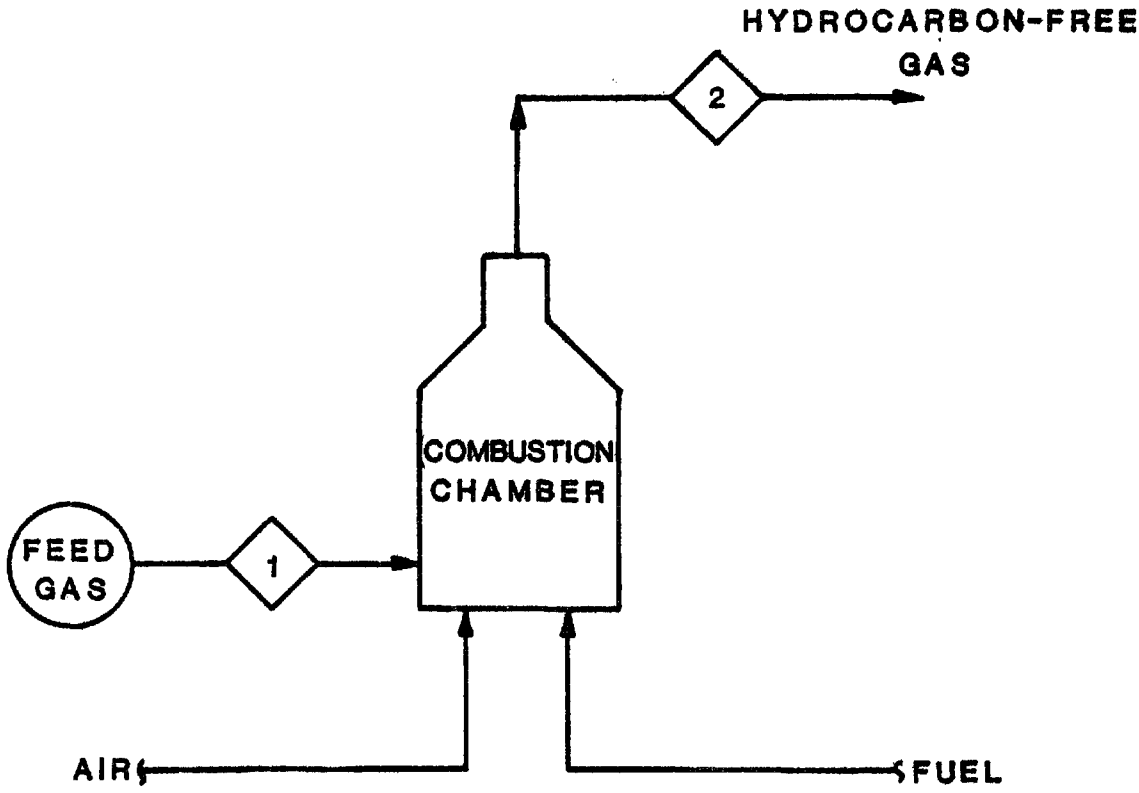

Figure 1. Typical Flow Diagram - Direct Flame Afterburner

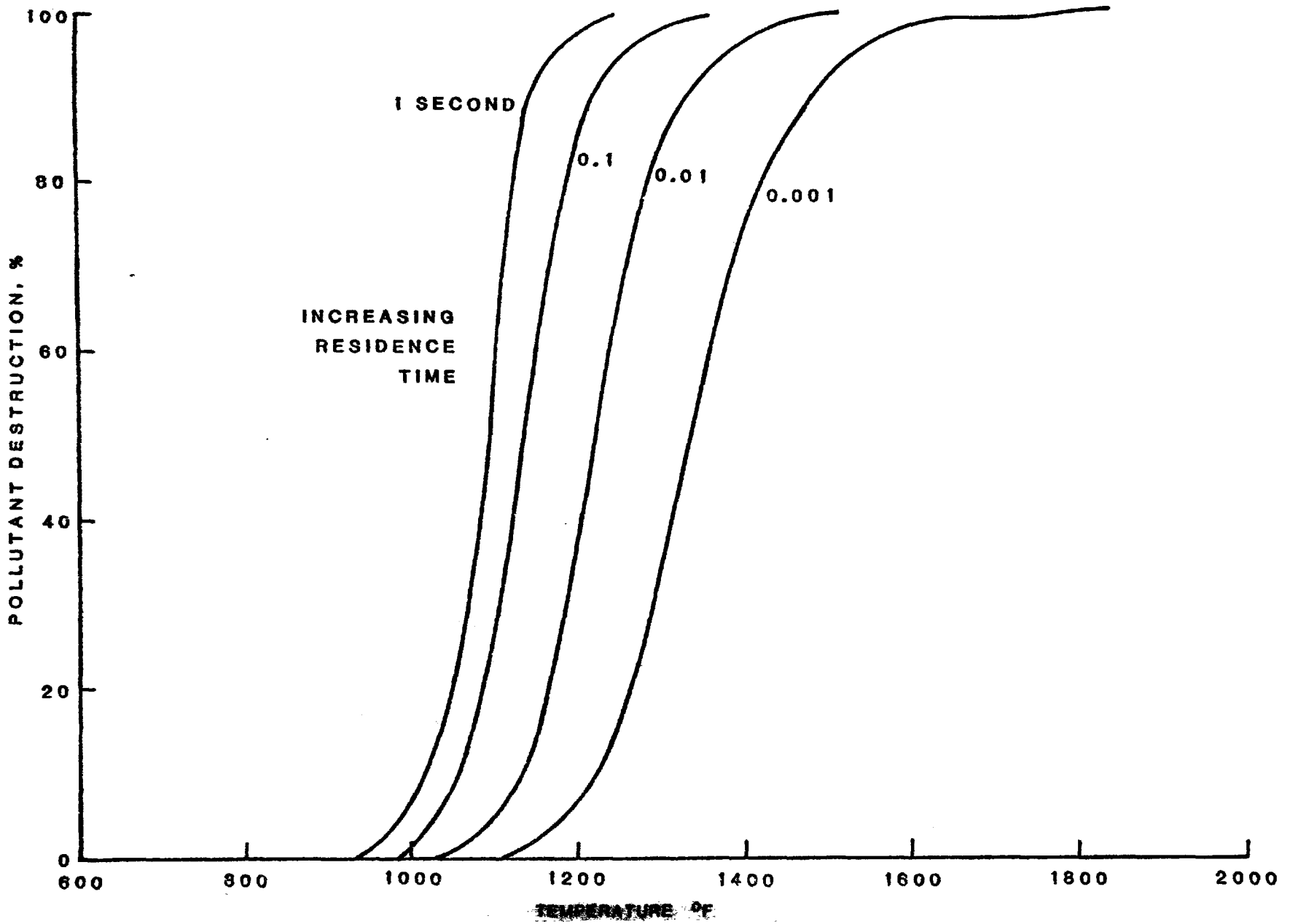

Figure 2. Effect of flame temperature and residence time on the control of hydrocarbons emissions by direct flame afterburner.

TABLE 1. TYPICAL ANALYSIS OF EMISSIONS ENTERING AND LEAVING LARGE DIRECT-FIRED AFTERBURNER

	Temperature			
	1030°K(1400°F)		1090°K(1500°F)	
	In	Out	In	Out
CO_2, ppm	6,300	22,000	6,600	27,000
CO, ppm	59	230	65	21
Organics as CO_2, ppm	1,568	235*	1,591	70
Volume (dry basis), Nm^3/s (scfm)	5.7(12,000)	5.6(11,800)	5.7(12,000)	5.6(11,800)
Organics (as carbon), g/s (lb/hr)	4.5(35.6)	0.66(5.26)	4.6(36.2)	0.20(1.6)
Afterburner efficiency, %	85		96	

* Includes increase of CO across afterburner.

(Ref. 236)

TABLE 2. TYPICAL ANALYSIS OF EMISSIONS ENTERING AND LEAVING SMALL DIRECT-FIRED AFTERBURNER

	Temperature			
	980°K(1300°F)		1030°K(1400°F)	
	In	Out	In	Out
CO_2, ppm	1,950	19,000	2,000	23,500
CO, ppm	8	110	9	24
Organics as CO_2, ppm	521	122*	408	33[a]
Volume (dry basis), Nm^3/s (scfm)	1.1(2,240)	1.0(2,200)	1.1(2,240)	1.0(2,200)
Organics (as carbon), g/s (lb/hr)	0.28(2.21)	0.06(0.50)	0.22(1.74)	0.02(0.14)
Afterburner efficiency, %	77		92	

*Includes increase of CO across afterburner.

(Ref. 237)

Raw Material and Utility Requirements -

- Typical supplemental fuel requirements are shown in Figures 3 and 4.
- Dependent upon the composition of the stream to be treated and the required control efficiency.

TABLE 3. THERMAL AFTERBURNER CONDITIONS

Abatement Category	Afterburner Residence Time (sec)	Temperature, °K(°F)
Hydrocarbons (90% + destruction)	0.3 - 0.5	870-950 (1100-1250)
Hydrocarbons + CO (90% + destruction of HC + CO)	0.3 - 0.5	950-1090 (1250-1500)
Odor		
(50-90% destruction)	0.3 - 0.5	810-920 (1000-1200)
(90-99% destruction)	0.3 - 0.5	870-980 (1100-1300)
(99% + destruction)	0.3 - 0.5	920-1090 (1200-1500)

(Ref. 238)

PROCESS ADVANTAGES

- Proven process for reducing the emission of hydrocarbons and other combustibles.
- May use existing boiler or furnace.

PROCESS LIMITATIONS

- Normally requires supplemental fuel to raise gas stream to combustion temperature.

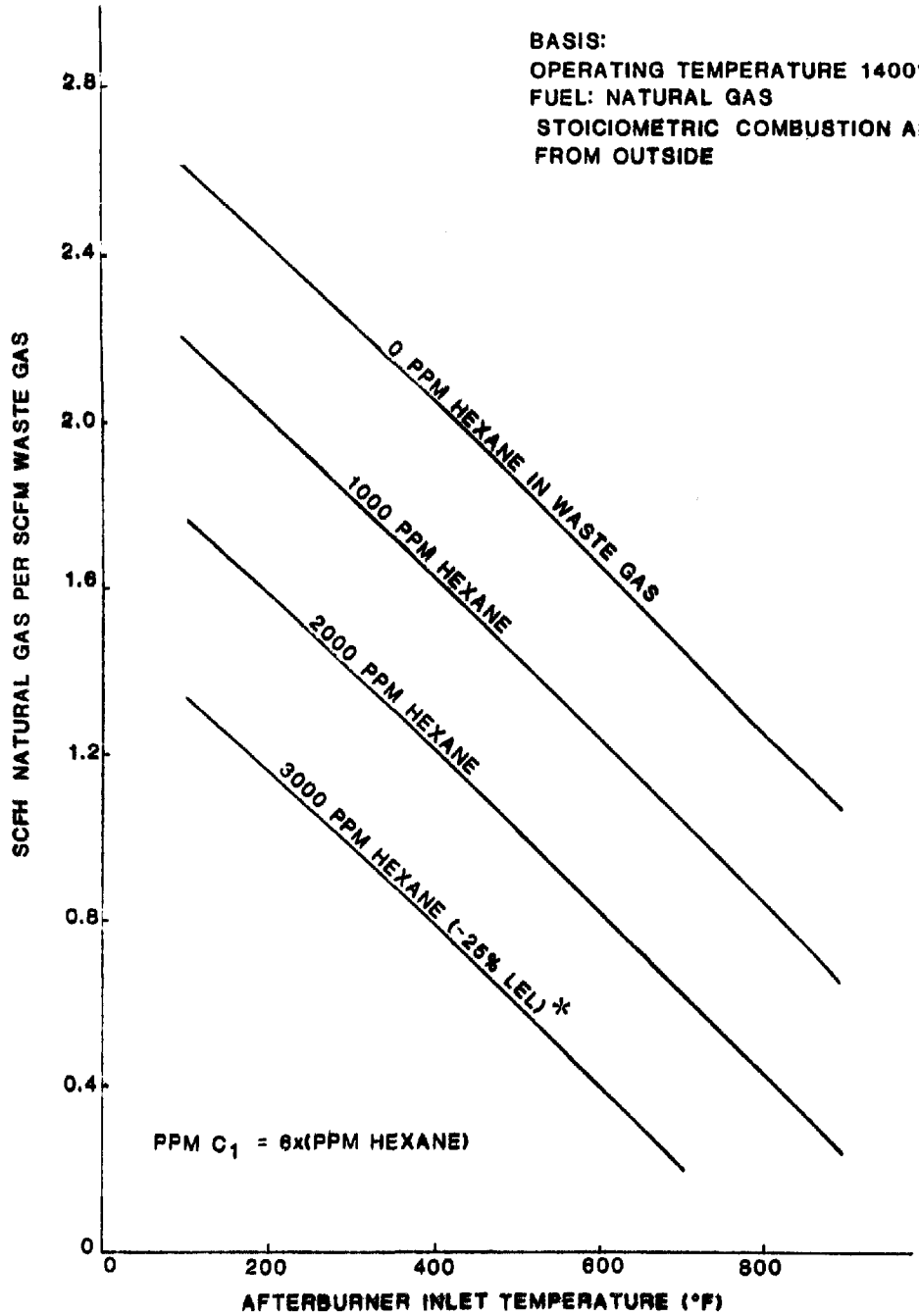

*LEL = Lower Explosion Limit

Figure 3. Supplemental fuel requirements (natural gas)--Direct Flame Afterburners (Ref. 239)

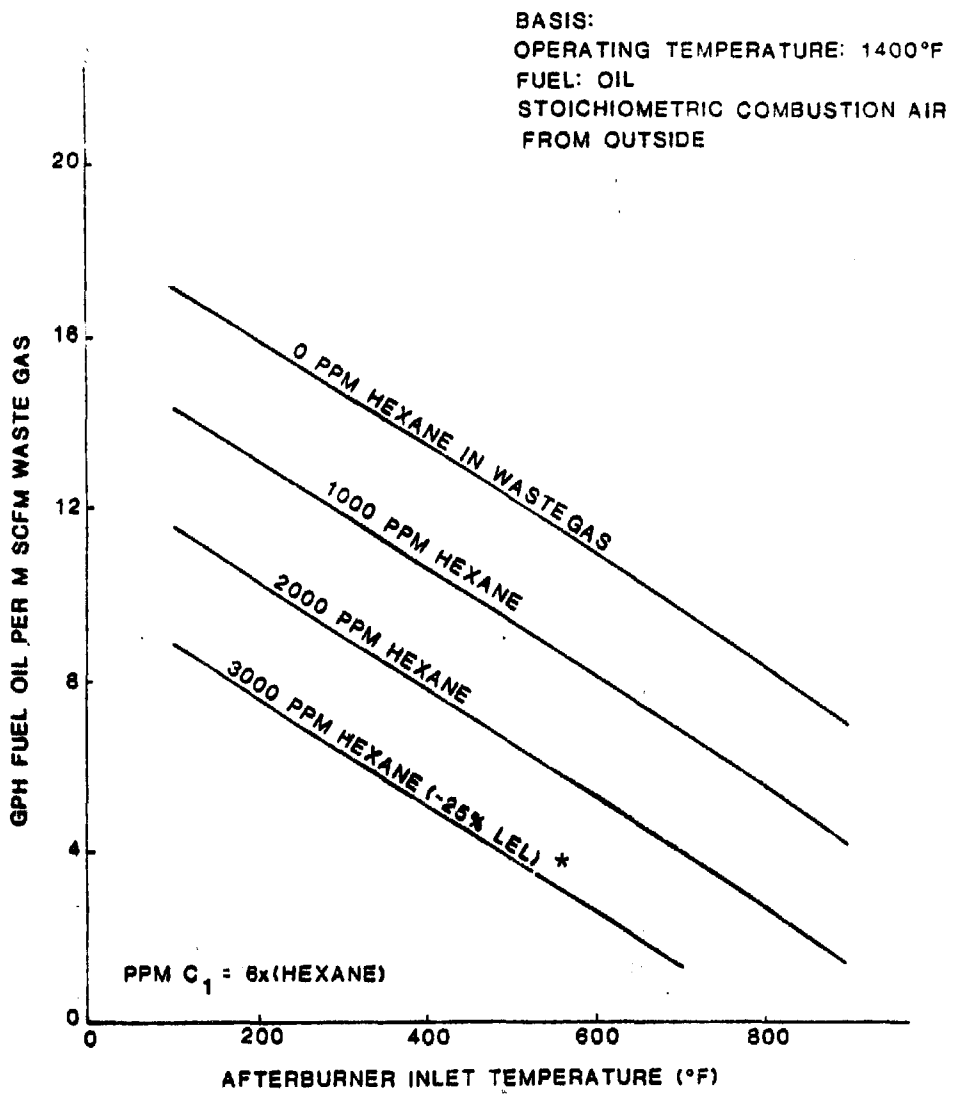

*LEL = Lower Explosion Limit

Figure 4. Supplemental fuel requirements (fuel oil)--Direct Flame Afterburners (Ref. 240)

INLET GAS STREAM

The inlet gas stream to this process is composed of hydrocarbons, H_2, CO, CO_2, H_2O, and possibly small amounts of sulfur compounds such as H_2S and COS. These streams may be the tail gas from sulfur recovery processes or streams produced by acid gas removal systems during regeneration.

DISCHARGE STREAMS

The use of direct flame afterburners for hydrocarbon control produces only one discharge stream, the treated gas (Stream No. 2). This stream contains primarily CO_2, H_2O, N_2, with possibly small amounts of hydrocarbons and SO_2. It should be ventable to the atmosphere with no further treatment.

Catalytic Afterburners

GENERAL INFORMATION

Process Function - Hydrocarbon control device which converts combustible materials to CO_2 and H_2O through catalytic oxidation.

Development Status - Commercially available.

Licensor/Developer - Not applicable.

Commercial Applications -

- Paint drying ovens
- Wire enameling ovens
- Varnish cookers

Applicability to Coal Gasification - Catalytic afterburners should be a feasible process for controlling hydrocarbon emissions in the tail gases from sulfur recovery processes, streams produced by acid gas removal systems during regeneration or other waste streams containing hydrocarbons.

PROCESS INFORMATION

Equipment - A preheat burner section, a catalyst chamber, heat recovery equipment.

Flow Diagram - See Figure 1.

Control Effectiveness - Function of many variables such as:

- Catalyst surface area
- Catalyst type
- Flow uniformity through catalyst
- Oxygen concentration

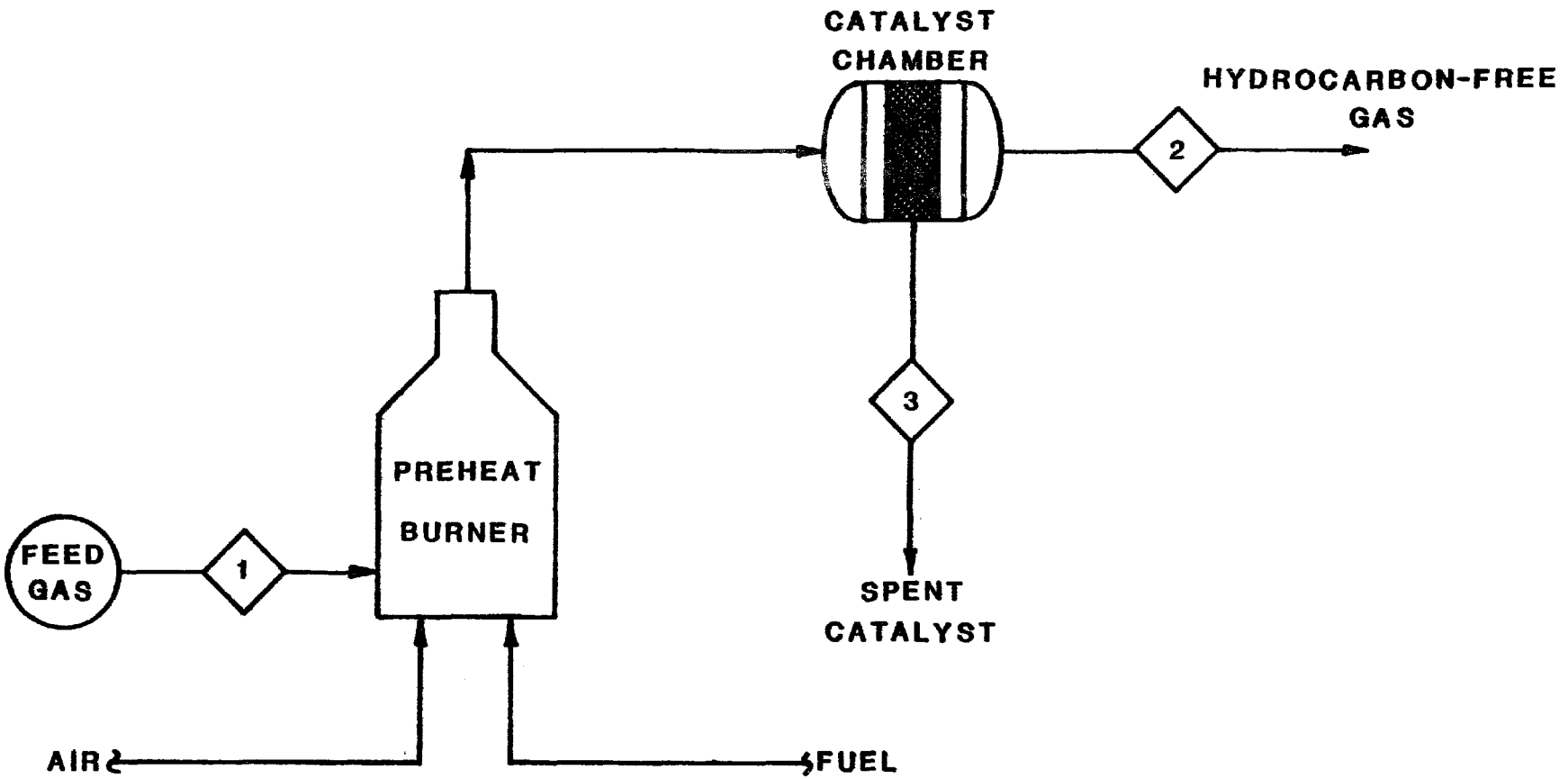

Figure 1. Typical flow diagram - Catalytic Afterburner

- Temperature
- Volume of gases per volume of catalyst per unit time
- Presence of catalyst poisons in inlet gas

Typically, 90 percent removal of combustibles can be achieved (see Figure 2).

Operating Parameter Ranges -

- Temperature - see Table 1
- Pressure - atmospheric

Raw Materials and Utility Requirements -

- Catalyst makeup - A typical catalyst would consist of an active noble metal deposited on a support material such as alumina.
- Fuel - Typical supplemental fuel requirements are shown in Figures 3 and 4.

TABLE 1. TEMPERATURES FOR CATALYTIC OXIDATION

Component	Ignition Temp. °F	Minimum Preheat Temp. for 90% conversion with organic concentration 10% LEL*			
		Acres	Miller & Sowards	Thomiades	Romeo & Warsh
H_2	68	68		250	32
CO	300	300-390		500	600
Propane	320	480-570	480	500	660
n-Pentane	320	480-570	480		570 a
n-Heptane	320	480-570	480		570 a
n-Decane	320	480-570	480		570 a
Benzene	355	480-570		575	500
Toulene	340	480-570		575	
Xylene	390	480-570	572	575	570
Methane	750	840-930		932	800
Thiophene	635	750-840			

(Ref. 241)

* - Lower Explosion Level

a - Naphtha

Note: Al_2O_3 base catalyst
°K = (°F + 460)/1.8

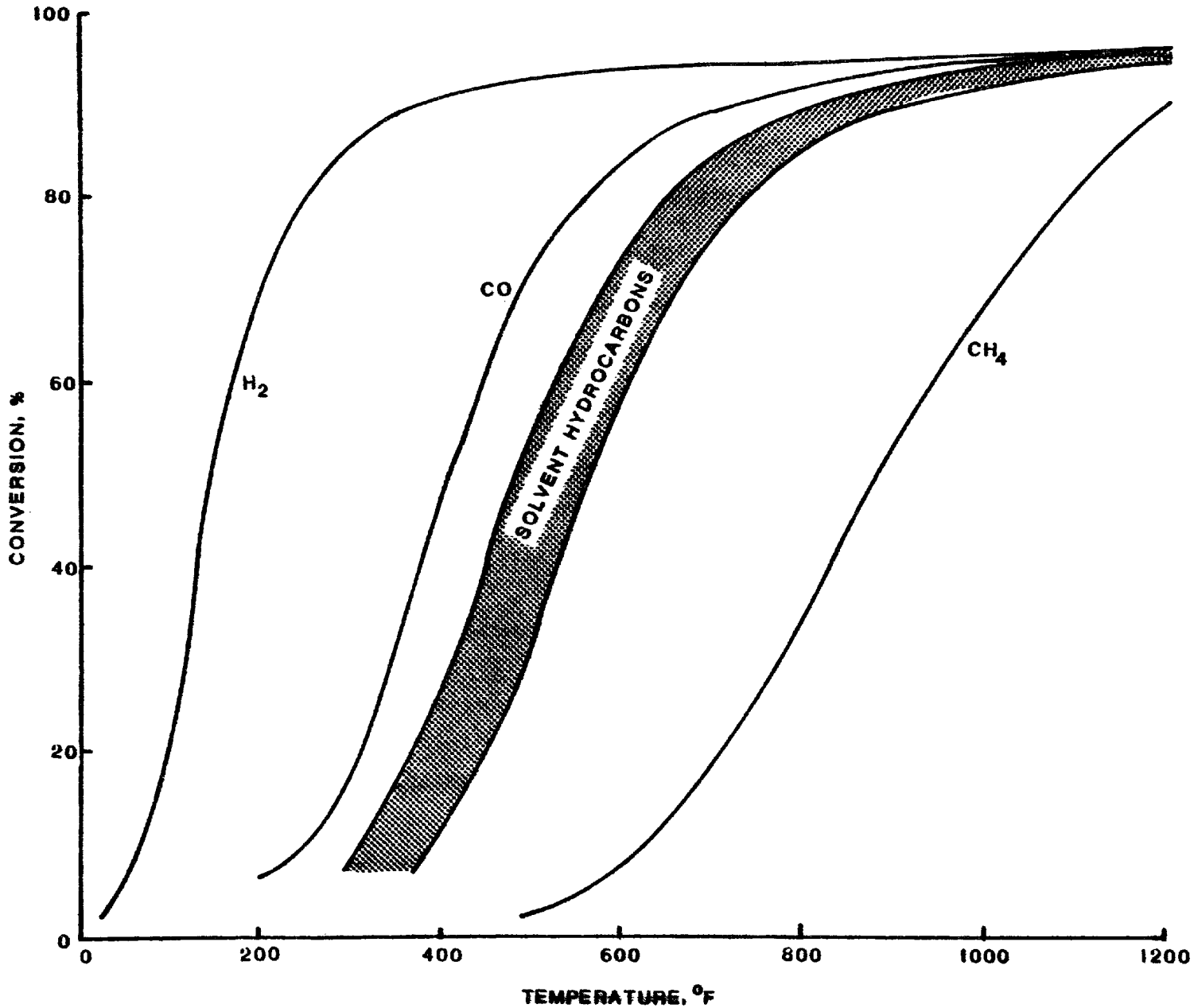

Figure 2. Catalytic Afterburner performance for Pt/Al_2O_3 catalyst (Ref. 242)

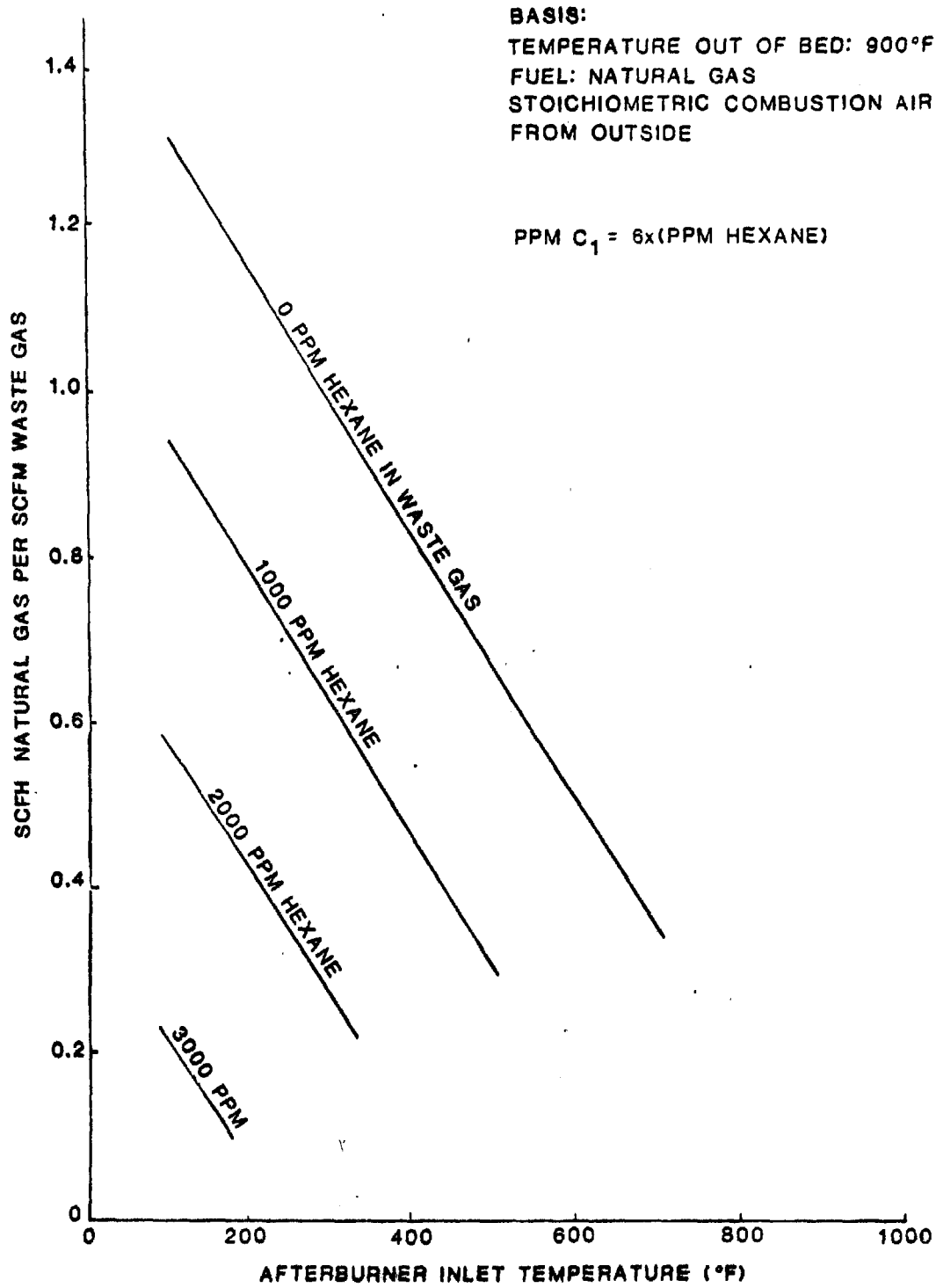

Figure 3. Fuel consumption (natural gas)--Catalytic Afterburners (Ref. 243)

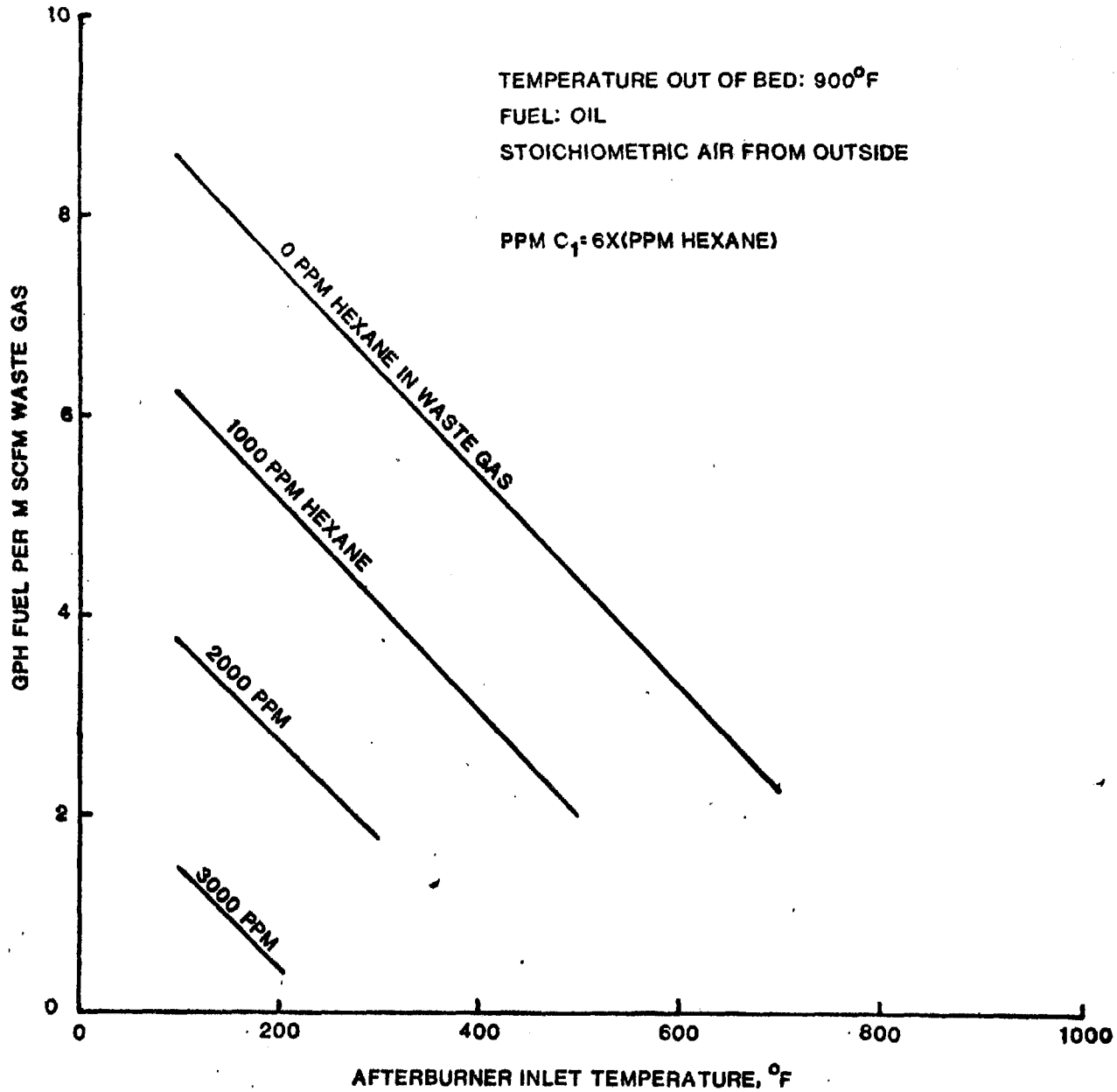

Figure 4. Fuel consumption (fuel oil)--Catalytic Afterburners (Ref. 244)

PROCESS ADVANTAGES

- Requires less supplementary fuel than direct flame afterburners.

PROCESS LIMITATIONS (Ref. 245)

- Catalyst degrades and requires periodic replacement.
- Catalyst is susceptible to poisons such as mercury, arsenic and lead.
- Incomplete combustion can cause discharge of gases that are odorous and eye irritating due to the presence of aldehydes, ketones and organic acids.

INLET GAS STREAM

The inlet gas stream to this process is composed of hydrocarbons, H_2, CO, CO_2, H_2O, and possibly small amounts of sulfur compounds such as H_2S and COS. These streams may be the tail gas from sulfur recovery processes or streams produced by acid gas removal systems during regeneration.

DISCHARGE STREAMS

The use of catalytic afterburners for hydrocarbon control produces two discharge streams. These discharge streams are:

- Air Emissions
  - Treated Gas (Stream No. 2)
- Solid Wastes
  - Spent catalyst (Stream No. 3)

These discharge streams are discussed below.

Treated Gas - The treated gas stream contains primarily CO_2, H_2O, N_2, with possibly small amounts of hydrocarbons and SO_2. This stream should be ventable to the atmosphere with no further treatment.

Spent Catalyst - The spent catalyst may be sent to the catalyst manufacturer for regeneration. If not, it represents an environmental concern in the form of a solid waste.

Carbon Adsorption

GENERAL INFORMATION

Process Function - Control process which removes hydrocarbons from gas streams by carbon adsorption with subsequent thermal regeneration of the carbon.

Development Status - Commercially available.

Licensor/Developer - Not applicable.

Commercial Applications -

- Recovery of organics from manufacturing operations
- Removal of hydrocarbons and other contaminants (e.g., sulfur compounds) from gas streams

Applicability to Coal Gasification - Technically feasible process for controlling hydrocarbon emissions from 1) tail gases from sulfur recovery processes, 2) streams produced in acid gas removal systems during regeneration, or 3) other waste streams containing hydrocarbons.

PROCESS INFORMATION

Equipment - Absorbers containing activated carbon beds, coolers

Flow Diagram - See Figure 1.

Control Effectiveness - Typically, 99+ percent removal of hydrocarbons can be obtained.

Operating Parameter Ranges -

- Temperature
  - Sorption: less than 320°K (120°F)
  - Regeneration: highly dependent on gases absorbed. Temperature up to 620°K (650°F)

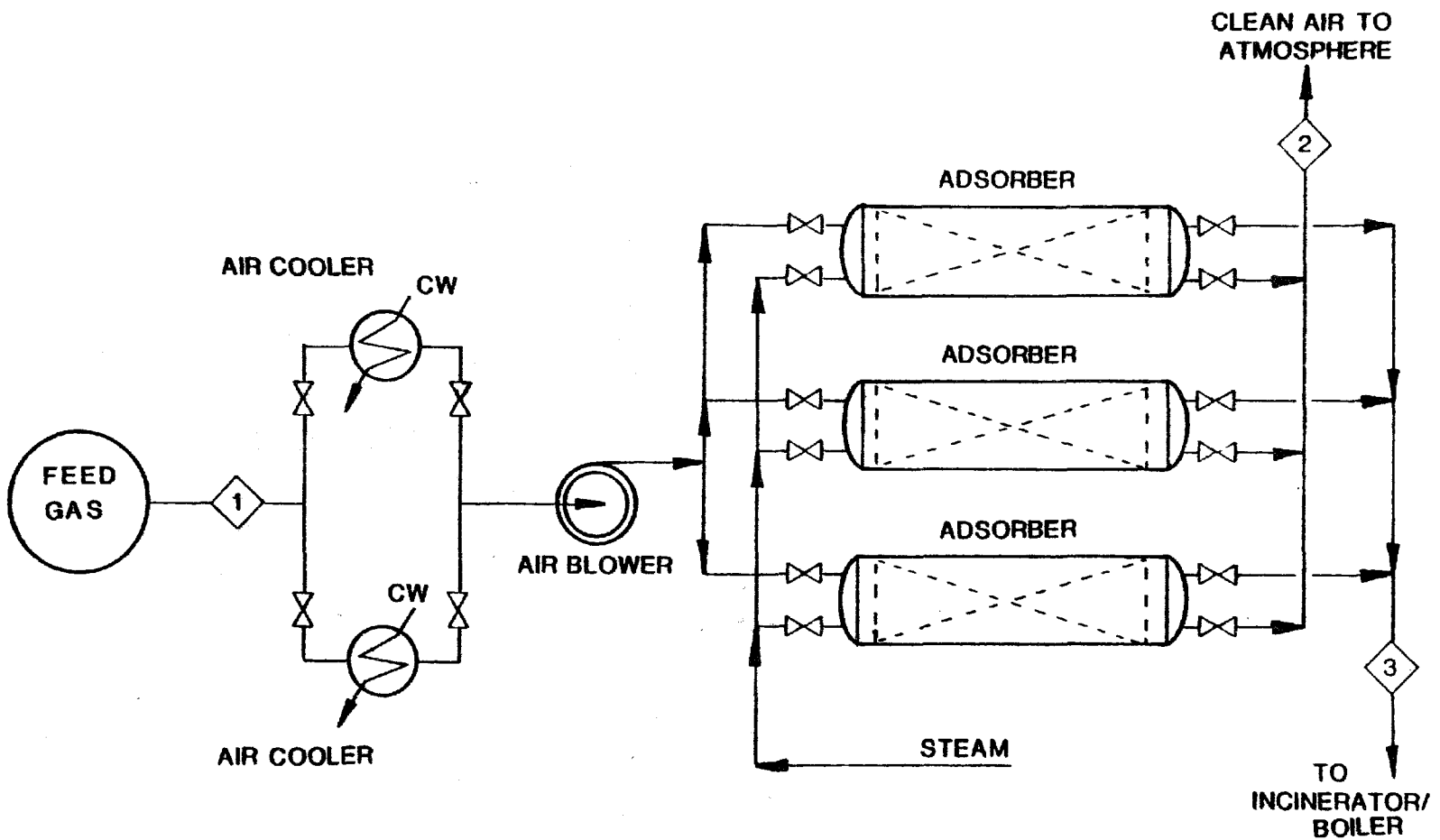

Figure 1. Simplified flow scheme - carbon adsorption

may be required for complete regeneration of some systems (Ref. 246)

- Pressure: Not pressure sensitive

Raw Material and Utility Requirements - Basis: Per 0.454 kg (1 lb) of solvent recovered.

- Steam: 1.8 kg (4 lb)
- Electricity: .082 kWh
- Cooling water: 0.03 m^3 (8.75 gal)
- Activated carbon makeup:

PROCESS ADVANTAGES

- Highly efficient hydrocarbon removal process
- Also removes CO and sulfur compounds

PROCESS LIMITATIONS

- Regeneration produces a hydrocarbon rich stream which must be disposed of.
- Normally only used for treating gas streams with low hydrocarbon concentrations.

INLET STREAMS

Inlet Gas Stream - The inlet gas stream to a carbon adsorption process is composed of hydrocarbons, N_2, CO_2, with smaller quantities of CO, H_2, and some sulfur compounds. The amounts of each compound present will depend upon the source of the waste gas.

DISCHARGE STREAMS AND THEIR CONTROL

Treated Gas - The treated gas will contain CO_2, N_2, H_2O and small quantities of contaminants (principally hydrocarbons)

present in the feed gas. This stream should be ventable to the atmosphere with no further treatment required.

Regenerator Offgas - The regenerator offgas will mainly contain CO_2, H_2O, and hydrocarbons. The amounts of each of these components will depend upon the inlet gas composition and the amount of steam used during regeneration. This stream may have a high enough fuel value to sustain combustion in an incinerator with no supplemental fuel required.

Spent Activated Carbon - Since activated carbon can be recycled to the manufacturer for reactivation, it is not an environmental problem with respect to the coal gasification plant.

APPENDIX D

WATER POLLUTION CONTROL

Flocculation-Flotation

GENERAL INFORMATION

Process Function - Flocculation involves the addition of chemical additives to coagulate any finely divided solids that are present in the wastewater. Flotation uses air bubbles to raise the oil droplets to the water surface where they are skimmed off.

Development Status - This process combination is widely used to remove suspended solids and oils from water.

Licensor/Developer - Not applicable.

Commercial Applications - Presently used in the refining industry when the removal of solids and free oils from water is required.

Applicability to Coal Gasification - Because of its capabilities, this technique should be applicable to the purification of coal gasification plant wastewaters.

PROCESS INFORMATION

Equipment - Mixer, clarifier, air sparger.

Flow Diagram - See Figure 1.

Control Effectiveness - An example of the results that can be obtained by flocculation-flotation is given below (Ref. 247).

- BOD reduced by 80%.
- COD reduced by 80%.
- Suspended solids reduced by 75%.
- Free oils reduced by 97%.

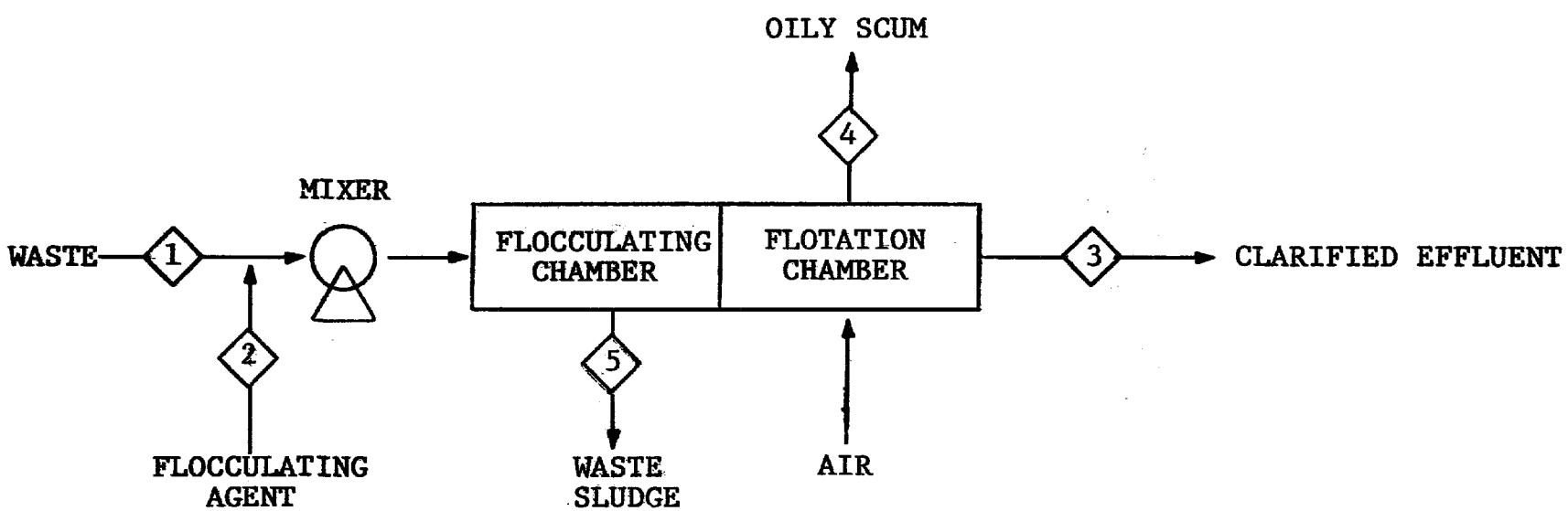

Figure 1. Suspended oil removal by flocculation-flotation (Ref. 248)

Operating Parameters (Ref. 249) -

- Temperature - can effect this process, however, no temperature or temperature ranges were specified
- Pressure - usually atmospheric
- pH - acidic level best (optimum ∿5)

Raw Material Requirements - The raw materials required for flocculation are listed below; however, the required amounts of these chemicals are not specified (Ref. 250).

- Alum
- Lime
- Polyelectrolyte

Utility Requirements -

- Electricity - required for pumps, air compressor, skimmer

PROCESS ADVANTAGES

- Effectively reduces the concentration of suspended oils and solids in the wastewater.
- Relatively inexpensive process for reducing suspended solids and oils.

PROCESS LIMITATIONS

- Flocculation-flotation is sensitive to
  - Temperature change.
  - Wastewater pH
  - Fluctuations in hydraulic or suspended solids loading
- Type and size of mixing pump significantly affect results obtained with flocculation.

INPUT STREAMS

- Wastewater containing suspended solids, non-emulsified oils, dissolved organics, and dissolved inorganics (Stream No. 1).
- Chemical additive for coagulating suspended solids (Stream No. 2).

DISCHARGE STREAMS AND THEIR CONTROL

Clarified Effluent (Stream No. 3) - This effluent is free of suspended solids but still contains dissolved organic and inorganic contaminants that must be removed before the water can be discharged. The treatment that will be required may include solvent extraction, acid gas stripping, biological treating, etc.

Waste Sludge (Stream No. 5) - This sludge is comprised of solids and water. Before its disposal the sludge must be dewatered, which is usually achieved by gravitational techniques. Once the sludge is dewatered it can be disposed of in a landfill. The water is usually sent to a holding pond to allow the suspended solids to settle before the water is discharged, reused or further treated.

Oily Scum (Stream No. 4) - This effluent stream contains oil and flocculant that have been skimmed from the surface of the wastewater. This material can be incinerated or disposed of with the sludge in an evaporation pond.

Oil-Water Separators

GENERAL INFORMATION

Process Function - Gravity separators remove non-emulsified oils and suspended solids that are present in the wastewaters from chemical and petrochemical processes. Corrugated plate interceptor separators use parallel plates to induce faster settling.

Development Status - Extensively used in refineries.

Licensor/Developer - API Separator: developer unknown.
CPI Separator: patented by Shell Oil Co.

Commercial Applications - Presently used in any industry which requires the separation of non-emulsified oils and solids from water.

Applicability to Coal Gasification - Because oil and solids are present in coal gasification wastewaters, gravity separation should be an effective initial cleanup process. API separators are presently used in the SASOL coal gasification complex in South Africa.

PROCESS INFORMATION

Equipment - Separation pit, inlet weir, outlet weir, oil skimmer, corrugated plate interceptor (CPI).

Flow Diagram - See Figure 1, CPI Separator.

Control Effectiveness -

- General for API Separator (Ref. 251):
  - Removes oils with 60-99% efficiency.
  - Removes solids with 10-50% efficiency.

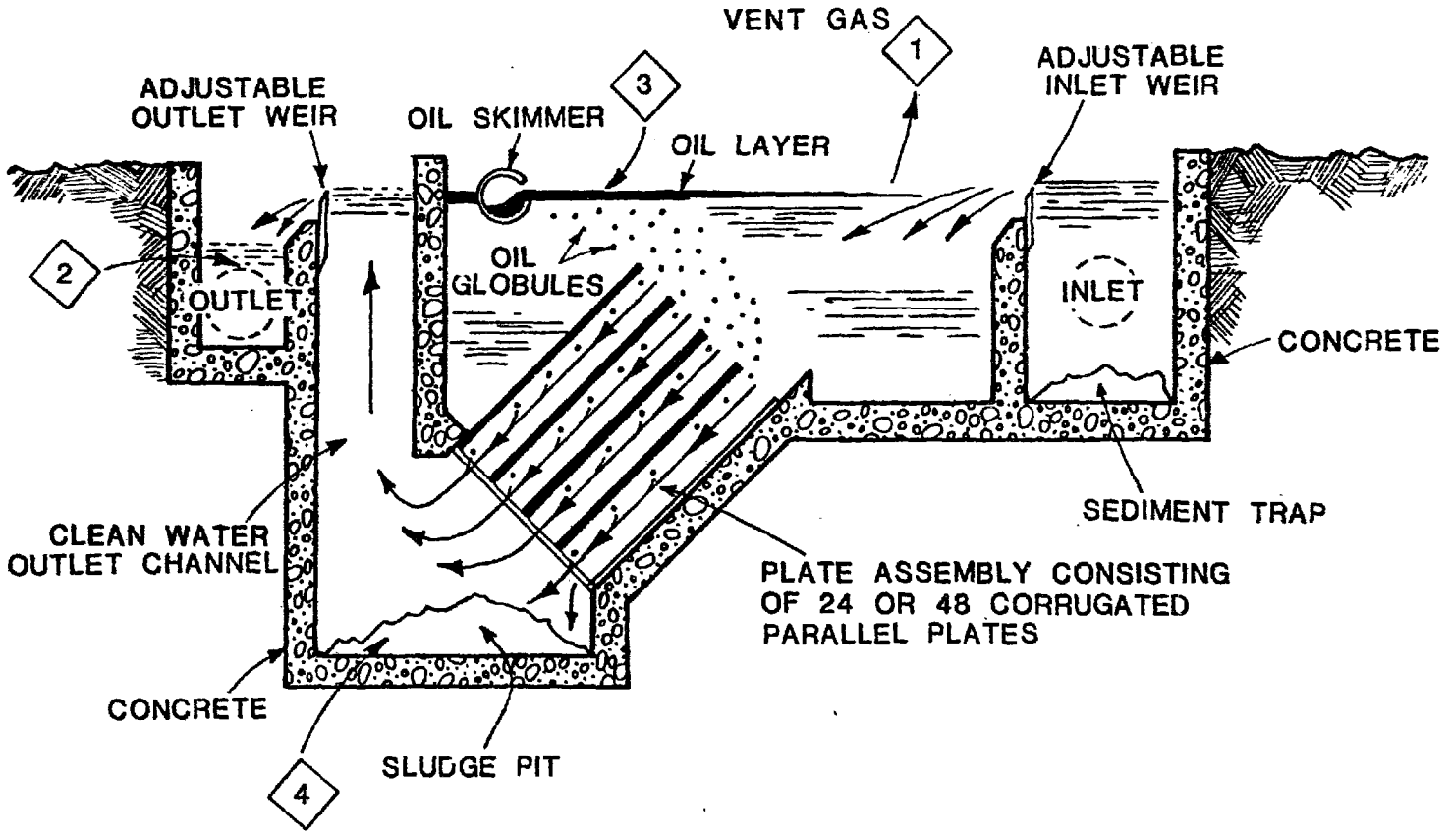

Figure 1. Schematic of corrugated plate interceptor oil-water separator (Ref. 252)

- Specific for API Separator (Ref. 253):
  - Reduces non-emulsified oil concentrations by 90%.
  - Reduces suspended solids concentrations by 90%.
  - Reduces BOD by 80%.
- Specific for CPI Separators (Ref. 254):

TABLE I
Distilling Unit CPI
"Set A"

Flow Rate, GPM Water	Flow Rate, GPM Oil	Calculated Influent Oil Content, PPMV	Effluent Oil Content, PPMV	Oil Recovered, %V	Separated Oil Grav. °API	Separated Oil Water Content PPMV
215	0.40	1860	8	99.6	30.6	255
150	0.36	4170	6	99.9	32.4	250
150	0.25	1670	35	97.9	33.3	480
230	0.67	2910	20	99.3	33.0	765
315	0.17	540	5	99.1	31.5	830
			"Set B"			
686	2.32	3410	27	99.2	30.0	1315
900	2.09	2370	46	98.1	30.0	1540
1276	2.76	2230	64	97.1	29.4	2550
1200	2.47	2160	105	95.1	30.1	415
1134	2.57	2330	61	97.4	30.5	2580

TABLE II
Catalytic Cracking Unit CPI

Flow Rate, GPM Water	Flow Rate, GPM Oil	Calculated Influent Oil Content, PPMV	Effluent Oil Content, PPMV	Oil Recovered, %V	Separated Oil Grav. °API	Separated Oil Water Content PPMV
310	0.10	340	12	96.5	34.5	136
343	0.92	2710	30	98.9	29.3	224
382	0.23	650	25	96.2	25.9	148
431	1.62	3780	52	98.6	25.3	695

TABLE III
International Lubricant Corp.
CPI

Flow Rate, GPM Water	Flow Rate, GPM Oil	Calculated Influent Oil Content, PPM	Effluent Oil Content, PPM	Oil Recovered, %	Recovered Oil Water Content %
83.5	.209	2503	13	99.5	3.5
120	.211	1758	21	98.8	3.5
700	.74	1057	60	94.3	3.5

Operating Parameters -

- Flowrates - See above.
- Pressure - Generally atmospheric pressure.
- Temperature - Although this process can tolerate significant temperature variations, high temperatures influence the viscosity and droplet size of the oil; this will, in turn, affects the performance of the separator.

Utility Requirements (Ref. 255) -

- Energy consumers
  - Flight scrapers
  - Oil skimmers
  - Sludge, oil, water pumps
- Typical energy consumption for gravity separation unit (Ref. 256):

Equipment	W (Hp)	W-hr/m^3/sec	(Hp-hr/1000 GPM)
2 flight skim./sep.	559.5 (0.75 ea.)	295.61	(.025)
2 skimmed oil pumps	373.0 (.50)	484.8	(.041)
1 sludge pump	5595 (7.5)	744.93	(.063)
1 effluent pump	3730.0 (5.0)	2956.09	(.25)
		4481.43	(.379)

Process Sensitivity (Ref. 257) - Oil-water separation efficiency is influenced by:

- Wastewater temperature
- Density and size of oil droplets (settling velocity)
- Types of solids in the water

Attached is a graph (Figure 2) that correlates specific gravity of the oil, plate surface area per unit flow and concentration of oil in the effluent for a CPI separator. This correlation shows the size of separator required at a given flow rate to obtain an effluent having a specified oil content.

PROCESS ADVANTAGES

- Simple and effective way to remove non-emulsified oils and solids from wastewater
- Low energy consumption
- High reliability

PROCESS LIMITATIONS

- Can require large amounts of space
- Effluent streams require further control
- Only effective for separation of non-emulsified oils

INPUT STREAMS

The input stream consists of wastewater containing free oil, emulsified oils, and suspended solids. Typical raw water characteristics are (Ref. 258):

- Suspended solids - 3500 ppm
- Non-emulsified oils - 1300 ppm

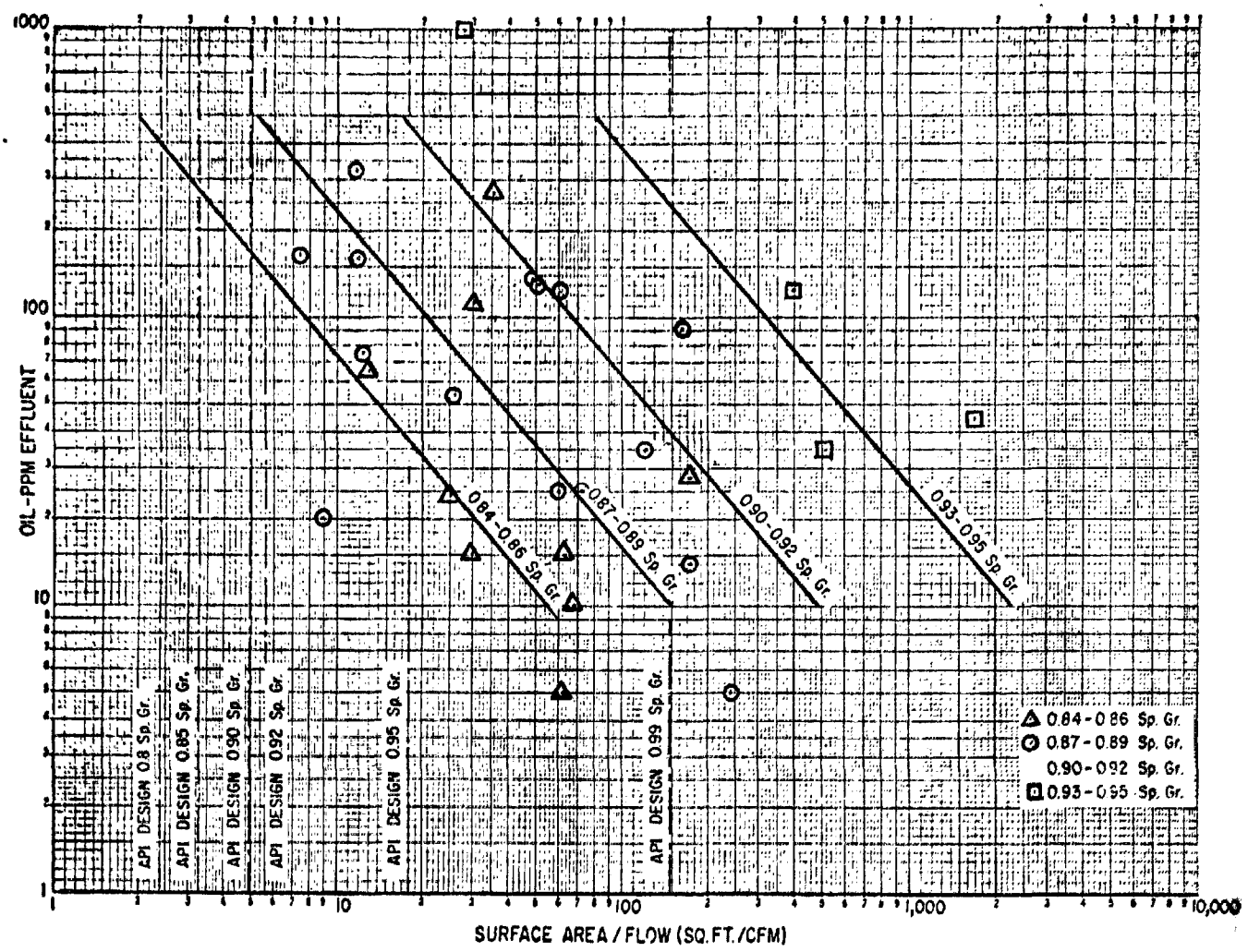

Figure 2. Correlation of API effluent oil content with operating factors (Ref. 259)

- Phenol - 20 ppm
- BOD - 4000 ppm

DISCHARGE STREAMS AND THEIR CONTROL -

General - Discharge streams from an oil-water separator are:

- Vent gas from the separator (if the separator is enclosed) (Stream No. 1)
- Effluent water (Stream No. 2)
- Oil skimmed from water's surface (Stream No. 3)
- Sludge (solids) (Stream No. 4)

Specific -

- Separator Vent Gases - These are gases that are relatively insoluble in the wastewater. The gases consist primarily of CO_2, CH_4, N_2, C_2H_6, and some H_2S and NH_3. Because the volume of these gases is expected to be small at ambient conditions, it is unlikely that any control will be required for this stream.

- CPI Separator Effluent Water - The effluent from the separator will contain emulsified oil, some suspended solids, and dissolved organics and inorganics.

  Based upon the raw water composition shown above, a typical effluent water composition is:

  Suspended solids - 100 ppm

  Non-emulsified oils - 50 ppm

  Phenol - 15 ppm

  BOD - 200 ppm

  Before its discharge or reuse this water must be treated in subsequent processes (biological oxidation, acid gas stripping, etc.) to further reduce the concentrations of these components.

- Recovered Oil - This is the oil that is skimmed from the surface of the water. In industry, this oil is withdrawn and generally burned in an incinerator or a boiler.

Sludge - This waste is composed primarily of solids that settle out in the separator. This material is periodically removed from the separator and is either sent directly to a solar evaporator or to a mechanical dewatering system, then to final disposal in a landfill.

Filtration

GENERAL INFORMATION

Process Function - The primary function of filtration is to reduce the concentrations of suspended contaminants in aqueous streams so that problems caused by solids in subsequent treatment processes are minimized.

Development Status - A well-developed technology.

Licensor/Developer - No licensor cited; however, commercially available from numerous suppliers of filtration equipment.

Commercial Applications - Filtration is extensively utilized in many industries such as the refinery industry to remove suspended oils and solids from wastewater.

Applicability to Coal Gasification - Filtration is presently being utilized in the wastewater treatment system at the SASOL Coal Gasification complex in South Africa.

PROCESS INFORMATION

Equipment - Pumps, vessels containing filter media.

Flow Diagram - See Figure 1.

Control Effectiveness - Although there are different types of filter media, only the control effectiveness of sand filtration is cited here (Ref. 260):

- BOD_5 removal - 36%
- COD removal - 25 to 44%
- Suspended oil removal - 52 to 83%
- Suspended solids removal - 70 to 75%

Operating Parameters - Wide ranges of temperature and pressure can be tolerated.

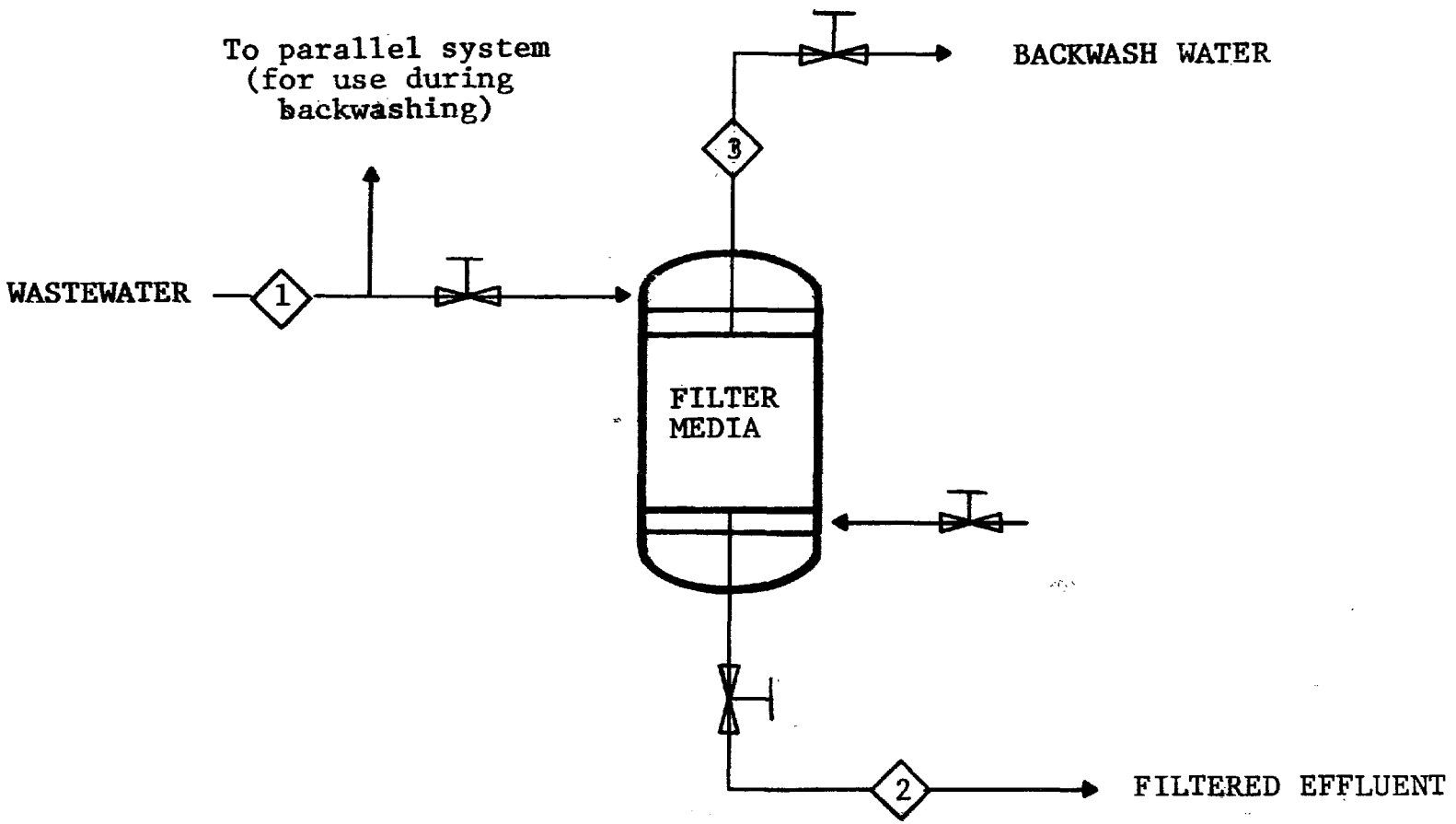

Figure 1. Scheme for suspended solids and oil removal by filtration

Raw Material Requirements - Normally, no raw materials are required; however, in some instances chemical additives may be used.

Utility Requirements - Normally power, steam and water (for backflushing); quantities will depend upon application.

PROCESS ADVANTAGES

- Effectively reduces the concentration of suspended oils and solids in the wastewater.
- Easily maintained.
- Relatively inexpensive.
- Has been successfully applied in a coal gasification complex.

PROCESS LIMITATIONS

- The system must be regenerated by backwashing, which generates a stream contaminated with suspended solids and oils.
- Backwashing effluent can be disposed of by incineration or landfilling; however, both must be closely controlled.

INPUT STREAMS

Wastewater (Stream No. 1) - This stream contains suspended solids and oils, dissolved organics, and dissolved inorganics.

DISCHARGE STREAMS AND THEIR CONTROL

Filtered Wastewater (Stream No. 2) - This stream, which contains dissolved organics, dissolved inorganics, and residual quantities of suspended solids and oils, will normally require further treatment prior to disposal or reuse. Potentially applicable treatment processes include solvent extraction, carbon adsorption, acid gas stripping and forced evaporation.

Backwash Water - This effluent consists of water and contaminants washed from the filter media. This stream can be recycled to the process, treated further, or disposed of by incineration or landfilling.

Phenosolvan

GENERAL INFORMATION

Process Function - Removal of phenols from wastewater streams by liquid-liquid extraction.

Development Status - 32 commercial installations since 1940.

Licensor/Developer - Lurgi Mineralötechnik GmbH
American Lurgi Corporation
377 Rt. 17 South
Hasbrouck Heights, New Jersey

Commercial Applications - Removal of phenols from coke oven and gasification plant aqueous waste streams.

Applicability to Coal Gasification - Proven process; used in coal gasification complexes located in:

- Sasolburg, South Africa (SASOL)
- Kosovo, Yugoslavia

PROCESS INFORMATION

Equipment - Mixer-extractor; distillation column for solvent recovery.

Flow Diagram - See Figure 1.

Control Effectiveness - (Ref. 261, 262) -

- General -
  - 99.5% removal of monohydric phenols
  - 60.0% removal of polyhydric phenols
  - 15.0% removal of other organics
- Specifically -
  - 95% total organics removed at SASOL

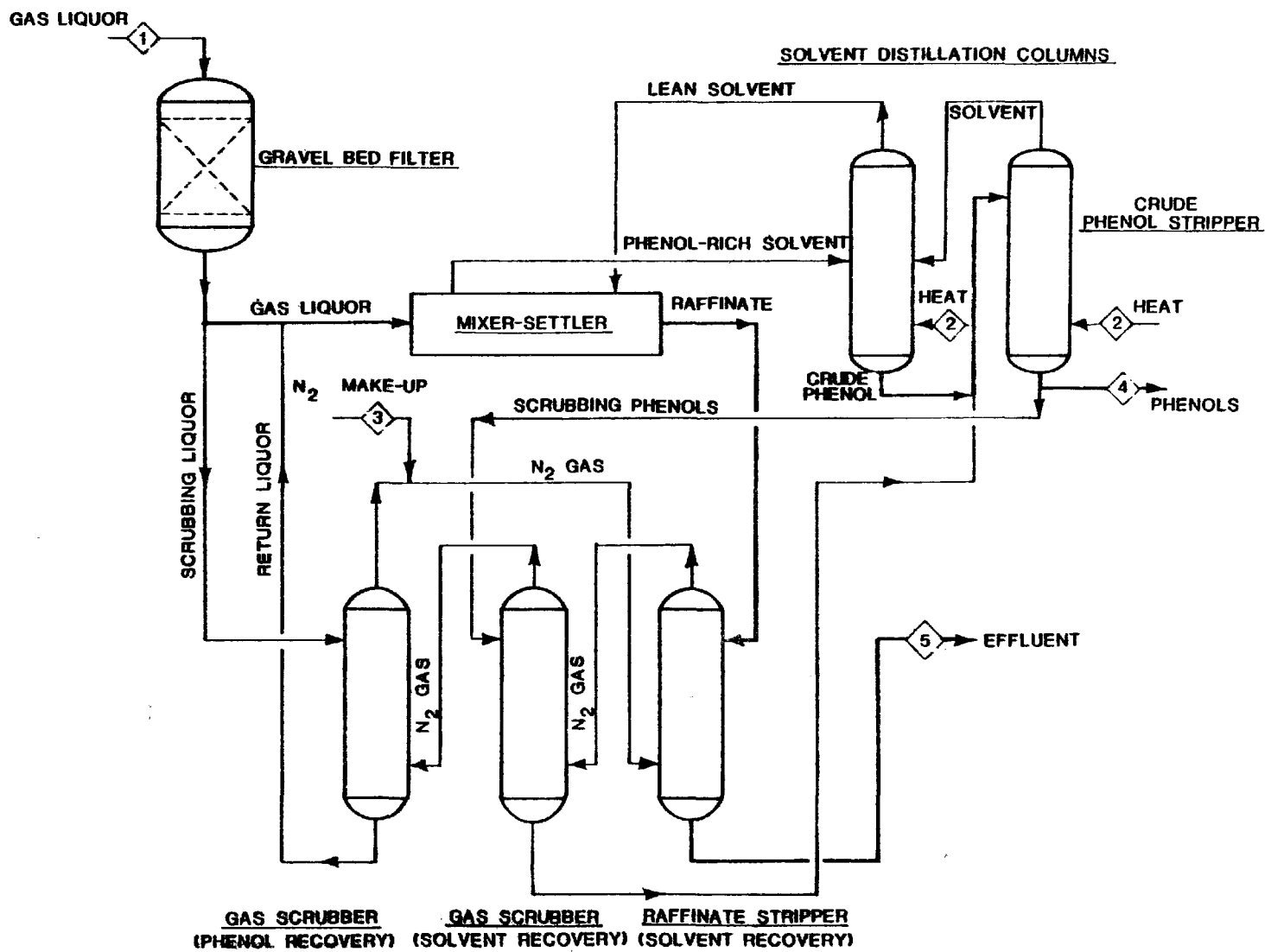

Figure 1. Phenosolvan process flow (Ref. 263)

Normal Operating Parameters -

- Pressure - Atmospheric
- Temperature - 343.2°K (158°F) at SASOL, otherwise dependent on solvent.

Solvent Used (Ref. 264) -

Locale	Solvent	Distribution Coefficient	Boiling Point
Sasol	butyl acetate	49	397.7°K (256.1°F)
Proposed U.S. (New Mexico) Gasification Complexes	isopropyl ether	20	337.7°K (148.0°F)
General	light aromatic oil	∿22	varies with solvent

Solvent Solubility (Ref. 265) -

Solvent	Solubility in Water @ 308.2°K (95°F)
butyl acetate	1% by wt.
isopropyl ether	.8% by wt.

Utility Requirements - Basis: Utilities per 3.79 m^3 (1000 gal.) (Ref. 266).

- Cooling H_2O - 5.68 m^3 (1500 gal.)
- Electrical Power - 4-6 kWh
- Steam - 36.3-122.5 Kg

PROCESS ADVANTAGES

- General - Economically attractive technique for phenol removal and recovery
- Specific - Solvent has:
  - Relative low volatility.
  - Low solubility in water.
  - High distribution coefficient.

PROCESS LIMITATIONS

- Solvent - Soluble enough in water to require its recovery.
- Process - Initial process investment is substantial.

INPUT STREAMS

Basis: Attached flow diagram (Figure 1), which is the tentative design for two New Mexico complexes.

- Phenol-rich gas liquor (Stream No. 1).
- Steam for phenol, acid gas, and NH_3 strippers (Stream No. 2).
- N_2 makeup for solvent recovery (Stream No. 3)

DISCHARGE STREAMS AND THEIR CONTROL

The discharge streams generated by the Phenosolvan process are listed below for both a general and a specific (WESCO) design case.

General - Output streams are:

- Dephenolized liquor - is the effluent wastewater and contains traces of phenols, solvent, other dissolved organics, and dissolved acid gases. Although the wastewater has had the bulk of the dissolved phenols removed from it, the resulting effluent will still require the use of a polishing process such as carbon adsorption, biological oxidation, or cooling tower air stripping. The effluent may also contain significant amounts of dissolved acid gases that will require further control (Stream No. 5).
- By-product phenols - are high purity phenols obtained when the solvent is regenerated (Stream No. 4).

Specific -

- Flows -
  - .17 m^3/sec dephenolized water
  - 1.10 kg/sec extracted crude phenol

- Compositions -

  - Influent Gas Liquor Composition (Stream No. 1):

	lbs/hr	(kg/hr)	PPM
Monohydric phenols	7475	3390.6	5537
Polyhydric phenols	1458	661.3	1080
Other organics	2913	1321.3	2158
Totals (water-free)	11846	5146.5	

  - Dephenolized Liquor Composition (Stream No. 5):

	lbs/hr	(kg/hr)	PPM
Monohydric phenols	37	16.80	27
Polyhydric phenols	583	262.40	432
Other organics	2476	1114.20	1834
Totals (water-free)	3096	1393.40	

  - By-Product Phenols (Stream No. 4): These are the extracted phenols which are disposed of as a by-product. An approximate composition of these phenols follows:

	lbs/hr	(kg/hr)	wt%
Monohydric phenols	7438	3347.1	85
Polyhydric phenols	875	393.8	10
Other organics	437	196.7	5
Totals (water-free)	8750	3937.6	100

Adsorption of Dissolved Organics

GENERAL INFORMATION

Process Function - In wastewater treating adsorption can be adequately utilized as either a primary, secondary, or tertiary treatment process.

Development Status - Adsorption is currently being used in varied industrial applications.

Licensor/Developer - No specific developer cited; however several companies market carbon adsorption processes commercially.

Commercial Applications -

- General - Used to remove dissolved organics from waste streams regardless of their origin.
- Specific - Applied to upgrading waste streams in the following industries:
  - Detergent manufacturing in New Jersey.
  - Oil refining in California and Pennsylvania.
  - Chemicals manufacturing in Alabama.
  - Resin manufacturing in New York.
  - Herbicide manufacturing in Oregon.
  - Coking plants in Pennsylvania.

PROCESS INFORMATION

Special Consideration for Coal Gasification Applicability - Since phenols are a valuable by-product of coal gasification, adsorption should be considered as only a tertiary (polishing) process for coal gasification effluents because phenols are essentially unrecoverable once they are adsorbed.

Equipment Requirements -

- Adsorbers
- Hydraulic transfer system for regenerated adsorbent
- Adsorbent regeneration facilities

Flow Diagram - See Figure 1.

Control Effectiveness (Ref. 267) - Adsorption has performed well in removing dissolved organics from wastewater streams. Because of economic considerations it is normally used only when a water of high quality is desired. Adsorption has exhibited the following removal efficiencies:

- Phenol - 99%
- COD - 81%
- Cyanide - 1%

Production Rates - Quantity of water treated by adsorption ranges from < .002 m^3/sec to .21 m^3/sec (35 gpm - 3300 gpm)

Operating Parameters -

- Pressure: atmospheric
- Temperature: No operating temperature specified; however, carbon adsorption is more effective at high temperatures than at low temperatures.

Adsorbents -

- General traits of good adsorbent (Ref. 268):
  - High selectivity
  - Regenerable
  - Chemically inert
  - Inexpensive
- Specific adsorbents:
  - Activated carbon
  - Synthetic polymer

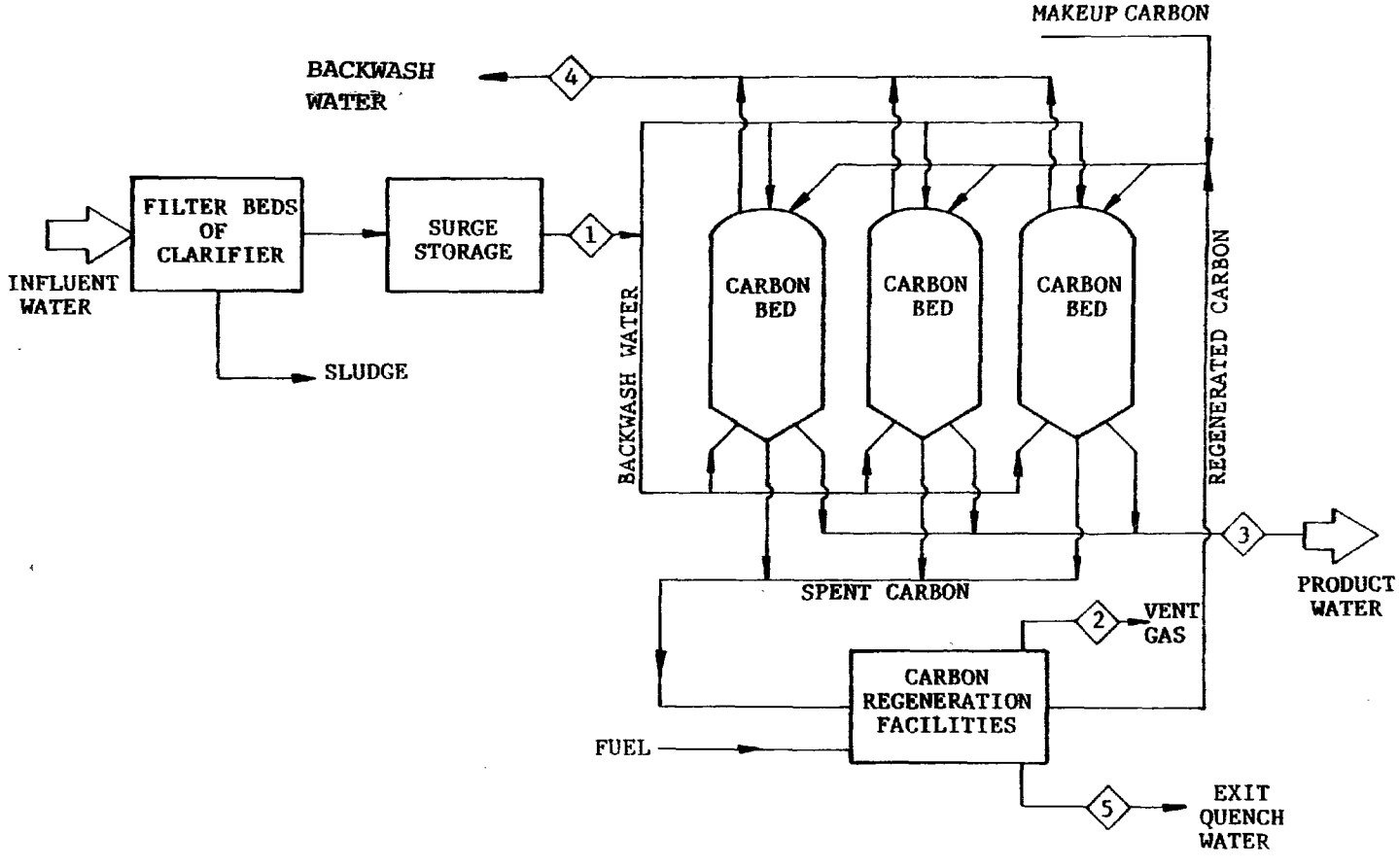

Figure 1. Wastewater stream treatment by activated carbon adsorption (Ref. 269)

Regeneration of Adsorbent (Ref. 270, 271) - The spent adsorbent is regenerated by subjecting it to a high temperature (∿1144°K) in order to oxidize the adsorbed organic pollutants. The hot adsorbent is cooled with quench water and returned to service. Regeneration of the adsorbent results in the following:

- ∿5-10% carbon loss if activated carbon is used as the adsorbent (Ref. 272, 273)
- Dirty water as the result of cooling the adsorbent (Ref. 274).
- High energy consumption.

Adsorption Sensitivity - Pressure does not significantly affect the adsorption process. However, the adsorption of dissolved organics can be enhanced by slightly lowering the pH level of the waste stream. Higher temperatures also enhance the adsorption efficiency.

Utility Requirements - Specific utility information was unavailable. The utilities required in general for an adsorption process are identified below.

- Electricity for:
  - Hydraulic transfer pumps
  - Quench water pumps
  - Wastewater pumps
- Cooling water for quenching the regenerated adsorbent
- Fuel required for heating the regeneration gas
- Chemicals to adjust the pH level of the wastewater

Economics (Ref. 275) - Basis: Phenol reduced from 110 ppm to 1 ppm; .01 m^3/sec throughput (150,000 gal/day).

- Investment cost was $300,000
- Operating cost was $.094/$m^3$ (35.6¢/1000 gal)

PROCESS ADVANTAGES

General - Adsorption makes it economically possible to purify streams that contain only small amounts of impurities that would otherwise be impossible to clean (Ref. 276).

Specific -

- Adsorption has high ability to reduce impurity concentration at ambient conditions (Ref. 277).
- Adsorption is not affected by slight temperature change, fluctuations in organic loading or toxicity (Ref. 278).
- Adsorption has wide applicability to many industrial wastewater problems.
- Adsorption is not upset by fluctuations in hydraulic rates (Ref. 279).

PROCESS DISADVANTAGES

- Since adsorption does not allow easy recovery of adsorbed dissolved organics, regeneration of the adsorbent is necessary (Ref. 280).
- Regeneration of adsorbent generates aqueous and gaseous streams that may require further control.
- Regeneration of adsorbent may not be complete, therefore, the removal efficiency of the absorbent may decrease with time (Ref. 281).

INPUT STREAMS

Wastewater (Stream No. 1) - This influent is a water stream containing dissolved monohydric and polyhydric phenols. It may also contain some suspended and dissolved inorganic contaminants.

DISCHARGE STREAMS AND THEIR CONTROL

Quench Water (Stream No. 5) - This stream is generated when water is used to cool the regenerated carbon. Because of the carbon losses experienced in regeneration, this stream can become contaminated with suspended solids. The solids can be removed by gravity separation.

Vent Gas (Stream No. 2) - This stream is generated when the activated carbon undergoes thermal oxidation to destroy adsorbed organics. This stream consists primarily of CO_2 and CO but may contain some hydrocarbons. It is not certain that this stream will require control. However, if further control is necessary, a scrubbing system will be necessary.

Treated Effluent (Stream No. 3) - This stream should be free of dissolved organics and suspended contaminants. However, it may contain some dissolved inorganic contaminants. The desired quality of this effluent will dictate the need for any further treating. Cooling tower oxidation or activated sludge processes can be used to further treat this stream.

Backwash Water (Stream No. 4) - This stream is generated when water is used to wash away any solids that have collected on the carbon. This stream must be reprocessed to remove any contaminants that it contains.

Biological Oxidation of Dissolved Organics

GENERAL INFORMATION

Process Function - Biological oxidation processes involve the use of bacteria and other microbes for the removal of dissolved organics from waste streams. For its application to coal conversion processes, biological oxidation is best suited for use as a tertiary treatment process because by-product recovery is not economically practical with this process.

Development Status - Various biological oxidation techniques are presently being utilized for upgrading various industrial waste streams.

Licensor/Developer -

- Koppers: earliest known developer
- Numerous available including:
  - UNOX (by Union Carbide)
  - Reuse Bio-oxidation Process (Sun Oil)

Commercial Applications (Ref. 282) - This process is presently used to remove dissolved organics from waste streams originating from:

- Petrochemical industry
- Paper mills
- Pharmaceutical manufacturing
- Brewery
- Meat packing
- Coke oven plants

Applicability to Gasification - Biological oxidation is being used in the above industries to remove dissolved organics that closely approximate those that are predicted to exist in the waste streams from a low-Btu coal gasification complex.

- Locations - A biological system is presently being utilized at SASOL.

PROCESS INFORMATION

Flow Diagram - See Figure 1.

Special Consideration for Coal Gasification Applicability - Because phenols are a valuable by-product of coal gasification and should be recovered from waste streams, biological oxidation should be considered for use as a polishing process only.

Types of Biological Oxidation -

- Aerobic
- Anaerobic

Process Methods -

- Activated sludge
- Trickling filter
- Cooling tower oxidation (air stripping)
- Aerated lagoons
- Waste stabilization ponds (aerobic)
- Anaerobic digestor

Effectiveness of Methods (Ref. 283) -

	Range of % Removal					
	Sulfides	BOD	COD	S. Solids	Oil	Phenols
Activated sludge	97-100	88-90	60-85			95-99+
Trickling filters		60-85	30-70	50-80	50-80	
Waste Stab. Ponds (Aerobic)		40-95	30-65	20-70	50-90	
Aerated lagoons	95-100	75-95	60-85	40-65	70-90	90-99
Cooling tower oxidation (air stripping)		90+	90+			99.9

Note: Thiocyanates ~70% removed by all processes

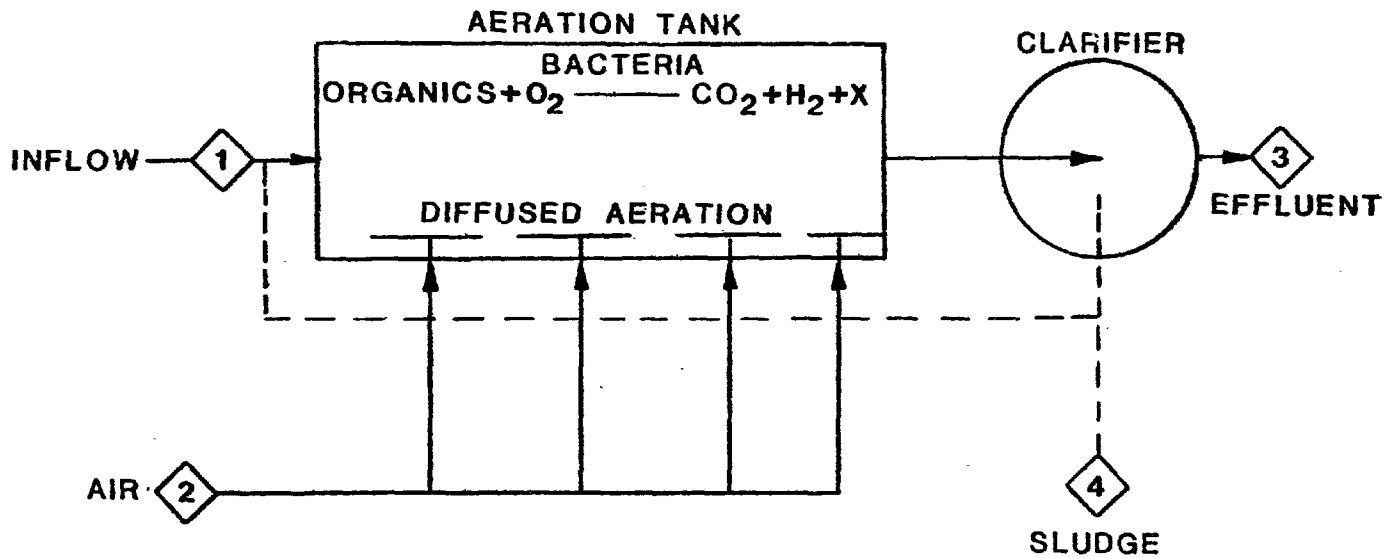

Figure 1. Simplified schematic of conventional plug flow activated sludge (Ref. 284)

Operating Parameter Ranges (Activated Sludge) (Ref. 285) - Information on others unavailable.

- Pressure: atmospheric
- Temperature: optimum range 290-310°K (60-100°F)

Production Range (Activated Sludge) (Ref. 286) - Information on other biological treating processes unavailable.

- Minimum flow: 2.19×10^{-6} m^3/sec (50 gal/day)
- Maximum flow: .02 m^3/sec (400,000 gal/day)

Process Sensitivity -

- Temperature: Biological oxidation of dissolved organics is optimum in the temperature range of 190-310°K (60-100°F). In this range, as the temperature increases so does the oxidation of dissolved organics. However, when the maximum temperature is exceeded the micro-organisms are adversely affected and the stability of the biological oxidation process is upset (Ref. 287).

- pH: The pH level of the waste stream is the most important factor influencing the efficiency of biological oxidation. The optimum pH level is ∿7.0; when the pH is below 5.5 or above 9.5 most micro-organisms can not exist. The pH level also influences the efficiency of thiocyanate removal (Ref. 288).

- Presence of Oxygen: Oxygen is required for oxidation of organics in the waste stream. The greater the amount of O_2 available, the more able the process is to resist shock organic loadings (Ref. 289).

- Organic and Hydraulic Loading: Biological oxidation is highly dependent upon both organic and hydraulic loadings. As the organic loading increases, the percent organic oxidized decreases, but the amount oxidized increases. The optimum feed to micro-organism ratio is .2-.5:1.0. An excessive hydraulic loading results in a foaming of trickling filters and a decrease in efficiency of biological oxidation (Ref. 290).

- Heavy Metals: The presence of heavy metals can have an adverse effect on the efficiency of the biological oxidation process, particularly if a rapid change in their concentration occurs (Ref. 291).

- Nutrients: Nitrogen (usually in the form of ammonia) and phosphorus must be present in the waste stream in order to keep phenol oxidation at its optimum level (Ref. 292).

Utility Requirements - Specific information is unavailable. General utilities required for specific biological processes are listed below.

- Activated sludge
  - Electricity for pumps, air or O_2 compressor, sludge mixers.
- Trickling bed
  - Electricity for pumps, compressor, waste distributor
- Aerated lagoon
  - Electricity for pumps, aerators
- Cooling tower oxidation (air stripping)
  - Electricity

Economics -

- Capital Investment (Ref. 293):
  - Trickling filters - $\$1.58 \times 10^7$ per m^3/sec for a .01 m^3/sec plant ($1000/gpm for 100 gpm plant), $\$7.9 \times 10^6$ per m^3/sec for a .03 m^3/sec plant ($500/gpm for 500 gpm plant).
  - Activated sludge - cost range for industrial application $\$6.6 \times 10^6$ - 3.5×10^7 m^3/sec ($420 - $2240/gpm); cost range for municipal application $\$9.2 \times 10^6$ m^3/sec for .04 m^3/sec ($580/gpm for 700 gpm); $\$2.95 \times 10^7$ m^3/sec for 4.4×10^{-4} m^3/sec ($1,860/gpm for 7 gpm)
  - Oxidation ponds - $.25/$m^2$ ($1000/acre)
- Operational Costs (Ref. 294):
  - Trickling filters - $15,850 per m^3/sec ($1/gpm) of waste flow per year
  - Activated sludge - $\$2.4 \times 10^5$ per m^3/sec ($15/gpm) of waste flow per year

PROCESS ADVANTAGES

- Effectively reduces the BOD and phenol level in industrial wastewater.
- Has wide applicability to industrial applications and has been proven in several applications.
- Comparatively inexpensive water treating process.
- Removes some amounts of trace metals, ammonia, and cyanides that may be present in waste (small when compared to phenol).

PROCESS LIMITATIONS

- Highly sensitive to pH levels.
- Highly sensitive to presence of heavy metals.
- Strongly influenced by organic and hydraulic loadings; consequently, susceptible to operational upsets.
- In instances where ponds and lagoons are used, large tracts are required.
- Highly dependent on oxygen supply.
- Requires the presence of nutrients.

INPUT STREAMS

Influent Waste Stream (Stream No. 1) - This stream contains dissolved organics, perhaps small amounts of ammonia, and minute amounts of trace metals.

Air or Pure Oxygen (Stream No. 2) - In some instances of activated sludge, compressed air or oxygen is used or surface agitators.

Phosphoric acid - Sometimes added as a micro-organism nutrient.

DISCHARGE STREAMS AND THEIR CONTROL -

Treated Waste Effluent (Stream No. 3) - This effluent should be of fairly high quality and require only polishing treatment; however, it is a good idea to monitor the treated effluent for BOD content and amount of suspended solids. During upset conditions these levels might not be environmentally acceptable. If a higher quality effluent is desired polishing processes can be utilized.

Sludge (Stream No. 4) - This effluent primarily consists of water and suspended solids. It may also contain heavy metals that are removed from the wastewater. All of these contaminants can have a detrimental effect on the environment. This waste stream can only be sent to final disposal (evaporation pond, sanitary landfill). The final disposal technique most commonly used is an evaporation pond. Sanitary landfills are used when an evaporation pond cannot be used. The sludge must be dewatered before a sanitary landfill can be used.

Acid Gas Stripping

GENERAL INFORMATION

Process Function - Acid gas stripping is a process in which a waste stream is contacted countercurrently with an inert gas in order to facilitate the removal of acid gases (CO_2, H_2S, etc.) from the wastewater.

Development Status - Presently being utilized in numerous refineries.

Licensor/Developer - Not applicable.

Commercial Application - Used to remove H_2S, NH_3, and small amounts of phenols from refinery waste streams prior to their reuse or discharge.

Applicability to Coal Gasification - Since the process has been successfully used in refineries and coke plants, it should be applicable to coal gasification waste streams.

PROCESS INFORMATION

Equipment -

- Sour water degasser
- Acid gas stripper

Flow Diagram - See Figure 1.

Control Effectiveness (Ref. 295, 296) - Acid gas stripping achieves:

- Approximately 99% H_2S removal
- Approximately 90% NH_3 removal
- Approximately 20-40% phenol removal
- Some cyanide removal

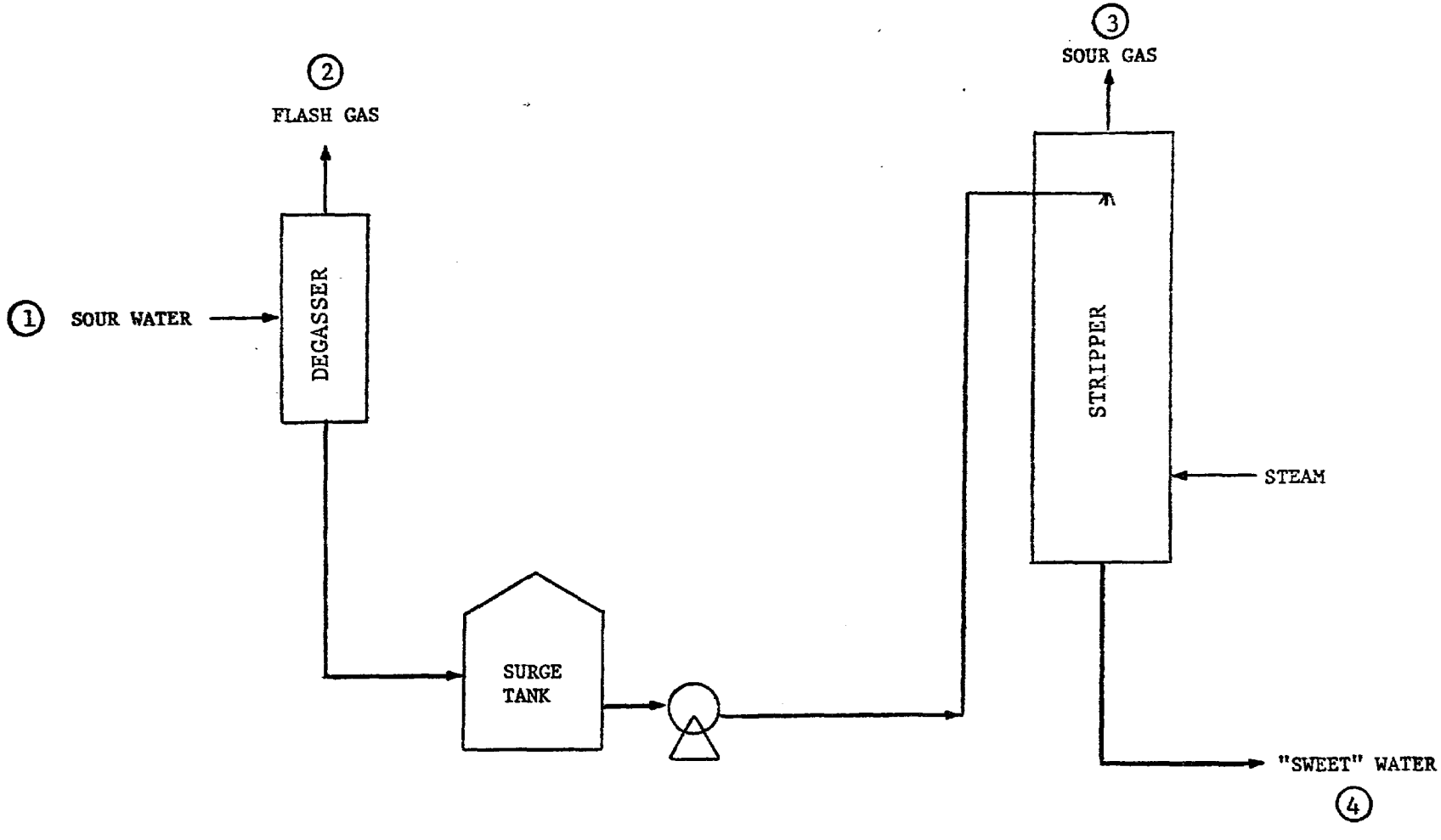

Figure 1. Simplified schematic of acid gas stripping process

Operating Parameters (Ref. 297) -

- Sour water feed temperature: 380.4°K (225°F)
- Stripper pressure range: 17.2-34.5 kPa (2.5-5.0 psig)

Utility Requirements -

- Electricity required to drive pumps; specific requirements not available.
- Steam requirement range: 2.0 - 200 kg of steam/sec per m^3/sec of wastewater (1-100 lbs of steam/hr/gpm of wastewater feed) (Ref. 298).

Process Economics (Ref. 299) - Basis: .04 m^3/s (10^6 gal/day) operating cost.

- Operating cost ∿25.2 mil/m^3 (4 mil/bbl)

PROCESS ADVANTAGES

- Effectively removes H_2S, NH_3, and phenols from industrial waste streams.
- Inexpensive technique for acid gas removal.
- Proven process.

PROCESS LIMITATION

- Stripping efficiency is dependent upon steam rates.
- NH_3 and cyanide removal is sensitive to pH level.
- H_2S in sour water and stripper overhead is corrosive.
- Stripper overhead and stripper bottoms will probably require further environmental control.

INPUT STREAMS

The feed to an acid gas stripping unit is an aqueous stream that is contaminated with:

- H_2S
- NH_3
- Phenols
- Some light hydrocarbons (C_1, C_2)
- CO_2
- Cyanides

No feed rates nor feed compositions were cited to use as a basis.

DISCHARGE STREAMS AND THEIR CONTROL

Flash Gas (Stream No. 2) - This is the off-gas from the sour water degasser, which predominately contains light hydrocarbons such as CH_4 and C_2H_6 that have a low solubility in water. These gases can be recombined with the product gas from the gasifier.

Stripper Overhead (Stream No. 3) - This stream contains steam, approximately 99 percent of the H_2S, 90 percent of the NH_3, and 30 percent of the phenols entering the stripper. Some cyanides will also be present in this stream. Because of its H_2S, NH_3 and phenol content, this stream will require further control. In some cases, this stream is incinerated which can cause air pollution problems. In other cases, this stream undergoes further processing for recovery of NH_3 and elemental sulfur.

Stripper Bottoms (Stream No. 4) - This "sweet" water contains phenols and minute portions of cyanides and would need further control before it could be discharged from the plant. In some instances this water can be used for process wash water, cooling tower makeup, and boiler makeup.

Fugitive Emissions - Fugitive air and water emissions from acid gas stripping arise from leaks around pump seals, process instrumentation, valves, etc. These emissions will be prevalent in the areas of the discharge streams and will contain components in those streams.

Acid Gas Stripping (WWT)

GENERAL INFORMATION

Process Function - The WWT process basically achieves the same results in regard to H_2S and NH_3 removal as does acid gas stripping. However, this process also facilitates recovery of sulfur and NH_3 by-products.

Development Status - Commercially available and currently used in industrial applications.

Licensor/Developer - Chevron Research
576 Standard Ave.
Richmond, CA 94802

Commercial Applications - Used for removal of H_2S and NH_3 from refinery waste streams.

Applicability to Coal Gasification - Use in coal conversion plants was explicitly considered when developed. Since the process has been successful in refineries it should be expected to perform successfully in conjunction with coal gasification technology.

PROCESS INFORMATION

Equipment -

- Sour water degasser
- Strippers (H_2S and NH_3)
- NH_3 scrubbers and compressor

Flowsheet - See Figure 1.

Control Effectiveness (Ref. 300) - Dependent upon process operation, however, typical results are as follows:

- Stripped water is 99.9% water by wt.
- NH_3 in stripped water <50 ppm.
- H_2S in stripped water <10 ppm.

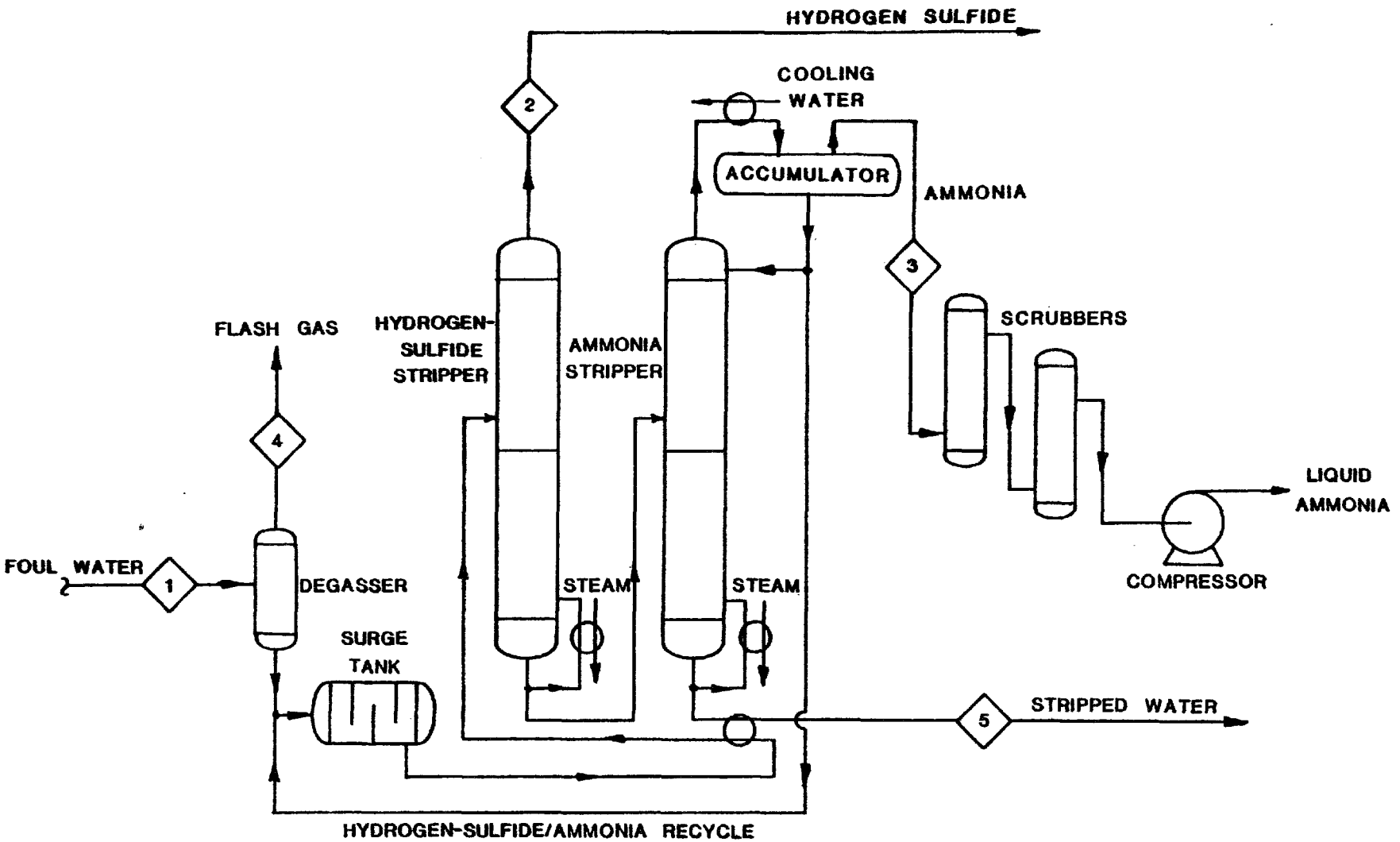

Figure 1. WWT acid gas stripping schematic (Ref. 301).

Operating Parameter Ranges - Data not available.

Normal Operating Prameters (Ref. 302) -

	Temperature	Pressure
Ammonia	311°K(100°F)	1.37 MPa (200 psig)
H_2S	311°K(200°F)	.689 MPa (100 psig)
Stripped H_2O	311°K(100°F)	.344 MPa (50 psig)

Raw Material Requirements - None specified.

Utility Requirements - No amounts specified, however, acid gas stripping requires:

- Steam
- Cooling Water
- Electricity

Economics (Ref. 303) - Basis: .01 m^3/s (170 gpm) throughput

- Operating cost $1.05/$m^3$ (∿.4¢/gal) treated

PROCESS ADVANTAGES

- Process does not require high pressure.
- Process facilitates the recovery of H_2S and NH_3 for further processing as by-products.
- Already proven in commercial applications.
- Capital and operating costs are moderate.

PROCESS LIMITATIONS

- Process is proprietary and a royalty must be paid for its use.
- Discharge streams require further environmental control.

- Phenol removal efficiency is low.

INPUT STREAMS

Wastewater (Stream No. 1) - This stream contains dissolved inorganics, primarily H_2S and NH_3.

Stripping Medium - Steam.

DISCHARGE STREAMS AND THEIR CONTROL

General -

- Flash gas from sour water stripper (Stream No. 4).
- H_2S in stripper overhead from H_2S stripper (Stream No. 2).
- NH_3 in stripper overhead from NH_3 stripper (Stream No. 3).
- Stripper water (Stream No. 5).

Specific - Basis (Ref. 304): The following input is used as the basis for the effluent concentrations reported below:

- .01 m^3/s (134 gal/min) wastewater to WWT process.
- 3.8% (wt.) of input is dissolved material.
  - Typically 3-5½% (wt.) of dissolved material is NH_3.
  - Typically 4-5½% (wt.) of dissolved material is H_2S.
  - Balance of dissolved materials is light hydrocarbons.
- Resulting effluents
  - Flash gas (Stream No. 4) - Is essentially all light hydrocarbons and contains virtually all the light hydrocarbons that enter the system in the sour water. This stream can be incinerated to remove the light hydrocarbons. It can also be recycled for further processing to recover the hydrocarbon.
  - Stripped H_2S (Stream No. 2) - .22 Kg/s (20.6 tons/day) generated with following composition:

Component	Wt%
H_2S	~99.9
H_2O	.1
NH_3	<30 ppm

Normally, the stripped H_2S stream is fed to a process that will convert the sulfide to elemental sulfur.

- Stripped NH_3 (Stream No. 3) (Ref. 305) - 9344 Kg/day (10.3 ton/day) generated with following compositions:

Component	Wt%
NH_3	99.9
H_2O	.1
H_2S	<1 ppm

The stripped NH_3 can be further processed to produce anhydrous NH_3 or it can be incinerated.

- Stripped water (Stream No. 5) - Has the following composition:

Component	Wt%
H_2O	99.9+
H_2S	<10 ppm
NH_3	<50 ppm

90 percent of the water can be reused and 10 percent is discharged.

Forced Evaporation

GENERAL INFORMATION

Process Function - Produces an effluent water that is generally suitable for recycling to the process by removing dissolved salts in the form of a concentrated sludge.

Development Status - Commercially available and presently being used in industrial applications.

Developer/Licensor - Although Resources Conservation Co., Renton, Washington, developed and markets a specific evaporator, the concept of forced evaporation is not new.

Commercial Applications - The RCC forced-evaporation system is being used in three power stations in the southwest U.S.

Applicability to Coal Gasification - Since solar evaporation ponds are not practical for use in certain areas of the country, forced evaporation is being investigated for possible use in coal gasification plants.

PROCESS INFORMATION

Flow Diagram - See Figure 1.

Control Effectiveness - Forced evaporation has been shown to be very effective in removing dissolved solids from a wastewater and reducing the waste to approximately 1-5% of its original volume.

Operating Parameter Ranges -

- Temperature - 338.7 to 394.3°K
- Pressure - Vacuum to atmospheric pressure

Normal Operating Parameters - Depends upon specific application.

Raw Material Requirements - None.

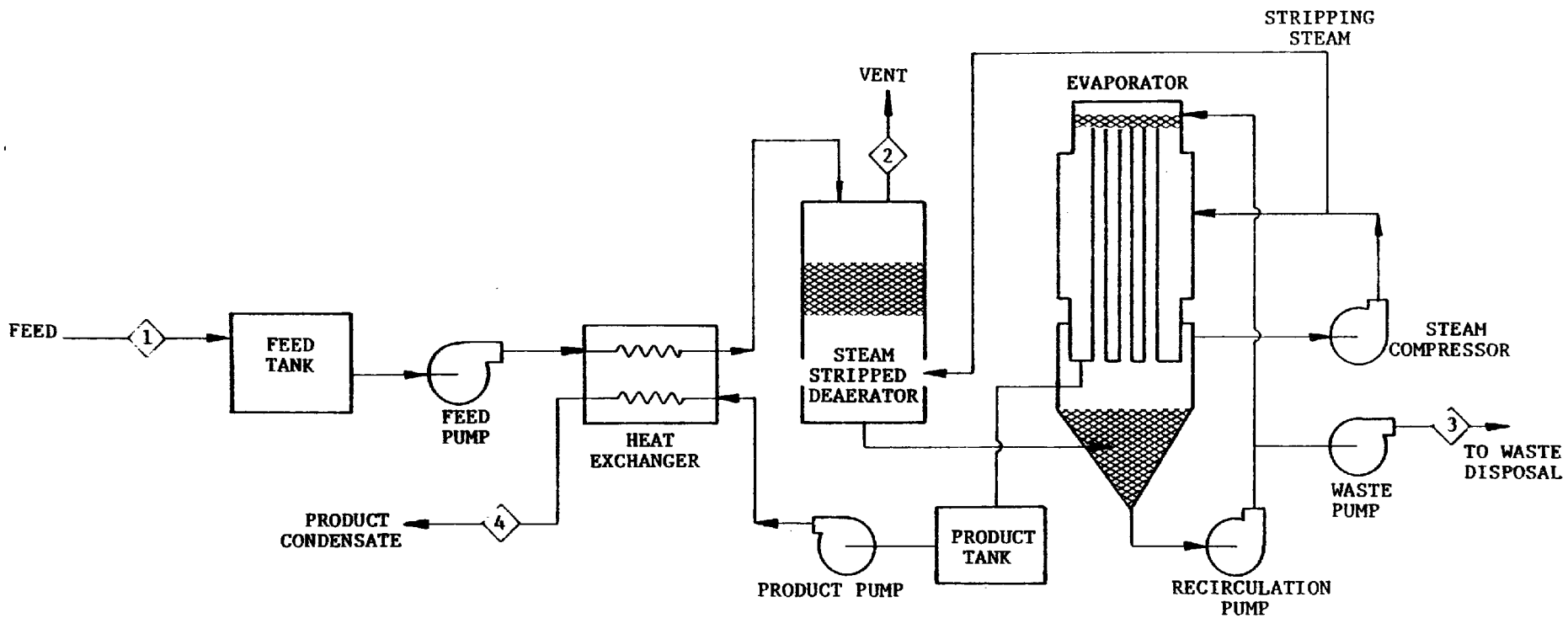

Figure 1. Simplified schematic of a brine concentrator system (Ref. 306).

Utility Requirements (Ref. 307) - Theoretically the brine concentrator requires 10.6 kWh/m^3 (72 kWh/1000 gal).

Economics - General cost comparisons show that forced evaporation costs can range from a 16.4 cent savings to a .53 cent cost per m^3 over the cost required by a solar evaporation pond (Ref. 308).

PROCESS ADVANTAGES (Ref. 309) -

- It is environmentally acceptable because of its maximum conservation of water and land.
- It can be used where solar evaporation ponds are impractical.
- It utilizes less energy than does mechanical drying.

PROCESS LIMITATIONS (Ref. 310) -

- High capital investment.
- Low energy efficiency.
- Generates a flash gas and a sludge that require further treating.

INPUT STREAMS

Wastewater containing residual dissolved solids, organics, and gases (Stream No. 1).

DISCHARGE STREAMS AND THEIR CONTROL

The discharge streams produced by a forced evaporator are described below:

General -

- Stripped gases (Stream No. 2) - contains steam and small quantities of H_2S, NH_3, CO_2 and phenols. The final

disposition of these gases will depend on the concentration of the contaminants. In most applications, this stream is vented to the atmosphere. An alternate disposition of this gas would be to process it for ammonia or sulfur recovery.

- Product water (Stream No. 4) - contains small amounts of dissolved solids and should not require any further control before being recycled.

- Concentrated sludge (waste brine) (Stream No. 3) - contains solids removed from water and some H_2O. Before it is sent to a landfill, this stream must undergo a drying process for removal of remaining water.

Specific -

- Product water

  - Basis: product water from a power station brine concentrator with the following feed (Ref. 311):

Feed

Component	Concentration (mg/ℓ)
Sodium	155
Calcium	430
Magnesium	164
Carbonate	12
Bicarbonate	268
Sulfate	1,625
Chloride	92
Ortho Phosphate	3.4
Total Phosphate	7
Silica (as SiO_2)	50
Total Dissolved Solids (TDS)	2,806
Suspended Solids (SS)	-
pH	8.15
Calgon CL-77	22
Conductivity (micro-mhos)	-

Product Condensate

Component	Concentration (mg/ℓ)
Sodium	-
Calcium	-
Magnesium	-
Carbonate	-
Bicarbonate	-
Sulfate	-
Chloride	-
Ortho Phosphate	-
Total Phosphate	-
Silica (as SiO_2)	-
Total Dissolved Solids (TDS)	0.5
Suspended Solids (SS)	-
pH	6.8
Calgon CL-77	-
Conductivity (micro-mhos)	3.5

- Waste brine (Ref. 312)
  - Basis: waste brine produced in an oil refinery having the following feed to a forced evaporator:

	Brine concentrator feed composition (mg/ℓ)
Sodium	681
Calcium	110
Magnesium	21
Chloride	480
Bicarbonate	26
Sulfate	1,100
Silica (as SiO_2)	4
Oil	5
Phenol	7.5
Total Organic Carbon	56
Ammonia Nitrogen	27
Kjeldahl Nitrogen	29
TDS	2,422
SS	-
pH	6.5

Effluent Waste Brine Concentration

	Concentration (mg/ℓ)
Sodium	67,800
Calcium	603
Magnesium	2,100
Chloride	48,000
Bicarbonate	0
Sulfate	87,082
Silica	200
Oil	8
Phenol	1
Total Organic Carbon	1,800
Ammonia Nitrogen	26
Kjeldahl Nitrogen	1,150
TDS	205,785
SS	35,510
pH	6.5-7.5
Boiling Pt., Rise, °F	4.18

Evaporation Pond

GENERAL INFORMATION

Process Function - Ultimate disposal of liquid and semisolid wastes generated in various processes. The water portion of the semisolid wastes is allowed to evaporate in place.

Development Status - Being used in many industrial applications.

Developer/Licensor - None.

Commercial Applications - Commercial applications not dependent on source of waste generation; consequently, used by various industries.

Applicability to Coal Gasification - Since evaporation ponds are used in refineries they should be applicable as the ultimate disposal technique for coal gasification wastes.

PROCESS INFORMATION

Flow Diagram - See Figure 1.

Control Effectiveness - Evaporation ponds are effective as an ultimate means of solids and liquids disposal.

Operating Parameters - Specific data not available; however, operation is highly influenced by site conditions.

Utility Requirements - Negligible.

PROCESS ADVANTAGES

- As an ultimate disposal technique it has no effluent streams requiring subsequent treating.

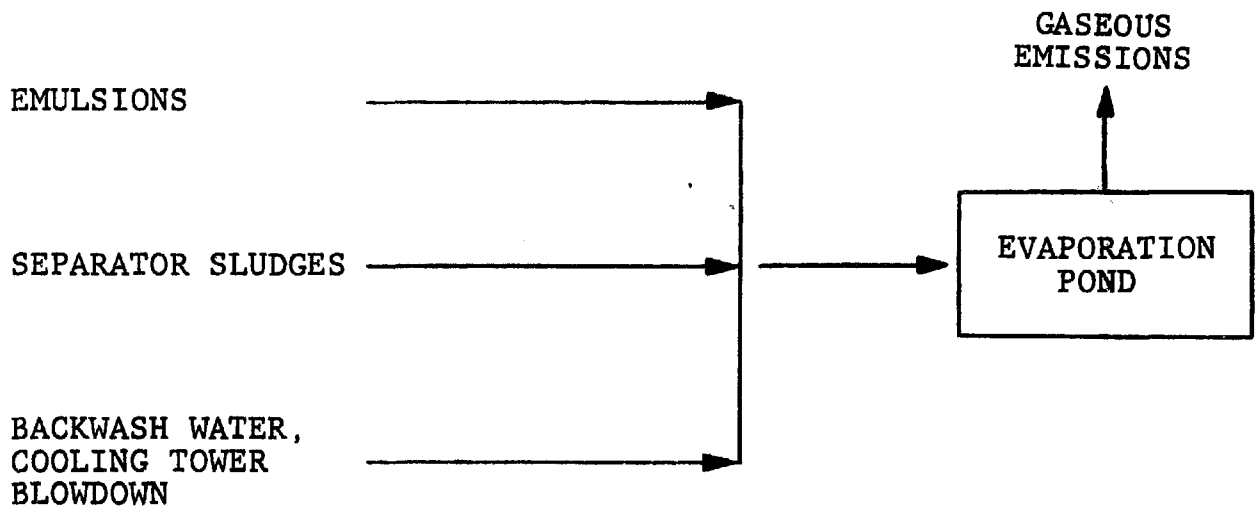

Figure 1. Evaporation pond - ultimate disposal technique.

- Effective technique for disposing of unprocessable wastes.
- Requires little maintenance.

PROCESS LIMITATIONS (Ref. 313) -

- Necessitates substantial land allocations.
- Care must be taken to insure that any contaminants the pond contains do not leach into underground water sources.
- Operation dependent upon climatological conditions.
- Environmental acceptability dependent upon methods and materials of construction, specific local hydrogeological conditions, and types of wastes handled.

INPUT STREAMS

The influent is wastewater which cannot be economically treated for reuse. It may contain dissolved organics, dissolved inorganics, small quantities of heavy metals, and suspended solids.

DISCHARGE STREAMS AND THEIR CONTROL

Aqueous - Normally evaporation ponds do not generate any effluents that require further treating. However, if the evaporation pond is not managed correctly, run-off is possible.

Air Emissions - Since the influent wastewater contains some volatile matter, the ambient air above an evaporation pond will contain some of these same volatiles. Since evaporation ponds are usually used in conjunction with processes that reduce the concentration of these volatiles to a low level, control of these emissions is normally not necessary.

APPENDIX E

SOLID WASTE CONTROL

Sanitary Landfill

GENERAL INFORMATION

Process Information - A sanitary landfill serves as a final disposal technique for solids and sludges generated by solids handling or wastewater treating processes.

Development Status - This technique is employed by industry and municipalities for disposing of their solid wastes.

Licensor/Developer - No particular developer cited.

Commercial Applications - Widely used by industry and municipalities.

Applicability to Coal Gasification - Because this technique has been applied to the disposal of a wide range of solid materials, it should be applicable to handling coal gasification plant residues.

PROCESS INFORMATION

Flow Diagram - See Figure 1.

Control Effectiveness - Effective ultimate disposal of solids, and when designed properly, landfills will not contribute to air or water pollution.

Utility Requirements - Specific utility usage was not available. Required utilities are:

- Water for fire protection
- Electricity

Economics - The costs of landfilling are generally about $.000826 - .00165/kg ($.75 - $1.50/ton).

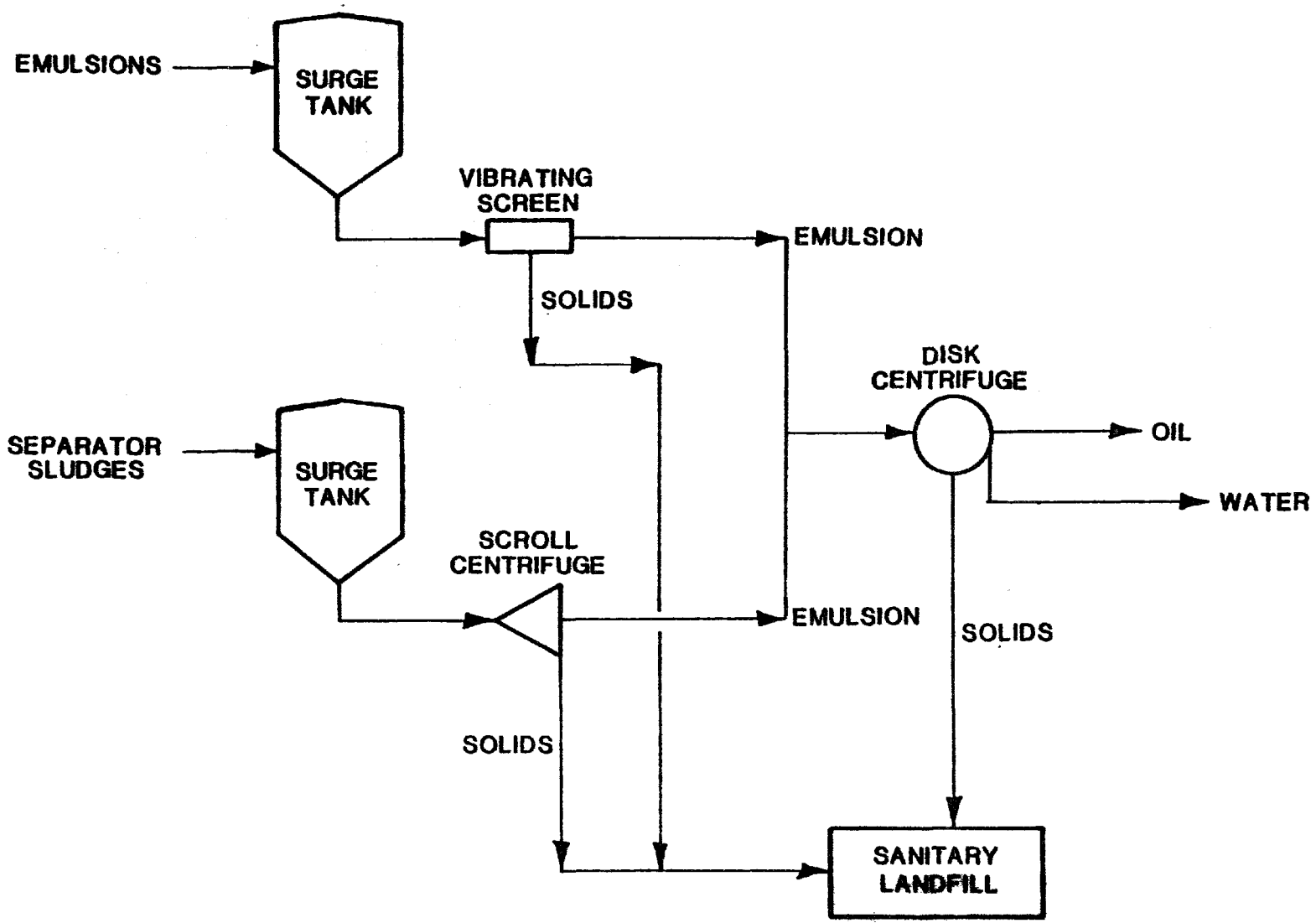

Figure 1. Schematic of dewatering pretreatment sometimes required for sanitary landfill (Ref. 314).

PROCESS ADVANTAGES

- Effective ultimate disposal of solids
- Does not create air or water pollution

PROCESS LIMITATIONS

- High degree of maintenance required
- Must be operated above the water table
- Sludge must undergo pretreatment prior to disposal

INPUT STREAM

Waste Sludge - This stream consists of solids with some associated water and is generated when separator bottoms are discharged.

DISCHARGE STREAMS

When managed properly a sanitary landfill has no discharge streams. However, contamination of surface and ground waters by leachable components may occur if the landfill is poorly designed or managed.

APPENDIX F

REFERENCES FOR VOLUME II

REFERENCES FOR VOLUME II

1. Dravo Corp., Handbook of Gasifiers and Gas Treatment Systems. Final Report. Report No. FE-1772-11, ERDA Contract No. E(49-18)-1772, Task Assignment No. 4. Pittsburgh, PA, Chemical Plants Div., February 1976. L-8590

2. McDowell Wellman Engineering Co., "Wellman-Galusha Gas Producers", Form No. 576, Company Brochure, Cleveland, OH, 1976. L-5775

3. Dravo Corp., Handbook of Gasifiers and Gas Treatment Systems. Final Report. Report No. FE-1772-11, ERDA Contract No. E(49-18)-1772, Task Assignment No. 4. Pittsburgh, PA, Chemical Plants Div., February 1976. L-8590

4. Ban, Thomas E., "Conversion of Solid Fuels to Low-Btu Gas", Amer. Chem. Soc., Div. Fuel Chem., Prepr. 19(1), 79-98 (1974). L-141

5. Dravo Corp., Handbook of Gasifiers and Gas Treatment Systems. Final Report. Report No. FE-1772-11, ERDA Contract No. E(49-18)-1772, Task Assignment No. 4. Pittsburgh, PA, Chemical Plants Div., February 1976. L-8590

6. Ban, Thomas E., "Conversion of Solid Fuels to Low-Btu Gas", Amer. Chem. Soc., Div. Fuel Chem., Prepr. 19(1), 79-98 (1974). L-141

7. Dravo Corp., Handbook of Gasifiers and Gas Treatment Systems. Final Report. Report No. FE-1772-11, ERDA Contract No. E(49-18)-1772, Task Assignment No. 4. Pittsburgh, PA, Chemical Plants Div., February 1976. L-8590

8. McDowell Wellman Engineering Co., "Wellman-Galusha Gas Producers", Form No. 576, Company Brochure, Cleveland, OH, 1976. L-5775

9. Dravo Corp., Handbook of Gasifiers and Gas Treatment Systems. Final Report. Report No. FE-1772-11, ERDA Contract No. E(49-18)-1772, Task Assignment No. 4. Pittsburgh, PA, Chemical Plants Div., February 1976. L-8590

10. Ibid.

11. Ibid.

12. McDowell Wellman Engineering Co., "Wellman-Galusha Gas Producers", Form No. 576, Company Brochure, Cleveland, OH, 1976. L-5775

13. Dravo Corp., Handbook of Gasifiers and Gas Treatment Systems. Final Report. Report No. FE-1772-11, ERDA Contract No. E(49-18)-1772, Task Assignment No. 4. Pittsburgh, PA, Chemical Plants Div., February 1976. L-8590

14. McDowell Wellman Engineering Co., "Wellman-Galusha Gas Producers", Form No. 576, Company Brochure, Cleveland, OH, 1976. L-5775

15. Dravo Corp., Handbook of Gasifiers and Gas Treatment Systems. Final Report. Report No. FE-1772-11, ERDA Contract No. E(49-18)-1772, Task Assignment No. 4. Pittsburgh, PA, Chemical Plants Div., February 1976. L-8590

16. Lurgi Mineraloltechnik GmbH, "Lurgi Pressure Gasification Performance Record -- Lurgi Express Information", Company Brochure, Frankfurt, Germany, October 1975. L-7843

17. Ibid.

18. Millett, H. C., "Lurgi Process for Complete Gasification of Coal with Oxygen Under Pressure", J. Inst. Fuel 10 15-21 (1936). L-1595

19. Woodall-Duckham, Ltd., Trials of American Coals in a Lurgi Gasifier at Westfield, Scotland. Final Report. Research & Development Report No. 105, FE-105. Crawley, Sussex, England, November 1974. L-1164

20. Shaw, H., and E. M. Magee, Evaluation of Pollution Control in Fossil Fuel Conversion Processes. Gasification, Section 1: Lurgi Process. Final Report. Report No. EPA-650/2-74-009c, EPA Contract No. 68-02-0629. Linden, NJ, Exxon Research & Engineering Co., 1974. L-1016

21. Hall, E. H., et al., Fuels Technology. A State-of-the-Art Review. Report No. PB-242 535, EPA-650/2-75-034, EPA Contract No. 68-02-1323, Task 14. Columbus, OH, Battelle Columbus Labs., April 1975.

22. Dravo Corp., Handbook of Gasifiers and Gas Treatment Systems. Final Report. Report No. FE-1772-11, ERDA Contract No. E(49-18)-1772, Task Assignment No. 4. Pittsburgh, PA, Chemical Plants Div., February 1976. L-8590

23. El Paso Natural Gas Co., Application of El Paso Natural Gas Co. for a Certificate of Public Convenience and Necessity. Docket No. CP73-131. El Paso, TX, 1973. L-512

24. Shaw, H., and E. M. Magee, Evaluation of Pollution Control in Fossil Fuel Conversion Processes. Gasification, Section 1: Lurgi Process. Final Report. Report No. EPA-650/2-74-009c, EPA Contract No. 68-02-0629. Linden, NJ, Exxon Research & Engineering Co., 1974. L-1016

25. Rudolph, Paul F. H., "Lurgi Process Route to Substitute Natural Gas (SNG) from Coal", Chem. Age India 25(5), 289-99 (1974). L-1545

26. El Paso Natural Gas Co., Application of El Paso Natural Gas Co. for a Certificate of Public Convenience and Necessity. Docket No. CP73-131. El Paso, TX, 1973. L-512

27. Woodall-Duckham, Ltd., Trials of American Coals in a Lurgi Gasifier at Westfield, Scotland. Final Report. Research & Development Report No. 105, FE-105. Crawley, Sussex, England, November 1974. L-1164

28. University of Kentucky, College of Engineering, Institute for Mining and Minerals Research, A Kentucky Coal Utilization Research Program, Project 3 - Low-Btu Gas and Solid Desulfurized Fuel. Annual Report, 1 July 1972 - 30 June 1973. Lexington, KY, November 1973. L-1392

29. American Gas Association, Proceedings of the Sixth Synthetic Pipeline Gas Symposium, Chicago, IL, October 1974. Washington, DC, 1974. L-1635

30. Dravo Corp., Handbook of Gasifiers and Gas Treatment Systems. Final Report. Report No. FE-1772-11, ERDA Contract No. E(49-18)-1772, Task Assignment No. 4. Pittsburgh, PA, Chemical Plants Div., February 1976. L-8590

31. Hahn, O. J., Present Status of Low-Btu Gasification Technology. Lexington, KY, Inst. for Mining and Minerals Research, Univ. of Kentucky, January 1976. L-9184

32. Dravo Corp., Handbook of Gasifiers and Gas Treatment Systems. Final Report. Report No. FE-1772-11, ERDA Contract No. E(49-18)-1772, Task Assignment No. 4. Pittsburgh, PA, Chemical Plants Div., February 1976. L-8590

33. Woodall-Duckham, Ltd., Trials of American Coals in a Lurgi Gasifier at Westfield, Scotland. Final Report. Research & Development Report No. 105, FE-105. Crawley, Sussex, England, November 1974. L-1164

34. Dravo Corp., Handbook of Gasifiers and Gas Treatment Systems. Final Report. Report No. FE-1772-11, ERDA Contract No. E(49-18)-1772, Task Assignment No. 4. Pittsburgh, PA, Chemical Plants Div., February 1976. L-8590

35. Ibid.

36. Woodall-Duckham, Ltd., Trials of American Coals in a Lurgi Gasifier at Westfield, Scotland. Final Report. Research & Development Report No. 105, FE-105. Crawley, Sussex, England, November 1974. L-1164

37. Lurgi Mineraloltechnik GmbH, "Lurgi Pressure Gasification Performance Record -- Lurgi Express Information", Company Brochure, Frankfurt, Germany, October 1975. L-7843

38. El Paso Natural Gas Co., Application of El Paso Natural Gas Co. for a Certificate of Public Convenience and Necessity. Docket No. CP73-131. El Paso, TX, 1973. L-512

39. Woodall-Duckham, Ltd., Trials of American Coals in a Lurgi Gasifier at Westfield, Scotland. Final Report. Research & Development Report No. 105, FE-105. Crawley, Sussex, England, November 1974.

40. Dravo Corp., Handbook of Gasifiers and Gas Treatment Systems. Final Report. Report No. FE-1772-11, ERDA Contract No. E(49-18)-1772, Task Assignment No. 4. Pittsburgh, PA, Chemical Plants Div., February 1976. L-8590

41. Grant, Andrew J., "Two-Stage Coal Gasification - Fluidized Coal Combustion", Presented at the Fourth National Conference on Energy and the Environment, AIChE and APCA, Cincinnati, OH, 7 October 1976. L-8614

42. Williams, Ian, "Fuel Gas Plants for the Process Industries Burn Coal Cleanly, Efficiently", Process Eng. 73 52-53, 55, 57 (1974). L-3066

43. Grant, Andrew J., "Applications of the Woodall-Duckham Two Stage Coal Gasification", Presented at the Third Annual International Conference on Coal Gasification and Liquefaction, School of Engineering, University of Pittsburgh, Pittsburgh, PA, 3-5 August 1976. L-6028

44. Grant, Andrew J., "Two-Stage Coal Gasification - Fluidized Coal Combustion", Presented at the Fourth National Conference on Energy and the Environment, AIChE and APCA, Cincinnati, OH, 7 October 1976. L-8614

45. Ibid.

46. Dravo Corp., Handbook of Gasifiers and Gas Treatment Systems. Final Report. Report No. FE-1772-11, ERDA Contract No. E(49-18)-1772, Task Assignment No. 4. Pittsburgh, PA, Chemical Plants Div., February 1976. L-8590

47. Grant, Andrew J., "Two-Stage Coal Gasification,- Fluidized Coal Combustion", Presented at the Fourth National Conference on Energy and the Environment, AIChE and APCA, Cincinnati, OH, 7 October 1976.

48. Dravo Corp., Handbook of Gasifiers and Gas Treatment Systems. Final Report. Report No. FE-1772-11, ERDA Contract No. E(49-18)-1772, Task Assignment No. 4. Pittsburgh, PA, Chemical Plants Div., February 1976. L-8590

49. Ibid.

50. Ibid.

51. Ibid.

52. "Any Coal Will Work in Low-Btu Process", Hydrocarbon Process. 54(2), 15 (1975). L-5336

53. Wilputte Corp., Wilputte Low-Btu Fuel Gas Process. Bulletin No. 7662. Murray Hill, NJ, 1 June 1976. L-8435

54. Wilputte Corp., "Economical Low-Btu Industrial Fuel Gas Process (Yesterday's Experience Can Be Today's Answer)", Company Brochure, Murray Hill, NJ, no date given. L-8436

55. Riley Stoker Corp., "The Riley-Morgan Coal Gasification System", Company Brochure, Worchester, MA, October 1975. L-2138

56. Rawdon, A. H., R. A. Lisauskas and S. A. Johnson, "Operation of a Commercial Size Riley-Morgan Coal Gasifier", Presented at the American Power Conference, Chicago, IL, 19-21 April 1976. L-2136

57. Ibid.

58. Ibid.

59. Ibid.

60. Riley Stoker Corp., "The Riley-Morgan Coal Gasification System", Company Brochure, Worchester, MA, October 1975. L-2138

61. Rawdon, A. H., R. A. Lisauskas and S. A. Johnson, "Operation of a Commercial Size Riley-Morgan Coal Gasifier", Presented at the American Power Conference, Chicago, IL, 19-21 April 1976. L-2136

62. Ibid.

63. Lewis, P. S., et al., "Low-Btu Fuel Gas for Power Generation", Presented at the 1973 Lignite Symposium, Grand Forks, ND, May 1973. L-776

64. Lewis, P. S., A. J. Liberatore, and J. P. McGee, Strongly Caking Coal Gasified in a Stirred-Bed Producer. U.S. Bur. Mines, Rep. Invest. No. 7644. Morgantown, WV, Morgantown Energy Research Center, 1972. L-777

65. Dravo Corp., Handbook of Gasifiers and Gas Treatment Systems. Final Report. Report No. FE-1772-11, ERDA Contract No. E(49-18)-1772, Task Assignment No. 4. Pittsburgh, PA, Chemical Plants Div., February 1976. L-8590

66. Lewis, P. S., A. J. Liberatore, and J. P. McGee, Strongly Caking Coal Gasified in a Stirred-Bed Producer. U.S. Bur. Mines, Rep. Invest. No. 7644. Morgantown, WV, Morgantown Energy Research Center, 1972. L-777

67. Dravo Corp., Handbook of Gasifiers and Gas Treatment Systems. Final Report. Report No. FE-1772-11, ERDA Contract No. E(49-18)-1772, Task Assignment No. 4. Pittsburgh, PA, Chemical Plants Div., February 1976. L-8590

68. Ibid.

69. Rahfuse, R. V., A. J. Liberatore and G. R. Friggens, Gasification of Caking-Type Bituminous Coal at 75 to 150 psig in a Stirred-Bed Gas Producer. Report No. MERC/TPR-75/3. Morgantown, WV, Morgantown Energy Research Center, July 1975. L-4931

70. Dravo Corp., Handbook of Gasifiers and Gas Treatment Systems. Final Report. Report No. FE-1772-11, ERDA Contract No. E(49-18)-1772, Task Assignment No. 4. Pittsburgh, PA, Chemical Plants Div., February 1976. L-8590

71. Ibid.

72. Ibid.

73. Rahfuse, R. V., A. J. Liberatore and G. R. Friggens, Gasification of Caking-Type Bituminous Coal at 75 to 150 psig in a Stirred-Bed Gas Producer. Report No. MERC/TPR-75/3. Morgantown, WV, Morgantown Energy Research Center, July 1975.

74. Rahfuse, R. V., G. B. Goff and A. J. Liberatore, Noncaking Coal Gasified in a Stirred-Bed Producer. Report No. PB231-983, Clean Energy Program, Tech. Progr. Rept. No. 77. Morgantown, WV, Morgantown Energy Research Center, 1974. L-953

75. Rahfuse, R. V., A. J. Liberatore and G. R. Friggens, Gasification of Caking-Type Bituminous Coal at 75 to 150 psig in a Stirred-Bed Gas Producer. Report No. MERC/TPR-75/3. Morgantown, WV, Morgantown Energy Research Center, July 1975.

76. University of Pittsburgh, School of Engineering, Second Annual Conference on Coal Gasification and Liquefaction, Pittsburgh, PA, 5-7 August 1975, collection of papers presented. L-5695

77. Gronhovd, G. H., et al., Design and Initial Operation of a Slagging, Fixed-Bed, Pressure Gasification Pilot Plant. U.S. Bur. Mines, Rep. Invest. No. 6085. Washington, DC, U.S. Bur. Mines, 1962. L-8615

78. U.S. Energy Research & Development Admin., Quarterly Technical Progress Report, April - June 1976, Grand Forks Energy Research Center. Report No. GFERC/QTR-76/4. Grand Forks, ND, GFERC, September 1976. L-9077

79. Ibid.

80. Ibid.

81. Gronhovd, G. H., et al., Design and Initial Operation of a Slagging, Fixed-Bed, Pressure Gasification Pilot Plant. U.S. Bur. Mines, Rep. Invest. No. 6085. Washington, DC, U.S. Bur. Mines, 1962. L-8615

82. U.S. Energy Research & Development Admin., Quarterly Technical Progress Report, April - June 1976, Grand Forks Energy Research Center. Report No. GFERC/QTR-76/4. Grand Forks, ND, GFERC, September 1976. L-9077

83. Gronhovd, G. H., "Pilot-Plant Experiments in Slagging Gasification", Chem. Eng. Progr., Symp. Ser. 61(54), 104-13 (1965). L-9098

84. U.S. Energy Research & Development Admin., Quarterly Technical Progress Report, April - June 1976, Grand Forks Energy Research Center. Report No. GFERC/QTR-76/4. Grand Forks, ND, GFERC, September 1976. L-9077

85. Ibid.

86. Gronhovd, G. H., "Pilot-Plant Experiments in Slagging Gasification", Chem. Eng. Progr., Symp. Ser. 61(54), 104-13 (1965). L-9098

87. Schora, Frank C., Jr., Fuel Gasification. Advances in Chemistry Series 69, A Symposium Sponsored by the Division of Fuel Chemistry at the 152nd Meeting of ACS, New York, NY, September 1966. Washington, DC, ACS, 1967. L-8527

88. American Gas Association, Proceedings of the Sixth Synthetic Pipeline Gas Symposium, Chicago, IL, October 1974. Washington, DC, 1974. L-1635

89. Schora, Frank C., Jr., Fuel Gasification. Advances in Chemistry Series 69, A Symposium Sponsored by the Division of Fuel Chemistry at the 152nd Meeting of ACS, New York, NY, September 1966. Washington, DC, ACS, 1967. L-8527

90. Sudbury, John D., J. R. Bowden and W. B. Watson, "Demonstration of the Slagging Gasifier Process", Presented at the Eighth Synthetic Pipeline Gas Symposium, Chicago, IL, 18-20 October 1976. L-9094

91. Hebden, D., J. A. Lacey and A. G. Horsler, "Further Experiments with a Slagging Pressure Gasifier", Presented at the 30th Autumn Res. Mtg., Inst. of Gas Engineers, London, England, 17-18 November 1964. Gas Council Research Communication No. GC-122, 16 pp. L-8616

92. Lacey, J. A., "The Gasification of Coal in a Slagging Pressure Gasifier", Amer. Chem. Soc., Div. Fuel Chem., Prepr. 10(4), 151-67 (1966). L-9100

93. Ibid.

94. Ibid.

95. Radian proprietary information. L-9861

96. Ibid.

97. Ibid.

98. Ibid.

99. Dravo Corp., Handbook of Gasifiers and Gas Treatment Systems. Final Report. Report No. FE-1772-11, ERDA Contract No. E(49-18)-1772, Task Assignment No. 4. Pittsburgh, PA, Chemical Plants Div., February 1976. L-8590

100. Flesch, W., "Gasification of Finely Divided Solid Fuels in a Whirling Bed", in AIME Symposium Papers, 1952, Gasification and Liquefaction of Coal. New York, NY, 1952. (pp. 47-59) L-1265

101. Dravo Corp., Handbook of Gasifiers and Gas Treatment Systems. Final Report. Report No. FE-1772-11, ERDA Contract No. E(49-18)-1772, Task Assignment No. 4. Pittsburgh, PA, Chemical Plants Div., February 1976. L-8590

102. Davy Powergas, Power Gas from Coal Via the Winkler Process. Lakeland, FL, 1974. L-438

103. Banchik, I. N., "Clean Energy from Coal", Energy Pipelines Sys. 1(2), 31-34 (1974). L-1370

104. Ibid.

105. Corey, Richard C., "Coal Technology", in Riegel's Handbook of Industrial Chemistry, Seventh edition, James A. Kent, ed., New York, NY, Van Nostrand Reinhold, 1974. (pp. 23-61) L-394

106. Dravo Corp., Handbook of Gasifiers and Gas Treatment Systems. Final Report. Report No. FE-1772-11, ERDA Contract No. E(49-18)-1772, Task Assignment No. 4. Pittsburgh, PA, Chemical Plants Div., February 1976. L-8590

107. Banchik, I. N., "Clean Energy from Coal", Energy Pipelines Sys. 1(2), 31-34 (1974). L-1370

108. Hall, E. H., et al., Fuels Technology. A State-of-the-Art Review. Report No. PB-242 535, EPA-650/2-75-034, EPA Contract No. 68-02-1323, Task 14. Columbus, OH, Battelle Columbus Labs., April 1975.

109. Sherwin, Martin B., and Marshall E. Frank, Chemicals from Coal and Shale - an R & D Analysis for National Science Foundation. Final Report. Report No. PB-243 393, NSF Grant No. NSF-EN-43237. New York, NY, Chem Systems, Inc., July 1975.

110. Hahn, O. J., Present Status of Low-Btu Gasification Technology. Lexington, KY, Inst. for Mining and Minerals Research, Univ. of Kentucky, January 1976. L-9184

111. Dravo Corp., Handbook of Gasifiers and Gas Treatment Systems. Final Report. Report No. FE-1772-11, ERDA Contract No. E(49-18)-1772, Task Assignment No. 4. Pittsburgh, PA, Chemical Plants Div., February 1976. L-8590

112. Davy Powergas, Power Gas from Coal Via the Winkler Process. Lakeland, FL, 1974. L-438

113. Sherwin, Martin B., and Marshall E. Frank, Chemicals from Coal and Shale - an R & D Analysis for National Science Foundation. Final Report. Report No. PB-243 393, NSF Grant No. NSF-EN-43237. New York, NY, Chem Systems, Inc., July 1975. L-1024

114. Dravo Corp., Handbook of Gasifiers and Gas Treatment Systems. Final Report. Report No. FE-1772-11, ERDA Contract No. E(49-18)-1772, Task Assignment No. 4. Pittsburgh, PA, Chemical Plants Div., February 1976. L-8590

115. Sherwin, Martin B., and Marshall E. Frank, Chemicals from Coal and Shale - an R & D Analysis for National Science Foundation. Final Report. Report No. PB-243 393, NSF Grant No. NSF-EN-43237. New York, NY, Chem Systems, Inc., July 1975. L-1024

116. Kamody, John F., and J. Frank Farnsworth, "Gas from the Koppers-Totzek Process for Steam and Power Generation", Presented at the Industrial Fuel Conference, Purdue Univ., West Lafayette, IN, October 1974. L-731

117. Wintrell, Reginald, "The K-T Process: Koppers Commercially Proven Coal and Multi-Fuel Gasifier for Synthetic Gas Production in the Chemical and Fertilizer Industries", Presented at the 78th National AIChE Mtg., Salt Lake City, UT, August 1974. Pittsburgh, PA, Koppers Co., Inc., 1974. (Paper No. 29A) L-1153

118. Dravo Corp., Handbook of Gasifiers and Gas Treatment Systems. Final Report. Report No. FE-1772-11, ERDA Contract No. E(49-18)-1772, Task Assignment No. 4. Pittsburgh, PA, Chemical Plants Div., February 1976. L-8590

119. Kamody, John F., and J. Frank Farnsworth, "Gas From the Koppers-Totzek Process for Steam and Power Generation", Presented at the Industrial Fuel Conference, Purdue Univ., West Lafayette, IN, October 1974. L-731

120. Dravo Corp., Handbook of Gasifiers and Gas Treatment Systems. Final Report. Report No. FE-1772-11, ERDA Contract No. E(49-18)-1772, Task Assignment No. 4. Pittsburgh, PA, Chemical Plants Div., February 1976. L-8590

121. Koppers Engineering & Construction, "Coal Gasification: The Koppers-Totzek Process", Company Brochure, Pittsburgh, PA, 1974. L-753

122. Farnsworth, J. F., et al., "K-T: Koppers Commercially Proven Coal and Multiple-Fuel Gasifier", Presented at the 1974 Annual Convention of the Assoc. of Iron and Steel Engrs., Philadelphia, PA, April 1974. Pittsburgh, PA, Koppers Co., Inc., 1974. L-526

123. Franzen, Johannes E., and Eberhard K. Goeke, "SNG Production Based on Koppers-Totzek Coal Gasification", Presented at the Sixth Synthetic Pipeline Gas Symposium, Chicago, IL, October 1974. Heinrich Koppers GmbH, 1974. L-564

124. Dravo Corp., Handbook of Gasifiers and Gas Treatment Systems. Final Report. Report No. FE-1772-11, ERDA Contract No. E(49-18)-1772, Task Assignment No. 4. Pittsburgh, PA, Chemical Plants Div., February 1976. L-8590

125. Farnsworth, J. F., et al., "K-T: Koppers Commercially Proven Coal and Multiple-Fuel Gasifier", Presented at the 1974 Annual Convention of the Assoc. of Iron and Steel Engrs., Philadelphia, PA, April 1974. Pittsburgh, PA, Koppers Co., Inc., 1974. L-526

126. Franzen, Johannes E., and Eberhard K. Goeke, "SNG Production Based on Koppers-Totzek Coal Gasification", Presented at the Sixth Synthetic Pipeline Gas Symposium, Chicago, IL, October 1974. Heinrich Koppers GmbH, 1974. L-564

127. Kamody, John F., and J. Frank Farnsworth, "Gas From the Koppers-Totzek Process for Steam and Power Generation", Presented at the Industrial Fuel Conference, Purdue Univ., West Lafayette, IN, October 1974. L-731

128. Farnsworth, J. F., H. F. Leonard and R. Wintrell, "Application of the K-T Coal Gasification Process for the Steel Industry", Pittsburgh, PA, Koppers Co., Inc., undated. L-531

129. Farnsworth, J. Frank, D. Michael Mitsak and J. F. Kamody, "Clean Environment with Koppers-Totzek Process", in Symposium Proceedings: Environmental Aspects of Fuel Conversion Technology, St. Louis, MO, May 1974. Report No. EPA-650/2-74-118, EPA Contract No. 68-02-1325, Task 6. Research Triangle Park, NC, Research Triangle Inst., EPA, October 1974. (pp. 115-30) L-527

130. Dravo Corp., Handbook of Gasifiers and Gas Treatment Systems. Final Report. Report No. FE-1772-11, ERDA Contract No. E(49-18)-1772, Task Assignment No. 4. Pittsburgh, PA, Chemical Plants Div., February 1976. L-8590

131. Ibid.

132. Sherwin, Martin B., and Marshall E. Frank, Chemicals from Coal and Shale - an R & D Analysis for National Science Foundation. Final Report. Report No. PB-243 393, NSF Grant No. NSF-EN-43237. New York, NY, Chem Systems, Inc., July 1975. L-1024

133. Farnsworth, J. Frank, D. Michael Mitsak and J. F. Kamody, "Clean Environment with Koppers-Totzek Process", in Symposium Proceedings: Environmental Aspects of Fuel Conversion Technology, St. Louis, MO, May 1974. Report No. EPA-650/2-74-118, EPA Contract No. 68-02-1325, Task 6. Research Triangle Park, NC, Research Triangle Inst., EPA, October 1974. (pp. 115-30) L-527

134. Kamody, John F., and J. Frank Farnsworth, "Gas From the Koppers-Totzek Process for Steam and Power Generation", Presented at the Industrial Fuel Conference, Purdue Univ., West Lafayette, IN, October 1974. L-731

135. Farnsworth, J. F., and R. A. Glenn, "Status and Design Characteristics of the BCR/OCR Bi-Gas Pilot Plant", Amer. Chem. Soc., Div. Fuel Chem. Prepr. 15(3), 12-31 (1971). L-525

136. Dravo Corp., Handbook of Gasifiers and Gas Treatment Systems. Final Report. Report No. FE-1772-11, ERDA Contract No. E(49-18)-1772, Task Assignment No. 4. Pittsburgh, PA, Chemical Plants Div., February 1976.

137. Zahradnik, R. L., and R. J. Grace, "Chemistry and Physics of Entrained Coal Gasification", Amer. Chem. Soc., Div. Fuel Chem., Prepr. 18(1), 203-27 (1973). L-3087

138. Air Products and Chemicals, Inc., Engineering Study and Technical Evaluation of the Bituminous Coal Research, Inc., Two-Stage Super Pressure Gasification Process. Report No. PB-235 778, OCR R&D Report 60, OCR Contract No. 14-32-0001-1204. Washington, DC, OCR, February 1971. L-70

139. Hegarty, W. P., and B. E. Moody, "Coal Gasification: Evaluating the Bi-Gas SNG Process", Chem. Eng. Progr. 69(3), 37-42 (1973). L-645

140. Sherwin, Martin B., and Marshall E. Frank, Chemicals from Coal and Shale - an R & D Analysis for National Science Foundation. Final Report. Report No. PB-243 393, NSF Grant No. NSF-EN-43237. New York, NY, Chem Systems, Inc., July 1975. L-1024

141. Robson, Fred L., et al., Fuel Gas Environmental Impact: Phase Report. Report No. EPA-600/2-75-078, EPA Contract No. 68-02-1099. East Hartford, CT, United Technologies Research Center, November 1975. L-1521

142. American Gas Association, Proceedings of the Seventh Synthetic Pipeline Gas Symposium, Chicago, IL, 27-29 October 1975. Arlington, VA, 1976. L-8583

143. Dravo Corp., Handbook of Gasifiers and Gas Treatment Systems. Final Report. Report No. FE-1772-11, ERDA Contract No. E(49-18)-1772, Task Assignment No. 4. Pittsburgh, PA, Chemical Plants Div., February 1976. L-8590

144. Ibid.

145. Katz, Donald L., et al., Evaluation of Coal Conversion Processes to Provide Clean Fuels. Final Report. Report No. EPRI 206-0-0, PB-234 202 & PB-234 203. Ann Arbor, MI, Univ. of Michigan, Col. of Engineering, 1974. L-727

146. Sherwin, Martin B., and Marshall E. Frank, Chemicals from Coal and Shale - an R & D Analysis for National Science Foundation. Final Report. Report No. PB-243 393, NSF Grant No. NSF-EN-43237. New York, NY, Chem Systems, Inc., July 1975. L-1024

147. Air Products and Chemicals, Inc., Engineering Study and Technical Evaluation of the Bituminous Coal Research, Inc., Two-Stage Super Pressure Gasification Process. Report No. PB-235 778, OCR R&D Report 60, OCR Contract No. 14-32-0001-1204. Washington, DC, OCR, February 1971. L-70

148. Robson, Fred L., et al., Fuel Gas Environmental Impact: Phase Report. Report No. EPA-600/2-75-078, EPA Contract No. 68-02-1099. East Hartford, CT, United Technologies Research Center, November 1975. L-1521

149. Conn, A. L., "Low-Btu Gas for Power Plants", Chem. Eng. Progr. 69(12), 56-61 (1973). L-1243

150. Hall, E. H., et al., Fuels Technology. A State-of-the-Art Review. Report No. PB-242 535, EPA-650/2-75-034, EPA Contract No. 68-02-1323, Task 14. Columbus, OH, Battelle Columbus Labs., April 1975.

151. Dravo Corp., Handbook of Gasifiers and Gas Treatment Systems. Final Report. Report No. FE-1772-11, ERDA Contract No. E(49-18)-1772, Task Assignment No. 4. Pittsburgh, PA, Chemical Plants Div., February 1976. L-8590

152. Hall, E. H., et al., Fuels Technology. A State-of-the-Art Review. Report No. PB-242 535, EPA-650/2-75-034, EPA Contract No. 68-02-1323, Task 14. Columbus, OH, Battelle Columbus Labs., April 1975.

153. Dravo Corp., Handbook of Gasifiers and Gas Treatment Systems. Final Report. Report No. FE-1772-11, ERDA Contract No. E(49-18)-1772, Task Assignment No. 4. Pittsburgh, PA, Chemical Plants Div., February 1976. L-8590

154. Hahn, O. J., Present Status of Low-Btu Gasification Technology. Lexington, KY, Inst. for Mining and Minerals Research, Univ. of Kentucky, January 1976. L-9184

155. Fleming, Donald K., "An Evaluation of Factors that Affect the Genesis and Disposition of Constituents in Coal Gasification", Presented at a Symposium/Workshop on Sampling Strategy and Characterization of Potential Emissions from Synfuel Production, Austin, TX, June 1976. L-4508

156. Hoy, H. R., and D. M. Wilkins, "Total Gasification of Coal", Brit. Coal Util. Res. Assoc. Mon. Bull. 22 57-110 (1958).

157. Ferretti, E. J., K. C. Baczewski and A. C. Mengon, "Coal Gasification for Industrial Fuel", Energy Commun. 1(5), 433-94 (1975). L-7082

158. Dravo Corp., Handbook of Gasifiers and Gas Treatment Systems. Final Report. Report No. FE-1772-11, ERDA Contract No. E(49-18)-1772, Task Assignment No. 4. Pittsburgh, PA, Chemical Plants Div., February 1976. L-8590

159. Dravo Corp., Handbook of Gasifiers and Gas Treatment Systems. Final Report. Report No. FE-1772-11, ERDA Contract No. E(49-18)-1772, Task Assignment No. 4. Pittsburgh, PA, Chemical Plants Div., February 1976. L-8590

160. Hahn, O. J., Present Status of Low-Btu Gasification Technology. Lexington, KY, Inst. for Mining and Minerals Research, Univ. of Kentucky, January 1976. L-9184

161. Katz, Donald L., et al., Evaluation of Coal Conversion Processes to Provide Clean Fuels. Final Report. Report No. EPRI 206-0-0, PB-234 202 & PB-234 203. Ann Arbor, MI, Univ. of Michigan, Col. of Engineering, 1974. L-727

162. Dravo Corp., Handbook of Gasifiers and Gas Treatment Systems. Final Report. Report No. FE-1772-11, ERDA Contract No. E(49-18)-1772, Task Assignment No. 4. Pittsburgh, PA, Chemical Plants Div., February 1976. L-8590

163. Ibid.

164. Ferrell, J., and G. Poe, Impact of Clean Fuels Combustion on Primary Particulate Emissions from Stationary Sources. Report No. PB-253 452, EPA Contract No. 68-02-1318. Mountain View, CA, Acurex Corp., Aerotherm Div., March 1976. L-7829

165. Inex Resources, Inc., "Inex Resources, Inc.", Company Brochure, Lakewood, CO, no date given. L-9344

166. Scholz, Walter H., "Rectisol: A Low-Temperature Scrubbing Process for Gas Purification", Advan. Cryog. Eng. 15 406-14 (1974). L-1004

167. Personal Communication with W. J. Rhodes. L-7888

168. Ibid.

169. Dravo Corp., Handbook of Gasifiers and Gas Treatment Systems. Final Report. Report No. FE-1772-11, ERDA Contract No. E(49-18)-1772, Task Assignment No. 4. Pittsburgh, PA, Chemical Plants Div., February 1976. L-8590

170. Raney, Donald R., "Remove Carbon Dioxide with Selexol", Hydrocarbon Process. 55(4), 73-75 (1976). L-1439

171. Riesenfeld, F. C., and A. L. Kohl, Gas Purification. Second edition. Houston, TX, Gulf Publishing Co., 1974. L-1359

172. Ibid.

173. Franckowiak, S., and E. Nitschke, "Estasolvan. New Gas Treating Process", Hydrocarbon Process. 49(5), 145-48 (1970). L-1504

174. Ibid.

175. Riesenfeld, F. C., and A. L. Kohl, Gas Purification. Second edition. Houston, TX, Gulf Publishing Co., 1974. L-1359

176. Dingman, J. C., and T. F. Moore, "Compare DGA and MEA Sweetening Methods", Hydrocarbon Process. 47(7), 138-40 (1968). L-1354

177. Riesenfeld, F. C., and A. L. Kohl, Gas Purification. Second edition. Houston, TX, Gulf Publishing Co., 1974. L-1359

178. Heisler, Leopold, and Helmut Weiss, "Experience with an Austrian Gas Plant", Hydrocarbon Process. 54(5), 157-61 1975. L-2128

179. Ibid.

180. Dravo Corp., Handbook of Gasifiers and Gas Treatment Systems. Final Report. Report No. FE-1772-11, ERDA Contract No. E(49-18)-1772, Task Assignment No. 4. Pittsburgh, PA, Chemical Plants Div., February 1976. L-8590

181. "NG/SNG Handbook", Hydrocarbon Process. 50(4), 93-122 (1971). L-5978

182. Ibid.

183. Ibid.

184. Dingman, J. C., and T. F. Moore, "Compare DGA and MEA Sweetening Methods", Hydrocarbon Process. 47(7), 138-40 (1968). L-1354

185. Ibid.

186. Dravo Corp., Handbook of Gasifiers and Gas Treatment Systems. Final Report. Report No. FE-1772-11, ERDA Contract No. E(49-18)-1772, Task Assignment No. 4. Pittsburgh, PA, Chemical Plants Div., February 1976. L-8590

187. Ibid.

188. Robson, Fred L., et al., Fuel Gas Environmental Impact: Phase Report. Report No. EPA-600/2-75-078, EPA Contract No. 68-02-1099. East Hartford, CT, United Technologies Research Center, November 1975. L-1521

189. Goar, B. G., "Sulfinol Process Has Several Key Advantages", Oil Gas J. 67 117-20 (30 June 1969). L-1916

190. Bratzler, K., and A. Doerges, "Amisol Process Purifies Gases", Hydrocarbon Process. 53(4), 78-80 (1974). L-1353

191. Ibid.

192. Pearson, M. J., "Developments in Claus Catalysts", Hydrocarbon Process. 52(2), 81-85 (1973). L-2106

193. Berlie, Elmer M., Richard K. Kerr and Robin P. Rankine, "The Role of the Claus Sulphur Recovery Process in Minimizing Air Pollution", Presented at the 67th Annual Air Pollution Control Association Meeting, Denver, CO, 9-13 June 1974. Pittsburgh, PA, Air Pollution Control Assoc., 1974. (Paper No. 74-135) L-1373

194. Ibid.

195. Riesenfeld, F. C., and A. L. Kohl, Gas Purification. Second edition. Houston, TX, Gulf Publishing Co., 1974. L-1359

196. Ibid.

197. Berlie, Elmer M., Richard K. Kerr and Robin P. Rankine, "The Role of the Claus Sulphur Recovery Process in Minimizing Air Pollution", Presented at the 67th Annual Air Pollution Control Association Meeting, Denver, CO, 9-13 June 1974. Pittsburgh, PA, Air Pollution Control Assoc., 1974. (Paper No. 74-135) L-1373

198. Gamson, B. W., and R. H. Elkins, "Sulfur from Hydrogen Sulfide", Chem. Eng. Progr. 49(4), 203-15 (1953). L-1871

199. Dravo Corp., Handbook of Gasifiers and Gas Treatment Systems. Final Report. Report No. FE-1772-11, ERDA Contract No. E(49-18)-1772, Task Assignment No. 4. Pittsburgh, PA, Chemical Plants Div., February 1976. L-8590

200. Goar, Gene, "Impure Feeds Cause Claus Plant Problems", Hydrocarbon Process. 53(7), 129-32 (1974). L-606

201. Pearson, M. J., "Developments in Claus Catalysts", Hydrocarbon Process. 52(2), 81-85 (1973). L-2106

202. Ibid.

203. Goar, Gene, "Impure Feeds Cause Claus Plant Problems", Hydrocarbon Process. 53(7), 129-32 (1974). L-606

204. Riesenfeld, F. C., and A. L. Kohl, Gas Purification. Second edition. Houston, TX, Gulf Publishing Co., 1974. L-1359

205. Homberg, Otto A., and Alan H. Singleton, "Performance and Problems of Claus Plant Operation on Coke Oven Acid Gases", Reprinted from J. Air Pollut. Contr. Assoc. 25(4), 375-78 (1975). L-7848

206. Personal Communication with Catalytic, Inc. L-9355

207. Ibid.

208. Riesenfeld, F. C., and A. L. Kohl, Gas Purification. Second edition. Houston, TX, Gulf Publishing Co., 1974. L-1359

209. Personal Communication with Catalytic, Inc. L-9355

210. Ibid.

211. El Paso Natural Gas Co., Application of El Paso Natural Gas Co. for a Certificate of Public Convenience and Necessity. Docket No. CP73-131. El Paso, TX, 1973. L-512

212. Personal Communication with Catalytic, Inc. L-9355

213. Ibid.

214. Ibid.

215. Ibid.

216. Personal Communication with Catalytic, Inc. L-9355

217. Beavon, David K., "Add-On Process Slashes Claus Tail Gas Pollution", Chem. Eng. 78(28), 71-73 (1971). L-183

218. Beavon, David K., "Beavon Sulfur Removal Process", in Proceedings of the International Conference on Control of Gaseous Sulphur Compound Emissions, Univ. of Salford, England, 10-12 April 1973, Vol. 1. L-1647

219. "New Beavon Process Takes Sulfur-Bearing Compounds from Tail Gas", Oil Gas J. 70(6), 66-67 (1972). L-2053

220. Personal Communication with Catalytic, Inc. L-9355

221. Beavon, David K., and Raoul P. Vaell, "The Beavon Sulfur Removal Process for Purifying Claus Plant Tail Gas", in American Petroleum Institute Proceedings, Division of Refining, 1972. New York, NY, 1972. (p. 267) L-194

222. Pearson, M. J., "Developments in Claus Catalysts", Hydrocarbon Process. 52(2), 81-85 (1973). L-2106

223. Ibid.

224. Beavon, David K., and Raoul P. Vaell, "The Beavon Sulfur Removal Process for Purifying Claus Plant Tail Gas", in American Petroleum Institute Proceedings, Division of Refining, 1972. New York, NY, 1972. (p. 267) L-194

225. Beavon, David K., "Add-On Process Slashes Claus Tail Gas Pollution", Chem. Eng. 78(28), 71-73 (1971). L-183

226. Beavon, David K., and Raoul P. Vaell, "The Beavon Sulfur Removal Process for Purifying Claus Plant Tail Gas", in American Petroleum Institute Proceedings, Division of Refining, 1972. New York, NY, 1972. (p. 267) L-194

227. Dravo Corp., Handbook of Gasifiers and Gas Treatment Systems. Final Report. Report No. FE-1772-11, ERDA Contract No. E(49-18)-1772, Task Assignment No. 4. Pittsburgh, PA, Chemical Plants Div., February 1976. L-8590

228. Naber, J. E., J. A. Wesselingh and W. Groenendaal, "New Shell Process Treats Claus Off-Gas", Chem. Eng. Progr. 69(12), 29-34 (1973).

229. Dravo Corp., Handbook of Gasifiers and Gas Treatment Systems. Final Report. Report No. FE-1772-11, ERDA Contract No. E(49-18)-1772, Task Assignment No. 4. Pittsburgh, PA, Chemical Plants Div., February 1976. L-8590

230. Ibid.

231. Pearson, M. J., "Developments in Claus Catalysts", Hydrocarbon Process. 52(2), 81-85 (1973). L-2106

232. Ibid.

233. Naber, J. E., J. A. Wesselingh and W. Groenendaal, "New Shell Process Treats Claus Off-Gas", Chem. Eng. Progr. 69(12), 29-34 (1973). L-8532

234. Ibid.

235. Ibid.

236. Danielson, John A., ed., comp., Air Pollution Engineering Manual. Second edition. Research Triangle Park, NC, EPA, Office of Air and Water Programs, May 1973. L-1642

237. Ibid.

238. Rolke, R. W., et al., Afterburner Systems Study. Report No. EPA-R2-72-062, PB-212 560, EPA Contract No. EHS-D-71-3. Emeryville, CA, Shell Development Co., August 1972.

239. Ibid.

240. Ibid.

241. Ibid.

242. Ibid.

243. Ibid.

244. Ibid.

245. Danielson, John A., ed., comp., Air Pollution Engineering Manual. Second edition. Research Triangle Park, NC, EPA, Office of Air and Water Programs, May 1973. L-1642

246. Danielson, John A., ed., comp., Air Pollution Engineering Manual. Second edition. Research Triangle Park, NC, EPA, Office of Air and Water Programs, May 1973. L-1642

247. American Petroleum Institute, API Manual on Disposal of Refinery Wastes, Liquid Wastes Volume. Washington, DC, 1969. L-46

248. Ibid.

249. Franzen, A., V. Skogan and J. Grutsch, "Pollution Abatement: Tertiary Treatment of Process Water", Chem. Eng. Progr. 68(8), 65-72 (1972). L-44

250. Dahlstrom, D., L. Lash and J. Boyd., "Biological and Chemical Treatment of Industrial Wastes", Chem. Eng. Progr. 66(11), 41-48 (1970). L-39

251. Bush, Kenneth E., "Refinery Wastewater Treatment and Reuse", Chem. Eng. 83(8), 113-18 (1976). L-1315

252. Thomson, S. J., "Data Improves Separator Design", Hydrocarbon Process. 52(10), 81-83 (1973). L-1687

253. "Meeting the Wastewater Treatment Challenge", Reprinted from Plant and Industrial Engineer's Digest 3(1) (1975). L-7844

254. Shaw, E. C., and W. L. Caughman, Jr., "Parallel Plate Interceptor", NLGI Spokesman 33(11), 395-99 (1970). L-4388

255. Prather, B. V., and E. P. Young, "Energy for Wastewater Treatment", Hydrocarbon Process. 55(5), 88-91 (1976). L-2166

256. Ibid.

257. Bush, Kenneth E., "Refinery Wastewater Treatment and Reuse", Chem. Eng. 83(8), 113-18 (1976). L-1315

258. "Meeting the Wastewater Treatment Challenge", Reprinted from Plant and Industrial Engineer's Digest 3(1) (1975). L-7844

259. Thomson, S. J., "Data Improves Separator Design", Hydrocarbon Process. 52(10), 81-83 (1973). L-1687

260. McCrodden, B. A., "Treatment of Refinery Wastewater Using Filtration and Carbon Adsorption", Eng. Bull., Purdue Univ., Eng. Ext. Ser. 145(II), 230-44 (1974). L-5325

261. Beychok, Milton R., "Coal Gasification and the Phenosolvan Process", Amer. Chem. Soc., Div. Fuel Chem., Prepr. 19(5), 85-93 (1974).

262. Personal Communication with W. J. Rhodes. L-7888

263. Beychok, Milton R., "Coal Gasification and the Phenosolvan Process", Amer. Chem. Soc., Div. Fuel Chem., Prepr. 19(5), 85-93 (1974). L-196

264. Wurm, H. J., "Treatment of Phenolic Wastes", Eng. Bull., Purdue Univ., Eng. Ext. Ser. 132(II), 1054-73 (1969). L-3078

265. Ibid.

266. American Lurgi Corp., "Dephenolization of Effluents by the Phenosolvan Process", Company Brochure, New Jersey, no date given. L-9333

267. Van Stone, G. R., "Treatment of Coke Plant Waste Effluent", Iron Steel Eng. 49(4), 63-66 (1972). L-1431

268. Cheremisinoff, Paul N., "Carbon Adsorption of Air and Water Pollutants", Pollut. Engr. 8(7), 24-32 (1976). L-7804

269. American Petroleum Institute, API Manual on Disposal of Refinery Wastes, Liquid Wastes Volume. Washington, DC, 1969. L-46

270. Cheremisinoff, Paul N., "Carbon Adsorption of Air and Water Pollutants", Pollut. Engr. 8(7), 24-32 (1976). L-7804

271. Henshaw, Tom B., "Adsorption/Filtration Plant Cuts Phenols from Effluent", Chem. Eng. 78(12), 47-51 (1971). L-4502

272. Fox, Robert D., "Pollution Control at the Source", Chem. Eng. 80(18), 72-82 (1973). L-4500

273. Erskine, D. B., and W. G. Schuliger, "Activated Carbon Processes for Liquids", Chem. Eng. Progr. 67(11), 41-44 (1971). L-2391

274. Henshaw, Tom B., "Adsorption/Filtration Plant Cuts Phenols from Effluent", Chem. Eng. 78(12), 47-51 (1971). L-4502

275. Ibid.

276. Cheremisinoff, Paul N., "Carbon Adsorption of Air and Water Pollutants", Pollut. Engr. 8(7), 24-32 (1976). L-7804

277. Ibid.

278. Van Stone, G. R., "Treatment of Coke Plant Waste Effluent", Iron Steel Eng. 49(4), 63-66 (1972). L-1431

279. Hager, Donald G., "Industrial Wastewater Treatment by Granular Activated Carbon", Ind. Water Eng. 11(1), 14-28 (1974). L-2083

280. Van Stone, G. R., "Treatment of Coke Plant Waste Effluent", Iron Steel Eng. 49(4), 63-66 (1972). L-1431

281. DeJohn, Paschal B., and Alan D. Adams, "Activated Carbon Improves Wastewater Treatment", Hydrocarbon Process. 54(10), 104-11 (1975) L-1442

282. Kostenbader, Paul D., and John W. Flecksteiner, "Biological Oxidation of Coke Plant Weak Ammonia Liquor", J. Water Pollut. Contr. Fed. 41(2, Part 1), 199+ (1969). L-751

283. Bush, Kenneth E., "Refinery Wastewater Treatment and Reuse", Chem. Eng. 83(8), 113-18 (1976). L-1315

284. American Petroleum Institute, API Manual on Disposal of Refinery Wastes, Liquid Wastes Volume. Washington, DC, 1969. L-46

285. Mohler, E. F., Jr., and L. T. Clere, "Bio-Oxidation Process Saves H_2O", Hydrocarbon Process. 52(10), 84-88 (1973). L-1685

286. Barker, John E., et al., Biological Removal of Carbon and Nitrogen Compounds from Coke Plant Wastes. Report No. EPA-R2-73-167, EPA Project No. 12010-EDY. New York, NY, American Iron and Steel Inst., April 1973. L-180

287. Mohler, E. F., Jr., and L. T. Clere, "Bio-Oxidation Process Saves H_2O", Hydrocarbon Process. 52(10), 84-88 (1973). L-1685

288. American Petroleum Institute, API Manual on Disposal of Refinery Wastes, Liquid Wastes Volume. Washington, DC, 1969. L-46

289. Matsch, L. C., and W. C. Dedeke, "Waste Water Treatment: Using Pure Oxygen for Secondary Treatment", Chem. Eng. Progr. 69(8), 75-76 (1973). L-8619

290. Kostenbader, Paul D., and John W. Flecksteiner, "Biological Oxidation of Coke Plant Weak Ammonia Liquor", J. Water Pollut. Contr. Fed. 41(2, Part 1), 199+ (1969). L-751

291. American Petroleum Institute, API Manual on Disposal of Refinery Wastes, Liquid Wastes Volume. Washington, DC, 1969. L-46

292. Ibid.

293. Ibid.

294. Ibid.

295. Maguire, William F., "Reuse Sour Water Stripper Bottoms", Hydrocarbon Process. 54(9), 151-52 (1975). L-2129

296. Beychok, Milton R., "Wastewater Treatment, State-of-the-Art", Hydrocarbon Process. 50(12), 109-12 (1971). L-1683

297. Hart, James A., "Waste Water Recycled for Use in Refinery Cooling Towers", Oil Gas J. 71(24), 92-96 (1973). L-3353

298. Ibid.

299. Bheda, Manilal, and D. B. Wilson, "A Foam Process for Treatment of Sour Water", Chem. Eng. Progr., Symp. Ser. 65(97), 274-77 (1969). L-217

300. Annesen, R., and G. Gould, "Sour-Water Processing Turns Problem Into Payout", Chem. Eng. 78(7), 67-69 (1971). L-42

301. Ibid.

302. Ibid.

303. Ibid.

304. Annesen, R., and G. Gould, "Sour-Water Processing Turns Problem Into Payout", Chem. Eng. 78(7), 67-69 (1971). L-42

305. Ibid.

306. Stickney, W. W., and T. M. Fosberg, "Putting Evaporators to Work: Treating Chemical Wastes by Evaporation", Chem. Eng. Progr. 72(4), 41-46 (1976). L-6051

307. "Get Zero Discharge with Brine Concentration", Hydrocarbon Process. 52(10), 77-80 (1973). L-2010

308. Ibid.

309. Stickney, W. W., and T. M. Fosberg, "Putting Evaporators to Work: Treating Chemical Wastes by Evaporation", Chem. Eng. Progr. 72(4), 41-46 (1976). L-6051

310. Perry, John H., ed., Chemical Engineer's Handbook Fourth edition. New York, NY, McGraw-Hill Book Co., 1963. L-9306

311. Stickney, W. W., and T. M. Fosberg, "Putting Evaporators to Work: Treating Chemical Wastes by Evaporation", Chem. Eng. Progr. 72(4), 41-46 (1976). L-6051

312. Ibid.

313. Cheremisinoff, Paul N., and Richard A. Young, Pollution Engineering Practice Handbook. Ann Arbor, MI, Ann Arbor Science, 1975. L-7845

314. Ibid.

TECHNICAL REPORT DATA
(Please read Instructions on the reverse before completing)

1. REPORT NO. EPA-600/7-77-125b	2.	3. RECIPIENT'S ACCESSION NO.
4. TITLE AND SUBTITLE Environmental Assessment Data Base for Low/Medium-Btu Gasification Technology: Volume II. Appendices A-F		5. REPORT DATE November 1977
		6. PERFORMING ORGANIZATION CODE
7. AUTHOR(S) E. C. Cavanaugh, W. E. Corbett, and G. C. Page		8. PERFORMING ORGANIZATION REPORT NO.
9. PERFORMING ORGANIZATION NAME AND ADDRESS Radian Corporation 8500 Shoal Creek Boulevard Austin, Texas 78758		10. PROGRAM ELEMENT NO. EHE623A
		11. CONTRACT/GRANT NO. 68-02-2147, Exhibit A
12. SPONSORING AGENCY NAME AND ADDRESS EPA, Office of Research and Development Industrial Environmental Research Laboratory Research Triangle Park, NC 27711		13. TYPE OF REPORT AND PERIOD COVERED Task Final; 8/76-6/77
		14. SPONSORING AGENCY CODE EPA/600/13

15. SUPPLEMENTARY NOTES IERL-RTP project officer for this report is William J. Rhodes, Mail Drop 61, 919/541-2851.

16. ABSTRACT The report represents the current data base for the environmental assessment of low- and medium-Btu gasification technology. Purpose of the report is to determine: processes that can be used to produce low/medium-Btu gas from coal, uses of the product gas, multimedia discharge streams generated by the processes, and the technology required to control the discharge streams. Attention is on the processes that appear to have the greatest likelihood of near-term commercialization. This type of screening provides the preliminary basis for establishing priorities for subsequent phases of the low/medium-Btu gasification environmental assessment program. Processes required to produce low/medium-Btu gas from coal are divided into discrete operations: coal pretreatment, gasification, and gas purification. Each operation is divided into discrete modules, each having a defined function and identifiable raw materials, products, and discharge streams. This volume includes appendices that contain detailed process, environmental, and control technology data for the processes considered to have the greatest potential for near-term commercialization. Volume I includes a discussion of the status, significant trends, major process operations, multimedia discharge stream control strategies, and recommendations for future program activities.

17. KEY WORDS AND DOCUMENT ANALYSIS

a. DESCRIPTORS	b. IDENTIFIERS/OPEN ENDED TERMS	c. COSATI Field/Group
Air Pollution	Air Pollution Control	13B
Assessments	Stationary Sources	14B
Coal	Environmental Assessment	21D
Gasification		13H,07A
Treatment	Pretreatment	
Gas Purification		

18. DISTRIBUTION STATEMENT Unlimited	19. SECURITY CLASS *(This Report)* Unclassified	21. NO. OF PAGES 365
	20. SECURITY CLASS *(This page)* Unclassified	22. PRICE

EPA Form 2220-1 (9-73)