United States
Environmental Protection
Agency

Industrial Environmental Research
Laboratory
Research Triangle Park NC 27711

EPA-600/7-79-022d
July 1979

EPA

# EPA Utility FGD Survey: February-March 1979

## Interagency Energy/Environment R&D Program Report

## RESEARCH REPORTING SERIES

Research reports of the Office of Research and Development, U.S. Environmental Protection Agency, have been grouped into nine series. These nine broad categories were established to facilitate further development and application of environmental technology. Elimination of traditional grouping was consciously planned to foster technology transfer and a maximum interface in related fields. The nine series are:

1. Environmental Health Effects Research
2. Environmental Protection Technology
3. Ecological Research
4. Environmental Monitoring
5. Socioeconomic Environmental Studies
6. Scientific and Technical Assessment Reports (STAR)
7. Interagency Energy-Environment Research and Development
8. "Special" Reports
9. Miscellaneous Reports

This report has been assigned to the INTERAGENCY ENERGY-ENVIRONMENT RESEARCH AND DEVELOPMENT series. Reports in this series result from the effort funded under the 17-agency Federal Energy/Environment Research and Development Program. These studies relate to EPA's mission to protect the public health and welfare from adverse effects of pollutants associated with energy systems. The goal of the Program is to assure the rapid development of domestic energy supplies in an environmentally-compatible manner by providing the necessary environmental data and control technology. Investigations include analyses of the transport of energy-related pollutants and their health and ecological effects; assessments of, and development of, control technologies for energy systems; and integrated assessments of a wide range of energy-related environmental issues.

## EPA REVIEW NOTICE

This report has been reviewed by the participating Federal Agencies, and approved for publication. Approval does not signify that the contents necessarily reflect the views and policies of the Government, nor does mention of trade names or commercial products constitute endorsement or recommendation for use.

This document is available to the public through the National Technical Information Service, Springfield, Virginia 22161.

EPA-600/7-79-022d

July 1979

# EPA Utility FGD Survey: February-March 1979

by

M. Smith, M. Melia, and T. Koger

PEDCo. Environmental, Inc.
11499 Chester Road
Cincinnati, Ohio 45246

Contract No. 68-02-2603
Task No. 48
Program Element No. EHE624

EPA Project Officers:

N. Kaplan

Industrial Environmental Research Laboratory
Office of Energy, Minerals, and Industry
Research Triangle Park, NC 27711

J.C. Herlihy

Division of Stationary Source Enforcement
Office of Enforcement
Washington, DC 20460

Prepared for

U.S. ENVIRONMENTAL PROTECTION AGENCY
Office of Research and Development
Washington, DC 20460

## NOTICE

This report, (prepared by PEDCo Environmental, Inc., Cincinnati, Ohio, under EPA Contract No. 68-02-2603, Task No. 48) is provided as an information transfer document. Data in this report are supplied voluntarily by utility representatives; flue gas desulfurization (FGD) system designers, and suppliers; regulatory personnel; and others. Neither EPA nor the designated contractor warrants the accuracy or completeness of information contained in this report.

This report is the first of three supplementary issues to the December 1978 - January 1979 report. Supplementary issues are cumulative, so that it is necessary to retain only the latest issue and the December 1978 - January 1979 report (EPA-600/7-79-022c).

Initial distribution of the report (generally, one copy per company) is limited to organizations and individuals indicating a specific interest in the field of FGD technology. Additional copies of this report and succeeding issues can be purchased from National Technical Information Service, Springfield, Virginia 22151.

CONTENTS


| | Page |
|---|---|
| Notice | ii |
| Tables | vi |
| Executive Summary and Highlights | vii |
| Section 1 Summary List of FGD Systems | 1 |
| Section 2 Status of FGD Systems | 6 |
| Section 3 Design and Performance Data for Operational FGD Systems | 34 |
| Alabama Electric | |
| Tombigbee 2 | 34 |
| Allegheny Power System | |
| Pleasants 1 | 35 |
| Arizona Electric Power | |
| Apache 2 | 37 |
| Arizona Public Service | |
| Cholla 1 | 38 |
| Cholla 2 | 40 |
| Central Illinois Light | |
| Duck Creek 1 | 41 |
| Columbus and Southern Ohio Electric | |
| Conesville 5 | 43 |
| Conesville 6 | 45 |
| Duquesne Light | |
| Elrama 1-4 | 46 |
| Phillips 1-6 | 47 |
| Gulf Power | |
| Scholz 1,2 | 48 |
| Indianapolis Power and Light | |
| Petersburg 3 | 49 |
| Kansas City Power and Light | |
| Hawthorn 3 | 51 |
| Hawthorn 4 | 52 |
| LaCygne 1 | 53 |
| Kansas Power and Light | |
| Jeffrey 1 | 55 |
| Lawrence 4 | 56 |
| Lawrence 5 | 57 |
| Kentucky Utilities | |
| Green River 1-3 | 58 |

CONTENTS (continued)


| | Page |
|---|---|
| Louisville Gas and Electric | |
| Cane Run 4 | 59 |
| Cane Run 5 | 60 |
| Cane Run 6 | 61 |
| Mill Creek 3 | 63 |
| Paddy's Run 6 | 64 |
| Minnkota Power Cooperative | |
| Milton R. Young 2 | 65 |
| Montana Power | |
| Colstrip 1 | 66 |
| Colstrip 2 | 67 |
| Nevada Power | |
| Reid Gardner 1 | 68 |
| Reid Gardner 2 | 69 |
| Reid Gardner 3 | 70 |
| Northern Indiana Public Service | |
| Dean H. Mitchell 11 | 71 |
| Northern States Power | |
| Sherburne 1 | 72 |
| Sherburne 2 | 74 |
| Pennsylvania Power | |
| Bruce Mansfield 1 | 76 |
| Bruce Mansfield 2 | 77 |
| Philadelphia Electric | |
| Eddystone 1A | 78 |
| Public Service Company of New Mexico | |
| San Juan 1 | 79 |
| San Juan 2 | 80 |
| Southern Carolina Public Service Authority | |
| Winyah 2 | 81 |
| Southern Indiana Gas and Electric | |
| A.B. Brown 1 | 82 |
| Southern Mississippi Electric | |
| R.D. Morrow 1 | 84 |
| Springfield City Utilities | |
| Southwest 1 | 85 |
| Tennessee Valley Authority | |
| Shawnee 10A | 87 |
| Shawnee 10B | 88 |
| Widows Creek 8 | 90 |
| Texas Utilities | |
| Martin Lake 1 | 91 |
| Martin Lake 2 | 92 |
| Martin Lake 3 | 93 |
| Monticello 3 | 95 |
| Utah Power and Light | |
| Hunter 1 | 96 |
| Huntington 1 | 98 |

CONTENTS (continued)


| | | Page |
|---|---|---|
| Section 4 | Summary of FGD Systems by Company | 99 |
| Section 5 | Summary of FGD Systems by System Supplier | 101 |
| Section 6 | Summary of FGD Systems by Process | 103 |
| Section 7 | Summary of Operating FGD Systems by Process and Unit | 104 |
| Section 8 | Summary of End-Product Disposal Practices for Operational FGD Systems | 106 |
| Section 9 | Summary of FGD Systems in Operation | 108 |
| Section 10 | Summary of FGD Systems Under Construction | 111 |
| Section 11 | Summary of Contract Awarded FGD Systems | 113 |
| Section 12 | Summary of Planned FGD Systems | 114 |
| Section 13 | Total FGD Units and Capacity (MW) Installed by Year | 117 |
| Section 14 | Design and Performance Data for Operational Particulate Scrubbers | 118 |
| Appendix A | FGD System Cost Data: Operational and Nonoperational Systems | |
| | A-1 Major FGD System Equipment Summary | A-7 |
| | A-2 Cost Element Factors | A-12 |
| | A-3 Description of Cost | A-15 |
| | A-4 Categorical Results of Reported and Adjusted Capital and Annual Costs for Operational FGD Systems | A-18 |
| | A-5 Costs for Operational FGD Systems | A-19 |
| | A-6 Costs for Nonoperational FGD Systems | A-23 |
| Appendix B | FGD Process Flow Diagrams | B-1 |
| Appendix C | Definitions | C-1 |
| Appendix D | Glossary of Units | D-1 |

TABLES


| No. | | Page |
|---|---|---|
| I | Number and Total Capacity of FGD Systems | vii |
| II | Summary of Changes, February-March 1979 | ix |
| III | Performance of Operational Units, February-March 1979 | x |

## EXECUTIVE SUMMARY

This report has been prepared every other month by PEDCo Environmental, Inc., under contract to the Industrial Environmental Research Laboratory/Research Triangle Park and the Division of Stationary Source Enforcement of the U.S. Environmental Protection Agency. After this issue, reports will be issued quarterly (every three months.) This is the second issue generated by a new computerized data base system, the structure of which is illustrated in Figure 1.

Table 1 summarizes the status of FGD systems in the United States at the end of March 1979. Table II lists the units that have changed status during February - March 1979, and Table III shows the performance of operating units during this period.

TABLE I. NUMBER AND TOTAL CAPACITY OF FGD SYSTEMS

| Status | No. of Units | Total Controlled Capacity, MW* | Equivalent Scrubbed Capacity, MW† |
|---|---|---|---|
| Operational | 51 | 19,170 | 17,822 |
| Under construction | 42 | 17,357 | 15,763 |
| Planned: | | | |
| Contract awarded | 20 | 11,093 | 10,517 |
| Letter of intent | 2 | 1,100 | 1,100 |
| Requesting/evaluating bids | 13 | 9,998 | 9,110 |
| Considering only FGD systems | 34 | 17,944 | 17,174 |
| TOTAL | 162 | 76,662 | 71,486 |

* Total Controlled Capacity (TCC) is the summation of the gross unit capacities (MW) brought into compliance with FGD systems regardless of the percent of the flue gas scrubbed by the FGD system(s).

† Equivalent Scrubbed Capacity (ESC) is the summation of the ef fective scrubbed flue gas in equivalent MW based on the percent of the flue gas scrubbed by the FGD system(s).

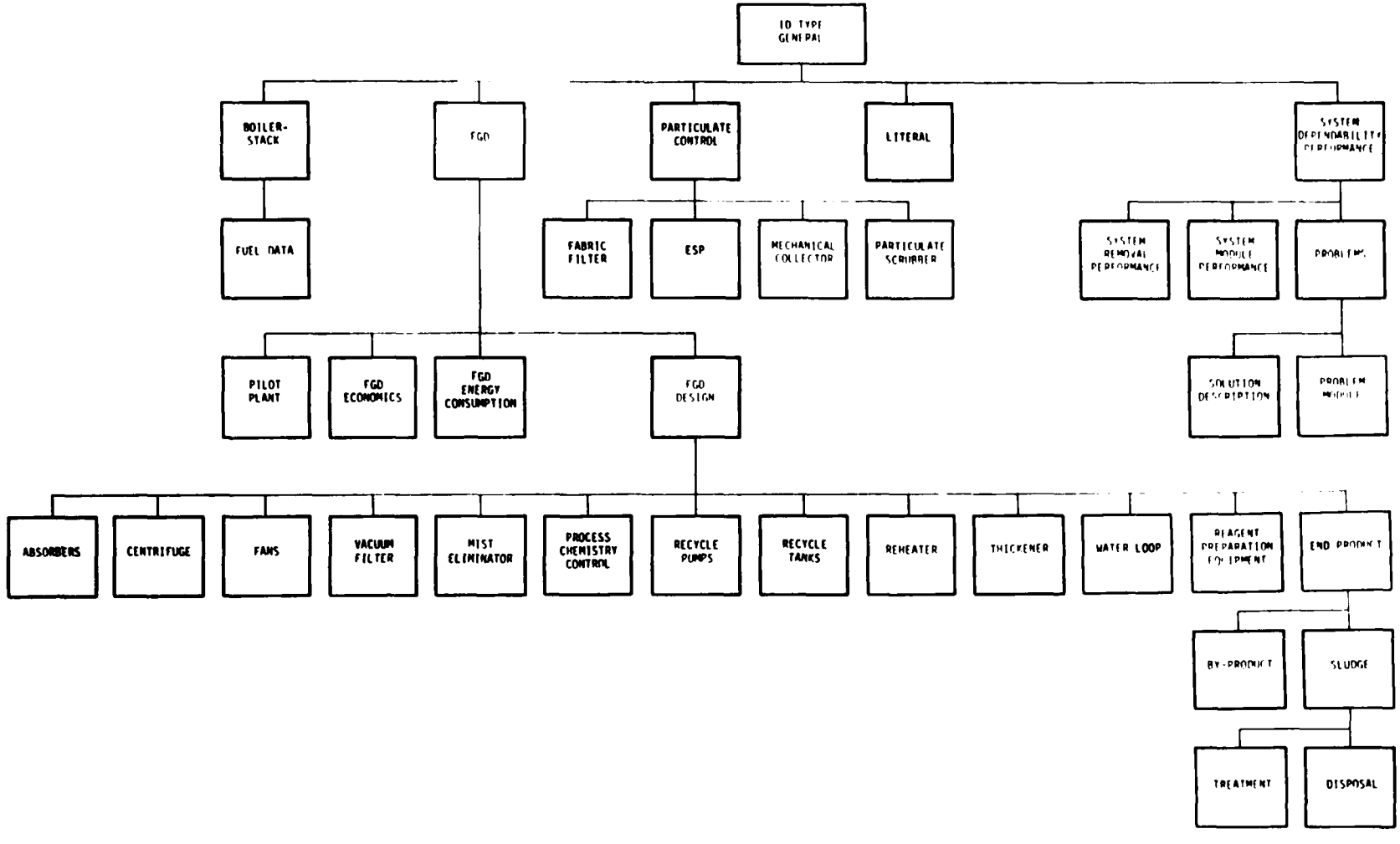


Figure 1. Computerized data base structure diagram.

TABLE II. SUMMARY OF CHANGES: FGD SUMMARY REPORT, FEBRUARY-MARCH 1979

| FGD status report | Operational | | Under construction | | Contract awarded | | Letter of intent | | Requesting/ eval. bids | | Considering FGD | | Total | |
|---|---|---|---|---|---|---|---|---|---|---|---|---|---|---|
| | No. | MW* | No. | MW* | No. | MW* | No. | MW* | No. | MW* | No. | MW* | No. | MW* |
| 11/31/79** | 46 | 15,795 | 45 | 16,976 | 21 | 11,051 | 2 | 1100 | 11 | 8268 | 33 | 17,014 | 158 | 70,204 |
| Allegheny Power System Pleasants 1 | +1 | 519 | -1 | 519 | | | | | | | | | | |
| Louisville Gas & Electric Cane Run 6 | +1 | 288 | -1 | 288 | | | | | | | | | | |
| Muscatine Power & Water Muscatine 9 | | | | | | | | | | | +1 | 160 | +1 | 160 |
| Northern Indiana Public Service Schahfer 17 | | | | | | | | | +1 | 421 | | | +1 | 421 |
| Northern Indiana Public Service Schahfer 18 | | | | | | | | | +1 | 421 | | | +1 | 421 |
| Public Service of New Mexico San Juan 3 | | | +1 | 534 | -1 | 534 | | | | | | | | |
| South Carolina Public Service Winyah 3 | | | +1 | 280 | -1 | 280 | | | | | | | | |
| South Carolina Public Service Winyah 4 | | | | | +1 | 280 | | | | | | | +1 | 280 |
| Southern Indiana Gas & Elec. A.B. Brown 1 | +1 | 265 | -1 | 265 | | | | | | | | | | |
| Texas Utilities Martin Lake 3 | +1 | 595 | -1 | 595 | | | | | | | | | | |
| Utah Power & Light Hunter 1 | +1 | 360 | -1 | 360 | | | | | | | | | | |
| TOTAL | 51 | 17,822 | 42 | 15,763 | 20 | 10,517 | 2 | 1100 | 13 | 9110 | 34 | 17,174 | 162 | 71,486 |

* Equivalent scrubbed capacity.
** The totals as of 1/31/79 shown have been modified as a result of corrections of MW ratings reported by utilities.

## TABLE III. PERFORMANCE OF OPERATIONAL UNITS FEBRUARY 1979 - MARCH 1979

| Plant | FGD system capacity, MW[a] | Flue gas % scrubbed | FGD capacity on line during period, MW[a,b] | No information for this period, MW | Shut down through-out period, MW | FGD system availability, %[c] | | FGD system operability, %[c] | | FGD system reliability, %[c] | | FGD system utilization, %[c] | |
|---|---|---|---|---|---|---|---|---|---|---|---|---|---|
| | | | | | | Feb. | Mar. | Feb. | Mar. | Feb. | Mar. | Feb. | Mar. |
| Tombigbee 2 | 179 | 70 | 179 | | | 95 | 95 | | | | | | |
| Pleasants 1 | 519 | 84 | 519 | | | | | | | | | | |
| Apache 2 | 195 | 100 | 195 | | | | | | | | | | |
| Cholla 1 | 119 | 100 | 119 | | | | | 100 | 98 | 100 | 98 | 100 | 98 |
| Cholla 2 | 350 | 100 | 350 | | | | | | | | | | |
| Duck Creek 1 | 416 | 100 | 416 | | | | | | | | | | |
| Conesville 5 | 411 | 100 | 411 | | | 0 | 25 | 0 | 25 | 0 | 25 | 0 | 22 |
| Conesville 6 | 411 | 100 | 411 | | | 0 | 38 | 0 | 33 | 0 | 34 | 0 | 29 |
| Elrama 1-4 | 510 | 100 | | 510 | | | | | | | | | |
| Phillips | 410 | 100 | | 410 | | | | | | | | | |
| Scholz 1,2 | 23 | N/A[d] | 23 | | | | 100 | 98 | 100 | | 100 | 98 | 100 |
| Petersburg 3 | 532 | 100 | 532 | | | | | | | | | 39[e] | 39[e] |
| Hawthorn 3 | 90 | 100 | 90 | | | | | | | | | | |
| Hawthorn 4 | 90 | 100 | 90 | | | | | | | | | | |
| LaCygne 1 | 874 | 100 | 874 | | | 94 | 95 | | | | | | |
| Jeffrey 1 | 540 | 75 | 540 | | | | | | | | | | |
| Lawrence 4 | 125 | 100 | 125 | | | | | | | | | | |
| Lawrence 5 | 420 | 100 | 420 | | | | | | | | | | |
| Green Rivers 1-3 | 64 | 100 | 64 | | | | 11 | | 100 | | 100 | 0 | 11 |
| Cane Run 4 | 188 | 100 | | | 188 | 100 | 100 | | | | | | |
| Cane Run 5 | 190 | 100 | 190 | | | 71 | | | 72 | 46 | 67 | 50 | 58 |
| Cane Run 6 | 288 | 100 | 288 | | | | | | | | | | |
| Mill Creek 3 | 442 | 100 | 442 | | | | | 18 | 53 | | | 17 | 52 |
| Paddy's Run 6 | 72 | 100 | | | 72 | | | | | | | | |
| Milton R. Young 2 | 405 | 85 | | 405 | | | | | | | | | |
| Colstrip 1 | 360 | 100 | 360 | | | | | | | | | | |
| Colstrip 2 | 360 | 100 | 360 | | | | | | | | | | |
| Reid Gardner 1 | 125 | 100 | 125 | | | 86 | 98 | 86 | 97 | 86 | 97 | 86 | 78 |
| Reid Gardner 2 | 125 | 100 | 125 | | | 97 | 98 | 93 | 97 | 93 | 97 | 88 | 90 |
| Reid Gardner 3 | 125 | 100 | 125 | | | 41 | 100 | 46 | 98 | 46 | 100 | 41 | 68 |
| Dean H. Mitchell 11 | 115 | 100 | 115 | | | 7 | 47 | | | 1 | 44 | 1 | 43 |
| Sherburne 1 | 740 | 100 | 740 | | | 89 | 92 | | | | | | |
| Sherburne 2 | 740 | 100 | 740 | | | 93 | 91 | | | | | | |

(continued)

TABLE III. (continued)

| Plant | FGD system capacity, MW[a] | Flue gas % scrubbed | FGD capacity on line during period, MW[a,b] | No information for this period, MW | Shut down through-out period, MW | FGD system availability, %[c] | | FGD system operability, %[c] | | FGD system reliability, %[c] | | FGD system utilization, %[c] | |
|---|---|---|---|---|---|---|---|---|---|---|---|---|---|
| | | | | | | Feb. | Mar. | Feb. | Mar. | Feb. | Mar. | Feb. | Mar. |
| Bruce Mansfield 1 | 917 | 100 | 917 | | | | | | | | | | |
| Bruce Mansfield 2 | 917 | 100 | | 917 | | | | | | | | | |
| Eddystone 1A | 120 | N/A[d] | | 120 | | | | | | | | | |
| San Jaun 1 | 361 | 100 | 361 | | | | | | | | | | |
| San Juan 2 | 350 | 100 | 350 | | | | | | | | | | |
| Winyah 2 | 140 | 50 | 140 | | | 97[f] | 97[f] | 96[f] | 96[f] | 96[f] | 96[f] | 93[f] | 93[f] |
| A.B. Brown 1 | 265 | | 265 | | | | | | | | | | |
| R.D. Morrow 1 | 124 | 62 | 124 | | | | | | | | | | |
| Southwest 1 | 194 | 100 | 194 | | | 25 | 59 | 16 | 27 | 16 | 27 | 12 | 26 |
| Shawnee 10A | 10 | N/A[d] | 10 | | | | | | | | | | |
| Shawnee 10B | 10 | N/A[d] | 10 | | | | | | | | | | |
| Widows Creek 8 | 550 | 100 | 550 | | | | | | | | | | |
| Martin Lake 1 | 595 | 75 | 595 | | | | | | | | | | |
| Martin Lake 2 | 595 | 75 | 595 | | | | | | | | | | |
| Martin Lake 3 | 595 | 75 | 595 | | | | | | | | | | |
| Monticello 3 | 800 | 100 | 800 | | | | | | | | | | |
| Hunter 1 | 360 | | | | 360 | | | | | | | | |
| Huntington 1 | 366 | 85 | | 366 | | | | | | | | | |
| TOTAL | 17,822 | | 14,474 | 2728 | 620 | | | | | | | | |

[a] Equivalent scrubber capacity.

[b] This category includes the flue gas capacity being handled by the FGD system at least part of the time during the report period.

[c] The percent figures listed are average values for all system scrubbing trains during the period.

[d] Flue gas % scrubbed for prototype and demonstration units is not applicable unless the system is designed to bring a unit into compliance with $SO_2$ emission standards.

[e] This figure represents the average utilization from September 1978 through December 1978.

[f] The figures represent averages for February through March.

As indicated in Table I, 51 power generating units (all coal-fired) are now equipped with operating FGD systems. These units represent a total controlled capacity of 19,170 MW. Projections indicate that the total power generating capacity of the U.S. electric utility industry will be approximately 878 GW by 1988.[a] (This value reflects the annual loss resulting from the retirement of older units, which is considered to be 0.4% of the average generating capacity at the end of each year.) Approximately 395 GW[a,b,c] or 45% of the 1988 total will come from coal-fired units. Of the 162 FGD-equipped units (76,662 MW) shown in Table I, 160 (76,072 MW) are scheduled for operation by 1988. Therefore, approximately 19% of the projected coal-fired capacity will be controlled by FGD by the end of 1988.

## HIGHLIGHTS: FEBRUARY - MARCH 1979

The following paragraphs highlight FGD system developments during February and March 1979.

Pleasants 1 of Allegheny Power System began operations in March 1979. Performance figures for the four-module lime slurry FGD system are not yet available as the unit is undergoing shake-down/debugging operations. Allegheny Power did report that some operational problems occurred during the period.

Arizona Public Service reported that the Cholla 1 FGD system remained in service during most of the report period. The FGD system's average reliability for February and March was 100 and 98%, respectively. The boiler was in service 672 hours in February and 727 hours in March.

The Thoroughbred 121 prototype FGD system retrofitted on Gulf Power's Scholz Units 1 and 2 achieved operabilities of 98 and 100% during February and March, respectively. The Thoroughbred 121 facility removes $SO_2$ and flyash from an effective 23 MW capacity slip stream drawn from the two 47 MW (gross) Scholz units. Chiyoda International, the system supplier, reported that removal efficiencies for $SO_2$ have ranged from 93 to 95%.

Kansas City Power and Light reported that the LaCygne 1 FGD system was in service during the report period, achieving average system availabilities of 94 and 95% for the months of February and March, respectively. Unit power production was limited by a number of boiler-related outages during the period, resulting in unit service times of 342 hours for February and 314 hours for March.

Cane Run 6 of Louisville Gas and Electric (LG&E) began operations in March 1979 with the boiler logging 475 hours and the FGD system, 237 hours in April 1979. This first full scale utility dual alkali FGD system uses a carbide lime slurry circulated through two parallel scrubbing trains to remove $SO_2$ from the flue gas generated by the 288 MW (gross) steam generator.

Muscatine Power and Water announced plans to install an FGD system at Muscatine Power Station. The plans call for a lime or limestone slurry type FGD system to clean flue gas generated by Muscatine 9, which is scheduled to begin operations in 1982. Particulate matter will be controlled with an ESP and $SO_2$ with two 100% capacity FGD modules. The design will include a forced oxidation system to produce a sludge product suitable for landfill after drying, and an indirect steam coil type flue gas reheat system.

Nevada Power reported that the FGD systems for Reid Gardner 1, 2, and 3 were in service during most of February and March. FGD system availabilities for February were 86% for Reid Gardner 1 and 97% for Reid Gardner 2 (Unit 3 experienced FGD system related outages that yielded low February availability). FGD system availabilities for March were 98, 98, and 100% for Units 1, 2, and 3, respectively.

Northern Indiana Public Service Company (NIPSCO) is requesting/evaluating bids for the installation of FGD systems on Schahfer 17 and 18. The new Schahfer units will be rated at 421 MW (gross) each. Particulate matter will be controlled with cold-side ESP's. NIPSCO is considering a sodium based FGD system for $SO_2$ control; however, no specific process has been selected. Schahfer 17 and 18 are scheduled to begin operations in June 1983 and June 1985, respectively.

Northern States Power reported that the FGD system availability for Sherburne 1 was 89% in both February and March and that the FGD system availability for Sherburne 2 was 93% in February and 91% in March.

Public Service Company of New Mexico reported that construction of San Juan 3 is nearing completion. The 534 MW unit is scheduled to begin operations in June, 1979, with a Wellman Lord FGD system controlling $SO_2$ emissions.

Winyah 2 of South Carolina Public Service achieved a combined FGD system availability of 97% for both February and March. The boiler operated 1362 hours during the two month period and the FGD system operated 1313 hours.

South Carolina Public Service reported that a contract was awarded for an FGD system planned for Winyah 4, a new 280 MW (gross) coal-fired unit scheduled for start up in May, 1981. The utility will equip the unit with an ESP for particulate matter control and a two-spray tower limestone slurry FGD system for $SO_2$ control. Winyah 3 is now under construction and is expected to begin operations in May, 1980.

A.B. Brown 1 of Southern Indiana Gas and Electric began operations in March, 1979. The 265 MW (gross) unit uses a cold-side ESP for particulate matter control and a two-scrubber train dual-alkali FGD system for the control of $SO_2$. The FGD system can operate in a closed or open loop and uses cooling tower blowdown for makeup water.

Martin Lake 3 of Texas Utilities became operational in March 1979. The 750 MW (gross) unit uses a limestone slurry FGD system for $SO_2$ control and ESP's for particulate matter control. A performance test was completed during the week of May 7. Results are not yet available.

Utah Power and Light reported that Hunter 1 (formerly called Emery 1) began operations in May 1979. The emission control system includes an ESP for particulate matter removal and a four-tower lime slurry FGD system for $SO_2$ control of flue gas generated by the 400 MW (gross) steam generator.

## REFERENCES FOR EXECUTIVE SUMMARY


a. Sixth Biennial Survey of Power Equipment Requirements of the U.S. Electric Utility Industry: 1977-1986. Sponsored by the Power Equipment Division, National Electrical Manufacturers Association.

b. Temple, Barker, and Sloane, Inc. Policy Testing Model for Electric Utilities, Exhibit II-3.

c. Twelth Annual Power Engineering Survey, Power Engineering, April 1978.

SECTION 1
SUMMARY LIST OF FGD SYSTEMS

| COMPANY NAME/ UNIT NAME | UNIT NO. | UNIT LOCATION | | START-UP DATE | STATUS | REG CLASS |
|---|---|---|---|---|---|---|
| ALABAMA ELECTRIC COOP | | | | | | |
| TOMBIGBEE | 2 | LEROY | ALABAMA | 9/78 | 1 | A |
| TOMBIGBEE | 3 | LEROY | ALABAMA | 6/79 | 2 | A |
| ALLEGHENY POWER SYSTEM | | | | | | |
| MITCHELL | 3 | COURTNEY | PENNSYLVANIA | 8/82 | 6 | B |
| PLEASANTS | 1 | BELMONT | WEST VIRGINIA | 3/79 | 1 | A |
| PLEASANTS | 2 | BELMONT | WEST VIRGINIA | 9/80 | 2 | A |
| ARIZONA ELECTRIC POWER COOP | | | | | | |
| APACHE | 2 | COCHISE | ARIZONA | 8/78 | 1 | B |
| APACHE | 3 | COCHISE | ARIZONA | 6/79 | 2 | B |
| ARIZONA PUBLIC SERVICE | | | | | | |
| CHOLLA | 1 | JOSEPH CITY | ARIZONA | 10/73 | 1 | B |
| CHOLLA | 2 | JOSEPH CITY | ARIZONA | 4/78 | 1 | B |
| CHOLLA | 4 | JOSEPH CITY | ARIZONA | 6/80 | 2 | B |
| FOUR CORNERS | 1 | FARMINGTON | NEW MEXICO | 0/79 | 2 | B |
| FOUR CORNERS | 2 | FARMINGTON | NEW MEXICO | 0/79 | 2 | B |
| FOUR CORNERS | 3 | FARMINGTON | NEW MEXICO | 0/79 | 2 | B |
| FOUR CORNERS | 4 | FARMINGTON | NEW MEXICO | 0/82 | 3 | B |
| FOUR CORNERS | 5 | FARMINGTON | NEW MEXICO | 0/82 | 3 | B |
| ASSOCIATED ELECTRIC COOP | | | | | | |
| THOMAS HILL | 3 | MOBERLY | MISSOURI | 1/82 | 3 | A |
| BASIN ELECTRIC POWER COOP | | | | | | |
| ANTELOPE VALLEY | 1 | BEULAH | NORTH DAKOTA | 11/81 | 3 | B |
| ANTELOPE VALLEY | 2 | BEULAH | NORTH DAKOTA | 11/83 | 6 | B |
| LARAMIE RIVER | 1 | WHEATLAND | WYOMING | 4/80 | 2 | A |
| LARAMIE RIVER | 2 | WHEATLAND | WYOMING | 10/80 | 2 | A |
| LARAMIE RIVER | 3 | WHEATLAND | WYOMING | 4/82 | 3 | A |
| BIG RIVERS ELECTRIC | | | | | | |
| GREEN | 1 | SEBREE | KENTUCKY | 12/79 | 2 | A |
| GREEN | 2 | SEBREE | KENTUCKY | 12/80 | 2 | A |
| CENTRAL ILLINOIS LIGHT | | | | | | |
| DUCK CREEK | 1 | CANTON | ILLINOIS | 7/76 | 1 | A |
| DUCK CREEK | 2 | CANTON | ILLINOIS | 1/84 | 5 | A |
| CENTRAL ILLINOIS PUBLIC SERV | | | | | | |
| NEWTON | 1 | NEWTON | ILLINOIS | 11/79 | 2 | A |
| CENTRAL MAINE POWER | | | | | | |
| SEARS ISLAND | 1 | PENOBSCOT BAY | MAINE | 11/87 | 6 | A |
| CINCINNATI GAS & ELECTRIC | | | | | | |
| EAST BEND | 2 | RABBITHASH | KENTUCKY | 10/81 | 2 | A |
| COLORADO UTE ELECTRIC ASSN. | | | | | | |
| CRAIG | 1 | CRAIG | COLORADO | 6/79 | 2 | B |
| CRAIG | 2 | CRAIG | COLORADO | 11/79 | 2 | B |
| COLUMBUS & SOUTHERN OHIO ELEC. | | | | | | |
| CONESVILLE | 5 | CONESVILLE | OHIO | 1/77 | 1 | B |
| CONESVILLE | 6 | CONESVILLE | OHIO | 6/78 | 1 | B |
| POSTON | 5 | ATHENS | OHIO | 0/83 | 6 | B |
| POSTON | 6 | ATHENS | OHIO | 0/85 | 6 | B |

1. OPERATIONAL UNITS
2. UNITS UNDER CONSTRUCTION
3. PLANNED - CONTRACT AWARDED
4. PLANNED - LETTER OF INTENT SIGNED
5. PLANNED - REQUESTING/EVALUATING BIDS
6. PLANNED - CONSIDERING ONLY FGD SYSTEMS
7. PLANNED - CONSIDERING FGD SYSTEMS; ALSO ALTERNATIVE METHODS

A. BOILER CONSTRUCTED SUBJECT TO FEDERAL NSPS
B. BOILER SUBJECT TO STATE STANDARD THAT IS MORE STRINGENT THAN THE FEDERAL NSPS
C. BOILER SUBJECT TO STATE STANDARD THAT IS EQUAL TO OR LESS STRINGENT THAN NSPS
D. OTHER
E. REGULATORY CLASS UNKNOWN

SECTION 1
SUMMARY LIST OF FGD SYSTEMS

| COMPANY NAME/ UNIT NAME | UNIT NO. | UNIT LOCATION | | START-UP DATE | STATUS | REG CLASS |
|---|---|---|---|---|---|---|
| COMMONWEALTH EDISON | | | | | | |
| POWERTON | 51 | PERKIN | ILLINOIS | 10/79 | 2 | C |
| COOPERATIVE POWER ASSOCIATION | | | | | | |
| COAL CREEK | 1 | UNDERWOOD | NORTH DAKOTA | 5/79 | 2 | A |
| COAL CREEK | 2 | UNDERWOOD | NORTH DAKOTA | 10/80 | 2 | A |
| DELMARVA POWER & LIGHT | | | | | | |
| DELAWARE CITY | 1-3 | DELAWARE CITY | DELAWARE | 4/80 | 2 | C |
| DUQUESNE LIGHT | | | | | | |
| ELRAMA | 1-4 | ELRAMA | PENNSYLVANIA | 10/75 | 1 | B |
| PHILLIPS | 1-6 | SOUTH HEIGHT | PENNSYLVANIA | 7/73 | 1 | B |
| EAST KENTUCKY POWER COOP | | | | | | |
| SPURLOCK | 2 | MAYSVILLE | KENTUCKY | 10/80 | 3 | A |
| GENERAL PUBLIC UTILITIES | | | | | | |
| COHO | 1 | ERIE | PENNSYLVANIA | 12/85 | 6 | A |
| SEWARD | 7 | SEWARD | PENNSYLVANIA | 12/85 | 6 | A |
| GULF POWER | | | | | | |
| SCHOLZ | 1,2 | SNEADS | FLORIDA | 8/78 | 1 | C |
| HOOSIER ENERGY | | | | | | |
| MEROM | 1 | SULLIVAN | INDIANA | 4/81 | 2 | A |
| MEROM | 2 | SULLIVAN | INDIANA | 1/82 | 2 | A |
| HOUSTON LIGHTING & POWER CO. | | | | | | |
| W.A. PARISH | 8 | THOMPSONS | TEXAS | 10/82 | 5 | A |
| INDIANAPOLIS POWER & LIGHT | | | | | | |
| PETERSBURG | 3 | PETERSBURG | INDIANA | 12/77 | 1 | A |
| PETERSBURG | 4 | PETERSBURG | INDIANA | 10/83 | 2 | A |
| KANSAS CITY POWER & LIGHT | | | | | | |
| HAWTHORN | 3 | KANSAS CITY | MISSOURI | 11/72 | 1 | B |
| HAWTHORN | 4 | KANSAS CITY | MISSOURI | 8/72 | 1 | B |
| LA CYGNE | 1 | LA CYGNE | KANSAS | 2/73 | 1 | C |
| KANSAS POWER & LIGHT | | | | | | |
| JEFFREY | 1 | WAMEGO | KANSAS | 8/78 | 1 | B |
| JEFFREY | 2 | WAMEGO | KANSAS | 6/80 | 2 | B |
| LAWRENCE | 4 | LAWRENCE | KANSAS | 1/76 | 1 | B |
| LAWRENCE | 5 | LAWRENCE | KANSAS | 11/71 | 1 | B |
| KENTUCKY UTILITIES | | | | | | |
| GREEN RIVER | 1-3 | CENTRAL CITY | KENTUCKY | 9/75 | 1 | C |
| LAKELAND UTILITIES | | | | | | |
| MCINTOSH | 3 | LAKELAND | FLORIDA | 10/81 | 3 | A |
| LOUISVILLE GAS & ELECTRIC | | | | | | |
| CANE RUN | 4 | LOUISVILLE | KENTUCKY | 8/76 | 1 | A |
| CANE RUN | 5 | LOUISVILLE | KENTUCKY | 12/77 | 1 | A |
| CANE RUN | 6 | LOUISVILLE | KENTUCKY | 3/79 | 1 | A |
| MILL CREEK | 1 | LOUISVILLE | KENTUCKY | 4/81 | 2 | B |
| MILL CREEK | 2 | LOUISVILLE | KENTUCKY | 4/82 | 3 | B |
| MILL CREEK | 3 | LOUISVILLE | KENTUCKY | 8/78 | 1 | B |
| MILL CREEK | 4 | LOUISVILLE | KENTUCKY | 7/81 | 2 | B |
| PADDY'S RUN | 6 | LOUISVILLE | KENTUCKY | 4/73 | 1 | C |

1. OPERATIONAL UNITS
2. UNITS UNDER CONSTRUCTION
3. PLANNED - CONTRACT AWARDED
4. PLANNED - LETTER OF INTENT SIGNED
5. PLANNED - REQUESTING/EVALUATING BIDS
6. PLANNED - CONSIDERING ONLY FGD SYSTEMS
7. PLANNED - CONSIDERING FGD SYSTEMS; ALSO ALTERNATIVE METHODS

A. BOILER CONSTRUCTED SUBJECT TO FEDERAL NSPS
B. BOILER SUBJECT TO STATE STANDARD THAT IS MORE STRINGENT THAN THE FEDERAL NSPS
C. BOILER SUBJECT TO STATE STANDARD THAT IS EQUAL TO OR LESS STRINGENT THAN NSPS
D. OTHER
E. REGULATORY CLASS UNKNOWN

SECTION 1
SUMMARY LIST OF FGD SYSTEMS

| COMPANY NAME/ UNIT NAME | UNIT NO. | UNIT LOCATION | | START-UP DATE | STATUS | REG CLASS |
|---|---|---|---|---|---|---|
| LOUISVILLE GAS & ELECTRIC | | | | | | |
| TRIMBLE COUNTY | 1 | BEDFORD | KENTUCKY | 7/84 | 6 | D |
| TRIMBLE COUNTY | 2 | BEDFORD | KENTUCKY | 0/84 | 6 | D |
| MIDDLE SOUTH UTILITIES | | | | | | |
| ARKANSAS COAL | 5 | | ARKANSAS | 1/86 | 5 | D |
| ARKANSAS COAL | 6 | | ARKANSAS | 1/88 | 5 | D |
| LOUISIANA COAL | 1 | | LOUSIANA | 0/86 | 5 | D |
| LOUISIANA COAL | 2 | | LOUSIANA | 0/88 | 5 | D |
| MISSISSIPPI COAL | 1 | | MISSISSIPPI | 0/85 | 5 | D |
| MISSISSIPPI COAL | 2 | | MISSISSIPPI | 0/87 | 5 | D |
| MINNESOTA POWER & LIGHT | | | | | | |
| CLAY BOSWELL | 4 | COHASSET | MINNESOTA | 5/80 | 2 | A |
| MINNKOTA POWER COOPERATIVE | | | | | | |
| MILTON R. YOUNG | 2 | CENTER | NORTH DAKOTA | 9/77 | 1 | B |
| MONTANA POWER | | | | | | |
| COLSTRIP | 1 | COLSTRIP | MONTANA | 9/75 | 1 | A |
| COLSTRIP | 2 | COLSTRIP | MONTANA | 5/76 | 1 | A |
| COLSTRIP | 3 | COLSTRIP | MONTANA | 7/80 | 3 | B |
| COLSTRIP | 4 | COLSTRIP | MONTANA | 7/81 | 3 | B |
| MUSCATINE POWER & WATER | | | | | | |
| MUSCATINE | 9 | MUSCATINE | IOWA | 0/82 | 6 | A |
| NEVADA POWER | | | | | | |
| HARRY ALLEN | 1 | N.E. LAS VEGAS | NEVADA | 6/85 | 6 | A |
| HARRY ALLEN | 2 | N.E. LAS VEGAS | NEVADA | 6/86 | 6 | A |
| HARRY ALLEN | 3 | N.E. LAS VEGAS | NEVADA | 6/87 | 6 | A |
| HARRY ALLEN | 4 | N.E. LAS VEGAS | NEVADA | 6/88 | 6 | A |
| REID GARDNER | 1 | MOAPA | NEVADA | 4/74 | 1 | A |
| REID GARDNER | 2 | MOAPA | NEVADA | 4/74 | 1 | A |
| REID GARDNER | 3 | MOAPA | NEVADA | 6/76 | 1 | A |
| REID GARDNER | 4 | MOAPA | NEVADA | 0/83 | 6 | A |
| WARNER VALLEY | 1 | ST. GEORGE | UTAH | 6/84 | 6 | A |
| WARNER VALLEY | 2 | ST. GEORGE | UTAH | 6/85 | 6 | A |
| NEW ENGLAND ELECTRIC SYSTEM | | | | | | |
| BRAYTON POINT | 3 | SOMERSET | MASSACHUSETTS | 0/ 0 | 7 | C |
| NIAGARA MOHAWK POWER COOP | | | | | | |
| CHARLES R. HUNTLEY | 66 | BUFFALO | NEW YORK | 0/82 | 3 | C |
| NORTHERN INDIANA PUB SERVICE | | | | | | |
| BAILLY | 7 | CHESTERTON | INDIANA | 0/ 0 | 6 | C |
| BAILLY | 8 | CHESTERTON | INDIANA | 0/ 0 | 6 | C |
| DEAN H. MITCHELL | 11 | GARY | INDIANA | 7/76 | 1 | C |
| SCHAHFER | 17 | WHEATFIELD | INDIANA | 6/83 | 5 | A |
| SCHAHFER | 18 | WHEATFIELD | INDIANA | 6/85 | 5 | A |
| NORTHERN STATES POWER | | | | | | |
| SHERBURNE | 1 | BECKER | MINNESOTA | 3/76 | 1 | B |
| SHERBURNE | 2 | BECKER | MINNESOTA | 4/77 | 1 | B |
| SHERBURNE | 3 | BECKER | MINNESOTA | 5/84 | 4 | B |
| OTTER TAIL POWER | | | | | | |
| COYOTE | 1 | BEULAH | NORTH DOKOTA | 5/81 | 2 | B |

1. OPERATIONAL UNITS
2. UNITS UNDER CONSTRUCTION
3. PLANNED - CONTRACT AWARDED
4. PLANNED - LETTER OF INTENT SIGNED
5. PLANNED - REQUESTING/EVALUATING BIDS
6. PLANNED - CONSIDERING ONLY FGD SYSTEMS
7. PLANNED - CONSIDERING FGD SYSTEMS; ALSO ALTERNATIVE METHODS

A. BOILER CONSTRUCTED SUBJECT TO FEDERAL NSPS
B. BOILER SUBJECT TO STATE STANDARD THAT IS MORE STRINGENT THAN THE FEDERAL NSPS
C. BOILER SUBJECT TO STATE STANDARD THAT IS EQUAL TO OR LESS STRINGENT THAN NSPS
D. OTHER
E. REGULATORY CLASS UNKNOWN

SECTION 1
SUMMARY LIST OF FGD SYSTEMS

| COMPANY NAME/ UNIT NAME | UNIT NO. | UNIT LOCATION | | START-UP DATE | STATUS | REG CLASS |
|---|---|---|---|---|---|---|
| PACIFIC GAS & ELECTRIC | | | | | | |
| FOSSIL | 1 | | CALIFORNIA | 0/85 | 6 | B |
| FOSSIL | 2 | | CALIFORNIA | 0/86 | 6 | B |
| PACIFIC POWER & LIGHT | | | | | | |
| JIM BRIDGER | 4 | ROCK SPRINGS | WYOMING | 9/79 | 2 | B |
| PENNSYLVANIA POWER | | | | | | |
| BRUCE MANSFIELD | 1 | SHIPPINGPORT | PENNSYLVANIA | 12/75 | 1 | B |
| BRUCE MANSFIELD | 2 | SHIPPINGPORT | PENNSYLVANIA | 7/77 | 1 | B |
| BRUCE MANSFIELD | 3 | SHIPPINGPORT | PENNSYLVANIA | 4/80 | 2 | B |
| PHILADELPHIA ELECTRIC | | | | | | |
| CROMBY | | PHOENIXVILLE | PENNSYLVANIA | 6/60 | 6 | B |
| EDDYSTONE | 1A | EDDYSTONE | PENNSYLVANIA | 9/75 | 1 | B |
| EDDYSTONE | 1B | EDDYSTONE | PENNSYLVANIA | 6/80 | 4 | B |
| EDDYSTONE | 2 | EDDYSTONE | PENNSYLVANIA | 6/80 | 6 | B |
| POTOMAC ELECTRIC POWER | | | | | | |
| DICKERSON | 4 | DICKERSON | MARYLAND | 0/87 | 6 | D |
| POWER AUTHORITY OF NEW YORK | | | | | | |
| ARTHUR KILL | | STATEN ISLAND | NEW YORK | 11/88 | 6 | B |
| PUBLIC SERVICE OF INDIANA | | | | | | |
| GIBSON | 5 | PRINCETON | INDIANA | 0/82 | 5 | A |
| PUBLIC SERVICE OF NEW MEXICO | | | | | | |
| SAN JUAN | 1 | WATERFLOW | NEW MEXICO | 4/78 | 1 | B |
| SAN JUAN | 2 | WATERFLOW | NEW MEXICO | 8/78 | 1 | B |
| SAN JUAN | 3 | WATERFLOW | NEW MEXICO | 6/79 | 2 | B |
| SAN JUAN | 4 | WATERFLOW | NEW MEXICO | 1/82 | 3 | B |
| SALT RIVER PROJECT | | | | | | |
| CORONADO | 1 | ST. JOHNS | ARIZONA | 8/79 | 2 | B |
| CORONADO | 2 | ST. JOHNS | ARIZONA | 1/80 | 2 | B |
| CORONADO | 3 | ST. JOHNS | ARIZONA | 0/87 | 6 | B |
| SAN MIGUEL ELECTRIC COOP | | | | | | |
| SAN MIGUEL | 1 | SAN MIGUEL | TEXAS | 8/80 | 2 | A |
| SEMINOLE ELECTRIC | | | | | | |
| SEMINOLE | 1 | PALATKA | FLORIDA | 6/83 | 6 | A |
| SIKESTON BOARD OF MUNIC. UTIL. | | | | | | |
| SIKESTON | 1 | SIKESTON | MISSOURI | 11/80 | 2 | A |
| SOUTH CAROLINA PUBLIC SERVICE | | | | | | |
| WINYAH | 2 | GEORGETOWN | SOUTH CAROLINA | 7/77 | 1 | A |
| WINYAH | 3 | GEORGETOWN | SOUTH CAROLINA | 5/80 | 2 | A |
| WINYAH | 4 | GEORGETOWN | SOUTH CAROLINA | 5/81 | 3 | A |
| SOUTHERN CALIFORNIA EDISON | | | | | | |
| ALAMITOS | 6 | SEAL BEACH | CALIFORNIA | 1/82 | 3 | D |
| SOUTHERN ILLINOIS POWER COOP | | | | | | |
| MARION | 4 | MARION | ILLINOIS | 5/79 | 2 | A |
| MARION | 5 | MARION | ILLINOIS | 0/84 | 6 | A |

1. OPERATIONAL UNITS
2. UNITS UNDER CONSTRUCTION
3. PLANNED - CONTRACT AWARDED
4. PLANNED - LETTER OF INTENT SIGNED
5. PLANNED - REQUESTING/EVALUATING BIDS
6. PLANNED - CONSIDERING ONLY FGD SYSTEMS
7. PLANNED - CONSIDERING FGD SYSTEMS; ALSO ALTERNATIVE METHODS

A. BOILER CONSTRUCTED SUBJECT TO FEDERAL NSPS
B. BOILER SUBJECT TO STATE STANDARD THAT IS MORE STRINGENT THAN THE FEDERAL NSPS
C. BOILER SUBJECT TO STATE STANDARD THAT IS EQUAL TO OR LESS STRINGENT THAN NSPS
D. OTHER
E. REGULATORY CLASS UNKNOWN

SECTION 1
SUMMARY LIST OF FGD SYSTEMS

| COMPANY NAME/ UNIT NAME | UNIT NO. | UNIT LOCATION | | START-UP DATE | STATUS | REG CLASS |
|---|---|---|---|---|---|---|
| SOUTHERN INDIANA GAS & ELEC | | | | | | |
| A.B. BROWN | 1 | WEST FRANKLIN | INDIANA | 3/79 | 1 | A |
| SOUTHERN MISSISSIPPI ELECTRIC | | | | | | |
| R.D. MORROW | 1 | HATTISBURG | MISSISSIPPI | 8/78 | 1 | A |
| R.D. MORROW | 2 | HATTISBURG | MISSISSIPPI | 7/79 | 2 | A |
| SOUTHWESTERN ELECTRIC POWER | | | | | | |
| HENRY W. PERKEY | 1 | HALLSVILLE | TEXAS | 2/84 | 3 | A |
| SPRINGFIELD CITY UTILITIES | | | | | | |
| SOUTHWEST | 1 | SPRINGFIELD | MISSOURI | 4/77 | 1 | A |
| SPRINGFIELD WATER, LIGHT & PWR | | | | | | |
| DALLMAN | 3 | SPRINGFIELD | ILLINOIS | 7/80 | 2 | A |
| ST. JOE ZINC | | | | | | |
| G.F. WEATON | 1 | MONACA | PENNSYLVANIA | 7/79 | 2 | B |
| TAMPA ELECTRIC | | | | | | |
| BIG BEND | 4 | TAMPA | FLORIDA | 0/85 | 6 | A |
| TENNESSEE VALLEY AUTHORITY | | | | | | |
| CUMBERLAND | | CUMBERLAND CITY | TENNESSEE | 7/82 | 6 | C |
| JOHNSONVILLE | 1-10 | NEW JOHNSONVILL | TENNESSEE | 0/82 | 5 | C |
| PARADISE | 1 | PARADISE | KENTUCKY | 6/82 | 3 | C |
| PARADISE | 2 | PARADISE | KENTUCKY | 3/82 | 3 | C |
| SHAWNEE | 10A | PADUCAH | KENTUCKY | 4/72 | 1 | C |
| SHAWNEE | 10B | PADUCAH | KENTUCKY | 4/72 | 1 | C |
| WIDOWS CREEK | 7 | BRIDGEPORT | ALABAMA | 10/80 | 2 | C |
| WIDOWS CREEK | 8 | BRIDGEPORT | ALABAMA | 5/77 | 1 | C |
| TEXAS MUNICIPAL POWER AGENCY | | | | | | |
| GIBBONS CREEK | 1 | CARLOS | TEXAS | 1/82 | 3 | A |
| TEXAS POWER & LIGHT | | | | | | |
| SANDOW | 4 | ROCKDALE | TEXAS | 7/80 | 2 | A |
| TWIN OAKS | 1 | | TEXAS | 8/83 | 6 | A |
| TWIN OAKS | 2 | | TEXAS | 0/86 | 6 | A |
| TEXAS UTILITIES | | | | | | |
| FOREST GROVE | 1 | ATHENS | TEXAS | 0/81 | 5 | A |
| MARTIN LAKE | 1 | TATUM | TEXAS | 4/77 | 1 | A |
| MARTIN LAKE | 2 | TATUM | TEXAS | 5/78 | 1 | A |
| MARTIN LAKE | 3 | TATUM | TEXAS | 2/79 | 1 | A |
| MARTIN LAKE | 4 | TATUM | TEXAS | 0/85 | 3 | A |
| MILL CREEK | 1 | HENDERSON | TEXAS | 0/85 | 6 | D |
| MILL CREEK | 2 | HENDERSON | TEXAS | 0/86 | 6 | D |
| MONTICELLO | 3 | MT. PLEASANT | TEXAS | 5/78 | 1 | A |
| UTAH POWER & LIGHT | | | | | | |
| HUNTER | 1 | CASTLE DALE | UTAH | 5/79 | 1 | A |
| HUNTER | 2 | CASTLE DALE | UTAH | 6/80 | 2 | A |
| HUNTINGTON | 1 | PRICE | UTAH | 5/78 | 1 | A |
| WISCONSIN POWER & LIGHT | | | | | | |
| COLUMBIA | 2 | PORTAGE | WISCONSIN | 1/82 | 3 | A |

1. OPERATIONAL UNITS
2. UNITS UNDER CONSTRUCTION
3. PLANNED - CONTRACT AWARDED
4. PLANNED - LETTER OF INTENT SIGNED
5. PLANNED - REQUESTING/EVALUATING BIDS
6. PLANNED - CONSIDERING ONLY FGD SYSTEMS
7. PLANNED - CONSIDERING FGD SYSTEMS; ALSO ALTERNATIVE METHODS

A. BOILER CONSTRUCTED SUBJECT TO FEDERAL NSPS
B. BOILER SUBJECT TO STATE STANDARD THAT IS MORE STRINGENT THAN THE FEDERAL NSPS
C. BOILER SUBJECT TO STATE STANDARD THAT IS EQUAL TO OR LESS STRINGENT THAN NSPS
D. OTHER
E. REGULATORY CLASS UNKNOWN

## SECTION 2
## STATUS OF FGD SYSTEMS

| UNIT IDENTIFICATION | ABSTRACT |
|---|---|
| ALABAMA ELECTRIC COOP<br>TOMBIGBEE<br>2<br>NEW 255.0 MW (GROSS)<br>179.0 MW (ESC)<br>COAL<br>1.15 %S BITUMINOUS<br>LIMESTONE<br>PEABODY PROCESS SYSTEMS<br>ENERGY CONSUMPTION: 3.1%<br>STATUS 1 STARTUP 9/78 | REFER TO SECTION 3 OF THIS REPORT FOR ADDITIONAL INFORMATION. PEABODY ENGINEERING WAS AWARDED A CONTRACT FOR THE INSTALLATION OF A LIMESTONE FGD SYSTEM ON THIS UNIT. A HIGH-EFFICIENCY ESP INSTALLED UPSTREAM OF THE FGD SYSTEM PROVIDES PRIMARY PARTICULATE CONTROL. THE FGD SYSTEM CONTAINS TWO SCRUBBING TRAINS, TREATING APPROXIMATELY 70% OF THE FLUE GAS FOR REMOVAL OF SO2. STACK GAS REHEAT IS NOT REQUIRED. THE UNIT IS CURRENTLY IN THE SHAKEDOWN-DEBUGGING PHASE OF OPERATIONS. |
| ALABAMA ELECTRIC COOP<br>TOMBIGBEE<br>1<br>NEW 255.0 MW (GROSS)<br>179.0 MW (ESC)<br>COAL<br>1.15 %S BITUMINOUS<br>LIMESTONE<br>PEABODY PROCESS SYSTEMS<br>ENERGY CONSUMPTION: 3.1%<br>STATUS 2 STARTUP 6/79 | REFER TO SECTION 3 OF THIS REPORT FOR ADDITIONAL INFORMATION. PEABODY ENGINEERING WAS AWARDED A CONTRACT FOR THE INSTALLATION OF A LIMESTONE FGD SYSTEM ON THIS UNIT. A HIGH-EFFICIENCY ESP INSTALLED UPSTREAM OF THE FGD SYSTEM PROVIDES PRIMARY PARTICULATE CONTROL. THE FGD SYSTEM CONTAINS TWO SCRUBBING TRAINS, TREATING APPROXIMATELY 70% OF THE FLUE GAS FOR REMOVAL OF SO2. STACK GAS REHEAT IS NOT REQUIRED. THE UNIT IS NOW ABOUT 95% COMPLETE. |
| ALLEGHENY POWER SYSTEM<br>MITCHELL<br>3<br>RETROFIT 300.0 MW (GROSS)<br>300.0 MW (ESC)<br>COAL<br>***** %S<br>PROCESS NOT SELECTED<br>VENDOR NOT SELECTED<br>ENERGY CONSUMPTION: ****%<br>STATUS 6 STARTUP 8/82 | ALLEGHENY POWER SYSTEM WILL INSTALL FLUE GAS DESULFURIZATION EQUIPMENT ON UNIT 3 AT THE MITCHELL POWER STATION. THE UTILITY IS CURRENTLY IN THE PROCESS OF EVALUATING VARIOUS FGD TECHNOLOGIES. THE FGD INSTALLATION IS SCHEDULED TO BEGIN OPERATIONS IN AUGUST 1982. |
| ALLEGHENY POWER SYSTEM<br>PLEASANTS<br>1<br>NEW 625.0 MW (GROSS)<br>519.0 MW (ESC)<br>COAL<br>4.50 %S BITUMINOUS<br>LIME<br>BABCOCK & WILCOX<br>ENERGY CONSUMPTION: ****%<br>STATUS 1 STARTUP 3/79 | REFER TO SECTION 3 OF THIS REPORT FOR ADDITIONAL INFORMATION. THE THREE PRINCIPAL OPERATING UTILITY COMPANIES OF THE ALLEGHENY POWER SYSTEM ARE INSTALLING AN EMISSION CONTROL SYSTEM FOR THIS NEW COAL-FIRED UNIT WHICH INCLUDES A HIGH-EFFICIENCY ESP UPSTREAM OF FOUR TRAY TOWERS FOR THE CONTROL OF PARTICULATES AND SULFUR DIOXIDE. DESIGN REMOVAL EFFICIENCIES FOR THIS EMISSION CONTROL SYSTEM ARE 90 AND 99.5 PERCENT, RESPECTIVELY. THE DRAVO CO. IS SUPPLYING THIOSORBIC LIME. THE CONSULTING A-E DESIGN FIRM FOR THIS PROJECT IS STEARNS-ROGER. ERECTION OF THE SCRUBBING EQUIPMENT IS IN PROGRESS. |
| ALLEGHENY POWER SYSTEM<br>PLEASANTS<br>2<br>NEW 625.0 MW (GROSS)<br>519.0 MW (ESC)<br>COAL<br>4.50 %S BITUMINOUS<br>LIME<br>BABCOCK & WILCOX<br>ENERGY CONSUMPTION: ****%<br>STATUS 2 STARTUP 9/80 | THE THREE PRINCIPAL OPERATING UTILITY COMPANIES OF THE ALLEGHENY POWER SYSTEM ARE INSTALLING AN EMISSION CONTROL SYSTEM FOR THIS NEW COAL-FIRED UNIT WHICH INCLUDES A HIGH-EFFICIENCY ESP UPSTREAM OF FOUR TRAY TOWERS FOR THE CONTROL OF PARTICULATES AND SULFUR DIOXIDE. DESIGN REMOVAL EFFICIENCIES FOR THIS EMISSION CONTROL SYSTEM ARE 90 AND 99.5 PERCENT, RESPECTIVELY. THE DRAVO CO. IS SUPPLYING THIOSORBIC LIME. THE CONSULTING ENGINEERING FIRM IS UNITED ENGINEERS AND CONSTRUCTORS. CURRENTLY, FOUNDATION WORK ON THE SCRUBBER PLANT IS IN PROGRESS. |
| ARIZONA ELECTRIC POWER COOP<br>APACHE<br>2<br>NEW 195.0 MW (GROSS)<br>195.0 MW (ESC)<br>COAL<br>.70 %S BITUMINOUS<br>LIMESTONE<br>RESEARCH COTTRELL<br>ENERGY CONSUMPTION: 4.1%<br>STATUS 1 STARTUP 8/78 | REFER TO SECTION 3 OF THIS REPORT FOR ADDITIONAL INFORMATION. THE FGD SYSTEM FOR THIS NEW 200 MW UNIT WAS SUPPLIED BY RESEARCH COTTRELL. THE DESIGN INCLUDES A 22 ACRE SLUDGE POND AND A 64 ACRE ASH POND, BOTH OF WHICH ARE UNLINED AND TEN FEET DEEP. A REHEAT SYSTEM IS NOT INCLUDED. THE LINERS USED IN THE STACK AND THE DUCTS THAT LEAD TO THE STACK ARE A NEW COLE BRAND CXL2000 WHICH HAS A VERY HIGH HEAT RESISTANCE. THIS UNIT BURNS BITUMINOUS COAL WITH ASH CONTENTS OF .7% AND 10% RESPECTIVELY. INITIAL OPERATION OF THIS UNIT BEGAN IN AUGUST, 1978. |

SECTION 2
STATUS OF FGD SYSTEMS

| UNIT IDENTIFICATION | ABSTRACT |
|---|---|
| ARIZONA ELECTRIC POWER COOP<br>APACHE<br>3<br>NEW 195.0 MW (GROSS)<br>195.0 MW (ESC)<br>COAL<br>.70 %S BITUMINOUS<br>LIMESTONE<br>RESEARCH COTTRELL<br>ENERGY CONSUMPTION: 4.1%<br>STATUS 2 STARTUP 6/79 | CONSTRUCTION OF UNIT 3 IS NOW ESSENTIALLY COMPLETE. STRUCTURE ERECTION OF THE SCRUBBER-ABSORBER TOWERS IS COMPLETE. EACH SCRUBBER CAN HANDLE 400,000 ACFM AT 270F AND RECIRCULATE 20,000 GPM OF SLURRY. THERE ARE CURRENTLY TWO PONDS WITH A TOTAL OF 20-YRS CAPACITY FOR DISPOSAL OF UNFIXATED SLUDGE. TWO ADDITIONAL PONDS ARE PLANNED PROVIDING AN ADDITIONAL 20 YRS OF DISPOSAL CAPABILITY. THERE WILL BE NO REHEAT. BECAUSE OF THE HIGH COST OF THE UNIT 2 STACK LINER, UNIT 3 WILL USE A CEILCOTE LINING INSTEAD OF THE CXL2000 USED IN UNIT 2. |
| ARIZONA PUBLIC SERVICE<br>CHOLLA<br>1<br>RETROFIT 119.0 MW (GROSS)<br>119.0 MW (ESC)<br>COAL<br>.50 %S SUBBITUMINOUS<br>LIMESTONE<br>RESEARCH COTTRELL<br>ENERGY CONSUMPTION: 4.2%<br>STATUS 1 STARTUP 10/73 | REFER TO SECTION 3 OF THIS REPORT FOR ADDITIONAL INFORMATION<br>THIS LIMESTONE SCRUBBING SYSTEM WAS PLACED IN SERVICE IN OCTOBER 1973. THIS SCRUBBER PLANT CONSISTS OF TWO PARALLEL SCRUBBING TRAINS. PARTICULATE CONTROL IS PROVIDED BY TWO FLOODED DISC SCRUBBERS. SO2 CONTROL IS PROVIDED BY ONE PACKED (MUNTERS PACKING) TOWER (A-SIDE). FLUE GAS CLEANING WASTES ARE DISCHARGED TO AN EXISTING FLY ASH POND. NO WATER IS RECYCLED BACK FROM THE DISPOSAL POND. IN-LINE STEAM REHEATERS RAISE THE GAS TEMPERATURE 40 F. |
| ARIZONA PUBLIC SERVICE<br>CHOLLA<br>2<br>NEW 350.0 MW (GROSS)<br>350.0 MW (ESC)<br>COAL<br>.50 %S SUBBITUMINOUS<br>LIMESTONE<br>RESEARCH COTTRELL<br>ENERGY CONSUMPTION: ****%<br>STATUS 1 STARTUP 4/78 | REFER TO SECTION 3 OF THIS REPORT FOR ADDITIONAL INFORMATION.<br>THE CONTRACT FOR THIS WET LIMESTONE SCRUBBING SYSTEM WAS AWARDED BY THE UTILITY TO RESEARCH-COTTRELL. THE DESIGN INCLUDES MECHANICAL COLLECTORS FOR PRIMARY PARTICULATE REMOVAL. THE FGD SYSTEM CONSISTS OF FOUR PARALLEL FLOODED DISC AND PACKED TOWER ABSORBER TRAINS. THREE ARE REQUIRED FOR FULL LOAD CAPACITY. INITIAL OPERATIONS BEGAN IN APRIL 1978. COMPLIANCE TESTING WAS COMPLETED DURING THE SECOND WEEK OF AUGUST 1978. THE UNIT IS CURRENTLY UNDERGOING SHAKEDOWN AND DEBUGGING OPERATIONS. |
| ARIZONA PUBLIC SERVICE<br>CHOLLA<br>4<br>NEW 350.0 MW (GROSS)<br>126.0 MW (ESC)<br>COAL<br>.50 %S<br>LIMESTONE<br>RESEARCH COTTRELL<br>ENERGY CONSUMPTION: ****%<br>STATUS 2 STARTUP 6/80 | UNIT NO. 4 IS CURRENTLY UNDER CONSTRUCTION. APS HAS AWARDED THE FGD CONTRACT TO RESEARCH COTTRELL. THE STATE REGULATORY AGENCY HAS NOT YET DECIDED THE EMISSION REGULATIONS WHICH WILL APPLY TO THE PLANT. THE C-E BOILER WILL FIRE THE SAME COAL AS CHOLLA NO.1, WITH SULFUR CONTENT OF 0.44-1.0 PERCENT. THE A-E FIRM IS EBASCO. THE FGD SYSTEM IS A DOUBLE LOOP LIMESTONE ABSORPTION PROCESS AND REVENUES OF THE CONTRACT TO R-C ARE REPORTED TO BE $5 MM. FOR CONTROL OF PARTICULATE, AN ESP WILL HANDLE 100% OF THE FLUE GAS. |
| ARIZONA PUBLIC SERVICE<br>FOUR CORNERS<br>1<br>RETROFIT 175.0 MW (GROSS)<br>175.0 MW (ESC)<br>COAL<br>.75 %S<br>LIME/ALKALINE FLYASH<br>CHEMICO<br>ENERGY CONSUMPTION: ****%<br>STATUS 2 STARTUP 0/79 | APS IS UPGRADING THE OPERATIONAL PARTICULATE SCRUBBERS AT THE FOUR CORNERS 1,2, AND 3 FOR ADDITIONAL SO2 REMOVAL. CURRENTLY, EACH UNIT HAS 2 CHEMICO VENTURI SCRUBBER MODULES FOR PARTICULATE CONTROL. ROUGHLY 30% OF THE FLUE GAS SO2 CONTENT IS REMOVED AT THE PRESENT TIME IN THE VENTURIS WITH THE HIGH ALKALINE FLYASH. NEW MEXICO APC OFFICIALS INDICATED THAT THE 5 FOUR CORNERS UNITS WILL BE REQUIRED TO REMOVE AT LEAST 67.5% OF THE STATION SO2(ALL 5 UNITS CONSIDERED TOGETHER). ADDITIONAL ALKALINITY WILL BE IMPARTED TO THE SCRUBBING SOLUTION BY ADDING LIME. |
| ARIZONA PUBLIC SERVICE<br>FOUR CORNERS<br>2<br>RETROFIT 175.0 MW (GROSS)<br>175.0 MW (ESC)<br>COAL<br>.75 %S<br>LIME/ALKALINE FLYASH<br>CHEMICO<br>ENERGY CONSUMPTION: ****%<br>STATUS 2 STARTUP 0/79 | APS IS UPGRADING THE OPERATIONAL PARTICULATE SCRUBBERS AT THE FOUR CORNERS 1,2, AND 3 FOR ADDITIONAL SO2 REMOVAL. CURRENTLY, EACH UNIT HAS 2 CHEMICO VENTURI SCRUBBER MODULES FOR PARTICULATE CONTROL. ROUGHLY 30% OF THE FLUE GAS SO2 CONTENT IS REMOVED AT THE PRESENT TIME IN THE VENTURIS WITH THE HIGH ALKALINE FLYASH. NEW MEXICO APC OFFICIALS INDICATED THAT THE 5 FOUR CORNERS UNITS WILL BE REQUIRED TO REMOVE AT LEAST 67.5% OF THE STATION SO2(ALL 5 UNITS CONSIDERED TOGETHER). ADDITIONAL ALKALINITY WILL BE IMPARTED TO THE SCRUBBING SOLUTION BY ADDING LIME. |

## SECTION 2
## STATUS OF FGD SYSTEMS

| UNIT IDENTIFICATION | ABSTRACT |
|---|---|
| ARIZONA PUBLIC SERVICE<br>FOUR CORNERS<br>1<br>RETROFIT 229.0 MW (GROSS)<br>229.0 MW (ESC)<br>COAL<br>.75 %S<br>LIME/ALKALINE FLYASH<br>CHEMICO<br>ENERGY CONSUMPTION: ****%<br>STATUS 2 STARTUP 0/79 | APS IS UPGRADING THE OPERATIONAL PARTICULATE SCRUBBERS AT THE FOUR CORNERS 1,2, AND 3 FOR ADDITIONAL SO2 REMOVAL. CURRENTLY, EACH UNIT HAS 2 CHEMICO VENTURI SCRUBBER MODULES FOR PARTICULATE CONTROL. ROUGHLY 30% OF THE FLUE GAS SO2 CONTENT IS REMOVED AT THE PRESENT TIME IN THE VENTURIS WITH THE HIGH AKALINE FLYASH. NEW MEXICO APC OFFICIALS INDICATED THAT THE 5 FOUR CORNERS UNITS WILL BE REQUIRED TO REMOVE AT LEAST 67.5% OF THE STATION SO2(ALL 5 UNITS CONSIDERED TOGETHER). ADDITIONAL ALKALINITY WILL BE IMPARTED TO THE SCRUBBING SOLUTION BY ADDING LIME. |
| ARIZONA PUBLIC SERVICE<br>FOUR CORNERS<br>4<br>RETROFIT 755.0 MW (GROSS)<br>755.0 MW (ESC)<br>COAL<br>.75 %S<br>LIME<br>UNITED ENGINEERS<br>ENERGY CONSUMPTION: ****%<br>STATUS 3 STARTUP 0/82 | THE UTILITY IS CURRENTLY EVALUATING THE DATA AND INFORMATION ACCUMULATED DURING THE HORIZONTAL PROTOTYPE SCRUBBING PROGRAM IN ORDER TO ASCERTAIN VARIOUS POSSIBLE STRATEGIES TO CONTROL THE EMISSIONS FROM THIS COAL FIRED 755-MW UNIT. APS WILL BE REQUIRED TO REDUCE THE CURRENT LEVEL OF SO2 EMISSIONS FROM THE ENTIRE PLANT BY INCREASING THE REMOVAL EFFICIENCY TO AT LEAST 67.5%. A CONTRACT HAS BEEN AWARDED TO UNITED ENGINEERS FOR THE ENGINEERING AND CONSTRUCTION OF AN FGD SYSTEM. |
| ARIZONA PUBLIC SERVICE<br>FOUR CORNERS<br>5<br>RETROFIT 755.0 MW (GROSS)<br>755.0 MW (ESC)<br>COAL<br>.75 %S<br>LIME<br>UNITED ENGINEERS<br>ENERGY CONSUMPTION: ****%<br>STATUS 3 STARTUP 0/82 | THE UTILITY IS CURRENTLY EVALUATING THE DATA AND INFORMATION ACCUMULATED DURING THE HORIZONTAL PROTOTYPE SCRUBBING PROGRAM IN ORDER TO ASCERTAIN VARIOUS POSSIBLE STRATEGIES TO CONTROL THE EMISSIONS FROM THIS COAL FIRED 755-MW UNIT. APS WILL BE REQUIRED TO REDUCE THE CURRENT LEVEL OF SO2 EMISSIONS FROM THE ENTIRE PLANT BY INCREASING THE REMOVAL EFFICIENCY TO AT LEAST 67.5%. A CONTRACT HAS BE AWARDED TO UNITED ENGINEERS FOR THE ENGINEERING AND CONSTRUCTION OF AN FGD SYSTEM. |
| ASSOCIATED ELECTRIC COOP<br>THOMAS HILL<br>3<br>NEW 730.0 MW (GROSS)<br>670.0 MW (ESC)<br>COAL<br>4.80 %S<br>LIMESTONE<br>PULLMAN KELLOGG<br>ENERGY CONSUMPTION: ****%<br>STATUS 3 STARTUP 1/82 | ASSOCIATED ELECTRIC COOP AWARDED A CONTRACT TO PULLMAN KELLOGG FOR THE ENGINEERING, PROCUREMENT AND CONSTRUCTION OF AN FGD SYSTEM ON THE UTILITY'S THOMAS HILL UNIT NO. 3 POWER PLANT. SO2 REMOVAL EQUIPMENT WILL OPERATE IN CONJUNCTION WITH A HIGH EFFICIENCY ESP. THE SYSTEM, SCHEDULED FOR START-UP IN 1982, WILL UTILIZE MAGNESIUM-PROMOTED LIMESTONE AS A REAGENT IN THE FOUR MODULE WEIR FGD SYSTEM. REHEAT WILL PROBABLY NOT BE INCLUDED. THE STACK WILL BE BRICK LINED. THE DRY FIXATED SLUDGE WILL BE HAULED TO AN ACTIVE STRIP MINE. CONSTRUCTION OF THE BOILER HAS BEGUN. |
| BASIN ELECTRIC POWER COOP<br>ANTELOPE VALLEY<br>1<br>NEW 440.0 MW (GROSS)<br>440.0 MW (ESC)<br>COAL<br>.68 %S LIGNITE<br>LIME/SPRAY DRYING<br>JOY MFG. CO. WESTERN PRECIPITA<br>ENERGY CONSUMPTION: ****%<br>STATUS 3 STARTUP 11/81 | THE UTILITY HAS SELECTED A LIME SCRUBBING PROCESS FOR THEIR PLANNED FGD SYSTEM. THE UNIT WILL FIRE LIGNITE COAL WITH A SULFUR CONTENT OF 0.68 PERCENT AND AN ASH CONTENT OF 8.0 PERCENT (6600 BTU/LB). THE WATER LOOP WILL BE OPEN WITH MAKE-UP COMING FROM COOLING TOWER BLOWDOWN. THE SLUDGE WILL BE DISPOSED IN A MINE LANDFILL. A CONTRACT HAS BEEN AWARDED TO WESTERN PRECIPITATION DIVISON, JOY MFG. CO. FOR A DRY FGD SYSTEM. THE SPRAY DRYER HAS BEEN SUBCONTRACTED TO NIRO ATOMITER. |
| BASIN ELECTRIC POWER COOP<br>ANTELOPE VALLEY<br>2<br>NEW 440.0 MW (GROSS)<br>440.0 MW (ESC)<br>COAL<br>.68 %S LIGNITE<br>PROCESS NOT SELECTED<br>VENDOR NOT SELECTED<br>ENERGY CONSUMPTION: ****%<br>STATUS 6 STARTUP 11/83 | THE UTILITY IS TENTATIVELY INVESTIGATING VARIOUS FGD PROCESSES FOR THIS SECOND LIGNITE-FIRED UNIT SCHEDULED AT THE NEW STATION LOCATED IN MERCER COUNTY, NEAR BEULAH, NORTH DAKOTA. THIS NEW FACILITY WILL BE KNOWN AS THE ANTELOPE VALLEY STATION AND WILL BE REQUIRED TO COMPLY WITH STATE AIR EMISSIONS STANDARDS VIA THE BEST AVAILABLE TECHNOLOGY. START-UP IS NOW SCHEDULED FOR NOVEMBER 1983. |

SECTION 2
STATUS OF FGD SYSTEMS

| UNIT IDENTIFICATION | ABSTRACT |
|---|---|
| BASIN ELECTRIC POWER COOP<br>LARAMIE RIVER<br>1<br>NEW 600.0 MW (GROSS)<br>600.0 MW (ESC)<br>COAL<br>.80 %S<br>LIMESTONE<br>RESEARCH COTTRELL<br>ENERGY CONSUMPTION: ****%<br>STATUS 2 STARTUP 4/80 | RESEARCH-COTTRELL IS CURRENTLY FABRICATING THE DUAL-LOOP LIMESTONE WET SCRUBBERS. ON-SITE CONSTRUCTION COMMENCED IN JANUARY 1978. SLUDGE WILL BE DEWATERED TO 83% SOLIDS BEFORE LANDFILL. THE SCRUBBERS WILL BE MADE OF STAINLESS STEEL AND WILL HANDLE 2.3 MM ACFM AT 286 F. L/G RATIO WILL BE 60. B&W HAS BEEN AWARDED A CONTRACT FOR TWO ESP'S. THE DESIGN DOES NOT INCLUDE STACK GAS REHEAT. COOLING TOWER BLOWDOWN WILL BE USED FOR MAKE-UP WATER IN THIS CLOSED LOOP SYSTEM. CONSTRUCTION IS NOW 20% COMPLETE. |
| BASIN ELECTRIC POWER COOP<br>LARAMIE RIVER<br>2<br>NEW 600.0 MW (GROSS)<br>600.0 MW (ESC)<br>COAL<br>.80 %S<br>LIMESTONE<br>RESEARCH COTTRELL<br>ENERGY CONSUMPTION: ****%<br>STATUS 2 STARTUP 10/80 | RESEARCH-COTTRELL IS CURRENTLY FABRICATING THE DUAL-LOOP LIMESTONE WET SCRUBBERS. ON-SITE CONSTRUCTION COMMENCED IN JANUARY 1978. SLUDGE WILL BE DEWATERED TO 83% SOLIDS BEFORE LANDFILL. THE SCRUBBERS WILL BE MADE OF STAINLESS STEEL AND WILL HANDLE 2.3 MM ACFM AT 286 F. L/G RATIO WILL BE 60. B&W HAS BEEN AWARDED A CONTRACT FOR TWO ESP'S. THE DESIGN DOES NOT INCLUDE STACK GAS REHEAT. COOLING TOWER BLOWDOWN WILL BE USED FOR MAKE-UP WATER IN THIS CLOSED LOOP SYSTEM. CONSTRUCTION IS NOW 20% COMPLETE. |
| BASIN ELECTRIC POWER COOP<br>LARAMIE RIVER<br>3<br>NEW 600.0 MW (GROSS)<br>600.0 MW (ESC)<br>COAL<br>.54 %S<br>LIME/SPRAY DRYING<br>BABCOCK & WILCOX<br>ENERGY CONSUMPTION: ****%<br>STATUS 3 STARTUP 4/82 | LARAMIE RIVER STATION WILL FIRE SUBBITUMINOUS COAL WITH THE FOLLOWING CHARACTERISTICS: 8100 BTU/LB, 0.8 PERCENT SULFUR AND 7.0 PERCENT ASH A CONTRACT FOR A DRY TYPE FGD SYSTEM HAS BEEN AWARDED TO BABCOCK & WILCOX. |
| BIG RIVERS ELECTRIC<br>GREEN<br>1<br>NEW 242.0 MW (GROSS)<br>242.0 MW (ESC)<br>COAL<br>3.75 %S BITUMINOUS<br>LIME<br>AMERICAN AIR FILTER<br>ENERGY CONSUMPTION: ****%<br>STATUS 2 STARTUP 12/79 | THE EMISSION CONTROL SYSTEM FOR THIS NEW COAL-FIRED UNIT IS BEING SUPPLIED BY AMERICAN AIR FILTER. THE SYSTEM WILL CONSIST OF A COLD-SIDE ESP AND TWO SPRAY TOWERS CONTROLLING PARTICULATE AND SO2 TO 99.6 PERCENT AND 90 PERCENT, RESPECTIVELY. THE B&W BOILER WILL FIRE HIGH SULFUR (3.5 TO 4.5 PERCENT) WESTERN KENTUCKY COAL. CONSTRUCTION IS NOW 66% COMPLETE ON THE BOILER AND 50% COMPLETE ON THE FGD SYSTEM. THE DESIGN INCLUDES AN INDIRECT HOT AIR REHEAT SYSTEM. IUCS WILL CONSTRUCT A SLUDGE DISPOSAL SYSTEM TO SERVICE BOTH GREEN 1 AND 2. |
| BIG RIVERS ELECTRIC<br>GREEN<br>2<br>NEW 242.0 MW (GROSS)<br>242.0 MW (ESC)<br>COAL<br>3.75 %S BITUMINOUS<br>LIME<br>AMERICAN AIR FILTER<br>ENERGY CONSUMPTION: ****%<br>STATUS 2 STARTUP 12/80 | THE EMISSION CONTROL SYSTEM FOR THIS NEW COAL-FIRED UNIT IS BEING SUPPLIED BY AMERICAN AIR FILTER. THE SYSTEM WILL CONSIST OF A COLD SIDE ESP AND TWO SPRAY TOWERS CONTROLLING PARTICULATE AND SO2 TO 99.6 PERCENT AND 90 PERCENT, RESPECTIVELY. THE B&W BOILER WILL FIRE HIGH SULFUR (3.5 4.5 PERCENT) WESTERN KENTUCKY COAL. THE FGD SYSTEM WILL INCLUDE AN INDIRECT HOT AIR REHEAT SYSTEM. IUCS WILL CONSTRUCT A SLUDGE DISPOSAL SYSTEM TO SERVICE BOTH GREEN 1 AND 2. THE BOILER IS CURRENTLY 6% COMPLETE AND CONSTRUCTION HAS JUST BEGUN ON THE FGD SYSTEM. |
| CENTRAL ILLINOIS LIGHT<br>DUCK CREEK<br>1<br>NEW 416.0 MW (GROSS)<br>416.0 MW (ESC)<br>COAL<br>3.30 %S BITUMINOUS<br>LIMESTONE<br>RILEY STOKER/ENVIROMEERING<br>ENERGY CONSUMPTION: 2.9%<br>STATUS 1 STARTUP 7/76 | REFER TO SECTION 3 OF THIS REPORT FOR ADDITIONAL INFORMATION. RILEY STOKER WAS THE SUPPLIER OF THE FOUR VENTURI-ABSORBER MODULES AT THIS UNIT. SCRUBBER TANKS AND PUMPS ARE NEOPRENE LINED. A HIGH EFFICIENCY ESP IS UPSTREAM OF THE FOUR VENTURI-ABSORBER SCRUBBER MODULES FOR PARTICULATE CONTROL. THE CONCRETE STACK IS LINED WITH CEILCOTE FLAKELINE 151. NO RE-HEAT SYSTEM IS INCLUDED. THE FIRST LIMESTONE SLURRY SCRUBBER MODULE WAS PLACED IN SERVICE ON SEPTEMBER 9,1976. AND OPERATED INTERMITTENTLY UNTIL APRIL 1, 1977. ALL FOUR MODULES BECOME OPERATIONAL ON JULY 24, 1978. |

SECTION 2
STATUS OF FGD SYSTEMS

| UNIT IDENTIFICATION | ABSTRACT |
|---|---|
| CENTRAL ILLINOIS LIGHT<br>DUCK CREEK<br>2<br>NEW 416.0 MW (GROSS)<br>416.0 MW (ESC)<br>COAL<br>3.30 %S BITUMINOUS<br>LIMESTONE<br>VENDOR NOT SELECTED<br>ENERGY CONSUMPTION: 2.9%<br>STATUS 5 STARTUP 1/84 | THE UTILITY HAS NOT YET SELECTED A SYSTEM SUPPLIER. THE UTILITY WILL USE ESP'S FOR PARTICULATE CONTROL AND EITHER LIMESTONE OR DOUBLE ALKALI FOR SO2 ABSORPTION. THE UTILITY IS NOW IN THE PROCESS OF EVALUATING BIDS AND A STUDY IS UNDERWAY TO DETERMINE THE SLUDGE DISPOSAL STRATEGY THAT WILL BE EMPLOYED. |
| CENTRAL ILLINOIS PUBLIC SERV<br>NEWTON<br>1<br>NEW 617.0 MW (GROSS)<br>617.0 MW (ESC)<br>COAL<br>4.00 %S BITUMINOUS<br>DUAL ALKALI<br>BUELL/ENVIROTECH<br>ENERGY CONSUMPTION: ****%<br>STATUS 2 STARTUP 11/79 | A CONTRACT HAS BEEN AWARDED BY CIPSO TO BUELL/ENVIROTECH FOR THE INSTALLATION OF AN EMISSION CONTROL SYSTEM ON UNIT 1. THE KEY COMPONENTS OF THE EMISSION CONTROL SYSTEM INCLUDE: A HIGH-EFFICIENCY ESP; FOUR PRECOOLERS, FOUR POLYSPHERE ABSORBERS, THREE THICKENERS, TWO EXPERIMENTAL REHEAT SYSTEMS, AND THREE HORIZONTAL EXTRACTION FILTERS FOR SLUDGE DEWATERING. MORE THAN 50 PERCENT OF THE CONSTRUCTION WORK AT THE PLANT HAS BEEN COMPLETED. THE FGD SYSTEM WILL HAVE CEILCOTE-LINED ABSORBER MODULES. |
| CENTRAL MAINE POWER<br>SEARS ISLAND<br>1<br>NEW 600.0 MW (GROSS)<br>600.0 MW (ESC)<br>COAL<br>***** %S<br>LIME/LIMESTONE<br>VENDOR NOT SELECTED<br>ENERGY CONSUMPTION: ****%<br>STATUS 6 STARTUP 11/87 | BECAUSE OF THE DISCOVERY OF A GEOLOGICAL FAULT ON SEARS ISLAND, THE UTILITY HAS CANCELLED PLANS FOR A 1150-MW NUCLEAR POWER PLANT. A 600-MW COAL FIRED UNIT IS NOW BEING PLANNED IN ITS PLACE. COMMERCIAL OPERATION IS PROJECTED FOR NOVEMBER 1986. COMPLIANCE WITH SO2 NSPS WILL BE ACHIEVED BY INSTALLING AN FGD SYSTEM. LIME AND LIMESTONE SCRUBBING PROCESSES ARE BEING GIVEN PRIMARY CONSIDERATION. CURRENTLY, CMPCO HAS FILED AN APPLICATION WITH THE STATE PUBLIC UTILITIES COMMISSION. A DELAY IN RECEIVING A PERMIT FROM THE MAINE PUBLIC UTILITIES COMMISSION HAS RESULTED IN A REVISED START-UP DATE OF NOVEMBER 1987. |
| CINCINNATI GAS & ELECTRIC<br>EAST BEND<br>2<br>NEW 650.0 MW (GROSS)<br>650.0 MW (ESC)<br>COAL<br>5.00 %S<br>LIME<br>BABCOCK & WILCOX<br>ENERGY CONSUMPTION: ****%<br>STATUS 2 STARTUP 10/81 | A CONTRACT HAS BEEN CONDITIONALLY AWARDED TO BABCOCK AND WILCOX FOR A COMMERCIAL LIME SCRUBBING SYSTEM. THE COAL SOURCE IS EXPECTED TO BE A WESTERN KENTUCKY COAL WITH A HIGH SULFUR CONTENT. THE THREE LIME SLURRY FGD MODULES WILL BE PRECEDED BY AN ESP FOR PARTICULATE CONTROL. A CONTRACT HAS BEEN CONDITIONALLY AWARDED TO IUCS FOR THE SLUDGE FIXATION. THE A-E FIRM IS SARGENT AND LUNDY. UNIT FOUNDATION HAS BEGUN AND FGD SYSTEM CONSTRUCTION WILL BEGIN IN EARLY 1979. |
| COLORADO UTE ELECTRIC ASSN.<br>CRAIG<br>1<br>NEW 447.0 MW (GROSS)<br>447.0 MW (ESC)<br>COAL<br>.45 %S SUBBITUMINOUS<br>LIMESTONE<br>PEABODY PROCESS SYSTEMS<br>ENERGY CONSUMPTION: 5.4%<br>STATUS 2 STARTUP 6/79 | PEABODY PROCESS SYSTEMS HAS BEEN AWARDED A CONTRACT TO DESIGN AND SUPPLY A LIMESTONE SLURRY SPRAY TOWER ABSORBER SYSTEM FOR SO2 REMOVAL FROM LOW-SULFUR COAL-FIRED BOILER FLUE GAS FROM UNITS 1 AND 2. PARTICULATE CONTROL WILL BE PROVIDED BY HOT-SIDE ESP'S UPSTREAM OF THE ABSORBER SYSTEM. SLUDGE WILL BE STABILIZED AND HAULED TO A MINEFILL THERE WILL BE A STEAM COIL TYPE STACK GAS REHEATER INCLUDED. REQUIRED PARTICULATE AND SO2 REMOVAL EFFICIENCIES ARE 99.8 AND 85 PERCENT RESPECTIVELY. FGD CONSTRUCTION IS NOW 80% COMPLETE. |
| COLORADO UTE ELECTRIC ASSN.<br>CRAIG<br>2<br>NEW 447.0 MW (GROSS)<br>447.0 MW (ESC)<br>COAL<br>.45 %S SUBBITUMINOUS<br>LIMESTONE<br>PEABODY PROCESS SYSTEMS<br>ENERGY CONSUMPTION: 5.4%<br>STATUS 2 STARTUP 11/79 | PEABODY PROCESS SYSTEMS HAS BEEN AWARDED A CONTRACT TO DESIGN AND SUPPLY A LIMESTONE SPRAY TOWER ABSORBER SYSTEM FOR SO2 REMOVAL FROM LOW-SULFUR COAL-FIRED BOILER FLUE GAS FROM UNITS 1 AND 2. PARTICULATE CONTROL WILL BE PROVIDED BY HOT-SIDE ESP'S UPSTREAM OF THE ABSORBER SYSTEM. SLUDGE WILL BE STABILIZED AND HAULED TO A MINEFILL. THERE WILL BE A STEAM COIL TYPE STACK GAS REHEATER INCLUDED. REQUIRED PARTICULATE AND SO2 REMOVAL EFFICIENCIES ARE 99.8 AND 85 PERCENT RESPECTIVELY. FGD CONSTRUCTION IS NOW 80% COMPLETE. |

SECTION 2
STATUS OF FGD SYSTEMS

| UNIT IDENTIFICATION | ABSTRACT |
|---|---|
| COLUMBUS & SOUTHERN OHIO ELEC.<br>CONESVILLE<br>5<br>NEW 411.0 MW (GROSS)<br>411.0 MW (ESC)<br>COAL<br>4.67 %S BITUMINOUS<br>LIME<br>AIR CORRECTION DIVISION, UOP<br>ENERGY CONSUMPTION: 3.9%<br>STATUS 1 STARTUP 1/77 | REFER TO SECTION 3 OF THIS REPORT FOR ADDITIONAL INFORMATION. THE BOILER AND ESP WERE COMPLETED AND PLACED IN SERVICE IN SEPTEMBER 1976. THE B-SIDE MODULE BECAME AVAILABLE FOR SERVICE IN JANUARY 1977. COMMERCIAL OPERATIONS WERE ACHIEVED ON FEBRUARY 1?, 1977. THE EMISSION CONTROL SYSTEM FOR THIS UNIT CONSISTS OF A COLD-SIDE ESP FOLLOWED BY TWO LIME TCA MODULES SUPPLIED BY UOP. DRAVO IS SUPPLING THE THIOSORBIC LIME REAGENT. IUCS IS SUPPLYING A POZ-O-TEC SLUDGE STABILIZATION FACILITY |
| COLUMBUS & SOUTHERN OHIO ELEC.<br>CONESVILLE<br>6<br>NEW 411.0 MW (GROSS)<br>411.0 MW (ESC)<br>COAL<br>4.67 %S BITUMINOUS<br>LIME<br>AIR CORRECTION DIVISION, UOP<br>ENERGY CONSUMPTION: 3.9%<br>STATUS 1 STARTUP 6/78 | REFER TO SECTION 3 OF THIS REPORT FOR ADDITIONAL INFORMATION. CBSOE SIGNED LONG TERM CONTRACTS WITH DRAVO FOR THE PURCHASE OF THIOSORBIC LIME AND WITH IUCS FOR A SLUDGE FIXATION SYSTEM. CONSTRUCTION COMMENCED IN 1977 AND WAS COMPLETED IN JANUARY 1978. SIMILAR TO UNIT 5. THIS MINE MOUTH PLANT BURNS COAL WITH 17% ASH AND 4.5 TO 4.9% SULFUR CONTENTS. THE DESIGN INCLUDES AN ESP UPSTREAM OF THE FGD SYSTEM FOR PARTICULATE CONTROL. THE FGD SYSTEM INCLUDES TWO LIME TCA MODULES FOR THE REMOVAL OF SO2. |
| COLUMBUS & SOUTHERN OHIO ELEC.<br>POSTON<br>5<br>NEW 375.0 MW (GROSS)<br>375.0 MW (ESC)<br>COAL<br>2.50 %S<br>PROCESS NOT SELECTED<br>VENDOR NOT SELECTED<br>ENERGY CONSUMPTION: ****%<br>STATUS 6 STARTUP 0/83 | THIS UNIT WILL BURN HIGH SULFUR OHIO COAL (APPROXIMATELY 2.5 PERCENT SULFUR CONTENT). THE DESIGN OF THE EMISSION CONTROL STRATEGY HAS NOT YET BEEN FINALIZED. THE PROCESS WILL EITHER BE LIME, LIMESTONE, OR DOUBLE ALKALI. |
| COLUMBUS & SOUTHERN OHIO ELEC.<br>POSTON<br>6<br>NEW 375.0 MW (GROSS)<br>375.0 MW (ESC)<br>COAL<br>2.50 %S<br>PROCESS NOT SELECTED<br>VENDOR NOT SELECTED<br>ENERGY CONSUMPTION: ****%<br>STATUS 6 STARTUP 0/85 | THIS UNIT WILL BURN HIGH SULFUR COAL (APPROXIMATELY 2.5 PERCENT SULFUR CONTENT). THE DESIGN OF THE EMISSION CONTROL STRATEGY FOR THIS UNIT HAS NOT YET BEEN FINALIZED. |
| COMMONWEALTH EDISON<br>POWERTON<br>51<br>RETROFIT 450.0 MW (GROSS)<br>450.0 MW (ESC)<br>COAL<br>3.60 %S<br>LIMESTONE<br>AIR CORRECTION DIVISION, UOP<br>ENERGY CONSUMPTION: 5.6%<br>STATUS 2 STARTUP 10/79 | THE AIR CORRECTION DIVISION OF UOP WAS AWARDED THE CONTRACT FOR A WET LIMESTONE SYSTEM THAT WILL BE BACKFITTED ON TO BOILER NO. 51, ONE OF TWO IDENTICAL BOILERS SUPPLING STEAM TO AN 850-MW TURBINE-GENERATOR. THE SLUDGE WILL BE STABILIZED AND HAULED TO A LANDFILL. REHEAT WILL BE PROVIDED BY A STEAM COIL WHICH WILL HEAT THE AMBIENT AIR THAT IS PUMPED INTO THE SCRUBBER OUTLET BEFORE THE FLUE GAS ENTERS THE STACK. THE SO2 EMISSION STANDARD IS 1.8 LB. SO2/MM BTU. CONSTRUCTION IS ABOUT 80% COMPLETE. |
| COOPERATIVE POWER ASSOCIATION<br>COAL CREEK<br>1<br>NEW 545.0 MW (GROSS)<br>327.0 MW (ESC)<br>COAL<br>.63 %S LIGNITE<br>LIME<br>COMBUSTION ENGINEERING<br>ENERGY CONSUMPTION: ****%<br>STATUS 2 STARTUP 5/79 | THIS UNIT IS UNDER THE COMBINED OWNERSHIP OF COOP POWER AND UNITED POWER. A CONTRACT HAS BEEN AWARDED TO COMBUSTION ENGINEERING FOR THE INSTALLATION OF LIME FGD SYSTEMS ON UNITS 1 AND 2 AT THIS STATION. THE FGD SYSTEM FOR EACH BOILER WILL CONSIST OF FOUR SPRAY TOWER ABSORBER MODULES FOR SO2 REMOVAL. ELECTROSTATIC PRECIPITATORS WILL BE INSTALLED UPSTREAM OF EACH ABSORBER TRAIN. CONSTRUCTION BEGAN EARLY IN AUGUST 1977. THE UNIT IS NOW 85-90% COMPLETE. BAD WINTER WEATHER SLOWED CONSTRUCTION SLIGHTLY. |

## SECTION 2
## STATUS OF FGD SYSTEMS

| UNIT IDENTIFICATION | ABSTRACT |
|---|---|
| COOPERATIVE POWER ASSOCIATION<br>COAL CREEK<br>2<br>NEW 545.0 MW (GROSS)<br>327.0 MW (ESC)<br>COAL<br>.63 %S LIGNITE<br>LIME<br>COMBUSTION ENGINEERING<br>ENERGY CONSUMPTION: ****%<br>STATUS 2 STARTUP 10/80 | THIS UNIT IS UNDER THE COMBINED OWNERSHIP OF COOP POWER AND UNITED POWER. A CONTRACT HAS BEEN AWARDED TO COMBUSTION ENGINEERING FOR THE INSTALLATION OF LIME FGD SYSTEMS ON UNITS 1 AND 2 AT THIS STATION. THE FGD STSTEM FOR EACH BOILER WILL CONSIST OF FOUR SPRAY TOWER ABSORBER MODULES FOR SO2 REMOVAL. ELECTROSTATIC PRECIPITATORS WILL BE INSTALLED UPSTREAM OF EACH ABSORBER TRAIN. CONSTRUCTION BEGAN EARLY IN AUGUST 1977 AND THE UNIT IS NOW 45% COMPLETE. THERE HAVE BEEN MINOR DELAYS BUT START-UP IS STILL SCHEDULED FOR NOVEMBER 1979. |
| DELMARVA POWER & LIGHT<br>DELAWARE CITY<br>1-3<br>RETROFIT 180.0 MW (GROSS)<br>180.0 MW (ESC)<br>COKE<br>7.50 %S COKE<br>WELLMAN LORD<br>DAVY POWERGAS<br>ENERGY CONSUMPTION: ****%<br>STATUS 2 STARTUP 4/80 | DELMARVA'S DELAWARE CITY PLANT HAS 4 BOILERS, 3 OF WHICH HAVE STEAM CAPACITIES OF 500K LBS/HR EACH. THE BOILERS GENERATE STEAM AS WELL AS ELECTRICAL POWER FOR GETTY REFINING & MARKETING. 7-8% S COKE WILL BE BURNED IN THE BOILERS (INSTEAD OF THE LOW-S CRUDE OIL NOW BURNED) WHEN THE CONTROL SYSTEM GOES INTO OPERATION IN APRIL 1980. DELMARVA WILL USE VENTURI SCRUBBERS FOR PARTICULATE REMOVAL AND WELLMAN-LORD FGD SYSTEMS AT EACH BOILER GAS EXIT FOR SO2 CONTROL. DESIGN PARTICULATE AND SO2 REMOVAL EFFICIENCIES ARE 90 AND 85-90 PERCENT RESPECTIVELY. CONSTRUCTION IS 38% COMPLETE. |
| DUQUESNE LIGHT<br>ELRAMA<br>1-4<br>RETROFIT 510.0 MW (GROSS)<br>510.0 MW (ESC)<br>**** %S<br>LIME<br>CHEMICO<br>ENERGY CONSUMPTION: 3.5%<br>STATUS 1 STARTUP 10/75 | REFER TO SECTION 3 OF THIS REPORT FOR ADDITIONAL INFORMATION.<br>THE FGD SYSTEM ON THIS 4-BOILER UNIT CONSISTS OF FIVE COMMON-HEADERED SINGLE STAGE VENTURI SCRUBBER-ABSORBERS DOWNSTREAM FROM A MECHANICAL COLLECTOR-ESP PARTICULATE REMOVAL SYSTEM. THE PLANT BURNS COAL WITH A HEATING VALVE OF 11,000 BTU/LB AND SULFUR AND ASH CONTENTS OF 1.8 TO 2.2% AND 21% RESPECTIVELY. DEWATERED SLUDGE FROM THE IUCS PLANT IS HAULED TO AN OFF-SITE LANDFILL. THE SYSTEM INCLUDES A DIRECT OIL-FIRED STACK GAS REHEAT SYSTEM. DESIGNED REMOVAL EFFICIENCIES ARE 99% (PART) AND 83% (SO2). |
| DUQUESNE LIGHT<br>PHILLIPS<br>1-6<br>RETROFIT 410.0 MW (GROSS)<br>410.0 MW (ESC)<br>COAL<br>2.00 %S<br>LIME<br>CHEMICO<br>ENERGY CONSUMPTION: 2.4%<br>STATUS 1 STARTUP 7/73 | REFER TO SECTION 3 OF THIS REPORT FOR ADDITIONAL INFORMATION.<br>THE FGD SYSTEM ON THIS 6-BOILER UNIT CONSISTS OF ONE 2-STAGE AND THREE SINGLE STAGE VENTURI SCRUBBER-ABSORBERS DOWNSTREAM FROM A MECHANICAL COLLECTOR-ESP PARTICULATE REMOVAL SYSTEM. THE PLANT BURNS COAL WITH A HEATING VALVE OF 11,000 BTU/LB AND SULFUR AND ASH CONTENTS OF 1.8 TO 2.2% AND 21% RESPECTIVELY. DEWATERED SLUDGE FROM THE IUCS PLANT IS HAULED TO AN OFF-SITE LANDFILL. THE SYSTEM INCLUDES A DIRECT OIL-FIRED STACK GAS REHEAT SYSTEM. DESIGNED REMOVAL EFFICIENCIES ARE 99%(PART) AND 83%(SO2). |
| EAST KENTUCKY POWER COOP<br>SPURLOCK<br>2<br>NEW 500.0 MW (GROSS)<br>500.0 MW (ESC)<br>COAL<br>3.50 %S<br>LIME<br>ADL/COMBUSTION EQUIP ASSOCIATE<br>ENERGY CONSUMPTION: ****%<br>STATUS 3 STARTUP 10/80 | A CONTRACT HAS BEEN AWARDED TO ADL/COMBUSTION EQUIPMENT ASSOCIATES FOR A LIME SLURRY FGD SYSTEM ON THE NEW 500-MW UNIT SPURLOCK 2. PARTICULATES WILL BE CONTROLLED BY A 99.5% EFFICIENT ESP. COOLING TOWER BLOWDOWN WILL BE USED AS THE MAKE-UP WATER SOURCE FOR THE FGD SYSTEM. THE DESIGN SO2 REMOVAL EFFICIENCY IS 90%. THE SYSTEM IS NOW IN THE DESIGN PHASE. |
| GENERAL PUBLIC UTILITIES<br>CONO<br>1<br>NEW 800.0 MW (GROSS)<br>800.0 MW (ESC)<br>COAL<br>3.50 %S<br>PROCESS NOT SELECTED<br>VENDOR NOT SELECTED<br>ENERGY CONSUMPTION: ****%<br>STATUS 6 STARTUP 12/85 | STARTUP DATE WAS CHANGED TO 5/88 FOR BOTH BOILER AND DESULFURIZATION SYSTEM. LIME AND LIMESTONE SCRUBBING ARE THE PRIMARY STRATEGIES BEING CONSIDERED FOR COMPLIANCE WITH NEW SOURCE PERFORMANCE STANDARDS. NO DECISION HAS BEEN MADE YET, ALTHOUGH A SLURRY TYPE SYSTEM IS NOT CONTEMPLATED. |

## SECTION 2
## STATUS OF FGD SYSTEMS

| UNIT IDENTIFICATION | ABSTRACT |
|---|---|
| GENERAL PUBLIC UTILITIES<br>SEWARD<br>7<br>NEW 800.0 MW (GROSS)<br>800.0 MW (ESC)<br>COAL<br>**** %S<br>PROCESS NOT SELECTED<br>VENDOR NOT SELECTED<br>ENERGY CONSUMPTION: ****%<br>STATUS 6 STARTUP 12/85 | STARTUP DATE WAS CHANGED TO 5/85 FOR BOTH BOILER AND DESULFURIZATION SYSTEM. LIME AND LIMESTONE SCRUBBING ARE THE PRIMARY STRATEGIES BEING CONSIDERED FOR COMPLIANCE WITH THE NEW SOURCE PERFORMANCE STANDARDS. NO DECISION HAS BEEN MADE YET, ALTHOUGH A SLURRY TYPE WILL NOT BE USED. |
| SULF POWER<br>SCHOLZ<br>1,2<br>RETROFIT 23.0 MW (GROSS)<br>23.0 MW (ESC)<br>COAL<br>2.50 %S BITUMINOUS<br>LIMESTONE/THOROUGHBRED 121<br>CHIYODA INTERNATIONAL<br>ENERGY CONSUMPTION: ****%<br>STATUS 1 STARTUP 8/78 | REFER TO SECTION 3 OF THIS REPORT FOR ADDITIONAL INFORMATION. CHIYODA INTERNATIONAL SUPPLIED THIS 23 MW PROTOTYPE UNIT WHICH BEGAN OPERATION ON AUGUST 30, 1978. THE CT-121 SYSTEM INCLUDES A NEWLY DEVELOPED JET BUBBLING REACTOR WHICH FEATURES A LARGE GAS-LIQUID INTERFACIAL AREA AND PROVIDES PARTICULATE AS WELL AS SO2 REMOVAL. MIST ELIMINATION IS PROVIDED BY A DOUBLE PASS VERTICAL CHEVRON. GYPSUM IS PRODUCED AND STACKED IN THE EXISTING POND. THE STACKING CAPABILITIES OF THE GYPSUM ARE BEING TESTED, ALONG WITH THE GROUND WATER NEAR THE STACK SITE TO CHECK FOR LEACHING. |
| HOOSIER ENERGY<br>MEROM<br>1<br>NEW 490.0 MW (GROSS)<br>441.0 MW (ESC)<br>COAL<br>3.50 %S<br>LIMESTONE<br>MITSUBISHI INTERNATIONAL<br>ENERGY CONSUMPTION: ****%<br>STATUS 2 STARTUP 4/81 | HOOSIER ENERGY AWARDED A CONTRACT TO MITSUBISHI INTERNATIONAL CORP. FOR TWO LIMESTONE FGD SYSTEMS FOR MEROM 1 AND 2. THE NEW 490 MW COAL-FIRED UNITS ARE PLANNED FOR LOCATION IN SULLIVAN, INDIANA. THE FLUE GAS STREAMS WILL BE CLEANED OF PARTICULATE WITH ESP'S (99.4%) AND OF SULFUR DIOXIDE WITH GRID-TOWER ABSORBERS (90%). SLUDGE WILL BE STABILIZED AND STOCKPILED. THE GROUND WAS BROKEN FOR CONSTRUCTION IN NOVEMBER 1977. BOILER STRUCTURAL STEEL IS NOW BEING ERECTED AND FGD FOOTINGS ARE IN PLACE |
| HOOSIER ENERGY<br>MEROM<br>2<br>NEW 490.0 MW (GROSS)<br>441.0 MW (ESC)<br>COAL<br>3.50 %S<br>LIMESTONE<br>MITSUBISHI INTERNATIONAL<br>ENERGY CONSUMPTION: ****%<br>STATUS 2 STARTUP 1/82 | HOOSIER ENERGY AWARDED A CONTRACT TO MITSUBISHI INTERNATIONAL CORP. FOR TWO LIMESTONE FGD SYSTEMS FOR MEROM 1 AND 2. THE NEW 490 MW COAL-FIRED UNITS ARE PLANNED FOR LOCATION IN SULLIVAN, INDIANA. THE FLUE GAS STREAMS WILL BE CLEANED OF PARTICULATE WITH ESP'S (99.4%) AND OF SULFUR DIOXIDE WITH GRID-TOWER ABSORBERS (90%). SLUDGE WILL BE STABILIZED AND STOCKPILED. THE GROUND WAS BROKEN FOR CONSTRUCTION IN NOVEMBER 1977, BUT DUE TO THE BAD WINTER WEATHER, CONSTRUCTION WAS DELAYED. THE BOILER IS ESSENTIALLY COMPLETE, STARTUP IS EXPECTED SHORTLY. |
| HOUSTON LIGHTING & POWER CO.<br>W.A. PARISH<br>8<br>NEW 550.0 MW (GROSS)<br>512.0 MW (ESC)<br>COAL<br>.60 %S<br>LIMESTONE<br>VENDOR NOT SELECTED<br>ENERGY CONSUMPTION: ****%<br>STATUS 5 STARTUP 10/82 | HL&P WILL BE INSTALLING AN FGD SYSTEM ON THE UTILITY'S 600 MW W. A.-PARISH 8 UNIT. PARTICUALTE MATTER WILL BE CONTROLLED BY BAGHOUSE UP-STREAM OF THE LIMESTONE SLURRY FGD SYSTEM. THE FGD SYSTEM WILL BE DESIGNED TO REMOVE SO2 WITH AN EFFICIENCY OF GREATER THAN 83%. REHEAT WILL BE PROVIDED BY BY-PASSING 7% OF THE PARTICULATE CLEANED GAS. SLUDGE WILL BE DEWATERED, BLENDED WITH FLYASH AND DISPOSED IN AN ON SITE LANDFILL. INITIAL STARTUP IS SCHEDULED FOR FALL, 1982. |
| INDIANAPOLIS POWER & LIGHT<br>PETERSBURG<br>3<br>NEW 532.0 MW (GROSS)<br>532.0 MW (ESC)<br>COAL<br>3.25 %S BITUMINOUS<br>LIMESTONE<br>AIR CORRECTION DIVISION, UOP<br>ENERGY CONSUMPTION: 2.4%<br>STATUS 1 STARTUP 12/77 | REFER TO SECTION 3 OF THIS REPORT FOR ADDITIONAL INFORMATION. THE WET LIMESTONE FGD SYSTEM INSTALLED ON THIS UNIT WAS SUPPLIED BY THE AIR CORRECTION DIVISION OF UOP. UNIT 3 FIRES BITUMINOUS COAL HAVING A SULFUR CONTENT OF 1.5-4.5%. AN ASH CONTENT OF 9-10% AND A 11,000 BTU/LB VALUE. TWO ESPS PROVIDE PRIMARY PARTICULATE CONTROL UPSTREAM OF A FOUR-MODULE TCA FGD SYSTEM. STABILIZED SLUDGE IS DISPOSED ON AN ON-SITE POND. THE DESIGN INCLUDES AN INDIRECT STEAM TUBE REHEAT SYSTEM. SHAKE DOWN AND DEBUGGING OPERATIONS ARE STILL PROCEEDING. |

SECTION 2
STATUS OF FGD SYSTEMS

| UNIT IDENTIFICATION | ABSTRACT |
|---|---|
| INDIANAPOLIS POWER & LIGHT<br>PETERSBURG<br>4<br>NEW 530.0 MW (GROSS)<br>530.0 MW (ESC)<br>COAL<br>3.50 %S BITUMINOUS<br>LIMESTONE<br>RESEARCH COTTRELL<br>ENERGY CONSUMPTION: ****%<br>STATUS 2 STARTUP 10/83 | INDIANAPOLIS POWER & LIGHT AWARDED A CONTRACT TO RESEARCH COTTRELL FOR A LIME STONE FGD SYSTEM. SO2 REMOVAL EFFICIENCY WILL BE APPROXIMATELY 80 PERCENT. THIS NEW UNIT WILL FIRE HIGH-SULFUR BITUMINOUS COAL WITH A HEATING VALUE OF 11,000 BTU/LB AND ASH AND SULFUR CONTENTS OF 10 PERCENT AND 3.5 PERCENT, RESPECTIVELY. SLUDGE WILL BE DEWATERED AND MIXED WITH FLYASH TO PRODUCE A DRY STABILIZED PRODUCT. EXCAVATION, FOUNDATION WORK AND SOME STEEL WORK IS NOW IN PROGRESS ON THE UNIT. |
| KANSAS CITY POWER & LIGHT<br>HAWTHORN<br>3<br>RETROFIT 90.0 MW (GROSS)<br>90.0 MW (ESC)<br>COAL<br>.60 %S BITUMINOUS<br>LIME<br>COMBUSTION ENGINEERING<br>ENERGY CONSUMPTION: 2.2%<br>STATUS 1 STARTUP 11/72 | REFER TO SECTION 3 OF THIS REPORT FOR ADDITIONAL INFORMATION. THE SCRUBBER-ABSORBER SYSTEM ON THIS UNIT WAS CONVERTED FROM A LIMESTONE FURNACE INJECTION AND TAIL-END SYSTEM TO A TAIL-END LIME SLURRY SYSTEM. OPERATION IN THE LIME SCRUBBING MODE COMMENCED ON JANUARY 1, 1977. COMPLIANCE TEST INDICATED THE UNIT MEETS THE KANSAS CITY 0.17 LB/MM BTU PARTICULATE REG. FGD SYSTEM DESIGN INCLUDES A FINNED-TUBE STEAM REHEATER, AN ON-SITE UNLINED SLUDGE DISPOSAL POND, AND A CHEVRON MIST ELIMINATOR SYSTEM. THE 2 FGD MODULES CAN BE BY-PASSED IN EMERGENCIES. |
| KANSAS CITY POWER & LIGHT<br>HAWTHORN<br>4<br>RETROFIT 90.0 MW (GROSS)<br>90.0 MW (ESC)<br>COAL<br>.60 %S BITUMINOUS<br>LIME<br>COMBUSTION ENGINEERING<br>ENERGY CONSUMPTION: 2.2%<br>STATUS 1 STARTUP 8/72 | REFER TO SECTION 3 OF THIS REPORT FOR ADDITIONAL INFORMATION. THE SCRUBBER-ABSORBER SYSTEM ON THIS UNIT WAS CONVERTED FROM A LIMESTONE FURNACE INJECTION AND TAIL-END SYSTEM TO A TAIL-END LIME SLURRY SYSTEM. OPERATION IN THE LIME SCRUBBING MODE COMMENCED ON JANUARY 1, 1977. COMPLIANCE TEST INDICATED THE UNIT MEETS THE KANSAS CITY 0.17 LB/MM BTU PARTICULATE REG. FGD SYSTEM DESIGN INCLUDES A FINNED-TUBE STEAM REHEATER, AN ON-SITE UNLINED SLUDGE DISPOSAL POND, AND A CHEVRON ELIMINATOR SYSTEM. THE 2 FGD MODULES CAN BE BY-PASSED IN EMERGENCIES. |
| KANSAS CITY POWER & LIGHT<br>LA CYGNE<br>1<br>NEW 874.0 MW (GROSS)<br>874.0 MW (ESC)<br>COAL<br>5.39 %S SUBBITUMINOUS<br>LIMESTONE<br>BABCOCK & WILCOX<br>ENERGY CONSUMPTION: 2.7%<br>STATUS 1 STARTUP 2/73 | REFER TO SECTION 3 OF THIS REPORT FOR ADDITIONAL INFORMATION. THE EMISSION CONTROL SYSTEM FOR THIS NEW COAL-FIRED POWER-GENERATING UNIT CONSISTS OF EIGHT SCRUBBER MODULES FOR FLY ASH AND SO2 REMOVAL. EACH MODULE INCLUDES A VENTURI SCRUBBER IN SERIES WITH A 2-STAGE IMPINGEMENT PLATE ABSORBER. THE SCRUBBER PLANT IS AN INTEGRAL PART OF THE POWER-GENERATING COMPLEX, ALLOWING NO FLUE GAS BYPASS. INITIAL OPERATIONS COMMENCED IN FEB. 1973. COMMERCIAL SERVICE WAS ATTAINED BY JUNE 1973. |
| KANSAS POWER & LIGHT<br>JEFFREY<br>1<br>NEW 720.0 MW (GROSS)<br>540.0 MW (ESC)<br>COAL<br>.32 %S<br>LIMESTONE<br>COMBUSTION ENGINEERING<br>ENERGY CONSUMPTION: ****%<br>STATUS 1 STARTUP 8/78 | REFER TO SECTION 3 OF THIS REPORT FOR ADDITIONAL INFORMATION. COMBUSTION ENGINEERING SUPPLIED THE LIMESTONE EMISSION CONTROL SYSTEM FOR THIS NEW COAL FIRED UNIT. THE UNIT CONSISTS OF A COLD-SIDE ESP AND SPRAY TOWERS FOR THE CONTROL OF SO2 AND PARTICULATE EMISSIONS. 30% OF THE FLUE GAS IS BYPASSED FOR REHEAT. NOX EMISSIONS ARE CONTROLLED BY AN AIR OVERFIRE SYSTEM AT THE TANGENTIALLY FIRED PULVERIZED BUNKERS. THE CLEANED GASES ARE VENTED TO A 600 FT STACK. SLUDGE IS MIXED WITH BOTTOM ASH AND DISPOSED OF IN THE EXISTING ON-SITE BOTTOM ASH POND. |
| KANSAS POWER & LIGHT<br>JEFFREY<br>2<br>NEW 700.0 MW (GROSS)<br>490.0 MW (ESC)<br>COAL<br>.30 %S<br>LIMESTONE<br>COMBUSTION ENGINEERING<br>ENERGY CONSUMPTION: ****%<br>STATUS 2 STARTUP 6/80 | COMBUSTION ENGINEERING IS SUPPLYING THE EMISSION CONTROL SYSTEM FOR THIS NEW COAL FIRED UNIT. THE SYSTEM WILL CONSIST OF A COLD-SIDE ESP AND SPRAY TOWERS FOR THE CONTROL OF PARTICULATE AND SO2 EMISSIONS. 30% OF THE FLUE GAS WILL BE BYPASSED FOR REHEAT. AN OVERFIRE AIR SYSTEM AT THE TANGENTIAL FIRED PULVERIZED BURNERS WILL CONTROL NOX EMISSIONS. THE CLEANED GASES WILL BE VENTED TO A 600 FT STACK. SLUDGE WILL BE MIXED WITH BOTTOM ASH AND DISPOSED ON-SITE IN THE BOTTOM ASH POND. THE SYSTEM STEEL WORK IS UP AND CONSTRUCTION IS APPROXIMATELY 60% COMPLETE. |

SECTION 2
STATUS OF FGD SYSTEMS

| UNIT IDENTIFICATION | ABSTRACT |
|---|---|
| KANSAS POWER & LIGHT<br>LAWRENCE<br>4<br>RETROFIT 125.0 MW (GROSS)<br>125.0 MW (ESC)<br>COAL<br>.55 %S<br>LIMESTONE<br>COMBUSTION ENGINEERING<br>ENERGY CONSUMPTION: ****%<br>STATUS 1 STARTUP 1/76 | REFER TO SECTION 3 OF THIS REPORT FOR ADDITIONAL INFORMATION.<br>THE NEW LIMESTONE FGD SYSTEM COMMENCED OPERATIONS IN EARLY JANUARY 1977. THE NEW SYSTEM REPLACED MARBLE-BED TOWERS WITH SPRAY TOWERS. THERE HAVE BEEN NO FORCED SCRUBBER OUTAGES REPORTED SINCE START-UP. CONTINUOUS SO2 MONITORS HAVE RECORDED SO2 REMOVAL EFFICIENCIES OF BETTER THAN 85%. THE UTILITY REPORTED PARTICULATE REMOVAL IS SUCH THAT NO VISIBLE PLUME EXITS THE STACK. THE PLANT IS FIRING COAL RATED AT 10,000 BTU/LB WITH A SULFUR CONTENT OF 0.5% |
| KANSAS POWER & LIGHT<br>LAWRENCE<br>5<br>RETROFIT 420.0 MW (GROSS)<br>420.0 MW (ESC)<br>COAL<br>.55 %S<br>LIMESTONE<br>COMBUSTION ENGINEERING<br>ENERGY CONSUMPTION: ****%<br>STATUS 1 STARTUP 11/71 | REFER TO SECTION 3 OF THIS REPORT FOR ADDITIONAL INFORMATION. THE ORIGINAL LIMESTONE INJECTION AND TAIL-END SCRUBBING SYSTEM WAS SHUT DOWN ON MARCH 20 SO THAT THE NEW ROD-SCRUBBER AND SPRAY TOWER ABSORBER SYSTEM COULD BE TIED INTO THE UNIT. THE NEW SYSTEM, WHICH INCLUDES TWO MODULES, EACH CAPABLE OF HANDLING APPROXIMATELY 50 PERCENT OF THE TOTAL BOILER FLUE GAS FLOW, CAME ON LINE APRIL 14, 1978. THE SYSTEM DESIGNER AND SUPPLIER WAS COMBUSTION ENGINEERING. THE UNIT FIRES LOW SULFUR WYOMING COAL WITH A HEAT CONTENT OF 10,000 BTU/LB. |
| KENTUCKY UTILITIES<br>GREEN RIVER<br>1-3<br>RETROFIT 64.0 MW (GROSS)<br>64.0 MW (ESC)<br>COAL<br>4.00 %S BITUMINOUS<br>LIME<br>AMERICAN AIR FILTER<br>ENERGY CONSUMPTION: 3.1%<br>STATUS 1 STARTUP 9/75 | REFER TO SECTION 3 OF THIS REPORT FOR ADDITIONAL INFORMATION.<br>THE SCRUBBER PLANT INSTALLED AT THIS STATION CONSISTS OF ONE MODULE DESIGNED TO REMOVE PARTICULATE (VARIABLE-THROAT VENTURI) AND SO2 (MOBILE-BED CONTACTOR) FROM COAL-FIRED BOILER FLUE GAS. THE SCRUBBER WAS DESIGNED AND SUPPLIED BY AAF. SLUDGE IS DISPOSED IN AN ON-SITE UNLINED POND. THE COAL BURNED HAS SULFUR AND ASH CONTENTS OF 4.0 AND 11% RESPECTIVELY AND A MOISTURE CONTENT OF 6-10 PERCENT. INITIAL STARTUP OCCURRED IN SEPTEMBER 1975. COMMERCIAL OPERATION BEGAN IN JANUARY 1976. |
| LAKELAND UTILITIES<br>MCINTOSH<br>3<br>NEW 364.0 MW (GROSS)<br>364.0 MW (ESC)<br>COAL<br>2.56 %S BITUMINOUS<br>LIMESTONE<br>BABCOCK & WILCOX<br>ENERGY CONSUMPTION: ****%<br>STATUS 3 STARTUP 10/81 | THE CITY OF LAKELAND DEPARTMENT OF ELECTRIC AND WATER UTILITIES AWARDED A CONTRACT TO B&W FOR AN EMISSION CONTROL SYSTEM ON THE UTILITY'S NEW 350-MW POWER GENERAGING UNIT, MCINTOSH 3. THE UNIT WILL UTILIZE COLD SIDE ESP'S FOR PARTICULATE REMOVAL AND TWO LIMESTONE SCRUBBER ABSORBER MODULES. START-UP IS SCHEDULED FOR OCTOBER 1981. THE COAL WILL CONTAIN ABOUT 2.5% SULFUR. THE UNIT DESIGN INCLUDES A REHEAT AND AN IUCS SLUDGE DISPOSAL SYSTEM. SITE EXCAVATION HAS BEGUN. |
| LOUISVILLE GAS & ELECTRIC<br>CANE RUN<br>4<br>RETROFIT 188.0 MW (GROSS)<br>188.0 MW (ESC)<br>COAL<br>3.75 %S BITUMINOUS<br>LIME<br>AMERICAN AIR FILTER<br>ENERGY CONSUMPTION: 1.6%<br>STATUS 1 STARTUP 8/76 | REFER TO SECTION 3 OF THIS REPORT FOR ADDITIONAL INFORMATION.<br>THE FGD SYSTEM RETROFITTED ON THIS BOILER WAS DESIGNED AND SUPPLIED BY AMERICAN AIR FILTER AND WAS FIRST PLACED IN THE GAS PATH ON AUGUST 7, 1976. THE SYSTEM CONSISTS OF TWO PARALLEL MODULES WHICH INCLUDE MOBILE BED CONTACTORS AND OPERATE WITH A CARBIDE LIME ADDITIVE. FOLLOWING A NUMBER OF MAJOR SYSTEM MODIFICATIONS (CHEVRON-TYPE MIST ELIMINATOR, OIL FIRED REHEAT, PLASITE DUCT LINER, HIGHER L/G), THE SYSTEM SUCCESSFULLY PASSED COMPLIANCE TESTING (85% SO2 REMOVAL) ON AUGUST 3 AND 4, 1977. |
| LOUISVILLE GAS & ELECTRIC<br>CANE RUN<br>5<br>RETROFIT 190.0 MW (GROSS)<br>190.0 MW (ESC)<br>COAL<br>3.75 %S BITUMINOUS<br>LIME<br>COMBUSTION ENGINEERING<br>ENERGY CONSUMPTION: 1.6%<br>STATUS 1 STARTUP 12/77 | REFER TO SECTION 3 OF THIS REPORT FOR ADDITIONAL INFORMATION.<br>THE FGD SYSTEM FOR THIS UNIT WAS DESIGNED AND SUPPLIED BY COMBUSTION ENGINEERING. IT CONSISTS OF TWO SPRAY TOWER ABSORBERS FOR FULL-LOAD SO2 REMOVAL AND UTILIZES CARBIDE LIME AS THE ABSORBING REAGENT. IN-LINE STEAM REHEAT, A COMMON REACTION TANK, AND A THICKENER FOR SOLIDS DEWATERING ARE INCLUDED. AN EXISTING UPSTREAM ESP PROVIDES PRIMARY PARTICULATE CONTROL. THE FGD SYSTEM BEGAN INITIAL OPERATION IN DEC. 1977 BUT A COAL STRIKE FORCED A PLANT SHUTDOWN. THE SYSTEM WAS RE-STARTED MARCH 24, 1978. |

SECTION 2
STATUS OF FGD SYSTEMS

| UNIT IDENTIFICATION | ABSTRACT |
|---|---|
| LOUISVILLE GAS & ELECTRIC<br>CANE RUN<br>4<br>RETROFIT 288.0 MW (GROSS)<br>288.0 MW (ESC)<br>COAL<br>3.75 %S BITUMINOUS<br>DUAL ALKALI<br>ADL/COMBUSTION EQUIP ASSOCIATE<br>ENERGY CONSUMPTION: 1.0%<br>STATUS 1 STARTUP 3/79 | REFER TO SECTION 3 OF THIS REPORT FOR ADDITIONAL INFORMATION. A.D. LITTLE/COMBUSTION EQUIPMENT ASSOCIATES HAS SUPPLIED THE INSTALLATION OF A DOUBLE ALKALI SYSTEM. THE FEDERAL EPA WILL SUBSIDIZE A MAXIMUM $4.5 MF FOR OPERATION, RESEARCH AND DEVELOPMENT, AND REPORT WRITING FOR A ONE-YEAR PERIOD FOLLOWING THE FIRST THREE MONTHS OF OPERATIONS (NOTE: THIS SUBSIDY WILL NOT BE APPLIED FOR ANY CAPITAL EXPENDITURES). |
| LOUISVILLE GAS & ELECTRIC<br>MILL CREEK<br>1<br>RETROFIT 358.0 MW (GROSS)<br>358.0 MW (ESC)<br>COAL<br>3.75 %S<br>LIME/LIMESTONE<br>COMBUSTION ENGINEERING<br>ENERGY CONSUMPTION: 1.4%<br>STATUS 2 STARTUP 4/81 | A COMPLIANCE SCHEDULE WAS SUBMITTED TO THE JEFFERSON COUNTY AIR POLLUTION CONTROL DISTRICT WITH 4/81 ESTABLISHED AS THE STARTUP DATE FOR AN FGD SYSTEM. OPERATING DATA AND INFORMATION FROM THE FULL-SCALE SCRUBBER PLANT NOW IN SERVICE ON THE NO. 4 UNIT AT CANE RUN WILL BE OBTAINED BEFORE THE UTILITY PROCEEDS WITH ADDITIONAL SYSTEM DESIGN WORK. A CONTRACT WAS AWARDED TO COMBUSTION ENGINEERING FOR A LIME/LIMESTONE FGD SYSTEM. |
| LOUISVILLE GAS & ELECTRIC<br>MILL CREEK<br>2<br>RETROFIT 350.0 MW (GROSS)<br>350.0 MW (ESC)<br>COAL<br>3.75 %S<br>LIME/LIMESTONE<br>COMBUSTION ENGINEERING<br>ENERGY CONSUMPTION: 1.4%<br>STATUS 3 STARTUP 4/82 | A COMPLIANCE SCHEDULE WAS SUBMITTED TO THE JEFFERSON COUNTY AIR POLLUTION CONTROL DISTRICT WITH 4/82 ESTABLISHED AS THE STARTUP DATE FOR AN FGD SYSTEM. OPERATING DATA AND INFORMATION FROM THE FULL-SCALE SCRUBBER PLANT NOW IN SERVICE ON THE NO. 4 UNIT AT CANE RUN WILL BE OBTAINED BEFORE THE UTILITY PROCEEDS WITH ADDITIONAL SYSTEM DESIGN WORK. A CONTRACT WAS AWARDED TO COMBUSTION ENGINEERING FOR A LIME/LIMESTONE FGD SYSTEM. |
| LOUISVILLE GAS & ELECTRIC<br>MILL CREEK<br>3<br>NEW 442.0 MW (GROSS)<br>442.0 MW (ESC)<br>COAL<br>3.75 %S BITUMINOUS<br>LIME<br>AMERICAN AIR FILTER<br>ENERGY CONSUMPTION: 1.6%<br>STATUS 1 STARTUP 8/78 | REFER TO SECTION 3 OF THIS REPORT FOR ADDITIONAL INFORMATION. THE SYSTEM WAS DESIGNED AND SUPPLIED BY AAF AND UTILIZES CARBIDE LIME AS THE ABSORBENT. FOUR MOBILE-BED ABSORBERS TREAT THE FLUE GAS RESULTING FROM THE COMBUSTION OF HIGH-SULFUR COAL. THE SYSTEM OPERATES IN AN OPEN WATER LOOP. THE SCRUBBING WASTE IS STABILIZED WITH FLYASH AND LIME. THE UNIT BECAME OPERATIONAL ON AUGUST 13, 1978. |
| LOUISVILLE GAS & ELECTRIC<br>MILL CREEK<br>4<br>NEW 495.0 MW (GROSS)<br>495.0 MW (ESC)<br>COAL<br>3.75 %S<br>LIME<br>AMERICAN AIR FILTER<br>ENERGY CONSUMPTION: ****%<br>STATUS 2 STARTUP 7/81 | BECAUSE POWER DEMAND HAS NOT COME UP AS RAPIDLY AS HAD BEEN EXPECTED, UNIT START-UP HAS BEEN MOVED BACK TO JULY 1981. CONSTRUCTION OF THIS NEW 495-MW COAL-FIRED UNIT IS ON SCHEDULE. CURRENTLY, FOUNDATION WORK IS IN PROGRESS. THIS AAF SYSTEM WILL INCLUDE MOBILE-BED ABSORBERS TREATING HIGH SULFUR COAL FLUE GAS. THE SYSTEMS WATER LOOP WILL BE CLOSED. THE SLUDGE WILL BE STABILIZED WITH LIME AND FLYASH. STEAM REHEAT WILL PROVIDE GAS TEMPERATURE ELEVATION OF THE SCRUBBED GASES PRIOR TO DISCHARGE TO THE MAIN STACK. |
| LOUISVILLE GAS & ELECTRIC<br>PADDY'S RUN<br>6<br>RETROFIT 72.0 MW (GROSS)<br>72.0 MW (ESC)<br>COAL<br>2.50 %S<br>LIME<br>COMBUSTION ENGINEERING<br>ENERGY CONSUMPTION: 2.8%<br>STATUS 1 STARTUP 4/73 | REFER TO SECTION 3 OF THIS REPORT FOR ADDITIONAL INFORMATION. THIS SCRUBBING SYSTEM WAS DESIGNED BY COMBUSTION ENGINEERING AND PLACED IN SERVICE IN APRIL 1973. THE FGD SYSTEM CONSISTS OF TWO 2-STAGE MARBLE BED ABSORBERS WHICH ARE DESIGNED TO USE CARBIDE LIME ADDITIVE AS THE SCRUBBING REAGENT. PADDYS RUN NO. 6 IS A PEAK-LOAD UNIT THAT OPERATES ONLY DURING DEMAND PERIODS. AN EXTENSIVE EPA SCRUBBER/SLUDGE EVALUATION STUDY WAS COMPLETED IN AUGUST 1977. THIS UNIT WILL BE RETIRED WHEN MILL CREEK 3 BECOMES FULLY OPERATIONAL. |

SECTION 2
STATUS OF FGD SYSTEMS

| UNIT IDENTIFICATION | ABSTRACT |
|---|---|
| LOUISVILLE GAS & ELECTRIC<br>TRIMBLE COUNTY<br>1<br>NEW 575.0 MW (GROSS)<br>575.0 MW (ESC)<br>COAL<br>4.00 %S BITUMINOUS<br>PROCESS NOT SELECTED<br>VENDOR NOT SELECTED<br>ENERGY CONSUMPTION: ****%<br>STATUS 6 STARTUP 7/84 | LG&E WILL BE INSTALLING FGD SYSTEMS ON TWO OF THE UTILITY'S TRIMBLE COUNTY UNITS. THE 575-MW UNITS WILL BURN COAL WITH AN AVERAGE 4% SULFUR CONTENT (IF NO COAL WASH IS INCLUDED). PARTICULATE MATTER WILL BE CONTROLLED BY ESP'S AND SO2 WILL BE CONTROLLED BY WET SCRUBBING (90% REMOVAL EFFICIENCY). SLUDGE DISPOSAL STRATEGY IS AS YET, UNDECIDED. START-UP IS SCHEDULED FOR JULY 1984 AND 1986 RESPECTIVELY. |
| LOUISVILLE GAS & ELECTRIC<br>TRIMBLE COUNTY<br>2<br>NEW 575.0 MW (GROSS)<br>575.0 MW (ESC)<br>COAL<br>4.00 %S BITUMINOUS<br>PROCESS NOT SELECTED<br>VENDOR NOT SELECTED<br>ENERGY CONSUMPTION: ****%<br>STATUS 6 STARTUP 0/84 | LG&E WILL BE INSTALLING FGD SYSTEMS ON TWO OF THE UTILITY'S TRIMBLE COUNTY UNITS. THE 575-MW UNITS WILL BURN COAL WITH AN AVERAGE 4% SULFUR CONTENT (IF NO COAL WASH IS INCLUDED). PARTICULATE MATTER WILL BE CONTROLLED BY ESP'S AND SO2 WILL BE CONTROLLED BY WET SCRUBBING (90% REMOVAL EFFICIENCY). SLUDGE DISPOSAL STRATEGY IS AS YET, UNDECIDED. START-UP IS SCHEDULED FOR JULY 1984 AND 1986 RESPECTIVELY. |
| MIDDLE SOUTH UTILITIES<br>ARKANSAS COAL<br>5<br>NEW 890.0 MW (GROSS)<br>890.0 MW (ESC)<br>COAL<br>.50 %S<br>PROCESS NOT SELECTED<br>VENDOR NOT SELECTED<br>ENERGY CONSUMPTION: ****%<br>STATUS 5 STARTUP 1/86 | A CONTRACT HAS BEEN AWARDED FOR BOILERS AND TURBINES ON SIX NEW MIDDLE SOUTH UTILITIES UNITS. THE UTILITY IS CURRENTLY REQUESTING/EVALUATING BIDS FOR THE FGD INSTALLATIONS ALTHOUGH THE TYPE OF FGD SYSTEM HAS NOT YET BEEN DETERMINED. |
| MIDDLE SOUTH UTILITIES<br>ARKANSAS COAL<br>6<br>NEW 890.0 MW (GROSS)<br>890.0 MW (ESC)<br>COAL<br>.50 %S<br>PROCESS NOT SELECTED<br>VENDOR NOT SELECTED<br>ENERGY CONSUMPTION: ****%<br>STATUS 5 STARTUP 1/88 | A CONTRACT HAS BEEN AWARDED FOR BOILERS AND TURBINES ON SIX NEW MIDDLE SOUTH UTILITIES UNITS. THE UTILITY IS CURRENTLY REQUESTING/EVALUATING BIDS FOR THE FGD INSTALLATIONS ALTHOUGH THE TYPE OF FGD SYSTEM HAS NOT YET BEEN DETERMINED. |
| MIDDLE SOUTH UTILITIES<br>LOUISIANA COAL<br>1<br>NEW 890.0 MW (GROSS)<br>890.0 MW (ESC)<br>COAL<br>.50 %S<br>PROCESS NOT SELECTED<br>VENDOR NOT SELECTED<br>ENERGY CONSUMPTION: ****%<br>STATUS 5 STARTUP 0/86 | A CONTRACT HAS BEEN AWARDED FOR BOILERS AND TURBINES ON SIX NEW MIDDLE SOUTH UTILITIES UNITS. THE UTILITY IS CURRENTLY REQUEST/EVALVATING BIDS FOR THE FGD INSTALLATIONS ALTHOUGH THE TYPE OF FGD SYSTEM HAS NOT YET BEEN DETERMINED. |
| MIDDLE SOUTH UTILITIES<br>LOUISIANA COAL<br>2<br>NEW 890.0 MW (GROSS)<br>890.0 MW (ESC)<br>COAL<br>.50 %S<br>PROCESS NOT SELECTED<br>VENDOR NOT SELECTED<br>ENERGY CONSUMPTION: ****%<br>STATUS 5 STARTUP 0/88 | A CONTRACT HAS BEEN AWARDED FOR BOILERS AND TURBINES ON SIX NEW MIDDLE SOUTH UTILITIES UNITS. THE UTILITY IS CURRENTLY REQUESTING/EVALUATING BIDS FOR THE FGD INSTALLATIONS ALTHOUGH THE TYPE OF FGD SYSTEM HAS NOT YET BEEN DETERMINED. |

SECTION 2
STATUS OF FGD SYSTEMS

| UNIT IDENTIFICATION | ABSTRACT |
|---|---|
| MIDDLE SOUTH UTILITIES<br>MISSISSIPPI COAL<br>1<br>NEW 890.0 MW (GROSS)<br>890.0 MW (ESC)<br>COAL<br>.50 %S<br>PROCESS NOT SELECTED<br>VENDOR NOT SELECTED<br>ENERGY CONSUMPTION: ****%<br>STATUS 5 STARTUP 0/85 | A CONTRACT HAS BEEN AWARDED FOR BOILERS AND TURBINES ON SIX NEW MIDDLE SOUTH UTILITIES UNITS. THE UTILITY IS CURRENTLY REQUESTING/EVALUATING BIDS FOR THE FGD INSTALLATIONS ALTHOUGH THE TYPE OF FGD SYSTEM HAS NOT YET BEEN DETERMINED. |
| MIDDLE SOUTH UTILITIES<br>MISSISSIPPI COAL<br>2<br>NEW 890.0 MW (GROSS)<br>890.0 MW (ESC)<br>COAL<br>.50 %S<br>PROCESS NOT SELECTED<br>VENDOR NOT SELECTED<br>ENERGY CONSUMPTION: ****%<br>STATUS 5 STARTUP 0/87 | A CONTRACT HAS BEEN AWARDED FOR BOILERS AND TURBINES ON SIX NEW MIDDLE SOUTH UTILITIES UNITS. THE UTILITY IS CURRENTLY REQUESTING/EVALUATING BIDS FOR THE FGD INSTALLATIONS ALTHOUGH THE TYPE OF FGD SYSTEM HAS NOT YET BEEN DETERMINED. |
| MINNESOTA POWER & LIGHT<br>CLAY BOSWELL<br>4<br>NEW 500.0 MW (GROSS)<br>475.0 MW (ESC)<br>COAL<br>.80 %S SUBBITUMINOUS<br>LIME/ALKALINE FLYASH<br>PEABODY PROCESS SYSTEMS<br>ENERGY CONSUMPTION: ****%<br>STATUS 2 STARTUP 5/80 | MINNESOTA P&L HAS AWARDED A CONTRACT TO PEABODY PROCESS SYSTEMS FOR A LIME/ALKALINE FLYASH SCRUBBING SYSTEM. THE CONFIGURATION WILL BE VENTURI SCRUBBERS FOLLOWED BY SPRAY TOWERS. HOT SIDE ESP'S WILL BE USED FOR PARTICULATE CONTROL. STACK GAS REHEAT WILL BE ACCOMPLISHED BY BYPASSING 5% OF FLUE GAS AROUND THE SCRUBBER. THE UNIT WILL FIRE SUBBITUMINOUS COLSTRIP COAL WITH A SULFUR CONTENT OF 0.8%, AND AN ASH CONTENT OF 9.0% (HEATING VALUE-8300 BTU/LB). MAKE-UP WATER SOURCE WILL BE THE RIVER AND THE CLAY LINED POND. CONSTRUCTION OF THE FGD SYSTEM IS ABOUT 90% COMPLETE. |
| MINNKOTA POWER COOPERATIVE<br>MILTON R. YOUNG<br>2<br>NEW 477.0 MW (GROSS)<br>405.0 MW (ESC)<br>COAL<br>.70 %S LIGNITE<br>LIME/ALKALINE FLYASH<br>ADL/COMBUSTION EQUIP ASSOCIATE<br>ENERGY CONSUMPTION: 1.9%<br>STATUS 1 STARTUP 9/77 | REFER TO SECTION 3 OF THIS REPORT FOR ADDITIONAL INFORMATION. THIS LIME/ALKALINE FLYASH SCRUBBING WAS DESIGNED AND SUPPLIED BY ADL/COMBUSTION EQUIPMENT ASSOCIATES. IT CONSISTS OF A COLD-SIDE ESP FOLLOWED BY TWO SPRAY TOWERS. THE DESIGN INCLUDES A WASH TRAY AND A CHEVRON MIST ELIMINATOR. 15% FLUE GAS BYPASS PROVIDES STACK GAS REHEAT. THE UNIT FIRES A LOW-SULFUR NORTH DAKOTA LIGNITE WITH AN AVERAGE ASH CONTENT OF 8 PERCENT, SULFUR CONTENT OF 0.7 PERCENT, AND HEAT CONTENT OF 6500 BTU/LB. THE FLYASH ALKALINITY IS USED AS THE PRIMARY SO2 REAGENT. |
| MONTANA POWER<br>COLSTRIP<br>1<br>NEW 360.0 MW (GROSS)<br>360.0 MW (ESC)<br>COAL<br>.77 %S SUBBITUMINOUS<br>LIME<br>ADL/COMBUSTION EQUIP ASSOCIATE<br>ENERGY CONSUMPTION: 3.3%<br>STATUS 1 STARTUP 9/75 | REFER TO SECTION 3 OF THIS REPORT FOR ADDITIONAL INFORMATION. THIS FGD EQUIPPED UNIT WAS DECLARED COMMERCIAL IN NOVEMBER 1975. THE SCRUBBING SYSTEM PROVIDES PARTICULATE AND SO2 CONTROL WITH THREE SCRUBBER MODULES. EACH MODULE CONSISTS OF A DOWNFLOW VENTURI SCRUBBER CENTERED WITHIN AN UPFLOW SPRAY TOWER ABSORBER. EACH MODULE CAN TREAT 40% OF THE TOTAL BOILER FLUE GAS AND THE MODULES CANNOT BE BYPASSED. THE UNSTABILIZED SLUDGE IS DISPOSED IN AN ON-SITE LINED DISPOSAL POND. IN-LINE STEAM REHEAT AND CLOSED WATER LOOP CAPABILITY ARE INCLUDED IN THE SYSTEM. |
| MONTANA POWER<br>COLSTRIP<br>2<br>NEW 360.0 MW (GROSS)<br>360.0 MW (ESC)<br>COAL<br>.77 %S SUBBITUMINOUS<br>LIME<br>ADL/COMBUSTION EQUIP ASSOCIATE<br>ENERGY CONSUMPTION: 3.3%<br>STATUS 1 STARTUP 5/76 | REFER TO SECTION 3 OF THIS REPORT FOR ADDITIONAL INFORMATION. THIS FGD EQUIPPED UNIT WAS DECLARED COMMERCIAL IN AUGUST 1976. THE SCRUBBING SYSTEM PROVIDES PARTICULATE AND SO2 CONTROL WITH THREE SCRUBBER MODULES. EACH MODULE CONSISTS OF A DOWNFLOW VENTURI SCRUBBER CENTERED WITHIN AN UPFLOW SPRAY TOWER ABSORBER. EACH MODULE CAN TREAT 40% OF THE TOTAL BOILER FLUE GAS AND THE MODULES CANNOT BE BYPASSED. THE UNSTABILIZED SLUDGE IS DISPOSED IN AN ON-SITE LINED DISPOSAL POND. IN-LINE STEAM REHEAT AND CLOSED WATER LOOP CAPABILITY ARE INCLUDED IN THE SYSTEM. |

SECTION 2
STATUS OF FGD SYSTEMS

| UNIT IDENTIFICATION | ABSTRACT |
|---|---|
| MONTANA POWER<br>COLSTRIP<br>3<br>NEW 700.0 MW (GROSS)<br>700.0 MW (ESC)<br>COAL<br>.70 %S<br>LIME/ALKALINE FLYASH<br>ADL/COMBUSTION EQUIP ASSOCIATE<br>ENERGY CONSUMPTION: ****%<br>STATUS 3 STARTUP 7/80 | A CONTRACT FOR THE INSTALLATION OF TWO ADDITIONAL LIME/ALKALINE FLYASH SCRUBBING SYSTEMS HAS BEEN AWARDED TO A.D. LITTLE/COMBUSTION EQUIPMENT ASSOCIATES. THESE SYSTEMS WILL BE INSTALLED ON UNITS 3 AND 4 OF THE COLSTRIP POWER STATION. COLSTRIP UNITS 1 AND 2 ARE BOTH EQUIPPED WITH OPERATIONAL LIME/ALKALINE FLYASH SCRUBBING SYSTEMS FOR THE REMOVAL OF PARTICULATES AND SULFUR DIOXIDE. |
| MONTANA POWER<br>COLSTRIP<br>4<br>NEW 700.0 MW (GROSS)<br>700.0 MW (ESC)<br>COAL<br>.70 %S<br>LIME/ALKALINE FLYASH<br>ADL/COMBUSTION EQUIP ASSOCIATE<br>ENERGY CONSUMPTION: ****%<br>STATUS 3 STARTUP 7/81 | A CONTRACT FOR THE INSTALLATION OF TWO ADDITIONAL LIME/ALKALINE FLYASH SCRUBBING SYSTEMS HAS BEEN AWARDED TO A.D. LITTLE/COMBUSTION EQUIPMENT ASSOCIATES. THESE SYSTEMS WILL BE INSTALLED ON UNITS 3 AND 4 OF THE COLSTRIP POWER STATION. COLSTRIP UNITS 1 AND 2 ARE BOTH EQUIPPED WITH OPERATIONAL LIME/ALKALINE FLYASH SCRUBBING SYSTEMS FOR THE REMOVAL OF PARTICULATES AND SULFUR DIOXIDE. |
| MUSCATINE POWER & WATER<br>MUSCATINE<br>9<br>NEW 160.0 MW (GROSS)<br>160.0 MW (ESC)<br>COAL<br>.30 %S BITUMINOUS<br>PROCESS NOT SELECTED<br>VENDOR NOT SELECTED<br>ENERGY CONSUMPTION: 5.0%<br>STATUS 6 STARTUP 0/82 | MP&W ANNOUNCED PLANS TO INSTALL A LIME OR LIMESTONE SLURRY FGD SYSTEM ON MUSCATINE 9. PARTICULATE MATTER WILL BE CONTROLLED BY AN ESP FOLLOWED BY THE FGD SYSTEM FOR SO2 REMOVAL. THE SYSTEM DESIGN FEATURES TWO 100% CAPACITY ABSORBER TOWERS, A STEAM COIL REHEAT SYSTEM AND A FORCED OXIDATION SYSTEM TO PRODUCE SLUDGE PRODUCT SUITABLE FOR LANDFILL AFTER DRYING. |
| NEVADA POWER<br>HARRY ALLEN<br>1<br>NEW 500.0 MW (GROSS)<br>500.0 MW (ESC)<br>COAL<br>***** %S<br>PROCESS NOT SELECTED<br>VENDOR NOT SELECTED<br>ENERGY CONSUMPTION: ****%<br>STATUS 6 STARTUP 6/85 | CONSIDERING HOT SIDE ESP IN CONJUNCTION WITH AN FGD SYSTEM. SPECIFICATIONS HAVE NOT YET BEEN PREPARED. |
| NEVADA POWER<br>HARRY ALLEN<br>2<br>NEW 500.0 MW (GROSS)<br>500.0 MW (ESC)<br>COAL<br>***** %S<br>PROCESS NOT SELECTED<br>VENDOR NOT SELECTED<br>ENERGY CONSUMPTION: ****%<br>STATUS 6 STARTUP 6/86 | CONSIDERING HOT SIDE ESP IN CONJUNCTION WITH AN FGD SYSTEM. SPECIFICATIONS HAVE NOT YET BEEN PREPARED. |
| NEVADA POWER<br>HARRY ALLEN<br>3<br>NEW 500.0 MW (GROSS)<br>500.0 MW (ESC)<br>COAL<br>***** %S<br>PROCESS NOT SELECTED<br>VENDOR NOT SELECTED<br>ENERGY CONSUMPTION: ****%<br>STATUS 6 STARTUP 6/87 | CONSIDERING HOT SIDE ESP IN CONJUNCTION WITH AN FGD SYSTEM. SPECIFICATIONS HAVE NOT YET BEEN PREPARED. |

SECTION 2
STATUS OF FGD SYSTEMS

| UNIT IDENTIFICATION | ABSTRACT |
|---|---|
| NEVADA POWER<br>HARRY ALLEN<br>4<br>NEW 500.0 MW (GROSS)<br>500.0 MW (ESC)<br>COAL<br>***** %S<br>PROCESS NOT SELECTED<br>VENDOR NOT SELECTED<br>ENERGY CONSUMPTION: ****%<br>STATUS 6 STARTUP 6/88 | CONSIDERING HOT SIDE ESP IN CONJUNCTION WITH AN FGD SYSTEM. SPECIFICATIONS HAVE NOT YET BEEN PREPARED. |
| NEVADA POWER<br>REID GARDNER<br>1<br>RETROFIT 125.0 MW (GROSS)<br>125.0 MW (ESC)<br>COAL<br>.50 %S<br>SODIUM CARBONATE<br>ADL/COMBUSTION EQUIP ASSOCIATE<br>ENERGY CONSUMPTION: ****%<br>STATUS 1 STARTUP 4/74 | REFER TO SECTION 3 OF THIS REPORT FOR ADDITIONAL INFORMATION. THIS SODIUM CARBONATE-BASED (TRONA) SCRUBBING SYSTEM CONSISTS OF ONE MODULE CONTAINING A TWIN VARIABLE THROAT VENTURI SCRUBBER FOLLOWED BY A SEPARATOR IN SERIES WITH A SINGLE-STAGE PERFORATED-PLATE WASH TOWER. PRIMARY PARTICULATE CONTROL IS PROVIDED BY UPSTREAM MECHANICAL COLLECTORS. AN INDIRECT STEAM HOT AIR REHEAT SYSTEM RAISES THE GAS TEMPERATURE 30F PRIOR TO DISCHARGE TO THE MAIN STACK. THE FLUE GAS CLEANING WASTES ARE ULTIMATELY DISPOSED IN AN ON-SITE CLAY-LINED SOLAR EVAPORATION POND. |
| NEVADA POWER<br>REID GARDNER<br>2<br>RETROFIT 125.0 MW (GROSS)<br>125.0 MW (ESC)<br>COAL<br>.50 %S<br>SODIUM CARBONATE<br>ADL/COMBUSTION EQUIP ASSOCIATE<br>ENERGY CONSUMPTION: ****%<br>STATUS 1 STARTUP 4/74 | REFER TO SECTION 3 OF THIS REPORT FOR ADDITIONAL INFORMATION. THIS SODIUM CARBONATE-BASED (TRONA) SCRUBBING SYSTEM CONSISTS OF ONE MODULE CONTAINING A TWIN VARIABLE THROAT VENTURI SCRUBBER FOLLOWED BY A SEPARATOR IN SERIES WITH A SINGLE-STAGE PERFORATED-PLATE WASH TOWER. PRIMARY PARTICULATE CONTROL IS PROVIDED BY UPSTREAM MECHANICAL COLLECTORS. AN INDIRECT STEAM HOT AIR REHEAT SYSTEM RAISES THE GAS TEMPERATURE 30F PRIOR TO DISCHARGE TO THE MAIN STACK. THE FLUE GAS CLEANING WASTES ARE ULTIMATELY DISPOSED IN AN ON-SITE CLAY-LINED SOLAR EVAPORATION POND. |
| NEVADA POWER<br>REID GARDNER<br>3<br>NEW 125.0 MW (GROSS)<br>125.0 MW (ESC)<br>COAL<br>.50 %S<br>SODIUM CARBONATE<br>ADL/COMBUSTION EQUIP ASSOCIATE<br>ENERGY CONSUMPTION: ****%<br>STATUS 1 STARTUP 6/76 | REFER TO SECTION 3 OF THIS REPORT FOR ADDITIONAL INFORMATION. THIS UNIT IS A NEW COAL-FIRED BOILER THAT IS EQUIPPED WITH SODIUM CARBONATE-BASED (TRONA) SCRUBBING SYSTEM WHICH INCORPORATES A TWIN VARIABLE-THROAT VENTURI SCRUBBER FOLLOWED BY A SEPARATOR IN SERIES WITH A SINGLE-STAGE PERFORATED-PLATE WASH TOWER. MECHANICAL COLLECTORS PROVIDE PRIMARY PARTICULATE CONTOL. REHEAT IS PROVIDED BY A INDIRECT STEAM HOT AIR REHEAT SYSTEM. WASTE IS DISPOSED IN AN ON-SITE CLAY-LINED POND. |
| NEVADA POWER<br>REID GARDNER<br>4<br>NEW 250.0 MW (GROSS)<br>250.0 MW (ESC)<br>COAL<br>.75 %S<br>PROCESS NOT SELECTED<br>VENDOR NOT SELECTED<br>ENERGY CONSUMPTION: ****%<br>STATUS 6 STARTUP 0/83 | NEVADA POWER COMPANY HAS SCRAPPED THEIR ORIGINAL PLANS TO MAKE UNIT 4 A COPY OF UNIT 3. THE NEW PLANS CALL FOR A 250-MW UNIT TO BE IN OPERATION BY 1983. THE UTILITY IS PREPARING SPECIFICATIONS AT THIS TIME. CONSTRUCTION IS SCHEDULED TO START IN 1980. |
| NEVADA POWER<br>WARNER VALLEY<br>1<br>NEW 250.0 MW (GROSS)<br>250.0 MW (ESC)<br>COAL<br>***** %S<br>PROCESS NOT SELECTED<br>VENDOR NOT SELECTED<br>ENERGY CONSUMPTION: ****%<br>STATUS 6 STARTUP 6/84 | SPECIFICATIONS ARE BEING PREPARED FOR A SCRUBBING SYSTEM. NEVADA POWER HAS NOT YET ANNOUNCED PLANS FOR THIS UNIT'S EMISSION CONTROL STRATEGY. |

SECTION 2
STATUS OF FGD SYSTEMS

| UNIT IDENTIFICATION | ABSTRACT |
|---|---|
| NEVADA POWER<br>WARNER VALLEY<br>2<br>NEW 250.0 MW (GROSS)<br>250.0 MW (ESC)<br>COAL<br>**** %S<br>PROCESS NOT SELECTED<br>VENDOR NOT SELECTED<br>ENERGY CONSUMPTION: ****%<br>STATUS 6 STARTUP 6/85 | SPECIFICATIONS ARE BEING PREPARED FOR A SCRUBBING SYSTEM. NEVADA POWER HAS NOT YET ANNOUNCED PLANS FOR THIS UNIT'S EMISSION CONTROL STRATEGY. |
| NEW ENGLAND ELECTRIC SYSTEM<br>BRAYTON POINT<br>2<br>RETROFIT 650.0 MW (GROSS)<br>650.0 MW (ESC)<br>OIL<br>1.00 %S<br>PROCESS NOT SELECTED<br>VENDOR NOT SELECTED<br>ENERGY CONSUMPTION: ****%<br>STATUS 7 STARTUP 0/ 0 | NEW ENGLAND ELECTRIC SYSTEM HAS REQUESTED PERMISSION TO BURN 1.5% SULFUR COAL AT THIS UNIT. THIS IS ALLOWABLE UNDER STATE STANDARDS BUT SO2 EMISSIONS WOULD BE ABOVE ALLOWABLE FEDERAL LEVELS. A DECISION BY THE EPA IS STILL PENDING. MEANWHILE, THE UTILITY IS INVESTIGATING VARIOUS ADVANCE REGENERABLE FGD SYSTEMS WHICH OFFER A BREAKTHROUGH IN OPERATING COSTS AND PRODUCE ELEMENTAL SULFUR AS AN END PRODUCT. THE UTILITY IS CURRENTLY INVOLVED IN BENCH AND LABORATORY SCALE INVESTIGATIONS OF SULFUR RECOVERY. THIS UNIT IS CURRENTLY OPERATIONAL FIRING LOW SULFUR FUEL OIL. |
| NIAGARA MOHAWK POWER COOP<br>CHARLES R. HUNTLEY<br>66<br>RETROFIT 100.0 MW (GROSS)<br>100.0 MW (ESC)<br>COAL<br>1.80 %S<br>AQUEOUS CARBONATE<br>ROCKWELL INTERNATIONAL<br>ENERGY CONSUMPTION: ****%<br>STATUS 3 STARTUP 0/82 | A CONTRACT WAS AWARDED TO ATOMICS INTERNATIONAL FOR THE DESIGN AND INSTALLATION OF AN AQUEOUS CARBONATE FGD SYSTEM. THIS DEMONSTRATION SYSTEM WILL PRODUCE END-PRODUCT SULFUR. FUNDS ARE BEING PROVIDED BY THE U.S. EPA AND THE EMPIRE STATE ELECTRIC ENERGY RESEARCH CORP. THE DESIGN SO2 REMOVAL EFFICIENCY WILL BE 90 PERCENT. ROCKWELL INTERNATIONAL IS PRESENTLY IN THE DESIGN PHASE. |
| NORTHERN INDIANA PUB SERVICE<br>BAILLY<br>7<br>RETROFIT 190.0 MW (GROSS)<br>190.0 MW (ESC)<br>COAL<br>3.00 %S<br>PROCESS NOT SELECTED<br>VENDOR NOT SELECTED<br>ENERGY CONSUMPTION: ****%<br>STATUS 6 STARTUP 0/ 0 | NORTHERN INDIANA PUBLIC SERVICE IS CURRENTLY CONSIDERING A LIME OR LIMESTONE SCRUBBING UNIT FOR BAILLY 7 AND 8. THEY ARE ALSO WAITING FOR PERFORMANCE RESULTS OF THE WELLMAN LORD/ALLIED CHEMICAL UNIT IN SERVICE AT DEAN H. MITCHELL 11. LOW SULFUR COAL MAY BE EMPLOYED TO COMPLY WITH SO2 EMISSION REGUALTIONS. APPLICABLE INDIANA SO2 REGULATIONS ARE STILL NOT FIRMLY ESTABLISHED. |
| NORTHERN INDIANA PUB SERVICE<br>BAILLY<br>8<br>RETROFIT 400.0 MW (GROSS)<br>400.0 MW (ESC)<br>COAL<br>3.00 %S<br>PROCESS NOT SELECTED<br>VENDOR NOT SELECTED<br>ENERGY CONSUMPTION: ****%<br>STATUS 6 STARTUP 0/ 0 | NORTHERN INDIANA PUBLIC SERVICE IS CURRENTLY CONSIDERING A LIME OR LIMESTONE SCRUBBING UNIT FOR BAILLY 7 AND 8. THEY ARE ALSO WAITING FOR PERFORMANCE RESULTS OF THE WELLMAN LORD/ALLIED CHEMICAL UNIT IN SERVICE AT DEAN H. MITCHELL 11. LOW SULFUR COAL MAY BE EMPLOYED TO COMPLY WITH SO2 EMISSION REGULATIONS. APPLICABLE INDIANA SO2 REGULATIONS ARE STILL NOT FIRMLY ESTABLISHED. |
| NORTHERN INDIANA PUB SERVICE<br>DEAN H. MITCHELL<br>11<br>RETROFIT 115.0 MW (GROSS)<br>115.0 MW (ESC)<br>COAL<br>3.50 %S<br>WELLMAN LORD<br>DAVY POWERGAS<br>ENERGY CONSUMPTION: ****%<br>STATUS 1 STARTUP 7/76 | REFER TO SECTION 3 OF THIS REPORT FOR ADDITIONAL INFORMATION<br>THIS FGD SYSTEM IS AN INTEGRATION OF THE WELLMAN-LORD SO2 RECOVERY PROCESS OFFERED BY DAVY POWERGAS AND THE SO2 TO SULFUR REDUCTION PROCESS DEVELOPED BY ALLIED CHEMICAL. DAVY POWERGAS IS THE DESIGN AND CONSTRUCTION FIRM AND ALLIED CHEMICAL IS SYSTEM OPERATOR AND PRODUCT MARKETER. PERFORMANCE TESTS WERE SUCCESSFULLY COMPLETED ON SEPTEMBER 14, 1977. A DEMONSTRATION YEAR COMMENCED ON SEPTEMBER 16, 1977. |

SECTION 2
STATUS OF FGD SYSTEMS

| UNIT IDENTIFICATION | ABSTRACT |
|---|---|
| NORTHERN INDIANA PUB SERVICE<br>SCHAHFER<br>17<br>NEW 421.0 MW (GROSS)<br>421.0 MW (ESC)<br>COAL<br>3.20 %S BITUMINOUS<br>PROCESS NOT SELECTED<br>VENDOR NOT SELECTED<br>ENERGY CONSUMPTION: ****%<br>STATUS 5 STARTUP 6/83 | NIPSCO IS REQUESTING/EVALUATING BIDS FOR FGD SYSTEMS ON SCHAHFER 17 AND 18. ALTHOUGH THE SO2 CONTROL STRATEGY HAS NOT BEEN SELECTED THE UTILITY IS CONSIDERING A SODIUM BASED SYSTEM. PARTICULATE MATTER WILL BE CONTROLLED BY AN ESP. THE SYSTEM DESIGN WILL INCLUDE A REHEAT SYSTEM. |
| NORTHERN INDIANA PUB SERVICE<br>SCHAHFER<br>18<br>NEW 421.0 MW (GROSS)<br>421.0 MW (ESC)<br>COAL<br>3.20 %S BITUMINOUS<br>PROCESS NOT SELECTED<br>VENDOR NOT SELECTED<br>ENERGY CONSUMPTION: ****%<br>STATUS 5 STARTUP 6/85 | NIPSCO IS REQUESTING/EVALUATING BIDS FOR FGD SYSTEMS ON SCHAHFER 17 AND 18. ALTHOUGH THE SO2 CONTROL STRATEGY HAS NOT BEEN SELECTED THE UTILITY IS CONSIDERING A SODIUM BASED SYSTEM. PARTICULATE MATTER WILL BE CONTROLLED BY AN ESP. THE SYSTEM DESIGN WILL INCLUDE A REHEAT SYSTEM. |
| NORTHERN STATES POWER<br>SHERBURNE<br>1<br>NEW 740.0 MW (GROSS)<br>740.0 MW (ESC)<br>COAL<br>.80 %S SUBBITUMINOUS<br>LIMESTONE/ALKALINE FLYASH<br>COMBUSTION ENGINEERING<br>ENERGY CONSUMPTION: 2.7%<br>STATUS 1 STARTUP 3/76 | REFER TO SECTION 3 OF THIS REPORT FOR ADDITIONAL INFORMATION.<br>FULL COMMERCIAL OPERATION OF THE SYSTEM BEGAN ON MAY 1, 1976. THE SCRUBBING SYSTEM FOR THIS UNIT CONSISTS OF 12 MODULES. EACH SCRUBBING MODULE INCORPORATES A VENTRI-ROD SECTION AND A MARBLE BED ABSORBER FOR PARTICULATE AND SULFUR DIOXIDE REMOVAL. A FORCED OXIDATION SYSTEM CONVERTS ALL THE CALCIUM SULFITE TO SULFATE PRIOR TO DISCHARGE TO A CLAY-LINED SETTLING POND. STACK GAS REHEAT IS PROVIDED BY IN-LINE HOT WATER TUBES. THE COAL BURNED AT THIS UNIT CONTAINS 0.8% SULFUR AND 9-10% ASH. |
| NORTHERN STATES POWER<br>SHERBURNE<br>2<br>NEW 740.0 MW (GROSS)<br>740.0 MW (ESC)<br>COAL<br>.80 %S SUBBITUMINOUS<br>LIMESTONE/ALKALINE FLYASH<br>COMBUSTION ENGINEERING<br>ENERGY CONSUMPTION: 2.7%<br>STATUS 1 STARTUP 4/77 | REFER TO SECTION 3 OF THIS REPORT FOR ADDITIONAL INFORMATION.<br>THE SHERBURNE NO. 2 AIR QUALITY CONTROL SYSTEM IS IDENTICAL IN DESIGN TO THE SYSTEM IN OPERATION ON THE NO. 1 UNIT AT THIS STATION. TWELVE 2-STAGE PARTICULATE SCRUBBER (VENTRI-ROD SCRUBBER) AND SULFUR DIOXIDE ABSORBER (MARBLE-BED ABSORBER) MODULES ARE PROVIDED FOR FLYASH AND SO2 CONTROL. ELEVEN MODULES ARE EQUIPPED FOR FULL GENERATING CAPACITY OPERATIONS. THE CALCIUM SULFITE IS FORCIBLY OXIDIZED TO SULFATE PRIOR TO DISCHARGE TO THE DISPOSAL POND. IN-LINE HOT WATER TUBES PROVIDE STACK GAS REHEAT. |
| NORTHERN STATES POWER<br>SHERBURNE<br>3<br>NEW 860.0 MW (GROSS)<br>860.0 MW (ESC)<br>COAL<br>.80 %S<br>LIMESTONE<br>COMBUSTION ENGINEERING<br>ENERGY CONSUMPTION: ****%<br>STATUS 4 STARTUP 5/84 | TWO ADDITIONAL COAL-FIRED POWER-GENERATING UNITS ARE SCHEDULED TO BE INSTALLED AT NSP'S SHERBURNE COUNTY GENERATING STATION IN BECKER MINNESOTA. A LETTER OF INTENT HAS BEEN SIGNED WITH C-E FOR A LIMESTONE SLURRY SPRAY TOWER SYSTEM FOR THIS NEW 860-MW UNIT. THE 2-STAGE SCRUBBING SYSTEM WILL REMOVE PARTICULATES (99.5%) & SO2 (80%). THE BOILER CONTRACT HAS BEEN AWARDED TO BABCOCK & WILCOX AND THE TURBINE WILL BE SUPPLIED BY GENERAL ELECTRIC. START-UP HAS BEEN DELAYED TO MAY 1984 AND CONSTRUCTION START-UP HAS BEEN DELAYED UNTIL APRIL 1980 DUE TO ENVIRONMENTAL PROBLEMS. |
| OTTER TAIL POWER<br>COYOTE<br>1<br>NEW 440.0 MW (GROSS)<br>440.0 MW (ESC)<br>COAL<br>.87 %S LIGNITE<br>AQUEOUS CARBONATE/SPRAY DRYING<br>WHEELABRATOR-FRYE/R.I.<br>ENERGY CONSUMPTION: ****%<br>STATUS 2 STARTUP 5/81 | THIS NEW COAL-FIRED STATION IS JOINTLY OWNED BY FIVE UTILITIES. OTTER TAIL POWER IS THE MAJOR OWNER AND CONSTRUCTOR. MONTANA-DAKOTA UTILITES IS THE FACILITY OPERATOR. THIS PLANNED UNIT WILL FIRE LOW SULFUR LIGNITE FROM THE MERCER COUNTY AREA IN A B&W CYCLONE BOILER. THE CONTRACT FOR THIS AQUEOUS CARBONATE/FABRIC FILTER SO2 SCRUBBER-ABSORBER WAS AWARDED TO WHEELABRATOR-FRYE AND ATOMICS INTERNATIONAL. THE DRY REMOVAL SYSTEM COMBINES AI'S AQUEOUS CARBONATE PROCESS IN A W-F FABRIC FILTER. UNIT CONSTRUCTION IS NOW 30% COMPLETE AND FGD SYSTEM CONSTRUCTION HAS JUST BEGUN. |

SECTION 2
STATUS OF FGD SYSTEMS

| UNIT IDENTIFICATION | ABSTRACT |
|---|---|
| PACIFIC GAS & ELECTRIC<br>FOSSIL<br>1<br>NEW 800.0 MW (GROSS)<br>800.0 MW (ESC)<br>COAL<br>.80 %S<br>LIMESTONE<br>VENDOR NOT SELECTED<br>ENERGY CONSUMPTION: ****%<br>STATUS 6 STARTUP 0/85 | PG&E ANNOUNCED PLANS TO BUILD TWO 800-MW COAL-FIRED POWER GENERATING UNITS IN NORTHERN CALIFORNIA. THE FIRST UNIT WILL BURN COAL WITH A HEATING VALUE OF 12000 BTU/LB, 0.8% SULFUR AND 10% ASH CONTENTS. THE SECOND UNIT WILL BURN COAL OF AN EQUAL OR BETTER QUALITY. THE EMISSION CONTROL SYSTEM WILL CONSIST OF A BAGHOUSE AND A LIMESTONE FGD SYSTEM. SLUDGE WILL BE DISPOSED OF IN A LANDFILL. START-UP DATES ARE 1985 AND 1986 FOR NOS. 1 AND 2 RESPECTIVELY. CONSTRUCTION IS NOT ENVISIONED TO BEGIN BEFORE TWO OR THREE YEARS. |
| PACIFIC GAS & ELECTRIC<br>FOSSIL<br>2<br>NEW 800.0 MW (GROSS)<br>800.0 MW (ESC)<br>COAL<br>.80 %S<br>LIMESTONE<br>VENDOR NOT SELECTED<br>ENERGY CONSUMPTION: ****%<br>STATUS 6 STARTUP 0/86 | PG&E ANNOUNCED PLANS TO BUILD TWO 800-MW COAL-FIRED POWER GENERATING UNITS IN NORTHERN CALIFORNIA. THE FIRST UNIT WILL BURN COAL WITH A HEATING VALUE OF 12000 BTU/LB, 0.8% SULFUR AND 10% ASH CONTENTS. THE SECOND UNIT WILL BURN COAL OF AN EQUAL OR BETTER QUALITY. THE EMISSION CONTROL SYSTEM WILL CONSIST OF A BAGHOUSE AND A LIMESTONE FGD SYSTEM. SLUDGE WILL BE DISPOSED OF IN A LANDFILL. START-UP DATES ARE 1985 AND 1986 FOR NOS. 1 AND 2 RESPECTIVELY. CONSTRUCTION IS NOT ENVISIONED TO BEGIN BEFORE TWO OR THREE YEARS. |
| PACIFIC POWER & LIGHT<br>JIM BRIDGER<br>4<br>NEW 550.0 MW (GROSS)<br>550.0 MW (ESC)<br>COAL<br>.56 %S SUBBITUMINOUS<br>SODIUM CARBONATE<br>AIR CORRECTION DIVISION, UOP<br>ENERGY CONSUMPTION: ****%<br>STATUS 2 STARTUP 9/79 | THE AIR CORRECTION DIVISION OF UOP WAS AWARDED A CONTRACT FOR AN FGD SYSTEM AT THIS NEW-509 MW COAL-FIRED UNIT. THE FGD SYSTEM WILL CONSIST OF PARALLEL TRAY TOWER ABSORBER MODULES, EACH TREATING ONE-THIRD OF THE BOILER FLUE GAS AT FULL LOAD. AN ESP WILL PROVIDE PRIMARY PARTICULATE CONTROL. AN ACID BRICK LINED WET STACK IS INCLUDED IN THE SYSTEM. PPL'S PILOT STUDY INSPECTION REVEALED SCALE FORMATION PROBLEMS. TESTS ARE BEING CONDUCTED TO RESOLVE THIS PROBLEM. THE UTILITY EXPECTS TO CONDUCT A SYSTEM CHECKOUT IN 7/79 WITH COMMERCIAL STARTUP AT THE END OF 1979. |
| PENNSYLVANIA POWER<br>BRUCE MANSFIELD<br>1<br>NEW 917.0 MW (GROSS)<br>917.0 MW (ESC)<br>COAL<br>3.00 %S BITUMINOUS<br>LIME<br>CHEMICO<br>ENERGY CONSUMPTION: 6.0%<br>STATUS 1 STARTUP 12/75 | REFER TO SECTION 3 OF THIS REPORT FOR ADDITIONAL INFORMATION.<br>THIS EMISSION CONTROL SYSTEM WAS DESIGNED TO REMOVE FLYASH AND SO2 FROM 3.35 MM ACFM OF FLUEGAS USING THIOSORBIC LIME AS A SCRUBBING ABSORBENT. THE INITIAL SHAKEDOWN AND DEBUGGING PHASE OF OPERATION BEGAN FOR PART OF THE SYSTEM IN DECEMBER 1975. PARTIAL COMMERCIAL OPERATION COMMENCED IN APRIL 1976. THE UNIT WAS CERTIFIED FULL-LOAD COMMERCIAL IN JUNE 1976. THE FGD SYSTEM HAS EXPERIENCED OPERATIONAL PROBLEMS SINCE IT HAS BEEN IN SERVICE REQUIRING A NUMBER OF SYSTEM REPAIRS AND DESIGN MODIFICATIONS. |
| PENNSYLVANIA POWER<br>BRUCE MANSFIELD<br>2<br>NEW 917.0 MW (GROSS)<br>917.0 MW (ESC)<br>COAL<br>3.00 %S BITUMINOUS<br>LIME<br>CHEMICO<br>ENERGY CONSUMPTION: 6.0%<br>STATUS 1 STARTUP 7/77 | REFER TO SECTION 3 OF THIS REPORT FOR ADDITIONAL INFORMATION.<br>THIS EMISSION CONTROL SYSTEM WAS DESIGNED TO REMOVE FLYASH AND SO2 FROM 3.35 MM ACFM OF FLUE GAS USING THIOSORBIC LIME AS A SCRUBBING ABSORBENT. SIX SCRUBBING TRAINS, EACH INCLUDING TWO VENTURI SCRUBBERS IN SERIES ARRANGEMENT, ARE PROVIDED FOR FULL-LOAD OPERATION. THE INITIAL SHAKEDOWN AND DEBUGGING PHASE OF OPERATION BEGAN FOR THREE TRAINS IN JULY, 1977. FULL COMMERCIAL OPERATION FOR THE ENTIRE SYSTEM COMMENCED ON OCTOBER 1, 1977. |
| PENNSYLVANIA POWER<br>BRUCE MANSFIELD<br>3<br>NEW 917.0 MW (GROSS)<br>917.0 MW (ESC)<br>COAL<br>3.00 %S<br>LIME<br>PULLMAN KELLOGG<br>ENERGY CONSUMPTION: ****%<br>STATUS 2 STARTUP 4/80 | A CONTRACT WAS AWARDED TO PULLMAN KELLOGG FOR THE FGD SYSTEM AT THIS UNIT. THE EMISSION CONTROL SYSTEM FOR THIS UNIT WILL CONSIST OF ESP'S UP-STREAM OF FIVE WEIR HORIZONTAL CROSSFLOW WET SCRUBBING MODULES. EACH MODULE CONSISTS OF SIX STAGES, ONE BEING A SPARE. SLUDGE WILL BE DISPOSED OF BY THE EXISTING SYSTEM AT THE BRUCE MANSFIELD PLANT. LINER IN THE STACK WILL BE AN INCONEL 625 MATERIAL. THE UNIT IS CURRENTLY UNDER CONSTRUCTION WITH ESP'S 70-80 PERCENT COMPLETE AND THE FGD SYSTEM 30 PERCENT COMPLETE. UNIT START-UP WILL BE IN APRIL 1980. |

## SECTION 2
## STATUS OF FGD SYSTEMS

| UNIT IDENTIFICATION | ABSTRACT |
|---|---|
| PHILADELPHIA ELECTRIC<br>CROMBY<br><br>RETROFIT 150.0 MW (GROSS)<br>150.0 MW (ESC)<br>COAL<br>3.00 %S<br>MAGNESIUM OXIDE<br>UNITED ENGINEERS<br>ENERGY CONSUMPTION: ****%<br>STATUS 6 STARTUP 6/80 | THE UTILITY PLANS TO RETROFIT ONE OF THE TWO BOILERS AT CROMBY WITH AN FGD SYSTEM. HOWEVER, A FINAL DECISION HAS NOT BEEN MADE. THE SYSTEM BEING GIVEN PRIMARY CONSIDERATION IS MAGNESIUM OXIDE. CURRENTLY, THE UTILITY IS RE-NEGOTIATING CONSENT ORDERS AND THE START-UP DATE OF JUNE 1980 IS TENTATIVE. |
| PHILADELPHIA ELECTRIC<br>EDDYSTONE<br>1A<br>RETROFIT 120.0 MW (GROSS)<br>120.0 MW (ESC)<br>COAL<br>2.60 %S<br>MAGNESIUM OXIDE<br>UNITED ENGINEERS<br>ENERGY CONSUMPTION: ****%<br>STATUS 1 STARTUP 9/75 | REFER TO SECTION 3 OF THIS REPORT FOR ADDITIONAL INFORMATION.<br>THE EMISSION CONTROL SYSTEM FOR THIS UNIT CONSISTS OF THREE PARALLEL SCRUBBING TRAINS FOR THE CONTROL OF PARTICULATE AND SULFUR DIOXIDE. THE C-SIDE SCRUBBING TRAIN INCLUDES AN SO2 ABSORBER MODULE IN SERIES WITH A PARTICULATE SCRUBBER. APPROXIMATELY ONE-THIRD OF THE BOILER FLUE GAS IS SCRUBBED WITH MAGNESIUM OXIDE SLURRY FOR SO2 REMOVAL. THE SPENT SLURRY IS REGENERATED AT THE ESSEX SULFURIC ACID PLANT IN NEWARK, N.J. THE REGENERATED MAGOX IS RETURNED TO THE PLANT FOR SO2 SCRUBBING SERVICE. |
| PHILADELPHIA ELECTRIC<br>EDDYSTONE<br>1B<br>RETROFIT 240.0 MW (GROSS)<br>240.0 MW (ESC)<br>COAL<br>2.60 %S<br>MAGNESIUM OXIDE<br>UNITED ENGINEERS<br>ENERGY CONSUMPTION: ****%<br>STATUS 4 STARTUP 6/80 | THE INSTALLATION OF AN FGD SYSTEM ON THE BALANCE OF THE FLUE GAS FROM THIS UNIT WILL FOLLOW PENDING THE OUTCOME OF THE PERFORMANCE OF THE EXPERIMENTAL SCRUBBING UNIT WHICH HAS BEEN INSTALLED AND CURRENTLY OPERATIONAL ON THIS UNIT. CURRENTLY, 3 PARTICULATE SCRUBBERS ARE TREATING THE FULL GAS LOAD FROM THIS UNIT. CONSENT ORDERS ARE PRESENTLY BEING RE-NEGOTIATED AND THE START-UP DATE OF JUNE, 1980 IS TENTATIVE. |
| PHILADELPHIA ELECTRIC<br>EDDYSTONE<br>2<br>RETROFIT 334.0 MW (GROSS)<br>334.0 MW (ESC)<br>COAL<br>2.50 %S<br>MAGNESIUM OXIDE<br>UNITED ENGINEERS<br>ENERGY CONSUMPTION: ****%<br>STATUS 6 STARTUP 6/80 | THE UTILITY IS AWAITING PERFORMANCE RESULTS FROM THE EXPERIMENTAL FGD SYSTEM INSTALLED ON UNIT 1 AT THIS STATION BEFORE PRECEEDING WITH THE DESIGN OF AN FGD SYSTEM FOR THIS COAL-FIRED BOILER. THE SYSTEM BEING GIVEN PRIMARY CONSIDERATION IS MAGNESIUM OXIDE, DESIGNED JOINTLY BY UNITED ENGINEERS AND PHILADELPHIA ELECTRIC. CURRENTLY, THE UTILITY IS RE-NEGOTIATING CONSENT ORDERS AND THE START UP DATE OF JUNE 1980 IS TENTATIVE. |
| POTOMAC ELECTRIC POWER<br>DICKERSON<br>4<br>NEW 800.0 MW (GROSS)<br>800.0 MW (ESC)<br>COAL<br>2.00 %S<br>PROCESS NOT SELECTED<br>VENDOR NOT SELECTED<br>ENERGY CONSUMPTION: ****%<br>STATUS 6 STARTUP 0/87 | THERE ARE NO FIRM PLANS FOR INSTALLATION OF AN FGD SYSTEM. STARTUP DATE OF THE BOILER IS PLANNED FOR 1985. THIS UNIT WILL BURN 2% SULFUR COAL WITH A HEATING VALUE OF 11000 BTU/LB. |
| POWER AUTHORITY OF NEW YORK<br>ARTHUR KILL<br><br>NEW 700.0 MW (GROSS)<br>700.0 MW (ESC)<br>COAL<br>3.00 %S<br>PROCESS NOT SELECTED<br>VENDOR NOT SELECTED<br>ENERGY CONSUMPTION: ****%<br>STATUS 6 STARTUP 11/88 | THE UTILITY IS CONSIDERING BOTH REGENERABLE AND LIMESTONE FGD PROCESSES. FGD TECHNOLOGY IS BEING CONSIDERED FOR A FOSSIL FUEL BURNING UNIT WHICH WILL EMPLOY COAL AS THE PRIMARY FUEL AND OIL AS BACKUP. REFUSE WILL BE PROVIDED AS A SUPPLEMENTAL FUEL SUPPLY. THE PREFERRED PLANT SITE IS THE ARTHUR KILL FACILITY LOCATED ON STATEN ISLAND. THE PROJECT DESIGN ENGINEERING FIRM IS SARGENT AND LUNDY. PUBLIC SERVICE COMMISSION HEARINGS ARE IN PROGRESS. |

SECTION 2
STATUS OF FGD SYSTEMS

| UNIT IDENTIFICATION | ABSTRACT |
|---|---|
| PUBLIC SERVICE OF INDIANA<br>GIBSON<br>5<br>NEW 650.0 MW (GROSS)<br>650.0 MW (ESC)<br>COAL<br>3.30 %S<br>PROCESS NOT SELECTED<br>VENDOR NOT SELECTED<br>ENERGY CONSUMPTION: ****%<br>STATUS 5 STARTUP 0/82 | PUBLIC SERVICE CO OF INDIANA ANNOUNCED PLANS FOR THE CONSTRUCTION OF THIS NEW 650-MW COAL FIRED POWER GENERATING UNIT AT GIBSON STATION. BIDS HAVE BEEN RECIEVED AND ARE BEING EVALUATED. INITIAL START-UP IS SCHEDULED FOR 1982. |
| PUBLIC SERVICE OF NEW MEXICO<br>SAN JUAN<br>1<br>RETROFIT 361.0 MW (GROSS)<br>361.0 MW (ESC)<br>COAL<br>.80 %S<br>WELLMAN LORD<br>DAVY POWERGAS<br>ENERGY CONSUMPTION: 4.4%<br>STATUS 1 STARTUP 4/78 | REFER TO SECTION 3 OF THIS REPORT FOR ADDITIONAL INFORMATION. THIS FGD SYSTEM IS AN INTEGRATION OF THE WELLMAN LORD SO2 RECOVERY PROCESS OF DAVY POWERGAS AND ALLIED CHEMICAL'S SO2 REDUCTION TO SULFUR PROCESS. A HOT SIDE ELECTROSTATIC PRECIPITATOR PRECEEDS THE FGD SYSTEM. OF THE FOUR ABSORBER TOWERS INSTALLED. THREE ARE NEEDED TO CARY THE FULL LOAD. THE COAL BURNED AT THIS UNIT HAS SULFUR AND ASH CONTENTS OF .8% AND 20% RESPECTIVELY. THE SYSTEM OPERATES ON A CLOSED WATER LOOP WITH RIVER WATER BEING USED AS MAKE-UP FOR LOSSES DUE TO EVAPORATION. |
| PUBLIC SERVICE OF NEW MEXICO<br>SAN JUAN<br>2<br>RETROFIT 350.0 MW (GROSS)<br>350.0 MW (ESC)<br>COAL<br>.80 %S<br>WELLMAN LORD<br>DAVY POWERGAS<br>ENERGY CONSUMPTION: 4.6%<br>STATUS 1 STARTUP 8/78 | REFER TO SECTION 3 OF THIS REPORT FOR ADDITIONAL INFORMATION. THIS FGD SYSTEM IS AN INTEGRATION OF THE WELLMAN LORD SO2 RECOVERY PROCESS OF DAVY POWERGAS/ALLIED CHEMICAL'S SO2 REDUCTION TO SULFUR PROCESS. A HOT SIDE ELECTROSTATIC PRECIPITATOR PRECEEDS THE FGD SYSTEM. THE SYSTEM INCLUDES FOUR ABSORBER TOWERS. THREE OF WHICH ARE NECESSARY TO CARRY THE FULL LOAD. THE WATER LOOP IS CLOSED WITH RIVER WATER BEING USED TO MAKE UP FOR LOSSES DUE TO EVAPORATION. THE COAL BURNED AT THIS UNIT HAS SULFUR AND ASH CONTENTS OF 0.8% AND 20% RESPECTIVELY. |
| PUBLIC SERVICE OF NEW MEXICO<br>SAN JUAN<br>3<br>NEW 534.0 MW (GROSS)<br>534.0 MW (ESC)<br>COAL<br>.80 %S<br>WELLMAN LORD<br>DAVY POWERGAS<br>ENERGY CONSUMPTION: ****%<br>STATUS 2 STARTUP 6/79 | A CONTRACT HAS BEEN AWARDED TO DAVY POWERGAS TO SUPPLY FOUR ABSORBER TOWERS FOR REMOVAL OF SO2 AT THIS NEW UNIT. ONE MODULE IS EXPECTED TO BE OPERATIONAL BY JUNE 1979 WHICH WILL BRING THE UNIT INTO COMPLIANCE WITH FEDERAL NSPS. THE REMAINING THREE MODULES SHOULD BE OPERATIONAL BY JANUARY 1982 AT WHICH TIME THE UNIT WILL BE IN COMPLIANCE OF STATE STANDARDS. POWER PLANT CONSTRUCTION IS BEHIND SCHEDULE BUT ABSORBER CONSTRUCTION IS PROCEEDING AS PLANNED. IT IS POSSIBLE THAT THE FINAL THREE ABSORBERS MAY BE IN AS EARLY AS JANUARY 1981. |
| PUBLIC SERVICE OF NEW MEXICO<br>SAN JUAN<br>4<br>NEW 534.0 MW (GROSS)<br>534.0 MW (ESC)<br>COAL<br>.80 %S<br>WELLMAN LORD<br>DAVY POWERGAS<br>ENERGY CONSUMPTION: ****%<br>STATUS 3 STARTUP 1/82 | DAVY POWERGAS HAS BEEN AWARDED A CONTRACT TO SUPPLY THE SO2 REMOVAL SYSTEM FOR THIS UNIT. THE PLANS INCLUDE A WELLMAN LORD SO2 RECOVERY PROCESS AS WELL AS AN UPSTREAM ELECTROSTATIC PRECIPITATOR FOR PRIMARY PARTICULATE REMOVAL. FGD OPERATIONS ARE EXPECTED TO BEGIN AT THIS PLANT IN JANUARY 1982. |
| SALT RIVER PROJECT<br>CORONADO<br>1<br>NEW 350.0 MW (GROSS)<br>260.0 MW (ESC)<br>COAL<br>1.00 %S SUBBITUMINOUS<br>LIMESTONE<br>PULLMAN KELLOGG<br>ENERGY CONSUMPTION: ****%<br>STATUS 2 STARTUP 8/79 | THIS NEW UNIT WILL BURN LOW SULFUR WESTERN COAL. A MAXIMUM OF 80% OF THE FLUE GAS WILL BE SCRUBBED TO MEET SULFUR DIOXIDE EMISSION REGULATIONS. PULLMAN/KELLOGG WILL PROVIDE 2 WEIR HORIZONTAL SPRAY TOWERS UTILIZING LIMESTONE SLURRY FOR SO2 CONTROL. THE SYSTEM WILL UTILIZE RUBBER-LINED SLURRY RECYCLE PUMPS. EACH RATED AT 9800 GPM. RIGIFLAKE-LINED SCRUBBER MODULES. VERTICAL HEIL MIST ELIMINATORS AND A MINIMUM OF 20 PERCENT OF THE FLUE GAS WILL BE BYPASSED FOR REHEAT. THE SLUDGE WILL BE PONDED. STRUCTURAL WORK IS 90% COMPLETE. |

## SECTION 2
## STATUS OF FGD SYSTEMS

| UNIT IDENTIFICATION | ABSTRACT |
|---|---|
| SALT RIVER PROJECT<br>CORONADO<br>2<br>NEW 350.0 MW (GROSS)<br>280.0 MW (ESC)<br>COAL<br>1.00 %S SUBBITUMINOUS<br>LIMESTONE<br>PULLMAN KELLOGG<br>ENERGY CONSUMPTION: ****%<br>STATUS 2 STARTUP 1/80 | THIS NEW UNIT WILL BURN LOW SULFUR WESTERN COAL. A MAXIMUM OF 60% OF THE FLUE GAS WILL BE SCRUBBED TO MEET SULFUR DIOXIDE EMISSION REGULATIONS. PULLMAN/KELLOGG WILL PROVIDE 2 WEIR HORIZONTAL SPRAY TOWERS UTILIZING LIMESTONE SLURRY FOR SO2 CONTROL. THE SYSTEM WILL UTILIZE RUBBER-LINED SLURRY RECYCLE PUMPS, EACH RATED AT 9800 GPM, RIGIFLAKE-LINED SCRUBBER MODULES, VERTICAL HEIL MIST ELIMINATORS AND A MINIMUM OF 20 PERCENT OF THE FLUE GAS WILL BE BYPASSED FOR REHEAT. THE SLUDGE WILL BE PONDED. STRUCTURAL WORK IS 60% COMPLETE. |
| SALT RIVER PROJECT<br>CORONADO<br>3<br>NEW 350.0 MW (GROSS)<br>280.0 MW (ESC)<br>COAL<br>1.00 %S<br>LIMESTONE<br>VENDOR NOT SELECTED<br>ENERGY CONSUMPTION: ****%<br>STATUS 6 STARTUP 0/87 | THIS NEW UNIT WILL BURN SULDUR WESTERN COAL. EIGHTY PERCENT OF THE GAS WILL BE SCRUBBED TO MEET SULFUR DIOXIDE EMISSION REGULATIONS. UTILITY IS CURRENTLY CONSIDERING THE INSTALLATION OF TWO HORIZONTAL SPRAY TOWERS EMPLOYING A LIMESTONE SCRUBBING SOLUTION TO REMOVE SO2. FROM THE FLUE GAS. SCHEDULED COMMERCIAL OPERATION DATE IS 1987. PLANS FOR AN EMISSION CONTROL SYSTEM HAVE NOT BEEN FINALIZED. SLUDGE WILL PROBABLY BE PONDED. |
| SAN MIGUEL ELECTRIC COOP<br>SAN MIGUEL<br>1<br>NEW 400.0 MW (GROSS)<br>400.0 MW (ESC)<br>COAL<br>1.70 %S LIGNITE<br>LIMESTONE<br>BABCOCK & WILCOX<br>ENERGY CONSUMPTION: ****%<br>STATUS 2 STARTUP 8/80 | THE EMISSION CONTROL EQUIPMENT FOR THE COAL-FIRED RADIANT BOILER WILL CONSIST OF AN ESP UPSTREAM OF FOUR LIMESTONE SCRUBBING MODULES. THE SCRUBBER FLUE GAS CAPACITY IS NOMINALLY DESIGNED AT 1.579 MILLION ACFM (302 F). DESIGN SO2 REMOVAL EFFICIENCY IS 86 PERCENT FOR 4400 PPM SO2 INLET. L/G RATIOS ARE 10 AND 45 FOR QUENCHER AND ABSORBER, RESPECTIVELY. RESEARCH COTTRELL HAS BEEN AWARDED THE SLUDGE DISPOSAL CONTRACT. FGD SYSTEM FOUNDATION AND STRUCTURAL STEEL WORK IS COMPLETE. INITIAL START-UP IS SCHEDULED FOR LATE SUMMER 1980. |
| SEMINOLE ELECTRIC<br>SEMINOLE<br>1<br>NEW 620.0 MW (GROSS)<br>620.0 MW (ESC)<br>COAL<br>2.75 %S<br>LIMESTONE<br>VENDOR NOT SELECTED<br>ENERGY CONSUMPTION: ****%<br>STATUS 6 STARTUP 6/83 | SEMINOLE ELECTRIC HAS ANNOUNCED PLANS TO CONSTRUCT ONE AND POSSIBLY TWO NEW 600 MW COAL-FIRED UNITS. THE UTILITY INTENDS TO UTILIZE ESPS FOR PARTICULATE REMOVAL AND A LIMESTONE FGD SYSTEM FOR SO2 CONTROL OF EMISSIONS FROM THE BURNING OF 2.75% SULFUR, 8.5% ASH COAL (11000 BTU/LB HEATING VALUE). THE UTILITY EXPECTS TO INITIATE REQUESTS FOR BIDS FOR THE FGD SYSTEM IN MAY 1979. |
| SIKESTON BOARD OF MUNIC. UTIL.<br>SIKESTON<br>1<br>NEW 235.0 MW (GROSS)<br>235.0 MW (ESC)<br>COAL<br>2.80 %S<br>LIMESTONE<br>BABCOCK & WILCOX<br>ENERGY CONSUMPTION: ****%<br>STATUS 2 STARTUP 11/80 | B&W WAS AWARDED A CONTRACT FOR THE BOILER AIR QUALITY CONTROL SYSTEM. THE AQCS WILL CONSIST OF 2 ESP'S FOLLOWED BY 3 FGD MODULES, EACH CAPABLE OF HANDLING 50% OF THE BOILER LOAD; ONE WILL BE ON STAND-BY AT ALL TIMES. THE UNIT WILL BURN A 2.8% SULFUR COAL. THE SIKESTON STATION WILL FEATURE AN FRP-LINED STACK, 2 PONDS (ONE FOR FLY ASH, ONE FOR SCRUBBER SLUDGE-BOTTOM ASH DISPOSAL), AND 4 AXIAL FLOW FANS. NO STACK GAS REHEAT IS PLANNED. MAXIMUM FLUE GAS CAPACITY IS 748,390 ACFM AT 288 F. BOILER STRUCTURAL STEEL ERECTION IS NOW ABOUT 33% COMPLETE |
| SOUTH CAROLINA PUBLIC SERVICE<br>WINYAH<br>2<br>NEW 280.0 MW (GROSS)<br>140.0 MW (ESC)<br>COAL<br>1.00 %S BITUMINOUS<br>LIMESTONE<br>BABCOCK & WILCOX<br>ENERGY CONSUMPTION: .7%<br>STATUS 1 STARTUP 7/77 | REFER TO SECTION 3 OF THIS REPORT FOR ADDITIONAL INFORMATION. THE EMISSION CONTROL SYSTEM FOR THIS UNIT CONSISTS OF A 100% CAPACITY ESP FOLLOWED BY A 50% CAPACITY LIMESTONE FGD SYSTEM. ONE FGD MODULE, CONSISTING OF A VENTURI SCRUBBER AND TRAY TOWER ABSORBER, REMOVES 70% OF THE INLET SO2. REHEAT IS SUPPLIED BY FLUE GAS BYPASS. THE SCRUBBING WASTES ARE DISCHARGED TO AN ON-SITE, UNLINED DIKED POND. THE NO. 2 UNIT COMMENCED INITIAL OPERATION IN JULY 1977. |

SECTION 2
STATUS OF FGD SYSTEMS

| UNIT IDENTIFICATION | ABSTRACT |
|---|---|
| SOUTH CAROLINA PUBLIC SERVICE<br>WINYAH<br>3<br>NEW 280.0 MW (GROSS)<br>280.0 MW (ESC)<br>COAL<br>1.70 %S<br>LIMESTONE<br>BABCOCK & WILCOX<br>ENERGY CONSUMPTION: ****%<br>STATUS 2 STARTUP 5/80 | A CONTRACT HAS BEEN AWARDED TO BABCOCK & WILCOX FOR THE INSTALLATION OF THE FGD SYSTEM ON THIS UNIT. PARTICULATE REMOVAL WILL BE PROVIDED BY RESEARCH COTTRELL ESP'S. THE BOILER IS A COAL-FIRED DRY-BOTTOM UNIT WHICH WILL BURN COAL WITH A 1.7% SULFUR CONTENT AND A HEAT VALUE OF 11,500 BTU/LB. THE GENERATING EQUIPMENT IS BEING SUPPLIED BY RILEY STOKER. 100% OF THE FLUE GAS WILL BE SCRUBBED. ALL FGD FOOTINGS HAVE BEEN POURED AND TANK FABRICATION IS COMPLETE. DUCTWORK IS IN PROGRESS. |
| SOUTH CAROLINA PUBLIC SERVICE<br>WINYAH<br>4<br>NEW 280.0 MW (GROSS)<br>280.0 MW (ESC)<br>COAL<br>***** %S BITUMINOUS<br>LIMESTONE<br>AMERICAN AIR FILTER<br>ENERGY CONSUMPTION: ****%<br>STATUS 3 STARTUP 5/81 | SOUTH CAROLINA PUBLIC SERVICE AWARDED A CONTRACT TO AMERICAN AIR FILTER FOR THE INSTALLATION OF AN FGD SYSTEM ON WINYAH 4. PARTICULATE MATTER WILL BE CONTROLLED BY AN ESP. THE SYSTEM DESIGN INCLUDES TWO LIMESTONE SLURRY SPRAY TOWERS AND AN INDIRECT STEAM COIL REHEAT SYSTEM. THE UTILITY PLANS TO OPERATE THE UNIT WITH A CLOSED WATER LOOP. |
| SOUTHERN CALIFORNIA EDISON<br>ALAMITOS<br>6<br>RETROFIT 480.0 MW (GROSS)<br>175.0 MW (ESC)<br>OIL<br>.25 %S<br>LIME<br>SO. CALIFORNIA EDISON/STEARNS-<br>ENERGY CONSUMPTION: ****%<br>STATUS 3 STARTUP 1/82 | AS A RESULT OF AN "EMISSION OFFSET" AGREEMENT, STANDARD OIL OF OHIO HAS CONTRACTED SCE AND STEARNS AND RODGERS TO INSTALL A LIME SCRUBBING SYSTEM ON ITS EXISTING ALAMITOS 6 UNIT. THE FGD SYSTEM WILL TREAT ONE THIRD OF THE FLUE GAS WITH HORIZONTAL WEIR MODULES. REHEAT WILL BE PROVIDED BY THE BALANCE OF THE FLUE GAS. THE SLUDGE WILL BE DEWATERED BY CENTRIFUGES OR DISC DRYERS AND HAULED TO AN OFFSITE LANDFILL. |
| SOUTHERN ILLINOIS POWER COOP<br>MARION<br>4<br>NEW 184.0 MW (GROSS)<br>184.0 MW (ESC)<br>COAL<br>3.00 %S<br>LIMESTONE<br>BABCOCK & WILCOX<br>ENERGY CONSUMPTION: ****%<br>STATUS 2 STARTUP 5/79 | THE EMISSION CONTROL SYSTEM FOR THIS NEW COAL-FIRED BOILER CONSISTS OF AN ESP FOR PARTICULATE CONTROL FOLLOWED BY 2 SPRAY TOWERS FOR SO2 CONTROL. LIMESTONE SLURRY WILL BE USED AS THE SCRUBBING REAGENT. SIPC IS NOT PLANNING TO UTILIZE FLUE GAS REHEAT AND IS CURRENTLY PLANNING ON A BRICK LINING FOR THE STACK. SIPC INTENDS TO USE A LANDFILL WITH ASH STABILIZATION FOR SLUDGE DISPOSAL. CONSTRUCTION IS NEARLY 100% COMPLETE AND THE SYSTEM HAS BEEN AIR TESTED. THE BOILER IS NOW OPERATING. THE FGD SYSTEM WILL START IN MAY. |
| SOUTHERN ILLINOIS POWER COOP<br>MARION<br>5<br>NEW 300.0 MW (GROSS)<br>300.0 MW (ESC)<br>COAL<br>3.00 %S<br>PROCESS NOT SELECTED<br>VENDOR NOT SELECTED<br>ENERGY CONSUMPTION: ****%<br>STATUS 6 STARTUP 0/84 | SOUTHERN ILLINOIS POWER COOP IS PLANNING A NEW COAL-FIRED UNIT FOR ITS MARION STATION, MARION 5. THE FGD PROCESS HAS NOT BEEN DECIDED. THE UNIT WILL FIRE 3.0% SULFUR COAL AND MAY START UP AS EARLY AS 1983. THE UTILITY IS WAITING FOR THE FINALIZATION OF THE SO2 REGULATIONS THEY WILL HAVE TO MEET. |
| SOUTHERN INDIANA GAS & ELEC<br>A.B. BROWN<br>1<br>NEW 265.0 MW (GROSS)<br>265.0 MW (ESC)<br>COAL<br>4.50 %S<br>DUAL ALKALI<br>FMC CORPORATION<br>ENERGY CONSUMPTION: 1.9%<br>STATUS 1 STARTUP 3/79 | REFER TO SECTION 3 OF THIS REPORT FOR ADDITIONAL INFORMATION. THE UTILITY HAS AWARDED A CONTRACT TO FMC FOR THE INSTALLATION OF A DOUBLE ALKALI SCRUBBING SYSTEM UTILIZING SODA ASH AND LIME. THIS UNIT IS A PART OF A NEW POWER STATION LOCATED IN WEST FRANKLIN, INDIANA. THE SYSTEM WILL PRODUCE A FILTER CAKE WASTE PRODUCT WHICH WILL BE DISPOSED OF IN AN ON-SITE LANDFILL. THE PARTICULATE EMISSIONS WILL BE CONTROLLED BY A BUELL-ENVIROTECH COLD-SIDE ESP. |

## SECTION 2
## STATUS OF FGD SYSTEMS

| UNIT IDENTIFICATION | ABSTRACT |
|---|---|
| SOUTHERN MISSISSIPPI ELECTRIC<br>P.D. MORROW<br>1<br>NEW 200.0 MW (GROSS)<br>124.0 MW (ESC)<br>COAL<br>1.30 %S<br>LIMESTONE<br>RILEY STOKER/ENVIRONEERING<br>ENERGY CONSUMPTION: 5.5%<br>STATUS 1 STARTUP 8/78 | REFER TO SECTION 3 OF THIS REPORT FOR ADDITIONAL INFORMATION. PARTICULATES WILL BE CONTROLLED BY A HIGH-EFFICIENCY ESP UPSTREAM OF THE FGD SYSTEM. DESIGN SO2 AND PARTICULATE REMOVAL EFFICIENCIES ARE 85 AND 99.6%, RESPECTIVELY. A WATER SPRAY HAS BEEN ADDED IN THE BY-PASS DUCT TO PROTECT THE LINER FROM TEMPERATURE EXCURSION. SLUDGE WILL BE STABILIZED WITH FLYASH AND DISPOSED OF ON-SITE. INITIAL STARTUP HAS BEGUN. HOWEVER DUE TO BOILER PROBLEMS NO OPERATING TIME HAS BEEN ACCUMULATED. ACCEPTANCE TESTING IS EXPECTED IN NOVEMBER. |
| SOUTHERN MISSISSIPPI ELECTRIC<br>P.D. MORROW<br>2<br>NEW 200.0 MW (GROSS)<br>124.0 MW (ESC)<br>COAL<br>1.30 %S<br>LIMESTONE<br>RILEY STOKER/ENVIRONEERING<br>ENERGY CONSUMPTION: 5.5%<br>STATUS 2 STARTUP 7/79 | A CONTRACT WAS AWARDED BY SME TO RILEY STOKER/ENVIRONEERING FOR THIS FGD SYSTEM. PARTICULATES WILL BE CONTROLLED BY A HIGH-EFFICIENCY ESP UPSTREAM OF THE FGD SYSTEM. DESIGN SULFUR DIOXIDE AND PARTICULATE EFFICIENCIES ARE 85 AND 99.6 PERCENT, RESPECTIVELY. A WATER SPRAY HAS BEEN ADDED IN THE BY-PASS DUCT TO PROTECT THE LINER FROM TEMPERATURE EXCURSION. SLUDGE WILL BE STABILIZED WITH FLYASH AND DISPOSED ON THE PLANT SITE. CONSTRUCTION OF THE WET LIMESTONE SCRUBBING SYSTEM IS NOW IN ITS FINAL STAGES. THE BOILER IS NOW IN OPERATION. |
| SOUTHWESTERN ELECTRIC POWER<br>HENRY W. PERKEY<br>1<br>NEW 720.0 MW (GROSS)<br>720.0 MW (ESC)<br>COAL<br>.80 %S LIGNITE<br>LIMESTONE<br>AIR CORRECTION DIVISION, UOP<br>ENERGY CONSUMPTION: ****%<br>STATUS 3 STARTUP 2/84 | A CONTRACT FOR THE EMISSION CONTROL SYSTEM HAS BEEN AWARDED TO THE AIR CORRECTION DIVISION OF UOP. THE SYSTEM DESIGN INCLUDES TWO COLD-SIDE ESP'S FOR PARTICULATE REMOVAL UP-STREAM FROM 4 SPRAY TOWERS WHICH UTILIZE LIMESTONE SLURRY FOR SO2 CONTROL. SLUDGE DISPOSAL WILL BE HANDLED BY AN IUCS SYSTEM. START-UP IS EXPECTED BY FEBRUARY 1984. |
| SPRINGFIELD CITY UTILITIES<br>SOUTHWEST<br>1<br>NEW 194.0 MW (GROSS)<br>194.0 MW (ESC)<br>COAL<br>3.50 %S BITUMINOUS<br>LIMESTONE<br>AIR CORRECTION DIVISION, UOP<br>ENERGY CONSUMPTION: 4.6%<br>STATUS 1 STARTUP 4/77 | REFER TO SECTION 3 OF THIS REPORT FOR ADDITIONAL INFORMATION. THE EMISSION CONTROL SYSTEM FOR THIS NEW COAL-FIRED UNIT CONSISTS OF A FOUR-FIELD HIGH EFFICIENCY ESP (99.6% DESIGN) AND 2 TURBULENT CONTACT ABSORBER MODULES (80% DESIGN) FOR THE CONTROL OF PARTICULATES AND SO2. BOTH THE ESP AND LIMESTONE FGD SYSTEM ARE SUPPLIED BY UOP. THE SCRUBBING WASTES ARE DEWATERED BY A ROTARY DRUM VACUUM FILTER AND THE FILTER CAKE IS HAULED AWAY TO A LANDFILL. INITIAL OPERATION OF THE FGD SYSTEM OCCURRED IN APRIL 77. IN SEPT. 77, THE UNIT SUCCESSFULLY COMPLETED COMPLIANCE TESTING. |
| SPRINGFIELD WATER, LIGHT & PWR<br>DALLMAN<br>2<br>NEW 205.0 MW (GROSS)<br>205.0 MW (ESC)<br>COAL<br>3.30 %S<br>LIMESTONE<br>RESEARCH COTTRELL<br>ENERGY CONSUMPTION: ****%<br>STATUS 2 STARTUP 7/80 | A CONTRACT WAS AWARDED TO RESEARCH COTTRELL FOR THE INSTALLATION OF A LIMESTONE FGD SYSTEM. REQUIRED SULFUR DIOXIDE REMOVAL EFFICIENCY IS 90 PERCENT. A SLUDGE DISPOSAL STRATEGY HAS NOT BEEN FINALIZED, BUT THE UTILITY IS CONSIDERING EITHER PONDING OR LANDFILL. CONSTRUCTION OF THE FGD SYSTEM FOUNDATIONS HAVE BEGUN. ALL SYSTEMS ARE ON SCHEDULE. THE BOILER OPERATION WAS SCHEDULED TO COMMENCE IN JUNE 1978. |
| ST. JOE ZINC<br>E.F. WEATON<br>1<br>RETROFIT 60.0 MW (GROSS)<br>60.0 MW (ESC)<br>COAL<br>3.00 %S<br>CITRATE<br>BUREAU OF MINES<br>ENERGY CONSUMPTION: ****%<br>STATUS 2 STARTUP 7/79 | CONSTRUCTION CONTINUES ON THE CITRATE PROCESS SCRUBBING SYSTEM WHICH WILL CONTROL SO2 EMISSIONS FROM A 60-MW COAL-FIRED POWER GENERATING UNIT AT ST. JOE ZINC. THIS UNIT PROVIDES POWER FOR THE LOCAL UTILITY GRID. FGD SYSTEM START-UP IS SCHEDULED FOR DECEMBER 1978. THE REGENERABLE FGD SYSTEM WILL PRODUCE ELEMENTAL SULFUR AS A BY-PRODUCT. ALL MAJOR CONSTRUCTION IS COMPLETE. WIRING AND PIPING WORK IS NOW BEING COMPLETED. |

SECTION 2
STATUS OF FGD SYSTEMS

| UNIT IDENTIFICATION | ABSTRACT |
|---|---|
| TAMPA ELECTRIC<br>BIG BEND<br>4<br>NEW 450.0 MW (GROSS)<br>450.0 MW (ESC)<br>COAL<br>2.50 %S<br>PROCESS NOT SELECTED<br>VENDOR NOT SELECTED<br>ENERGY CONSUMPTION: ****%<br>STATUS 6 STARTUP 0/85 | TAMPA ELECTRIC HAS ANNOUNCED PLANS TO INSTALL AN FGD SYSTEM AT BIG BEND 4 WHICH IS SCHEDULED TO BEGIN OPERATIONS EARLY IN 1985. THE FGD PROCESS HAS NOT YET BEEN SELECTED. PRIMART PARTICULATE CONTROL WILL BE PROVIDED BY AN ELECTROSTATIC PRICIPITATOR UPSTREAM OF THE FGD SYSTEM. AN INDIRECT (STEAM COIL) HOT AIR INJECTION REHEAT SYSTEM WILL BE INCLUDED AT THE SCRUBBER OUTLET. DESIGN SULFUR DIOXIDE REMOVAL EFFICIENCY WILL BE 90 PERCENT |
| TENNESSEE VALLEY AUTHORITY<br>CUMBERLAND<br>RETROFIT 1300.0 MW (GROSS)<br>600.0 MW (ESC)<br>COAL<br>***** %S BITUMINOUS<br>PROCESS NOT SELECTED<br>VENDOR NOT SELECTED<br>ENERGY CONSUMPTION: ****%<br>STATUS 6 STARTUP 7/82 | TVA INSTALLING A HEAVY-MEDIA COAL-CLEANING SYSTEM AND HAS AGREED TO INSTALL A 600-MW FGD SYSTEM AT THE CUMBERLAND PLANT TO BRING IT INTO COMPLIANCE WITH STATE AND FEDERAL SO2 EMISSION LIMITS. THE TYPE OF FGD SYSTEM CHOSEN WILL BE DETERMINED BY PROTOTYPE LEVEL EVALUATION OF SEVERAL ADVANCED SCRUBBER CONCEPTS. |
| TENNESSEE VALLEY AUTHORITY<br>JOHNSONVILLE<br>1-10<br>RETROFIT 1450.0 MW (GROSS)<br>600.0 MW (ESC)<br>COAL<br>***** %S<br>MAGNESIUM OXIDE<br>TVA/UNITED ENGINEERS<br>ENERGY CONSUMPTION: ****%<br>STATUS 5 STARTUP 0/82 | TVA IS PLANNING TO RETROFIT A 600-MW MAGNESIUM OXIDE FGD SYSTEM AT THE JOHNSONVILLE STEAM PLANT, A 1500-MW COAL-FIRED STATION. ENGINEERING ASSISTANCE WILL BE PROVIDED BY UNITED ENGINEERS. THIS PROJECT IS BUDGETTED AT $185 MILLION, INCLUDING THE COST OF A NEW 600-FT. STACK. |
| TENNESSEE VALLEY AUTHORITY<br>PARADISE<br>1<br>RETROFIT 704.0 MW (GROSS)<br>704.0 MW (ESC)<br>COAL<br>***** %S<br>LIMESTONE<br>VENDOR NOT SELECTED<br>ENERGY CONSUMPTION: ****%<br>STATUS 3 STARTUP 6/82 | TVA IS REQUESTING/EVALUATING BID SPECIFICATIONS FOR TWO LIMESTONE SLURRY FGD SYSTEMS WHICH WILL BE RETROFITTED ONTO TWO 650-MW HIGH SULFUR COAL-FIRED BOILERS AT THIS STATION. THE FGD SYSTEMS WILL TREAT 100% OF THE FLUE GASES FROM BOTH UNITS. TVA HAS PROJECTED THE TOTAL COST OF THE PARADISE FGD SYSTEMS TO BE APPROXIMATELY $220 MILLION ($170/KW). BID REQUEST WAS COMPLETED BY MID-NOVEMBER AND EVALUATION IS NOW IN PROCESS. BID EVALUATION IS EXPECTED TO BE COMPLETED BY JANUARY 1 AND A CONTRACT SHOULD BE AWARDED SHORTLY THEREAFTER. |
| TENNESSEE VALLEY AUTHORITY<br>PARADISE<br>2<br>RETROFIT 704.0 MW (GROSS)<br>704.0 MW (ESC)<br>COAL<br>4.20 %S<br>LIMESTONE<br>VENDOR NOT SELECTED<br>ENERGY CONSUMPTION: ****%<br>STATUS 3 STARTUP 3/82 | TVA IS REQUESTING/EVALUATING BID SPECIFICATIONS FOR TWO LIMESTONE SLURRY FGD SYSTEMS WHICH WILL BE RETROFITTED ONTO TWO 650-MW HIGH SULFUR COAL-FIRED BOILERS AT THIS STATION. THE FGD SYSTEMS WILL TREAT 100% OF THE FLUE GASES FROM BOTH UNITS. TVA HAS PROJECTED THE TOTAL COST OF THE PARADISE FGD SYSTEMS TO BE APPROXIMATELY $220 MILLION ($170/KW). BID REQUEST WAS COMPLETED BY MID-NOVEMBER AND EVALUATION IS NOW IN PROCESS. BID EVALUATION IS EXPECTED TO BE COMPLETED BY JANUARY 1 AND A CONTRACT SHOULD BE AWARDED SHORTLY THEREAFTER. |
| TENNESSEE VALLEY AUTHORITY<br>SHAWNEE<br>10A<br>RETROFIT 10.0 MW (GROSS)<br>10.0 MW (ESC)<br>COAL<br>2.90 %S BITUMINOUS<br>LIME/LIMESTONE<br>AIR CORRECTION DIVISION, UOP<br>ENERGY CONSUMPTION: ****%<br>STATUS 1 STARTUP 4/72 | REFER TO THE BACKGROUND INFORMATION IN SECTION 3 OF THIS REPORT. THIS TURBULENT CONTACT ABSORBER (TCA) LIME/LIMESTONE SCRUBBING SYSTEM HAS BEEN OPERATIONAL SINCE APRIL 1972. THIS TEST PROGRAM IS FUNDED BY THE EPA WITH TVA AS THE CONSTRUCTOR AND FACILITY OPERATOR. THE BECHTEL CORP. OF SAN FRANCISCO IS THE MAJOR CONTRACTOR, TEST DIRECTOR, AND REPORT WRITER. TESTING CHEMICAL ADDITIVES FOR IMPROVING SO2 REMOVAL EFFICIENCY CONTINUED THROUGH OCTOBER AND NOVEMBER. BOTH VENTURI/SPRAY TOWER AND TCA SYSTEMS WERE OPERATED ON LIMESTONE SLURRY WITH FLYASH LOADING. |

SECTION 2
STATUS OF FGD SYSTEMS

| UNIT IDENTIFICATION | ABSTRACT |
|---|---|
| TENNESSEE VALLEY AUTHORITY<br>SHAWNEE<br>10B<br>RETROFIT 10.0 MW (GROSS)<br>10.0 MW (ESC)<br>COAL<br>2.90 %S BITUMINOUS<br>LIME/LIMESTONE<br>CHEMICO<br>ENERGY CONSUMPTION: ****%<br>STATUS 1 STARTUP 4/72 | REFER TO SECTION 3 OF THIS REPORT FOR ADDITIONAL INFORMATION. THIS VENTURI/SPRAY TOWER LIME/LIMESTONE SCRUBBING SYSTEM HAS BEEN OPERATIONAL SINCE APRIL 1972. THIS TEST PROGRAM IS FUNDED BY THE EPA WITH TVA AS THE CONSTRUCTOR AND FACILITY OPERATOR. THE BECHTEL CORP. OF SAN FRANCISCO IS THE MAJOR CONTRACTOR, TEST DIRECTOR, AND REPORT WRITER. TESTING WITH CHEMICAL ADDITIVES FOR IMPROVING SO2 REMOVAL EFFICIENCY CONTINUED THROUGH OCTOBER AND NOVEMBER. BOTH VENTURI/SPRAY TOWER AND TCA SYSTEMS WERE OPERATED ON LIMESTONE SLURRY WITH HIGH FLYASH LOADING. |
| TENNESSEE VALLEY AUTHORITY<br>WIDOWS CREEK<br>7<br>RETROFIT 575.0 MW (GROSS)<br>575.0 MW (ESC)<br>COAL<br>3.70 %S BITUMINOUS<br>LIMESTONE<br>COMBUSTION ENGINEERING<br>ENERGY CONSUMPTION: ****%<br>STATUS 2 STARTUP 10/80 | TENNESSEE VALLEY AUTHORITY ANNOUNCED THAT A CONTRACT HAS BEEN AWARDED TO COMBUSTION ENGINEERING FOR A LIMESTONE SLURRY SPRAY TOWER FGD SYSTEM. THE FGD SYSTEM WILL TREAT HIGH SULFUR COAL FLUE GAS. THE SPRAY TOWER ABSORBERS WILL BE CONSTRUCTED OF 317L STAINLESS STEEL. THE NUMBER 7 UNIT FIRES COAL WITH THE SAME CHARACTERISTICS AS THE COAL FIRED IN UNIT 8. INITIAL OPERATIONS ARE SCHEDULED FOR OCTOBER 1980. THE FGD SYSTEM IS CURRENTLY UNDER CONSTRUCTION. |
| TENNESSEE VALLEY AUTHORITY<br>WIDOWS CREEK<br>8<br>RETROFIT 550.0 MW (GROSS)<br>550.0 MW (ESC)<br>COAL<br>4.30 %S<br>LIMESTONE<br>TENNESSEE VALLEY AUTHORITY<br>ENERGY CONSUMPTION: ****%<br>STATUS 1 STARTUP 5/77 | REFER TO SECTION 3 OF THIS REPORT FOR ADDITIONAL INFORMATION.<br>THE EMISSION CONTROL SYSTEM FOR THIS 516 MW COAL-FIRED POWER GENERATING UNIT CONSISTS OF EXISTING ELECTROSTATIC PRECIPITATORS FOLLOWED BY FOUR PARALLEL SCRUBBING TRAINS, EACH CAPABLE OF HANDLING 25 PERCENT OF THE BOILER FLUE GAS FROM UNIT 8. EACH TRAIN INCLUDES A RECTANGULAR THROAT VENTURI SCRUBBER AND A GRID-TOWER ABSORBER SUPPLIED BY POLYCON. THE GRID TOWER CAN BE CONVERTED TO A MOBILE-BED TOWER IF GREATER SO2 REMOVAL IS REQUIRED. |
| TEXAS MUNICIPAL POWER AGENCY<br>GIBBONS CREEK<br>1<br>NEW 400.0 MW (GROSS)<br>400.0 MW (ESC)<br>COAL<br>1.06 %S LIGNITE<br>LIMESTONE<br>COMBUSTION ENGINEERING<br>ENERGY CONSUMPTION: ****%<br>STATUS 3 STARTUP 1/82 | COMBUSTION ENGINEERING WAS AWARDED A CONTRACT TO DESIGN AND SUPPLY A 400-MW LIGNITE-FIRED BOILER, ESP, AND FGD SYSTEM AT GIBBONS CREEK STEAM ELECTRIC STATION UNIT NO. 1. THE BOILER WILL BURN 1.06% SULFUR LIGNITE. FLUE GAS WILL BE CLEANED OF PARTICULATES BY A COLD-SIDE ESP (99.73% EFFICIENCY). SO2 WILL BE REMOVED BY 3 SPRAY TOWER MODULES UTILIZING A LIMESTONE SLURRY (72.5 TO 87.5% EFFICIENCY). A CONTRACT HAS BEEN AWARDED TO IUCS FOR SLUDGE DISPOSAL. CONSTRUCTION IS TO BEGIN IN THE SPRING OF 1979. COMMERICAL START-UP IS SCHEDULED FOR JANUARY, 1982. |
| TEXAS POWER & LIGHT<br>SANDOW<br>4<br>NEW 545.0 MW (GROSS)<br>382.0 MW (ESC)<br>COAL<br>1.60 %S LIGNITE<br>LIMESTONE<br>COMBUSTION ENGINEERING<br>ENERGY CONSUMPTION: ****%<br>STATUS 2 STARTUP 7/80 | COMBUSTION ENGINEERING HAS BEEN CHOSEN AS THE BOILER AND FGD VENDOR FOR THIS UNIT. BOILER CONSTRUCTION BEGAN ON SEPTEMBER 9, 1977. PARTICULATE REMOVAL EQUIPMENT WILL BE LOCATED ON THE COLD-SIDE OF THE AIR HEATER. SOME PORTION OF THE FLUE GAS WILL BYPASS THE SCRUBBER FOR REHEAT. THE SPENT SLURRY WILL BE PONDED AND WATER RECYCLED.<br>THE UNIT IS NOW APPROXIMATELY 35% COMPLETE. |
| TEXAS POWER & LIGHT<br>TWIN OAKS<br>1<br>NEW 750.0 MW (GROSS)<br>750.0 MW (ESC)<br>COAL<br>***** %S LIGNITE<br>LIMESTONE<br>VENDOR NOT SELECTED<br>ENERGY CONSUMPTION: ****%<br>STATUS 6 STARTUP 8/83 | THIS UNIT WILL BE JOINTLY OWNED BY TP&L AND ALCOA. A FIRM DECISION HAS NOT BEEN MADE WHETHER TO INSTALL FGD FACILITIES. THIS IS PRIMARILY DUE TO THE FACT THAT SUCH A DECISION IS NOT YET REQUIRED IN THE UTILITIES PLANNING TIMETABLE |

SECTION 2
STATUS OF FGD SYSTEMS

| UNIT IDENTIFICATION | ABSTRACT |
|---|---|
| TEXAS POWER & LIGHT<br>TWIN OAKS<br>2<br>NEW 750.0 MW (GROSS)<br>750.0 MW (ESC)<br>COAL<br>***** %S LIGNITE<br>LIMESTONE<br>VENDOR NOT SELECTED<br>ENERGY CONSUMPTION: ****%<br>STATUS 6 STARTUP 0/86 | THIS UNIT WILL BE JOINTLY OWNED BY TP&L AND ALCOA. A FIRM DECISION HAS NOT BEEN MADE WHETHER TO INSTALL FGD FACILITIES. THIS IS PRIMARILY DUE TO THE FACT THAT SUCH A DECISION IS NOT YET REQUIRED IN THE UTILITIES PLANNING TIMETABLE |
| TEXAS UTILITIES<br>FOREST GROVE<br>1<br>NEW 750.0 MW (GROSS)<br>750.0 MW (ESC)<br>COAL<br>***** %S LIGNITE<br>PROCESS NOT SELECTED<br>VENDOR NOT SELECTED<br>ENERGY CONSUMPTION: ****%<br>STATUS 5 STARTUP 0/81 | TEXAS UTILITIES IS PLANNING A NEW 750-MW UNIT AT THE FOREST GROVE SITE. TWO ESP'S WILL BE INSTALLED FOR PARTICULATE CONTROL. THE UTILITY IS CURRENTLY REQUESTING BIDS FOR AN FGD SYSTEM. START-UP IS SCHEDULED FOR LATE 1981. THE BOILER WILL BE SUPPLIED BY BABCOCK & WILCOX COMPANY. THE DESIGN DOES NOT INCLUDE A STACK GAS REHEAT SYSTEM. |
| TEXAS UTILITIES<br>MARTIN LAKE<br>1<br>NEW 793.0 MW (GROSS)<br>595.0 MW (ESC)<br>COAL<br>.90 %S LIGNITE<br>LIMESTONE<br>RESEARCH COTTRELL<br>ENERGY CONSUMPTION: 1.3%<br>STATUS 1 STARTUP 4/77 | REFER TO SECTION 3 OF THIS REPORT FOR ADDITIONAL INFORMATION. THIS NEW 793 MW UNIT FIRES TEXAS LIGNITE CONTAINING 0.9% SULFUR (AVG) AND 8% ASH (AVG). THE UNIT IS EQUIPPED WITH AN EMISSION CONTROL SYSTEM WHICH INCLUDES COLD-SIDE ESP'S AND A LIMESTONE FGD SYSTEM BOTH SUPPLIED BY RESEARCH-COTTRELL. THE FGD SYSTEM CONSISTS OF 6 PACKED/SPRAY TOWER ABSORBERS WHICH TREAT 75% OF THE TOTAL BOILER FLUE GAS. THE REMAINING FLUE GAS IS BYPASSED FOR REHEAT. TOTAL SO2 REMOVAL EFFICIENCY IS 70.5%. THE FLUE GAS CLEANING WASTES ARE STABILIZED AND DISPOSED IN AN ON-SITE, LANDFILL. |
| TEXAS UTILITIES<br>MARTIN LAKE<br>2<br>NEW 793.0 MW (GROSS)<br>595.0 MW (ESC)<br>COAL<br>.90 %S LIGNITE<br>LIMESTONE<br>RESEARCH COTTRELL<br>ENERGY CONSUMPTION: 1.3%<br>STATUS 1 STARTUP 5/78 | REFER TO SECTION 3 OF THIS REPORT FOR ADDITIONAL INFORMATION. THIS NEW 793 MW UNIT FIRES TEXAS LIGNITE CONTAINING 0.9% SULFUR (AVG) AND 8% ASH (AVG). THE UNIT IS EQUIPPED WITH AN EMISSION CONTROL SYSTEM CONSISTING OF COLD-SIDE ESP'S AND A LIMESTONE FGD SYSTEM, BOTH SUPPLIED BY RESEARCH-COTTRELL. THE FGD SYSTEM CONSISTS OF 6 PACKED/SPRAY TOWER ABSORBERS WHICH TREAT 75% OF THE TOTAL BOILER FLUE GAS. THE REMAINING FLUE GAS IS BY-PASSED FOR REHEAT. TOTAL DESIGN SO2 REMOVAL EFFICIENCY IS 70.5%. THE FLUE GAS CLEANING WASTES ARE STABILIZED AND DISPOSED IN AN ON-SITE LANDFILL. |
| TEXAS UTILITIES<br>MARTIN LAKE<br>3<br>NEW 793.0 MW (GROSS)<br>595.0 MW (ESC)<br>COAL<br>.90 %S LIGNITE<br>LIMESTONE<br>RESEARCH COTTRELL<br>ENERGY CONSUMPTION: 1.3%<br>STATUS 1 STARTUP 2/79 | REFER TO SECTION 3 OF THIS REPORT FOR ADDITIONAL INFORMATION. THIS NEW 793-MW POWER GENERATING UNIT WILL FIRE TEXAS LIGNITE CONTAINING 0.9% SULFUR (AVG.) AND 8% ASH (AVG.). TO MEET FEDERAL NSPS, THE BE EQUIPPED WITH AN EMISSION CONTROL SYSTEM CONSISTING OF COLD-SIDE ESP'S AND A LIMESTONE FGD SYSTEM, BOTH SUPPLIED BY RESEARCH-COTTRELL. THE FGD SYSTEM CONSISTS OF 6 PACKED/SPRAY TOWER ABSORBERS WHICH WILL TREAT 75% OF THE TOTAL BOILER FLUE GAS. THE REMAINING GAS WILL BE BYPASSED FOR REHEAT. TOTAL DESIGN SO2 REMOVAL EFFICIENCY IS 70.5% THE FLUE GAS CLEANING WASTES WILL BE STABILIZED AND DISPOSED IN AN ON-SITE LANDFILL. |
| TEXAS UTILITIES<br>MARTIN LAKE<br>4<br>NEW 750.0 MW (GROSS)<br>750.0 MW (ESC)<br>COAL<br>.90 %S LIGNITE<br>LIMESTONE<br>RESEARCH COTTRELL<br>ENERGY CONSUMPTION: ****%<br>STATUS 3 STARTUP 0/85 | THE CONTRACT FOR THIS FGD SYSTEM HAS BEEN AWARDED TO RESEARCH-COTTRELL. THE BOILER IS NOW BEING ERECTED. START-UP HAS BEEN DELAYED TO EITHER 1985 OR 1986. |

## SECTION 2
## STATUS OF FGD SYSTEMS

| UNIT IDENTIFICATION | ABSTRACT |
|---|---|
| TEXAS UTILITIES<br>MILL CREEK<br>1<br>NEW 750.0 MW (GROSS)<br>750.0 MW (ESC)<br>COAL<br>***** %S LIGNITE<br>PROCESS NOT SELECTED<br>VENDOR NOT SELECTED<br>ENERGY CONSUMPTION: ****%<br>STATUS 6 STARTUP 0/85 | TEXAS UTILITIES IS PLANNING TWO NEW 750-MW UNITS FOR THE UTILITY'S MILL CREEK SITE. THE UTILITY WILL INCORPORATE FGD SYSTEMS ON EACH UNIT SO THAT SO2 EMISSIONS WILL BE CONTROLLED TO APPROXIMATELY 1LB/MM BTU. PARTICULATE MATTER WILL BE CONTROLLED BY ESP'S. START-UP FOR UNITS 1 AND2 ARE PROJECTED TO BE 1985 AND 1986 RESPECTIVELY. |
| TEXAS UTILITIES<br>MILL CREEK<br>2<br>NEW 750.0 MW (GROSS)<br>750.0 MW (ESC)<br>COAL<br>***** %S LIGNITE<br>PROCESS NOT SELECTED<br>VENDOR NOT SELECTED<br>ENERGY CONSUMPTION: ****%<br>STATUS 6 STARTUP 0/86 | TEXAS UTILITIES IS PLANNING TWO NEW 750-MW UNITS FOR THE UTILITY'S MILL CREEK SITE. THE UTILITY WILL INCORPORATE FGD SYSTEMS ON EACH UNIT SO THAT SO2 EMISSIONS WILL BE CONTROLLED TO APPROXIMATELY 1 LB/MM BTU. PARTICULATE MATTER WILL BE CONTROLLED BY ESP'S. START-UP FOR UNITS 1 AND 2 ARE PROJECTED TO BE 1985 AND 1986 RESPECTIVELY. |
| TEXAS UTILITIES<br>MONTICELLO<br>3<br>NEW 800.0 MW (GROSS)<br>800.0 MW (ESC)<br>COAL<br>1.50 %S LIGNITE<br>LIMESTONE<br>CHEMICO<br>ENERGY CONSUMPTION: ****%<br>STATUS 1 STARTUP 5/78 | REFER TO SECTION 3 OF THIS REPORT FOR ADDITIONAL INFORMATION. THE EMISSION CONTROL SYSTEM FOR THIS UNIT CONSISTS OF A HIGH EFFICIENCY ESP AND A LIMESTONE FGD SYSTEM. THE ESP (POLLUTION CONTROL-WALTHER) PROVIDES PRIMARY PARTICULATE CONTROL (99.56%). THE FGD SYSTEM CONSISTS OF 3 LIMESTONE SCRUBBING SPRAY TOWERS THAT PROVIDE PRIMARY SO2 CONTROL (74%). THE FGD SYSTEM IS DESIGNED TO TREAT 3 MM ACFM OF FLUE GAS RESULTING FROM COAL WITH 1.5% SULFUR, 18.9% ASH AND 0.04% CL. THE FLUE GAS CLEANING WASTES ARE DISPOSED IN AN ON-SITE LINED POND. |
| UTAH POWER & LIGHT<br>HUNTER<br>1<br>NEW 400.0 MW (GROSS)<br>360.0 MW (ESC)<br>COAL<br>.55 %S<br>LIME<br>CHEMICO<br>ENERGY CONSUMPTION: ****%<br>STATUS 1 STARTUP 5/79 | REFER TO SECTION 3 OF THIS REPORT FOR ADDITIONAL INFORMATION. A CONTRACT HAS BEEN AWARDED TO THE CHEMICO AIR POLLUTION DIVISION FOR A PEBBLE LIME WET SCRUBBING SYSTEM FOR THIS NEW UNIT. THE SCRUBBING SYSTEM IS DESIGNED TO OPERATE IN AN OPEN WATER LOOP MODE WITH AN SO2 REMOVAL EFFICIENCY OF 80 PERCENT FOR LOW SULFUR UTAH COAL. PRIMARY PARTICULATE CONTROL WILL BE PROVIDED BY AN ESP UPSTREAM OF THE SCRUBBERS. THE SLUDGE WILL BE STABILIZED WITH FLYASH AND DISPOSED OF ON THE PLANT SITE. THE A-E DESIGN FIRM FOR THIS PROJECT IS STEARNS-ROGER. CONSTRUCTION IS NOW |
| UTAH POWER & LIGHT<br>HUNTER<br>2<br>NEW 400.0 MW (GROSS)<br>360.0 MW (ESC)<br>COAL<br>.55 %S<br>LIME<br>CHEMICO<br>ENERGY CONSUMPTION: ****%<br>STATUS 2 STARTUP 6/80 | UTAH P&L AWARDED CHEMICO A CONTRACT TO SUPPLY A LIME FGD SYSTEM FOR EMERY 2 DESIGNED TO OPERATE IN AN OPEN WATER LOOP MODE WITH AN SO2 REMOVAL EFFICIENCY OF 80 PERCENT (FIRING LOW SULFUR UTAH COAL). PRIMARY PARTICULATE CONTROL WILL BE PROVIDED BY AN ESP UP-STREAM OF THE SCRUBBERS. THE SLUDGE WILL BE STABILIZED WITH FLYASH AND DISPOSED OF ON THE PLANT SITE. INITIAL BOILER AND FGD SYSTEM START-UP IS SCHEDULED FOR JUNE 1980. THIS UNIT WILL BE IDENTICAL TO UNIT 1. CONSTRUCTION ON THIS UNIT IS ABOUT 50% COMPLETE. |
| UTAH POWER & LIGHT<br>HUNTINGTON<br>1<br>NEW 430.0 MW (GROSS)<br>366.0 MW (ESC)<br>COAL<br>.55 %S<br>LIME<br>CHEMICO<br>ENERGY CONSUMPTION: ****%<br>STATUS 1 STARTUP 5/78 | REFER TO SECTION 3 OF THIS REPORT FOR ADDITIONAL INFORMATION. CHEMICO WAS THE SUPPLIER OF A LIME SCRUBBING SYSTEM FOR THIS NEW UNIT. PRIMARY PARTICULATE REMOVAL IS PROVIDED BY AN ESP INSTALLED UPSTREAM OF THE WET SCRUBBING SYSTEM. A DAMPER IS USED DURING OPERATION TO ALLOW BETWEEN 10 AND 20 PERCENT OF THE FLUE GAS TO BY-PASS THE FGD SYSTEM. DESIGN REMOVAL EFFICIENCIES FOR SO2 AND PARTICULATE ARE 80 AND 99.5 PERCENT RESPECTIVELY. SLUDGE IS DEWATERED (60% SOLIDS) AND TRUCKED TO AN ON-SITE LANDFILL. INITIAL OPERATIONS AT THIS UNIT BEGAN ON MAY 10, 1978. |

SECTION 2
STATUS OF FGD SYSTEMS

| UNIT IDENTIFICATION | ABSTRACT |
|---|---|
| WISCONSIN POWER & LIGHT<br>COLUMBIA<br>2<br>RETROFIT 527.0 MW (GROSS)<br>316.0 MW (ESC)<br>COAL<br>.80 %S<br>LIME/ALKALINE FLYASH<br>CHEMICO<br>ENERGY CONSUMPTION: ****%<br>STATUS 3 STARTUP 1/82 | A CONTRACT HAS BEEN AWARDED TO CHEMICO FOR A LIME/FLYASH FGD SYSTEM. IT WILL CONSIST OF TWO SPRAY MODULES WITH A HOT-SIDE ESP FOR PARTICULATE REMOVAL. A CLOSED LOOP WATER SYSTEM IS ANTICIPATED WITH FLYASH STABILIZATION OF THE SLUDGE. A SLUDGE DISPOSAL POND LOCATED OFF-SITE IS BEING CONSIDERED. THE FGD SYSTEM IS BEING DESIGNED TO TREAT 60% OF THE FLUE GAS RESULTING FROM THE COMBUSTION OF LOW SULFUR COLSTRIP COAL. THE REMAINING 40% WILL BE BYPASSED FOR REHEAT. |

SECTION 3
DESIGN AND PERFORMANCE DATA FOR OPERATIONAL FGD SYSTEMS

| | |
|---|---|
| COMPANY NAME | ALABAMA ELECTRIC COOP |
| PLANT NAME | TOMBIGBEE |
| UNIT NUMBER | 2 |
| CITY | LEROY |
| STATE | ALABAMA |
| GROSS UNIT GENERATING CAPACITY - MW | 255.0 |
| NET UNIT GENERATING CAPACITY W/FGD - MW | 235.0 |
| EQUIVALENT SCRUBBED CAPACITY - MW | 179.0 |
| ** FUEL DATA | |
| FUEL TYPE | COAL |
| FUEL GRADE | BITUMINOUS |
| AVERAGE HEAT CONTENT - KJ/KG | 26749. ( 11500 BTU/LB) |
| AVERAGE ASH CONTENT - % | 14.00 |
| AVERAGE MOISTURE CONTENT - % | 7.00 |
| AVERAGE SULFUR CONTENT - % | 1.15 |
| AVERAGE CHLORIDE CONTENT - % | ******** |
| ** FGD SYSTEM | |
| GENERAL PROCESS TYPE | WET SCRUBBING |
| PROCESS TYPE | LIMESTONE |
| SYSTEM SUPPLIER | PEABODY PROCESS SYSTEMS |
| NEW/RETROFIT | NEW |
| ENERGY CONSUMPTION - % | 3.1 |
| INITIAL START-UP DATE | 9/78 |
| COMMERCIAL START-UP DATE | **/** |
| SO2 DESIGN REMOVAL EFFICIENCY - % | 85.00 |
| PARTICULATE DESIGN REMOVAL EFFICIENCY - % | 99.30 |
| ** WATER LOOP | |
| TYPE | OPEN |
| FRESH MAKE-UP WATER - LITER/S | 17.6 ( 280 GPM) |
| ** DISPOSAL | |
| TYPE | LINED POND |

PERFORMANCE DATA

| PERIOD | MODULE | AVAILABILITY | OPERABILITY | RELIABILITY | UTILIZATION | % REMOVAL SO2 | % REMOVAL PART. | PER HOURS | BOILER HOURS | FGD HOURS | CAP. FACTOR |
|---|---|---|---|---|---|---|---|---|---|---|---|
| 2/79 | SYSTEM | | | | | | | 672 | | | |
| 3/79 | SYSTEM | | | | | | | 744 | | | |
| 4/79 | SYSTEM | | | | | | | 720 | | | |

** PROBLEMS/SOLUTIONS/COMMENTS

START DATE 2/79 END DATE 4/79
THE UTILITY HAS REPORTED THAT NO UNUSUAL PROBLEMS HAVE OCCURRED.

SECTION 3
DESIGN AND PERFORMANCE DATA FOR OPERATIONAL FGD SYSTEMS

| | | |
|---|---|---|
| COMPANY NAME | ALLEGHENY POWER SYSTEM | |
| PLANT NAME | PLEASANTS | |
| UNIT NUMBER | 1 | |
| CITY | BELMONT | |
| STATE | WEST VIRGINIA | |
| REGULATORY CLASSIFICATION | A | |
| PARTICULATE EMISSION LIMITATION - NG/J | 21. | ( .050 LB/MMBTU) |
| SO2 EMISSION LIMITATION - NG/J | 516. | ( 1.200 LB/MMBTU) |
| NET PLANT GENERATING CAPACITY - MW | ******* | |
| GROSS UNIT GENERATING CAPACITY - MW | 625.0 | |
| NET UNIT GENERATING CAPACITY W/FGD - MW | 625.0 | |
| NET UNIT GENERATING CAPACITY WO/FGD - MW | ******* | |
| EQUIVALENT SCRUBBED CAPACITY - MW | 519.0 | |
| ** BOILER DATA | | |
| SUPPLIER | ****** | |
| TYPE | ****** | |
| SERVICE LOAD | BASE | |
| COMMERCIAL SERVICE DATE | **/** | |
| MAXIMUM BOILER FLUE GAS FLOW - CU.M/S | 1152.85 | (2443000 ACFM) |
| FLUE GAS TEMPERATURE - C | 132.2 | ( 270 F) |
| STACK HEIGHT - M | 366. | (1200 FT) |
| STACK TOP DIAMETER - M | ******* | (***** FT) |
| ** FUEL DATA | | |
| FUEL TYPE | COAL | |
| FUEL GRADE | BITUMINOUS | |
| AVERAGE HEAT CONTENT - KJ/KG | ******* | (****** BTU/LB) |
| RANGE HEAT CONTENT - BTU/LB | | 11,000-13,300 |
| AVERAGE ASH CONTENT - % | ******** | |
| RANGE ASH CONTENT - % | ****** | |
| AVERAGE MOISTURE CONTENT - % | ******** | |
| RANGE MOISTURE CONTENT - % | 10-20 | |
| AVERAGE SULFUR CONTENT - % | 4.50 | |
| RANGE SULFUR CONTENT - % | 2-4.5 | |
| AVERAGE CHLORIDE CONTENT - % | ******** | |
| RANGE CHLORIDE CONTENT - % | ****** | |
| FUEL FIRING RATE - M T/H | ******* | (*** TPH) |
| FUEL FIRING RATE - MW | ***** | |
| ** ESP | | |
| NUMBER | 1 | |
| SUPPLIER | AIR CORRECTION DIVISION, UOP | |
| ** FGD SYSTEM | | |
| SALEABLE PRODUCT/THROWAWAY PRODUCT | THROWAWAY PRODUCT | |
| GENERAL PROCESS TYPE | WET SCRUBBING | |
| PROCESS TYPE | LIME | |
| PROCESS ADDITIVES | MG/2-6% | |
| SYSTEM SUPPLIER | BABCOCK & WILCOX | |
| A-E FIRM | UNITED ENGINEERS AND CONTRACTORS | |
| DEVELOPMENT LEVEL | FULL-SCALE | |
| NEW/RETROFIT | NEW | |
| PARTICULATE DESIGN REMOVAL EFFICIENCY - % | 99.55 | |
| SO2 DESIGN REMOVAL EFFICIENCY - % | 90.00 | |
| COMMERCIAL DATE | 3/79 | |
| INITIAL START-UP | 3/79 | |
| ** ABSORBER | | |
| NUMBER | 4 | |
| TYPE | SPRAY TOWER | |
| INITIAL START UP | 3/79 | |
| NUMBER OF STAGES | 1 | |
| BOILER LOAD/ABSORBER - % | 83.5 | |
| GAS TEMPERATURE - C | 132.2 | ( 270 F) |
| ** REHEATER | | |
| TYPE | BYPASS | |
| TEMPERATURE BOOST - C | 11.1 | ( 20 F) |

EPA UTILITY FGD SURVEY: FEBRUARY - MARCH 1979

ALLEGHENY POWER SYSTEM (CONT.)

** WATER LOOP
TYPE OPEN

| PERIOD | MODULE | AVAILABILITY | OPERABILITY | RELIABILITY | UTILIZATION | % REMOVAL SO2 | % REMOVAL PART. | PER HOURS | BOILER HOURS | FGD HOURS | CAP. FACTOR |
|---|---|---|---|---|---|---|---|---|---|---|---|
| | | PERFORMANCE DATA | | | | | | | | | |
| 3/79 | SYSTEM | | | | | | | 744 | | | |
| 4/79 | SYSTEM | | | | | | | 720 | | | |

** PROBLEMS/SOLUTIONS/COMMENTS

START DATE 3/79 END DATE 4/79
THE UNIT STARTED ON MARCH 7 1979. NO HOURS ARE YET AVAILABLE BECAUSE OF THE RECENT OPERATING STATUS.

START DATE 3/79 END DATE 4/79
A MODULE HAS BEEN REMOVED FROM SERVICE DUE TO A WELD FAILURE ON THE ABSORBER DOWNCOMER.

SECTION 3
DESIGN AND PERFORMANCE DATA FOR OPERATIONAL FGD SYSTEMS

| | |
|---|---|
| COMPANY NAME | ARIZONA ELECTRIC POWER COOP |
| PLANT NAME | APACHE |
| UNIT NUMBER | 2 |
| CITY | COCHISE |
| STATE | ARIZONA |
| GROSS UNIT GENERATING CAPACITY - MW | 195.0 |
| NET UNIT GENERATING CAPACITY W/FGD - MW | 175.0 |
| EQUIVALENT SCRUBBED CAPACITY - MW | 195.0 |
| ** FUEL DATA | |
| FUEL TYPE | COAL |
| FUEL GRADE | BITUMINOUS |
| AVERAGE HEAT CONTENT - KJ/KG | ****** (****** BTU/LB) |
| AVERAGE ASH CONTENT - % | 10.00 |
| AVERAGE MOISTURE CONTENT - % | ******** |
| AVERAGE SULFUR CONTENT - % | .70 |
| AVERAGE CHLORIDE CONTENT - % | ******** |
| ** FGD SYSTEM | |
| GENERAL PROCESS TYPE | WET SCRUBBING |
| PROCESS TYPE | LIMESTONE |
| SYSTEM SUPPLIER | RESEARCH COTTRELL |
| NEW/RETROFIT | NEW |
| ENERGY CONSUMPTION - % | 4.1 |
| INITIAL START-UP DATE | 8/78 |
| COMMERCIAL START-UP DATE | 1/79 |
| SO2 DESIGN REMOVAL EFFICIENCY - % | 85.00 |
| PARTICULATE DESIGN REMOVAL EFFICIENCY - % | 99.50 |
| ** WATER LOOP | |
| TYPE | OPEN |
| FRESH MAKE-UP WATER - LITER/S | 115.9 ( 1840 GPM) |
| ** DISPOSAL | |
| TYPE | SLUDGE POND |

PERFORMANCE DATA

| PERIOD | MODULE | AVAILABILITY | OPERABILITY | RELIABILITY | UTILIZATION | % REMOVAL SO2 | % REMOVAL PART. | PER HOURS | BOILER HOURS | FGD HOURS | CAP. FACTOR |
|---|---|---|---|---|---|---|---|---|---|---|---|
| 2/79 | SYSTEM | | | | | | | 672 | | | |
| 3/79 | SYSTEM | | | | | | | 744 | | | |
| 4/79 | SYSTEM | | | | | | | 720 | | | |

** PROBLEMS/SOLUTIONS/COMMENTS

START DATE 2/79 END DATE 4/79
COMPLIANCE TESTS WERE RUN ON THIS UNIT LAST NOVEMBER AND THE UNIT WAS DECLARED COMMERCIAL IN FEBRUARY. THE FGD SYSTEM OPERATES ONLY ABOUT 50 PERCENT OF THE BOILER HOURS BECAUSE THE UNIT OPERATES AT SUCH A LOW RATING 50 PERCENT OF THE TIME THAT THE FGD SYSTEM IS NOT NEEDED.

START DATE 2/79 END DATE 3/79
A BOILER EXPLOSION AT THE BURNER FACE CAUSED THE UNIT TO BE DOWN FROM THE LAST WEEK IN FEBRUARY THROUGH THE MIDDLE OF MARCH.

SECTION 3
DESIGN AND PERFORMANCE DATA FOR OPERATIONAL FGD SYSTEMS

| | |
|---|---|
| COMPANY NAME | ARIZONA PUBLIC SERVICE |
| PLANT NAME | CHOLLA |
| UNIT NUMBER | 1 |
| CITY | JOSEPH CITY |
| STATE | ARIZONA |
| GROSS UNIT GENERATING CAPACITY - MW | 119.0 |
| NET UNIT GENERATING CAPACITY W/FGD - MW | 115.0 |
| EQUIVALENT SCRUBBED CAPACITY - MW | 119.0 |
| ** FUEL DATA | |
| FUEL TYPE | COAL |
| FUEL GRADE | SUBBITUMINOUS |
| AVERAGE HEAT CONTENT - KJ/KG | 23609. ( 10150 BTU/LB) |
| AVERAGE ASH CONTENT - % | 13.50 |
| AVERAGE MOISTURE CONTENT - % | 15.00 |
| AVERAGE SULFUR CONTENT - % | .50 |
| AVERAGE CHLORIDE CONTENT - % | .02 |
| ** FGD SYSTEM | |
| GENERAL PROCESS TYPE | WET SCRUBBING |
| PROCESS TYPE | LIMESTONE |
| SYSTEM SUPPLIER | RESEARCH COTTRELL |
| NEW/RETROFIT | RETROFIT |
| ENERGY CONSUMPTION - % | 4.2 |
| INITIAL START-UP DATE | 10/73 |
| COMMERCIAL START-UP DATE | 12/73 |
| SO2 DESIGN REMOVAL EFFICIENCY - % | 58.50 |
| PARTICULATE DESIGN REMOVAL EFFICIENCY - % | 99.70 |
| ** WATER LOOP | |
| TYPE | OPEN |
| FRESH MAKE-UP WATER - LITER/S | 7.6 ( 120 GPM) |
| ** DISPOSAL | |
| TYPE | UNLINED POND |

PERFORMANCE DATA

| PERIOD | MODULE | AVAILABILITY | OPERABILITY | RELIABILITY | UTILIZATION | % REMOVAL SO2 | % REMOVAL PART. | PER HOURS | BOILER HOURS | FGD HOURS | CAP. FACTOR |
|---|---|---|---|---|---|---|---|---|---|---|---|
| 12/78 | A | 88.2 | 88.1 | 88.2 | | | | | | | |
| | B | 85.6 | 88.3 | 85.6 | | | | | | | |
| | SYSTEM | 86.9 | 88.2 | 86.9 | | | | 744 | 744 | 647 | |
| 1/79 | A | 99.2 | 99.1 | 99.2 | | | | | | | |
| | B | 100.0 | 100.0 | 100.0 | | | | | | | |
| | SYSTEM | 99.6 | 99.6 | 99.6 | | | | 744 | 744 | 741 | |

** PROBLEMS/SOLUTIONS/COMMENTS

START DATE 12/78 END DATE 1/79
THE UTILITY HAS REPORTED THAT THE FGD SYSTEM EXPERIENCED CONTROL PROBLEMS.

| | | | | | | | | | | | |
|---|---|---|---|---|---|---|---|---|---|---|---|
| 2/79 | A | 100.0 | 100.0 | 100.0 | | | | | | | |
| | B | 100.0 | 100.0 | 100.0 | | | | | | | |
| | SYSTEM | 100.0 | 100.0 | 100.0 | | | | 672 | 672 | 672 | |
| 3/79 | A | 95.3 | 95.0 | 95.3 | | | | | | | |
| | B | 100.0 | 100.0 | 100.0 | | | | | | | |
| | SYSTEM | 97.7 | 97.5 | 97.7 | | | | 744 | 744 | 727 | |

** PROBLEMS/SOLUTIONS/COMMENTS

START DATE 3/79 END DATE 3/79
THE UTILITY HAS EXPERIENCED PLUGGED REHEAT TUBES. THE OLD TUBES, IN UNSECTIONALIZED BUNDLES, WERE REPLACED WITH NEW TUBES OF SPLIT COIL CON-

ARIZONA PUBLIC SERVICE (CONT.)

| PERIOD | MODULE | AVAILABILITY | OPERABILITY | RELIABILITY | UTILIZATION | % REMOVAL SO2 | % REMOVAL PART. | PER HOURS | BOILER HOURS | FGD HOURS | CAP. FACTOR |
|---|---|---|---|---|---|---|---|---|---|---|---|
| | | PERFORMANCE DATA | | | | | | | | | |
| | | STRUCTION AND MADE OF 316L SS. THE NEW TYPE OF TUBES ALONG WITH BETTER MAINTENANCE PROCEEDURES HAS ADDED TO THE REHEAT TUBE LIFE AND AVAILABILITY. | | | | | | | | | |
| 4/79 | A | | 100.0 | 100.0 | 100.0 | | | | | | |
| | B | | 100.0 | 100.0 | 100.0 | | | | | | |
| | SYSTEM | | 100.0 | 100.0 | 100.0 | | | 720 | 720 | 720 | |

## SECTION 3
## DESIGN AND PERFORMANCE DATA FOR OPERATIONAL FGD SYSTEMS

| | |
|---|---|
| COMPANY NAME | ARIZONA PUBLIC SERVICE |
| PLANT NAME | CHOLLA |
| UNIT NUMBER | 2 |
| CITY | JOSEPH CITY |
| STATE | ARIZONA |
| GROSS UNIT GENERATING CAPACITY - MW | 350.0 |
| NET UNIT GENERATING CAPACITY W/FGD - MW | 250.0 |
| EQUIVALENT SCRUBBED CAPACITY - MW | 350.0 |
| ** FUEL DATA | |
| FUEL TYPE | COAL |
| FUEL GRADE | SUBBITUMINOUS |
| AVERAGE HEAT CONTENT - KJ/KG | 23609. ( 10150 BTU/LB) |
| AVERAGE ASH CONTENT - % | 13.50 |
| AVERAGE MOISTURE CONTENT - % | 15.00 |
| AVERAGE SULFUR CONTENT - % | .50 |
| AVERAGE CHLORIDE CONTENT - % | .02 |
| ** FGD SYSTEM | |
| GENERAL PROCESS TYPE | WET SCRUBBING |
| PROCESS TYPE | LIMESTONE |
| SYSTEM SUPPLIER | RESEARCH COTTRELL |
| NEW/RETROFIT | NEW |
| ENERGY CONSUMPTION - % | ******* |
| INITIAL START-UP DATE | 4/78 |
| COMMERCIAL START-UP DATE | **/** |
| SO2 DESIGN REMOVAL EFFICIENCY - % | 75.00 |
| PARTICULATE DESIGN REMOVAL EFFICIENCY - % | 99.70 |
| ** WATER LOOP | |
| TYPE | OPEN |
| FRESH MAKE-UP WATER - LITER/S | 7.6 ( 120 GPM) |
| ** DISPOSAL | |
| TYPE | SLUDGE POND |

PERFORMANCE DATA

| PERIOD | MODULE | AVAILABILITY | OPERABILITY | RELIABILITY | UTILIZATION | % REMOVAL SO2 | % REMOVAL PART. | PER HOURS | BOILER HOURS | FGD HOURS | CAP. FACTOR |
|---|---|---|---|---|---|---|---|---|---|---|---|
| 12/78 | SYSTEM | | | | | | | 744 | | | |
| 1/79 | SYSTEM | | | | | | | 744 | | | |
| 2/79 | SYSTEM | | | | | | | 672 | | | |
| 3/79 | SYSTEM | | | | | | | 744 | | | |
| 4/79 | SYSTEM | | | | | | | 720 | | | |

** PROBLEMS/SOLUTIONS/COMMENTS

START DATE 12/78 END DATE 4/79
OPERATION PARAMATERS ARE STILL UNAVAILABLE FOR THIS UNIT.

SECTION 3
DESIGN AND PERFORMANCE DATA FOR OPERATIONAL FGD SYSTEMS

| | |
|---|---|
| COMPANY NAME | CENTRAL ILLINOIS LIGHT |
| PLANT NAME | DUCK CREEK |
| UNIT NUMBER | 1 |
| CITY | CANTON |
| STATE | ILLINOIS |
| GROSS UNIT GENERATING CAPACITY - MW | 416.0 |
| NET UNIT GENERATING CAPACITY W/FGD - MW | 378.0 |
| EQUIVALENT SCRUBBED CAPACITY - MW | 416.0 |
| ** FUEL DATA | |
| FUEL TYPE | COAL |
| FUEL GRADE | BITUMINOUS |
| AVERAGE HEAT CONTENT - KJ/KG | 24423. ( 10500 BTU/LB) |
| AVERAGE ASH CONTENT - % | 9.12 |
| AVERAGE MOISTURE CONTENT - % | ******** |
| AVERAGE SULFUR CONTENT - % | 3.30 |
| AVERAGE CHLORIDE CONTENT - % | .03 |
| ** FGD SYSTEM | |
| GENERAL PROCESS TYPE | WET SCRUBBING |
| PROCESS TYPE | LIMESTONE |
| SYSTEM SUPPLIER | RILEY STOKER/ENVIRONEERING |
| NEW/RETROFIT | NEW |
| ENERGY CONSUMPTION - % | 2.9 |
| INITIAL START-UP DATE | 7/76 |
| COMMERCIAL START-UP DATE | 8/78 |
| SO2 DESIGN REMOVAL EFFICIENCY - % | 85.00 |
| PARTICULATE DESIGN REMOVAL EFFICIENCY - % | 99.80 |
| ** WATER LOOP | |
| TYPE | CLOSED |
| FRESH MAKE-UP WATER - LITER/S | 37.8 ( 600 GPM) |
| ** DISPOSAL | |
| TYPE | LINED POND |

PERFORMANCE DATA

| PERIOD | MODULE | AVAILABILITY | OPERABILITY | RELIABILITY | UTILIZATION | % REMOVAL SO2 | % REMOVAL PART. | PER HOURS | BOILER HOURS | FGD HOURS | CAP. FACTOR |
|---|---|---|---|---|---|---|---|---|---|---|---|
| 12/78 | A | 23.0 | 25.0 | 25.0 | 23.0 | | | | | | |
| | B | 26.0 | 28.0 | 28.0 | 26.0 | | | | | | |
| | C | 21.0 | 23.0 | 23.0 | 21.0 | | | | | | |
| | D | 10.0 | 11.0 | 11.0 | 10.0 | | | | | | |
| | SYSTEM | 20.0 | 21.0 | 21.0 | 20.0 | | | 744 | 706 | 151 | 66.0 |

** PROBLEMS/SOLUTIONS/COMMENTS

START DATE 12/78 END DATE 12/78
ISOLATION DAMPER FAILURES AND SLURRY RECYCLE DISCHARGE VALVE FAILURES OCCURRED DURING DECEMBER.

START DATE 12/78 END DATE 12/78
LIMESTONE MILL PROBLEMS AND PLUGGED LIMESTONE FEEDER HAMPERED SCRUBBER OPERATIONS DURING DECEMBER.

START DATE 12/78 END DATE 12/78
FROZEN INSTRUMENT CONTROL LINES WERE A PROBLEM.

| | | | | | | | | | | | |
|---|---|---|---|---|---|---|---|---|---|---|---|
| 1/79 | A | .0 | .0 | .0 | .0 | | | | | | |
| | B | .0 | .0 | .0 | .0 | | | | | | |
| | C | .0 | .0 | .0 | .0 | | | | | | |
| | D | .0 | .0 | .0 | .0 | | | | | | |
| | SYSTEM | .0 | .0 | .0 | .0 | | | 744 | 738 | 0 | |

| PERIOD | MODULE | AVAILABILITY | OPERABILITY | RELIABILITY | UTILIZATION | % REMOVAL SO2 | % REMOVAL PART. | PER HOURS | BOILER HOURS | FGD HOURS | CAP. FACTOR |
|---|---|---|---|---|---|---|---|---|---|---|---|
| | | PERFORMANCE DATA | | | | | | | | | |
| 2/79 | A | .0 | .0 | .0 | .0 | | | | | | |
| | B | .0 | .0 | .0 | .0 | | | | | | |
| | C | .0 | .0 | .0 | .0 | | | | | | |
| | D | .0 | .0 | .0 | .0 | | | | | | |
| | SYSTEM | .0 | .0 | .0 | .0 | | | 672 | 533 | 0 | 80.5 |
| 3/79 | A | 33.7 | 31.1 | 31.1 | 31.1 | | | | | | |
| | B | 6.7 | 6.7 | 6.7 | 6.7 | | | | | | |
| | C | | | | | | | | | | |
| | D | .0 | .0 | .0 | .0 | | | | | | |
| | SYSTEM | 10.1 | 9.4 | 9.4 | 9.4 | | | 744 | 744 | 70 | |

** PROBLEMS/SOLUTIONS/COMMENTS

START DATE 1/79 END DATE 1/79
FROZEN INSTRUMENT CONTROL LINES, RECYCLE TANK SUCTION LINES, MAIN MODULE DRAIN LINES AND MIST ELIMINATOR DRAIN LINES WERE MAJOR PROBLEM AREAS DURING JANUARY.

START DATE 1/79 END DATE 1/79
SLURRY RECYCLE VALVE PLUGGAGE AND SLURRY TRANSFER PUMP FAILURE CONTRIBUTED TO EGO SYSTEM OUTAGE.

** PROBLEMS/SOLUTIONS/COMMENTS

START DATE 2/79 END DATE 2/79
RECYCLE PUMP SUCTION VALVE FAILURES AND A SLURRY TRANSFER PUMP FAILURE CONTRIBUTED TO THE LOW OPERATION PARAMETERS OF THE FGD SYSTEM.

START DATE 2/79 END DATE 2/79
FROZEN MIST ELIMINATOR DRAINS, ABSORBER DRAINS AND INSTRUMENT LINES WERE A MAJOR PROBLEM DURING FEBRUARY.

** PROBLEMS/SOLUTIONS/COMMENTS

START DATE 3/79 END DATE 3/79
FREEZING PROBLEMS CONTINUED TO HAMPER FGD OPERATIONS DURING MARCH.

START DATE 3/79 END DATE 3/79
BROKEN MIST ELIMINATOR SPAY LINES AND PLUGGED MIST ELIMINATOR NOZZLES WERE PROBLEM AREAS DURING MARCH.

START DATE 3/79 END DATE 3/79
RECYCLE PUMP FAILURES AND WASTE WATER PUMP FAILURES WERE EXPERIENCED DURING MARCH.

START DATE 3/79 END DATE 3/79
PLUGGED SLURRY NOZZLES AND GENERAL INSTRUMENTATION PROBLEMS WERE REPORTED BY THE UTILITY.

SECTION 3
DESIGN AND PERFORMANCE DATA FOR OPERATIONAL FGD SYSTEMS

| | |
|---|---|
| COMPANY NAME | COLUMBUS & SOUTHERN OHIO ELEC. |
| PLANT NAME | CONESVILLE |
| UNIT NUMBER | 5 |
| CITY | CONESVILLE |
| STATE | OHIO |
| GROSS UNIT GENERATING CAPACITY - MW | 411.0 |
| NET UNIT GENERATING CAPACITY W/FGD - MW | 375.0 |
| EQUIVALENT SCRUBBED CAPACITY - MW | 411.0 |
| ** FUEL DATA | |
| FUEL TYPE | COAL |
| FUEL GRADE | BITUMINOUS |
| AVERAGE HEAT CONTENT - KJ/KG | 25237. ( 10850 BTU/LB) |
| AVERAGE ASH CONTENT - % | 15.10 |
| AVERAGE MOISTURE CONTENT - % | 7.50 |
| AVERAGE SULFUR CONTENT - % | 4.67 |
| AVERAGE CHLORIDE CONTENT - % | ******** |
| ** FGD SYSTEM | |
| GENERAL PROCESS TYPE | WET SCRUBBING |
| PROCESS TYPE | LIME |
| SYSTEM SUPPLIER | AIR CORRECTION DIVISION, UOP |
| NEW/RETROFIT | NEW |
| ENERGY CONSUMPTION - % | 3.9 |
| INITIAL START-UP DATE | 1/77 |
| COMMERCIAL START-UP DATE | 2/77 |
| SO2 DESIGN REMOVAL EFFICIENCY - % | 89.50 |
| PARTICULATE DESIGN REMOVAL EFFICIENCY - % | 99.60 |
| ** WATER LOOP | |
| TYPE | OPEN |
| FRESH MAKE-UP WATER - LITER/S | 31.5 ( 500 GPM) |
| ** TREATMENT | |
| TYPE | PROPRIETARY (POZ-O-TEC) |
| ** DISPOSAL | |
| TYPE | LANDFILL |

PERFORMANCE DATA

| PERIOD | MODULE | AVAILABILITY | OPERABILITY | RELIABILITY | UTILIZATION | % REMOVAL SO2 | % REMOVAL PART. | PER HOURS | BOILER HOURS | FGD HOURS | CAP. FACTOR |
|---|---|---|---|---|---|---|---|---|---|---|---|
| 2/79 | A | .0 | .0 | .0 | .0 | | | | | | |
| | B | .0 | .0 | .0 | .0 | | | | | | |
| | SYSTEM | .0 | .0 | .0 | .0 | | | 672 | | 0 | |

** PROBLEMS/SOLUTIONS/COMMENTS

START DATE 2/79 END DATE 2/79
THE LOW OPERATING HOURS FOR FEBRUARY WERE CAUSED BY SEVERE WINTER WEATHER.

START DATE 0/ 0 END DATE 0/ 0
THE LOW OPERATING HOURS FOR FEBRUARY WERE CAUSED BY SEVERE WINTER WEATHER.

| | | | | | | | | | | | |
|---|---|---|---|---|---|---|---|---|---|---|---|
| 3/79 | A | 50.0 | 49.0 | 50.0 | 43.0 | | | | | | |
| | B | .0 | .0 | .0 | .0 | | | | | | |
| | SYSTEM | 25.0 | 24.5 | 25.0 | 21.5 | | | 744 | 652 | 160 | |
| 4/79 | A | 17.0 | 58.0 | 73.0 | 12.0 | | | | | | |
| | B | .0 | .0 | .0 | .0 | | | | | | |
| | SYSTEM | 8.5 | 29.0 | 36.5 | 6.0 | | | 720 | 149 | 43 | |

COLUMBUS & SOUTHERN OHIO ELEC. (CONT.)

| PERIOD | MODULE | AVAILABILITY | OPERABILITY | RELIABILITY | UTILIZATION | % REMOVAL SO2 | % REMOVAL PART. | PER HOURS | BOILER HOURS | FGD HOURS | CAP. FACTOR |
|---|---|---|---|---|---|---|---|---|---|---|---|
| | | | | PERFORMANCE DATA | | | | | | | |

** PROBLEMS/SOLUTIONS/COMMENTS

START DATE 3/79 END DATE 4/79
THE LOW OPERATING HOURS REPORTED FOR MODULE B IS DUE TO SEVERE CORROSION AT THE PRESATURATOR INLET DUCT WHICH UOP HAS BEEN REPAIRING SINCE MARCH.

SECTION 3
DESIGN AND PERFORMANCE DATA FOR OPERATIONAL FGD SYSTEMS

| | |
|---|---|
| COMPANY NAME | COLUMBUS & SOUTHERN OHIO ELEC. |
| PLANT NAME | CONESVILLE |
| UNIT NUMBER | 6 |
| CITY | CONESVILLE |
| STATE | OHIO |
| GROSS UNIT GENERATING CAPACITY - MW | 411.0 |
| NET UNIT GENERATING CAPACITY W/FGD - MW | 375.0 |
| EQUIVALENT SCRUBBED CAPACITY - MW | 411.0 |
| ** FUEL DATA | |
| FUEL TYPE | COAL |
| FUEL GRADE | BITUMINOUS |
| AVERAGE HEAT CONTENT - KJ/KG | 25237. ( 10850 BTU/LB) |
| AVERAGE ASH CONTENT - % | 15.10 |
| AVERAGE MOISTURE CONTENT - % | 7.50 |
| AVERAGE SULFUR CONTENT - % | 4.67 |
| AVERAGE CHLORIDE CONTENT - % | ******** |
| ** FGD SYSTEM | |
| GENERAL PROCESS TYPE | WET SCRUBBING |
| PROCESS TYPE | LIME |
| SYSTEM SUPPLIER | AIR CORRECTION DIVISION, UOP |
| NEW/RETROFIT | NEW |
| ENERGY CONSUMPTION - % | 3.9 |
| INITIAL START-UP DATE | 6/78 |
| COMMERCIAL START-UP DATE | 6/78 |
| SO2 DESIGN REMOVAL EFFICIENCY - % | 89.50 |
| PARTICULATE DESIGN REMOVAL EFFICIENCY - % | 99.60 |
| ** WATER LOOP | |
| TYPE | OPEN |
| FRESH MAKE-UP WATER - LITER/S | 31.5 ( 500 GPM) |
| ** TREATMENT | |
| TYPE | PROPRIETARY (PO2-O-TEC) |
| ** DISPOSAL | |
| TYPE | DIKED LANDFILL |

PERFORMANCE DATA

| PERIOD | MODULE | AVAILABILITY | OPERABILITY | RELIABILITY | UTILIZATION | % REMOVAL SO2 | % REMOVAL PART. | PER HOURS | BOILER HOURS | FGD HOURS | CAP. FACTOR |
|---|---|---|---|---|---|---|---|---|---|---|---|
| 2/79 | A | .0 | .0 | .0 | .0 | | | | | | |
| | B | .0 | .0 | .0 | .0 | | | | | | |
| | SYSTEM | .0 | .0 | .0 | .0 | | | 672 | | | 0 |
| 3/79 | A | 43.0 | 37.0 | 39.0 | 33.0 | | | | | | |
| | B | 32.0 | 28.0 | 29.0 | 25.0 | | | | | | |
| | SYSTEM | 37.5 | 32.5 | 34.0 | 29.0 | | | 744 | 664 | 216 | |
| 4/79 | A | 82.0 | 79.0 | 79.0 | 78.0 | | | | | | |
| | B | 72.0 | 59.0 | 59.0 | 58.0 | | | | | | |
| | SYSTEM | 77.0 | 69.0 | 69.0 | 68.0 | | | 720 | 711 | 489 | |

** PROBLEMS/SOLUTIONS/COMMENTS

START DATE 2/79 END DATE 2/79
THE LOW FEBRUARY PARAMETERS WERE BLAMED ON SEVERE WINTER WEATHER.

SECTION 3
DESIGN AND PERFORMANCE DATA FOR OPERATIONAL FGD SYSTEMS

| | | |
|---|---|---|
| COMPANY NAME | DUQUESNE LIGHT | |
| PLANT NAME | ELRAMA | |
| UNIT NUMBER | 1-4 | |
| CITY | ELRAMA | |
| STATE | PENNSYLVANIA | |
| GROSS UNIT GENERATING CAPACITY - MW | 510.0 | |
| NET UNIT GENERATING CAPACITY W/FGD - MW | 475.0 | |
| EQUIVALENT SCRUBBED CAPACITY - MW | 510.0 | |
| ** FUEL DATA | | |
| FUEL TYPE | COAL | |
| FUEL GRADE | ****** | |
| AVERAGE HEAT CONTENT - KJ/KG | 26400. | ( 11350 BTU/LB) |
| AVERAGE ASH CONTENT - % | 21.00 | |
| AVERAGE MOISTURE CONTENT - % | ******** | |
| AVERAGE SULFUR CONTENT - % | 2.20 | |
| AVERAGE CHLORIDE CONTENT - % | ******** | |
| ** FGD SYSTEM | | |
| GENERAL PROCESS TYPE | WET SCRUBBING | |
| PROCESS TYPE | LIME | |
| SYSTEM SUPPLIER | CHEMICO | |
| NEW/RETROFIT | RETROFIT | |
| ENERGY CONSUMPTION - % | 3.5 | |
| INITIAL START-UP DATE | 10/75 | |
| COMMERCIAL START-UP DATE | 10/75 | |
| $SO_2$ DESIGN REMOVAL EFFICIENCY - % | 83.00 | |
| PARTICULATE DESIGN REMOVAL EFFICIENCY - % | 99.00 | |
| ** WATER LOOP | | |
| TYPE | OPEN | |
| FRESH MAKE-UP WATER - LITER/S | ******* | (***** GPM) |
| ** TREATMENT | | |
| TYPE | POZ-O-TEC | |
| ** DISPOSAL | | |
| TYPE | LANDFILL | |

SECTION 3
DESIGN AND PERFORMANCE DATA FOR OPERATIONAL FGD SYSTEMS

| | | |
|---|---|---|
| COMPANY NAME | DUQUESNE LIGHT | |
| PLANT NAME | PHILLIPS | |
| UNIT NUMBER | 1-6 | |
| CITY | SOUTH HEIGHT | |
| STATE | PENNSYLVANIA | |
| GROSS UNIT GENERATING CAPACITY - MW | 410.0 | |
| NET UNIT GENERATING CAPACITY W/FGD - MW | 377.0 | |
| EQUIVALENT SCRUBBED CAPACITY - MW | 410.0 | |
| ** FUEL DATA | | |
| FUEL TYPE | COAL | |
| FUEL GRADE | ****** | |
| AVERAGE HEAT CONTENT - KJ/KG | 26400. | ( 11350 BTU/LB) |
| AVERAGE ASH CONTENT - % | 18.20 | |
| AVERAGE MOISTURE CONTENT - % | ******** | |
| AVERAGE SULFUR CONTENT - % | 2.00 | |
| AVERAGE CHLORIDE CONTENT - % | ******** | |
| ** FGD SYSTEM | | |
| GENERAL PROCESS TYPE | WET SCRUBBING | |
| PROCESS TYPE | LIME | |
| SYSTEM SUPPLIER | CHEMICO | |
| NEW/RETROFIT | RETROFIT | |
| ENERGY CONSUMPTION - % | 2.4 | |
| INITIAL START-UP DATE | 7/73 | |
| COMMERCIAL START-UP DATE | **/** | |
| SO2 DESIGN REMOVAL EFFICIENCY - % | 83.00 | |
| PARTICULATE DESIGN REMOVAL EFFICIENCY - % | 99.00 | |
| ** WATER LOOP | | |
| TYPE | OPEN | |
| FRESH MAKE-UP WATER - LITER/S | ******* | (***** GPM) |
| ** TREATMENT | | |
| TYPE | POZ-O-TEC | |
| ** DISPOSAL | | |
| TYPE | LANDFILL | |

## SECTION 3
## DESIGN AND PERFORMANCE DATA FOR OPERATIONAL FGD SYSTEMS

| | |
|---|---|
| COMPANY NAME | GULF POWER |
| PLANT NAME | SCHOLZ |
| UNIT NUMBER | 1,2 |
| CITY | SNEADS |
| STATE | FLORIDA |
| GROSS UNIT GENERATING CAPACITY - MW | 23.0 |
| NET UNIT GENERATING CAPACITY W/FGD - MW | 23.0 |
| EQUIVALENT SCRUBBED CAPACITY - MW | 23.0 |
| ** FUEL DATA | |
| FUEL TYPE | COAL |
| FUEL GRADE | BITUMINOUS |
| AVERAGE HEAT CONTENT - KJ/KG | 29075. ( 12500 BTU/LB) |
| AVERAGE ASH CONTENT - % | 11.00 |
| AVERAGE MOISTURE CONTENT - % | 5.00 |
| AVERAGE SULFUR CONTENT - % | 2.50 |
| AVERAGE CHLORIDE CONTENT - % | ******** |
| ** FGD SYSTEM | |
| GENERAL PROCESS TYPE | WET SCRUBBING |
| PROCESS TYPE | LIMESTONE/THOROUGHBRED 121 |
| SYSTEM SUPPLIER | CHIYODA INTERNATIONAL |
| NEW/RETROFIT | RETROFIT |
| ENERGY CONSUMPTION - % | ******* |
| INITIAL START-UP DATE | 8/78 |
| COMMERCIAL START-UP DATE | **/** |
| SO2 DESIGN REMOVAL EFFICIENCY - % | 90.00 |
| PARTICULATE DESIGN REMOVAL EFFICIENCY - % | 99.50 |
| ** WATER LOOP | |
| TYPE | CLOSED |
| FRESH MAKE-UP WATER - LITER/S | ******* (***** GPM) |
| ** BYPRODUCT | |
| BYPRODUCT NATURE | GYPSUM |
| DISPOSITION | STACKED IN POND |

PERFORMANCE DATA

| PERIOD | MODULE | AVAILABILITY | OPERABILITY | RELIABILITY | UTILIZATION | % REMOVAL SO2 | % REMOVAL PART. | PER HOURS | BOILER HOURS | FGD HOURS | CAP. FACTOR |
|---|---|---|---|---|---|---|---|---|---|---|---|
| 2/79 | SYSTEM | | 98.3 | | 98.4 | | | 672 | 672 | 661 | |
| 3/79 | SYSTEM | 100.0 | 100.0 | 100.0 | 100.0 | | | 744 | 744 | 744 | |
| 4/79 | SYSTEM | 100.0 | 100.0 | 100.0 | 100.0 | | | 720 | 720 | 720 | |

** PROBLEMS/SOLUTIONS/COMMENTS

START DATE 2/79 END DATE 4/79
ONE PUMP FAILURE CAUSING A 5 MINUTE OUTAGE WAS REPORTED BY THE UTILITY.

START DATE 4/79 END DATE 4/79
HIGH PARTICULATE LOADING TESTS WERE DONE IN APRIL. THE ESP WAS TOTALLY SHUT DOWN. THE SO2 REMOVAL WAS NOT AFFECTED BUT THE GYPSUM PRODUCT WAS TEMPORARILY AFFECTED. HIGH CHLORIDE TESTS WERE ALSO PERFORMED BY ADDING CALCIUM CHLORIDE TO THE SYSTEM. A RESULTANT CONCENTRATION OF 6000 PPM CHLORIDE WAS FOUND IN THE UNDERFLOW. NO SIGNIFICANT SCALING WAS ENCOUNTERED.

SECTION 3
DESIGN AND PERFORMANCE DATA FOR OPERATIONAL FGD SYSTEMS

| | |
|---|---|
| COMPANY NAME | INDIANAPOLIS POWER & LIGHT |
| PLANT NAME | PETERSBURG |
| UNIT NUMBER | 3 |
| CITY | PETERSBURG |
| STATE | INDIANA |
| GROSS UNIT GENERATING CAPACITY - MW | 532.0 |
| NET UNIT GENERATING CAPACITY W/FGD - MW | 515.0 |
| EQUIVALENT SCRUBBED CAPACITY - MW | 532.0 |
| ** FUEL DATA | |
| FUEL TYPE | COAL |
| FUEL GRADE | BITUMINOUS |
| AVERAGE HEAT CONTENT - KJ/KG | 25004. ( 10750 BTU/LB) |
| AVERAGE ASH CONTENT - % | ******** |
| AVERAGE MOISTURE CONTENT - % | ******** |
| AVERAGE SULFUR CONTENT - % | 3.25 |
| AVERAGE CHLORIDE CONTENT - % | ******** |
| ** FGD SYSTEM | |
| GENERAL PROCESS TYPE | WET SCRUBBING |
| PROCESS TYPE | LIMESTONE |
| SYSTEM SUPPLIER | AIR CORRECTION DIVISION, UOP |
| NEW/RETROFIT | NEW |
| ENERGY CONSUMPTION - % | 2.4 |
| INITIAL START-UP DATE | 12/77 |
| COMMERCIAL START-UP DATE | 12/77 |
| $SO_2$ DESIGN REMOVAL EFFICIENCY - % | 85.00 |
| PARTICULATE DESIGN REMOVAL EFFICIENCY - % | 99.30 |
| ** WATER LOOP | |
| TYPE | CLOSED |
| FRESH MAKE-UP WATER - LITER/S | 55.6 ( 882 GPM) |
| ** DISPOSAL | |
| TYPE | UNLINED POND |

PERFORMANCE DATA

| PERIOD | MODULE | AVAILABILITY | OPERABILITY | RELIABILITY | UTILIZATION | % REMOVAL SO2 | % REMOVAL PART. | PER HOURS | BOILER HOURS | FGD HOURS | CAP. FACTOR |
|---|---|---|---|---|---|---|---|---|---|---|---|
| 2/79 | SYSTEM | | | | | | | 672 | | | |

** PROBLEMS/SOLUTIONS/COMMENTS

START DATE 2/79 END DATE 2/79
THE UTILIZATION FIGURES GIVEN BELOW ARE FOR THE PERIOD SEPTEMBER-DECEMBER 1

| | | | | | | | | | | | |
|---|---|---|---|---|---|---|---|---|---|---|---|
| 3/79 | A | | | | 31.2 | | | | | | |
| | B | | | | 30.0 | | | | | | |
| | C | | | | 48.0 | | | | | | |
| | D | | | | 48.0 | | | | | | |
| | SYSTEM | | | | 39.0 | | | 744 | | 715 | |

** PROBLEMS/SOLUTIONS/COMMENTS

START DATE 1/79 END DATE 3/79
THE FGD SYSTEM WAS DOWN FROM JANUARY 1 TO MARCH 15 DUE TO SEVERE WINTER WEATHER.

| | | | | | | | | | | | |
|---|---|---|---|---|---|---|---|---|---|---|---|
| 4/79 | SYSTEM | | | | | | | 722 | | | |

** PROBLEMS/SOLUTIONS/COMMENTS

START DATE 4/79 END DATE 5/79
DUE TO THE FORMER SHELL LINING PEELING AWAY, THE STEEL SHELL WAS SAND BLASTED AND RIGIFLAKE 4850 APPLYED BY TROWEL.

PERFORMANCE DATA

| PERIOD | MODULE | AVAILABILITY | OPERABILITY | RELIABILITY | UTILIZATION | % REMOVAL SO2 | % REMOVAL PART. | PER HOURS | BOILER HOURS | FGD HOURS | CAP. FACTOR |
|---|---|---|---|---|---|---|---|---|---|---|---|

START DATE 4/79 END DATE 5/79
ALL MIST ELIMINATORS WERE CLEANED DUE TO SEVERE SCALING PROBLEMS.

START DATE 4/79 END DATE 5/79
EXTENSIVE REPAIRS WERE MADE TO THE INLET DAMPERS. THE OUTLET DUCTS WERE LINED WITH RESISTIFLAKE 1150, AND MAJOR REPAIRS WERE MADE TO BONNETS BECAUSE OF ACID CORROSION.

START DATE 4/79 END DATE 5/79
THE SYSTEM HAS BEEN DOWN SINCE MID-MARCH FOR INSPECTION AND MAINTENANCE.

SECTION 3
DESIGN AND PERFORMANCE DATA FOR OPERATIONAL FGD SYSTEMS

| | |
|---|---|
| COMPANY NAME | KANSAS CITY POWER & LIGHT |
| PLANT NAME | HAWTHORN |
| UNIT NUMBER | 3 |
| CITY | KANSAS CITY |
| STATE | MISSOURI |
| GROSS UNIT GENERATING CAPACITY - MW | 90.0 |
| NET UNIT GENERATING CAPACITY W/FGD - MW | 85.0 |
| EQUIVALENT SCRUBBED CAPACITY - MW | 90.0 |
| ** FUEL DATA | |
| FUEL TYPE | COAL |
| FUEL GRADE | BITUMINOUS |
| AVERAGE HEAT CONTENT - KJ/KG | 22795. ( 9800 BTU/LB) |
| AVERAGE ASH CONTENT - % | 11.00 |
| AVERAGE MOISTURE CONTENT - % | ******** |
| AVERAGE SULFUR CONTENT - % | .60 |
| AVERAGE CHLORIDE CONTENT - % | ******** |
| ** FGD SYSTEM | |
| GENERAL PROCESS TYPE | WET SCRUBBING |
| PROCESS TYPE | LIME |
| SYSTEM SUPPLIER | COMBUSTION ENGINEERING |
| NEW/RETROFIT | RETROFIT |
| ENERGY CONSUMPTION % | 2.2 |
| INITIAL START-UP DATE | 11/72 |
| COMMERCIAL START-UP DATE | **/** |
| SO2 DESIGN REMOVAL EFFICIENCY - % | 70.00 |
| PARTICULATE DESIGN REMOVAL EFFICIENCY - % | 99.00 |
| ** WATER LOOP | |
| TYPE | CLOSED |
| FRESH MAKE-UP WATER - LITER/S | ******* (***** GPM) |
| ** TREATMENT | |
| TYPE | SOME STABILIZATION FROM FLYASH |
| ** DISPOSAL | |
| TYPE | UNLINED POND |

PERFORMANCE DATA

| PERIOD | MODULE | AVAILABILITY | OPERABILITY | RELIABILITY | UTILIZATION | % REMOVAL SO2 | % REMOVAL PART. | PER HOURS | BOILER HOURS | FGD HOURS | CAP. FACTOR |
|---|---|---|---|---|---|---|---|---|---|---|---|
| 2/79 | SYSTEM | | | | | | | 672 | | | |
| 3/79 | SYSTEM | | | | | | | 744 | | | |

** PROBLEMS/SOLUTIONS/COMMENTS

START DATE 1/79 END DATE 3/79
OPERATING INFORMATION IS STILL NOT AVAILABLE FOR UNIT 3

| | | | | | | | | | | | |
|---|---|---|---|---|---|---|---|---|---|---|---|
| 4/79 | SYSTEM | 18.0 | | | | | | 720 | 130 | 130 | 9.0 |

** PROBLEMS/SOLUTIONS/COMMENTS

START DATE 4/79 END DATE 4/79
THE BOILER WAS DOWN IN APRIL FOR 543 HOURS FOR TURBINE OVERHAUL.

| | | | | | | | | | | | |
|---|---|---|---|---|---|---|---|---|---|---|---|
| 5/79 | SYSTEM | 55.0 | | | | | | 744 | 409 | 409 | 29.0 |

** PROBLEMS/SOLUTIONS/COMMENTS

START DATE 5/79 END DATE 5/79
IN MAY THE OUTAGE TIME WAS DUE TO BOILER TUBE LEAKS.

## SECTION 3
## DESIGN AND PERFORMANCE DATA FOR OPERATIONAL FGD SYSTEMS

| | |
|---|---|
| COMPANY NAME | KANSAS CITY POWER & LIGHT |
| PLANT NAME | HAWTHORN |
| UNIT NUMBER | 4 |
| CITY | KANSAS CITY |
| STATE | MISSOURI |
| GROSS UNIT GENERATING CAPACITY - MW | 90.0 |
| NET UNIT GENERATING CAPACITY W/FGD - MW | 85.0 |
| EQUIVALENT SCRUBBED CAPACITY - MW | 90.0 |
| ** FUEL DATA | |
| FUEL TYPE | COAL |
| FUEL GRADE | BITUMINOUS |
| AVERAGE HEAT CONTENT - KJ/KG | 22795. ( 9800 BTU/LB) |
| AVERAGE ASH CONTENT - % | 11.00 |
| AVERAGE MOISTURE CONTENT - % | ******** |
| AVERAGE SULFUR CONTENT - % | .60 |
| AVERAGE CHLORIDE CONTENT - % | ******** |
| ** FGD SYSTEM | |
| GENERAL PROCESS TYPE | WET SCRUBBING |
| PROCESS TYPE | LIME |
| SYSTEM SUPPLIER | COMBUSTION ENGINEERING |
| NEW/RETROFIT | RETROFIT |
| ENERGY CONSUMPTION - % | 2.2 |
| INITIAL START-UP DATE | 8/72 |
| COMMERCIAL START-UP DATE | **/** |
| SO2 DESIGN REMOVAL EFFICIENCY - % | 70.00 |
| PARTICULATE DESIGN REMOVAL EFFICIENCY - % | 99.00 |
| ** WATER LOOP | |
| TYPE | CLOSED |
| FRESH MAKE-UP WATER - LITER/S | ******* (***** GPM) |
| ** TREATMENT | |
| TYPE | SOME STABILIZATION FROM FLYASH |
| ** DISPOSAL | |
| TYPE | UNLINED POND |

### PERFORMANCE DATA

| PERIOD | MODULE | AVAILABILITY | OPERABILITY | RELIABILITY | UTILIZATION | % REMOVAL SO2 | % REMOVAL PART. | PER HOURS | BOILER HOURS | FGD HOURS | CAP. FACTOR |
|---|---|---|---|---|---|---|---|---|---|---|---|
| 2/79 | SYSTEM | | | | | | | 672 | | | |
| 3/79 | SYSTEM | | | | | | | 744 | | | |

** PROBLEMS/SOLUTIONS/COMMENTS

START DATE 1/79 END DATE 3/79
OPERATING INFORMATION FOR UNIT 4 IS STILL NOT AVAILABLE.

| | | | | | | | | | | | |
|---|---|---|---|---|---|---|---|---|---|---|---|
| 4/79 | SYSTEM | 57.0 | | | | | | 720 | 410 | 410 | 30.0 |

** PROBLEMS/SOLUTIONS/COMMENTS

START DATE 4/79 END DATE 4/79
AN EXCITER FAILURE ON THE GENERATOR CAUSED THE APRIL OUTAGE TIME.

| | | | | | | | | | | | |
|---|---|---|---|---|---|---|---|---|---|---|---|
| 5/79 | SYSTEM | 94.0 | | | | | | 744 | 699 | 699 | 49.0 |

** PROBLEMS/SOLUTIONS/COMMENTS

START DATE 5/79 END DATE 5/79
MAY OUTAGE TIME WAS FOR SCRUBBER CLEANING AND GENERAL MAINTENANCE.

SECTION 3
DESIGN AND PERFORMANCE DATA FOR OPERATIONAL FGD SYSTEMS

| | |
|---|---|
| COMPANY NAME | KANSAS CITY POWER & LIGHT |
| PLANT NAME | LA CYGNE |
| UNIT NUMBER | 1 |
| CITY | LA CYGNE |
| STATE | KANSAS |
| GROSS UNIT GENERATING CAPACITY - MW | 874.0 |
| NET UNIT GENERATING CAPACITY W/FGD - MW | 820.0 |
| EQUIVALENT SCRUBBED CAPACITY - MW | 874.0 |
| ** FUEL DATA | |
| FUEL TYPE | COAL |
| FUEL GRADE | SUBBITUMINOUS |
| AVERAGE HEAT CONTENT - KJ/KG | 21913. ( 9421 BTU/LB) |
| AVERAGE ASH CONTENT - % | 24.36 |
| AVERAGE MOISTURE CONTENT - % | 8.60 |
| AVERAGE SULFUR CONTENT - % | 5.39 |
| AVERAGE CHLORIDE CONTENT - % | .03 |
| ** FGD SYSTEM | |
| GENERAL PROCESS TYPE | WET SCRUBBING |
| PROCESS TYPE | LIMESTONE |
| SYSTEM SUPPLIER | BABCOCK & WILCOX |
| NEW/RETROFIT | NEW |
| ENERGY CONSUMPTION - % | 2.7 |
| INITIAL START-UP DATE | 2/73 |
| COMMERCIAL START-UP DATE | 6/73 |
| $SO_2$ DESIGN REMOVAL EFFICIENCY - % | 80.00 |
| PARTICULATE DESIGN REMOVAL EFFICIENCY - % | 99.50 |
| ** WATER LOOP | |
| TYPE | OPEN |
| FRESH MAKE-UP WATER - LITER/S | 72.3 ( 1148 GPM) |
| ** DISPOSAL | |
| TYPE | UNLINED POND |

PERFORMANCE DATA

| PERIOD | MODULE | AVAILABILITY | OPERABILITY | RELIABILITY | UTILIZATION | % REMOVAL SO2 | % REMOVAL PART. | PER HOURS | BOILER HOURS | FGD HOURS | CAP. FACTOR |
|---|---|---|---|---|---|---|---|---|---|---|---|
| 2/79 | A | 95.0 | | | | | | | | | |
| | B | 94.6 | | | | | | | | | |
| | C | 92.6 | | | | | | | | | |
| | D | 93.5 | | | | | | | | | |
| | E | 95.1 | | | | | | | | | |
| | F | 94.3 | | | | | | | | | |
| | G | 94.1 | | | | | | | | | |
| | H | 93.8 | | | | | | | | | |
| | SYSTEM | 94.1 | | | | | | 672 | 342 | | |
| 3/79 | A | 96.1 | | | | | | | | | |
| | B | 96.0 | | | | | | | | | |
| | C | 93.2 | | | | | | | | | |
| | D | 95.6 | | | | | | | | | |
| | E | 96.5 | | | | | | | | | |
| | F | 94.8 | | | | | | | | | |
| | G | 95.7 | | | | | | | | | |
| | H | 93.4 | | | | | | | | | |
| | SYSTEM | 95.2 | | | | | | 744 | 314 | | |
| 4/79 | A | 95.5 | | | | | | | | | |
| | B | 95.7 | | | | | | | | | |
| | C | 94.4 | | | | | | | | | |
| | D | 91.4 | | | | | | | | | |
| | E | 95.5 | | | | | | | | | |
| | F | 96.2 | | | | | | | | | |

PERFORMANCE DATA

| PERIOD | MODULE | AVAILABILITY | OPERABILITY | RELIABILITY | UTILIZATION | % REMOVAL SO2 | % REMOVAL PART. | PER HOURS | BOILER HOURS | FGD HOURS | CAP. FACTOR |
|---|---|---|---|---|---|---|---|---|---|---|---|
| | G | 95.9 | | | | | | | | | |
| | H | 95.7 | | | | | | | | | |
| | SYSTEM | 95.0 | | | | | | 720 | 638 | | |

** PROBLEMS/SOLUTIONS/COMMENTS

START DATE 2/79 END DATE 3/79
NO MAJOR FGD SYSTEM PROBLEMS WERE REPORTED BY THE UTILITY FOR FEBRUARY OR MARCH.

START DATE 2/79 END DATE 3/79
THE UTILITY HAS REPORTED THAT MANY TUBE LEAKS AND CYCLONE LEAKS WERE EXPERIENCED WITH THE BOILER.

SECTION 3
DESIGN AND PERFORMANCE DATA FOR OPERATIONAL FGD SYSTEMS

| | |
|---|---|
| COMPANY NAME | KANSAS POWER & LIGHT |
| PLANT NAME | JEFFREY |
| UNIT NUMBER | 1 |
| CITY | WAMEGO |
| STATE | KANSAS |
| GROSS UNIT GENERATING CAPACITY - MW | 720.0 |
| NET UNIT GENERATING CAPACITY W/FGD - MW | 680.0 |
| EQUIVALENT SCRUBBED CAPACITY - MW | 540.0 |
| ** FUEL DATA | |
| FUEL TYPE | COAL |
| FUEL GRADE | ****** |
| AVERAGE HEAT CONTENT - KJ/KG | 18899. ( 8125 BTU/LB) |
| AVERAGE ASH CONTENT - % | 5.80 |
| AVERAGE MOISTURE CONTENT - % | 30.00 |
| AVERAGE SULFUR CONTENT - % | .32 |
| AVERAGE CHLORIDE CONTENT - % | .01 |
| ** FGD SYSTEM | |
| GENERAL PROCESS TYPE | WET SCRUBBING |
| PROCESS TYPE | LIMESTONE |
| SYSTEM SUPPLIER | COMBUSTION ENGINEERING |
| NEW/RETROFIT | NEW |
| ENERGY CONSUMPTION - % | ******* |
| INITIAL START-UP DATE | 8/78 |
| COMMERCIAL START-UP DATE | 8/78 |
| SO2 DESIGN REMOVAL EFFICIENCY - % | 80.00 |
| PARTICULATE DESIGN REMOVAL EFFICIENCY - % | 99.00 |
| ** WATER LOOP | |
| TYPE | CLOSED |
| FRESH MAKE-UP WATER - LITER/S | 35.1 ( 557 GPM) |
| ** TREATMENT | |
| TYPE | NON-PROPRIETARY |
| ** DISPOSAL | |
| TYPE | UNLINED POND |

PERFORMANCE DATA

| PERIOD | MODULE | AVAILABILITY | OPERABILITY | RELIABILITY | UTILIZATION | % REMOVAL SO2 | % REMOVAL PART. | PER HOURS | BOILER HOURS | FGD HOURS | CAP. FACTOR |
|---|---|---|---|---|---|---|---|---|---|---|---|
| 2/79 | SYSTEM | | | | | | | 672 | | | |
| 3/79 | SYSTEM | | | | | | | 744 | | | |
| 4/79 | SYSTEM | | | | | | | 720 | 0 | 0 | .0 |
| 5/79 | SYSTEM | | | | | | | 744 | 0 | 0 | .0 |

** PROBLEMS/SOLUTIONS/COMMENTS

START DATE 4/79 END DATE 5/79
THE BOILER WAS SHUT DOWN FOR WARRANTY INSPECTION ON APRIL 1 AND REMAINED OUT OF SERVICE DURING MAY.

SECTION 3
DESIGN AND PERFORMANCE DATA FOR OPERATIONAL FGD SYSTEMS

| | |
|---|---|
| COMPANY NAME | KANSAS POWER & LIGHT |
| PLANT NAME | LAWRENCE |
| UNIT NUMBER | 4 |
| CITY | LAWRENCE |
| STATE | KANSAS |
| GROSS UNIT GENERATING CAPACITY - MW | 125.0 |
| NET UNIT GENERATING CAPACITY W/FGD - MW | 115.0 |
| EQUIVALENT SCRUBBED CAPACITY - MW | 125.0 |
| ** FUEL DATA | |
| FUEL TYPE | COAL |
| FUEL GRADE | ****** |
| AVERAGE HEAT CONTENT - KJ/KG | 23260. ( 10000 BTU/LB) |
| AVERAGE ASH CONTENT - % | 9.80 |
| AVERAGE MOISTURE CONTENT - % | ******** |
| AVERAGE SULFUR CONTENT - % | .55 |
| AVERAGE CHLORIDE CONTENT - % | .03 |
| ** FGD SYSTEM | |
| GENERAL PROCESS TYPE | WET SCRUBBING |
| PROCESS TYPE | LIMESTONE |
| SYSTEM SUPPLIER | COMBUSTION ENGINEERING |
| NEW/RETROFIT | RETROFIT |
| ENERGY CONSUMPTION - % | ******* |
| INITIAL START-UP DATE | 1/76 |
| COMMERCIAL START-UP DATE | **/** |
| SO2 DESIGN REMOVAL EFFICIENCY - % | 73.00 |
| PARTICULATE DESIGN REMOVAL EFFICIENCY - % | 98.90 |
| ** WATER LOOP | |
| TYPE | CLOSED |
| FRESH MAKE-UP WATER - LITER/S | ******* (***** GPM) |
| ** TREATMENT | |
| TYPE | NONPROPRIETARY; FORCED OXIDATION WITH AIR |
| ** DISPOSAL | |
| TYPE | UNLINED POND |

PERFORMANCE DATA

| PERIOD | MODULE | AVAILABILITY | OPERABILITY | RELIABILITY | UTILIZATION | % REMOVAL SO2 | % REMOVAL PART. | PER HOURS | BOILER HOURS | FGD HOURS | CAP. FACTOR |
|---|---|---|---|---|---|---|---|---|---|---|---|
| 3/79 | SYSTEM | | | | | | | 744 | | | |
| 4/79 | SYSTEM | | | | | | | 720 | | | |

** PROBLEMS/SOLUTIONS/COMMENTS

START DATE 2/79 END DATE 4/79
UNIT 4 EXPERIENCED A MOTOR FAILURE ON AN I.D. FAN DURING THE FEBRUARY-MARCH PERIOD.

SECTION 3
DESIGN AND PERFORMANCE DATA FOR OPERATIONAL FGD SYSTEMS

| | |
|---|---|
| COMPANY NAME | KANSAS POWER & LIGHT |
| PLANT NAME | LAWRENCE |
| UNIT NUMBER | 5 |
| CITY | LAWRENCE |
| STATE | KANSAS |
| GROSS UNIT GENERATING CAPACITY - MW | 420.0 |
| NET UNIT GENERATING CAPACITY W/FGD - MW | 400.0 |
| EQUIVALENT SCRUBBED CAPACITY - MW | 420.0 |
| ** FUEL DATA | |
| FUEL TYPE | COAL |
| FUEL GRADE | ****** |
| AVERAGE HEAT CONTENT - KJ/KG | 23260. ( 10000 BTU/LB) |
| AVERAGE ASH CONTENT - % | 9.80 |
| AVERAGE MOISTURE CONTENT - % | ******** |
| AVERAGE SULFUR CONTENT - % | .55 |
| AVERAGE CHLORIDE CONTENT - % | .03 |
| ** FGD SYSTEM | |
| GENERAL PROCESS TYPE | WET SCRUBBING |
| PROCESS TYPE | LIMESTONE |
| SYSTEM SUPPLIER | COMBUSTION ENGINEERING |
| NEW/RETROFIT | RETROFIT |
| ENERGY CONSUMPTION - % | ******* |
| INITIAL START-UP DATE | 11/71 |
| COMMERCIAL START-UP DATE | **/** |
| SO2 DESIGN REMOVAL EFFICIENCY - % | 52.00 |
| PARTICULATE DESIGN REMOVAL EFFICIENCY - % | 98.90 |
| ** WATER LOOP | |
| TYPE | CLOSED |
| FRESH MAKE-UP WATER - LITER/S | ******* (***** GPM) |
| ** TREATMENT | |
| TYPE | NONPROPRIETARY; FORCED OXIDATION WITH AIR |
| ** DISPOSAL | |
| TYPE | UNLINED POND |

PERFORMANCE DATA

| PERIOD | MODULE | AVAILABILITY | OPERABILITY | RELIABILITY | UTILIZATION | % REMOVAL SO2 | % REMOVAL PART. | PER HOURS | BOILER HOURS | FGD HOURS | CAP. FACTOR |
|---|---|---|---|---|---|---|---|---|---|---|---|
| 2/79 | SYSTEM | | | | | | | 672 | | | |
| 3/79 | SYSTEM | | | | | | | 744 | | | |
| 4/79 | SYSTEM | | | | | | | 720 | | | |
| 5/79 | SYSTEM | | | | | | | 744 | | | |

** PROBLEMS/SOLUTIONS/COMMENTS

START DATE 5/79 END DATE 5/79
THE UNIT WAS BROUGHT DOWN TO 1/2 CAPACITY FOR A SCHEDULED 3 WEEK OUTAGE TO REBUILD AN AIR PREHEATER FAN MOTOR.

## SECTION 3
## DESIGN AND PERFORMANCE DATA FOR OPERATIONAL FGD SYSTEMS

| | |
|---|---|
| COMPANY NAME | KENTUCKY UTILITIES |
| PLANT NAME | GREEN RIVER |
| UNIT NUMBER | 1-3 |
| CITY | CENTRAL CITY |
| STATE | KENTUCKY |
| GROSS UNIT GENERATING CAPACITY - MW | 64.0 |
| NET UNIT GENERATING CAPACITY W/FGD - MW | 60.0 |
| EQUIVALENT SCRUBBED CAPACITY - MW | 64.0 |
| ** FUEL DATA | |
| FUEL TYPE | COAL |
| FUEL GRADE | BITUMINOUS |
| AVERAGE HEAT CONTENT - KJ/KG | 25586. ( 11000 BTU/LB) |
| AVERAGE ASH CONTENT - % | 13.40 |
| AVERAGE MOISTURE CONTENT - % | 12.10 |
| AVERAGE SULFUR CONTENT - % | 4.00 |
| AVERAGE CHLORIDE CONTENT - % | ******** |
| ** FGD SYSTEM | |
| GENERAL PROCESS TYPE | WET SCRUBBING |
| PROCESS TYPE | LIME |
| SYSTEM SUPPLIER | AMERICAN AIR FILTER |
| NEW/RETROFIT | RETROFIT |
| ENERGY CONSUMPTION - % | 3.1 |
| INITIAL START-UP DATE | 9/75 |
| COMMERCIAL START-UP DATE | 6/76 |
| SO2 DESIGN REMOVAL EFFICIENCY - % | 80.00 |
| PARTICULATE DESIGN REMOVAL EFFICIENCY - % | 99.50 |
| ** WATER LOOP | |
| TYPE | CLOSED |
| FRESH MAKE-UP WATER - LITER/S | 4.7 ( 75 GPM) |
| ** DISPOSAL | |
| TYPE | LINED POND |

### PERFORMANCE DATA

| PERIOD | MODULE | AVAILABILITY | OPERABILITY | RELIABILITY | UTILIZATION | % REMOVAL SO2 | % REMOVAL PART. | PER HOURS | BOILER HOURS | FGD HOURS | CAP. FACTOR |
|---|---|---|---|---|---|---|---|---|---|---|---|
| 2/79 | SYSTEM | .0 | | .0 | .0 | | | 672 | 0 | 0 | .0 |
| | ** PROBLEMS/SOLUTIONS/COMMENTS | | | | | | | | | | |
| | START DATE 1/79 END DATE 2/79 THE PROBLEMS IN JANUARY AND FEBRUARY WERE A RESULT OF FREEZING WEATHER. | | | | | | | | | | |
| 3/79 | SYSTEM | 11.2 | 100.0 | 100.0 | 11.2 | | | 744 | 83 | 83 | |
| | ** PROBLEMS/SOLUTIONS/COMMENTS | | | | | | | | | | |
| | START DATE 3/79 END DATE 4/79 THE LOW OPERATIONAL HOURS FOR MARCH AND APRIL DUE TO RECYCLE PUMP PROBLEMS. | | | | | | | | | | |
| 4/79 | | 18.2 | 100.0 | 100.0 | 18.2 | | | | | | |
| | SYSTEM | | | | | | | 720 | 131 | | |
| 5/79 | | .0 | | .0 | .0 | | | | | | |
| | SYSTEM | | | | | | | 744 | 0 | | .0 |
| | ** PROBLEMS/SOLUTIONS/COMMENTS | | | | | | | | | | |
| | START DATE 5/79 END DATE 5/79 THE BOILER WAS TAKEN DOWN IN MAY FOR REPAIRS THAT IS PROJECTED TO LAST THROUGH THE END OF SEPTEMBER. | | | | | | | | | | |

SECTION 3
DESIGN AND PERFORMANCE DATA FOR OPERATIONAL FGD SYSTEMS

| | |
|---|---|
| COMPANY NAME | LOUISVILLE GAS & ELECTRIC |
| PLANT NAME | CANE RUN |
| UNIT NUMBER | 4 |
| CITY | LOUISVILLE |
| STATE | KENTUCKY |
| GROSS UNIT GENERATING CAPACITY - MW | 189.0 |
| NET UNIT GENERATING CAPACITY W/FGD - MW | 175.0 |
| EQUIVALENT SCRUBBED CAPACITY - MW | 188.0 |
| ** FUEL DATA | |
| FUEL TYPE | COAL |
| FUEL GRADE | BITUMINOUS |
| AVERAGE HEAT CONTENT - KJ/KG | 26749. ( 11500 BTU/LB) |
| AVERAGE ASH CONTENT - % | 17.10 |
| AVERAGE MOISTURE CONTENT - % | 9.00 |
| AVERAGE SULFUR CONTENT - % | 3.75 |
| AVERAGE CHLORIDE CONTENT - % | .04 |
| ** FGD SYSTEM | |
| GENERAL PROCESS TYPE | WET SCRUBBING |
| PROCESS TYPE | LIME |
| SYSTEM SUPPLIER | AMERICAN AIR FILTER |
| NEW/RETROFIT | RETROFIT |
| ENERGY CONSUMPTION - % | 1.6 |
| INITIAL START-UP DATE | 8/76 |
| COMMERCIAL START-UP DATE | 9/77 |
| SO2 DESIGN REMOVAL EFFICIENCY - % | 85.00 |
| PARTICULATE DESIGN REMOVAL EFFICIENCY - % | 99.00 |
| ** WATER LOOP | |
| TYPE | OPEN |
| FRESH MAKE-UP WATER - LITER/S | 6.3 ( 100 GPM) |
| ** DISPOSAL | |
| TYPE | LINED POND |

PERFORMANCE DATA

| PERIOD | MODULE | AVAILABILITY | OPERABILITY | RELIABILITY | UTILIZATION | % REMOVAL SO2 | % REMOVAL PART. | PER HOURS | BOILER HOURS | FGD HOURS | CAP. FACTOR |
|---|---|---|---|---|---|---|---|---|---|---|---|
| 2/79 | SYSTEM | 100.0 | | | | | | 672 | 0 | | |
| 3/79 | SYSTEM | 100.0 | | | | | | 744 | 0 | | |
| 4/79 | SYSTEM | 100.0 | | | | | | 720 | 0 | | |

** PROBLEMS/SOLUTIONS/COMMENTS

START DATE 2/79 END DATE 4/79
THE UNIT DID NOT OPERATE DURING THESE MONTHS BECAUSE THE BOILER WAS STILL DOWN WITH TUBE LEAKS.

SECTION 3
DESIGN AND PERFORMANCE DATA FOR OPERATIONAL FGD SYSTEMS

| | |
|---|---|
| COMPANY NAME | LOUISVILLE GAS & ELECTRIC |
| PLANT NAME | CANE RUN |
| UNIT NUMBER | 5 |
| CITY | LOUISVILLE |
| STATE | KENTUCKY |
| GROSS UNIT GENERATING CAPACITY - MW | 190.0 |
| NET UNIT GENERATING CAPACITY W/FGD - MW | 180.0 |
| EQUIVALENT SCRUBBED CAPACITY - MW | 190.0 |
| ** FUEL DATA | |
| FUEL TYPE | COAL |
| FUEL GRADE | BITUMINOUS |
| AVERAGE HEAT CONTENT - KJ/KG | 26749. ( 11500 BTU/LB) |
| AVERAGE ASH CONTENT - % | 17.10 |
| AVERAGE MOISTURE CONTENT - % | 9.00 |
| AVERAGE SULFUR CONTENT - % | 3.75 |
| AVERAGE CHLORIDE CONTENT - % | .04 |
| ** FGD SYSTEM | |
| GENERAL PROCESS TYPE | WET SCRUBBING |
| PROCESS TYPE | LIME |
| SYSTEM SUPPLIER | COMBUSTION ENGINEERING |
| NEW/RETROFIT | RETROFIT |
| ENERGY CONSUMPTION - % | 1.6 |
| INITIAL START-UP DATE | 12/77 |
| COMMERCIAL START-UP DATE | 5/79 |
| SO2 DESIGN REMOVAL EFFICIENCY - % | 85.00 |
| PARTICULATE DESIGN REMOVAL EFFICIENCY - % | 99.00 |
| ** WATER LOOP | |
| TYPE | OPEN |
| FRESH MAKE-UP WATER - LITER/S | ******* (***** GPM) |
| ** DISPOSAL | |
| TYPE | LINED POND |

PERFORMANCE DATA

| PERIOD | MODULE | AVAILABILITY | OPERABILITY | RELIABILITY | UTILIZATION | % REMOVAL SO2 | % REMOVAL PART. | PER HOURS | BOILER HOURS | FGD HOURS | CAP. FACTOR |
|---|---|---|---|---|---|---|---|---|---|---|---|
| 2/79 | SYSTEM | 70.6 | | | 50.1 | | | 672 | 477 | 337 | |

** PROBLEMS/SOLUTIONS/COMMENTS

START DATE 2/79 END DATE 2/79
DURING FEBRUARY FREEZING CAUSED PROBLEMS WITH LIME DELIVERY.

| | | | | | | | | | | | |
|---|---|---|---|---|---|---|---|---|---|---|---|
| 3/79 | SYSTEM | | 71.8 | | 57.5 | | | 744 | 596 | 428 | |
| 4/79 | SYSTEM | | 99.2 | | 49.6 | | | 720 | 360 | 357 | |

** PROBLEMS/SOLUTIONS/COMMENTS

START DATE 2/79 END DATE 4/79
SOME PROBLEMS WERE EXPERIENCED WITH DAMPERS AND THERE WERE PUMP FAILURES.

SECTION 3
DESIGN AND PERFORMANCE DATA FOR OPERATIONAL FGD SYSTEMS

| | | |
|---|---|---|
| COMPANY NAME | LOUISVILLE GAS & ELECTRIC | |
| PLANT NAME | CANE RUN | |
| UNIT NUMBER | 6 | |
| CITY | LOUISVILLE | |
| STATE | KENTUCKY | |
| REGULATORY CLASSIFICATION | A | |
| PARTICULATE EMISSION LIMITATION - NG/J | 50. | ( .116 LB/MMBTU) |
| SO2 EMISSION LIMITATION - NG/J | 516. | ( 1.200 LB/MMBTU) |
| NET PLANT GENERATING CAPACITY - MW | 992.0 | |
| GROSS UNIT GENERATING CAPACITY - MW | 288.0 | |
| NET UNIT GENERATING CAPACITY W/FGD - MW | 269.0 | |
| NET UNIT GENERATING CAPACITY WO/FGD - MW | 272.0 | |
| EQUIVALENT SCRUBBED CAPACITY - MW | 288.0 | |
| ** BOILER DATA | | |
| SUPPLIER | COMBUSTION ENGINEERING | |
| TYPE | PULVERIZED COAL | |
| SERVICE LOAD | BASE | |
| COMMERCIAL SERVICE DATE | 0/69 | |
| MAXIMUM BOILER FLUE GAS FLOW - CU.M/S | 459.63 | ( 974000 ACFM) |
| FLUE GAS TEMPERATURE - C | 148.9 | ( 300 F) |
| STACK HEIGHT - M | ****** | (**** FT) |
| STACK TOP DIAMETER - M | ******* | (***** FT) |
| ** FUEL DATA | | |
| FUEL TYPE | COAL | |
| FUEL GRADE | BITUMINOUS | |
| AVERAGE HEAT CONTENT - KJ/KG | 26749. | ( 11500 BTU/LB) |
| RANGE HEAT CONTENT - BTU/LB | | 10,400-11,900 |
| AVERAGE ASH CONTENT - % | 17.10 | |
| RANGE ASH CONTENT - % | 15.5-24.5 | |
| AVERAGE MOISTURE CONTENT - % | 9.00 | |
| RANGE MOISTURE CONTENT - % | 8.0-10.75 | |
| AVERAGE SULFUR CONTENT - % | 3.75 | |
| RANGE SULFUR CONTENT - % | 3.5-4.0 | |
| AVERAGE CHLORIDE CONTENT - % | .04 | |
| RANGE CHLORIDE CONTENT - % | 0.03-0.06 | |
| FUEL FIRING RATE - M T/H | ******* | (*** TPH) |
| FUEL FIRING RATE - MW | ***** | |
| ** ESP | | |
| NUMBER | 1 | |
| ** FGD SYSTEM | | |
| SALEABLE PRODUCT/THROWAWAY PRODUCT | THROWAWAY PRODUCT | |
| GENERAL PROCESS TYPE | WET SCRUBBING | |
| PROCESS TYPE | DUAL ALKALI | |
| SYSTEM SUPPLIER | ADL/COMBUSTION EQUIP ASSOCIATE | |
| DEVELOPMENT LEVEL | FULL-SCALE DEMONSTRATION | |
| NEW/RETROFIT | RETROFIT | |
| SO2 DESIGN REMOVAL EFFICIENCY - % | 95.00 | |
| INITIAL START-UP | 3/79 | |
| CONTRACT AWARDED | 10/76 | |
| ** ABSORBER | | |
| NUMBER | 2 | |
| TYPE | TRAY TOWER | |
| INITIAL START UP | 12/78 | |
| SUPPLIER | COMBUSTION EQUIPMENT ASSOCIATES | |
| NUMBER OF STAGES | 2 | |
| BOILER LOAD/ABSORBER - % | 60.0 | |
| GAS TEMPERATURE - C | 80.0 | ( 176 F) |
| L/G RATIO - L/CU.M | 1.3 | ( 10.0 GAL/1000ACF) |
| SUPERFICAL GAS VELOCITY - M/SEC | 2.7 | ( 9.0 FT/S) |
| SO2 INLET CONCENTRATION - PPM | 3471 | |
| SO2 OUTLET CONTRATION - PPM | 200 | |
| ** FANS | | |
| NUMBER | 2 | |
| TYPE | BOOSTER | |

LOUISVILLE GAS & ELECTRIC (CONT.)

** VACUUM FILTER

| | |
|---|---|
| NUMBER | 3 |
| TYPE | ROTARY-DRUM WITH WATER WASH |

** PUMPS

| SERVICE | NUMBER |
|---|---|
| REACTOR PUMP | 2 |

** TANKS

| SERVICE | NUMBER |
|---|---|
| PRIMARY REACTION TANK | 2 |
| SECONDARY REACTION TANK | 2 |
| FEED FORWARD TANK | **** |
| FILTRATE SUMP | **** |

** THICKENER

| | | |
|---|---|---|
| NUMBER | 1 | |
| CONSTRUCTION MATERIAL | CONCRETE | |
| DIAMETER - M | 38.1 | (125 FT) |
| OUTLET SOLIDS - % | 25.0 | |

** WATER LOOP

| | |
|---|---|
| TYPE | OPEN |

** DISPOSAL

| | |
|---|---|
| NATURE | FINAL |
| TYPE | LINED POND |
| LOCATION | ON SITE |

PERFORMANCE DATA

| PERIOD | MODULE | AVAILABILITY | OPERABILITY | RELIABILITY | UTILIZATION | % REMOVAL SO2 | % REMOVAL PART. | PER HOURS | BOILER HOURS | FGD HOURS | CAP. FACTOR |
|---|---|---|---|---|---|---|---|---|---|---|---|
| 4/79 | SYSTEM | 43.3 | | | 37.9 | | | 62 | 475 | 237 | |

** PROBLEMS/SOLUTIONS/COMMENTS

START DATE 4/79 END DATE 4/79
THIS UNIT STARTED OPERATING ON APRIL 4, 1979. COMPLIANCE TESTING IS SCHEDULED FOR THE WEEK OF JUNE 3.

SECTION 3
DESIGN AND PERFORMANCE DATA FOR OPERATIONAL FGD SYSTEMS

| | |
|---|---|
| COMPANY NAME | LOUISVILLE GAS & ELECTRIC |
| PLANT NAME | MILL CREEK |
| UNIT NUMBER | 3 |
| CITY | LOUISVILLE |
| STATE | KENTUCKY |
| GROSS UNIT GENERATING CAPACITY - MW | 442.0 |
| NET UNIT GENERATING CAPACITY W/FGD - MW | 420.0 |
| EQUIVALENT SCRUBBED CAPACITY - MW | 442.0 |
| ** FUEL DATA | |
| FUEL TYPE | COAL |
| FUEL GRADE | BITUMINOUS |
| AVERAGE HEAT CONTENT - KJ/KG | 26749. ( 11500 BTU/LB) |
| AVERAGE ASH CONTENT - % | 11.50 |
| AVERAGE MOISTURE CONTENT - % | ******** |
| AVERAGE SULFUR CONTENT - % | 3.75 |
| AVERAGE CHLORIDE CONTENT - % | ******** |
| ** FGD SYSTEM | |
| GENERAL PROCESS TYPE | WET SCRUBBING |
| PROCESS TYPE | LIME |
| SYSTEM SUPPLIER | AMERICAN AIR FILTER |
| NEW/RETROFIT | NEW |
| ENERGY CONSUMPTION % | 1.6 |
| INITIAL START-UP DATE | 8/78 |
| COMMERCIAL START-UP DATE | 3/79 |
| SO2 DESIGN REMOVAL EFFICIENCY - % | 85.00 |
| PARTICULATE DESIGN REMOVAL EFFICIENCY - % | 99.00 |
| ** WATER LOOP | |
| TYPE | OPEN |
| FRESH MAKE-UP WATER - LITER/S | 9.4 ( 150 GPM) |
| ** TREATMENT | |
| TYPE | FLYASH AND LIME STABILIZED |
| ** DISPOSAL | |
| TYPE | SLUDGE POND |

PERFORMANCE DATA

| PERIOD | MODULE | AVAILABILITY | OPERABILITY | RELIABILITY | UTILIZATION | % REMOVAL SO2 | % REMOVAL PART. | PER HOURS | BOILER HOURS | FGD HOURS | CAP. FACTOR |
|---|---|---|---|---|---|---|---|---|---|---|---|
| 2/79 | SYSTEM | 18.0 | | | 17.4 | | | 672 | 651 | 117 | |
| 3/79 | SYSTEM | 53.1 | | | 52.4 | | | 744 | 735 | 390 | |

** PROBLEMS/SOLUTIONS/COMMENTS

START DATE 3/79 END DATE 3/79
COMPLIANCE TESTING WAS PERFORMED DURING MARCH AND THE UNIT WAS DECLARED COMMERCIAL.

| | | | | | | | | | | | |
|---|---|---|---|---|---|---|---|---|---|---|---|
| 4/79 | SYSTEM | 63.6 | | | 44.4 | | | 720 | 503 | 320 | |

** PROBLEMS/SOLUTIONS/COMMENTS

START DATE 2/79 END DATE 4/79
THE ONLY PROBLEMS REPORTED WERE DAMPERS AND PUMP FAILURES.

SECTION 3
DESIGN AND PERFORMANCE DATA FOR OPERATIONAL FGD SYSTEMS

| | |
|---|---|
| COMPANY NAME | LOUISVILLE GAS & ELECTRIC |
| PLANT NAME | PADDY'S RUN |
| UNIT NUMBER | 6 |
| CITY | LOUISVILLE |
| STATE | KENTUCKY |
| GROSS UNIT GENERATING CAPACITY - MW | 72.0 |
| NET UNIT GENERATING CAPACITY W/FGD - MW | 67.0 |
| EQUIVALENT SCRUBBED CAPACITY - MW | 72.0 |
| ** FUEL DATA | |
| FUEL TYPE | COAL |
| FUEL GRADE | ****** |
| AVERAGE HEAT CONTENT - KJ/KG | 26749. ( 11500 BTU/LB) |
| AVERAGE ASH CONTENT - % | 11.50 |
| AVERAGE MOISTURE CONTENT - % | ******** |
| AVERAGE SULFUR CONTENT - % | 2.50 |
| AVERAGE CHLORIDE CONTENT - % | ******** |
| ** FGD SYSTEM | |
| GENERAL PROCESS TYPE | WET SCRUBBING |
| PROCESS TYPE | LIME |
| SYSTEM SUPPLIER | COMBUSTION ENGINEERING |
| NEW/RETROFIT | RETROFIT |
| ENERGY CONSUMPTION - % | 2.8 |
| INITIAL START-UP DATE | 4/73 |
| COMMERCIAL START-UP DATE | **/** |
| SO2 DESIGN REMOVAL EFFICIENCY - % | 90.00 |
| PARTICULATE DESIGN REMOVAL EFFICIENCY - % | 99.10 |
| ** WATER LOOP | |
| TYPE | CLOSED |
| FRESH MAKE-UP WATER - LITER/S | 3.1 ( 50 GPM) |
| ** TREATMENT | |
| TYPE | FIXATION WITH LIME |
| ** DISPOSAL | |
| TYPE | UNLINED POND |

PERFORMANCE DATA

| PERIOD | MODULE | AVAILABILITY | OPERABILITY | RELIABILITY | UTILIZATION | % REMOVAL SO2 | % REMOVAL PART. | PER HOURS | BOILER HOURS | FGD HOURS | CAP. FACTOR |
|---|---|---|---|---|---|---|---|---|---|---|---|
| 2/79 | SYSTEM | 100.0 | | | | | | 672 | 0 | 0 | .0 |
| 3/79 | SYSTEM | 100.0 | | | | | | 744 | 0 | 0 | .0 |
| 4/79 | SYSTEM | 100.0 | | | | | | 720 | 0 | 0 | .0 |

** PROBLEMS/SOLUTIONS/COMMENTS

START DATE 2/79 END DATE 4/79
THE UNIT WAS NOT OPERATED DURING THESE MONTHS BECAUSE OF LACK OF DEMAND.

SECTION 3
DESIGN AND PERFORMANCE DATA FOR OPERATIONAL FGD SYSTEMS

| | |
|---|---|
| COMPANY NAME | MINNKOTA POWER COOPERATIVE |
| PLANT NAME | MILTON R. YOUNG |
| UNIT NUMBER | 2 |
| CITY | CENTER |
| STATE | NORTH DAKOTA |
| GROSS UNIT GENERATING CAPACITY MW | 477.0 |
| NET UNIT GENERATING CAPACITY W/FGD - MW | 408.0 |
| EQUIVALENT SCRUBBED CAPACITY - MW | 405.0 |
| ** FUEL DATA | |
| FUEL TYPE | COAL |
| FUEL GRADE | LIGNITE |
| AVERAGE HEAT CONTENT - KJ/KG | 15119. ( 6500 BTU/LB) |
| AVERAGE ASH CONTENT - % | ******** |
| AVERAGE MOISTURE CONTENT - % | 38.00 |
| AVERAGE SULFUR CONTENT - % | .70 |
| AVERAGE CHLORIDE CONTENT - % | ******** |
| ** FGD SYSTEM | |
| GENERAL PROCESS TYPE | WET SCRUBBING |
| PROCESS TYPE | LIME/ALKALINE FLYASH |
| SYSTEM SUPPLIER | ADL/COMBUSTION EQUIP ASSOCIATE |
| NEW/RETROFIT | NEW |
| ENERGY CONSUMPTION - % | 1.9 |
| INITIAL START-UP DATE | 9/77 |
| COMMERCIAL START-UP DATE | 6/78 |
| SO2 DESIGN REMOVAL EFFICIENCY - % | 85.00 |
| PARTICULATE DESIGN REMOVAL EFFICIENCY - % | 99.60 |
| ** WATER LOOP | |
| TYPE | OPEN |
| FRESH MAKE-UP WATER - LITER/S | 44.1 ( 700 GPM) |
| ** DISPOSAL | |
| TYPE | MINEFILL |

PERFORMANCE DATA

| PERIOD | MODULE | AVAILABILITY | OPERABILITY | RELIABILITY | UTILIZATION | % REMOVAL SO2 | % REMOVAL PART. | PER HOURS | BOILER HOURS | FGD HOURS | CAP. FACTOR |
|---|---|---|---|---|---|---|---|---|---|---|---|
| 2/79 | SYSTEM | | | | | | | 672 | | | |
| 3/79 | SYSTEM | | | | | | | 744 | | | |

** PROBLEMS/SOLUTIONS/COMMENTS

START DATE 2/79 END DATE 3/79
NO INFORMATION WAS REPORTED BY THE UTILITY FOR THIS REPORT PERIOD.

SECTION 3
DESIGN AND PERFORMANCE DATA FOR OPERATIONAL FGD SYSTEMS

| | |
|---|---|
| COMPANY NAME | MONTANA POWER |
| PLANT NAME | COLSTRIP |
| UNIT NUMBER | 1 |
| CITY | COLSTRIP |
| STATE | MONTANA |
| GROSS UNIT GENERATING CAPACITY - MW | 360.0 |
| NET UNIT GENERATING CAPACITY W/FGD - MW | 332.0 |
| EQUIVALENT SCRUBBED CAPACITY - MW | 360.0 |
| ** FUEL DATA | |
| FUEL TYPE | COAL |
| FUEL GRADE | SUBBITUMINOUS |
| AVERAGE HEAT CONTENT - KJ/KG | 20569. ( 8843 BTU/LB) |
| AVERAGE ASH CONTENT - % | 8.60 |
| AVERAGE MOISTURE CONTENT - % | 23.90 |
| AVERAGE SULFUR CONTENT - % | .77 |
| AVERAGE CHLORIDE CONTENT - % | ******** |
| ** FGD SYSTEM | |
| GENERAL PROCESS TYPE | WET SCRUBBING |
| PROCESS TYPE | LIME |
| SYSTEM SUPPLIER | ADL/COMBUSTION EQUIP ASSOCIATE |
| NEW/RETROFIT | NEW |
| ENERGY CONSUMPTION - % | 3.3 |
| INITIAL START-UP DATE | 9/75 |
| COMMERCIAL START-UP DATE | 11/75 |
| SO2 DESIGN REMOVAL EFFICIENCY - % | 60.00 |
| PARTICULATE DESIGN REMOVAL EFFICIENCY - % | 99.50 |
| ** WATER LOOP | |
| TYPE | CLOSED |
| FRESH MAKE-UP WATER - LITER/S | ******* (***** GPM) |
| ** DISPOSAL | |
| TYPE | SLUDGE POND |

PERFORMANCE DATA

| PERIOD | MODULE | AVAILABILITY | OPERABILITY | RELIABILITY | UTILIZATION | % REMOVAL SO2 | % REMOVAL PART. | PER HOURS | BOILER HOURS | FGD HOURS | CAP. FACTOR |
|---|---|---|---|---|---|---|---|---|---|---|---|
| 12/78 | SYSTEM | 96.7 | | | | | | 744 | | | |
| 1/79 | SYSTEM | 97.6 | | | | | | 744 | | | |
| 2/79 | SYSTEM | 90.3 | | | | | | 672 | | | |

SECTION 3
DESIGN AND PERFORMANCE DATA FOR OPERATIONAL FGD SYSTEMS

| | | |
|---|---|---|
| COMPANY NAME | MONTANA POWER | |
| PLANT NAME | COLSTRIP | |
| UNIT NUMBER | 2 | |
| CITY | COLSTRIP | |
| STATE | MONTANA | |
| GROSS UNIT GENERATING CAPACITY - MW | 360.0 | |
| NET UNIT GENERATING CAPACITY W/FGD - MW | 332.0 | |
| EQUIVALENT SCRUBBED CAPACITY - MW | 360.0 | |
| ** FUEL DATA | | |
| FUEL TYPE | COAL | |
| FUEL GRADE | SUBBITUMINOUS | |
| AVERAGE HEAT CONTENT - KJ/KG | 20569. | ( 8843 BTU/LB) |
| AVERAGE ASH CONTENT - % | 8.60 | |
| AVERAGE MOISTURE CONTENT - % | 23.90 | |
| AVERAGE SULFUR CONTENT - % | .77 | |
| AVERAGE CHLORIDE CONTENT - % | ******** | |
| ** FGD SYSTEM | | |
| GENERAL PROCESS TYPE | WET SCRUBBING | |
| PROCESS TYPE | LIME | |
| SYSTEM SUPPLIER | ADL/COMBUSTION EQUIP ASSOCIATE | |
| NEW/RETROFIT | NEW | |
| ENERGY CONSUMPTION % | 3.3 | |
| INITIAL START-UP DATE | 5/76 | |
| COMMERCIAL START-UP DATE | 10/76 | |
| SO2 DESIGN REMOVAL EFFICIENCY - % | 60.00 | |
| PARTICULATE DESIGN REMOVAL EFFICIENCY - % | 99.50 | |
| ** WATER LOOP | | |
| TYPE | CLOSED | |
| FRESH MAKE-UP WATER - LITER/S | ******* | (***** GPM) |
| ** DISPOSAL | | |
| TYPE | SLUDGE POND | |

PERFORMANCE DATA

| PERIOD | MODULE | AVAILABILITY | OPERABILITY | RELIABILITY | UTILIZATION | % REMOVAL SO2 | % REMOVAL PART. | PER HOURS | BOILER HOURS | FGD HOURS | CAP. FACTOR |
|---|---|---|---|---|---|---|---|---|---|---|---|
| 12/78 | SYSTEM | 91.2 | | | | | | 744 | | | |
| 1/79 | SYSTEM | 94.3 | | | | | | 744 | | | |
| 2/79 | SYSTEM | 98.3 | | | | | | 672 | | | |

## SECTION 3
## DESIGN AND PERFORMANCE DATA FOR OPERATIONAL FGD SYSTEMS

| | |
|---|---|
| COMPANY NAME | NEVADA POWER |
| PLANT NAME | REID GARDNER |
| UNIT NUMBER | 1 |
| CITY | MOAPA |
| STATE | NEVADA |
| GROSS UNIT GENERATING CAPACITY - MW | 125.0 |
| NET UNIT GENERATING CAPACITY W/FGD - MW | 110.0 |
| EQUIVALENT SCRUBBED CAPACITY - MW | 125.0 |

** FUEL DATA

| | | |
|---|---|---|
| FUEL TYPE | COAL | |
| FUEL GRADE | ****** | |
| AVERAGE HEAT CONTENT - KJ/KG | 28959. | ( 12450 BTU/LB) |
| AVERAGE ASH CONTENT - % | 8.00 | |
| AVERAGE MOISTURE CONTENT - % | ******** | |
| AVERAGE SULFUR CONTENT - % | .50 | |
| AVERAGE CHLORIDE CONTENT - % | ******** | |

** FGD SYSTEM

| | |
|---|---|
| GENERAL PROCESS TYPE | WET SCRUBBING |
| PROCESS TYPE | SODIUM CARBONATE |
| SYSTEM SUPPLIER | ADL/COMBUSTION EQUIP ASSOCIATE |
| NEW/RETROFIT | RETROFIT |
| ENERGY CONSUMPTION - % | ******* |
| INITIAL START-UP DATE | 4/74 |
| COMMERCIAL START-UP DATE | **/** |
| SO2 DESIGN REMOVAL EFFICIENCY - % | 90.00 |
| PARTICULATE DESIGN REMOVAL EFFICIENCY - % | 97.00 |

** WATER LOOP

| | | |
|---|---|---|
| TYPE | OPEN | |
| FRESH MAKE-UP WATER - LITER/S | 1.6 | ( 25 GPM) |

** DISPOSAL

| | |
|---|---|
| TYPE | EVAP POND |

### PERFORMANCE DATA

| PERIOD | MODULE | AVAILABILITY | OPERABILITY | RELIABILITY | UTILIZATION | % REMOVAL SO2 | % REMOVAL PART. | PER HOURS | BOILER HOURS | FGD HOURS | CAP. FACTOR |
|---|---|---|---|---|---|---|---|---|---|---|---|
| 3/79 | SYSTEM | 97.9 | 96.5 | 96.5 | 78.3 | | | 744 | 603 | 582 | |

** PROBLEMS/SOLUTIONS/COMMENTS

START DATE 3/79 END DATE 3/79
THE FGD SYSTEM WAS OFF TO UNPLUG VENTURI NOZZLES AND TO CLEAN SENSING LINES. THE DOWNTIME WAS ABOUT 15 HOURS.

START DATE 3/79 END DATE 3/79
THE FGD SYSTEM WAS OFF FOR ABOUT 146 HOURS FOR REPAIR OF BOILER TUBE LEAKS.

| | | | | | | | | | | | |
|---|---|---|---|---|---|---|---|---|---|---|---|
| 4/79 | SYSTEM | 100.0 | 98.7 | 98.6 | 25.7 | | | 720 | 188 | 185 | |

** PROBLEMS/SOLUTIONS/COMMENTS

START DATE 4/79 END DATE 4/79
THE BOILER AND FGD SYSTEM WERE OFF FOR APPROXIMATELY 533 HOURS FOR SCHEDULED MAINTENANCE.

SECTION 3
DESIGN AND PERFORMANCE DATA FOR OPERATIONAL FGD SYSTEMS

| | |
|---|---|
| COMPANY NAME | NEVADA POWER |
| PLANT NAME | REID GARDNER |
| UNIT NUMBER | 2 |
| CITY | MOAPA |
| STATE | NEVADA |
| GROSS UNIT GENERATING CAPACITY - MW | 125.0 |
| NET UNIT GENERATING CAPACITY W/FGD - MW | 110.0 |
| EQUIVALENT SCRUBBED CAPACITY - MW | 125.0 |
| ** FUEL DATA | |
| FUEL TYPE | COAL |
| FUEL GRADE | ****** |
| AVERAGE HEAT CONTENT - KJ/KG | 28842. ( 12400 BTU/LB) |
| AVERAGE ASH CONTENT - % | 8.00 |
| AVERAGE MOISTURE CONTENT - % | ******** |
| AVERAGE SULFUR CONTENT - % | .50 |
| AVERAGE CHLORIDE CONTENT - % | ******** |
| ** FGD SYSTEM | |
| GENERAL PROCESS TYPE | WET SCRUBBING |
| PROCESS TYPE | SODIUM CARBONATE |
| SYSTEM SUPPLIER | ADL/COMBUSTION EQUIP ASSOCIATE |
| NEW/RETROFIT | RETROFIT |
| ENERGY CONSUMPTION - % | ******* |
| INITIAL START-UP DATE | 4/74 |
| COMMERCIAL START-UP DATE | **/** |
| SO2 DESIGN REMOVAL EFFICIENCY - % | 90.00 |
| PARTICULATE DESIGN REMOVAL EFFICIENCY - % | 97.00 |
| ** WATER LOOP | |
| TYPE | OPEN |
| FRESH MAKE-UP WATER - LITER/S | 1.6 ( 25 GPM) |
| ** DISPOSAL | |
| TYPE | EVAP POND |

PERFORMANCE DATA

| PERIOD | MODULE | AVAILABILITY | OPERABILITY | RELIABILITY | UTILIZATION | % REMOVAL SO2 | % REMOVAL PART. | PER HOURS | BOILER HOURS | FGD HOURS | CAP. FACTOR |
|---|---|---|---|---|---|---|---|---|---|---|---|
| 3/79 | SYSTEM | 88.8 | 95.9 | 96.0 | 88.8 | | | 744 | 688 | 640 | |

** PROBLEMS/SOLUTIONS/COMMENTS

START DATE 3/79 END DATE 3/79
THE BOILER AND SCRUBBER WERE OFF FOR ABOUT TWO DAYS FOR REPAIR OF BOILER TUBE LEAKS.

START DATE 3/79 END DATE 3/79
THE BOILER TRIPPED DUE TO HIGH FURNACE PRESSURE. WHILE THE BOILER WAS DOWN SENSING LINES WERE CLEANED ON THE SCRUBBER.

| | | | | | | | | | | | |
|---|---|---|---|---|---|---|---|---|---|---|---|
| 4/79 | SYSTEM | | | | | | | 720 | 666 | | |

** PROBLEMS/SOLUTIONS/COMMENTS

START DATE 4/78 END DATE 4/78
A HIGH PRESSURE ALARM ON THE SCRUBBER DUCT TRIPPED THE SCRUBBER OFF LINE. THE SCRUBBER PRESSURE SENSING LINES WERE CLEANED. THIS OCCURRED TWICE DURING THE MONTH OF APRIL.

START DATE 4/78 END DATE 4/78
A CONTROL POWER FAILURE OCCURRED CAUSING A SCRUBBER TRIP WHEN THE 10 KW GENERATOR WAS PUT BACK IN SERVICE.

## SECTION 3
## DESIGN AND PERFORMANCE DATA FOR OPERATIONAL FGD SYSTEMS

| | |
|---|---|
| COMPANY NAME | NEVADA POWER |
| PLANT NAME | REID GARDNER |
| UNIT NUMBER | 3 |
| CITY | MOAPA |
| STATE | NEVADA |
| GROSS UNIT GENERATING CAPACITY - MW | 125.0 |
| NET UNIT GENERATING CAPACITY W/FGD - MW | 110.0 |
| EQUIVALENT SCRUBBED CAPACITY - MW | 125.0 |
| ** FUEL DATA | |
| FUEL TYPE | COAL |
| FUEL GRADE | ****** |
| AVERAGE HEAT CONTENT - KJ/KG | 28959. ( 12450 BTU/LB) |
| AVERAGE ASH CONTENT - % | 8.00 |
| AVERAGE MOISTURE CONTENT - % | ******** |
| AVERAGE SULFUR CONTENT - % | .50 |
| AVERAGE CHLORIDE CONTENT - % | ******** |
| ** FGD SYSTEM | |
| GENERAL PROCESS TYPE | WET SCRUBBING |
| PROCESS TYPE | SODIUM CARBONATE |
| SYSTEM SUPPLIER | ADL/COMBUSTION EQUIP ASSOCIATE |
| NEW/RETROFIT | NEW |
| ENERGY CONSUMPTION - % | ******* |
| INITIAL START-UP DATE | 6/76 |
| COMMERCIAL START-UP DATE | 7/76 |
| SO2 DESIGN REMOVAL EFFICIENCY - % | 85.00 |
| PARTICULATE DESIGN REMOVAL EFFICIENCY - % | 99.00 |
| ** WATER LOOP | |
| TYPE | OPEN |
| FRESH MAKE-UP WATER - LITER/S | 1.6 ( 25 GPM) |
| ** DISPOSAL | |
| TYPE | EVAP POND |

PERFORMANCE DATA

| PERIOD | MODULE | AVAILABILITY | OPERABILITY | RELIABILITY | UTILIZATION | % REMOVAL SO2 | % REMOVAL PART. | PER HOURS | BOILER HOURS | FGD HOURS | CAP. FACTOR |
|---|---|---|---|---|---|---|---|---|---|---|---|
| 3/79 | SYSTEM | 100.0 | 97.9 | 100.0 | 67.7 | | | 744 | 246 | 241 | |

** PROBLEMS/SOLUTIONS/COMMENTS

START DATE 3/79 END DATE 3/79
THE BOILER AND FGD SYSTEM WERE OFF FOR ABOUT 2 DAYS TO REPAIR AND BALANCE A BOILER I.D. FAN.

START DATE 3/79 END DATE 3/79
THE BOILER AND FGD SYSTEM WERE OFF FOR ABOUT 19 DAY FOR SCHEDULED MAINTENANCE.

| | | | | | | | | | | | |
|---|---|---|---|---|---|---|---|---|---|---|---|
| 4/79 | SYSTEM | 100.0 | 100.0 | 100.0 | 100.0 | | | 720 | 719 | 719 | |

** PROBLEMS/SOLUTIONS/COMMENTS

START DATE 4/79 END DATE 4/79
NO OUTAGES WERE REPORTED FOR APRIL.

SECTION 3
DESIGN AND PERFORMANCE DATA FOR OPERATIONAL FGD SYSTEMS

| | |
|---|---|
| COMPANY NAME | NORTHERN INDIANA PUB SERVICE |
| PLANT NAME | DEAN H. MITCHELL |
| UNIT NUMBER | 11 |
| CITY | GARY |
| STATE | INDIANA |
| GROSS UNIT GENERATING CAPACITY - MW | 115.0 |
| NET UNIT GENERATING CAPACITY W/FGD - MW | 115.0 |
| EQUIVALENT SCRUBBED CAPACITY - MW | 115.0 |

** FUEL DATA

| | | |
|---|---|---|
| FUEL TYPE | COAL | |
| FUEL GRADE | ****** | |
| AVERAGE HEAT CONTENT - KJ/KG | 25586. | ( 11000 BTU/LB) |
| AVERAGE ASH CONTENT - % | ******** | |
| AVERAGE MOISTURE CONTENT - % | 11.00 | |
| AVERAGE SULFUR CONTENT - % | 3.50 | |
| AVERAGE CHLORIDE CONTENT - % | ******** | |

** FGD SYSTEM

| | |
|---|---|
| GENERAL PROCESS TYPE | WET SCRUBBING |
| PROCESS TYPE | WELLMAN LORD |
| SYSTEM SUPPLIER | DAVY POWERGAS |
| NEW/RETROFIT | RETROFIT |
| ENERGY CONSUMPTION - % | ******* |
| INITIAL START-UP DATE | 7/76 |
| COMMERCIAL START-UP DATE | 6/77 |
| SO2 DESIGN REMOVAL EFFICIENCY - % | 90.00 |
| PARTICULATE DESIGN REMOVAL EFFICIENCY - % | 98.50 |

** WATER LOOP

| | | |
|---|---|---|
| TYPE | CLOSED | |
| FRESH MAKE-UP WATER - LITER/S | ******* | (***** GPM) |

** BYPRODUCT

| | |
|---|---|
| BYPRODUCT NATURE | ELEMENTAL SULFUR |
| DISPOSITION | |

PERFORMANCE DATA

| PERIOD | MODULE | AVAILABILITY | OPERABILITY | RELIABILITY | UTILIZATION | % REMOVAL SO2 | % REMOVAL PART. | PER HOURS | BOILER HOURS | FGD HOURS | CAP. FACTOR |
|---|---|---|---|---|---|---|---|---|---|---|---|
| 2/79 | SYSTEM | 7.0 | | 1.0 | 1.0 | | | 720 | | 5 | |

** PROBLEMS/SOLUTIONS/COMMENTS

START DATE 2/79 END DATE 2/79
THE BOILER OPERATED ON LOW SULFUR COAL FEBRUARY 1-12 AND HIGH SULFUR COAL FEBRUARY 13-MARCH 2. THE FGD SYSTEM REMAINED DOWN THROUGH FEBRUARY 22 FOR COMPLETION OF SULFUR CONDENSER REPAIRS FOLLOWED BY REPAIR OF EXPANSION JOINT LEAKS.

START DATE 2/79 END DATE 2/79
A POWER INTERUPTION ON FEBRUARY 24 RESULTED IN LOSS OF SEAL WATER TO THE EVAPORATOR PUMP AND PACKING FAILURE. THE FGD SYSTEM REMAINED DOWN THROUGH MARCH 2.

| | | | | | | | | | | | |
|---|---|---|---|---|---|---|---|---|---|---|---|
| 3/79 | SYSTEM | 47.0 | | 44.0 | 43.0 | | | 720 | | 308 | |

** PROBLEMS/SOLUTIONS/COMMENTS

START DATE 3/79 END DATE 3/79
THE BOILER OPERATED ON HIGH SULFUR COAL.

START DATE 3/79 END DATE 3/79
THE FGD SYSTEM WAS SHUT DOWN DUE TO HIGH LEAKAGE IN THE EVAPORATOR CIRCULATING PUMP PACKING GLAND. THE PUMP SHAFT SLEEVE WAS REPLACED AND THE PUMP REALIGNED. THE SYSTEM WAS DOWN FOR ABOUT 16 DAYS.

SECTION 3
DESIGN AND PERFORMANCE DATA FOR OPERATIONAL FGD SYSTEMS

| | |
|---|---|
| COMPANY NAME | NORTHERN STATES POWER |
| PLANT NAME | SHERBURNE |
| UNIT NUMBER | 1 |
| CITY | BECKER |
| STATE | MINNESOTA |
| GROSS UNIT GENERATING CAPACITY - MW | 740.0 |
| NET UNIT GENERATING CAPACITY W/FGD - MW | 700.0 |
| EQUIVALENT SCRUBBED CAPACITY - MW | 740.0 |
| ** FUEL DATA | |
| FUEL TYPE | COAL |
| FUEL GRADE | SUBBITUMINOUS |
| AVERAGE HEAT CONTENT - KJ/KG | 19771. ( 8500 BTU/LB) |
| AVERAGE ASH CONTENT - % | 9.00 |
| AVERAGE MOISTURE CONTENT - % | 25.00 |
| AVERAGE SULFUR CONTENT - % | .80 |
| AVERAGE CHLORIDE CONTENT - % | ******** |
| ** FGD SYSTEM | |
| GENERAL PROCESS TYPE | WET SCRUBBING |
| PROCESS TYPE | LIMESTONE/ALKALINE FLYASH |
| SYSTEM SUPPLIER | COMBUSTION ENGINEERING |
| NEW/RETROFIT | NEW |
| ENERGY CONSUMPTION - % | 2.7 |
| INITIAL START-UP DATE | 3/76 |
| COMMERCIAL START-UP DATE | 5/76 |
| SO2 DESIGN REMOVAL EFFICIENCY - % | 50.00 |
| PARTICULATE DESIGN REMOVAL EFFICIENCY - % | 99.00 |
| ** WATER LOOP | |
| TYPE | OPEN |
| FRESH MAKE-UP WATER - LITER/S | ******* (***** GPM) |
| ** TREATMENT | |
| TYPE | FORCIBLY OXIDIZED |
| ** DISPOSAL | |
| TYPE | LINED POND |

PERFORMANCE DATA

| PERIOD | MODULE | AVAILABILITY | OPERABILITY | RELIABILITY | UTILIZATION | % REMOVAL SO2 | % REMOVAL PART. | PER HOURS | BOILER HOURS | FGD HOURS | CAP. FACTOR |
|---|---|---|---|---|---|---|---|---|---|---|---|
| 2/79 | 101 | | 78.0 | | 78.0 | | | | | | |
| | 102 | | 73.0 | | 73.0 | | | | | | |
| | 103 | | 70.0 | | 70.0 | | | | | | |
| | 104 | | 76.0 | | 76.0 | | | | | | |
| | 105 | | 50.0 | | 50.0 | | | | | | |
| | 106 | | 91.0 | | 91.0 | | | | | | |
| | 107 | | 92.0 | | 92.0 | | | | | | |
| | 108 | | 92.0 | | 92.0 | | | | | | |
| | 109 | | 75.0 | | 75.0 | | | | | | |
| | 110 | | 77.0 | | 77.0 | | | | | | |
| | 111 | | 66.0 | | 66.0 | | | | | | |
| | 112 | | 93.0 | | 93.0 | | | | | | |
| | SYSTEM | 89.0 | | | | | | 672 | 672 | | 67.9 |
| 3/79 | 101 | | 61.0 | | 60.1 | | | | | | |
| | 102 | | 88.0 | | 86.8 | | | | | | |
| | 103 | | 45.0 | | 44.4 | | | | | | |
| | 104 | | 86.0 | | 84.8 | | | | | | |
| | 105 | | 94.0 | | 92.7 | | | | | | |
| | 106 | | 71.0 | | 70.0 | | | | | | |
| | 107 | | 91.0 | | 89.8 | | | | | | |
| | 108 | | 73.0 | | 72.0 | | | | | | |
| | 109 | | 91.0 | | 89.8 | | | | | | |

NORTHERN STATES POWER (CONT.)

PERFORMANCE DATA

| PERIOD | MODULE | AVAILABILITY | OPERABILITY | RELIABILITY | UTILIZATION | % REMOVAL SO2 | % REMOVAL PART. | PER HOURS | BOILER HOURS | FGD HOURS | CAP. FACTOR |
|---|---|---|---|---|---|---|---|---|---|---|---|
| | 110 | | 80.0 | | 75.9 | | | | | | |
| | 111 | | 89.0 | | 87.8 | | | | | | |
| | 112 | | 80.0 | | 78.9 | | | | | | |
| | SYSTEM | 92.0 | | | | | | 744 | 734 | | 59.4 |

** PROBLEMS/SOLUTIONS/COMMENTS

START DATE 2/79 END DATE 3/79
THE ONLY MAJOR PROBLEM REPORTED BY THE UTILITY WAS BOILER RELATED - SPECIFICALLY PROBLEMS WITH WET COAL.

START DATE 3/79 END DATE 3/79
CURRENTLY THE UTILITY IS INCREASING THE RECYCLE PUMP CAPACITY BY INSTALLING 800 GPM WORTHINGTON RECYCLE PUMPS. DURING THIS PERIOD THEY HAVE BEEN INSTALLED ON MODULES 101,103,104,105,107, AND 110.

## SECTION 3
## DESIGN AND PERFORMANCE DATA FOR OPERATIONAL FGD SYSTEMS

| | |
|---|---|
| COMPANY NAME | NORTHERN STATES POWER |
| PLANT NAME | SHERBURNE |
| UNIT NUMBER | 2 |
| CITY | BECKER |
| STATE | MINNESOTA |
| GROSS UNIT GENERATING CAPACITY - MW | 740.0 |
| NET UNIT GENERATING CAPACITY W/FGD - MW | 700.0 |
| EQUIVALENT SCRUBBED CAPACITY - MW | 740.0 |
| ** FUEL DATA | |
| FUEL TYPE | COAL |
| FUEL GRADE | SUBBITUMINOUS |
| AVERAGE HEAT CONTENT - KJ/KG | 19771. ( 8500 BTU/LB) |
| AVERAGE ASH CONTENT - % | 9.00 |
| AVERAGE MOISTURE CONTENT - % | 25.00 |
| AVERAGE SULFUR CONTENT - % | .80 |
| AVERAGE CHLORIDE CONTENT - % | ******** |
| ** FGD SYSTEM | |
| GENERAL PROCESS TYPE | WET SCRUBBING |
| PROCESS TYPE | LIMESTONE/ALKALINE FLYASH |
| SYSTEM SUPPLIER | COMBUSTION ENGINEERING |
| NEW/RETROFIT | NEW |
| ENERGY CONSUMPTION - % | 2.7 |
| INITIAL START-UP DATE | 4/77 |
| COMMERCIAL START-UP DATE | 4/77 |
| $SO_2$ DESIGN REMOVAL EFFICIENCY - % | 50.00 |
| PARTICULATE DESIGN REMOVAL EFFICIENCY - % | 99.00 |
| ** WATER LOOP | |
| TYPE | OPEN |
| FRESH MAKE-UP WATER - LITER/S | ******* (***** GPM) |
| ** TREATMENT | |
| TYPE | FORCIBLY OXIDIZED |
| ** DISPOSAL | |
| TYPE | LINED POND |

### PERFORMANCE DATA

| PERIOD | MODULE | AVAILABILITY | OPERABILITY | RELIABILITY | UTILIZATION | % REMOVAL SO2 | % REMOVAL PART. | PER HOURS | BOILER HOURS | FGD HOURS | CAP. FACTOR |
|---|---|---|---|---|---|---|---|---|---|---|---|
| 2/79 | 201 | | 86.0 | | | | | | | | |
| | 202 | | 84.0 | | | | | | | | |
| | 204 | | 89.0 | | | | | | | | |
| | 205 | | 59.0 | | | | | | | | |
| | 206 | | 76.0 | | | | | | | | |
| | 207 | | 72.0 | | | | | | | | |
| | 208 | | 66.0 | | | | | | | | |
| | 209 | | 80.0 | | | | | | | | |
| | 210 | | 75.0 | | | | | | | | |
| | 211 | | 92.0 | | | | | | | | |
| | 212 | | 65.0 | | | | | | | | |
| | SYSTEM | 93.0 | | | | | | 672 | 671 | | |
| 3/79 | 201 | | 85.0 | | | | | | | | |
| | 202 | | 69.0 | | | | | | | | |
| | 203 | | 78.0 | | | | | | | | |
| | 204 | | 47.0 | | | | | | | | |
| | 205 | | 71.0 | | | | | | | | |
| | 206 | | 76.0 | | | | | | | | |
| | 207 | | 90.0 | | | | | | | | |
| | 208 | | 78.0 | | | | | | | | |
| | 209 | | 50.0 | | | | | | | | |
| | 210 | | 85.0 | | | | | | | | |

NORTHERN STATES POWER (CONT.)

| PERIOD | MODULE | AVAILABILITY | OPERABILITY | RELIABILITY | UTILIZATION | % REMOVAL SO2 | % REMOVAL PART. | PER HOURS | BOILER HOURS | FGD HOURS | CAP. FACTOR |
|---|---|---|---|---|---|---|---|---|---|---|---|
| | 211 | | 57.0 | | | | | | | | |
| | 212 | | 86.0 | | | | | | | | |
| | SYSTEM | 91.0 | | | | | | 744 | 744 | | |

** PROBLEMS/SOLUTIONS/COMMENTS

START DATE 2/79 END DATE 3/79
THE ONLY REAL PROBLEMS ENCOUNTERED DURING THIS PERIOD WERE PROBLEMS WITH WET COAL.

START DATE 2/79 END DATE 3/79
THE RECYCLE PUMPS ARE BEING REPLACED WITH LARGER 8000 GPM WORTHINGTON PUMPS. DURING THIS PERIOD THE PUMPS WERE INSTALLED ON MODULES 204 AND 206.

SECTION 3
DESIGN AND PERFORMANCE DATA FOR OPERATIONAL FGD SYSTEMS

| | |
|---|---|
| COMPANY NAME | PENNSYLVANIA POWER |
| PLANT NAME | BRUCE MANSFIELD |
| UNIT NUMBER | 1 |
| CITY | SHIPPINGPORT |
| STATE | PENNSYLVANIA |
| GROSS UNIT GENERATING CAPACITY - MW | 917.0 |
| NET UNIT GENERATING CAPACITY W/FGD - MW | 825.0 |
| EQUIVALENT SCRUBBED CAPACITY - MW | 917.0 |
| ** FUEL DATA | |
| FUEL TYPE | COAL |
| FUEL GRADE | BITUMINOUS |
| AVERAGE HEAT CONTENT - KJ/KG | 26749. ( 11500 BTU/LB) |
| AVERAGE ASH CONTENT - % | 12.90 |
| AVERAGE MOISTURE CONTENT - % | 7.00 |
| AVERAGE SULFUR CONTENT - % | 3.00 |
| AVERAGE CHLORIDE CONTENT - % | ******** |
| ** FGD SYSTEM | |
| GENERAL PROCESS TYPE | WET SCRUBBING |
| PROCESS TYPE | LIME |
| SYSTEM SUPPLIER | CHEMICO |
| NEW/RETROFIT | NEW |
| ENERGY CONSUMPTION - % | 6.0 |
| INITIAL START-UP DATE | 12/75 |
| COMMERCIAL START-UP DATE | 6/76 |
| SO2 DESIGN REMOVAL EFFICIENCY - % | 92.10 |
| PARTICULATE DESIGN REMOVAL EFFICIENCY - % | 99.80 |
| ** WATER LOOP | |
| TYPE | OPEN |
| FRESH MAKE-UP WATER - LITER/S | ******* (***** GPM) |
| ** TREATMENT | |
| TYPE | CALCILOX |
| ** DISPOSAL | |
| TYPE | LANDFILL |

PERFORMANCE DATA

| PERIOD | MODULE | AVAILABILITY | OPERABILITY | RELIABILITY | UTILIZATION | % REMOVAL SO2 | % REMOVAL PART. | PER HOURS | BOILER HOURS | FGD HOURS | CAP. FACTOR |
|---|---|---|---|---|---|---|---|---|---|---|---|
| 2/79 | SYSTEM | | | | | | | 672 | | | |
| 3/79 | SYSTEM | | | | | | | 744 | | | |
| 4/79 | SYSTEM | | | | | | | 720 | | | |
| 5/79 | SYSTEM | | | | | | | 744 | | | |

** PROBLEMS/SOLUTIONS/COMMENTS

START DATE 2/79 END DATE 5/79
UNIT 1 IS CURRENTLY DOWN FOR BOILER OUTAGE.

START DATE 2/79 END DATE 5/79
SIX OF THE TWELVE FAN HOUSINGS HAVE BEEN CHANGED FROM CARBON STEEL TO INCOLLOY 825.

SECTION 3
DESIGN AND PERFORMANCE DATA FOR OPERATIONAL FGD SYSTEMS

| | |
|---|---|
| COMPANY NAME | PENNSYLVANIA POWER |
| PLANT NAME | BRUCE MANSFIELD |
| UNIT NUMBER | 2 |
| CITY | SHIPPINGPORT |
| STATE | PENNSYLVANIA |
| GROSS UNIT GENERATING CAPACITY - MW | 917.0 |
| NET UNIT GENERATING CAPACITY W/FGD - MW | 825.0 |
| EQUIVALENT SCRUBBED CAPACITY - MW | 917.0 |
| ** FUEL DATA | |
| FUEL TYPE | COAL |
| FUEL GRADE | BITUMINOUS |
| AVERAGE HEAT CONTENT - KJ/KG | 26749. ( 11500 BTU/LB) |
| AVERAGE ASH CONTENT - % | 12.90 |
| AVERAGE MOISTURE CONTENT - % | 7.00 |
| AVERAGE SULFUR CONTENT - % | 3.00 |
| AVERAGE CHLORIDE CONTENT - % | ******** |
| ** FGD SYSTEM | |
| GENERAL PROCESS TYPE | WET SCRUBBING |
| PROCESS TYPE | LIME |
| SYSTEM SUPPLIER | CHEMICO |
| NEW/RETROFIT | NEW |
| ENERGY CONSUMPTION - % | 6.0 |
| INITIAL START-UP DATE | 7/77 |
| COMMERCIAL START-UP DATE | 10/77 |
| SO2 DESIGN REMOVAL EFFICIENCY - % | 92.10 |
| PARTICULATE DESIGN REMOVAL EFFICIENCY - % | 99.80 |
| ** WATER LOOP | |
| TYPE | OPEN |
| FRESH MAKE-UP WATER - LITER/S | ******* (***** GPM) |
| ** TREATMENT | |
| TYPE | CALCILOX |
| ** DISPOSAL | |
| TYPE | LANDFILL |

PERFORMANCE DATA

| PERIOD | MODULE | AVAILABILITY | OPERABILITY | RELIABILITY | UTILIZATION | % REMOVAL SO2 | % REMOVAL PART. | PER HOURS | BOILER HOURS | FGD HOURS | CAP. FACTOR |
|---|---|---|---|---|---|---|---|---|---|---|---|
| 2/79 | SYSTEM | | | | | | | 672 | | | |
| 3/79 | SYSTEM | | | | | | | 744 | | | |
| 4/79 | SYSTEM | | | | | | | 720 | | | |

** PROBLEMS/SOLUTIONS/COMMENTS

START DATE 1/79 END DATE 4/79
NO INFORMATION WAS REPORTED FOR THIS PERIOD BY THE UTILITY.

SECTION 3
DESIGN AND PERFORMANCE DATA FOR OPERATIONAL FGD SYSTEMS

| | |
|---|---|
| COMPANY NAME | PHILADELPHIA ELECTRIC |
| PLANT NAME | EDDYSTONE |
| UNIT NUMBER | 1A |
| CITY | EDDYSTONE |
| STATE | PENNSYLVANIA |
| GROSS UNIT GENERATING CAPACITY - MW | 120.0 |
| NET UNIT GENERATING CAPACITY W/FGD - MW | 120.0 |
| EQUIVALENT SCRUBBED CAPACITY - MW | 120.0 |
| ** FUEL DATA | |
| FUEL TYPE | COAL |
| FUEL GRADE | ****** |
| AVERAGE HEAT CONTENT - KJ/KG | 31634. ( 13600 BTU/LB) |
| AVERAGE ASH CONTENT - % | 9.40 |
| AVERAGE MOISTURE CONTENT - % | 5.90 |
| AVERAGE SULFUR CONTENT - % | 2.60 |
| AVERAGE CHLORIDE CONTENT - % | ******** |
| ** FGD SYSTEM | |
| GENERAL PROCESS TYPE | WET SCRUBBING |
| PROCESS TYPE | MAGNESIUM OXIDE |
| SYSTEM SUPPLIER | UNITED ENGINEERS |
| NEW/RETROFIT | RETROFIT |
| ENERGY CONSUMPTION - % | ******* |
| INITIAL START-UP DATE | 9/75 |
| COMMERCIAL START-UP DATE | 9/75 |
| SO2 DESIGN REMOVAL EFFICIENCY - % | 90.00 |
| PARTICULATE DESIGN REMOVAL EFFICIENCY - % | 99.00 |
| ** WATER LOOP | |
| TYPE | OPEN |
| FRESH MAKE-UP WATER - LITER/S | 8.3 ( 132 GPM) |
| ** BYPRODUCT | |
| BYPRODUCT NATURE | SULFURIC ACID |
| DISPOSITION | |

PERFORMANCE DATA

| PERIOD | MODULE | AVAILABILITY | OPERABILITY | RELIABILITY | UTILIZATION | % REMOVAL SO2 | % REMOVAL PART. | PER HOURS | BOILER HOURS | FGD HOURS | CAP. FACTOR |
|---|---|---|---|---|---|---|---|---|---|---|---|
| 2/79 | SYSTEM | | | | | | | 672 | | | |
| 3/79 | SYSTEM | | | | | | | 744 | | | |

** PROBLEMS/SOLUTIONS/COMMENTS

START DATE 2/79 END DATE 3/79
NO INFORMATION WAS REPORTED FOR THIS REPORT PERIOD.

SECTION 3
DESIGN AND PERFORMANCE DATA FOR OPERATIONAL FGD SYSTEMS

| | |
|---|---|
| COMPANY NAME | PUBLIC SERVICE OF NEW MEXICO |
| PLANT NAME | SAN JUAN |
| UNIT NUMBER | 1 |
| CITY | WATERFLOW |
| STATE | NEW MEXICO |
| GROSS UNIT GENERATING CAPACITY - MW | 361.0 |
| NET UNIT GENERATING CAPACITY W/FGD - MW | 314.0 |
| EQUIVALENT SCRUBBED CAPACITY - MW | 361.0 |
| ** FUEL DATA | |
| FUEL TYPE | COAL |
| FUEL GRADE | ****** |
| AVERAGE HEAT CONTENT - KJ/KG | 18841. ( 8100 BTU/LB) |
| AVERAGE ASH CONTENT - % | 22.45 |
| AVERAGE MOISTURE CONTENT - % | 14.82 |
| AVERAGE SULFUR CONTENT - % | .80 |
| AVERAGE CHLORIDE CONTENT - % | ******** |
| ** FGD SYSTEM | |
| GENERAL PROCESS TYPE | WET SCRUBBING |
| PROCESS TYPE | WELLMAN LORD |
| SYSTEM SUPPLIER | DAVY POWERGAS |
| NEW/RETROFIT | RETROFIT |
| ENERGY CONSUMPTION - % | 4.4 |
| INITIAL START-UP DATE | 4/79 |
| COMMERCIAL START-UP DATE | **/** |
| $SO_2$ DESIGN REMOVAL EFFICIENCY - % | 85.00 |
| PARTICULATE DESIGN REMOVAL EFFICIENCY - % | 99.50 |
| ** WATER LOOP | |
| TYPE | CLOSED |
| FRESH MAKE-UP WATER - LITER/S | 30.2 ( 480 GPM) |
| ** BYPRODUCT | |
| BYPRODUCT NATURE | ELEMENTAL SULFUR |
| DISPOSITION | MARKETED |

PERFORMANCE DATA

| PERIOD | MODULE | AVAILABILITY | OPERABILITY | RELIABILITY | UTILIZATION | % REMOVAL SO2 | % REMOVAL PART. | PER HOURS | BOILER HOURS | FGD HOURS | CAP. FACTOR |
|---|---|---|---|---|---|---|---|---|---|---|---|
| 2/79 | SYSTEM | | | | | | | 672 | | | |
| 3/79 | SYSTEM | | | | | | | 744 | | | |
| 4/79 | SYSTEM | | | | | | | 720 | | | |
| 5/79 | SYSTEM | | | | | | | 720 | | | |

** PROBLEMS/SOLUTIONS/COMMENTS

START DATE 1/79 END DATE 5/79
HOURS ARE NOT YET AVAILABLE BECAUSE THE UTILITY IS CONCENTRATING EFFORTS ON OPERATION OF THIS NEW UNIT. THE UTILITY REPORTED THAT THE SCRUBBING MODULES THEMSELVES ARE OPERATING FINE. ALSO THE CHEMICAL PLANT IS READY AND THERE IS NO SYSTEM PLUGGING WHATSOEVER.

START DATE 1/79 END DATE 5/79
THE MAJOR PROBLEM ENCOUNTERED WAS GYRATING FANS.

SECTION 3
DESIGN AND PERFORMANCE DATA FOR OPERATIONAL FGD SYSTEMS

| | |
|---|---|
| COMPANY NAME | PUBLIC SERVICE OF NEW MEXICO |
| PLANT NAME | SAN JUAN |
| UNIT NUMBER | 2 |
| CITY | WATERFLOW |
| STATE | NEW MEXICO |
| GROSS UNIT GENERATING CAPACITY - MW | 350.0 |
| NET UNIT GENERATING CAPACITY W/FGD - MW | 306.0 |
| EQUIVALENT SCRUBBED CAPACITY - MW | 350.0 |
| ** FUEL DATA | |
| FUEL TYPE | COAL |
| FUEL GRADE | ****** |
| AVERAGE HEAT CONTENT - KJ/KG | 20934. ( 9000 BTU/LB) |
| AVERAGE ASH CONTENT - % | 22.45 |
| AVERAGE MOISTURE CONTENT - % | 14.82 |
| AVERAGE SULFUR CONTENT - % | .80 |
| AVERAGE CHLORIDE CONTENT - % | ******** |
| ** FGD SYSTEM | |
| GENERAL PROCESS TYPE | WET SCRUBBING |
| PROCESS TYPE | WELLMAN LORD |
| SYSTEM SUPPLIER | DAVY POWERGAS |
| NEW/RETROFIT | RETROFIT |
| ENERGY CONSUMPTION - % | 4.6 |
| INITIAL START-UP DATE | 8/78 |
| COMMERCIAL START-UP DATE | **/** |
| SO2 DESIGN REMOVAL EFFICIENCY - % | 85.00 |
| PARTICULATE DESIGN REMOVAL EFFICIENCY - % | 99.50 |
| ** WATER LOOP | |
| TYPE | CLOSED |
| FRESH MAKE-UP WATER - LITER/S | ******* (***** GPM) |
| ** BYPRODUCT | |
| BYPRODUCT NATURE | ELEMENTAL SULFUR |
| DISPOSITION | MARKETED |

PERFORMANCE DATA

| PERIOD | MODULE | AVAILABILITY | OPERABILITY | RELIABILITY | UTILIZATION | % REMOVAL SO2 | % REMOVAL PART. | PER HOURS | BOILER HOURS | FGD HOURS | CAP. FACTOR |
|---|---|---|---|---|---|---|---|---|---|---|---|
| 2/79 | SYSTEM | | | | | | | 672 | | | |
| 3/79 | SYSTEM | | | | | | | 744 | | | |
| 4/79 | SYSTEM | | | | | | | 720 | | | |
| 5/79 | SYSTEM | | | | | | | 720 | | | |

*. PROBLEMS/SOLUTIONS/COMMENTS

START DATE 1/79 END DATE 5/79
HOURS ARE NOT YET AVAILABLE BECAUSE THE UTILITY IS CONCENTRATING EFFORTS ON OPERATION OF THIS NEW UNIT. THE UTILITY REPORTED THAT THE SCRUBBING MODULES THEMSELVES ARE OPERATING FINE. ALSO THE CHEMICAL PLANT IS READY AND THERE IS NO SYSTEM PLUGGING WHATSOEVER.

START DATE 1/79 END DATE 5/79
THE MAJOR PROBLEM ENCOUNTERED WAS GYRATING FANS.

SECTION 3
DESIGN AND PERFORMANCE DATA FOR OPERATIONAL FGD SYSTEMS

| | |
|---|---|
| COMPANY NAME | SOUTH CAROLINA PUBLIC SERVICE |
| PLANT NAME | WINYAH |
| UNIT NUMBER | 2 |
| CITY | GEORGETOWN |
| STATE | SOUTH CAROLINA |
| GROSS UNIT GENERATING CAPACITY - MW | 280.0 |
| NET UNIT GENERATING CAPACITY W/FGD - MW | 258.0 |
| EQUIVALENT SCRUBBED CAPACITY - MW | 140.0 |
| ** FUEL DATA | |
| FUEL TYPE | COAL |
| FUEL GRADE | BITUMINOUS |
| AVERAGE HEAT CONTENT - KJ/KG | 26749. ( 11500 BTU/LB) |
| AVERAGE ASH CONTENT - % | 13.50 |
| AVERAGE MOISTURE CONTENT - % | ******** |
| AVERAGE SULFUR CONTENT - % | 1.00 |
| AVERAGE CHLORIDE CONTENT - % | ******** |
| ** FGD SYSTEM | |
| GENERAL PROCESS TYPE | WET SCRUBBING |
| PROCESS TYPE | LIMESTONE |
| SYSTEM SUPPLIER | BABCOCK & WILCOX |
| NEW/RETROFIT | NEW |
| ENERGY CONSUMPTION - % | .7 |
| INITIAL START-UP DATE | 7/77 |
| COMMERCIAL START-UP DATE | **/** |
| SO2 DESIGN REMOVAL EFFICIENCY - % | 69.00 |
| PARTICULATE DESIGN REMOVAL EFFICIENCY - % | 99.40 |
| ** WATER LOOP | |
| TYPE | OPEN |
| FRESH MAKE-UP WATER - LITER/S | 6.3 ( 100 GPM) |
| ** DISPOSAL | |
| TYPE | UNLINED POND |

PERFORMANCE DATA

| PERIOD | MODULE | AVAILABILITY | OPERABILITY | RELIABILITY | UTILIZATION | % REMOVAL SO2 | % REMOVAL PART. | PER HOURS | BOILER HOURS | FGD HOURS | CAP. FACTOR |
|---|---|---|---|---|---|---|---|---|---|---|---|
| 2/79 | SYSTEM | | | | | | | 672 | | | |
| 3/79 | SYSTEM | 96.6 | 96.6 | 96.6 | 92.7 | | | 744 | 1361 | 1313 | |

** PROBLEMS/SOLUTIONS/COMMENTS

START DATE 2/79 END DATE 3/79
AN OUTAGE WAS REQUIRED TO RENEW QUENCHER PUMP BELTS AND FOR REPAIRS TO QUENCHER SUCTION VALVE.

START DATE 2/79 END DATE 3/79
OUTAGES WERE REQUIRED TO REPAIR A HOLE IN THE FEED SLURRY LINE, TO INSPECT THE MODULE FOR PLUGGAGE, AND BECAUSE OF A BOOSTER FAN TRIP.

START DATE 2/79 END DATE 3/79
THE OPERATING VALUES SHOWN ARE THE FIGURES OF FEBRUARY AND MARCH COMBINED.

SECTION 3
DESIGN AND PERFORMANCE DATA FOR OPERATIONAL FGD SYSTEMS

| | | |
|---|---|---|
| COMPANY NAME | SOUTHERN INDIANA GAS & ELEC | |
| PLANT NAME | A.B. BROWN | |
| UNIT NUMBER | 1 | |
| CITY | WEST FRANKLIN | |
| STATE | INDIANA | |
| REGULATORY CLASSIFICATION | A | |
| PARTICULATE EMISSION LIMITATION - NG/J | 43. | ( .100 LB/MMBTU) |
| SO2 EMISSION LIMITATION - NG/J | 516. | ( 1.200 LB/MMBTU) |
| NET PLANT GENERATING CAPACITY - MW | 250.0 | |
| GROSS UNIT GENERATING CAPACITY - MW | 265.0 | |
| NET UNIT GENERATING CAPACITY W/FGD - MW | 250.0 | |
| NET UNIT GENERATING CAPACITY WO/FGD - MW | 255.0 | |
| EQUIVALENT SCRUBBED CAPACITY - MW | 265.0 | |
| ** BOILER DATA | | |
| SUPPLIER | BABCOCK & WILCOX | |
| TYPE | PULVERIZED COAL, DRY BOTTOM | |
| SERVICE LOAD | BASE | |
| COMMERCIAL SERVICE DATE | 0/79 | |
| MAXIMUM BOILER FLUE GAS FLOW - CU.M/S | 372.82 | ( 790036 ACFM) |
| FLUE GAS TEMPERATURE - C | 143.3 | ( 290 F) |
| STACK HEIGHT - M | 152. | ( 498 FT) |
| STACK TOP DIAMETER - M | ******* | (***** FT) |
| ** FUEL DATA | | |
| FUEL TYPE | COAL | |
| FUEL GRADE | ****** | |
| AVERAGE HEAT CONTENT - KJ/KG | 30261. | ( 13010 BTU/LB) |
| RANGE HEAT CONTENT - BTU/LB | | ****** |
| AVERAGE ASH CONTENT - % | 8.80 | |
| RANGE ASH CONTENT - % | ****** | |
| AVERAGE MOISTURE CONTENT - % | 11.40 | |
| RANGE MOISTURE CONTENT - % | ****** | |
| AVERAGE SULFUR CONTENT - % | 4.50 | |
| RANGE SULFUR CONTENT - % | ****** | |
| AVERAGE CHLORIDE CONTENT - % | ******** | |
| RANGE CHLORIDE CONTENT - % | ****** | |
| FUEL FIRING RATE - M T/H | ******* | (*** TPH) |
| FUEL FIRING RATE - MW | ***** | |
| ** ESP | | |
| NUMBER | 1 | |
| TYPE | COLD SIDE | |
| SUPPLIER | BUELL-ENVIROTECH | |
| ** FGD SYSTEM | | |
| SALEABLE PRODUCT/THROWAWAY PRODUCT | THROWAWAY PRODUCT | |
| GENERAL PROCESS TYPE | WET SCRUBBING | |
| PROCESS TYPE | DUAL ALKALI | |
| SYSTEM SUPPLIER | FMC CORPORATION | |
| A-E FIRM | MID VALLEY DIVISION OF BROWN ROOT | |
| CONSTRUCTION FIRM | MID VALLEY | |
| DEVELOPMENT LEVEL | FULL-SCALE | |
| NEW/RETROFIT | NEW | |
| PARTICULATE DESIGN REMOVAL EFFICIENCY - % | 99.50 | |
| SO2 DESIGN REMOVAL EFFICIENCY - % | 85.00 | |
| INITIAL START-UP | 3/79 | |
| CONSTRUCTION INITIATION | 10/77 | |
| CONTRACT AWARDED | 12/76 | |
| STARTED REQUESTING BIDS | 4/76 | |
| ** ABSORBER | | |
| NUMBER | 2 | |
| TYPE | DISC CONTACTOR | |
| INITIAL START UP | 1/79 | |
| SUPPLIER | FMC CORPORATION | |
| NUMBER OF STAGES | 3 | |
| DIMENSIONS - FT | 62 HIGH X 32 DIA. | |
| SHELL MATERIAL | CARBON STEEL | |
| SHELL LINER MATERIAL | CEILCOTE | |
| BOILER LOAD/ABSORBER - % | 60.0 | |
| GAS FLOW - CU.M/S | 237.84 | ( 504000 ACFM) |

SOUTHERN INDIANA GAS & ELEC (CONT.)

| | | |
|---|---|---|
| GAS TEMPERATURE - C | 145.0 | ( 293 F) |
| SO2 INLET CONCENTRATION - PPM | 2810 | |
| SO2 OUTLET CONTRATION - PPM | 520 | |
| SO2 DESIGN REMOVAL EFFICIENCY - % | 85.0 | |

** FANS

| | |
|---|---|
| NUMBER | 2 |
| TYPE | BOOSTER |

** VACUUM FILTER

| | |
|---|---|
| NUMBER | 3 |
| TYPE | ROTARY DRUM |

** MIST ELIMINATOR

| | |
|---|---|
| NUMBER | 2 |
| TYPE | CHEVRON |
| WASH SYSTEM | WASH ONCE/SHIFT |

** PUMPS

| SERVICE | NUMBER |
|---|---|
| RECIRCULATION | 1 |
| RECIRCULATION [SPARE] | 1 |

** TANKS

| SERVICE | NUMBER |
|---|---|
| REACTOR | **** |
| SURGE TANK | **** |

** THICKENER

| | | |
|---|---|---|
| NUMBER | 1 | |
| DIAMETER - M | 30.5 | (100 FT) |

** WATER LOOP

| | |
|---|---|
| TYPE | UNDECIDED (CAN BE OPERATED EITHER WAY) |

** DISPOSAL

| | |
|---|---|
| NATURE | FINAL |
| TYPE | LANDFILL |
| LOCATION | ON-SITE |

PERFORMANCE DATA

| PERIOD | MODULE | AVAILABILITY | OPERABILITY | RELIABILITY | UTILIZATION | % REMOVAL SO2 | % REMOVAL PART. | PER HOURS | BOILER HOURS | FGD HOURS | CAP. FACTOR |
|---|---|---|---|---|---|---|---|---|---|---|---|
| 3/79 | SYSTEM | | | | | | | 744 | | | |
| 4/79 | SYSTEM | | | | | | | 720 | | | |

** PROBLEMS/SOLUTIONS/COMMENTS

START DATE 3/79 END DATE 3/79
THE FGD SYSTEM BEGAN OPERATIONS ON MARCH 18, 1979. NO OPERATIONAL DATA ARE YET AVAILABLE.

SECTION 3
DESIGN AND PERFORMANCE DATA FOR OPERATIONAL FGD SYSTEMS

| | |
|---|---|
| COMPANY NAME | SOUTHERN MISSISSIPPI ELECTRIC |
| PLANT NAME | R.D. MORROW |
| UNIT NUMBER | 1 |
| CITY | HATTISBURG |
| STATE | MISSISSIPPI |
| GROSS UNIT GENERATING CAPACITY - MW | 200.0 |
| NET UNIT GENERATING CAPACITY W/FGD - MW | 180.0 |
| EQUIVALENT SCRUBBED CAPACITY - MW | 124.0 |
| ** FUEL DATA | |
| FUEL TYPE | COAL |
| FUEL GRADE | ****** |
| AVERAGE HEAT CONTENT - KJ/KG | 27912. ( 12000 BTU/LB) |
| AVERAGE ASH CONTENT - % | 8.00 |
| AVERAGE MOISTURE CONTENT - % | 6.50 |
| AVERAGE SULFUR CONTENT - % | 1.30 |
| AVERAGE CHLORIDE CONTENT - % | ******** |
| ** FGD SYSTEM | |
| GENERAL PROCESS TYPE | WET SCRUBBING |
| PROCESS TYPE | LIMESTONE |
| SYSTEM SUPPLIER | RILEY STOKER/ENVIRONEERING |
| NEW/RETROFIT | NEW |
| ENERGY CONSUMPTION - % | 5.5 |
| INITIAL START-UP DATE | 8/78 |
| COMMERCIAL START-UP DATE | **/** |
| SO2 DESIGN REMOVAL EFFICIENCY - % | 85.00 |
| PARTICULATE DESIGN REMOVAL EFFICIENCY - % | 99.60 |
| ** WATER LOOP | |
| TYPE | CLOSED |
| FRESH MAKE-UP WATER - LITER/S | ******* (***** GPM) |
| ** TREATMENT | |
| TYPE | FLYASH STABILIZED |
| ** DISPOSAL | |
| TYPE | LANDFILL |

PERFORMANCE DATA

| PERIOD | MODULE | AVAILABILITY | OPERABILITY | RELIABILITY | UTILIZATION | % REMOVAL SO2 | % REMOVAL PART. | PER HOURS | BOILER HOURS | FGD HOURS | CAP. FACTOR |
|---|---|---|---|---|---|---|---|---|---|---|---|
| 2/79 | SYSTEM | | | | | | | 672 | | | |
| 3/79 | SYSTEM | | | | | | | 744 | | | |
| 4/79 | SYSTEM | | | | | | | 720 | 631 | | |

*. PROBLEMS/SOLUTIONS/COMMENTS

START DATE 4/79 END DATE 4/79
THE BOILER RETURNED TO SERVICE ON APRIL 1 AFTER COMPLETION OF REPAIRS TO THE BOILER TUBES.

START DATE 4/79 END DATE 4/79
NO FGD SYSTEM RELATED PROBLEMS WERE REPORTED BY THE UTILITY FOR APRIL.

SECTION 3
DESIGN AND PERFORMANCE DATA FOR OPERATIONAL FGD SYSTEMS

| | |
|---|---|
| COMPANY NAME | SPRINGFIELD CITY UTILITIES |
| PLANT NAME | SOUTHWEST |
| UNIT NUMBER | 1 |
| CITY | SPRINGFIELD |
| STATE | MISSOURI |
| GROSS UNIT GENERATING CAPACITY - MW | 194.0 |
| NET UNIT GENERATING CAPACITY W/FGD - MW | 173.0 |
| EQUIVALENT SCRUBBED CAPACITY - MW | 194.0 |
| ** FUEL DATA | |
| FUEL TYPE | COAL |
| FUEL GRADE | BITUMINOUS |
| AVERAGE HEAT CONTENT - KJ/KG | 29075. ( 12500 BTU/LB) |
| AVERAGE ASH CONTENT - % | 13.00 |
| AVERAGE MOISTURE CONTENT - % | ******** |
| AVERAGE SULFUR CONTENT - % | 3.50 |
| AVERAGE CHLORIDE CONTENT - % | .30 |
| ** FGD SYSTEM | |
| GENERAL PROCESS TYPE | WET SCRUBBING |
| PROCESS TYPE | LIMESTONE |
| SYSTEM SUPPLIER | AIR CORRECTION DIVISION, UOP |
| NEW/RETROFIT | NEW |
| ENERGY CONSUMPTION - % | 4.6 |
| INITIAL START-UP DATE | 4/77 |
| COMMERCIAL START-UP DATE | **/** |
| SO2 DESIGN REMOVAL EFFICIENCY - % | 80.00 |
| PARTICULATE DESIGN REMOVAL EFFICIENCY - % | 99.70 |
| ** WATER LOOP | |
| TYPE | CLOSED |
| FRESH MAKE-UP WATER - LITER/S | 19.8 ( 315 GPM) |
| ** TREATMENT | |
| TYPE | NONPROPRIETARY |
| ** DISPOSAL | |
| TYPE | LANDFILL |

PERFORMANCE DATA

| PERIOD | MODULE | AVAILABILITY | OPERABILITY | RELIABILITY | UTILIZATION | % REMOVAL SO2 | % REMOVAL PART. | PER HOURS | BOILER HOURS | FGD HOURS | CAP. FACTOR |
|---|---|---|---|---|---|---|---|---|---|---|---|
| 2/79 | S-1 | 25.0 | | | | | | | | | |
| | S-2 | 24.0 | 32.0 | 32.0 | 24.0 | | | | | | |
| | SYSTEM | 24.5 | 16.0 | 16.0 | 12.1 | | | 672 | 508 | 81 | 71.4 |

** PROBLEMS/SOLUTIONS/COMMENTS

START DATE 2/79 END DATE 2/79
THE S-1 MODULE EXPERIENCED PLUGGING PROBLEMS IN THE FIRST AND SECOND STAGE DURING FEBRUARY. ALSO DUE TO GAS LEAKAGE INTO THE MODULE CLEANING WAS DELAYED.

START DATE 2/79 END DATE 2/79
EXPANSION JOINT PROBLEMS AND BROKEN LINES WERE REPORTED.

START DATE 2/79 END DATE 2/79
A LACK OF SCRUBBING MEDIUM DURING THE LATTER PART OF FEBRUARY WAS REPORTED BY THE UTILITY.

START DATE 2/79 END DATE 2/79
THE S-2 MODULE PROBLEMS INCLUDED FROZEN VALVES AND LINES.

| | | | | | | | | | | | |
|---|---|---|---|---|---|---|---|---|---|---|---|
| 3/79 | S-1 | 62.0 | 39.5 | 39.5 | 38.7 | | | | | | |
| | S-2 | 55.0 | 14.0 | 14.0 | 13.7 | | | | | | |
| | SYSTEM | 58.5 | 26.8 | 26.8 | 26.2 | | | 744 | 730 | 195 | 52.8 |

| PERIOD | MODULE | AVAILABILITY | OPERABILITY | RELIABILITY | UTILIZATION | % REMOVAL SO2 | % REMOVAL PART. | PER HOURS | BOILER HOURS | FGD HOURS | CAP. FACTOR |
|---|---|---|---|---|---|---|---|---|---|---|---|
| | | PERFORMANCE DATA | | | | | | | | | |

** PROBLEMS/SOLUTIONS/COMMENTS

START DATE 3/79 END DATE 3/79
THE MAJORITY OF MODULE S-1 DOWNTIME WAS DUE TO A BROKEN SUPERNATE LINE AND MAKEUP CROSS TIE.

START DATE 3/79 END DATE 3/79
THE UTILITY REPORTED THAT THE MODULE WAS UNABLE TO RUN FOR A TIME DUE TO A DESIGN PROBLEM WITH A 500 HP MOTOR.

| | | | | | | | | | | |
|---|---|---|---|---|---|---|---|---|---|---|
| 4/79 | S-2 | 51.6 | 26.5 | 45.0 | 27.0 | | | | | |
| | S-1 | 42.6 | 30.9 | 30.9 | 18.5 | | | | | |
| | SYSTEM | 47.1 | 37.9 | 50.4 | 22.8 | | | 720 | 432 | 164 |

** PROBLEMS/SOLUTIONS/COMMENTS

START DATE 4/79 END DATE 4/79
MODULE S-1 EXPERIENCED AN EXPANSION JOINT FAILURE ON THE I.D. FAN DISCHARGE.

START DATE 4/79 END DATE 4/79
LOW DENSITY AT THE SLURRY HOLD TANK WAS A MAJOR PROBLEM.

START DATE 4/79 END DATE 4/79
SOME PLUGGING OF THE FIRST STAGE OF THE S-2 MODULE WAS REPORTED BY THE UTILITY.

SECTION 3
DESIGN AND PERFORMANCE DATA FOR OPERATIONAL FGD SYSTEMS

| | |
|---|---|
| COMPANY NAME | TENNESSEE VALLEY AUTHORITY |
| PLANT NAME | SHAWNEE |
| UNIT NUMBER | 10A |
| CITY | PADUCAH |
| STATE | KENTUCKY |
| GROSS UNIT GENERATING CAPACITY - MW | 10.0 |
| NET UNIT GENERATING CAPACITY W/FGD - MW | 10.0 |
| EQUIVALENT SCRUBBED CAPACITY - MW | 10.0 |
| ** FUEL DATA | |
| FUEL TYPE | COAL |
| FUEL GRADE | BITUMINOUS |
| AVERAGE HEAT CONTENT - KJ/KG | ****** (****** BTU/LB) |
| AVERAGE ASH CONTENT - % | ******** |
| AVERAGE MOISTURE CONTENT - % | ******** |
| AVERAGE SULFUR CONTENT - % | 2.90 |
| AVERAGE CHLORIDE CONTENT - % | ******** |
| ** FGD SYSTEM | |
| GENERAL PROCESS TYPE | WET SCRUBBING |
| PROCESS TYPE | LIME/LIMESTONE |
| SYSTEM SUPPLIER | AIR CORRECTION DIVISION, UOP |
| NEW/RETROFIT | RETROFIT |
| ENERGY CONSUMPTION - % | ******* |
| INITIAL START-UP DATE | 4/72 |
| COMMERCIAL START-UP DATE | **/** |
| SO2 DESIGN REMOVAL EFFICIENCY - % | ******** |
| PARTICULATE DESIGN REMOVAL EFFICIENCY - % | ******** |

PERFORMANCE DATA

| PERIOD | MODULE | AVAILABILITY | OPERABILITY | RELIABILITY | UTILIZATION | % REMOVAL SO2 | % REMOVAL PART. | PER HOURS | BOILER HOURS | FGD HOURS | CAP. FACTOR |
|---|---|---|---|---|---|---|---|---|---|---|---|
| 0/79 | SYSTEM | | | | | | | | | | |

** PROBLEMS/SOLUTIONS/COMMENTS

START DATE 0/72 END DATE 0/79
REFER TO PERFORMANCE UPDATE INFORMATION FOR SHAWNEE 10B.

SECTION 3
DESIGN AND PERFORMANCE DATA FOR OPERATIONAL FGD SYSTEMS

| | |
|---|---|
| COMPANY NAME | TENNESSEE VALLEY AUTHORITY |
| PLANT NAME | SHAWNEE |
| UNIT NUMBER | 10P |
| CITY | PADUCAH |
| STATE | KENTUCKY |
| GROSS UNIT GENERATING CAPACITY - MW | 10.0 |
| NET UNIT GENERATING CAPACITY W/FGD - MW | 10.0 |
| EQUIVALENT SCRUBBED CAPACITY - MW | 10.0 |
| ** FUEL DATA | |
| FUEL TYPE | COAL |
| FUEL GRADE | BITUMINOUS |
| AVERAGE HEAT CONTENT - KJ/KG | ****** (****** BTU/LB) |
| AVERAGE ASH CONTENT - % | ******** |
| AVERAGE MOISTURE CONTENT - % | ******** |
| AVERAGE SULFUR CONTENT - % | 2.90 |
| AVERAGE CHLORIDE CONTENT - % | ******** |
| ** FGD SYSTEM | |
| GENERAL PROCESS TYPE | WET SCRUBBING |
| PROCESS TYPE | LIME/LIMESTONE |
| SYSTEM SUPPLIER | CHEMICO |
| NEW/RETROFIT | RETROFIT |
| ENERGY CONSUMPTION - % | ******* |
| INITIAL START-UP DATE | 4/72 |
| COMMERCIAL START-UP DATE | **/** |
| SO2 DESIGN REMOVAL EFFICIENCY - % | ******** |
| PARTICULATE DESIGN REMOVAL EFFICIENCY - % | ******** |

PERFORMANCE DATA

| PERIOD | MODULE | AVAILABILITY | OPERABILITY | RELIABILITY | UTILIZATION | % REMOVAL SO2 | % REMOVAL PART. | PER HOURS | BOILER HOURS | FGD HOURS | CAP. FACTOR |
|---|---|---|---|---|---|---|---|---|---|---|---|
| 2/79 | SYSTEM | | | | | | | 672 | | | |
| 3/79 | SYSTEM | | | | | | | 744 | | | |

** PROBLEMS/SOLUTIONS/COMMENTS

START DATE 2/79 END DATE 3/79

ONE TEST RUN WAS CONDUCTED ON EACH OF THE TWO SCRUBBER SYSTEMS IN EARLY FEBRUARY TO PROVIDE SAMPLES FOR LEVEL 1 BIOASSY TESTING BY LITTON BIOMETICS CORPORATION UNDER CONTRACT WITH EPA. ACTUAL SAMPLING OF SLURRIES AND CONDENSATES FROM THE SCRUBBER AND OXIDATION TANK OFF-GASES WAS PERFORMED BY BATTELLE COLUMBUS LABROATORY. FOR THIS PURPOSE. THE TCA WAS OPERATED WITH LIMESTONE/FLYASH SLURRY AS A BASE CASE. AND THE VENTURI/SPRAY TOWER WAS OPERATED WITH LIMESTONE/FLYASH SLURRY AND WITH ADIPIC ACID ADDITIVE AND TWO-SCRUBBER-LOOP FORCED OXIDATION.

A SERIES OF TESTS WAS CONDUCTED ON THE VENTURI/SPRAY TOWER SYSTEM FORM MID-FEBRUARY THROUGH THE END OF MARCH TO SIMULATE THE PLANNED TVA WIDOWS CREEK UNIT 8 FULL-SCALE. TWO-SCRUBBER-LOOP FORCED-OXIDATION SCHEME. SPECIAL WIDOWS CREEK LIMESTONE (STONEMAN) AND COAL (PITTSBURGH MIDWAY) WERE USED AT SHAWNEE DURING THESE TESTS. NEAR COMPLETE SULFITE OXIDATION WAS ACHIEVED AT OXIDATION TANK PH UP TO 6.0 AND AN AIR STOICHIOMETRY AS LOW AS 1.5 ATOMS OXYGEN/ MOLE SO2 ABSORBED. EXPECTED SLURRY CARRY-OVER FROM THE FIRST TO THE SECOND SCRUBBER LOOP AT WIDOWS CREEK WAS SIMULATED BY AN ARTIFICIAL BACKMIX STREAM OF UP TO 65 GPM.

A NEW LIME/ADIPIC ACID TEST BLOCK WITH AND WITHOUT FORCED OCIDATION BEGAN IN EARLY FEBRUARY ON THE SINGLE-LOOP TCA SYSTEM USING FLUE GAS WITH HIGH FLYASH LOADINGS. AT TCA INLET PH OF 7.0. 2400 TO 2900 PPM INLET SO2. L/G OF 50 GAL/ MCF. AND 15 INCHES TOTAL STATIC BED HEIGHT OF 1-7/8 INCH NITRILE FOAM SPHERES. SO2 REMOVALS WERE 83. 93. AND 97 PERCENT WITH ZERO. 600. AND 1200 PPM ADIPIC ACID. RESPECTIVELY. WITHOUT FORCED OXIDATION. SO2 REMOVAL REMAINED HIGH AT 91 PERCENT WITH 1200 PPM ADIPIC ACID WHEN L/G WAS REDUCED FROM 50 TO 37 GAL/MCF. WHEN OXIDATION WAS FORCED WITH ABOUT 1.8 AIR STOICHIOMETRY. NEAR COMPLETE SULFITE OXIDATION WAS ACHIEVED AT OXIDATION TANK PH (TCA INLET PH) UP TO ABOUT 5.5. AND 1200 PPM ADIPIC

TENNESSEE VALLEY AUTHORITY (CONT.)

| PERIOD | MODULE | AVAILABILITY | OPERABILITY | RELIABILITY | UTILIZATION | % REMOVAL SO2 | % REMOVAL PART. | PER HOURS | BOILER HOURS | FGD HOURS | CAP. FACTOR |
|---|---|---|---|---|---|---|---|---|---|---|---|
| | | | | PERFORMANCE DATA | | | | | | | |

ACID. SO2 REMOVAL ABOVE 90 PERCENT WAS OBTAINED AT TCA INLET PH AS LOW AS 5.0 WITH FORCED OXIDATION.

## SECTION 3
## DESIGN AND PERFORMANCE DATA FOR OPERATIONAL FGD SYSTEMS

| | |
|---|---|
| COMPANY NAME | TENNESSEE VALLEY AUTHORITY |
| PLANT NAME | WIDOWS CREEK |
| UNIT NUMBER | 8 |
| CITY | BRIDGEPORT |
| STATE | ALABAMA |
| GROSS UNIT GENERATING CAPACITY - MW | 550.0 |
| NET UNIT GENERATING CAPACITY W/FGD - MW | 516.0 |
| EQUIVALENT SCRUBBED CAPACITY - MW | 550.0 |
| ** FUEL DATA | |
| FUEL TYPE | COAL |
| FUEL GRADE | ****** |
| AVERAGE HEAT CONTENT - KJ/KG | 23260. ( 10000 BTU/LB) |
| AVERAGE ASH CONTENT - % | 25.00 |
| AVERAGE MOISTURE CONTENT - % | 10.00 |
| AVERAGE SULFUR CONTENT - % | 4.30 |
| AVERAGE CHLORIDE CONTENT - % | ******** |
| ** FGD SYSTEM | |
| GENERAL PROCESS TYPE | WET SCRUBBING |
| PROCESS TYPE | LIMESTONE |
| SYSTEM SUPPLIER | TENNESSEE VALLEY AUTHORITY |
| NEW/RETROFIT | RETROFIT |
| ENERGY CONSUMPTION - % | ******* |
| INITIAL START-UP DATE | 5/77 |
| COMMERCIAL START-UP DATE | 1/78 |
| SO2 DESIGN REMOVAL EFFICIENCY - % | 80.00 |
| PARTICULATE DESIGN REMOVAL EFFICIENCY - % | 99.50 |
| ** DISPOSAL | |
| TYPE | POND |

PERFORMANCE DATA

| PERIOD | MODULE | AVAILABILITY | OPERABILITY | RELIABILITY | UTILIZATION | % REMOVAL SO2 | % REMOVAL PART. | PER HOURS | BOILER HOURS | FGD HOURS | CAP. FACTOR |
|---|---|---|---|---|---|---|---|---|---|---|---|
| 2/79 | SYSTEM | | | | | | | 672 | | | |
| 3/79 | SYSTEM | | | | | | | 744 | | | |

** PROBLEMS/SOLUTIONS/COMMENTS

START DATE 2/79 END DATE 3/79
CONSTRUCTION OF THE FORCED OXIDATION TEST WAS COMPLETED AND THE TESTING HAS BEGUN ALTHOUGH NO RESULTS ARE YET AVAILABLE (THIS TESTING IS BEING DONE ON ONE OF THE FOUR MODULES).

START DATE 2/79 END DATE 3/79
THE UNIT OUTAGE WHICH BEGAN IN OCTOBER AND WAS SCHEDULED TO END IN FEBRUARY CONTINUED THROUGH MARCH BECAUSE AFTER A FEW START-UPS THERE WERE BOILER AND TURBINE FAILURES.

SECTION 3
DESIGN AND PERFORMANCE DATA FOR OPERATIONAL FGD SYSTEMS

| | |
|---|---|
| COMPANY NAME | TEXAS UTILITIES |
| PLANT NAME | MARTIN LAKE |
| UNIT NUMBER | 1 |
| CITY | TATUM |
| STATE | TEXAS |
| GROSS UNIT GENERATING CAPACITY - MW | 793.0 |
| NET UNIT GENERATING CAPACITY W/FGD - MW | 750.0 |
| EQUIVALENT SCRUBBED CAPACITY - MW | 595.0 |
| ** FUEL DATA | |
| FUEL TYPE | COAL |
| FUEL GRADE | LIGNITE |
| AVERAGE HEAT CONTENT - KJ/KG | 17166. ( 7380 BTU/LB) |
| AVERAGE ASH CONTENT - % | 8.00 |
| AVERAGE MOISTURE CONTENT - % | 33.00 |
| AVERAGE SULFUR CONTENT - % | .90 |
| AVERAGE CHLORIDE CONTENT - % | ******** |
| ** FGD SYSTEM | |
| GENERAL PROCESS TYPE | WET SCRUBBING |
| PROCESS TYPE | LIMESTONE |
| SYSTEM SUPPLIER | RESEARCH COTTRELL |
| NEW/RETROFIT | NEW |
| ENERGY CONSUMPTION - % | 1.3 |
| INITIAL START-UP DATE | 4/77 |
| COMMERCIAL START-UP DATE | 8/77 |
| SO2 DESIGN REMOVAL EFFICIENCY - % | ******** |
| PARTICULATE DESIGN REMOVAL EFFICIENCY - % | 99.40 |
| ** WATER LOOP | |
| TYPE | CLOSED |
| FRESH MAKE-UP WATER - LITER/S | 34.6 ( 550 GPM) |
| ** TREATMENT | |
| TYPE | FLYASH STABILIZED |
| ** DISPOSAL | |
| TYPE | LANDFILL |

PERFORMANCE DATA

| PERIOD | MODULE | AVAILABILITY | OPERABILITY | RELIABILITY | UTILIZATION | % REMOVAL SO2 | % REMOVAL PART. | PER HOURS | BOILER HOURS | FGD HOURS | CAP. FACTOR |
|---|---|---|---|---|---|---|---|---|---|---|---|
| 2/79 | SYSTEM | | | | | | | 672 | | | |
| 3/79 | SYSTEM | | | | | | | 744 | | | |
| 4/79 | SYSTEM | | | | | | | 720 | | | |

** PROBLEMS/SOLUTIONS/COMMENTS

START DATE 2/79 END DATE 4/79
UNIT 1 IS NOW IN FULL OPERATION ALTHOUGH A SLUDGE DISPOSAS PROBLEM STILL EXISTS.

START DATE 2/79 END DATE 4/79
THE UTILITY HAS CHANGED THE LOUVER DAMPERS WITH GUILLOTINE DAMPERS WHICH SEEM TO WORK BETTER. HOWEVER, THEY STILL HAVE PROBLEMS WITH THE GUILLOTINE DAMPERS FAILING TO SEAL WHEN THEY BECOME SCALED

START DATE 2/79 END DATE 4/79
THERE HAS BEEN REPORTS OF TOWER LEAKS, FROM LINER FAILURE BUT IT DOESN'T SEEM TO BE SERIOUS.

SECTION 3
DESIGN AND PERFORMANCE DATA FOR OPERATIONAL FGD SYSTEMS

| | |
|---|---|
| COMPANY NAME | TEXAS UTILITIES |
| PLANT NAME | MARTIN LAKE |
| UNIT NUMBER | 2 |
| CITY | TATUM |
| STATE | TEXAS |
| GROSS UNIT GENERATING CAPACITY - MW | 793.0 |
| NET UNIT GENERATING CAPACITY W/FGD - MW | 750.0 |
| EQUIVALENT SCRUBBED CAPACITY - MW | 595.0 |
| ** FUEL DATA | |
| FUEL TYPE | COAL |
| FUEL GRADE | LIGNITE |
| AVERAGE HEAT CONTENT - KJ/KG | 17166. ( 7380 BTU/LB) |
| AVERAGE ASH CONTENT - % | 8.00 |
| AVERAGE MOISTURE CONTENT - % | 33.00 |
| AVERAGE SULFUR CONTENT - % | .90 |
| AVERAGE CHLORIDE CONTENT - % | ******** |
| ** FGD SYSTEM | |
| GENERAL PROCESS TYPE | WET SCRUBBING |
| PROCESS TYPE | LIMESTONE |
| SYSTEM SUPPLIER | RESEARCH COTTRELL |
| NEW/RETROFIT | NEW |
| ENERGY CONSUMPTION - % | 1.3 |
| INITIAL START-UP DATE | 5/78 |
| COMMERCIAL START-UP DATE | **/** |
| SO2 DESIGN REMOVAL EFFICIENCY - % | ******** |
| PARTICULATE DESIGN REMOVAL EFFICIENCY - % | 99.40 |
| ** WATER LOOP | |
| TYPE | CLOSED |
| FRESH MAKE-UP WATER - LITER/S | 34.6 ( 550 GPM) |
| ** TREATMENT | |
| TYPE | FLYASH STABLIZATION |
| ** DISPOSAL | |
| TYPE | LANDFILL |

PERFORMANCE DATA

| PERIOD | MODULE | AVAILABILITY | OPERABILITY | RELIABILITY | UTILIZATION | % REMOVAL SO2 | % REMOVAL PART. | PER HOURS | BOILER HOURS | FGD HOURS | CAP. FACTOR |
|---|---|---|---|---|---|---|---|---|---|---|---|
| 2/79 | SYSTEM | | | | | | | 672 | | | |
| 3/79 | SYSTEM | | | | | | | 744 | | | |
| 4/79 | SYSTEM | | | | | | | 720 | | | |

*. PROBLEMS/SOLUTIONS/COMMENTS

START DATE 2/79 END DATE 4/79
THERE HAS BEEN REPORTS OF TOWER LEAKS, FROM LINER FAILURE BUT IT SOESN'T SEEM TO BE SERIOUS.

START DATE 2/79 END DATE 4/79
UNIT 1 IS NOW IN FULL OPERATION ALTHOUGH A SLUDGE DISPOSAL PROBLEM STILL EXISTS.

START DATE 2/79 END DATE 4/79
THE UTILTIY HAS CHANGED THE LOUVER DAMPERS WITH GUILLOTINE DAMPERS WHICH SEEM TO WORK BETTER. HOWEVER, THEY STILL HAVE PROBLEMS WITH THE GUILLOTINE DAMPERS FAILING TO SEAL WHEN THEY BECOME SCALED.

SECTION 3
DESIGN AND PERFORMANCE DATA FOR OPERATIONAL FGD SYSTEMS

| | | |
|---|---|---|
| COMPANY NAME | TEXAS UTILITIES | |
| PLANT NAME | MARTIN LAKE | |
| UNIT NUMBER | 3 | |
| CITY | TATUM | |
| STATE | TEXAS | |
| REGULATORY CLASSIFICATION | A | |
| PARTICULATE EMISSION LIMITATION - NG/J | 43. | ( .100 LB/MMBTU) |
| SO2 EMISSION LIMITATION - NG/J | 516. | ( 1.200 LB/MMBTU) |
| NET PLANT GENERATING CAPACITY - MW | 3000.0 | |
| GROSS UNIT GENERATING CAPACITY - MW | 793.0 | |
| NET UNIT GENERATING CAPACITY W/FGD - MW | 750.0 | |
| NET UNIT GENERATING CAPACITY WO/FGD - MW | 760.0 | |
| EQUIVALENT SCRUBBED CAPACITY - MW | 595.0 | |
| ** BOILER DATA | | |
| SUPPLIER | COMBUSTION ENGINEERING | |
| TYPE | ****** | |
| SERVICE LOAD | BASE | |
| COMMERCIAL SERVICE DATE | **/** | |
| MAXIMUM BOILER FLUE GAS FLOW - CU.M/S | ******** | (******* ACFM) |
| FLUE GAS TEMPERATURE - C | ******* | (**** F) |
| STACK HEIGHT - M | ****** | (**** FT) |
| STACK TOP DIAMETER - M | ******* | (***** FT) |
| ** FUEL DATA | | |
| FUEL TYPE | COAL | |
| FUEL GRADE | LIGNITE | |
| AVERAGE HEAT CONTENT - KJ/KG | 17166. | ( 7380 BTU/LB) |
| RANGE HEAT CONTENT - BTU/LB | | 6972-7894 |
| AVERAGE ASH CONTENT - % | 8.00 | |
| RANGE ASH CONTENT - % | 5.6-13.2 | |
| AVERAGE MOISTURE CONTENT - % | 33.00 | |
| RANGE MOISTURE CONTENT - % | 29.0-37.9 | |
| AVERAGE SULFUR CONTENT - % | .90 | |
| RANGE SULFUR CONTENT - % | 0.5-1.5 | |
| AVERAGE CHLORIDE CONTENT - % | ******** | |
| RANGE CHLORIDE CONTENT - % | ****** | |
| FUEL FIRING RATE - M T/H | 453.5 | (500 TPH) |
| FUEL FIRING RATE - MW | ***** | |
| ** ESP | | |
| NUMBER | 1 | |
| TYPE | COLD SIDE | |
| SUPPLIER | RESEARCH-COTTRELL | |
| ** FGD SYSTEM | | |
| SALEABLE PRODUCT/THROWAWAY PRODUCT | THROWAWAY PRODUCT | |
| GENERAL PROCESS TYPE | WET SCRUBBING | |
| PROCESS TYPE | LIMESTONE | |
| SYSTEM SUPPLIER | RESEARCH COTTRELL | |
| DEVELOPMENT LEVEL | FULL-SCALE | |
| NEW/RETROFIT | NEW | |
| PARTICULATE DESIGN REMOVAL EFFICIENCY - % | 99.40 | |
| COMMERCIAL DATE | 12/78 | |
| INITIAL START-UP | 2/79 | |
| ** ABSORBER | | |
| NUMBER | 6 | |
| TYPE | PACKED/SPRAY TOWER | |
| INITIAL START UP | 12/78 | |
| NUMBER OF STAGES | 3 | |
| BOILER LOAD/ABSORBER - % | 12.5 | |
| ** CENTRIFUGE | | |
| NUMBER | 3 | |
| OUTLET SOLIDS - % | 69.0 | |
| ** MIST ELIMINATOR | | |
| NUMBER | 6 | |
| TYPE | CHEVRON | |
| NUMBER OF STAGES | 2 | |

TEXAS UTILITIES (CONT.)

** PUMPS

| SERVICE | NUMBER |
|---|---|
| QUENCHER FEED PUMP | **** |
| ABSORBER FEED PUMPS | **** |

** TANKS

| SERVICE | NUMBER |
|---|---|
| ABSORBER FEED TANKS | 3 |

** REHEATER

| | |
|---|---|
| TYPE | BYPASS |

** THICKENER

| | | |
|---|---|---|
| NUMBER | 1 | |
| TYPE | GRAVITY | |
| DIAMETER - M | 42.7 | (140 FT) |
| OUTLET SOLIDS - % | 35.0 | |

** TREATMENT

| | |
|---|---|
| TYPE | FLYASH STABILIZATION |
| SUPPLIER | NONPROPRIETARY |

** DISPOSAL

| | |
|---|---|
| NATURE | FINAL |
| TYPE | LANDFILL |
| LOCATION | ON-SITE |
| TRANSPORTATION | RAIL |

PERFORMANCE DATA

| PERIOD | MODULE | AVAILABILITY | OPERABILITY | RELIABILITY | UTILIZATION | % REMOVAL SO2 | % REMOVAL PART. | PER HOURS | BOILER HOURS | FGD HOURS | CAP. FACTOR |
|---|---|---|---|---|---|---|---|---|---|---|---|
| 3/79 | SYSTEM | | | | | | | 744 | | | |
| 4/79 | SYSTEM | | | | | | | 720 | | | |

** PROBLEMS/SOLUTIONS/COMMENTS

START DATE 3/79 END DATE 4/79
MARTIN LAKE UNIT 3 BECAME OPERATIONAL DURING MARCH. NO OPERATION DETAILS ARE YET AVAILABLE.

SECTION 3
DESIGN AND PERFORMANCE DATA FOR OPERATIONAL FGD SYSTEMS

| | |
|---|---|
| COMPANY NAME | TEXAS UTILITIES |
| PLANT NAME | MONTICELLO |
| UNIT NUMBER | 3 |
| CITY | MT. PLEASANT |
| STATE | TEXAS |
| GROSS UNIT GENERATING CAPACITY - MW | 800.0 |
| NET UNIT GENERATING CAPACITY W/FGD - MW | 750.0 |
| EQUIVALENT SCRUBBED CAPACITY - MW | 800.0 |
| ** FUEL DATA | |
| FUEL TYPE | COAL |
| FUEL GRADE | LIGNITE |
| AVERAGE HEAT CONTENT - KJ/KG | ****** (****** BTU/LB) |
| AVERAGE ASH CONTENT - % | 18.90 |
| AVERAGE MOISTURE CONTENT - % | ******** |
| AVERAGE SULFUR CONTENT - % | 1.50 |
| AVERAGE CHLORIDE CONTENT - % | .04 |
| ** FGD SYSTEM | |
| GENERAL PROCESS TYPE | WET SCRUBBING |
| PROCESS TYPE | LIMESTONE |
| SYSTEM SUPPLIER | CHEMICO |
| NEW/RETROFIT | NEW |
| ENERGY CONSUMPTION - % | ******* |
| INITIAL START-UP DATE | 5/78 |
| COMMERCIAL START-UP DATE | 10/78 |
| SO2 DESIGN REMOVAL EFFICIENCY - % | 74.00 |
| PARTICULATE DESIGN REMOVAL EFFICIENCY - % | 99.50 |
| ** WATER LOOP | |
| TYPE | CLOSED |
| FRESH MAKE-UP WATER - LITER/S | 34.4 ( 546 GPM) |
| ** TREATMENT | |
| TYPE | FLYASH STABILIZED |
| ** DISPOSAL | |
| TYPE | LANDFILL |

PERFORMANCE DATA

| PERIOD | MODULE | AVAILABILITY | OPERABILITY | RELIABILITY | UTILIZATION | % REMOVAL SO2 | % REMOVAL PART. | PER HOURS | BOILER HOURS | FGD HOURS | CAP. FACTOR |
|---|---|---|---|---|---|---|---|---|---|---|---|
| 2/79 | SYSTEM | | | | | | | 672 | | | |
| 3/79 | SYSTEM | | | | | | | 744 | | | |
| 4/79 | SYSTEM | | | | | | | 720 | | | |

** PROBLEMS/SOLUTIONS/COMMENTS

START DATE 2/79 END DATE 4/79
THE UNIT IS CURRENTLY DOWN FOR A SCHEDULED OVERHAUL. THE TOWERS HAVE BEEN INSPECTED AND NO SCALING WAS FOUND.

START DATE 2/79 END DATE 4/79
SOME MINOR RECYCLE PUMP LINER PROBLEMS HAVE BEEN REPORTED.

SECTION 3
DESIGN AND PERFORMANCE DATA FOR OPERATIONAL FGD SYSTEMS

| | | |
|---|---|---|
| COMPANY NAME | UTAH POWER & LIGHT | |
| PLANT NAME | HUNTER | |
| UNIT NUMBER | 1 | |
| CITY | CASTLE DALE | |
| STATE | UTAH | |
| REGULATORY CLASSIFICATION | A | |
| PARTICULATE EMISSION LIMITATION - NG/J | ****** | (****** LB/MMBTU) |
| SO2 EMISSION LIMITATION - NG/J | ****** | (****** LB/MMBTU) |
| NET PLANT GENERATING CAPACITY - MW | ******* | |
| GROSS UNIT GENERATING CAPACITY - MW | 400.0 | |
| NET UNIT GENERATING CAPACITY W/FGD - MW | 400.0 | |
| NET UNIT GENERATING CAPACITY WO/FGD - MW | ******* | |
| EQUIVALENT SCRUBBED CAPACITY - MW | 360.0 | |
| ** BOILER DATA | | |
| SUPPLIER | ****** | |
| TYPE | ****** | |
| SERVICE LOAD | BASE | |
| COMMERCIAL SERVICE DATE | **/** | |
| MAXIMUM BOILER FLUE GAS FLOW - CU.M/S | ******** | (******* ACFM) |
| FLUE GAS TEMPERATURE - C | ******* | (**** F) |
| STACK HEIGHT - M | ****** | (**** FT) |
| STACK TOP DIAMETER - M | ******* | (***** FT) |
| ** FUEL DATA | | |
| FUEL TYPE | COAL | |
| FUEL GRADE | ****** | |
| AVERAGE HEAT CONTENT - KJ/KG | 29075. | ( 12500 BTU/LB) |
| RANGE HEAT CONTENT - BTU/LB | | 12,200 - 12,700 |
| AVERAGE ASH CONTENT - % | 10.00 | |
| RANGE ASH CONTENT - % | 9 - 12 | |
| AVERAGE MOISTURE CONTENT - % | 6.50 | |
| RANGE MOISTURE CONTENT - % | ****** | |
| AVERAGE SULFUR CONTENT - % | .55 | |
| RANGE SULFUR CONTENT - % | ****** | |
| AVERAGE CHLORIDE CONTENT - % | ******** | |
| RANGE CHLORIDE CONTENT - % | ****** | |
| FUEL FIRING RATE - M T/H | ******* | (*** TPH) |
| FUEL FIRING RATE - MW | ***** | |
| ** ESP | | |
| NUMBER | 1 | |
| ** FGD SYSTEM | | |
| SALEABLE PRODUCT/THROWAWAY PRODUCT | THROWAWAY PRODUCT | |
| GENERAL PROCESS TYPE | WET SCRUBBING | |
| PROCESS TYPE | LIME | |
| SYSTEM SUPPLIER | CHEMICO | |
| A-E FIRM | STEARNS & ROGER | |
| DEVELOPMENT LEVEL | FULL-SCALE | |
| NEW/RETROFIT | NEW | |
| PARTICULATE DESIGN REMOVAL EFFICIENCY - % | 99.50 | |
| SO2 DESIGN REMOVAL EFFICIENCY - % | 80.00 | |
| COMMERCIAL DATE | 3/79 | |
| INITIAL START-UP | 5/79 | |
| ** ABSORBER | | |
| INITIAL START UP | 12/78 | |
| SUPPLIER | CHEMICO | |
| ** REHEATER | | |
| TYPE | BYPASS | |
| ** WATER LOOP | | |
| TYPE | OPEN | |
| ** TREATMENT | | |
| TYPE | FLYASH STABILIZATION | |
| ** DISPOSAL | | |
| NATURE | FINAL | |
| TYPE | POND | |

UTAH POWER & LIGHT (CONT.)

LOCATION ON-SITE

PERFORMANCE DATA

| PERIOD | MODULE | AVAILABILITY | OPERABILITY | RELIABILITY | UTILIZATION | % REMOVAL SO2 | % REMOVAL PART. | PER HOURS | BOILER HOURS | FGD HOURS | CAP. FACTOR |
|---|---|---|---|---|---|---|---|---|---|---|---|
| 5/79 | SYSTEM | | | | | | | 744 | | | |

** PROBLEMS/SOLUTIONS/COMMENTS

START DATE 5/79 END DATE 5/79
THE UNIT STARTED OPERATIONS ON MAY 21, 1979.

SECTION 3
DESIGN AND PERFORMANCE DATA FOR OPERATIONAL FGD SYSTEMS

| | |
|---|---|
| COMPANY NAME | UTAH POWER & LIGHT |
| PLANT NAME | HUNTINGTON |
| UNIT NUMBER | 1 |
| CITY | PRICE |
| STATE | UTAH |
| GROSS UNIT GENERATING CAPACITY - MW | 430.0 |
| NET UNIT GENERATING CAPACITY W/FGD - MW | 400.0 |
| EQUIVALENT SCRUBBED CAPACITY - MW | 366.0 |
| ** FUEL DATA | |
| FUEL TYPE | COAL |
| FUEL GRADE | ****** |
| AVERAGE HEAT CONTENT - KJ/KG | 29075. ( 12500 BTU/LB) |
| AVERAGE ASH CONTENT - % | 10.00 |
| AVERAGE MOISTURE CONTENT - % | 6.50 |
| AVERAGE SULFUR CONTENT - % | .55 |
| AVERAGE CHLORIDE CONTENT - % | ******** |
| ** FGD SYSTEM | |
| GENERAL PROCESS TYPE | WET SCRUBBING |
| PROCESS TYPE | LIME |
| SYSTEM SUPPLIER | CHEMICO |
| NEW/RETROFIT | NEW |
| ENERGY CONSUMPTION - % | ******* |
| INITIAL START-UP DATE | 5/78 |
| COMMERCIAL START-UP DATE | **/** |
| SO2 DESIGN REMOVAL EFFICIENCY - % | 80.00 |
| PARTICULATE DESIGN REMOVAL EFFICIENCY - % | 99.50 |
| ** WATER LOOP | |
| TYPE | CLOSED |
| FRESH MAKE-UP WATER - LITER/S | 18.9 ( 300 GPM) |
| ** TREATMENT | |
| TYPE | NONPROPRIETARY FLYASH STABILIZED |
| ** DISPOSAL | |
| TYPE | LANDFILL |

PERFORMANCE DATA

| PERIOD | MODULE | AVAILABILITY | OPERABILITY | RELIABILITY | UTILIZATION | % REMOVAL SO2 | % REMOVAL PART. | PER HOURS | BOILER HOURS | FGD HOURS | CAP. FACTOR |
|---|---|---|---|---|---|---|---|---|---|---|---|
| 2/79 | SYSTEM | | | | | | | 672 | | | |
| 3/79 | SYSTEM | | | | | | | 744 | | | |

** PROBLEMS/SOLUTIONS/COMMENTS

START DATE 2/79 END DATE 3/79
NO INFORMATION WAS REPORTED BY THE UTILITY FOR THIS REPORT PERIOD.

SECTION 4
SUMMARY OF FGD SYSTEMS BY COMPANY

| COMPANY NAME | TOTAL | | STATUS: OPERATIONAL | | CONSTRUCTION | | CONTRACT AWARDED | | PLANNED | |
|---|---|---|---|---|---|---|---|---|---|---|
| | NO. | MW | NO. | MW | NO. | MW | NO. | MW | NO. | MW |
| ALABAMA ELECTRIC COOP | 2 | 358. | 1 | 179. | 1 | 179. | 0 | 0. | 0 | 0. |
| ALLEGHENY POWER SYSTEM | 3 | 1338. | 1 | 519. | 1 | 519. | 0 | 0. | 1 | 300. |
| ARIZONA ELECTRIC POWER COOP | 2 | 390. | 1 | 195. | 1 | 195. | 0 | 0. | 0 | 0. |
| ARIZONA PUBLIC SERVICE | 8 | 2684. | 2 | 469. | 4 | 705. | 2 | 1510. | 0 | 0. |
| ASSOCIATED ELECTRIC COOP | 1 | 670. | 0 | 0. | 0 | 0. | 1 | 670. | 0 | 0. |
| BASIN ELECTRIC POWER COOP | 5 | 2680. | 0 | 0. | 2 | 1200. | 2 | 1040. | 1 | 440. |
| BIG RIVERS ELECTRIC | 2 | 484. | 0 | 0. | 2 | 484. | 0 | 0. | 0 | 0. |
| CENTRAL ILLINOIS LIGHT | 2 | 832. | 1 | 416. | 0 | 0. | 0 | 0. | 1 | 416. |
| CENTRAL ILLINOIS PUBLIC SERV | 1 | 617. | 0 | 0. | 1 | 617. | 0 | 0. | 0 | 0. |
| CENTRAL MAINE POWER | 1 | 600. | 0 | 0. | 0 | 0. | 0 | 0. | 1 | 600. |
| CINCINNATI GAS & ELECTRIC | 1 | 650. | 0 | 0. | 1 | 650. | 0 | 0. | 0 | 0. |
| COLORADO UTE ELECTRIC ASSN. | 2 | 894. | 0 | 0. | 2 | 894. | 0 | 0. | 0 | 0. |
| COLUMBUS & SOUTHERN OHIO ELEC. | 4 | 1572. | 2 | 622. | 0 | 0. | 0 | 0. | 2 | 750. |
| COMMONWEALTH EDISON | 1 | 450. | 0 | 0. | 1 | 450. | 0 | 0. | 0 | 0. |
| COOPERATIVE POWER ASSOCIATION | 2 | 654. | 0 | 0. | 2 | 654. | 0 | 0. | 0 | 0. |
| DELMARVA POWER & LIGHT | 1 | 160. | 0 | 0. | 1 | 160. | 0 | 0. | 0 | 0. |
| DUQUESNE LIGHT | 2 | 920. | 2 | 920. | 0 | 0. | 0 | 0. | 0 | 0. |
| EAST KENTUCKY POWER COOP | 1 | 500. | 0 | 0. | 0 | 0. | 1 | 500. | 0 | 0. |
| GENERAL PUBLIC UTILITIES | 2 | 1600. | 0 | 0. | 0 | 0. | 0 | 0. | 2 | 1600. |
| GULF POWER | 1 | 23. | 1 | 23. | 0 | 0. | 0 | 0. | 0 | 0. |
| HOOSIER ENERGY | 2 | 882. | 0 | 0. | 2 | 882. | 0 | 0. | 0 | 0. |
| HOUSTON LIGHTING & POWER CO. | 1 | 512. | 0 | 0. | 0 | 0. | 0 | 0. | 1 | 512. |
| INDIANAPOLIS POWER & LIGHT | 2 | 1062. | 1 | 532. | 1 | 530. | 0 | 0. | 0 | 0. |
| KANSAS CITY POWER & LIGHT | 3 | 1054. | 3 | 1054. | 0 | 0. | 0 | 0. | 0 | 0. |
| KANSAS POWER & LIGHT | 4 | 1575. | 3 | 1085. | 1 | 490. | 0 | 0. | 0 | 0. |
| KENTUCKY UTILITIES | 1 | 64. | 1 | 64. | 0 | 0. | 0 | 0. | 0 | 0. |
| LAKELAND UTILITIES | 1 | 364. | 0 | 0. | 0 | 0. | 1 | 364. | 0 | 0. |
| LOUISVILLE GAS & ELECTRIC | 10 | 3533. | 5 | 1180. | 2 | 853. | 1 | 350. | 2 | 1150. |
| MIDDLE SOUTH UTILITIES | 6 | 5340. | 0 | 0. | 0 | 0. | 0 | 0. | 6 | 5340. |
| MINNESOTA POWER & LIGHT | 1 | 475. | 0 | 0. | 1 | 475. | 0 | 0. | 0 | 0. |
| MINNKOTA POWER COOPERATIVE | 1 | 405. | 1 | 405. | 0 | 0. | 0 | 0. | 0 | 0. |
| MONTANA POWER | 4 | 2120. | 2 | 720. | 0 | 0. | 2 | 1400. | 0 | 0. |
| MUSCATINE POWER & WATER | 1 | 160. | 0 | 0. | 0 | 0. | 0 | 0. | 1 | 160. |
| NEVADA POWER | 10 | 3125. | 3 | 375. | 0 | 0. | 0 | 0. | 7 | 2750. |
| NIAGARA MOHAWK POWER COOP | 1 | 100. | 0 | 0. | 0 | 0. | 1 | 100. | 0 | 0. |
| NORTHERN INDIANA PUB SERVICE | 5 | 1547. | 1 | 115. | 0 | 0. | 0 | 0. | 4 | 1432. |
| NORTHERN STATES POWER | 3 | 2340. | 2 | 1480. | 0 | 0. | 0 | 0. | 1 | 860. |
| OTTER TAIL POWER | 1 | 440. | 0 | 0. | 1 | 440. | 0 | 0. | 0 | 0. |
| PACIFIC GAS & ELECTRIC | 2 | 1600. | 0 | 0. | 0 | 0. | 0 | 0. | 2 | 1600. |
| PACIFIC POWER & LIGHT | 1 | 550. | 0 | 0. | 1 | 550. | 0 | 0. | 0 | 0. |
| PENNSYLVANIA POWER | 3 | 2751. | 2 | 1834. | 1 | 917. | 0 | 0. | 0 | 0. |
| PHILADELPHIA ELECTRIC | 4 | 844. | 1 | 120. | 0 | 0. | 0 | 0. | 3 | 724. |
| POTOMAC ELECTRIC POWER | 1 | 800. | 0 | 0. | 0 | 0. | 0 | 0. | 1 | 800. |
| POWER AUTHORITY OF NEW YORK | 1 | 700. | 0 | 0. | 0 | 0. | 0 | 0. | 1 | 700. |
| PUBLIC SERVICE OF INDIANA | 1 | 650. | 0 | 0. | 0 | 0. | 0 | 0. | 1 | 650. |
| PUBLIC SERVICE OF NEW MEXICO | 4 | 1779. | 2 | 711. | 1 | 534. | 1 | 534. | 0 | 0. |
| SALT RIVER PROJECT | 3 | 840. | 0 | 0. | 2 | 560. | 0 | 0. | 1 | 280. |
| SAN MIGUEL ELECTRIC COOP | 1 | 400. | 0 | 0. | 1 | 400. | 0 | 0. | 0 | 0. |
| SEMINOLE ELECTRIC | 1 | 620. | 0 | 0. | 0 | 0. | 0 | 0. | 1 | 620. |
| SIKESTON BOARD OF MUNIC. UTIL. | 1 | 235. | 0 | 0. | 1 | 235. | 0 | 0. | 0 | 0. |
| SOUTH CAROLINA PUBLIC SERVICE | 2 | 700. | 1 | 140. | 1 | 280. | 1 | 280. | 0 | 0. |
| SOUTHERN CALIFORNIA EDISON | 1 | 175. | 0 | 0. | 0 | 0. | 1 | 175. | 0 | 0. |
| SOUTHERN ILLINOIS POWER COOP | 2 | 484. | 0 | 0. | 1 | 184. | 0 | 0. | 1 | 300. |
| SOUTHERN INDIANA GAS & ELEC | 1 | 265. | 1 | 265. | 0 | 0. | 0 | 0. | 0 | 0. |
| SOUTHERN MISSISSIPPI ELECTRIC | 2 | 248. | 1 | 124. | 1 | 124. | 0 | 0. | 0 | 0. |
| SOUTHWESTERN ELECTRIC POWER | 1 | 720. | 0 | 0. | 0 | 0. | 1 | 720. | 0 | 0. |
| SPRINGFIELD CITY UTILITIES | 1 | 194. | 1 | 194. | 0 | 0. | 0 | 0. | 0 | 0. |
| SPRINGFIELD WATER, LIGHT & PWR | 1 | 205. | 0 | 0. | 1 | 205. | 0 | 0. | 0 | 0. |
| ST. JOE ZINC | 1 | 60. | 0 | 0. | 1 | 60. | 0 | 0. | 0 | 0. |
| TAMPA ELECTRIC | 1 | 450. | 0 | 0. | 0 | 0. | 0 | 0. | 1 | 450. |
| TENNESSEE VALLEY AUTHORITY | 8 | 3753. | 3 | 570. | 1 | 575. | 2 | 1408. | 2 | 1200. |
| TEXAS MUNICIPAL POWER AGENCY | 1 | 400. | 0 | 0. | 0 | 0. | 1 | 400. | 0 | 0. |
| TEXAS POWER & LIGHT | 3 | 1882. | 0 | 0. | 1 | 382. | 0 | 0. | 2 | 1500. |
| TEXAS UTILITIES | 8 | 5585. | 4 | 2585. | 0 | 0. | 1 | 750. | 3 | 2250. |
| UTAH POWER & LIGHT | 3 | 1086. | 2 | 726. | 1 | 360. | 0 | 0. | 0 | 0. |

NOTE - PLANNED STATUS INCLUDES LETTER OF INTENT SIGNED, REQUESTING/EVALUTING BIDS, AND CONSIDERING ONLY FGD SYSTEMS

SECTION 4
SUMMARY OF FGD SYSTEMS BY COMPANY

| | TOTAL | | STATUS: OPERATIONAL | | STATUS: CONSTRUCTION | | STATUS: CONTRACT AWARDED | | STATUS: PLANNED | |
|---|---|---|---|---|---|---|---|---|---|---|
| COMPANY NAME | NO. | MW | NO. | MW | NO. | MW | NO. | MW | NO. | MW |
| WISCONSIN POWER & LIGHT | 1 | 316. | 0 | 0. | 0 | 0. | 1 | 316. | 0 | 0. |
| TOTALS | 162 | 71486. | 51 | 17822. | 42 | 15763. | 20 | 10517. | 49 | 27384. |

NOTE - PLANNED STATUS INCLUDES LETTER OF INTENT SIGNED, REQUESTING/EVALUTING BIDS, AND CONSIDERING ONLY FGD SYSTEMS

SECTION 5
SUMMARY OF FGD SYSTEMS BY SYSTEM SUPPLIER

| SYSTEM SUPPLIER/PROCESS | TOTAL | | STATUS: OPERATIONAL | | STATUS: CONSTRUCTION | | STATUS: CONTRACT AWARDED | |
|---|---|---|---|---|---|---|---|---|
| | NO. | MW | NO. | MW | NO. | MW | NO. | MW |
| ADL/COMBUSTION EQUIP ASSOCIATE | | | | | | | | |
| DUAL ALKALI | 1 | 288. | 1 | 288. | 0 | 0. | 0 | 0. |
| LIME | 3 | 1220. | 2 | 720. | 0 | 0. | 1 | 500. |
| LIME/ALKALINE FLYASH | 3 | 1805. | 1 | 405. | 0 | 0. | 2 | 1400. |
| SODIUM CARBONATE | 3 | 375. | 3 | 375. | 0 | 0. | 0 | 0. |
| TOTAL - | 10 | 3688. | 7 | 1788. | 0 | 0. | 3 | 1900. |
| AIR CORRECTION DIVISION, UOP | | | | | | | | |
| LIME | 2 | 822. | 2 | 822. | 0 | 0. | 0 | 0. |
| LIMESTONE | 4 | 1896. | 2 | 726. | 1 | 450. | 1 | 720. |
| LIME/LIMESTONE | 1 | 10. | 1 | 10. | 0 | 0. | 0 | 0. |
| SODIUM CARBONATE | 1 | 550. | 0 | 0. | 1 | 550. | 0 | 0. |
| TOTAL - | 8 | 3278. | 5 | 1558. | 2 | 1000. | 1 | 720. |
| AMERICAN AIR FILTER | | | | | | | | |
| LIME | 6 | 1673. | 3 | 694. | 3 | 979. | 0 | 0. |
| LIMESTONE | 1 | 280. | 0 | 0. | 0 | 0. | 1 | 280. |
| TOTAL - | 7 | 1953. | 3 | 694. | 3 | 979. | 1 | 280. |
| BABCOCK & WILCOX | | | | | | | | |
| LIME | 3 | 1688. | 1 | 519. | 2 | 1169. | 0 | 0. |
| LIMESTONE | 7 | 2477. | 2 | 1014. | 4 | 1099. | 1 | 364. |
| LIME/SPRAY DRYING | 1 | 600. | 0 | 0. | 0 | 0. | 1 | 600. |
| TOTAL - | 11 | 4765. | 3 | 1533. | 6 | 2268. | 2 | 964. |
| BUELL/ENVIROTECH | | | | | | | | |
| DUAL ALKALI | 1 | 617. | 0 | 0. | 1 | 617. | 0 | 0. |
| TOTAL - | 1 | 617. | 0 | 0. | 1 | 617. | 0 | 0. |
| BUREAU OF MINES | | | | | | | | |
| CITRATE | 1 | 60. | 0 | 0. | 1 | 60. | 0 | 0. |
| TOTAL - | 1 | 60. | 0 | 0. | 1 | 60. | 0 | 0. |
| CHEMICO | | | | | | | | |
| LIME | 7 | 3840. | 6 | 3480. | 1 | 360. | 0 | 0. |
| LIMESTONE | 1 | 800. | 1 | 800. | 0 | 0. | 0 | 0. |
| LIME/ALKALINE FLYASH | 4 | 895. | 0 | 0. | 3 | 579. | 1 | 316. |
| LIME/LIMESTONE | 1 | 10. | 1 | 10. | 0 | 0. | 0 | 0. |
| TOTAL - | 13 | 5545. | 8 | 4290. | 4 | 939. | 1 | 316. |
| CHIYODA INTERNATIONAL | | | | | | | | |
| LIMESTONE/THOROUGHERED 121 | 1 | 23. | 1 | 23. | 0 | 0. | 0 | 0. |
| TOTAL - | 1 | 23. | 1 | 23. | 0 | 0. | 0 | 0. |
| COMBUSTION ENGINEERING | | | | | | | | |
| LIME | 6 | 1096. | 4 | 442. | 2 | 654. | 0 | 0. |
| LIMESTONE | 7 | 2932. | 3 | 1085. | 3 | 1447. | 1 | 400. |
| LIMESTONE/ALKALINE FLYASH | 2 | 1480. | 2 | 1480. | 0 | 0. | 0 | 0. |
| LIME/LIMESTONE | 2 | 708. | 0 | 0. | 1 | 358. | 1 | 350. |
| TOTAL - | 17 | 6216. | 9 | 3007. | 6 | 2459. | 2 | 750. |
| DAVY POWERGAS | | | | | | | | |
| WELLMAN LORD | 6 | 2074. | 3 | 826. | 2 | 714. | 1 | 534. |
| TOTAL - | 6 | 2074. | 3 | 826. | 2 | 714. | 1 | 534. |
| FMC CORPORATION | | | | | | | | |
| DUAL ALKALI | 1 | 265. | 1 | 265. | 0 | 0. | 0 | 0. |
| TOTAL - | 1 | 265. | 1 | 265. | 0 | 0. | 0 | 0. |
| JOY MFG. CO. WESTERN PRECIPITA | | | | | | | | |
| LIME/SPRAY DRYING | 1 | 440. | 0 | 0. | 0 | 0. | 1 | 440. |
| TOTAL - | 1 | 440. | 0 | 0. | 0 | 0. | 1 | 440. |

SECTION 5
SUMMARY OF FGD SYSTEMS BY SYSTEM SUPPLIER

| | TOTAL | | STATUS: OPERATIONAL | | STATUS: CONSTRUCTION | | STATUS: CONTRACT AWARDED | |
|---|---|---|---|---|---|---|---|---|
| SYSTEM SUPPLIER/PROCESS | NO. | MW | NO. | MW | NO. | MW | NO. | MW |
| MITSUBISHI INTERNATIONAL | | | | | | | | |
| LIMESTONE | 2 | 882. | 0 | 0. | 2 | 882. | 0 | 0. |
| TOTAL - | 2 | 882. | 0 | 0. | 2 | 882. | 0 | 0. |
| PEABODY PROCESS SYSTEMS | | | | | | | | |
| LIMESTONE | 4 | 1252. | 1 | 179. | 3 | 1073. | 0 | 0. |
| LIME/ALKALINE FLYASH | 1 | 475. | 0 | 0. | 1 | 475. | 0 | 0. |
| TOTAL - | 5 | 1727. | 1 | 179. | 4 | 1548. | 0 | 0. |
| PULLMAN KELLOGG | | | | | | | | |
| LIME | 1 | 917. | 0 | 0. | 1 | 917. | 0 | 0. |
| LIMESTONE | 3 | 1230. | 0 | 0. | 2 | 560. | 1 | 670. |
| TOTAL - | 4 | 2147. | 0 | 0. | 3 | 1477. | 1 | 670. |
| RESEARCH COTTRELL | | | | | | | | |
| LIMESTONE | 13 | 5455. | 6 | 2449. | 6 | 2256. | 1 | 750. |
| TOTAL - | 13 | 5455. | 6 | 2449. | 6 | 2256. | 1 | 750. |
| RILEY STOKER/ENVIRONEERING | | | | | | | | |
| LIMESTONE | 3 | 664. | 2 | 540. | 1 | 124. | 0 | 0. |
| TOTAL - | 3 | 664. | 2 | 540. | 1 | 124. | 0 | 0. |
| ROCKWELL INTERNATIONAL | | | | | | | | |
| AQUEOUS CARBONATE | 1 | 100. | 0 | 0. | 0 | 0. | 1 | 100. |
| TOTAL - | 1 | 100. | 0 | 0. | 0 | 0. | 1 | 100. |
| SO. CALIFORNIA EDISON/STEARNS- | | | | | | | | |
| LIME | 1 | 175. | 0 | 0. | 0 | 0. | 1 | 175. |
| TOTAL - | 1 | 175. | 0 | 0. | 0 | 0. | 1 | 175. |
| TENNESSEE VALLEY AUTHORITY | | | | | | | | |
| LIMESTONE | 1 | 550. | 1 | 550. | 0 | 0. | 0 | 0. |
| TOTAL - | 1 | 550. | 1 | 550. | 0 | 0. | 0 | 0. |
| UNITED ENGINEERS | | | | | | | | |
| LIME | 2 | 1510. | 0 | 0. | 0 | 0. | 2 | 1510. |
| MAGNESIUM OXIDE | 1 | 120. | 1 | 120. | 0 | 0. | 0 | 0. |
| TOTAL - | 3 | 1630. | 1 | 120. | 0 | 0. | 2 | 1510. |
| VENDOR NOT SELECTED | | | | | | | | |
| LIMESTONE | 2 | 1408. | 0 | 0. | 0 | 0. | 2 | 1408. |
| TOTAL - | 2 | 1408. | 0 | 0. | 0 | 0. | 2 | 1408. |
| WHEELABRATOR-FRYE/R.I. | | | | | | | | |
| AQUEOUS CARBONATE/SPRAY DRYING | 1 | 440. | 0 | 0. | 1 | 440. | 0 | 0. |
| TOTAL - | 1 | 440. | 0 | 0. | 1 | 440. | 0 | 0. |
| TOTAL - | 113 | 44102. | 51 | 17822. | 42 | 15763. | 20 | 10517. |

SECTION 6
SUMMARY OF FGD SYSTEMS BY PROCESS

| PROCESS | TOTAL NO. | TOTAL MW | STATUS: OPERATIONAL NO. | OPERATIONAL MW | CONSTRUCTION NO. | CONSTRUCTION MW | CONTRACT AWARDED NO. | CONTRACT AWARDED MW | PLANNED NO. | PLANNED MW |
|---|---|---|---|---|---|---|---|---|---|---|
| AQUEOUS CARBONATE | 1 | 100. | 0 | 0. | 0 | 0. | 1 | 100. | 0 | 0. |
| CITRATE | 1 | 60. | 0 | 0. | 1 | 60. | 0 | 0. | 0 | 0. |
| LIMESTONE/THOROUGHERED 121 | 1 | 23. | 1 | 23. | 0 | 0. | 0 | 0. | 0 | 0. |
| MAGNESIUM OXIDE | 5 | 1444. | 1 | 120. | 0 | 0. | 0 | 0. | 4 | 1324. |
| WELLMAN LORD | 6 | 2074. | 3 | 826. | 2 | 714. | 1 | 534. | 0 | 0. |
| SUBTOTAL - SALEABLE PRODUCT | 14 | 3701. | 5 | 969. | 3 | 774. | 2 | 634. | 4 | 1324. |
| AQUEOUS CARBONATE/SPRAY DRYING | 1 | 440. | 0 | 0. | 1 | 440. | 0 | 0. | 0 | 0. |
| DUAL ALKALI | 3 | 1170. | 2 | 553. | 1 | 617. | 0 | 0. | 0 | 0. |
| LIME | 31 | 12941. | 18 | 6677. | 9 | 4079. | 4 | 2185. | 0 | 0. |
| LIMESTONE | 57 | 25614. | 18 | 7343. | 22 | 7891. | 8 | 4592. | 9 | 5788. |
| LIMESTONE/ALKALINE FLYASH | 2 | 1480. | 2 | 1480. | 0 | 0. | 0 | 0. | 0 | 0. |
| LIME/ALKALINE FLYASH | 8 | 3175. | 1 | 405. | 4 | 1054. | 3 | 1716. | 0 | 0. |
| LIME/LIMESTONE | 5 | 1328. | 2 | 20. | 1 | 358. | 1 | 350. | 1 | 600. |
| LIME/SPRAY DRYING | 2 | 1040. | 0 | 0. | 0 | 0. | 2 | 1040. | 0 | 0. |
| PROCESS NOT SELECTED | 35 | 19672. | 0 | 0. | 0 | 0. | 0 | 0. | 35 | 19672. |
| SODIUM CARBONATE | 4 | 925. | 3 | 375. | 1 | 550. | 0 | 0. | 0 | 0. |
| SUBTOTAL - THROWAWAY PRODUCT | 148 | 67785. | 46 | 16853. | 39 | 14989. | 18 | 9883. | 45 | 26060. |
| TOTALS | 162 | 71486. | 51 | 17822. | 42 | 15763. | 20 | 10517. | 49 | 27384. |
| SALEABLE % OF TOTAL MW | | 5 | | 5 | | 5 | | 6 | | 5 |

SECTION 7
SUMMARY OF OPERATIONAL FGD SYSTEMS BY PROCESS AND UNIT

| PROCESS/ UNIT NAME | UNIT NO. | CAPACITY MW | INITIAL STARTUP | COMMERCIAL STARTUP |
|---|---|---|---|---|
| DUAL ALKALI | | | | |
| A.B. BROWN | 1 | 265. | 3/79 | 0/ 0 |
| CANE RUN | 6 | 288. | 3/79 | 0/ 0 |
| | | 553. | | |
| LIME | | | | |
| BRUCE MANSFIELD | 1 | 917. | 12/75 | 6/76 |
| BRUCE MANSFIELD | 2 | 917. | 7/77 | 10/77 |
| CANE RUN | 4 | 188. | 8/76 | 9/77 |
| CANE RUN | 5 | 190. | 12/77 | 5/79 |
| COLSTRIP | 1 | 360. | 9/75 | 11/75 |
| COLSTRIP | 2 | 360. | 5/76 | 10/76 |
| CONESVILLE | 5 | 411. | 1/77 | 2/77 |
| CONESVILLE | 6 | 411. | 6/78 | 6/78 |
| ELPAMA | 1-4 | 510. | 10/75 | 10/75 |
| GREEN RIVER | 1-3 | 64. | 9/75 | 6/76 |
| HAWTHORN | 3 | 90. | 11/72 | 0/ 0 |
| HAWTHORN | 4 | 90. | 8/72 | 0/ 0 |
| HUNTER | 1 | 360. | 5/79 | 3/79 |
| HUNTINGTON | 1 | 366. | 5/78 | 0/ 0 |
| MILL CREEK | 3 | 442. | 8/78 | 3/79 |
| PADDY'S RUN | 6 | 72. | 4/73 | 0/ 0 |
| PHILLIPS | 1-6 | 410. | 7/73 | 0/ 0 |
| PLEASANTS | 1 | 519. | 3/79 | 3/79 |
| | | 6677. | | |
| LIMESTONE | | | | |
| APACHE | 2 | 195. | 8/78 | 1/79 |
| CHOLLA | 1 | 119. | 10/73 | 12/73 |
| CHOLLA | 2 | 350. | 4/78 | 0/ 0 |
| DUCK CREEK | 1 | 416. | 7/76 | 8/78 |
| JEFFREY | 1 | 540. | 8/78 | 8/78 |
| LA CYGNE | 1 | 874. | 2/73 | 6/73 |
| LAWRENCE | 4 | 125. | 1/76 | 0/ 0 |
| LAWRENCE | 5 | 420. | 11/71 | 0/ 0 |
| MARTIN LAKE | 1 | 595. | 4/77 | 8/77 |
| MARTIN LAKE | 2 | 595. | 5/78 | 0/ 0 |
| MARTIN LAKE | 3 | 595. | 2/79 | 12/78 |
| MONTICELLO | 3 | 800. | 5/78 | 10/78 |
| PETERSBURG | 3 | 532. | 12/77 | 12/77 |
| R.D. MORROW | 1 | 126. | 8/78 | 0/ 0 |
| SOUTHWEST | 1 | 194. | 4/77 | 0/ 0 |
| TOMBIGBEE | 2 | 179. | 9/78 | 0/ 0 |
| WIDOWS CREEK | 8 | 550. | 5/77 | 1/78 |
| WINYAH | 2 | 140. | 7/77 | 0/ 0 |
| | | 7343. | | |
| LIMESTONE/ALKALINE FLYASH | | | | |
| SHERBURNE | 1 | 740. | 3/76 | 5/76 |
| SHERBURNE | 2 | 740. | 4/77 | 4/77 |
| | | 1480. | | |
| LIMESTONE/THOROUGHBRED 121 | | | | |
| SCHOLZ | 1,2 | 23. | 8/78 | 0/ 0 |
| | | 23. | | |
| LIME/ALKALINE FLYASH | | | | |
| MILTON R. YOUNG | 2 | 405. | 9/77 | 6/78 |
| | | 405. | | |
| LIME/LIMESTONE | | | | |
| SHAWNEE | 10A | 10. | 4/72 | 0/ 0 |
| SHAWNEE | 10B | 10. | 4/72 | 0/ 0 |

SECTION 7
SUMMARY OF OPERATIONAL FGD SYSTEMS BY PROCESS AND UNIT

| PROCESS/ UNIT NAME | UNIT NO. | CAPACITY MW | INITIAL STARTUP | COMMERCIAL STARTUP |
|---|---|---|---|---|
| | | 20. | | |
| MAGNESIUM OXIDE | | | | |
| EDDYSTONE | 1A | 120. | 9/75 | 9/75 |
| | | 120. | | |
| SODIUM CARBONATE | | | | |
| REID GARDNER | 1 | 125. | 4/74 | 0/ 0 |
| REID GARDNER | 2 | 125. | 4/74 | 0/ 0 |
| REID GARDNER | 3 | 125. | 6/76 | 7/76 |
| | | 375. | | |
| WELLMAN LORD | | | | |
| DEAN H. MITCHELL | 11 | 115. | 7/76 | 6/77 |
| SAN JUAN | 1 | 361. | 4/78 | 0/ 0 |
| SAN JUAN | 2 | 350. | 8/78 | 0/ 0 |
| | | 826. | | |
| TOTAL | | 17822. | | |

SECTION 8
SUMMARY OF END-PRODUCT DISPOSAL PRACTICES FOR OPERATIONAL FGD SYSTEMS

| PROCESS/ UNIT NAME | UNIT NO | THROWAWAY STABILIZED | THROWAWAY UNSTABILIZED | BYPRODUCT TYPE | BYPRODUCT DISPOSITION |
|---|---|---|---|---|---|
| DUAL ALKALI | | | | | |
| A.B. BROWN | 1 | | LANDFILL | | |
| CANE RUN | 6 | | LINED POND | | |
| LIME | | | | | |
| BRUCE MANSFIELD | 1 | LANDFILL | | | |
| BRUCE MANSFIELD | 2 | LANDFILL | | | |
| CANE RUN | 4 | | LINED POND | | |
| CANE RUN | 5 | LINED POND | | | |
| COLSTRIP | 1 | | SLUDGE POND | | |
| COLSTRIP | 2 | | SLUDGE POND | | |
| CONESVILLE | 5 | LANDFILL | | | |
| CONESVILLE | 6 | DIKED LANDFIL | | | |
| ELRAMA | 1-4 | LANDFILL | | | |
| GREEN RIVER | 1-3 | | LINED POND | | |
| HAWTHORN | 3 | UNLINED POND | | | |
| HAWTHORN | 4 | UNLINED POND | | | |
| HUNTER | 1 | POND | | | |
| HUNTINGTON | 1 | LANDFILL | | | |
| MILL CREEK | 3 | SLUDGE POND | | | |
| PADDY'S RUN | 6 | UNLINED POND | | | |
| PHILLIPS | 1-6 | LANDFILL | | | |
| PLEASANTS | 1 | | | | |
| LIMESTONE | | | | | |
| APACHE | 2 | | SLUDGE POND | | |
| CHOLLA | 1 | | UNLINED POND | | |
| CHOLLA | 2 | | SLUDGE POND | | |
| DUCK CREEK | 1 | | LINED POND | | |
| JEFFREY | 1 | UNLINED POND | | | |
| LA CYGNE | 1 | | UNLINED POND | | |
| LAWRENCE | 4 | UNLINED POND | | | |
| LAWRENCE | 5 | UNLINED POND | | | |
| MARTIN LAKE | 1 | LANDFILL | | | |
| MARTIN LAKE | 2 | LANDFILL | | | |
| MARTIN LAKE | 3 | LANDFILL | | | |
| MONTICELLO | 3 | LANDFILL | | | |
| PETERSBURG | 3 | UNLINED POND | | | |
| R.D. MORROW | 1 | LANDFILL | | | |
| SOUTHWEST | 1 | LANDFILL | | | |
| TOMBIGBEE | 2 | LINED POND | | | |
| WIDOWS CREEK | 8 | | POND | | |
| WINYAH | 2 | | UNLINED POND | | |
| LIMESTONE/ALKALINE FLYASH | | | | | |
| SHERBURNE | 1 | LINED POND | | | |
| SHERBURNE | 2 | LINED POND | | | |
| LIMESTONE/THOROUGHBRED 121 | | | | | |
| SCHOLZ | 1.2 | | | GYPSUM | STACKED IN POND |
| LIME/ALKALINE FLYASH | | | | | |
| MILTON R. YOUNG | 2 | | MINEFILL | | |
| LIME/LIMESTONE | | | | | |
| SHAWNEE | 10A | | | | |
| SHAWNEE | 10B | | | | |
| MAGNESIUM OXIDE | | | | | |
| EDDYSTONE | 1A | | | SULFURIC ACID | |

SECTION 8
SUMMARY OF END-PRODUCT DISPOSAL PRACTICES FOR OPERATIONAL FGD SYSTEMS

| PROCESS/ UNIT NAME | UNIT NO | THROWAWAY STABILIZED | THROWAWAY UNSTABILIZED | BYPRODUCT TYPE | BYPRODUCT DISPOSITION |
|---|---|---|---|---|---|
| SODIUM CARBONATE | | | | | |
| REID GARDNER | 1 | | EVAP POND | | |
| REID GARDNER | 2 | | EVAP POND | | |
| REID GARDNER | 3 | | EVAP POND | | |
| WELLMAN LORD | | | | | |
| DEAN H. MITCHELL | 11 | | | ELEMENTAL SULFUR | |
| SAN JUAN | 1 | | ASH POND | ELEMENTAL SULFUR | MARKETED |
| SAN JUAN | 2 | | ASH POND | ELEMENTAL SULFUR | MARKETED |

SECTION 9
SUMMARY OF FGD SYSTEMS IN OPERATION

| COMPANY NAME/ UNIT NAME | UNIT NO. | NEW OR RETROFIT | CAPACITY MW | PROCESS/ SYSTEM SUPPLIER | START-UP DATE |
|---|---|---|---|---|---|
| ALABAMA ELECTRIC COOP TOMBIGBEE | 2 | NEW | 179.0 | LIMESTONE PEABODY PROCESS SYSTEMS | 9/78 |
| ALLEGHENY POWER SYSTEM PLEASANTS | 1 | NEW | 519.0 | LIME BABCOCK & WILCOX | 3/79 |
| ARIZONA ELECTRIC POWER COOP APACHE | 2 | NEW | 195.0 | LIMESTONE RESEARCH COTTRELL | 8/78 |
| ARIZONA PUBLIC SERVICE CHOLLA | 1 | RETROFIT | 119.0 | LIMESTONE RESEARCH COTTRELL | 10/73 |
| ARIZONA PUBLIC SERVICE CHOLLA | 2 | NEW | 350.0 | LIMESTONE RESEARCH COTTRELL | 4/78 |
| CENTRAL ILLINOIS LIGHT DUCK CREEK | 1 | NEW | 416.0 | LIMESTONE RILEY STOKER/ENVIRONEERING | 7/76 |
| COLUMBUS & SOUTHERN OHIO ELEC. CONESVILLE | 5 | NEW | 411.0 | LIME AIR CORRECTION DIVISION, UOP | 1/77 |
| COLUMBUS & SOUTHERN OHIO ELEC. CONESVILLE | 6 | NEW | 411.0 | LIME AIR CORRECTION DIVISION, UOP | 6/78 |
| DUQUESNE LIGHT ELRAMA | 1-4 | RETROFIT | 510.0 | LIME CHEMICO | 10/75 |
| DUQUESNE LIGHT PHILLIPS | 1-6 | RETROFIT | 410.0 | LIME CHEMICO | 7/73 |
| GULF POWER SCHOLZ | 1,2 | RETROFIT | 23.0 | LIMESTONE/THOROUGHBRED 121 CHIYODA INTERNATIONAL | 8/78 |
| INDIANAPOLIS POWER & LIGHT PETERSBURG | 3 | NEW | 532.0 | LIMESTONE AIR CORRECTION DIVISION, UOP | 12/77 |
| KANSAS CITY POWER & LIGHT HAWTHORN | 3 | RETROFIT | 90.0 | LIME COMBUSTION ENGINEERING | 11/72 |
| KANSAS CITY POWER & LIGHT HAWTHORN | 4 | RETROFIT | 90.0 | LIME COMBUSTION ENGINEERING | 8/72 |
| KANSAS CITY POWER & LIGHT LA CYGNE | 1 | NEW | 874.0 | LIMESTONE BABCOCK & WILCOX | 2/73 |
| KANSAS POWER & LIGHT JEFFREY | 1 | NEW | 540.0 | LIMESTONE COMBUSTION ENGINEERING | 8/78 |
| KANSAS POWER & LIGHT LAWRENCE | 4 | RETROFIT | 125.0 | LIMESTONE COMBUSTION ENGINEERING | 1/76 |
| KANSAS POWER & LIGHT LAWRENCE | 5 | RETROFIT | 420.0 | LIMESTONE COMBUSTION ENGINEERING | 11/71 |
| KENTUCKY UTILITIES GREEN RIVER | 1-3 | RETROFIT | 64.0 | LIME AMERICAN AIR FILTER | 9/75 |
| LOUISVILLE GAS & ELECTRIC CANE RUN | 4 | RETROFIT | 188.0 | LIME AMERICAN AIR FILTER | 8/76 |
| LOUISVILLE GAS & ELECTRIC CANE RUN | 5 | RETROFIT | 190.0 | LIME COMBUSTION ENGINEERING | 12/77 |
| LOUISVILLE GAS & ELECTRIC CANE RUN | 6 | RETROFIT | 288.0 | DUAL ALKALI ADL/COMBUSTION EQUIP ASSOCIATE | 3/79 |
| LOUISVILLE GAS & ELECTRIC MILL CREEK | 3 | NEW | 442.0 | LIME AMERICAN AIR FILTER | 8/78 |
| LOUISVILLE GAS & ELECTRIC PADDY'S RUN | 6 | RETROFIT | 72.0 | LIME COMBUSTION ENGINEERING | 4/73 |

SECTION 9
SUMMARY OF FGD SYSTEMS IN OPERATION

| COMPANY NAME/ UNIT NAME | UNIT NO. | NEW OR RETROFIT | CAPACITY MW | PROCESS/ SYSTEM SUPPLIER | START-UP DATE |
|---|---|---|---|---|---|
| MINNKOTA POWER COOPERATIVE<br>MILTON R. YOUNG | 2 | NEW | 405.0 | LIME/ALKALINE FLYASH<br>ADL/COMBUSTION EQUIP ASSOCIATE | 9/77 |
| MONTANA POWER<br>COLSTRIP | 1 | NEW | 360.0 | LIME<br>ADL/COMBUSTION EQUIP ASSOCIATE | 9/75 |
| MONTANA POWER<br>COLSTRIP | 2 | NEW | 360.0 | LIME<br>ADL/COMBUSTION EQUIP ASSOCIATE | 5/76 |
| NEVADA POWER<br>REID GARDNER | 1 | RETROFIT | 125.0 | SODIUM CARBONATE<br>ADL/COMBUSTION EQUIP ASSOCIATE | 4/74 |
| NEVADA POWER<br>REID GARDNER | 2 | RETROFIT | 125.0 | SODIUM CARBONATE<br>ADL/COMBUSTION EQUIP ASSOCIATE | 4/74 |
| NEVADA POWER<br>REID GARDNER | 3 | NEW | 125.0 | SODIUM CARBONATE<br>ADL/COMBUSTION EQUIP ASSOCIATE | 6/76 |
| NORTHERN INDIANA PUB SERVICE<br>DEAN H. MITCHELL | 11 | RETROFIT | 115.0 | WELLMAN LORD<br>DAVY POWERGAS | 7/76 |
| NORTHERN STATES POWER<br>SHERBURNE | 1 | NEW | 740.0 | LIMESTONE/ALKALINE FLYASH<br>COMBUSTION ENGINEERING | 3/76 |
| NORTHERN STATES POWER<br>SHERBURNE | 2 | NEW | 740.0 | LIMESTONE/ALKALINE FLYASH<br>COMBUSTION ENGINEERING | 4/77 |
| PENNSYLVANIA POWER<br>BRUCE MANSFIELD | 1 | NEW | 917.0 | LIME<br>CHEMICO | 12/75 |
| PENNSYLVANIA POWER<br>BRUCE MANSFIELD | 2 | NEW | 917.0 | LIME<br>CHEMICO | 7/77 |
| PHILADELPHIA ELECTRIC<br>EDDYSTONE | 1A | RETROFIT | 120.0 | MAGNESIUM OXIDE<br>UNITED ENGINEERS | 9/75 |
| PUBLIC SERVICE OF NEW MEXICO<br>SAN JUAN | 1 | RETROFIT | 361.0 | WELLMAN LORD<br>DAVY POWERGAS | 4/78 |
| PUBLIC SERVICE OF NEW MEXICO<br>SAN JUAN | 2 | RETROFIT | 350.0 | WELLMAN LORD<br>DAVY POWERGAS | 8/78 |
| SOUTH CAROLINA PUBLIC SERVICE<br>WINYAH | 2 | NEW | 140.0 | LIMESTONE<br>BABCOCK & WILCOX | 7/77 |
| SOUTHERN INDIANA GAS & ELEC<br>A.B. BROWN | 1 | NEW | 265.0 | DUAL ALKALI<br>FMC CORPORATION | 3/79 |
| SOUTHERN MISSISSIPPI ELECTRIC<br>R.D. MORROW | 1 | NEW | 124.0 | LIMESTONE<br>RILEY STOKER/ENVIRONEERING | 8/78 |
| SPRINGFIELD CITY UTILITIES<br>SOUTHWEST | 1 | NEW | 194.0 | LIMESTONE<br>AIR CORRECTION DIVISION, UOP | 4/77 |
| TENNESSEE VALLEY AUTHORITY<br>SHAWNEE | 10A | RETROFIT | 10.0 | LIME/LIMESTONE<br>AIR CORRECTION DIVISION, UOP | 4/72 |
| TENNESSEE VALLEY AUTHORITY<br>SHAWNEE | 10B | RETROFIT | 10.0 | LIME/LIMESTONE<br>CHEMICO | 4/72 |
| TENNESSEE VALLEY AUTHORITY<br>WIDOWS CREEK | 8 | RETROFIT | 550.0 | LIMESTONE<br>TENNESSEE VALLEY AUTHORITY | 5/77 |
| TEXAS UTILITIES<br>MARTIN LAKE | 1 | NEW | 595.0 | LIMESTONE<br>RESEARCH COTTRELL | 4/77 |
| TEXAS UTILITIES<br>MARTIN LAKE | 2 | NEW | 595.0 | LIMESTONE<br>RESEARCH COTTRELL | 5/78 |
| TEXAS UTILITIES<br>MARTIN LAKE | 3 | NEW | 595.0 | LIMESTONE<br>RESEARCH COTTRELL | 2/79 |

SECTION 9
SUMMARY OF FGD SYSTEMS IN OPERATION

| COMPANY NAME/ UNIT NAME | UNIT NO. | NEW OR RETROFIT | CAPACITY MW | PROCESS/ SYSTEM SUPPLIER | START-UP DATE |
|---|---|---|---|---|---|
| TEXAS UTILITIES MONTICELLO | 3 | NEW | 800.0 | LIMESTONE CHEMICO | 5/78 |
| UTAH POWER & LIGHT HUNTER | 1 | NEW | 360.0 | LIME CHEMICO | 5/79 |
| UTAH POWER & LIGHT HUNTINGTON | 1 | NEW | 366.0 | LIME CHEMICO | 5/78 |

SECTION 10
SUMMARY OF FGD SYSTEMS UNDER CONSTRUCTION

| COMPANY NAME/ UNIT NAME | UNIT NO. | NEW OR RETROFIT | CAPACITY MW | PROCESS/ SYSTEM SUPPLIER | START-UP DATE |
|---|---|---|---|---|---|
| ALABAMA ELECTRIC COOP TOMBIGBEE | 3 | NEW | 179.0 | LIMESTONE PEABODY PROCESS SYSTEMS | 6/79 |
| ALLEGHENY POWER SYSTEM PLEASANTS | 2 | NEW | 519.0 | LIME BABCOCK & WILCOX | 9/80 |
| ARIZONA ELECTRIC POWER COOP APACHE | 3 | NEW | 195.0 | LIMESTONE RESEARCH COTTRELL | 6/79 |
| ARIZONA PUBLIC SERVICE CHOLLA | 4 | NEW | 126.0 | LIMESTONE RESEARCH COTTRELL | 6/80 |
| ARIZONA PUBLIC SERVICE FOUR CORNERS | 1 | RETROFIT | 175.0 | LIME/ALKALINE FLYASH CHEMICO | 0/79 |
| ARIZONA PUBLIC SERVICE FOUR CORNERS | 2 | RETROFIT | 175.0 | LIME/ALKALINE FLYASH CHEMICO | 0/79 |
| ARIZONA PUBLIC SERVICE FOUR CORNERS | 3 | RETROFIT | 229.0 | LIME/ALKALINE FLYASH CHEMICO | 0/79 |
| BASIN ELECTRIC POWER COOP LARAMIE RIVER | 1 | NEW | 600.0 | LIMESTONE RESEARCH COTTRELL | 4/80 |
| BASIN ELECTRIC POWER COOP LARAMIE RIVER | 2 | NEW | 600.0 | LIMESTONE RESEARCH COTTRELL | 10/80 |
| BIG RIVERS ELECTRIC GREEN | 1 | NEW | 242.0 | LIME AMERICAN AIR FILTER | 12/79 |
| BIG RIVERS ELECTRIC GREEN | 2 | NEW | 242.0 | LIME AMERICAN AIR FILTER | 12/80 |
| CENTRAL ILLINOIS PUBLIC SERV NEWTON | 1 | NEW | 617.0 | DUAL ALKALI BUELL/ENVIROTECH | 11/79 |
| CINCINNATI GAS & ELECTRIC EAST BEND | 2 | NEW | 650.0 | LIME BABCOCK & WILCOX | 10/81 |
| COLORADO UTE ELECTRIC ASSN. CRAIG | 1 | NEW | 447.0 | LIMESTONE PEABODY PROCESS SYSTEMS | 6/79 |
| COLORADO UTE ELECTRIC ASSN. CRAIG | 2 | NEW | 447.0 | LIMESTONE PEABODY PROCESS SYSTEMS | 11/79 |
| COMMONWEALTH EDISON POWERTON | 51 | RETROFIT | 450.0 | LIMESTONE AIR CORRECTION DIVISION, UOP | 10/79 |
| COOPERATIVE POWER ASSOCIATION COAL CREEK | 1 | NEW | 327.0 | LIME COMBUSTION ENGINEERING | 5/79 |
| COOPERATIVE POWER ASSOCIATION COAL CREEK | 2 | NEW | 327.0 | LIME COMBUSTION ENGINEERING | 10/80 |
| DELMARVA POWER & LIGHT DELAWARE CITY | 1-3 | RETROFIT | 180.0 | WELLMAN LORD DAVY POWERGAS | 4/80 |
| HOOSIER ENERGY MEROM | 1 | NEW | 441.0 | LIMESTONE MITSUBISHI INTERNATIONAL | 4/81 |
| HOOSIER ENERGY MEROM | 2 | NEW | 441.0 | LIMESTONE MITSUBISHI INTERNATIONAL | 1/82 |
| INDIANAPOLIS POWER & LIGHT PETERSBURG | 4 | NEW | 530.0 | LIMESTONE RESEARCH COTTRELL | 10/83 |
| KANSAS POWER & LIGHT JEFFREY | 2 | NEW | 490.0 | LIMESTONE COMBUSTION ENGINEERING | 6/80 |
| LOUISVILLE GAS & ELECTRIC MILL CREEK | 1 | RETROFIT | 358.0 | LIME/LIMESTONE COMBUSTION ENGINEERING | 4/81 |

SECTION 10
SUMMARY OF FGD SYSTEMS UNDER CONSTRUCTION

| COMPANY NAME/ UNIT NAME | UNIT NO. | NEW OR RETROFIT | CAPACITY MW | PROCESS/ SYSTEM SUPPLIER | START-UP DATE |
|---|---|---|---|---|---|
| LOUISVILLE GAS & ELECTRIC<br>MILL CREEK | 4 | NEW | 495.0 | LIME<br>AMERICAN AIR FILTER | 7/81 |
| MINNESOTA POWER & LIGHT<br>CLAY BOSWELL | 4 | NEW | 475.0 | LIME/ALKALINE FLYASH<br>PEABODY PROCESS SYSTEMS | 5/80 |
| OTTER TAIL POWER<br>COYOTE | 1 | NEW | 440.0 | AQUEOUS CARBONATE/SPRAY DRYING<br>WHEELABRATOR-FRYE/R.I. | 5/81 |
| PACIFIC POWER & LIGHT<br>JIM BRIDGER | 4 | NEW | 550.0 | SODIUM CARBONATE<br>AIR CORRECTION DIVISION, UOP | 9/79 |
| PENNSYLVANIA POWER<br>BRUCE MANSFIELD | 3 | NEW | 917.0 | LIME<br>PULLMAN KELLOGG | 4/80 |
| PUBLIC SERVICE OF NEW MEXICO<br>SAN JUAN | 3 | NEW | 534.0 | WELLMAN LORD<br>DAVY POWERGAS | 6/79 |
| SALT RIVER PROJECT<br>CORONADO | 1 | NEW | 280.0 | LIMESTONE<br>PULLMAN KELLOGG | 8/79 |
| SALT RIVER PROJECT<br>CORONADO | 2 | NEW | 280.0 | LIMESTONE<br>PULLMAN KELLOGG | 1/80 |
| SAN MIGUEL ELECTRIC COOP<br>SAN MIGUEL | 1 | NEW | 400.0 | LIMESTONE<br>BABCOCK & WILCOX | 8/80 |
| SIKESTON BOARD OF MUNIC. UTIL.<br>SIKESTON | 1 | NEW | 235.0 | LIMESTONE<br>BABCOCK & WILCOX | 11/80 |
| SOUTH CAROLINA PUBLIC SERVICE<br>WINYAH | 3 | NEW | 280.0 | LIMESTONE<br>BABCOCK & WILCOX | 5/80 |
| SOUTHERN ILLINOIS POWER COOP<br>MARION | 4 | NEW | 184.0 | LIMESTONE<br>BABCOCK & WILCOX | 5/79 |
| SOUTHERN MISSISSIPPI ELECTRIC<br>R.D. MORROW | 2 | NEW | 124.0 | LIMESTONE<br>RILEY STOKER/ENVIRONEERING | 7/79 |
| SPRINGFIELD WATER, LIGHT & PWR<br>DALLMAN | 3 | NEW | 205.0 | LIMESTONE<br>RESEARCH COTTRELL | 7/80 |
| ST. JOE ZINC<br>G.F. WEATON | 1 | RETROFIT | 60.0 | CITRATE<br>BUREAU OF MINES | 7/79 |
| TENNESSEE VALLEY AUTHORITY<br>WIDOWS CREEK | 7 | RETROFIT | 575.0 | LIMESTONE<br>COMBUSTION ENGINEERING | 10/80 |
| TEXAS POWER & LIGHT<br>SANDOW | 4 | NEW | 382.0 | LIMESTONE<br>COMBUSTION ENGINEERING | 7/80 |
| UTAH POWER & LIGHT<br>HUNTER | 2 | NEW | 360.0 | LIME<br>CHEMICO | 6/80 |

SECTION 11
SUMMARY OF CONTRACT AWARDED FGD SYSTEMS

| COMPANY NAME/ UNIT NAME | UNIT NO. | NEW OR RETROFIT | CAPACITY MW | PROCESS/ SYSTEM SUPPLIER | START-UP DATE |
|---|---|---|---|---|---|
| ARIZONA PUBLIC SERVICE FOUR CORNERS | 4 | RETROFIT | 755.0 | LIME UNITED ENGINEERS | 0/82 |
| ARIZONA PUBLIC SERVICE FOUR CORNERS | 5 | RETROFIT | 755.0 | LIME UNITED ENGINEERS | 0/82 |
| ASSOCIATED ELECTRIC COOP THOMAS HILL | 3 | NEW | 670.0 | LIMESTONE PULLMAN KELLOGG | 1/82 |
| BASIN ELECTRIC POWER COOP ANTELOPE VALLEY | 1 | NEW | 440.0 | LIME/SPRAY DRYING JOY MFG. CO. WESTERN PRECIPITA | 11/81 |
| BASIN ELECTRIC POWER COOP LARAMIE RIVER | 3 | NEW | 600.0 | LIME/SPRAY DRYING BABCOCK & WILCOX | 4/82 |
| EAST KENTUCKY POWER COOP SPURLOCK | 2 | NEW | 500.0 | LIME ADL/COMBUSTION EQUIP ASSOCIATE | 10/80 |
| LAKELAND UTILITIES MCINTOSH | 3 | NEW | 364.0 | LIMESTONE BABCOCK & WILCOX | 10/81 |
| LOUISVILLE GAS & ELECTRIC MILL CREEK | 2 | RETROFIT | 350.0 | LIME/LIMESTONE COMBUSTION ENGINEERING | 4/82 |
| MONTANA POWER COLSTRIP | 3 | NEW | 700.0 | LIME/ALKALINE FLYASH ADL/COMBUSTION EQUIP ASSOCIATE | 7/80 |
| MONTANA POWER COLSTRIP | 4 | NEW | 700.0 | LIME/ALKALINE FLYASH ADL/COMBUSTION EQUIP ASSOCIATE | 7/81 |
| NIAGARA MOHAWK POWER COOP CHARLES R. HUNTLEY | 66 | RETROFIT | 100.0 | AQUEOUS CARBONATE ROCKWELL INTERNATIONAL | 0/82 |
| PUBLIC SERVICE OF NEW MEXICO SAN JUAN | 4 | NEW | 534.0 | WELLMAN LORD DAVY POWERGAS | 1/82 |
| SOUTH CAROLINA PUBLIC SERVICE WINYAH | 4 | NEW | 280.0 | LIMESTONE AMERICAN AIR FILTER | 5/81 |
| SOUTHERN CALIFORNIA EDISON ALAMITOS | 6 | RETROFIT | 175.0 | LIME SO. CALIFORNIA EDISON/STEARNS- | 1/82 |
| SOUTHWESTERN ELECTRIC POWER HENRY W. PERKEY | 1 | NEW | 720.0 | LIMESTONE AIR CORRECTION DIVISION, UOP | 2/84 |
| TENNESSEE VALLEY AUTHORITY PARADISE | 1 | RETROFIT | 704.0 | LIMESTONE VENDOR NOT SELECTED | 6/82 |
| TENNESSEE VALLEY AUTHORITY PARADISE | 2 | RETROFIT | 704.0 | LIMESTONE VENDOR NOT SELECTED | 3/82 |
| TEXAS MUNICIPAL POWER AGENCY GIBBONS CREEK | 1 | NEW | 400.0 | LIMESTONE COMBUSTION ENGINEERING | 1/82 |
| TEXAS UTILITIES MARTIN LAKE | 4 | NEW | 750.0 | LIMESTONE RESEARCH COTTRELL | 0/85 |
| WISCONSIN POWER & LIGHT COLUMBIA | 2 | RETROFIT | 316.0 | LIME/ALKALINE FLYASH CHEMICO | 1/82 |

## SECTION 12
## SUMMARY OF PLANNED FGD SYSTEMS

| COMPANY NAME/ UNIT NAME | UNIT NO. | NEW OR RETROFIT | CAPACITY MW | PROCESS/ SYSTEM SUPPLIER | START-UP DATE |
|---|---|---|---|---|---|
| LETTER OF INTENT SIGNED | | | | | |
| NORTHERN STATES POWER SHERBURNE | 3 | NEW | 860.0 | LIMESTONE COMBUSTION ENGINEERING | 5/84 |
| PHILADELPHIA ELECTRIC EDDYSTONE | 1B | RETROFIT | 240.0 | MAGNESIUM OXIDE UNITED ENGINEERS | 6/80 |
| REQUESTING/EVALUATING BIDS | | | | | |
| CENTRAL ILLINOIS LIGHT DUCK CREEK | 2 | NEW | 416.0 | LIMESTONE VENDOR NOT SELECTED | 1/84 |
| HOUSTON LIGHTING & POWER CO. W.A. PARISH | 8 | NEW | 512.0 | LIMESTONE VENDOR NOT SELECTED | 10/82 |
| MIDDLE SOUTH UTILITIES ARKANSAS COAL | 5 | NEW | 890.0 | PROCESS NOT SELECTED VENDOR NOT SELECTED | 1/86 |
| MIDDLE SOUTH UTILITIES ARKANSAS COAL | 6 | NEW | 890.0 | PROCESS NOT SELECTED VENDOR NOT SELECTED | 1/88 |
| MIDDLE SOUTH UTILITIES LOUISIANA COAL | 1 | NEW | 890.0 | PROCESS NOT SELECTED VENDOR NOT SELECTED | 0/86 |
| MIDDLE SOUTH UTILITIES LOUISIANA COAL | 2 | NEW | 890.0 | PROCESS NOT SELECTED VENDOR NOT SELECTED | 0/88 |
| MIDDLE SOUTH UTILITIES MISSISSIPPI COAL | 1 | NEW | 890.0 | PROCESS NOT SELECTED VENDOR NOT SELECTED | 0/85 |
| MIDDLE SOUTH UTILITIES MISSISSIPPI COAL | 2 | NEW | 890.0 | PROCESS NOT SELECTED VENDOR NOT SELECTED | 0/87 |
| NORTHERN INDIANA PUB SERVICE SCHAHFER | 17 | NEW | 421.0 | PROCESS NOT SELECTED VENDOR NOT SELECTED | 6/83 |
| NORTHERN INDIANA PUB SERVICE SCHAHFER | 18 | NEW | 421.0 | PROCESS NOT SELECTED VENDOR NOT SELECTED | 6/85 |
| PUBLIC SERVICE OF INDIANA GIBSON | 5 | NEW | 650.0 | PROCESS NOT SELECTED VENDOR NOT SELECTED | 0/82 |
| TENNESSEE VALLEY AUTHORITY JOHNSONVILLE | 1-10 | RETROFIT | 600.0 | MAGNESIUM OXIDE TVA/UNITED ENGINEERS | 0/82 |
| TEXAS UTILITIES FOREST GROVE | 1 | NEW | 750.0 | PROCESS NOT SELECTED VENDOR NOT SELECTED | 0/81 |
| CONSIDERING FGD SYSTEMS | | | | | |
| ALLEGHENY POWER SYSTEM MITCHELL | 3 | RETROFIT | 300.0 | PROCESS NOT SELECTED VENDOR NOT SELECTED | 8/82 |
| BASIN ELECTRIC POWER COOP ANTELOPE VALLEY | 2 | NEW | 440.0 | PROCESS NOT SELECTED VENDOR NOT SELECTED | 11/83 |
| CENTRAL MAINE POWER SEARS ISLAND | 1 | NEW | 600.0 | LIME/LIMESTONE VENDOR NOT SELECTED | 11/87 |
| COLUMBUS & SOUTHERN OHIO ELEC. POSTON | 5 | NEW | 375.0 | PROCESS NOT SELECTED VENDOR NOT SELECTED | 0/83 |
| COLUMBUS & SOUTHERN OHIO ELEC. POSTON | 6 | NEW | 375.0 | PROCESS NOT SELECTED VENDOR NOT SELECTED | 0/85 |
| GENERAL PUBLIC UTILITIES CONO | 1 | NEW | 800.0 | PROCESS NOT SELECTED VENDOR NOT SELECTED | 12/85 |
| GENERAL PUBLIC UTILITIES SEWARD | 7 | NEW | 800.0 | PROCESS NOT SELECTED VENDOR NOT SELECTED | 12/85 |

SECTION 12
SUMMARY OF PLANNED FGD SYSTEMS

| COMPANY NAME/ UNIT NAME | UNIT NO. | NEW OR RETROFIT | CAPACITY MW | PROCESS/ SYSTEM SUPPLIER | START-UP DATE |
|---|---|---|---|---|---|
| LOUISVILLE GAS & ELECTRIC TRIMBLE COUNTY | 1 | NEW | 575.0 | PROCESS NOT SELECTED VENDOR NOT SELECTED | 7/84 |
| LOUISVILLE GAS & ELECTRIC TRIMBLE COUNTY | 2 | NEW | 575.0 | PROCESS NOT SELECTED VENDOR NOT SELECTED | 0/84 |
| MUSCATINE POWER & WATER MUSCATINE | 9 | NEW | 160.0 | PROCESS NOT SELECTED VENDOR NOT SELECTED | 0/82 |
| NEVADA POWER HARRY ALLEN | 1 | NEW | 500.0 | PROCESS NOT SELECTED VENDOR NOT SELECTED | 6/85 |
| NEVADA POWER HARRY ALLEN | 2 | NEW | 500.0 | PROCESS NOT SELECTED VENDOR NOT SELECTED | 6/86 |
| NEVADA POWER HARRY ALLEN | 3 | NEW | 500.0 | PROCESS NOT SELECTED VENDOR NOT SELECTED | 6/87 |
| NEVADA POWER HARRY ALLEN | 4 | NEW | 500.0 | PROCESS NOT SELECTED VENDOR NOT SELECTED | 6/88 |
| NEVADA POWER REID GARDNER | 4 | NEW | 250.0 | PROCESS NOT SELECTED VENDOR NOT SELECTED | 0/83 |
| NEVADA POWER WARNER VALLEY | 1 | NEW | 250.0 | PROCESS NOT SELECTED VENDOR NOT SELECTED | 6/84 |
| NEVADA POWER WARNER VALLEY | 2 | NEW | 250.0 | PROCESS NOT SELECTED VENDOR NOT SELECTED | 6/85 |
| NORTHERN INDIANA PUB SERVICE BAILLY | 7 | RETROFIT | 190.0 | PROCESS NOT SELECTED VENDOR NOT SELECTED | 0/ 0 |
| NORTHERN INDIANA PUB SERVICE BAILLY | 8 | RETROFIT | 400.0 | PROCESS NOT SELECTED VENDOR NOT SELECTED | 0/ 0 |
| PACIFIC GAS & ELECTRIC FOSSIL | 1 | NEW | 800.0 | LIMESTONE VENDOR NOT SELECTED | 0/85 |
| PACIFIC GAS & ELECTRIC FOSSIL | 2 | NEW | 800.0 | LIMESTONE VENDOR NOT SELECTED | 0/86 |
| PHILADELPHIA ELECTRIC CROMBY | | RETROFIT | 150.0 | MAGNESIUM OXIDE UNITED ENGINEERS | 6/80 |
| PHILADELPHIA ELECTRIC EDDYSTONE | 2 | RETROFIT | 334.0 | MAGNESIUM OXIDE UNITED ENGINEERS | 6/80 |
| POTOMAC ELECTRIC POWER DICKERSON | 4 | NEW | 800.0 | PROCESS NOT SELECTED VENDOR NOT SELECTED | 0/87 |
| POWER AUTHORITY OF NEW YORK ARTHUR KILL | | NEW | 700.0 | PROCESS NOT SELECTED VENDOR NOT SELECTED | 11/88 |
| SALT RIVER PROJECT CORONADO | 3 | NEW | 280.0 | LIMESTONE VENDOR NOT SELECTED | 0/87 |
| SEMINOLE ELECTRIC SEMINOLE | 1 | NEW | 620.0 | LIMESTONE VENDOR NOT SELECTED | 6/83 |
| SOUTHERN ILLINOIS POWER COOP MARION | 5 | NEW | 300.0 | PROCESS NOT SELECTED VENDOR NOT SELECTED | 0/84 |
| TAMPA ELECTRIC BIG BEND | 4 | NEW | 450.0 | PROCESS NOT SELECTED VENDOR NOT SELECTED | 0/85 |
| TENNESSEE VALLEY AUTHORITY CUMBERLAND | | RETROFIT | 600.0 | PROCESS NOT SELECTED VENDOR NOT SELECTED | 7/82 |
| TEXAS POWER & LIGHT TWIN OAKS | 1 | NEW | 750.0 | LIMESTONE VENDOR NOT SELECTED | 8/83 |

SECTION 12
SUMMARY OF PLANNED FGD SYSTEMS

| COMPANY NAME/ UNIT NAME | UNIT NO. | NEW OR RETROFIT | CAPACITY MW | PROCESS/ SYSTEM SUPPLIER | START-UP DATE |
|---|---|---|---|---|---|
| TEXAS POWER & LIGHT TWIN OAKS | 2 | NEW | 750.0 | LIMESTONE VENDOR NOT SELECTED | 0/86 |
| TEXAS UTILITIES MILL CREEK | 1 | NEW | 750.0 | PROCESS NOT SELECTED VENDOR NOT SELECTED | 0/85 |
| TEXAS UTILITIES MILL CREEK | 2 | NEW | 750.0 | PROCESS NOT SELECTED VENDOR NOT SELECTED | 0/86 |

SECTION 13
TOTAL FGD UNITS AND CAPACITY (MW) INSTALLED BY YEAR

| YEAR | NEW ON LINE NO. | NEW ON LINE MW | TERMINATED NO. | TERMINATED MW | TOTAL ON LINE NO. | TOTAL ON LINE MW |
|---|---|---|---|---|---|---|
| 1968 | 1 | 0. | 0 | 0. | 1 | 0. |
| 1971 | 3 | 420. | 0 | 0. | 4 | 420. |
| 1972 | 8 | 200. | 0 | 0. | 12 | 620. |
| 1973 | 7 | 1475. | 1 | 0. | 18 | 2095. |
| 1974 | 3 | 250. | 0 | 0. | 21 | 2345. |
| 1975 | 6 | 1971. | 0 | 0. | 27 | 4316. |
| 1976 | 8 | 2069. | 1 | 0. | 34 | 6385. |
| 1977 | 10 | 4674. | 0 | 0. | 44 | 11059. |
| 1978 | 13 | 4736. | 0 | 0. | 57 | 15795. |
| 1979 | 22 | 7242. | 0 | 0. | 79 | 23037. |
| 1980 | 23 | 9117. | 0 | 0. | 102 | 32154. |
| 1981 | 10 | 4918. | 0 | 0. | 112 | 37072. |
| 1982 | 19 | 9326. | 0 | 0. | 131 | 46398. |
| 1983 | 7 | 3386. | 0 | 0. | 138 | 49784. |
| 1984 | 7 | 3696. | 1 | 250. | 144 | 53230. |
| 1985 | 11 | 6786. | 0 | 0. | 155 | 60016. |
| 1986 | 6 | 4580. | 0 | 0. | 161 | 64596. |
| 1987 | 6 | 3070. | 0 | 0. | 167 | 67666. |
| UNDEFINED | 20 | 1240. | | | | |

SECTION 14
DESIGN AND PERFORMANCE DATA FOR OPERATIONAL PARTICULATE SCRUBBERS

| | | |
|---|---|---|
| COMPANY NAME | COMMONWEALTH EDISON | |
| PLANT NAME | WILL COUNTY | |
| UNIT NUMBER | 1 | |
| CITY | ROMEOVILLE | |
| STATE | ILLINOIS | |
| REGULATORY CLASSIFICATION | ****** | |
| PARTICULATE EMISSION LIMITATION - NG/J | 0. | ( .000 LB/MMBTU) |
| SO2 EMISSION LIMITATION - NG/J | 774. | ( 1.800 LB/MMBTU) |
| NET PLANT GENERATING CAPACITY - MW | 1147.0 | |
| GROSS UNIT GENERATING CAPACITY - MW | 167.0 | |
| NET UNIT GENERATING CAPACITY W/FGD - MW | 137.0 | |
| NET UNIT GENERATING CAPACITY WO/FGD - MW | .0 | |
| EQUIVALENT SCRUBBED CAPACITY - MW | .0 | |
| ** BOILER DATA | | |
| SUPPLIER | BABCOCK & WILCOX | |
| TYPE | WET BOTTOM, CYCLONE | |
| SERVICE LOAD | CYCLIC | |
| COMMERCIAL SERVICE DATE | 0/55 | |
| MAXIMUP BOILER FLUE GAS FLOW - CU.M/S | 363.36 | ( 770000 ACFM) |
| FLUE GAS TEMPERATURE - C | 179.4 | ( 355 F) |
| STACK HEIGHT - M | 107. | ( 350 FT) |
| STACK TOP DIAMETER - M | 3.8 | ( 12.4 FT) |
| ** FUEL DATA | | |
| FUEL TYPE | COAL | |
| FUEL GRADE | ****** | |
| AVERAGE HEAT CONTENT - KJ/KG | 22260. | ( 9570 BTU/LB) |
| RANGE HEAT CONTENT - BTU/LB | | 9,100 - 10,500 |
| AVERAGE ASH CONTENT - % | 7.40 | |
| RANGE ASH CONTENT - % | 3 - 16 | |
| AVERAGE MOISTURE CONTENT - % | ******** | |
| RANGE MOISTURE CONTENT - % | ****** | |
| AVERAGE SULFUR CONTENT - % | 1.50 | |
| RANGE SULFUR CONTENT - % | 0.3 - 4.5 | |
| AVERAGE CHLORIDE CONTENT - % | ******** | |
| RANGE CHLORIDE CONTENT - % | ****** | |
| FUEL FIRING RATE - M T/H | 77.1 | ( 85 TPH) |
| FUEL FIRING RATE - MW | 167 | |
| ** ESP | | |
| NUMBER | 1 | |
| TYPE | COLD SIDE | |
| SUPPLIER | WESTERN PRECIPITATION (JOY MANUFACTURING) | |
| PARTICULATE DESIGN REMOVAL EFFICIENCY - % | 79.0 | |
| FLUE GAS TEMPERATURE - C | 179.4 | ( 355 F) |
| ** PARTICULATE SCRUBBER | | |
| NUMBER | 2 | |
| TYPE | ADJUSTABLE THROAT VENTURI | |
| SUPPLIER | BABCOCK & WILCOX | |
| SHELL MATERIAL | CARBON STEEL | |
| LINING MATERIAL | PLASITE AND KAOCRETE | |
| TYPE OF NOZZLES | STAINLESS STEEL | |
| FLUE GAS CAPACITY - CU.M/S | 181.7 | ( 385000 ACFM) |
| FLUE GAS TEMPERATURE - C | 179.4 | ( 355 F) |
| LIQUID RECIRCULATION RATE - LITER/S | 365.4 | ( 5800 GPM) |
| L/G RATIO - LITER/CU.M | 2.4 | (18.0 GAL/1000ACF) |
| PRESSURE DROP - KPA | 2.2 | ( 9 IN-H2O) |
| SUPERFICIAL GAS VELOCITY - M/S | 36.6 | ( 120.0 FT/S) |
| PARTICULATE INLET LOAD - G/CU.M | .4 | ( .16 GR/SCF) |
| PARTICULATE DESIGN REMOVAL EFFICIENCY - % | 98.0 | |

SECTION 14
DESIGN AND PERFORMANCE DATA FOR OPERATIONAL PARTICULATE SCRUBBERS

| | | |
|---|---|---|
| COMPANY NAME | DETROIT EDISON | |
| PLANT NAME | ST. CLAIR | |
| UNIT NUMBER | 6 | |
| CITY | BELLE RIVER | |
| STATE | MICHIGAN | |
| REGULATORY CLASSIFICATION | C | |
| PARTICULATE EMISSION LIMITATION - NG/J | ****** | (****** LB/MMBTU) |
| SO2 EMISSION LIMITATION - NG/J | 1376. | ( 3.200 LB/MMBTU) |
| NET PLANT GENERATING CAPACITY - MW | 1775.0 | |
| GROSS UNIT GENERATING CAPACITY - MW | 325.0 | |
| NET UNIT GENERATING CAPACITY W/FGD - MW | ******* | |
| NET UNIT GENERATING CAPACITY WO/FGD - MW | .0 | |
| EQUIVALENT SCRUBBED CAPACITY - MW | .0 | |
| ** BOILER DATA | | |
| SUPPLIER | COMBUSTION ENGINEERING | |
| TYPE | TWO-STAGE SUPERHEATER | |
| SERVICE LOAD | BASE | |
| COMMERCIAL SERVICE DATE | 0/61 | |
| MAXIMUM BOILER FLUE GAS FLOW - CU.M/S | ******** | (******* ACFM) |
| FLUE GAS TEMPERATURE - C | 132.2 | ( 270 F) |
| STACK HEIGHT - M | ****** | (**** FT) |
| STACK TOP DIAMETER - M | ******* | (***** FT) |
| ** FUEL DATA | | |
| FUEL TYPE | COAL | |
| FUEL GRADE | SUBBITUMINOUS | |
| AVERAGE HEAT CONTENT - KJ/KG | ******* | (****** BTU/LB) |
| RANGE HEAT CONTENT - BTU/LB | | 9,500 - 9,600 |
| AVERAGE ASH CONTENT - % | 4.00 | |
| RANGE ASH CONTENT - % | ****** | |
| AVERAGE MOISTURE CONTENT - % | ******** | |
| RANGE MOISTURE CONTENT - % | 22 - 24 | |
| AVERAGE SULFUR CONTENT - % | ******** | |
| RANGE SULFUR CONTENT - % | 0.3 - 0.4 | |
| AVERAGE CHLORIDE CONTENT - % | ******** | |
| RANGE CHLORIDE CONTENT - % | ****** | |
| FUEL FIRING RATE - M T/H | 120.6 | (133 TPH) |
| FUEL FIRING RATE - MW | ***** | |
| ** ESP | | |
| ** MECHANICAL COLLECTOR | | |
| ** PARTICULATE SCRUBBER | | |
| NUMBER | 2 | |
| TYPE | VENTURI | |

SECTION 14
DESIGN AND PERFORMANCE DATA FOR OPERATIONAL PARTICULATE SCRUBBERS

| | | |
|---|---|---|
| COMPANY NAME | MINNESOTA POWER & LIGHT | |
| PLANT NAME | AURORA | |
| UNIT NUMBER | 1 | |
| CITY | AURORA | |
| STATE | MINNESOTA | |
| REGULATORY CLASSIFICATION | ****** | |
| PARTICULATE EMISSION LIMITATION - NG/J | 0. | ( .000 LB/MMBTU) |
| SO2 EMISSION LIMITATION - NG/J | ****** | (****** LB/MMBTU) |
| NET PLANT GENERATING CAPACITY - MW | 116.0 | |
| GROSS UNIT GENERATING CAPACITY - MW | ******* | |
| NET UNIT GENERATING CAPACITY W/FGD - MW | 58.0 | |
| NET UNIT GENERATING CAPACITY WO/FGD - MW | .0 | |
| EQUIVALENT SCRUBBED CAPACITY - MW | .0 | |
| ** BOILER DATA | | |
| SUPPLIER | COMBUSTION ENGINEERING | |
| TYPE | PULVERIZED COAL | |
| SERVICE LOAD | ****** | |
| COMMERCIAL SERVICE DATE | 0/53 | |
| MAXIMUM BOILER FLUE GAS FLOW - CU.M/S | ******** | (******* ACFM) |
| FLUE GAS TEMPERATURE - C | ******* | (**** F) |
| STACK HEIGHT - M | ****** | (**** FT) |
| STACK TOP DIAMETER - M | ******* | (***** FT) |
| ** FUEL DATA | | |
| FUEL TYPE | COAL | |
| FUEL GRADE | SUBBITUMINOUS | |
| AVERAGE HEAT CONTENT - KJ/KG | 20469. | ( 8800 BTU/LB) |
| RANGE HEAT CONTENT - BTU/LB | | ****** |
| AVERAGE ASH CONTENT - % | ******** | |
| RANGE ASH CONTENT - % | ****** | |
| AVERAGE MOISTURE CONTENT - % | 26.70 | |
| RANGE MOISTURE CONTENT - % | ****** | |
| AVERAGE SULFUR CONTENT - % | 1.37 | |
| RANGE SULFUR CONTENT - % | ****** | |
| AVERAGE CHLORIDE CONTENT - % | ******** | |
| RANGE CHLORIDE CONTENT - % | ****** | |
| FUEL FIRING RATE - M T/H | ******* | (*** TPH) |
| FUEL FIRING RATE - MW | ***** | |
| ** PARTICULATE SCRUBBER | | |
| NUMBER | 1 | |
| TYPE | ELBAIR SPRAY-IMPINGEMENT | |
| SUPPLIER | KREBS ENGINEERING | |
| SHELL MATERIAL | 316 ELC STAINLESS STEEL | |
| LINING MATERIAL | FLAKE-POLYESTER | |
| BOILER LOAD/SCRUBBER - % | 100.0 | |
| FLUE GAS CAPACITY - CU.M/S | 137.4 | ( 291160 ACFM) |
| FLUE GAS TEMPERATURE - C | 171.1 | ( 340 F) |
| L/G RATIO - LITER/CU.M | 1.1 | ( 8.3 GAL/1000ACF) |
| PRESSURE DROP - KPA | .7 | ( 3 IN-H2O) |
| SUPERFICIAL GAS VELOCITY - M/S | 2.1 | ( 7.0 FT/S) |
| PARTICULATE INLET LOAD - G/CU.M | 4.7 | ( 2.06 GR/SCF) |
| PARTICULATE OUTLET LOAD - G/CU.M | .1 | ( .040 GR/SCF) |
| SO2 INLET CONCENTRATION - PPM | 800.000 | |
| SO2 OUTLET CONCENTRATION - PPM | 500.000 | |
| SO2 DESIGN REMOVAL EFFICIENCY - % | 37.0 | |

SECTION 14
DESIGN AND PERFORMANCE DATA FOR OPERATIONAL PARTICULATE SCRUBBERS

| | | |
|---|---|---|
| COMPANY NAME | MINNESOTA POWER & LIGHT | |
| PLANT NAME | AURORA | |
| UNIT NUMBER | 2 | |
| CITY | AURORA | |
| STATE | MINNESOTA | |
| REGULATORY CLASSIFICATION | ****** | |
| PARTICULATE EMISSION LIMITATION - NG/J | 0. | ( .000 LB/MMBTU) |
| SO2 EMISSION LIMITATION - NG/J | ****** | (****** LB/MMBTU) |
| NET PLANT GENERATING CAPACITY - MW | 116.0 | |
| GROSS UNIT GENERATING CAPACITY - MW | ******* | |
| NET UNIT GENERATING CAPACITY W/FGD - MW | 58.0 | |
| NET UNIT GENERATING CAPACITY WO/FGD - MW | .0 | |
| EQUIVALENT SCRUBBED CAPACITY - MW | .0 | |
| ** BOILER DATA | | |
| SUPPLIER | COMBUSTION ENGINEERING | |
| TYPE | PULVERIZED COAL | |
| SERVICE LOAD | ****** | |
| COMMERCIAL SERVICE DATE | 0/53 | |
| MAXIMUM BOILER FLUE GAS FLOW - CU.M/S | ******** | (******* ACFM) |
| FLUE GAS TEMPERATURE - C | ******* | (**** F) |
| STACK HEIGHT - M | ****** | (**** FT) |
| STACK TOP DIAMETER - M | ******* | (***** FT) |
| ** FUEL DATA | | |
| FUEL TYPE | COAL | |
| FUEL GRADE | SUBBITUMINOUS | |
| AVERAGE HEAT CONTENT - KJ/KG | 20469. | ( 8800 BTU/LB) |
| RANGE HEAT CONTENT - BTU/LB | | ****** |
| AVERAGE ASH CONTENT - % | ******** | |
| RANGE ASH CONTENT - % | ****** | |
| AVERAGE MOISTURE CONTENT - % | 26.70 | |
| RANGE MOISTURE CONTENT - % | ****** | |
| AVERAGE SULFUR CONTENT - % | 1.37 | |
| RANGE SULFUR CONTENT - % | ****** | |
| AVERAGE CHLORIDE CONTENT - % | ******** | |
| RANGE CHLORIDE CONTENT - % | ****** | |
| FUEL FIRING RATE - M T/H | ******* | (*** TPH) |
| FUEL FIRING RATE - MW | ***** | |
| ** PARTICULATE SCRUBBER | | |
| NUMBER | 1 | |
| TYPE | ELBAIR SPRAY-IMPINGEMENT | |
| SUPPLIER | KREBS ENGINEERING | |
| SHELL MATERIAL | 316 ELC STAINLESS STEEL | |
| LINING MATERIAL | FLAKE-POLYESTER | |
| BOILER LOAD/SCRUBBER - % | 100.0 | |
| FLUE GAS CAPACITY - CU.M/S | 137.4 | ( 291160 ACFM) |
| FLUE GAS TEMPERATURE - C | 171.1 | ( 340 F) |
| L/G RATIO - LITER/CU.M | 1.1 | ( 8.3 GAL/1000ACF) |
| PRESSURE DROP - KPA | .7 | ( 3 IN-H2O) |
| SUPERFICIAL GAS VELOCITY - M/S | 2.1 | ( 7.0 FT/S) |
| PARTICULATE INLET LOAD - G/CU.M | 4.7 | ( 2.06 GR/SCF) |
| PARTICULATE OUTLET LOAD - G/CU.M | .1 | ( .040 GR/SCF) |
| SO2 INLET CONCENTRATION - PPM | 800.000 | |
| SO2 OUTLET CONCENTRATION - PPM | 500.000 | |
| SO2 DESIGN REMOVAL EFFICIENCY - % | 37.0 | |

SECTION 14
DESIGN AND PERFORMANCE DATA FOR OPERATIONAL PARTICULATE SCRUBBERS

| | | |
|---|---|---|
| COMPANY NAME | MONTANA-DAKOTA UTILITIES CO. | |
| PLANT NAME | LEWIS & CLARK | |
| UNIT NUMBER | ****** | |
| CITY | ****** | |
| STATE | ****** | |
| REGULATORY CLASSIFICATION | ****** | |
| PARTICULATE EMISSION LIMITATION - NG/J | 0. | ( .000 LB/MMBTU) |
| SO2 EMISSION LIMITATION - NG/J | ****** | (****** LB/MMBTU) |
| NET PLANT GENERATING CAPACITY - MW | ******* | |
| GROSS UNIT GENERATING CAPACITY - MW | ******* | |
| NET UNIT GENERATING CAPACITY W/FGD - MW | ******* | |
| NET UNIT GENERATING CAPACITY WO/FGD - MW | .0 | |
| EQUIVALENT SCRUBBED CAPACITY - MW | .0 | |
| ** BOILER DATA | | |
| SUPPLIER | ****** | |
| TYPE | ****** | |
| SERVICE LOAD | ****** | |
| COMMERCIAL SERVICE DATE | **/** | |
| MAXIMUM BOILER FLUE GAS FLOW - CU.M/S | ******** | (******* ACFM) |
| FLUE GAS TEMPERATURE - C | ******* | (**** F) |
| STACK HEIGHT - M | ****** | (**** FT) |
| STACK TOP DIAMETER - M | ******* | (***** FT) |
| ** FUEL DATA | | |
| FUEL TYPE | COAL | |
| FUEL GRADE | LIGNITE | |
| AVERAGE HEAT CONTENT - KJ/KG | ******* | (****** BTU/LB) |
| RANGE HEAT CONTENT - BTU/LB | | ****** |
| AVERAGE ASH CONTENT - % | 9.00 | |
| RANGE ASH CONTENT - % | ****** | |
| AVERAGE MOISTURE CONTENT - % | ******** | |
| RANGE MOISTURE CONTENT - % | ****** | |
| AVERAGE SULFUR CONTENT - % | .45 | |
| RANGE SULFUR CONTENT - % | ****** | |
| AVERAGE CHLORIDE CONTENT - % | ******** | |
| RANGE CHLORIDE CONTENT - % | ****** | |
| FUEL FIRING RATE - M T/H | ******* | (*** TPH) |
| FUEL FIRING RATE - MW | ***** | |
| ** MECHANICAL COLLECTOR | | |
| NUMBER | 1 | |
| ** PARTICULATE SCRUBBER | | |
| TYPE | VENTURI-FLOODED DISC | |
| SUPPLIER | RESEARCH COTTERELL | |
| L/G RATIO - LITER/CU.M | 1.7 | (13.0 GAL/1000ACF) |
| PRESSURE DROP - KPA | 3.2 | ( 13 IN-H2O) |

SECTION 14
DESIGN AND PERFORMANCE DATA FOR OPERATIONAL PARTICULATE SCRUBBERS

| | | |
|---|---|---|
| COMPANY NAME | PACIFIC POWER & LIGHT | |
| PLANT NAME | DAVE JOHNSTON | |
| UNIT NUMBER | 4 | |
| CITY | GLENROCK | |
| STATE | WYOMING | |
| REGULATORY CLASSIFICATION | ****** | |
| PARTICULATE EMISSION LIMITATION - NG/J | 0. | ( .000 LB/MMBTU) |
| SO2 EMISSION LIMITATION - NG/J | ****** | (****** LB/MMBTU) |
| NET PLANT GENERATING CAPACITY - MW | ******* | |
| GROSS UNIT GENERATING CAPACITY - MW | ******* | |
| NET UNIT GENERATING CAPACITY W/FGD - MW | 330.0 | |
| NET UNIT GENERATING CAPACITY WO/FGD - MW | .0 | |
| EQUIVALENT SCRUBBED CAPACITY - MW | .0 | |
| ** BOILER DATA | | |
| SUPPLIER | COMBUSTION ENGINEERING | |
| TYPE | PULVERIZED COAL | |
| SERVICE LOAD | ****** | |
| COMMERCIAL SERVICE DATE | **/** | |
| MAXIMUM BOILER FLUE GAS FLOW - CU.M/S | ******** | (******* ACFM) |
| FLUE GAS TEMPERATURE - C | ******* | (**** F) |
| STACK HEIGHT - M | 76. | ( 250 FT) |
| STACK TOP DIAMETER - M | ******* | (***** FT) |
| ** FUEL DATA | | |
| FUEL TYPE | COAL | |
| FUEL GRADE | SUBBITUMINOUS | |
| AVERAGE HEAT CONTENT - KJ/KG | 17282. | ( 7430 BTU/LB) |
| RANGE HEAT CONTENT - BTU/LB | | ****** |
| AVERAGE ASH CONTENT - % | 12.00 | |
| RANGE ASH CONTENT - % | ****** | |
| AVERAGE MOISTURE CONTENT - % | 26.00 | |
| RANGE MOISTURE CONTENT - % | ****** | |
| AVERAGE SULFUR CONTENT - % | .50 | |
| RANGE SULFUR CONTENT - % | ****** | |
| AVERAGE CHLORIDE CONTENT - % | .04 | |
| RANGE CHLORIDE CONTENT - % | ****** | |
| FUEL FIRING RATE - M T/H | ******* | (*** TPH) |
| FUEL FIRING RATE - MW | ***** | |
| ** ESP | | |
| ** PARTICULATE SCRUBBER | | |
| NUMBER | 3 | |
| TYPE | VENTURI | |
| SUPPLIER | CHEMICO | |
| LINING MATERIAL | POLYESTER-LINED STEEL | |
| FLUE GAS CAPACITY - CU.M/S | 327.5 | ( 694000 ACFM) |
| FLUE GAS TEMPERATURE - C | 135.0 | ( 275 F) |
| LIQUID RECIRCULATION RATE - LITER/S | 409.5 | ( 6500 GPM) |
| L/G RATIO - LITER/CU.M | 1.3 | ( 9.4 GAL/1000ACF) |
| PRESSURE DROP - KPA | 2.5 | ( 10 IN-H2O) |
| PARTICULATE INLET LOAD - G/CU.M | 9.2 | ( 4.00 GR/SCF) |
| PARTICULATE DESIGN REMOVAL EFFICIENCY - % | 99.7 | |
| SO2 INLET CONCENTRATION - PPM | 459.000 | |
| SO2 DESIGN REMOVAL EFFICIENCY - % | 40.0 | |

SECTION 14
DESIGN AND PERFORMANCE DATA FOR OPERATIONAL PARTICULATE SCRUBBERS

| | | |
|---|---|---|
| COMPANY NAME | POTOMAC ELECTRIC POWER | |
| PLANT NAME | CHALK POINT | |
| UNIT NUMBER | 4 | |
| CITY | ****** | |
| STATE | MARYLAND | |
| REGULATORY CLASSIFICATION | ****** | |
| PARTICULATE EMISSION LIMITATION - NG/J | 0. | ( .000 LB/MMBTU) |
| SO2 EMISSION LIMITATION - NG/J | ****** | (****** LB/MMBTU) |
| NET PLANT GENERATING CAPACITY - MW | 1892.0 | |
| GROSS UNIT GENERATING CAPACITY - MW | 630.0 | |
| NET UNIT GENERATING CAPACITY W/FGD - MW | 630.0 | |
| NET UNIT GENERATING CAPACITY WO/FGD - MW | .0 | |
| EQUIVALENT SCRUBBED CAPACITY - MW | .0 | |
| ** BOILER DATA | | |
| SUPPLIER | ****** | |
| TYPE | ****** | |
| SERVICE LOAD | BASE | |
| COMMERCIAL SERVICE DATE | **/** | |
| MAXIMUM BOILER FLUE GAS FLOW - CU.M/S | ******** | (******* ACFM) |
| FLUE GAS TEMPERATURE - C | ******* | (**** F) |
| STACK HEIGHT - M | ****** | (**** FT) |
| STACK TOP DIAMETER - M | ******* | (***** FT) |
| ** FUEL DATA | | |
| FUEL TYPE | OIL | |
| FUEL GRADE | ****** | |
| AVERAGE HEAT CONTENT - KJ/KG | ******* | (****** BTU/LB) |
| RANGE HEAT CONTENT - BTU/LB | | ****** |
| AVERAGE ASH CONTENT - % | ******** | |
| RANGE ASH CONTENT - % | ****** | |
| AVERAGE MOISTURE CONTENT - % | ******** | |
| RANGE MOISTURE CONTENT - % | ****** | |
| AVERAGE SULFUR CONTENT - % | ******** | |
| RANGE SULFUR CONTENT - % | ****** | |
| AVERAGE CHLORIDE CONTENT - % | ******** | |
| RANGE CHLORIDE CONTENT - % | ****** | |
| FUEL FIRING RATE - M T/H | ******* | (*** TPH) |
| FUEL FIRING RATE - MW | ***** | |

SECTION 14
DESIGN AND PERFORMANCE DATA FOR OPERATIONAL PARTICULATE SCRUBBERS

| | | |
|---|---|---|
| COMPANY NAME | POTOMAC ELECTRIC POWER | |
| PLANT NAME | DICKERSON | |
| UNIT NUMBER | 3 | |
| CITY | DICKERSON | |
| STATE | MARYLAND | |
| REGULATORY CLASSIFICATION | ****** | |
| PARTICULATE EMISSION LIMITATION - NG/J | 0. | ( .000 LB/MMBTU) |
| SO2 EMISSION LIMITATION - NG/J | 688. | ( 1.600 LB/MMBTU) |
| NET PLANT GENERATING CAPACITY - MW | 548.0 | |
| GROSS UNIT GENERATING CAPACITY - MW | 190.0 | |
| NET UNIT GENERATING CAPACITY W/FGD - MW | 183.0 | |
| NET UNIT GENERATING CAPACITY WO/FGD - MW | .0 | |
| EQUIVALENT SCRUBBED CAPACITY - MW | .0 | |
| ** BOILER DATA | | |
| SUPPLIER | COMBUSTION ENGINEERING | |
| TYPE | PULVERIZED COAL, DRY BOTTOM | |
| SERVICE LOAD | BASE | |
| COMMERCIAL SERVICE DATE | 0/62 | |
| MAXIMUM BOILER FLUE GAS FLOW - CU.M/S | 278.42 | ( 590000 ACFM) |
| FLUE GAS TEMPERATURE - C | 126.1 | ( 259 F) |
| STACK HEIGHT - M | 122. | ( 400 FT) |
| STACK TOP DIAMETER - M | ******* | (***** FT) |
| ** FUEL DATA | | |
| FUEL TYPE | COAL | |
| FUEL GRADE | ****** | |
| AVERAGE HEAT CONTENT - KJ/KG | 27214. | ( 11700 BTU/LB) |
| RANGE HEAT CONTENT - BTU/LB | | ****** |
| AVERAGE ASH CONTENT - % | 14.00 | |
| RANGE ASH CONTENT - % | ****** | |
| AVERAGE MOISTURE CONTENT - % | ******** | |
| RANGE MOISTURE CONTENT - % | ****** | |
| AVERAGE SULFUR CONTENT - % | 2.00 | |
| RANGE SULFUR CONTENT - % | ****** | |
| AVERAGE CHLORIDE CONTENT - % | ******** | |
| RANGE CHLORIDE CONTENT - % | ****** | |
| FUEL FIRING RATE - M T/H | 67.1 | ( 74 TPH) |
| FUEL FIRING RATE - MW | ***** | |
| ** ESP | | |
| NUMBER | 1 | |
| SUPPLIER | RESEARCH-COTTRELL | |
| PARTICULATE DESIGN REMOVAL EFFICIENCY - % | 94.0 | |
| ** PARTICULATE SCRUBBER | | |
| NUMBER | 1 | |
| TYPE | ADJUSTABLE VENTURI | |
| SUPPLIER | CHEMICO | |
| BOILER LOAD/SCRUBBER - % | 50.0 | |
| FLUE GAS CAPACITY - CU.M/S | 139.2 | ( 295000 ACFM) |
| FLUE GAS TEMPERATURE - C | 126.1 | ( 259 F) |
| L/G RATIO - LITER/CU.M | 2.7 | (20.0 GAL/1000ACF) |
| PRESSURE DROP - KPA | 2.7 | ( 11 IN-H2O) |

SECTION 14
DESIGN AND PERFORMANCE DATA FOR OPERATIONAL PARTICULATE SCRUBBERS

| | | |
|---|---|---|
| COMPANY NAME | PUBLIC SERVICE OF COLORADO | |
| PLANT NAME | ARAPAHOE | |
| UNIT NUMBER | 4 | |
| CITY | DENVER | |
| STATE | COLORADO | |
| REGULATORY CLASSIFICATION | ****** | |
| PARTICULATE EMISSION LIMITATION - NG/J | 0. | ( .000 LB/MMBTU) |
| SO2 EMISSION LIMITATION - NG/J | ****** | (****** LB/MMBTU) |
| NET PLANT GENERATING CAPACITY - MW | ******* | |
| GROSS UNIT GENERATING CAPACITY - MW | ******* | |
| NET UNIT GENERATING CAPACITY W/FGD - MW | 112.0 | |
| NET UNIT GENERATING CAPACITY WO/FGD - MW | .0 | |
| EQUIVALENT SCRUBBED CAPACITY - MW | .0 | |
| ** BOILER DATA | | |
| SUPPLIER | ****** | |
| TYPE | PULVERIZED COAL | |
| SERVICE LOAD | ****** | |
| COMMERCIAL SERVICE DATE | 0/55 | |
| MAXIMUM BOILER FLUE GAS FLOW - CU.M/S | ******** | (******* ACFM) |
| FLUE GAS TEMPERATURE - C | ******* | (**** F) |
| STACK HEIGHT - M | ****** | (**** FT) |
| STACK TOP DIAMETER - M | ******* | (***** FT) |
| ** FUEL DATA | | |
| FUEL TYPE | COAL | |
| FUEL GRADE | SUBBITUMINOUS | |
| AVERAGE HEAT CONTENT - KJ/KG | 23725. | ( 10200 BTU/LB) |
| RANGE HEAT CONTENT - BTU/LB | | ****** |
| AVERAGE ASH CONTENT - % | 9.30 | |
| RANGE ASH CONTENT - % | ****** | |
| AVERAGE MOISTURE CONTENT - % | 13.70 | |
| RANGE MOISTURE CONTENT - % | ****** | |
| AVERAGE SULFUR CONTENT - % | .95 | |
| RANGE SULFUR CONTENT - % | ****** | |
| AVERAGE CHLORIDE CONTENT - % | .01 | |
| RANGE CHLORIDE CONTENT - % | ****** | |
| FUEL FIRING RATE - M T/H | ******* | (*** TPH) |
| FUEL FIRING RATE - MW | ***** | |
| ** FUEL DATA | | |
| FUEL TYPE | COAL | |
| FUEL GRADE | ****** | |
| AVERAGE HEAT CONTENT - KJ/KG | 23493. | ( 10100 BTU/LB) |
| RANGE HEAT CONTENT - BTU/LB | | ****** |
| AVERAGE ASH CONTENT - % | 12.50 | |
| RANGE ASH CONTENT - % | ****** | |
| AVERAGE MOISTURE CONTENT - % | 11.20 | |
| RANGE MOISTURE CONTENT - % | ****** | |
| AVERAGE SULFUR CONTENT - % | .65 | |
| RANGE SULFUR CONTENT - % | ****** | |
| AVERAGE CHLORIDE CONTENT - % | .01 | |
| RANGE CHLORIDE CONTENT - % | ****** | |
| FUEL FIRING RATE - M T/H | ******* | (*** TPH) |
| FUEL FIRING RATE - MW | ***** | |
| ** ESP | | |
| NUMBER | 1 | |
| ** MECHANICAL COLLECTOR | | |
| NUMBER | 1 | |
| ** PARTICULATE SCRUBBER | | |
| NUMBER | 1 | |
| TYPE | TCA | |
| SUPPLIER | UOP | |
| NUMBER OF STAGES | 3 | |
| SHELL MATERIAL | CARBON STEEL | |
| LINING MATERIAL | RUBBER | |
| INTERNAL MATERIAL | STAINLESS STEEL | |
| L/G RATIO - LITER/CU.M | 7.5 | (56.0 GAL/1000ACF) |
| SUPERFICIAL GAS VELOCITY - M/S | 3.4 | ( 11.0 FT/S) |
| PARTICULATE INLET LOAD - G/CU.M | 1.8 | ( .80 GR/SCF) |
| PARTICULATE OUTLET LOAD - G/CU.M | .0 | ( .020 GR/SCF) |
| PARTICULATE DESIGN REMOVAL EFFICIENCY - % | 93.0 | |
| SO2 INLET CONCENTRATION - PPM | 500.000 | |

SECTION 14
DESIGN AND PERFORMANCE DATA FOR OPERATIONAL PARTICULATE SCRUBBERS

| | |
|---|---|
| SO2 OUTLET CONCENTRATION - PPM | 350.000 |
| SO2 DESIGN REMOVAL EFFICIENCY - % | 30.0 |

SECTION 14
DESIGN AND PERFORMANCE DATA FOR OPERATIONAL PARTICULATE SCRUBBERS

| | | |
|---|---|---|
| COMPANY NAME | PUBLIC SERVICE OF COLORADO | |
| PLANT NAME | CHEROKEE | |
| UNIT NUMBER | 1 | |
| CITY | DENVER | |
| STATE | COLORADO | |
| REGULATORY CLASSIFICATION | ****** | |
| PARTICULATE EMISSION LIMITATION - NG/J | 0. | ( .000 LB/MMBTU) |
| SO2 EMISSION LIMITATION - NG/J | ****** | (****** LB/MMBTU) |
| NET PLANT GENERATING CAPACITY - MW | 710.0 | |
| GROSS UNIT GENERATING CAPACITY - MW | 115.0 | |
| NET UNIT GENERATING CAPACITY W/FGD - MW | 100.0 | |
| NET UNIT GENERATING CAPACITY WO/FGD - MW | .0 | |
| EQUIVALENT SCRUBBED CAPACITY - MW | .0 | |
| ** BOILER DATA | | |
| SUPPLIER | BABCOCK & WILCOX | |
| TYPE | PULVERIZED COAL | |
| SERVICE LOAD | ****** | |
| COMMERCIAL SERVICE DATE | 0/57 | |
| MAXIMUM BOILER FLUE GAS FLOW - CU.M/S | ******** | (******* ACFM) |
| FLUE GAS TEMPERATURE - C | ******* | (**** F) |
| STACK HEIGHT - M | ****** | (**** FT) |
| STACK TOP DIAMETER - M | ******* | (***** FT) |
| ** FUEL DATA | | |
| FUEL TYPE | COAL | |
| FUEL GRADE | BITUMINOUS | |
| AVERAGE HEAT CONTENT - KJ/KG | 23493. | ( 10100 BTU/LB) |
| RANGE HEAT CONTENT - BTU/LB | | ****** |
| AVERAGE ASH CONTENT - % | 12.50 | |
| RANGE ASH CONTENT - % | ****** | |
| AVERAGE MOISTURE CONTENT - % | 11.30 | |
| RANGE MOISTURE CONTENT - % | ****** | |
| AVERAGE SULFUR CONTENT - % | .65 | |
| RANGE SULFUR CONTENT - % | ****** | |
| AVERAGE CHLORIDE CONTENT - % | .01 | |
| RANGE CHLORIDE CONTENT - % | ****** | |
| FUEL FIRING RATE - M T/H | ******* | (*** TPH) |
| FUEL FIRING RATE - MW | ***** | |
| ** ESP | | |
| NUMBER | 1 | |
| ** MECHANICAL COLLECTOR | | |
| NUMBER | 1 | |
| ** PARTICULATE SCRUBBER | | |
| NUMBER | 1 | |
| TYPE | TCA | |
| SUPPLIER | UOP | |
| NUMBER OF STAGES | 3 | |
| SHELL MATERIAL | CARBON STEEL | |
| LINING MATERIAL | RUBBER | |
| INTERNAL MATERIAL | STAINLESS STEEL | |
| BOILER LOAD/SCRUBBER - % | 67.0 | |
| FLUE GAS CAPACITY - CU.M/S | 164.4 | ( 348400 ACFM) |
| FLUE GAS TEMPERATURE - C | 146.1 | ( 295 F) |
| L/G RATIO - LITER/CU.M | 7.5 | (56.0 GAL/1000ACF) |
| PRESSURE DROP - KPA | 3.2 | ( 13 IN-H2O) |
| SUPERFICIAL GAS VELOCITY - M/S | 3.4 | ( 11.0 FT/S) |
| PARTICULATE INLET LOAD - G/CU.M | 1.8 | ( .80 GR/SCF) |
| PARTICULATE OUTLET LOAD G/CU.M | .0 | ( .020 GR/SCF) |
| PARTICULATE DESIGN REMOVAL EFFICIENCY - % | 97.0 | |
| SO2 INLET CONCENTRATION - PPM | 500.000 | |
| SO2 OUTLET CONCENTRATION - PPM | 420.000 | |
| SO2 DESIGN REMOVAL EFFICIENCY - % | 16.0 | |

SECTION 14
DESIGN AND PERFORMANCE DATA FOR OPERATIONAL PARTICULATE SCRUBBERS

| | | |
|---|---|---|
| COMPANY NAME | PUBLIC SERVICE OF COLORADO | |
| PLANT NAME | CHEROKEE | |
| UNIT NUMBER | 3 | |
| CITY | DENVER | |
| STATE | COLORADO | |
| REGULATORY CLASSIFICATION | ****** | |
| PARTICULATE EMISSION LIMITATION - NG/J | 0. | ( .000 LB/MMBTU) |
| SO2 EMISSION LIMITATION - NG/J | ****** | (****** LB/MMBTU) |
| NET PLANT GENERATING CAPACITY - MW | 710.0 | |
| GROSS UNIT GENERATING CAPACITY MW | 170.0 | |
| NET UNIT GENERATING CAPACITY W/FGD - MW | 150.0 | |
| NET UNIT GENERATING CAPACITY WO/FGD - MW | .0 | |
| EQUIVALENT SCRUBBED CAPACITY - MW | .0 | |
| ** BOILER DATA | | |
| SUPPLIER | BABCOCK & WILCOX | |
| TYPE | PULVERIZED COAL | |
| SERVICE LOAD | ****** | |
| COMMERCIAL SERVICE DATE | 0/62 | |
| MAXIMUM BOILER FLUE GAS FLOW - CU.M/S | ******** | (******* ACFM) |
| FLUE GAS TEMPERATURE - C | ******* | (**** F) |
| STACK HEIGHT - M | ****** | (**** FT) |
| STACK TOP DIAMETER M | ******* | (***** FT) |
| ** FUEL DATA | | |
| FUEL TYPE | COAL | |
| FUEL GRADE | BITUMINOUS | |
| AVERAGE HEAT CONTENT - KJ/KG | 23493. | ( 10100 BTU/LB) |
| RANGE HEAT CONTENT - BTU/LB | | ****** |
| AVERAGE ASH CONTENT - % | 12.50 | |
| RANGE ASH CONTENT - % | ****** | |
| AVERAGE MOISTURE CONTENT - % | 11.30 | |
| RANGE MOISTURE CONTENT - % | ****** | |
| AVERAGE SULFUR CONTENT - % | .65 | |
| RANGE SULFUR CONTENT - % | ****** | |
| AVERAGE CHLORIDE CONTENT - % | .01 | |
| RANGE CHLORIDE CONTENT - % | ****** | |
| FUEL FIRING RATE - M T/H | ******* | (*** TPH) |
| FUEL FIRING RATE - MW | ***** | |
| ** ESP | | |
| NUMBER | 1 | |
| ** MECHANICAL COLLECTOR | | |
| NUMBER | 1 | |
| ** PARTICULATE SCRUBBER | | |
| NUMBER | 2 | |
| TYPE | TCA | |
| SUPPLIER | UOP | |
| NUMBER OF STAGES | 3 | |
| SHELL MATERIAL | CARBON STEEL | |
| LINING MATERIAL | RUBBER | |
| INTERNAL MATERIAL | STAINLESS STEEL | |
| BOILER LOAD/SCRUBBER - % | 20.0 | |
| FLUE GAS CAPACITY - CU.M/S | 57.6 | ( 122000 ACFM) |
| FLUE GAS TEMPERATURE - C | 137.8 | ( 280 F) |
| L/G RATIO - LITER/CU.M | 7.5 | (56.0 GAL/1000ACF) |
| PRESSURE DROP - KPA | 3.2 | ( 13 IN-H2O) |
| SUPERFICIAL GAS VELOCITY M/S | 3.4 | ( 11.0 FT/S) |
| PARTICULATE INLET LOAD - G/CU.M | .9 | ( .40 GR/SCF) |
| PARTICULATE OUTLET LOAD - G/CU.M | .0 | ( .020 GR/SCF) |
| PARTICULATE DESIGN REMOVAL EFFICIENCY - % | 95.0 | |
| SO2 INLET CONCENTRATION - PPM | 500.000 | |
| SO2 OUTLET CONCENTRATION - PPM | 420.000 | |
| SO2 DESIGN REMOVAL EFFICIENCY - % | 16.0 | |

SECTION 14
DESIGN AND PERFORMANCE DATA FOR OPERATIONAL PARTICULATE SCRUBBERS

| | | |
|---|---|---|
| COMPANY NAME | PUBLIC SERVICE OF COLORADO | |
| PLANT NAME | CHEROKEE | |
| UNIT NUMBER | 4 | |
| CITY | DENVER | |
| STATE | COLORADO | |
| REGULATORY CLASSIFICATION | ****** | |
| PARTICULATE EMISSION LIMITATION - NG/J | 0. | ( .000 LB/MMBTU) |
| SO2 EMISSION LIMITATION - NG/J | ****** | (****** LB/MMBTU) |
| NET PLANT GENERATING CAPACITY - MW | 710.0 | |
| GROSS UNIT GENERATING CAPACITY - MW | 375.0 | |
| NET UNIT GENERATING CAPACITY W/FGD - MW | 350.0 | |
| NET UNIT GENERATING CAPACITY WO/FGD - MW | .0 | |
| EQUIVALENT SCRUBBED CAPACITY - MW | .0 | |
| ** BOILER DATA | | |
| SUPPLIER | COMBUSTION ENGINEERING | |
| TYPE | PULVERIZED COAL | |
| SERVICE LOAD | ****** | |
| COMMERCIAL SERVICE DATE | 0/68 | |
| MAXIMUM BOILER FLUE GAS FLOW - CU.M/S | 717.29 | (1520000 ACFM) |
| FLUE GAS TEMPERATURE - C | 135.0 | ( 275 F) |
| STACK HEIGHT - M | ****** | (**** FT) |
| STACK TOP DIAMETER - M | ******* | (***** FT) |
| ** FUEL DATA | | |
| FUEL TYPE | COAL | |
| FUEL GRADE | BITUMINOUS | |
| AVERAGE HEAT CONTENT - KJ/KG | 23493. | ( 10100 BTU/LB) |
| RANGE HEAT CONTENT - BTU/LB | | ****** |
| AVERAGE ASH CONTENT - % | 12.50 | |
| RANGE ASH CONTENT - % | ****** | |
| AVERAGE MOISTURE CONTENT - % | 11.30 | |
| RANGE MOISTURE CONTENT - % | ****** | |
| AVERAGE SULFUR CONTENT - % | .65 | |
| RANGE SULFUR CONTENT - % | ****** | |
| AVERAGE CHLORIDE CONTENT - % | .01 | |
| RANGE CHLORIDE CONTENT - % | ****** | |
| FUEL FIRING RATE - M T/H | ******* | (*** TPH) |
| FUEL FIRING RATE - MW | ***** | |
| ** ESP | | |
| NUMBER | 1 | |
| ** MECHANICAL COLLECTOR | | |
| NUMBER | 1 | |
| ** PARTICULATE SCRUBBER | | |
| NUMBER | 4 | |
| TYPE | TCA | |
| SUPPLIER | UOP | |
| NUMBER OF STAGES | 3 | |
| SHELL MATERIAL | CARBON STEEL | |
| LINING MATERIAL | RUBBER | |
| INTERNAL MATERIAL | STAINLESS STEEL | |
| L/G RATIO - LITER/CU.M | 7.5 | (56.0 GAL/1000ACF) |
| PRESSURE DROP - KPA | 3.2 | ( 13 IN-H2O) |
| SUPERFICIAL GAS VELOCITY M/S | 3.4 | ( 11.0 FT/S) |
| PARTICULATE INLET LOAD - G/CU.M | 1.6 | ( .70 GR/SCF) |
| PARTICULATE OUTLET LOAD G/CU.M | .0 | ( .020 GR/SCF) |
| PARTICULATE DESIGN REMOVAL EFFICIENCY - % | 97.0 | |
| SO2 INLET CONCENTRATION - PPM | 500.000 | |
| SO2 OUTLET CONCENTRATION - PPM | 420.000 | |
| SO2 DESIGN REMOVAL EFFICIENCY - % | 16.0 | |

SECTION 14
DESIGN AND PERFORMANCE DATA FOR OPERATIONAL PARTICULATE SCRUBBERS

| | | |
|---|---|---|
| COMPANY NAME | PUBLIC SERVICE OF COLORADO | |
| PLANT NAME | VALMONT | |
| UNIT NUMBER | 5 | |
| CITY | VALMONT | |
| STATE | COLORADO | |
| REGULATORY CLASSIFICATION | ****** | |
| PARTICULATE EMISSION LIMITATION - NG/J | 0. | ( .000 LB/MMBTU) |
| SO2 EMISSION LIMITATION - NG/J | ****** | (****** LB/MMBTU) |
| NET PLANT GENERATING CAPACITY - MW | 273.8 | |
| GROSS UNIT GENERATING CAPACITY - MW | 166.0 | |
| NET UNIT GENERATING CAPACITY W/FGD - MW | 166.0 | |
| NET UNIT GENERATING CAPACITY WO/FGD - MW | .0 | |
| EQUIVALENT SCRUBBED CAPACITY - MW | .0 | |
| ** BOILER DATA | | |
| SUPPLIER | ****** | |
| TYPE | PULVERIZED COAL | |
| SERVICE LOAD | BASE | |
| COMMERCIAL SERVICE DATE | 0/64 | |
| MAXIMUM BOILER FLUE GAS FLOW - CU.M/S | ******** | (******* ACFM) |
| FLUE GAS TEMPERATURE - C | ******* | (**** F) |
| STACK HEIGHT - M | ****** | (**** FT) |
| STACK TOP DIAMETER - M | ******* | (***** FT) |
| ** FUEL DATA | | |
| FUEL TYPE | COAL | |
| FUEL GRADE | SUBBITUMINOUS | |
| AVERAGE HEAT CONTENT - KJ/KG | ******* | (****** BTU/LB) |
| RANGE HEAT CONTENT - BTU/LB | | ****** |
| AVERAGE ASH CONTENT - % | 5.20 | |
| RANGE ASH CONTENT - % | ****** | |
| AVERAGE MOISTURE CONTENT - % | ******** | |
| RANGE MOISTURE CONTENT - % | ****** | |
| AVERAGE SULFUR CONTENT - % | .60 | |
| RANGE SULFUR CONTENT - % | ****** | |
| AVERAGE CHLORIDE CONTENT - % | ******** | |
| RANGE CHLORIDE CONTENT - % | ****** | |
| FUEL FIRING RATE - M T/H | ******* | (*** TPH) |
| FUEL FIRING RATE - MW | ***** | |
| ** ESP | | |
| TYPE | COLD SIDE | |
| ** MECHANICAL COLLECTOR | | |

# APPENDIX A

## FGD SYSTEM COST DATA: OPERATIONAL AND NONOPERATIONAL SYSTEMS

## INTRODUCTION

The cost of flue gas desulfurization (FGD) systems for the control of sulfur dioxide emissions is an area of intense interest and substantial controversy. As a result, many computer models have recently been developed to estimate capital and annual costs. As part of an effort by the U.S. Environmental Protection Agency to provide meaningful economic data concerning FGD systems, reported economic data have been incorporated into the EPA Utility FGD Survey report. This information has appeared as a separate appendix of the report since October 1976. Until January 1978, this cost appendix consisted entirely of data reported by the utilities with little or no interpretation provided by PEDCo Environmental, Inc. Beginning with the May 1978 report, the format and content of the cost appendix were revised to include reported and adjusted costs for the operational FGD systems.

The rationale for including adjusted as well as reported costs stems primarily from the lack of comparability of the reported costs. Many of the reported cost figures, both capital and operating, are largely site-sensitive values that cannot be accurately compared because they refer to different FGD battery limits and different years in which the expenditures were made. As a result, an analysis of the cost data was made for the operational units since these systems offer the potential of having complete and accurate economic data. The adjustments were made to provide comparable, accurate cost data for the sulfur dioxide portion of the emission control system. This, in effect, will eliminate much of the confusion that exists concerning the reported data, and it will provide a common basis for the reported costs.

## APPROACH

In March 1978, each utility having at least one operational FGD system was given a cost form containing all available cost information then in the PEDCo files. The utility was asked to verify the data and fill in any missing information called for on the form. A follow-up visit by the PEDCo Environmental staff was arranged to assist in data acquisition and to insure completeness and reliability of information. Results of the cost analysis were forwarded to each participating utility for final review and comment.

The cost data were treated solely to establish the accurate costs for FGD systems, on a common basis, not to critique the design or reasonableness of the costs reported by any utility. Adjustments focused primarily on the following items:

- All capital costs were adjusted to July 1, 1977, dollars using the Chemical Engineering Index. All capital costs, represented in dollars/kilowatt ($/kW), were expressed in terms of gross megawatts (MW). Actual costs were reported by utilities in dollar values for years 1970 to 1980. These values are represented in terms of the year of greatest capital expenditures.

- Gross unit capacity was used to express all FGD capital expenditures because the capital requirement of an FGD system is dependent on actual boiler size before derating for auxiliary and air quality control power requirements.

- Particulate control costs were deducted. Since the purpose of the study was to estimate the incremental cost for sulfur dioxide control, particulate control costs were deducted using either data contained in the cost breakdowns or as a percentage of the total direct cost (capital and annual). The percentage reduction varied depending upon system design and operation.

- The capital costs associated with the modification or installation of equipment not part of the FGD system but needed for its proper functioning, were included (e.g. - stack lining, modification to existing ductwork or fans, etc.).

- Indirect charges were adjusted to provide adequate funds for engineering, field expenses, legal expenses, insurance, interest during construction, allowance for startup, taxes, and contingency.

- All annual costs, represented in mills/kilowatt-hour (mills/kWh), were expressed in terms of net megawatts (MW).

- Net unit capacity was used to express all FGD annual expenditures because the annual cost requirement of an FGD system is dependent on the actual amount of kilowatt-hours (kWh) produced by the unit after derating for auxiliary and air quality control power requirements.

- All annual costs were adjusted to a common capacity factor (65%).

- Replacement power costs were not included since only a few utilities reported such costs and these were presented using a variety of methods.

- Sludge disposal costs were adjusted to reflect the costs of sulfur dioxide waste disposal only (i.e., excluding fly ash disposal) and to provide for disposal over the anticipated lifetime of the FGD system. This latter correction was necessary since several utilities reported costs for sludge disposal capacity that would last only a fraction of the FGD system life. The adjustments were based on a land cost of $2000/acre with a sludge depth of 50 ft in a clay-lined pond (clay is assumed to be available at the site).

- A 30-year life was assumed for all process and economic considerations for all new systems that were installed for the life of the unit. A 20-year life was assumed for all process and economic considerations for retro-

fit systems that were installed for the remaining portion of the life of the unit.*

- Regeneration and by-product recovery facility costs were added for those regenerable systems not reporting such costs.

To the extent possible, all cost adjustments were made using the previous assumptions developed by PEDCo Environmental. When cost data were inadequate, adjustments were made using process design data in conjunction with the previous cost assumptions. In some cases, no adjustments were possible because of insufficient data.

---

* The use of a 30-year service life for new units coincides with the conclusion of the National Power Survey of the Federal Power Commission which recognized this value as reasonable for steam-electric plants. A 20-year service life was assumed for all retrofit units even if the remaining life of the units is less than this value. Thus, two different rates are used and should be noted when making comparisons between new and retrofit systems.

## DESCRIPTION OF COST ELEMENTS

Capital costs consist of direct costs, indirect costs, contingency costs, and other capital costs. Direct costs include the "bought-out" cost of the equipment, the cost of installation, and site development. Indirect costs include interest during construction, contractor's fees and expenses, engineering, legal expenses, taxes, insurance, allowance for start-up and shakedown, and spares. Contingency costs include those costs resulting from malfunctions, equipment alterations, and similar unforeseen sources. Other capital costs include the nondepreciable items of land and working capital.

Annual costs consist of direct costs, fixed costs, and overhead costs. Direct costs include the cost of raw materials, utilities, operating labor and supervision, and maintenance and repairs. Fixed costs include those of depreciation, interim replacement, insurance, taxes, and interest on borrowed capital. Overhead costs include those of plant and payroll expenses. The various capital and annual cost components are discussed and defined in greater detail in the following paragraphs.

The direct capital costs include the following elements:

- Equipment required for the FGD system. Table A-1 provides a summary of the major process equipment used in regenerable and nonregenerable systems.

- Installation of equipment, including foundations; steel work for support, buildings, piping and ducting for effluents, slurries, sludge, and make-up water, control panels, instrumentation, insulation of ducting, buildings, piping, and other equipment, painting and piling.

- Site development may include clearing and grading, construction of access roads and walkways, establishment of rail, barge, and/or truck facilities, and parking facilities.

TABLE A-1. MAJOR FGD SYSTEM EQUIPMENT SUMMARY

| Category | Description |
|---|---|
| Material handling-raw materials | Equipment for the handling and transfer of raw materials includes unloading facilities, conveyors, storage areas and silos, vibrators, atmospheric emission control associated with these facilities, and related accessories. |
| Feed preparation-raw materials | Equipment for the preparation of raw material to produce a feed slurry consists of feed weighers, crushers, grinders, classifiers, ball mills, mixing tanks, pumps, agitators, and related accessories. |
| Sulfur dioxide absorption | Equipment for treating the flue gas includes absorbers, mist eliminators, hold tanks, agitators, circulating pumps, pond water return pumps, and related accessories. |
| Flue gas reheat | Equipment required includes air, steam, or hot water heaters, condensate tanks, pumps, soot blowers, fans, fuel storage facilities, gas bypass equipment, and related accessories. |
| Gas handling | Equipment to handle the boiler flue gas includes booster fans, ductwork, flue gas bypass system, turning vanes, supports, platforms, and related accessories. |
| Sludge disposal | Nonregenerable FGD systems require solids/water separation equipment such as clarifiers, vacuum filters, centrifuges, sludge fixation equipment, and related accessories. |
| Utilities | Equipment to supply power and water to the FGD equipment consists of switch-gear, breakers, transformers, piping, and related accessories. |
| By-product handling | Equipment for processing the by-product of regenerable FGD systems may include a rotary kiln, fluid bed dryer, conveyor, storage silo, vibrator, combustion equipment and oil storage tanks, waste heat boilers, hammer mills, evaporators, crystallizers, strippers, tanks, agitators, pumps, compressors, sulfuric acid absorber and cooling, mist eliminator, pumps, acid coolers, tanks, etc. |

(continued)

TABLE A-1. (continued)

| Category | Description |
|---|---|
| Regeneration | Equipment for regeneration of the absorbing medium of an FGD system may consist of reactor vessels, material handling system, storage, weigh feeder, conveyor, rotary kiln, fluid bed calciner, dust collector, storage silo, vibrator, combustion equipment and oil storage tanks, waste heat boiler, hammer mill, evaporators, crystallizers, strippers, tanks, agitators, pumps, compressors, sulfuric acid absorber and cooling, mist eliminator, pumps, acid coolers, tanks, etc. |
| Purge treatment | Equipment for the removal of purge material (e.g. sodium sulfate) includes refrigeration, pumps, tanks, crystallizer, centrifuge, dryer, dust collector, conveyors, storage, and related equipment. |
| Auxiliary | Equipment not directly related to the FGD system, but which may require design or modification to accommodate an FGD system may include such items as existing fans, ducts, or stack. If new fans, ducts, or stacks are added to improve boiler performance and accommodate the FGD system, the costs are prorated to the boiler and FGD system. |

Indirect capital costs include the following elements:

- Interest accrued on borrowed capital during construction.

- Contractor's fee and expenses, including costs for field labor payroll; field office supervision; personnel; construction offices; temporary roadways; railroad trackage; maintenance and welding shops; parking lot; communications; temporary piping and electrical and sanitary facilities; safety security (fire, material, medical, etc.); construction tools and rental equipment; unloading and storage of materials; travel expenses; permits; licenses; taxes; insurance; overhead; legal liabilities; field testing of equipment; start-up; and labor relations.

- Engineering costs, including administrative, process, project, and general; design and related functions for specifications; bid analysis; special studies; cost analysis; accounting; reports; consultant fees; purchasing; procurement; travel expenses; living expenses; expediting; inspection; safety; communications; modeling; pilot plant studies (if required because of process design or application novelty); royalty payments during construction; training of plant personnel; field engineering; safety engineering; and consultant services.

- Legal expenses, including those for securing permits, rights-of-way, etc.

- Taxes, including sales, and excise taxes.

- Insurance covering liability for equipment in transit and at site; fire, casualty, injury, and death; damage to property; delay; and noncompliance.

- Allowance for start-up and shakedown includes the cost associated with system start-up.

- Spare parts including pumps, valves, controls, special piping and fittings, instruments, spray nozzles, and similar items.

Other capital costs include the following elements:

- Land required for the FGD process, waste disposal, regeneration facility, and storage.

- Working capital, including the total amount of money invested in raw materials and supplies in stock, finished products in stock, and unfinished products

in the process of being manufactured; accounts receivable; cash kept on hand for payment of operating expenses such as salaries, wages, and raw materials purchases; accounts payable; and taxes payable.

Annual cost of an FGD system includes the following direct, fixed and overhead charges:

- Direct Charges

  - Raw materials, including those required by the FGD process for sulfur dioxide control, absorbent regeneration, sludge treatment, sludge fixation, flocculants, etc.

  - Utilities, including water for slurries, cooling and cleaning; electricity for pumps, fans, valves, lighting controls, conveyors, and mixers; fuel for reheating of flue gases; and stream for processing.

  - Operating labor, including supervisory, skilled, and unskilled labor required to operate, monitor, and control the FGD process.

  - Maintenance and repairs, consisting of both manpower and materials to keep the unit operating efficiently. The function of maintenance is both preventive and corrective to keep outages to a minimum.

  - Byproduct Sales: credit from the sale of byproducts regenerable FGD processes (e.g. sulfur, sulfuric acid) is a negative charge deducted from the annual direct cost to obtain the net annual direct cost of the FGD system.

- Fixed Charges

  - Depreciation - the annual charge to recover direct and indirect costs of physical assets over the life of the asset.

  - Interim, replacement - costs expended for temporary or provisional replacement of equipment that has failed or malfunctioned prematurely.

  - Insurance, including the costs of protection from loss by a specified contingency, peril, or unforeseen event. Required coverage could include losses due to fire, personal injury or death, property damage, explosion, lightning, or other natural phenomena.

- Taxes, including franchise, excise, and property taxes levied by a city, county, state, or Federal government.

- Interest on borrowed funds.

- Overhead

  Plant and administrative overhead is a business expense that is not charged directly to a particular part of a project, but is allocated to it. Overhead costs include administrative, safety, engineering, legal and medical services; payroll; employee benefits; recreation; and public relations.

Table A-2 provides a summary of the means used to determine the missing cost elements if the costs were not reported or insufficient information prevented their actual determination. The assumptions and cost bases for determining the capital and annual costs of FGD systems were developed by the PEDCo staff based upon previous economic studies conducted for the U.S. EPA (Flue Gas Desulfurization Process Cost Assessment, May 1975; Simplified Procedures for Estimating Flue Gas Desulfurization System Costs, June 1976, EPA-600/2-76-150; Particulate and Sulfur Dioxide Emission Control Costs for Large Coal-Fired Boilers, March 1978, EPA-600/7-78-032).

TABLE A-2. COST ELEMENT FACTORS

| Category | Value |
|---|---|
| Indirect capital costs: | |
| Interest during construction | 10% of total direct capital costs |
| Field overhead | 10% of total direct capital costs |
| Contractor's fee and expenses | 5% of total direct capital costs |
| Engineering | 10% of total direct capital costs |
| Taxes | 2% of total direct capital costs |
| Spares | 1% of total direct capital costs |
| Shakedown allowance | 5% of total direct capital costs |
| Other capital costs: | |
| Contingency[a] | 20% of total direct and indirect capital costs |
| Direct annual costs: | |
| Raw materials: | |
| Fixation chemicals | $2/ton |
| Lime | $40/ton |
| Limestone | $10/ton |
| Magnesium oxide | $150/ton |
| Sodium carbonate | $80/ton |
| Salt cake (credit) | $50/ton |
| Sulfur (credit) | $65/ton |
| Sulfuric acid (credit) | $25/ton |
| Utilities: | |
| Electricity | 25 mills/kWh |
| Water | $0.20/$10^3$ gal |
| Steam | $0.80/$10^6$ Btu |
| Operating labor: | |
| Direct labor | $8.50/man-hour |
| Supervision | 15% of direct labor costs |

[a] Contingency costs are used only when the cost data supplied are incomplete (such as equipment costs or direct costs only) and a contingency cost must be factored in to give an accurate estimate of the total capital cost.

(continued)

TABLE A-2. (continued)

| Category | Value |
|---|---|
| Maintenance: | |
| Labor and materials | 4% of total direct capital costs |
| Supplies | 15% of labor and materials costs |
| Overhead: | |
| Plant | 50% of operation and maintenance costs |
| Payroll | 20% of operating labor costs |
| Fixed annual costs: | |
| Depreciation | 3.33% or 5% (new or retrofit) |
| Interim replacement[b] | 0.7% or 0.35% |
| Taxes | 4% |
| Insurance | 0.3% |
| Capital costs | 9% |

[b] Some system components have life spans less than the expected service life of the system. Interim replacement is an allowance factor used in estimating annual revenue requirements to provide for the replacement of these short-lived items. An average allowance of 0.35% of the total investment is normally provided and used for systems with an expected service life of 20 years or less. A higher allowance of 0.70% of the total investment is provided and used for systems with an expected service life of 30 years or more.

## DEFINITION OF COST ELEMENTS

The costs displayed in Appendix A are accompanied by a series of alphabetic characters summarizing data presented for each FGD system. These relate to the cost elements described earlier in this section and identify what has been included and excluded for reported and adjusted capital and annual costs. The alphabetic characters, along with their titles, are briefly described in Table A-3.

TABLE A-3. DESCRIPTION OF COST

| Code | Title | Description |
|---|---|---|
| A | Particulate control (required for FGD process) included in capital cost. | Particulate precollection device (ESP, fabric filter, venturi) prior to FGD system required for proper operation of $SO_2$ control system. |
| B | Particulate control (included in FGD process) included in capital cost. | Particulate collection equipment (venturi scrubber) is included in the FGD system. |
| C | Total direct capital costs included. | Complete cost of all FGD equipment, the labor and materials required for equipment installation, and interconnecting the system is included in the total capital cost. |
| D | Partial direct capital costs included. | One or a number of direct cost items, or the cost associated with one or a number of direct cost items, are excluded from the total capital cost. |
| E | Total indirect capital costs included. | Complete cost of all the indirect cost elements, including interest during construction, contractor's fees, engineering, legal expenses, taxes, insurance, allowance for start-up, and spares, is included in total capital cost. |
| F | Partial indirect costs included. | One or a number of indirect cost items, or the cost associated with one or a number of indirect cost items, are excluded from the total capital cost. |
| G | Chemical fixation of sludge included in capital cost. | The cost of a chemical fixation process which stabilizes the flue gas cleaning wastes prior to disposal is included in the total capital cost. |
| H | Dry sludge disposal included in capital cost. | The cost of a secondary dewatering or treatment method, such as filtration, centrifugation, or forced oxidation, which ultimately produces a dry sludge cake for final disposal, is included in the total capital cost. |
| I | Off-site landfill area included in capital cost. | The cost of an off-site area used as a landfill for flue gas cleaning wastes is included in the total capital cost. |
| J | Sludge pond included in capital cost. | The cost of an on-site disposal area for ponding of treated or untreated flue gas cleaning wastes is included in the total capital cost. |
| K | Additional sludge disposal capacity added for life of system. | The cost of additional $SO_2$ waste disposal capacity required for FGD system operation over the anticipated service life of the unit is included in the total capital cost. |
| L | Stack included in capital cost. | The cost of the stack is included in the total capital cost. |
| M | Modifications to stack, ducts, and/or fans included in capital cost. | Modifications to existing equipment (stack, fans, ducts, etc.) which are required because of inclusion of an FGD system. |
| N | Total regeneration facility cost included in capital cost. | Complete cost of entire regeneration facility included in total capital cost. |
| O | Partial regeneration facility cost included in capital cost. | Part of the cost associated with the regeneration facility included in the total capital cost. |
| P | R & D costs included in capital cost. | Bench scale or pilot plant studies to determine process and design characteristics. |

(continued)

TABLE A-3. (continued)

| Code | Title | Description |
|---|---|---|
| Q | Costs underwritten by system supplier included in capital cost. | Capital expenditures underwritten by the system supplier for system repairs or modifications for optimization of performance or R & D programs. |
| R | Excess reagent supply costs included in capital cost. | Capital expenditures for reagent supply exceeds the amount required for the period of initial operation. |
| S | Total direct annual costs included. | Complete cost of all raw materials, utilities, operating labor and maintenance and repairs is included in the total annual cost. |
| T | Partial direct annual costs included. | One or a number of direct annual cost items, or the cost associated with one or a number of direct annual cost items, are excluded from the total annual cost. |
| U | Total fixed annual costs included. | Complete cost of all fixed cost elements, including depreciation, interim replacement, insurance, taxes, and interest, is included in the total annual cost. |
| V | Partial fixed annual costs included. | One or a number of fixed annual cost items, or the cost associated with one or a number of fixed annual cost items, are excluded from the total annual cost. |
| W | Overhead cost included in total annual cost. | Plant and payroll overhead costs are included in the total annual cost. |
| X | Particulate control costs included in direct annual cost. | The cost of operating particulate collection equipment included in the FGD system is included in the total annual cost. |
| Y | Sludge disposal service costs (contract) included in direct annual cost. | The treatment and disposal of flue gas cleaning wastes that are handled by an outside firm. |
| Z | Replacement energy costs included in total annual costs. | The cost of additional power-generating capacity required to compensate for power used by the FGD system. |

## RESULTS OF COST ANALYSIS

The results of the operational FGD system survey are summarized in Table A-4 and Section A-1. Table A-4 produces a summary of a categorical analysis of the reported and adjusted capital and annual costs for the operational FGD systems addressed in the survey. Included in this categorical analysis are the ranges, means, and standard deviation for all the various types and categories of FGD systems examined. Section A-1 summarizes the reported and adjusted capital and annual costs for all the operational FGD systems addressed in the survey (Section A-2 summarizes available cost data for nonoperational FGD systems).

In an attempt to further clarify and allow additional comparison of costs between different FGD units, the adjusted fixed annual costs were standardized. This was done by taking the adjusted Total Direct and Indirect Capital Costs for each unit and applying the identical rate for costs of depreciation, interim replacement, taxes, insurance and capital. These new sums were totaled, then added to the adjusted Variable Cost to determine the Total Standardized Annual Costs. In this manner costs can be compared based upon the assumption that Utilities can incur Fixed Annual Costs at the same rate.

TABLE A-4. CATEGORICAL RESULTS OF THE REPORTED AND ADJUSTED CAPITAL AND ANNUAL COSTS FOR OPERATIONAL FGD SYSTEMS

| CATEGORY | REPORTED | | | | | | ADJUSTED | | | | | |
|---|---|---|---|---|---|---|---|---|---|---|---|---|
| | CAPITAL, $/KW | | | ANNUAL, MILLS/KWH | | | CAPITAL, $/KW | | | ANNUAL, MILLS/KWH | | |
| | RANGE | AVG | DEV | RANGE | AVG | DEV | RANGE | AVG | DEV | RANGE | AVG | DEV |
| ALL | 5.3-156.9 | 77.0 | 36.9 | .3- 14.9 | 6.3 | 5.1 | 60.9-233.2 | 94.2 | 35.2 | 2.7- 12.4 | 5.5 | 2.4 |
| NEW | 5.3-120.6 | 71.4 | 30.0 | .3- 14.3 | 4.6 | 5.0 | 66.4-117.6 | 85.5 | 16.9 | 2.8- 8.7 | 5.2 | 2.0 |
| RETROFIT | 29.2-156.9 | 83.7 | 42.7 | 2.1- 14.9 | 8.3 | 4.4 | 60.9-233.2 | 103.6 | 45.8 | 2.7- 12.4 | 5.8 | 2.6 |
| THROWAWAY PRODUCT | 5.3-120.6 | 67.1 | 29.2 | .3- 14.3 | 5.9 | 4.9 | 60.9-140.6 | 87.0 | 21.2 | 2.7- 8.7 | 5.2 | 1.9 |
| SALEABLE PRODUCT | 93.3-156.9 | 132.5 | 23.5 | 3.3- 14.9 | 9.1 | 5.8 | 134.8-233.2 | 184.0 | 49.2 | 12.4- 12.4 | 12.4 | .0 |
| LIMESTONE | 5.3- 99.5 | 61.4 | 27.6 | 1.6- 3.3 | 2.2 | .8 | 66.4-117.6 | 93.1 | 21.9 | 2.9- 6.6 | 5.0 | 1.4 |
| LIME | 29.2-120.6 | 74.1 | 29.7 | .3- 14.3 | 9.0 | 4.5 | 67.5-140.6 | 88.9 | 21.1 | 2.7- 8.7 | 6.0 | 2.0 |
| LIME/ALKALINE FLYASH | 85.9- 85.9 | 85.9 | .0 | *****- .0 | .0 | .0 | 93.0- 93.0 | 93.0 | .0 | 5.2- 5.2 | 5.2 | .0 |
| SODIUM CARBONATE | 42.9-113.6 | 66.5 | 33.3 | 2.1- 2.1 | 2.1 | .0 | 60.9-107.9 | 76.6 | 22.2 | 3.2- 4.4 | 3.6 | .6 |
| WELLMAN LORD | 127.9-156.9 | 137.6 | 13.7 | 14.9- 14.9 | 14.9 | .0 | 134.8-134.8 | 134.8 | .0 | 12.4- 12.4 | 12.4 | .0 |
| LIMESTONE/ALKALINE FLYASH | 47.9- 47.9 | 47.9 | .0 | 2.0- 2.0 | 2.0 | .0 | 71.5- 71.5 | 71.5 | .0 | 2.8- 2.8 | 2.8 | .0 |
| MAGNESIUM OXIDE | 156.7-156.7 | 156.7 | .0 | *****- .0 | .0 | .0 | 233.2-233.2 | 233.2 | .0 | *****- .0 | .0 | .0 |

SECTION A-1
COSTS FOR OPERATIONAL FGD SYSTEMS

| UNIT DESCRIPTION | COST DESCRIPTION | COST REPORTED | COST ADJUSTED | COST STANDARDIZED ADJUSTED |
|---|---|---|---|---|
| ALABAMA ELECTRIC COOP<br>TOMBIGBEE<br>2<br>179.0 MW (NET) | CAPACITY FACTOR, %<br>TOTAL CAPITAL, $/KW(YEAR)<br>TOTAL ANNUAL, MILLS/KWH(YEAR)<br>COST ELEMENTS | ***<br>172.5(1978)<br>******( 0)<br>A,D | 65<br>******( 0)<br>******( 0) | 65<br>******( 0)<br>******( 0) |
| ARIZONA ELECTRIC POWER COOP<br>APACHE<br>2<br>195.0 MW (NET) | CAPACITY FACTOR, %<br>TOTAL CAPITAL, $/KW(YEAR)<br>TOTAL ANNUAL, MILLS/KWH(YEAR)<br>COST ELEMENTS | 44<br>35.9(1977)<br>2.1(1978)<br>C,E,H,J,L,S,<br>U,W,Y,Z | 65<br>******( 0)<br>******( 0) | 65<br>******( 0)<br>******( 0) |
| CENTRAL ILLINOIS LIGHT<br>DUCK CREEK<br>1<br>416.0 MW (NET) | CAPACITY FACTOR, %<br>TOTAL CAPITAL, $/KW(YEAR)<br>TOTAL ANNUAL, MILLS/KWH(YEAR)<br>COST ELEMENTS | ***<br>93.3(1978)<br>3.3(1976)<br>C,E,J,M | 65<br>******( 0)<br>******( 0) | 65<br>******( 0)<br>******( 0) |
| COLUMBUS & SOUTHERN OHIO ELEC.<br>CONESVILLE<br>5<br>411.0 MW (NET) | CAPACITY FACTOR, %<br>TOTAL CAPITAL, $/KW(YEAR)<br>TOTAL ANNUAL, MILLS/KWH(YEAR)<br>COST ELEMENTS | 48<br>55.5(1975)<br>5.2(1978)<br>B,C,J,M,S,U,<br>W,X,Y | 65<br>70.7(1977)<br>7.4(1977)<br>C,E,J,M,S,U,<br>W,Y | 65<br>70.7(1977)<br>7.4(1977)<br>C,E,J,M,S,U,<br>W,Y |
| COLUMBUS & SOUTHERN OHIO ELEC.<br>CONESVILLE<br>4<br>411.0 MW (NET) | CAPACITY FACTOR, %<br>TOTAL CAPITAL, $/KW(YEAR)<br>TOTAL ANNUAL, MILLS/KWH(YEAR)<br>COST ELEMENTS | 48<br>55.5(1978)<br>5.2(1978)<br>B,C,J,M,S,U,<br>W,X,Y | 65<br>70.7(1977)<br>******( 0)<br>C,E,J,M,S,U,<br>W,Y | 65<br>******( 0)<br>******( 0) |
| DUQUESNE LIGHT<br>ELRAMA<br>1-4<br>510.0 MW (NET) | CAPACITY FACTOR, %<br>TOTAL CAPITAL, $/KW(YEAR)<br>TOTAL ANNUAL, MILLS/KWH(YEAR)<br>COST ELEMENTS | 64<br>113.4(1976)<br>8.6(1977)<br>B,D,F,I,J,M,<br>T,V,X,Y | 65<br>127.1(1977)<br>7.8(1977)<br>C,E,I,J,M,S,<br>U,Y | 65<br>127.1(1977)<br>7.5(1977)<br>C,E,I,J,M,S,<br>U,Y |
| DUQUESNE LIGHT<br>PHILLIPS<br>1-6<br>410.0 MW (NET) | CAPACITY FACTOR, %<br>TOTAL CAPITAL, $/KW(YEAR)<br>TOTAL ANNUAL, MILLS/KWH(YEAR)<br>COST ELEMENTS | 70<br>106.9(1972)<br>7.8(1977)<br>B,D,F,I,J,M,<br>T,V,X,Y | 65<br>140.6(1977)<br>8.6(1977)<br>C,E,I,J,M,S,<br>U,Y | 65<br>140.6(1977)<br>8.2(1977)<br>C,E,I,J,M,S,<br>U,Y |
| INDIANAPOLIS POWER & LIGHT<br>PETERSBURG<br>7<br>532.0 MW (NET) | CAPACITY FACTOR, %<br>TOTAL CAPITAL, $/KW(YEAR)<br>TOTAL ANNUAL, MILLS/KWH(YEAR)<br>COST ELEMENTS | ***<br>99.5(1976)<br>******( 0)<br>C,F,G,J,M | 65<br>100.6(1977)<br>6.6(1977)<br>C,E,G,J,M,S,<br>U,W,Y | 65<br>100.6(1977)<br>7.4(1977)<br>C,E,G,J,M,S,<br>U,W,Y |
| KANSAS CITY POWER & LIGHT<br>HAWTHORN<br>3<br>90.0 MW (NET) | CAPACITY FACTOR, %<br>TOTAL CAPITAL, $/KW(YEAR)<br>TOTAL ANNUAL, MILLS/KWH(YEAR)<br>COST ELEMENTS | 14<br>29.2(1972)<br>8.4(1977)<br>B,D,F,T,X | 65<br>87.2(1977)<br>4.3(1977)<br>B,C,E,J,K,S,<br>U,W,X | 65<br>87.2(1977)<br>4.4(1977)<br>B,C,E,J,K,S,<br>U,W,X |
| KANSAS CITY POWER & LIGHT<br>HAWTHORN<br>4<br>90.0 MW (NET) | CAPACITY FACTOR, %<br>TOTAL CAPITAL, $/KW(YEAR)<br>TOTAL ANNUAL, MILLS/KWH(YEAR)<br>COST ELEMENTS | ***<br>29.2(1972)<br>8.4(1977)<br>B,D,F,T,X | 65<br>87.2(1977)<br>4.3(1977)<br>B,C,E,J,K,S,<br>U,W,X | 65<br>87.2(1977)<br>4.4(1977)<br>B,C,E,J,K,S,<br>U,W,X |

****** INDICATES COST FIGURES NOT YET AVAILABLE

SECTION A-1
COSTS FOR OPERATIONAL FGD SYSTEMS

| UNIT DESCRIPTION | COST DESCRIPTION | COST REPORTED | COST ADJUSTED | COST STANDARDIZED ADJUSTED |
|---|---|---|---|---|
| KANSAS CITY POWER & LIGHT<br>LA CYGNE<br>1<br>874.0 MW (NET) | CAPACITY FACTOR, %<br>TOTAL CAPITAL, $/KW(YEAR)<br>TOTAL ANNUAL, MILLS/KWH(YEAR)<br>COST ELEMENTS | 42<br>53.6(1972)<br>1.3(1978)<br>T | 65<br>68.0(1977)<br>3.8(1977)<br>C,E,J,K,S,U | 65<br>68.0(1977)<br>3.9(1977)<br>C,E,J,K,S,U |
| KENTUCKY UTILITIES<br>GREEN RIVER<br>1-3<br>64.0 MW (NET) | CAPACITY FACTOR, %<br>TOTAL CAPITAL, $/KW(YEAR)<br>TOTAL ANNUAL, MILLS/KWH(YEAR)<br>COST ELEMENTS | 16<br>70.3(1975)<br>14.3(1977)<br>B,C,E,J,S,U,W | 65<br>77.5(1977)<br>2.7(1977)<br>C,E,J,S,U,W | 65<br>77.5(1977)<br>5.2(1977)<br>C,E,J,S,U,W |
| LOUISVILLE GAS & ELECTRIC<br>CANE RUN<br>4<br>188.0 MW (NET) | CAPACITY FACTOR, %<br>TOTAL CAPITAL, $/KW(YEAR)<br>TOTAL ANNUAL, MILLS/KWH(YEAR)<br>COST ELEMENTS | 55<br>66.5(1975)<br>******(1977)<br>C,E,H,J,Q,T | 65<br>80.6(1977)<br>5.8(1977)<br>C,E,H,J,K,Q,S,U,W | 65<br>80.6(1977)<br>6.2(1977)<br>C,E,H,J,K,Q,S,U,W |
| LOUISVILLE GAS & ELECTRIC<br>CANE RUN<br>5<br>190.0 MW (NET) | CAPACITY FACTOR, %<br>TOTAL CAPITAL, $/KW(YEAR)<br>TOTAL ANNUAL, MILLS/KWH(YEAR)<br>COST ELEMENTS | ***<br>62.4(1977)<br>******( 0)<br>C,E,H,J | 65<br>67.5(1977)<br>5.6(1977)<br>C,E,H,J,K,S,U,W | 65<br>67.5(1977)<br>5.6(1977)<br>C,E,H,J,K,S,U,W |
| LOUISVILLE GAS & ELECTRIC<br>CANE RUN<br>6<br>286.0 MW (NET) | CAPACITY FACTOR, %<br>TOTAL CAPITAL, $/KW(YEAR)<br>TOTAL ANNUAL, MILLS/KWH(YEAR)<br>COST ELEMENTS | ***<br>57.9(1977)<br>3.2(1979)<br>C,E,H,M,S,V,W | 65<br>******( 0)<br>******( 0) | 65<br>******( 0)<br>******( 0) |
| LOUISVILLE GAS & ELECTRIC<br>PADDY'S RUN<br>6<br>72.0 MW (NET) | CAPACITY FACTOR, %<br>TOTAL CAPITAL, $/KW(YEAR)<br>TOTAL ANNUAL, MILLS/KWH(YEAR)<br>COST ELEMENTS | ***<br>52.8(1977)<br>******( 0)<br>C,E | 65<br>76.4(1977)<br>6.5(1977)<br>C,E,S,U,W | 65<br>76.4(1977)<br>6.4(1977)<br>C,E,S,U,W |
| MINNKOTA POWER COOPERATIVE<br>MILTON R. YOUNG<br>2<br>405.0 MW (NET) | CAPACITY FACTOR, %<br>TOTAL CAPITAL, $/KW(YEAR)<br>TOTAL ANNUAL, MILLS/KWH(YEAR)<br>COST ELEMENTS | ***<br>85.9(1976)<br>******( 0)<br>C,E,H,P | 65<br>93.0(1977)<br>5.2(1977)<br>C,E,H,M,P,S,U,W | 65<br>93.0(1977)<br>5.2(1977)<br>C,E,H,M,P,S,U,W |
| MONTANA POWER<br>COLSTRIP<br>1<br>360.0 MW (NET) | CAPACITY FACTOR, %<br>TOTAL CAPITAL, $/KW(YEAR)<br>TOTAL ANNUAL, MILLS/KWH(YEAR)<br>COST ELEMENTS | 76<br>77.1(1975)<br>******(1977)<br>B,C,E,J,P,T | 65<br>77.2(1977)<br>4.1(1977)<br>C,E,J,K,P,S,U,W | 65<br>77.2(1977)<br>4.0(1977)<br>C,E,J,K,P,S,U,W |
| MONTANA POWER<br>COLSTRIP<br>2<br>360.0 MW (NET) | CAPACITY FACTOR, %<br>TOTAL CAPITAL, $/KW(YEAR)<br>TOTAL ANNUAL, MILLS/KWH(YEAR)<br>COST ELEMENTS | 76<br>77.1(1975)<br>.3(1977)<br>B,C,E,J,P,T | 65<br>77.2(1977)<br>4.1(1977)<br>C,E,J,K,P,S,U,W | 65<br>77.2(1977)<br>4.1(1977)<br>C,E,J,K,P,S,U,W |
| NEVADA POWER<br>REID GARDNER<br>1<br>125.0 MW (NET) | CAPACITY FACTOR, %<br>TOTAL CAPITAL, $/KW(YEAR)<br>TOTAL ANNUAL, MILLS/KWH(YEAR)<br>COST ELEMENTS | 67<br>42.9(1973)<br>2.1(1977)<br>B,D,E,P,S,U,W,X | 65<br>60.9(1977)<br>3.2(1977)<br>B,D,E,P,S,U,W,X | 65<br>60.9(1977)<br>3.4(1977)<br>B,D,E,P,S,U,W,X |

****** INDICATES COST FIGURES NOT YET AVAILABLE

SECTION A-1
COSTS FOR OPERATIONAL FGD SYSTEMS

| UNIT DESCRIPTION | COST DESCRIPTION | COST REPORTED | COST ADJUSTED | COST STANDARDIZED ADJUSTED |
|---|---|---|---|---|
| NEVADA POWER<br>REID GARDNER<br>2<br>125.0 MW (NET) | CAPACITY FACTOR, %<br>TOTAL CAPITAL, $/KW(YEAR)<br>TOTAL ANNUAL, MILLS/KWH(YEAR)<br>COST ELEMENTS | 67<br>42.9(1973)<br>2.1(1977)<br>B,D,E,P,S,U,W,X | 65<br>60.9(1977)<br>3.2(1977)<br>B,D,E,P,S,U,W,X | 65<br>60.9(1977)<br>3.4(1977)<br>B,D,E,P,S,U,W,X |
| NEVADA POWER<br>REID GARDNER<br>3<br>125.0 MW (NET) | CAPACITY FACTOR, %<br>TOTAL CAPITAL, $/KW(YEAR)<br>TOTAL ANNUAL, MILLS/KWH(YEAR)<br>COST ELEMENTS | 67<br>113.6(1975)<br>2.1(1977)<br>B,C,E,L,S,U,W,X | 65<br>107.9(1977)<br>4.4(1977)<br>B,C,E,L,S,U,W,X | 65<br>107.9(1977)<br>5.0(1977)<br>B,C,E,L,S,U,W,X |
| NORTHERN INDIANA PUB SERVICE<br>DEAN H. MITCHELL<br>11<br>115.0 MW (NET) | CAPACITY FACTOR, %<br>TOTAL CAPITAL, $/KW(YEAR)<br>TOTAL ANNUAL, MILLS/KWH(YEAR)<br>COST ELEMENTS | 77<br>156.9(1976)<br>14.9(1976)<br>B,C,E,L,N,S,U,W,X,Z | 65<br>134.8(1977)<br>12.4(1977)<br>C,E,L,N,S,U,W,Z | 65<br>134.8(1977)<br>11.0(1977)<br>C,E,L,N,S,U,W,Z |
| NORTHERN STATES POWER<br>SHERBURNE<br>1<br>740.0 MW (NET) | CAPACITY FACTOR, %<br>TOTAL CAPITAL, $/KW(YEAR)<br>TOTAL ANNUAL, MILLS/KWH(YEAR)<br>COST ELEMENTS | 73<br>47.9(1972)<br>2.0(1977)<br>B,C,J,S,U,X,Z | 65<br>71.5(1977)<br>2.8(1977)<br>C,E,J,K,S,U,W | 65<br>71.5(1977)<br>3.3(1977)<br>C,E,J,K,S,U,W |
| NORTHERN STATES POWER<br>SHERBURNE<br>2<br>740.0 MW (NET) | CAPACITY FACTOR, %<br>TOTAL CAPITAL, $/KW(YEAR)<br>TOTAL ANNUAL, MILLS/KWH(YEAR)<br>COST ELEMENTS | 73<br>47.9(1972)<br>2.0(1977)<br>B,C,J,S,U,X,Z | 65<br>71.5(1977)<br>2.8(1977)<br>C,E,J,K,S,U,W | 65<br>71.5(1977)<br>3.3(1977)<br>C,E,J,K,S,U,W |
| PENNSYLVANIA POWER<br>BRUCE MANSFIELD<br>1<br>917.0 MW (NET) | CAPACITY FACTOR, %<br>TOTAL CAPITAL, $/KW(YEAR)<br>TOTAL ANNUAL, MILLS/KWH(YEAR)<br>COST ELEMENTS | 40<br>120.6(1975)<br>14.3(1977)<br>B,C,E,G,I,L,S,U,W,X | 65<br>102.1(1977)<br>8.7(1977)<br>C,E,G,I,M,S,U,W | 65<br>102.1(1977)<br>10.8(1977)<br>C,E,G,I,M,S,U,W |
| PENNSYLVANIA POWER<br>BRUCE MANSFIELD<br>2<br>917.0 MW (NET) | CAPACITY FACTOR, %<br>TOTAL CAPITAL, $/KW(YEAR)<br>TOTAL ANNUAL, MILLS/KWH(YEAR)<br>COST ELEMENTS | 40<br>120.6(1975)<br>14.3(1977)<br>B,C,E,G,I,L,S,U,W,X | 65<br>102.1(1977)<br>8.7(1977)<br>C,E,G,I,M,S,U,W | 65<br>102.1(1977)<br>10.8(1977)<br>C,E,G,I,M,S,U,W |
| PHILADELPHIA ELECTRIC<br>EDDYSTONE<br>1A<br>120.0 MW (NET) | CAPACITY FACTOR, %<br>TOTAL CAPITAL, $/KW(YEAR)<br>TOTAL ANNUAL, MILLS/KWH(YEAR)<br>COST ELEMENTS | ***<br>156.7(1972)<br>******(1972)<br>D,F,N,P | 65<br>233.2(1977)<br>******(1977)<br>C,E,N,P | 65<br>233.2(1977)<br>******(1977)<br>C,E,N,P |
| PUBLIC SERVICE OF NEW MEXICO<br>SAN JUAN<br>1<br>361.0 MW (NET) | CAPACITY FACTOR, %<br>TOTAL CAPITAL, $/KW(YEAR)<br>TOTAL ANNUAL, MILLS/KWH(YEAR)<br>COST ELEMENTS | ***<br>127.9(1977)<br>******( 0)<br>A,C,E,N | 65<br>******( 0)<br>******( 0) | 65<br>******( 0)<br>******( 0) |
| PUBLIC SERVICE OF NEW MEXICO<br>SAN JUAN<br>2<br>350.0 MW (NET) | CAPACITY FACTOR, %<br>TOTAL CAPITAL, $/KW(YEAR)<br>TOTAL ANNUAL, MILLS/KWH(YEAR)<br>COST ELEMENTS | ***<br>127.9(1977)<br>******( 0)<br>A,C,E,N | 65<br>******( 0)<br>******( 0) | 65<br>******( 0)<br>******( 0) |

****** INDICATES COST FIGURES NOT YET AVAILABLE

SECTION A-1
COSTS FOR OPERATIONAL FGD SYSTEMS

| UNIT DESCRIPTION | COST DESCRIPTION | COST REPORTED | COST ADJUSTED | COST STANDARDIZED ADJUSTED |
|---|---|---|---|---|
| SOUTH CAROLINA PUBLIC SERVICE | CAPACITY FACTOR, % | 80 | 65 | 65 |
| WINYAH | TOTAL CAPITAL, $/KW(YEAR) | 47.4(1976) | 66.4(1977) | 6.4(1977) |
| 2 | TOTAL ANNUAL, MILLS/KWH(YEAR) | 1.6( 0) | 2.9(1977) | 3.2(1977) |
| 140.0 MW (NET) | COST ELEMENTS | C,F,J,M,S,V | C,E,J,K,M,S, U,W | C,E,J,K,M,S, U,W |
| SOUTHERN INDIANA GAS & ELEC | CAPACITY FACTOR, % | *** | 65 | 65 |
| A.B. BROWN | TOTAL CAPITAL, $/KW(YEAR) | 43.2(1979) | ******( 0) | ******( 0) |
| 1 | TOTAL ANNUAL, MILLS/KWH(YEAR) | ******( 0) | ******( 0) | ******( 0) |
| 265.0 MW (NET) | COST ELEMENTS | C,E,G | | |
| SOUTHERN MISSISSIPPI ELECTRIC | CAPACITY FACTOR, % | *** | 65 | 65 |
| R.D. MORROW | TOTAL CAPITAL, $/KW(YEAR) | 232.5(1978) | ******( 0) | ******( 0) |
| 1 | TOTAL ANNUAL, MILLS/KWH(YEAR) | ******( 0) | ******( 0) | ******( 0) |
| 124.0 MW (NET) | COST ELEMENTS | D | | |
| SPRINGFIELD CITY UTILITIES | CAPACITY FACTOR, % | *** | 65 | 65 |
| SOUTHWEST | TOTAL CAPITAL, $/KW(YEAR) | 77.3(1974) | 117.6(1977) | 117.6(1977) |
| 1 | TOTAL ANNUAL, MILLS/KWH(YEAR) | ******( 0) | 6.2(1977) | 6.9(1977) |
| 194.0 MW (NET) | COST ELEMENTS | C,F,H,J,P | C,E,H,J,K,P, S,U,W | C,E,H,J,K,P, S,U,W |
| TENNESSEE VALLEY AUTHORITY | CAPACITY FACTOR, % | 60 | 65 | 65 |
| WIDOWS CREEK | TOTAL CAPITAL, $/KW(YEAR) | 98.1(1976) | 113.1(1977) | 113.1(1977) |
| 8 | TOTAL ANNUAL, MILLS/KWH(YEAR) | 3.0(1977) | 5.3(1977) | 5.1(1977) |
| 550.0 MW (NET) | COST ELEMENTS | B,C,E,P,R,T, U | C,E,J,S,U,W | C,E,J,S,U,W |

****** INDICATES COST FIGURES NOT YET AVAILABLE

SECTION A-2
COSTS FOR NON-OPERATIONAL FGD SYSTEMS

| UNIT DESCRIPTION | COST DESCRIPTION | COST REPORTED | COST ADJUSTED | COST STANDARDIZED ADJUSTED |
|---|---|---|---|---|
| ALABAMA ELECTRIC COOP<br>TOMBIGBEE<br>2<br>179.0 MW (NET) | CAPACITY FACTOR, %<br>TOTAL CAPITAL, $/KW(YEAR)<br>TOTAL ANNUAL, MILLS/KWH(YEAR)<br>COST ELEMENTS | ***<br>69.5(1978)<br>******( 0)<br>C,E,J | 65<br>******( 0)<br>******( 0) | 65<br>******( 0)<br>******( 0) |
| ARIZONA ELECTRIC POWER COOP<br>APACHE<br>2<br>195.0 MW (NET) | CAPACITY FACTOR, %<br>TOTAL CAPITAL, $/KW(YEAR)<br>TOTAL ANNUAL, MILLS/KWH(YEAR)<br>COST ELEMENTS | 44<br>31.8(7700)<br>2.1(1978)<br>C,E,H,J,L,S,<br>U,W,Y,Z | 65<br>******( 0)<br>******( 0) | 65<br>******( 0)<br>******( 0) |
| BASIN ELECTRIC POWER COOP<br>LARAMIE RIVER<br>1<br>600.0 MW (NET) | CAPACITY FACTOR, %<br>TOTAL CAPITAL, $/KW(YEAR)<br>TOTAL ANNUAL, MILLS/KWH(YEAR)<br>COST ELEMENTS | ***<br>68.2(1980)<br>******( 0)<br>C,E | 65<br>******( 0)<br>******( 0) | 65<br>******( 0)<br>******( 0) |
| BASIN ELECTRIC POWER COOP<br>LARAMIE RIVER<br>2<br>600.0 MW (NET) | CAPACITY FACTOR, %<br>TOTAL CAPITAL, $/KW(YEAR)<br>TOTAL ANNUAL, MILLS/KWH(YEAR)<br>COST ELEMENTS | ***<br>68.2(1980)<br>******( 0)<br>C,E | 65<br>******( 0)<br>******( 0) | 65<br>******( 0)<br>******( 0) |
| BIG RIVERS ELECTRIC<br>GREEN<br>1<br>242.0 MW (NET) | CAPACITY FACTOR, %<br>TOTAL CAPITAL, $/KW(YEAR)<br>TOTAL ANNUAL, MILLS/KWH(YEAR)<br>COST ELEMENTS | ***<br>43.2(1976)<br>******( 0)<br>B,C | 65<br>******( 0)<br>******( 0) | 65<br>******( 0)<br>******( 0) |
| BOSTON EDISON<br>MYSTIC<br>6<br>.0 MW (NET) | CAPACITY FACTOR, %<br>TOTAL CAPITAL, $/KW(YEAR)<br>TOTAL ANNUAL, MILLS/KWH(YEAR)<br>COST ELEMENTS | ***<br>63.4(1972)<br>3.0(1974)<br>B,C,E,N,Q | 65<br>******( 0)<br>******( 0) | 65<br>******( 0)<br>******( 0) |
| CENTRAL ILLINOIS PUBLIC SERV<br>NEWTON<br>617.0 MW (NET) | CAPACITY FACTOR, %<br>TOTAL CAPITAL, $/KW(YEAR)<br>TOTAL ANNUAL, MILLS/KWH(YEAR)<br>COST ELEMENTS | ***<br>189.0(1979)<br>******( 0)<br>C,E,G | 65<br>******( 0)<br>******( 0) | 65<br>******( 0)<br>******( 0) |
| COLORADO UTE ELECTRIC ASSN.<br>CRAIG<br>1<br>447.0 MW (NET) | CAPACITY FACTOR, %<br>TOTAL CAPITAL, $/KW(YEAR)<br>TOTAL ANNUAL, MILLS/KWH(YEAR)<br>COST ELEMENTS | ***<br>117.0(1979)<br>******( 0)<br>B,D,E | 65<br>******( 0)<br>******( 0) | 65<br>******( 0)<br>******( 0) |
| COLORADO UTE ELECTRIC ASSN.<br>CRAIG<br>2<br>447.0 MW (NET) | CAPACITY FACTOR, %<br>TOTAL CAPITAL, $/KW(YEAR)<br>TOTAL ANNUAL, MILLS/KWH(YEAR)<br>COST ELEMENTS | ***<br>117.0(1979)<br>******( 0)<br>A,C | 65<br>******( 0)<br>******( 0) | 65<br>******( 0)<br>******( 0) |
| COMMONWEALTH EDISON<br>POWERTON<br>51<br>450.0 MW (NET) | CAPACITY FACTOR, %<br>TOTAL CAPITAL, $/KW(YEAR)<br>TOTAL ANNUAL, MILLS/KWH(YEAR)<br>COST ELEMENTS | ***<br>117.7(1979)<br>******( 0)<br>C,E,H,J | 65<br>******( 0)<br>******( 0) | 65<br>******( 0)<br>******( 0) |

****** INDICATES COST FIGURES NOT YET AVAILABLE

SECTION A-2
COSTS FOR NON-OPERATIONAL FGD SYSTEMS

| UNIT DESCRIPTION | COST DESCRIPTION | COST REPORTED | COST ADJUSTED | COST STANDARDIZED ADJUSTED |
|---|---|---|---|---|
| COMMONWEALTH EDISON | CAPACITY FACTOR, % | 49 | 65 | 65 |
| WILL COUNTY | TOTAL CAPITAL, $/KW(YEAR) | 113.0(1972) | ******( 0) | ******( 0) |
| 1 | TOTAL ANNUAL, MILLS/KWH(YEAR) | 13.1(1975) | ******( 0) | ******( 0) |
| .0 MW (NET) | COST ELEMENTS | B,C,E,G,J,X | | |
| DETROIT EDISON | CAPACITY FACTOR, % | *** | 65 | 65 |
| ST. CLAIR | TOTAL CAPITAL, $/KW(YEAR) | 80.3(1976) | ******( 0) | ******( 0) |
| 6 | TOTAL ANNUAL, MILLS/KWH(YEAR) | 9.6(1976) | ******( 0) | ******( 0) |
| .0 MW (NET) | COST ELEMENTS | B,C,E,J,M,X | | |
| ILLINOIS POWER COMPANY | CAPACITY FACTOR, % | *** | 65 | 65 |
| WOOD RIVER | TOTAL CAPITAL, $/KW(YEAR) | 82.5(1972) | ******( 0) | ******( 0) |
| 4 | TOTAL ANNUAL, MILLS/KWH(YEAR) | ******( 0) | ******( 0) | ******( 0) |
| .0 MW (NET) | COST ELEMENTS | A,C,E,M,N | | |
| PACIFIC POWER & LIGHT | CAPACITY FACTOR, % | *** | 65 | 65 |
| JIM BRIDGER | TOTAL CAPITAL, $/KW(YEAR) | 120.0(1979) | ******( 0) | ******( 0) |
| 4 | TOTAL ANNUAL, MILLS/KWH(YEAR) | ******( 0) | ******( 0) | ******( 0) |
| 550.0 MW (NET) | COST ELEMENTS | C,E,J | | |
| POTOMAC ELECTRIC POWER | CAPACITY FACTOR, % | *** | 65 | 65 |
| DICKERSON | TOTAL CAPITAL, $/KW(YEAR) | 68.0(1978) | ******( 0) | ******( 0) |
| 3 | TOTAL ANNUAL, MILLS/KWH(YEAR) | ******( 0) | ******( 0) | ******( 0) |
| .0 MW (NET) | COST ELEMENTS | A,C,E,M | | |
| PUBLIC SERVICE OF COLORADO | CAPACITY FACTOR, % | *** | 65 | 65 |
| VALMONT | TOTAL CAPITAL, $/KW(YEAR) | 87.0(1974) | ******( 0) | ******( 0) |
| 5 | TOTAL ANNUAL, MILLS/KWH(YEAR) | ******( 0) | ******( 0) | ******( 0) |
| .0 MW (NET) | COST ELEMENTS | B,C,E,J | | |
| SALT RIVER PROJECT | CAPACITY FACTOR, % | *** | 65 | 65 |
| CORONADO | TOTAL CAPITAL, $/KW(YEAR) | 98.0(1978) | ******( 0) | ******( 0) |
| 2 | TOTAL ANNUAL, MILLS/KWH(YEAR) | ******( 0) | ******( 0) | ******( 0) |
| 280.0 MW (NET) | COST ELEMENTS | C,E | | |
| SOUTHERN MISSISSIPPI ELECTRIC | CAPACITY FACTOR, % | *** | 65 | 65 |
| R.D. MORROW | TOTAL CAPITAL, $/KW(YEAR) | 232.5(1978) | ******( 0) | ******( 0) |
| 2 | TOTAL ANNUAL, MILLS/KWH(YEAR) | ******( 0) | ******( 0) | ******( 0) |
| 124.0 MW (NET) | COST ELEMENTS | D | | |

****** INDICATES COST FIGURES NOT YET AVAILABLE

# APPENDIX B

## FGD PROCESS FLOW DIAGRAMS

THIS APPENDIX COMPRISES OPERATING FGD SYSTEMS

ARRANGED ALPHABETICALLY ACCORDING TO UTILITY

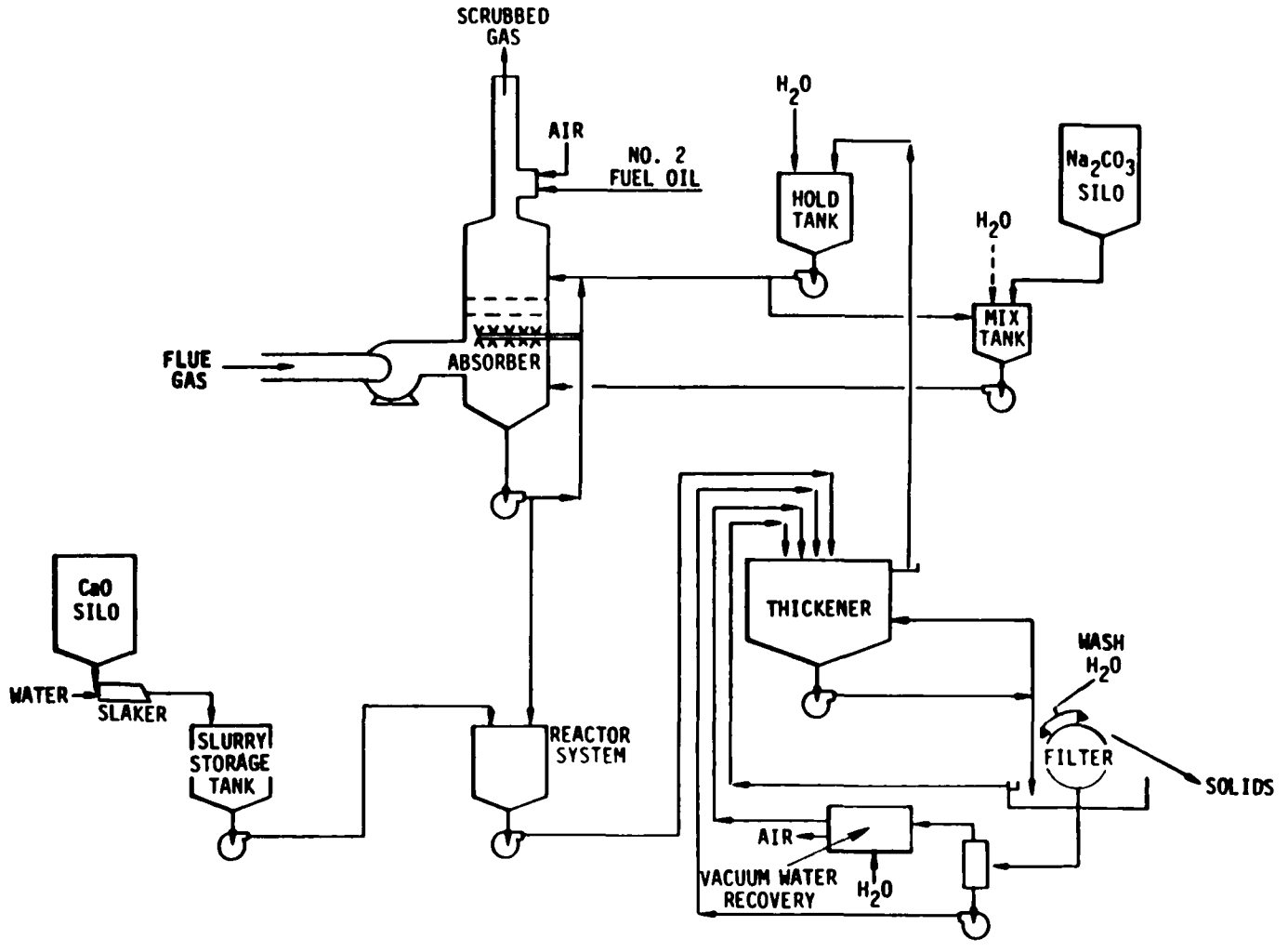


Louisville Gas and Electric, Cane Run 6
Dual Alkali FGD System: Simplified Process Flow Diagram

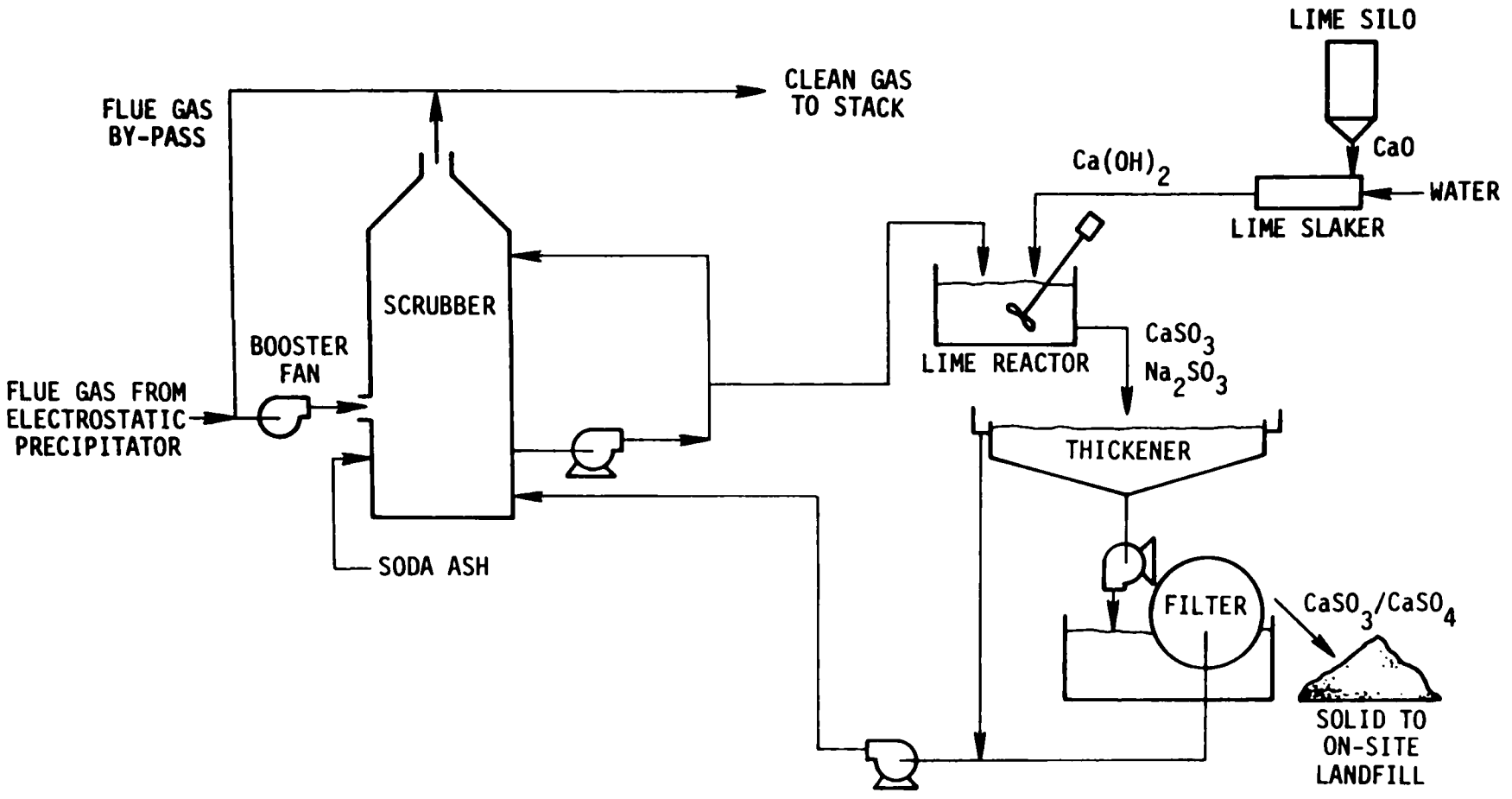


Southern Mississippi Electric, A.B. Brown 1
Dual Alkali FGD System: Simplified Process Flow Diagram

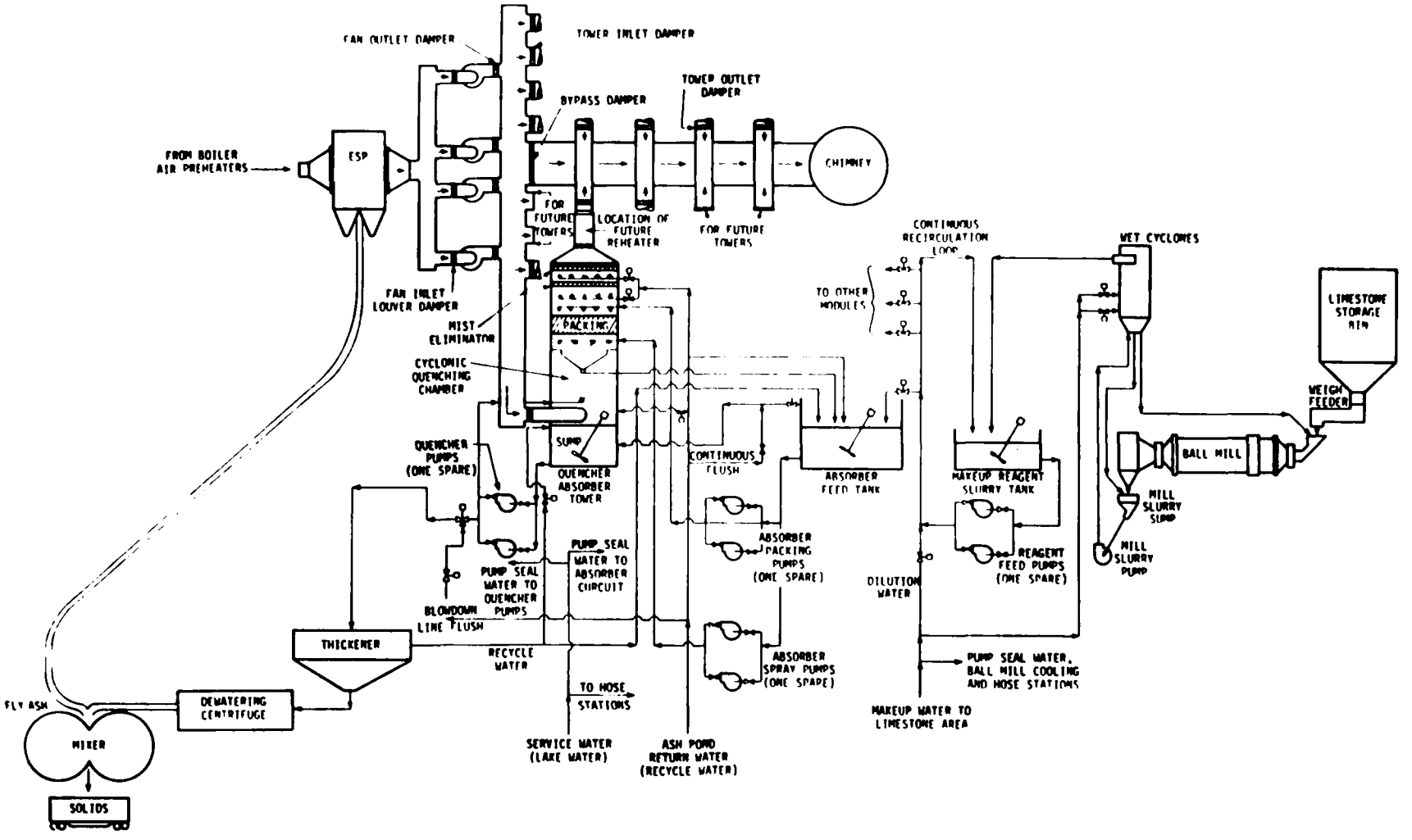


Texas Utilities,
Simplified Process Flow Diagram for One of the Three Identical
Martin Lake FGD Systems

# APPENDIX C

# DEFINITIONS

## DEFINITIONS

| | |
|---|---|
| Boiler Capacity Factor: | (kWh generation in year)/maximum continuous generating capacity in kW x 8760 hr/yr). |
| Boiler Utilization Parameters: | Hours boiler operated/hours in period, expressed as a percentage. |
| Byproduct | The nature (e.g. elemental sulfur, sulfuric acid) and disposition (e.g. stockpile on site, marketed) of the end product produced by systems that generate a saleable product. |
| Disposal | Disposal method for throwaway product systems producing sludge including: stabilized or unstabilized sludge, interim and final disposal sites and disposal type (minefill, landfill, etc.) as well as disposal location. |
| Efficiency: | |
| Particulate Matter | The actual percentage of particulate matter removed by the emission control system (mechanical collectors, ESP, or fabric filter and FGD) from the untreated flue gas. |
| $SO_2$ | The actual percentage of $SO_2$ removed from the flue gas by the FGD system. Design removal efficiency values are presented for nonoperational systems for which actual removal data are not available. |
| FGD Viability Indexes | Several parameters have been developed to quantify the viability of FGD system technology. Various terms such as "availability," "reliability," "operability," and "utilization" are used to accurately |

represent the operation of any FGD system during a given period. The above-mentioned parameters are defined below and discussed briefly. The objectives of this discussion are to make the reader aware that several different definitions are being used and to select appropriate parameters that can be used for reporting purposes so that reasonably consistent comparisons can be made.

| | |
|---|---|
| Availability Index | Hours the FGD system is available for operation (whether operated or not) divided by hours in period, expressed as a percentage. This parameter tends to overestimate the viability of the FGD system because it does not penalize for election not to operate the system when it could have been operated. Boiler downtime may tend to increase the magnitude of the parameter because FGD failures generally cannot occur during such periods. |
| Reliability Index | Hours the FGD system was operated divided by the hours the FGD system was called upon to operate, expressed as a percentage. This parameter has been developed in order not to penalize the FGD system for elected outages, e.g., periods when the FGD system could have been run but was not run because of chemical shortages, lack of manpower, short duration boiler operations, etc. The main problem in using this formula is the concise determination whether or not the system was "called upon to operate" during a given time period. In addition, an undefined value can |

| | |
|---|---|
| | result when the FGD system is not called upon to operate for a given period (e.g., turbine or boiler outage when FGD system is available). |
| FGD Operability Index | Hours the FGD system was operated divided by boiler operating hours in period, expressed as a percentage. This parameter indicates the degree to which the FGD system is actually used, relative to boiler operating time. The parameter is penalized when options are exercised not to use the FGD system in periods when the system is operable. In addition, an undefined value can result when the FGD system is not called upon to operate for a given period (e.g., turbine or boiler outage when FGD system is available). |
| FGD Utilization Index | Hours that the FGD system operated divided by total hours in period. This parameter is a relative stress factor for the FGD system. It is not a complete measure of FGD system viability because the parameter can be strongly influenced by conditions that are external to the FGD system (e.g., infrequent boiler operation will lower the value of the parameter although the FGD system may be highly dependable in its particular application). |
| End Product | |
| Saleable | The $SO_2$ removed from the flue gas is recovered in a usable or marketable form (e.g., sulfur, sulfuric acid, gypsum, ammonium sulfate, sodium sulfate). |

| | |
|---|---|
| Throwaway | The $SO_2$ removed from the flue gas is not recovered in a usable or marketable form and resulting sulfur-bearing waste products must be disposed in an environmentally acceptable fashion. |
| Energy Consumption, % | The percentage of gross unit electrical generating capacity consumed by the FGD system, as defined by the following equation:<br><br>[Net MW w/o FGD - Net MW w/FGD]/ Gross unit rating] |
| Equivalent Scrubbed Capacity (ESC) | The effective scrubbed flue gas in equivalent MW based on the percent of flue gas scrubbed by the FGD system. |
| FGD Status: | |
| Category 1 | Operational - FGD system is in service removing $SO_2$. |
| Category 2 | Under Construction - ground has been broken for installation of FGD system, but FGD system has not become operational. |
| Category 3 | Planned, Contract Awarded - contract has been signed for purchase of FGD system but ground has not been broken for installation. |
| Category 4 | Planned, Letter of Intent Signed - letter of intent has been signed, but legal contract for purchase has not been awarded. |
| Category 5 | Planned, Requesting/Evaluating Bids - bid requests have been released but no letter of intent or contract has been issued. |
| Category 6 | Considering only FGD Systems - an FGD system is proposed as a means to meet an $SO_2$ regulation. |

| | |
|---|---|
| Category 7 | Considering an FGD system as well as alternative methods. |
| Category 8 | Nonoperational - FGD system has been operated in the past but has been shut down permanently or for an extended indefinite period of time. |
| FGD Vendor | A firm that fabricates and supplies flue gas desulfurization systems. |
| Fuel Characteristics | Type of fuel, average gross heating value in Btu/lb. average percent ash and average percent sulfur content for fuel as fired. |
| General Process Type | The manner in which the $SO_2$ from the flue gas is collected, e.g. wet scrubbing, spray drying, dry adsorption. |
| New | FGD unit and boiler were designed at the same time or space for addition of an FGD unit was reserved when boiler was constructed. |
| Process Additives | A chemical compound or element which is added to the process or normally found with the main process reagent in small quantities (e.g. Mg, adipic acid) to promote improved process operation (e.g. scale reduction, increased $SO_2$ removal efficiency). |
| Process Type | Company name if process is patented. Generic name if several companies have similar processes (e.g., Lime, Limestone, Wellman Lord, Thoroughbred 121). |

| | |
|---|---|
| **Regulatory Class** | A. New boiler constructed subject to Federal New Source Performance Standards (NSPS), 8/17/71.<br><br>B. Existing boiler subject to State Standard that is more stringent than the NSPS, 8/17/71.<br><br>C. Existing boiler subject to State Standard that is equal to or less stringent than NSPS, 8/17/71.<br><br>D. Other (unknown, undetermined). |
| **Retrofit** | FGD unit will be/was added to an existing boiler not specifically designed to accommodate FGD unit. |
| **Start-up Date** | Date when initial $SO_2$ removal began or is scheduled to begin. |
| **Total Controlled Capacity [TCC]** | The gross rating (MW) of a unit brought into compliance with FGD, regardless of the percent of flue gas treated at the facility. In the case of prototype and demonstration FGD systems, this figure will be identical to the Equivalent Scrubbed Capacity rather than the gross unit rating if the system is not meant to bring the facility into compliance with $SO_2$ emission standards. |
| **Total FGD System Lost Generation Factor** | The total monthly lost generation hours due to FGD train outages divided by the total monthly expected generation if the FGD trains would have been available for operation, expressed as a percentage. |
| **Unit Location** | City and State listed in mailing address. |

| | |
|---|---|
| Unit Name | Unit identification as it appears in Electrical World - Directory of Electrical Utilities, McGraw-Hill - Current Edition - or as indicated by utility representative for installations in planning stages. |
| Unit Rating | |
| Gross | Operational - Maximum continuous gross generation capacity in MW; Preoperational - maximum continuous design generation capacity in MW. |
| Net w/FGD | Gross unit rating less the energy required to operate ancillary station equipment, inclusive of emission control systems. |
| Net w/o FGD | Gross unit rating less the energy required to operate ancillary station equipment, exclusive of emission control systems. |
| Utility Name | Name of corporation as it appears in Electrical World - Directory of Electrical Utilities, McGraw-Hill - Current Edition - as space permits. |
| Water Make-Up | Gallons per minute of make-up water required per MW of capacity. |

# APPENDIX D

# TABLE OF UNIT NOTATION

# TABLE OF UNIT NOTATION

| Classification | English Unit | Symbol | Survey Report Notation | ASTM/SI Unit | Symbol | Survey Report Notation |
|---|---|---|---|---|---|---|
| Area | Acre | acre | ACRE | Square meter | $M^2$ | SQ.M |
| | Square foot | $ft^2$ | SQ.FT | Square meter | $M^2$ | SQ.M |
| Concentration | Grains per standard cubic foot | gr/scf | GR/SCF | Grams per cubic meter | $g/m^3$ | G/CU.M |
| | Parts per million | ppm | PPM | Parts per million | ppm | PPM |
| | Pounds per million Btu | $lb/10^6$ Btu | LB/MMBTU | Nanograms per joule | ng/J | NG/J |
| Flow | Actual cubic feet per minute | $ft^3$/min (actual) | ACFM | Cubic meters per second | $m^3/s$ | CU.M/S |
| | Gallons per minute | gal/min | GPM | Liters per second | liter/s | LITER/S |
| | Pounds per minute | lb/min | LB/MIN | Kilogram per second | kg/s | KG/S |
| | Ton per day | t/day | TPD | Metric ton per day | M t/d | M T/D |
| | Ton per hour | t/h | TPH | Metric ton per hour | M t/h | M T/H |
| Heat Content | Btu per pound | Btu/lb | BTU/LB | Kilojoule per kilogram | kJ/kg | KJ/KG |
| Length | Foot | ft | FT | Meter | m | M |
| | Inch | in | IN | Centimeter | cm | CM |
| | Mile | mi | MI | Kilometer | km | KM |
| L/G Ratio | Gallons per thousand actual cubic feet | gal/1000 $ft^3$ (actual) | GAL/1000ACF | Liters per cubic meter | $liter/m^3$ | LITER/CU.M |
| Mass/Weight | Pound | lb | LB | Kilogram | kg | KG |
| | Ton | t | T | Megagram | Mg | MG |
| Pressure | Inches of water | in. $H_2O$ | IN. $H_2O$ | Kilopascal | kPa | KPA |
| Temperature | Degree Fahrenheit | °F | F | Degree Celsius | °C | C |
| Volume | Cubic feet | $ft^3$ | CU.F | Cubic meter | $m^3$ | CU.M |
| | Acre-feet | Acre-ft | ACRE-FT | Cubic meter | $m^3$ | CU.M |

## TECHNICAL REPORT DATA
*(Please read Instructions on the reverse before completing)*

| | | |
|---|---|---|
| 1. REPORT NO. EPA-600/7-79-022d | 2. | 3. RECIPIENT'S ACCESSION NO. |
| 4. TITLE AND SUBTITLE EPA Utility FGD Survey: February-March 1979 | | 5. REPORT DATE July 1979 |
| | | 6. PERFORMING ORGANIZATION CODE |
| 7. AUTHOR(S) M. Smith, M. Melia, and T. Koger | | 8. PERFORMING ORGANIZATION REPORT NO. PN 3470-1-C |
| 9. PERFORMING ORGANIZATION NAME AND ADDRESS PEDCo Environmental, Inc. 11499 Chester Road Cincinnati, Ohio 45246 | | 10. PROGRAM ELEMENT NO. EHE624 |
| | | 11. CONTRACT/GRANT NO. 68-02-2603, Task 48 |
| 12. SPONSORING AGENCY NAME AND ADDRESS EPA, Office of Research and Development Industrial Environmental Research Laboratory Research Triangle Park, NC 27711 | | 13. TYPE OF REPORT AND PERIOD COVERED Periodic; 2-3/79 |
| | | 14. SPONSORING AGENCY CODE EPA/600/13 |

15. SUPPLEMENTARY NOTES EPA project officers are N. Kaplan (IERL-RTP, MD-61, 919/541-2556) and J. C. Herlihy (DSSE, 202/755-9137). EPA-600/7-78-051a thru -d and EPA-600/7-79-002a thru -c are previous reports in this series.

16. ABSTRACT The report is the second in a series of four generated by a new computerized data base system. Because the three succeeding issues are supplements, the first should be retained for reference throughout the year. The report differs from the previous series in that the scope of design data for operating FGD systems is vastly expanded, section formats are revised, and a new section includes operating particulate scrubbers. The report surveys utility FGD systems in the U.S. It summarizes information contributed by the utility industry, process suppliers, regulatory agencies, and consulting engineering firms. Systems are tabulated alphabetically by development status (operating, under construction, or in planning stages), utility company, process supplier, process, waste disposal practice, and regulatory class. It presents data on system design, fuel sulfur content, operating history, and actual performance. It includes unit by unit dependability parameters and discusses problems and solutions associated with the boilers and FGD systems. Process flow diagrams and FGD system economic data are appended. Current data shows 51 units operating FGD systems, 42 systems under construction, and 69 planned units with gross generating capacities of approximately 19,170, 17,377, and 40,115, respectively. Total controlled capacity for 1988 is expected to be 76,000-plus MW.

17. KEY WORDS AND DOCUMENT ANALYSIS

| a. DESCRIPTORS | b. IDENTIFIERS/OPEN ENDED TERMS | c. COSATI Field/Group |
|---|---|---|
| Pollution | Pollution Control | 13B |
| Maintenance | Stationary Sources | 21B |
| Flue Gases | Utility Boilers | 07A, 07D |
| Desulfurization | | |
| Electric Utilities | | 15E |
| Waste Disposal | | 13A. |
| Boilers | | |

| | | |
|---|---|---|
| 18. DISTRIBUTION STATEMENT Release to Public | 19. SECURITY CLASS (This Report) Unclassified | 21. NO. OF PAGES 185 |
| | 20. SECURITY CLASS (This page) Unclassified | 22. PRICE |

EPA Form 2220-1 (9-73)



☆U.S. GOVERNMENT PRINTING OFFICE: 1979-640-013/3910 REGION NO. 4