EPA

U.S. Environmental Protection Agency
Office of Research and Development

Industrial Environmental Research Laboratory
Cincinnati, Ohio 45268

EPA-600/7-76-034i
December 1976

ENVIRONMENTAL CONSIDERATIONS OF SELECTED ENERGY CONSERVING MANUFACTURING PROCESS OPTIONS: Vol. IX. Textile Industry Report

Interagency
Energy-Environment
Research and Development
Program Report

RESEARCH REPORTING SERIES

Research reports of the Office of Research and Development, U.S. Environmental Protection Agency, have been grouped into seven series. These seven broad categories were established to facilitate further development and application of environmental technology. Elimination of traditional grouping was consciously planned to foster technology transfer and a maximum interface in related fields. The seven series are:

1. Environmental Health Effects Research
2. Environmental Protection Technology
3. Ecological Research
4. Environmental Monitoring
5. Socioeconomic Environmental Studies
6. Scientific and Technical Assessment Reports (STAR)
7. Interagency Energy-Environment Research and Development

This report has been assigned to the INTERAGENCY ENERGY-ENVIRONMENT RESEARCH AND DEVELOPMENT series. Reports in this series result from the effort funded under the 17-agency Federal Energy/Environment Research and Development Program. These studies relate to EPA's mission to protect the public health and welfare from adverse effects of pollutants associated with energy systems. The goal of the Program is to assure the rapid development of domestic energy supplies in an environmentally--compatible manner by providing the necessary environmental data and control technology. Investigations include analyses of the transport of energy-related pollutants and their health and ecological effects; assessments of, and development of, control technologies for energy systems; and integrated assessments of a wide range of energy-related environmental issues.

This document is available to the public through the National Technical Information Service, Springfield, Virginia 22161.

EPA-600/7-76-034i
December 1976

ENVIRONMENTAL CONSIDERATIONS OF SELECTED ENERGY CONSERVING MANUFACTURING PROCESS OPTIONS

VOLUME IX

TEXTILE INDUSTRY REPORT

EPA Contract No. 68-03-2198

Project Officer

Herbert S. Skovronek
Industrial Pollution Control Division
Industrial Environmental Research Laboratory - Cincinnati
Edison, New Jersey 08817

INDUSTRIAL ENVIRONMENTAL RESEARCH LABORATORY
OFFICE OF RESEARCH AND DEVELOPMENT
U.S. ENVIRONMENTAL PROTECTION AGENCY
CINCINNATI, OHIO 45268

For sale by the Superintendent of Documents, U.S. Government Printing Office, Washington, D.C. 20402

DISCLAIMER

This report has been reviewed by the Industrial Environmental Research Laboratory, U.S. Environmental Protection Agency, and approved for publication. Approval does not signify that the contents necessarily reflect the views and policies of the U.S. Environmental Protection Agency, nor does mention of trade names or commercial products constitute endorsement or recommendation for use.

FOREWORD

When energy and material resources are extracted, processed, converted, and used, the related pollutional impacts on our environment and even on our health often require that new and increasingly more efficient pollution control methods be used. The Industrial Environmental Research Laboratory - Cincinnati (IERL-Ci) assists in developing and demonstrating new and improved methodologies that will meet these needs both efficiently and economically.

This study, consisting of 15 reports, identifies promising industrial processes and practices in 13 energy-intensive industries which, if implemented over the coming 10 to 15 years, could result in more effective utilization of energy resources. The study was carried out to assess the potential environmental/energy impacts of such changes and the adequacy of existing control technology in order to identify potential conflicts with environmental regulations and to alert the Agency to areas where its activities and policies could influence the future choice of alternatives. The results will be used by the EPA's Office of Research and Development to define those areas where existing pollution control technology suffices, where current and anticipated programs adequately address the areas identified by the contractor, and where selected program reorientation seems necessary. Specific data will also be of considerable value to individual researchers as industry background and in decision-making concerning project selection and direction. The Power Technology and Conservation Branch of the Energy Systems-Environmental Control Division should be contacted for additional information on the program.

David G. Stephan
Director
Industrial Environmental Research Laboratory
Cincinnati

EXECUTIVE SUMMARY

The textile industry is extremely diversified with many plants, different types of raw materials, and many end products. Processing operations also reflect the diversity.

In 1971, total energy use was about 0.54 quads (0.54×10^{15} Btu) equivalent, according to the Census of Manufactures, with 66% of the total consumed by four SIC segments, namely: weaving mills-cotton (SIC 221), and synthetic (SIC 222), knitting mills (SIC 225), and textile finishing (SIC 226). About 60% of the total energy used is consumed in wet operations, such as fabric preparation, dyeing, and finishing. A major fraction is spent in heating and evaporation of water, so water conservation (or elimination of water use) represents a crucial part of the analysis. Natural gas is used for many drying and heat-setting operations. Although natural gas use is necessary with present equipment, significant economies can be achieved.

To cover the points just listed, we elected to study the following models as energy conserving process options:

- Integrated knit fabric mill using advanced processing,*
- Integrated knit fabric mill using solvent processing, and
- Integrated woven fabric mill using advanced processing.

Thus, the models cover weaving or knitting, combined with finishing operations.

Advanced processing of knit fabrics results in a 50% reduction in energy use from the base case and we conclude that advanced processing offers lower energy costs and lower pollution control costs for a somewhat higher capital investment. Therefore, adoption of advanced processing might be expected for replacement capacity and for capacity expansion.

All-solvent processing of knit fabrics offers an energy saving of 70% from the base case in our hypothetical example. Unfortunately, solvent processing (for knit fabrics) has not yet been developed technically to the

*Advanced Processing is based on minimizing water use.

point where it could be applied widely, although specialized applications do exist (e.g., solvent scouring). Potential solvent losses may present economic and environmental problems and require further study.

Advanced processing of woven fabrics results in a 57% reduction in energy consumption, lower energy costs, and lower pollution control costs. One unit operation, recovery of polyvinyl alcohol (PVA) size looks quite attractive economically, and accounts for much of the reduced effluent load. Wider application of PVA recovery systems needs to be demonstrated.

The average plant in the textile industry can still achieve energy savings by efficient operation, water conservation and waste heat recovery with a minimum captial investment. Beyond that point, further substantial reductions are possible, as indicated by the models developed in this study, with appropriate capital investment. The benefits of advanced processing of knits and woven fabrics are sufficient to suggest that it will be adopted in some form for much of capacity replacement or expansion. The models developed should be applicable (with some modification) to other important segments of the textile industry; e.g., carpets and yarn dyeing.

Advanced processing for knit and woven fabrics reduces pollution problems primarily from a reduction in water use (hence, reducing the hydraulic load on the biological waste treatment plant). Thus, energy conservation and effluent reduction are complementary.

All-solvent processing practically eliminates water pollution problems, but the loss of solvent (typically chlorinated solvent) is a potential occupational health and environmental problem. The energy savings from this route may not be as attractive as the model suggests, if substantial additional energy is required to adequately control air pollution.

This report was submitted in partial fulfillment of contract 68-03-2198 by Arthur D. Little, Inc. under sponsorship of the U.S. Environmental Protection Agency. This report covers a period from June 9, 1975 to January 30, 1976.

TABLE OF CONTENTS

	Page
FOREWORD	iii
EXECUTIVE SUMMARY	iv
List of Figures	ix
List of Tables	x
Acknowledgments	xii
Conversion Table	xiv
I. INTRODUCTION	1
A. BACKGROUND	1
B. CRITERIA FOR INDUSTRY SELECTION	1
C. CRITERIA FOR PROCESS SELECTION	2
D. METHOD OF ANALYSIS	5
II. FINDINGS, CONCLUSIONS AND RECOMMENDATIONS	8
A. INTEGRATED KNIT FABRIC MILL	8
B. INTEGRATED WOVEN FABRIC MILL	10
III. INDUSTRY OVERVIEW	13
A. INDUSTRY STRUCTURE	13
B. ECONOMIC OUTLOOK	17
1. Historical Trends and Projected Growth	17
2. Total Fiber Demand and Shipments	19
3. Financial Profile	19
4. Energy Costs	24
IV. COMPARISON OF CURRENT AND ALTERNATIVE PROCESSES	25
A. BASIS FOR PROCESS SELECTION	25
1. Total Energy Use	25
2. Integrated Knit Fabric Mill	25
3. Integrated Woven Fabric Mill	27
4. Selection of Advanced Unit Operations	27
5. Advanced Processing	28
B. COMPARISON OF CURRENT AND ALTERNATIVE PROCESSES	33
1. Integrated Knit Fabric Mill	33
2. Integrated Woven Fabric Mill	44

TABLE OF CONTENTS (Cont.)

	Page
V. IMPLICATIONS OF POTENTIAL PROCESS CHANGES	56
A. INTEGRATED KNIT FABRIC MILL	56
B. INTEGRATED WOVEN FABRIC MILL	57
APPENDIX A - CURRENT POLLUTION PROBLEMS AND EFFECTIVENESS OF AVAILABLE POLLUTION CONTROL TECHNOLOGY	60
APPENDIX B - GLOSSARY	71

LIST OF FIGURES

Number		Page
III-1	U.S. Fiber Consumption - 1960-1974 with Projections to 1980	18
III-2	Fiber Consumption by Type and Product Category, 1974 and 1980	21
IV-1	Flow Diagram: Integrated Knit Fabric Mill - Base Case	34
IV-2	Flow Diagram: Integrated Knit Fabric Mill - Advanced Case	36
IV-3	Flow Diagram: Integrated Knit Fabric Mill - Solvent Case	38
IV-4	Flow Diagram: Integrated Woven Fabric Mill - Base Case	46
IV-5	Flow Diagram: Integrated Woven Fabric Mill - Base Case	47
IV-6	Flow Diagram: Integrated Woven Fabric Mill - Advanced Case	50
IV-7	Flow Diagram: Integrated Woven Fabric Mill - Advanced Case	51
A-1	Schematic Flow Diagram: Process Steps and Cost Centers for Level 1 Treatment	66
A-2	Schematic Flow Diagram: Process Steps and Cost Centers for Level II Treatment	67

LIST OF TABLES

Number		Page
I-1	Summary of 1971 Energy Purchased in Selected Industry Sectors	3
II-1	Summary of Process Options in the Textile Industry	9
II-2	Integrated Knit Fabric Mill	9
II-3	Summary of Process Options in the Textile Industry	11
II-4	Integrated Woven Fabric Mill	11
III-1	Number of Establishments and Number of Employees	14
III-2	Categorization Schemes for the Textile Industry	16
III-3	1974-1980 Fiber Consumption by Type, Mill Demand, and Shipments	20
III-4	Textile Mill Products Trends, 1967-74	22
III-5	Broadwoven Fabrics, 1974 Profile	22
III-6	Knit Fabrics Mills, 1974 Profile	23
IV-1	Fuel and Electric Energy Use in the Textile Industry, 1971	26
IV-2	Energy Use in an Integrated Knit Fabric Mill	26
IV-3	Energy Use in an Integrated Woven Fabric Mill	28
IV-4	Summary of Energy Consumption: Knit Fabric Mill	40
IV-5	Capital and Operating Costs Integrated Knit Fabric Mill - Base Case	42
IV-6	Capital and Operating Costs Integrated Knit Fabric Mill - Advanced Case	43
IV-7	Water Pollution Control Costs for Integrated Knit Fabric Mill	44
IV-8	Capital and Operating Costs/Integrated Knit Fabric Mill - Solvent Case	45

LIST OF TABLES (Cont.)

Number		Page
IV-9	Summary of Energy Consumption/Woven Fabric Mill	52
IV-10	Capital and Operating Costs/Integrated Woven Fabric Mill - Base Case	53
IV-11	Capital and Operating Costs/Integrated Woven Fabric Mill - Advanced Case	54
IV-12	Water Pollution Control Costs for Integrated Woven Fabric Mill	55
A-1	Effluent Limitations Requirements - Woven Fabric Finishing	65
A-2	Effluent Limitations Requirements - Knit Fabric Finishing	65
A-3	Pollution Control Costs - Woven Fabric Mill	68
A-4	Pollution Control Costs - Knit Fabric Mill	69

ACKNOWLEDGMENTS

This study could not have been accomplished without the support of a great number of people in government agencies, industry, trade associations and universities. Although it would be impossible to mention each individual by name, we would like to take this opportunity to acknowledge the particular support of a few such people.

Dr. Herbert S. Skovronek, Project Officer, was a valuable resource to us throughout the study. He not only supplied us with information on work presently being done in other branches of EPA and other government agencies, but served as an indefatigable guide and critic as the study progressed. His advisors within EPA, FEA, DOC, and NBS also provided us with insights and perspectives valuable for the shaping of the study.

During the course of the study we also had occasion to contact many individuals within industry and trade associations. Where appropriate we have made reference to these contacts within the various reports. Frequently, however, because of the study's emphasis on future developments with comparative assessments of new technology, information given to us was of a confidential nature or was supplied to us with the understanding that it was not to be credited. Therefore, we extend a general thanks to all those whose comments were valuable to us for their interest in and contribution to this study.

Finally, because of the broad range of industries covered in this study, we are indebted to many people within Arthur D. Little, Inc. for their participation. Responsible for the guidance and completion of the overall study were Mr. Henry E. Haley, Project Manager; Dr. Charles L. Kusik, Technical Director; Mr. James I. Stevens, Environmental Coordinator; and Ms. Anne B. Littlefield, Administrative Coordinator.

Members of the environmental team were Dr. Indrakumar L. Jashnani, Mr. Edmund H. Dohnert and Dr. Richard Stephens (consultant).

Within the individual industry studies we would like to acknowledge the contributions of the following people.

Iron and Steel: Dr. Michel R. Mounier, Principal Investigator
Dr. Krishna Parameswaran

Petroleum Refining: Mr. R. Peter Stickles, Principal Investigator
Mr. Edward Interess
Mr. Stephen A. Reber
Dr. James Kittrell (consultant)
Dr. Leigh Short (consultant)

Pulp and Paper:	Mr. Fred D. Iannazzi, Principal Investigator Mr. Donald B. Sparrow Mr. Edward Myskowski (consultant) Mr. Karl P. Fagans Mr. G. E. Wong
Olefins:	Mr. Stanley E. Dale, Principal Investigator Mr. R. Peter Stickles Mr. J. Kevin O'Neill Mr. George B. Hegeman
Ammonia:	Mr. John L. Sherff, Principal Investigator Ms. Nancy J. Cunningham Mr. Harry W. Lambe
Aluminum:	Mr. Richard W. Hyde, Principal Investigator Ms. Anne B. Littlefield Dr. Charles L. Kusik Mr. Edward L. Pepper Mr. Edwin L. Field Mr. John W. Rafferty
Textiles:	Dr. Douglas Shooter, Principal Investigator Mr. Robert M. Green (consultant) Mr. Edward S. Shanley Dr. John Willard (consultant) Dr. Richard F. Heitmiller
Cement:	Dr. Paul A. Huska, Principal Investigator Ms. Anne B. Littlefield Mr. J. Kevin O'Neill
Glass:	Dr. D. William Lee, Principal Investigator Mr. Michael Rossetti Mr. R. Peter Stickles Mr. Edward Interess Dr. Ravindra M. Nadkarni
Chlor-Alkali:	Mr. Roger E. Shamel, Principal Investigator Mr. Harry W. Lambe Mr. Richard P. Schneider
Phosphorus/ Phosphoric Acid:	Mr. William V. Keary, Principal Investigator Mr. Harry W. Lambe Mr. George C. Sweeney Dr. Krishna Parameswaran
Primary Copper:	Dr. Ravindra M. Nadkarni, Principal Investigator Dr. Michel R. Mounier Dr. Krishna Parameswaran
Fertilizers:	Mr. John L. Sherff, Principal Investigator Mr. Roger Shamel Dr. Indrakumar L. Jashnani

ENGLISH-METRIC (SI) CONVERSION FACTORS

To Convert From	To	Multiply By
Acre	Metre^2	4,046
Atmosphere (normal)	Pascal	101,325
Barrel (42 gal)	Metre^3	0.1589
British Thermal Unit	Joule	1,055
Centipoise	Pascal-second	0.001
Degree Fahrenheit	Degree Celsius	$t_C^\circ = (t_F^\circ - 32)/1.8$
Degree Rankine	Degree Kelvin	$t_K^\circ = t_R^\circ/1.8$
Foot	Metre	0.3048
Foot^3/minute	Metre^3/sec	0.0004719
Foot^3	Metre^3	0.02831
Foot^2	Metre^2	0.09290
Foot/sec	Metre/sec	0.3048
Foot^2/hr	Metre^2/sec	0.00002580
Gallon (U.S. liquid)	Metre^3	0.003785
Horsepower (550 ft-lbf/sec)	Watt	745.7
Horsepower (electric)	Watt	746.0
Horsepower (metric)	Watt	735.5
Inch	Metre	0.02540
Kilowatt-hour	Joule	3.60×10^6
Litre	Metre^3	1.000×10^{-3}
Micron	Metre	1.000×10^{-6}
Mil	Metre	0.00002540
Mile (U.S. statute)	Metre	1,609
Poise	Pascal-second	0.1000
Pound force (avdp)	Newton	4.448
Pound mass (avdp)	Kilogram	0.4536
Ton (assay)	Kilogram	0.02916
Ton (long)	Kilogram	1,016
Ton (metric)	Kilogram	1,000
Ton (short)	Kilogram	907.1
Tonne	Kilogram	1,000

Source: American National Standards Institute, "Standard Metric Practice Guide," March 15, 1973. (ANS72101-1973) (ASTM Designation E380-72)

I. INTRODUCTION

A. BACKGROUND

Industry in the United States purchases about 27 quads* annually, approximately 40% of total national energy usage.** This energy is used for chemical processing, raising steam, drying, space cooling and heating, process stream heating, and miscellaneous other purposes.

In many industrial sectors energy consumption can be reduced significantly by better "housekeeping" (i.e., shutting off of standby furnaces, better thermostat control, elimination of steam and heat leaks, etc.) and greater emphasis on optimization of energy usage. In addition, however, industry can be expected to introduce new industrial practices or processes either to conserve energy or to take advantage of a more readily available or less costly fuel. Such changes in industrial practices may result in changes in air, water of solid waste discharges. The EPA is interested in identifying the pollution loads of such new energy-conserving industrial practices or processes and in determining where additional research, development, or demonstration is needed to characterize and control the effluent streams.

B. CRITERIA FOR INDUSTRY SELECTION

In the first phase of this study we identified industry sectors that have a potential for change, emphasizing those changes which have an environmental/energy impact.

Industries were eliminated from further consideration within this assignment if the only changes that could be envisioned were:

- energy conservation as a result of better policing or "housekeeping,"
- better waste heat utilization,
- fuel switching in steam raising, or
- power generation.

---

*1 quad = 10^{15} Btu

**Purchased electricity valued at approximate fossil fuel equivalence of 10,500 Btu/kWh.

After discussions with the EPA Project Officer and his advisors, industry sectors were selected for further consideration and ranked using:

- Quantitative criteria based on the gross amount of energy (fossil fuel and electric) purchased by industry sector as found in U.S. Census figures and from information provided from industry sources. The textile industry purchased 0.54 quads out of the 12.14 quads purchased in 1971 by the 13 industries selected for study, or 2% of the 27 quads purchased by all industry (see Table I-1).

- Qualitative criteria relating to probability and potential for process change, and the energy and effluent consequences of such changes.

In order to allow for as broad a coverage of technologies as possible, we then reviewed the ranking, eliminating some industries in which the process changes to be studied were similar to those in another industry planned for study. We believe the final ranking resulting from these considerations identifies those industry sectors which show the greatest possibility of energy conservation via process change. Further details on this selection process can be found in the Industry Priority Report prepared under this contract (Volume II). On the basis of this ranking method, the textile industry appeared in ninth place among the 13 industrial sectors listed. Of the 0.54 quads of energy purchased by the textile industry in 1971, about 48% was for electrical energy and the remaining 52% was supplied by distillate and residual fuel oil, natural gas, propane, and coal. Dyeing and finishing operations consume about 60% of all the energy used in producing textiles, relying heavily on steam for water heating and on propane and natural gas for drying and heat setting. The other processes, such as spinning, weaving, and knitting, consume the remaining energy, primarily in the form of electricity for motor power. Demand for energy in the textile industry is expected to increase in line with population growth and consumer demands.

Much of the energy required is used for heating water for dyeing fiber or fabric and for subsequent washing and drying and heat setting operations. Therefore, process changes which reduce or eliminate water use will have a major positive impact on energy conservation. Major process changes either under development or already in limited use commercially which satisfy these goals are identified in the next section.

C. CRITERIA FOR PROCESS SELECTION

In this study we have focused on identifying changes in the primary production processes which have clearly defined pollution consequences. In selecting those to be included in this study, we have considered the needs and limitations of the EPA as discussed more completely in the Industry Priority Report mentioned above. Specifically, energy conservation has been defined broadly to include, in addition to process changes, conservation of energy or energy form (gas, oil, coal) by a process or feedstock change. Natural gas has been considered as having the highest energy form

TABLE I-1

SUMMARY OF 1971 ENERGY PURCHASED IN SELECTED INDUSTRY SECTORS

	Industry Sector	10^{15} Btu/Yr	SIC Code In Which Industry Found
1.	Blast furnaces and steel mills	3.49[1]	3312
2.	Petroleum refining	2.96[2]	2911
3	Paper and allied products	1.59	26
4.	Olefins	0.984[3]	2818
5	Ammonia	0.63[4]	287
6	Aluminum	0.59	3334
7	Textiles	0.54	22
8.	Cement	0.52	3241
9	Glass	0.31	3211, 3221, 3229
10.	Alkalies and chlorine	0.24	2812
11.	Phosphorus and phosphoric acid production	0.12[5]	2819
12.	Primary copper	0.081	3331
13.	Fertilizers (excluding ammonia)	0.078	287

[1] Estimate for 1967 reported by FEA Project Independence Blueprint, p. 6-2, USGPO, November 1974.

[2] Includes captive consumption of energy from process byproducts (FEA Project Independence Blueprint)

[3] Olefins only, includes energy of feedstocks: ADL estimates

[4] Ammonia feedstock energy included: ADL estimates

[5] ADL estimates

Source: 1972 Census of Manufactures, FEA Project Independence Blueprint, USGPO, November 1974, and ADL estimates.

value followed in descending order by oil, electric power, and coal. Thus, a switch from gas to electric power would be considered energy conservation because electric power could be generated from coal, existing in abundant reserves in the United States in comparison to natural gas. Moreover, pollution control methods resulting in energy conservation have been included within the scope of this study. Finally, emphasis has been placed on process changes with near-term rather than long-term potential within the 15-year span of time of this study.

In addition to excluding from consideration better waste heat utilization, "housekeeping," power generation, and fuel switching, as mentioned above, certain options have been excluded to avoid duplicating work being funded under other contracts and to focus this study more strictly on "process changes." Consequently, the following have also not been considered to be within the scope of work:

- Carbon monoxide boilers (however, unique process vent streams yielding recoverable energy could be mentioned);
- Fuel substitution in fired process heaters;
- Mining and milling, agriculture, and animal husbandry;

- Substituion of scrap (such as reclaimed textile, iron, aluminum, glass, and paper) for virgin materials;

- Production of synthetic fuels from coal (low- and high-Btu gas, synthetic crude, synthetic fuel oil, etc.); and

- All aspects of industry-related transportation (such as transportation of raw material).

A major difficulty arises in identifying suitable process options in the textile industry because of the complexity and diversity of textile processing. Textile mills consist of a series of unit operations linked together in a variety of ways and producing many different end products. It is difficult to find two mills which use exactly the same processing sequence and in fact, most mills vary their processing to meet market demands. Consequently, a variety of natural and synthetic fibers are processed singly and in combination. The type and proportion vary from mill to mill and with season, to meet product requirements.

There are many potential "energy conserving" unit operations being introduced commercially or under development, some with EPA sponsorship. Any given unit operation will not by itself make a substantial impact on the textile industry but a series of such operations assembled in a textile mill can make a substantial impact. However, the number of possible combinations is too large and must somehow be reduced to a manageable number. After discussion with the EPA Project Officer, his advisors, and industry representatives, we have chosen to overcome this problem by defining "model" textile mills which would maximize the use of energy conserving "unit process" options. In addition, water consumption is the most important contributor to energy costs and indirectly to environmental problems. Therefore, "advanced" processing techniques (including dry processing) which reduce water use, or solvent processing techniques are expected to have the greatest impact on energy conservation.

Using these guidelines the following models were defined.

1. Integrated knit fabric mill* using "advanced" processing of 100% polyester fiber.

2. Integrated knit fabric mill using solvent processing of 100% polyester fiber.

3. Integrated woven fabric mill using advanced processing of 50/50 polyester/cotton fiber mixture.

*A glossary of textile terms is included in Appendix B of this report.

The environmental, energy and economic impacts of these "model" technologies can then be compared to "base line" technology which represents the best of present textile industry practice. Knitting and weaving are the two principal processes used in the textile industry. Polyester knit goods and polyester/cotton woven goods represent the most important types of fiber used in these operations. Thus, the models are applicable to major segments of the textile industry but conversely, do not consider directly other important segments of the industry (carpets, yarns), different synthetic and natural fiber use (nylon, acrylics, wool), or the effects of the many different end products.

However, we believe that the principles evolved are applicable to other sections of the textile industry, particularly with respect to "advanced" processing. We have more reservations with respect to solvent processing, which has only found real application to certain process operations for knit goods and further technical development is required before wide-spread application of solvent processing can occur. It was originally intended to study solvent processing of woven fabric, but during the course of the study it became apparent that data was not available to develop a model mill based on solvent processing of polyester/cotton fiber.

D. METHOD OF ANALYSIS

Within each industry, the magnitude of energy use was an important criterion in judging where the most significant energy savings might be realized, since reduction in energy use reduces the amount of pollution generated in the energy production step. Guided by this consideration, candidate options for in-depth analysis were identified from the major energy consuming steps with known or potential environmental problems.

After developing a list of candidate process options, we assessed subjectively

- pollution or environmental consequences of the process change,
- probability or potential for the change, and
- energy conservation consequences of the change.

Even though all of the candidate process options were large energy users, there was wide variation in energy use and estimated pollution loads between options at the top and bottom of the list. A modest process change in a major energy consuming process step could have more dramatic consequences than a more technically significant process change in a process step whose energy consumption is rather modest. For the lesser energy-using process steps process options were selected for in-depth analysis only if a high probability for process change and pollution consequences were perceived.

Because of the time and scope limitations for this study, we have not attempted to prepare a comprehensive list of process options or to consider all economic, technological, institutional, legal or other factors affecting implementation of these changes. Instead we have relied on our own background experience, industry contacts, and the guidance of the Project Officer and EPA advisors to select reasonably promising process options (with an emphasis on near-term potential).

In this study, the textile industry description is based on 1972, the latest representative year for the industry for which we had good statistical information. Recognizing that capital investments and energy costs have escalated rapidly in the past few years and have greatly distorted the traditional basis for making cost comparisons, we developed costs representative of the first half of 1975, using constant 1975 dollars for our comparative analysis of new and current processes.

The procedure adopted for this project was to construct a base case analysis for both a representatively sized integrated mill producing knit fabric and one producing woven fabric in the following manner.

First, we devised an appropriate series of unit operations to produce the textile fabric, and then proceeded to construct the mass and energy balances around each unit operation in the process. This was then summarized in tabular form to obtain an overall mass and energy balance for the process. From the mass balances we also determined pollution loadings for effluent streams to be discharged to air and water. (Solid waste is a minor problem in this industry.)

Second, we constructed cost analyses showing both operating and capital costs in a predetermined format, using appropriate factors to describe the textile industry (e.g., labor rates, overhead factors, depreciation, raw material use, and fuel and utilities consumption).

This model, base line mill so constructed, is not intended to relate to any given textile operation. However, we believe it is probably more representative of a combination of the best technology practiced in existing mills, rather than the average technology presently achieved in the textile industry.

Following this part of the analysis, we then applied a similar methodology to construct process option examples using energy conserving technology. Since a major part of the energy consumption occurs from heating and vaporization of water, those process options which reduce water consumption or eliminate water use (dry processing or solvent processing) deserve first consideration. Separate models have been constructed for "advanced" processing (i.e., combination of process options with reduced water use) and solvent processing (no water use). Dry processing unit operations fit into either category. A solvent processing example for woven fabric was not constructed because appropriate data was not available.

These model process options use essentially the same sequence of unit operations but we have substituted the latest textile equipment, introduced recycle loops for resource recovery where applicable, and reduced water and energy use in accordance with the expected performance represented by this new technology. In some cases, the substitution of the new equipment allowed elimination of certain energy consuming process operations.

The data for these models was based on information obtained from the literature, from equipment manufacturers, from textile industry manufacturers, and other industry contacts. It also relies on information obtained from various EPA publications, such as the Effluent Guidelines Document and the Economic Analysis of Effluent Guidelines, together with information obtained from other published analyses of the textile industry. (These source are identified at the appropriate places.)

II. FINDINGS, CONCLUSIONS AND RECOMMENDATIONS

A. INTEGRATED KNIT FABRIC MILL

A summary of the conclusions for advanced processing and solvent processing is provided in Table II-1. A comparison in terms of economic, energy and environmental considerations with the base line is shown in Table II-2. Overall energy use is decreased by 50% with advanced processing, although electricity use is increased through substitution of air extraction for conventional drying. The same substitution, together with more efficient operation of the heat-set tenterframes* reduces natural gas use considerably. Reduction in steam use is achieved through maximum water economy and by recycling rinsewaters.

Solvent processing shows a 70% reduction in overall energy use, although steam is still required for evaporation and recovery of the solvent and for stripping the solvent after the finishing operation.

Advanced processing does not reduce the pollution loading (because the same chemicals are used), but the lower hydraulic load should reduce pollution control costs and reduce the total quantities of pollutants emitted. All-solvent processing practically eliminates the water pollution potential, but the chemicals removed from the solvent present a solid-waste disposal problem. Solvent recovery must be very high for economic reasons, but solvent losses may still represent an air pollution problem. Solvent recovery systems are designed by the manufacturers to meet present air pollution control regulations and environmental health regulations, but there is considerable concern on the part of EPA and OSHA that chlorinated solvents are a particular hazard that may require more severe regulation. This factor may be a potential deterrent to the adoption of solvent processing, although at the present time the technical limitations are probably more important. The capital investment required for the advanced process options is not a great deal higher than for conventional technology;** therefore, this would not be the determining factor in introducing technology to a new plant or processing line. However, because of the small leverage of energy costs compared to capital costs, there is no major advantage in terms of reduced product costs that might encourage the adoption of such

---

*Although waste heat recovery per se is outside the scope of this study, we have included as a process modification a heat recovery unit attached directly to the tenterframe which preheats the incoming air.

**Differences in the capital investment estimates, shown in Table II-2, are within the accuracy of the analysis (±20%), but from a knowledge of equipment costs we conclude that a small, real difference does exist.

TABLE II-1

SUMMARY OF PROCESS OPTIONS IN THE TEXTILE INDUSTRY
(Base line process: Integrated Knit Fabric Mill)

	Process Options	
	Advanced Processing	Solvent Processing
ECONOMICS	Slightly higher capital cost. Marginally lower pollution control costs as a result of reduced process water consumption. Lower energy costs.	Higher capital cost, lower operating cost, lower energy costs, (pollution control is an integral part of the solvent recovery system).
ENERGY	Lower steam and natural gas use. Higher electrical energy use through substitution of mechanical energy for heat energy to remove water. Overall energy saving of 50%.	Lower natural gas use, but higher steam consumption for solvent recovery. Overall decrease of 70% in energy use.
ENVIRONMENTAL	No change in feedstock or products. Lower water use allows more effective biological wastewater treatment. Minimal air pollution, no solid waste.	No change in feedstock or products. Eliminates water pollution problems but introduces potential air pollution from chlorinated hydrocarbons. Some solid waste for disposal but lower overall chemical use.

TABLE II-2

INTEGRATED KNIT FABRIC MILL
(Production: 22,000 lb/day)

	Base Line Process (thousand lb)	Advanced Process (thousand lb)	Solvent Process (thousand lb)
ENERGY CONSUMPTION			
Electricity (10^6 Btu equiv.)	1.9	2.6	1.3
Steam (10^6 Btu equiv.)	8.2	4.1	2.4
Natural Gas (10^6 Btu)	4.0	0.4	0.4
Total (10^6 Btu)	14.1	7.1	4.1
POLLUTION POTENTIAL			
WATER			
Hydraulic Load gal	6,190	2,050	---
Pollution Loading (BOD lb)	25	25	---
(COD lb)	80	80	---
(TSS lb)	80	80	---
AIR	Small	Small	Small
SOLID WASTE	---	---	Small(~100 lb)
ECONOMICS			
Capital Investment ($)	2,560	2,650	2,820
Variable Costs ($)	1,620	1,610	1,500
Fixed Costs ($)	420	430	450
Energy Costs ($)	26	13	21
Pollution Control Costs ($)	26	16	---*
Total Annual Costs ($)	2,450	2,440	2,330

Notes: Electricity 1 kWh = 10,500 Btu equiv.
Variable costs include energy costs.
Total Annual Costs = (Fixed Costs + Variable Costs + Pollution Control Costs) x 12.
Energy consumption from Table IV-5.
Economics from Table IV-6, IV-7, IV-9.

*Pollution control costs are included in manufacturing costs.

technology at a rapid rate throughout the industry. The incremental capital costs for advanced processing over the base line are adequately repaid from reductions in operating costs and pollution control costs. Therefore, whenever new or replacement capacity is required, advanced processing does have an economic (and environmental) advantage. It also has lower energy costs, thus providing the manufacturer with some protection against future fuel and energy price increases. It is also feasible for the unit operations which make up the advanced processing to be adopted piecemeal by existing plants, with a consequent energy saving and lowering of pollution control costs.

Similar comments apply to the solvent processing system, but there are other reservations. Equipment for solvent processing is commercially available and being used in textile mills, generally in more specialized applications where solvent processing is essential because of the nature of the chemicals used or because an improved product is obtained. At present, the most widespread application is in scouring of knit goods. An all-solvent processing line would have the advantage of completely eliminating wastewater effluent, but as yet, the technology is not sufficiently well demonstrated to show that an all-solvent processing line is commercially feasible. The dyeing step is particularly troublesome; in spite of much work, there are still severe limitations in the type of dyes and range of colors that can be applied from a solvent medium. In particular, the dyeing of polyester by solvent methods has not been adequately demonstrated and this is one of the most important fibers being used in knit fabric today.

B. INTEGRATED WOVEN FABRIC MILL

A summary of conclusions concerning advanced processing for woven fabrics is given in Table II-3. A comparison of energy consumption, pollution potential, and economics is given in Table II-4. Advanced processing offers a 57% reduction in energy consumption from a reduction in electricity, steam, and natural gas use. Reduced electricity and steam consumption is a result of better water economy (in spite of the increased electrical requirements for PVA recovery). Lower natural gas use comes from optimization of tenterframe operations for drying and heat setting, which includes the addition of a heat recovery unit on each tenterframe. This reduction is a result of optimization of 23 different unit operations in a particular sequence for the processing of a 50/50 polyester/cotton fabric. Many textile mills have much more diversified processing, so the energy savings may be less, but we would still expect them to be substantial.

It is assumed that the wastewater effluent from base line and advanced processing are both treated by biological methods. As with the knit fabric mill, the decreased hydraulic load will reduce treatment plant size and costs. PVA size recovery reduces the hydraulic load and the pollution loading (BOD and COD). Potential air and solid waste effluents are minor. Some organics (degradation products of finishing chemicals) escapes with the flue gas, but with good operation the levels of hydrocarbon are below the levels set by regulation. Other minor amounts of finishing chemicals may end up as a tarry residue in the tenterframe which is periodically removed for disposal.

Adoption of advanced processing does not greatly reduce product cost because of the high capital investment required for a new woven mill. The

TABLE II-3

SUMMARY OF PROCESS OPTIONS IN THE TEXTILE INDUSTRY
(Base line process: Integrated Woven Fabric Mill)

	Advanced Processing
ECONOMICS	Slightly higher capital cost. Slightly lower operating cost. Lower pollution control costs through water conservation and resource recovery.
ENERGY	Lower energy use (Natural gas, steam, and electricity) through reduction in process water consumption and through resource recovery. Overall energy saving of 57%.
ENVIRONMENTAL	No change in feedstock or product. Lower pollution loading (from PVA recovery) and lower water use allows more effective biological wastewater treatment. Minimal air pollution, no solid waste.

TABLE II-4

INTEGRATED WOVEN FABRIC MILL
(Production 66,000 lb/day)

Basis: 1000 lb of production

ENERGY CONSUMPTION		
Electricity (10^6 Btu equiv.)	3.0	1.6
Steam (10^6 Btu equiv.)	32.2	14.4
Natural gas (10^6 Btu)	7.1	2.2
Total (10^6 Btu)	42.3	18.2
POLLUTION POTENTIAL		
WATER		
Hydraulic Load gal	16,800	5,830
Pollution Loading (BOD lb)	30	25
(COD lb)	100	50
(TSS lb)	100	100
AIR	Small	Small
SOLID WASTE	Small	Small
ECONOMICS		
Capital Investment ($)	5,610	5,690
Variable Costs ($)	1,480	1,400
Fixed Costs ($)	860	860
Energy Costs ($)	81	33
Pollution Control Costs ($)	20	18
Total Annual Cost ($)	2,810	2,720

Notes: Electricity 1 kWh = 10,500 Btu equiv.
Variable Costs include energy costs.
Total Annual Costs = (Fixed Costs + Variable Costs + Pollution Control Costs) x 1.2.
Energy consumption from Table IV-10.
Economics from Tables IV-11, IV-12.

incremental costs of capital investment for advanced processing over conventional processing in a new mill are relatively small and show a good payback in terms of lower energy use and resource recovery. Lower pollution loading from PVA recovery and reduced water use will also reduce the size and cost of biological treatment plants for the wastewater effluent. Therefore, adoption of advanced processing appears likely for capacity replacement and expansion. PVA recovery is attractive economically and environmentally, and will be used if it can be shown to be applicable to a wider range of fiber combinations.

C. RECOMMENDATIONS FOR FURTHER RESEARCH

- PVA recovery has been shown to have economic and energy-conserving advantages. So far, however, this has only been demonstrated on polyester/cotton sheeting. Its applicability to other products and fibers should be demonstrated.

- Energy saving is possible if the amount of water used for washing can be reduced substantially. This requires an evaluation of washing efficiency for the various types of washers currently used in the industry and for the new units now available. Concurrent with this, there should be a program to demonstrate improved instrumentation and techniques for monitoring washing in the various process steps and to determine when adequate washing has been achieved.

- Water reuse currently appears to be limited by the variety of chemicals used in each process step. Development work could minimize the amount of chemical used in each step and make the different chemicals more compatible with each other, so that processing steps might be combined and/or additional water recycled.

- Recovery of chemicals other than PVA and caustic soda has not yet achieved any major application, although work is in progress to evaluate water and chemicals reuse in dyeing operations. (EPA 800929 and Brandon, 1975). Additional methods for recovery of dyes - high-cost chemicals that cause color problems in waste treatment plants because of their refractory nature-should be investigated.

- A major obstacle to the demonstration of an all-solvent processing system is the lack of acceptable techniques for solvent dyeing, particularly of polyester and cotton/polyester blends. Pilot-scale studies should be carried out to demonstrate the advantages and limitations of the best processes described in the literature. Similar work is also required to demonstrate the applicability of solvent finishing systems.

- It appears from the data available that solvent losses from an all-solvent system are now only marginally acceptable and may be in excess of future occupational health or environmental regulations. A study of an all-solvent system is required to define where and how solvent losses occur and to develop better control technology for solvent emissions. Otherwise, we believe this problem may represent an obstacle to further development of solvent processing.

III. INDUSTRY OVERVIEW

A. INDUSTRY STRUCTURE

The textile industry is extremely diversified, processing a variety of fabrics and fabric blends into a multitude of end products. Its primary customer is the domestic apparel industry,* followed by the auto and furniture industries. Knit apparel, yarns and carpets are also produced as final products for the consumer. Textile plants range from highly integrated manufacturing complexes that process fibers (natural and synthetic) into finished products, to small, non-integrated contract plants (commission finishers) that process goods owned by other producers.

According to the standard SIC Classification (Census of Manufactures, 1972), the textile industry contains 10 major SIC classifications and 30 subclassifications. A breakdown according to these classifications, in terms of the number of establishments and number of employees, is listed in Table III-1. The total number of plants listed (7,203), is distributed over 47 states, and has increased only about 2% since the 1967 census. However, there have been changes within the groupings that reflect internal changes within the textile industry, such as the decline in weaving mills for cotton (SIC 221) and wool (223), together with increases for knitting mills (225) and floor-covering mills (227). Knitting mills now constitute the largest single SIC group, with 2,723 plants, followed by weaving mills of various types totaling 1,293 plants. These two categories together provide 56% of the total number of plants and an even higher proportion of total production.

The textile industry is labor intensive (Department of Commerce, 1974, 1975), accounting for about 5% of the U.S. manufacturing workforce. Employment was about 960,000 in 1972 and peaked at over one million in 1973. By mid-1975, employment was down to 910,000 causing the unemployment rate in the industry to remain above the average for all manufacturing throughout 1975. As shown in Table III-1, weaving mills and knitting mills constitute 62% of the total employment.

In recent decades, the industry has been concentrating in the Southeast - notably in North and South Carolina, Georgia, and Alabama - and this trend is

*The apparel industry (SIC 23) consists of establishments that cut and sew clothing (knits and wovens, outerwear and underwear) from purchased fabric.

TABLE III-1

NUMBER OF ESTABLISHMENTS AND NUMBER OF EMPLOYEES

SIC CODE	NAME	NUMBER OF ESTABLISHMENTS		THOUSANDS OF EMPLOYEES	
2211	Weaving Mills - Cotton	307		121.3	
2221	Weaving Mills - Manmade fiber	412		149.7	
2231	Weaving and Finishing Mills - Wool	198		19.4	
2241	Narrow Fabric Mills	376		27.1	
Total	Weaving Mills		1,293		317.5
2251	Women's Hosiery	312		49.5	
2252	Hosiery NEC	415		32.6	
2253	Knit Outerwear Mills	917		74.4	
2254	Knit Underwear Mills	87		26.0	
2257	Circular Knit Fabric Mills	716		68.0	
2258	Warp Knit Fabric Mills	203		22.0	
2259	Knitting Mills NEC	73		3.9	
Total	Knitting Mills		2,723		276.4
2261	Finishing Plants - Cotton	196		25.7	
2262	Finishing Plants - Manmade fiber	259		35.5	
2269	Finishing Plants NEC	201		18.5	
Total	Dyeing and Finishing Textiles (except wool fabrics & knit goods)		656		79.7
2271	Woven Carpets & Rugs	64		6.5	
2272	Tufted Carpets & Rugs	381		50.3	
2279	Carpets & Rugs NEC	83		3.1	
Total	Floor Covering Mills		528		66.4
2281	Yarn Mills, except wool	426		89.7	
2282	Throwing and Winding Mills	212		38.0	
2283	Wool Yarn Mills	99		8.5	
2284	Thread Mills	73		11.6	
Total	Yarn & Thread Mills		810		147.8
2291	Felt Goods	47		5.0	
2292	Lace Goods	105		2.9	
2293	Padding & Upholstery Filling	132		4.4	
2294	Processed Textile Waste	106		3.6	
2295	Coated Fabrics	202		17.9	
2296	Tire Cord & Fabric	18		10.0	
2297	Non-Woven Fabrics	82		10.4	
2298	Cordage & Twine	156		9.0	
2299	Textile Goods NEC	345		8.3	
Total	Miscellaneous Textile Goods		1,193		71.5
22	Total Textile Goods		7,203		959.3

Source: 1972 Census of Manufactures

continuing. Today, nearly 40% of the textile plants are in the Southeast and over 90% are on the Eastern Seaboard. The rest are scattered thinly throughout the United States.

The industry's basic raw materials are wool, cotton, and manmade fibers. Wool now accounts for a very small proportion of the industry, and that proportion is declining. Cotton is still a major raw material, but shows very little growth; whereas the use of manmade fibers* is growing quite rapidly.

The natural fibers are supplied in staple form (short fibers). Manmade fibers are supplied as either staple or continuous filament. In either case, fiber is spun into yarn, which is simply a number of filaments twisted together. The yarn is woven or knit into a fabric, and the fabric is then dyed and treated to impart such characteristics as shrink resistance, crease resistance, etc. The finished fabric is delivered -- directly or through convertors, jobbers, and wholesalers -- to the manufacturer of textile products.

In transforming a fiber, both wet and dry processes are used. The SIC code breakdown is not particularly useful for evaluating the waste problems of the textile industry. The codes are grouped primarily by the process used -- e.g., weaving or knitting, which are essentially dry processes -- whereas waste problems stem from various wet processes that are used (sizing, desizing, washing, dyeing, scouring, mercerizing, bleaching, and various types of finishing processes). SIC Code 226 identifies textile finishing, Code 221 identifies weaving mills, which may also be integrated mills that have a finishing operation or may be greige** goods mills that have only dry processing. Knitting mills fall into a similar category; many of the mills identified as knitting mills, in fact, process dyed yarns and, therefore, essentially carry out only dry operations.

To surmount this difficulty and assist in promulgation of effluent guideline limitations, the EPA divided the textile industry into 7 categories, as shown in Table III-2. All the dry plants are essentially lumped together into Category 3, greige goods. Similar categorizations, but with more subdivisions, have been proposed by others (see Table III-2), but they do not overcome the problem, which is that all the statistical data (energy, economics, etc.) is arranged by SIC code and cannot be directly correlated with effluent data. This makes it very difficult to establish the effects on the industry of a process change at the plant level. A further obstacle to deriving industry data is the lack of a good estimate on the number of "wet" plants (plants using wet-process operations) or total water use by the industry. The Census of Manufactures for 1968 listed a total of 684 wet plants

*Principal manmade fibers are: rayon, acetate, nylon, acrylic, polyester, polypropylene, and glass fiber.

**See Appendix B "Glossary".

TABLE III-2

CATEGORIZATION SCHEMES FOR THE TEXTILE INDUSTRY

Environmental Protection Agency	American Textile Manufacturers Institute[1]	National Commission on Water Quality (Lockwood Greene)[2]
1. Wool Scouring	1. Wool Scouring	1. Wool and Animal Hair Scouring
2. Wool Finishing	2. Wool Finishing	2. Wool Raw Stock, Top & Yarn Dyeing
3. Greige Goods Mill	3. Greige Mill	3. Wool and Animal Hair Fabric Finishing
4. Woven Fabric Finishing	4. Woven Fabric Finishing	4. Woven Dry Processing Mill
5. Knit Fabric Finishing	5. Knit Fabric Finishing	5. Adhesive Related Dry Processing Mill
6. Carpet Mill	6. Greige Mill & Woven Fabric Finishing	6. Woven Fabric Finishing, Cotton & Blends
7. Stock & Yarn, Dyeing and Finishing	7. Carpet Backing & Foam	7. Woven Fabric Finishing, Others
	8. Integrated Carpet Mill	8. Knit Fabric Finishing, Cotton and Blends
	9. Stock & Yarn Dyeing & Finishing	9. Knit Fabric Finishing, 100% Synthetic
	10. Greige Mill & Finishing of Yarns & Knit Fabrics	10. Piece Dyeing and Printing of Carpets, Wool, Cotton and Synthetics
	11. Combined Materials Finishing - Stock, Yarn Wovens, Knits	11. Stock & Yarn Dyeing of Cotton and Synthetic Yarns
	12. Multiple Operation, Commission House	
	13. Specialized Finishing	

1 Report by the Institute of Textile Technology and Hydroscience Inc., Jan. 15, 1973
2 Draft Report by Lockwood Greene No. 74391-01, March 10, 1975

which consume 109 billion gallons of process water per year. 1970 estimates by the American Textile Manufacturers Institute (Institute of Textile Technology and Hydroscience, Inc., 1973) gave 346 plants using 104 billion gallons per year (estimated to be 83% of total industry use).

Lockwood Greene (Lockwood Greene Engineers, Inc., 1975) conducted an extensive survey of the textile industry in 1973, and identified 1,926 wet operations and 1,852 dry operations out of 5,366 mills. From an employee count, Greene estimated that less than 12% of the industry data was missing from the wet operation category. From this array of data, we estimate that present water use by the textile industry is in the range of 100-125 billion gallons/yr. About 2000 mills have wet operations of some kind, and 75-85% of the water use is concentrated in 300-350 relatively large plants.

B. ECONOMIC OUTLOOK

1. Historical Trends and Projected Growth

The U.S. textile industry has experienced modest growth since 1960 (Department of Commerce 1974, 1975). Total fiber consumed by the industry for manufacture into textile products increased by 85.5%, from 6.4 billion pounds in 1960 to 11.5 billion pounds in 1973. During the 1974-75 recession, fiber consumption fell to a 10 billion pounds annual rate, but is now recovering. As another indicator of the effects of the recession, the Federal Reserve Industrial Production Index for Textile Mill Products was 125.5 (1967 = 100) in the first half of 1974, compared with 126.8 for the first half of 1973. By February 1975, the Index was 93.3, the lowest point in almost 10 years, and 27% below the previous year. We project that by 1980 (Figure III-1), annual fiber consumption will reach 13.4 billion pounds, (16.5% above the peak year of 1973).

Synthetic fibers (polyester, nylon, acrylic and olefin fibers) dramatically increased their market share from 10% of total fiber consumption in 1960 to about 60% of total fiber consumption in 1973. Demand for these fibers will continue to grow and is expected to be approximately 70% (9.4 billion pounds) of total fiber consumption by 1980. U.S. capacity for production of these synthetic fibers is scheduled to increase at a rate sufficient to accommodate this growth, even with potential feedstock shortages.

The rapid demand growth for polyester fiber after 1968 was accomplished by continued penetration into traditional cotton markets, especially in home furnishing (e.g., sheets) and woven apparel (e.g., shirting), but more particularly by the emergence of the textured, continuous-filament, knit-fabric industry which utilizes predominantly polyester fiber. During this period, the manmade cellulosic fibers (rayon and acetate) and natural fibers (cotton and wool) have gradually lost ground to polyester, unable even to hold historical market volumes.

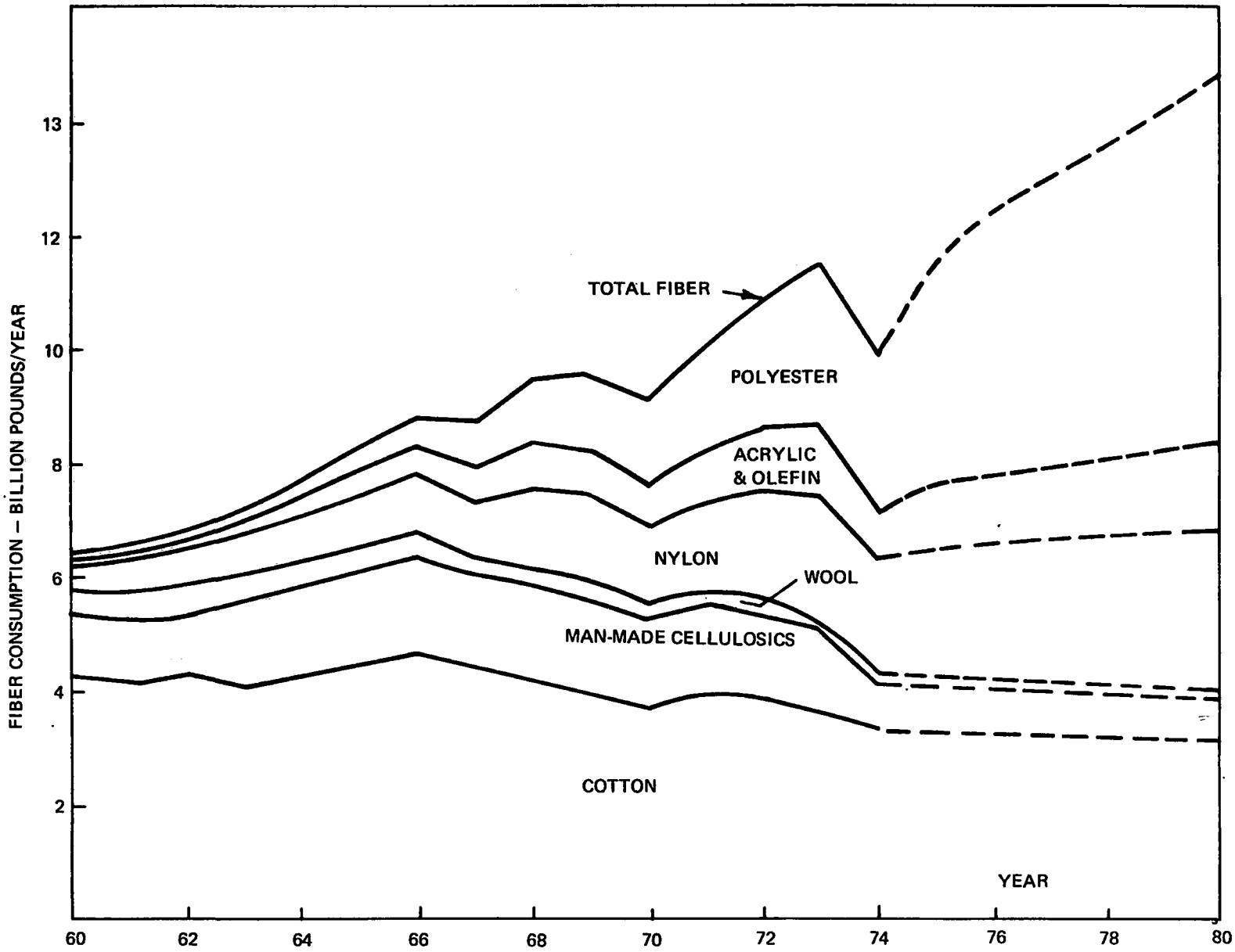

Figure III-1. U.S. Fiber Consumption - 1960-1974 with Projections to 1980

In the late 1970's, we expect a continued slow decline in cotton and wool consumption, while manmade cellulosics will probably hold their own in total output. Cotton fiber will suffer increasingly in competition with polyester, thus increasing the proportion of blended fabrics. The 1980 shipments of manmade fibers are expected to increase over 1974 shipments by 80% for polyester, 37% for nylon, 27% for acrylics and modacrylics, and 56% for polypropylene.

2. Total Fiber Demand and Shipments

A breakdown of fiber consumption in U.S. markets is shown in Table III-3, where mill consumption is adjusted with estimated imports and exports to provide total shipments by fiber type.

The U.S. textile industry had suffered from sharply rising imports for a decade until the situation reversed in 1973. This reversal was independent of import quotas imposed in the early 1970's and was due to sharply increased fiber and manufacturing costs in Europe and much of the Far East and relative changes in international monetary policy. Imports have undergone a sharp decline (not even meeting the imposed quotas) and exports have increased very substantially to more than offset imports. Exports exceeded imports, 663 to 461 million pounds, in 1974. We expect this trend to continue. A net balance of 2% exports in total shipments should increase to 3% in 1980. Cotton containing manufactured products will continue to be the largest single factor in both imports and exports.

U.S. production for domestic markets is shown in Figure III-2 by fiber type for apparel, home furnishings, and industrial and miscellaneous fabric in 1974, together with estimates for 1980. Home-furnishing fabrics are expected to show the greatest growth, increasing market share by 1980 from 30% to 35%. This growth will involve primarily increased usage of polyester and nylon. Cotton fiber is expected to hold its own in apparel and home furnishing markets (with growth going to synthetic fibers), but will suffer losses in industrial fabrics, particularly to polyester. Wool is expected to continue to lose ground in all three principal application areas.

3. Financial Profile

Trends for textile mill products are shown in Table III-4. Over the period from 1967 to 1974, the value of shipments has increased from slightly under $20 billion to over $33 billion. Broad woven fabrics suffered a 27% drop in production in the first half of 1975, but still maintain a dominant position in the industry. A profile of broad woven fabric production for 1974 is shown in Table III-5. Fabric shipments in 1974 were $8 billion out of the industry's total of $33 billion, and employment represented about 30% of the textile workforce. A profile of knit fabrics for 1974 is given in Table III-6. Production was down in 1975 for most knit fabrics, but double-knits and tricot did well. Knit-fabric mills produced 13% of textile industry shipments and employ about 10% of the workforce.

TABLE III-3

1974 - 1980 FIBER CONSUMPTION BY TYPE, MILL DEMAND, AND SHIPMENTS
(Millions of Pounds)

	Mill Demand		Imports		Exports		Total Demand And Shipments	
	1974	1980	1974	1980	1974	1980	1974	1980
Polyester								
Filament	1320	2555	72	20	42	50	1290	2585
Staple	1370	2680	--	--	74	55	1444	2735
Nylon								
Filament	1401	1830	20	20	83	100	1464	1910
Staple	495	805	20	20	37	45	512	830
Acrylic/Modacrylic	614	776	19	20	80	90	675	846
Polypropylene	150	235	--	--	4	5	154	240
Acetate/Triacetate	315	270	--	--	37	40	352	310
Rayon Staple	562	628	35	30	36	30	563	628
Cotton	3242	3100	280	350	255	400	3217	3150
Wool	148	100	15	30	15	20	148	90
Total	9617	12,979	461	490	663	835	9819	13,324

Source: 1974 Data, Textile Organon Dec. 1975
1980 Projections, Arthur D. Little, Inc. estimates.

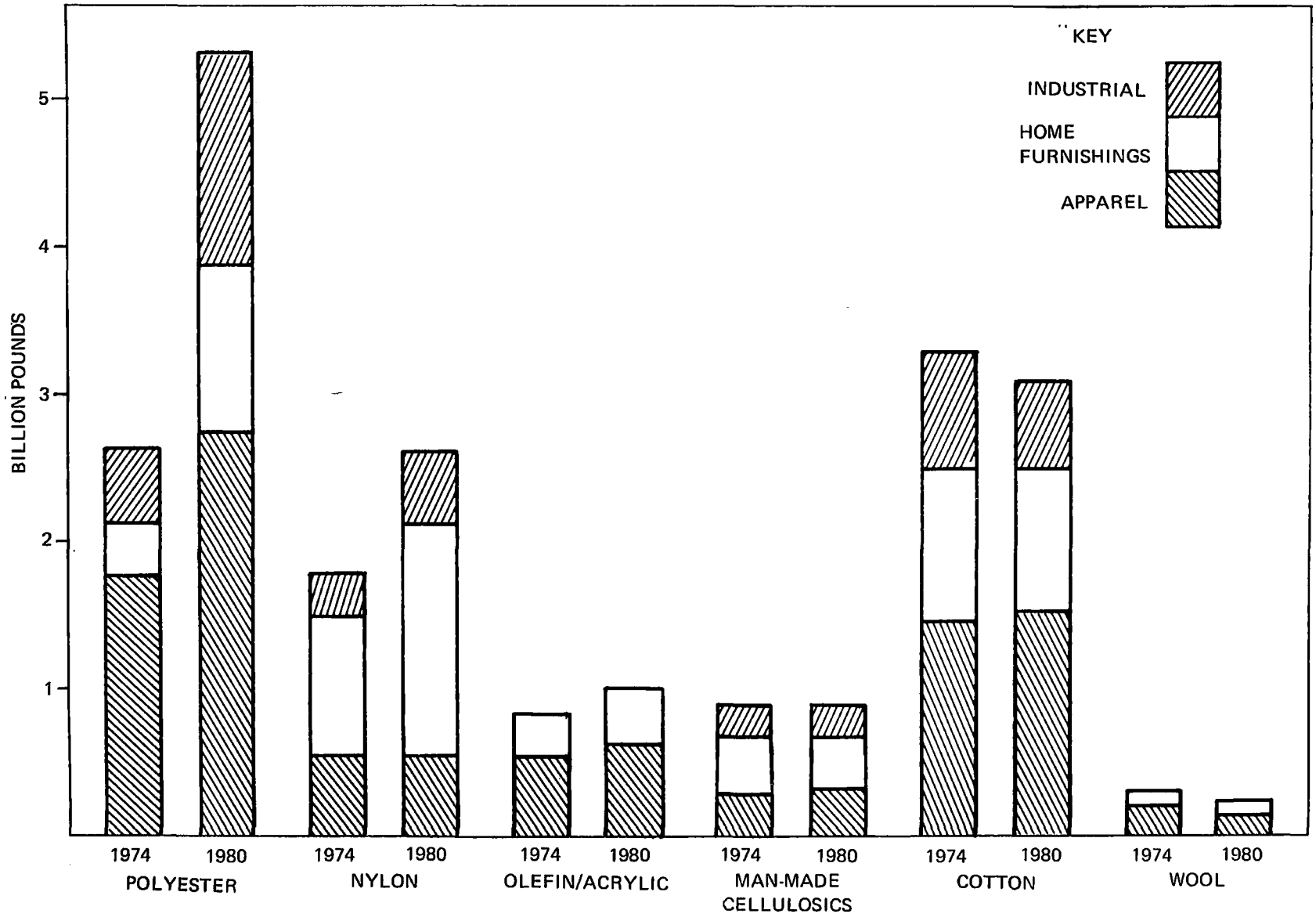

Source: Arthur D. Little, Inc. compiled data.
Figure III-2. Fiber Consumption by Type and Product Category, 1974 and 1980

TABLE III-4

TEXTILE MILL PRODUCTS TRENDS, 1967-74
(In millions of dollars, except as noted)

	1967	1971	1972	1973	1974[2]
Value of shipments	19,815	24,030	27,430	31,073	33,335
Thousands employed	958.5	957.0	991.0	980.2	940.0
Value added	8,153	9,995	11,366	13,017	14,000
Value of Imports	803	1,248	1,379	1,421	1,630
Value of Exports	377	465	638	1,001	1,275
Wholesale price index	100.0	103.7	111.6	128.6	147.8

[1] Value of all products and services sold by the textile products industry (SIC 22).

[2] Estimated by Office of Textiles, Bureau of Labor Statistics.

Source: Bureau of the Census; Office of Textiles, Bureau of Labor Statistics.

TABLE III-5

BROADWOVEN FABRICS, 1974 PROFILE

SIC Codes	221, 222, 223
Value of industry shipments ($ million)	8,210
Number of establishments (1972)	917
Total employment (000)	298
Exports as a percent of product shipments	9.0
Imports as a percent of apparent consumption	7.9
Compound average annual rate of growth 1967-74 (percent)	
Value of shipments (current $)	2.9
Value of exports (current $)	19.6
Value of imports (current $)	10.3
Employment	-2.4
Major producing areas	Atlantic Coast and South

Source: U.S. Industrial Outlook 1976, U.S. Department of Commerce.

TABLE III-6

KNIT FABRICS MILLS, 1974 PROFILE

SIC Codes	2257, 2258
Value of industry shipments ($ million)	4,500
Number of establishments (1972)	896
Total employment (000)	89
Exports as a percent of product shipments	1.0
Imports as a percent of apparent consumption	1.0
Compound average annual rate of growth 1967-74 (percent):	
Value of shipments (current $)	11.1
Value of imports (current $)	19.8
Employment	13.8
Major producing areas	Middle and South Atlantic

Source: U.S. Industrial Outlook 1976, U.S. Department of Commerce.

Historically, profit margins in the textile industry have been substantially lower than the all-industry average. In good years, after-tax profits typically represent 3% or less of sales for all major textile producers. There is no reason to believe that this profit level will improve substantially in the future. In fact, higher labor costs, escalating energy costs, and capital investment demands required to comply with recent environmental and health legislation may cause further erosion.

Capital expenditures for new plants and equipment are estimated to be $660 million in 1975, down from $840 million in 1974, and $770 million in 1973, representing the highest expenditure since $820 million in 1966. About 5% of this investment was spent in 1973 and 1974 to meet air and water quality standards set by the Environmental Protection Agency and the Occupational Health and Safety Standards set by the Department of Labor. These investment costs are expected to continue over the next five to ten years, and will compete with the capital funds that can be assigned to new technological activity affecting product type and quality.

Total hourly wages for production workers in the labor-intensive textile industry averaged $3.37 in mid-1975, up 6% from $3.15 in 1974. Employment dropped sharply, from 1.03 million in 1973 to 910,000 in mid-1975 and only started to recover in late 1975. Product sales amount to about $30,000 per hourly employee, showing that the industry is highly labor intensive. Competition for hourly labor in the Southeast has increased sharply in recent years, so wage rates may increase at a faster rate to approach the average for all manufacturing in the region.

4. Energy Costs

Traditionally, energy costs have not been a major factor in the production of textile fabrics because much of the production has benefited from low-cost natural gas and electricity. With deregulation, or the need to obtain new gas supplies, the impact could be considerable. Natural gas is an essential fuel for certain textile operations (e.g., heat setting) because the combustion products come in contact with the fabric. Fuel oil, at a substantially higher cost, is being increasingly substituted for natural gas in steam raising operations.

Actual energy costs vary widely with the type of fabric and the product mix and, according to industry estimates, range from 2-8¢/lb of fabric. Knit goods such as hosiery tend to be at the low end, while heavy woven fabrics tend to be at the high end. However, geographic location and product mix can also cause large variations in energy cost.

IV. COMPARISON OF CURRENT AND ALTERNATIVE PROCESSES

A. BASIS FOR PROCESS SELECTION

1. Total Energy Use

The 1971 Census of Manufactures provides data on energy use in the form of purchased fuel and purchased electricity using the standard SIC classifications. This classification divides the textile industry into nine groups. (See Table IV-1.) For the purposes of this study, the figures in the table have been converted from kilowatt hour equivalents to Btu equivalents, using the conversion factors indicated. (It was mentioned earlier that this SIC classification suffers from a number of limitations in relating energy use and pollution potential to the various unit operations which are carried out by the textile industry; however it still represents the only data base.)

Four SIC categories comprise 66% of the total energy used in the textile industry, as shown in Table IV-1. These categories are: 221, Weaving Mills Cotton; 222, Weaving Mills Synthetic; 225, Knitting Mills; and 226, Textile Finishing. We can therefore establish the potential for energy conservation under these four categories by examining in detail two different types of textile mills; i.e., an integrated knitting mill, (which knits greige yarn and subsequently dyes and finishes* the fabric), and an integrated weaving mill (which weaves greige fabric and then dyes and finishes the fabric). In addition, we would anticipate that some of the data on energy-conserving process options examined in this manner can be extrapolated to estimate potential energy savings in other sections of the textile industry, such as yarns and carpet. Although similar unit operations are used, there are considerable differences in the processes for weaving and finishing wool. However, wool processing presently accounts for less than 3% of total textile energy use and a separate treatment is not justified in this report. To focus the effort on appropriate unit operations we used in-house data to obtain a first estimate of energy use, by area of processing, for a knit fabric mill and a woven fabric mill.

2. Integrated Knit Fabric Mill

Energy consumption for knit fabric manufacture can be broken down as shown in Table IV-2. We estimate that about 27,000 Btu per pound of cloth are expended, from yarn manufacture to finished fabric. Slightly less than

---

*Note that "finishing" is commonly used to indicate combined operations, which include fabric preparation and dyeing in addition to specialized "finishing" operations which consist of end treatments to provide durable press characteristics, water repellency, etc.

TABLE IV-1

FUEL AND ELECTRIC ENERGY USE IN THE TEXTILE INDUSTRY, 1971

Code	Industry Group	Purchased Fuel Btu Equiv. x 10^{12} (1)	Purchased Electricity Btu Equiv. x 10^{12} (2)	Total Btu Equiv. x 10^{12}	Total %
221	Weaving Mills Cotton	30.02	57.01	87.03	16.12*
222	Weaving Mills Synthetic	31.39	58.52	89.91	16.65*
223	Weaving & Finishing Mills, Wool	10.58	5.35	15.93	2.95
224	Narrow Fabric Mills	3.75	3.54	7.29	1.35
225	Knitting Mills	48.79	32.77	81.56	15.11*
226	Textile Finishing (except Wool)	80.86	16.69	97.55	18.07*
227	Floor Covering Mills	29.68	9.68	39.36	7.29
228	Yarn & Thread Mills	20.13	57.89	78.02	14.45
229	Miscellaneous Textile Goods	23.54	20.23	43.77	8.11
22	Textile Mill Products	278.42	261.45	539.87	100

(1) Converted from Census table on the basis of 1 kWh = 3,412 Btu
(2) " " " " " " " 1 kWh = 10,500 Btu (energy required at the generating plant).

* Total energy use in these categories represents more than 66% of textile industry energy consumption.

Source: 1972 Census of Manufactures

TABLE IV-2

ENERGY USE IN AN INTEGRATED KNIT FABRIC MILL

OPERATION	10^3 Btu/lb	%
GREIGE FABRIC MANUFACTURE		
Yarn Manufacture	3.91	11.2
Preparation	3.40	9.7
Weaving	1.53	4.4
Air Conditioning	6.29	18.0
Lighting	1.19	3.4
Miscellaneous	0.68	1.9
Subtotal	17.00	48.6
FABRIC FINISHING		
Preparation	5.61	16.0
Dyeing	6.12	17.5
Finishing	5.27	15.1
Lighting	0.60	1.7
Miscellaneous	0.40	1.1
Subtotal	18.00	51.4
Total	35.00	100.0

Note: In this Table, electrical energy is calculated as energy used in the process.

Source: Arthur D. Little, Inc. Estimates

half of the energy is consumed in greige fabric manufacture and the rest is in fabric finishing. However, 27% of the total energy is used for lighting and air conditioning which are essential, but are not directly related to process operations. Thus, the potential for energy conservation lies with fabric finishing operations, and is about equally divided between preparation, dyeing, and finishing. About 80-90% of the energy is consumed as thermal energy in the form of natural gas or steam (produced by oil or gas). The rest is electricity consumed as mechanical energy. In practice, most of the steam is used to heat the process and wash water, and the gas is used to dry and heatset the finished fabric.

3. Integrated Woven Fabric Mill

Similar estimates were made for an integrated woven fabric mill, and the result shown in Table IV-3. The 35,000 Btu expended per pound of woven fabric is again about equally divided between greige fabric manufacturing and fabric finishing.

In greige fabric manufacturing, of the 3,400 Btu/lb used for preparation, about 2,900 Btu/lb are needed to provide the steam used in sizing (slashing). The largest fraction is again electricity required for air conditioning. In fabric finishing, energy use is again about equally divided between preparation, dyeing, and heating, with a very high proportion in the form of thermal energy. Steam is used for heating water, fixing vat or reactive dyes, and for heating "cans" that dry the fabric as it passes over them. Gas is used for drying, heatsetting, in dyeing operations (thermal-setting processes), and in curing of finishing chemicals.

4. Selection of Advanced Unit Operations

We began our search for potential energy-saving unit operations by evaluating the recent textile literature, examining EPA demonstration projects, and talking with outside consultants and industry personnel. It soon became obvious that there are a large number of potential energy-saving process options for individual unit operations, particularly in fabric preparation and in the dyeing and finishing operations. It became necessary to limit the search, so the selection was limited to those process developments which appeared to have a broad applicability and were sufficiently developed to be available now (or at least ready for pilot-scale operation).

Because the major fraction of energy use in the textile industry is spent in heating and evaporating water, water conservation or elimination of water use represents a crucial part of the analysis. Methods or equipment that provide improved contacting, mixing, or elimination of water from the farbic were evaluated as part of the overall process operations. Those process options that survived to the final selection process are discussed in the following sections under advanced processing for water-based systems, and under solvent processing for all-solvent systems. Hybrid water/solvent systems were eliminated, because we believe they would incur both energy and pollution penalties.

TABLE IV-3

ENERGY USE IN AN INTEGRATED WOVEN FABRIC MILL

OPERATION	10^3 Btu/lb	%
GREIGE FABRIC MANUFACTURE		
Yarn Manufacture	2.74	10.0
Knitting	1.00	3.6
Air Conditioning	6.29	23.0
Lighting	1.19	4.3
Miscellaneous	0.68	2.5
Subtotal	11.90	43.5
FABRIC FINISHING		
Preparation	4.77	17.4
Dyeing	5.20	19.0
Finishing	4.48	16.4
Lighting	0.60	2.2
Miscellaneous	0.40	1.5
Subtotal	15.45	56.5
Total	27.35	100.0

Note: In this Table, electrical energy is calculated as energy used in the process.

Source: Arthur D. Little, Inc. Estimates.

5. Advanced Processing

a. Aqueous Sizing

Most woven goods require the use of warp size during manufacture. The sizing (traditionally starch) coats and protects the warp yarns and binds the individual fibers together. This action is necessary to preserve the warps from excessive abrasion damage during weaving. The sizing is generally removed as the first operation in the fabric finishing sequence. Warp size constitutes, on the average, about 5% of the weight of the fabric, and it all ends up in the effluent waters after desizing. Accordingly, it is a substantial contributor to the total BOD and COD in textile mill effluents. Sizing waste generally accounts for about 50% of the total BOD and COD load from textile woven-fabric operations.

Polyvinyl alcohol (PVA) represents the material of choice for warp sizing of synthetics, such as polyester and polyester/cotton blends. Its use in the textile industry roughly parallels the growth of synthetic fiber use and now accounts for about 60% of all size used in the textile industry. PVA adheres to polyester better than starch size and, in addition, leads to faster fabric processing with less yarn breaking and shedding at the slasher and at the loom. However, these sizing advantages imparted by the properties of PVA tend to work against its removal in desizing.

PVA is unaffected by enzymes systems used to degrade and solubilize starch and is generally removed from the fabric by desizing with detergent in hot water. For effective size removal, PVA-sized fabrics must be subjected to water rinses at temperatures of 190°-200°F, because any PVA that remains on the cloth after desizing affects subsequent operations such as alkaline scouring and finishing. This leads to high energy losses in the hot wastewater effluent from the washing operations. It has been demonstrated that PVA can be recovered by ultrafiltration through temperature-resistant and chemically coated, inert carbon tubes. The purified wash water is also recycled to the process (Gaston County Dyeing Machine Co., 1974a, and Textile Industries, 1974). This process has now been commercialized* and over 20 million yards of polyester/cotton fabric have been processed with reclaimed size. There have been no serious operating problems with the filtration system, after two years of operation.

Further development of the techniques of PVA reclamation, and the extension of its use to other fibers and weaves, will probably occur on the basis of good return on investment. The modular construction of the recovery units would appear to make the technique applicable even to small mills.

b. Water Conservation

Typically, washing or rinsing after wet processing steps such as scouring and dyeing uses one to three times as much hot water as the process step itself and in some operations (e.g., continuous dyeing) much higher ratios are found. Hence, improved washing methods offer significant energy savings. Techniques being developed include more effective continuous countercurrent rinsing. One report (Textile Industries, December 1975b) proposes rinsing at slightly elevated pressures in continuous equipment to provide more efficient removal of chemicals, such as the sodium hydroxide used in mercerizing operations. Experimental units using vibrating-reed jet washers and cam-driven beater rollers** are on field trial in the textile industry. Development work is also being conducted with the use of mechanical devices (Gaston County Dyeing Machine Co., brochure a) to increase water turbulence and with the use of sonics (Textile Industries, December 1975a) to increase the rate of dirt and excess dye removal.

Reuse of hot wash waters from dyeing operations after treatment by reverse osmosis (hyperfiltration) is the objective of an EPA demonstration project (LaFrance Industries; and Brandon, Nasher, and Porter, 1975). Successful pilot-scale tests at one plant have shown that 65-90% water recovery can be obtained and the concentrate containing all the chemicals can, in some instances, be reused in the dyeing step.

---

*A PVA System designed and constructed by Gaston County Dyeing Machine Co. is in operation at the J.P. Stevens Mill in Clemson, S.C.

**Riggs & Lombard, High Efficiency Washer observed at Charlton Woolen, Charlton, Mass.

c. Processing at Low Liquor/Fabric Ratios

Current practice in the textile industry uses a variety of dyeing machines, some of which have been in service for a long time. These include open dyebecks, and pressurized dye machines. Considerable energy savings can be achieved by enclosing the open becks to prevent evaporation and insulating them to reduce heat loss. The use of pressurized machines results in considerably less use of dye and water. We estimate that raising the average level of operations to the level of the best presently existing in the industry might save 15-20% of the current energy use in dyeing operations, or about 2-3% of the total energy used in a typical mill.

The reduction of water use in a typical dyeing unit operation is complicated by the fact that as the liquor-to-cloth* ratio decreases, there is more difficulty in applying dye uniformly to the fabric and, therefore, in obtaining uniform color in the final product. This problem varies with the particular dye/fabric combination being used. However, processes and equipment have been developed for dyeing at very low liquor-to-cloth ratios which still allow uniform dyeing to be consistently achieved (Textile Industries, May 1975). The use of 5:1 liquor/fabric ratios have been demonstrated for batch dyeing of knit fabric. This is a considerable reduction from the commonly used 15:1 to 10:1 ratios, with consequent savings in energy and water use. Its applicability to a wide range of textile fabrics has been demonstrated in pilot-plant work by the equipment manufacturers, (Gaston County Dyeing Machine Co., brochure b) but adoption by the industry will require capital investment in new equipment, and additional experimentation.

Dyeing of woven goods, particularly pad dyeing of polyester with disperse dyes (thermosol process) and of cotton with reactive dyes, is commonly practiced. However, not all shades and fabrics can be processed in this manner.

Low liquor-to-fabric ratios have also been successfully employed in other process operations such as scouring (10:1 from 20:1) and washing, (8:1 from 25:1).

The use of 8:1 in place of 25:1 water-to-fabric ratios for open-width washing of woven goods has been demonstrated in practice (Carp, personal communication), but its applicability to all fabric types needs further demonstration.

d. Vacuum Impregnation and Extraction

Vacuum impregnation (Textile World, 1972) has been found useful in dyeing certain fabrics, because the removal of air from the fabric results in more rapid and even dye penetration, with a consequent reduction in dyeing time and lower liquor-to-cloth ratio. With this equipment, the fabric closely contacts a perforated cylinder and air is extracted by the vacuum. Dye solutions and fabric come into contact prior to the fabric's return to normal atmospheric pressure, thus promoting penetration of dye into the fabric. This

*A solution containing dye and other chemicals.

technique is particularly useful with heavy fabrics, such as corduroy, which are difficult to dye uniformly by conventional means. Vacuum impregnation is also potentially applicable to various finishing processes, such as durable-press and flame-retardant finishing.

Evaporation of water represents the largest energy-consuming portion of textile processing. Typically, fabric after wet operations followed by squeezing between mechanical rollers still contains 50-100% of its weight as water, depending on the particular fabric being treated. Vacuum extraction (International Textile Machinery, 1975) by the use of porous rollers will reduce the water content more effectively and thus reduce the energy required for drying.

One manufacturer (Zeiffer) markets an air/vacuum extractor device that permits lowering the water pickup on polyester doubleknit fabric below 20%. According to published data, the mechanical water-removal methods show more advantage with synthetic fibers (or blends with at least 65% synthetic fiber). Natural fibers such as cotton are hydrophilic, and conventional squeeze rolls appear to be nearly as effective as vacuum extraction in removing water from this type of fabric.

e. Finishing

There are a number of improved finishing techniques under development which include application of low-temperature curing resins, and radiation curing of resins (Textile Industries, November 1975), which offer the promise of lower energy consumption. However, these techniques have not yet been commercially accepted. One technique which is now being used in commercial practice (Gaston County Dyeing Machine Co., personal communication) is the application of finish solutions that use considerably less water to dilute the finish solution, emulsion, or suspension. The conventional method is to dip dry fabric in a finish pad and then express the excess finish solution by squeeze rolls. This gives a total water pickup of 60 wt % of the fabric. The advanced technique uses a vacuum extractor (or a transfer roll) that limits solution pickup to about 16 wt % of the fabric, thus reducing the water content that must be evaporated in the heat set tenter. An additional benefit claimed is that less finish is lost from the fabric during heat setting.

6. Solvent Processing*

Solvent processing offers the prospect of substantial energy savings over conventional aqueous processing, principally because about 8.6 times more energy is required per pound to heat and vaporize water (1162 Btu/lb) than to heat and vaporize typical organic solvents such as perchloroethylene (135 Btu/lb). Further, because non-aqueous solvents have higher vapor pressures, drying rates are appreciably faster. Solvent processing is potentially applicable to most of the major textile operations now carried out by wet processing, such as sizing and desizing, scouring, bleaching, dyeing, and various finishing processes. However, solvent processing is not without

*(Textile Industries, 1970; Reinhart & Reid, 1973; and Willard, 1973)

major potential economic and pollution disadvantages. Direct solvent losses from the process can be in the range of 5-8%, and most of the solvent must be recovered to make the economics of the process acceptable and to meet air quality requirements. However, there are existing installations in the textile industry with carbon adsorption systems for solvent recovery which claim acceptable economics and compliance with air pollution regulations.

In the course of this work, it has become clear that chlorinated solvents such as perchloroethylene and trichloreothylene are the most suitable materials now available and, to date, there has been no appreciable commercial use of solvent finishing for woven goods. However, solvent processing has established a firm, if specialized, position for the finishing of synthetic knit fabrics.

Solvent processing has also found commercial use only where superior fabric properties have been achieved. For example, solvent applications of stain-repellent finish to upholstery and drapery materials are widely practiced. In this case, aqueous treatment is not always possible, because the fabric is sensitive to water. Similarly, solvent scouring and finishing of synthetic knit fabrics is widely practiced, because improved quality is obtained by avoiding contact with water. Some finishes, furthermore, are not available in water-soluble or water-dispersible form and can be used only in solvents. However, before introduction of all-solvent processing, considerable investment in new equipment would be required, together with development of an expanded range of solvent-compatible reagents, dyes, and finishing chemicals.

a. Sizing and Desizing

Desizing of starch-base sizes can be accomplished by treating the fabric with an enzyme suspension in trichloroethylene solvent followed by steaming to remove trichloroethylene solvent. ("Textile Industry and the Environment," 1973) The degraded starch is not reusable and goes to the waste treatment plant. PVA, CMC, and acrylic sizes can also be removed by dissolution in solvents. In this case, reuse of the size is possible and would reduce process and waste treatment costs.

b. Scouring, Bleaching, Mercerizing

The widest application of solvent processing to date has been in the use of solvent scouring (Willard, 1973) to prepare knit fabrics for dyeing. Batch-type dry cleaning equipment is used commonly, both in Europe and the United States. Continuous scouring and finishing equipment for circular knits has recently been made available from a number of suppliers. These process units are engineered to minimize air pollution problems. Under the processing conditions, chlorinated solvents are not retained inside the fiber.

c. Dyeing

Continuous-dyeing and exhaust-dyeing systems have been examined in great depth, but major problems still exist in both areas which must be solved before extensive application of solvent dyeing can be achieved. Chlorinated solvents may be retained by polyester fiber after dyeing to the extent of

5-7% by weight of the fabric or yarn (Willard, 1973). This solvent must be removed and recovered in subsequent operations. The widest application of solvent dyeing to date has been in batch dyeing of synthetics, such as nylon knit sportswear.

Experimental work has shown that superheated solvent vapor can be used for dispersed dyes on polyester (Textile Industries, 1973). The same principle is also applicable for dispersed and acid dyes on polyamide fibers and reactive dyes on acrylonitrile fibers.

Solvent dyeing of cotton/polyester blends may be possible as a result of recent developments, where the cotton component was dyed using dimethyl formamide (DMF) and perchloroethylene. (Byland, Capponi, Gerber, and Somm, 1971)

d. Finishing

Durable-press finishes for cottons and cotton blends can be applied from chlorinated solvents. (JAATCC, 1973) Chemicals used must either be emulsified in the solvent or must be chemically modified to make them soluble, which requires that the treated fabric be exposed to steam to effect fiber swelling and penetration.

At present, most finishes are designed to be applied from aqueous solution as emulsions or dispersions. This situation is partly a result of integration with existing water-based processing, so new approaches could be tried for a mill based completely on solvent processing.

B. COMPARISON OF CURRENT AND ALTERNATIVE PROCESSES

1. Integrated Knit Fabric Mill

a. Process Description

Our model base line plant in this category was based on good operation with present practices and conventional equipment. It is assumed that reasonable housekeeping measures have already been enforced to conserve energy by reducing water use.

(1) Base Case

The mill was chosen to have a production of 22,000 lb/day of a 100% polyester doubleknit using purchased texturized yarn.* It includes the sequence of unit operations shown in Figure IV-1. Yarn is first knitted into a fabric in the greige mill. This greige fabric then goes through a scouring operation to remove knitting oil, followed by dyeing, washing, and spin drying to remove as much water as possible before hot-air drying. A finish (softener/lubricant) is then applied to the fabric, which is dried and heat set. Process water is required for the scouring, dyeing, and washing operations, and this is combined into one wastewater effluent.

*An integrated mill can also include yarn spinning operations.

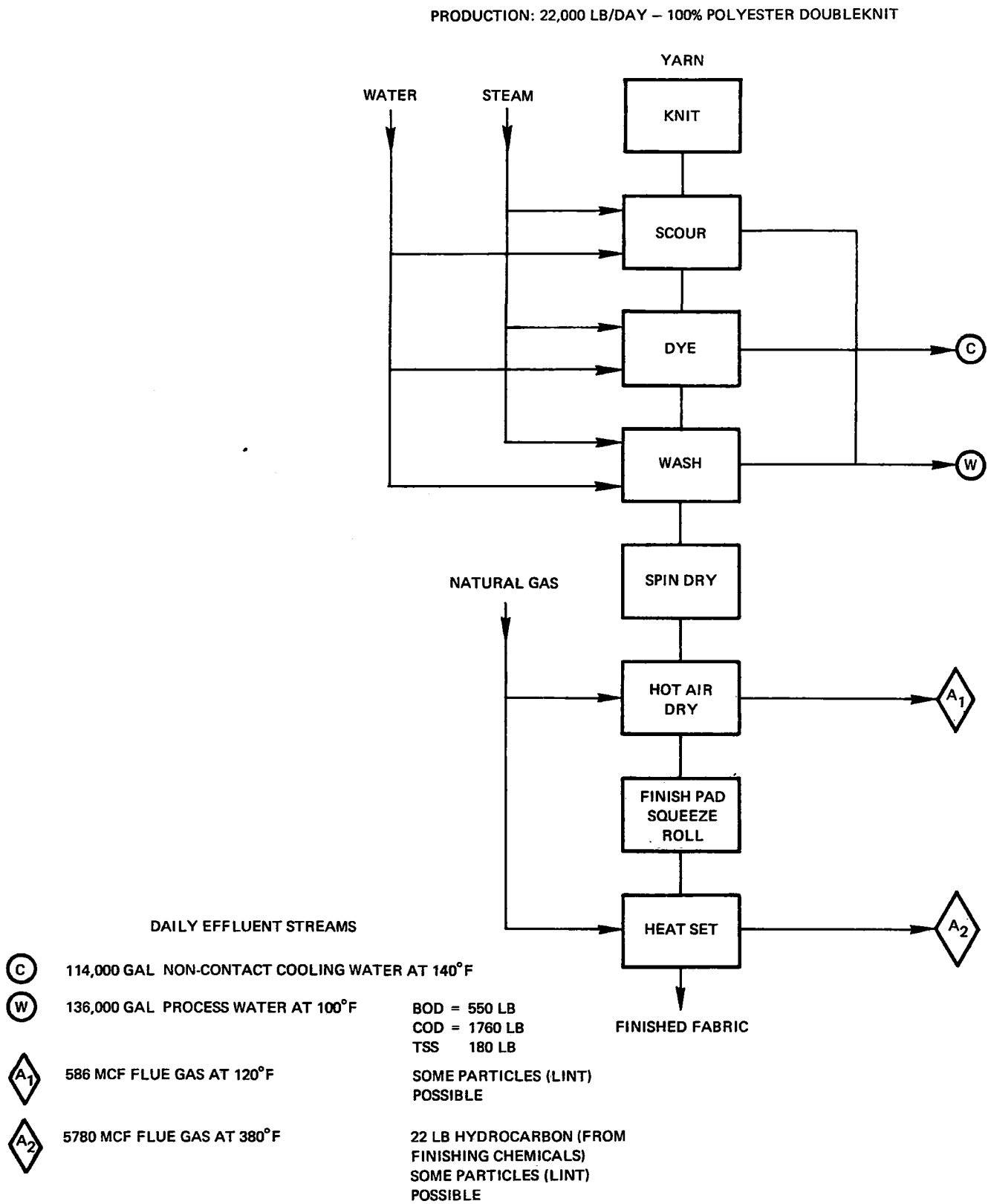

Figure IV-1. Flow Diagram: Integrated Knit Fabric Mill – Base Case

Live steam is used for the heat input to scouring, dyeing, and washing operations; natural gas is used for the hot-air drying and heat-set operations and results in flue gas effluents to the air. Varying amounts of electricity are used to provide mechanical energy to transfer fabric from the beginning to the end of the process line and for knitting the yarn into fabric. The use of electricity for air conditioning in the knitting section of the mill is substantial and air conditioning is essential to satisfactory operation of the knitting machines. However, this does not bear directly on the process energy use and is not changed by going to advanced processing. Therefore, we have eliminated it from direct consideration.*

Process water effluent contains a variety of organic and inorganic materials from the chemicals used in processing. These include dyes, dye carriers, detergents, sequestering agents and dissolved salts. The effluent undergoes biological treatment before discharge for pollution control purposes, so the effluent is defined in terms of its biochemical oxygen demand (BOD_5), chemical oxygen demand (COD), and total suspended solids (TSS). The combined untreated waste from knit-fabric finishing mills will generally contain 100 to 500 mg/1 BOD_5, 40 to 485 mg/1 TSS, and 450 and 1500 mg/1 COD.

Flue-gas effluents from the hot-air dryer and the heat-set tenter contain only minor amounts of pollutants. Some lint particles are possible from both units and a small amount of organics from the finishing chemicals will be present in the flue gas effluent from the heat-set tenter.

(2) Advanced Case

The sequence of process operations for the mill using advanced processing is similar (see Figure IV-2), except that mechanical water removal has been introduced in the form of an air/vacuum extractor as an alternative to the hot-air dryer. A second air/vacuum extractor has been added to the finishing operation to remove excess water before passing the fabric to the heat-set tenter, which therefore reduces the energy requirements (natural gas) for the heat-set operation. We have assumed that the vacuum extractor will remove water down to about 25% of the fabric weight without effecting the fabric quality.

Substituting modern, efficient equipment, process water use in the scouring, dyeing, and washing operations has been reduced. For scouring, the 20:1 water-to-fabric ratio used for the base case has been reduced to 10:1, and the process water for this operation is recycled cooling water from the dyeing operation. Similarly, the ratio of dye liquor to fabric has been reduced from 10:1 to 5:1 (although the dyes and chemicals used will be approximately the same). The water-to-fabric ratio in the final wash has been reduced from 35:1 to 7:1.

---

*The use of waste heat from air conditioning and/or space heating is outside the scope of this study.

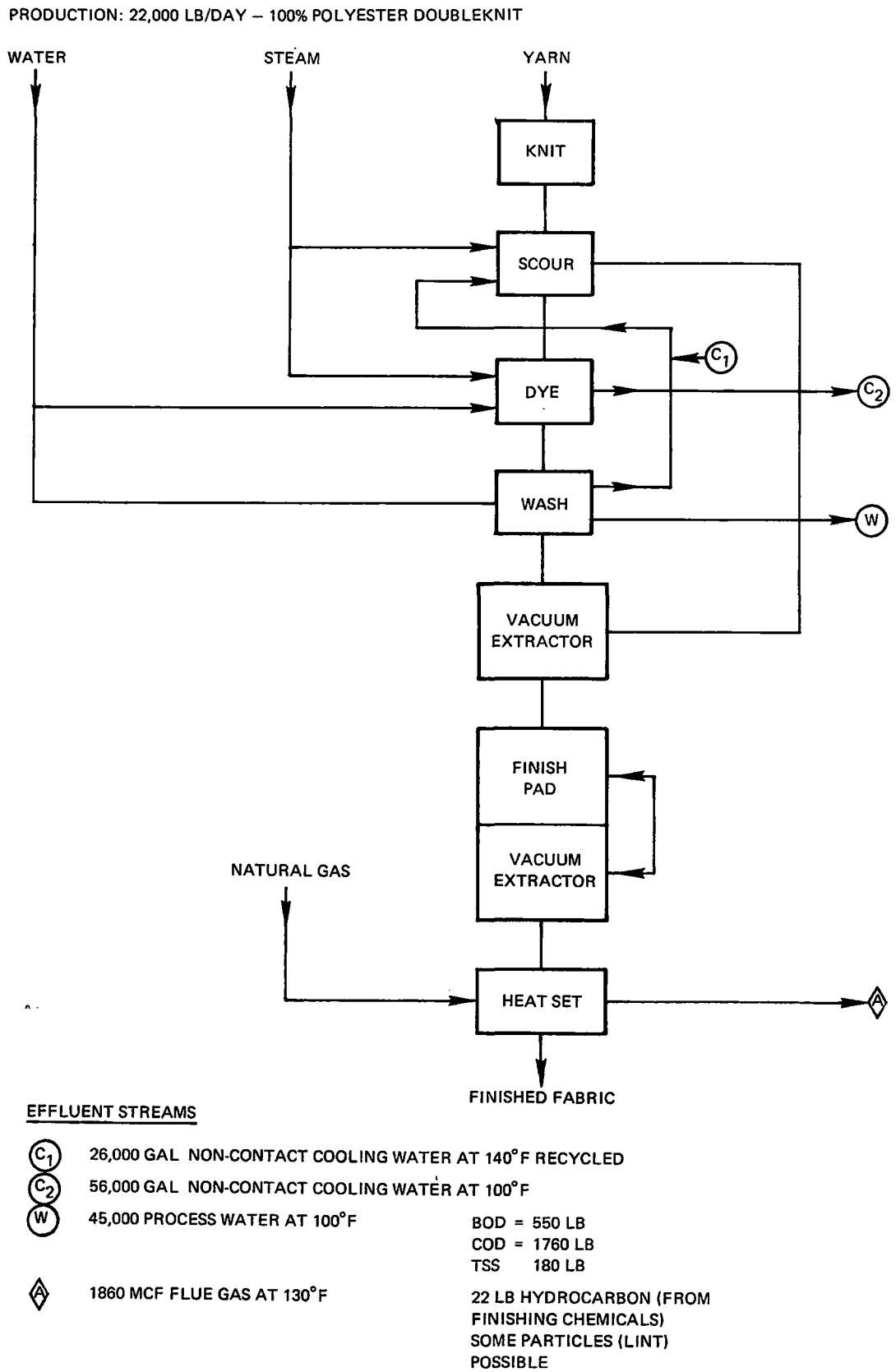

Figure IV-2. Flow Diagram: Integrated Knit Fabric Mill - Advanced Case

Steam is no longer required in the washing operation, and the natural gas requirements have been eliminated for the drying step and reduced for the tenterframe. (See energy section.)

These advanced operations do not change the pollution load in the effluent water appreciably, but they do reduce the total volume of water for treatment by over 65%, thereby effecting a considerable savings in biological treatment costs.

(3) Solvent Case

Solvent systems (Textile Industries, 1970; and Reinhart & Reid, 1973) are being used for scouring synthetic knit fabric prior to dyeing and finishing, and we can presume that solvent scouring is an accepted method of treatment for polyester doubleknits.

Solvent dyeing, on the other hand, is not a developed, practicable method even for synthetic fibers. The published literature describes many methods for solvent dyeing, but we were unable to obtain verification that any solvent dyeing is practiced commercially. Thus, for our evaluation of solvent processing, we have assumed (by analogy with previous processing) that a solvent dyeing machine and a solvent finishing machine will be roughly equivalent to the scouring machines now in use.

The solvent machines are purchased as packaged units, complete with solvent distillation equipment, vapor recovery, and tanks and pumps for segregation of solvents in a system. Three machines have been linked in series, as shown in Figure IV-3, to provide the process operations of scouring, dyeing, and finishing.* Fabric is first scoured to remove knitting oil then transferred to the second machine where it is dyed. Polyester is wetted by perchloroethylene, so we surmise that smaller amounts of auxiliary chemicals will be required to obtain adequate dye penetration. Then the fabric is transferred to a third machine to remove excess dye and, finally, steam stripped to remove residual perchloroethylene and give an essentially dry fabric for the final heat-set operation.

Periodically, contaminated solvent from each operation is transferred to the common solvent still and clean solvent is recovered by distillation with steam. The condensate from the finishing operation and the still represents the only waste water effluent that may contain traces of solvent and other chemicals. Knitting oils removed in scouring and chemicals from dyeing and finishing remain as residues in the solvent still and are removed as a solid waste for disposal (probably by incineration).

The process units are surrounded by an enclosure maintained at a negative pressure by exhausting air continuously. Exhausted air containing solvent vapors is passed through an activated carbon vapor recovery system before discharge to the atmosphere. Periodically, the activated carbon is stripped with steam and the solvent vapors are returned to the solvent recovery still.

*Equipment specifically designed for all-solvent processing might consist of a single machine equipped to carry out scouring, dyeing, and finishing in sequence.

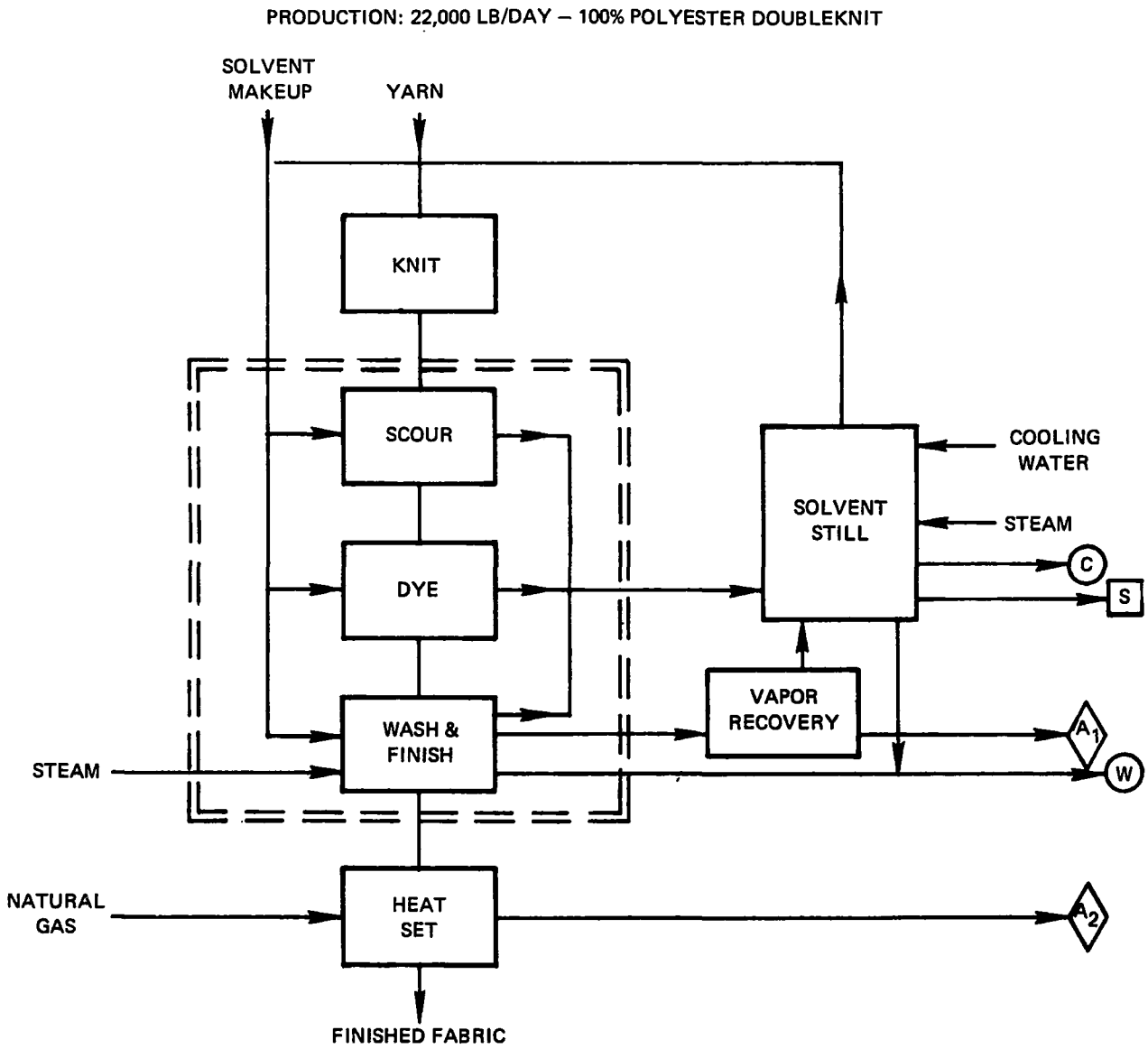

EFFLUENT STREAMS

- (C) 56,400 GAL NON-CONTACT COOLING WATER AT 104°F
- (W) 3,000 GAL PROCESS WATER (STEAM CONDENSATE) AT 80°F
  4 LB PERCHLORETHYLENE
- (A_1) 5,600 MCF AIR AT 85°F, CONTAINING 216 LB (80 PPM) PERCHLORETHYLENE
- (A_2) 1,860 MCF FLUE GAS AT 130°F, CONTAINING 22 LB ORGANICS (FROM FINISHING CHEMICALS, SOME PARTICULATE (LINT) POSSIBLE
- [S] 1,200 LB/DAY SOLID WASTE (KNITTING OIL, DYES AND FINISHING CHEMICALS)

Figure IV-3. Flow Diagram: Integrated Knit Fabric Mill - Solvent Case

According to manufacturers' data, solvent losses are about 3% of the fabric weight in present solvent-scouring systems. We believe that solvent losses will need to be reduced to less than 1% to meet air quality regulations. (American Periodic, Inc.)

b. Energy Requirements

Electrical energy is consumed in all the process operations in the form of mechanical energy to move the fabric through the process operations and to knit the yarn into fabric. Steam is used to heat the process operations that use water, and natural gas is used to dry the fabric. The combustion gases are applied directly to the fabric, so a clean fuel is required. Oil and coal are not substitutable fuels in this section of the process.

A summary of the energy use (base and advanced case) is provided in Table IV-4. Electrical energy consumption is about 4,000 kWh/day in the base case and this is increased 37% in the advanced case due to the substitution of the air/vacuum extractors which require significantly more mechanical energy. Steam use is 90 million Btu/day in the base case, but this is reduced by 50% with advanced processing. Natural gas is reduced by about 90% in the advanced case by optimization of the air flow, addition of an integrated heat-recovery unit on the heat-set tenterframe, and by elimination of natural gas from the drying step. Energy consumed "at the source" is reduced by 50% to 155 million Btu/day with advanced processing. To obtain this conversion we assume that 1 kWh is equivalent to 10,500 Btu; i.e., the heat requirement at the generating plant. Steam use has an overall efficiency of 50% and natural gas is assumed to have an efficiency of 100%, because it is consumed directly in the process unit. Electrical energy can be provided by coal-based generating plants, so a change from natural gas to electricity is a form of conservation.

Energy requirements for solvent processing are estimated to be 2740 kWh for electricity, 26.4 million Btu steam (much of the steam is required for solvent recovery), and 8.4 million Btu for natural gas. (These data were calculated by extrapolation of manufacturers' data for solvent scouring systems. Reinhart & Reid, 1973.) Calculated as energy consumed at the source with the same conversion factors as before, the total energy consumed is 54.8 million Btu, which is an 82% reduction from the base case.

c. Economics

(1) Common Cost Factors

There are a number of common cost factors that apply to knit and woven fabric operations.

Energy costs for natural gas ($1.85/MCF) have been based on the estimated prices paid in March 1975 by electric utilities. We have found that such prices are consistent with prices reported by SIC sector in the 1972 Census which were escalated by fuel cost indexes to 1975 prices. Cost of steam is ($4.07/1000 lb) based on use of a "package" unit fueled by oil. It should be recognized that most of the gas and electric utility industry is regulated, so the price prevalent in the first half of 1975 would not necessarily be

TABLE IV-4

SUMMARY OF ENERGY CONSUMPTION: KNIT FABRIC MILL
(Production, 22,000 lb/day)

	BASE CASE			ADVANCED CASE		
Process Operation	Electrical kWh	Steam 10^6 Btu	Natural Gas 10^6 Btu	Electrical kWh	Steam 10^6 Btu	Natural Gas 10^6 Btu
Scour	80	26.8	---	80	6.5	---
Dye	803	57.7	---	803	38.5	---
Wash	117	5.6	---	117	---	---
Dry	197	---	33.5	1800	---	---
Finish	2818	---	53.1	2709	---	8.4
Total	4015	90.1	86.6	5509	45.0	8.4

ENERGY CONSUMED AT THE SOURCE

	BASE CASE			ADVANCED CASE		
	Electrical	Steam	Natural Gas	Electrical	Steam	Natural Gas
	--10^6 Btu equiv.--			--10^6 Btu equiv.--		
	42.1	180.2	86.6	56.5	90.0	8.4
Total (rounded)		308.9			154.9	(50% reduction)

Assumptions: Electrical Energy, 1kWh = 2,646Kcal (10,500Btu). All electrical energy is consumed as mechanical energy.
Steam: 70% boiler efficiency; 20% distribution losses.
Natural Gas: direct combustion in the process 100% efficiency
Electrical energy consumed for knitting, air conditioning, and lighting, is excluded.

indicative of the costs that a new plant built upon a greenfield site would incur. Estimates indicate that the cost of natural gas for such new facilities may be similar to the price of oil. Similarly, the price of electric power might be higher than electric power costs in early 1975.

The cost of water suitable for cooling purposes has been based on $0.03 per thousand gallons. The cost of treated process water is based on $0.20 per thousand gallons.

We have used the wage rate published by the Bureau of Labor Statistics for March 1975 by industry sector to calculate labor costs. For the textile industry, this cost is $3.30/hr. Cost of raw materials are based upon typical costs in the first half of 1975. Texturized polyester for knit fabrics is priced at $1.10/lb and polyester is priced at $0.51/lb and cotton at $0.55/lb for woven fabrics.

The costs of maintenance, labor, and materials have been taken as 2.5% of initial investment cost. Labor overhead has been taken at 25% of labor wages. This would account for fringe benefits, such as vacations, holidays, and sick pay, in addition to overtime pay.

Under the category of fixed costs we have shown plant overhead at 100% of production labor; it is textile industry practice to include production supervisors and most other personnel in this area. Local taxes and insurance are taken as 1.5% of the initial capital investment.

To distribute the cost of the capital assets (less salvage value, if any), over the estimated life of the facility, annual depreciation is calculated on a straight-line basis over 12 years for the textile industry. In addition to being used often in feasibility studies, this depreciation schedule is consistent with previously published IRS guidelines (Davidson 1970; Perry, et al., 1969).

We show an annual allowance for "return on investment" (pre-tax) amounting to 20% of initial capital investment. We have segregated the pollution costs, except where pollution control equipment is considered to be a part of the plant, such as in solvent processing of knit fabric, where we included those in the plant operating costs. In determining pollution control costs, we followed the same methodology for the variable and fixed costs. We recognize that this interpretation may be subject to question, because of the different methods of financing pollution control equipment.

(2) Integrated Knit Mill

A summary of production economics for an integrated knit mill is shown in Table IV-5 for the base case and in Table IV-6 for the advanced case. It is assumed that the annual production is based on 250 stream days (5.5 million lb/year), i.e., a 5-day week with 3-shift operation. Capital investment is based on mid-1975 estimates and does not contain any inflation factor. The fixed investment for a new grassroots plant, exclusive of pollution control costs, is estimated at $14.1 million for the base case and $14.6 million for advanced processing. The raw materials used are polyester fiber plus a variety of chemicals for fabric, preparation, dyeing and finishing. Energy use consists of natural gas, electric power, and steam. In the latter case, we assumed that steam is provided from a central boiler facility which also provides steam for space heating and other purposes. The fuel used for steam raising has previously been natural gas in many mills, because that was the cheapest and most convenient fuel available. However, in most mills it has been supplemented, at least partially, by oil, and in constructing these economic profiles we have assumed that all steam raising employs oil as a fuel source. Because of the relatively small energy requirements of textile mills, even large integrated mills, it seems unlikely that coal will be used as a fuel for steam production instead of oil, even if significant further price increases occur. Similarly, it is very unlikely that natural gas will be completely supplemented as an energy source, because it is essential with any of the equipment presently available for fabric drying and heat setting operations. Even a substantial increase in natural gas prices is unlikely to change this picture.

The costs of raw materials, labor, and chemicals are not affected by a change to advanced processing. Fixed costs increase slightly because of higher investment in the advanced mill. Energy costs are reduced by about 49%, from $144,000 per year to $74,000 per year, but since process energy costs represent a small amount of the total annual cost (~ 1%), final costs are hardly affected ($2.45/lb vs. $2.44/lb is certainly within the accuracy of the estimates).

Pollution control costs (derived in Appendix A) must be added to manufacturing costs. Wastewater treatment is biological for both base and advanced case, as specified by the Effluent Limitations Guidelines. (EPA,

TABLE IV-5

CAPTIAL AND OPERATING COSTS
INTEGRATED KNIT FABRIC MILL - BASE CASE

Annual Production: 5.5×10^6 lb/yr

Fixed Investment: $14.1 million

Location: Southeast

Stream Days/Yr: 250 days

	Units Used in Costing or Annual Cost Basis	$/Unit	Units Consumed per lb of Product	Annual Costs ($000)	$/lb of Product
VARIABLE COSTS					
Raw Materials					
• Polyester Fiber	lb	1.10	1.03	6231	1.13
Energy					
• Natural Gas	MCF	1.85	0.0038	38	0.007
• Steam	10^3 lb	4.07	0.004	87	0.016
• Electric Power	kWh	0.019	0.018	19	0.0003
Process Water	10^3 gal	0.20	0.0062	6.8	0.001
Cooling Water	10^3 gal	0.03	0.0046	0.9	0.0001
Direct Operating Labor	hr	3.30	0.11	935	0.170
Labor Overhead	25% labor			235	0.043
Maintenance	2.5% C.I.			352	0.064
Chemicals	lb	0.48	0.39	1025	0.186
TOTAL VARIABLE COSTS				8931	1.623
FIXED COSTS					
Plant Overhead	100% labor			935	0.170
Depreciation	8.33% C.I.			1.175	0.214
Taxes & Insurance	1.5% C.I.			211	0.039
TOTAL FIXED COSTS				2321	0.422
TOTAL PRODUCTION COSTS				11250	2.045
Return on Investment 20%				2250	0.409
TOTAL (ROUNDED)				13500	2.45

TABLE IV-6

CAPITAL AND OPERATING COSTS
INTEGRATED KNIT FABRIC MILL - ADVANCED CASE

Annual Production: 5.5×10^6 lb/yr

Fixed Investment: $14.6 million

Location: Southeast

Stream Days/Yr: 250 days

	Units Used in Costing or Annual Cost Basis	$/Unit	Units Consumed per lb of Product	Annual Costs ($000)	$/lb of Product
VARIABLE COSTS					
Raw Materials					
• Poylester Fiber	lb	1.10	1.03	6231	1.13
Energy					
• Natural Gas	MCF	1.85	0.00037	4	0.0007
• Steam	10^3 lb	4.07	0.0019	43	0.0079
• Electric Power	kWh	0.019	0.25	26	0.0048
Process Water	10^3 gal	0.20	0.0046	5.1	0.0009
Cooling Water	10^3 gal	0.03	---	---	
Direct Operating Labor	hr	3.30	0.11	935	0.170
Labor Overhead	25% Labor			235	0.043
Maintenance	2.5% C.I.			365	0.065
Chemicals	lb	0.48	0.39	1025	0.186
TOTAL VARIABLE COSTS				8869	1.610
FIXED COSTS					
Plant Overhead	100% Labor			935	0.170
Depreciation	8.33% C.I.			1.217	0.221
Taxes & Insurance	1.5% C.I.			219	0.039
TOTAL FIXED COSTS				2371	0.430
TOTAL PRODUCTION COSTS				11240	2.039
Return on Investment 20%				2248	0.408
TOTAL (ROUNDED)				13490	2.44

1974a) These costs are summarized in Table IV-7 and show that pollution control costs would add 2.5¢/lb in the base case and 1.5¢/lb in the advanced case. Thus, there appears to be a total savings of 2¢/lb (production costs and pollution control costs) or an annual saving of $110,000.

TABLE IV-7

WATER POLLUTION CONTROL COSTS FOR INTEGRATED KNIT FABRIC MILL

	Base Line Process (thousand $)	Advanced Process (thousand $)
Capital Investment	239	171
Variable Costs	49	34
Fixed Costs	86	51
Total Annual Cost	135	85
¢/lb Fabric	2.5	1.5

Basis: Production 22,000 lb/day, 250 days per year
Hydraulic Load, Base Case 136,000 gpd
Advanced Case 45,000 gpd

Production costs for the solvent case are shown in Table IV-8. A higher investment of $15.5 million is required than for the base case, but the total manufacturing cost is lower, at $2.33/lb. Thus, there is a potential savings of 12¢/lb. Energy costs are lower than in the base case or the advanced case, but steam is still required for solvent recovery. For the solvent example, pollution control costs are an integral part of the manufacturing costs based on the manufacturers' data; however, we have some reservations and feel that for an all-solvent system of the type proposed, further investigation is necessary.

2. Integrated Woven Fabric Mill

a. Process Description

For our example of an integrated woven fabric mill, we assumed a mill with production of 66,000 lb/day of a 50/50 polyester/cotton fabric. Some change in the ratios of polyester to cotton would not affect the sequence and type of processing operations materially, except that with lower percentages of cotton, mercerizing would probably be eliminated.

(1) Base Case

Woven fabrics require a much longer sequence of processing operation than knit fabrics. Consequently, the process diagram becomes quite complex and it is convenient to divide it into two sections. Figures IV-4 and IV-5 show fabric preparation, and fabric dyeing and finishing, respectively. This is a logical separation, because in most mills there is an interruption in

TABLE IV-8

CAPITAL AND OPERATING COSTS/
INTEGRATED KNIT FABRIC MILL - SOLVENT CASE

Annual Production: 5.5×10^6 lb/yr

Location: Southeast

Fixed Investment: $15.5 million

Stream Days/Yr: 250 days

	Units Used in Costing or Annual Cost Basis	$/Unit	Units Consumed per lb of Product	Annual Costs ($000)	$/lb of Product
VARIABLE COSTS					
Raw Materials					
• Polyester Fiber	lb	1.10	1.03	6231	1.13
Energy					
• Natural Gas	MCF	1.85	0.00037	4	0.0007
• Steam	10^3 lb	4.07	0.0011	25	0.0045
• Electric Power	kWh	0.019	0.12	13	0.0024
Process Water	10^3 gal	0.20			
Cooling Water	10^5 gal	0.03	0.0026	1	0.0001
Director Operating Labor	hr.	3.3	0.11	935	0.170
Labor Overhead	25% labor			235	0.043
Maintenance	2.5% C.I.			387	0.071
Chemicals	lb	0.68	0.1	375	0.068
TOTAL VARIABLE COSTS				8280	1.505
FIXED COSTS					
Plant Overhead	100% labor			935	0.170
Depreciation	8.33% C.I.			1291	0.235
Taxes & Insurance	1.5% C.I.			232	0.042
TOTAL FIXED COSTS				2458	0.447
TOTAL PRODUCTION COSTS				10738	1.951
Return on Investment 20%				2148	0.391
TOTAL (ROUNDED)				12810	2.33

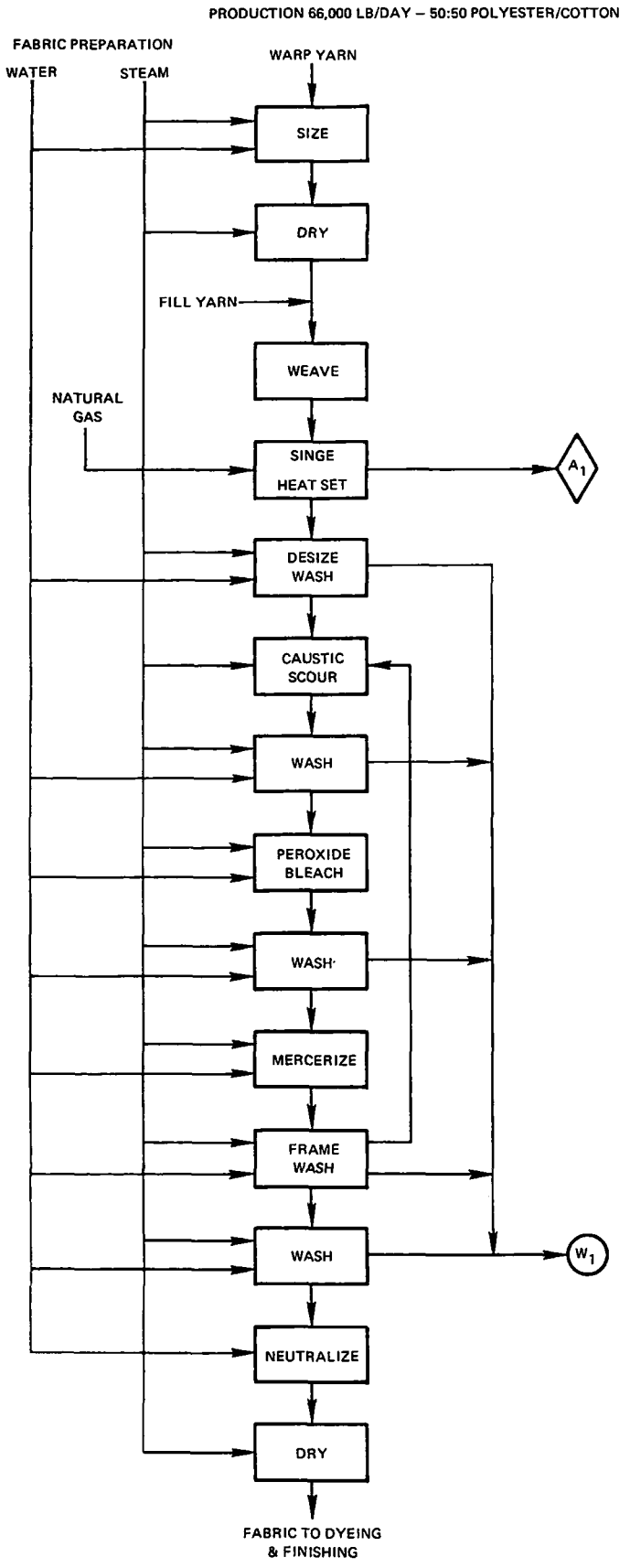

Figure IV-4. Flow Diagram: Integrated Woven Fabric Mill - Base Case

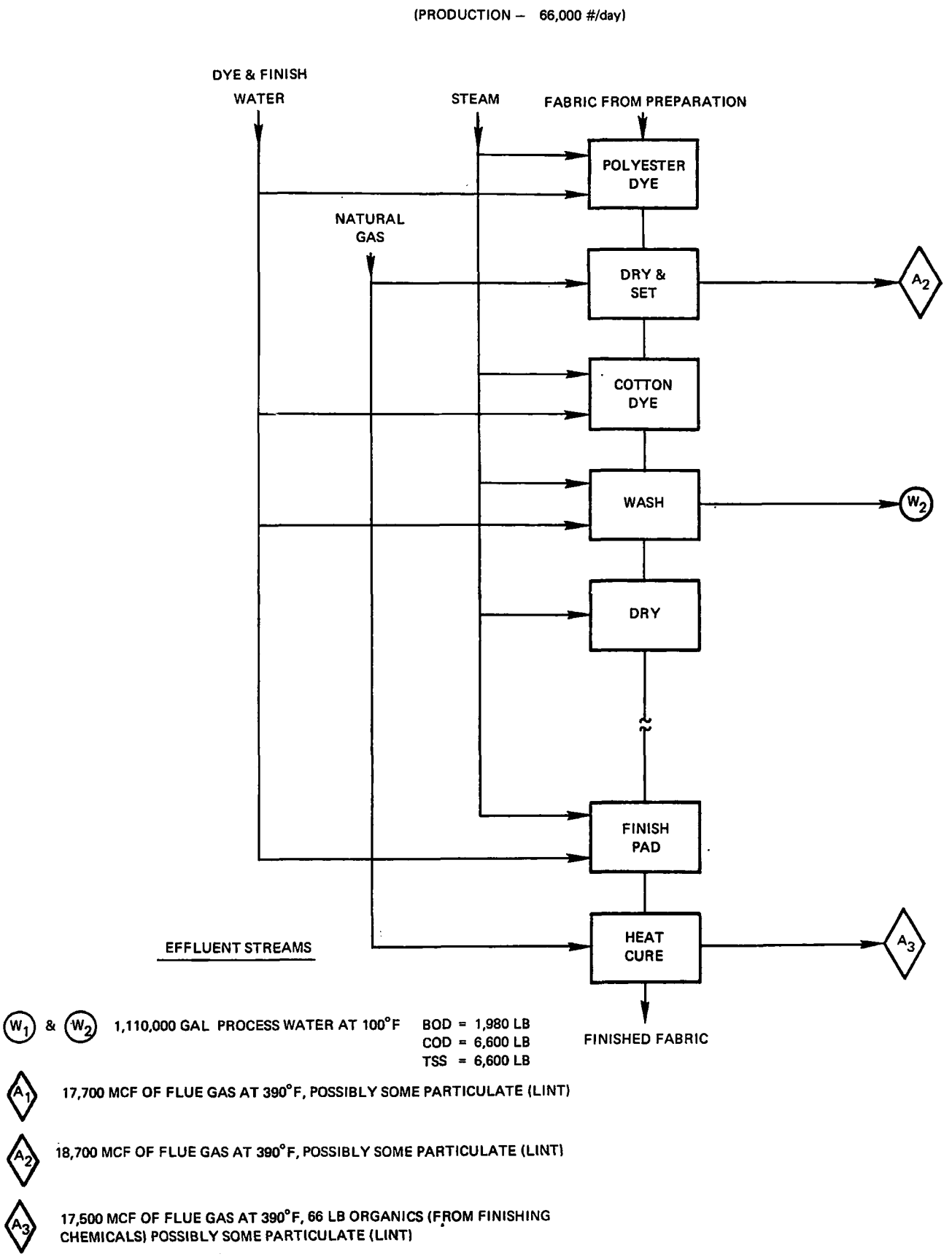

Figure IV-5. Flow Diagram: Integrated Woven Fabric Mill - Base Case

processing between the two. The first operation is sizing (also called slashing) of the warp yarn and then drying in preparation for weaving. We have assumed the use of 100% PVA size, which has been demonstrated in industry, although much of present-day commercial operation still uses starch size, or a mixture of starch and synthetic sizes.

After weaving, the cloth is singed - by direct contact with a natural gas flame, which removes extended fiber ends protruding from the fabric surface - and is then heat set. The cloth is desized by washing with detergent solution, followed by scouring with caustic, bleaching with hydrogen peroxide, and mercerizing with a stronger caustic solution. Each of these steps has an intermediate wash for the fabric to remove residual chemicals before proceeding to the next operation. The first wash after the mercerizer consists of diluted but relatively clean caustic solution, which is recycled to the caustic scour operation. The fabric is then neutralized and dried to complete the fabric preparation steps. Process water is used in all steps (except the drying steps and weaving operations) and the effluents from the washing steps are combined for treatment in a biological treatment system. Steam is used in most of the processing steps, including the drying steps which take place on dry cans. Natural gas is used in the singe and heat-set operations, resulting in a relatively pollution-free flue gas.

After preparation, the sequence of operations (Figure IV-5) is to dye the polyester using a thermosol pad, followed by drying and heat setting. A reactive dye is next used to dye the cotton, followed by a washing step and drying over dry cans. Finish is then applied by padding, followed by the final heat-set operation in a tenter frame.

The dry and heat-set operations, and the final heat cure, require natural gas and result in flue gas effluents to the atmosphere. The washing step after the cotton dyeing produces a wastewater effluent, which is combined with the wastewater effluents from fabric preparation and sent to the biological treatment system. Wastewater from woven-fabric finishing mills contains natural fiber impurities and processing chemicals from desizing, scouring, mercerizing, bleaching, dyeing, and finishing.

The desizing process is a major source of BOD and COD. Desizing waste is also high in dissolved and suspended solids.

Wastewater from scouring and rinsing will contain natural and processing impurities removed by hot alkaline detergents or soap solution used in scouring. The waste will contain significant levels of BOD, dissolved solids, oil and grease, and color.

In mercerizing, the caustic soda absorbed by the cloth is recovered and reused at some large mills. The mercerizing rinse waters are alkaline and high in dissolved solids. Hydrogen peroxide is generally used for bleaching. This process contributes little to the waste load; however, the dissolved solids concentration may be high.

Waste concentrations from dyeing are dependent on the dye and the various other chemicals used. In addition to color, the waste can contain high concentrations of BOD and dissolved solids.

Finishing chemicals are applied by padding, followed by drying and curing. The chemicals used are diverse, but only small amounts of them will enter the wastewater, as the intent is to capture a very high fraction of the active agent on the cloth.

The combined waste from woven fabric finishing mills will generally contain 250 to 850 mg/l BOD, 45 to 475 mg/l TSS, 425 to 1440 mg/l COD.

(2) Advanced Case

The advanced processing example shown in Figures IV-6 and IV-7 necessarily uses a very similar sequence of process operations. The most important process change is the inclusion of a PVA recovery loop, which takes the effluent stream from the desizing step and (after ultrafiltration) recycles the concentrated PVA solution back to sizing and the hot water back to the desizing operation. An additional recycle loop has been added to the washing steps, and overall water use has been reduced to levels consistant with the high-efficiency equipment. After examination of manufacturers' data, we concluded that an air/vacuum extractor for drying operations does not offer a significant advantage for a 50/50 polyester/cotton fabric. As the percentage of polyester increases, it becomes more effective and would provide further energy conservation.

A heat-recovery unit has been integrated with all three tenterframes; in heat-set operations during preparation, after the polyester dyeing, and for the final heat set of the finish.

b. Energy Consumption

A summary of energy consumption is provided in Table IV-9. The total electrical energy consumption in the base case is about 19,000 kW and this has been reduced in the advanced case by about 50%. Steam has been reduced to 476 million Btu (a decrease of 55%) and natural gas to 146 million Btu (a decrease of 70%). In terms of energy consumed at the source, the total reduction is 57%. The decrease in electrical energy has been achieved by a reduction in the air-moving requirements to the various tenterframes, although this is partially compensated by the need for additional electrical energy to power the PVA recovery system. Steam requirements have been reduced by the reduction in overall process water use and the recycling of the relatively clean washwaters to recover their heat values. An advanced type of finish is also assumed, which requires less water in its application and, therefore, a reduced heat load on the final heat-cure step. Natural gas requirements for the tenterframe operations have been considerably reduced by optimization of the air throughput and the addition of a heat-recovery loop to the system, to recover waste heat from the flue gases.

c. Economics

A summary of production costs for the base case and advanced processing of woven fabrics is given in Tables IV-10 and IV-11. The raw materials used, polyester fiber and cotton, are the same in both cases. Annual energy costs have been reduced by about 59%, from $1.33 million to $540,000, and the mix

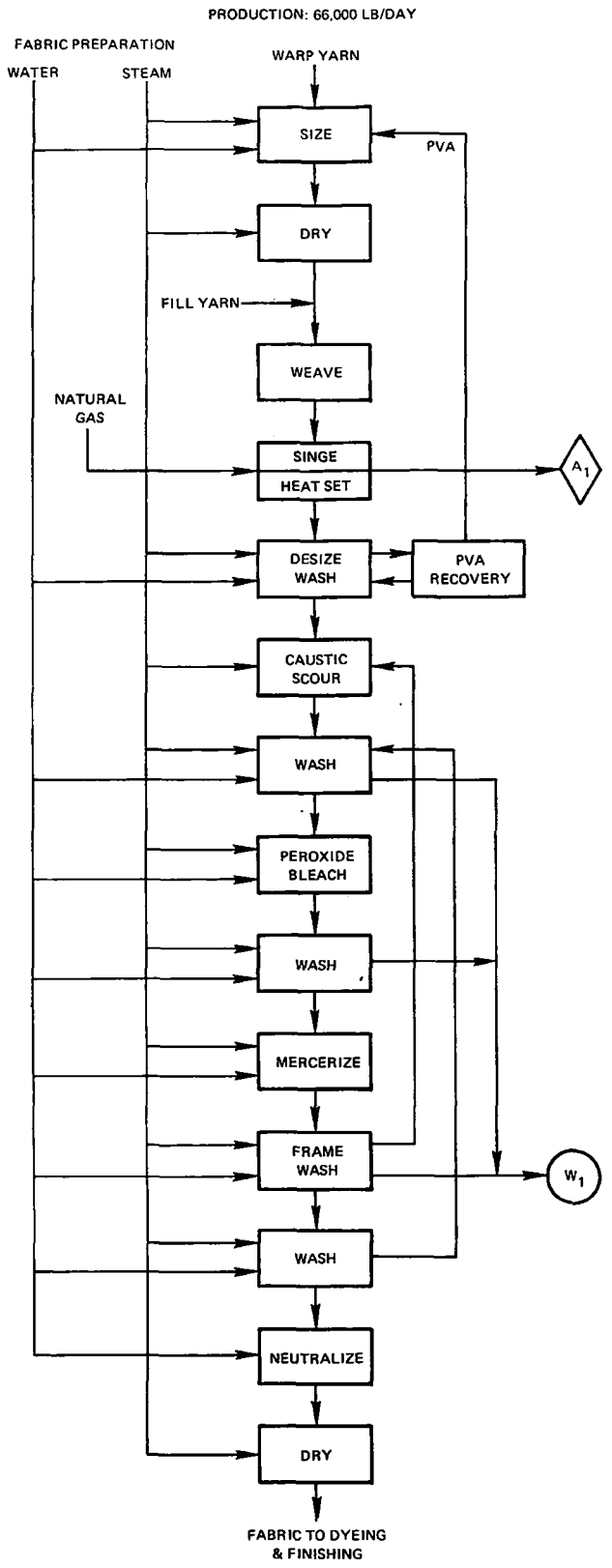

Figure IV-6. Flow Diagram: Integrated Woven Fabric Mill - Advanced Case

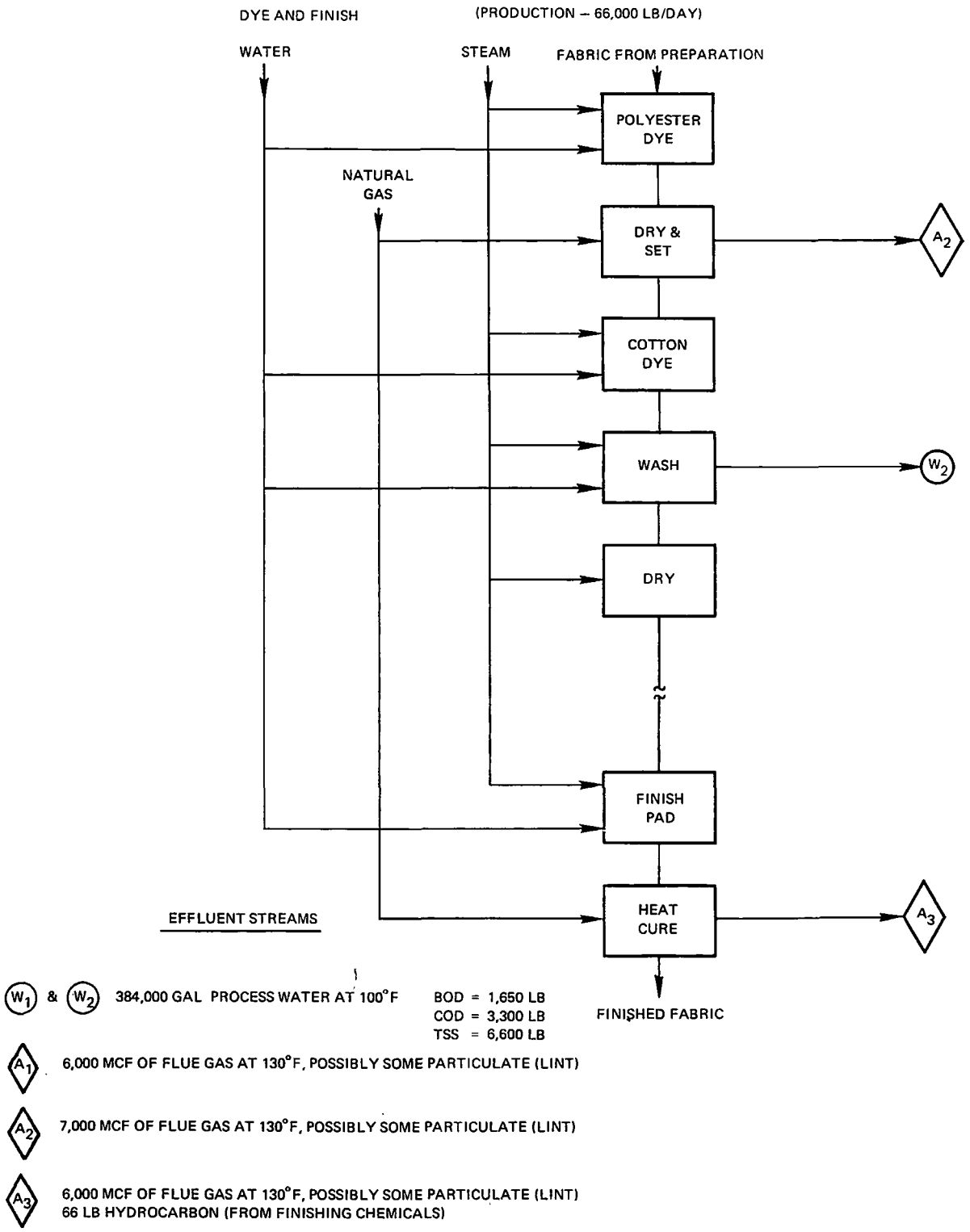

Figure IV-7. Flow Diagram: Integrated Woven Fabric Mill - Advanced Case

TABLE IV-9

SUMMARY OF ENERGY CONSUMPTION - WOVEN FABRIC MILL
(Production, 66,000 lb/day)

ENERGY CONSUMED IN THE PROCESS

	BASE CASE			ADVANCED CASE		
	Electrical kWh	Steam 10^6Btu	Natural Gas 10^6Btu	Electrical kWh	Steam 10^6Btu	Natural Gas 10^6Btu
Preparation	6539	711	139	5644	366	31
Dyeing	6617	320	210	2268	110	101
Finishing	5778	30	119	1929	---	14
Total	18934	1060	468	9841	476	146

ENERGY CONSUMED AT SOURCE

	Electrical	Steam	Nat'l Gas	Electrical	Steam	Nat'l Gas	
	-- 10^6Btu equiv.--			-- 10^6Btu equiv --			
	199	2120	468	103	952	146	
Total (rounded)		2790			1200		(57% reduction)

Assumptions: Electrical Energy 1 kWh = 10,500 Btu. All electrical energy is consumed as mechanical energy.
Steam: 70% boiler efficiency, 20% distribution losses.
Natural Gas: Direct combustion, in the process 100% efficiency
Electrical energy consumed for weaving, air conditioning, and lighting is excluded.

TABLE IV-10

CAPITAL AND OPERATING COSTS
INTEGRATED WOVEN FABRIC MILL - BASE CASE

Annual Production: 16.5 million lb/yr

Fixed Investment: $92.6 million

Location: Southeast

Stream Days/Yr: 250 days

	Units Used in Costing or Annual Cost Basis	$/Unit	Units Consumed per lb of Product	Annual Costs ($000)	$/lb of Product
VARIABLE COSTS					
Raw Materials					
• Polyester Fiber	lb	0.51	0.54	4582	0.278
• Cotton	lb	0.55	0.54	4942	0.300
Energy					
• Natural Gas	MCF	1.85	0.0068	209.2	0.0127
• Steam	10^3 lb	4.07	0.015	1035	0.063
• Electric Power	kWh	0.019	0.29	89.9	0.005
Process Water	10^3 gal	0.20	0.015	52	0.003
Cooling Water	10^3 gal	0.03			
Direct Operating Labor	hr	3.3	0.20	5016	0.304
Labor Overhead	25% labor			1254	0.076
Maintenance	2.5% C.I.			2412	0.146
PVA Size	lb	0.60	0.05	495	0.030
Other Chemicals	lb	0.36	0.73	4402.5	0.267
TOTAL VARIABLE COSTS				24489	1.484
FIXED COSTS					
Plant Overhead	100% labor			5016	0.304
Depreciation	8.33% C.I.			7713	0.467
Taxes & Insurance	1.5% C.I.			1389	0.084
TOTAL FIXED COSTS				14118	0.856
TOTAL PRODUCTION COSTS				38607	2.340
Return on Investment 20%				7721	0.468
TOTAL (ROUNDED)				46330	2.81

TABLE IV-11

CAPITAL AND OPERATING COSTS
INTEGRATED WOVEN FABRIC MILL - ADVANCED CASE

Location: Southeast

Annual Production: 16.5 million lb/yr

Stream Days/Yr: 250 days

Fixed Investment: $93.9 million

	Units Used in Costing or Annual Cost Basis	$/Unit	Units Consumed per lb. of Product	Annual Costs ($000)	$/lb of Product
VARIABLE COSTS					
Raw Materials					
• Polyester Fiber	lb	0.51	0.54	4582	0.278
• Cotton	lb	0.55	0.54	4942	0.300
Energy					
• Natural Gas	MCF	1.85	0.0023	69.1	0.004
• Steam	10^3 lb	4.07	0.0064	429.2	0.026
• Electric Power	kWh	0.019	0.15	46.5	0.003
Process Water	10^3 gal	0.20	0.0056	18.4	0.001
Cooling Water	10^3 gal	0.03			
Direct Operating Labor	hr	3.3	0.20	5016	0.304
Labor Overhead	25% labor			1254	0.076
Maintenance	1.5% C.I.			2347	0.142
PVA Size	lb	0.60	0.005	49.5	0.003
Other Chemicals	lb	0.41	0.73	4402	0.266
TOTAL VARIABLE COSTS				23156	1.403
FIXED COSTS					
Plant Overhead	100% labor			5016	0.304
Dpreciation	8.33% C.I.			7822	0.474
Taxes & Insurance	1.5% C.I.			1408	0.086
TOTAL FIXED COSTS				14246	0.864
TOTAL PRODUCTION COSTS				37402	2.267
Return on Investment 20%				7480	0.454
TOTAL (ROUNDED)				44880	2.72

has been changed away from natural gas. An additional $450,000 is saved by the recovery of the PVA size, which eliminates 90% of annual PVA costs. Because the capital investment for installation of the PVA recovery system is somewhat less than $1 million, the investment for this section of the plant alone is attractive.

The fixed investment for an annual production of 16.5 million lb is estimated to be $92.6 million in the base case and $93.9 million in the advanced case. (The difference is within the accuracy of the estimates, but we would anticipate a high investment, because the PVA recovery system alone costs close to $1 million.)

We also do not anticipate any changes in labor requirements for advanced processing, so the total fixed costs in both cases are practically the same. As a result of the lower variable costs, the overall total cost of woven fabric production is reduced from $2.81/lb to $2.72/lb from the use of advanced processing.

Water pollution control costs (derived in Appendix A) are based on biological treatment as specified in the Effluent Guidelines document. (EPA, 1974a) These costs are summarized in Table IV-12, and show that pollution control would add 2.6¢/lb to the base line costs and 1.8¢/lb to advanced processing costs.

TABLE IV-12

WATER POLLUTION CONTROL COSTS FOR INTEGRATED WOVEN FABRIC MILL

	Base Line Process (thousand $)	Advanced Process (thousand $)
Capital Investment	714	543
Variable Costs	216	133
Fixed Costs	213	162
Total Annual Cost	429	295
¢/lb Fabric	2.6	1.8

Basis: Production 66,000 lb/day, 250 days per year
Hydraulic Load-Base Case 1,110,000 gpd
Advanced Case 385,000 gpd

V. IMPLICATIONS OF POTENTIAL PROCESS CHANGES

A. INTEGRATED KNIT FABRIC MILL

Adoption of advanced processing for an integrated knit mill, in spite of substantially lower energy costs, does not show a marked reduction in overall fabric production costs. Therefore, investment in a new plant cannot be justified solely on economic grounds. However, if it is necessary to replace processing equipment or install new capacity (or if natural gas is not available), then the adoption of advanced processing looks attractive, because the incrementally higher investment is recouped by lower operating costs and gives protection against future increases in fuel and water costs. The reduced water use also reduces pollution control costs and, therefore, stabilizes the process economics in terms of future, more stringent, pollution control requirements.

Because overall BOD loads are not reduced appreciably, the pollutant concentration in the effluent to the biological waste treatment plant will be higher, but not to the extent that they will adversely affect treatment plant operation. The quantity of dissolved salts in the effluent will be decreased, because salts tend to be added in proportion to the water used. Although some toxic chemicals are used in textile mills - e.g., phenolic compounds, benzidine-type dyes, chromium compounds - we do not consider their use essential for the majority of textile mills. Thus, we have assumed that such chemicals are not used in either base case or advanced processing.

Natural gas is universally used as the fuel for heat-set tenterframes, because the flue gases come into contact with the fabric. Direct heating with oil cannot be used in present equipment, because sulfur compounds and other impurities would affect product quality. Indirect heating of tenterframes by superheated steam or heat-transfer fluids appears feasible, but the equipment is not commercially available. Direct heating with natural gas allows continuous combustion of lint particles which are removed from the fabric. In an indirectly heated system, these particulates would tend to build up in the unit and reduce operating efficiency. Other penalties of an indirect heating system would be decreased efficiency, higher capital cost, and higher fuel cost (for fuel oil, because coal would be impractical for most textile mills). In summary, we believe that the textile industry will continue to need natural gas for these operations even with gas at a premium price.

In terms of incremental investment, an increase of $500,000 to achieve advanced processing is recouped to the extent of $100,000 annually from reduced total cost, which provides an attractive payback period of less than five years. All the technology is available and has been commercially demonstrated at some point in the textile industry.

The technology for all-solvent processing is not yet commercially demonstrated, although equipment is available and certain operations (such as solvent scouring) are well demonstrated and commercially used in certain parts of the knit-fabric industry for a variety of synthetic fabrics. However, dyes for solvent dyeing have not been sufficiently well developed to be widely acceptable, and though much laboratory data is available, solvent dyeing is not practiced on a commercial scale. Assuming that all-solvent dyeing can be established, then solvent washing would appear to be possible, leading to an all-solvent system. This would virtually eliminate the process water effluent which needs biological treatment, but would instead produce a potential air pollution problem from the escape of solvent and require appropriate solvent recovery systems. However, such systems are within the state of the art and are sold as packaged units with the solvent-scouring systems presently in use. Because of the present concern over chlorinated solvents, some additional recovery may be required to meet future, more stringent, air pollution control regulations. An all-solvent system would also generate a minor proportion of solid waste for disposal.

Overall costs for the solvent case are quite attractive ($2.33/lb versus $2.45/lb for the base case). There also is a further savings in energy costs over that achieved in advanced processing, but the incremental investment of $1.1 million is only offset by a reduction of about $30,000 in utility costs. However, we believe that there is a potential further reduction of up to $650,000 in chemical costs, though the technology has yet to be demonstrated. Air pollution control costs are carried as part of overall production costs, because solvent distillation and recovery units are sold as a package with the process equipment.

B. INTEGRATED WOVEN FABRIC MILL

The adoption of advanced processing for woven fabrics shows a significant lowering of overall production costs compared to the base line case (from $2.81 to $2.72). Adoption of advanced processing is likely to occur where new or replacement capacity is required, because the incremental savings over new capacity using base case technology are substantial. (An incremental investment of $1.3 million produces annual savings of $800,000.) The PVA recovery loop shows substantial economic savings from the reuse of the PVA size, and this is being installed in existing mills. However, at present, the technology is only applicable where PVA size is being used exclusively, and it must still be demonstrated that PVA size can be applied to the wide variety of fibers and products being processed in the textile industry.

The reduced water use for advanced processing will reduce treatment plant size and costs. PVA recovery and reduced chemicals use will also reduce pollution loads. Increased pollutant concentrations will not be sufficient to cause problems in biological treatment.

REFERENCES

American Permac Inc., "Finishing in Solvent," Manufacturers Data, Garden City, N. Y.

C.A. Brandon, A. El Nasher and J.P. Porter, "Hyperfiltration Pilot Plant For Textile Wastewater Renovation," Am. Dyestuff Rep., p. 20, Oct. 1975.

Byland, H.R., Capponi, M., Gerber, H., and Somm, F., "Application of Dyeing Principles from Organic Solvents in Continuous Dyeing," JAATCC, 3, 33, 1971.

Jesse G. Camp, Jr., Gaston County Dyeing Machine Co., personal communication.

U.S. Dept. of Commerce, U.S. Industrial Outlook 1975, U.S. Government Printing Office, Washington, D.C., 1974.

U.S. Dept. of Commerce, U.S. Industrial Outlook 1976, U.S. Government Printing Office, Washington, D.C., 1975.

U.S. Environmental Protection Agency, Textile Mills (Development Document for Effluent Limitations Guidelines and New Source Performance Standards) EPA 440/1-74-022a, June 1974a.

U.S. Environmental Protection Agency, "In-Plant Control of Pollution," EPA 625/3-74-004, October 1974b.

U.S. Environmental Protection Agency, "Treatment and Reuse of Textile Dyehouse Wastewaters Using Reverse Osmosis," EPA Demonstration Project 800929 to LaFrance Industries, S.C.

Gaston County Dyeing Machine Co., "The Reuse of Polyvinyl Alcohol in Textile Processing," presented at Clemson, S.C., July 30, 1974a.

Gaston County Dyeing Machine Co., The Gaston County Alternator Washer, Manufacturers Brochure, Stanley, N.C., brochure a.

Gaston County Dyeing Machine Co., The Gaston County H-Series Jet Dyer, Stanley, N.C., brochure b.

Gaston County Dyeing Machine Co., personal communication.

Hofstetter, H.H., "Solvents in Textile Processing," Textile Industries, p. 53, June 1970.

Institute of Textile Technology and Hydroscience, Inc., report for the American Textile Manufacturers Institute, Jan. 15, 1973.

Lockewood Green Engineers, Inc., Textile Industry, Technology and Costs of Wastewater Control, prepared for National Commission on Water Quality, 1975.

Reinhart, R.M., and Reid, J.D., "Solvent Technology Update," AATCC Symposium, Atlanta, January 1973.

Willard, J.J., "Solvent Processing in the Textile Industry," p. 43, AATCC Symposium.

Zeiffer, D., Gaston County Dyeing Machine Co., "Extraction Capability and Economics of Gaston County Vacuum Roll Extractor," paper.

1972 Census of Manufactures, Textile Products.

International Textile Machinery, "Continued Evolution in Dyeing and Finishing," p. 125, 1975.

"Solvent Dyeing of Cellulosic Fibers," JAATCC 5, 60, March 1973.

Textile Industries, "Solvent and Hot Melt Slashing," p. 30, January 1973.

Textile Industries, "Stevens Reclaims PVA for Warp Sizing" Staff Report, p. 47, October 1974.

Textile Industries, "Machinery Designed to Save Energy," 197, May 1975.

Textile Industries, "Progress in Radiation Processing," A Staff Report, p. 83, November 1975.

Textile Industries, Jawtex unit descriptor, p. 91, Dec. 1975.

Textile Industries, Kleinewefers "100 plus" description, p. 88, Dec. 1975.

"Textile Industry and the Environment," Washington, D.C., May 1973.

Textile World, "Whitaker's Vacuum Impregnator Scores," p. 105, December 1972.

APPENDIX A

CURRENT POLLUTION PROBLEMS AND EFFECTIVENESS OF AVAILABLE POLLUTION CONTROL TECHNOLOGY

The textile industry is involved in many different kinds of processing. This report has defined energy-conserving process options in terms of an integrated knit fabric mill and an integrated woven fabric mill. An integrated mill is a combination of a greige fabric mill and a finishing mill, so in terms of pollution control technology this includes three categories defined in the Effluent Guidelines Limitations:

Category 3 - Dry Processing

Category 4 - Woven Fabric Finishing

Category 5 - Knit Fabric Finishing

Pollution control problems in the textile industry are concentrated in the wastewater effluent. Air pollution problems and solid waste disposal problems are minimal. Therefore, major emphasis has been given to water-related environmental problems.

I. WATER-RELATED ENVIRONMENTAL PROBLEMS

a. Wastewater Sources

Wastes at greige mills constitute residues in size boxes at the end of a day or a week, and water used for cleanup. The volumes of textile wastes in a greige mill are small. Significant amounts of cooling water used in a greige mill may not require waste treatment. Wastes associated with finishing woven goods result from removal of foreign material during the cleaning and bleaching of cotton polyester blends and from the various chemicals used in finishing the fabric.

(1) Desizing

Polyvinyl alcohol (the size agent chosen for the base line case), is removable with a detergent/water solution. Desizing these materials will thus contribute suspended solids, dissolved solids and oil and grease. Desizing may contribute 50% or more of the total waste solids in a woven goods finishing mill. Polyvinyl alcohol has been considered only slowly biodegradable, and,

as such, is a major source of COD. Recent studies performed by producers of polyvinyl alcohol, in cooperation with textile mills, indicate that biological waste systems will develop organisms acclimated to polyvinyl alcohol, and when this has occurred, biodegradation is relatively rapid and complete.

(2) Scouring

The major chemical used in scouring cotton - caustic soda - appears in the waste stream. A surfactant and a small amount of sodium phosphate are frequently used, and these also appear in the waste stream. The wastes will also contain cotton waxes (about 3-4% of the cotton used). Consequently, scouring liquors are strongly alkaline (pH greater than 12), and dark colored due to cotton impurities. They contain significant levels of dissolved solids and oil and grease. A modest level of suspended solids results from the presence of cotton impurities. The natural cotton impurities removed from greige fabric by scouring contribute BOD and are biodegraded rapidly.

(3) Mercerization

Mercerization wastes are predominatly the caustic alkali used in the process. The waste stream contains high dissolved solids, and again may have a pH of 12 to 13. BOD level is low, and is due to penetrant used as an auxiliary with the caustic. Small amounts of foreign material and wax may be removed from the fiber and will appear as suspended solids; these materials will contribute a small BOD load.

In large mills, caustic soda is recovered and concentrated for reuse thus saving chemical and avoiding a sizeable waste load. Estimates have indicated that recovery of mercerizing caustic is justified when the caustic use is more than 5 million pounds per year (dry), and concentration of alkali is not permitted to fall below 2%.

(4) Bleaching

Bleaching with hydrogen peroxide contributes very small waste loads, most of which are dissolved solids. The dissolved solids are both inorganic (sodium silicate, sodium hydroxide and sodium phosphate) and organic (a surfactant and chelating agent). The waste stream contains some suspended solids when goods containing cotton are bleached.

(5) Dyeing

Dyeing processes contribute substantially to textile wastes. Color is a visible problem. A high level of dissolved solids is expected. Suspended solids should be low. Carriers, which are essential for dyeing polyester, and acetic acid, have high BOD. With thermosol dyeing of cotton/polyester blends, carriers may be avoided, thus reducing BOD and COD loads.

(6) Finishing

Wastes from resin treatment, water-proofing, flame-proofing, and soil release are small, because the chemicals are applied by padding, followed by drying and curing. The chemicals used are diverse and small amounts of them will enter the wastes.

The main differences between knit and woven-fabric wet-processing operations are that knit yarns are treated with lubricants rather than with the PVA sizes used for woven goods yarns, and that mercerizing operations are not employed with knit goods. Otherwise, the character of the wastes generated from comparable unit operations performed on different fibers - cottons, synthetics, and blends - are similar to those found in woven-fabric finishing.

Lubricating finishes applied to knitting yarns generally are based on mineral oils, vegetable oils, synthetic ester-type oils, or waxes, and may also contain antistatic agents, antioxidants, bacteriostats, and corrosion inhibitors. Specific formulations are proprietary with the yarn supplier or throwster who applies the finish. The amount applied varies with the type of yarn; general levels of add-on by weight-percent on yarn are: untexturized synthetic yarns, 1-2%; texturized synthetic yarns, 4-7%; and cotton yarns 3% or less. The knitting oils are readily emulsified or soluble in water, and are removed to the wastewater by washing prior to the dyeing operation.

b. Wastewater Characterization, Woven Fabrics - Base Case

The combined wastewater streams contain a mixture of inorganic salts (mainly sodium chloride, sodium sulfate, and some sodium acetate), polyvinyl alcohol (PVA), caustic soda, biodegradable detergents, excess dyestuffs, and suspended solids that are mostly short, non-reusable fibers and a small amount of insoluble dye. The detergents constitute the principal BOD_5 load, while PVA is the major source of COD. Note, however, that PVA is substantially biodegradable in an "acclimatized" treatment plant, although it does not indicate an appreciable BOD_5 in a standard test using unconditioned microorganisms.

Figures IV-4 and IV-5 show the wastewater flow streams occurring from the woven fabric mill, (greige manufacturing and finishing).

c. Wastewater Characterization, Woven Fabrics - Advanced Aqueous

The total hydraulic load is reduced to about one third the value used for the base case example by conservation and reuse. With more efficient washing, detergent decreases about 15-20%, thereby lowering the BOD_5 load on the treatment plant. In addition, the use of PVA recovery techniques will reduce COD by about 50%. We have assumed a small bleed of the PVA stream to the waste treatment plant to maintain it biologically acclimatized to PVA. Other chemical use will be similar to the base line example.

Figures IV-6 and IV-7 show the expected wastewater flows from the woven-goods advanced aqueous example.

d. Wastewater Characterization, Knit Fabrics - Base Case

The combined wastewater streams contain a mixture of inorganic salts (sodium chloride and sulfate, principally), knitting oil, biodegradable detergent, suspended solids that are mostly excess disperse dye and dye carriers.

The detergents and knitting oils are the primary contributors to the BOD_5 values, along with the dye carriers. The dye carriers tend to show high COD in standard tests, but are often satisfactorily treated in a conditioned secondary waste treatment plant. Knitting oils also require acclimatized microorganisms for satisfactory biological treatment.

Figure IV-1 shows the wastewater effluents from the knit-fabric mill, base case (greige manufacturing and finishing).

e. Wastewater Characteristics, Knit Fabrics - Advanced Aqueous

Figure IV-2 shows the expected wastewater flows from the knit goods advanced aqueous example. The hydraulic load is reduced to one third of that postulated for the base line example, with possible small reduction in BOD_5, COD, and suspended solids.

f. Wastewater Characteristics, Knit Fabrics - Solvent Processing

The wastewater effluent from all solvent processing of knit goods will be essentially zero. A minor quantity of polluted water from the steam condensate may exist, which can be treated by solid waste disposal techniques or possibly discharged to municipal treatment (see Figure IV-3).

g. Existing Regulatory Constraints

Water pollution regulatory constraints imposed on the manufacture of textile fabrics are mainly the result of Sections 304 (b) and 306 of the Federal Water Pollution Control Act, as amended. The Act provides for the United States Environmental Protection Agency to issue effluent limitations guidelines applicable to the point-source discharge of industrial wastewater. The effluent limitations guidelines for Textile Mills is based on the "EPA Development Document" pertinent to that industry (EPA-440/1-74-022a, 1974).

The Development Document is a technical study that characterizes the industry, describes the sources of water pollution, and presents suggested permissible effluent levels based on recommended technology and its associated cost. The effluent limitations guidelines, based on the Development Document and supplemented by EPA and industry review and comment, forms the basis from which actual discharge permits are negotiated.

The effluent limitations guidelines set forth three effluent discharge levels for the manufacture of textiles:

- BPCTCA - Best Practicable Control Technology Currently Available (to be implemented by 1977);
- BATEA - Best Available Technology Economically Achievable (to be implemented by 1983); and
- Standards of Performance for New Sources (applicable to new plants built between 1977 and 1983; after 1983 the BATEA level applies).

The pollutional parameters which have been deemed necessary to set specific regulations for are:

- 5-day biochemical oxygen demand (BOD_5),
- Chemical oxygen demand (COD),
- Total suspended solids (TSS),
- Total chromium,
- Phenol,
- Sulfide,
- Fecal coliform, and
- Color.

The effluent limitations, as published in the Development Document, are in terms of weight of the specific pollutant per unit weight of production and are presented in Tables A-1 and A-2.

h. Recommended Wastewater Treatment Technology

To achieve the effluent levels stipulated in the effluent guidelines, we have accepted the treatment steps recommended in the Development Document and in the Economic Analysis of Effluent Guidelines, Textile Industry, EPA-230/2-75-028 dated June 1975. These treatment steps are shown in Figures A-1 and A-2. We have assumed the full Level II Treatment in costing our example processes.

i. Wastewater Treatment Costs

The wastewater treatment plant costs were calculated based on the methodology used in EPA-230/2-75-028, Economic Analysis of Effluent Guidelines, Textile Industry, dated June 1975, updated to mid-1975 using the ENR Cost Index. The results are shown in Tables A-3 and A-4.

TABLE A-1

EFFLUENT LIMITATIONS REQUIREMENTS - WOVEN FABRIC FINISHING

Effluent Characteristics	Average of Daily Values for 30 Consecutive Days shall not exceed (kg/10^3 kg product)		
	BPCTCA	BATEA	NSPS
BOD_5	3.3	2.2	3.3
COD	30-60	10-20.2	30-60
TSS	8.9	1.5	3.3
Total Chromium	0.5	0.05	0.05
Phenol	0.5	0.05	0.05
Sulfide	0.10	0.10	0.10
Fecal Coliform	---	400 $\frac{MPN}{100ml}$	---
Color	---	300	---

Except for fecal coliform, the maximum limitations for any one day should not exceed these 30-day limitations by more than 100%.

TABLE A-2

EFFLUENT LIMITATIONS REQUIREMENTS - KNIT FABRIC FINISHING

Effluent Characteristics	Average of Daily Values for 30 Consecutive Days, shall not exceed: (kilograms per 1000 kg of product)		
	BPCTCA	BATEA	NSPS
BOD_5	2.5	1.7	2.5
COD	30-50	10-16.7	30-50
TSS	10.9	1.7	2.5
Total Chromium	0.05	0.05	0.05
Phenol	0.05	0.05	0.05
Sulfide	0.10	0.10	0.10
Fecal Coliform	---	400 $\frac{MPN}{100ml}$	---
Color	---	300	---

Except for fecal coliform, the maximum limitations for any one day should not exceed these 30-day limitations by more than 100%.

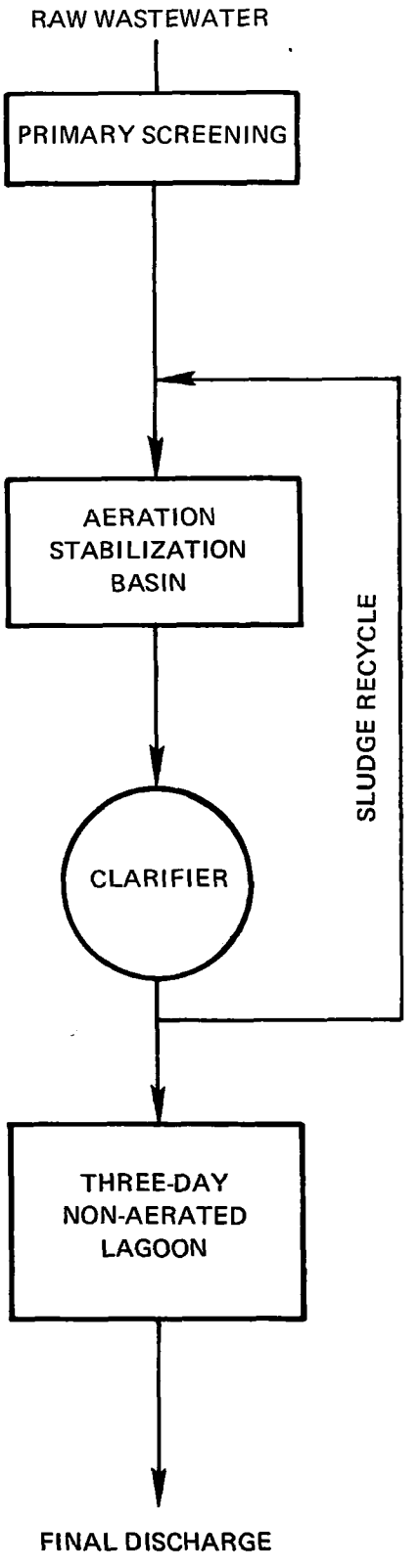

Figure A-1. Schematic Flow Diagram of Process Steps and Cost Centers for Level I Treatment

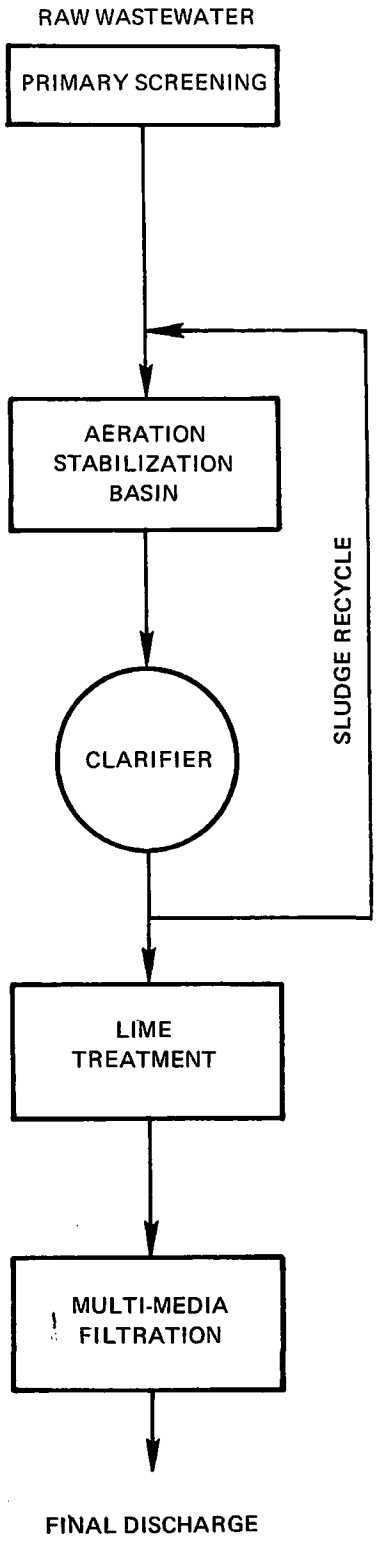

Figure A-2. Schematic Flow Diagram of Process Steps and Cost Centers for Level II Treatment

TABLE A-3

POLLUTION CONTROL COSTS - WOVEN FABRIC MILL

	Base Case	Advanced Aqueous Processing
Capital Investment	$714,000	$573,000
Fixed Costs		
Depreciation @8.3%	59,300	45,100
ROI @20%	142,800	108,600
Taxes & Insurance @1.5%	10,700	8,200
	212,800	161,900
Variable Costs		
Operating Labor (Incl.overhead)	43,300	52,000
Maintenance, Labor & Supplies	18,600	18,600
Chemicals	54,100	21,400
Energy	99,800	40,800
Total Annual Cost	$428,600	$294,700
Basis: Production (kg/day)	30,000	30,000
Hydraulic Load (kg/day)	4210,000	1450,000
Pollution Load: BOD_5 (kg/day)	900	750
COD (kg/day)	3,000	1,500
TSS (kg/day)	3,000	3,000

TABLE A-4

POLLUTION CONTROL COSTS - KNIT FABRIC MILL

	BASE CASE	ADVANCED AQUEOUS PROCESSING
	$ 288,800	$ 170,500
FIXED COSTS		
Depreciation @ 8.33%	24,000	14,200
Tax and Insurance @ 1.5%	4,300	2,600
ROI @ 20%	57,800	37,100
Total Fixed Costs	$ 86,100	$ 50,900
VARIABLE COSTS		
Operating Labor	$ 35,400	$ 24,300
Maintenance, Labor and Supplies	11,500	8,500
Chemicals	900	300
Energy	1,000	1,000
Total Variable Costs	$ 48,800	$ 34,100
TOTAL ANNUAL COST	$ 134,900	$ 85,000
Basis:		
Production (kg/day)	10,000	10,000
Hydraulic Load (kg/day)	516,000	171,000
Pollution Load: BOD (kg/day)	250	250
COD (kg/day)	800	800
TSS (kg/day)	80	80

2. AIR-RELATED ENVIRONMENTAL PROBLEMS

Air pollution from textile mills is relatively minor and consists of low levels of particulates, such as lint, and a small amount of organic from the finishing chemical used, which is exhausted with the flue gases from heat-set tenterframes. We estimate that the amount emitted (66 lb/day from the model woven-fabric mill; 22 lb/day from the model knit-fabric mill) is below the level which would require air pollution controls.

Adoption of advanced aqueous processing will not materially affect air emissions from woven-fabric mills or knit-fabric mills. Solvent processing of knit fabrics is a different situation, because of the potential emissions of chlorinated hydrocarbons, trichlorethylene, and perchlorethylene. The commercially available equipment for solvent processing incorporates solvent recovery as part of the equipment for economic reasons, and it is claimed that the emissions of solvents are less than 3% of the weight of fabric processed. This level may be satisfactory for a small amount of solvent scouring, but for an all-solvent knit mill, processing 22,000 lb/day, it would result in emissions of 660 lb/day of perchlorethylene solvent. We have assumed in the model that emissions will be 1% of fabric weight (220 lb/day). Further development work is clearly necessary to define an acceptable level and to develop control technology to control solvent emissions.

3. SOLID WASTE-RELATED PROBLEMS

Solid wastes are not a big problem in the textile industry. One source consists of waste fiber in short lengths which accumulates on and around the machinery or is filtered out in the waste-treatment system. This material is usually stored and periodically disposed of to landfill.

A second source is the tarry residues that gradually accumulate in the heat-set tenterframes. These residues consist of degradation products from finishing chemicals and periodically the tenterframes are shut down so that they can be removed manually.

Adoption of solvent processing will result in a solid waste from the solvent recovery system containing hydrocarbons, such as knitting oils, with smaller amounts of dyes and finishing chemicals. This will be removed daily for incineration or landfill.

APPENDIX B

GLOSSARY

acetate - A manufactured fiber made of cellulose acetate.

acrylic - A manufactured fiber in which the fiber-forming substance is any long-chain synthetic polymer composed at least 85% by weight of acrylonitrile units. Made in both filament and staple form. (e.g., Acrilan, Orlon, Creslan.)

advanced processing - An assembly of unit operations in a knit or woven fabric mill which are designed to minimize water and energy use.

beck - A chamber in which goods may be scoured and dyed. May be operated at atmospheric pressure or at elevated temperature and pressure.

biphenyl (or diphenyl) - A carrier used in dyeing polyester.

biochemical oxygen demand (BOD) - A method of measuring rate of oxygen usage due to biological oxidation. A BOD_5 of 100 mg/liter means that a sample (1 liter) used 100 mg of oxygen in 5 days.

biological treatment - The use of biological organisms in a waste treatment system (similar to those used in a municipal sewage system) to achieve reductions in pollutants before discharge.

bleaching - Removal of colored components from a textile. Common bleaches are hydrogen peroxide, sodium hypochlorite, and sodium chlorite.

blend - The combination of two or more types of fibers and/or colors in one yarn.

butyl benzoate - A carrier used in dyeing polyester.

carrier - An organic material used in dyeing polyester. (See biphenyl, orthophenyl, phenol, trichlorobenzene, butyl benzoate.)

caustic soda - A strong alkali used, for example, in mercerizing.

cellulose - Major component of cotton and rayon. Also used as the base for acetate fiber.

chemical oxygen demand (COD) - The amount of oxygen required to oxidize materials in a sample by means of a dichromate solution.

chlorinated solvents - Organic hydrocarbons containing chlorine in the molecule; e.g., perchloroethylene, which is used in drycleaning and in some textile operations.

commission finishers - Mills that dye and finish textile fabrics owned by others. (A "legal" definition of commission finishers is given in the Development Document for Effluent Limitations Guidelines, EPA-440/1-74-022-a.)

crease-resistant - Fabrics that have been treated to make them resistant to wrinkling. One of the most common methods is to incorporate a resin.

desize - Removal of size. Several methods may be used. (See enzyme.)

developed dye - An azo dye whose color is developed by reaction on cotton.

diphenyl - (See biphenyl.)

direct dyes - Class of dyestuffs that colors cellulosic fibers in full shades.

disperse dye - A type of dye used to color several synthetic fibers. Applied as a fine dispersion using a carrier. On cloth, padded dye may be baked on or "thermofixed."

dissolved solids - Total solids - suspended solids in a sample of wastewater.

double knit - Knitted fabric made on a special knitting machine that combines a double set of needles to produce a fabric.

durable press - Goods that require no ironing during the normal use-life of a garment. The term applies to apparel and other textile products such as sheets, draperies, etc. As a rule, DP is achieved in two ways: 1. Pre-curing fabrics with a special resin finish then pressing made-up garment. 2. Post-curing fabric with a resin finish then cooking made-up garments in an oven. As a rule, polyester-cotton blends are used, but there are 100% cottons, and other blends also.

enzyme - An agent used to remove starch size.

greige - Fabrics in unbleached, undyed state before finishing. In the United States, called "gray goods" or "grey goods."

heat setting - Application of heat to the fabric in a tenterframe at temperatures of 340°-400°F, with or without additional chemicals to impart to the fabric desirable and permanent characteristics.

hydraulic load - The volume rate of polluted water in gallons per day (gpd) which is sent to the biological (or other) treatment plant. Sometimes expressed as gal per pound of fabric processed.

kier - A piece of equipment in which cotton is boiled with dilute caustic soda to remove impurities. Also used as a verb to describe the process.

knitting - Process of making fabric by interlocking series of loops of one or more yarns. Types are: jersey (circular knits), tricots (wrap knits), double knits.

mercerizing - Finish used on cotton yarns and fabrics to increase luster, improve stretch and dyeability. Treatment consists of impregnating fabrics with cold, concentrated sodium hydroxide solution.

modacrylic - Generic name established by the Federal Trade Commission for a "manufactured fiber in which the fiber-forming substance is any long-chain synthetic polymer composed of 35-85% by weight of acrylonitrile units."

naphthol dye - An azo dye whose color is formed by coupling with a naphthol. Used chiefly on cotton.

nylon - Generic name for a manufactured fiber in which the fiber-forming substance is any long-chain synthetic polyamide having recurring amide groups as an integral part of the polymer chain.

ortho phenyl phenol - A carrier used in dyeing polyester.

perchloroethylene - A chlorinated solvent which has been widely used in dry-cleaning establishments and in solvent scouring of knit goods.

permanent finish - Fabric treatments of various kinds to improve glaze, hand, or performance of fabrics. These finishes are durable to laundering.

pH scale - A method used to describe acidity or alkalinity: pH 7 is neutral; from 0-7 is acid; 7-14, alkaline. The scale extends from 0 to 14 and a change of 1 unit represents a tenfold change in acidity or alkalinity.

polyamide - (See nylon.)

polyester - A manufactured fiber in which the fiber-forming substance is any long-chain synthetic polymer composed of at least 85% by weight of an ester of dihydric alcohol and terephthalic acid.

polypropylene - Basic fiber-forming substance for an olefin fiber.

precured fabric - Technique for imparting durable press by impregnating fabrics with special resins then curing same. Does not require oven after-treatment of apparel. (See durable press.)

post-cured - Technique for imparting durable press that requires baking apparel in ovens to cure fabrics that have been impregnated with special resins. Most common technique used with polyester and cotton blends. (See durable press.)

rayon - A generic name for man-made fibers, monofilaments, and continuous filaments, made for regenerated cellulose. Fibers produced by both viscose and cuprammonium process are classified as rayon.

reactive dyes - Dyes that react chemically with the fiber.

resin - A chemical finish used to impart a property desired in a fabric, such as water repellency or hand, etc. (See durable press.)

scouring - Removal of foreign components from textiles. Normal scouring materials are alkalies (e.g., soda ash) or trisodium phosphate, frequently used in the presence of a surfactant. Textile materials are sometimes scoured by use of a solvent.

sequestrant - A chemical used to bind foreign metal ions. Frequently used in dyeing. A common sequestrant is EDTA.

size - A material applied to warp yarns to minimize abrasion during weaving. Common sizes are starch, polyvinyl alcohol (PVA), and carboxymethyl cellulose. Sizes are applied continuously in a slasher.

softener - A chemical used to apply a soft, pleasant hand. Fat derivatives and polyethylene are common softeners.

solution-dyed - Synthetic fibers sometimes are dyed by adding color to the chemical polymer before fibers are formed. Also called dope dyed.

solvent processing - An assembly of unit operations in which a solvent such as perchloroethylene is used instead of water to transfer chemicals to and from the fabric.

standard raw waste load (SRWL) - A description of the properties of wastewater before treatment.

starch - Organic polymer material used as a size; highly biodegradeable.

sulfur dye - A class of dyes that dissolve in aqueous sodium sulfide forming products with a marked affinity for cotton; the dyes are regenerated by air oxidation.

suspended solids (TSS) - Amount of solids separated by filtration of a sample of wastewater.

tenterframe - A driven-chain machine that maintains dimensional stability of fabric being processed. (See heat setting.)

textured - Bulked yarns that have greater volume and surface interest than conventional yarn of same fiber.

total organic content (TOC) - The total organic materials present in a sample of wastewater.

total oxygen demand (TOD) - The amount of oxygen necessary to completely oxidize materials present in a sample of wastewater.

total solids - Amount of residue obtained on evaporation of a sample of wastewater.

triacetate - Differs from regular cellulose acetate, which is a diacetate. The description implies the extent of acetylation and degree of solubility in acetone.

tricot - Warp-knitted fabric. Tricots are flat knitted with fine ribs on the face (lengthwise) and ribs on the back (widthwise).

tufted fabric - Fabric decorated with tufts of multiple ply yarns. Usually hooked by needle into fabric structure. Used widely for carpets.

vat dye - A type of dye applied from a liquor containing alkali and a powerful reducing agent, generally hydrosulfite. The dye is subsequently oxidized to the colored form. Widely used on cellulosic fibers.

warp - Set of lengthwise yarns in a loom through which the crosswise filling yarns (weft) are interlaced. Sometimes called "ends."

weaving - The process of manufacturing fabric by interlacing a series of warp yarns with filling yarns at right angles.

yarn - An assemblage of fibers or filaments, either manufactured or natural, twisted or laid together so as to form a continuous strand which can be used in weaving, knitting, or otherwise made into a textile material.

yarn-dyed - Fabrics in which the yarn is dyed before weaving or knitting.

TECHNICAL REPORT DATA
(Please read Instructions on the reverse before completing)

1. REPORT NO. EPA-600/7-76-034i	2.	3. RECIPIENT'S ACCESSION NO.
4. TITLE AND SUBTITLE ENVIRONMENTAL CONSIDERATIONS OF SELECTED ENERGY CONSERVING MANUFACTURING PROCESS OPTIONS. Vol. IX. Textile Industry Report		5. REPORT DATE December 1976 issuing date 6. PERFORMING ORGANIZATION CODE
7. AUTHOR(S)		8. PERFORMING ORGANIZATION REPORT NO.
9. PERFORMING ORGANIZATION NAME AND ADDRESS Arthur D. Little, Inc. Acorn Park Cambridge, Massachusetts 02140		10. PROGRAM ELEMENT NO. 11. CONTRACT/GRANT NO. 68-03-2198
12. SPONSORING AGENCY NAME AND ADDRESS Industrial Environmental Research Laboratory Office of Research and Development U.S. Environmental Protection Agency Cincinnati, Ohio 45268		13. TYPE OF REPORT AND PERIOD COVERED FINAL 14. SPONSORING AGENCY CODE EPA-ORD

15. SUPPLEMENTARY NOTES Vol. III-VIII, EPA-600/7-76-034c through EPA-600/7-76-034h, and X-XV, EPA-600/7-76-034j through EPA-600/7-76-034j through EPA-600/7-76-034o, refer to studies of other industries as noted below; Vol. I, EPA-600/7-76-034a is the Industry Summary Report and Vol. II, EPA-600/7-76-034b is the Industry Primary Report.

16. ABSTRACT

This study assesses the likelihood of new process technology and new practices being introduced by energy intensive industries and explores the environmental impacts of such changes.

Specifically, Vol. IX deals with the textile industry and examines the environmental energy and economic impacts of three "model" technologies: (1) integrated knit fabric mill using "advanced" processing of 100% polyester fiber, (2) integrated knit fabric mill using solvent processing of 100% polyester fiber, and (3) integrated woven fabric mill using advanced processing of 50/50 polyester cotton fiber mixture, all in comparison with a "base line" technology representing the best of present textile industry practice. Vol. III-VIII and Vol. X-XV deal with the following industries: iron and steel, petroleum refining, pulp and paper, olefins, amonia, aluminum, cement, glass, chlor-alkali, phosphorus and phosphoric acid, copper, and fertilizers. Vol. I presents the overall summation and identification of research needs and areas of highest overall priority. Vol. II, prepared early in the study, presents and describes the overview of the industries considered and presents the methodology used to select industries.

17. KEY WORDS AND DOCUMENT ANALYSIS

a. DESCRIPTORS	b. IDENTIFIERS/OPEN ENDED TERMS	c. COSATI Field/Group
Energy Pollution Industrial Wastes Textiles	Manufacturing Processes; Energy Conservation; Blend Fabrics; Solvent Finishing; Dyeing; Finishing	13B

18. DISTRIBUTION STATEMENT Release to public	19. SECURITY CLASS *(This Report)* unclassified	21. NO. OF PAGES 90
	20. SECURITY CLASS *(This page)* unclassified	22. PRICE

EPA Form 2220-1 (9-73)