United States
Environmental Protection
Agency

Industrial Environmental Research
Laboratory
Research Triangle Park NC 27711

EPA-600/7-79-073a
February 1979

EPA

Environmental Assessment of Coal Cleaning Processes: Master Test Plan

Interagency Energy/Environment R&D Program Report

RESEARCH REPORTING SERIES

Research reports of the Office of Research and Development, U.S. Environmental Protection Agency, have been grouped into nine series. These nine broad categories were established to facilitate further development and application of environmental technology. Elimination of traditional grouping was consciously planned to foster technology transfer and a maximum interface in related fields. The nine series are:

1. Environmental Health Effects Research
2. Environmental Protection Technology
3. Ecological Research
4. Environmental Monitoring
5. Socioeconomic Environmental Studies
6. Scientific and Technical Assessment Reports (STAR)
7. Interagency Energy-Environment Research and Development
8. "Special" Reports
9. Miscellaneous Reports

This report has been assigned to the INTERAGENCY ENERGY-ENVIRONMENT RESEARCH AND DEVELOPMENT series. Reports in this series result from the effort funded under the 17-agency Federal Energy/Environment Research and Development Program. These studies relate to EPA's mission to protect the public health and welfare from adverse effects of pollutants associated with energy systems. The goal of the Program is to assure the rapid development of domestic energy supplies in an environmentally-compatible manner by providing the necessary environmental data and control technology. Investigations include analyses of the transport of energy-related pollutants and their health and ecological effects; assessments of, and development of, control technologies for energy systems; and integrated assessments of a wide range of energy-related environmental issues.

EPA REVIEW NOTICE

This report has been reviewed by the participating Federal Agencies, and approved for publication. Approval does not signify that the contents necessarily reflect the views and policies of the Government, nor does mention of trade names or commercial products constitute endorsement or recommendation for use.

This document is available to the public through the National Technical Information Service, Springfield, Virginia 22161.

EPA-600/7-79-073a

February 1979

Environmental Assessment of Coal Cleaning Processes: Master Test Plan

by

D.A. Tolle, D.W. Neuendorf, and P. Van Voris

Battelle-Columbus Laboratories
505 King Avenue
Columbus, Ohio 43201

Contract No. 68-02-2163
Task No. 451
Program Element No. EHE623A

EPA Project Officer: James D. Kilgroe

Industrial Environmental Research Laboratory
Office of Energy, Minerals, and Industry
Research Triangle Park, NC 27711

Prepared for

U.S. ENVIRONMENTAL PROTECTION AGENCY
Office of Research and Development
Washington, DC 20460

FOREWORD

Many elements and chemical compounds are known to be toxic to man and other biological species, but our knowledge concerning the levels and conditions under which these substances are toxic is extremely limited. Little is known concerning the emission of these pollutants from industrial processes and the mechanism by which they are transported, transformed, dispersed or accumulated in our environment.

Portions of the Federal Clean Air Act, the Resource Conservation Recovery Act and the Federal Water Pollution Control Act require EPA to identify and regulate hazardous or toxic substances which result from man's industrial activities. Industrial pollutants are often identified only after harmful health or ecological effects are noted. Remedial actions are costly, the damage to human and other biological populations is often irreversible and the persistence of some environmental contaminants may endanger future populations.

EPA's Office of Research and Development (ORD) is responsible for health and ecological research, studies concerning the transportation and fate of pollutants, and the development of technologies for controlling industrial pollutants. The Industrial Environmental Research Laboratory, an ORD organization, is responsible for development of pollution control technology and conducts a large environmental assessment program. The primary objectives of this program are:

1. The development of information on the quantities of toxic pollutants emitted from various industrial processes--information needed to prioritize health and ecological research efforts.

2. The identification of industrial pollutant emissions which pose a clearly evident health or ecological risk and which should be regulated.

3. The evaluation and development of technologies for controlling pollution from these toxic substances.

The coal cleaning environmental assessment program has as its specific objectives the evaluation of pollution control problems which are unique to coal preparation, storage and transportation. The coal preparation industry is a mature, yet changing industry and in recent years significant achievements have been made in pollution abatement. The environmental assessment work will document existing environmental regulations, characterize pollutants, and evaluate the adequacy of commercial pollution control techniques.

ABSTRACT

This plan for source testing presents the objectives and general structure of a field testing program designed for an environmental assessment of coal cleaning processes. The document is intended for use in preparation of test plans for individual coal cleaning sites and as a means of showing the reader the common thread which runs through a series of tests at various sites. Included in this report is a section on the background and objectives of Battelle's Columbus Laboratories' overall program for EPA entitled "Environmental Assessment of Coal Cleaning Processes". The report's major emphasis is on the philosophy of the field testing program and the elements of sampling and sample analysis which are common to all test sites.

The specific objectives of the field testing program are (1) to produce supporting data for the overall assessment program by characterizing process and effluent streams at selected coal cleaning plants, (2) to support trade-off studies with field data that will help evaluate and compare the effectiveness of pollution control equipment and waste management techniques used at various types of coal cleaning plants and their associated facilities, and (3) to make environmental source assessments of process and effluent streams using a three-phased approach developed by IERL/RTP.

The phased approach for coal cleaning facilities selected in each of ten site categories will eventually involve three distinct levels of sampling and analytical effort. These three levels are linked such that Level 1 identifies problem areas that are assessed by the more rigorous Level 2 tests. Level 3 involves long-term monitoring of "key" indicator parameters which have been identified in the environmentally hazardous streams tested by Level 2 techniques.

Results of the environmental source assessments will provide the following types of information: (1) a systematic evaluation of the physical, chemical, and biological characteristics of selected process streams and all effluent streams, (2) predictions of the potential effects of those streams on the environment, (3) ranking of the streams

according to their relative biological toxicity, and (4) identification of pollution control technology which needs further research and development.

Since the environmental source assessments for each of the selected coal cleaning plants will be similar, the elements common to all or most of the test plans for these facilities are presented in this report to facilitate the planning and preparation of individual test plans for each plant. The elements discussed include potential sample locations, collection techniques, and analysis techniques.

CONTENTS

	Page
FOREWORD	ii
ABSTRACT	iii
CONTENTS	v
FIGURES	vii
TABLES	viii
ACKNOWLEDGMENTS	ix
INTRODUCTION	1
General Objectives of the Field Testing Program	2
Specific Objectives of the Source Test Program	4
Testing Philosophy: The Phased Approach	4
Level 1 Sampling and Analysis	6
Level 2 Sampling and Analysis	8
Level 3 Sampling and Analysis	11
Benefits of the Field Testing Program to the Coal Preparation Industry	12
Benefits of Site Sampling to Cooperating Facility Owners	13
ELEMENTS COMMON TO ALL FIELD TEST PLANS	15
Potential Sampling Locations	15
Water and Slurry Filtrate Quality Program	23
Process Water and Slurry Sampling	30
Surface Runoff and Leachate Sampling	31

CONTENTS
(Continued)

	Page
Groundwater Sampling	31
Analytical Techniques	32
Air Quality Program	34
Fugitive Dust Sampling	35
Stack Sampling	35
Analytical Techniques	37
Coal, Refuse, and Slurry Solids Quality Program	40
Coal Sampling	40
Slurry Solids Sampling	41
Refuse Disposal Evaluation	41
Analytical Techniques	42
REFERENCES	44
APPENDIX A. TEST PLANNING AND CONDUCT GUIDELINES	46
APPENDIX B. BRIEF DESCRIPTION OF LEVEL 1 PHYSICAL AND CHEMICAL TESTS	54
APPENDIX C. BRIEF DESCRIPTION OF LEVEL 1 HEALTH AND ECOLOGICAL TESTS	61

FIGURES

Number		Page
1	Overview of potential sample types and their sources at coal cleaning plants	16
2	Potential air sampling locations	17
3	Potential water sampling locations	18
4	Potential slurry sampling locations	19
5	Potential solid sampling locations	20
6	Block flow diagram of generalized coal preparation plant and associated facilities showing potential sampling locations	22
7	Flow diagram of a Type A crushing and sizing plant showing potential sampling locations	24
8	Flow diagram of a Type B coarse-size coal beneficiation plant showing potential sampling locations	25
9	Flow diagram of a Type F concentrating table and hydrocyclone plant showing potential sampling locations	26
10	Flow diagram of a Type G concentrating table and froth-flotation plant showing potential sampling locations	27
11	Flow diagram of a Type H dense-medium cyclone and hydrocyclone plant showing potential sampling locations	28
12	Flow diagram of a Type I dense-medium cyclone and froth-flotation plant showing potential sampling locations	29
A-1	Process wastewater sampling	47
A-2	Surface runoff and leachate sampling	48
A-3	Groundwater sampling	49
A-4	Fugitive dust sampling	50
A-5	Stack sampling	51
A-6	Coal and slurry solids sampling	52
A-7	Refuse disposal evaluation	53

TABLES

Number		Page
1	Generalized coal cleaning plant Level 1 sampling points . . .	21
2	Potential Level 1 water and slurry filtrate analysis techniques	33
3	Potential Level 1 analysis techniques for fugitive dust and stack samples	38

ACKNOWLEDGMENTS

This study was conducted as a part of the Battelle's Columbus Laboratories' ongoing program, "Environmental Assessment of Coal Cleaning Processes", which is supported by the U.S. Environmental Protection Agency, Industrial Environmental Research Laboratory, Research Triangle Park (IERL/RTP), North Carolina. The contributions of the Program Manager, Mr. G. Ray Smithson, Jr., and the Deputy Program Manager, Mr. Alexis W. Lemmon, Jr., are gratefully acknowledged.

The authors would also like to express their thanks for critical review and editing of this report to Mrs. Dorothy J. Wallace.

The advice and counsel of the EPA Project Officer, Mr. James D. Kilgroe, and other IERL/RTP staff members were invaluable in performance of this work.

INTRODUCTION

Battelle's Columbus Laboratories (BCL) is performing an environmental source assessment of coal cleaning processes under Contract No. 68-02-2163 with the Industrial Environmental Research Laboratory, Research Triangle Park (IERL/RTP), North Carolina, of the Office of Research and Development of the U.S. Environmental Protection Agency (EPA). The broad objective of Battelle's program with EPA is to perform a comprehensive assessment of the environmental consequences of coal cleaning (physical and chemical) and the disposal of refuse from coal cleaning processes. In addition, combined techniques to achieve environmental goals, such as coal cleaning combined with stack gas scrubbing to reduce the pollution potential of coal-fired power plants, will be reviewed. Increased use of both physical and chemical coal cleaning techniques for the removal of sulfur and ash-forming constituents is extremely important in an era of growing dependence on coal as a major domestic source of energy. The advantage of coal cleaning processes is the removal of sulfur, ash, and a variety of other unwanted materials from the raw coal prior to any oxidation or reduction reactions.

In order to optimize the overall control of emissions from plants that use coal, it is necessary to assess the pollution potential of coal cleaning processes, allied operations, and--in certain cases--the end uses of coal. This optimization process will also include an economic evaluation of the benefits derived from coal cleaning, e.g., reduced cost of ash transportation, simplified boiler design, reduced boiler downtime, smaller dust collectors and ash-disposal systems, and reduced costs for SO_2 control.

The broad goals of this program are to establish a strong base of engineering, ecological, pollution control, and cost data which can be used to determine which coal cleaning processes are most acceptable from both an environmental and an economic viewpoint. This information can also be used to identify areas where development of pollution control technology is needed.

General Objectives of the Field Testing Program

A field testing program is being planned at selected coal cleaning facilities throughout the United States with the objective of supplying information on the pollutants associated with effluents from a variety of such facilities and their associated coal transportation, storage, and refuse disposal areas. Sampling sites will be located upstream and downstream of pollution control equipment and points of application of waste treatment techniques to determine the effectiveness of these pieces of equipment or techniques in reducing the potential pollution loading on the environment. Effluents of interest include leachate and runoff from coal storage and refuse disposal piles; leachate from slurry holding and disposal ponds; and fugitive dust or gases from coal transportation and handling, storage piles, refuse piles, and plant operations. Thermal dryer gases and particulates will be sampled at selected plants where the clean coal is dried. In summary, the objectives of the field testing program are:

- to produce supporting data for the overall assessment program from coal cleaning plants in a variety of environmental and technological situations, specifically data on effluent streams which may impact the environment;
- to support trade-off studies with field data that will help evaluate and compare the effectiveness of pollution control equipment and waste management techniques used at various types of coal cleaning plants and their associated facilities; and
- to make environmental source assessments of process and effluent streams using a three-phased approach developed by IERL/RTP (see the following section on Testing Philosophy: The Phased Approach).

In order to understand the scope of the field testing program, it is important to discuss a similar, but more comprehensive, approach that is <u>not</u> part of the current plan. "Environmental impact assessment" has been widely used to determine the effects of industrial operations ever since the enactment of the National Environmental Policy Act. This "broad brush" approach frequently includes--among other topics--a comprehensive characteri-

zation of air, water, and biological quality in the general vicinity of the facility under study. If abnormal conditions exist in these areas, field experiments may be conducted to determine which pollutants from specified effluent streams are causing the ecological effect.

The current field testing program is intended to determine the physical, chemical, and relative toxic characteristics of effluent streams sampled at their respective sources, rather than to assess the environmental quality in the general vicinity of the cleaning plant. Therefore, results of the present testing program cannot be used to evaluate cause/effect relationships between effluent streams and ecological effects observed in the field. Laboratory tests, however, will provide information on the relative toxicity of effluents to aquatic and terrestrial biota. In addition, long-term objectives include those directed at the detailed analysis of cause/effect relationships in the field. Future field studies of this type will require an analysis of effluent streams after they have had a chance to disperse, degrade, biomagnify, and intermix with other effluents in the surrounding environment.

In order to select coal cleaning plants for the field testing program, a site selection scheme has been devised which will assist in the selection of plants in ten site categories. The site categories are based on four variables considered to be of prime importance in determining the pollution potential of any given coal cleaning plant: (1) acid neutralization potential of the soil in the plant area, (2) pyritic sulfur content of the raw coal, (3) average annual precipitation, and (4) the relative sophistication of coal cleaning technology. Although there are 16 possible combinations of these four variables, coal cleaning plants presently exist only in situations corresponding to ten of the possible combinations.

Within each of the ten site categories, site selection is being accomplished by imposing a series of constraints to assure that specific kinds of questions are answered about pollution potential and pollution control for the coal cleaning processes. For example, one of the most important constraints relates to the type of pollution control technology employed at coal cleaning plants and their associated facilities. Plants using relatively high-efficiency pollution control technology are considered to be the first choice for a field testing location in a particular site category. Sampling upstream and downstream of these high-efficiency control devices should give

an idea of both the "best" and "worst" case effluent streams likely to be emitted by coal cleaning plants in that site category. In addition, extrapolation to plants with less sophisticated pollution control technology will require testing of process equipment on streams in a high technology facility because in a less sophisticated plant this same equipment might represent pollution control equipment.

Specific Objectives of the Source Test Program

The source test program described in this document is intended to facilitate the planning and preparation of site-specific field tests at coal cleaning plants selected in each of ten site categories. As such, it identifies the potential pollution sources associated with a generalized coal cleaning plant and suggests the media likely to be impacted by the effluents from these sources. This information will simplify the process of selecting sampling locations critical to an environmental source assessment of each of the chosen coal cleaning plants and their associated facilities. At the same time, this master plan will ensure that each of the site-specific field tests conforms to the overall EPA program needs and objectives.

Since the site-specific test plans are all parts of a unified data acquisition program, most of the steps involved in planning and executing tests at each facility are the same. Also, many of the sampling locations, techniques, and equipment will be common to most of the site-specific tests. This document identifies these common elements and describes how they fit into the overall thrust and direction of the test program. A compilation of these common elements in one reference source will expedite the preparation of site-specific test plans by providing a generalized testing framework that can be modified to fit each facility chosen for sampling.

Testing Philosophy: The Phased Approach

The approach for the field testing program is to follow the three-phased sampling and analytical strategy developed by the Process Measurement Branch of IERL/RTP. Separate manuals are available from EPA for the chemical sampling and analysis techniques(1) and the bioassay sampling and analysis techniques(2). An overview of the development of the strategy, the concepts employed, the suggested measurement techniques, and the estimated costs for

implementation of the tests are presented in a third EPA document.[3] In all three of these EPA reports, the first phase (Level 1 testing) is explained in the greatest detail. The Level 1 techniques described in these reports have been revised and a second edition of the Level 1 manual[4] is in press and should be available soon. A Level 2 manual[5] describing inorganic and organic sampling and analysis techniques is also in draft form. An interim report [6] on Level 2 organic sampling and analysis procedures was recently released by EPA.

The three-phased environmental source assessment strategy has been designed to obtain the following information: (1) a systematic inventory of the physical, chemical, and biological characteristics of selected process streams and all effluent streams, (2) predictions of the potential effects of those streams on the environment, (3) ranking of the streams according to their relative biological toxicity, and (4) identification of pollution control technology which needs further research and development.[3]

Studies by EPA have shown that the most cost-effective source assessment strategy is one in which statistically rigorous sampling and highly quantitative analysis are performed only on streams demonstrated to be potentially hazardous by a generalized survey program. Also, it is not sound practice to plan a detailed sampling program until (1) the general characteristics of process and waste streams are known and (2) the nature of unfavorable reactions within samples is considered (e.g., chemical reaction, volatility loss). Thus, each of the source assessments planned for coal cleaning plants will involve a series of iterative tests where each additional test focuses resources and efforts on the pollutants and streams of greatest concern.[3]

The phased approach planned for coal cleaning facilities selected in each of the ten site categories will ultimately involve three separate levels of sampling and analytical effort. These three levels are linked such that Level 1 identifies the questions and problem areas that must be assessed by the more rigorous Level 2 tests and Level 3 uses long-term monitoring of the "key" indicator parameters identified in the environmentally-hazardous streams measured by Level 2 techniques. The Level 3 results are then used for control device design and development. A more detailed discussion of each level is provided in the following sections.[1]

Level 1 Sampling and Analysis

Level 1 sampling involves the collection of grab samples at all potential effluent locations. Although some precautions are taken to ensure that samples are not biased, the techniques of multiple point, isokinetic or flow proportional sampling are not rigorously applied. Usually a single sample of each stream is collected under average process operating conditions or under each condition of interest. When a series of separate samples are taken at one location, they are combined to produce a single "average" sample for analysis.[3]

Certain modifications appear desirable in the application of the normal Level 1 approach to the design of test plans for each of the coal cleaning plants selected. The four modifications described below will fit better the needs of the coal cleaning program and will increase the effectiveness of the three-phased strategy by decreasing the cost of Level 1 sampling and analysis and by reducing the time required to obtain Level 2 data.

These modifications are based on the premise that sequential sampling and analysis will take place at a series of coal cleaning plants. In other words, data from Level 1 testing at the first facility will be used to design the test plan for the second facility, and data from the second facility will be used to design the test plan for the third facility, etc. A similar sequential sampling and test design approach will be followed for Level 2 sampling, although Level 2 sampling at the first facility will begin before all plants have been tested by the Level 1 approach. Thus, after the first plant has been tested using a Level 1 approach, plus Level 2 analyses of selected parameters, future sampling plans of similar facilities can be modified based on the analytical results.

The four modifications recommended are:

(1) Since one of the goals of the field sampling program is to make comparisons among cleaning plants, it will be necessary to sample some pieces of equipment which are considered process equipment in certain closed-loop plants but are considered pollution control equipment in other open-loop plants.

(2) The results of Level 1 tests from previous tests on similar plant(s) by the environmental assessment program or from the

same plant for compliance testing may permit the elimination of tests for particular types of pollutants or effluent streams. This type of modification would only be made if the data characterize a particular type of pollutant or effluent stream well enough to give them a low priority classification. Similarly, some Level 2 sampling and analysis may be performed during the first phase of testing, where previous data indicate that high priority pollutants exist in a particular effluent stream. The high priority designation for pollutants may result from the environmental assessment criteria studies conducted as part of the overall coal cleaning environmental assessment program, or they may result from environmental assessment studies on other coal using or handling facilities. This modification would cut costs by decreasing the amount of Level 1 sampling and analysis required, and would reduce the time required to obtain Level 2 data.

(3) Some pollutants may be eliminated from consideration because they have been demonstrated to be of minimal importance in tests by Federal and state agencies or test results by other EPA contractors doing environmental assessments.

(4) Since one of the goals of the Level 1 field sampling program for coal cleaning plants is to make a crude evaluation of the effectiveness of pollution control equipment and techniques in reducing the pollution load to the environment, samples will be taken from all input and output streams associated with each control device or application of control technology.

Level 1 analytical techniques are designed to make a broad spectrum survey of the physical, chemical, and biological characteristics of a liquid, gaseous, slurry, or solid sample in a quantitative manner and with a target accuracy factor of plus or minus two or three. More specifically, the analysis is designed to show the presence or absence, the approximate concentrations, and the emission rate of inorganic elements and classes of organic compounds. Samples of particulate matter will be further analyzed by size distribution, microscopic examination, and gross physical characteristics. The biological analysis will involve laboratory tests for human health effects and ecological toxicity screening.[1]

Each of the above types of analyses is included in the Level 1 phase because it provides some unique information on the behavior, control approach, and/or potential toxicity of effluent streams. Particle size and shape, for example, has a major effect on particle behavior in process streams, control equipment, atmospheric dispersion, and animal respiratory systems. Chemical analyses can be used to predict control approaches, atmospheric dispersion/transformation, and potential toxicity. Finally, only the biological tests can provide a reliable measure of the potential biological response to an effluent stream. These biological tests can detect complex biological effects such as synergism and antagonism that cannot be easily predicted by physical and chemical tests.[1,2,3]

Level 2 Sampling and Analysis

Level 2 sampling involves a statistically representative sample collection scheme at priority streams identified by Level 1 sampling and analysis as having a potentially significant level of environmental impact. In addition, Level 2 sampling usually is designed to collect information on specific compounds or classes of compounds that are considered toxic and are known to occur in the streams sampled. This may require the modification of Level 1 sampling equipment or in some cases the use of entirely new types of sampling equipment in order to isolate the compounds of special interest. At the same time, stream flow rates are measured accurately instead of using estimates as in Level 1.[1,3]

The Level 2 requirement for obtaining a statistically representative sample may require several changes in the Level 1 technique. Sampling location(s) within a stream will need to be carefully determined; this may require collection of several samples across a traverse of the stream. Time-integrated samples will need to be obtained, frequently by using automatic sampling equipment. Sample collection over an extended time period and under a variety of environmental conditions will be necessary, due to the extreme variability of the coal cleaned and the variability of effluent streams exposed to weather-caused modifications.[1,3]

In some cases, Level 2 sampling techniques have already been identified. For example, preferred Level 2 sampling and sample treatment methods for

various organic chemical categories are presented in a recent EPA report.[6] Similar lists of Level 2 sampling and sample treatment methods for inorganic compounds and for health and ecological testing are not yet available.

Although Level 2 sampling may require the use of complex sampling equipment and repetitive sample collection, it may not require more manpower than the Level 1 sampling. Sampling locations should be considerably reduced, since only the potentially hazardous streams will be sampled in the Level 2 effort. Similarly, the isolation during Level 1 of specific elements, particle sizes, or organic fractions of environmental concern will reduce the individual sample volume and multitude of preservation techniques required during Level 2 sampling, as compared to the Level 1 sampling which is designed to handle collection of all potential pollutants.[1,3]

In some cases, Level 1 samples may be used for Level 2 analyses. However, in order to be useful, Level 1 samples must be reasonably representative, properly preserved, and analyzed only for stable compounds or elements. For example, some of the organics collected by stack sampling are preserved as extracts in methylene chloride solution. These extracts could be used for Level 2 analyses that would confirm the presence of a specific toxic organic compound; the presence of such a compound may have been suspected on the basis of a Level 1 analysis that identified the class for that compound.[6]

Decision criteria for the selection of streams and pollutants requiring Level 2 sampling will be based on a number of factors. The decision to sample a particular stream by Level 2 techniques will be based primarily on the results of ecological and health bioassay tests, since these data may be the only information on possible synergistic effects of the complex mixture of pollutants found in that stream. Decision criteria for Level 2 sampling of specific parameters within a stream will be based on such threshold concentrations as (1) the 0.5 mg/m^3 Level 1 value for gas emissions obtained by Source Assessment Sampling System (SASS) sampling[1]; (2) minimum acute toxicity effluent (MATE) values from the multimedia environmental goals (MEG) studies[6,7,8]; (3) estimated permissible concentration (EPC) values from the MEG studies[6,7,8]; (4) threshold limit values (TLV's) developed by the American Conference of Governmental Industrial Hygienists[9]; and (5) recently published acute and chronic toxicity data and biomagnification data not included in the development of the previously listed values. Methodologies for applying these values in the planning for Level 2 sampling have been described in several EPA reports.[5,6,7]

In most cases, Level 2 analytical techniques will be more sophisticated and have the capability for a more precise identification and quantification of selected parameters than was possible using Level 1 techniques. In some cases, however, Level 2 analyses may be extensions of Level 1 procedures used on samples that are much more representative than those obtained by Level 1 sampling. Expanded biological testing on the more toxic streams will be used to obtain a more detailed characterization of the biological effects.[1,2,3]

Because Level 2 analyses must positively identify pollutants in the most toxic streams and provide a valid estimate of this toxicity, these analyses are extremely critical. The analyses, however, must be conducted in a cost- and information-effective manner. Due to the multiplicity of analytical techniques which could be used for a Level 2 analysis, the selection of techniques and interpretation of results should be managed by experienced analytical personnel working in well-equipped laboratories. These personnel should be fully aware of the goals and requirements of the field program for an environmental source assessment of coal cleaning processes.[1,3]

It is fairly obvious from the preceding comments that not all Level 2 analyses can be conducted using a prescribed series of tests. The following examples, however, might help to clarify the types of tests appropriate for Level 2. Spark-source mass spectrometry, which is used for elemental analysis in Level 1, might be replaced by neutron activation analysis or atomic absorption spectroscopy for a Level 2 analysis. Level 2 analysis of certain water quality parameters, such as nitrates, phosphates, or ammonia, is likely to be done using carefully controlled, wet chemical, laboratory techniques, instead of using test kits in the field as suggested for a Level 1 analysis. Health effects bioassays used in Level 2 might include *in vitro* tests to confirm possible toxicity or mutagenicity suspected from the results of Level 1 assays. Level 2 ecological bioassays might involve studies of bioaccumulation and persistence, which are not evaluated at all during Level 1 testing.[1,2,3]

Level 2 analysis techniques have been recommended for certain organic and inorganic compounds. Techniques for Level 2 analysis of classes of organic compounds are listed in a recent EPA report.[6] In addition, a draft report containing recommended Level 2 analysis techniques for selected

inorganic compounds and options for organic analysis of stack samples is in review.[5] Neither of these reports, however, contains recommended analytical procedures for all of the compounds which may be encountered in the various process and effluent streams from coal cleaning facilities. In addition, no manual is available yet which lists recommended Level 2 analytical techniques for either health or ecological tests.

Level 3 Sampling and Analysis

Level 3 sampling is designed to monitor a limited number of "key" elements, compounds, or compound classes over an extended period of time. The goal is to determine the variability of stream composition with time, and as a function of weather, and process or control system parameters ("set points"). Once it has been established that a stream is hazardous to the environment and the pollutant(s) has been specifically identified by the first two phases, Level 3 testing should be designed to accurately quantify the range of values to be expected and the effectiveness of control equipment or processes in limiting the release of the pollutant(s) to the environment.[3]

To be cost-effective, the Level 3 sampling should be tailor-made for each high priority stream selected for monitoring. Where possible, this sampling plan should involve the use of continuous, in-stream monitoring devices.[3]

Level 2 sampling should be periodically used to check the accuracy of the Level 3, "key indicator", approach. The Level 2 check may determine that it is necessary to monitor additional indicator parameters where the key indicators initially selected do not accurately reflect stream variability.[3]

Level 3 analytical techniques are as specific to the stream and indicator parameter being monitored as the sampling plan; thus, the necessary Level 3 techniques cannot be determined until after the completion of a Level 2 analysis. The Level 3 techniques selected must be capable of detecting minor variations with time in the concentrations of key indicator materials. However, the techniques will be optimized to fit a specific set of stream conditions and therefore may not be as sophisticated or expensive as Level 2 methods. The equipment may be either manual or instrumental, as long as it can be used at the cleaning plant. Continuous monitors should be used whenever possible to aid in interpreting data acquired intermittently by manual techniques.[3]

Benefits of the Field Testing Program to the Coal Preparation Industry

Results of the field testing program will be useful to owners and operators of coal preparation plants even if their facilities are not selected for testing. Field sampling is planned for at least one coal cleaning plant in each of ten site categories. These ten site categories were carefully selected to represent combinations of extremes in the values of four variables. These four variables were also carefully selected to be the ones of major importance in determining the pollution potential of any given coal cleaning plant. Because this site selection design is comprehensive, extrapolation of test results to a large number of coal cleaning plants should be possible. Therefore, benefits to this expanded group of coal cleaning plants will include the following:

- Reduced costs for pollution control. Cost reductions should be possible by utilizing the following field program results:
  - Information needed to select the most efficient pollution control device or technique for a specific type of effluent stream in a specific environmental setting
  - Information needed to select the process equipment and set points that result in effluent streams with reduced pollution potential.
- Decreased pollutant monitoring and reporting requirements. A better understanding of the pollutants of concern in specific effluent streams should reduce the number of air and water quality parameters and/or effluent streams that are under consideration for government regulation.

- Improved pollution control technology. Identification of the most toxic waste streams should stimulate research and development on improved control technology techniques.

Benefits of Site Sampling to Cooperating Facility Owners

Results of the air, water, and solid waste sampling and analysis programs will be of direct use to the cooperating coal cleaning facilities. Sample analysis will produce data on pollutant concentrations which can be used without cost to facility owners for partial compliance with the testing and monitoring requirements mandated by part or all of the following Federal laws:

- Toxic Substances Control Act of 1976 (PL 94-469),
- Resource Conservation and Recovery Act of 1976 (PL 94-580), and
- National Pollutant Discharge Elimination System - U.S. Water Pollution Control Act Amendments of 1972 (PL 92-500).

One important part of the Toxic Substances Control Act (TSCA) gives the regulatory and monitoring branches of EPA the authority to obtain data on important health and environmental aspects of potentially harmful substances and mixtures through testing, record keeping, and reporting.[10] Manufacturers and processors of these substances will be required to bear the costs of both testing and record keeping. An initial group of potentially harmful substances which must be considered by EPA under TSCA includes four elements known to occur in coal (cadmium, lead, mercury, and arsenic). Thus, EPA may require coal processors to conduct tests that define or clarify the health and environmental effects of coal cleaning plant effluents. This requirement may include tests to determine carcinogenicity, mutagenicity, behavior disorders, cumulative or synergistic effects, and acute toxicity. The health and ecological screening tests planned by Battelle for samples from cleaning plant, refuse pile, and coal pile effluents or leachates have been approved by EPA. Thus, results of Battelle's tests can be used by cooperating facility owners for partial compliance with the requirements of TSCA.

The Resource Conservation and Recovery Act (RCRA) of 1976 expands the current provisions of the Solid Waste Disposal Act to, among other items, provide for a hazardous waste regulatory program.[11,12] Coal preparation refuse clearly falls under the law's definition of solid wastes and may in

the future be considered "hazardous waste". The U.S. EPA's definition of hazardous waste includes any waste or its leachate that is considered flammable, corrosive, infectious, reactive, radioactive, or toxic. The high levels of heavy metals and sulfate and the low pH of leachate from coal refuse are very likely to result in a "hazardous" classification for this type of waste. If the "hazardous" classification is given to preparation plant refuse, then permit application, monitoring, record keeping, and reporting will be required of owners and operators of the refuse facilities under RCRA. These activities will require air and water quality analysis of the type planned by Battelle for preparation plant refuse. Cooperating facilities could use the data generated by Battelle's sampling and analysis efforts as part of a permit application or monitoring report to comply with RCRA.

The National Pollutant Discharge Elimination System (NPDES), which is an amendment to the U.S. Water Pollution Control Act, requires (1) application for a permit for the construction and operation of facilities considered to be point source discharges, and (2) a continuous operational monitoring program. Effluents and leachates from coal cleaning plants, cleaning plant slurry holding ponds, coal pile runoff collection systems or desilting basins, and coal refuse leachate collection systems or ponds are considered point source discharges and are therefore subject to NPDES requirements. These effluents fall under the effluent limitations guidelines for the coal mining point source category. Discharge water pollution limitations in this category were set by EPA on April 26, 1977, for existing sources[13] and proposed limitations for new sources were published in the Federal Register on September 19, 1977.[14] In addition, EPA is considering the promulgation of regulations which would indicate that the amounts of pollutants in any existing discharge, as disclosed in a permit application, would be incorporated as NPDES permit limitations unless otherwise modified in the permit.[15] Thus, no discharge of pollutants other than those indicated in the permit would be authorized except in amounts equal to those in intake waters. All of the above existing and proposed regulations will require water quality data of the type planned by Battelle for coal cleaning plants and their associated facilities. Cooperating coal cleaning facility owners could benefit by use of these data in NPDES permit applications or monitoring reports.

ELEMENTS COMMON TO ALL FIELD TEST PLANS

The environmental source assessments proposed for coal cleaning plants in each of ten site categories will be similar in many respects. The elements (e.g., sample locations, collection techniques, analysis techniques) that should be common to all or most of these test plans are presented in the following sections to facilitate the planning and preparation of the site-specific test plans. Adherence to this generalized plan will ensure that each of the field tests meets the overall project needs and objectives.

Potential Sampling Locations

The multimedia Level 1 environmental source assessments at each coal cleaning plant will involve sample collection from a wide variety of gaseous, liquid, and solid streams (Figure 1). The four primary types of samples which need to be collected are air, water, slurry, and solids. More specific sampling locations recommended for each of the sample types listed in Figure 1 are identified in Figures 2 through 5. Level 2 and 3 sampling locations will be selected from these comprehensive lists as described earlier (see Testing Philosophy: The Phased Approach).

A block flow diagram of a generalized coal cleaning plant showing potential sampling locations is provided as an overview of the type of sampling plan needed for each facility to be tested (Figure 6). Points in the flows of coal, refuse, water, and air at which air or water pollutants may potentially be released are noted on the diagram, as well as sampling points necessary to characterize pollution control equipment and waste management techniques. The general analytical group(s) recommended for a Level 1 analysis of samples from each of the locations on Figure 6 is indicated in Table 1.

As part of the site selection scheme, it was decided that the coal cleaning facilities selected for testing would be limited to six out of nine general types of coal preparation processes. This scheme is summarized in a

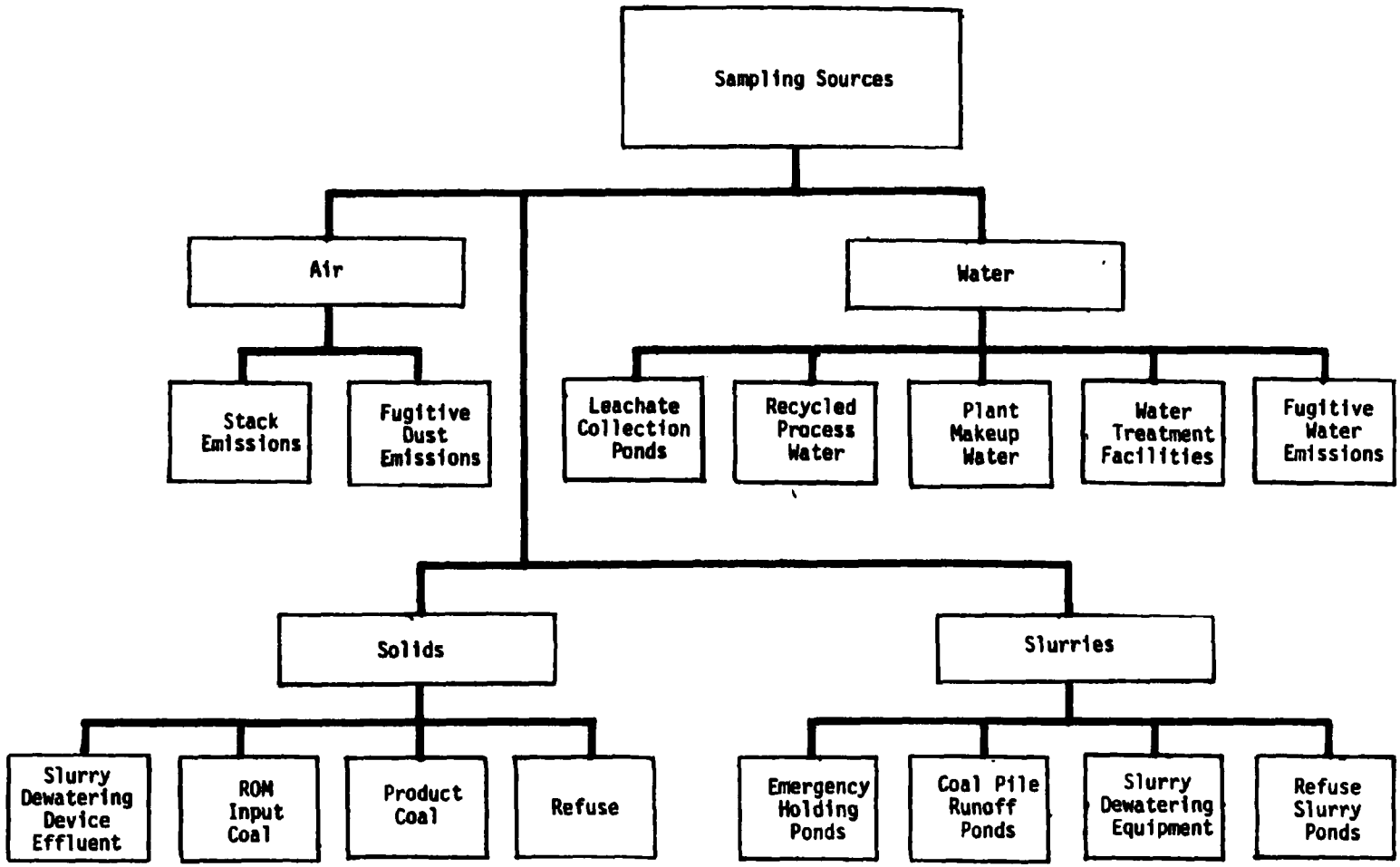

FIGURE 1. OVERVIEW OF POTENTIAL SAMPLE TYPES AND THEIR SOURCES AT COAL-CLEANING PLANTS

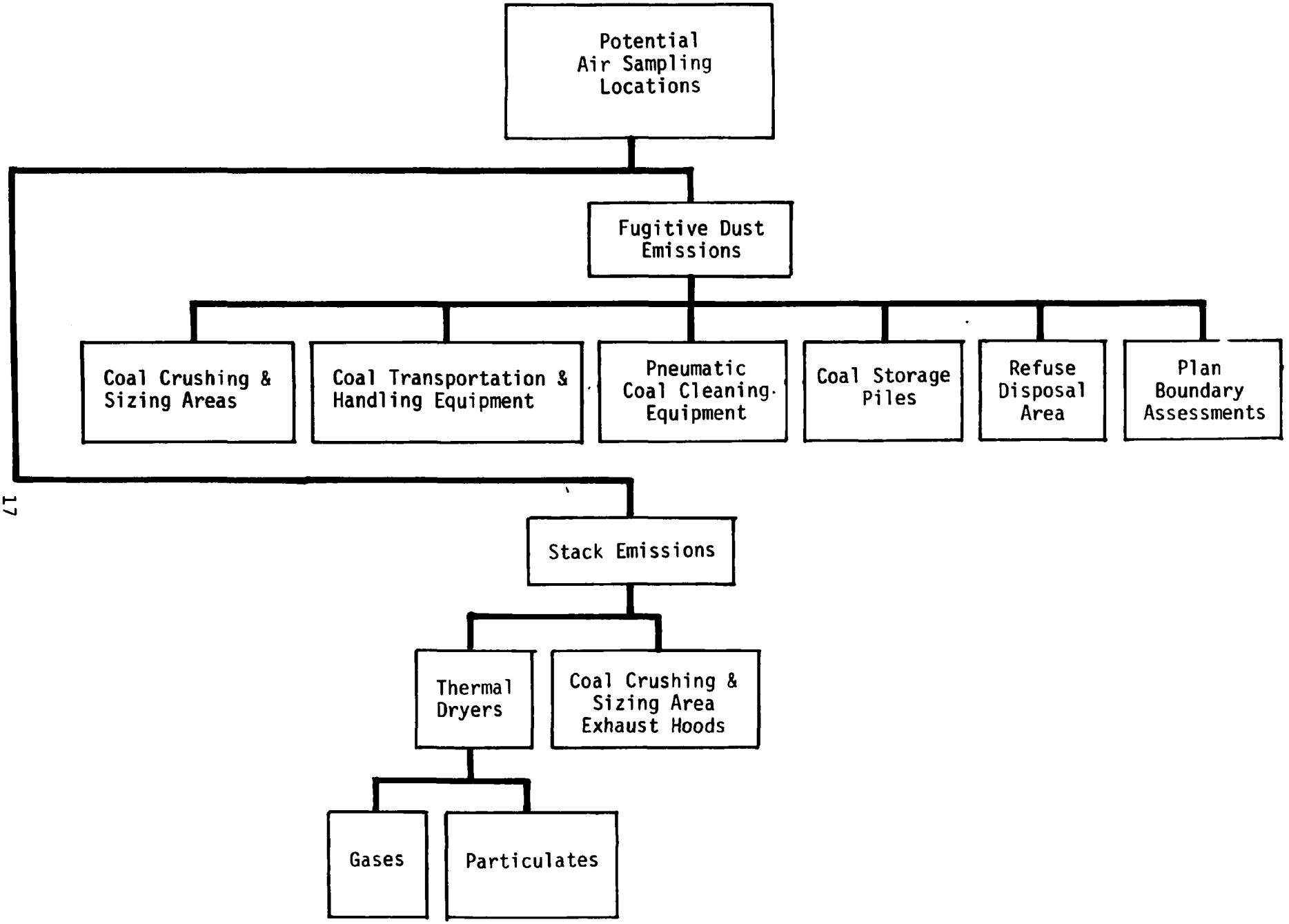

FIGURE 2. POTENTIAL AIR SAMPLING LOCATIONS

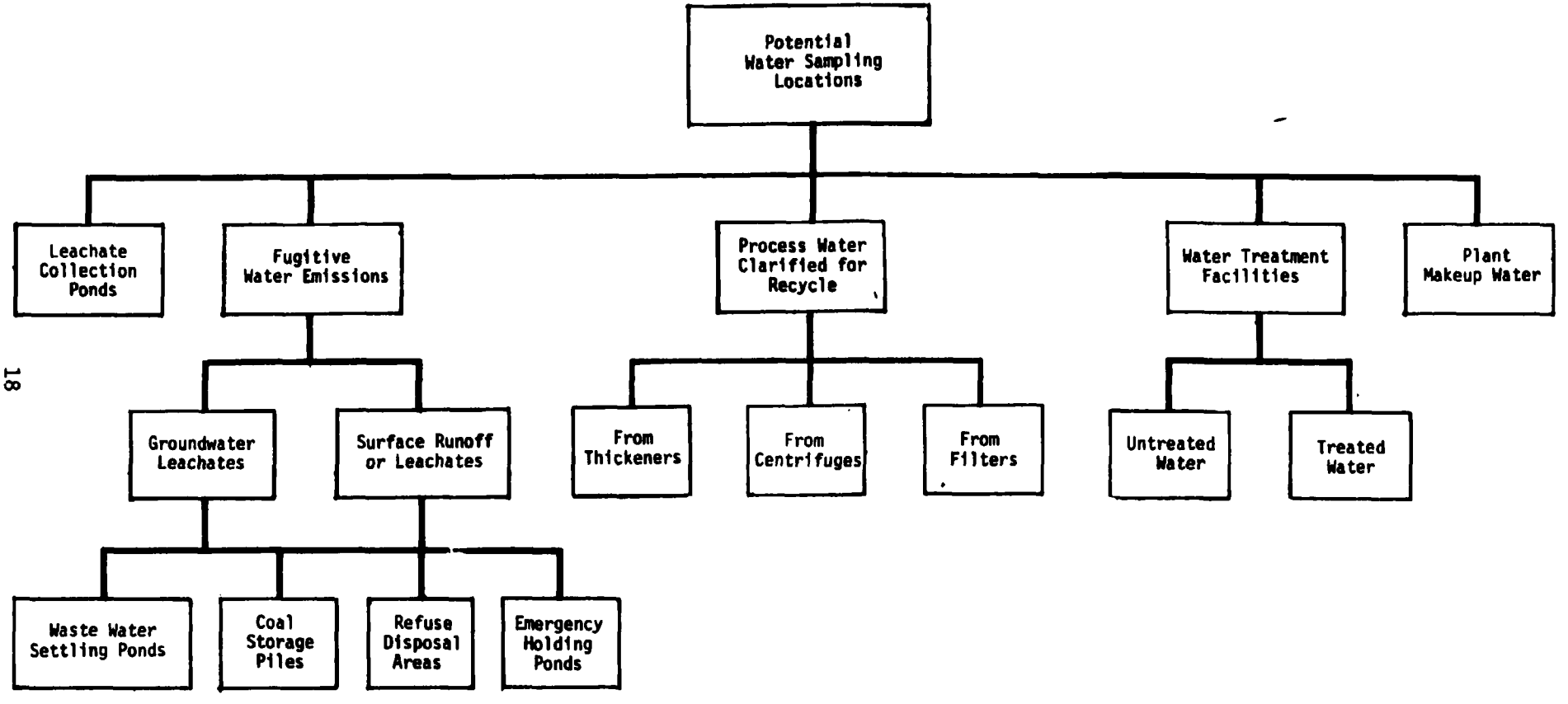

FIGURE 3. POTENTIAL WATER SAMPLING LOCATIONS

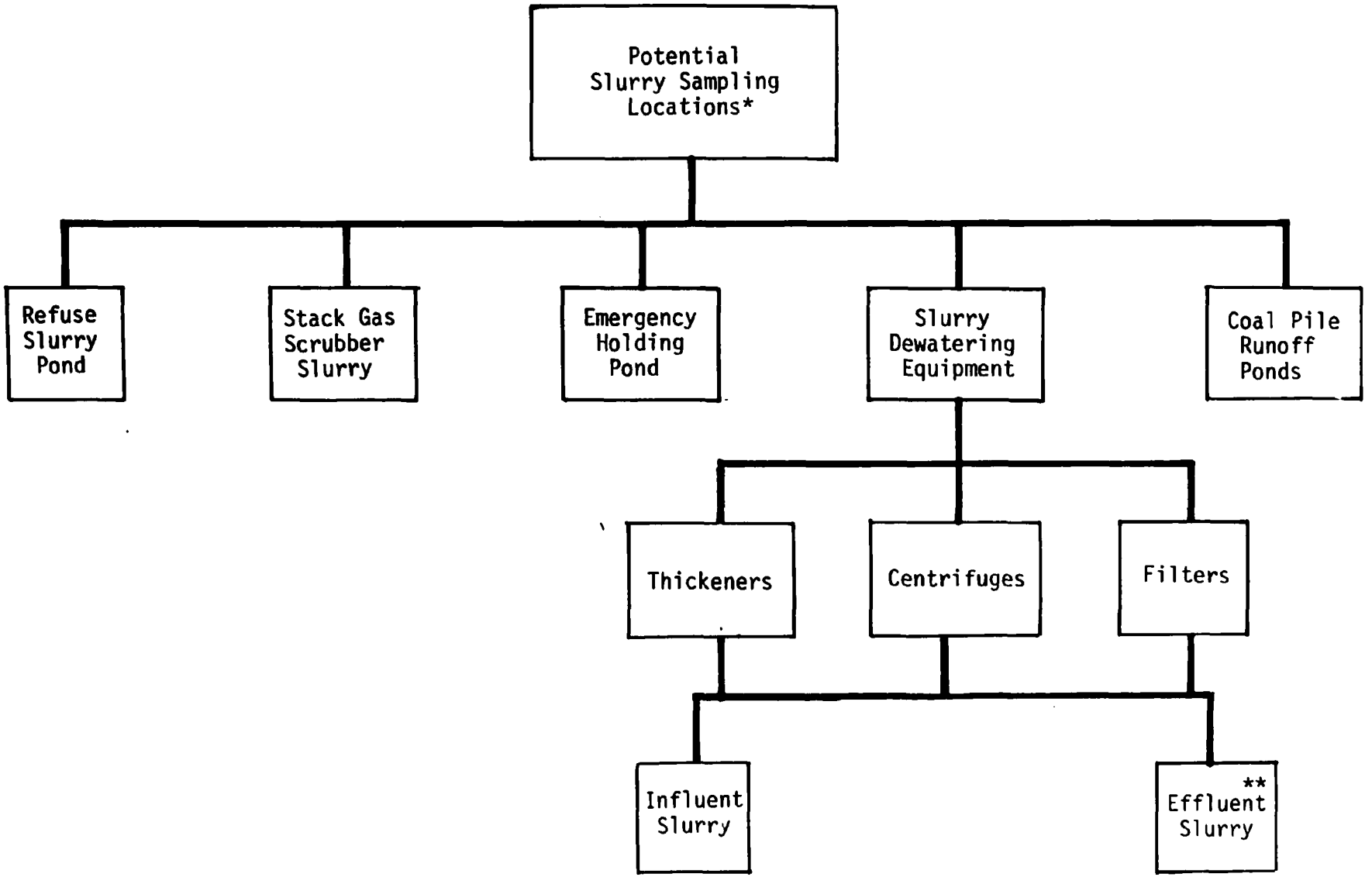

FIGURE 4. POTENTIAL SLURRY SAMPLING LOCATIONS

*Slurry samples will be filtered so that the water and solids can be analyzed separately.

**In some cases the effluent may be a solid.

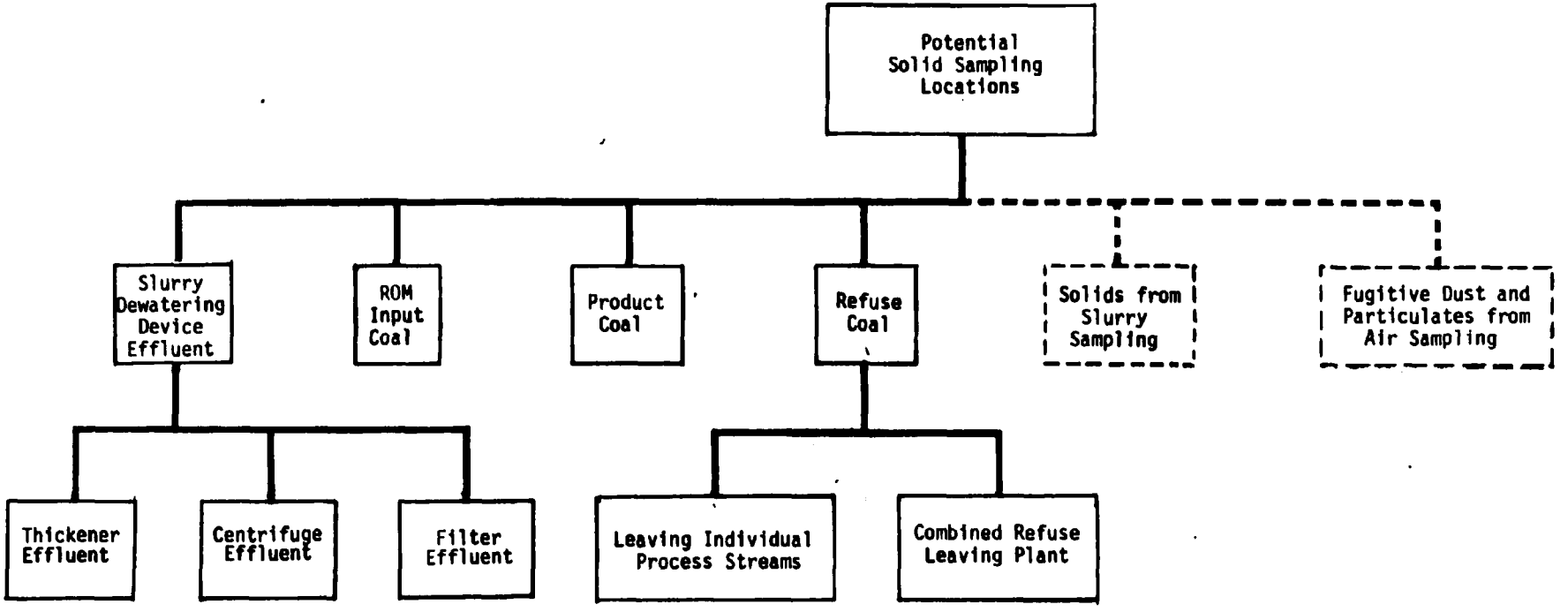

FIGURE 5. POTENTIAL SOLID SAMPLING LOCATIONS

TABLE 1. GENERALIZED COAL CLEANING PLANT LEVEL 1 SAMPLING POINTS

	Potential Analysis Group(s)[a]
1. Cleaning Plant (overall performance)	
(a) Input coal	C
(b) Product coal	C
(c) Refuse	C
(d) Process makeup water	W,B,O
2. Dewatering Devices (thickness, centrifuges, filters, settling ponds, etc.)	
(a) Input slurry (of coal or refuse)	S
(b) Clarified water	W,B,O
(c) Concentrated solids	S
3. Cleaning Plant Refuse Disposal Area	
(a) Refuse water leachate	W,B,O
(b) Surface water leachate from leachate collection system	W,B,O
(c) Treated leachate	W,B,O
(d) Fugitive dust (Hi-Vol and Andersen samplers) (use a sieved sample of refuse for ecological testing)	F,O
(e) Groundwater contamination	W,B,O
4. Water Treatment System(s)	
(a) Input water streams	W,B,O
(b) Treated water destined for discharge or recycle	W,B,O
5. Thermal Dryer	
(a) Particulate catch entering air pollution controls	PC
(b) Particulate catch exiting air pollution controls	PC,B
(c) Gas stream entering air pollution controls	G,O
(d) Gas stream exiting air pollution controls	G,O,B
(e) Scrubber slurry (if any)	S,O
(f) Ash from furnace	C
6. Coal Storage (cleaned and/or raw coal)	
(a) Surface runoff	S,O,B
(b) Fugitive dust (use sieved coal sample for ecological testing)	F,O,B
(c) Groundwater contamination	S,O,B
7. Coal Loading and Unloading Facilities	
(a) Surface runoff	S,O,B
(b) Fugitive dust	F,O

(a) The potential analysis groups listed for each sampling location are the *maximum* recommended; circumstances at some of the cleaning plants may result in fewer analyses at a particular location. More details on the analysis groups listed below will be given in the following sections of this report.

C = coal analysis; B = biological tests (health and/or ecological bioassays); F = fugitive dust analysis; O = organic analysis; S = slurry analysis (includes both coal and water quality analyses); W = water quality analysis; G = gas analysis; PC = particulate catch analysis.

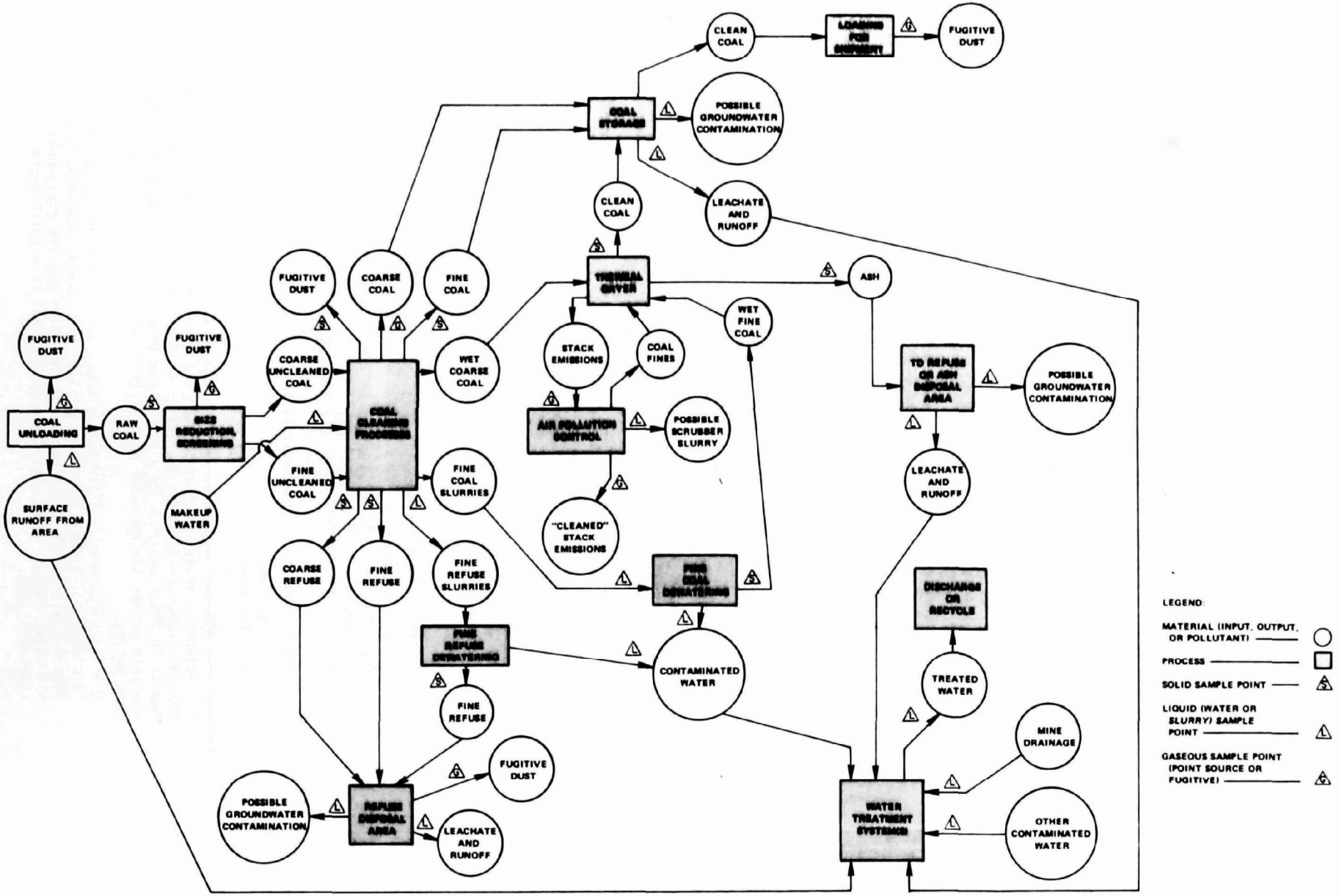

FIGURE 6. BLOCK FLOW DIAGRAM OF GENERALIZED COAL PREPARATION PLANT AND ASSOCIATED FACILITIES SHOWING POTENTIAL SAMPLING LOCATIONS

previous section of this report (see General Objectives of the Field Testing Program) and is presented in great detail in another Battelle report.[16] For sampling purposes, however, it is important to review the six types of coal preparation processes that will be encountered during the field testing program. Block flow diagrams of these six types of processes are presented in Figures 7 through 12, including potential sampling locations specific to each type of process. Cleaning plant Types A and B (Figures 7 and 8) represent low (simple) technology facilities, which prepare coarse coal sizes only. Cleaning plant Types F, G, H, and I (Figures 9 through 12) represent high (complex) technology facilities, which prepare all coal sizes including the very finest sizes. The nature of the site selection scheme resulted in the exclusion of cleaning plant Types C, D, and E, which prepare coarse and intermediate sizes of coal (greater than 28 mesh in size). Although an entire environmental source assessment is not planned for cleaning plant Types C, D, and E, it may be necessary to evaluate the refuse disposal areas at some of these facilities, since the fine coal (less than 28 mesh) is not recovered from the refuse stream.

Water and Slurry Filtrate Quality Program

Water and slurry filtrate samples will be collected from both process and effluent streams for a variety of physical, chemical, and biological tests. The types of water and slurry sampling locations are shown, respectively, in Figures 3 and 4. The locations for collecting these sample types are shown in the block flow diagram of a generalized coal cleaning plant (Figure 6) and for specific coal cleaning processes (Figures 7 through 12).

Water quality will be assessed for several different reasons. For example, the improvement in water quality from the use of pollution control devices and techniques will be determined by sampling both input and output flows from these systems. Although many plants have closed process water circuits which theoretically allow no discharge, the effluent from dewatering devices at closed-loop plants will be sampled in order to characterize streams which would be released to the environment from open-loop plants. A major source of pollution from the coal cleaning process is the surface runoff and leachate from coal piles, refuse piles, and settling ponds. These surface effluents will be characterized as well as the leachate to groundwater from the above sources.

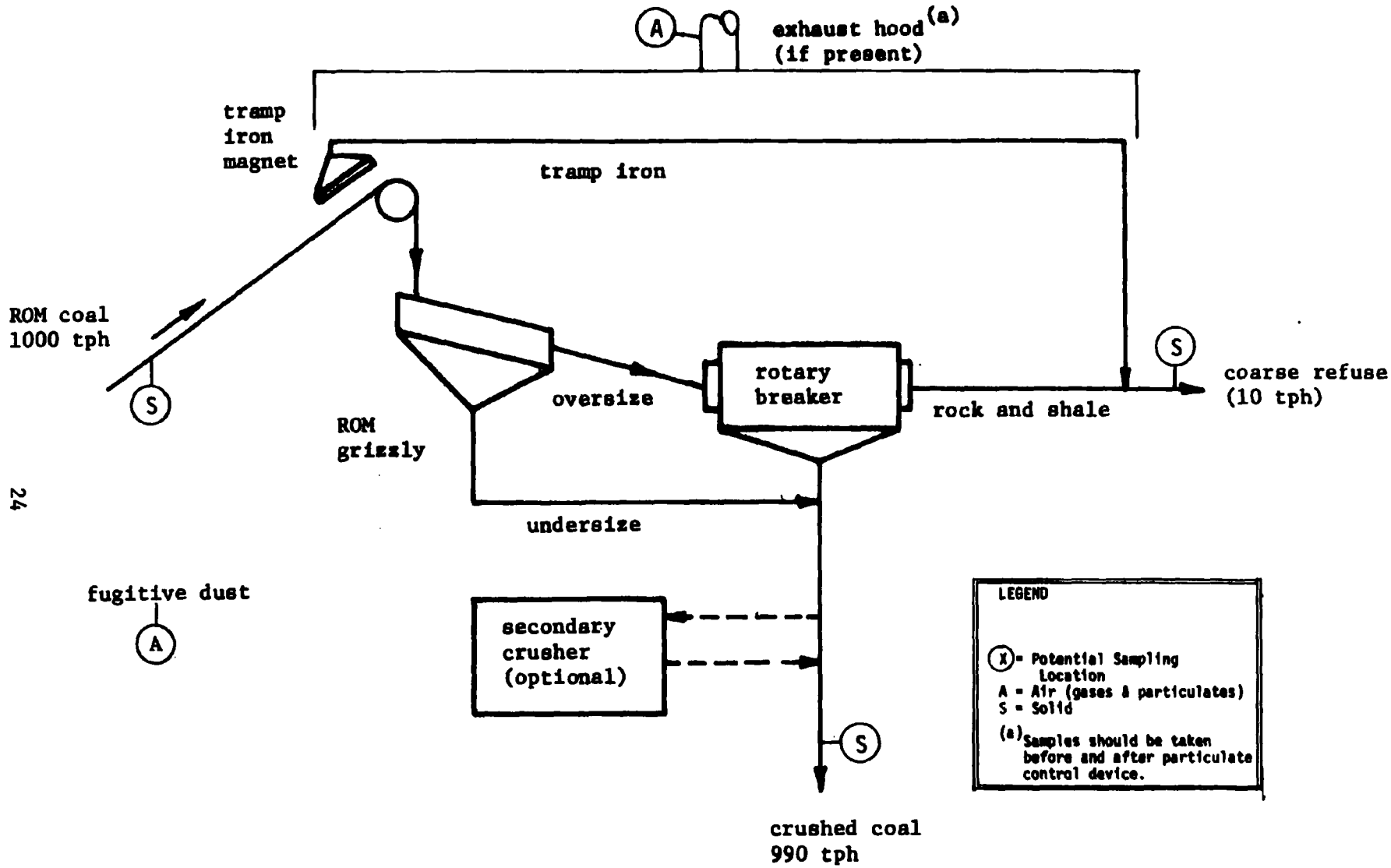

FIGURE 7. FLOW DIAGRAM OF A TYPE "A" CRUSHING AND SIZING PLANT SHOWING POTENTIAL SAMPLING LOCATIONS

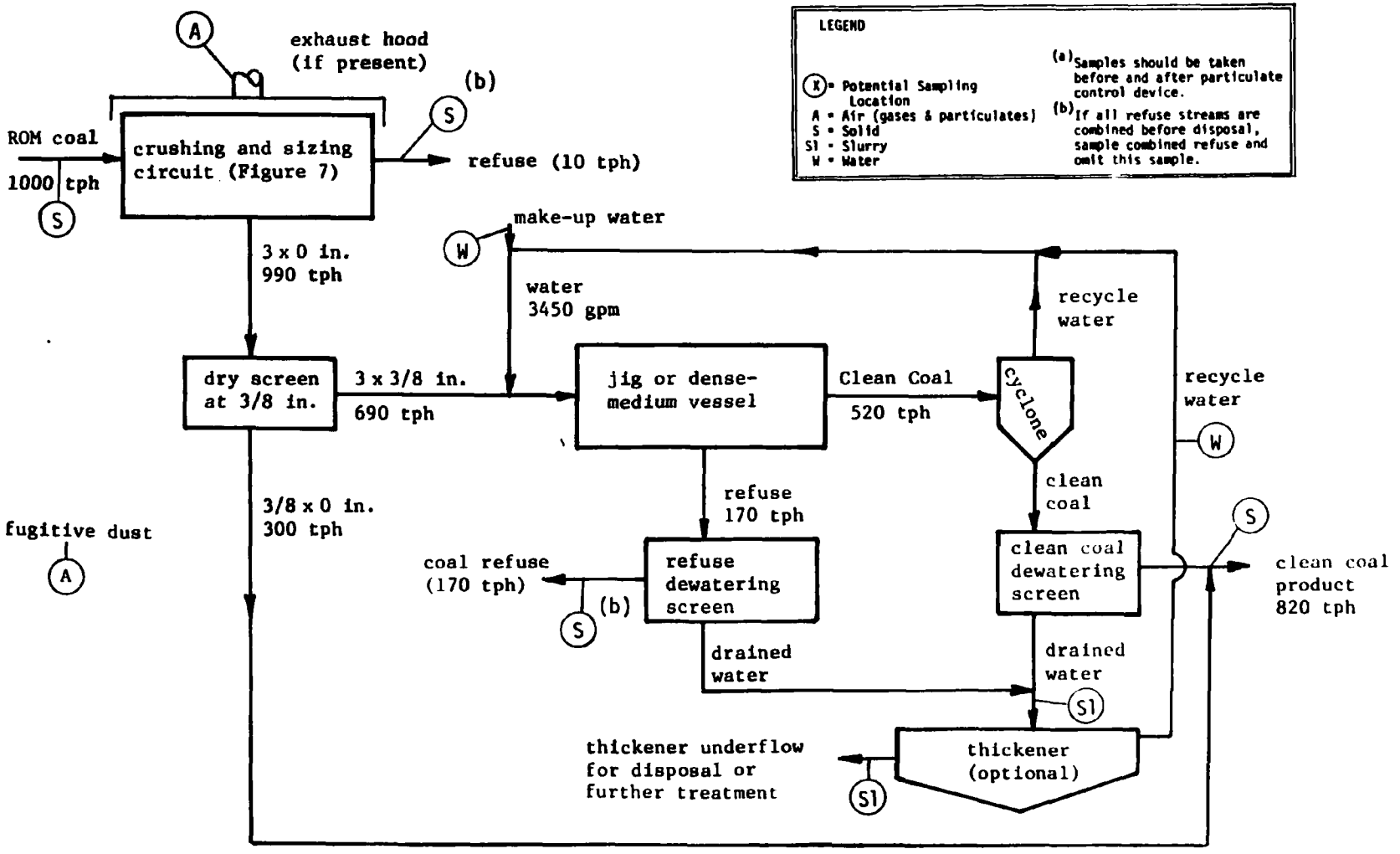

FIGURE 8. FLOW DIAGRAM OF A TYPE B COARSE-SIZE COAL BENEFICIATION PLANT SHOWING POTENTIAL SAMPLING LOCATIONS

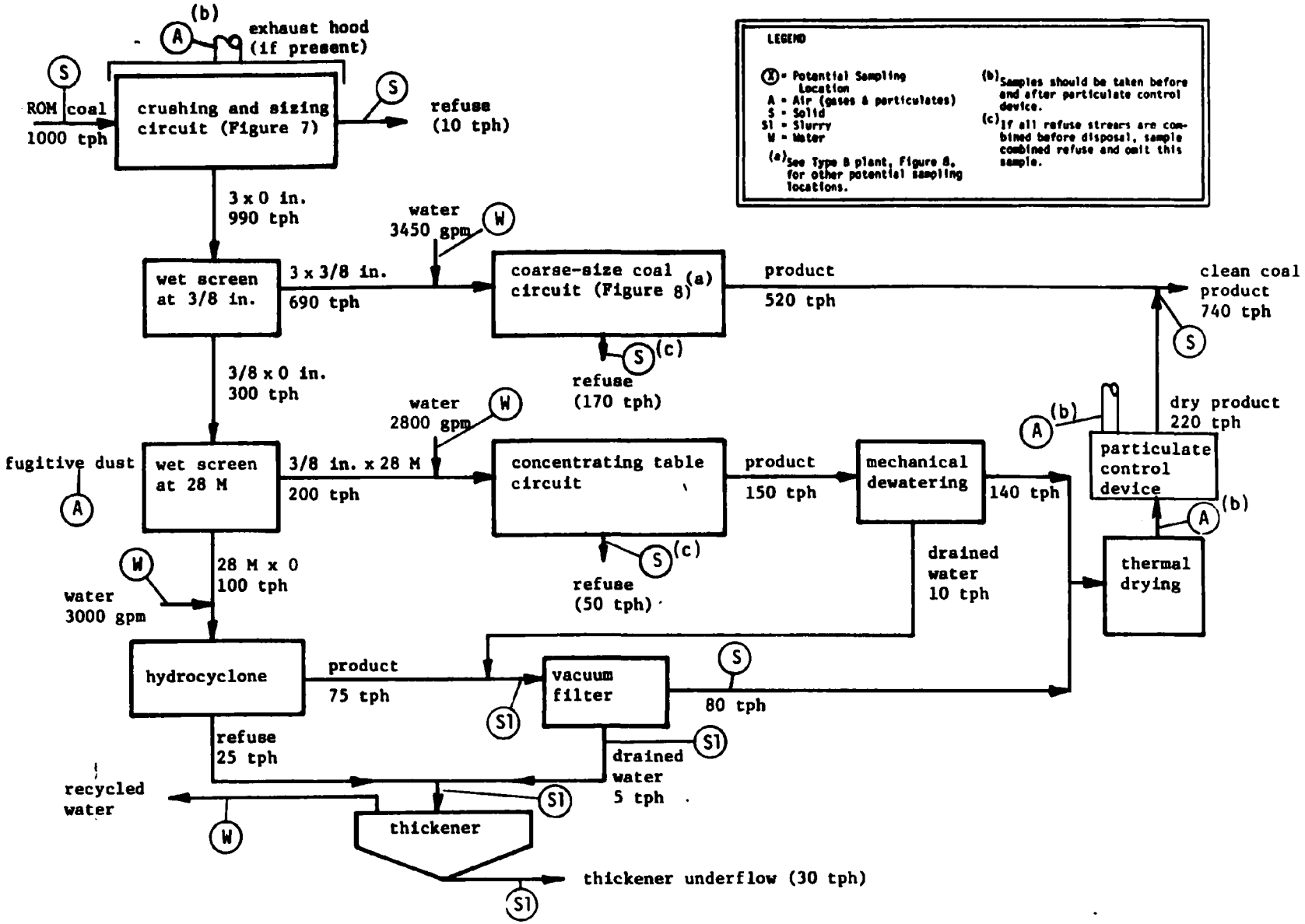

FIGURE 9. FLOW DIAGRAM OF A TYPE "F" CONCENTRATING TABLE AND HYDROCYCLONE PLANT SHOWING POTENTIAL SAMPLING LOCATIONS

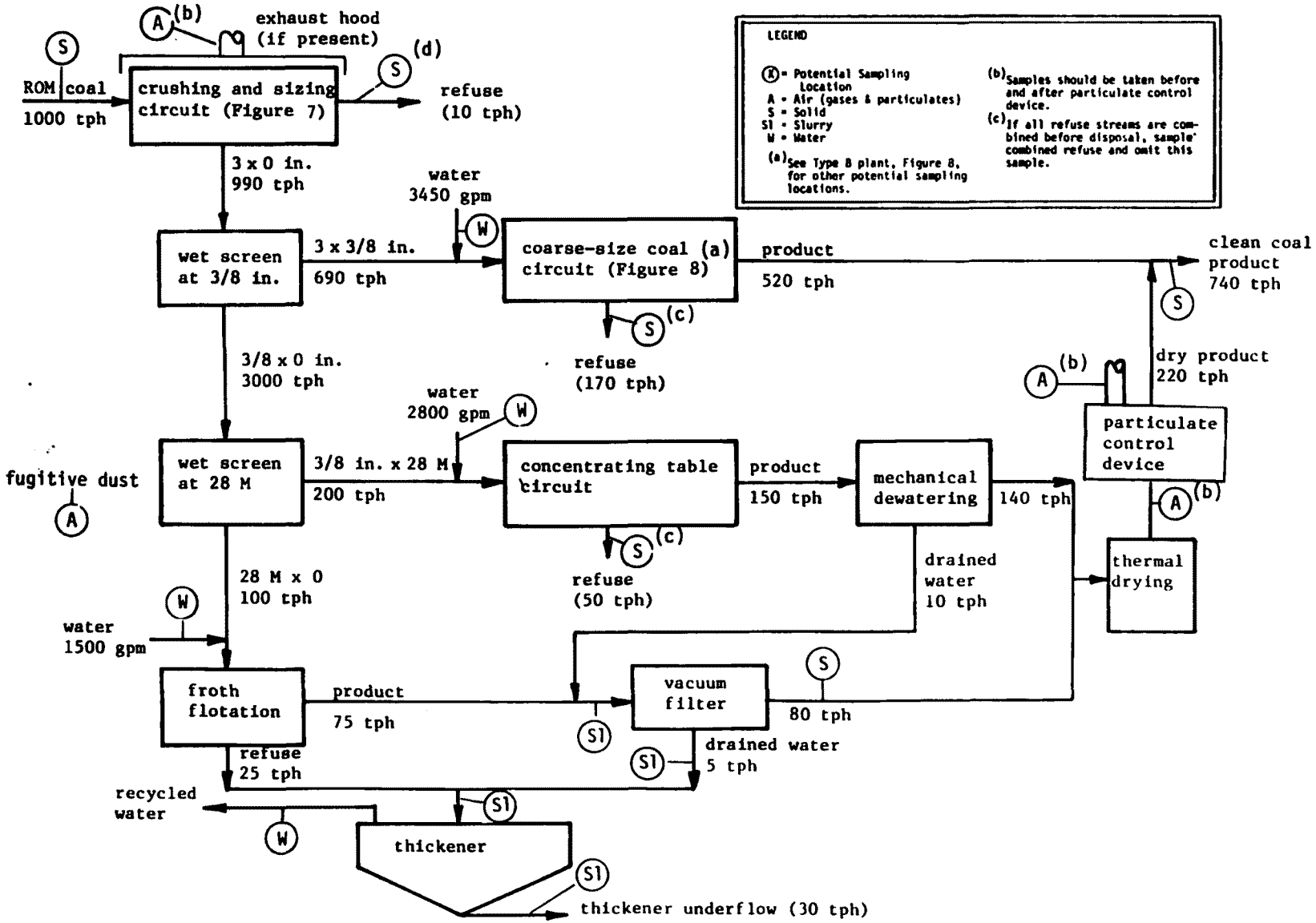

FIGURE 10. FLOW DIAGRAM OF A TYPE "G" CONCENTRATING TABLE AND FROTH FLOTATION PLANT SHOWING POTENTIAL SAMPLING LOCATIONS

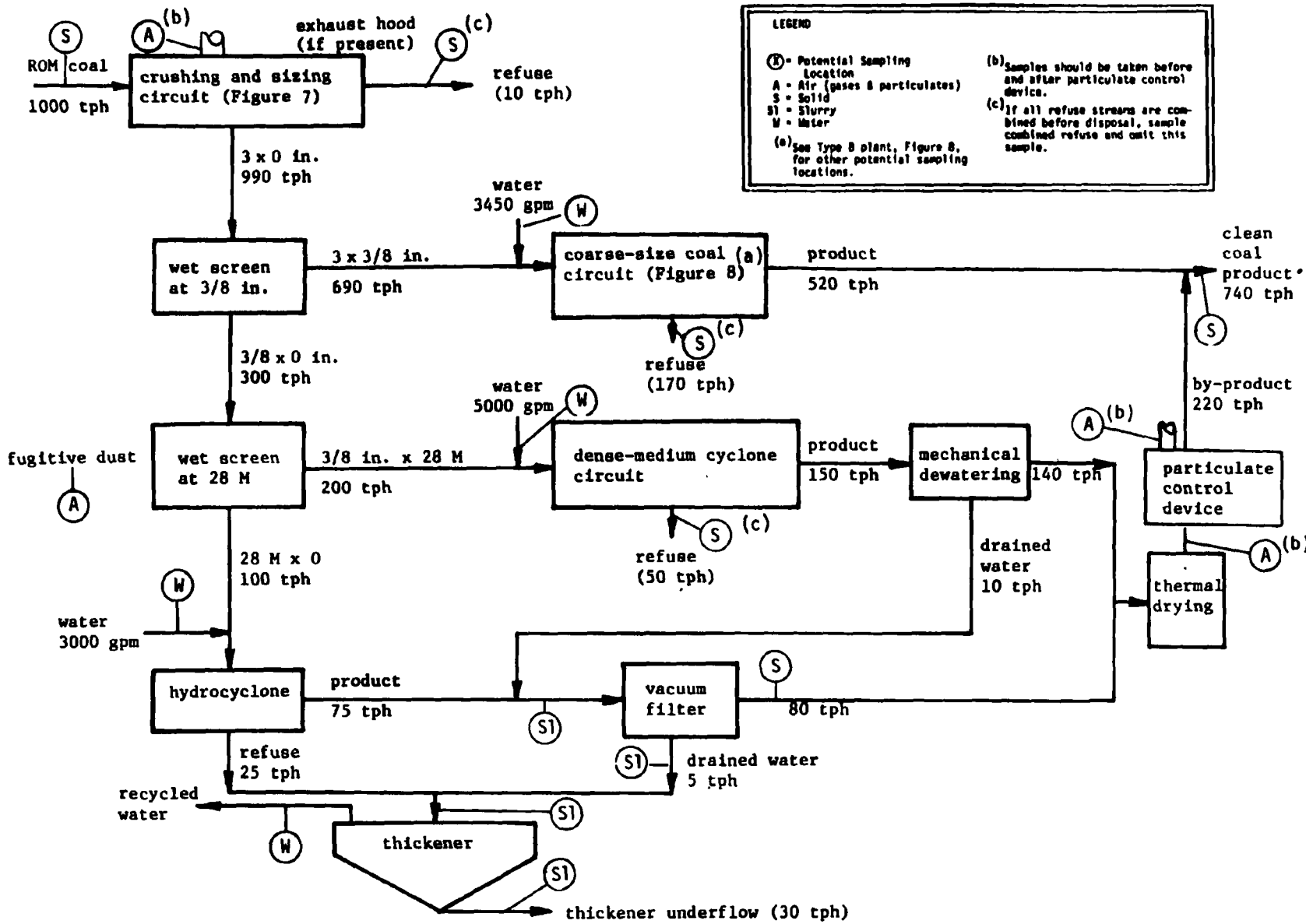

FIGURE 11. FLOW DIAGRAM OF A TYPE "H" DENSE-MEDIUM CYCLONE AND HYDROCYCLONE PLANT SHOWING POTENTIAL SAMPLING LOCATIONS

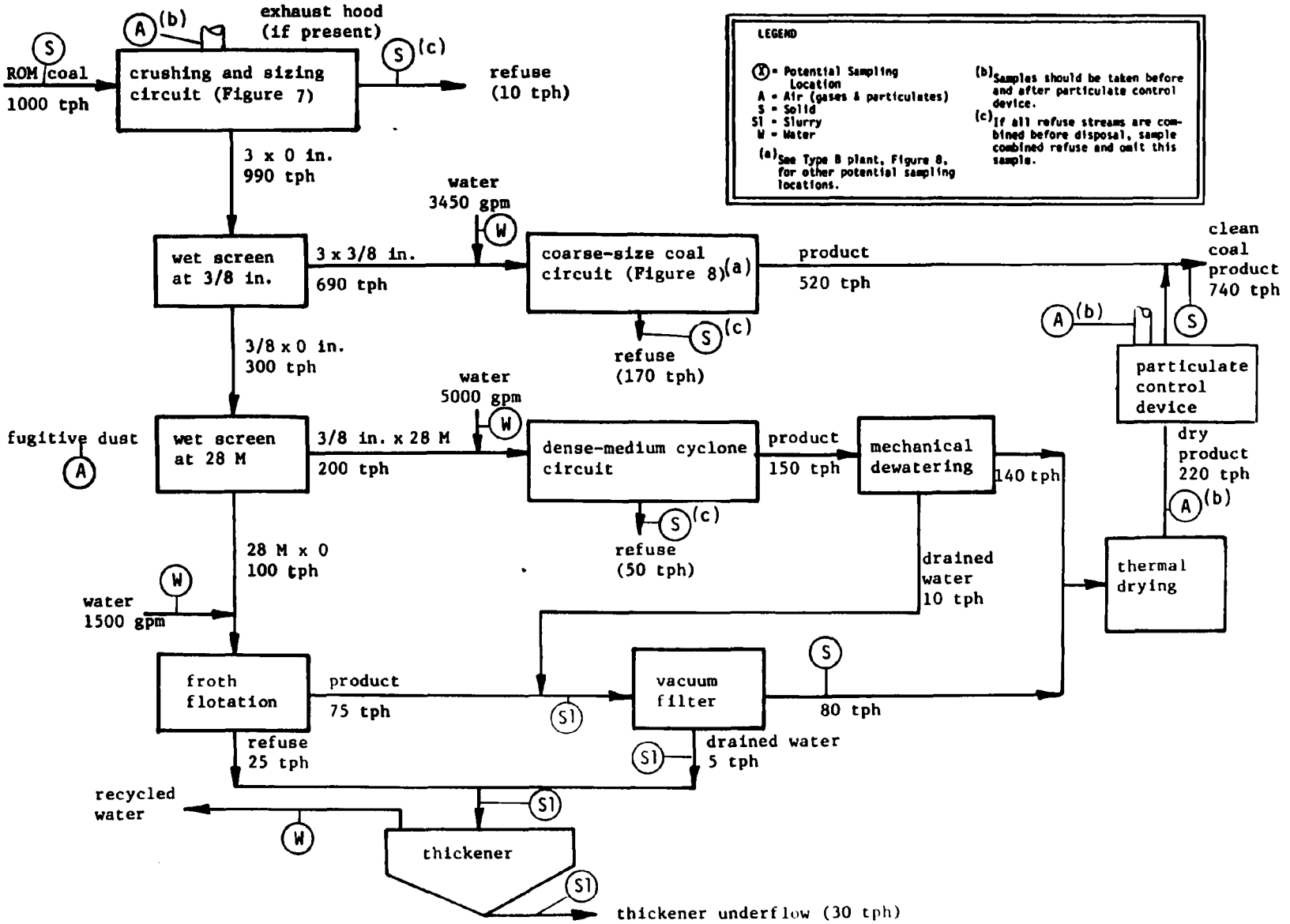

FIGURE 12. FLOW DIAGRAM OF A TYPE "I" DENSE-MEDIUM CYCLONE AND FROTH-FLOTATION PLANT SHOWING POTENTIAL SAMPLING LOCATIONS

The Level 1 sampling of liquids will be accomplished by using dippers in exposed streams and standing water. Normally, three grab samples will be composited over a 5-minute period, with an effort being made to sample the zone of maximum mixing. Each of the three grab samples taken in stagnant water or slurry will be from a different location. Liquid will be obtained from slurry and sludge samples by filtering through a Buchner funnel and Whatman filter paper. Filtering and preservation of slurry filtrate will be done on site. Other sampling methods, which are more specific to the type of liquid stream involved, are discussed in the following sections.

Level 2 water and slurry sampling may involve either grab or proportional sampling depending on the data needed. Grab samples may be appropriate if a more complete qualitative chemical or biological characterization is required than was determined in Level 1. If quantitative data are desired, then proportional sampling should be used for Level 2. Proportional sampling can be conducted on either a time or flow basis, depending on the process characteristics and measurement objectives.[6]

Level 2 sampling for organics in aqueous streams may require continuous extraction/concentration techniques in conjunction with a proportional sampler. This procedure holds significant promise for obtaining a quantitative time-averaged sample of organics. The extraction part of this procedure may involve carbon or resin sorbents or solvent extraction.[6]

Process Water and Slurry Sampling

A number of preliminary planning steps must be completed before sampling process water and slurries. These data-gathering steps, plus the steps in test planning and execution are presented in a flow diagram (Appendix A, Figure A-1). This flow diagram indicates that sampling locations should not be decided until process flow diagrams have been obtained and a site visit has been made.

Basically, the Level 1 process liquid sampling will be performed at every point of water influent to and effluent from the plant. In addition, liquid streams entering and exiting fine-coal slurry dewatering devices (e.g., filters, centrifuges, and thickeners) will also be sampled. These dewatering devices will be sampled even in a closed-process-loop plant, so that the efficiency of the device in reducing potential water pollutants can be compared with

similar devices in open-loop plants which discharge the clarified water. Potential sampling locations for the six types of coal preparation processes that will be encountered are shown previously in Figures 7-12.

Some slurry streams that need to be sampled in the plant will be in closed pipes and tanks. In these cases, valves or taps will have to be installed prior to the sampling trip. No high-pressure or high-temperature liquid sampling is anticipated.

Surface Runoff and Leachate Sampling

Level 1 surface runoff and leachate samples will be collected from raw and clean coal storage piles, cleaning plant refuse disposal areas, and cleaning plant work or parking areas. Surface leachate samples from water treatment settling ponds, slurry disposal ponds, emergency holding ponds, and leachate water holding ponds will also be sampled. Potential sampling locations for surface runoff and leachate are shown on the diagram of a generalized coal cleaning plant and its ancillary facilities (see Figure 6). The preliminary data-gathering and test planning phases for this part of the water quality program are shown in Appendix A, Figure A-2.

Some runoff and leachate water streams will be intermittent or at least too shallow for dipper sampling. These streams will be sampled using polyethylene, or preferably Teflon, plug collectors that are driven into the ground so that water can flow through the wire screen top, which should be located just below the surface. Channels cut in the sides of the plug collectors permit accumulation of groundwater seepage.[1,4]

Groundwater Sampling

Groundwater sampling should be designed to determine changes in groundwater quality due to leachate from coal piles, refuse piles, and all types of water and slurry holding ponds. This will require the collection of water from appropriate upgradient and downgradient locations. Since the location of sampling wells is not straightforward, a study of the site geology will be necessary. Preliminary data collection and test planning phases necessary for this part of the water quality program are shown in Appendix A, Figure A-3.

Groundwater sampling is not part of EPA's phased assessment approach[1,4] and will probably not be conducted as part of Battelle's Level 1 tests, unless appropriate upgradient and downgradient wells already exist. However, if Level 1 surface water sampling reveals a highly toxic leachate water source, the potential for groundwater contamination will be investigated in a Level 2 analysis. Groundwater sampling during a Level 2 analysis will be accomplished by installing piezometric wells upgradient and downgradient from potential sources of aquifer pollution. The Level 2 groundwater sampling and analysis will be designed to correlate the concentration of pollutants and rate of groundwater contamination with the character of the pollutant source. Where the pollutant source is a refuse disposal area, the above factors should also be correlated with the refuse disposal techniques in use at that site. The above addition to the standard phased assessment approach described by EPA is necessary to meet the goals of the overall coal cleaning environmental assessment program (see pages 2 and 6 for rationale).

Analytical Techniques

The 37 physical, chemical, and biological tests listed in Table 2 are potential Level 1 analysis techniques for water and slurry filtrate. Decisions on which parameters should be measured on which streams will be determined after a site visit has been made and available water quality monitoring data obtained. It may be desirable to analyze some of the parameters in the field with probes or reagent test kits. Field test kits, such as those manufactured by Hach or Bausch and Lomb, are sufficiently accurate for a Level 1 analysis. However, the availability of previous water quality data may allow deletion of some analyses from certain streams or may indicate that other parameters should be more accurately determined using laboratory techniques, instead of the less accurate reagent test kits. Brief descriptions of the more detailed water quality analysis techniques for Level 1 studies are presented in Appendix B for physical and chemical techniques and in Appendix C for biological techniques.

TABLE 2. POTENTIAL LEVEL 1 WATER AND SLURRY FILTRATE ANALYSIS TECHNIQUES

Recommended by IERL/RTP for Source Assessments[a]	Additional Tests Recommended by Battelle for Coal Cleaning Program
Physical & Chemical Tests[c]	
Acidity[b]	Chloride
Alkalinity[b]	Phenol
pH[b]	Oil and Grease
Biological Oxygen Demand	Sulfide
Chemical Oxygen Demand	Dissolved Iron
Conductivity[b]	Fluoride
Total Dissolved Solids[b]	Redox Potential[b]
Sulfates[b]	
Nitrites[b]	
Nitrates[b]	
Hardness[b]	
Total Suspended Solids	
Dissolved Oxygen[b]	
Ammonia[b]	
Total Organic and Inorganic Phosphate[b]	
Sulfite[b]	
Free Cyanide[b]	
Organics on Methylene Chloride Extract	
Liquid Chromatography	
Infrared Spectrometry	
Low Resolution Mass Spectrometry	
Spark Source Mass Spectrometry	
Atomic Absorption Spectroscopy	
Biological Tests[d]	
Human Health Tests	
Salmonella/Microsome Mutagenesis Assay (Ames)	
Rabbit Alveolar Macrophage (Cytotoxicity)	
WI-38 Human Lung Fibroblast (Cytotoxicity)	
Acute *in vivo* Test in Rodents	
Aquatic Tests	
Fathead Minnow Acute Static Bioassay	
Daphnia Acute Static Bioassay	
Freshwater Algal Assay	
Terrestrial Test	
Soil Microcosm Test	

(a) From Reference (4).
(b) May be desirable to analyze on site with probe or field test kit.
(c) See Appendix B for a brief description of the more complex physical and chemical tests.
(d) See Appendix C for a brief description of the biological tests.

Analytical techniques for Level 2 or 3 water quality programs cannot be determined until the analysis of the Level 1 sampling phase has been completed. However, the basis for decisions about which parameters and streams need to be analyzed and which analysis techniques to use for Levels 2 and 3 are discussed briefly in an earlier section of this report (see Testing Philosophy: The Phased Approach). In many cases, the water quality parameters determined with field test kits for Level 1 will be determined by more accurate laboratory techniques for Level 2. Usually, fewer parameters will need to be analyzed for Level 2 than for Level 1. Where Level 2 analyses are made, the samples will generally be proportional to time or flow instead of grab samples.

Level 2 water and slurry filtrate analysis techniques may need to be more quantitative and/or more compound specific than Level 1 techniques. Trace element analysis, for example, will probably require the use of atomic absorption spectroscopy instead of spark source mass spectrometry. Analysis for organics may require the use of gas chromatography combined with mass spectrometry, nuclear magnetic resonance spectroscopy, or ultraviolet luminescence spectroscopy. These potential Level 2 organic analysis techniques can be used for a more precise determination of organic compounds suspected from Level 1 analyses.[6]

Air Quality Program

The objective of the air quality program will be to quantify and characterize the fugitive dust from coal cleaning plant operations, especially coal and refuse transfer and storage facilities, as well as stack emissions from thermal dryers and crushing and sizing hoods. The types of potential air sampling locations are listed in Figure 2. In addition, these potential air sampling locations are shown in the block flow diagram of a generalized coal cleaning plant (see Figure 6) and in the diagrams for specific types of coal cleaning processes (see Figures 7-12).

Fugitive Dust Sampling

Level 1 samples of fugitive dust will be obtained using high volume samplers (Hi-Vols) to draw large volumes of air through a glass fiber filter. These Hi-Vols are described in EPA's Level 1 manual.[1,4] Some of the Hi-Vols will be fitted with particulate size fractionating heads known as Andersen impactors. These impactors will have aluminum plates and a filter to collect particulates in five size fractions.

Hi-Vol sampler locations will be chosen to permit collection of upwind and downwind samples at (1) specific dust sources associated with the coal cleaning plant and (2) locations beyond the property boundaries. Fugitive dust sources of interest are listed in Figure 2. The design of a fugitive dust sampling network will be determined by such factors as source complexity and size, site geometry, and prevailing meteorological conditions. These factors will be considered in a fugitive dust dispersion model, which was recently modified by Battelle from EPA's Multiple Point Source Model. The use of the diffusion model and the steps in conducting the fugitive dust sampling are outlined in Appendix A, Figure A-4.

Since the amount of fugitive dust needed for ecological testing is difficult to obtain in Hi-Vols within a reasonable period of time, a 53-μm sieve will be used to filter the raw, cleaned, and refuse coal. The particulate matter filtering through this extremely fine sieve represents the size fraction normally expected to become airborne and contribute to fugitive dust. These sieved samples will be used for elemental analysis, particle morphology, and in human health and soil microcosm tests. Obviously, these ecological tests can only determine the relative toxicity of the sieved samples and should not be construed to represent the toxicity of the combined components of fugitive dust.

A Level 2 study will require more quantitative fugitive dust data, which will require a greater number of samples collected under a variety of meteorological conditions.

Stack Sampling

Level 1 stack sampling will be conducted on both thermal dryers and crushing and sizing hoods, where these processes are used. Samples of particulates and gases will be obtained before and after particulate control

equipment by using the source assessment sampling system (SASS) train developed by EPA and described in detail in EPA's Level 1 procedures.[1,4] The SASS train has a relatively high sampling flow rate, which provides the quantity of particulate matter needed for testing within a reasonable period of time. Usually, the sampling time will be 5 hours in order to sample the required volume of stack gases. The SASS train collects the following types of samples:

(1) Particulate matter (in four size fractions)

(2) Volatile organic species (greater than C_7 organics are collected in an XAD-2 adsorbent trap using a porous polymer resin)

(3) Volatile inorganic elements (captured primarily in the condensate collector).

The steps involved in planning and executing a stack sampling program are shown in Appendix A, Figure A-5.

The SASS train samples for a Level 1 analysis will be collected at the point of average velocity in the stack, which is determined by a velocity traverse. Also, the samples should be withdrawn at a relatively constant flow rate using a nozzle specifically selected for isokinetic conditions when the test is initiated. This flow rate is allowed to vary from -30 to +50 percent of the specified isokinetic rate.

A sample of the thermal dryer gases will be collected at points upstream and downstream from the particulate control devices for determination of C_1 through C_7 hydrocarbons and sulfur compounds. The gas sample will be obtained using the low pressure grab purge sampling apparatus described in EPA's Level 1 manual.[1,4] Once stack gases are captured in the glass vessel, they can be withdrawn through a septum for on-site analysis in a mobile laboratory.

Level 2 stack sampling may involve samples taken at a variety of points along a velocity traverse and may require a flow rate that is extremely close to isokinetic conditions. Depending on the stream components that are identified as potentially hazardous during Level 1 testing, Level 2 testing may necessitate use of some of the EPA sampling methods required for point source compliance tests, which are described in detail in the Federal Register. Time-integrated gas samples may need to be collected in an inert bag. In most cases, the sampling techniques will be simpler than for Level 1 because fewer parameters will need to be measured.[5]

Analytical Techniques

Potential Level 1 analysis techniques for fugitive dust and stack samples are listed in Table 3. The more complex techniques are briefly described in Appendix B for physical and chemical techniques and in Appendix C for biological techniques.

Fugitive dust captured in the glass fiber filters of the regular Hi-Vols will be analyzed for trace elements using several different techniques. A Level 1 analysis will normally involve analysis of fugitive dust using spark source mass spectrometry for a broad-spectrum check of the presence or absence of over 70 elements. In Level 1 tests on streams where toxic trace elements are already known to occur in potentially hazardous concentrations and in some Level 2 studies, trace elements may be more accurately quantified by atomic absorption spectroscopy.

Fugitive dust will be captured in Andersen impactors for a determination of the amount present in each of five size classes. Since the Andersen impactors will have aluminum plates instead of filters, the fugitive dust impacted on the plates can be more easily examined during the particle morphology analysis. Also, the Andersen impactor catch can be separated into respirable and nonrespirable particles for morphological analysis.

Sieved samples from the clean coal and coal refuse piles will be used in human health and ecological tests. These tests will provide information on the relative toxicity of these specific dusts before they have a chance to mix with other dusts in the air column.

Particulate samples obtained during Level 1 studies from thermal dryer or crushing and sizing stacks with the SASS train will be weighed to determine the amount in each of four size classes. These four size classes will then be reduced to respirable (1-μ cyclone and filter) and nonrespirable (3-μ and 10-μ cyclones) particles, which will be examined separately for particle morphology. In addition, the respirable particles will be used for human health tests. The respirable and nonrespirable particles will be analyzed by spark source mass spectrometry and possibly by atomic absorption spectroscopy if sufficient information on certain elements in particulates is already known. The combined respirable and nonrespirable particles will be used for soil microcosm tests.

TABLE 3. POTENTIAL LEVEL 1 ANALYSIS TECHNIQUES FOR FUGITIVE DUST AND STACK SAMPLES

Sample Type	Sampling Device	Analysis Technique(s)[b]
Fugitive Dust	Regular Hi-Vol	Spark Source Mass Spectrometry Atomic Absorption[c]
Fugitive Dust	Andersen Impactor	Size Distribution Particle Morphology
Fugitive Dust	53-μm Sieve	Human Health Tests Soil Microcosm Test
Stack Particulates	SASS[a] Cyclones	Spark Source Mass Spectrometry Atomic Absorption[c] Size Distribution Particle Morphology Human Health Tests Soil Microcosm Test
Volatile Organics Greater Than C_7	Sorbent Resin from SASS[a]	Total Chromatographable Organics Analysis of C_8-C_{16} Liquid Chromatographic Separation Infrared Analysis Low Resolution Mass Spectrometry Gas Chromatography/Mass Spectrometry
Volatile Organics C_1-C_7 and Sulfur Compounds	Purge Sampling Vessel	On-Site Gas Chromatographic Analysis of C_1-C_7 and Sulfur Compounds
Volatile Inorganics	Condensate Collector and Impingers from SASS[a]	Spark Source Mass Spectrometry Atomic Absorption[c]
Stack Gas	Teflon or Tedlar Bag	Plant Stress Ethylene

(a) SASS = Source Assessment Sampling System developed by IERL/RTP.[1,4]
(b) Brief descriptions of physical and chemical analysis techniques are given in Appendix B; biological analysis techniques are described in Appendix C.
(c) Atomic absorption spectroscopy will be used only if data on trace elements is already available or for certain elements, such as mercury, which are not readily detected by spark source mass spectrometry.

The volatile organic gases will be analyzed by three different methods. First, the C_1 through C_7 organics will be determined on-site by a gas chromatograph (GC). The GC analysis will be conducted on a subsample of gas taken from the 3-liter flask with a septum described on page 35. Second, the XAD-2 resin extract will be analyzed for C_8 through C_{16} hydrocarbons using a GC. This analysis and the following analyses will require liquid chromatographic (LC) separation of the resin extract into seven fractions. Third, the seven LC fractions will be analyzed by infrared (IR) spectrophotometry and, when the quantity is sufficient, by low resolution mass spectrometry (LRMS). These techniques are explained in detail in the EPA Level 1 manual[1,4] and are briefly explained in Appendix B.

The volatile inorganic gases captured in the condensate collector will be analyzed during Level 1 studies by spark source mass spectrometry (SSMS) for a broad-spectrum elemental analysis and may be analyzed by atomic absorption (AA) for trace elements of special interest. In addition, the impinger solutions will be analyzed for mercury.

Sulfur compounds present in the thermal dryer stack gases will be determined on site in a mobile laboratory during Level 1 testing. This GC analysis will be conducted by withdrawing a subsample of gas from the 3-liter glass flask full of stack gas. The subsample will be analyzed using sulfur-specific flame photometric detection. .

As described earlier in this report, Level 2 and 3 analysis techniques cannot be predetermined (see the section on Testing Philosophy: The Phased Approach). However, examples of some Level 2 analysis techniques which may be useful for fugitive dust and stack gases can be suggested. For example, Level 2 analyses for trace elements in fugitive dust and stack gas particulates may involve atomic absorption spectroscopy and neutron activation. For a Level 2 analysis of organics, it will still be necessary to perform liquid chromatographic separation as in Level 1. However, a variety of separation techniques are likely to be used, depending on which compounds are of concern; these separation techniques may include reverse phase or normal phase high performance liquid chromatography. Other Level 2 analysis techniques for organics may include GC analysis, combined with mass spectrometry, nuclear magnetic resonance spectroscopy, and ultraviolet luminescence spectroscopy. These and other potential Level 2 organic analysis techniques are described in an EPA report entitled

"EPA/IERL-RTP Interim Procedures for Level 2 Sampling and Analysis of Organic Materials".[6]

Coal, Refuse, and Slurry Solids Quality Program

Potential types of sampling locations for solids include run-of-mine (ROM) and product coal, cleaning plant refuse, and the solids filtered from slurry samples (see Figure 5). Fugitive dust and stack particulate sampling has been discussed under the air sampling program. Potential locations for collecting solid samples are shown in the block flow diagram of a generalized coal cleaning plant (see Figure 6) and for specific types of coal cleaning processes (see Figures 7-12).

Coal Sampling

Solid samples of the ROM, product, and refuse coal streams are needed to determine the overall efficiency of various coal cleaning processes in the removal of sulfur and other pollutants, such as trace metals. Normally, the ROM and product coal streams move by conveyors and will already be equipped with manual or automatic samplers. These cross-stream samplers are usually designed to take a sample from a conveyor while it is moving. The refuse stream, and possibly the ROM coal feed, is not likely to have a sampling device. In the absence of a sampling device, Level 1 sampling of ROM coal will consist of taking a one-shovel-width, cross-stream cut from the belt conveyor. In this instance, the conveyor will have to be stopped. A flat-nosed shovel with straight sides should be used. Solid refuse streams leaving a cleaning plant by truck will be sampled during Level 1 tests by using a shovel. A composite sample of four shovelsful from each side of a freshly dumped load of refuse will be used for analysis.[1,4] The data collection, planning, and execution phases for coal sampling are given in Appendix A, Figure A-6.

Level 1 sampling of extremely fine product or refuse coal may be accomplished by boring techniques in storage piles or bins, where the moving stream is not accessible. Pipe borers, thief borers, or augers may be used, depending on lump size and pile compaction.[1,4]

In Level 2 sampling, techniques should be used that can obtain a much more representative sample of coal and coal refuse. Coal and refuse piles may be sampled by a technique such as ASTM D346-35, "Standard Method of Sampling Coke for Analysis", which involves shoveling with coning and quartering methods. For streams of coal or refuse moving by conveyor, a mechanical cutter device should be used such as that described in ASTM D2235-72, which removes a portion of a moving stream by a traverse at a uniform speed. The large sample obtained by either of the above techniques will need to be reduced to a representative subsample for analysis. ASTM D2013-72, "Preparing Coal for Analysis", describes sample reduction techniques using sample dividers and riffles.[6]

Slurry Solids Sampling

The sampling of process slurries was discussed in a previous section (see the section on Water and Slurry Filtrate Quality Program). Sludge samples, such as those which accumulate in the bottom of ponds and thickeners, may need to be sampled by techniques different from those for water samples. For a Level 1 sample, sludges can be obtained with an Eckman dredge, which has jaws that close when it hits the bottom of a pond. Similar, but much more expensive, equipment is available for Level 2 sampling, which should include compositing of samples obtained several days or weeks apart. The data collection, planning, and execution phases for slurry solids sampling are given in Appendix A, Figure A-6.

Refuse Disposal Evaluation

One of the potential sources of pollution from a coal cleaning operation is the disposal area for cleaning plant refuse. This refuse usually contains high concentrations of both toxic heavy metals and pyrite. When it rains, acid drainage with dissolved iron, aluminum, and toxic trace metals is created.[17,18] Thus, a detailed assessment of the refuse disposal area is extremely important to the overall environmental assessment of coal cleaning processes.

The character of the refuse and methods of disposal have profound effects on the quality and quantity of runoff and leachate discharged from the refuse

pile. Therefore, information on the techniques used in refuse disposal and on geology and topography of the disposal area should be obtained and evaluated before Level 1 sampling plans are completed (see Appendix A, Figure A-7).

If analyses of the Level 1 grab samples of refuse and refuse leachate indicate a hazardous situation, as expected, then the planning for a Level 2 sampling program should include a detailed geological analysis of the refuse disposal area. This analysis should include test borings in the refuse pile and in the underlying and surrounding soil. The boring sites should be coordinated as much as possible with Level 2 groundwater sampling well locations, in order to reduce the number of borings. Soil and refuse samples from varying depths should be saved for Level 2 chemical analysis in order to determine how deep the pollutants identified in Level 1 are leaching. The Level 2 soil analysis results will be extremely important in the interpretation of Level 2 groundwater analyses.

Analytical Techniques

All coal, coal refuse, and slurry solids samples will be analyzed by spark source mass spectrometry (SSMS) as part of the Level 1 testing. SSMS provides a broad-spectrum look at the presence or absence of over 70 elements. Since the SSMS technique is not highly quantitative, some elements may be analyzed by atomic absorption (AA) spectroscopy as part of the Level 1 tests. Decisions on which elements to analyze by the more quantitative AA method will depend on the availability of previous analyses on raw coal or refuse. Six trace elements (As, Cd, Pb, Mn, Se, and Hg) should be given high priority for AA analysis due to their occurrence in coal from many locations and their high toxicity.

Particulate catch and fugitive dust collected as part of the air sampling program, as well as sieved samples of cleaned coal and coal refuse, will be assayed by several tests to determine their relative biological toxicity. The human health tests run on solid samples may include (1) the *Salmonella*/microsome mutagenesis assay (Ames' test), (2) the rabbit alveolar macrophage cytotoxicity test, (3) the WI-38 human lung fibroblast cytotoxicity test, and (4) the acute *in vivo* test in rodents. Ecological tests on solids will involve a soil microcosm test.[4]

Some solid samples, especially particulate catch, fugitive dust, and cleaned coal, will be analyzed for organics. The Level 1 organic analysis on the methylene chloride extract from solids will include the following: total chromatographable organics (TCO) for volatiles, gravimetric analysis for nonvolatiles, and a combination of liquid chromatographic separation, infrared spectrophotometry, and low resolution mass spectrometry.[4] Level 2 organic analysis of extract from solids may include many of the techniques discussed in a previous section for the water and slurry filtrate quality program.

REFERENCES

(1) Hamersma, J. W., Reynolds, S. L., and Maddalone, R. F., "IERL-RTP Procedures Manual: Level 1 Environmental Assessment", EPA-600/2-76-160a, U.S. Environmental Protection Agency, Research Triangle Park, North Carolina (June, 1976), 131 pp.

(2) Duke, K. M., Davis, M. E., and Dennis, A. J., "IERL-RTP Procedures Manual: Level 1 Environmental Assessment Biological Tests for Pilot Studies", EPA-600/7-77-043, U.S. Environmental Protection Agency, Research Triangle Park, North Carolina (April, 1977), 106 pp.

(3) Dorsey, J. A., Johnson, L. D., Statnick, R. M., and Lochmüller, C. H., "Environmental Assessment Sampling and Analysis: Phased Approach and Techniques for Level 1", EPA-600/2-77-115, U.S. Environmental Protection Agency, Research Triangle Park, North Carolina (June, 1977), 33 pp.

(4) Lentzen, D. E., Wagoner, D. E., Estes, E. D., and Gutknecht, W. F., "IERL-RTP Procedures Manual: Level 1 Environmental Assessment, (Second Edition)", EPA-600/7-78-201, U.S. Environmental Protection Agency, Research Triangle Park, North Carolina (in press), 178 pp + appendices.

(5) Beimer, R. I., Ryan, L. E., Maddalone, R. A., and Yamada, M. M., "Approach to Level 2 Analysis Based on Level 1 Results, MEG Categories and Compounds and Decision Criteria", draft report No. 30051-001-RU-00, by TRW Defense and Space Systems Group, Redondo Beach, California (October, 1977), 157 pp.

(6) Harris, J. C., and Levins, P. L., "EPA/IERL-RTP Interim Procedures for Level 2 Sampling and Analysis of Organic Materials", EPA-600/7-78-016, U.S. Environmental Protection Agency, Research Triangle Park, North Carolina (February, 1978), 103 pp.

(7) Cleland, J. G., and Kingsbury, G. L., "Multimedia Environmental Goals for Environmental Assessment, Volume 1", EPA-600/7-77-136a, U.S. Environmental Protection Agency, Research Triangle Park, North Carolina (November, 1977), 148 pp plus appendices.

(8) Cleland, J. G., and Kingsbury, G. L., "Multimedia Environmental Goals for Environmental Assessment, Volume 2: MEG Charts and Background Information", EPA-600/7-77-136b, U.S. Environmental Protection Agency, Research Triangle Park, North Carolina (November, 1977), 450 pp.

(9) American Conference of Governmental Industrial Hygienists, "TLV's Threshold Limit Values for Chemical Substances and Physical Agents in the Workroom Environment with Intended Changes for 1976", ACGIH, Cincinnati, Ohio (1976), 94 pp.

(10) Librizzi, W., "TSCA - An EPA View", Chemtech, 7(7) 405-408 (July, 1977).

(11) U.S. Environmental Protection Agency, "The Resource Conservation and Recovery Act of 1976: A Summary of Public Law 94-580", undated pamphlet, Number SW-564, p 14.

(12) Min, S., Ballantyne, W. E., Neuendorf, D. W., and Sharp, D. A., "Pollution Control Technology for Coal Cleaning Processes", preliminary report to U.S. Environmental Protection Agency, Battelle's Columbus Laboratories, Columbus, Ohio (June, 1977), p 220.

(13) U.S. Environmental Protection Agency, "Coal Mining Point Source Category", Federal Register, 42 (181), 46932-46938 (1977).

(14) U.S. Environmental Protection Agency, "Coal Mining Point Source Category", Federal Register, 42 (80), 21380-21390 (1977).

(15) U.S. Environmental Protection Agency, "National Pollutant Discharge Elimination System", Federal Register, 42 (251), 65209 (1977).

(16) Tolle, D. A., Thomas, R. E., Markarian, R. K., and Hale, V. Q., "Selection of Sites for an Environmental Source Assessment of the Pollution Potential from Coal Cleaning Processes", draft report on Contract No. 68-02-2163, by Battelle's Columbus Laboratories, Columbus, Ohio (April, 1978), 32 pp plus appendices.

(17) Martin, J. F., "The Impact of Coal Refuse on Water Quality", Coal, 437-440 (1977).

(18) Martin, J. F., "Quality of Effluents from Coal Refuse Piles", Proceedings of the First Symposium on Mine and Preparation Plant Refuse Disposal, Coal and the Environment Technical Conference, sponsored by the National Coal Association in Louisville, Kentucky (October, 1974).

APPENDIX A

TEST PLANNING AND CONDUCT GUIDELINES

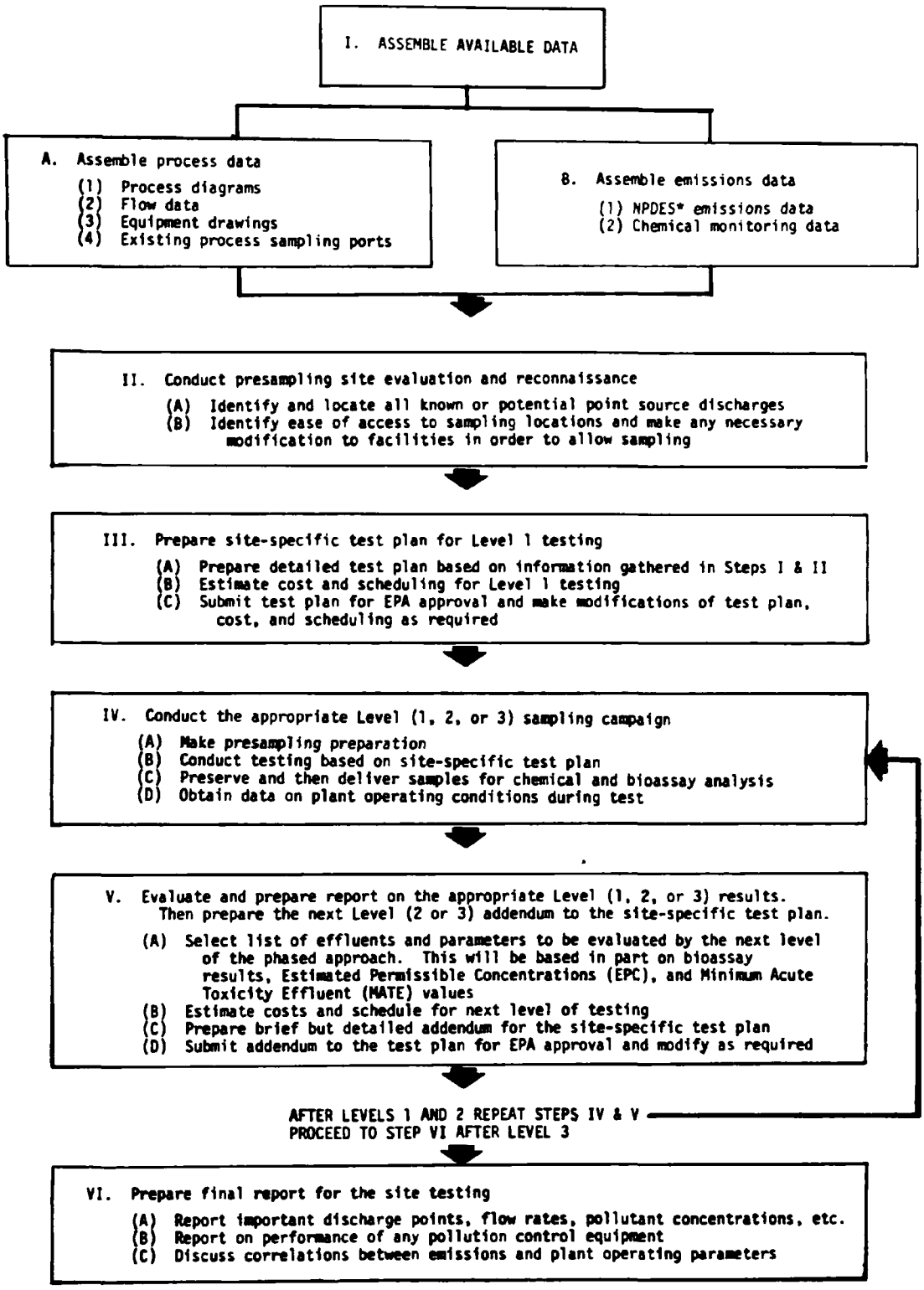

FIGURE A-1. PROCESS WASTEWATER SAMPLING

*NPDES - National Pollutant Discharge Elimination System

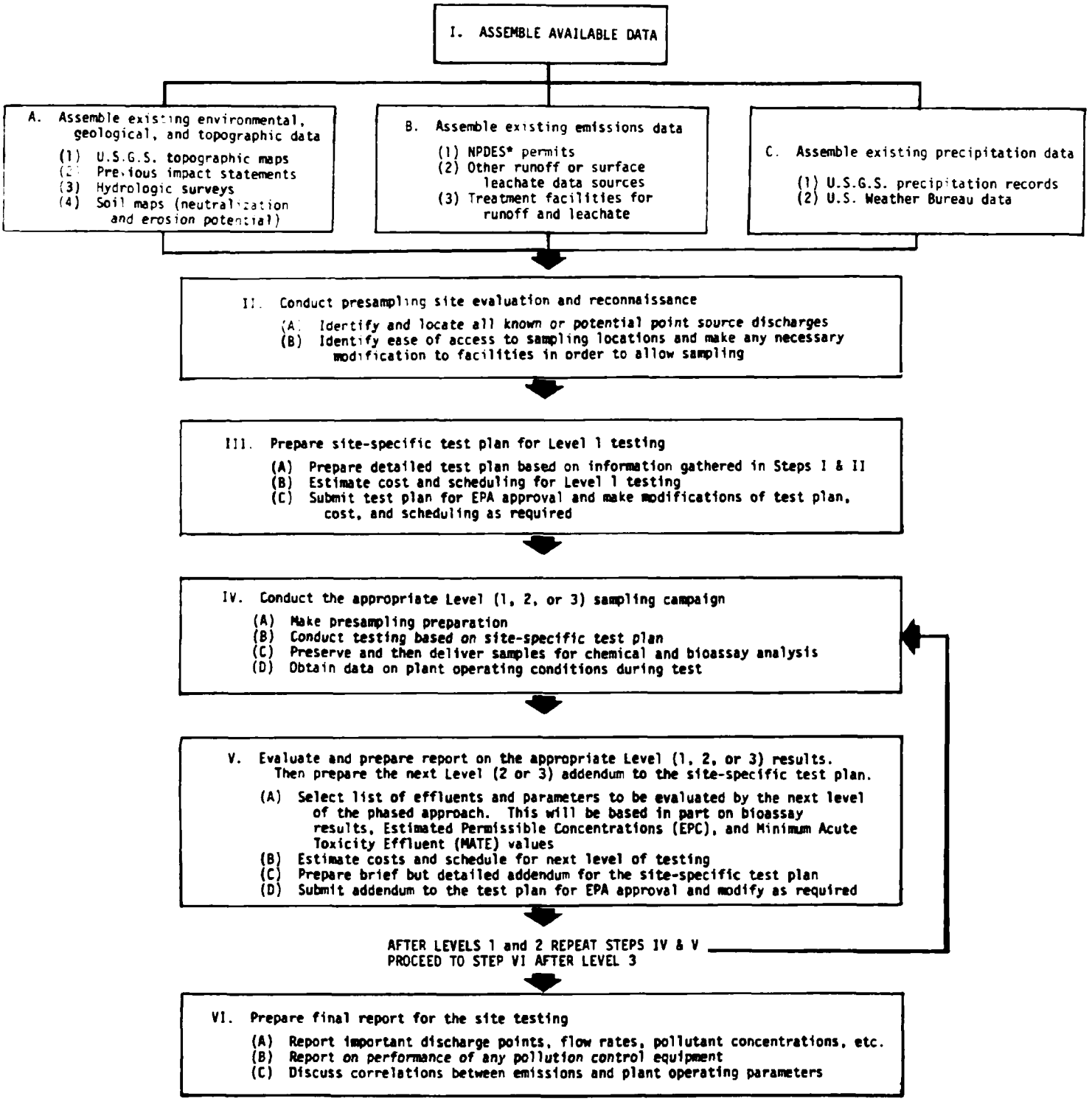

FIGURE A-2. SURFACE RUNOFF AND LEACHATE SAMPLING

*NPDES - National Pollutant Discharge Elimination System

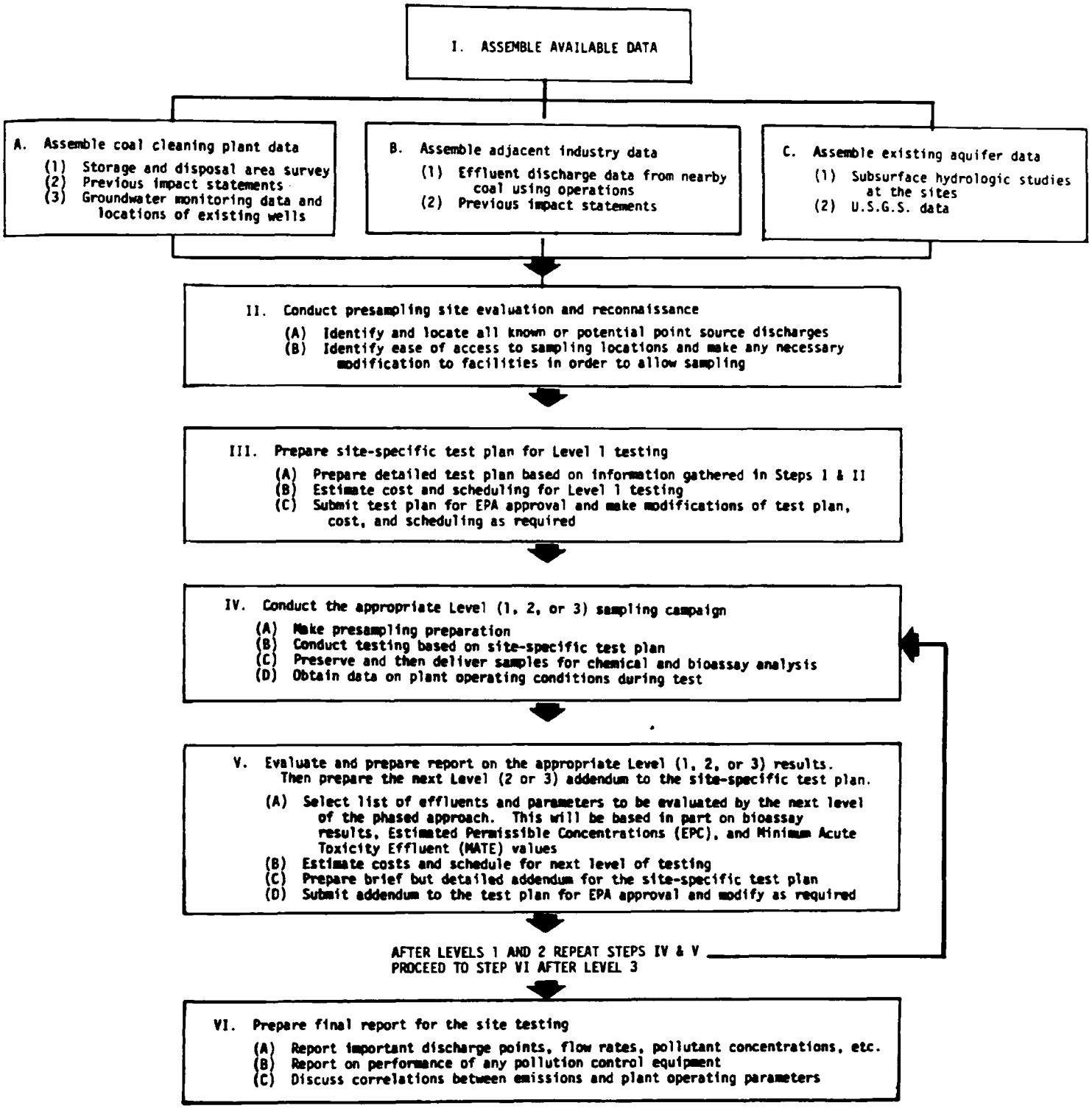

FIGURE A-3. GROUNDWATER SAMPLING

(Only existing wells will be sampled during Level 1. Wells will be installed if deemed necessary for Level 2 or 3 sampling.)

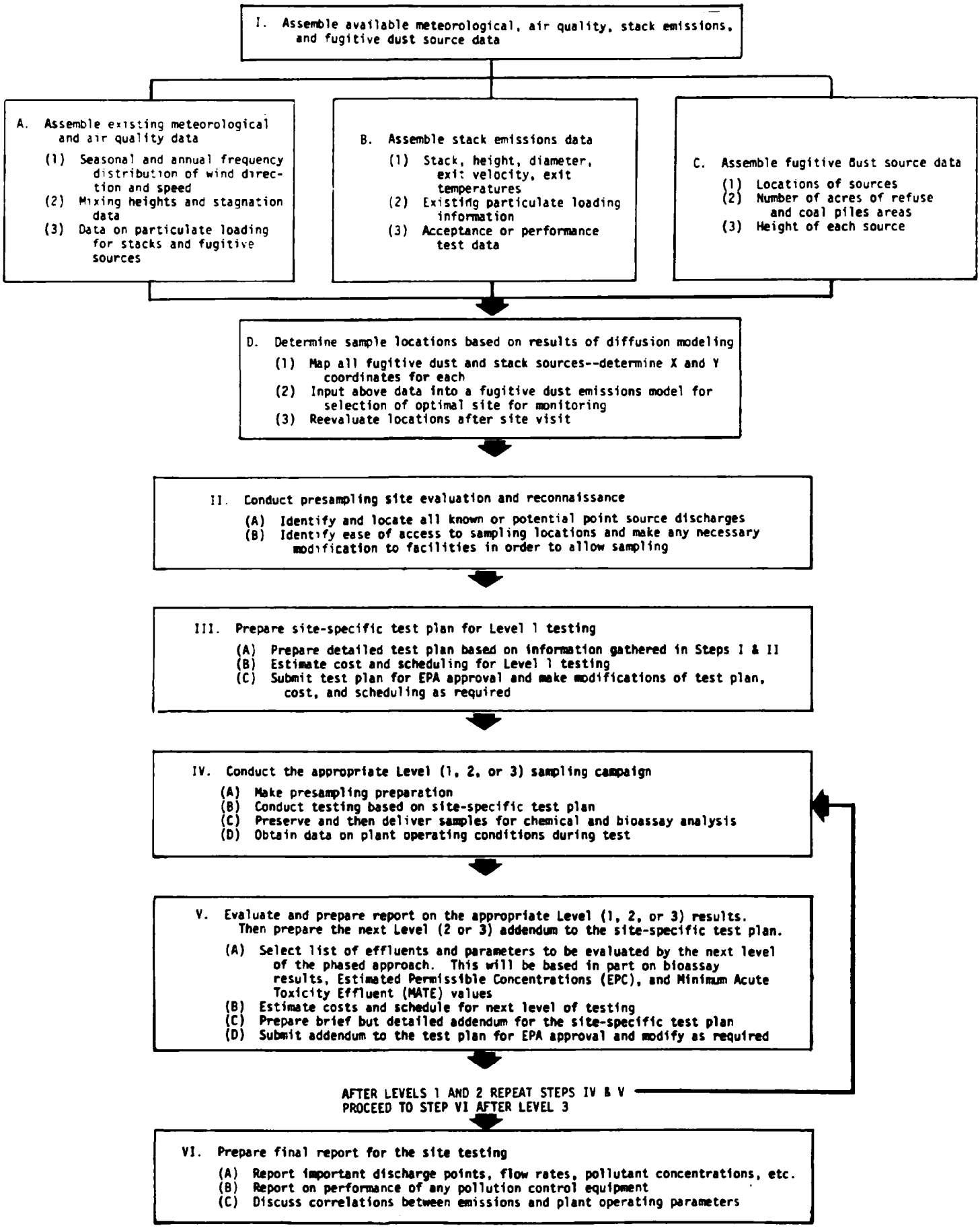

FIGURE A-4. FUGITIVE DUST SAMPLING

I. Assemble available data on stack(s) and emissions

(A) Collect stack physical characteristics--height, diameter, pollution control devices, etc.
(B) Collect information on operating conditions--temperatures, flow rates, fuel used for combustion, and compliance test data
(C) Assemble information on physical and chemical characteristics of coal being dried and coal used in dryer furnace

II. Conduct presampling site evaluation and reconnaissance

(A) Identify and locate all known or potential point source discharges
(B) Identify ease of access to sampling locations and make any necessary modification to facilities in order to allow sampling

III. Prepare site-specific test plan for Level 1 testing

(A) Prepare detailed test plan based on information gathered in Steps I & II
(B) Estimate cost and scheduling for Level 1 testing
(C) Submit test plan for EPA approval and make modifications of test plan, cost, and scheduling as required

IV. Conduct the appropriate Level (1, 2, or 3) sampling campaign

(A) Make presampling preparation
(B) Conduct testing based on site-specific test plan
(C) Preserve and then deliver samples for chemical and bioassay analysis
(D) Obtain data on plant operating conditions during test

V. Evaluate and prepare report on the appropriate Level (1, 2, or 3) results. Then prepare the next Level (2 or 3) addendum to the site-specific test plan.

(A) Select list of effluents and parameters to be evaluated by the next level of the phased approach. This will be based in part on bioassay results, Estimated Permissible Concentrations (EPC), and Minimum Acute Toxicity Effluent (MATE) values
(B) Estimate costs and schedule for next level of testing
(C) Prepare brief but detailed addendum for the site-specific test plan
(D) Submit addendum to the test plan for EPA approval and modify as required

AFTER LEVELS 1 AND 2 REPEAT STEPS IV & V
PROCEED TO STEP VI AFTER LEVEL 3

VI. Prepare final report for the site testing

(A) Report important discharge points, flow rates, pollutant concentrations, etc.
(B) Report on performance of any pollution control equipment
(C) Discuss correlations between emissions and plant operating parameters

FIGURE A-5. STACK SAMPLING

I. Assemble available data on coal and slurried solids

(A) Collect all available data on physical and chemical characteristics of feedstock and product coals
(B) Obtain process diagrams showing slurry flow volumes, percent solids, and mesh sizes
(C) Note locations and frequency of automatic coal sampling devices for both feedstock(s) and product(s)

II. Conduct presampling site evaluation and reconnaissance

(A) Identify and locate all known or potential point source discharges
(B) Identify ease of access to sampling locations and make any necessary modification to facilities in order to allow sampling

III. Prepare site-specific test plan for Level 1 testing

(A) Prepare detailed test plan based on information gathered in Steps I & II
(B) Estimate cost and scheduling for Level 1 testing
(C) Submit test plan for EPA approval and make modifications of test plan, cost, and scheduling as required

IV. Conduct the appropriate Level (1, 2, or 3) sampling campaign

(A) Make presampling preparation
(B) Conduct testing based on site-specific test plan
(C) Preserve and then deliver samples for chemical and bioassay analysis
(D) Obtain data on plant operating conditions during test

V. Evaluate and prepare report on the appropriate Level (1, 2, or 3) results. Then prepare the next Level (2 or 3) addendum to the site-specific test plan.

(A) Select list of effluents and parameters to be evaluated by the next level of the phased approach. This will be based in part on bioassay results, Estimated Permissible Concentrations (EPC), and Minimum Acute Toxicity Effluent (MATE) values
(B) Estimate costs and schedule for next level of testing
(C) Prepare brief but detailed addendum for the site-specific test plan
(D) Submit addendum to the test plan for EPA approval and modify as required

AFTER LEVELS 1 AND 2 REPEAT STEPS IV & V
PROCEED TO STEP VI AFTER LEVEL 3

VI. Prepare final report for the site testing

(A) Report important discharge points, flow rates, pollutant concentrations, etc.
(B) Report on performance of any pollution control equipment
(C) Discuss correlations between emissions and plant operating parameters

FIGURE A-6. COAL AND SLURRY SOLIDS SAMPLING

I. Conduct preinspection evaluation and assemble available data

(A) Obtain design and operation specifications for disposal facility
(B) Obtain any existing refuse analysis data (physical and chemical) for new and old refuse
(C) Obtain information on operating history of disposal facility
(D) Obtain soil maps, copies of solid waste permits

II. Conduct presampling site evaluation and reconnaissance

(A) Identify and locate all known or potential point source discharges
(B) Identify ease of access to sampling locations and make any necessary modification to facilities in order to allow sampling

III. Prepare site-specific test plan for Level 1 testing

(A) Prepare detailed test plan based on information gathered in Steps I & II
(B) Estimate cost and scheduling for Level 1 testing
(C) Submit test plan for EPA approval and make modifications of test plan, cost, and scheduling as required

IV. Conduct the appropriate Level (1, 2, or 3) sampling campaign

(A) Make presampling preparation
(B) Conduct testing based on site-specific test plan
(C) Preserve and then deliver samples for chemical and bioassay analysis
(D) Obtain data on plant operating conditions during test

V. Evaluate and prepare report on the appropriate Level (1, 2, or 3) results. Then prepare the next Level (2 or 3) addendum to the site-specific test plan.

(A) Select list of effluents and parameters to be evaluated by the next level of the phased approach. This will be based in part on bioassay results, Estimated Permissible Concentrations (EPC), and Minimum Acute Toxicity Effluent (MATE) values
(B) Estimate costs and schedule for next level of testing
(C) Prepare brief but detailed addendum for the site-specific test plan
(D) Submit addendum to the test plan for EPA approval and modify as required

AFTER LEVELS 1 AND 2 REPEAT STEPS IV & V
RPOCEED TO STEP VI AFTER LEVEL 3

VI. Prepare final report for the site testing

(A) Report important discharge points, flow rates, pollutant concentrations, etc.
(B) Report on performance of any pollution control equipment
(C) Discuss correlations between emissions and plant operating parameters

FIGURE A-7. REFUSE DISPOSAL EVALUATION

APPENDIX B

BRIEF DESCRIPTIONS OF LEVEL 1 PHYSICAL AND CHEMICAL TESTS

APPENDIX B

BRIEF DESCRIPTIONS OF LEVEL 1 PHYSICAL AND CHEMICAL TESTS

The intent of this appendix is to give a brief description of the results expected from the physical and chemical tests referred to in the text. In general, these analytical techniques are consistent with EPA's Level 1 protocol. Therefore, some of the organic techniques are designed to identify classes of compounds rather than species. Also, some of the inorganic analyses, such as spark source mass spectrometry, are only roughly quantitative. In certain cases, techniques have been chosen that are Level 2 in nature. Atomic absorption, for example, may be necessary for a more quantitative analysis of volatile trace elements such as Hg, As, and Sb.

Inorganic Elemental Analysis

Spark Source Mass Spectrometry (SSMS)

This analysis will be performed on nearly all effluent streams to obtain concentrations that are roughly quantitative for the following 71 elements.

Al	Cu	La	Pt	Th
Ag	Dy	Li	Rb	Ti
As	Er	Lu	Re	Tl
B	Eu	Mg	Rh	Tm
Ba	F	Mn	Ru	U
Be	Fe	Mo	S	V
Bi	Ga	Na	Se	W
Br	Gd	Nb	Sc	Y
Ca	Ge	Nd	Si	Yb
Cd	Hf	Ni	Sm	Zn
Ce	Ho	Os	Sn	Zr
Cl	I	P	Sr	
Co	In	Pb	Ta	
Cs	Ir	Pd	Tb	
Cr	K	Pr	Te	

Atomic Absorption Spectroscopy (AA)

This technique will be used to make highly quantitative measurements on toxic trace elements that are known to occur in significant concentrations in the raw coal or are inaccurately analyzed by SSMS due to volatility problems. These elements may include As, Be, Cd, Hg, Mn, Pb, Sb, and Se.

Particle Morphology

Fugitive dust and particulates in stack gases will be analyzed microscopically to determine the following parameters:

- particle size range
- predominant shape
- evident cleavage
- structure
- color
- predominant types (fly ash, coal dust, etc.).

Several dust samples of known origin may also be analyzed for the above parameters. These samples may include cleaned coal, coal cleaning refuse, and road dust. A photomicrograph will be taken of each sample.

Particle Size Distribution

The particle size distriubtions of fugitive dust and stack particulates will be determined by the two field techniques described below. Each size class will subsequently be weighed in the laboratory.

Andersen Impactor

An Andersen head will be used on some high volume samplers to determine the size distribution of fugitive dust. The five size ranges determined by the Andersen impactors and filter are the following:

Nonrespirable Size Ranges

> 7.0 μm

3.3 - 7.0 μm

Respirable Size Ranges

2.0 - 3.3 μm

1.1 - 2.0 μm

< 1.1 μm

Source Assessment Sampling System (SASS) Cyclones

The SASS sampling train contains an oven module with three cyclones and a filter which provide classification of particulate matter in stack gases into the following size ranges:

Nonrespirable Size Ranges

> 10 μm

3 - 10 μm

Respirable Size Ranges

1 - 3 μm

< 1 μm

Organic Analysis

On-Site Gas Chromatographic (GC) Analysis

A CG system operated in a mobile laboratory will be used to separate and analyze C_1 through C_7 hydrocarbons present in stack gases according to their boiling points. Since the chromatogram peaks will represent mixtures of materials present in a certain boiling range, rather than pure, individual compounds, the results will be presented in the following ranges:

Level 1 Designation	Level 1 Boiling Point Range, °C
GC 1	-160 to -100
GC 2	-100 to -50
GC 3	-50 to 0
GC 4	0 to 30
GC 5	30 to 60
GC 6	60 to 90
GC 7	90 to 110

In addition, the same GC system may be used with sulfur-specific flame photometric detection for analysis of sulfur compounds.

Total Chromatographable Organics (TCO) Analysis

The TCO procedure will be applied to various organic solvent extracts, organic liquids, and SASS sorbent module rinses. The TCO results are reported as one number which corresponds to the total quantity of material in the 100-300°C boiling range.

Gravimetric (GRAV) Analysis

The GRAV analysis is used to quantify organics with boiling points above 300°C. For a Level 1 analysis, weighing to a precision of ±0.1 mg is adequate. The sample of organic extract which is dried and weighed should be no more than 5 ml or one-half of the total sample, whichever is smaller.

Liquid Chromatographic (LC) Separation

Extracted organics are separated by liquid chromatography using seven different solvents in a gradient elution technique. This separation procedure is not a high-resolution technique; therefore, there is overlap in class type among the seven resulting fractions. Each of the fractions is evaporated and weighed.

Infrared (IR) Analysis

The total sample extract and the seven LC fractions discussed above are analyzed by IR spectrophotometry. Spectra are interpreted in terms of functional groups of organic gases present in the total sample and each LC fraction.

Low Resolution Mass Spectrometry (LRMS)

LRMS spectra will be obtained on any of the LC fractions which are present in quantities greater than those recommended by IERL/RTP for Level 1.

The resulting spectra will be interpreted on the basis of the investigator's experience and a knowledge of the LC separation scheme, the IR spectra, the type of sample, and compilations of reference spectra. The interpretation may suggest the presence of specific compounds or may be able to identify only the general types of organic compounds present in the sample.

Gas Chromatography/Mass Spectrometry (GC/MS)

The first portion (GC) of this analytical technique is a physical method designed for separating components of a complex organic mixture. Individual components within a sample register a succession of peaks on a chromatogram; the area under the peak indicates the quantity of the component, and the time lapse between injection and emergence of the peak serves to identify it. The mass spectrometry portion of this technique produces charged ions consisting of the parent ion and ionic fragments of the original organic molecule and sorts these ions according to their mass/charge ratio. The mass spectrum of the gas chromatography output is a record of the number of different kinds of ions--the relative numbers of each are characteristic for every compound, including isomers. From the wealth of information obtained from GC/MS analysis, one can determine the specific organic compound present rather than having to accept statements on the relative abundance of groups or fractions of the wastes. Thus, it is a more powerful and precise tool for organic analysis than the combined IR and LRMS techniques.

Water Quality Chemistry

Water and slurry filtrate samples will be analyzed for some or all of the following water quality parameters, depending on the availability of previously collected water quality data at a test site:

Acidity	Nitrate
Alkalinity	Nitrite
Ammonia	Oil and Grease
Biological Oxygen Demand	pH
Chemical Oxygen Demand	Phenol
Chloride	Redox Potential
Conductivity	Sulfate
Dissolved Iron	Sulfide
Dissolved Oxygen	Sulfite
Fluoride	Total Dissolved Solids
Free Cyanide	Total Organic and Inorganic Phosphate
Hardness	Total Suspended Solids

APPENDIX C

BRIEF DESCRIPTIONS OF LEVEL 1 HEALTH AND ECOLOGICAL TESTS

APPENDIX C

BRIEF DESCRIPTIONS OF LEVEL 1 HEALTH AND ECOLOGICAL TESTS

The following human health and ecological tests are intended to complement the physical and chemical data. Only the biological tests can provide a reliable measure of the potential biological response to an effluent stream. Also, the biological tests can detect complex biological effects such as synergism and antagonism. On the other hand, the causes of the biological effects observed cannot be interpreted without the data provided by physical and chemical tests. All of the biological tests described briefly below are presented in more detail in the EPA Level 1 manual.[2]

Health Effects Tests

Ames Test

The Ames test, also known as the *Salmonella*/microsome mutagenesis assay, is designed as a screening technique to determine the mutagenic activity of complex mixtures. It is based on the property of a bacterium, *Salmonella typhimurium*, to change from a histidine-requiring state to prototrophy due to exposure to nanogram quantities of various classes of mutagens.

Human Lung Fibroblast Assay

In this cytotoxicity test, also known as the WI-38 test, human-lung fibroblast cells in culture are used to measure quantitatively the cellular metabolic impairment and death resulting from *in vitro* exposure to soluble and particulate toxicants. This test is performed by incubating cells in a flask with various dilutions of an effluent test material, followed by cell counts, cell viability, and protein and adenosine triphosphate (ATP) determinations.

Rabbit Alveolar Macrophage (RAM) Assay

In the RAM assay, cells washed out of the lungs of clinically healthy rabbits are used to determine cellular impairment and death due to toxicants. The testing and measurements are similar to the human-lung fibroblast test described above. However, in addition to the cell viability and protein and ATP determinations, the cells are also measured for phagocytic activity (ability to engulf particulates).

Acute *In vivo* Test in Rodents

The first step of this two-step test involves administration of a 10 g/kg dose of sample to five rats by introduction into the stomach through a tube. Toxicological effects are noted over a 14-day period to determine the necessity for a second step. If one or more test animals die or exhibit gross toxic effects, then a second, more extensive test involving a graded response is conducted. In this series, 80 rats are divided into groups, each of which receives a fraction of the original dose. This second test provides LD_{50} and other toxicological information.

Plant Stress Ethylene

This test is based on the fact that plants respond to environmental stress by releasing ethylene; the greater the stress on a plant, the more ethylene it releases. Therefore, gaseous effluent samples will be released into controlled test chambers with plants, and the amount of ethylene released will be compared with the amount released by control plants in similar test chambers. Obviously, the 6-week-old soybean plants recommended for these tests must be very carefully handled to prevent physical damage or other stresses which would confuse the test results. Normally, the undiluted sample of gas and gas-to-air dilutions of 1:1 and 1:3 are used in the exposure tests.

Freshwater Aquatic Tests

Fathead Minnow Acute Static Bioassay

In this test, the fathead minnow (Pimephales promelus) is used to determine the concentration of toxicant in dilution water that causes death of

50 percent of the test population (10-20 individuals) in a 96-hour period. The result of this acute mortality test is the statistically derived best estimate of the 96-hour median lethal concentration (96-hour LC_{50}).

Daphnia Acute Static Bioassay

In this test, the crustacean *Daphnia pulex* is used to determine the concentration of toxicant in dilution water that causes immobilization of 50 percent of the test population (10-20 individuals) in a 48-hour period. The test result is known as the 48-hour median effective concentration (48-hour EC_{50}).

Freshwater Algal Assay: Bottle Test

In this test, freshwater algae are used to quantify changes in their growth due to changes in concentrations of effluent in the dilution water. The dilution water is provided with a standard nutrient medium. The two parameters used to describe the growth of each test alga are maximum specific growth rate and maximum standing crop.

Soil Microcosm Test

In the soil microcosm test, intact soil cores are used to quantify the relationship between contaminant dose and transport, accumulation, and short-term effects. The effects of concern are nutrient cycling disruption and changes in soil biota populations. Biotic analysis involves a determination of the adenosine triphosphate (ATP) concentration, while nutrients monitored include calcium and dissolved organic carbon.

TECHNICAL REPORT DATA
(Please read Instructions on the reverse before completing)

1. REPORT NO. EPA-600/7-79-073a	2.	3. RECIPIENT'S ACCESSION NO.
4. TITLE AND SUBTITLE Environmental Assessment of Coal Cleaning Processes: Master Test Plan		5. REPORT DATE February 1979
		6. PERFORMING ORGANIZATION CODE
7. AUTHOR(S) D.A. Tolle, D.W. Neuendorf, and P. Van Voris		8. PERFORMING ORGANIZATION REPORT NO.
9. PERFORMING ORGANIZATION NAME AND ADDRESS Battelle-Columbus Laboratories 505 King Avenue Columbus, Ohio 43201		10. PROGRAM ELEMENT NO. EHE623A
		11. CONTRACT/GRANT NO. 68-02-2163, Task 451
12. SPONSORING AGENCY NAME AND ADDRESS EPA, Office of Research and Development Industrial Environmental Research Laboratory Research Triangle Park, NC 27711		13. TYPE OF REPORT AND PERIOD COVERED Task Final; 6/77 - 1/79
		14. SPONSORING AGENCY CODE EPA/600/13

15. SUPPLEMENTARY NOTES IERL-RTP project officer is James D. Kilgroe, MD-61, 919/541-2851.

16. ABSTRACT The report gives a master test plan, presenting the objectives and general structure of a field testing program designed for an environmental source assessment of coal cleaning processes. The report, to be used to prepare test plans for individual coal cleaning sites, reflects the common thread running through a series of tests at various sites. It includes the background and objectives of Battelle's overall program for EPA, entitled 'Environmental Assessment of Coal Cleaning Processes.' The report emphasizes the philosophy of the field testing program and the elements of sampling and sample analysis which are common to all test sites. Coal cleaning facilities to be tested in the 10 site categories will be evaluated at three sampling and analytical levels. Level 1 tests identify problem areas that are assessed by the more rigorous Level 2 tests. Level 3 involves long-term monitoring of 'key' indicator parameters which have been identified in the environmentally hazardous streams tested by Level 2 techniques. Environmental source assessments will: systematically evaluate the physical, chemical, and biological characteristics of selected process streams and all effluent streams; predict the potential effects of those streams on the environment; rank the streams according to their relative biological toxicity; and identify areas requiring further research and development.

17. KEY WORDS AND DOCUMENT ANALYSIS

a. DESCRIPTORS		b. IDENTIFIERS/OPEN ENDED TERMS	c. COSATI Field/Group
Pollution	Analyzing	Pollution Control	13B
Assessments	Toxicity	Stationary Sources	14B 06T
Coal Preparation		Environmental Assessment	08I
Coal			08G,21D
Tests		Coal Cleaning	
Sampling			

18. DISTRIBUTION STATEMENT Unlimited	19. SECURITY CLASS *(This Report)* Unclassified	21. NO. OF PAGES 74
	20. SECURITY CLASS *(This page)* Unclassified	22. PRICE

EPA Form 2220-1 (9-73)