United States
Environmental Protection
Agency

Environmental Sciences Research
Laboratory
Research Triangle Park NC 27711

EPA-600/2-78-126
July 1978

Research and Development

Analytical System for Measuring Malodorous Compounds from Kraft Mills

RESEARCH REPORTING SERIES

Research reports of the Office of Research and Development, U.S. Environmental Protection Agency, have been grouped into nine series. These nine broad categories were established to facilitate further development and application of environmental technology. Elimination of traditional grouping was consciously planned to foster technology transfer and a maximum interface in related fields. The nine series are:

1. Environmental Health Effects Research
2. Environmental Protection Technology
3. Ecological Research
4. Environmental Monitoring
5. Socioeconomic Environmental Studies
6. Scientific and Technical Assessment Reports (STAR)
7. Interagency Energy-Environment Research and Development
8. "Special" Reports
9. Miscellaneous Reports

This report has been assigned to the ENVIRONMENTAL PROTECTION TECHNOLOGY series. This series describes research performed to develop and demonstrate instrumentation, equipment, and methodology to repair or prevent environmental degradation from point and non-point sources of pollution. This work provides the new or improved technology required for the control and treatment of pollution sources to meet environmental quality standards.

This document is available to the public through the National Technical Information Service, Springfield, Virginia 22161.

EPA-600/2-78-126
July 1978

ANALYTICAL SYSTEM FOR MEASURING MALODOROUS COMPOUNDS FROM KRAFT MILLS

by

James D. Mulik, Robert K. Stevens, and Ralph E. Baumgardner
Atmospheric Chemistry and Physics Division
Environmental Sciences Research Laboratory
Research Triangle Park, North Carolina 27711

ENVIRONMENTAL SCIENCES RESEARCH LABORATORY
OFFICE OF RESEARCH AND DEVELOPMENT
U.S. ENVIRONMENTAL PROTECTION AGENCY
RESEARCH TRIANGLE PARK, NORTH CAROLINA 27711

DISCLAIMER

This report has been reviewed by the Environmental Sciences Research Laboratory, U.S. Environmental Protection Agency, and approved for publication. Mention of trade names or commercial products does not constitute endorsement or recommendation for use.

ABSTRACT

Automated chromatographs equipped with flame photometric detectors were developed for the qualitative and quantitative analysis of low- and high-molecular-weight sulfur compounds in kraft mill effluents. One chromatograph equipped with a Teflon column packed with Teflon and coated with polyphenyl ether measured the following low-molecular-weight sulfur compounds: hydrogen sulfide (H_2S), sulfur dioxide (SO_2), methyl mercaptan (CH_3SH), ethyl mercaptan (C_2H_5SH), dimethyl sulfide ($(CH_3)_2S$), and propyl mercaptan (C_3H_7SH). A second chromatograph equipped with a Teflon column packed with Teflon and coated with Triton X-305 measured the higher-molecular-weight sulfur compounds: butyl mercaptan (C_4H_9SH), dimethyl disulfide ($(CH_3)_2S_2$), and dibutyl sulfide ($(C_4H_9)_2S$).

Kraft mill effluents containing sulfur species ranging in concentrations from 5 ppb to percent levels were analyzed using a 6-stage dynamic dilution system.

Sulfur emission data were collected from two kraft mills, one employing strong black liquor oxidation and the other weak black liquor oxidation. Part of the study was dedicated to determining the relationship between the total gaseous sulfur and the individual sulfur compounds observed chromatographically. In most cases, more than 90 percent of the sulfur emitted from the kraft mills studied was accounted for by chromatographically identified compounds.

This report covers a period from 1969 to 1971 and work was completed as of December 1972. For further information contact Robert K. Stevens, Environmental Sciences Research Laboratory, U.S. Environmental Protection Agency, Research Triangle Park, North Carolina 27711.

SECTION 1

INTRODUCTION

The growth of the kraft pulping industry has created a definite need for more quantitative data on gaseous emissions from kraft paper mills. Previous studies by Brink, Thomas, and Feuerstein (1) and Adams and Koppe (2) indicate the complexity of identifying and measuring the pollutants generated by kraft mill activities. Highly sophisticated and complicated analytical techniques are necessary to quantitatively characterize these emissions. Vital to the analytical systems used, is a detector that specifically senses sulfur, as the characteristic, unpleasant, decayed-vegetable odor related to kraft mill activities is produced by sulfur compounds. Adams and Koppe (2) and Brink et al. (1) used the microcoulometric detector designed to measure sulfur constituents specifically as they are eluted from a gas chromatographic column. Most gas chromatographic systems, however, have proven unreliable because many sulfur compounds (H_2S, SO_2, and CH_3SH) are so reactive that they fail to pass quantitatively through conventional gas chromatographic columns. Koppe and Adams (3) reported gross losses of these compounds at concentrations below 10 ppm. Walther and Amberg (4) described a process-chromatograph using thermal conductivity and flame ionization detectors consecutively for sulfur analysis. A thermal conductivity detector was required for fixed gases such as H_2S and SO_2 which have no flame ionization response. By amplifying the thermal conductivity detector signal, Walther and Amberg were able to detect concentrations of H_2S as low as 2 ppm. The flame ionization detector is approximately a thousand times as sensitive as the thermal conductivity detector and responds to all organic compounds.

Stevens, Mulik, Krost, and O'Keeffe (5) reported on the first automated gas chromatographic flame photometric analysis of sub-ppm levels of sulfur compounds in the ambient air. This technology led to the development of methodology for analyzing sulfur compounds in kraft mill effluents.

SECTION 2

EXPERIMENTAL

The flame photometric detector for the analysis of sulfur compounds, as described by the Draegers (6) in 1962, was used by Crider (7) in 1967 for monitoring SO_2 in animal exposure chambers. The flame photometric detector of Brody and Chaney (8), shown in Figure 1, was used by Stevens et al. (5) for the sub-ppm analysis of sulfur compounds in the ambient air. The flame photometric detector measures sulfur compounds by detecting the chemiluminescent emission from the excited S_2 molecules formed whenever sulfur compounds are burned in a hydrogen-rich air flame. A narrow-band-pass interference filter between the flame and the photomultiplier tube isolates a particular band of the S_2 emission at 394 mμ. The interference filter virtually eliminates interferences from sulfur-deficient constituents. Because only the chemiluminescent emission above the flame is viewed, the background flame noise is reduced.

The gas chromatographic flame photometric system shown in Figure 2 was developed to measure low-molecular-weight sulfur compounds in kraft mill effluents. The analyzer consists of a Varian 122 gas chromatographic oven (Varian Associates, Walnut Creek, California), a flame photometric detector (Meloy Laboratories, Alexandria, Virginia), a power supply and electrometer (Tracor, Austin, Texas), and a modified 10-part sliding plate valve (Beckman Instrument Company, Fullerton, California) equipped with a 10-cc Teflon sample loop, stripper column, and analytical column. The function of the stripper column is to vent heavier sulfur compounds by backflushing, thereby preventing them from reaching the analytical column. The analytical column is 36-foot by 0.085-inch I.D. Teflon tubing packed with 30/60 mesh Teflon and coated with 10 grams of polyphenyl ether and 500 mg of orthophosphoric acid. The 2-foot by 0.085-inch I.D. stripper column is packed with the same material as

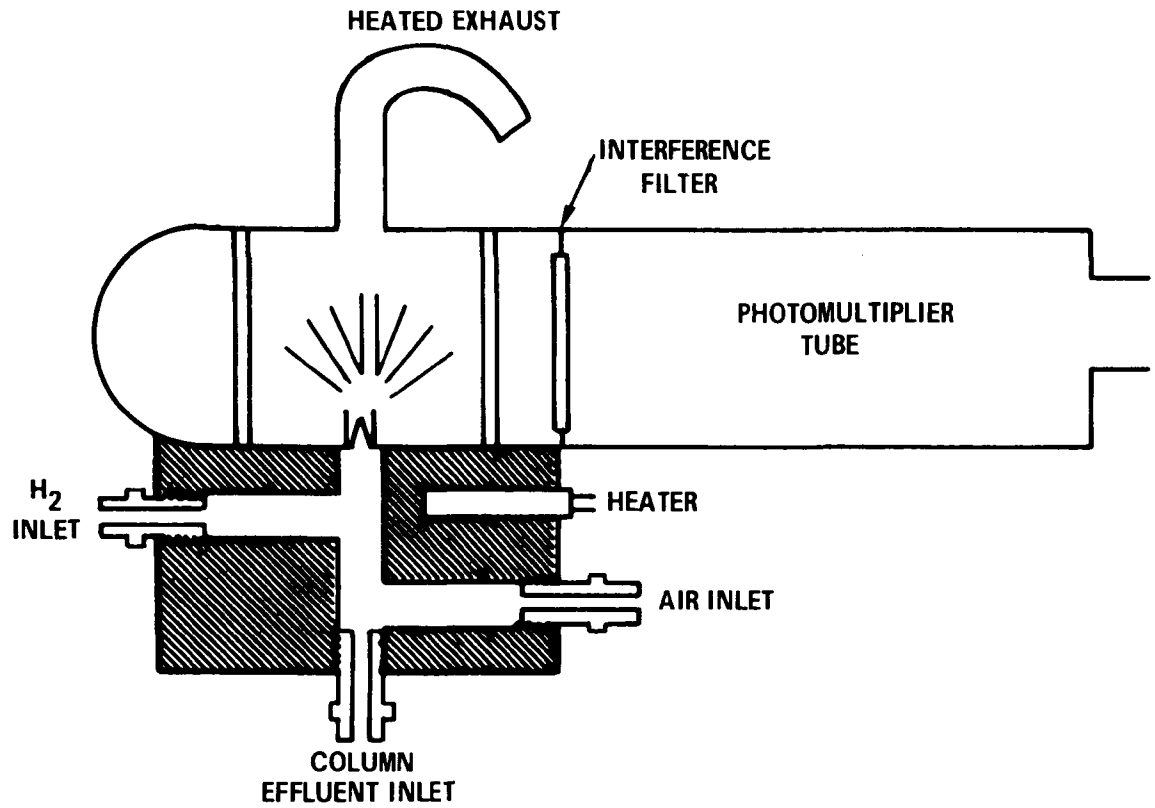

Figure 1. Cross-sectional view of flame photometric detector.

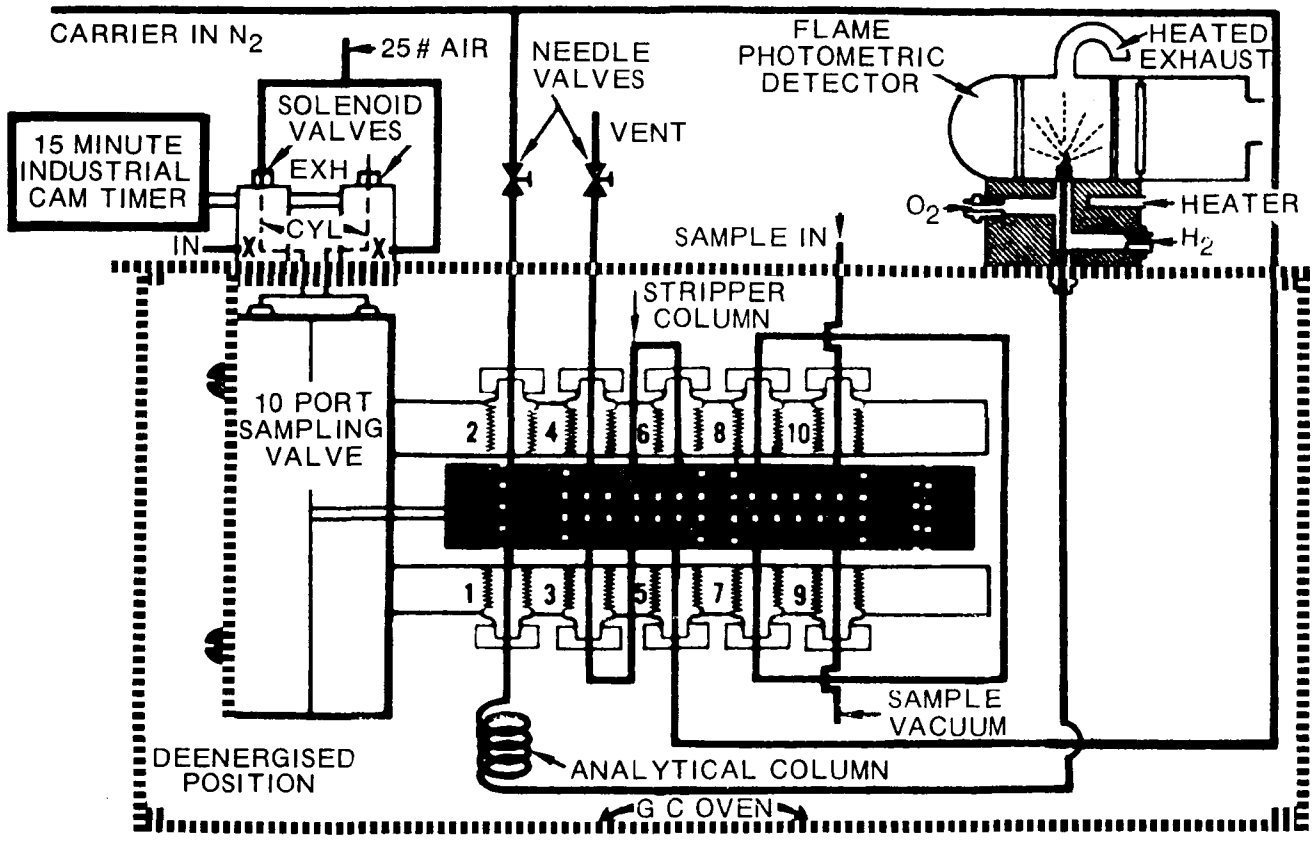

Figure 2. Automated gas chromatographic-FPD sulfur gas analyzer equipped with a pre-column, backflusing modifications, and a 36-foot by 0.085-inch Teflon column packed with Teflon and coated with polyphenyl ether.

the analytical column. Two solenoids and an industrial cam timer automatically actuate the valve at 10-minute intervals. The timing sequence to actuate the valve for sample injection, foreflushing, and backflushing is as follows:

1. Valve is energized for 1 minute.
   a. Sample is injected into stripper column and analytical column.
2. Valve is de-energized for 9 minutes.
   a. Stripper column backflushes heavy sulfur compounds to vent while the analytical column continues to be foreflushed.
   b. Sample loop is refilled.

The 10-part valve was modified to minimize the sample-to-metal contact that can cause severe losses at levels below 10 ppm. The fittings on the valve connecting the 1/16-inch pipe to the 1/8-inch tube were drilled out so that the Teflon lines would go through the fitting and into the body of the valve up to the Teflon slider, thus making the valve essentially all Teflon. The column exit was also fitted into the base of the detector to further minimize sample-to-metal interaction.

A chromatogram of a sub-ppm mixture of sulfur compounds which was obtained using permeation tubes as a source of sulfur compounds is shown in Figure 3. Hydrogen sulfide, sulfur dioxide, methyl mercaptan, ethyl mercaptan, dimethyl sulfide, and propyl mercaptan were resolved in 10 minutes on the 36-foot by 0.085-inch I.D. polyphenyl ether Teflon column. Chromatographic conditions were as follows:

- Nitrogen carrier gas flow of 100 cc/minute.
- Detector temperature of 105°C.
- Exhaust temperature of 110°C.
- Column temperature of 50°C.
- Flame conditions: hydrogen flow of 80 cc/minute; oxygen flow of 20 cc/minute.

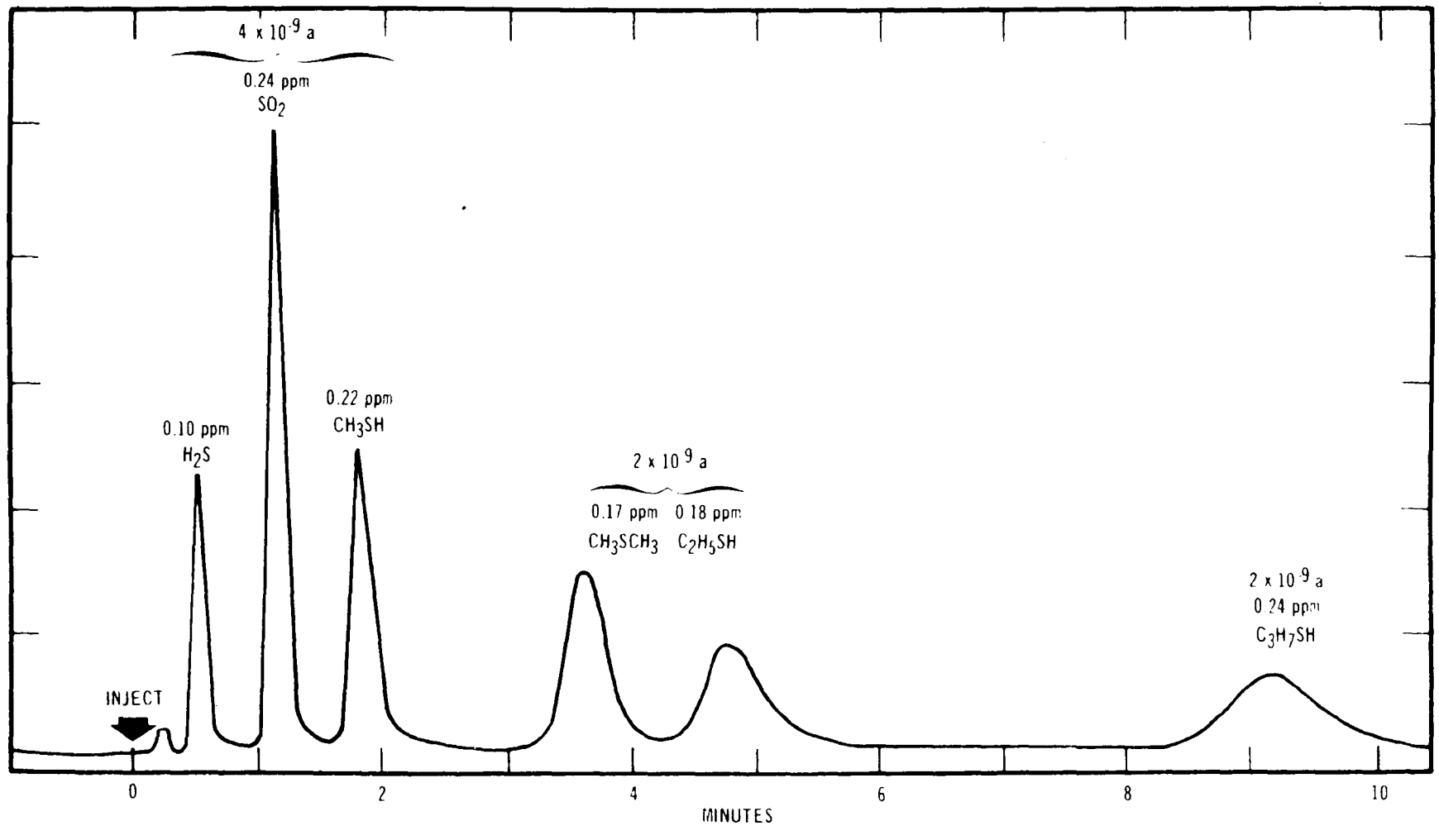

Figure 3. Chromatogram of a mixture of hydrogen sulfide, sulfur dioxide, methyl mercaptan, dimethyl sulfide, ethyl mercaptan, and propyl mercaptan.

The analytical system developed for the heavier sulfur compounds is shown in Figure 4. A Teflon 6-port gas sampling valve (Chromatronix, Inc., 2743 Eighth Street, Berkeley, California), equipped with a 10-cc Teflon sample loop, was used since backflushing was not necessary. The analytical column is 10-foot by 0.085-inch I.D. Teflon tubing packed with 30/60 mesh Teflon coated with 10 percent Triton X-305. The lighter sulfur compounds emerge rapidly from this column as one peak, followed by heavy sulfur compounds that elute separately.

A chromatogram of a sub-ppm mixture of high-molecular-weight sulfur compounds is shown in Figure 5. Butyl mercaptan, dimethyl disulfide, dipropyl sulfide, and dibutyl sulfide were resolved in 10 minutes on the 10-foot by 0.085-inch I.D. Triton X-305 column. Chromatographic conditions were as follows:

- Nitrogen carrier gas flow of 100 cc/minute.
- Detector temperature of 105°C.
- Exhaust temperature of 110°C.
- Column temperature of 70°C.
- Flame conditions: hydrogen flow of 80 cc/minute; oxygen flow of 20 cc/minute.

Teflon permeation tubes gravimetrically calibrated according to the procedure of O'Keeffe and Ortman (9) were used as primary standards. The permeation tube assembly is shown in the upper right of Figure 4. The instruments were calibrated by injecting aliquots of an air stream flowing over the tubes into the chromatographic column. The concentration of the sulfur compound is inversely proportional to the air flow over the permeation tube.

When kraft mill stack effluents are sampled directly, special sampling techniques are required to reduce losses due to the high moisture content and the wide concentration range of the sulfur compounds present (ppb to percent levels). Grimly, Smith, and Martin (10) designed and constructed a dynamic

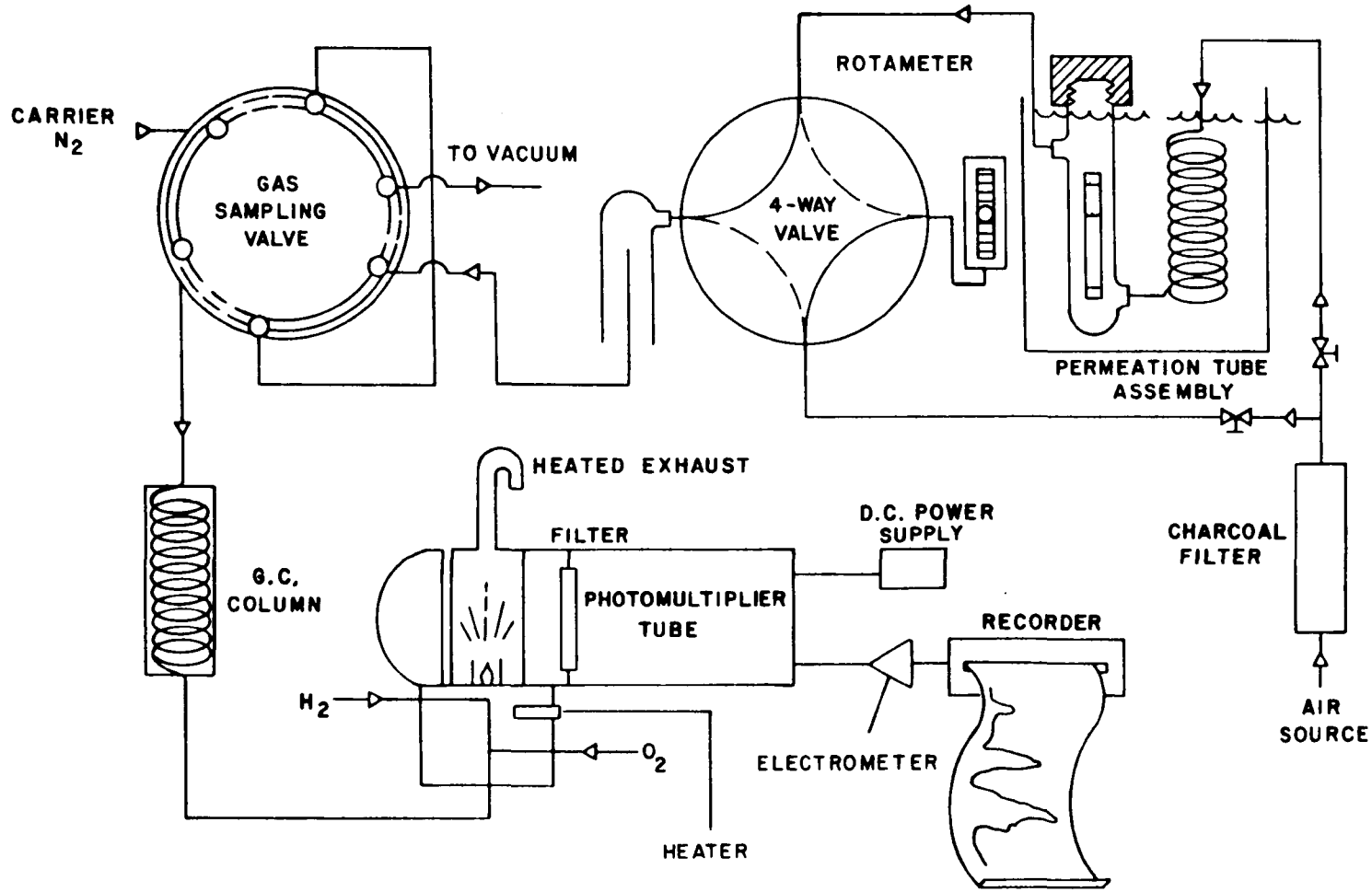

Figure 4. Automated gas chromatographic-FPD sulfur gas analyzer equipped with a 6-port gas sampling and a 10-foot by 0.085-inch Teflon column packed with Teflon coated with Triton X-305. Also shown is the permeation tube sample dilution system.

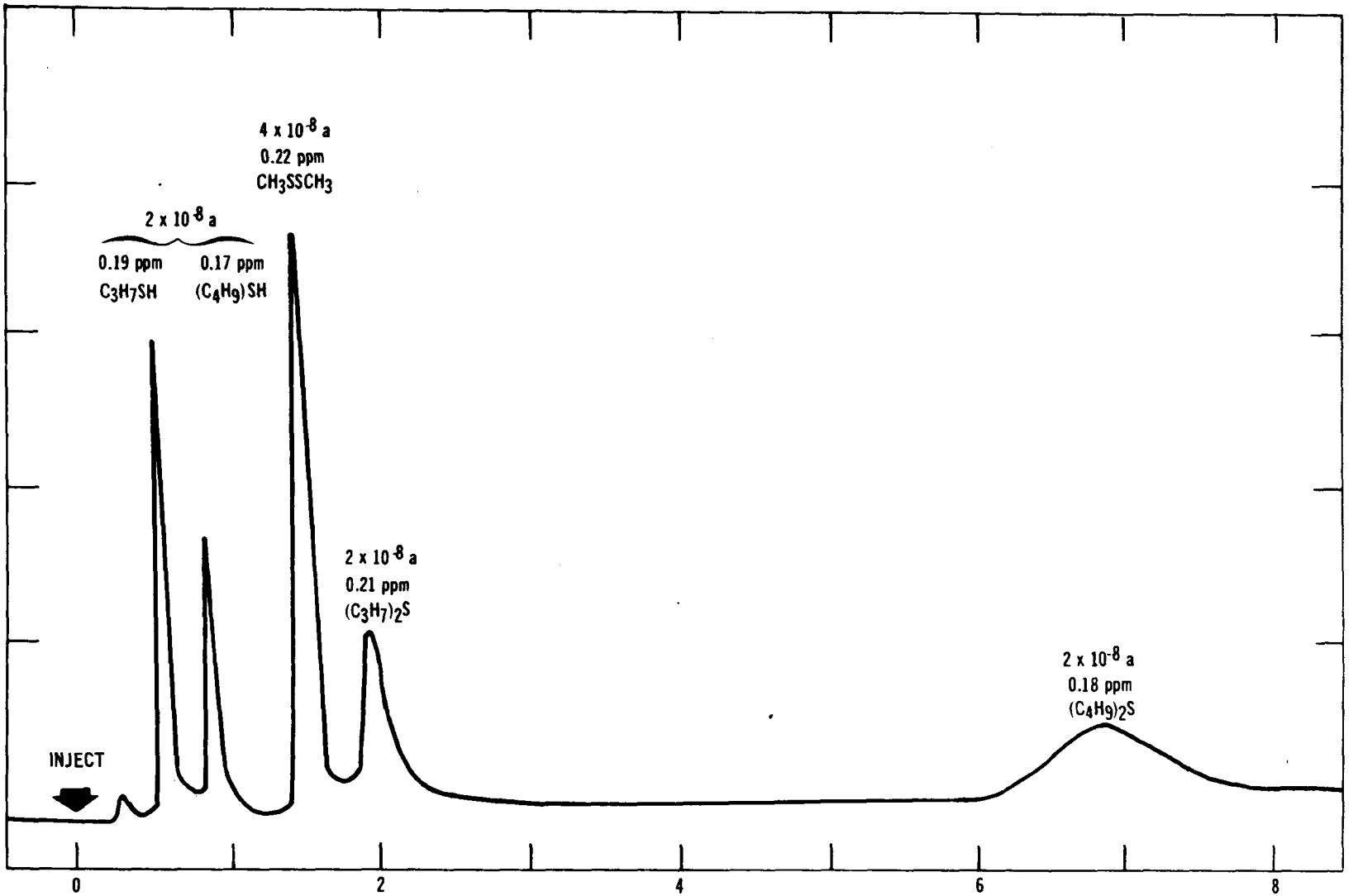

Figure 5. Chromatogram of a mixture of propyl mercaptan butyl mercaptan, dimethyl disulfide, dipropyl disulfide, and dibutyl sulfide.

dilution system to bring the effluent samples into the inherently limited dynamic range of the flame photometric detectors. The dynamic dilution system is capable of diluting effluent samples from a 10-to-1 dilution to a 10^6-to-1 dilution.

To determine if the chromatographic peaks represent the total volatile sulfur introduced into the chromatographs, a Meloy total sulfur analyzer continuously monitored the diluted sample.

SECTION 3

RESULTS AND DISCUSSION

SAMPLING

The chromatographs, sample dilution system and total sulfur flame photometric detector were installed in a mobile laboratory, which was moved first to a kraft mill employing the strong black liquor oxidation process and then to a plant using the weak black liquor oxidation process.

Figure 6 is a diagram of a typical chemical pulping operation. The weak black liquor oxidation plant investigated for this study differed slightly from the typical plant in that the lime kiln had a separate stack vent. In the strong black liquor oxidation pulping operation, the emission from the lime kiln was vented through a scrubber and into the recovery stack. The letters in Figure 6 designate the points where samples were extracted for analysis. Samples from each emission point were pulled to the dilution apparatus through a 250- by 1/4-inch heated Teflon line. The sampling line was maintained at about 180°C to prevent sample condensation. The probe was fixed into position in the emission-source gas stream and sampled at a flow rate of 50 liters per minute. Multiple measurements were made over a 3- to 4-hour period at each sampling point to determine the extent of the variation in concentration of the individual sulfur compounds with time. Wide variations in concentrations of the major constituents were not observed in this study; the data contained in Tables 1 through 4 can be considered typical.

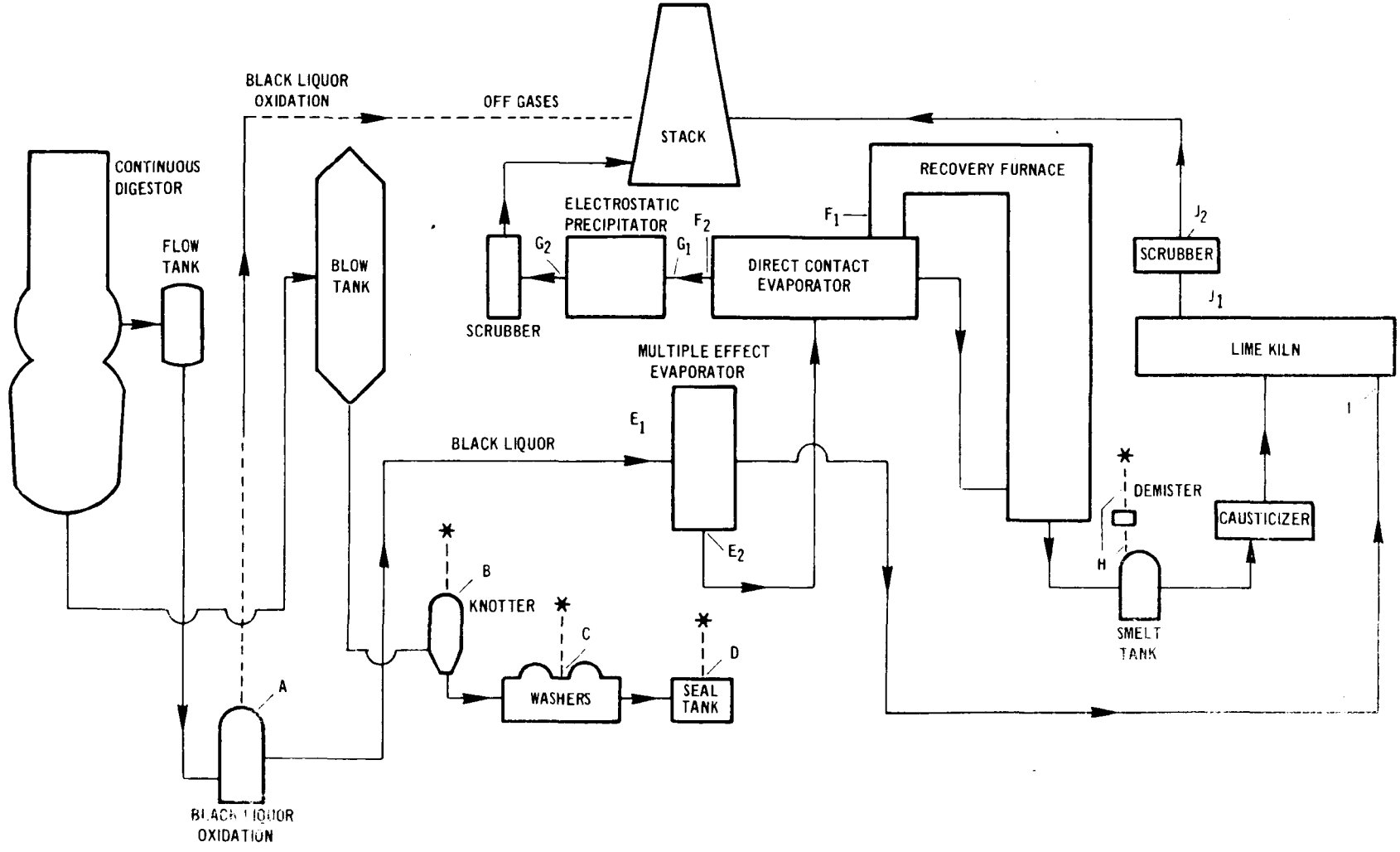

Figure 6. Diagram of a typical chemical pulping operation. Letters designate points where samples were extracted for analysis.

TABLE 1. STRONG BLACK LIQUOR OXIDATION

Sample point	Figure designation	Flow scfm	Concentration, ppm						
			H_2S	SO_2	CH_3SH	CH_3SCH_3	$CH_3CH_2CH_2CH_2SH$	CH_3SSCH_3	Compound X
Black liquor oxidation vent	A	6,000	9.0	1.27	18.75	7.35	-	0.35	0.22[a]
Knotter vent	B	n.d.[b]	tr[c]	tr	tr	3.22	-	3.30	tr
Brown-stock washer vent	C	37,800	tr	.29	tr	2.34	-	.75	tr
Brown-stock seal-tank vent	D	1,970	268	tr	18.30	305	-	48	1.87
Inlet to direct-contact evaporator	F_1	n.d.	tr	244.0	-	-	-	.21	-
Outlet to direct-contact evaporator	F_2	n.d.	tr	164.70	-	-	-	.22	-
Precipitator inlet	G_1	72,000	-	164.70	-	-	-	-	-
Precipitator outlet	G_2	31,000	-	146.40	-	-	-	-	.12
Smelt-tank vent	H	20,000	2.08	tr	-	-	-	-	-
Non-condensables to lime kiln	I	10	291.2	-	5,720.0	6,240.0	-	572.0	tr
Lime kiln scrubber inlet	J_1	14,000	30.0	tr	-	-	-	-	-
Lime kiln scrubber outlet	J_2	17,000	103.7	32.94	-	-	-	-	-

[a]Calculated as dibutyl disulfide

[b]Not determined

[c]Trace

TABLE 2. WEAK BLACK LIQUOR OXIDATION

Sample point	Figure designation	Flow scfm	Concentration, ppm						
			H_2S	SO_2	CH_3SH	CH_3SCH_3	$CH_3CH_2CH_2CH_2SH$	CH_3SSCH_3	Compound X
Black liquor oxidation vent	A	n.d.[a]	tr[b]	-	1.20	0.80	-	10.40	-
Washer head vent	C	n.d.	2.27	-	3.38	3.90	.28	2.4	-
Multiple effect evaporator inlet	E_1	n.d.	14,400	-	13,500	-	-	1,980	-
Multiple effect evaporator outlet	E_2	n.d.	tr	-	9,500	4,500	-	950	-
Direct contact evaporator inlet	F_1	n.d.	0.28	1.20	-	-	tr	tr	-
Direct contact evaporator outlet	F_2	n.d.	1.20	tr	1.20	0.384	tr	-	-
Precipitator inlet	G_1	100,000	1.28	tr	0.448	tr	tr	tr	-
Precipitaor outlet	G_2	143,000	1.52	tr	0.96	tr	tr	tr	tr
Smelt tank after demister	H	15,000	4.0	-	1.20	0.384	tr	0.136	-
Non-condensables to lime kiln	I	n.d.	-	tr	19,800	14,400	-	7,200	-
Lime kiln scrubber inlet	J_1	n.d.	16.25	-	tr	tr	-	-	-
Lime kiln scrubber outlet	J_2	18,000	70.50	-	-	-	-	-	-

[a]Not determined

[b]Trace

TABLE 3. WEAK BLACK LIQUOR OXIDATION KRAFT MILL

Sample point	Figure designation	Total sulfur concentration, ppm	
		Gas chromatography	Flame photometric detector
Black liquor oxidation vent	A	12.4	17.0
Washer head vent	C	12.3	12.4
Multiple-effects evaporator inlet	E_1	29,880	17,100
Multiple-effects evaporator outlet	E_2	14,950	15,250
Direct-contact evaporator inlet	F_1	1.50	1.80
Direct-contact evaporator outlet	F_2	2.80	1.80
Precipitator inlet	G_1	1.7	1.1
Precipitator outlet	G_2	2.5	1.3
Smelt tank after demister	H	7.7	7.2
Non-condensables to lime kiln	I	41,400	39,600
Lime kiln scrubber inlet	J_1	16.3	16.3
Lime kiln scrubber outlet	J_2	70.5	70.5

TABLE 4. STRONG BLACK LIQUOR OXIDATION KRAFT MILL

Sample point	Figure designation	Total sulfur concentration, ppm	
		Gas chromatography	Flame photometric detector
Black liquor oxidation vent	A	37.0	73.0
Knotter vent	B	11.0	11.0
Brown-stock washer vent	C	3.40	4.20
Brown-stock seal-tank vent	D	643.0	624.0
Inlet to direct-contact evaporator	F_1	244.0	195.0
Outlet to direct-contact evaporator	F_2	165.0	153.0
Precipitator inlet	G_1	165.0	134.0
Precipitator outlet	G_2	146.0	171.0
Smelt-tank vent	H	2.10	2.60
Non-condensables to lime kiln	I		
Lime kiln scrubber inlet	J_1	30.0	23.0
Lime kiln scrubber outlet	J_2	137.0	110.0

ANALYTICAL RESULTS

The principal emissions from the kraft mills employing the weak black liquor oxidation process were hydrogen sulfide and methyl mercaptan. Trace amounts, (that is, concentrations less than 5 ppb), of the following compounds were also present: sulfur dioxide, dimethyl sulfide, butyl mercaptan, dimethyl sulfide and an unknown sulfur compound. This unknown compound, (for this text termed compound X), was the last to elute from the Triton X-305 column and had a retention time of 17 minutes. Dibutyl disulfide (boiling point 226°C) had a retention time of 16 minutes on this column; therefore, the unknown compound probably has a boiling point greater than 226°C, or it is an extremely polar compound.

As noted in Tables 1 and 2, there was no chromatographic evidence of the presence of a wide variety of sulfur compounds. In fact, the chromatograms were so uncomplicated that, at least for these plants, hydrogen sulfide and methyl mercaptan can be considered the only significant emissions. The uncomplicated nature of these emissions is important, as the correlation of malodor with sulfur in the ambient air of this kraft mill cannot be totally determined by a simple sulfide test, especially since the ratio of sulfide to methyl mercaptan from the main recovery stack is roughly 1 to 1. Tables 2 and 3 list: (a) the sum of the sulfur emissions obtained by gas chromatography from each sampling point; and, (b) the values obtained with the total-sulfur flame photometric detector analyzer. With the exception of the measurements made at the inlet to the multiple-effect evaporator, the gas chromatographic and total-sulfur measurements were in close agreement. This indicates that sulfur compounds identified chromatographically represent the majority of the emissions. The discrepancy in the values obtained from the multiple-effects evaporator may have been the result of sampling problems caused by the high concentration of particles, water vapor, and organics.

The identified emissions from the strong black liquor oxidation process are shown in Table 4. Sulfur dioxide and hydrogen sulfide represent the major

pollutants emitted from this plant. Again, the chromatographic data were relatively uncomplicated although measurable quantities of dimethyl sulfide and dimethyl disulfide were emitted to the atmosphere from several vents.

DISPERSION CALCULATIONS

A measurement not made during these studies was the determination of the concentrations of sulfur compounds downwind of the kraft mills. Although these determinations were not made, estimates of the impact of emissions from the recovery furnace stack and lime kiln stack can be made using Turner's dispersion estimates (11). On the basis of Turner's calculations for a night-time inversion, (wind speed 3 meters per second), the concentrations of the sulfur dioxide, hydrogen sulfide and methyl mercaptan from the weak black liquor oxidation and strong black liquor oxidation kraft mills were determined and are listed in Table 5. Based on these estimates, the concentration of the sulfur gases in the ambient air 6000 meters from the source, indicates that the malodor impact of these gases would be negligible.

The total malodor impact of a kraft mill on the surrounding community can only be determined, however, by chromatographic measurements of the sulfur gases downwind of the plant. These determinations are necessary because a typical kraft mill is comprised of many separate point sources, some emitting only two or three sulfur compounds while others emit a variety of inorganic and organic sulfur species.

TABLE 5. ESTIMATE OF ATMOSPHERIC DISPERSIONS OF SULFUR GAS FROM KRAFT MILLS

	Strong black liquor oxidation			
Emission source	Source concentration, ppm H_2S	SO_2	Estimate of abmient concentration, ppm H_2S	SO_2
Recovery furnace stack	-	146		0.004
Lime kiln	103	33	0.001	0.001

	Weak black liquor oxidation			
Emission source	Source concentration, ppm H_2S	CH_3SH	Estimate of ambient concentration, ppm H_2S	CH_3SH
Recovery furnace stack	1.52	0.96	0.001	0.001
Lime kiln	70.50	-	0.017	-

REFERENCES

1. Brink, D.L., J.F. Thomas, and R. Feuerstein. Malodorous Products from the Combustion of Kraft Black Liquor. Tappi, 50(6):276-285, 1967.

2. Adams, D.F., and R.K. Koppe. Direct GLC Coulometric Analysis of Kraft Mill Gases. J. Air Pollu. Control Asso., 17(1):161-165, 1967.

3. Koppe, R.K., and D.F. Adams. Evaluation of Gas Chromatographic Columns for Analysis of Subparts per Million Concentrations of Gaseous Sulfur Compounds. Environ. Sci. Technol., 1:479-481, 1967.

4. Walther, J.E., and H.R. Amberg. Mobile Laboratory for Source-Sampling Kraft Mill Emissions. Tappi, 51(11):126A-129A, 1968.

5. Stevens, R.K., J.D. Mulik and A.E. O'Keeffe. Gas Chromatography of Reactive Sulfur Gases in Air at the Parts per Billion Level. Anal. Chem., 43(6):827-831, 1971.

6. Draeger, B., and H. Draeger. West German Patent 1-33918. Patent Date July 1962.

7. Crider, W.L. An Automatic Flame Emission Instrument for Selectively Monitoring SO_2 in Animal Exposure Chambers. In: Proceedings of the 12th Annual Analysis Instrumentation Symposium, 1966. pp. 67-73.

8. Brodey, S.S., and J.E. Chaney. Flame Photometric Detector. The Application of a Specific Detector for Phosphorus and for Sulfur Compounds Sensitive to Subnanogram Quantities. J. Gas Chromatogr., 4(2):42-46, 1966.

9. O'Keeffe, A.E., and G.C. Ortman. Primary Standards for Trace Gas Analysis. Anal. Chem., 38(6):760-763, 1966.

10. Grimley, K.W., Jr., W.S. Smith and R.M. Martin. The Use of a Dynamic Dilution System in the Conditioning of Stack Gases for Automated Analysis by a Mobile Sampling Van. Presented at 63rd APCA Meeting, St. Louis, Missouri, June 1970.

11. Turner, D.B. Workbook of Atmospheric Dispersions Estimates. Public Health Service, Publication No. 99-AP-26, Revised 1969.

12. Lindvall, T. On Sensory Evaluation of Odorous Air Pollutant Intensities. Nordisk Hygienisk Tidschrift, Supplementum 2. Karolinska Institutet, National Institute of Public Health, No. 5-104-01, Stockholm, Sweden, 1970.

TECHNICAL REPORT DATA
(Please read Instructions on the reverse before completing)

1. REPORT NO. EPA-600/2-78-126	2.	3. RECIPIENT'S ACCESSION NO.
4. TITLE AND SUBTITLE ANALYTICAL SYSTEM FOR MEASURING MALODOROUS COMPOUNDS FROM KRAFT MILLS		5. REPORT DATE July 1978
		6. PERFORMING ORGANIZATION CODE
7. AUTHOR(S) J. D. Mulik, R. K. Stevens and R. E. Baumgardner		8. PERFORMING ORGANIZATION REPORT NO.
9. PERFORMING ORGANIZATION NAME AND ADDRESS Environmental Sciences Research Laboratory Office of Research and Development U.S. Environmental Protection Agency Research Triangle Park, NC 27711		10. PROGRAM ELEMENT NO. 1AD712
		11. CONTRACT/GRANT NO.
12. SPONSORING AGENCY NAME AND ADDRESS Environmental Sciences Research Laboratory - RTP, NC Office of Research and Development U.S. Environmental Protection Agency Research Triangle Park, NC 27711		13. TYPE OF REPORT AND PERIOD COVERED Final
		14. SPONSORING AGENCY CODE EPA/600/09
15. SUPPLEMENTARY NOTES		

16. ABSTRACT

Automated chromatographs equipped with flame photometric detectors were developed for the qualitative and quantitative analysis of low- and high-molecular-weight sulfur compounds in kraft mill effluents. One chromatograph equipped with a Teflon column packed with Teflon and coated with polyphenyl ether measured the following low-molecular-weight sulfur compounds: hydrogen sulfide (H_2S), sulfur dioxide (SO_2), methyl mercaptan (CH_3SH), ethyl mercaptan (C_2H_5SH), dimethyl sulfide ($(CH_3)_2S$), and propyl mercaptan (C_3H_7SH). A second chromatograph equipped with a Teflon column packed with Teflon and coated with Triton X-305 measured the higher-molecular-weight sulfur compounds: butyl mercaptan (C_4H_9SH), dimethyl disulfide ($(CH_3)_2S_2$), and dibutyl sulfide ($(C_4H_9)_2S$).

Kraft mill effluents containing sulfur species ranging in concentrations from 5 ppb to percent levels were analyzed using a 6-stage dynamic dilution system.

Sulfur emission data were collected from two kraft mills, one employing strong black liquor oxidation and the other weak black liquor oxidation. Part of the study was dedicated to determining the relationship between the total gaseous sulfur and the individual sulfur compounds observed chromatographically. In most cases, more than 90 percent of the sulfur emitted from the kraft mills studied was accounted for by chromatographically identified compounds.

17. KEY WORDS AND DOCUMENT ANALYSIS

a. DESCRIPTORS	b. IDENTIFIERS/OPEN ENDED TERMS	c. COSATI Field/Group
* Air pollution		13B
* Sulfur inorganic compounds		07B
* Sulfur organic compounds		07C
* Sulfate pulping		13H
* Chemical analysis		07D
* Chromatography		

18. DISTRIBUTION STATEMENT RELEASE TO PUBLIC	19. SECURITY CLASS *(This Report)* UNCLASSIFIED	21. NO. OF PAGES 27
	20. SECURITY CLASS *(This page)* UNCLASSIFIED	22. PRICE

EPA Form 2220-1 (Rev. 4-77) PREVIOUS EDITION IS OBSOLETE