EPA-650/2-73-017

August 1973

ENVIRONMENTAL PROTECTION TECHNOLOGY SERIES

ATMOSPHERIC EMISSIONS FROM THE PETROLEUM REFINING INDUSTRY

Office of Research and Development
National Environmental Research Center
U.S. Environmental Protection Agency
Research Triangle Park, N.C. 27711

EPA-650/2-73-017

ATMOSPHERIC EMISSIONS FROM THE PETROLEUM REFINING INDUSTRY

by

L. L. Laster
Control Systems Laboratory

ENVIRONMENTAL PROTECTION AGENCY
Office of Research and Development
National Environmental Research Center
Research Triangle Park, North Carolina 27711

August 1973

This report has been reviewed by the Environmental Protection Agency and approved for publication. Approval does not signify that the contents necessarily reflect the views and policies of the Agency, nor does mention of trade names or commercial products constitute endorsement or recommendation for use.

Publication No. EPA-650/2-73-017

CONTENTS

Section	Page
LIST OF FIGURES	vi
LIST OF TABLES	vi
ABSTRACT	vii
INTRODUCTION	1
PETROLEUM REFINERIES	7
OPERATION OF REFINERIES	11
Separation	11
Conversion	14
Catalytic Cracking	14
Catalytic Naphtha Reforming	18
Light Hydrocarbon Processing	18
Isomerization	19
Coking	20
Hydrocracking	22
Sulfur Recovery Unit	23
Desulfurization of Fuel Oils	25
Treating	26
Blending	27
FACTORS CONTRIBUTING TO EMISSION OF POLLUTANTS	29
Emission Control Equipment and Methods in Use	29

Sulfur Content of Raw Materials 29
Refining Operations 30
Housekeeping and Maintenance Practices 30
Major Sources of Pollutant Emissions 31
CONTROL METHODS 33
Available Methods 33
Hydrocarbons 33
Particulates 33
Carbon Monoxide 34
Smoke 34
Odors 34
Control Technology Needed 35
Sulfur Dioxide 35
Nitrogen Oxides 36
Particulates 36
Odors 36
Interim Control of Emissions 36
Sulfur Dioxide 36
Nitrogen Oxides 37
Particulates 37
Odors 38
Proposed Guidelines for Refinery Emissions 38
Comments on Emission Controls 38
REFERENCES 39
APPENDIX A: GLOSSARY 43

APPENDIX B: GUIDELINES PROPOSED BY THE ENVIRONMENTAL PROTECTION AGENCY FOR REFINERY EMISSIONS 49

LIST OF FIGURES

Figure *Page*

1 Processing Plan for Complete Modern Refinery 8

2 Typical Crude-oil Separation Unit
Employing Atmospheric and Vacuum Distillation 9

3 Typical Moving-bed (Thermofor)
Catalytic Cracking Unit (TCC) 15

4 Fluid Catalytic Cracking Unit (FCC) 16

5 Flow Diagram of Modern Fluid Coking Unit 21

6 Growth of Use of Hydrocracking 22

7 Recovery of Sulfur from Hydrogen Sulfide 25

LIST OF TABLES

Table *Page*

1 Crude-oil Charge for 1968, 1969, and 1970 2

2 Crude-oil Charge for Various Sizes of Refineries (1970) 2

3 Crude-oil Charge to Refineries in Concentrated Areas (1970) 3

4 Estimated Emissions from 262 U.S. Refineries (1969) 4

5 Average Composition of Crude-oil and
Typical Composition of Overhead Stream 12

6 Pollutants from Crude-oil Separation Units 13

7 Emission Factors for Pollutants from Catalyst Regeneration 17

8 Major Sources of Pollutant Emissions 31

ABSTRACT

As petroleum refining has developed in recent years into one of the leading industries of the nation, with a growth rate of 4 to 8 percent annually, air pollution problems have increased, though the corporations involved have, as a result of research, produced control methods for some of the pollutants. The principal emissions from refining operations are sulfur oxides, nitrogen oxides, hydrocarbons, particulates, carbon monoxide, and odors. The estimated emissions of these pollutants (except for odor *per se*) at the 262 refineries operating in the United States in 1969 totaled 7.04 million tons, with substantial control exercised only in the case of hydrocarbons, particulates, and carbon monoxide.

Although refineries vary considerably in capacity, type of crude oil processed, and complexity of operations, petroleum refining generally encompasses: (1) separation processes (atmospheric distillation and vacuum distillation); (2) conversion processes, such as catalytic cracking, light hydrocarbon processing, isomerization and coking; (3) treating; and (4) blending. The bulk of air pollution emissions from a refinery is from process equipment such as the catalytic cracking regenerators, storage tanks, barometric condensers, waste oil separators, and cooling towers, and from such miscellaneous sources as loading facilities, sampling activities, spillage, and leaks. Factors contributing to the emission of pollutants include the sulfur content of raw materials, emission control equipment and methods in use, deficiencies in "housekeeping" and maintenance practices, and operational considerations such as the variety of products manufactured and types of fuels used.

Although control methods have been developed for some of the principal pollutants from refining processes, the industry still has significant air pollution problems because some of the pollutants emitted by refineries contribute to photochemical smogs and have harmful effects on the public in congested industrial areas. Substantial progress has been made in controlling hydrocarbons, with the cost often offset by the saving of valuable products that otherwise escape into the atmosphere. Particulates also can be controlled by means such as electrostatic precipitators, but the necessary devices and techniques are not being used in all refineries. In addition, the technology exists for controlling carbon monoxide emissions and for significantly reducing smoke and odors.

There is a definite need for methods by which to remove sulfur and nitrogen oxides from refinery flue gases, as well as for better techniques for controlling refinery odors. In 1968 through 1970, refineries released about 5.5 to 7.0

percent of the national total of sulfur dioxide emitted annually into the atmosphere from all sources. Though desulfurization of petroleum products has increased in the industry in recent years, a reevaluation of direct crude desulfurization may now be in order. It is anticipated that reduction of nitrogen oxides from combustion processes will result from some combination of combustion modification techniques. The technology for controlling all pollutants from refineries has been instrumental in reducing odors, but altogether effective means remain to be employed.

In accordance with guidelines proposed by the U.S. Environmental Protection Agency for emissions from refinery operations, oil companies, working in conjunction with trade organizations and equipment manufacturers, have employed interim controls in many cases and have developed processes and devices for at least reducing all pollutants from refineries. A major problem, however, is the cost of the needed equipment, and the industry still has installed only about 50 percent of the control equipment that is available.

Key Words: sulfur oxides, nitrogen oxides, particulates, hydrocarbons, odor emissions, emission factors for petroleum refineries, emission control, pollution, pollution control techniques, atmospheric pollution, fluid catalytic cracking, refining, crude oil.

ATMOSPHERIC EMISSIONS FROM THE PETROLEUM REFINING INDUSTRY

INTRODUCTION

This report summarizes the air pollution problems of the petroleum refining industry, with emphasis on gaseous emissions. A general outline of the refining processes, sources and types of pollutant emissions, and present and needed control methods is provided.

One of the leading industries of the nation, petroleum refining is growing at an estimated 4 to 8 percent annually. Refineries have expanded from simple "batch" stills to the large complex plants required today to supply products needed for the general public and to produce feedstocks for the increasing needs of the closely related petrochemical industry. The technical breakthroughs necessary for the development of present-day petroleum operations came largely as a result of the need, in the early 1940's, for synthetic rubber, high octane gasoline, and feedstocks for other related industries.

Petroleum products supply a large percentage of the world's energy, and the industry estimates that the demand is increasing yearly. As a result, the refiner must constantly seek new processes, develop these processes, improve the efficiency of operations, and produce a wider variety of products, yet remain competitive. With the development of new processes, existing ones could shortly become obsolete. Table 1 shows the industry's growth in crude-oil charge rate for 3 recent years. The capacities of the refineries (Table 2)[1] range from less than 1000 to 434,000 barrels per calendar day. The smaller refineries, built for special markets such as fuel oils, do not contribute appreciably to air pollution in congested areas because of the locations of these facilities and their limited crude-oil charging rates. Geographically, approximately 80 percent of the crude-oil charge processed is concentrated in the five regions shown in Table 3.[1]

Crude oil, the charge stock for a refinery, is a mixture of many different hydrocarbons varying in chemical composition and physical properties. Physically, crude oil ranges from a thick tar-like material to a light colorless liquid. Chemically, the crude oil can be saturated hydrocarbons having a formula of C_nH_{2n+2}, naphthene having a ring structure of C_nH_{2n}, or

Table 1. CRUDE-OIL CHARGE FOR 1968, 1969, AND 1970

Year	Number of refineries	Crude-oil charge, 10^6 bbl/calendar day[a]
1968	263	11.5
1969	262	12.0
1970	253	12.7

[a]Barrels per day or barrels per calendar day is an expression for the operating capacity of a refinery, generally with an allowance for downtime. In the petroleum industry, a barrel is equivalent to 42 U.S. standard gallons.

Table 2. CRUDE-OIL CHARGE FOR VARIOUS SIZES OF REFINERIES (1970)

Crude-oil charge, bbl/calendar day	Number of refineries[1]
<1,000	5
1,000 to 2,000	14
2,000 to 10,000	67
10,000 to 20,000	32
20,000 to 50,000	59
50,000 to 100,000	40
100,000 to 200,000	22
200,000 to 300,000	7
300,000 to 400,000	6
>400,000	1
Total 12,700,000	253

Table 3. CRUDE-OIL CHARGE TO REFINERIES IN CONCENTRATED AREAS (1970)

Region	Crude-oil charge, 10^6 bbl/calendar day[1]
California - West Coast	2.0
Texas, La., Miss., Ala. - Gulf Coast	4.3
Chicago, St. Louis, Kansas	1.9
Cleveland, Toledo, Detroit, Buffalo	0.7
Philadelphia, New Jersey, New York - East Coast	1.3
Total	10.2

aromatics having a benzene ring structure of C_6H_6.[8] Most crude oils are a mixture of these compounds. Distillation separates the crude oil into a number of predetermined fractions, depending on the desired products resulting from this operation and feedstocks desired for processing in downstream units that are used to crack, reform, treat, redistill, air-blow and, if necessary, blend the crude distillation products into finished products.

Though, as noted, the constituents of crude oil are carbon and hydrogen, impurities such as sulfur, sodium chloride, oxygen, nitrogen, and various metals also are present and cause operational and pollution problems in refining. Before the crude oil is processed, some of the impurities, such as salts (chiefly sodium chloride), are removed. Salt is separated out by washing the crude with water and breaking down the resulting emulsion, either chemically or electrically. The salty water is drawn from a settling drum to the refinery sewage system. Then, the desalted crude oil is ready for further processing in a crude-oil separation unit. Removing the salt reduces both the corrosion of equipment and plugging or fouling of heat exchangers, thus decreasing equipment expenses. Removal of the salt and other foreign materials, referred to as "desalting," increases the on-stream hours of the crude-oil separation unit and, thus, the throughput of a refinery.

Estimated emissions from the 262 operating refineries in the United States in 1964 are given in Table 4.[4] Sulfur, one of the impurities in the crude oil, is a principal contributor to pollution problems, and its removal from the crude oil is expensive, though research directed toward the development of effective, inexpensive processes is progressing. McAfee *et al.*[5] reported in 1955 that hydrodesulfurization of West Texas crude oil for a refinery with a capacity of 20,000 to 25,000 barrels per calendar day was practical. One of the initial

Table 4. ESTIMATED EMISSIONS FROM 262 U. S. REFINERIES (1969)[4]

Pollutant	Emission, 1000 tons	Control, %
Sulfur oxides	2200	0
Nitrogen oxides	61	0
Hydrocarbons	2300	50
Particulates	55	50
Carbon monoxide	2420	75

problems in this pilot plant study was solved by developing a rugged and stable catalyst that can be regenerated periodically and has a unique stability toward heavy-metal poisoning.[5] Desulfurization of petroleum products has grown in the industry in recent years. At first, gasolines were desulfurized, then low-sulfur middle distillates or heating oils; now, in response to the demand for low-sulfur residual fuel oils, what appears to be a crash desulfurization program is under way. These developments suggest that a reevaluation of direct crude-oil desulfurization may be in order. Recently, Chevron Research Company announced that it has developed a process[6] for removing sulfur directly from Mideast crude oil (having low metal content), and comparable processes have been developed by other companies.

The average sulfur content of domestic crude oil is about 0.75 percent, varying from 0.20 to 3.70 percent. When charged to the crude-oil separation units with the higher sulfur imported crude oil, the average sulfur content of the crude oil is slightly above 1 percent. These figures vary from region to region and, in many instances, from refinery to refinery. Results[7] obtained from several large oil corporations indicate that, during refinery operations, approximately 50 tons of sulfur dioxide (SO_2) are released per 100,000 barrels of crude oil processed; thus, oil refining operations released about 2,100,000 tons of SO_2 in 1968, 2,200,000 tons in 1969, and 2,300,000 tons in 1970. These quantities represent about 5.5 to 7.0 percent of the national total of SO_2 emitted annually into the atmosphere from all sources.[4] The emission of SO_2 can be decreased if natural gas rather than fuel oil is used to fire process heaters and boilers.

Other air pollutants from refineries are nitrogen oxides (NO_x), particulates, malodorous compounds, carbon monoxide (CO), smoke, and hydrocarbons. Even though refineries are not the largest industrial emitters of air pollution on a nationwide basis, they do add to local pollution problems because they emit pollutants that can be hazardous if not controlled. These pollutants contribute to the formation of photochemical smog and have harmful effects on public health and property in congested industrial regions, as well as on vegetation. This regional aspect of the problem is particularly

important in relation to the control of a refinery's emissions of SO_2, NO_x and, to some extent, odors and particulates. Technology has been developed for effectively controlling emissions of carbon monoxide, hydrocarbons, particulates, and smoke, but improved devices and techniques are needed for particulates and odors.

PETROLEUM REFINERIES

The modern petroleum refinery, in which crude oil is converted into usable products, is a well-planned, integrated unit of many processes that encompass the latest technology in the field. The larger refineries may be designed to manufacture about 2500 different products.[8] Feedstocks are also produced for other industries such as the synthetic rubber, agriculture, drug, and steel industries, and the closely related petrochemical industry.

Refineries differ in their processing schemes, depending on their capacity, type of crude oil processed, complexity of the processes involved, product distribution, and product requirements. The following processes are generally used in petroleum refining:

1. Separation.
   a. Atmospheric distillation.
   b. Vacuum distillation.

2. Conversion.
   a. Catalytic cracking.
   b. Catalytic naphtha reforming.
   c. Light hydrocarbon processing.
      (1). Polymerization.
      (2). Alkylation.
   d. Isomerization.
   e. Coking.
      (1). Delayed.
      (2). Fluid.
   f. Hydrocracking.
   g. Sulfur recovery.
   h. Desulfurization of fuel oils.

3. Treating.

4. Blending.

Figure 1, a flow chart for a complete refinery, shows most of these processes; Figure 2 illustrates a crude-oil separation unit in more detail. As noted in each chart, the initial processing step consists of charging the heated crude to the crude-oil separation unit. Predetermined products are withdrawn from this unit and are either charged to other processing units (Figure 1) or transferred to storage tanks for future processing. The process equipment consists mainly of

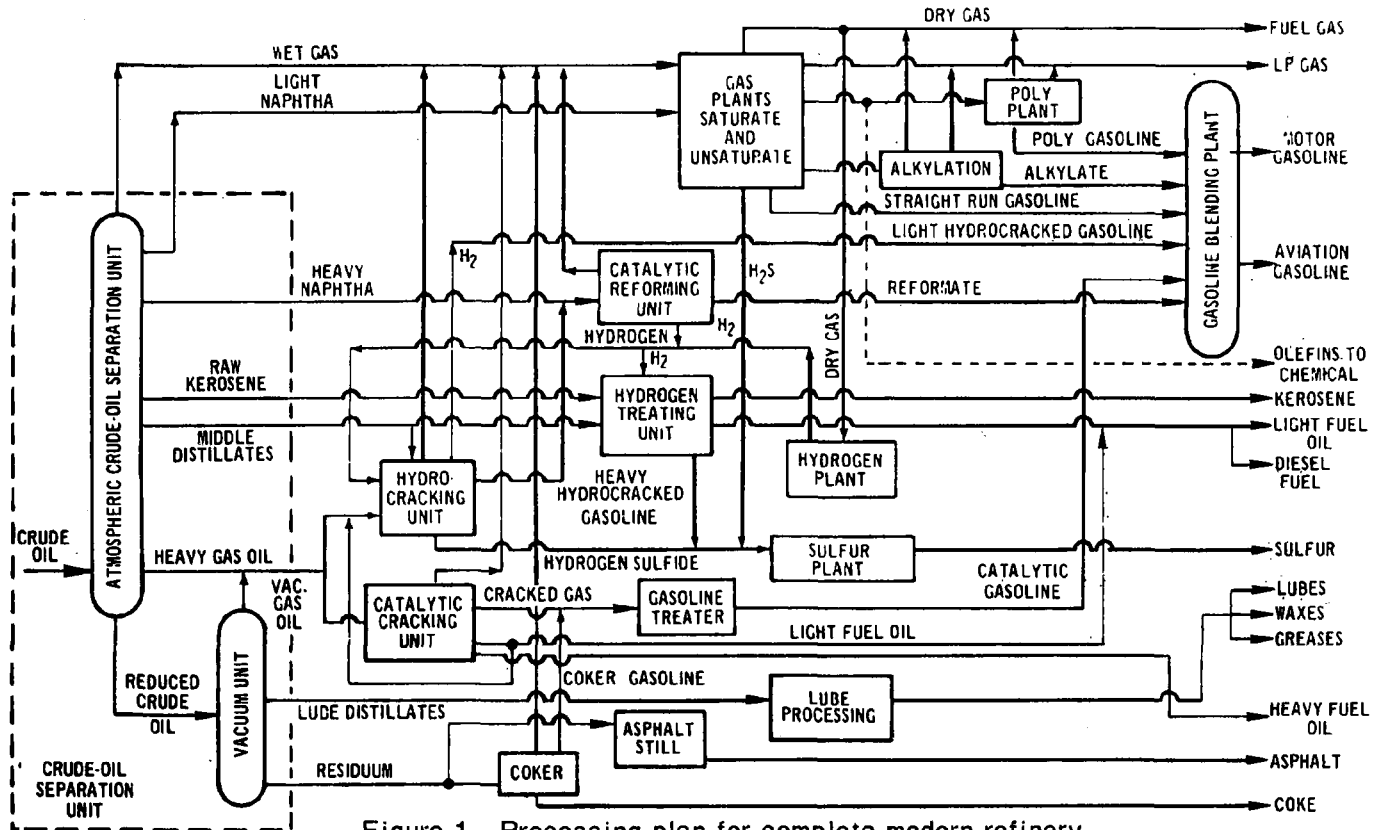

Figure 1. Processing plan for complete modern refinery.

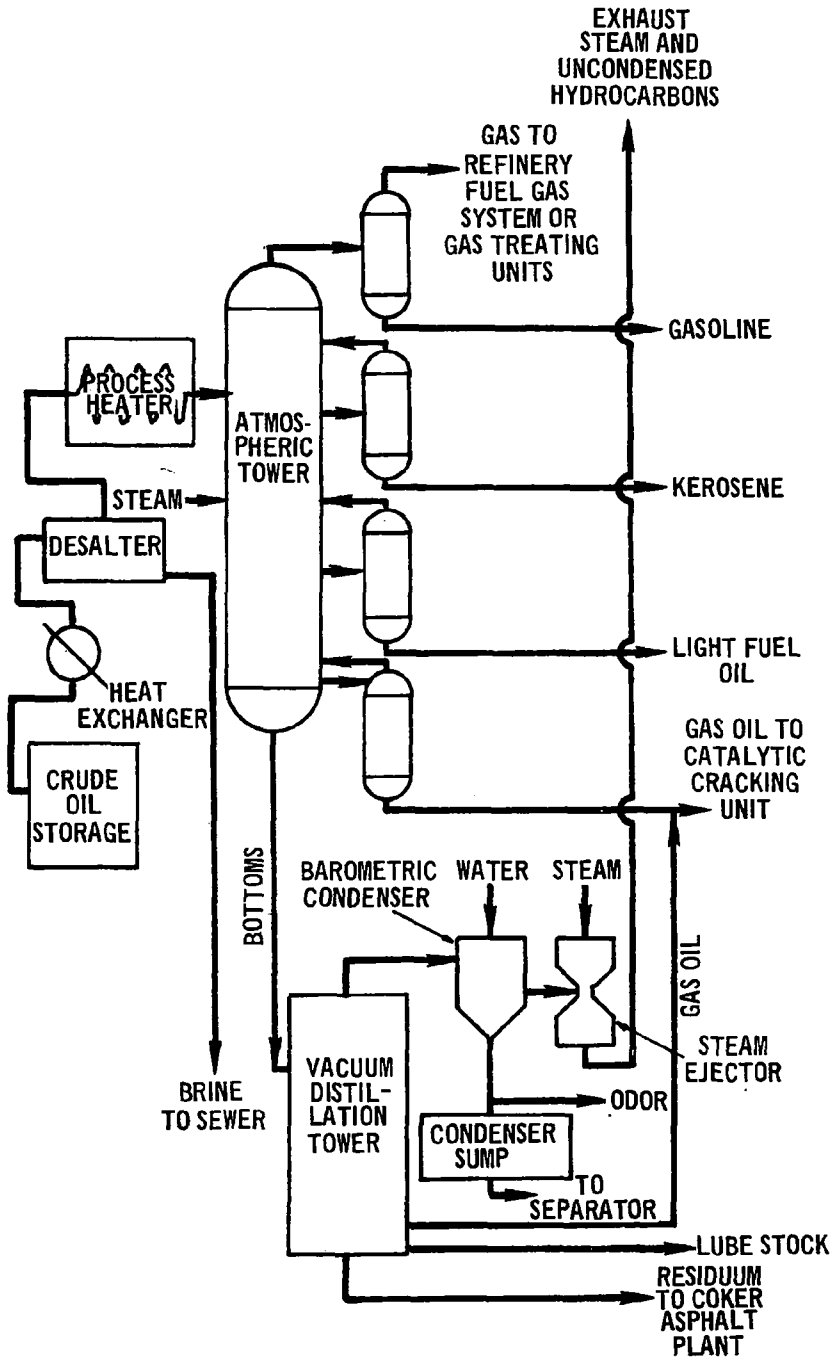

Figure 2. Typical crude-oil separation unit employing atmospheric and vacuum distillation.

fired heaters, heat exchangers, coolers, pumps, distillation towers (fractionators), and absorption towers. Fuel oil, refinery fuel gas, or purchased natural gas are used to generate steam and provide heat for the refinery. Electric power is normally purchased, if available. Products are cooled by water (with a once-through system or from cooling towers); by air fans; or, sometimes, by both. The process equipment is protected against overpressure by safety valves set for release at a predesignated pressure level to the atmosphere, to a flare, or to a blowdown system, where the heavier hydrocarbons are recovered and reprocessed. Oil-contaminated water and oil drained from processing equipment and storage tanks are carried to a water sewer separator, where the oil is recovered and reprocessed.

In addition to these processing units, other units and equipment may be included:

1. Preparatory units for production of petrochemical feedstocks and feedstocks for other industries.

2. Off-site facilities.
   a. Storage tanks.
   b. Utilities, such as boiler houses, power plants, water treating units, and compressed air and cooling water systems.
   c. Loading and shipping facilities for products shipped in tank cars, transport trucks, railcars, and (if on a waterway) barges or tankers.
   d. Incinerators for waste disposal.
   e. Flares.
   f. Waste oil treatment or recovery plants.

All of the facilities are potential sources of emissions. These units must be effectively coordinated for the successful operation of the refinery as a whole.

OPERATION OF REFINERIES

The somewhat complex processes involved in petroleum refining can be divided into four steps: separation, conversion, treating, and blending. The function and operation of each phase will be briefly described below.

SEPARATION

The primary separation step in a refinery is simple fractionation or distillation of the crude oil. Figure 2 is a simplified flow diagram of a complete, typical crude-oil separation unit, employing atmospheric and vacuum distillation. Such units vary in size of crude-oil charge capacity from 1000 to over 100,000 barrels per stream day. They consist of fired heaters, fractionating towers, heat exchangers, coolers, drums, pumps, and instruments. For economical operation, modern automatic control instruments are now being installed in processing units.

Desalted crude oil is pumped through a pipe tube heater where, depending on the type of crude, it is heated to a predetermined temperature (usually 690 to 710 °F); higher temperatures may cause some cracking. From the heater, the hot crude oil enters the atmospheric tower. The tower is equipped with a calculated number of fractionating trays of various types; desired products determine the number, spacing, and types used. In the tower, the crude oil is separated into specified boiling range products by controlled fractionation under atmospheric pressure.

As shown in Figure 1, the typical crude-oil separation unit is principally a preparatory unit for feedstocks to such other processes as catalytic reforming, catalytic cracking, hydrogen treating, hydrocracking, vacuum distillation, coking, alkylation, polymerization, sulfur production, asphalt production, treating, chilling, filtering, and gasoline blending. This line of flow shows that the present-day refinery must be a well-planned, integrated facility, employing the latest petroleum refining technology in order to maintain efficient and economical operations.

The first product from the crude-oil separation unit shown in Figure 2 is a light gasoline stream plus gaseous hydrocarbons that together represent a total of about 26.5 percent of the crude. This product is commonly called the "overhead cut" or "stream." The yield and composition of this product depend chiefly on the type of crude. Some petroleum companies inject light hydrocarbons (propane and heavier) into the crude-oil stream at the production source as a means of transporting them to the refinery for processing

into suitable products. This procedure has a direct effect, of course, on yields of light hydrocarbons. Typical yield and composition of this overhead stream, without injection of the light hydrocarbons, are based on the average crude-oil composition shown in Table 5.

Table 5. AVERAGE COMPOSITION OF CRUDE OIL AND TYPICAL COMPOSITION OF OVERHEAD STREAM[a]

Product	Percent by volume	
	Product	Crude oil
Hydrogen sulfide	0.20	0.05
Methane	7.00	1.86
Ethane	2.30	0.61
Propane	3.00	0.80
Butane	2.80	0.74
Gasoline	84.70	22.45
Total	100.00	26.51

[a]Without injection of light hydrocarbons.

The hydrogen sulfide is recovered in an amine unit for charge to the sulfur plants; propane is recovered and sold as liquid petroleum gas; butane is recovered and blended into gasoline; and the gasoline is either blended into the refinery gasoline pool or charged to the catalytic naphtha reformer for octane upgrading.

Kerosene and light fuel oil (middle distillate), representing about 22 percent of the crude oil, are the next two streams withdrawn from the crude-oil separation unit. These streams are normally hydrogen-treated for sulfur removal to make them saleable products. After withdrawing the two distillate fuel streams, a maximum gas oil stream is taken for feedstocks to the catalytic cracking unit and/or a hydrocracker.

As shown in Figure 2, the separation process is completed when the bottoms from the atmospheric tower are transferred to the vacuum distillation tower and heated under vacuum to reduce them further to residuum ("flux bottoms"), representing about 8 percent of the typical domestic crude-oil charge. From this tower, a gas oil is withdrawn and used as feedstock to the catalytic cracking unit or to a hydrocracker. If a lube stock is required, it is

also withdrawn as a sidestream; if the lube stock is not required, the entire vacuum tower distillate production is charged to the catalytic cracking operations. The flux bottoms may be charged to the coker or asphalt plant, or may be blended into residual fuel oils.

The barometric condenser on the vacuum unit is the principal source of pollutants consisting of noncondensables, light hydrocarbons, and odors. Equipment in new units injects these light hydrocarbons into the process heater for burning and controls odors by using tubular condensers.

Table 6 shows that the crude-oil separation unit (employed at the separation stage of petroleum refining) can be a potential source of pollution,[9] particularly if fuel oil is used for fuel in the processing. Control technology for some of these pollutants is yet to be developed. Mechanical improvements have been made to increase the efficiency of the furnaces and burners used in the combustion process, thus reducing the emission factors for most of the pollutants except sulfur oxides. Currently, the only practical method of

Table 6. POLLUTANTS FROM CRUDE-OIL SEPARATION UNITS

Source	Pollutant	Emission factor	
		lb/1000 ft^3	lb/1000 bbl oil
Combustion	Sulfur oxides	Neg.	6400 x %S
Process heaters	Hydrocarbons	0.03	140
Boilers	Particulates	0.02	800
	Carbon monoxide		2
	Nitrogen oxides	0.02	2900
Barometric condensers	Hydrocarbons		130 lb/1000 bbl charge to vacuum distillation tower
	Odors		Odors caused by noncondensables and light hydrocarbons
Miscellaneous: Sampling, spillage, leaks, drains, and blowdown	Hydrocarbons		150 lb/1000 bbl crude

controlling the emission of sulfur dioxide is the use of low-sulfur fuel. Table 6 shows that the emission factor of particulates from the combustion process is about 800 pounds per 1000 barrels of fuel oil burned; for a large refinery, the tonnage would be large. Using electrostatic precipitators on the many process heaters would not be practical, but it would be on boilers if an appreciable quantity of residual fuel oil were burned.

"Good housekeeping," employee training, improved maintenance, use of efficient control equipment, and use of efficient process operations contribute to controlling the emissions of smoke, odors, hydrocarbons, and carbon monoxide; but, as stated, the technology for removing sulfur and nitrogen oxides from flue gases has not been used commercially to date. Some processes are, however, in the development stage.

CONVERSION

When the demand for gasoline began to exceed that for other petroleum products, refiners were faced with the problem of producing an excessive quantity of fuel oils or developing a process to convert heavier hydrocarbons into low-boiling hydrocarbons within the gasoline range. First, they developed thermal cracking, then, the catalytic process, which replaced the thermal process. The catalytic unit is more economical and gives a higher yield, a higher octane product, and a more desirable feedstock for other processes (especially alkylation).

Catalytic Cracking

Catalytic cracking is the most important and essential process in the refinery, so that the cracking unit is the heart of the refinery complex. To supply more gasoline with a higher octane, refiners are increasing their catalytic cracking capacity: the daily charge rate has increased from 5.80 million barrels per day in 1968 to 5.97 million barrels per day in 1969, a 0.7-million-barrel-per-day increase in 2 years. The gas oils from the crude-oil separation unit and the vacuum unit, representing about 45 percent of the crude, are charged to the catalytic unit. The method used for transferring the catalyst determines the type or class of the catalytic unit:

1. *Fixed-bed (Houdry Process) (Obsolete).* A number of reaction chambers are used in a batch-type operation. When the catalyst must be regenerated, the reactor is bypassed, the coke and other impurities are burned off, and the catalyst is reused.

2. *Once-through Process.* The catalyst is passed through the cracking furnace with the oil and is removed by a filter. This process has never been used commercially to any extent.

3. *Thermofor Catalytic Cracking Units (TCC) (Being phased out).* These units (Figure 3) are classified as a moving-bed system. The catalyst leaving the regenerator is lifted to the surge hopper and returned by gravity to the reaction and regeneration areas.

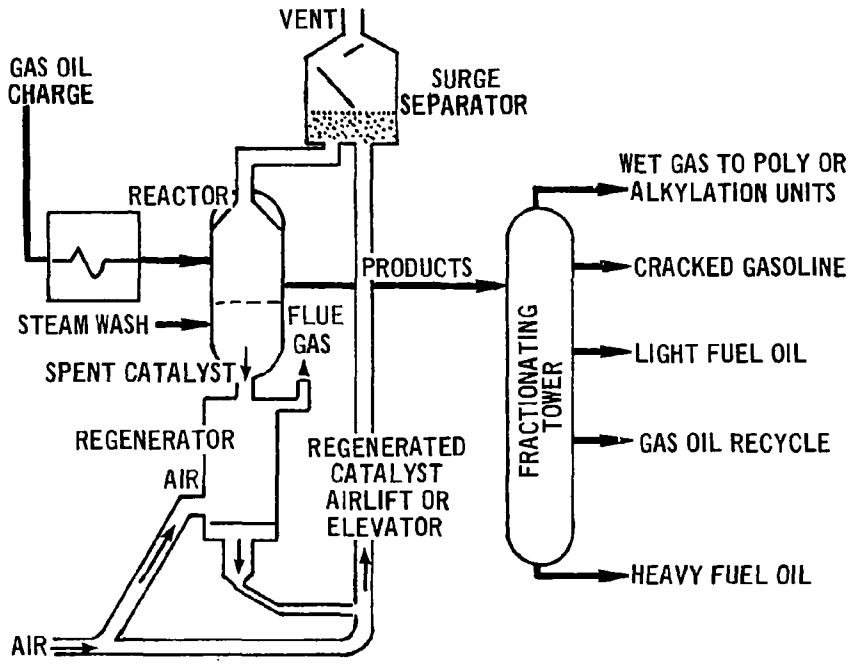

Figure 3. Typical moving-bed (Thermofor) catalytic cracking unit (TCC).

4. *Fluid Catalytic Cracking Units (FCC).* These units (Figure 4) are classified as a fluidized system. The principal equipment in these units are reactor, regenerator, catalyst stripper, slide valves, fractionator (recovery section), air blowers, catalyst recovery system, waste heater boilers, and instrumentation.

The operation of these catalytic units is relatively simple. The finely powdered hot catalyst from the regenerator is transferred to the reactor (cracking zone) with the gas oil charge, as shown in Figure 4. Cracking begins in the transfer line and is completed in the reactor, with the cracked hydrocarbon products flowing into the fractionating tower where they are separated into end products or feedstocks for other processes. During the cracking process, coke is deposited on the catalyst and must be removed to

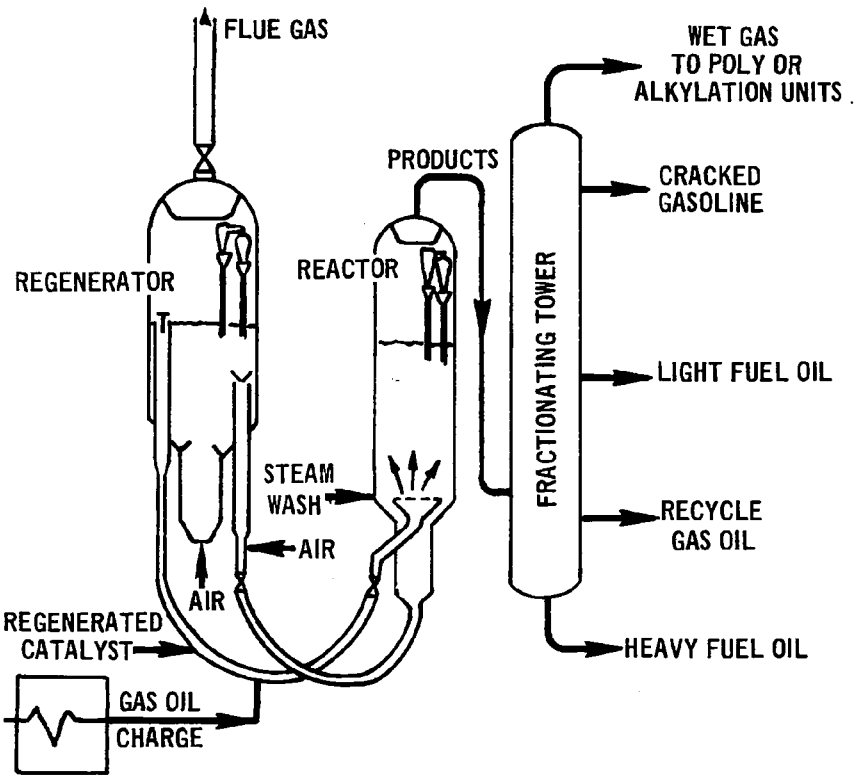

Figure 4. Fluid catalytic cracking unit (FCC).

maintain the activity of the catalyst. The powdered catalyst, saturated with oil in the reactor, must be stripped with steam before it is returned to the regenerator. This transfer is made by using air and steam. In the regenerator, the coke is continuously burned from the catalyst with a controlled amount of air. Steam and a water spray are used in an emergency to keep the temperature from going too high during the coke burn. If the percentage of coke on the catalyst is high, the temperature (if not controlled) could exceed the maximum permissible limit for the metal of the regenerator. The amount of coke left on the catalyst will vary from 0.2 to 0.35 percent, depending on the kind of catalyst used. During its regeneration, some of the catalyst will be emitted through the stack with the flue gases, regardless of the efficiency of the methods used to control emissions. As a result of this loss, fresh catalyst is added to the system to maintain the necessary bed levels in the reactor and regenerator. At times, the activity of the catalyst decreases because impurities accumulate to an undesirable level. When this decrease occurs, some of the catalyst is withdrawn from the regenerator and replaced with fresh catalyst.

The vapors or synthetic crude oil (products) from the reactor enter the fractionating tower as shown in Figure 4. Here the synthetic crude oil is

fractionated or separated into gas, gasoline, and fuel oils similar to the original crude-oil charge shown in Figure 2. Figure 4 does not show the complete recovery section of the fluid catalytic cracking unit, which contains, in addition to the equipment shown, other fractionating towers, absorbers, debutanizers, and other auxiliary equipment that could vary between refineries. The wet gas from the fractionating tower is further processed into various desirable products. For example, the hydrogen sulfide is recovered in an amine absorber for feedstock to the sulfur unit; the methane and ethane are used for refinery fuel gas; and the propane and butane are used for feedstock for polymerization or alkylation units. Gasoline with a high octane number and a good octane blending value can be blended into lead-free finished gasolines. The lead susceptibility is good and, if leaded gasolines are permitted, will decrease the lead content of the finished gasolines. The fuel oils are either used as a cutter stock (for blending with the flux bottoms from the vacuum tower) to make the residual fuel oils or are hydrotreated and sold as heating oils.

The catalytic cracking unit is one of the principal sources of pollutant emissions in the refinery; however, control technology is available by which to suppress these emissions to some extent. The regenerator is the largest polluter of these units (Table 7).[9] The installation of a carbon monoxide boiler operating on the hot flue gases from the regenerator practically eliminates the emission of carbon monoxide and hydrocarbons, without reducing particulates or the oxides of sulfur and nitrogen. Particulates may be reduced by improving the efficiency of the electrostatic precipitator used on the regenerator or by installing modern cyclones. Except for leaks, sampling, spillage, and process drains, the recovery section is not a potential source of air pollutants.

Table 7. EMISSION FACTORS FOR POLLUTANTS FROM CATALYST REGENERATOR

Pollutant	Source	Emission factor, lb/1000 bbl charge
Sulfur dioxide	Regenerator	500
Particulates	Regenerator (with precipitator)	61
Hydrocarbons	Regenerator	220
Carbon monoxide	Regenerator	13,700
Nitrogen oxides	Regenerator	63

Catalytic Naphtha Reforming

The catalytic reforming process was developed largely in response to the need for higher octane gasoline. Catalytic naphtha reforming is a simple refining process that improves the antiknock quality (octane number) of low-grade naphthas or virgin gasolines by contacting them with a platinum catalyst under pressure and at high temperature. Rearranging the molecules (usually by removing hydrogen) produces a gasoline of higher quality and octane number. Naphthenes, such as cyclohexane, and paraffins are converted into benzene, toluene, and xylenes.

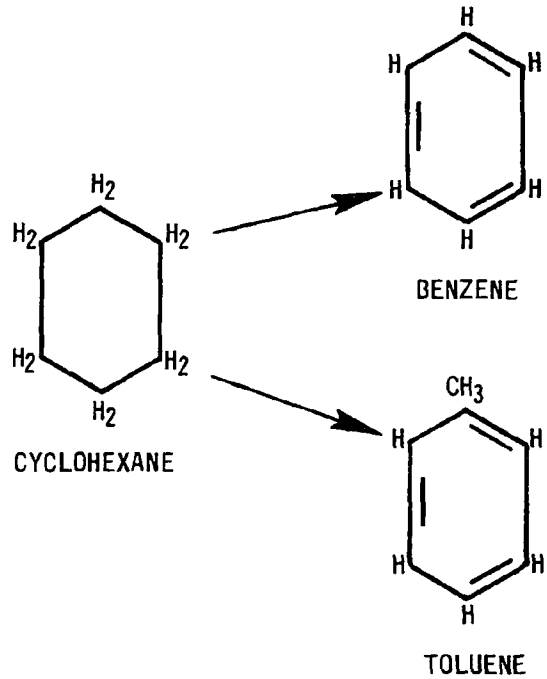

The operating conditions vary depending on the desired end products. An excess of hydrogen is produced from this operation and is utilized in other refining processes such as desulfurization and hydro treating. The charge is normally hydro treated to prevent poisoning the catalyst. The reforming unit is not a potential source of pollutants.

Light Hydrocarbon Processing

Polymerization

The polymerization process, used to produce a high octane gasoline, consists of joining two or more olefins (unsaturated hydrocarbons) in the presence of a catalyst, usually phosphoric acid. A typical reaction equation is:

$$CH_3-CH=CH_2 + CH_3-CH_2-CH=CH_2 + CATALYST \rightarrow CH_2-CH-CH_2-CH_2-\overset{\overset{CH_3}{|}}{CH}-CH_3$$

(PROPENE) (BUTENE-1) (PHOSPHORIC ACID) (4 METHYLHEXENE-1)

Alkylation

In the alkylation process, an olefin is joined with isobutane, using either sulfuric or hydrofluoric acid as the catalyst. The olefin is usually butene-1, butene-2, or isobutylene. This chemical reaction may be illustrated by the following equation:

$$CH_3-CH_2-CH=CH_2 + CH_3-\overset{\overset{CH_3}{|}}{CH}-CH_3 \xrightarrow{ACID} CH_3-\underset{\underset{CH_3}{|}}{\overset{\overset{CH_3}{|}}{C}}-CH_2-\overset{\overset{CH_3}{|}}{CH}-CH_3$$

(BUTENE-1) (ISOBUTANE) (2-2-4 TRIMETHYLPENTANE ISOOCTANE)

Isomerization

Isomerization reactions involve rearrangement of the molecular structure of a hydrocarbon, with nothing added or removed from the material, as shown below:

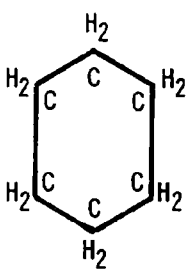

CYCLOHEXANE

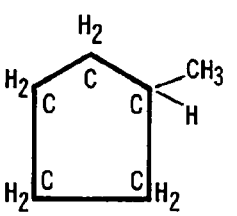

METHYLCYCLOPENTANE

Coking

Coking is not economically attractive unless the fuel-oil market is weak or there is a demand for coke, because the coking operation will reduce the production of residual fuel oils to practically zero. Coking will, however, produce more feedstocks for the catalytic and hydrocracking units, thus giving a higher yield of gasoline and other desirable products, such as jet fuels. A disadvantage of this operation is that sulfur and nitrogen become concentrated in the coke, constituting impurities that hinder its sale.

Delayed Process

The coking operation can be carried out by delayed or fluid processes. Delayed coking, which is semicontinuous, is accomplished by cracking the vacuum tower bottoms from the crude-oil separation unit as severely as possible in a single-pass heater and transferring the cracked material into a coke drum, where the liquids remain to form coke and the vapors proceed to a fractionating tower for separation into lighter products to be used in other processes. Two coke drums are used for this operation, one of which is kept in operation while the other is being decoked hydraulically. Hydraulic decoking involves drilling a hole down the center of the coking chamber for insertion of a hydraulic cutting assembly having jets through which water under high pressure is directed at the chamber walls, cutting away the coke. Normally the drums are switched every 24 hours.

Fluid Process

In the fluid coking process, coke is built up on pellets until they are suitably large for removal from the unit. Figure 5 is a flow diagram of a modern fluid coking unit.[10] As shown, two vessels are used: a reactor and a burner. The solids are circulated between these vessels to transfer heat to the reactor. This coke circulation is about 5 to 10 pounds per pound of feed. The hot residue is coked by distributing it as a thin film on the hot coke particles in the reactor. The coke bed is fluidized by introducing steam into the bottom of the reactor, thus distributing the feed uniformly over the surface of the particles, where it cracks and vaporizes. Vapor products leave the bed and pass through cyclones, where most of the entrained coke is removed. The remaining coke is removed by scrubbing, and the products are cooled to condense the heavy tar, which is recycled to the reactor. The overhead products are recovered in the fractionator and the coke is withdrawn from the system as necessary to maintain a predetermined level in the vessel.[10]

Each of these coking processes has advantages or disadvantages with respect to the other. The total operations of the individual refinery must be considered in selecting the best coking process. Some of the factors involved are market demands for specific products, control of emissions, flexibility of operations, sulfur content of crude oil, savings in overall refinery cost, and presently

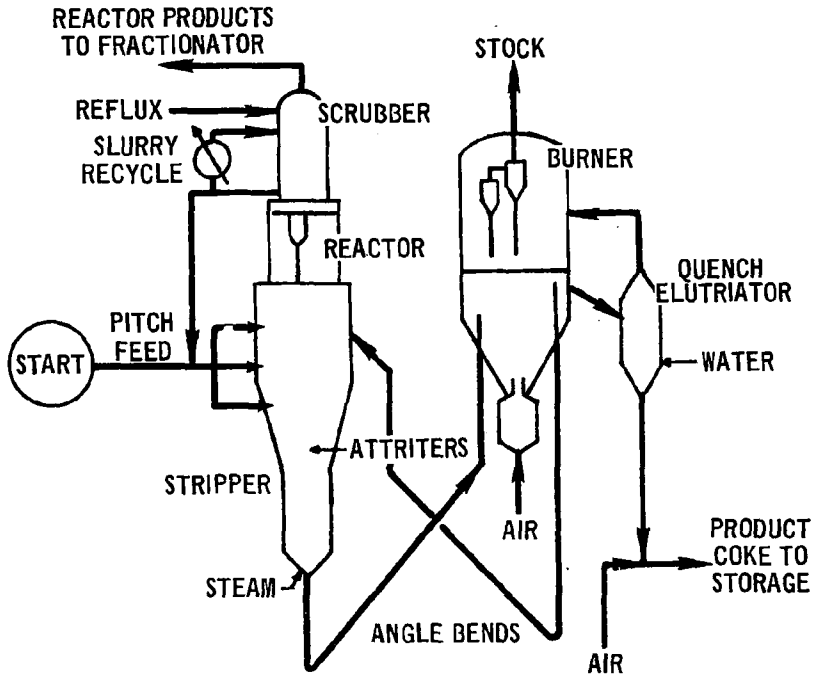

Figure 5. Flow diagram of modern fluid coking unit.

installed coke handling equipment. Fluid coking would perhaps offer more flexibility in refinery operations because its operation can be integrated with other units such as carbon monoxide boilers, process heaters, power recovery equipment, and the crude-oil separation unit. A combined coke- and carbon monoxide-fired boiler would increase the steam generation.[10] These factors can contribute to decreasing the cost of refinery operations.

Delayed coking, which is an older process and has been well established longer, is more widely used than fluid coking. The delayed coking process is preferred where residual fuel oils with low sulfur are involved. The process is not a serious source of pollutant emissions, although the usual pollutants are emitted from the process heaters, and some particulates are emitted when the coke is being removed from the drums. These emissions can be minimized, however, by water quenching during the coke removal procedure.

The fluid coking process was commercially introduced in 1954 but today is receiving serious consideration by refiners.[10] With higher sulfur crude oil being processed (resulting in higher sulfur residual fuel oils), fluid coking would be preferred. The severity of fluid coking is greater than delayed coking; thus, with fluid coking, less coke is produced, with more contaminants, but the liquid yield is higher.

In addition to the usual pollutants from the combustion process of this operation, an estimated 30 pounds of carbon monoxide per barrel of feed is emitted. This emission can be controlled either by using a carbon monoxide boiler on the coker or by using the boiler installed on the catalytic cracking unit. Using the coke as fuel could present air pollution problems.

Hydrocracking

The growth of the hydrocracking process for the last 5 years is shown in Figure 6.[11]

Hydrocracking is a combination of catalytic cracking and hydrogenation in which the olefinic materials created by cracking are saturated before being used in coke formation. The conversion occurs in the presence of hydrogen, at pressures ranging from 100 to 2000 pounds per square inch gauge, and at about 900 °F. The resulting product contains not only unsaturated hydrocarbons but isomerized materials that are desirable as gasoline blending stocks. Depending on sulfur content and characteristics of the chargestock, 1000 to 2500 standard cubic feet of hydrogen per barrel of charge may be required to obtain the desired end products. Typical chargestocks are light and heavy gas oils, vacuum gas oils, cracked and coker gas oils, deasphalted residuum, and topped crude oil.[11]

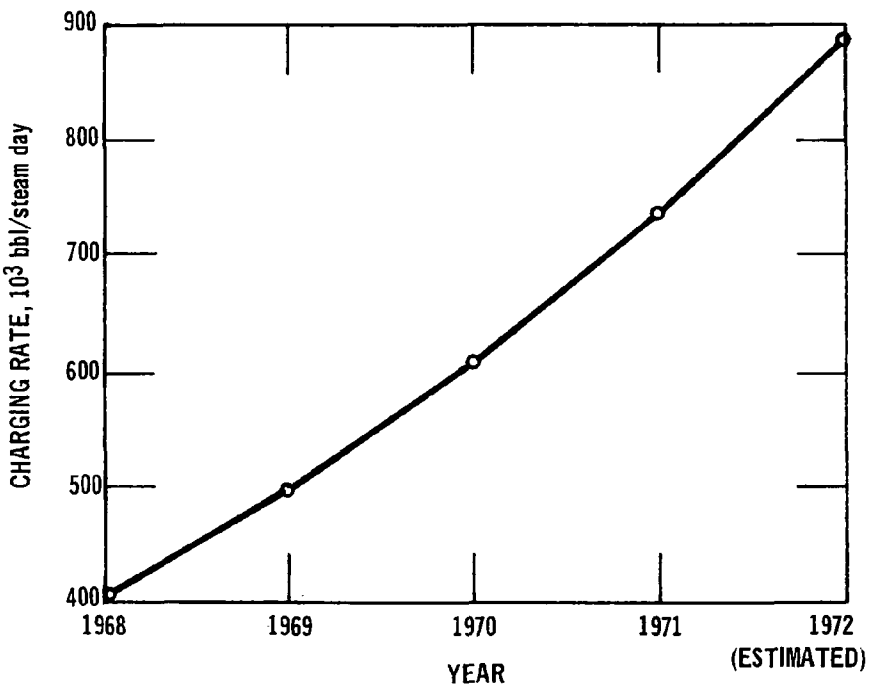

Figure 6. Growth of use of hydrocracking.

The hydrocracking process was developed to convert middle distillates obtained from the crude-oil separation unit to gasoline because the catalytic cracking unit was incapable then of cracking these virgin distillates; but with the development of zeolite catalysts that could crack these gas oils, operation of hydrocrackers has been changed so that the unit is charged with different feedstocks to produce a wider range of products, such as jet fuels and light hydrocarbons for use in other processes. Gasolines produced from the hydrocracker have a low octane number and must be catalytically reformed before blending into the gasoline pool.

Sulfur Recovery Unit

A sulfur recovery unit is an example of the use of technology developed for the control of pollutant emissions in petroleum refining. The hydrogen sulfide (H_2S) produced in miscellaneous processes is charged to a sulfur recovery unit instead of being burned as fuel. In the 1950's, after naphtha catalytic reforming was introduced, cheaper by-product hydrogen became available for hydrodesulfurization, which removed sulfur from the distillates as H_2S. Recovering the H_2S from the hydrodesulfurization gases with the amines provided an increase in feedstock for the sulfur units. Contributing to the increase in the number of sulfur recovery units used during the past 10 to 15 years has been the development of such new refining processes as:

1. Catalytic cracking.
2. Catalytic reforming and desulfurization of naphtha.
3. Desulfurization of kerosene, and jet and diesel fuels.
4. Hydrocracking of virgin and cycle gas oils.
5. Desulfurization of residual fuel oil (to levels of 0.5 to 1.0 percent of sulfur).
6. Coking operations.

As shown in Figure 1, gases from various processes are treated in amine units to recover the H_2S for feedstock to the sulfur recovery unit (or sulfuric acid plant). The amine units are simple to operate and do not present pollution problems, except for odors perhaps. Usually the unit consists of an absorber, regenerator exchanger, cooler for the amine solution, and a reboiler with which to supply heat to the process. Either a 15 to 20 percent solution of monoethanolamine (MEA) or a 20 to 30 percent solution of diethanolamine (DEA) may be used.[13] The H_2S is absorbed at about 100 °F and is rejected at about 240 °F. Chemically this reaction is:

$$RNH_2 + H_2S \rightleftarrows RNH_3HS$$

where RNH_2 represents MEA or DEA. The H_2S thus recovered is charged to the sulfur recovery unit. Amine units also will remove carbon dioxide (CO_2) as shown:

$$RNH_2 + CO_2 + H_2O \rightleftarrows RNH_3HCO_3$$

The CO_2 is absorbed at 120 °F and rejected at 300 °F. Efficient operation of the amine units can increase the efficiency of the sulfur recovery units by removing the CO_2 and hydrocarbons from the process stream containing the H_2S.

The basic process for converting H_2S to sulfur, developed by Claus, has been improved through the years, and is now referred to as the Modified Claus Process.[14] The process involves burning one-third of the H_2S to SO_2 and H_2O, and then reacting the SO_2 with the remaining H_2S to form elemental sulfur and water vapor. The reaction occurs in a combustion chamber connected to a fire-tube waste heat boiler that generates steam. The gas is cooled in the boiler tubes and goes either directly to a condenser or to the first-stage catalytic converter, where the reaction proceeds further over a catalyst of activated bauxite (alumina). The operation may be shown by the chemical equations:

$$2H_2S + 3O_2 = 2SO_2 + 2H_2O$$

$$SO_2 + 2H_2S = 3S + 2H_2O$$

The sulfur produced in the second step is recovered in the condenser. The gases are reheated and flow to a second converter where more sulfur is recovered. This two-converter process recovers about 90-92 percent of the sulfur from the charge. If a third converter is used, recovery is about 96-98 percent, reducing SO_2 emissions by about 50 percent.

Figure 7 is a simplified diagram of a sulfur recovery unit. With the establishment of emission standards for SO_2, refiners (especially the larger ones) were compelled to include sulfur recovery units in refinery operations even if the process was not profitable.

Oddly enough, the operation of a sulfur unit to recover sulfur from refinery waste gases has created a serious pollution problem within itself. During operations, all unreacted H_2S is incinerated and emitted as SO_2 with the other flue gases. This emission factor is about 400 pounds of SO_2 per ton of sulfur produced. The flue gas contains about 1.5 percent of SO_2, well over the legal limit of proposed standards. Installation of more converters, although reducing this emission somewhat, has been unsuccessful in meeting present standards; however, several processes have been developed and are being installed for commercial use on the tail gas from the sulfur recovery units used to control SO_2.

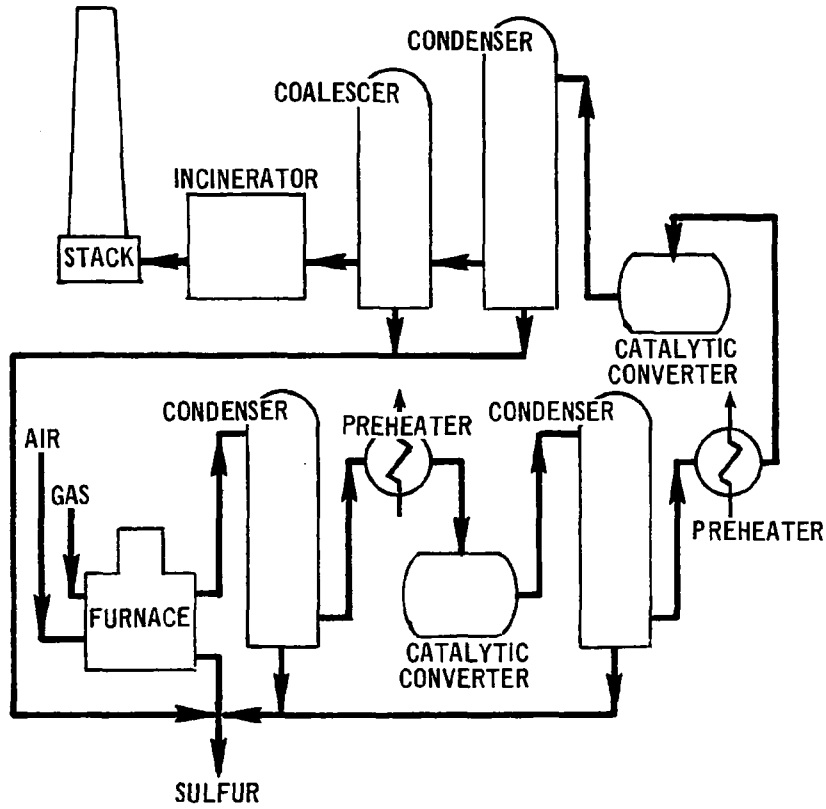

Figure 7. Recovery of sulfur from hydrogen sulfide.

Desulfurization of Fuel Oils

In many sections of the country, especially those that are highly industrialized, fuel oils cannot legally exceed a maximum sulfur content. Because of this restriction, it is mandatory that a desulfurization process be included or at least considered in the development of the refining system.

Considering the sulfur level, volume of the market, the crude-oil source, and the cost of producing the fuel oil, refiners may choose one of three such processes:

1. Vacuum gas oil hydrodesulfurization (indirect).
2. Deasphalted oil hydrodesulfurization (indirect).
3. Residuum hydrodesulfurization (direct).

The process selected must be flexible enough to supply fuel oils to customers within the marketing area of the refinery.[3,15,16]

In the vacuum gas oil hydrodesulfurization process, the gas oil from the vacuum distillation tower (Figure 2) is desulfurized to about 0.25 percent sulfur and used directly as a grade of fuel oil or blended with the flux bottoms for the amount of sulfur content permissible. The production of low-sulfur fuel is limited in this process by the quantity of gas oil.

In the process referred to as deasphalted oil hydrodesulfurization, which is important in meeting increasing demands for low-sulfur fuel oil, the vacuum tower residuum is deasphalted. Then, the deasphalted oil (void of metals and other catalyst poisons) can be desulfurized and thus supplement the fuel oil inventory.

Direct residuum hydrodesulfurization produces more fuel oil than the deasphalted oil process. One of the most promising advances in direct residuum desulfurization has been the development of a catalyst that will be tolerant to metal deposits and inexpensive, so that the spent catalyst can be discarded rather than regenerated. Aalund[11] indicates that these requirements have been met for crude oil with low metal content such as the Mideast variety of crude oils. This direct process does not necessitate all the equipment used in the other processes, notably, the deasphalter and the vacuum tower, if the refinery is operated to produce fuel oils as the prime product.

Basically, desulfurization processes are similar. The hydrocarbons are treated with hydrogen at an elevated temperature under pressure, producing, as a by-product, hydrogen sulfide, which is used as feedstock for the sulfur recovery unit. Except for odors and other pollutants emitted through leaks, spillage, process drains, and heaters, desulfurization units are not a serious source of pollutants.

TREATING

In the refining process, some of the sulfur in the crude oil is converted to H_2S and lower molecular weight mercaptans. These sulfur compounds are concentrated in the process gases and low-boiling-range hydrocarbons and are normally removed in preparing the hydrocarbons for further processing. The H_2S is removed in the amine units, and the mercaptans are separated out by chemical treatment as explained later.

Desulfurization of the heavier hydrocarbons will be necessary in order to meet sulfur specifications for industrial uses. This process involves catalytic treatment in the presence of hydrogen under pressure and at elevated temperatures, so that the sulfur is removed as H_2S. In this processing scheme, it is imperative to include a sulfur recovery unit so as to prevent the emission of sulfur oxides (from the incineration of the hydrogen sulfide) into the atmosphere.

In the chemical process, a mixing chamber, a separator vessel, a water-wash system, and a regeneration system by which to recover spent chemicals are needed for removing sulfur compounds. The sweetening process oxidizes the mercaptans to disulfides but does not remove the sulfur from the products. The oxidation process also removes the disagreeable odor of the mercaptans.

Treatment of petroleum products has been improved during the past few years. The previous sodium plumbite method of oxidizing the odoriferous mercaptans to disulfides is shown in the following chemical equation:

$$2RSH + Na_2PbO_2 + S \rightarrow$$
MERCAPTANS + SODIUM PLUMBITE + SULFUR

$$2R_2S_2 + PbS + 2NaOH$$
DISULFIDES + LEAD SULFIDE + SODIUM HYDROXIDE

This process has been replaced by either the copper chloride or the "inhibitor" sweetening process. Unlike the sodium plumbite process, these techniques will oxidize the mercaptans without the loss of octane number. The copper chloride reaction is:

$$4RSH + 4CuCl_2 + O_2 \rightarrow$$
MERCAPTANS + COPPER CHLORIDE + OXYGEN

$$2R_2S_2 + 4CuCl_2 + 2H_2O$$
DISULFIDES + COPPER CHLORIDE + WATER

Because of the regeneration of the chemicals, treating plants are the potential sources of odors, sulfur compounds, and hydrocarbons.

In the inhibitor sweetening process, a p-phenylenediamine type of inhibitor is added to the gasoline and, in the presence of air, reduces odors by converting the mercaptans to disulfides.

With the development of new techniques, the treating operation is not a serious potential source of pollutants. Odors are the predominating pollutant; sulfur compounds and hydrocarbons are contained within the system.

BLENDING

To make the 2500 different finished products, the refinery blends base stocks in different proportions to meet the applicable specifications. This routine step is the final one in the refining system. Except for leaks and spillage, blending should not be a source of emissions.

FACTORS CONTRIBUTING TO EMISSION OF POLLUTANTS

The control of refinery emissions is complicated by the diversity of refinery operations required For this reason, in any survey of pollutant emissions, a refinery should be considered one unit. Since no two refineries have exactly the same operations, emissions will vary in both quantity and type; therefore, any total estimate of a specific pollutant should be the sum of the emissions of that pollutant from all sources throughout the refinery.[8] Major factors affecting the quantities and types of pollutants are the emission control equipment in use, the sulfur content of raw materials, refining operations, and housekeeping and maintenance practices.

EMISSION CONTROL EQUIPMENT AND METHODS IN USE

The modern refinery utilizes equipment for emission control in order to meet air quality standards, to prevent loss of products, or both. Older refineries hesitate to spend large sums of money strictly for pollution control; but if use of the equipment is economically feasible or if the refinery is required by law to control specified pollutants, the devices will be installed. Floating-roof storage tanks, for example, are a justified expenditure that will reduce the loss of valuable products, thus giving a short-term return on the investment. As another example, the types of stacks at a refinery may affect the quantities and types of pollutants. Although taller stacks are not considered a long-term, effective control method, shorter stacks will not disperse combustion gases above ground level and will contribute to photochemical smog. If the latest control methods are not being used, excessive emissions of all the pollutants produced during refinery operations will occur.

SULFUR CONTENT OF RAW MATERIALS

Sulfur is present in the crude oil charged and in the acid (sulfuric acid) utilized in treating or alkylating operations. Serious pollution problems are created when the original sulfur compounds in the crude oil are exposed to refinery processing or when they are burned as fuel. By the use of modern refining methods, up to 85 percent of this sulfur will be converted first to H_2S and then, by the Claus process, to sulfur. A refinery charging 100,000 barrels per calendar day of crude oil containing 1 percent sulfur could produce about 100 tons of sulfur per day.

REFINING OPERATIONS

A number of refining operations and practices can contribute to the air pollution problem even if they are not the major sources of emission from refineries. For example, the variety of products manufactured has an effect on emissions, inasmuch as potential pollution sources will increase as more equipment is needed for more and different products. Also, the use of flares and incinerators, even though they are smokeless, will result in the emission of particulates, sulfur dioxide, nitrogen oxides, and hydrocarbons. Such emissions, especially from flares, are difficult to estimate because of the manner in which flares and incinerators are operated. Flaring is controlled but not measured, and is the result of depressurizing processing units or of some disruption in a unit. The fuels used in process operations and the types and sizes of equipment can also affect emissions. Specifically, the quantities and types of air pollutants emitted from refinery operations can be affected by the size and number of catalytic cracking units (cat crackers) used and by the type of particulate control equipment used on cat crackers. In addition, the following considerations are significant:

1. Whether a carbon monoxide boiler is operated.
2. Whether the chemical or catalytic method of product treating is used.
3. Whether the fuel used is refinery gas, oil, or natural gas.
4. Whether a sulfur recovery unit is operated, and whether flue gases from incineration of hydrogen sulfide are controlled.
5. Whether fixed- or floating-roof storage tanks are used.
6. Whether a sulfuric acid plant is operated.
7. How acid sludge is disposed of (if a sulfuric acid plant is operated).

HOUSEKEEPING AND MAINTENANCE PRACTICES

Poor housekeeping practices can increase emissions. For example, if excessive purging of lines is the normal practice, sampling alone will contribute about 50 to 100 pounds of hydrocarbons per 1000 barrels of crude-oil charge. Other important items connected with housekeeping are use of process drains and blowdown systems, and occurrence of spills. General maintenance practices also affect emissions. Leaking of flanges, valves, and pump seals, and spillage from the installation and removal of blinds will contribute about 200 pounds of hydrocarbons per 1000 barrels of daily crude charge.

MAJOR SOURCES OF POLLUTANT EMISSIONS

Table 8 shows major sources of air pollution from a petroleum refinery, with the principal pollutants from these sources, as discussed in the general description of refining processes.

Table 8. MAJOR SOURCES OF POLLUTANT EMISSIONS [4, 9, 29]

Source	Pollutant	Emission factor, lb/1000 bbl
Catalytic cracking regenerator	Sulfur oxides	500 (charge)
	Hydrocarbons	220 (charge)
	Particulates (with ESP)[a]	61 (charge)
	Carbon monoxide	13,700 (charge)
	Nitrogen oxides	63 (charge)
Combustion operations	Sulfur oxides	6,400 x %S (oil burned)
	Hydrocarbons	140 (oil burned)
	Particulates	800 (oil burned)
	Carbon monoxide	2 (oil burned)
	Nitrogen oxides	2,900 (oil burned)
Storage tanks	Hydrocarbons (cone roof)	400 (throughput)[b]
Miscellaneous factors Loading facilities Sampling Spillage Leaks Barometric condensers Waste oil separator Cooling tower	Hydrocarbons	700 (crude charge)

[a]Electrostatic precipitator

[b]With a floating-roof tank the emission factor would be about 4 pounds per day per 1000 barrels.

CONTROL METHODS

AVAILABLE METHODS

Control methods have been developed for some of the principal pollutants from refining processes, but only about 50 percent of the necessary control equipment has been installed by the refineries.

Hydrocarbons

Perhaps more progress has been made in controlling hydrocarbon emissions than any other pollutant, and the control methods are economically feasible. Expenditures for new equipment are more than offset by the saving of valuable products lost through vaporization to the atmosphere, especially for such high-vapor-pressure hydrocarbons as gasoline and crude oil. Some of these control methods are:

1. Installation of floating-roof tanks.
2. Manifolding of purge lines to a recovery system or to a flare.
3. Use of vapor recovery system on loading facilities.
4. Use of improved housekeeping method.
5. Use of covered waste treatment plant.
6. Operation of a carbon monoxide boiler.
7. Installation of mechanical seals on pumps and compressors.
8. Training of personnel.

Particulates

Although emissions may not meet standards, particulates can be controlled by:

1. Use of high-efficiency mechanical separators.
2. Installation of electrostatic precipitators on catalyst regenerators or on power plant stacks or on both.

3. Careful control of combustion to avoid smoke.

4. Maintenance of correct stack temperature.

5. Use of smokeless flames for burning waste gases.

6. Use of improved incinerators.

Carbon Monoxide

The emission of carbon monoxide can be controlled by using a modern furnace and burner design and proper fuel atomization. Furthermore, a waste heat boiler, such as a carbon monoxide boiler, should be installed on the catalytic cracking and fluid coking units. The flue gases from the regenerator will contain 4 to 9 percent carbon monoxide (13.7 pounds per barrel of fresh feed) and about 200 pounds of hydrocarbons per 1000 barrels of charge. The boiler will not only remove these pollutants but will reduce the cost of fuel used to produce steam.[28]

Smoke

Although visible emissions could occur if high-sulfur fuel is used, developments in the design of efficient furnaces, burners, control instrumentation, smokeless flares, and incinerators, and improvements in their operation have enabled refineries to reduce smoke emissions greatly.

Odors

Odor can be reduced in a number of ways, including improved housekeeping and maintenance practices. Primary methods of odor reduction, however, involve the control of emissions of hydrocarbon and sulfur compounds and the treatment of sour water.

The method selected for treatment of sour water will vary from refinery to refinery, must be evaluated on its own merits, and must be solved for local requirements. Most of the sour water is produced in fluid catalytic cracking, in gas processing, and in the vacuum tower. Sulfides, ammonia, and phenols are the principal pollutants contributing to odors. The waste water, after heating to 200°F, is pumped to a stripper, with air and steam being injected. The H_2S from this stripping process is either incinerated or used as chargestock for the sulfur unit. In numerous refineries, stripped water is used for the crude desalting process, where phenols and other compounds are absorbed in the crude oil, with a resulting reduction in process odors. The excess water from the stripper will go with other process waste to the waste treatment plant for oxidation, skimming, settling, or any treatment necessary before the water is discharged into a receiving stream.

CONTROL TECHNOLOGY NEEDED

It is important that methods for removing sulfur and nitrogen oxides from refinery flue gases be developed and that techniques for controlling odor from refineries be improved. Millions of dollars have been spent by the petroleum industry and by the Federal Government on research to develop control methods for nitrogen oxides and sulfur dioxide. Although progress is being made, continued development could result in further substantial reductions in emissions, along with a decrease in investment and operating costs.

Sulfur Dioxide

The most successful approach to controlling sulfur dioxide (SO_2) from refineries is the desulfurization processes that have been developed for distillate fuels, residual fuels (both indirect or direct methods), and for fuel gas cleaning. Metals in the residual fuel oil adversely affect direct desulfurization. There is a definite need for a catalyst that can withstand high metal deposits or for some auxiliary process that can remove the metals before contacting the catalyst; such developments could simplify the refinery desulfurization program.

The principal sources of SO_2 in the refinery are:

1. Refinery process heaters and boilers.

2. Claus sulfur recovery plants.

3. Sulfuric acid plants.

4. Fluid catalytic cracking units.

5. Fluid coking units.

The technology for preventing the emission of SO_2 has been developed and can be employed, though processes may be expensive to operate. They are as follows:

1. Desulfurize the fuels used in process heaters and boilers.

2. Use recently developed processes to control emissions from the Claus sulfur recovery and sulfuric acid units.

3. Desulfurize the gas oil used to charge the catalytic cracking units, a technique currently employed in some refineries.

The most critical unknown is flue gas desulfurization. A workable cheap process would save millions of dollars spent in residual fuel desulfurization. Accordingly, research should be continued to develop the technology for removing SO_2 from flue gases.

Nitrogen Oxides

Nitrogen oxides (NO_x) are formed in the combustion processes, largely by fixation of oxygen and nitrogen at high temperature.[30] The most promising prospects for significant early reduction of NO_x from the combustion processes will probably result from applying some combination of combustion modification techniques to reduce the NO_x formed.

Improved burner designs, reduced load, low-excess-air firing, and flue gas recirculation have reduced NO_x emissions; however, since NO_x will react with moisture in the atmosphere to form acids and with hydrocarbons to form new compounds (which under certain atmospheric conditions will contribute to the formation of photochemical smogs), research to improve current techniques and to identify additional methods for removing or reducing emissions of nitrogen oxides is urgently needed.

Particulates

Even though technology has been developed for controlling particulate emissions, it has not yet been applied in all refineries; some refiners, depending on electrostatic precipitators to control the fine clay-like catalyst, have not installed modern control equipment on the catalytic cracking units and process heaters. Extensive investments have been made for research on the control of sulfur compounds and hydrocarbons, and on combustion techniques, but the efforts to control particulate emissions have not reached the same level.[31,32]

Odors

Technology developed for controlling emissions of all pollutants from refinery processes has been instrumental in reducing odors. Since disagreeable odors from petroleum refineries cause the majority of complaints from the public, it is clearly desirable from a public relations standpoint to eliminate or at least reduce these pollutants.[17,33]

INTERIM CONTROL OF EMISSIONS

Until technologies can be developed by which to control the emission of some pollutants, interim control techniques can be employed to reduce these emissions.

Sulfur Dioxide

Taller Stacks

Currently, tall stacks are permitted as a dispersion method for SO_2 emission, but this approach is not likely to be a long-term solution. Tall stacks

are effective, however, in reducing local ground level concentration of pollutants (except in a major industrial area) and could prevent the ground level concentration from becoming harmful. This method depends on process, source, and meteorological factors[34] but is not really a control method.

Low-sulfur Fuel

The use of low-sulfur fuel is the quickest way to reduce SO_2 emissions; however, the natural low-sulfur fuel supply is limited. It is produced mostly from foreign crudes, and low-sulfur crude is in short supply because of import limitations.

Natural Gas

Here again, limited supply and lack of facilities for delivering the fuel to customers are factors governing the use of natural gas as fuel in order to reduce SO_2 emissions.

Sulfur Recovery Unit

The development and installation of sulfur recovery units have contributed to the reduction of SO_2 in the refinery flue gases by removing the H_2S from the process gases before they are burned as refinery fuel. Tail gases from these sulfur recovery units contain an appreciable amount of SO_2 and are the subject of current efforts to remove this pollutant for commercial use. Some progress has been made in developing processes by which to control these emissions.

Nitrogen Oxides

Efficient control technology for NO_x has not been developed. The use of modern equipment and the control of combustion processes will reduce NO_x. Taller stacks will improve local NO_x concentrations by permitting better dispersion, but will not control the pollutants.

Particulates

Although emissions may be in excess of prescribed standards, particulates can be abated by the use of: (1) highly efficient mechanical separators, (2) electrostatic precipitators on catalytic regenerator and power plant stacks, and (3) smokeless flares and incinerators. In addition, the careful control of combustion (no smoke) and the maintenance of specified stack temperature will help reduce particulate emissions.

Odors

Odors can be controlled by improvements in: housekeeping, maintenance, and control of emissions of hydrocarbons and sulfur compounds.

PROPOSED GUIDELINES FOR REFINERY EMISSIONS

The U.S. Environmental Protection Agency has proposed guidelines for emissions from refinery operations. These guidelines were published in the *Federal Register*, Volume 36, Number 158, Part 2, August 14, 1971, and are reprinted in this document as Appendix B.

COMMENTS ON EMISSION CONTROLS

Working separately, or with such trade organizations as the American Petroleum Institute and the National Petroleum Refiners Association, and in cooperation with equipment manufacturers, oil companies have, through research, developed processes and equipment for controlling or at least reducing all pollutants from refineries. One of the most recent developments is that of a new catalyst, suitable for direct desulfurization of residual fuel oils or of the whole crude. The problem confronting refineries is the present cost of this equipment. Hopefully, processes will be improved and the cost of control can be cut accordingly.

In 1955, Lauren B. Hitchcock, President of the Air Pollution Foundation, said: "The approach to the solution of the smog problem taken by the Air Pollution Foundation is to devise means of economically controlling pollutants at their sources – under this approach, we seek out the sources of pollution, identify them and their emissions, assess their magnitudes and go after the more important ones first. Organic compounds, oxides of nitrogen and sulfur, and particulate head the list."[2]

Following this philosophy, refiners have developed controls for all pollutants except nitrogen oxides; but the fact that *all* refiners are not employing these controls is a major drawback of the pollution control effort being expended by the petroleum refining industry.

REFERENCES

1. Gardner, F.J. Worldwide Issue. Oil and Gas J. *69*(52): 67-156, December 27, 1971.

2. Hitchcock, L.B. Air Pollution and the Oil Industry. In: Proceedings, American Petroleum Institute, Division of Production. Los Angeles, American Petroleum Institute, April 28, 1955. p. 150-154.

3. Siegmund, C.W. and E.H. Manny. Effect of Fuel-oil Sulfur on Product Patterns. (Presented at ASME-IEEE Power Conference. San Francisco. 1968.)

4. Nationwide Emission Estimates for 1969. Environmental Protection Agency, Washington, D.C. April 1971.

5. McAfee, J. *et al.* Gulf HDS Process Upgrades Crude. Petro. Refiner. Vol. 34, May 1955.

6. Paradis, S.G. *et al.* Isomax Desulfurization of Residuum and Whole Crude Oil. Chevron Research Company. (Presented at 68th National Meeting of American Institute of Chemical Engineers. February 28-March 4, 1971.)

7. Rohrman, F.A. and J.H. Ludwig. Sources of Sulfur Dioxide Pollution. Public Health Service, U.S. Department of Health, Education, and Welfare, Cincinnati, Ohio. (Presented at 55th National Meeting of American Institute of Chemical Engineers. Houston. February 7-11, 1965. 17 p.)

8. Steigerwald, B.J. Atmospheric Emissions from Petroleum Refineries – A Guide for Measurement and Control. Public Health Service, U.S. Department of Health, Education, and Welfare. Washington, D.C. Publication No. 763. 1960. 56 p.

9. Duprey, R.L. Compilation of Air Pollutant Emission Factors. Public Health Service, U.S. Department of Health, Education, and Welfare. Durham, N.C. Publication No. 999-AP-42. 1968. p. 41-42.

10. Busch, R.G. Fluid Coking: Seasoned Process Takes on New Job. Oil and Gas J. *68*(14): 102-111, April 1970.

11. 1970 Refining Progress Handbook. Hydrocarbon Processing. *49*(9): 167-173, September 1970.

12. Cantrell, A. Annual Refining Issue. Oil and Gas J. *69*(1): 93-124, March 1971.

13. Nelson, W.L. Petroleum Refinery Engineering. New York, McGraw-Hill, 1958. 960 p.

14. Chute, A.E. Sulfur from Petroleum Gases and Liquids. The Ralph M. Parsons Company. (Presented at meeting of Society of Mining Engineers. September 7, 1967.)

15. Meredith, H.H., Jr. and W.L. Lewis. Desulfurization and the Petroleum Industry. Chem. Eng. Proc. September 1968.

16. Rogers, L.C. and D.H. Stormont. Oil Scrambling to Unravel Sulfur – Curb Supply Knot. Oil and Gas J. *66*(26): 41-44, June 24, 1968.

17. Burhouse, W.A. The Oil Industry and Air Pollution. Air Eng. *10*(3): 18-22, March 1968.

18. Chass, R.L. The Status of Engineering Knowledge for Control of Air Pollution. Los Angeles County Air Pollution Control District. (Presented at National Conference on Air Pollution. Washington, D.C. December 1962.)

19. Devorkin, H. and B.J. Steigerwald. Emissions of Air Contaminants from Boilers and Process Heaters, Joint District, Federal, and State Project for the Evaluation of Refinery Emissions, Report No. 7. June 1958.

20. Flynn, N.E. and W.R. Crouse. Report on Nitrogen Oxides in the Bay Area Pollution Control District. Bay Area Pollution Control District. San Francisco, Calif. September 3, 1964. 20 p.

21. Gammelgard, P.N. Current Status and Future Prospects – Refinery Air Pollution Control. In: Proceedings from the Third National Conferences on Air Pollution. Washington, D.C., The American Petroleum Institute, 1966. p. 260, 263.

22. Giever, P.M. Significance of Carbon Monoxide as a Pollutant. J. Occupational Med. June 1967.

23. Hardison, L.C. Where It Originates, How to Stop It – Air Pollution Control Equipment. Petro/Chem. Eng. *40*(3): 30-38, March 1968.

24. Kirby, A.W.W. Pollution Abatement in the Petroleum Refining Industry. Inst. Petro. Rev. *11*(131): 289-293, November 1957.

25. Mencher, S.K. Change Your Process to Alleviate Your Pollution Problem. Petro/Chem. Eng. May 1967.

26. Mencher, S.K. Minimizing Waste in the Petrochemical Industry. Chem. Eng. Progress. *63*(10): 80-88, October 1967.

27. Phillips, C.W. and S.W. Dickey. Air Pollution Control Features of a Modern Refinery. (Presented at the American Chemical Society Meeting. Chicago. September 1967.)

28. Wangerin, D.D. Waste-Heat Boilers – Principles and Applications. (Presented at American Power Conference. April 14-16, 1964. 7 p.)

29. Estimated Cost of Controlling SO_x in the United States. Ernst and Ernst. Washington, D.C. December 22, 1967.

30. Systems Study of NO_x Control Methods for Stationary Sources. Esso Research and Engineering Company. Linden, N.J. Contract No. PH 22-85-55. November 1969. 520 p.

31. Wilson, J.G. and D.W. Miller. The Removal of Particulate Matter from Fluid Bed Catalytic Cracking Unit Stack Gases. J. Air Pollut. Contr. Assoc. *17*(10): 682-685, October 1967.

32. Profile of Industry Costs for Control of Particulate Air Pollution; Background Paper for the Interagency Pollution Control Incentive Study Committee. Ernst and Ernst. Washington, D.C. October 6, 1967.

33. Kendall, D.A. and A.J. Neilson. Odor Profile Studies of Effluent Waste Waters from Seven Refineries. (Presented at Midyear Meeting of American Petroleum Institute, Division of Refining. May 1964.)

34. Giant Stack Will Vent Sulfur Oxides above Smog Ceiling. Chem. Eng. *74*(17): 104, August 17, 1967.

35. Petroleum Products Handbook. Guthrie, V.B. (ed.). New York, McGraw-Hill. 1960.

APPENDIX A: GLOSSARY[35] *

Alkylation. A refinery process for chemically combining isoparaffin with olefin hydrocarbons. The product, alkylate, has high octane value and is blended with motor and aviation gasoline to improve the antiknock value of the fuel.

Barrel. For statistical purposes, the petroleum industry uses a barrel containing 42 U.S. standard gallons. Where the price of fuel oils or other products is quoted by the barrel, it is the 42-gal. barrel, regardless of the method of shipment.

Blending. The process of mixing two or more oils having different properties to obtain a product of intermediate properties. Lubricating oil stocks are blended to a desired viscosity; naphthas and gasolines are blended to meet distillation and octane requirements.

Bottoms. See *Residue.*

Catalyst. A substance used to accelerate or retard a chemical reaction without itself undergoing significant chemical change or change in volume during the process.

Coke. The solid residue remaining after the destructive distillation of crude petroleum or residual fractions. Used commercially as domestic and industrial fuel and, when purified, in various metallurgical and industrial processes.

Cracked. When applied to gasolines, naphthas, distillate gas oils, fuel oils, and similar products, reference is to oils produced by the cracking process in place of straight distillation.

Cracking. Process carried out in a refinery reactor in which the large molecules in the charge stock are broken up into smaller, lower-boiling, stable hydrocarbon molecules, which leave the vessel overhead as unfinished cracked gasoline, kerosenes, and gas oils. At the same time, certain of the unstable or reactive molecules in the charge stock combine to form tar or coke bottoms. The cracking reaction may be carried out with heat and pressure (thermal cracking) or in the presence of a catalyst (catalytic cracking).

***From Petroleum Products Handbook, V.B. Guthrie, editor. Copyright 1960 by McGraw-Hill Book Company. Used with permission of McGraw-Hill Book Company.**

Crude Oil, Crude Petroleum. A naturally occurring mixture, consisting predominantly of hydrocarbons and/or of sulfur, nitrogen, and/or oxygen derivatives of hydrocarbons, which is capable of being removed from the earth in a liquid state. Basic types of crudes are asphaltic, naphthenic, or paraffinic, depending on the relative proportion of these types of hydrocarbons present.

Deasphalting. Process for removing asphalt from petroleum fractions, such as reduced crude. A common deasphalting process introduces liquid propane in which the nonasphaltic compounds are soluble while the asphalt settles out.

Distillate. The product of distillation obtained by condensing the vapors from a refinery still; also known as overhead fractions, as distinguished from the non-vaporizing residual components left in the still.

Distillate Fuel Oils. A general classification for one of the overhead fractions produced from crude oil in conventional distillation operations. The so-called light heating oils, diesel fuels, and gas oils come from this fraction.

Distillation. The general process of vaporizing liquids, crude oil, or one of its fractions in a closed vessel; then collecting and condensing the vapors into liquids. Commercial forms of distillation in petroleum refining include crude, atmospheric, vacuum, rerun, steam, and extractive.

Floating Roof. Special type of steel tank roof which floats on the surface of the oil in the tank; it eliminates tank breathing and reduces evaporation losses.

Fuel Oils. Any liquid or liquefiable petroleum product burned for the generation of heat and power.

Gallon (U.S.). Unit of liquid volume equal to 231 cu. in., equal to 0.83268 times the imperial gallon.

Gas Oil. A fraction derived in refining petroleum with a boiling range between kerosene and lubricating oil. Derives its name from having originally been used in the manufacture of illuminating gas. Now supplies distillate-type fuel oils and diesel fuel, also cracked to produce gasoline.

Gasoline. A refined petroleum naphtha which by its composition is suitable for fuel in a reciprocating-type internal-combustion engine. ASTM D 439 specifies three grades for various types of motor vehicle operations. Straight-run gasoline is the product of distillation; cracked gasoline, of a cracking process.

Hydrocarbons. Compounds containing only carbon and hydrogen. They form the principal constituents of petroleum. The simplest hydrocarbons are gases at ordinary temperatures, but with increasing molecular weight, they change to liquid and, finally, to solid form.

Hydrodesulfurizing. A process for combining hydrogen with the sulfur in refinery petroleum streams to make hydrogen sulfide, which is removed from the oil as a gas.

Hydrogen (H_2). Colorless gas recovered from naphtha reforming processes in refinery operations; also made from methane. Used in refinery processing and treating and in manufacturing ammonia and methyl alcohol.

Hydrogen Sulfide (H_2S). An objectionable impurity present in some natural gas and crude oils and formed during the refining of sulfur-containing oils. It is removed from products by various treating methods at the refinery.

Isomerization. A refining process which alters the fundamental arrangement of atoms in the molecule. Used to convert normal butane into isobutane, an alkylation process feedstock, and normal pentane and hexane into isopentane and isohexane, high-octane gasoline components.

Jet Fuel. Kerosene-type fuels or blends of gasoline, distillate, and residual oils which are used as fuels for gas-turbine-powered aircraft.

Kerosene. A refined petroleum distillate suitable for use as an illuminant when burned in a wick lamp. In the United States, state, local, and insurance regulations generally require flash points higher than 73 °F (23 °C) by the standard test for flash point, ASTM D 56. Synonymous terms are lamp oil, burning oil, illuminating oil, and range oil when the product is used in space heaters.

Kerosene Distillate. The second or water-white cut from the distillation of crude petroleum, which is the unrefined base for all grades of domestic and export kerosene.

Mercaptans. Compounds of sulfur having a strong, repulsive garlic-like odor. A contaminant of "sour" crude oil and products.

Naphtha. Liquid hydrocarbon fractions, generally boiling within the gasoline range, recovered by the distillation of crude petroleum. Used as solvents, dry-cleaning agents, and charge stocks to reforming units to make high-octane gasoline.

Octane Number. The anti-knock quality of motor gasoline is expressed by a numerical scale which is based on the knocking tendencies of two pure hydrocarbons: normal heptane is rated zero and isooctane is rated 100. In a standard laboratory test engine, the octane number of the fuel under test is the percentage by volume of isooctane in blend with heptane that knocks with the same intensity as the fuel under test. This intensity is recorded on a scale.

Polymerization. The process of combining two or more simple molecules of the same type, called monomers, to form a single molecule having the same elements in the same proportion as in the original molecule but having different molecular weights. The product of this combination is a copolymer. GR-S synthetic rubber is a copolymer of butadiene and styrene.

Refinery Gas. Gas produced in refineries by cracking, reforming, and other processes. Components are principally methane, ethane, ethylene, propane, propene, butanes, and butylene.

Refining. The separation of crude petroleum into its component parts and the manufacture therefrom of finished commercial products by distillation, thermal or catalytic cracking processes using chemicals, and treating.

Reforming. The mild thermal cracking of naphthas to obtain more volatile products, such as olefins, of higher octane values; or catalytic conversion of naphtha components to produce higher octane aromatic compounds.

Residual Fuel Oils. Topped crude petroleum or viscous residuums obtained in refinery operations. Commercial grades of burner fuel oils No. 5 and 6 are residual oils and include Bunker fuels.

Residue. In the standard laboratory distillation test, the amount of the original liquid remaining in the flask after the distillation is complete. Also the substance left after distilling off from crude oil in refinery operations all but the heaviest components. Also known as residuum or bottoms.

Smog. An atmospheric disturbance caused by dust, smoke, and fumes remaining over a given area, sometimes to the point that discomfort results to humans and vegetation is affected.

Sour Gas. A gas containing sulfur-bearing compounds such as hydrogen sulfide and mercaptans; usually corrosive.

Straight-Run Distillation. Continuous distillation of petroleum oils which separates the products in the order of their boiling points without cracking.

Straight-Run Products. Gasoline, naphthas, or other products obtained directly from the distillation of crude or other straight-run charge stocks without cracking.

Sulfur (S). Amorphous or solid substance made from hydrogen sulfide recovered from sour natural gas and from refinery gases. Used in manufacturing sulfuric acid, plastics, and fertilizers.

Thermal Cracking. See *Cracking*

Treating. Usually the contact of petroleum products with chemicals, during refining, to improve their properties; e.g., treating unfinished products such as gasoline, kerosene, diesel fuels, and lubricating stocks with sulfuric acid to improve color, odor, and other properties.

Unsaturates. Hydrocarbon compounds of such molecular structure that they readily pick up additional hydrogen atoms. Olefins and dioelfins, which occur in cracking, are of this type.

Vacuum Distillation. Distillation under reduced pressure, which reduces the boiling temperature of the material being distilled sufficiently to prevent decomposition or cracking. See *Distillation*.

Vapor Pressure. The pressure exerted by the vapors released from an oil at a given temperature when enclosed in an airtight container. For motor gasoline, a criterion of vapor-lock tendencies; for light products generally, an index of storage and handling requirements.

Yield. In petroleum refining, the percentage obtained of product or intermediate fractions of the amount of crude charged to the processing operation.

APPENDIX B: GUIDELINES PROPOSED BY THE ENVIRONMENTAL PROTECTION AGENCY FOR REFINERY EMISSIONS

Proposed guidelines for emissions from refining operations, as published in the *Federal Register*, Volume 36, Number 158, Part 2, are presented below.

2.0 CONTROL OF PARTICULATE EMISSIONS

2.1 *Visible emissions.*. The emission of visible air pollutants can be limited to a shade or density equal to but not darker than that designated as No. 1 on the Ringelmann chart or 20 percent opacity except for brief periods during such operations as soot blowing and startup. This limitation would generally eliminate visible pollutant emissions from stationary sources.

2.3 *Incineration.* The emission of particulate matter from any incinerator can be limited to 0.20 pound per 100 pounds (2 gm/kg) of refuse charged. This emission limitation is based on the source test method for stationary sources of particulate emissions which will be published by the Administrator. This method includes both a dry filter and wet impingers and represents particulate matter of 70 °F and 1.0 atmosphere pressure.

2.4 *Fuel burning equipment.* The emission of particulate matter from fuel-burning equipment burning solid fuel can be limited to 0.30 pound per million B.t.u. (0.54 gm/10^6 gm-cal) of heat input. This emission limitation is based on the source test method for stationary sources of particulate emissions which will be published by the Administrator. This method includes both a dry filter and wet impingers and represents particulate matter of 70 °F and 1.0 atmosphere pressure.

3.0 CONTROL OF SULFUR COMPOUND EMISSIONS

3.1 *Fuel combustion.* It is not possible to make nationally applicable generalizations about attainable degrees of control of sulfur oxides emissions from combustion sources. Availability of low-sulfur fuels varies from one area to another. In some areas, severe restrictions on the sulfur content of fuels could have a significant impact on fuel-supply patterns; accordingly, where such restrictions are necessary for attainment of national ambient air quality standards, adoption of phased schedules of sulfur-in-fuel limitations is recommended. Stack gas cleaning of sulfur-in-fuel limitations is recommended . . . .

Alternative means of meeting requirements for the control of sulfur oxides emissions from fuel combustion sources include: use of natural gas, distillate oil, low-sulfur coal, and low-sulfur residual oil; desulfurization of oil or coal; stack gas desulfurization; and restricted use, shutdown, or relocation of large existing sources.

It is technically feasible to produce or desulfurize fuels to meet the following specifications: distillate oil – 0.1 percent sulfur (though it should be noted that distillate oil containing less than 0.2 percent sulfur is not generally available at this time); residual oil – 0.3 percent sulfur; and bituminous coal – 0.7 percent sulfur. Availability of significant quantities of such low-sulfur fuels in any region where they do not naturally occur or have not been imported from other domestic or foreign sources will require planning for the timely development of new sources of such fuels. Because residual oil generally is obtained from overseas sources, its use ordinarily is restricted to areas accessible to waterborne transportation. There are limited tonnages of 0.7 percent sulfur coal produced at the present time, primarily in the western United States; large reserves of such coal exist but are not now being mined.

The flaring or combustion of any refinery process gas stream or any other process gas stream that contains sulfur compounds measured as hydrogen sulfide can be limited to a concentration of 10 grains per 100 standard cubic feet (23 gm/100 scm) of gas. This limitation on combustion of process gas relates to the control of sulfur oxide emissions that would result from burning untreated process gas from refinery operations or coke ovens containing hydrogen sulfide and other sulfur compounds. Hydrogen sulfide emissions can be controlled by requiring incineration or other equally effective means for all process units. Approximately 95 to 99 percent of the sulfur compounds must be removed from the process gas stream to meet this emission limitation. It may be appropriate to consider exemption of very small units which economically may not be able to achieve this level of control.

3.2 *Sulfuric acid plants*. The emission of sulfur oxides, calculated as sulfur dioxide, from a sulfur recovery plant can be limited to 0.01 pound (kg) per pound (kg) of sulfur processed. Approximately 99.5 percent of the sulfur processed must be recovered to meet this limitation. Existing plants typically recover 90 to 97 percent of the sulfur. This emission limitation corresponds to a sulfur dioxide concentration of about 1300 ppm by volume.

4.0 CONTROL OF ORGANIC COMPOUNDS EMISSIONS

The following emission limitations are applicable to the principal stationary source of organic compound emissions. Reducing total organic compound emissions will reduce photochemical oxidant formation. Such control of organic compound emissions may appropriately be considered in areas where application of the Federal motor vehicle emission standards will not produce the emission reductions necessary for attainment and maintenance of the national ambient air quality standards for photochemical oxidants. These

emission limitations emphasize reduction of total organic compound emissions, rather than substitution of "non-reactive" or "less reactive" organic compounds for those already in use, because there is evidence that very few organic compounds are photochemically non-reactive. Substitution may be useful, however, where it would result in a clearly evident decrease in reactivity and thus tend to reduce photochemical oxidant formation. The extent to which application of these emission limitations would reduce photochemical oxidant formation in a given air quality control region will depend on the "mix" of emission sources in the region. These limitations are separable; i.e., one or more portions can be considered, as necessary.

4.1 *Storage of volatile organic compounds.* The storage of volatile organic compounds in any stationary tank, reservoir, or other container of more than 40,000 gallons (150,000 liters) can be in a pressure tank capable of maintaining working pressures sufficient at all times to prevent vapor or gas loss to the atmosphere. If this cannot be done, the tank can be equipped with a vapor loss control device such as:

(a) A floating roof, consisting of a pontoon type, double-deck type roof or internal floating cover, which will rest on the surface of the liquid contents and be equipped with a closure seal or seals to close the space between the roof edge and tank wall. This control equipment may not be appropriate if the volatile organic compounds have a vapor pressure of 11 pounds per square inch absolute (568 mm Hg) or greater under actual storage conditions. All tank gauging or sampling devices can be gas-tight except when tank gauging or sampling is taking place.

(b) A vapor recovery system, consisting of a vapor gathering system capable of collecting the volatile organic compound vapors and gases discharged, and a vapor disposal system capable of processing such volatile organic vapors and gases so as to prevent their emission to the atmosphere and all tank gauging and sampling devices can be gas-tight except when gauging or sampling is taking place.

The storage of any volatile organic compound in any stationary storage vessel more than 250-gallon (950 liter) capacity can be in a vessel equipped with a permanent submerged fill pipe or fitted with a vapor recovery system. This emission limitation will reduce volatile organic emissions 90 to 100 percent from uncontrolled sources of storage in vessels 40,000 gallon capacity or greater and approximately 40 percent from uncontrolled sources of storage in vessels 250 gallon capacity or greater.

4.2 *Volatile organic compounds loading facilities.* The loading of volatile organic compounds into any tank, truck, or trailer having a capacity in excess of 200 gallons (760 liters) can be from a loading facility equipped with a vapor collection and disposal system. Also, the loading facility can be equipped with a loading arm with a vapor collection adaptor, pneumatic, hydraulic or other mechanical means to force a vapor-tight seal between the adaptor and the hatch. A means can be provided to prevent drainage of liquid organic

compounds from the loading device when it is removed from the hatch of any tank, truck, or trailer, or to accomplish complete drainage before the removal. When loading is effected through means other than hatches, all loading and vapor lines can be equipped with fittings which make vapor-tight connections and which close automatically when disconnected. This emission limitation will result in 55 to 60 percent reduction in volatile organic emissions from uncontrolled sources in gasoline marketing and other organic transfer operations.

4.3 *Volatile organic compounds water separation.* Single or multiple compartment volatile organic compounds water separators which receive effluent water containing 200 gallons (760 liters) a day or more of any volatile organic compound from any equipment processing, refining, treating, storing or handling volatile organic compounds having a Reid vapor pressure of 0.5 pound or greater can be equipped with one of the following vapor loss control devices, properly installed in good working order and in operation:

(a) A container having all openings sealed and totally enclosing the liquid contents. All gauging and sampling devices can be gas-tight except when gauging or sampling is taking place.

(b) A container equipped with a floating roof, consisting of a pontoon type, double-deck type roof, or internal floating cover, which will rest on the surface of the contents and be equipped with a closure seal or seals to close the space between the roof edge and container wall. All gauging and sampling devices can be gas-tight except when gauging or sampling is taking place.

(c) A container equipped with a vapor recovery system consisting of a vapor gathering system capable of collecting the organic vapors and gases discharged and a vapor disposal system capable of processing such organic vapors and gases so as to prevent their emission to the atmosphere and with all container gauging and sampling devices gas-tight except when gauging or sampling is taking place. This emission limitation will reduce organic compound emissions from uncontrolled waste water separator units approximately 95 to 100 percent.

4.4 *Pumps and compressors.* All pumps and compressors handling volatile organic compounds can be equipped with mechanical seals or other equipment of equal efficiency.

4.5 *Waste gas disposal.* Any waste gas stream containing organic compounds from any ethylene producing plant or other ethylene emission source can be burned at 1300 °F (704 °C) for 0.3 second or greater in a direct-flame afterburner or an equally effective device. This does not apply to emergency reliefs and vapor blowdown systems. The emission of organic compounds from a vapor blowdown system or emergency relief can be burned by smokeless flares, or an equally effective control device. This emission limitation will reduce organic compound emissions approximately 98 percent.

5.0 CONTROL OF CARBON MONOXIDE EMISSIONS

The emissions of carbon monoxide can be limited by requring complete secondary combustion of waste gas generated in such operations as a grey iron cupola, blast furnace, basic oxygen steel furnace, catalyst regeneration of a petroleum cracking system, petroleum fluid coker or other petroleum process.

6.0 CONTROL OF NITROGEN OXIDES EMISSIONS

6.1 *Fuel burning equipment.* The emission of nitrogen oxides, calculated as nitrogen dioxide, from gas-fired fuel burning equipment can be limited to 0.2 pound per million B t.u. (0.36 gm/10^6 gm-cal) of heat input. This emission limitation is about equivalent to a nitrogen dioxide concentration of 175 p.p.m., by volume, on a dry basis at 3 percent oxygen and represents about a 50 percent reduction in nitrogen oxide emissions from uncontrolled gas-fired equipment.

The emission of nitrogen oxides, calculated as nitrogen dioxide, from oil-fired fuel burning equipment can be limited to 0.30 pound per million B.t.u. (0.54 gm/10^6 gm-cal) of heat input. This emission limitation is about equivalent to a nitrogen dioxide concentration of 230 p.p.m. by volume, on a dry basis, at 3 percent oxygen and represents about a 50 percent reduction in nitrógen oxide emissions from uncontrolled oil-fired fuel burning equipment.

6.2 *Nitric acid manufacture.* The emission of nitrogen oxides, calculated as nitrogen dioxide, from nitric acid manufacturing plants can be limited to 5.5 pounds per ton (2.8 kg/metric ton) of 100 percent acid produced. This emission limitation is about equivalent to a nitrogen dioxide concentration of 400 p.p.m., by volume.

BIBLIOGRAPHIC DATA SHEET	1. Report No. EPA-650/2-73-017	2.	3. Recipient's Accession No.
4. Title and Subtitle Atmospheric Emissions from the Petroleum Refining Industry			5. Report Date August 1973 6.
7. Author(s) L. L. Laster			8. Performing Organization Rept. No.
9. Performing Organization Name and Address Control Systems Laboratory Environmental Protection Agency National Environmental Research Center Research Triangle Park, North Carolina 27711			10. Project/Task/Work Unit No. Program Element 1A 2013 11. Contract/Grant No. In-house report
12. Sponsoring Organization Name and Address			13. Type of Report & Period Covered Final 14.
15. Supplementary Notes			

16. Abstracts

As petroleum refining has developed in recent years into one of the leading industries of the nation, with a growth rate of 4 to 8 percent annually, air pollution problems have increased, though the corporations involved have, as a result of research, produced control methods for some of the pollutants. The principal emissions from refining operations are sulfur oxides, nitrogen oxides, hydrocarbons, particulates, carbon monoxide, and odors. The estimated emissions of these pollutants (except for odor per se) at the 262 refineries operating in the United States in 1969 totaled 7.04 million tons with substantial control excercised only in the case of hydrocarbons, particulates, and carbon monoxide. In accordance with guidelines proposed by the U. S. Environmental Protection Agency for emissions from refinery operations, oil companies, working in conjunction with trade organizations and equipment manufacturers, have employed interim controls in many cases and have developed processes and devices for at least reducing all pollutants from refineries.

17. Key Words and Document Analysis. 17a. Descriptors

Sulfur oxides
Nitrogen oxides
Hydrocarbons
Emission
Air pollution
Refining
Crude oil
Pollution

17b. Identifiers/Open-Ended Terms

17c. COSATI Field/Group 13b

18. Availability Statement	19. Security Class (This Report)	21. No. of Pages
Release unlimited	UNCLASSIFIED	62
	20. Security Class (This Page) UNCLASSIFIED	22. Price

FORM NTIS-35 (REV. 3-72)

USCOMM-DC 14952-P72

INSTRUCTIONS FOR COMPLETING FORM NTIS-35 (10-70) (Bibliographic Data Sheet based on COSATI Guidelines to Format Standards for Scientific and Technical Reports Prepared by or for the Federal Government, PB-180 600).

1. **Report Number.** Each individually bound report shall carry a unique alphanumeric designation selected by the performing organization or provided by the sponsoring organization. Use uppercase letters and Arabic numerals only. Examples FASEB-NS-87 and FAA-RD-68-09.

2. Leave blank.

3. **Recipient's Accession Number.** Reserved for use by each report recipient.

4. **Title and Subtitle.** Title should indicate clearly and briefly the subject coverage of the report, and be displayed prominently. Set subtitle, if used, in smaller type or otherwise subordinate it to main title. When a report is prepared in more than one volume, repeat the primary title, add volume number and include subtitle for the specific volume.

5. **Report Date.** Each report shall carry a date indicating at least month and year. Indicate the basis on which it was selected (e.g., date of issue, date of approval, date of preparation.

6. **Performing Organization Code.** Leave blank.

7. **Author(s).** Give name(s) in conventional order (e.g., John R. Doe, or J. Robert Doe). List author's affiliation if it differs from the performing organization.

8. **Performing Organization Report Number.** Insert if performing organization wishes to assign this number.

9. **Performing Organization Name and Address.** Give name, street, city, state, and zip code. List no more than two levels of an organizational hierarchy. Display the name of the organization exactly as it should appear in Government indexes such as USGRDR-I.

10. **Project/Task/Work Unit Number.** Use the project, task and work unit numbers under which the report was prepared.

11. **Contract/Grant Number.** Insert contract or grant number under which report was prepared.

12. **Sponsoring Agency Name and Address.** Include zip code.

13. **Type of Report and Period Covered.** Indicate interim, final, etc., and, if applicable, dates covered.

14. **Sponsoring Agency Code.** Leave blank.

15. **Supplementary Notes.** Enter information not included elsewhere but useful, such as: Prepared in cooperation with . . . Translation of . . . Presented at conference of . . . To be published in . . . Supersedes . . . Supplements . . .

16. **Abstract.** Include a brief (200 words or less) factual summary of the most significant information contained in the report. If the report contains a significant bibliography or literature survey, mention it here.

17. **Key Words and Document Analysis. (a). Descriptors.** Select from the Thesaurus of Engineering and Scientific Terms the proper authorized terms that identify the major concept of the research and are sufficiently specific and precise to be used as index entries for cataloging.
(b). **Identifiers and Open-Ended Terms.** Use identifiers for project names, code names, equipment designators, etc. Use open-ended terms written in descriptor form for those subjects for which no descriptor exists.
(c). **COSATI Field/Group.** Field and Group assignments are to be taken from the 1965 COSATI Subject Category List. Since the majority of documents are multidisciplinary in nature, the primary Field/Group assignment(s) will be the specific discipline, area of human endeavor, or type of physical object. The application(s) will be cross-referenced with secondary Field/Group assignments that will follow the primary posting(s).

18. **Distribution Statement.** Denote releasability to the public or limitation for reasons other than security for example "Release unlimited". Cite any availability to the public, with address and price.

19 & 20. **Security Classification.** Do not submit classified reports to the National Technical

21. **Number of Pages.** Insert the total number of pages, including this one and unnumbered pages, but excluding distribution list, if any.

22. **Price.** Insert the price set by the National Technical Information Service or the Government Printing Office, if known.