United States
Environmental Protection
Agency

Industrial Environmental Research
Laboratory
Research Triangle Park NC 27711

EPA-600/7-80-093
May 1980

EPA

Environmental Assessment Report: Wellman-Galusha Low-Btu Gasification Systems

Interagency Energy/Environment R&D Program Report

RESEARCH REPORTING SERIES

Research reports of the Office of Research and Development, U.S. Environmental Protection Agency, have been grouped into nine series. These nine broad categories were established to facilitate further development and application of environmental technology. Elimination of traditional grouping was consciously planned to foster technology transfer and a maximum interface in related fields. The nine series are:

1. Environmental Health Effects Research
2. Environmental Protection Technology
3. Ecological Research
4. Environmental Monitoring
5. Socioeconomic Environmental Studies
6. Scientific and Technical Assessment Reports (STAR)
7. Interagency Energy-Environment Research and Development
8. "Special" Reports
9. Miscellaneous Reports

This report has been assigned to the INTERAGENCY ENERGY-ENVIRONMENT RESEARCH AND DEVELOPMENT series. Reports in this series result from the effort funded under the 17-agency Federal Energy/Environment Research and Development Program. These studies relate to EPA's mission to protect the public health and welfare from adverse effects of pollutants associated with energy systems. The goal of the Program is to assure the rapid development of domestic energy supplies in an environmentally-compatible manner by providing the necessary environmental data and control technology. Investigations include analyses of the transport of energy-related pollutants and their health and ecological effects; assessments of, and development of, control technologies for energy systems; and integrated assessments of a wide range of energy-related environmental issues.

EPA REVIEW NOTICE

This report has been reviewed by the participating Federal Agencies, and approved for publication. Approval does not signify that the contents necessarily reflect the views and policies of the Government, nor does mention of trade names or commercial products constitute endorsement or recommendation for use.

This document is available to the public through the National Technical Information Service, Springfield, Virginia 22161.

EPA-600/7-80-093

May 1980

Environmental Assessment Report: Wellman-Galusha Low-Btu Gasification Systems

by

Pat Murin, Theresa Sipes, and G.C. Page

Radian Corporation
8500 Shoal Creek Boulevard
Austin, Texas 78766

Contract No. 68-02-2147
Exhibit A
Program Element No. INE825

EPA Project Officer: William J. Rhodes

Industrial Environmental Research Laboratory
Office of Environmental Engineering and Technology
Research Triangle Park, NC 27711

Prepared for

U.S. ENVIRONMENTAL PROTECTION AGENCY
Office of Research and Development
Washington, DC 20460

ABSTRACT

This Environmental Assessment Report (EAR) for Wellman-Galusha low-Btu gasification systems was prepared as part of an overall environmental assessment program for low/medium-Btu gasification technology. The purpose of this EAR is to provide EPA Administrators and Program Offices with a document that represents the Office of Research and Development's (ORD's) research input to standards support for Wellman-Galusha gasification facilities. This EAR represents a detailed evaluation and presentation of process, control, and waste stream data collected from field testing programs, open literature, vendors, process licensors, and computer modeling activties.

An overview of Wellman-Galusha gasification systems is presented, including estimates of the system's energy conversion efficiencies and capital and operating costs. Data characterizing the system's input materials, process streams, products, by-products, and multimedia discharges are provided. Pollution control alternatives for the multimedia discharges and toxic substances in the system's products and by-products are identified and their costs and energy impacts estimated.

Regulatory requirements for and environmental impacts of Wellman-Galusha systems were assessed. Data needs and recommendations for obtaining those data are presented, along with a discussion of the EPA Program Office's issues and areas of concern for Wellman-Galusha low-Btu gasification technology.

TABLE OF CONTENTS

	Page
ABSTRACT	ii
LIST OF FIGURES	v
LIST OF TABLES	vi
ACKNOWLEDGMENT	xv
1.0 SUMMARY	1
1.1 Overview of Wellman-Galusha Low-Btu Gasification Systems	1
1.2 Waste Streams and Pollutants of Major Concern	12
1.3 Status of Environmental Protection Alternatives	19
1.4 Data Needs and Recommendations	29
1.5 Issues and Areas of Concern by Program Offices	31
2.0 WELLMAN-GALUSHA GASIFICATION SYSTEMS	37
2.1 Wellman-Galusha Gasification Systems: Technology Overview	37
2.2 Description of Processes and Systems	48
2.3 Process Areas of Current Environmental Concern	106
3.0 CHARACTERIZATION OF INPUT MATERIALS, PRODUCTS, AND WASTE STREAMS	112
3.1 Summary of Sampling and Analytical Activities	112
3.2 Input Materials	128
3.3 Process Streams	137
3.4 Toxic Substances in Product and By-Product	140
3.5 Waste Streams to Air	153
3.6 Waste Streams to Water	167
3.7 Waste Streams to Land	174

TABLE OF CONTENTS
(Continued)

Page

4.0 PERFORMANCE AND COST OF CONTROL ALTERNATIVES 190

4.1 Procedures for Evaluating Control Alternatives 190

4.2 Air Emissions Control Alternatives 190

4.3 Water Effluent Control Alternatives 198

4.4 Solid Waste Control Alternatives 209

4.5 Toxic Substances 216

4.6 Summary of Most Effective Control Alternatives 217

4.7 Regional Considerations Affecting Selection of Alternatives 217

4.8 Summary of Cost and Energy Considerations 220

5.0 ANALYSIS OF REGULATORY REQUIREMENTS AND ENVIRONMENTAL IMPACTS 223

5.1 Environmental Assessment Methodologies 223

5.2 Impacts on Air 236

5.3 Impacts on Water 248

5.4 Impacts of Land Disposal 252

5.5 Product Impacts 257

5.6 Radiation and Noise Impacts 259

5.7 Summary of Major Environmental Impacts 260

6.0 SUMMARY OF NEEDS FOR ADDITIONAL DATA 265

APPENDIX: NOMENCLATURE, STRETFORD DESIGN BASIS, TRACE ELEMENT PREDICTIONS, ATMOSPHERIC DISPERSION MODEL 270

REFERENCES 284

LIST OF FIGURES

Number		Page
1.1-1	Wellman-Galusha System Process Modules and Multimedia Discharges	2
2.2-1	Wellman-Galusha System Process Modules and Multimedia Discharges	61
2.2-2	Wellman-Galusha Gasification System Producing a Hot Removal Product Gas from Anthracite and Low-Sulfur Bituminous Coals	63
2.2-3	Wellman-Galusha Gasification System Producing a Clean Product Gas from Anthracite Coal	64
2.2-4	Wellman-Galusha Gasification System for Producing a Clean Product Gas from Lignite and Low- and High-sulfur Bituminous Coal	65
2.2-5	Wellman-Galusha Gasification System for Producing a Clean Product Gas (with MEA and Gas Removal) from High-Sulfur Bituminous Coal	66
2.2-6	Diagram of a Wellman-Galusha Gasifier Equipped with a Coal Bed Agitator	92
2.2-7	Schematic Flow Diagram for the Stretford Sulfur Removal Process	100
2.2-8	Schematic Flow Diagram for the MEA Acid Gas Removal Process	103
3.1-1	Flow Diagram for Glen-Gery Gasification Facility	114
3.1-2	Bureau of Mines Wellman-Galusha Facility, Fort Snelling, Minnesota	118
3.1-3	Simplified Process Flow Diagram for the Chapman Facility Showing Emission Streams	123
4.2-1	Typical Flow Diagram - Claus Sulfur Recovery Process	195

LIST OF TABLES

Number		Page
1.1-1	Operations/Process Modules in Wellman-Galusha Low-Btu Gasification Systems	3
1.1-2	Current Wellman-Galusha Coal Gasification Facilities in the United States	6
1.1-3	Past Users of Gas Produced by Wellman-Galusha[a] Gasifiers	8
1.1-4	Calculated Energy Efficiencies for Various Uncontrolled Wellman-Galusha Gasification Systems	11
1.1-5	Capital Investment Requirements and Annualized Costs of Uncontrolled Wellman-Galusha Gasification Systems Producing Nominally 17.6 MW (60 x 10^6 BTU/HR) of Product Low-Btu Gas (Late-1977 Dollars)[a]	13
1.1-6	Capital Investment Requirements and Annualized Costs of Uncontrolled Wellman-Galusha Gasification Systems Producing Nominally 87.9 MW (300 x 10^6 BTU/HR) of Product Low-Btu Gas (Late-1977 Dollars)[a]	14
1.2-1	Gaseous Waste Streams and Pollutants of Major Concern from Wellman-Galusha Low-Btu Gasification Systems	15
1.2-2	Liquid Waste Streams and Pollutants of Major Concern from Wellman-Galusha Low-Btu Gasification Systems	16
1.2-3	Solid Waste Streams and Major Pollutants of Concern from Wellman-Galusha Low-Btu Gasification Systems	17
1.2-4	Potential Toxic Streams and Compounds of Major Concern for Wellman-Galusha Low-Btu Gasification Systems	18
1.3-1	Summary of Most Effective Emission, Effluent, Solid Wastes, and Toxic Substances Control Alternatives	21
1.3-2	Summary of Major Costs and Energy Consumption of Alternative Control Methods	23
1.3-3	Comparison of Predicted Pollutant Concentrations to the NAAQS and State of Texas H_2S Ambient Air Standard	26

LIST OF TABLES
(Continued)

Number		Page
1.3-4	Liquid Effluents from Wellman-Galusha Low-Btu Gasification Systems	28
1.3-5	Solid Wastes from Wellman-Galusha Low-Btu Gasification Systems that will be Regulated by the RCRA	30
1.4-1	Summary of Waste Stream Characterization and Control Data Needs and Planned Activities to Obtain Those Data	32
1.4-2	Process and Process Stream Data Needs and Planned Activities to Obtain Those Data	33
1.5-1	EPA Program Office Data Needs	35
2.1-1	Current Wellman-Galusha Coal Gasification Facilities in the United States	38
2.1-2	Past Users of Gas Produced by Wellman-Galusha Gasifiers[a]	41
2.1-3	Classification of Industrial Processes with Respect to Ease of Retrofit for Low-Btu Gas	42
2.1-4	Estimated Costs for a 73.3 MW (250 Million Btu/Hr)[a] Coal Gasification Plant Using Fixed-Bed Atmospheric Pressure Gasifiers	49
2.1-5	Estimated Costs for Coal Gasification Plants Containing One, Five, or Ten Fixed-Bed Atmospheric Pressure Gasifiers[a]	50
2.2-1	Coal Composition Examined[a]	52
2.2-2	Raw Product Gas Compositions Resulting from the Gasification of the Four Selected Coals[a]	53
2.2-3	Product Gas Specifications Selected for Environmental Assessment	56
2.2-4	Sulfur Removal Requirements to Attain Product Specifications for Gases Produced from Four Selected Coals	58
2.2-5	Operations/Process Modules in Wellman-Galusha Low-Btu Gasification Systems	62
2.2-6	Stream Compositions and Flow Rates for Wellman-Galusha Gasification Systems (Figure 2.2-2) Producing 17.6 MW of Hot Product Gas from Anthracite Coal	67

LIST OF TABLES
(Continued)

Number		Page
2.2-7	Stream Compositions and Flow Rates for Wellman-Galusha Gasification Systems (Figure 2.2-2) Producing 17.6 MW of Hot Product Gas from Low-Sulfur Bituminous Coals	68
2.2-8	Stream Compositions and Flow Rates for Wellman-Galusha Gasification Systems (Figure 2.2-3) Producing 17.6 MW of Clean Product Gas from Anthracite Coal	69
2.2-9	Stream Compositions and Flow Rates for Wellman-Galusha Gasification Systems (Figure 2.2-4) Producing 17.6 MW of Clean Product Gas from Lignite Coal	72
2.2-10	Stream Compositions and Flow Rates for Wellman-Galusha Gasification Systems (Figure 2.2-4) Producing 17.6 MW of Clean Product Gas from Low-Sulfur Bituminous Coal	75
2.2-11	Stream Compositions and Flow Rates for Wellman-Galusha Gasification Systems (Figure 2.2-4) Producing 17.6 MW of Clean Product Gas from High-Sulfur Bituminous Coal	78
2.2-12	Stream Compositions and Flow Rates for Wellman-Galusha Gasification Systems (Figure 2.2-5) Producing 17.6 MW of Clean Product Gas from High-Sulfur Bituminous Coal (MEA Process Operating Pressure of 0.44 MPa, 50 psig)	81
2.2-13	Stream Compositions and Flow Rates for Wellman-Galusha Systems (Figure 2.2-5) Producing 17.6 MW of Clean Product Gas from High-Sulfur Bituminous Coal (MEA Process Operating Pressure of 1.5 MPa or 200 psig)	83
2.2-14	Calculated Energy Efficiencies for Various Uncontrolled Wellman-Galusha Gasification Systems	87
2.2-15	Capital Investment Requirements and Annualized Costs of Uncontrolled Wellman-Galusha Gasification Systems Producing Nominally 87.9 MW (300 x 10^6 BTU/HR) of Product Low-Btu Gas (Late-1977 Dollars)[a]	88
2.2-16	Capital Investment Requirements and Annualized Costs of Uncontrolled Wellman-Galusha Gasification Systems Producing Nominally 17.6 MW (60 x 10^6 BTU/HR) of Product Low-Btu Gas (Late 1977 Dollars)[a]	89

LIST OF TABLES
(Continued)

Number		Page
2.2-17	Efficiency Range of "Conventional" Cyclones . .	95
2.3-1	Gaseous Waste Streams and Pollutants of Major Concern from Wellman-Galusha Low-Btu Gasification Systems	107
2.3-2	Liquid Waste Streams and Pollutants of Major Concern from Wellman-Galusha Low-Btu Gasification Systems	108
2.3-3	Solid Waste Streams and Pollutants of Major Concern from Wellman-Galusha Low-Btu Gasification Systems	109
2.3-4	Potential Toxic Streams and Compounds of Major Concern for Wellman-Galusha Low-Btu Gasification Systems	110
3.1-1	Multimedia Waste Streams from the Glen-Gery Wellman-Galusha Gasification Facility*	116
3.1-2	Waste and Process Stream Sampled at the Glen-Gery Wellman-Galusha Gasification Facility* . .	117
3.1-3	Multimedia Waste Streams from the Bureau of Mines Wellman-Galusha Gasification Facility* .	120
3.1-4	Waste and Process Streams Sampled at the BOM Wellman-Galusha Gasification Facility* . .	121
3.1-5	Multimedia Waste Streams from the Chapman Gasification Facility*	125
3.1-6	Waste and Process Streams Sampled at the Chapman Gasification Facility*	126
3.2-1	Input Material Requirements for the Gasification Operation in Wellman-Galusha Systems Producing 17.6 MW of Low-Btu Gas[a]	129
3.2-2	Coal Composition Data	130
3.2-3	Reported Average Trace Element Compositions of U.S. Coals*	132
3.2-4	Input Material Requirements for the Stretford Sulfur Removal Process	134
3.2-5	Estimated Make-Up Chemical Requirements for MEA Process[a]	136

LIST OF TABLES
(Continued)

Number		Page
3.3-1	Compositions of Raw Low-Btu Gas Exiting a Wellman-Galusha Gasifier	138
3.3-2	Concentrations of Trace Elements in Jacket and Service Water at the Glen-Gery Wellman-Galusha Gasifier[a]	139
3.3-3	Water Quality Parameters of Quench Liquor at Chapman Gasifier	141
3.3-4	Organic Compounds Found in a Chapman Gasification Facility Quench Liquor	142
3.3-5	Trace Element Concentrations Found in a Chapman Gasification Facility Quench Liquor	143
3.4-1	Trace Element Concentration (By SSMS) in the Product Gas from a Wellman-Galusha Gasifier Using Anthracite Coal	146
3.4-2	Predicted Equilibrium Trace Element Distributions	148
3.4-3	Composition of Low-Btu Product Gases After Stretford	150
3.4-4	Composition of Low-Btu Product Gas from High-Sulfur Bituminous Coal After Treatment in MEA	151
3.4-5	Ultimate Analyses of By-Product Tar	152
3.4-6	Organic Compounds Identified in the Tar Produced from a Chapman Facility Using Bituminous Coal	154
3.4-7	Trace Elements (By SSMS) in the By-Product Tar Produced from Low-Sulfur Bituminous Coal	155
3.4-8	Bioassay Test Results for the Tar Produced from a Chapman Facility Using Low-Sulfur Bituminous Coal	156
3.5-1	Composition of Coal Feeder Gas from the Glen-Gery Wellman-Galusha Gasifier*	157

LIST OF TABLES
(Continued)

Number		Page
3.5-2	Organic Compounds Identified in the Separator Vent Stream from a Chapman Gasification Facility Using Low-Sulfur Bituminous Coal	160
3.5-3	Trace Elements (By SSMS) Found in the Separator Vent Stream from a Chapman Gasification Facility Using Low-Sulfur Bituminous Coal.	161
3.5-4	Water Quality Analyses on the Separator Vent Condensable from a Chapman Gasification Facility Using Low-Sulfur Bituminous Coal.	162
3.5-5	Gaseous Components Found in the Separator Unit Stream from a Chapman Gasification Facility Using Low-Sulfur Bituminous Coal.	163
3.5-6	Bioassay Results of the XAD-2 Resin Extract of the Separator Vent Gases from the Chapman Facility Using Low-Sulfur Bituminous Coal	164
3.5-7	Acid Gas from MEA Unit Purifying Gas from High-Sulfur Bituminous Coal	166
3.6-1	Trace Element Concentration (by SSMS) of Ash Sluice Water and Ash Leachate	168
3.6-2	Water Quality Parameters for the Ash Sluice Water and Ash Leachate from the Glen-Gery Wellman-Galusha Gasification Facility*.	169
3.6-3	Results of Bioassay Tests on the Ash Sluice Water and Ash Leachate from the Glen-Gery Wellman-Galusha Gasification Facility	170
3.6-4	Bioassay Test Results for the Quench Liquor from a Chapman Gasification Facility Using Low-Sulfur Bituminous Coal.	172
3.6-5	Quantity and Composition of Stretford Blowdown. .	173
3.7-1	Analyses of Ash	175
3.7-2	Trace Elements in Gasifier Ash from Gasification of Anthracite and Low-Sulfur Bituminous Coals . .	176
3.7-3	Radioactive Disintegration Data for Ash Produced from the Glen-Gery Wellman-Galusha Gasification Facility	177
3.7-4	Concentrations of Extractable Organics and Compounds Identified in the Ash Prodsuced from the Gasification of Anthracite and Low-Sulfur Bituminous Coal	177

LIST OF TABLES
(Continued)

Number		Page
3.7-5	Trace Element Concentrations in the Ash Leachate from the Gasification of Anthracite Coal.	179
3.7-6	Bioassay Results of the Ash from the Gasification of Anthracite and Low-Sulfur Bituminous Coal. . .	180
3.7-7	Ultimate Analysis of Cyclone Dust	181
3.7-8	Trace Elements in Cyclone Dust.	182
3.7-9	Trace Element Concentrations of Particulates Collected by the Cylone and Those not Collected for the Gasification of Anthracite Coal	183
3.7-10	Radioactive Disintegration for the Cyclone Dust from the Glen-Gery Wellman-Galusha Gasification Facility	184
3.7-11	Extractable Organics Found in the Cyclone Dust from the Gasification of Anthracite and Low-Sulfur Bituminous Coals	184
3.7-12	Trace Element Concentrations in the Cyclone Dust Leachate from the Gasification of Anthracite Coal.	185
3.7-13	Bioassay Test Results for the Cyclone Dust from the Gasification of anthracite and Low-Sulfur Bituminous Coals.	187
3.7-14	By-Product Sulfur from Stretford Process[a]	188
3.7-15	Estimated Blowdown from MEA Acid Gas Removal Process	189
4.2-1	Costs for Stretford and Claus Processes Treating an Acid Gas Produced from the Purification of a High-Sulfur Coal Gas.	199
4.3-1	Costs for the Containment and Treatment of Process Condensate in a Centrally-Located Hazardous Waste Treatment Facility[a]	203
4.3-2	Costs for the Evaporation of Process Condensate in Single-Effect Vertical Tube Evaporators . . .	204
4.4-1	Costs for Land Disposal of Gasifier Ash	213
4.4-2	Estimated Costs for Land Disposal of Recovered Sulfur.	215
4.5-1	Emission Factors for SO_2 Produced During the Combustion of by-Product Tars and Oils.	216

LIST OF TABLES
(Continued)

Number		Page
4.6-1	Summary of Most Effective Emission, Effluent, Solid Wastes and Toxic Substances Control Alternatives[a]	218
4.8-1	Summary of Major Costs and Energy Consumption of Alternative Control Methods.	221
5.1-1	MEG Values Bases for Discharge and Ambient Level Goals	226
5.1-2	MEG Chart for 2-Aminonaphthalene.	227
5.1-3	Model for Translating TLV's and NIOSH Recommendations into AMEG Values Based on Health Effects for Exposure to a Compound in the Ambient Air	230
5.1-4	Proposed Bioassay Test Matrix for Samples Collected During Environmental Sampling and Analysis Programs	234
5.2-1	Most Stringent Emission Standards	238
5.2-2	National Ambient Air Quality Standards (40 CFR Part 50).	239
5.2-3	Performance Guidelines for Lurgi Gasification Plants.	240
5.2-4	Stack Parameters for Model Plants	244
5.2-5	Emission Parameters for Model Plants, g/s	245
5.2-6	Maximum Down Wind Concentrations for Model Gasification Plants	246
5.2-7	Percentage Contributions of H_2S, CO, and NH_3 from the Separator Vent Stream to the Calculated Maximum Ground-Level Concentration[a]	247
5.2-8	Bioassay Results for Coal Feeding and Separator Vent Cases.	249
5.3-1	Most Stringent Water Effluent Standards	251
5.3-2	Components with DS's>1 and Priority Pollutants Identified in the Quench Liquor from a Chapman Facility Using Low-Sulfur Bituminous Coal	253
5.3-3	Bioassay Test Results for Ash Sluice Water and Process Condensate.	254
5.7-1	Liquid Effluents from Wellman-Galusha Low-Btu Gasification Systems Exceeding the Most Stringent Effluent Standards and DMEG Values . .	262

LIST OF TABLES
(Continued)

Number		Page
5.7-2	Solid Wastes from Wellman-Calusha Low-Btu Gasification Systems that could be Regulated by the RCRA	264
6-1	Summary of Waste Stream Characterization and Control Data Needs and Planned Activities to Obtain those Data	266
6-2	Process and Process Stream Data Needs and Planned Activities to Obtain those Data	267
6-3	EPA Program Office Data Needs	268
A.3-1	Species Considered in Free Energy Minimization Program	280
A.3-2	Comparison of Observed and Predicted Trace Element Volatilization in the Coed Process. . . .	282

ACKNOWLEDGMENTS

The authors wish to express their thanks to W.C. Thomas, J.A. Reego, and E.A. Baker for their contributions to this report. Guidance and review by W.J. Rhodes and T.K. Janes of EPA/IERL-RTP also aided significantly in the successful completion of this report.

SECTION 1.0
SUMMARY

This Environmental Assessment Report (EAR) for Wellman-Galusha low-Btu gasification systems was prepared as part of an overall environmental assessment program for low/medium-Btu gasification technology. The purpose of this EAR is to provide EPA administrators, Program Offices, and Policy and Planning with a document that represents the Office of Research and Development's (ORD's) research input to standards support for Wellman-Galusha gasification facilities. This EAR represents a detailed evaluation and presentation of process, control, and waste stream data collected from field testing programs, open literature, vendors, process licensors, and computer modeling activities.

1.1 OVERVIEW OF WELLMAN-GALUSHA LOW-BTU GASIFICATION SYSTEMS

Wellman Galusha gasifiers are one of the commercially available gasifiers used to produce low-Btu ($\sim$5.9 MJ/Nm^3 or 150 Btu/scf) gas from a variety of coal feedstocks. The Wellman-Galusha gasification systems examined in this report are described in the following subsections along with discussions of their status of development, industrial applicability, commercial prospects, energy efficiency, and capital and operating costs.

1.1.1 System Description

Wellman-Galusha low-Btu gasifictaion systems have three basic operations: coal pretreatment, coal gasification, and gas purification. In each operation, there are processes with specific functions, inputs, and outputs. Figure 1.1-1 is a generalized flow diagram showing the operations and process modules for the Wellman-Galusha gasification systems considered in this report. Table 1.1-1 summarizes the input and output streams and the function associated with each process.

Four gasification systems, as shown in Figure 1.1-1, were considered in this study. The first system is typical of what would be required to produce a "moderately clean" industrial fuel from a low-sulfur coal feedstock. This system has only three process modules: coal handling and storage, gasification, and particulate removal (hot cyclone). This system also represents currently-operating Wellman-Galusha facilities that use anthracite and low-sulfur bituminous coals.

A variation of the first system has an additional process module: raw gas quenching and cooling. This additional

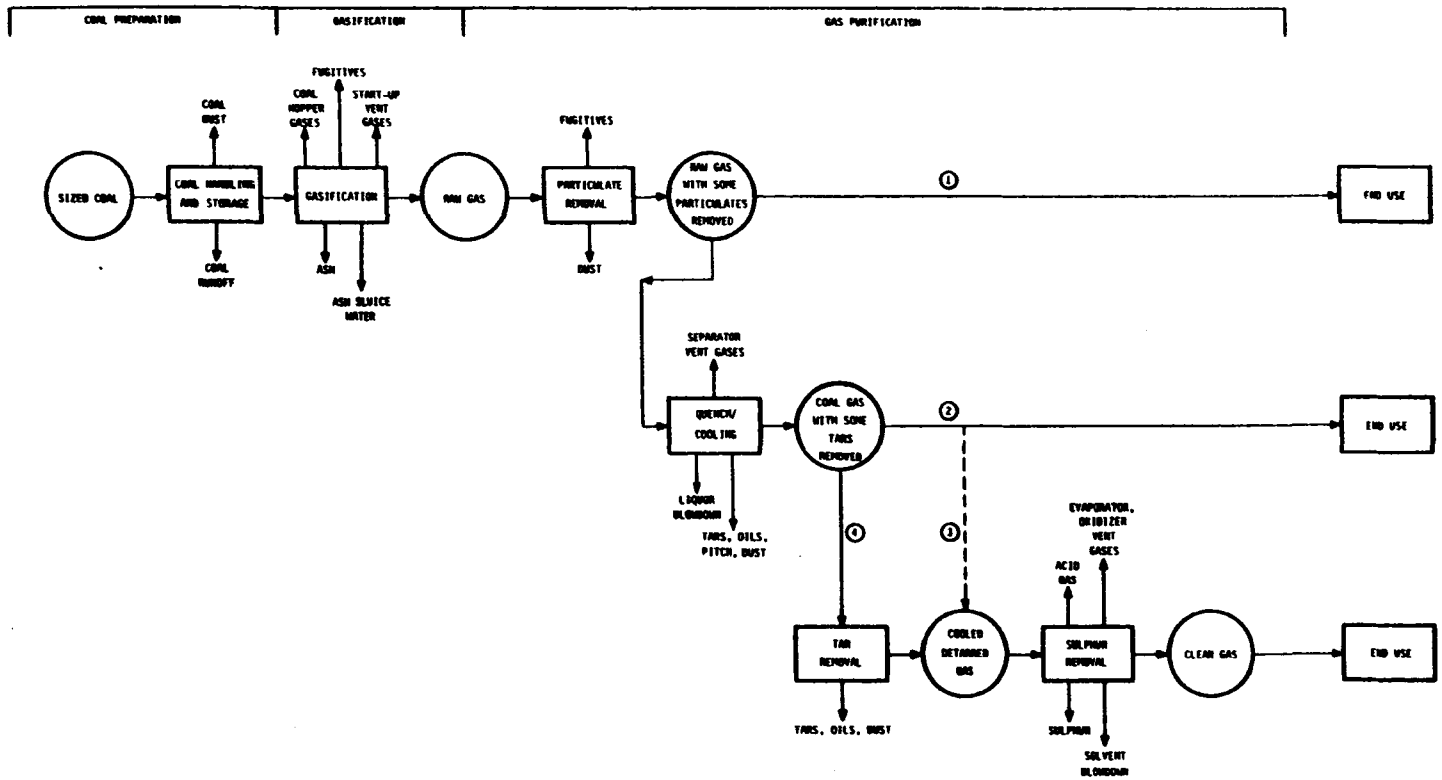

KEY TO SYSTEMS

① GASIFICATION OF LOW-SULFUR COALS (LESS THAN 0.7% SULFUR FOR COALS WITH HEATING VALUES OF 30 MJ/KG OR 13,000 BTU/LB) TO PRODUCE A FUEL GAS ABLE TO COMPLY WITH CURRENT NSPS FOR THE COMBINATION OF COAL.

② GASIFICATION OF LOW-SULFUR COALS TO PRODUCE A MOSTLY TAR-FREE FUEL GAS ABLE TO COMPLY WITH CURRENT NSPS.

③ GASIFICATION OF ANTHRACITE COALS TO PRODUCE A FUEL GAS ABLE TO COMPLY WITH PROPOSED NSPS FOR THE COMBUSTION OF COAL; GASIFICATION OF ANTHRACITE COALS TO PRODUCE A "CLEAN" GAS.

④ GASIFICATION OF LOW-SULFUR BITUMINOUS, SUB-BITUMINOUS, AND LIGNITE COALS TO PRODUCE A FUEL GAS ABLE TO COMPLY WITH PROPOSED NSPS FOR THE COMBINATION OF COAL, GASIFICATION OF HIGH-SULFUR COALS TO PRODUCE A FUEL GAS ABLE TO COMPLY WITH CURRENT AND PROPOSED NSPS FOR THE COMBINATION OF COAL; GASIFICATION OF ALL NON-ANTHRACITE COALS TO PRODUCE A "CLEAN" GAS.

DETAILED PROCESS FLOWSHEETS ARE FOUND IN FIGURES 2.2-2 TO 2.2-6.

70-1427-3

Figure. 1.1-1. Wellman Galusha System Process Modules and Multimedia Discharges

TABLE 1.1-1. OPERATIONS/PROCESS MODULES IN WELLMAN-GALUSHA LOW-BTU GASIFICATION SYSTEMS

Operation/Process Module	Input Streams	Output Streams	Function	Remarks
Coal Pretreatment				
Coal Handling and Storage	Presized coal	Presized coal Coal dust Coal pile runoff water	Store and transport coal feedstock	Coal storage piles would contain a 30 day coal supply (2-12 Gg, 2000-13,000 short tons of coal for a plant producing 18-88 MW, 60-300 million Btu/hr of low-Btu gas).
Coal Gasification				
Fixed-Bed, Atmospheric Pressure, Dry Ash Gasifier - Wellman-Galusha	Presized coal Steam Air Ash sluice water	Raw product gas Coal hopper gases Fugitive gases Start-up vent gases Ash Ash sluice water	React coal with a mixture of steam and air to produce a raw low-Btu gas	Coals that have been used include anthracite and bituminous. Coal size specifications are 7.9 to 14.3 mm for anthracite and 26-51 mm for bituminous. Larger particle sizes can be used for more reactive coals.
Gas Purification				
Particulate Removal - Hot Cyclone	Raw product gas	Product gas Removed particulates	Remove large particulate matter from the hot, raw product gas	Total particulate removal efficiencies have been determined to be between 50-80%. Small particulate matter will not be removed. Collected particulates have characteristics similar to devolatilized coal particles.
Gas Quenching and Cooling	Product gas Quenching liquor	Quenched/cooled product gas Quench liquor Tars Oils Particulate matter	Remove tars and oils from the product gas and cool the product gas to approximately 316°K (110°F)	The amount of tars and oils removed is dependent upon the coal feedstock. Anthracite coal will produce essentially no tars, however, bituminous coal will produce a significant amount of tars. Emissions from the tar/liquor separator may contain potentially hazardous compounds. Spent quench liquor will require treatment before disposal.
Tar/Oil Removal - Electrostatic Precipitator	Cooled product gas	Cooled/detarred product gas Tars Oils	Remove tar and oil aerosols from the cooled product gas	ESP's have been used to remove tars and oils produced by two-stage, fixed-bed, atmospheric gasifiers and good removal of tars and oils have been demonstrated by ESP's used in sampling systems. Vent gases from tar/oil storage tanks may contain potentially harmful compounds and may need to be controlled.
Sulfur Removal - Stretford	Detarred product gas Stretford solution Air	Clean product gas Oxidizer vent gas Sorbent blowdown Sulfur	Remove H_2S from the detarred product gas	Organic sulfur species (i.e., COS, CS_2, etc) will not be removed from the product gas. If the HCN concentration is high, then a cyanide guard may be needed. Blowdown sorbent will require treatment before disposal. If the sulfur is to be disposed of, tests need to be performed (i.e., RCRA tests for solid wastes) to determine treatment and/or disposal techniques required.
Sulfur Removal - Monoethanolamine Process	Detarred product gas MEA solution	Clean product gas MEA blowdown Acid gases Sulfur from acid gas treatment processes Tail gases from acid gas treatment processes	Remove sulfur species and CO_2 from the detarred product gas	Removal efficiency increases with increasing inlet gas pressure. Acid gases have to be treated to control sulfur emissions. MEA blowdown will require treatment before disposal.

module removes tars and oils from the raw product gas and reduces the potential of fouling equipment used to transport the low-Btu product gas to its end use. This system also is capable of producing a "moderately clean" industrial fuel gas from a low-sulfur coal feedstock. It is similar to a facility using Chapman (Wilputte) gasifiers to produce a low-Btu combustion gas for process heaters.

The second Wellman-Galusha gasification system is used to produce a "clean" industrial fuel gas from anthracite coal. This system contains the following process modules: coal handling and storage, gasification, gas quenching and cooling, and sulfur removal. In this system, the product gas is cooled to 316 K (110°F) before entering the sulfur removal process. Two sulfur removal processes are considered in this report: Stretford and Monoethanolamine (MEA) processes. If a Stretford sulfur removal process is used, only H_2S will be removed, leaving or-ganic sulfur species (e.g., COS, CS_2) in the product gas stream. H_2S removal efficiencies of greater than 99% have been achieved with residual outlet H_2S concentrations less than 10 ppmv. If the MEA process is used, both H_2S and organic sulfur compounds can be removed. However, the sulfur removal effectiveness is dependent upon the pressure of the product gas. For example, at 0.34 MPa (50 psi) residual H_2S concentrations of 8 ppmv can routinely be achieved, while at a higher pressure of 0.69 MPa (100 psi), residsual H_2S levels can be reduced to 4 ppmv. The MEA process also produces an acid gas stream that requires further treatment.

The third system is used to produce a "clean" industrial fuel gas from the following coal feedstocks: bituminous (low- and high-sulfur) coal and lignite. In this system, the quenched and cooled product gas is sent to a tar/oil removal process followed by a sulfur removal process. An electrostatic precipitator (ESP) is used to remove tars and oils that would cause operating problems with the downstream sulfur removal process. As in the second system, the Stretford and MEA processes were chosen for the removal of sulfur species in order to produce a "clean" industrial fuel gas.

The fourth system is very similar to the third system. The major difference is that only the MEA process is used for removing sulfur species. By compressing the gas to approximately 1.5 MPa (200 psi), the MEA process can remove essentially all sulfur compounds and produce a "very clean" product gas.

1.1.2 Status

Wellman-Galusha gasifiers have been commercially available since 1941. Approximately 150 gasifiers have been installed worldwide. In the U.S., eleven Wellman-Galusha gasifiers are currently being used to produce a low-Btu gas from anthracite and low-sulfur bituminous coals. Table 1.1-2 summarizes the locations, processes, and coal feedstocks for each plant.

1.1.3 Industrial Applicability

Wellman-Galusha gasification systems have been used to provide a low-Btu fuel gas and a synthesis gas for ammonia production. A summary of past applications is given in Table 1.1-3.

In the near term, Wellman-Galusha gasifiers will be used primarily to produce a fuel gas for on-site use, including:

- fuel to provide direct heat for processes such as brick and lime kilns, and
- fuel for industrial boilers.

Production of gas for off-site use will probably not be significant because of the cost of transporting atmospheric pressure, low-Btu gas.

1.1.4 Commercial Prospects

Many industries either must have or prefer a gaseous fuel to meet their energy requirements. In the near term, low-Btu gas from fixed-bed, atmospheric pressure gasifiers like the Wellman-Galusha will be used primarily as a substitute fuel by industries threatened with natural gas curtailments. The low-Btu gas will principally be considered for use as a fuel in on-site furnaces, heaters, kilns, and small boilers. Its substitution for natural gas will most likely occur when: 1) the costs of retrofitting for use of the low-Btu gas are small, and 2) the low-Btu gas requires minimal purification.

In both new and retrofit applications where use of a gaseous fuel is not mandatory, low-Btu coal gasification is mainly competing with the alternative of direct coal combustion. Factors affecting the selection of coal gasification or direct coal combustion include: the suitability of the coal conversion technology for satisfying the specific end use, the cost of the technology, the cost and difficulty of retrofitting, the cost of environmental controls, and the cost of the coal.

TABLE 1.1-2. CURRENT WELLMAN-GALUSHA COAL GASIFICATION FACILITIES IN THE UNITED STATES

Gasifier Used	Coal Feedstock	Gas Purification Processes	Company/Location	Number of Gasifiers	Remarks
Wellman-Galusha	Anthracite, low sulfur (~0.7)	• Cyclone	Glen-Gery Brick Co. - York, PA - Reading, PA - Shoemakersville, PA - Watsontown, PA - New Oxford, PA	8	• Currently in commercial operation • Product gas used to fire brick kiln
Wellman-Galusha	Anthracite, low sulfur	• Cyclone	Hazelton Brick Co. - Hazelton, PA	4	• One gasifier in use • Three other gasifiers inactive • Product gas used to fire brick kiln
Wellman-Galusha	Anthracite, low sulfur	• Cyclone	Binghamton Brick Co. - Binghamton, NY	2	• Gasifiers not currently in use
Wellman-Galusha	Bituminous, low sulfur (~0.7%)	• Cyclone	National Lime & Stone Co. - Cary, OH	1	• Currently in commercial operation • Product gas used to fire lime kiln • Lime will remove some of the sulfur species in the flue gas
Wellman-Galusha	Anthracite, low sulfur	• Cyclone • Gas Quench	Can Do, Inc. - Hazelton, PA	2	• To be completed in 1980 • Product gas to be used in an industrial park • Possibility of adding two more gasifiers • Partial funding by DOC
Wellman-Galusha	KY Bituminous CO Subbituminous MT Bituminous ND Lignite	• Cyclone • Gas Quench • Tar/Liquor separation	Bureau of Mines - Ft. Snelling, MN	1	• Commercial-size demonstration unit • Partial funding by DOE • First series of test runs completed in 1978 • Additional tests conducted in 1979 • Product gas was used to fire an iron pelletizing kiln • Excess product gas was combusted
Wellman-Galusha	Bituminous, low sulfur	• Cyclone • Possibly gas quench, tar/liquor separation, wastewater treatment and sulfur removal (Stretford)	Pike County - Pikeville, KY	2	• To be completed in 1982 • Product gas used to fire boilers and process heaters • Partial funding by DOE

TABLE 1.1-2. (CONTINUED)

Gasifier Used	Coal Feedstock	Gas Purification Processes	Company/Location	Number of Gasifiers	Remarks
Wellman-Galusha	Anthracite, low sulfur (∿0.7%)	• Cyclone	Howmet Aluminum - Lancaster, PA	1	• To be completed in early 1980 • Product gas used to fire process furnaces • Possibility of adding up to eleven more gasifiers
Chapman (Wilputte)	Bituminous, low sulfur (∿0.6%)	• Cyclone • Gas quench • Tar/liquor separation • Wastewater evaporation	Holston Army Ammunition Plant - Kingsport, TN	12	• Currently in commercial operation • Product gas used to fire process heaters • Only two gasifiers are operated at one time to meet current fuel needs • By-product tar used with coal to fire a steam boiler
Foster Wheeler/Stoic	Bituminous, low sulfur	• Cyclone • Electrostatic precipitator (ESP)	University of Minnesota - Duluth, MN	1	• Construction completed in 1978 • Partial funding by DOE • 100 hours of start-up tests completed • Full time operation scheduled for fall 1979 • Product gas to be used to fire steam boilers • By-product tar to be used to fire a steam boiler
Wellman Incandescent	Bituminous	• Cyclone • ESP • Sulfur removal (Stretford)	Caterpillar, Inc. - York, PA	1	• Demonstration-commercial size • Product gas to be used to fire process heaters
Riley Morgan	Bituminous lignite	• Cyclone	Riley Stoker Co. - Worchester, MA	1	• Commercial-size demonstration unit • Coal hopper vent control
Foster Wheeler/Stoic	Various	• Cyclone • quench	General Motors Corp - Siginaw, Mich	1	• Commercial size demonstration unit • Gas used in metal processing furnace • Start up in 1979
Wellman-Galusha	Coke	• Cyclone	Gulf & Western (N. J. zinc) - Ashtabula, Ohio	1	• Gas used in process furnace • Installed 1963
Wellman-Galusha	Coke	• Cyclone	Olin Chemical Corp. - Ashtabula, Ohio	1	• Gas used in process furnace • Installed 1963
Wellman-Galusha	Lignite	• Not available	Chemical Exchange - Houston, TX	1	• Start up in 1979 • Gas end use not available

TABLE 1.1-3. PAST USERS OF GAS PRODUCED BY WELLMAN-GALUSHA[a] GASIFIERS

- chemical plants
- glass plants
- steel mills
- magnesium manufacturers
- silk mills
- bakeries
- wire mills
- foundries
- potteries
- aluminum and stainless steel manufacturers
- ordinance plants
- tin plate mills
- lime plants
- brick plants
- zinc smelters
- iron ore processors
- fertilizer plants

[a]Specific uses varied from heat treating (in glass and steel mills) to synthesis gas (for synthetic fertilizer manufacture). Materials gasified included charcoal, coke, anthracite, and bituminous coa.

Increased commercialization of low-Btu gasification systems like the Wellman-Galusha will also depend on demonstration of the environmental acceptability of the gasification systems. Although commercially available controls seem to be adequate, some of the ocntrols (such as treatment of process condensate blowdown) have not been adequately demonstrated on coal gasification systems. The costs of these controls are also uncertain.

Gasification systems featuring Wellman-Galusha gasifiers are most suitable for relatively small applications, with fuel demands ranging from about 8.8 to 88 MW of thermal energy (30 to 300 million Btu/hr). This would require from 1 to 10 gasifiers. Energy demands greater than about 88 MW (300 million Btu/hr) may be better served by gasification systems using gasifiers with larger capacities (for example, pressurized gasifiers).

McDowell-Wellman can deliver Wellman-Galusha gasifiers 6 to 8 months from the date of order. However, systems using 2 to 4 gasifiers and including extensive gas purification will require 18 to 24 months from initial feasibility studies to full-scale operations. (Refs. 1, 2).

Wellman-Galusha gasification systems will be most widely used in industrialized areas which also contain available coal reserves. Two areas of the country which meet these conditions are the Northeast and Midwest.

1.1.5 Energy Efficiency

The energy efficiency of Wellman-Galusha gasification systems will be a significant factor affecting their commercialization potential. However, this factor may become less critical if alternative fuels, e.g., natural gas or petroleum liquids, are either unavailable or too expensive.

A large number of energy efficiencies can conceivably be defined. In this study, three efficiencies are used:

- coal to low-Btu gas efficiency which relates the energy of the product gas (higher heating value or HHV of combustibles plus sensible heat) to the HHV of the feed coal,

- gas production efficiency which relates the energy of the product gas to the total energy input to the system (HHV of coal plus utility steam and electricity energy), and

- overall thermal efficiency which relates the energy of the product gas and by-product tars, oils, and steam to the total energy input to the system.

Mathematically, the three energy efficiencies are defined as follows:

$$\eta_{cg} = \frac{(Q_g)_{out}}{(Q_c)_{in}} \times 100$$

$$\eta_{gT} = \frac{(Q_g)_{out}}{(Q_T)_{in}} \times 100$$

and

$$\eta_T = \frac{(Q_T)_{out}}{(Q_T)_{in}} \times 100$$

where

η_{cg} = coal to gas efficiency (%)

η_{gT} = gas production efficiency (%)

η_T = overall thermal efficiency (%)

$(Q_g)_{out}$ = output product gas energy

$(Q_c)_{in}$ = input coal energy

$(Q_T)_{out}$ = total output energy (product gas + by-products + steam)

$(Q_T)_{in}$ = total input energy (coal + steam + electricity)

Calculated energy efficiencies for the Wellman-Galusha systems considered in this report are shown in Table 1.1-4. These calculated efficiencies show that the types of processes used, by-products produced, and the nature of the coal feedstock affect the coal to gas and overall thermal energy efficiency of the system.

1.1.6 Detailed Capital and Operating Costs

Capital and operating costs were calculated for the following Wellman-Galusha gasification systems producing nominally 17.6 MW (60 x 10^6 Btu/hr) and 87.9 MW (300 x 10^6 Btu/hr) of product low-Btu gas:

TABLE 1.1-4. CALCULATED ENERGY EFFICIENCIES FOR VARIOUS UNCONTROLLED WELLMAN-GALUSHA GASIFICATION SYSTEMS

Coal Feed Type	Typical Raw Gas Temperature	Energy Efficiencies for Systems Producing a Hot Product Gas			Energy Efficiencies for Systems Producing Cool Desulfurized Gas		
		η_{cg}[a]	η_{gT}[b]	η_T[c]	η_{cg}[a]	η_{gT}[b]	η_T[c]
Anthracite	700°K (800°F)	87.2[d]	86.6[d]	86.6[d]	80.5[e]	78.9[e]	81.5[e]
Low-Sulfur, HVA Bituminous	840°K (1050°F)[f]	92.8[d]	92.2[d]	92.2[d]	68.8[e]	67.0[e]	83.2[e]
High-Sulfur, HVA Bituminous	640°K (700°F)	NA[g]	NA[g]	NA[g]	69.6[e] 60.4[h] 62.1[i]	66.8[e] 55.9[h] 50.5[i]	82.6[e] 71.2[h] 63.9[i]
Lignite	420°K (300°F)	NA[g]	NA[g]	NA[g]	77.0[e]	73.6[e]	88.5[e]

[a] η_{cg} is the coal to low-Btu gas energy efficiency which relates the energy of the product gas (higher heating value of HHV of the combustible gases plus sensible heat) to the HHV of the feed coal.

[b] η_{gT} is the gas production efficiency which relates the energy of the product gas to the total energy input to the system (HHV of coal plus utility steam and electricity energy).

[c] η_T is the overall thermal efficiency which relates the energy of the product gas and by-product tars, oils, and steam to the total energy input to the system.

[d] These systems produce a "moderately clean" industrial fuel gas. A "moderately clean" industrial fuel gas is used in this report to describe a low-Btu gas whose combustion emissions would be equal to or lower than the 1971 new source performance standards (NSPS) for direct combustion of coal in a large stream.

[e] These systems produce a "clean" industrial fuel gas using the Stretford process for removing H_2S. A "clean" industrial fuel gas is used in this report to describe a low-Btu gas whose combustion emission would be approximately equal to the 1979 NSPS for direct combustion of coal in a large steam generator.

[f] This temperature is much higher than that which would normally be encountered in a Wellman-Galusha gasifier (600-700°K is more typical). See discussion in Section 3.

[g] Not applicable - These coals have sulfur contents too high to produce a hot, "moderately clean" industrial fuel gas.

[h] These systems produce a "clean" industrial fuel gas using the MEA process to remove sulfur species. In these systems some of the low-Btu gas is used to meet the energy requirements of the MEA process.

[i] These systems produce a "very clean" gas using the MEA process.

- System 1 produces a hot, raw product gas.
- System 2 produces a desulfurized product gas (down to 10 ppmv H_2S) using the Stretford sulfur removal process.
- System 3 produces a desulfurized product gas (down to 200 ppmv H_2S) using a MEA sulfur removal process operating at 0.44 MPa (50 psi).
- System 4 produces a desulfurized product gas (less than 10 ppmv total sulfur) using an MEA sulfur removal process operating at 1.5 MPa (200 psi).

Tables 1.1-5 and 1.1-6 summarize the capital and operating costs for uncontrolled Wellman-Galusha gasification systems using various coal feedstocks. Cost of removing sulfur species from the low-Btu product gas are included in these cost estimates. However, pollution control equipment costs are not included.

As shown in Tables 1.1-5 and 1.1-6, the product gas costs are dependent upon coal feedstock, product gas specifications (tar/sulfur content) and plant size. Product gas costs for producing a hot, raw gas for on-site use (System 1) range from \$1.90 to \$3.80 per GJ (\$2.00 to \$4.00 per 10^6 Btu) depending upon the coal feedstock. For systems using a Stretford sulfur removal process, product gas costs range from \$3.40 to \$5.80 per GJ (\$3.60 to \$6.10 per 10^6 Btu) depending upon the product gas sulfur content and unit size. If an MEA sulfur removal process is used to remove gaseous sulfur species, product gas costs would range from \$3.80 to \$6.10 per GJ (\$4.00 to \$6.40 per 10^6 Btu) depending upon the product gas sulfur content and unit size.

For each of these gasification systems, the major cost item is the coal feedstock. For systems using anthracite coal, the coal costs represent 36 to 56 percent of the total costs of the product gas. For systems using low-sulfur bituminous coal, coal costs are 36 to 70 percent of the product gas costs and for high-sulfur bituminous coals, 25 to 42 percent.

1.2 WASTE STREAMS AND POLLUTANTS OF MAJOR CONCERN

Wellman-Galusha low-Btu gasification systems are sources of gaseous, liquid, and solid waste streams. Also associated with these systems are process and by-product streams that may contain toxic substances. The multimedia waste streams and pollutants of major concern are summarized in Tables 1.2-1 through 1.2-3. Process and by-product streams that may contain potentially toxic compounds are summarized in Table 1.2-4.

TABLE 1.1-5. CAPITAL INVESTMENT REQUIREMENTS AND ANNUALIZED COSTS OF UNCONTROLLED WELLMAN-GALUSHA GASIFICATION SYSTEMS PRODUCING NOMINALLY 17.6 MW (60×10^6 BTU/HR) OF PRODUCT LOW-BTU GAS (LATE-1977 DOLLARS) [a]

	Coal Feedstock/Type of Product Gas						
	Anthracite		Low Sulfur Bituminous		High Sulfur Bituminous (Cold Gas)		
	Hot Gas[b]	Cold Gas[c]	Hot Gas[b]	Cold Gas[c]	Stretford[c]	MEA (200 ppmv)[d]	MEA (neg.)[e]
Capital Investment Requirements[f], $1,000	3,250	6,110	1,730	5,200	5,500	3,890	4,700
Design Plant Capacity, MW	19.1	17.6	24.9	18.5	18.0	15.6	16.0
Annual Operating Factor	90%	90%	90%	90%	90%	90%	90%
Annualized Costs, $1,000/yr							
Operating and Maintenance Costs							
Coal[g]	1,040	1,040	919	919	702	702	702
Labor/Overhead (@ $15.00/man-hr)	131	197	66	131	131	131	131
Electricity (@ $0.04/kWh)	16	48	18	79	118	225	643
Steam[h]	-	(17)	-	-	-	-	-
Chemicals	-	8	-	8	63	55	55
Maintenance (@ 6% of direct equipment costs)	149	276	74	233	248	175	210
Taxes, Insurance, and GSA Costs (@ 4% of depreciable investment)	117	229	58	194	207	143	171
Capital Related Charges[i]	602	1,116	326	950	1,003	715	867
TOTAL Annualized Costs, $10³/yr	2,055	2,897	1,461	2,514	2,472	2,146	2,779
Average Gas Costs, $/GJ	3.79	5.80	2.07	4.79	4.84	4.85	6.10

[a]Each system has a nominal capabity of 17.6 MW (60×10^6 Btu/hr) of tar/oil-free product gas at 43.3°C (110°F). The actual total energy supplied to the end-user though is as indicated. Differences in the indicated useful energy supplied and the basic capacity of 17.6 MW (60×10^6 Btu/hr) are a result of 1) energy credits taken for the sensible heat and/or tar/oil content of the product gas for the hot gas systems, and 2) use of a portion of the product gas to supply energy to the stripper reboiler in the systems that use the MEA process.

[b]These systems use only a cyclone for product gas purification and deliver a hot product gas to the end user.

[c]These systems use the Stretford process to remove H_2S from the cooled product gas. Residual H_2S levels are nominal 10 ppmv. Organic sulfur compounds, such as COS and CS_2, are not removed by the Stretford process.

[d]This system uses the MEA process operating at 0.44 MPa (50 psig) to remove sulfur species from the cooled product gas. Residual sulfur species amount to the equivalent of 200 ppmv H_2S.

[e]This system uses the MEA process operating at 1.5 MPa (200 psig) to remove sulfur species from the cooled product gas. Negligible sulfur species are left in the product gas.

[f]In estimating capital investment requirements, a spare gasifier/cyclone unit is included for all systems and cooling liquor pumps are spared 100%.

[g]Assumed coal properties and delivered costs are: Anthracite: 29.7 MJ/kg (12,800 Btu/lb) and $50/metric ton ($45/short ton)
Low sulfur bituminous: 33.2 MJ/kg (14,300 Btu/lb) and $40/metric ton ($36/short ton)
High sulfur bituminous: 29.0 MJ/kg (12,500 Btu/lb) and $28/metric ton ($25/short ton)

[h]Steam costs were assumed to be $0.011/kg ($5/10³ lb). Steam credits were taken as $1/GJ ($1.05/10⁶ Btu).

[i]Basis for capital related charges:
- Utility financing method
- Late-1977 dollars without inflation
- 25-year economic project lifetime
- 4% per year straightline depreciation of depreciable investment
- 100% equity financing
- 15% after tax return on equity
- 46% federal income tax rate
- 10% pretax return on working capital

TABLE 1.1-6. CAPITAL INVESTMENT REQUIREMENTS AND ANNUALIZED COSTS OF UNCONTROLLED WELLMAN-GALUSHA GASIFICATION SYSTEMS PRODUCING NOMINALLY 87.9 MW (300×10^6 BTU/HR) OF PRODUCT LOW-BTU GAS (LATE-1977 DOLLARS)[a]

	Coal Feedstock/Type of Product Gas						
	Anthracite		Low Sulfur Bituminous		High Sulfur Bituminous (Cold Gas)		
	Hot Gas[b]	Cold Gas[c]	Hot Gas[b]	Cold Gas[c]	Stretford[c]	MEA (200 ppmv)[d]	MEA (neg.)[e]
Capital Investment Requirements[f], $1,000	13,300	19,700	4,770	13,100	14,200	11,600	14,000
Design Plant Capacity, MW	95.6	87.9	99.7	92.4	89.9	77.9	80.1
Annual Operating Factor	90%	90%	90%	90%	90%	90%	90%
Annualized Costs, $1,000/yr							
Operating and Maintenance Costs							
Coal[g]	5,198	5,198	3,676	4,595	3,510	3,510	3,510
Labor/Overhead (@ $15.00/man-hr)	524	657	263	394	394	394	394
Electricity (@ $0.04/kWh)	81	238	72	396	590	1,125	334
Steam[h]	-	(86)	-	-	-	-	3,390
Chemicals	-	40	-	40	315	274	274
Maintenance (@ 6% of direct equipment costs)	596	871	189	563	617	499	582
Taxes, Insurance, and GSA Costs (@ 4% of depreciable investment)	468	713	149	465	512	406	474
Capital Related Charges[i]	2,476	3,640	916	2,436	2,614	2,165	2,625
TOTAL Annualized Costs, $\$10^3$/yr	9,343	11,271	5,265	8,889	8,552	8,373	11,583
Average Gas Costs, $/GJ	3.44	4.52	1.86	3.39	3.35	3.78	5.09

[a]Each system, except the one producing a hot product gas from low sulfur bituminous coal, has a basic capacity of 87.9 MW (300×10^6 Btu/hr) of tar/oil-free product gas at 43.3°C (110°F). The actual total energy supplied to the end-user though is as indicated. Differences in the indicated useful energy supplied and the basic capacity of 87.9 MW (300×10^6 Btu/hr) are a result of 1) energy credits taken for the sensible heat and/or tar/oil content of the product gas for the hot gas systems, and 2) use of a portion of the product gas to supply energy to the stripper reboiler in the systems that use the MEA process. For the hot gas, low sulfur bituminous system, the tar/oil-free product gas rate is 74.0 MW (253×10^6 Btu/hr). But, the sensible heat and tar/oil content of the hot product gas raise the total system capacity to 99.7 MW (340×10^6 Btu/hr). This capacity was used in the cost analysis because it is comparable to the capacity of the other systems examined.

[b]These systems use only a cyclone for product gas purification and deliver a hot product gas to the end user.

[c]These systems use the Stretford process to remove H_2S from the cooled product gas. Residual H_2S levels are nominal 10 ppmv. Organic sulfur compounds, such as COS and CS_2, are not removed by the Stretford process.

[d]This system uses the MEA process operating at 0.44 MPa (50 psig) to remove sulfur species from the cooled product gas. Residual sulfur species amount to the equivalent of 200 ppmv H_2S.

[e]This system uses the MEA process operating at 1.5 MPa (200 psig) to remove sulfur species from the cooled product gas. Negligible sulfur species are left in the product gas.

[f]In estimating capital investment requirements, a spare gasifier/cyclone unit is included for all systems and cooling liquor pumps are spared 100%.

[g]Assumed coal properties and delivered costs are: Anthracite: 29.7 MJ/kg (12,800 Btu/lb) and $50/metric ton ($45/short ton)
Low sulfur bituminous: 33.2 MJ/kg (14,300 Btu/lb) and $40/metric ton ($36/short ton)
High sulfur bituminous: 29.0 MJ/kg (12,500 Btu/lb) and $28/metric ton ($25/short ton)

[h]Steam costs were assumed to be $0.011/kg ($5/10^3 lb). Steam credits were taken as $1/GJ ($1.05/10^6 Btu).

[i]Basis for capital related charges:
- Utility financing method
- Late-1977 dollars without inflation
- 25-year economic project lifetime
- 4% per year straightline depreciation of depreciable investment
- 100% equity financing
- 15% after tax return on equity
- 46% federal income tax rate
- 10% pretax return on working capital

TABLE 1.2-1. GASEOUS WASTE STREAMS AND POLLUTANTS OF MAJOR CONCERN FROM WELLMAN-GALUSHA LOW-BTU GASIFICATION SYSTEMS

Operation Process	Gaseous Waste Stream	Pollutants of Major Concern	Remarks
Coal Preparation			
Coal Storage and Handling	Coal dust	Particulate matter similar in composition ot the coal feedstock.	Bituminous coal gave slightly positive results for the Ames test which indicates a potential for the coal being carcinogenic. Anthracite coal results were negative.
Coal Gasification			
Wellman-Galusha Gasifier	Coal feeder vent gases	Gaseous species in the product gas (CO, H_2S, NH_3, HCN, light hydrocarbons).	High levels of CO were found in the coal hopper area.
	Start-up vent gases	Raw product gas constituents. Particulate matter (coal dust, tar, oil aerosols) and gaseous species (CO, H_2, H_2S, COS, NH_3, HCN, light hydrocarbons, etc.). Organics of concern include fused aromatic hydrocarbons, heterocyclic nitrogen, sulfur and oxygen compounds, carboxylic acids, amines, sulfonic acids, sulfoxides, phenols, thiols, benzene, and substituted benzene hydrocarbons. Inorganics of concern include CO, ethylene, Cr, Hg, U, V, Al, P, As, Cu, Cd, H_2S, CO_2, HCN, Li, Tl, Si, Pb, Sb, SO_2, CS_2, Cl, Ti, Zr, Fe, Co, Ni, Ag and Zn.	The amount of tars and oils will depend upon the coal feedstock. Bituminous coals will have a significant amount of tars where anthracite will not. Tars from the gasification of bituminous coals gave positive results on the Ames test which indicates they may be carcinogenic.
	Fugitive emissions (pokehole gases)	Gaseous species in the product gas (CO, H_2S, NH_3, HCN, light hydrocarbons).	Emissions of tars and oils will occur when pokehole valves are open; however, the major emissions from the pokeholes will be from gaseous species in the product gas leaking from the pokehole valves.
Gas Purification			
Gas Quenching and Cooling (Tar/Liquor Separation)	Separator vent gases	Organics of concern include fused aromatic hydrocarbons, amines, heterocyclic nitrogen and sulfur compounds, ethylene, phenols, methane, and carboxylic acids. Inorganics of concern include CO, NH_3, NO_2, CO_2, Cr, Ag, V, Cu, P, Li, As, Fe, Ni, and U.	These pollutants of concern are associated with bituminous coals.
Sulfur Removal-Stretford	Evaporator and oxidizer vent gases	Volatile compounds in the Stretford liquor (H_2O, CO_2, N_2, O_2, and possibly NH_3).	This stream has not been sample because no Stretford processes are currently used in this application or have been successfully demonstrated to remove sulfur species for low-Btu gas.
Sulfur Removal-MEA	Acid gas stream	CO_2, H_2S, COS, CS_2, mercaptans, and light hydrocarbons.	This stream is sent to a sulfur recovery unit consisting of a Claus process followed by a Claus tail gas clean-up process to remove the sulfur species in the acid gas stream. This stream has not been sampled since MEA processes have not been used to remove sulfur species from low-Btu gas. However, Koppers has used the MEA process to desulfurize medium-Btu gas.

TABLE 1.2-2. LIQUID WASTE STREAMS AND POLLUTANTS OF MAJOR CONCERN FROM WELLMAN-GALUSHA LOW-BTU GASIFICATION SYSTEMS

Operation Process	Liquid Waste Stream	Pollutants of Major Concern	Remarks
Coal Preparation			
Coal Handling and Storage	Coal pile runoff	Contain leachable organics and inorganics.	The composition of this stream will depend upon the coal feedstock and site-specific conditions (i.e. pH of leachate).
Coal Gasification			
Wellman-Galusha Gasifier	Ash sluice water	Inorganics of major concern include P, Ti, V, Cu, Fe, Ba, Cd, Cr, CN^-, Li and Ni. Organic concentrations of 65 mg/ℓ have been found; however, it is not certain whether these were present in the plant's service water used to sluice the ash from the gasifier.	The amount of sluice water is low and highly variable. Negative Ames tests were obtained with low to non-detectable results indicated for the cytotoxicity and rodent acute toxicity tests for sluice water from a facility gasifying anthracite coal. This indicates that the ash sluice water has a low potential for effecting health of the environment.
Gas Purification			
Gas Quenching and Cooling	Process condensate	May contain organic and inorganic pollutants found in the quench liquor (see Table 2.3-4).	The amount of process condensate produced will depend upon the system operation and type of processes used. Typical process condensate flow may range between 3.79×10^{-4} to 1.52×10^{-3} m^3/sec (5 to 20 gpm).
Sulfur Removal-Stretford	Solvent blowdown	Thiosulfate and thiocyanate salts.	The amount of these salts produced will depend upon the sulfur and cyanide content of the cooled product gas entering the Stretford process. Sulfur contents may range from 600 to 10,000 ppmv while cyanide may range from 50 to 200 ppmv.

TABLE 1.2-3. SOLID WASTE STREAMS AND MAJOR POLLUTANTS OF CONCERN FROM WELLMAN-GALUSHA LOW-BTU GASIFICATION SYSTEMS

Operation Process	Solid Waste Streams	Pollutants of Major Concern	Remarks
Coal Gasification			
Wellman-Galusha Gasifier	Gasifier ash	Inorganics of major concern include Be, P, Fe, Ca, Al, Li, Ba, Se, Pb, Cs, Cu, Ti, Cd, Sb, V, Co, U, Mg, Sr, Si, Hg, Zr, F, Rb, As, Mn, Cr, Ni, Th, Bi, Ag, Y. Total extractable organics in the ash is low ranging from 40-116 μg/g. Organics of potential concern include phthalate esters, phenols, nitrophenols, and fused aromatic hydrocarbons.	Results from the Ames, cytotoxicity, and rodent acute toxicity tests for ash produced from gasifying anthracite and bituminous coals were negative, low or nondetectable. Effects on soil microcosms were also low. This indicates that the ash may have a low potential for harmful health and ecological effects.
	Ash leachate (anthracite coal)	Inorganics of concern include P, Zn, Cd and Ag.	Results from the Ames, cytotoxicity and rodent acute toxicity tests of leachate from ash produced from gasifying anthracite coal were negative, low or nondetectable. This indicates that leachate resulting from ash may have a low potential for harmful health and ecological effects.
Gas Purification			
Particulate Removal-Hot Cyclone	Collected particulate matter	Inorganics of major concern include Ni, Pb, P, Mn, Fe, Cu, Ba, Sb, Ti, Cr, Ca, Al, V, Li, Mg, Zr, Co, As, Si, Se, Be, Cd, Ag, Th, Zn, F, Ga, Hf, Hg, Sr, Tl, Y. Low concentrations (40 to 800 μg/g) of extractable organics have been determined. Organics of concern include phthalate esters, phenols, nitrophenols, amines, cresols.	Negative results from the Ames test have been obtained with low to nondetectable results from cytotoxicity and rodent acute toxicity tests. High effects on soil microcosms were found. Collected particulates resemble devolatilized coal with carbon contents ranging from 70 to 80%. These may indicate that the cyclone dust may have a low potential for harmful health effects but a high potential for ecological effects.
	Collected particulate matter leachate (anthracite coal)	Inorganics of major concern include Mn, Pb, Li, Zn, Al, Cd, Co, Cu and Fe.	Negative Ames test results were obtained and cytotoxicity test results were nondetectable. This indicates that the leachate may have a low potential for harmful health effects.
Sulfur Removal-Stretford	Sulfur	Contain organics and inorganics including thiocyanate and thiosulfate salts.	No data is currently available on the chemical and biological aspects of the recovered sulfur.
Sulfur Removal-MEA	MEA sludge	Degradation products including oxazolidon-2, 1-(2-hydroxyethyl) imidazolindone-2, diethanol urea, dithiocarbamates, thiocarbamides and other high molecular weight nonregenerable compounds.	No data is currently available on the characteristics (chemical or biological) of MEA sludge.

TABLE 1.2-4. POTENTIAL TOXIC STREAMS AND COMPOUNDS OF MAJOR CONCERN FOR WELLMAN-GALUSHA LOW-BTU GASIFICATION SYSTEMS

Operation Process	Potential Toxic Stream	Compounds of Major Concern	Remarks
Gas Purification			
Gas Quenching and Cooling	By-product tar and oils	Organics of major concern include fused aromatic hydrocarbons, benzene, substituted benzene hydrocarbons, heterocyclic nitrogen, sulfur and oxygen compounds, carboxylic acids, aliphatic hydrocarbons, phenols and amines. Inorganics of concern include Cu, Pb, Sb, Cr, Cd, Ba, Hg, V, Mg, and As.	Tar will be produced from bituminous and lignite coals. Positive Ames test results have been obtained. This indicates that the tar may be carcinogenic. Safe handling and controlling tar leaks procedures are required.
	Quench liquor	Organics of major concern include phenols, fused aromatic hydrocarbons, heterocyclic nitrogen and sulfur compounds, carboxylic acids, thiols, glycols, and epoxides. Inorganics of concern include NH_3, cyanides, P, Se, As, F, Cl, Ca, Fe and Cd.	Results from aquatic bioassay tests indicated a high potential effect on aquatic species. Health effects tests were low; however, because of the chemical characteristics of the quench liquor, safe handling and control of leaks are required.

Gaseous emissions from Wellman-Galusha systems contain a significant amount of pollutants that may have harmful health and ecological effects. Gaseous pollutants (CO, H_2S, HCN, NH_3, and light hydrocarbons) from the coal feeder and gasifier pokeholes need to be controlled. Start-up vent gases will contain compounds found in the raw product gas (CO, sulfur species, light hydrocarbons, tars ands oils) which will require control before venting to the atmosphere. Vent gases from the by-product tar recovery process will contain significant amounts of potentially harmful pollutants and will, therefore, need to be controlled. Emissions from sulfur removal processes are not yet characterized since there are currently no sulfur recovery processes being used with fixed-bed, atmospheric pressure, low-Btu gasification systems.

The amount of liquid effluents from Wellman-Galusha systems will be limited to blowdown streams, ash sluice water, and coal pile runoff. Of these effluents, the blowdown streams will contain significant quantities of potentially harmful constituents. Ash sluice water and coal pile runoff will contain compounds leached from the ash and coal which may affect health and the environment.

Solid waste streams from Wellman-Galusha systems will consist of ash, collected particulates, sulfur, and blowdown from the MEA sulfur removal process. Ash and sulfur may contain leachable constituents that may be potentially harmful. Collected particulates resemble devolatilized coal and therefore, may be classified as a solid combustible material. MEA blowdown sludge contains potentially harmful constituents and needs to be treated before disposal.

The by-product tar and quench liquor represent process streams that contain potentially harmful organic and inorganic compounds. Worker exposure and accidental releases of these streams should be carefully controlled.

It should be emphasized that the chemical characteristics and potential biological effects are highly dependent upon the coal feedstock and processes used. For example, tars will not be produced when anthracite coal is gasified; however, process condensate may contain light oils.

1.3 STATUS OF ENVIRONMENTAL PROTECTION ALTERNATIVES

The assessment of the status of environmental protection alternatives involves identifying and evaluating control alternatives to determine the:

- most effective control alternatives, and
- costs and energy impacts of those control alternatives.

The secondary waste streams from the most effective control alternatives are compared to existing and proposed regulations and to the Multimedia Environmental Goals (MEG's) (Ref. 3).

1.3.1 Most Effective Control Alternatives

The criteria used to identify the most effective control alternatives are:

- applicability to treating waste streams from low-Btu gasification systems,
- control effectiveness,
- development status, and
- secondary waste streams.

Costs and energy considerations are not considered in the selection of the most effective controls. Table 1.3-1 shows the most effective control alternatives to treat the multimedia waste streams and potential toxic substances associated with Wellman-Calusha gasification systems.

1.3.2 Cost and Energy Considerations

Costs of the "best available" candidate control methods (identified in Table 1.3-1) are summarized in Table 1.3-2. Most of the control alternatives have negligible costs when compared to the costs of the low-Btu gas. The most costly control alternatives are those for treatment of the MEA acid gas vent stream and process condensate. The most costly control methods also have the largest energy consumption. Tars and oils represent a large energy credit (up to 0.25 J per J of product gas produced depending upon the coal feedstock).

One method to reduce the costs and energy consumption of process condensate treatment is to reduce the size of the condensate stream. This may be accomplished by drying the coal prior to gasification (the dryer off-gas could contain large amounts of coal volatiles). The size of the stream could also be reduced by minimizing the amount of steam fed to the gasifier.

TABLE 1.3-1. SUMMARY OF MOST EFFECTIVE EMISSION, EFFLUENT, SOLID WASTES, AND TOXIC SUBSTANCES CONTROL ALTERNATIVES

Waste Stream	Most Effective Control Technology
Air Emissions	
• Fugitive dust from coal storage	• Covered bins • Asphalt and polymer coatings
• Fugitive dust from coal handling	• Enclosed equipment, collect gas and recycle to gasifier inlet air or treat with baghouse
• Coal feeding system vent gas	• Collect gas and recycle to gasifier inlet air or combine with product gas
• Ash removal system vent gas	• No control necessary in a properly designed system
• Start-up emissions	• Incinerator
• Fugitive emissions and pokehole gases from gasifier	• Adherence to good operating and good maintenance procedures
• Fugitive emissions from hot cyclone	• Same as for gasifier
• Separator gas	• Combine with product gas • Recycle to gasifier
• MEA acid gas	• Stretford • Claus with tail gas cleanup
• Stretford oxidizer vent gas	• None required with existing applications. However, viability of this approach needs to be confirmed in a gasification process application.
• Stretford evaporator vent gas	• Same as for oxidizer vent gas
Liquid Effluents	
• Water runoff	• Use covered bins for coal storage • Contain, collect and reuse for process needs
• Ash sluice water	• Collect and recycle to ash sluice system
• Process condensate	• Containment and treatment at hazardous waste facility

TABLE 1.3-1. (Continued)

Waste Stream	Most Effective Control Technology
• Stretford blowdown	• Containment and treatment at hazardous waste facility • Reductive incineration at high temperature
Solid Wastes	
• Ash	• Secured landfill
• Cyclone dust	• Combustion in incinerator or coal-fired boiler
• Recovered sulfur	• Purify for sale or disposal
• MEA blowdown	• Containment and treatment at hazardous waste facility
Toxic Substances	
• Tars and oils	• Combustion in boiler or furnace

[a]Based only on effectiveness in eliminating or reducing emissions.

TABLE 1.3-2. SUMMARY OF MAJOR COSTS AND ENERGY CONSUMPTION OF ALTERNATIVE CONTROL METHODS

Operation Process	Waste Stream Media Waste Stream	Control Method	Control Costs ($/GJ)[a]	Energy Consumption (J/J)[b]
Coal Preparation				
Coal Handling and Storage	Gaseous Emissions			
	• Fugitive dust	• Covered bins	<0.01	• Negligible
		• Asphalt and polymer coatings	<0.01	• Negligible
		• Enclosed equipment, collection systems	<0.01	• Negligible
	Liquid Effluents			
	• Coal pile runoff	• Covered bins	<0.01	• Negligible
		• Collection and reuse	<0.01	• Negligible
Coal Gasification				
Wellman-Galusha Gasifier	Gaseous Emissions			
	• Coal feeding vent gases	• Collection and recycle to gasifier inlet air or product gas	<0.01	• Negligible
	• Ash removal vent gases	• None required	--	--
	• Start-up vent gases	• Flare or incinerator	<0.1	• NA[c]
	• Fugitive emissions (pokehole gases)	• Good maintenance and operating practices[d]	--	--
	Liquid Effluents			
	• Ash sluice water	• Collection and reuse	<0.01	• Negligible
	Solid Wastes			
	• Ash (low-S Bituminous)	• Secured landfill	0.01-0.02(0.01-0.03)[i]	• Negligible
	• Ash (high-S Bituminous)			
	- Stretford		0.02-0.06(0.04-0.08)[i]	• Negligible
	- MEA[e]		0.03-0.07(0.05-0.10)[i]	• Negligible
	- MEA (Stringent)[f]		0.03-0.06(0.04-0.10)[i]	• Negligible
	• Ash (Anthracite)		0.04-0.10(0.07-0.15)[i]	• Negligible
	• Ash (Lignite)		0.04-0.10(0.07-0.15)[i]	• Negligible
Gas Purification				
Particulate Removal-Hot Cyclone	Solid Wastes			
	• Collected particulates	• Combustion	<0.01	• NA[g]
Gas Quenching and Cooling	Gaseous Emissions			
	• Quench liquor/tar separator vent	• Combine with the product gas	<0.01	• Negligible
	Liquid Effluents			
	• Process Condensate	• Containment and treatment off-site in a hazardous waste treatment facility		
	- High-S Bituminous			
	• Stretford		0.40-0.59	• NA[h]
	• MEA[e]		0.88-1.32	• NA[h]
	• MEA (Stringent)[f]		1.16-1.69	• NA[h]
	- Lignite		1.43-2.01	• NA[h]
	• Process Condensate	• Forced evaporation on-site		
	- High-S Bituminous			
	• Stretford		0.06-0.07	0.019
	• MEA[e]		0.12-0.14	0.042
	• MEA (Stringent)[f]		0.16-0.18	0.055
	- Lignite		0.18-0.20	0.065

TABLE 1.3-2. (CONTINUED)

Operation Process	Waste Stream Media Waste Stream	Control Method	Control Costs ($/GJ)[a]	Energy Consumption (J/J)[b]
Sulfur Removal-Stretford	Gaseous Emissions			
	• Oxidizer vent gas	• None required	--	--
	• Evaporator vent gas	• None required	--	--
	Liquid Effluents			
	• Blowdown solvent	• Reductive incineration	NA	NA
	Solid Wastes			
	• Sulfur	• Secured landfill		
	- Low-S Bituminous		0.002-0.009	• Negligible
	- High-S Bituminous		0.02-0.07	• Negligible
	- Anthracite		0.002-0.009	• Negligible
	- Lignite		0.005-0.020	• Negligible
Sulfur Removal-MEA	Gaseous Emissions			
	• Acid gas	• Stretford acid gas removal		
	- 15 MW product gas		1.2-1.6	0.007
	- 74 MW product gas		0.6-0.8	0.007
	• Acid gas	• Claus without tail gas cleanup		
	- 15 MW product gas		0.5-0.6	0.008
	- 74 MW product gas		0.2	0.008
	Solid Wastes			
	• MEA Blowdown	• Containment and treatment at a hazardous waste facility	<0.01	NA[h]
	• Sulfur	← Same as the Stretford sulfur removal case →		

NA - Data not available for calculation of energy consumptions.

[a]Costs are annualized costs per GJ of cooled, detarred product gas.

[b]Energy consumptions are J of energy required by the control method per J of cooled, detarred product gas.

[c]Energy consumption will depend upon the materials (coke, coal, wood, oil, etc.) used to start up the gasifier and the composition of the gas during the start up time period.

[d]Good maintenance and operating procedures should already be defined and included in the units operating costs.

[e]MEA produces a product gas to meet combustion limits of 86 ng SO_2/J (0.2) lb/10^6 Btu.

[f]MEA (stringent) produces a "very clean" product gas containing 6 ng/Nm^3 (10 ppmv) of sulfur species.

[g]Combustion characteristics of the collected particulates have not been determined.

[h]Data are not available on the energy consumption of treating process condensate at an off-site hazardous waste treatment facility.

[i]Control costs: Without fixation (with fixation)

1.3.3 Impacts on Air Quality

The potential air quality impacts of gaseous waste streams from Wellman-Calusha low-Btu gasification facilities were estimated and compared to the following air standards and guidelines:

- New Source Performance Standards (NSPS) for stationary sources,
- National Emissions Standards for Hazardous Air Pollutants (NESHAP),
- National Ambient Air Quality Standards (NAAQS),
- State and Federal Emission Standards, and
- Performance Guidelines for Lurgi Gasification Plants

The air quality impacts of specified pollutants (CO, H_2S, COS, NH_3, HCN, NO_x, SO_x, and non-CH_4 hydrocarbons) in uncontrolled gaseous waste streams from Wellman-Calusha systems using a low- and high-sulfur bituminous coal were estimated using atmospheric dispersion models (See Appendix). The waste streams considered were:

- coal feeder gases,
- tar/quench liquor separator vent gases, and
- incinerated Claus tail gases (high-sulfur case only)

Table 1.3-3 shows a comparison between predicted maximum ground-level concentrations of CO, nonmethane hydrocarbons, NO_x, and SO_2 to the NAAQS and H_2S concentrations to the Texas ambient air standards. With the exception of nonmethane hydrocarbons, the predicted pollutant concentrations for both the low- and high-sulfur coals are below the NAAQS; however, they are relatively high. As indicated in Table 1.3-3, H_2S concentrations for the high-sulfur coal case exceed the Texas standard.

The major source of CO, H_2S NH_3, HCN, and COS emissions is the separator vent. Recycling the separator vent gas to the product gas would given an 85 to 98 percent reduction in the ground-level concentrations of those pollutants. Those gases could also be flared or incinerated. The resulting combustion gases would contain SO_x and NO_x with smaller amounts of CO, H_2S, NH_3, HCN and COS. There are no data on using combustion to control this emission.

TABLE 1.3-3. COMPARISON OF PREDICTED POLLUTANT CONCENTRATIONS TO THE NAAQS AND STATE OF TEXAS H_2S AMBIENT AIR STANDARDS

Pollutant	Low-Sulfur Coal[a] Predicted Concentrations ($\mu g/m^3$) 24-h	3-h	1-h	High-Sulfur Coal[b] Predicted Concentrations ($\mu g/m^3$) 24-h	3-h	1-h	NAAQS ($\mu g/m^3$) Primary Standards	Secondary Standards
CO	2,300	9,800	13,700	2,300	9,800	13,700	10,000 (8-h)[c]	10,000 (8-h)[c]
Non-CH_4 Hydrocarbons	650	2,800	3,900	650	2,800	3,900	160 (3-h)[c,d]	160 (3-h)[c,d]
NO_x	20	70	90	20	70	90	100 (aam)	100 (aam)
SO_x	NA	NA	NA	110	380	560	365 (24-h)[c]	1,300 (3-h)[c]
							State of Texas Regulations	
H_2S	10	50	70	90	390	540	122 $\mu g/m^3$	

NA - Not applicable, SO_x emissions are from the high-sulfur case using an incinerator to combust the Claus unit's tail gases.

aam - Annual arithmetic mean.

[a]For the low-sulfur coal case, a Stretford sulfur removal process is used.

[b]For the high-sulfur coal, an MEA sulfur removal process is used followed by a Claus process and a Claus tail gas incinerator.

[c]Concentration not to be exceeded more than once a year.

[d]6:00 a.m. to 9:00 a.m.

The Claus tail gas incinerator is the major source of SO_2 emissions. These emissions can be reduced approximately 90 percent by incorporating a Claus tail gas clean up process.

In summary, the gaseous emissions from a well-controlled Wellman-Calusha gasification facility should not significantly impact air quality. This implies that the separator vent gases are recycled to the product gas and for the high-sulfur case (using MEA and Claus processes), a Claus tail gas clean-up process is used before incineration.

1.3.4 Impacts on Water

The quantity of liquid wastes from a Wellman-Calusha gasification facility will be small; however, the concentrations of various constituents in those waste streams may exceed effluent standards. The liquid effluents associated with a Wellman-Calusha system are as follows:

- water runoff from coal storage,
- ash sluice water,
- process condensate, and
- blowdown from the Stretford process.

Water runoff may contain constituents exceeding effluent standards. The concentration of those constituents will be variable and highly site- and coal-specific.

Table 1.3-4 shows the constituents in the ash sluice water, process condensate, and Stretford blowdown that have either been found or estimated to exceed the most stringent effluent standards and Discharge Multimedia Environmental Goal values given in the MEG's. The amounts and types of organic compounds found in the process condensate will vary depending upon the coal feedstock. High levels of organics will be present when bituminous and lignite coals are used. Low levels of organics will be present when anthracite coals are gasified.

1.3.5 Impacts on Land

Under the Resource Conservation and Recovery Act (RCRA), EPA has issued guidelines for the land disposal of solid wastes. These standards set minimum levels of performance for any solid waste land disposal site. The guidelines apply to the land disposal of all solid material. Additional standards have been proposed for hazardous solid wastes (Ref. 4).

TABLE 1.3-4. LIQUID EFFLUENTS FROM WELLMAN-GALUSHA LOW-BTU GASIFICATION SYSTEMS EXCEEDING THE MOST STRINGENT EFFLUENT STANDARDS AND DMEG VALUES

Liquid Effluent	Constituents Exceeding Most Stringent Effluent Standards	Constituents Exceeding Health and/or Ecological DMEG Values in the Multimedia Environmental Goals[a]
Ash Sluice Water	Fe, Cr, CN^- and suspended solids	P, Fe, Ti, Ba, La, Li, Cd, Cu, CN^-, Ni and V
Process Condensate[b] (Bituminous Coal)	NH_3, As, Cl^-, CN^-, B, F^-, Fe, Phenols, P, Se, $SO_4^=$, BOD, COD, and suspended solids	Phenols, Fused Aromatic Hydrocarbons, Heterocyclic Nitrogen and Sulfur Compounds, Carboxylic Acids, Thiols, Glycols, Epoxides, NH_4, CN^-, P, Se, As, F^-, Cl^-, Ca, Fe and Cd
Stretford Blowdown	Fe	Vanadate, Fe, EDTA and possibly Thiocyanates and Thiosulfates

[a]Worst case DMEG values were used when specific compounds were not identified.

[b]Process condensate produced from gasifying anthracite coal should not contain the high amounts of organic constituents found in process condensate from gasifying bituminous or lignite coals.

DMEG: Discharge Multimedia Environmental Goal

The following solid waste streams from a Wellman-Galusha gasification facility will be regulated under the RCRA:

- gasifier ash,
- cyclone dust,
- sulfur cake, and
- MEA blowdown.

Table 1.3-5 shows the characteristics of those solid waste streams and how the proposed RCRA regulations may apply. All of the solid waste streams may be classified as hazardous wastes under the proposed RCRA regulations.

1.3.6 Product/By-Product Impacts

The product gas and by-product tar produced by Wellman-Galusha facilities may be regulated by the Toxic Substances Control Act (TSCA) of 1976. However, polychlorinated biphenols (PCB's) and chlorofluorocarbons are currently the only specific substances for which regulations have been issued.

The product low-Btu gas may contain toxic substances even after extensive purification. The by-product tar does contain toxic substances. Positive Ames test results for mutagenicity have been obtained as well as toxic responses for the Rodent Acute Toxicity test and the soil microcosm test.

1.3.7 Radiation and Noise Impacts

Wellman-Galusha low-Btu gasification facilities may have radiation and noise impacts. Some radioactive species in the coal may be concentrated in the entrained particulate matter in the raw, low-Btu gas and in the ash. Sources of potential noise impacts in Wellman-Galusha facilities are process blowers and turboblowers, coal conveyors, coal bucket elevators, and pumps.

1.4 DATA NEEDS AND RECOMMENDATIONS

Data needs and recommendations for obtaining those data are divided into the following categories:

- gaseous, liquid, and solid waste stream characterizations and control,
- process and process streams, and
- health and environmental impact assessments.

TABLE 1.3-5. SOLID WASTES FROM WELLMAN-GALISHA LOW-BTU GASIFICATION SYSTEMS THAT WILL BE REGULATED BY THE RCRA

Solid Waste Stream	Characteristics of the Waste Stream that may be Classified as Hazardous
Gasifier Ash	High levels of trace elements are present and may be leached from the ash.
Cyclone Dust	High levels of trace elements are present. The dust contains high levels of carbon (70-90%) and may be classified as ignitable.
Sulfur Cake	The sulfur will contain various components such as vanadium salts, thiocyanates, and thiosulfates.
MEA Blowdown	This stream will contain oxazolidin-2, 1-(2-hydroxyethyl) imidazolindone-2; diethyl urea; dithiocarbamates; thiocarbamides; and other high molecular weight compounds resulting from the formation of nonregenerable complexes.

The data needs for the multimedia waste streams and the process and process streams associated with Wellman-Galusha gasification systems are summarized in Tables 1.4-1 and 1.4-2, respectively. In general, data associated with the gasification of high-sulfur bituminous coal are currently not available. Since existing and planned commercial Wellman-Galusha gasification plants use low-sulfur bituminous and anthracite coals, data on high-sulfur coals may have to be obtained from bench-scale units. Data on the performance of and waste streams from sulfur recovery processes are not available.

Data requirements for assessing the health and environmental impacts of nonregulated pollutants and streams will involve pollutant-specific determinations, long term monitoring and biological testing (including both acute and chronic tests for health and ecological effects). The specific methodologies to be used in performing these impact assessments are still under development. Therefore, the specific data needs are not totally defined.

1.5 ISSUES AND AREAS OF CONCERN BY PROGRAM OFFICES

The EPA Program Offices' issues and areas of concern for Wellman-Galusha low-Btu gasification technology are briefly discussed here. The basic issues and areas of concern include:

- Wellman-Galusha gasification technology:
  - At what stage should existing standards apply to a developing technology?
  - When and to what extent will the technology be commercialized?

- Waste Streams from Wellman-Galusha facilities:
  - What are the potentially harmful pollutants in gaseous, liquid and solid waste streams including potential fugitive emissions?
  - What are the emission rates of regulated and unregulated pollutants?
  - What potentially harmful pollutants in those streams are not currently regulated?
  - What are the health and ecological effects of those pollutants and streams?

- Pollution control technology
  - What technologies have been demonstrated in controlling gaseous, liquid and solid waste streams from Wellman-Galusha facilities?

TABLE 1.4-1. SUMMARY OF WASTE STREAM CHARACTERIZATION AND CONTROL DATA NEEDS AND PLANNED ACTIVITIES TO OBTAIN THOSE DATA

Waste Stream Media / Waste Stream	Additional Characterization Needed	Control Technology Performance Needed	Planned Activities to Obtain Data Needs
Gaseous Emissions			
Coal feeder vent gas	Compounds present for gasification of high-sulfur coal	Effectiveness and actual cost of recycling this stream to the gasifier inlet air	This control will be evaluated by Radian and ORNL at the University of Minnesota (Duluth) (UMD) Foster Wheeler/Stoic gasification facility
Start-up vent gas	Chemical characteristics during the start-up period for various start-up materials (i.e. coke, wood, oil, etc.)	Effectiveness and energy requirements using a flare to control these gases. Currently there are no good techniques for evaluating the control effectiveness of flares	The Wellman-Galusha test facility at the U.S. Bureau of Mines at Ft. Snelling Minn. has a start-up vent flare that may be available for testing
Pokehole gases	Compounds present for gasifying bituminous (high- and low-sulfur) coals	Effectiveness of injecting an inert gas (i.e. steam) into the pokehole during the poking operation	None
		Effectiveness of using automatic pokers	None
Tar/quench liquor separator vent gases	Chemical and biological characteristics for gasifying high-sulfur bituminous, anthracite and lignite coals	Effectiveness of recycling to the product gas	The UMD facility will use this for their tar storage tank. Vent gases will be characterized by Radian and ORNL
Stretford oxidizer vent gases	Chemical characterization	None should be required, however, this will depend on the results of characterization studies.	Potential test sites are currently being pursued by Radian.
MEA acid gas stream	Chemical characterization	Effectiveness of using a Claus and tail gas cleanup process for sulfur removal	None
Liquid Effluents[a]			
Ash sluice water	Chemical and biological characterizations for effluent guideline standards and comparison to the MEG's for high-sulfur bituminous and lignite coals	Effectiveness of collection and reuse of the ash sluice water	Ash sluice water for the gasification of lignite at the Ft. Snelling facility may be characterized by Radian.
Process condensate	Chemical and biological characterizations for effluent guidelines and comparison to the MEG's for high-sulfur bituminous, anthracite and lignite coals	Effectiveness of concentrating process condensate by forced evaporation	Laboratory tests may be performed to evaluate the gaseous emissions generated by forced evaporation
Stretford blowdown	Chemical and biological characterizations for effluent guidelines and comparison to the MEG's for high- and low-sulfur bituminous, anthracite and lignite coals	Effectiveness of reductive incineration	No reductive incineration processes are planned.
Solid Wastes			
Gasifier ash	Chemical and biological characterizations for high-sulfur bituminous and lignite coals. Leaching studies are needed to determine if the ash is classified as hazardous by the RCRA and determine any potential problems.	Control and disposal requirements will be defined by the RCRA based on chemical and biological characteristics. Permitting agencies will also define these requirements.	Leaching tests for lignite ash are planned. Other leaching tests for low-sulfur bituminous ash may also be performed
Cyclone dust	Chemical and biological characterizations of dust collected from gasifying high- and low-sulfur bituminous and lignite coals are needed for the RCRA and for determining potential problems.	Control requirements will be defined by the RCRA based on chemical and biological characteristics	Leaching tests for lignite are planned. Other leaching tests for low-sulfur bituminous coal may be performed
		Effectiveness of combusting the dust may be required	Laboratory tests may be performed to evaluate dust combustion characteristics
Sulfur	Chemical and biological characterizations of sulfur are needed for the RCRA and for determining potential problems.	Control requirements will be defined by the RCRA based on chemical and biological characteristics	Sulfur produced by the Stretford process will be characterized if a Stretford process is used at Pike County or if another test site can be obtained.
MEA blowdown	Chemical and biological characterizations are needed for the RCRA and for determining potential problems.	Control requirements will be defined by the RCRA based on chemical and biological characteristics	None

[a]Liquid effluents may fall under RCRA guidelines if they are disposed of on land.

TABLE 1.4-2. PROCESS AND PROCESS STREAM DATA NEEDS AND PLANNED ACTIVITIES TO OBTAIN THOSE DATA

Process	Data Needs	Planned Activities
Wellman-Galusha Gasifier	Fate of pollutants (sulfur species, nitrogen species, tars and oils) for various gasifier operating conditions and coal feedstocks. Operating conditions that need to be evaluated include steam/air ratio, coal throughput, and bed depth. High-sulfur bituminous coal has not been tested since all commercial facilities use low-sulfur bituminous and anthracite coals.	Research Triangle Institute and North Carolina State University will be performing parametric studies on bench-scale gasifiers using various coal feedstocks.
Particulate Removal - Hot Cyclone	Collection efficiencies of hot cyclones are needed since the particulates not removed will affect downstream gas purification processes and the raw gas combustion process characteristics and flue gases.	Particulate removal efficiency studies for the hot cyclone at the UMD facility are planned.
Gas Quenching/Cooling	Fate and distribution of sulfur species, nitrogen species, tars, oils and particulate matter are needed. The quenched and cooled gas characteristics will affect the performance and design of downstream purification processes.	The Can Do Wellman-Galusha facility will have a gas quenching/cooling process. The Chapman facility may also be used to evaluate this process.
Tar Removal - Electrostatic Precipitation	Tar removal effectiveness needs to be determined since residual tar/oil aerosols will affect the performance and design of downstream sulfur removal processes.	The tar/oil removal effectiveness will be determined at the UMD gasification facility.
Sulfur Removal - Stretford	Sulfur removal effectiveness needs to be determined. There are currently no data on the performance of the Stretford process used to remove H_2S from low-Btu gas.	Stretford process performance will be evaluated by EPA and DOE if a Stretford unit is used at Pike County. Other test sites are currently being identified.
End Use - Combustion	Combustion gases from burning hot raw gas, quenched gas and desulfurized gas are needed along with tar combustion gases.	Combustion gases will be characterized at the UMD facility.

- What are the economics and energy usage associated with controlling those streams?

Each Program Office needs representative, quantitative and long-term monitoring data concerning:

- Chemical, physical, and biological characteristics of the waste streams to air, water and/or land,
- Technology required to control those waste streams, and
- Chemical, physical, and biological characteristics of fugitive emissions resulting from the processing, storage, and transport of waste streams, products, and by-products.

The waste stream and fugitive emission data must be able to stand up to a traditional peer review and court review before the data are used for recommending standards. Control technology data should be obtained on demonstration-scale control equipment. A summary of the EPA Program Office data needs is given in Table 1.5-1.

TABLE 1.5-1. EPA PROGRAM OFFICE DATA NEEDS

EPA Program Office	Chemical Analyses	Biological Analyses	Physical Analyses	Control Technology
OAQPS	• Air Emissions - Long term monitoring and quantitative analyses for: • CO • NO_x • Nonmethane hydrocarbons • Photochemical oxidants • SO_x • Pb - Identification and quantification of other potentially harmful pollutants: • Sulfur species • Organics • Trace elements • Pollutant Monitoring - Development of continuous/semi-continuous monitoring devices	None	• Air Emissions - Particulate loading and size distribution	• Control Effectiveness for Normal, Start-up, Upset and Shut-down Operation and for Operational Responses • Identification and Quantification of Liquid and/or Solid Waste Streams from Air Pollution Control Technology • Recommendations for Control Technology R&D Needs
OWP/Effluent Guidelines Div.	• Liquid Effluents - Long-term monitoring and quantitative analyses for: • 129 priority pollutants • BOD • pH • Grease/oils • P • COD - Identification and quantification of other potentially harmful pollutants • Pollutant Monitoring - Development of continuous/semi-continuous monitoring devices	None	• Liquid Effluents - Long-term monitoring and quantitative analysis for: • TSS • TDS	• Control Effectiveness for Normal, Start-up, Upset and Shut-down Operation and for Operational Responses • Identification and Quantification of Gaseous and/or Solid Waste Streams from Water Pollution Control Technology • Recommendations for Control Technology R&D Needs
OSW	• Solid Wastes or Waste Streams Sent to Land Disposal Sites - pH - Reactivity (explosion potential) - Radium-226 - Leachate • As • Cd • Pb • Se • Endrin • Methoxychlor • 2,4-D • Ba • Cr • Hg • Ag • Lindane • Toxaphane • 2,4,5-TP • Recommendations for New/Modified Methods	• Solid Wastes or Waste Streams Sent to Land Disposal Sites - Leachate • Mutagenicity • Bioaccumulativity • Toxic organic (LD-50)	• Solid Wastes or Waste Streams Sent to Land Disposal Sites - Flash point - Corrosion tests	• Identification and Quantification of Leachable matter from solid wastes • Control Effectiveness of leachate containment/control alternatives

TABLE 1.5-1. (Continued)

EPA Program Office	Chemical Analyses	Biological Analyses	Physical Analyses	Control Technology
OTS	• Products/By-Products and Streams not Regulated by other Program Offices - Identification and quantification of potentially harmful organic and inorganic species	• Products/By-Products and Streams not Regulated by other Program Offices - Health effects - Ecological effects		• Recommendations for Controlling Exposure to Potentially Harmful Streams
ORP	• Gaseous, Liquid and Solid Waste Streams - α, β and γ-ray measurements - Quantitative analyses for U-235 and Th-232	None	• Gaseous Emissions - Particulate loading and size distribution	
OE	Data needs are similar to those needed by other Program Offices. Data should be sufficient to evaluate permits and to issue permits for gasification plants.			
Office of Criteria and Standards	• Gaseous, Liquid and Solid Waste Streams - Identification and quantification of potentially harmful organic and inorganic species	• Gaseous, Liquid and Solid Waste Streams - Health effects - Ecological effects	• Gaseous Emissions - Particulate loading and size distribution • Liquid Effluents - TSS - TDS	• Control Effectiveness for Normal, Start-up, Upset and Shut-down Operation and for Operational Responses • Identification and Quantification of Pollutants in Gaseous, Liquid and/or Solid Waste Streams from Each Control Technology
Office of Noise Abatement and Control	Currently no data are needed for coal gasification technology. Noise sources should be identified.			

OAQPS: Office of Air Quality Planning and Standards
OWP: Office of Water Planning
OSW: Office of Solid Wastes
OTS: Office of Toxic Substances
ORP: Office of Radiation Planning
OE: Office of Enforcement

SECTION 2.0

WELLMAN-GALUSHA GASIFICATION SYSTEMS

Wellman-Galusha gasifiers are one of the commercially available gasifiers used to produce low-Btu (∿5.9 MJ/Nm^3 or 150 Btu/scf) gas from a variety of coal feedstocks. In this section an overview of Wellman-Galusha gasification systems is presented followed by detailed descriptions of the systems examined in this report.

2.1 WELLMAN-GALUSHA GASIFICATION SYSTEMS: TECHNOLOGY OVERVIEW

The overview of Wellman-Galusha gasification systems contains discussions concerning development status, industrial applicability, commercial prospects, energy efficiency, and costs. Detailed energy efficiencies and costs for the systems examined in this report are given in Section 2.2.

2.1.1 Development Status

About 150 Wellman-Galusha gasifiers have been installed worldwide since 1941. While the operating status, locations, and uses of these gasifiers are mostly unknown, the current status of Wellman-Galusha gasifiers in the U.S. is summarized in Table 2.1-1. Eleven gasifiers are currently being used to produce low-Btu gas from anthracite or low-sulfur bituminous coals. In all of these applications, the hot, raw product gas is used directly to fire lime or brick kilns. The only gas cleanup process used in these facilities is a cyclone for partial particulate removal.

Glen-Gery Brick and Hazelton Brick Companies gasify anthracite coal in nine gasifiers which are located in eastern Pennsylvania. The product gas contains essentially no tars and oils and is used on-site to fire brick kilns. A hot cyclone is used to remove about 60 to 70 percent of the particulates entrained in the product gas.

In Ohio, National Lime and Stone Company intermittently operates two Wellman-Galusha gasifiers with low-sulfur bituminous coal. The product gas contains tars and particulates and, after particulate removal in a cyclone, is used on-site to fire lime kilns.

Five gasifiers are scheduled to become operational in 1980-1982. The Can Do. Inc. gasification facility will operate two gasifiers with product gas quenching/cooling processes. The Pike County facility will have two gasifiers and may have gas

TABLE 2.1-1. CURRENT WELLMAN-GALUSHA COAL GASIFICATION FACILITIES IN THE UNITED STATES

Gasifier Used	Coal Feedstock	Gas Purification Processes	Company/Location	Number of Gasifiers	Remarks
Wellman-Galusha	Anthracite, low sulfur (~0.7)	• Cyclone	Glen-Gery Brick Co. - York, PA - Reading, PA - Shoemakersville, PA - Watsontown, PA - New Oxford, PA	8	• Currently in commercial operation • Product gas used to fire brick kiln
Wellman-Galusha	Anthracite, low sulfur	• Cyclone	Hazelton Brick Co. - Hazelton, PA	4	• One gasifier in use • Three other gasifiers inactive • Product gas used to fire brick kiln
Wellman-Galusha	Anthracite, low sulfur	• Cyclone	Binghamton Brick Co. - Binghamton, NY	2	• Gasifiers not currently in use
Wellman-Galusha	Bituminous, low sulfur (~0.7%)	• Cyclone	National Lime & Stone Co. - Cary, OH	1	• Currently in commercial operation • Product gas used to fire lime kiln • Lime will remove some of the sulfur species in the flue gas
Wellman-Galusha	Anthracite, low sulfur	• Cyclone • Gas Quench	Can Do, Inc. - Hazelton, PA	2	• To be completed in 1980 • Product gas to be used in an industrial park • Possibility of adding two more gasifiers • Partial funding by DOC
Wellman-Galusha	KY Bituminous CO Subbituminous MT Bituminous ND Lignite	• Cyclone • Gas Quench • Tar/Liquor separation	Bureau of Mines - Ft. Snelling, MN	1	• Commercial-size demonstration unit • Partial funding by DOE • First series of test runs completed in 1978 • Additional tests conducted in 1979 • Product gas was used to fire an iron pelletizing kiln • Excess product gas was combusted
Wellman-Galusha	Bituminous, low sulfur	• Cyclone • Possibly gas quench, tar/liquor separation, wastewater treatment and sulfur removal (Stretford)	Pike County - Pikeville, KY	2	• To be completed in 1982 • Product gas used to fire boilers and process heaters • Partial funding by DOE

TABLE 2.1-1. (CONTINUED)

Gasifier Used	Coal Feedstock	Gas Purification Processes	Company/Location	Number of Gasifiers	Remarks
Wellman-Galusha	Anthracite, low sulfur (~0.7%)	• Cyclone	Howmet Aluminum - Lancaster, PA	1	• To be completed in early 1980 • Product gas used to fire process furnaces • Possibility of adding up to eleven more gasifiers
Chapman (Wilputte)	Bituminous, low sulfur (~0.6%)	• Cyclone • Gas quench • Tar/liquor separation • Wastewater evaporation	Holston Army Ammunition Plant - Kingsport, TN	12	• Currently in commercial operation • Product gas used to fire process heaters • Only two gasifiers are operated at one time to meet current fuel needs • By-product tar used with coal to fire a steam boiler
Foster Wheeler/Stoic	Bituminous, low sulfur	• Cyclone • Electrostatic precipitator (ESP)	University of Minnesota - Duluth, MN	1	• Construction completed in 1978 • Partial funding by DOE • 100 hours of start-up tests completed • Full time operation scheduled for fall 1979 • Product gas to be used to fire steam boilers • By-product tar to be used to fire a steam boiler
Wellman Incandescent	Bituminous	• Cyclone • ESP • Sulfur removal (Stretford)	Caterpillar, Inc. - York, PA	1	• Demonstration-commercial size • Product gas to be used to fire process heaters
Riley Morgan	Bituminous lignite	• Cyclone	Riley Stoker Co. - Worchester, MA	1	• Commercial-size demonstration unit • Coal hopper vent control
Foster Wheeler/Stoic	Various	• Cyclone • quench	General Motors Corp - Siginaw, Mich	1	• Commercial size demonstration unit • Gas used in metal processing furnace • Start up in 1979
Wellman-Galusha	Coke	• Cyclone	Gulf & Western (N. J. zinc) - Ashtabula, Ohio	1	• Gas used in process furnace • Installed 1963
Wellman-Galusha	Coke	• Cyclone	Olin Chemical Corp. - Ashtabula, Ohio	1	• Gas used in process furnace • Installed 1963
Wellman-Galusha	Lignite	• Not available	Chemical Exchange - Houston, TX	1	• Start up in 1979 • Gas end use not available

quenching/cooling and sulfur removal. The Howmet Aluminum Company's facility will be similar to those used by the Glen-Gery Brick Company.

Cabot Titanium and Olin Chemicals have each operated Wellman-Galusha gasifiers in Ashtabula, Ohio. These gasifiers used a petroleum coke feed and pure oxygen to generate high-purity (greater than 99%) carbon monoxide reducing gas. Wellman-Galusha gasifiers in Taiwan, Spain and Cuba have been similarly operated. These and other past applications of the gas produced from Wellman-Galusha gasifiers are summarized in Table 2.1-2.

2.1.2 Industrial Applicability

In the near term, Wellman-Galusha gasifiers will be used primarily to produce a fuel gas for on-site uses, including:

- fuel to provide direct heat for processes such as brick and lime kilns, and
- fuel for industrial boilers.

Production of gas for off-site use will probably not be significant because of the cost of transporting atmospheric pressure, low-Btu gas.

While low-Btu gas certainly is an applicable fuel for most new industrial uses, industrial boilers currently fueled by natural gas and oils can also be retrofitted to burn low-Btu gas. However, since natural gas and low-Btu gas have different combustion characteristics, process burners must be modified or replaced and fuel supply lines and manifolds must be enlarged to handle the increased fuel gas flows. Depending on the composition of the low-Btu gas, changes may also be required to accomodate an increased flow of combustion products. If changes in the process cannot compensate for these increased flows and pressure drops, process derating may be unavoidable. The inability to handle increased flue gas flows could cause a derating of up to about 20 percent. Some processes also need recuperation for fuel air preheat to maintain equivalent furnace temperatures when operating with low-Btu gas. Because of these considerations, in many instances, retrofitting existing natural gas-fired equipment to allow the use of low-Btu gas may be impractical. Existing natural gas consuming industrial processes were classified according to their suitability for operation with low-Btu gas (Ref. 6). This classification is reported in Table 2.1-3. Processes in the first category, which in general are large energy consumers, are well suited to the use of a low-Btu fuel gas. Generally, retrofit problems in these applications will tend to be less severe than those encountered in other applications.

TABLE 2.1-2. PAST USERS OF GAS PRODUCED BY WELLMAN-GALUSHA GASIFIERS[a]

• chemical plants	• aluminum and stainless steel manufacturers
• glass plants	• ordinance plants
• steel mills	• tin plate mills
• magnesium manufacturers	• lime plants
• silk mills	• brick plants
• bakeries	• zinc smelters
• wire mills	• iron ore processors
• foundries	• fertilizer plants
• potteries	

[a]Specific uses varied from heat treating (in glass and steel mills) to synthesis gas (for synthetic fertilizer manufacture). Materials gasified included charcoal, coke, anthracite and bituminous coals.

Source: Ref. 5

TABLE 2.1-3. CLASSIFICATION OF INDUSTRIAL PROCESSES WITH RESPECT TO EASE OF RETROFIT FOR LOW-BTU GAS

Attractive for Retrofit	Potentially Attractive for Retrofit	Unattractive for Retrofit
Sintering (primary metals industry)	Direct firing on finished products (ceramics, primary metals industries)	Processes using flow through radiant burners (ceramic or metallic grid)
Pelletizing (primary metals industry)	Indirect fired furnaces with pull through radiant burners	Automated flame heating systems such as soldering, brazing, and lamp sealing (glass, pottery, special metals)
Incinerators (all industries)	Glass tanks (glass industry)	Glass and ceramic fiber production (glass industry)
Afterburners (all industries)	Finish annealing operations (primary metals industry)	Glass cutting, scraping, annealing (glass industry
Various kilns (ceramics industry, lumber industry)	Processes using flat flame burners (ceramics, primary metals industry)	Direct-fired or indirect-fired space heaters
Reheat furnaces (primary metals industry	Processes using partial premix burners	
Soaking pits (iron and steel industry	Blast furnace injection (iron and steel industry)	
Air preheating (iron and steel industry	Paper and print drying (pulp and paper industry)	
Open hearth furnaces (iron and steel industry)		
Direct reduction of iron ore (iron and steel industry)		
Calcining (cement, lime, aluminum industries)		
Heat treating where finish is not important (primary metals, ceramics industries)		
Forging furnaces (iron and steel industries)		
Direct-fired atmosphere generators (primary metals, ceramic industry)		
Smelting operations (nonferrous metals industry)		
Industrial boilers		

Source: Ref. 6

The second category includes processes that may be attractive for operation with low-Btu gas. For these processes, suitable burners may need to be developed, or substantially more process modification or derating may be necessary in a retrofit application.

The third category includes those processes that are unattractive for retrofitting with low-Btu gas.

2.1.3 Commercial Prospects

Many industries either must have or prefer a gaseous fuel to meet their energy requirements. In the near term, low-Btu gas from fixed-bed, atmospheric-pressure gasifiers like the Wellman-Galusha will be used primarily as a substitute fuel by industries threatened with natural gas curtailments. The low-Btu gas will principally be considered for use as a fuel in on-site furnaces, heaters, kilns, and small boilers. Its substitution for natural gas will most likely occur when: 1) the costs of retrofitting for use of the low-Btu gas are small, and 2) the low-Btu gas requires minimal purification.

In both new and retrofit applications where use of a gaseous fuel is not mandatory, low-Btu coal gasification is mainly competing with the alternative of direct coal combustion. Factors affecting the selection of coal gasification or direct coal combustion include: the suitability of the coal conversion technology for satisfying the specific end use, the cost of the technology, the cost and difficulty of retrofitting, the cost of environmental controls, and the cost of the coal.

Increased commercialization of low-Btu gasification systems like the Wellman-Galusha will also depend on demonstration of the environmental acceptability of the gasification systems. Although commercially available controls seem to be adequate, some of the controls (such as treatment of process condensate blowdown) have not been adequately demonstrated on coal gasification systems. The costs of these controls are also uncertain.

Gasification systems featuring Wellman-Galusha gasifiers are most suitable for relatively small applications, with fuel demands ranging from about 8.8 to 88 MW of thermal energy (30-300 million Btu/hr). This would require use of from 1 to 10 gasifiers. Energy demands greater than about 88 MW (300 million Btu/hr) may be better served by gasification systems using gasifiers with larger capacities (for example, pressurized gasifiers).

McDowell-Wellman can deliver Wellman-Galusha gasifiers 6 to 8 months from the date of order (Ref. 2). However, systems

using 2 to 4 gasifiers and including extensive gas purification will require 18 to 24 months from initial feasibility studies to full-scale operation (Ref. 1).

Wellman-Galusha gasification systems will be most widely used in industrialized areas which also contain available coal reserves. Two areas of the country which meet these conditions are the Northeast and Midwest.

2.1.4 Input Materials, Products, and By-Products

Input materials required for Wellman-Galusha gasification systems include coal, air, and water. If a sulfur removal process is used, sulfur removal sorbents or reactants will be additional input materials. Low-Btu gas is the only product from these systems with tar/oils and sulfur being potential by-products.

Input Materials -

Wellman-Galusha gasifiers require a sized coal feedstock. For less reactive coal feedstocks, e.g., anthracite, a size range between 7.9 to 14.3 mm (0.31 to 0.56 in.) is preferred. A size range of 4.8 to 7.9 mm (0.19 to 0.31 in.) may be used, although at a lower coal feedrate. For reactive coals, e.g., bituminous coals, larger particle sizes can be used, with the preferred range being 26 to 51 mm (1 to 2 in.) (Refs. 5, 7). In all cases, excessive fines tend to decrease the gasifier capacity by causing operating problems such as channeling and/or increased pressure drops. Oversized particles, because of their lower surface area per unit weight, also decrease the gasifier capacity.

Gasification of high-moisture coals (such as lignite) yields product gases with high-moisture contents and reduced temperatures. Significant condensation of the tars in the product gas could, therefore, occur as the gas leaves the gasifier. Coals with high moisture contents also cause lower gasification efficiencies because of the energy that must be supplied to evaporate the moisture in the coal. Coals with excessively high moisture contents could be dried before being fed to the gasifier. The decision to dry a high moisture coal versus purchase lower moisture (and probably more costly) coal must be determined on an individual case basis considering site-specific economic factors.

In general, coal ash softening temperatures are preferred to be higher than 1480 K (2200°F). Coals with softening

points lower than about 1260 K (1800°F) can be gasified by increasing the amount of steam introduced with the reaction air (Ref. 7).

Air and water are also required for producing the product low-Btu gas. Vaporization of water in the gasifier water jacket provides the steam used for gasification. Makeup water is required for these gasifier jackets and possibly for ash quenching.

Products -

The main product of a Wellman-Galusha gasification system is low-Btu gas. The composition of the low-Btu product gas is dependent upon the requirements of the end use. In some instances, a "very clean" gas (e.g., contain essentially no particulates, sulfur compounds, or tars and oils) may be required, such as that used for certain direct heating/drying applications. Conversely, a low-Btu fuel gas which has only undergone partial particulate removal and still contains particulate, sulfur compounds, etc., may be acceptable.

In this report, three product gas specifications were examined. These correspond to industrial fuels considered to be:

- "moderately clean",
- "clean", and
- "very clean".

The level of contaminants allowable in each fuel type were selected to provide a reasonable range of performance constraints for analyzing gas purification processes used in a gasification facility producing an industrial fuel gas. Details of the product gas specifications selected are presented in Section 2.2.

By-Products -

Gasification of coals containing significant amounts of volatile matter produces tars and oils in the raw product gas. These tars and oils can be recovered as by-products if the raw low-Btu gas is cooled. The amount recovered depends on the coal feedstock properties and the desired product gas specifications. Sulfur may also be recovered as a by-product if a desulfurized product gas is desired. A third by-product, steam, is produced by systems gasifying anthracite and using a waste heat boiler to cool the low-Btu gas.

The energy efficiency of Wellman-Galusha gasification systems will be a significant factor affecting their commercialization potential. However, this factor may become less critical if alternative fuels, e.g., natural gas or petroleum liquids, are either unavailable or too expensive.

A large number of energy efficiencies can conceivably be defined. In this study, three efficiencies are used:

- coal to low-Btu gas efficiency which relates the energy of the product gas (higher heating value or HHV of combustibles plus sensible heat) to the HHV of the feed coal,
- gas production efficiency which relates the energy of the product gas to the total energy input to the system (HHV of coal plus utility steam and electricity energy), and
- overall thermal efficiency which relates the energy of the product gas and by-product tars, oils, and steam to the total energy input to the system.

Mathematically, the three energy efficiencies are defined as follows:

$$\eta_{cg} = \frac{(Q_g)_{out}}{(Q_c)_{in}} \times 100$$

$$\eta_{gT} = \frac{(Q_g)_{out}}{(Q_T)_{in}} \times 100$$

and

$$\eta_T = \frac{(Q_T)_{out}}{(Q_T)_{in}} \times 100$$

where

η_{cg} = Coal to gas efficiency (%)

η_{gT} = gas production efficiency (%)

η_T = overall thermal efficiency (%)

$(Q_g)_{out}$ = output product gas energy

$(Q_c)_{in}$ = input coal energy

$(Q_T)_{out}$ = total output energy (product gas + by-products + steam)

$(Q_T)_{in}$ = total input energy (coal + steam + electricity)

Values for these energy efficiencies are dependent upon the coal feedstock and the gas purification processes used. Coal to gas efficiencies (η_{cg}) for the systems examined in this study range from about 60 to 93 percent. Product gas production efficiencies (η_{gT}) range from about 50 to 92 percent while overall thermal efficiencies (η_T) range from 64 to 92 percent. Section 2.2 gives further details on the calculated energy efficiencies for the Wellman-Galusha gasification systems examined.

2.1.6 Product Gas Costs

Product gas costs are dependent upon coal feedstock, product gas specification (e.g., tar/sulfur content), and plant size. Product gas costs for systems producing a hot, raw low-Btu gas range from approximately \$1.90 to \$3.80 per GJ (\$2.00 to \$4.00 per 10^6 Btu). For systems producing a desulfurized product gas using a Stretford sulfur removal process, product gas costs range from \$3.40 to \$5.80 per GJ (\$3.60 to \$6.10 per 10^6 Btu). If an MEA sulfur removal process is used to remove gaseous sulfur species, desulfurized product gas costs range from \$3.80 to \$6.10 per GJ (\$4.00 to \$6.40 per 10^6 Btu).

For almost all of these gasification systems, the major cost item is the coal feedstock. For systems using anthracite coal, the coal costs represent 36 to 56 percent of the total costs of the product gas. For systems using low-sulfur bituminous coal, coal costs are between 36 and 70 percent of the product gas costs and for high-sulfur bituminous coal, 25 to 42

percent. Details of the capital and operating costs for the systems considered in this report are presented in Section 2.2.

Gilbert Associates, Inc. (Ref. 1) and Dravo Corporation (Ref. 8) have also developed costs for fixed-bed, atmospheric-pressure gasifiers which are essentially similar to Wellman-Galusha gasifiers. These cost estimates are summarized in Tables 2.1-4 and 2.1-5, respectively. In general, the gas costs shown in these tables are lower than those estimated in this study for similar systems. However, insufficient details were provided with the literature estimates to ascertain the basis for the differences. Like the cost estimates for the systems examined here though, the literature estimates indicate that coal costs are a major portion of the gas costs.

2.2 DESCRIPTION OF PROCESSES AND SYSTEMS

Descriptions of the Wellman-Galusha gasification systems examined in this report are presented in this section. Section 2.2.1 is a discussion of factors which affect the selection of processes for use in low-Btu systems. Detailed flow diagrams and material balances for the systems examined are contained in Section 2.2.2. Also presented in Section 2.2.2 are estimates of the energy conversion efficiencies and capital and annualized operating costs for those systems. A more detailed description of the operations and processes found in the Wellman-Galusha systems examined is presented in Section 2.2.3.

2.2.1 Factors Affecting Process Selection

The primary factors affecting selection of the processes used in Wellman-Galusha gasification systems are:

- coal feedstock properties and gasifier operating parameters
- product gas specifications,
- capacity, and
- location of the facility.

Coal Feedstock Properties and Gasifier Operating Parameters -

The properties of the coal and gasifier operating parameters determine the kinds and quantities of contaminants found in the raw product gas. Contaminants of principal concern are tars and oils, particulates, and compounds of sulfur and nitrogen. Moisture in the raw product gas is determined by the moisture content of the feed coal and the amount of steam introduced with the reactant air.

TABLE 2.1-4. ESTIMATED COSTS FOR A 73.3 MW (250 MILLION BTU/HR)[a] COAL GASIFICATION PLANT USING FIXED-BED ATMOSPHERIC PRESSURE GASIFIERS

	Anthracite (Hot Gas)	Low Sulfur Bituminous (Hot Gas)	High Sulfur Bituminous (Cold Gas)
Capital Cost[b], Million $	4.0-6.7	1.7-4.5	5.7-8.5
Coal Cost, $/ton	50	40	30
$/day	13,900-15,700	10,200-10,300	8,600-9,200
$/$10^6$ Btu	2.31-2.61	1.70-1.71	1.43-1.53
Other Operating Costs, $/day	3,900-5,500	2,300-3,900	4,850-6,540
$/$10^6$ Btu	0.65-0.93	0.38-0.65	0.81-1.09
By-Product Credit, $/$10^6$ Btu	-	-	0.08-0.14
Net Gas Cost, $/$10^6$ Btu	2.97-3.35	2.08-2.36	2.18-2.45

[a]Gas purification for systems using anthracite or low sulfur bituminous coals is limited to particulate removal in a cyclone. Gas purification for systems using high sulfur bituminous coals includes cooling and the removal of hydrogen sulfide. The costs are assumed to be mid-1977 dollars; the accounting method used to develop the operating cost is unknown. By-product credits for the high-sulfur system are 10¢/gal for tar and $25/ton for sulfur.

[b]Retrofitting costs are omitted.

Source: Ref. 1

TABLE 2.1-5. ESTIMATED COSTS FOR COAL GASIFICATION PLANTS CONTAINING ONE, FIVE OR TEN FIXED-BED ATMOSPHERIC PRESSURE GASIFIERS[a]

Number of Gasifiers (10' Diameter)	1		5		10	
Coal Feed (2" to 1¼'), kg/s (TPD)[b]	0.9 (78)	0.9 (78)	4.7 (390)	4.7 (390)	9.4 (780)	9.4 (780)
Sulfur Content, %	3.0	0.7	3.0	0.7	3.0	0.7
Gas Production, MW (10^9 Btu/day)	20 (1.64)	20 (1.64)	100 (8.2)	100 (8.2)	200 (16.4)	200 (16.4)
Capital Cost, $\$10^6$	4.46	2.90	11.09	8.09	17.3	13.3
Adjusted Capital Cost[c], $\$10^6$	3.80	2.24	9.18	6.18	14.2	10.2
Coal Cost $/ton	25	35	25	35	25	35
$/day	1950	2730	9750	13.650	19,500	27,300
$/$10^6$ Btu	1.19	1.66	1.19	1.66	1.19	1.66
Estimated Gas Costs, $/$10^6$ Btu[d]						
Capital Cost, Utility Financing	3.75	3.44	2.48	2.62	2.24	2.46
Adj. Capital Cost, Utility Financing	3.59		2.36		2.24	
Capital Cost, Equity Financing	3.06	2.96	2.12	2.33	1.95	2.21
Adj. Capital Cost, Equity Financing	2.99		2.05		1.90	

[a]Costs are mid-1977 dollars.

[b]The coals are bituminous coals with equal heating values.

[c]Adjusted capital costs omit costs for administration buildings and wastewater treatment.

[d]The Utility Financing Method as outlined in DOE's Gas Cost Guidelines was used. The costs are average costs and assume:

- 20-year project life
- Straight-line depreciation on plant investment, allowance for funds used during construction, and capitalized portion of start-up costs
- Debt-equity ratio of 75/25
- Percent interest on debt of 9 percent
- Percent return on equity of 15 percent
- Federal income tax rate of 48 percent.

Maintenance costs are proportional to the capital costs:

- 6 percent for coal feed preparation, coal gasification, gas quench and solids removal
- 3 percent for sulfur recovery, product gas compression and drying, oxygen plant, liquid and solid effluent treating and water treating
- 1 percent for all other offsites.

Included in the total capital requirements are:

- Estimated installed cost of both onsite and offsite facilities
- Project contingency at 15 percent of the estimated cost of the facilities
- Initial charge of catalyst and chemicals
- Paid-up royalties
- Allowance for funds used during construction
- Start-up costs
- Working capital.

Operating costs are based on a 90 percent plant service factor. Included in operating costs are:

- Purchased utilities
- Raw materials
- Catalysts and chemicals
- Purchased water
- Labor
- Administration
- Supplies
- Local taxes and insurance
- Ash disposal.

No credit is taken for byproducts such as sulfur, tars, oils, etc. As stated above, it is assumed that power, steam and water will be purchased. The cost of power is 2¢ per kW hour. Steam cost is assumed to be $2 per 1000 pounds. Cooling water is 3¢ per 1000 gallons and make-up water 40¢ per 1000 gallons.

Source: Ref. 8

Coal feed properties also determine the compositions and quantities of the multimedia emissions from the gasifier (for example, the quantity and characteristics of gasifier ash). To a small extent, properties of the coal feed also define applicable coal preparation processes.

The properties of coal feeds examined in this report are summarized in Table 2.2-1. The four coal feeds selected a) provide a reasonable range of properties affecting environmental discharges, and b) represent feedstocks for which actual gasification test data are available. The compositions of the anthracite and low-sulfur bituminous coals are typical of Pennsylvania anthracite and eastern Kentucky bituminous coals. The composition of the high-sulfur bituminous coal is representative of several eastern bituminous coals (including bituminous coals from Illinois and Ohio). The lignite coal shown is a North Dakota lignite.

The compositions of the raw product gases produced from the gasification of the four selected coals are shown in Table 2.2-2. These compositions are largely based on the results of gasifier testing, as discussed in Section 3. The effects of coal feed properties on contaminants in the raw product gas and on the quantities and characteristics of the multimedia waste streams are discussed below.

Tars and Oils - The quantities and characteristics of the tars and oils found in the raw low-Btu product gas depend upon the properties of the coal feedstock and on the time-temperature profile of the coal as it passes through the gasifier. Coals containing little volatile matter (like anthracite) form virtually no tars while coals with larger amounts of volatiles will produce significant amounts of tars.

Tars ands oils in the product gas can interfere with the operation of downstream processes. Most sulfur removal processes, for example, operate best when inlet tar and oil concentrations are small. This is because tars and oils may be absorbed into the sorbent, causing foaming problems and possibly fouling of the absorber packing. Nearly complete removal of tars and oils is required to maintain efficient operation. Also, if the sulfur compounds are recovered as elemental sulfur, absorbed tars and oils could contaminate the sulfur by-product. The removal of tars and oils may also be necessary to protect other downstream equipment such as blowers.

Particulates - The quantity and characteristics of the particulates found in the product gas also depend on the properties of the coal feedstock. Gasification of hard coals such as anthracite, produces substantially less entrained particulates

TABLE 2.2-1. COAL COMPOSITIONS EXAMINED[a]

	Anthracite	Low-Sulfur Bituminous	High-Sulfur Bituminous	Lignite
Proximate Analysis (wt %)				
Moisture	0.94	2.5	6.1	35.0
Volatile Matter	5.15	36.7	34.5	27.8
Fixed Carbon	82.24	57.9	51.0	28.9
Ash	11.67	2.9	8.4	8.3
Ultimate Analysis (wt %)				
Carbon	81.2	79.1	67.9	41.5
Hydrogen	2.1	5.6	4.8	2.9
Nitrogen	0.8	1.6	2.1	1.0
Oxygen	2.6	7.6	6.8	10.5
Sulfur	0.6	0.7	3.9	0.9
Ash	11.7	2.9	8.4	8.3
Moisture	0.9	2.5	6.1	35.0
High Heating Value				
(as received, MJ/kg	29.9	33.2	29.2	16.0
Btu/lb)	12,900	14,300	12,600	6,900

[a]Coal compositions selected a) provide a reasonable range of properties affecting environmental discharges and b) represent feedstocks for which environmental test data are available.

Source: Refs. 9, 10, 11

TABLE 2.2-2. RAW PRODUCT GAS COMPOSITIONS RESULTING FROM THE GASIFICATION OF THE FOUR SELECTED COALS[a]

Component	Anthracite	Low-Sulfur Bituminous	High-Sulfur Bituminous	Lignite
	Dry Gas Composition, % vol			
CO	25.45	25.9	28.83	30.6
H_2	16.31	12.5	14.81	16.85
CO_2	5.51	4.9	3.42	3.89
N_2	51.48	53.4	48.90	46.55
CH_4	0.23	2.1	2.72	1.30
C_2H_4	0.0001	0.27	0.27	0.039
C_2H_6		0.10	0.10	0.089
C_3H_6	0.0004	ND	ND	0.025
C_3H_8		ND	ND	0.024
H_2S	0.081	0.10	0.84 - 0.86	0.25
COS	0.009	0.01	0.01 - 0.03	0.011
CS_2	0.0001	ND	ND	ND
SO_2	0.002	0.002	0.002	0.002
NH_3	0.02	0.03	0.03	0.03
HCN	0.004	0.01	0.01	0.01
Ar	ND	0.6	ND	0.6
O_2	0.9	ND	ND	ND
	Water Content, mole/mole dry gas			
	0.06	0.06	0.14	0.30
	Dust Loading, g/Nm^3 (gr/scf)			
	0.15 (0.06)	0.73 (0.30)	0.87 (0.36)	0.78 (0.32)
	Tar/Oil Loading, g/Nm^3 (gr/scf)			
	ND	39 (16)	39 (16)	36 (15)

[a]These gas compositions are mostly based on experimental data as discussed in Section 3.

ND: Not determined

Source: Refs. 9, 10, 11

than gasification of the softer and more reactive coals such as bituminous, subbituminous, and lignite coals. Particulate removal is almost always required to meet product gas specifications and protect downstream equipment.

Sulfur Compounds - The raw product gas contains various compounds of sulfur including H_2S and COS with small amounts of carbon disulfide, mercaptans, SO_2, and possibly free sulfur. The quantities and distribution of these compounds in the raw product gas are dependent on the properties of the coal feedstock and the operating conditions of the gasifier. The most important coal properties are the coal volatile matter, the coal ash and its composition, and the sulfur content and distribution in the coal. Among the important operating parameters are the time-temperature profile of the coal as it passes through the gasifier, the size of coal particles, the superficial velocity of the product gas, and the amount of steam fed to the gasifier (Ref. 12).

As discussed in Section 3, few data are available describing the distribution of sulfur in gases produced from Wellman-Galusha gasifiers. Although hydrogen sulfide and carbonyl sulfide are the principal sulfur species in the product gas, the quantitative distribution of H_2S and COS is largely unknown. The distribution of sulfur between gaseous and solid (ash) phases is also largely unknown and variable. Alkaline ashes, typical of those obtained from lignite and certain bituminous coals, may retain significant amounts of sulfur.

The sulfur distributions shown in Table 2.2-2 are mainly based on the results of tests conducted in fixed-bed atmospheric-pressure gasifiers. Environmental testing at a Wellman-Galusha gasifier gasifying anthracite provided the basis for the sulfur distribution in gas produced from the gasification of anthracite (Ref. 10). Testing at Wellman-Galusha and Chapman-Wilputte gasifiers supplied the basis for the sulfur distribution in gas produced from low-sulfur bituminous coal (Ref. 13). The sulfur distribution in lignite-produced gas is supported by test data from a thin-bed Riley Morgan gasifier (Ref. 9), but may not be exactly representative of results obtained during the gasification of lignite in a thick-bed Wellman-Galusha gasifier.

Nitrogen Compounds - During gasification, a portion of the coal-bound nitrogen reacts to form volatile species such as ammonia and hydrogen cyanide. Smaller amounts of coal nitrogen also may react to form thiocyanates as well as other organic compounds. These compounds could form NO_x when the low-Btu gas is burned. Very small amounts of NO_x may also be present in the product low-Btu gas.

The distribution of nitrogen compounds in the product gas depends on the coal nitrogen content, the steam feed rate to the gasifier, the surface mositure content of the coal, and the time-temperature history of the coal in the gasifier (Ref. 14). The ammonia and hydrogen cyanide contents of the raw gases examined in this study are based on experimental data obtained from these in Wellman-Galusha, Chapman-Wilputte, and Riley-Morgan fixed-bed atmospheric-pressure gasifiers (Refs. 10, 13, 15).

Moisture - Moisture in the raw low-Btu product gas is determined by the moisture content of the feed coal and the amount of steam fed to the gasifier. Essentially all moisture in the feed coal is evaporated. The evaporation of moisture and devolatilization of volatile matter from the coal cool the raw product gas. The gasification of coals with high moisture contents, such as lignite, may reduce the raw gas temperature causing condensation of tars and oils at or downstream of the point of gas exit from the gasifier. As a result, gasification of coals with excessively high moisture contents is not desirable. These coals could be dried prior to gasification. However, the decision to dry a high moisture coal versus use of a lower moisture (and probably more costly) coal must be determined on an individual case basis considering site-specific economic factors.

Product Gas Specifications -

While coal feedstock properties determine to a large extent the quantities of contaminants found in the raw low-Btu product gas, product gas specifications define the degree to which those contaminants must be removed. The product gas specifications are in turn defined by the intended use of the product gas. In this report, three product gas specifications were examined. These correspond to industrial fuels considered to be:

- "moderately clean",
- "clean", and
- "very clean".

The three sets of specifications corresponding to these industrial fuels are summarized in Table 2.2-3.

Combustion of low-Btu industrial fuel gas must comply with all applicable emission regulations. These include both Federal, State, and local regulations. Under Prevention of Significant Deterioration permits, State Implementation Plans, and other provisions of the Clean Air Act, low-Btu gas combustion sources may be regulated on a case-by-case basis.

TABLE 2.2-3. PRODUCT GAS SPECIFICATIONS SELECTED FOR ENVIRONMENTAL ASSESSMENT[a]

	Particulates		SO_2		H_2S	
	ng/J	(lb/10^6 Btu)	ng/J	(lb/10^6 Btu)	mg/Nm^3	(gr/100 scf)
"Moderately Clean" Industrial Fuel Gas (1971 NSPS[b])	43	(0.10)	520	(1.2)	--	--
"Clean" Industrial Fuel Gas (1979 NSPS[b])	13	(0.03)	86	(0.2)	--	--
"Very Clean" Gas[c]	∿0	(∿0)	—	--	6[d]	(0.25)[d]

[a] For this report, the gasification facility is constrained only by limitations on particulates and sulfur compounds in the low-Btu gas or in the gas resulting from combustion of the low-Btu gas.

[b] The product gas specifications refer to the allowable emissions of combustion products per unit energy of low-Btu gas. These low-Btu product gas specifications are similar to the 1971 and 1979 NSPS for direct combustion of coal in a steam generator. That these regulations should be applied to combustion of low-Btu gas is not implied or intended.

[c] The "very clean" gas is essentially free of contaminants; the sulfur specification is adapted from natural gas pipeline specification (<11 mg/Nm^3, <5 ppmv).

[d] Refers only to H_2S; total sulfur specification arbitrarily set at 22 mg/Nm^3 (10 ppmv).

In light of the lack of general guidelines for the allowable emissions from combustion of low-Btu gas, a range of gas specifications were selected. The intent of the selections was to provide a reasonable range of performance constraints for analyzing gas purification processes used in gasification facilities. The "moderately clean" gas specifications were selected such that resulting emissions would be basically the same as permitted by 1971 new source performance standards (NSPS) for direct combustion of coal in a steam generator. The "clean" gas specifications were selected to limit emissions to levels that are similar to those allowable under the revised (1979) NSPS for direct coal combustion.

Use of low-Btu product gas specifications tied to NSPS for direct coal combustion does not imply that these should be applied as a formal regulation to the combustion of coal-derived fuels. As stated previously, the gas specifications were only selected to provide a reasonable range of performance constraints for analyzing gas purification processes.

The most stringent specification considered in this report provides for production of a "very clean" gas essentially free of sulfur compounds and particulates. End uses requiring such intensive clean-up of the low-Btu gas are few but possibly include certain metals treatment and food preparation processes.

The principal constraint with respect to the target gas specifications shown in Table 2.2-3 is the quantity of sulfur compounds in the product low-Btu gas. Depending on the sulfur content of the feed coal and the distribution of sulfur in the low-Btu gas, the target specifications may be attained:

- without cleanup
- by removal of some or all of the hydrogen sulfide
- by removal of some or all of the hydrogen sulfide and carbonyl sulfide

Table 2.2-4 summarizes the gas cleanup requirements associated with gasification of the four selected coals to attain the three product specifications shown in Table 2.2-3.

The selection of processes for removing sulfur compounds from the low-Btu gas depends on the distribution of sulfur in the gas and the removal required to meet product gas specifications. As shown in Table 2.2-4, certain gas specifications could require the removal of both hydrogen sulfide and carbonyl sulfide.

TABLE 2.2-4. SULFUR REMOVAL REQUIREMENTS TO ATTAIN PRODUCT SPECIFICATIONS FOR GASES PRODUCED FROM FOUR SELECTED COALS

	Product Gas Specifications		
	"Moderately Clean" Industrial Fuel Gas	"Clean" Industrial Fuel Gas	"Very Clean" Gas
Coal Feeds			
Anthracite	• no cleanup	• removal of H_2S	• removal of H_2S • removal of COS
Low-Sulfur HVA Bituminous	• no cleanup	• removal of H_2S	• removal of H_2S • removal of COS
High-Sulfur HVB Bituminous	• partial removal of H_2S	• removal of H_2S • possible partial removal of COS[a]	• removal of H_2S • removal of COS
Lignite	• partial removal of H_2S	• removal of H_2S	• removal of H_2S • removal of COS

[a]Depends on the distribution of sulfur species in raw gas.

Hydrogen sulfide is relatively easy to remove from the gas stream and can be directly converted to elemental sulfur in processes like the Stretford process. Carbonyl sulfide is not removed in the direct conversion processes. Requirements to remove carbonyl sulfide would mandate use of processes featuring the absorption of acid gases into a sorbent like monoethanolamine followed by regeneration of the sorbent with desorption of the acid gases. While sulfur species would be removed from the low-Btu gas, the desorbed acid gas stream would require further treatment.

Capacity -

This report examines gasification facilities producing low-Btu product gas at the following rates:

- 17.6 MW (60 x 10^6 Btu/hr)
- 87.9 MW (300 x 10^6 Btu/hr)

The smaller size is the nominal capacity of one 3.0 m (10.0 ft) diameter Wellman-Galusha gasifier producing low-Btu gas from bituminous coal. The larger size was selected to give a range for demonstrating the economies of scale associated with gas purification processes and possibly alternative pollution control options.

For the gasification facilities examined in this report, the coal preparation operation will be limited to coal storage and handling, since it is more economical to purchase pre-sized coal than to install crushing, sizing, and briquetting equipment at the gasification plant (Ref. 1).

Location -

Three locational factors affect the selection of coal preparation and gas purification processes: (1) the availability and cost of the coal feed and other raw materials; (2) the available space for the plant; and (3) the local and state regulations affecting the design of the plant. The facility location may also affect the selection of disposal practices for wastes produced at the gasification plant.

Of the four feed coals examined in this report, anthracite, low-sulfur bituminous, and high-sulfur bituminous coals are most likely to be used in Wellman-Galusha gasifiers constructed in the near term. For purposes of this report, gasifiers using these three coals have been assumed to be located within 150 miles of the coal supply. Facilities located greater distances from the coal supply will suffer increased coal transportation costs.

In some instances, limited space may be available for the installation of a complete gasification facility. This constraint could limit coal storage and possibly affect the selection of gas purification processes. Certain processes for the removal of hydrogen sulfide (e.g., the iron oxide process) require large areas for equipment installation and maintenance. If little free space is available, such processes would be impractical.

Design of gasification facilities with acceptable controls for multimedia emissions depends on the requirements of applicable Federal, State, and local regulations. These requirements are described in Section 5.

2.2.2 System Flow Diagrams and Energy and Cost Analyses

Wellman-Galusha low-Btu gasification systems have three basic operations: coal pretreatment, coal gasification and gas purification. In each operation, there are processes with specific functions, inputs and outputs. Figure 2.2-1 is a generalized flow diagram showing the operations and process modules for the Wellman-Galusha gasification systems considered in this report. Table 2.2-5 summarizes the input and output streams and the function associated with each process.

Detailed process flow diagrams for each of the four uncontrolled Wellman-Galusha gasification systems considered in this report are shown in Figures 2.2-2 through 2.2-5. Following each flow diagram is a table showing the composition of process and waste streams as well as their flow rates, temperatures, and pressures (see Tables 2.2-6 through 2.2-13). The flow rates given in each table are for systems producing nominally 17.6 MW (60×10^6 Btu/hr) of low-Btu gas.

The first system considered in this study (see Figure 2.2-2) is typical of what would be required to produce a "moderately clean" industrial fuel from a low-sulfur coal feedstock. This system has only three process modules: coal handling and storage, gasification, and particulate removal (hot cyclone). This system also represents currently-operating Wellman-Galusha facilities that use anthracite and low-sulfur bituminous coals (Refs. 10, 11).

A variation of the first system has an additional process module: raw gas quenching and cooling. This additional module removes tars and oils from the raw product gas and reduces the potential of fouling equipment used to transport the low-Btu product gas to its end use. This system also is capable of producing a "moderately clean" industrial fuel gas from a low-sulfur

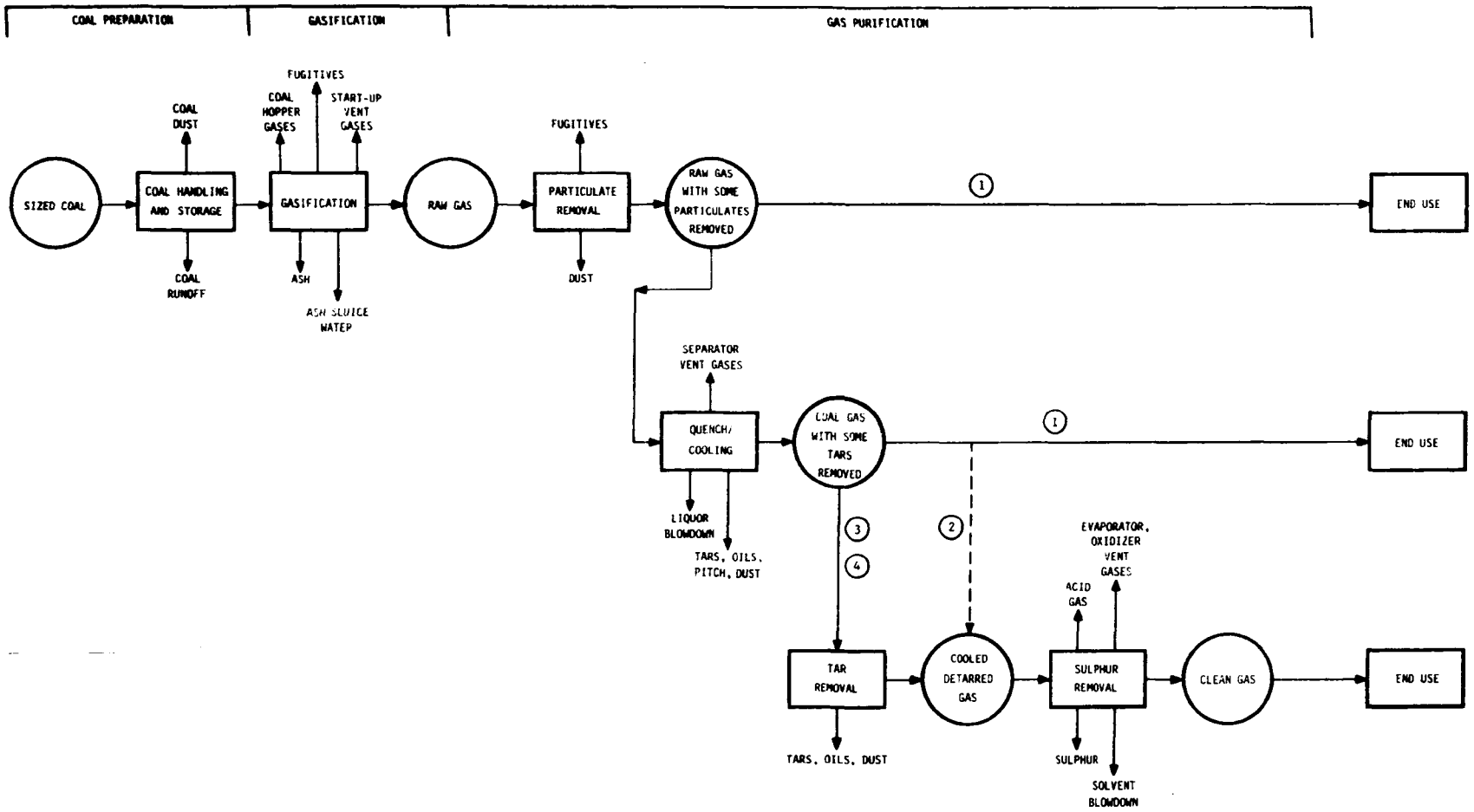

KEY TO SYSTEMS

1. GASIFICATION OF LOW-SULFUR COALS (LESS THAN 0.7% SULFUR FOR COALS WITH HEATING VALUES OF 30 MJ/KG OR 13,000 BTU/LB) TO PRODUCE A "MODERATELY CLEAN" INDUSTRIAL FUEL GAS.
2. GASIFICATION OF ANTHRACITE COALS TO PRODUCE A "CLEAN" INDUSTRIAL FUEL GAS.
3. GASIFICATION OF HIGH OR LOW-SULFUR BITUMINOUS, SUB-BITUMINOUS, AND LIGNITE COALS TO PRODUCE A "CLEAN" INDUSTRIAL FUEL GAS.
4. GASIFICATION OF HIGH-SULFUR BITUMINOUS COALS TO PRODUCE A "VERY CLEAN" GAS.

DETAILED PROCESS FLOWSHEETS ARE FOUND IN FIGURES 2.2-2 TO 2.2-5

70-1427-3

Figure 2.2-1. Wellman-Galusha System Process Modules and Multimedia Discharges

TABLE 2.2-5. OPERATIONS/PROCESS MODULES IN WELLMAN-GALUSHA LOW-BTU GASIFICATION SYSTEMS

Operation/Process Module	Input Streams	Output Streams	Function	Remarks
Coal Pretreatment				
Coal Handling and Storage	Presized coal	Presized coal Coal dust Coal pile runoff water	Store and transport coal feedstock	Coal storage piles would contain a 30 day coal supply (2-12 Gg, 2000-13,000 short tons of coal for a plant producing 18-88 MW, 60-300 million Btu/hr of low-Btu gas).
Coal Gasification				
Fixed-Bed, Atmospheric Pressure, Dry Ash Gasifier - Wellman-Galusha	Presized coal Steam Air Ash sluice water	Raw product gas Coal hopper gases Fugitive gases Start-up vent gases Ash Ash sluice water	React coal with a mixture of steam and air to produce a raw low-Btu gas	Coals that have been used include anthracite and bituminous. Coal size specifications are 7.9 to 14.3 mm for anthracite and 26-51 mm for bituminous. Larger particle sizes can be used for more reactive coals.
Gas Purification				
Particulate Removal - Hot Cyclone	Raw product gas	Product gas Removed particulates	Remove large particulate matter from the hot, raw product gas	Total particulate removal efficiencies have been determined to be between 50-80%. Small particulate matter will not be removed. Collected particulates have characteristics similar to devolatilized coal particles.
Gas Quenching and Cooling	Product gas Quenching liquor	Quenched/cooled product gas Quench liquor Tars Oils Particulate matter	Remove tars and oils from the product gas and cool the product gas to approximately 316°K (110°F)	The amount of tars and oils removed is dependent upon the coal feedstock. Anthracite coal will produce essentially no tars, however, bituminous coal will produce a significant amount of tars. Emissions from the tar/liquor separator may contain potentially hazardous compounds. Spent quench liquor will require treatment before disposal.
Tar/Oil Removal - Electrostatic Precipitator	Cooled product gas	Cooled/detarred product gas Tars Oils	Remove tar and oil aerosols from the cooled product gas	ESP's have been used to remove tars and oils produced by two-stage, fixed-bed, atmospheric gasifiers and good removal of tars and oils have been demonstrated by ESP's used in sampling systems. Vent gases from tar/oil storage tanks may contain potentially harmful compounds and may need to be controlled.
Sulfur Removal - Stretford	Detarred product gas Stretford solution Air	Clean product gas Oxidizer vent gas Sorbent blowdown Sulfur	Remove H_2S from the detarred product gas	Organic sulfur species (i.e., COS, CS_2, etc) will not be removed from the product gas. If the HCN concentration is high, then a cyanide guard may be needed. Blowdown sorbent will require treatment before disposal. If the sulfur is to be disposed of, tests need to be performed (i.e., RCRA tests for solid wastes) to determine treatment and/or disposal techniques required.
Sulfur Removal - Monoethanolamine Process	Detarred product gas MEA solution	Clean product gas MEA blowdown Acid gases Sulfur from acid gas treatment processes Tail gases from acid gas treatment processes	Remove sulfur species and CO_2 from the detarred product gas	Removal efficiency increases with increasing inlet gas pressure. Acid gases have to be treated to control sulfur emissions. MEA blowdown will require treatment before disposal.

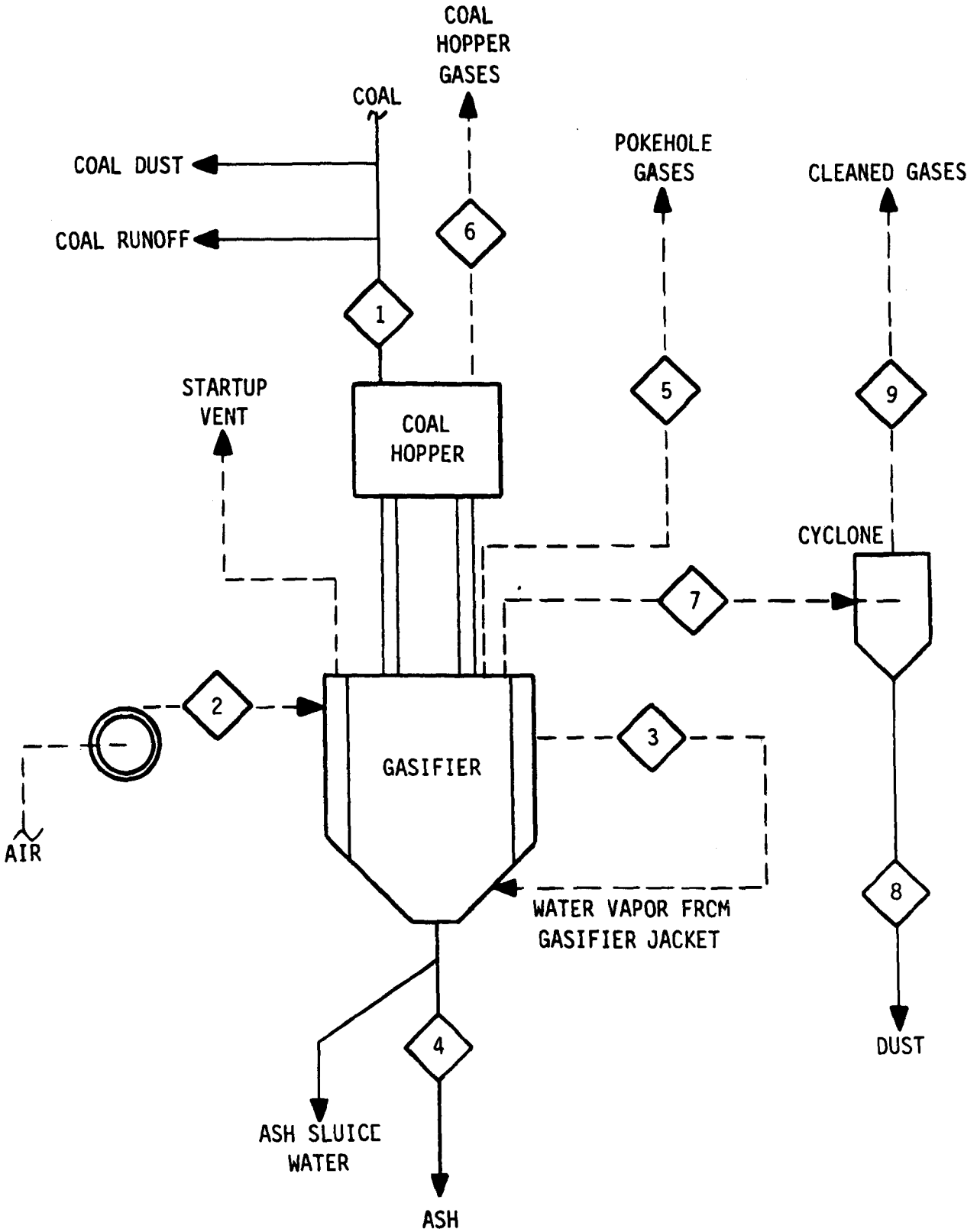

Figure 2.2-2. Wellman-Galusha Gasification System Producing a Hot Removal Product Gas from Anthracite and Low-Sulfur Bituminous Coals

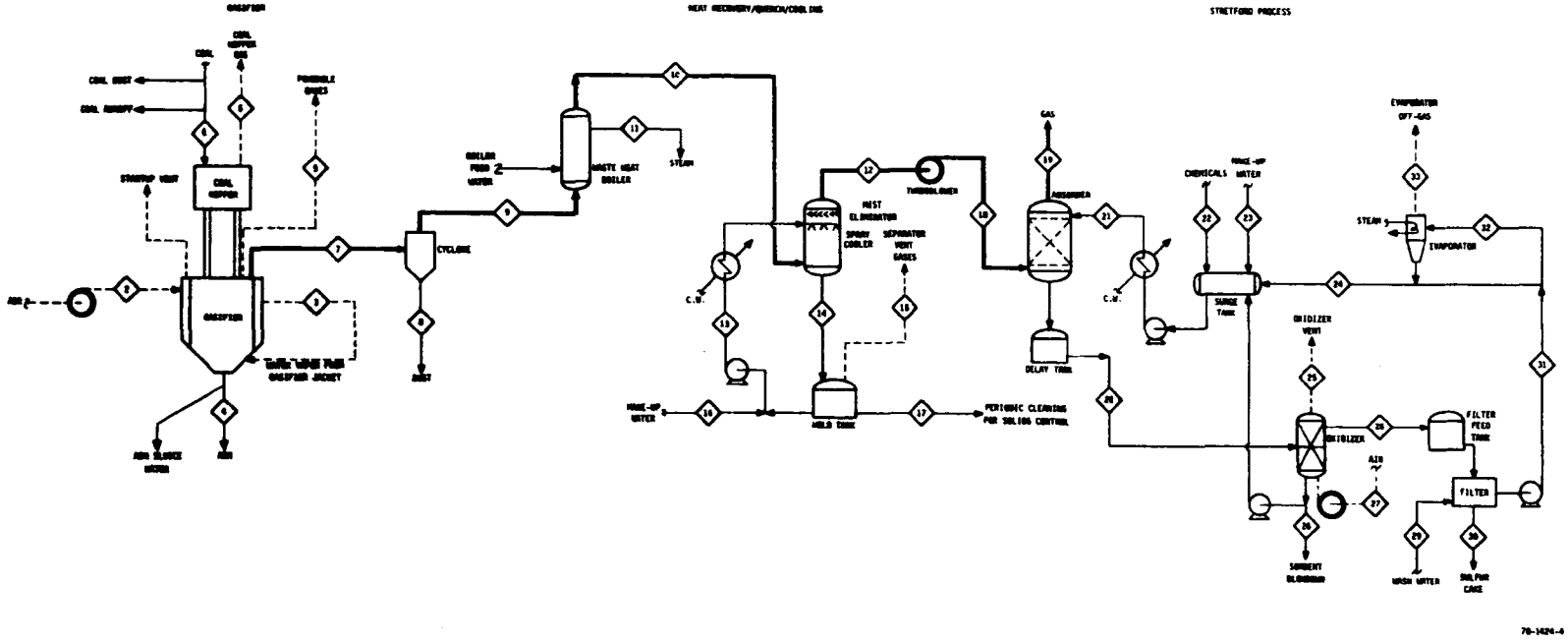

Figure 2.2-3. Wellman Galusha Gasification System Producing A Clean Product Gas from Anthracite Coal

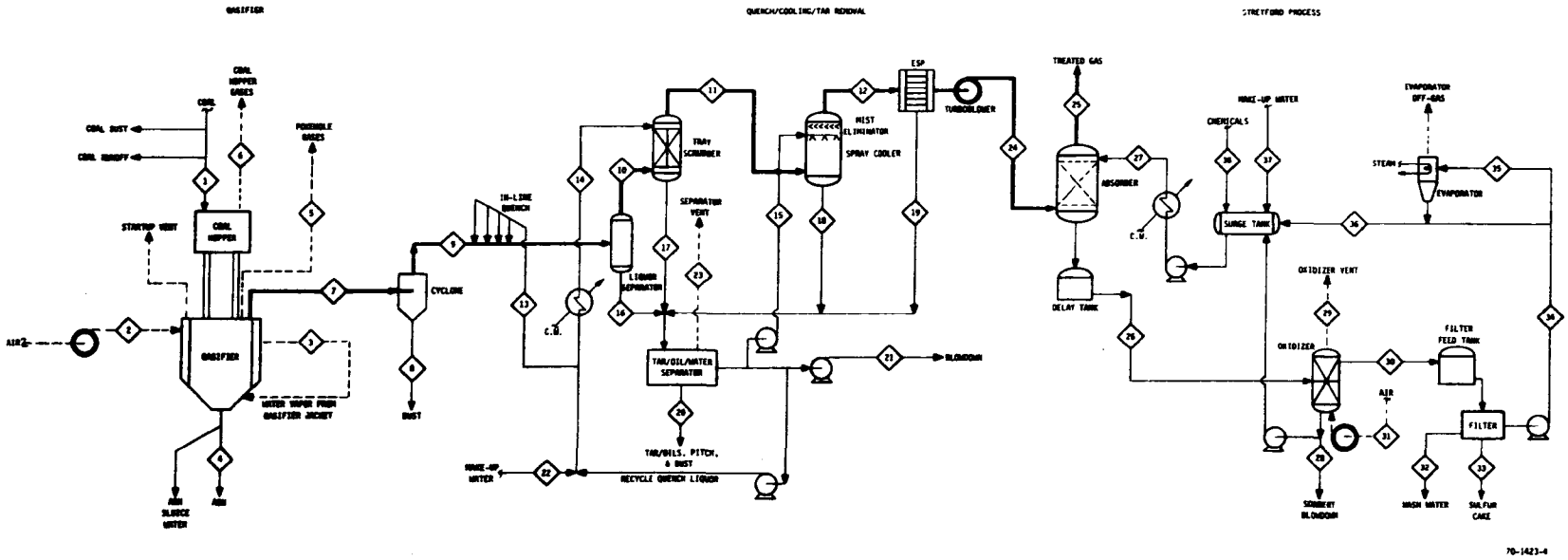

Figure 2.2-4. Wellman Galusha Gasification System for Producing a Clean Product Gas from Lignite and Low- and High-Sulfur Bituminous Coals

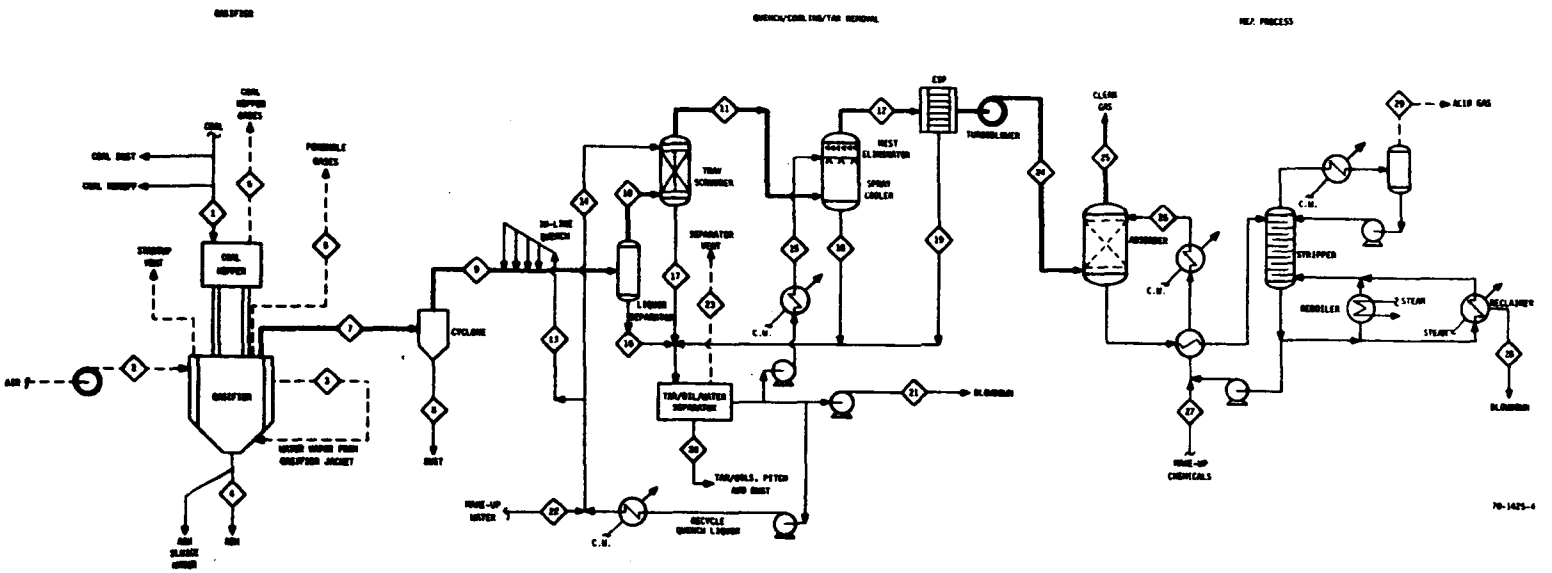

Figure 2.2-5. Wellman Galusha Gasification System for Producing a Clean Product Gas (with MEA Acid Gas Removal) from High-Sulfur Bituminous Coal

TABLE 2.2-6. STREAM COMPOSITIONS AND FLOW RATES FOR WELLMAN-GALUSHA GASIFICATION SYSTEMS (FIGURE 2.2-2) PRODUCING 17.6 MW OF HOT PRODUCT GAS FROM ANTHRACITE COAL

		STREAM NUMBER AND DESCRIPTION														
		1	2	3	-	4	5	6	7	8	9					
		Coal Feed	Inlet Air	Steam	Ash Sluice Water	Gasifier Ash	Pokehole Gases	Coal Hopper Gas	Raw Product Gas	Cyclone Dust	Hot Product Gas					
GASEOUS STREAMS	Major Gases	Component (Vol %)														
		H_2O			100			6.0	6.0	6.0		6.0				
		CO						23.9	23.9	23.9		23.9				
		H_2						15.3	15.3	15.3		15.3				
		CO_2						5.18	5.18	5.18		5.18				
		N_2	79					48.4	48.4	48.4		48.4				
		O_2	21					0.86	0.86	0.86		0.86				
		CH_4						0.22	0.22	0.22		0.22				
	Minor/Trace Gases	Component (ppmv)														
		C_2H_4, C_2H_6						0.9	0.9	0.9		0.9				
		C_3H_6, C_3H_8						38	38	38		38				
		H_2S						761	761	761		761				
		COS						87	87	87		87				
		CS_2						0.9	0.9	0.9		0.9				
		SO_2						20	20	20		20				
		NH_3						183	183	183		183				
		HCN						40	40	40		40				
		Particulates (g/Nm^3)						0.37	0.37	0.37		0.15				
		Tars (g/Nm^3)														
LIQUID AND SOLID STREAMS		Water (wt%)	0.9				0.29									
		Ash (wt%)	11.7				65.8				25.1					
		Carbon (wt%)	81.2				33.0				70.4					
		Hydrogen (wt%)	2.1				0.29				1.3					
		Nitrogen (wt%)	0.8				0.19				0.7					
		Oxygen (wt%)	2.6				0.29				1.0					
		Sulfur (wt%)	0.6				0.19				1.5					
		Total Flow (g/sec)	731	2740	430	100–164	130	3.5	8.4	3770	0.75	3770				
		Temperature, °K	294	333	333			420	300	700		620				
		Pressure, kPa						101	101	103		101				
		HHV solids (MJ/kg)	29.9				7.4	25.3	25.3	25.3	25.3	25.3				
		HHV gases (MJ/Nm^3)						5.3	5.3	5.3		5.2				

TABLE 2.2-7. STREAM COMPOSITIONS AND FLOW RATES FOR WELLMAN-GALUSHA GASIFICATION SYSTEMS (FIGURE 2.2-2) PRODUCING 17.6 MW OF HOT PRODUCT GAS FROM LOW-SULFUR BITUMINOUS COALS

		STREAM NUMBER AND DESCRIPTION									
		1	2	3	-	4	5	6	7	8	9
		Coal Feed	Inlet Air	Steam	Ash Sluice Water	Gasifier Ash	Pokehole Gases	Coal Hopper Gas	Raw Product Gas	Cyclone Dust	Hot Product Gas
GASEOUS STREAMS	Major Gases										
	Component (Vol %)										
	H_2O			100			5.5	5.5	5.5		5.5
	CO						24.5	24.5	24.5		24.5
	H_2						11.8	11.8	11.8		11.8
	CO_2						4.6	4.6	4.6		4.6
	N_2		79				50.5	50.5	50.5		50.5
	O_2		21								
	CH_4						1.98	1.98	1.98		1.98
	Minor/Trace Gases										
	Component (ppmv)										
	C_2H_4						2550	2550	2550		2550
	C_2H_6						945	945	945		945
	C_3H_6										
	C_3H_8										
	H_2S						945	945	945		945
	COS						95	95	95		95
	CS_2										
	SO_2						19	19	19		19
	NH_3						284	284	284		284
	HCN						95	95	95		95
	Particulates (g/Nm^3)						1.8	1.8	1.8		0.72
	Tars (g/Nm^3)						39	39	39		39
LIQUID AND SOLID STREAMS	Water (wt%)	2.5									
	Ash (wt%)	2.9				86.3				6.2	
	Carbon (wt%)	79.1				11.5				87.3	
	Hydrogen (wt%)	5.6				0.1				3.3	
	Nitrogen (wt%)	1.6				0.1				1.5	
	Oxygen (wt%)	7.6				0.1				1.5	
	Sulfur (wt%)	0.7				1.9				0.4	
	Total Flow (g/sec)	810	2610	220	20-33	26	1.8	8.8	3610	3.5	3607
	Temperature, °K	294	323	323			420	300	839		756
	Pressure, kPa						101	101	103		101
	HHV solids (MJ/kg)	33.2				3.8	29.7	29.7	29.7	29.7	29.7
	HHV gases (MJ/Nm^3)						7.4	7.4	7.4		7.3

TABLE 2.2-8. STREAM COMPOSITIONS AND FLOW RATES FOR WELLMAN-GALUSHA GASIFICATION SYSTEMS (FIGURE 2.2-3) PRODUCING 17.6 MW OF CLEAN PRODUCT GAS FROM ANTHRACITE COAL

		STREAM NUMBER AND DESCRIPTION														
		1	2	3	-	4	5	6	7	8	9	10	11	12	13	14
		Coal Feed	Inlet Air	Steam	Ash Sluice Water	Gasifier Ash	Pokehold Gases	Coal Hopper Gas	Raw Product Gas	Cyclone Dust	Hot Product Gas	Cooled Product Gas	WHB Steam	Cooled Quenched Prod/gas	Water to Spray Cooler	Water fr Spray Cooler
GASEOUS STREAMS	Component (Vol %)															
Major Gases	H_2O			100			6.0	6.0	6.0		6.0	6.0	100	8.9		
	CO						23.9	23.9	23.9		23.9	23.9		23.2		
	H_2						15.3	15.3	15.3		15.3	15.3		14.8		
	CO_2						5.18	5.18	5.18		5.18	5.18		5.02		
	N_2		79				48.4	48.4	48.4		48.4	48.4		46.9		
	O_2		21				0.86	0.86	0.86		0.86	0.86		0.83		
	CH_4						0.22	0.22	0.22		0.22	0.22		0.21		
Minor/Trace Gases	Component (ppmv)															
	C_2H_4, C_2H_6						0.9	0.9	0.9		0.9	0.9		0.9		
	C_3H_6, C_3H_8						38	38	38		38	38		37		
	H_2S						761	761	761		761	761		740		
	COS						87	87	87		87	87		84		
	CS_2						0.9	0.9	0.9		0.9	0.9		0.9		
	SO_2						20	20	20		20	20		19		
	NH_3						183	183	183		183	183		177		
	HCN						40	40	40		40	40		39		
	Particulates (g/Nm^3)						0.37	0.37	0.37		0.15	0.15		0.04		
	Tars (g/Nm^3)						-	-	-		-	-		-		
LIQUID AND SOLID STREAMS	Water (wt%)	0.9				0.29				25.1						
	Ash (wt%)	11.7				65.8				70.4						
	Carbon (wt%)	81.2				33.0				1.3						
	Hydrogen (wt%)	2.1				0.29				0.7						
	Nitrogen (wt%)	0.8				0.19				1.0						
	Oxygen (wt%)	2.6				0.29				1.5						
	Sulfur (wt%)	0.6				0.19										
	Total Flow (g/sec)	731	2740	430	100-164	130	3.5	8.4	3770	0.75	3770	3770	315	3850	9330	9240
	Temperature, °K	294	333	333			420	300	700		620	491	467	317	308	325
	Pressure, kPa						101	101	103		101	100	1380	98.8	790	
	HHV solids (MJ/kg)	29.9				7.4	25.3	25.3	25.3	25.3	25.3	25.3		25.3		
	HHV gases (MJ/Nm^3)						5.3	5.3	5.3		5.2	5.0	21	4.6		

TABLE 2.2-8. (Continued)

		STREAM NUMBER AND DESCRIPTION														
		15	16	17	18	19	20	21	22	23*	24*	25	26*	27	28	29*
		Separator Vent Gas	Spray Cool Make-up Water	Hold Tank Blowdown	Compressed Product Gas	Desul Product Gas	Stretford Liquor to Oxidizer	Stretford Liquor to Absorber	Make-up Chemical	Make-up Water	Stretford Liquor to Surge Tnk	Oxidizer Vent gas	Stretford Liquor Blowdown	Air to Oxidizer	Stretford Liquor from Oxid.	Sulfur Ck Wash Water
GASEOUS STREAMS	Major Gases: Component (Vol %)															
	H_2O				8.0	8.1										
	CO			peri-	23.4	23.4										
	H_2			odic	15.0	15.0						unk.				
	CO_2				5.1	5.1										
	N_2				47.4	47.3										
	O_2				0.84	0.84										
	CH_4				0.22	0.21										
	Minor/Trace Gases: Component (ppmv)															
	C_2H_4, C_2H_6				0.9	0.9										
	C_3H_6, C_3H_8				35	35										
	H_2S				750	10										
	COS				85	85										
	CS_2				1	1										
	SO_2				20	20										
	NH_3				180	180										
	HCN				40	40										
	Particulates (g/Nm^3)				-	-										
	Tars (g/Nm^3)				-	-										
LIQUID AND SOLID STREAMS	Water (wt%)														90	
	Ash (wt%)															
	Carbon (wt%)															
	Hydrogen (wt%)															
	Nitrogen (wt%)															
	Oxygen (wt%)															
	Sulfur (wt%)														10	
	Total Flow (g/sec)	105	82		3600	3550	6371	6367	0.115	0.542-None	26.2-27.6	41.7	1.73-2.60	42.1	29.1	2.91-8.73
	Temperature, °K	358	303		317	317										
	Pressure, kPa				110	109										
	HHV solids (MJ/kg)															
	HHV gases (MJ/Nm^3)				4.7	4.7										

TABLE 2.2-8 (Continued)

		STREAM NUMBER AND DESCRIPTION														
		30 Sulfur Cake	31* Stratford Liquor fr Filter	32* Stratford Liquor to Evaporator	33 Evaporator Off-Gases											
GASEOUS STREAMS	Major Gases: Component (Vol %)															
	H_2O															
	CO															
	H_2															
	CO_2															
	N_2															
	O_2															
	CH_4															
	Minor/Trace Gases: Component (ppmv)															
	C_2H_4															
	C_2H_6															
	C_3H_6															
	C_3H_8															
	H_2S															
	COS															
	CS_2															
	SO_2															
	NH_3															
	HCN															
	Particulates (g/Nm^3)															
	Tars (g/Nm^3)															
LIQUID AND SOLID STREAMS	Water (wt%)	50														
	Ash (wt%)															
	Carbon (wt%)															
	Hydrogen (wt%)															
	Nitrogen (wt%)															
	Oxygen (wt%)															
	Sulfur (wt%)	50														
	Total Flow (g/sec)	5.82	26.2–32.0	None–4.40	unk.											
	Temperature, °K															
	Pressure, kPa															
	HHV solids (MJ/kg)															
	HHV gases (MJ/Nm^3)															

*Flow rates will depend upon the number of sulfur cake washes, low rates are for 1 wash, high rates are for 3 washes

TABLE 2.2-9. STREAM COMPOSITIONS AND FLOW RATES FOR WELLMAN-GALUSHA GASIFICATION SYSTEMS (FIGURE 2.2-4) PRODUCING 17.6 MW OF CLEAN PRODUCT GAS FROM IGNITE COAL

		STREAM NUMBER AND DESCRIPTION														
		1	2	3	-	4	5	6	7	8	9	10	11	12	13	14
		Coal Feed	Inlet Air	Steam	Air Sluice Water	Gasifier Ash	Pokehole Gases	Coal Hopper Gas	Raw Product Gas	Cyclone Dust	Hot Product Gas	Quenched Product Gas	Scrubbed Product Gas	Cool Quenched Prod/gas	Liquor to Inliner Quench	Liquor to Tray Scrubber
GASEOUS STREAMS	Component (Vol %)															
Major Gases	H_2O						23.1	23.1	23.1		23.1	25.9	15.6	9.2		
	CO						23.5	23.5	23.5		23.5	22.6	25.7	27.6		
	H_2						13.0	13.0	13.0		13.0	12.5	14.2	15.3		
	CO_2						2.99	2.99	2.99		2.99	2.88	3.3	3.6		
	N_2						35.8	35.8	35.8		35.8	34.5	39.3	42.2		
	O_2															
	CH_4						1.0	1.0	1.0		1.0	0.96	1.1	1.2		
Minor/Trace Gases	Component (ppmv)															
	C_2H_4						2980	2980	2980		2980	2870	3270	3520		
	C_2H_6						660	660	660		660	636	724	780		
	C_3H_6						1950	1950	1950		1950	1880	2141	2300		
	C_3H_8						183	183	183		183	176	200	215		
	H_2S						1920	1920	1920		1920	1850	2110	2270		
	COS						85	85	85		85	82	94	101		
	CS_2						-	-	-		-	-	-	-		
	SO_2						-	-	-		-	-	-	-		
	NH_3						231	231	231		231	222	253	272		
	HCN						77	77	77		77	74	84	90		
	Particulates (g/Nm^3)						1.9	1.9	1.9		0.76	0.59	0.54	0.46		
	Tars (g/Nm^3)						36	36	36		36	28	26	22		
LIQUID AND SOLID STREAMS	Water (wt%)	35														
	Ash (wt%)	8.3				88.8				22.4						
	Carbon (wt%)	41.5				9.8				68.2						
	Hydrogen (wt%)	2.9								1.6						
	Nitrogen (wt%)	1.0								5.8						
	Oxygen (wt%)	10.5														
	Sulfur (wt%)	0.9				1.4				1.9						
	Total Flow (g/sec)	1460	1985	240	100-160	134	1.8	17.5	3470	3.91	3465	3520	3200	2990	1660	18400
	Temperature, °K	294	330	330			400	300	422		394	339	328	317	328	319
	Pressure, kPa						101	101	103		101	101	100	98.8	790	790
	HHV solids (MJ/kg)	16				3.3	24.8	24.8	24.8	24.8	24.8	24.8	24.8	24.8		
	HHV gases (MJ/Nm^3)						6.1	6.0	6.1		6.1	5.8	6.2	6.4		

TABLE 2.2-9. (Continued)

		15 Liquor to Spray Cooler	16 Liquor fr Gas/Liq Separator	17 Liquor fr Tray Scrubber	18 Liquor fr Spray Cooler	19 Oils From ESP	20 By-Prod Tars/ Oils	21 Tar/Oil Separator Blowdown	22 Make-up Quench Water	23 Separator Vent Gas	24 Compressed Product Gas	25 Desulfur Product Gas	26 Stretford Liquor to Oxidizer	27 Stretford Liquor to Absorber	28** Stretford Liquor Blowdown	29 Oxidizer Vent Gas
GASEOUS STREAMS	Major Gases: Component (Vol %)															
	H_2O										8.0	8.1				unk.
	CO										28.0	28.3				
	H_2										15.5	15.6				
	CO_2										3.7	3.7				
	N_2										42.8	43.2				
	O_2															
	CH_4										1.2	1.2				
	Minor/Trace Gases: Component (ppmv)															
	C_2H_4										3570	3600				
	C_2H_6										790	798				
	C_3H_6										2380	2400				
	C_3H_8										218	220				
	H_2S										2300	10				
	COS										102	103				
	CS_2										-	-				
	SO_2										-	-				
	NH_3										275	278				
	HCN										91	92				
	Particulates (g/Nm^3)										-	-				
	Tars (g/Nm^3)										0.14	0.14				
LIQUID AND SOLID STREAMS	Water (wt%)						3									
	Ash (wt%)						1.3									
	Carbon (wt%)						76.6									
	Hydrogen (wt%)						7.1									
	Nitrogen (wt%)						1.0									
	Oxygen (wt%)						9.8									
	Sulfur (wt%)						1.3									
	Total Flow (g/sec)	10000	1580	18700	10200	47	120	428	None	185	2900	2890	20125	20115	2.56 5.32	132
	Temperature, °K	308	339	331	319					358	317	317				
	Pressure, kPa	790									110	109				
	HHV solids (MJ/kg)					30.0	30.0				5.9	5.8				
	HHV gases (MJ/Nm^3)															

TABLE 2.2-9. (Continued)

		STREAM NUMBER AND DESCRIPTION														
		30	31	32**	33	34**	35**	36**	37**	38						
		Stretford Liquor to Filter	Air to Oxidizer	Sulfur Cake Wash/wat	Sulfur Cake	Stretford Liquor fr Filter	Stretford Liquor to Evaporator	Stretford Liquor to Surge Tnk	Make-up Water	Make-up Chem.						
GASEOUS STREAMS	Major Gases	Component (Vol %)														
		H_2O	79													
		CO	21													
		H_2														
		CO_2														
		N_2														
		O_2														
		CH_4														
	Minor/Trace Gases	Component (ppmv)														
		C_2H_4														
		C_2H_6														
		C_3H_6														
		C_3H_8														
		H_2S														
		COS														
		CS_2														
		SO_2														
		NH_3														
		HCN														
		Particulates (g/Nm^3)														
		Tars (g/Nm^3)														
LIQUID AND SOLID STREAMS		Water (wt%)	90			50*										
		Ash (wt%)														
		Carbon (wt%)														
		Hydrogen (wt%)														
		Nitrogen (wt%)														
		Oxygen (wt%)														
		Sulfur (wt%)	10			50										
		Total Flow (g/sec)	92.0	133	9.2-27.6	18.4	82.8-101	None-16.1	82.8-85.1	0.479-None	0.239					
		Temperature, °K														
		Pressure, kPa														
		HHV solids (MJ/kg)														
		HHV gases (MJ/Nm^3)														

*Includes Salts

** Flow rates depend upon the number of sulfur cake washes, low rates are for 1 wash, high rates are for 3 washes

TABLE 2.2-10. STREAM COMPOSITIONS AND FLOW RATES FOR WELLMAN-GALUSHA GASIFICATION SYSTEMS (FIGURE 2.2-4) PRODUCING 17.6 MW OF CLEAN PRODUCT GAS FROM LOW-SULFUR BITUMINOUS COAL

		STREAM NUMBER AND DESCRIPTION														
		1	2	3	-	4	5	6	7	8	9	10	11	12	13	14
		Coal Feed	Inlet Air	Steam	Ash Sluice Water	Gasifier Ash	Pokehole Gases	Coal Hopper Gas	Raw Product Gas	Cyclone Dust	Hot Product Gas	Quenched Product Gas	Scrubbed Product Gas	Quenched Cooled Prod/gas	Liquor to Inline Quench	Liquor to Tray Scrubber
GASEOUS STREAMS	Component (Vol %)															
Major Gases	H_2O			100			5.5	5.5	5.5		5.5	27.6	16.0	9.2		
	CO						24.5	24.5	24.5		24.5	18.8	21.8	23.6		
	H_2						11.8	11.8	11.8		11.8	9.0	10.4	11.2		
	CO_2						4.6	4.6	4.6		4.6	3.5	4.1	4.4		
	N_2		79				50.5	50.5	50.5		50.5	38.7	44.9	48.5		
	O_2		21				-	-	-		-	-	-	-		
	CH_4						1.98	1.98	1.98		1.98	1.52	1.76	1.90		
Minor/Trace Gases	Component (ppmv)															
	C_2H_4						2550	2550	2550		2550	1950	2260	2440		
	C_2H_6						945	945	945		945	720	835	903		
	C_3H_6						-	-	-		-	-	-	-		
	C_3H_8						-	-	-		-	-	-	-		
	H_2S						945	945	945		945	720	835	903		
	COS						95	95	95		95	73	85	92		
	CS_2						-	-	-		-	-	-	-		
	SO_2						19	19	19		19	15	17	18		
	NH_3						284	284	284		284	218	253	273		
	HCN						95	95	95		95	73	85	92		
	Particulates (g/Nm^3)						1.8	1.8	1.8		0.72	0.44	0.41	0.36		
	Tars (g/Nm^3)						39	39	39		39	24	22	19		
LIQUID AND SOLID STREAMS	Water (wt%)	2.5													100	100
	Ash (wt%)	2.9				86.3				6.2						
	Carbon (wt%)	79.1				11.5				87.3						
	Hydrogen (wt%)	5.6				0.1				3.3						
	Nitrogen (wt%)	1.6				0.1				1.5						
	Oxygen (wt%)	7.6				0.1				1.5						
	Sulfur (wt%)	0.7				1.9				0.4						
	Total Flow (g/sec)	810	2610	220	20-33	26	1.8	8.8	3610	3.5	3600	4340	3810	3400	2520	19400
	Temperature, °K	294	323	323			420	300	839		756	341	329	317	328	319
	Pressure, kPa						101	101	103		101	101	100	98.8	790	790
	HHV solids (MJ/kg)	33.2				3.8	29.7	29.7	29.7	29.7	29.7	29.7	29.7	29.7		
	HHV gases (MJ/Nm^3)						7.4	7.3	7.5		7.4	5.0	5.6	5.8		

TABLE 2.2-10 (Continued)

		STREAM NUMBER AND DESCRIPTION														
		15	16	17	18	19	20	21	22	23	24	25	26	27	28*	29
		Liquor to Spray Cooler	Liquor fr Gas/Liquor Separator	Liquor fr Tray Scrubber	Liquor fr Spray Cooler	Oils From ESP	By-Product Tars/Oils	Tar/Oil Separator Blowdown	Make-up Quench Water	Separator Product Gas	Compres Product Gas	Desulfur Product Gas	Stretford Liquor to Oxidizer	Stretford Liquor to Absorber	Stretford Liquor Blowdown	Oxidizer Vent Gas
GASEOUS STREAMS — Major Gases	Component (Vol %)															
	H_2O										8.0	8.1				
	CO										23.9	23.9				
	H_2										11.3	11.3				unk.
	CO_2										4.5	4.5				
	N_2										49.1	49.0				
	O_2										-	-				
	CH_4										1.93	1.93				
GASEOUS STREAMS — Minor/Trace Gases	Component (ppmv)															
	C_2H_4										2470	2470				
	C_2H_6										915	915				
	C_3H_6										-	-				
	C_3H_8										-	-				
	H_2S										915	10				
	COS										93	93				
	CS_2										-	-				
	SO_2										18	18				
	NH_3										277	277				
	HCN										93	93				
GASEOUS STREAMS	Particulates (g/Nm^3)										-	-				
	Tars (g/Nm^3)										0.15	0.15				
LIQUID AND SOLID STREAMS	Water (wt%)						2.9	peri-dic								
	Ash (wt%)						0.1									
	Carbon (wt%)						82.6									
	Hydrogen (wt%)						7.7									
	Nitrogen (wt%)						1.3									
	Oxygen (wt%)						4.9									
	Sulfur (wt%)						0.52									
	Total Flow (g/sec)	12900	1750	19900	13100	48	121		88	190	3310	3300	9450	9445	3.97-5.27	61.9
	Temperature, °K	308	341	333	319	317	328		303	358	317	317				
	Pressure, kPa	790									110	109				
	HHV solids (MJ/kg)					37	37									
	HHV gases (MJ/Nm^3)										5.3	5.2				

TABLE 2.2-10 (Continued)

		STREAM NUMBER AND DESCRIPTION														
		30 Stretford Liquor to Filter	31 Air to Oxidizer	32* Sulfur Cake Wash/Wat	33 Sulfur Cake	34* Stretford Liquor fr Filter	35* Stretford Liquor to Evaporator	36* Stretford Liquor to Surge/tnk	37* Make-up Water	38 Make-up Chem.						
GASEOUS STREAMS	Major Gases: Component (Vol %)															
	H_2O															
	CO															
	H_2															
	CO_2															
	N_2															
	O_2															
	CH_4															
	Minor/Trace Gases: Component (ppmv)															
	C_2H_4															
	C_2H_6															
	C_3H_6															
	C_3H_8															
	H_2S															
	COS															
	CS_2															
	SO_2															
	NH_3															
	HCN															
	Particulates (g/Nm^3)															
	Tars (g/Nm^3)															
LIQUID AND SOLID STREAMS	Water (wt%)	90			50											
	Ash (wt%)															
	Carbon (wt%)															
	Hydrogen (wt%)															
	Nitrogen (wt%)															
	Oxygen (wt%)															
	Sulfur (wt%)	10			50											
	Total Flow (g/sec)	43.2	62.2	4.32-13.0	8.64	38.9-47.6	None-5.47	38.9-42.1	1.88-None	0.231						
	Temperature, °K															
	Pressure, kPa															
	HHV solids (MJ/kg)															
	HHV gases (MJ/Nm^3)															

*Flow rates depend upon the number of sulfur cake washes, low rates are for 1 wash, high rates are for 3 washes

TABLE 2.2-11. STREAM COMPOSITIONS AND FLOW RATES FOR WELLMAN-GALUSHA GASIFICATION SYSTEMS (FIGURE 2.2.-4) PRODUCING 17.6 MW OF CLEAN PRODUCT GAS FROM HIGH-SULFUR BITUMINOUS COAL

		STREAM NUMBER AND DESCRIPTION														
		1	2	3	-	4	5	6	7	8	9	10	11	12	13	14
		Coal Feed	Inlet Air	Steam	Ash Sluice Water	Gasifier Ash	Pokehole Gases	Coal Hopper Gas	Raw Product Gas	Cyclone Dust	Hot Product Gas	Quenched Product Gas	Scrubbed Product Gas	Quenched Cooled Prod/gas	Liquor to Inline Quench	Liquor to Tray Scrubber
GASEOUS STREAMS	Major Gases															
	Component (Vol %)															
	H_2O						12.3	12.3	12.3		12.3	23.5	15.7	9.2		
	CO						25.3	25.3	25.3		25.3	22.1	24.4	26.3		
	H_2						13.0	13.0	13.0		13.0	11.3	12.5	13.5		
	CO_2						3.0	3.0	3.0		3.0	2.6	2.9	3.1		
	N_2						42.9	42.9	42.9		42.9	37.4	41.2	44.4		
	O_2						-	-	-		-	-	-	-		
	CH_4						2.4	2.4	2.4		2.4	2.1	2.3	2.5		
	Minor/Trace Gases															
	Component (ppmv)															
	C_2H_4						2370	2370	2370		2370	2070	2280	2460		
	C_2H_6						877	877	877		877	765	843	908		
	C_3H_6						-	-	-		-	-	-	-		
	C_3H_8						-	-	-		-	-	-	-		
	H_2S															
	COS						88-263	88-263	88-263		88-263	77-230	85-250	92-270		
	CS_2						-	-	-		-	-	-	-		
	SO_2						18	18	18		18	16	18	19		
	NH_3						263	263	263		263	229	252	271		
	HCN						88	88	88		88	77	85	92		
	Particulates (g/Nm^3)						2.2	2.2	2.2		0.88	0.61	0.54	0.47		
	Tars (g/Nm^3)						40	40	40		40	28	25	22		
LIQUID AND SOLID STREAMS	Water (wt%)	6.1														
	Ash (wt%)	8.4				92.8				6.6						
	Carbon (wt%)	67.9				5.6				89.1						
	Hydrogen (wt%)	4.8				0.3				0.3						
	Nitrogen (wt%)	2.1								1.3						
	Oxygen (wt%)	6.8								1.7						
	Sulfur (wt%)	3.9				1.2				0.7						
	Total Flow (g/sec)	883	2040	390	55-91	73.7	1.8	7.81	3200	3.78	3202	3640	3220	3100	2260	20500
	Temperature, °K	294	336	336			420	300	644		617	338	328	317	328	319
	Pressure, kPa						101	101			101	101	100	98.8	790	790
	HHV solids (MJ/kg)	29.2				2.0		28.2	28.2	28.2	28.2	28.2	28.2	28.2		
	HHV gases (MJ/Nm^3)						7.5	7.4	7.6		7.6	6.1	6.5	6.8		

TABLE 2.2-11. (Continued)

		15 Liquor to Spray Cooler	16 Liquor fr Gas/Liq. Sep	17 Liquor fr Tray Scrubber	18 Liquor fr Spray Cooler	19 Oils From ESP	20 By-Product Tar/Oils	21 Tar/Oil Separator Blowdown	22 Make-up Quench Water	23 Separator Vent Gas	24 Compress Product Gas	25 Desulfur Product Gas	26 Stretford Liquor to Oxidizer	27 Stretford Liquor to Absorber	28* Stretford Liquor Blowdown	29 Oxidizer Vent Gases
GASEOUS STREAMS	Major Gases: Component (Vol %)															
	H_2O										8.0	8.1				
	CO										26.6	26.8				
	H_2										13.7	13.8				
	CO_2										3.1	3.1				
	N_2										44.9	45.2				
	O_2										-	-				
	CH_4										2.5	2.5				
	Minor/Trace Gases: Component (ppmv)															
	C_2H_4										2490	2510				
	C_2H_6										920	930				
	C_3H_6										-	-				
	C_3H_8										7900-8200	10				
	H_2S										93-273	94-275				
	COS										-	-				
	CS_2										19	19				
	SO_2										274	276				
	NH_3										93	94				
	HCN															
	Particulates (g/Nm^3)										-	-				
	Tars (g/Nm^3)										0.16	0.16				
LIQUID AND SOLID STREAMS	Water (wt%)						3.0									
	Ash (wt%)						0.1									
	Carbon (wt%)						86.1									
	Hydrogen (wt%)						7.6									
	Nitrogen (wt%)						0.8									
	Oxygen (wt%)						1.4									
	Sulfur (wt%)						1.2									
	Total Flow (g/sec)	9900	1800	20900	10000	45.3	114	126	None	180	3010	2980	48009	47967	None-6.85	472
	Temperature, °K	308	339	331	319			328		358	317	317				
	Pressure, kPa	790									110	109				
	HHV solids (MJ/kg)					37.2	37.2									
	HHV gases (MJ/Nm^3)										6.0	6.0				

TABLE 2.2-11. (Continued)

		30 Stretford Liquor to Filter	31 Air to Oxidizer	32* Sulfur Cake Washwater	33 Sulfur Cake	34* Stretford Liquor fr Filter	35* Stretford Liquor to Evaporator	36* Stretford Liquor to Surge tnk	37 Make-up water	38* Make-up Chem.
GASEOUS STREAMS	Major Gases: Component (Vol %)									
	H_2O									
	CO									
	H_2									
	CO_2									
	N_2									
	O_2									
	CH_4									
	Minor/Trace Gases: Component (ppmv)									
	C_2H_4									
	C_2H_6									
	C_3H_6									
	C_3H_8									
	H_2S									
	COS									
	CS_2									
	SO_2									
	NH_3									
	HCN									
	Particulates (g/Nm^3)									
	Tars (g/Nm^3)									
LIQUID AND SOLID STREAMS	Water (wt%)		90		50					
	Ash (wt%)									
	Carbon (wt%)									
	Hydrogen (wt%)									
	Nitrogen (wt%)									
	Oxygen (wt%)									
	Sulfur (wt%)		10		50					
	Total Flow (g/sec)	329	475	32.9-98.7	70.8	291-357	8.32-56.5	283-290	None	.529-.378
	Temperature, °K									
	Pressure, kPa									
	HHV solids (MJ/kg)									
	HHV gases (MJ/Nm^3)									

*Flow rates depend upon the number of sulfur cake washes, low rates are for 1 wash, high rates are for 3 washes

TABLE 2.2-12. STREAM COMPOSITIONS AND FLOW RATES FOR WELLMAN-GALUSHA GASIFICATION SYSTEMS (FIGURE 2.2-5) PRODUCING 17.6 MW OF CLEAN PRODUCT GAS FROM HIGH SULFUR BITUMINOUS COAL (MEA PROCESS OPERATING PRESSURE OF 0.44 MPa, 50 psig)

		STREAM NUMBER AND DESCRIPTION														
		1	2	3	-	4	5	6	7	8	9	10	11	12	13	14
		Coal Feed	Inlet Air	Steam	Air Sluice Water	Gasifier Ash	Pokehold Gases	Coal Hopper Gas	Raw Product Gas	Cyclone Dust	Hot Product Gas	Quenched Product Gas	Scrubbed Product Gas	Quenched Cooled Prod/gas	Liquor to Inline Quench	Liquor to Tray Scrubber
GASEOUS STREAMS	Component (Vol %)															
Major Gases	H_2O						12.3	12.3	12.3		12.3	23.5	15.7	9.2		
	CO						25.3	25.3	25.3		25.3	22.1	24.4	26.3		
	H_2						13.0	13.0	13.0		13.0	11.3	12.5	13.5		
	CO_2						3.0	3.0	3.0		3.0	2.6	2.9	3.1		
	N_2						42.9	42.9	42.9		42.9	37.4	41.2	44.4		
	O_2						-	-	-		-	-	-	-		
	CH_4						2.4	2.4	2.4		2.4	2.1	2.3	2.5		
Minor/Trace Gases	Component (ppmv)															
	C_2H_4						2370	2370	2370		2370	2070	2280	2460		
	C_2H_6						877	877	877		877	765	843	908		
	C_3H_6						-	-	-		-	-	-	-		
	C_3H_8						-	-	-		-	-	-	-		
	H_2S															
	COS						88-263	88-263	88-263		88-263	77-230	85-250	92-270		
	CS_2						-	-	-		-	-	-	-		
	SO_2						18	18	18		18	16	18	19		
	NH_3						263	263	263		263	229	252	221		
	HCN						88	88	88		88	77	85	92		
	Particulates (g/Nm^3)						2.2	2.2	2.2		0.88	0.61	0.54	0.47		
	Tars (g/Nm^3)						40	40	40		40	2.8	25	22		
LIQUID AND SOLID STREAMS	Water (wt%)	6.1														
	Ash (wt%)	8.4				92.8				6.6						
	Carbon (wt%)	67.9				5.6				89.1						
	Hydrogen (wt%)	4.8				0.3				0.3						
	Nitrogen (wt%)	2.1								1.3						
	Oxygen (wt%)	6.8								1.7						
	Sulfur (wt%)	3.9				1.2				0.7						
	Total Flow (g/sec)	883	2040	390	55-91	73.7	1.8	7.8	3200	3.8	3202	3640	3220	3100	2260	20500
	Temperature, °K	294	336	336			420	300	644		617	338	328	317	328	319
	Pressure, kPa						101	101			101	101	100	98.8	790	790
	HHV solids (MJ/kg)	29.2				2.0	28.2	28.2	28.2	28.2	28.2	28.2	28.2	28.2		
	HHV gases (MJ/Nm^3)						6.8	6.7	6.9		6.9	5.4	5.8	6.0		

TABLE 2.2-12. (Continued)

		STREAM NUMBER AND DESCRIPTION														
		15 Liquor to Spray Cooler	16 Liquor fr Gas/Liquor Separator	17 Liquor fr Tray Scrubber	18 Liquor fr Spray Cooler	19 Oils From ESP	20 By-Product Tars/Oils	21 Tar/Oil Separator Blowdown	22 Make-up Quench Water	23 Separator Vent Gas	24 Compressed Product Gas	25 Desulfur Product Gas	26 MEA to Absorber	27 Make-up Chemicals	28 MEA Blowdown	29 Stripped Acid Gases
GASEOUS STREAMS	Major Gases															
	Component (Vol %)															
	H_2O										2.6	2.7				2.5
	CO										28.1	29.3				1.9
	N_2										14.4	15.0				0.4
	CO_2										3.3	0.1				71.9
	H_2										47.7	49.7				3.2
	O_2										-	-				-
	CH_4										2.7	2.8				0.3
	Minor/Trace Gases															
	Component (ppmv)															
	C_2H_4										2580	2690				
	C_2H_6										930	980				
	C_3H_4										-	-				
	C_3H_6										-	-				
	H_2S										[illegible]	157				192000
	COS										96-283	60				
	CS_2										-	-				
	SO_2										19	-				
	NH_3										284	-				6200
	HCN										96	-				
	Particulates (g/Nm^3)										-	-				
	Tars (g/Nm^3)										0.17	0.17				
LIQUID AND SOLID STREAMS	Water (wt%)						3.0									
	Ash (wt%)						0.1									
	Carbon (wt%)						86.1									
	Hydrogen (wt%)						7.6									
	Nitrogen (wt%)						0.8									
	Oxygen (wt%)						1.4									
	Sulfur (wt%)						1.2									
	Total Flow (g/sec)	9900	1800	20900	10000	45.3	11.4	227	None	180	2850	2640	7850	5	2	210
	Temperature, °K	308	339	331	319			319			322	322	317			317
	Pressure, kPa	790									448	446				103.4
	HHV solids (MJ/kg)					37.2	37.2									
	HHV gases (MJ/Nm^3)										6.6	6.7				5.0

TABLE 2.2-13. STREAM COMPOSITIONS AND FLOW RATES FOR WELLMAN-GALUSHA SYSTEMS (FIGURE 2.2-5) PRODUCING 17.6 MW OF CLEAN PRODUCT GAS FROM HIGH-SULFUR BITUMINOUS COAL (MEA PROCESS OPERATING PRESSURE OF 1.5 MPa OR 200 psig)

		STREAM NUMBER AND DESCRIPTION														
		1	2	3	-	4	5	6	7	8	9	10	11	12	13	14
		Coal Feed	Inlet Air	Steam	Ash Sluice Water	Gasifier Ash	Pokehole Gases	Coal Hopper Gas	Raw Product Gas	Cyclone Dust	Hot Product Gas	Quenched Product Gas	Scrubbed Product Gas	Quenched Cooled Prod/gas	Liquor to Inline Quench	Liquor to Tray Scrubber
GASEOUS STREAMS — Major Gases — Component (Vol %)																
	H_2O						12.3	12.3	12.3		12.3	23.5	15.7	9.2		
	CO						25.3	25.3	25.3		25.3	22.1	24.4	26.3		
	H_2						13.0	13.0	13.0		13.0	11.3	12.5	13.5		
	CO_2						3.0	3.0	3.0		3.0	2.6	2.9	3.1		
	N_2						42.9	42.9	42.9		42.9	37.4	41.2	44.4		
	O_2						-	-	-		-	-	-	-		
	CH_4						2.4	2.4	2.4		2.4	2.1	2.3	2.5		
GASEOUS STREAMS — Minor/Trace Gases — Component (ppmv)																
	C_2H_4						2370	2370	2370		2370	2070	2380	2460		
	C_2H_6						877	877	877		877	765	843	908		
	C_3H_6						-	-	-		-	-	-	-		
	C_3H_8						-	-	-		-	-	-	-		
	H_2S															
	COS						88-263	88-263	88-263		88-263	77-230	85-250	92-270		
	CS_2						-	-	-		-	-	-	-		
	SO_2						18	18	18		18	16	18	19		
	NH_3						263	263	263		263	229	252	271		
	HCN						88	88	88		88	77	85	92		
GASEOUS STREAMS	Particulates (g/Nm^3)						2.2	2.2	2.2		0.88	0.61	0.54	0.47		
	Tars (g/Nm^3)						40	40	40		40	28	25	22		
LIQUID AND SOLID STREAMS	Water (wt%)	6.1														
	Ash (wt%)	8.4				92.8				6.6						
	Carbon (wt%)	67.9				5.6				89.1						
	Hydrogen (wt%)	4.8				0.3				0.3						
	Nitrogen (wt%)	2.1								1.3						
	Oxygen (wt%)	6.8								1.7						
	Sulfur (wt%)	3.9				1.2				0.7						
	Total Flow (g/sec)	883	2040	390	55-91	73.7	1.8	7.8	3200	3.8	3202	3640	3220	3100	2260	20500
	Temperature, °K	294	336	336			420	300	644		617	338	328	317	328	319
	Pressure, kPa						101	101			101	101	100	93.8	790	790
	HHV solids (MJ/kg)	292				2.0		28.2	28.2	28.2	28.2	28.2	28.2	28.2		
	HHV gases (MJ/Nm^3)						6.8	6.7	6.9		6.9	5.4	5.8	6.0		

TABLE 2.2-13. (Continued)

		15 Liquor to Spray Cooler	16 Liquor fr Gas/Liquor Separator	17 Liquor fr Tray Scrubber	18 Liquor fr Spray Cooler	19 Oils from ESP	20 By-Product Tars/Oils	21 Tar/Oil Separator Blowdown	22 Make-up Quench Water	23 Separator Vent Gas	24 Compressed Product Gas	25 Desulfur Product Gas	26 MEA to Absorber	27 Make-up Chemicals	28 MEA Blowdown	29 Stripped Acid Gas
GASEOUS STREAMS	Major Gases: Component (Vol %)															
	H_2O										0.6	0.6				2.6
	CO										28.7	29.9				6.3
	H_2										14.7	15.5				1.0
	CO_2										3.4	0.002				62.2
	N_2										48.6	50.8				10.1
	O_2										-	-				-
	CH_4										2.7	2.8				0.9
	Minor/Trace Gases: Component (ppmv)															
	C_2H_4										2620	2780				420
	C_2H_6										950	1010				220
	C_3H_6										-	-				-
	C_3H_8										-	-				-
	H_2S										[illegible]	4				163000
	COS										90-280	-				-
	CS_2										-	-				-
	SO_2										20	-				-
	NH_3										284	-				5200
	HCN										96	-				-
	Particulates (g/Nm^3)										-	-				-
	Tars (g/Nm^3)										0.17	0.17				-
LIQUID AND SOLID STREAMS	Water (wt%)						3.0									
	Ash (wt%)						0.1									
	Carbon (wt%)						86.1									
	Hydrogen (wt%)						7.6									
	Nitrogen (wt%)						0.8									
	Oxygen (wt%)						1.4									
	Sulfur (wt%)						1.2									
	Total Flow (g/sec)	9900	1800	20900	10000	45.3	114	315	None	180	2810	2570	5000	5	2	241
	Temperature, °K	308	339	331	319			319			322	322	317			317
	Pressure, kPa	790									567	1565				103
	HHV solids (MJ/kg)					37.2	37.2									
	HHV gases (MJ/Nm^3)										6.7	6.8				5.3

coal feedstock. It is similar to a facility using Chapman (Wilputte) gasifiers to produce a low-Btu combustion gas for process heaters (Ref. 13).

The second Wellman-Galusha gasification system (see Figure 2.2-3) is used to produce a "clean" industrial fuel gas from anthracite coal. This system contains the following process modules: coal handling and storage, gasification, gas quenching and cooling, and sulfur removal. In this system, the product gas is cooled to 316 K (110°F) before entering the sulfur removal process. Two sulfur removal processes are considered in this report: Stretford and Monoethanolamine (MEA) processes (only the Stretford process is shown in Figure 2.2-3). If a Stretford sulfur removal process is used, only H_2S will be removed, leaving organic sulfur species (i.e., COS, CS_2, etc.) in the product gas stream. H_2S removal efficiencies of greater than 99% have been achieved with residual outlet H_2S concentrations less than 10 ppmv (Ref. 16). If the MEA process is used, both H_2S and organic sulfur compounds can be removed. However, the sulfur removal effectiveness is dependent upon the pressure of the product gas. For example, at 0.34 MPa (50 psi) residual H_2S concentrations of 8 ppmv can routinely be achieved, while at a higher pressure of 0.69 MPa (100 psi), residual H_2S levels can be reduced to 4 ppmv. The MEA process also produces an acid gas stream that requires further treatment (Refs. 17, 18).

The third system (see Figure 2.2-4) is used to produce a "clean" industrial fuel gas from the following coal feedstocks: bituminous (low- and high-sulfur) coal and lignite. In this system, the quenched and cooled product gas is sent to a tar/oil removal process followed by a sulfur removal process. An electrostatic precipitator (ESP) is used to remove tars and oils that would cause operating problems with the downstream sulfur removal process. As in the second system, the Stretford and MEA processes (only the Stretford is shown in Figure 2.2-4) were chosen for the removal of sulfur species in order to produce a "clean" industrial fuel gas.

The fourth system (see Figure 2.2-5) is very similar to the third system. The major difference is that only the MEA process is used for removing sulfur species. By compressing the gas to approximately 1.5 MPa (200 psi), the MEA process can remove essentially all sulfur compounds and produce a "very clean" product gas.

Energy Efficiencies -

Three energy efficiencies are used to describe the Wellman-Galusha gasification systems examined:

- coal to low-Btu gas efficiency which relates the energy of the product gas (higher heating value or HHV of combustibles plus sensible heat) to the HHV of the feed coal,

- gas production efficiency which relates the energy of the product gas to the total energy input to the systems (HHV of coal plus utility steam and electricity energy), and

- overall thermal efficiency which relates the energy of the product gas and by-product tars, oils, and steam to the total energy input to the system.

The energy efficiencies for each uncontrolled Wellman-Galusha gasification system examined in this report are summarized in Table 2.2-14. Energy efficiencies for systems producing a hot "moderately clean" industrial fuel gas are approximately 90 percent. Systems producing a desulfurized gas have overall energy efficiencies ranging from 64 to 88 percent depending upon the coal feedstock, product gas sulfur content, and type of sulfur removal process used. For the same coal feed, the system using the Stretford sulfur removal process had a higher energy efficiency than systems using the MEA process.

Detailed Capital and Operating Costs -

Capital and operating costs were calculated for the following Wellman-Galusha gasification systems producing nominally 17.6 MW (60 x 10^6 Btu/hr) and 87.9 MW (300 x 10^6 Btu/hr) of product low-Btu gas:

- System 1 produces a hot raw product gas.

- System 2 produces a desulfurized product gas (down to 10 ppmv H_2S) using a Stretford sulfur removal process.

- System 3 produces a desulfurized product gas (down to 200 ppmv H_2S) using a MEA sulfur removal process operating at 0.44 MPa (50 psi).

- System 4 produces a desulfurized product gas (less than 5 ppmv) using an MEA sulfur removal process operating at 1.5 MPa (200 psi).

Tables 2.2-15 and 2.2-16 summarize the capital and operating costs for uncontrolled Wellman-Galusha gasification systems using

TABLE 2.2-14. CALCULATED ENERGY EFFICIENCIES FOR VARIOUS UNCONTROLLED WELLMAN-GALUSHA GASIFICATION SYSTEMS

Coal Feed Type	Typical Raw Gas Temperature	Energy Efficiencies for Systems Producing a Hot Product Gas			Energy Efficiencies for Systems Producing Cool Desulfurized Gas		
		η_{cg} [a]	η_{gT} [b]	η_T [c]	η_{cg} [a]	η_{gT} [b]	η_T [c]
Anthracite	700°K (800°F)	87.2[d]	86.6[d]	86.6[d]	80.5[e]	78.9[e]	81.5[e]
Low-Sulfur, HVA Bituminous	840°K (1050°F)[f]	92.8[d]	92.2[d]	92.2[d]	68.8[e]	67.0[e]	83.2[e]
High-Sulfur, HVA Bituminous	640°K (700°F)	NA[g]	NA[g]	NA[g]	69.6[e] 60.4[h] 62.1[i]	66.8[e] 55.9[h] 50.5[i]	82.6[e] 71.2[h] 63.9[i]
Lignite	420°K (300°F)	NA[g]	NA[g]	NA[g]	77.0[e]	73.6[e]	88.5[e]

[a] η_{cg} is the coal to low-Btu gas energy efficiency which relates the energy of the product gas (higher heating value or HHV of the combustible gases plus sensible heat) to the HHV of the feed coal.

[b] η_{gT} is the gas production efficiency which relates the energy of the product gas to the total energy input to the system (HHV of coal plus utility steam and electricity energy).

[c] η_T is the overall thermal efficiency which relates the energy of the product gas and by-product tars, oils, and steam to the total energy input to the system.

[d] These systems produce a "moderately clean" industrial fuel gas. A "moderately clean" industrial fuel gas is used in this report to describe a low-Btu gas whose combustion emissions would be equal to or lower than the 1971 new source performance standards (NSPS) for direct combustion of coal in a large steam generator.

[e] These systems produce a "clean" industrial fuel gas using the Stretford process for removing H_2S. A "clean" industrial fuel gas is used in this report to describe a low-Btu gas whose combustion emission would be approximately equal to the 1979 NSPS for direct combustion of coal in large utility steam generators.

[f] This temperature is much higher than that which would normally be encountered in a Wellman-Galusha gasifier (600-700°K is more typical). See discussion in Section 3.

[g] Not applicable - These coals have sulfur contents too high to produce a hot, "moderately clean" industrial fuel gas.

[h] These systems produce a "clean" industrial fuel gas using the MEA process to remove sulfur species. In these systems some of the low-Btu gas is used to meet the energy requirements of the MEA process.

[i] These systems produce a "very clean" gas using the MEA process.

TABLE 2.2-15. CAPITAL INVESTMENT REQUIREMENTS AND ANNUALIZED COSTS OF UNCONTROLLED WELLMAN-GALUSHA GASIFICATION SYSTEMS PRODUCING NOMINALLY 87.9 MW (300 x 10^6 BTU/HR) OF PRODUCT LOW-BTU GAS (LATE-1977 DOLLARS)[a]

	Coal Feedstock/Type of Product Gas						
	Anthracite		Low Sulfur Bituminous		High Sulfur Bituminous (Cold Gas)		
	Hot Gas[b]	Cold Gas[c]	Hot Gas[b]	Cold Gas[c]	Stretford[c]	MEA (200 ppmv)[d]	MEA (neg.)[e]
Capital Investment Requirements[f], $1,000	13,300	19,700	4,770	13,100	14,200	11,600	14,000
Design Plant Capacity, MW	95.6	87.9	99.7	92.4	89.9	77.9	80.1
Annual Operating Factor	90%	90%	90%	90%	90%	90%	90%
Annualized Costs, $1,000/yr							
Operating and Maintenance Costs							
Coal[g]	5,198	5,198	3,676	4,595	3,510	3,510	3,510
Labor/Overhead (@ $15.00/man-hr)	524	657	263	394	394	394	394
Electricity (@ $0.04/kWh)	81	238	72	396	590	1,125	334
Steam[h]	-	(86)	-	-	-	-	3,390
Chemicals	-	40	-	40	315	274	274
Maintenance (@ 6% of direct equipment costs)	596	871	189	563	617	499	582
Taxes, Insurance, and GSA Costs (@ 4% of depreciable investment)	468	713	149	465	512	406	474
Capital Related Charges[i]	2,476	3,640	916	2,436	2,614	2,165	2,625
TOTAL Annualized Costs, $\$10^3$/yr	9,343	11,271	5,265	8,889	8,552	8,373	11,583
Average Gas Costs, $/GJ	3.44	4.52	1.86	3.39	3.35	3.78	5.09

[a]Each system, except the one producing a hot product gas from low sulfur bituminous coal, has a basic capacity of 87.9 MW (300 x 10^6 Btu/hr) of tar/oil-free product gas at 43.3°C (110°F). The actual total energy supplied to the end-user though is as indicated. Differences in the indicated useful energy supplied and the basic capacity of 87.9 MW (300 x 10^6 Btu/hr) are a result of 1) energy credits taken for the sensible heat and/or tar/oil content of the product gas for the hot gas systems, and 2) use of a portion of the product gas to supply energy to the stripper reboiler in the systems that use the MEA process. For the hot gas, low sulfur bituminous system, the tar/oil-free product gas rate is 74.0 MW (253 x 10^6 Btu/hr). But, the sensible heat and tar/oil content of the hot product gas raise the total system capacity to 99.7 MW (340 x 10^6 Btu/hr). This capacity was used in the cost analysis because it is comparable to the capacity of the other systems examined.

[b]These systems use only a cyclone for product gas purification and deliver a hot product gas to the end user.

[c]These systems use the Stretford process to remove H_2S from the cooled product gas. Residual H_2S levels are nominal 10 ppmv. Organic sulfur compounds, such as COS and CS_2, are not removed by the Stretford process.

[d]This system uses the MEA process operating at 0.44 MPa (50 psig) to remove sulfur species from the cooled product gas. Residual sulfur species amount to the equivalent of 200 ppmv H_2S.

[e]This system uses the MEA process operating at 1.5 MPa (200 psig) to remove sulfur species from the cooled product gas. Negligible sulfur species are left in the product gas.

[f]In estimating capital investment requirements, a spare gasifier/cyclone unit is included for all systems and cooling liquor pumps are spared 100%.

[g]Assumed coal properties and delivered costs are: Anthracite: 29.7 MJ/kg (12,800 Btu/lb) and $50/metric ton ($45/short ton)
Low sulfur bituminous: 33.2 MJ/kg (14,300 Btu/lb) and $40/metric ton ($36/short ton)
High sulfur bituminous: 29.0 MJ/kg (12,500 Btu/lb) and $28/metric ton ($25/short ton)

[h]Steam costs were assumed to be $0.011/kg ($5/10^3 lb). Steam credits were taken as $1/GJ ($1.05/10^6 Btu).

[i]Basis for capital related charges:
- Utility financing method
- Late-1977 dollars without inflation
- 25-year economic project lifetime
- 4% per year straightline depreciation of depreciable investment
- 100% equity financing
- 15% after tax return on equity
- 46% federal income tax rate
- 10% pretax return on working capital

TABLE 2.2-16. CAPITAL INVESTMENT REQUIREMENTS AND ANNUALIZED COSTS OF UNCONTROLLED WELLMAN-GALUSHA GASIFICATION SYSTEMS PRODUCING NOMINALLY 17.6 MW (60 x 10^6 BTU/HR) OF PRODUCT LOW-BTU GAS (LATE-1977 DOLLARS)

	Coal Feedstock/Type of Product Gas						
	Anthracite		Low Sulfur Bituminous		High Sulfur Bituminous (Cold Gas)		
	Hot Gas[b]	Cold Gas[c]	Hot Gas[b]	Cold Gas[c]	Stretford[c]	MEA (200 ppmv)[d]	MEA (neg.)[e]
Capital Investment Requirements[f], $1,000	3,250	6,110	1,730	5,200	5,500	3,890	4,700
Design Plant Capacity, MW	19.1	17.6	24.9	18.5	18.0	15.6	16.0
Annual Operating Factor	90%	90%	90%	90%	90%	90%	90%
Annualized Costs, $1,000/yr							
Operating and Maintenance Costs							
Coal[g]	1,040	1,040	919	919	702	702	702
Labor/Overhead (@ $15.00/man-hr)	131	197	66	131	131	131	131
Electricity (@ $0.04/kWh)	16	48	18	79	118	225	643
Steam[h]	-	(17)	-	-	-	-	-
Chemicals	-	8	-	8	63	55	55
Maintenance (@ 6% of direct equipment costs)	149	276	74	233	248	175	210
Taxes, Insurance, and GSA Costs (@ 4% of depreciable investment)	117	229	58	194	207	143	171
Capital Related Charges[i]	602	1,116	326	950	1,003	715	867
TOTAL Annualized Costs, $$10^3$/yr	2,055	2,897	1,461	2,514	2,472	2,146	2,779
Average Gas Costs, $/GJ	3.79	5.80	2.07	4.79	4.84	4.85	6.10

[a]Each system has a nominal capabity of 17.6 MW (60 x 10^6 Btu/hr) of tar/oil-free product gas at 43.3°C (110°F). The actual total energy supplied to the end-user though is as indicated. Differences in the indicated useful energy supplied and the basic capacity of 17.6 MW (60 x 10^6 Btu/hr) are a result of 1) energy credits taken for the sensible heat and/or tar/oil content of the product gas for the hot gas systems, and 2) use of a portion of the product gas to supply energy to the stripper reboiler in the systems that use the MEA process.

[b]These systems use only a cyclone for product gas purification and deliver a hot product gas to the end user.

[c]These systems use the Stretford process to remove H_2S from the cooled product gas. Residual H_2S levels are nominal 10 ppmv. Organic sulfur compounds, such as COS and CS_2, are not removed by the Stretford process.

[d]This system uses the MEA process operating at 0.44 MPa (50 psig) to remove sulfur species from the cooled product gas. Residual sulfur species amount to the equivalent of 200 ppmv H_2S.

[e]This system uses the MEA process operating at 1.5 MPa (200 psig) to remove sulfur species from the cooled product gas. Negligible sulfur species are left in the product gas.

[f]In estimating capital investment requirements, a spare gasifier/cyclone unit is included for all systems and cooling liquor pumps are spared 100%.

[g]Assumed coal properties and delivered costs are: Anthracite: 29.7 MJ/kg (12,800 Btu/lb) and $50/metric ton ($45/short ton)
Low sulfur bituminous: 33.2 MJ/kg (14,300 Btu/lb) and $40/metric ton ($36/short ton)
High sulfur bituminous: 29.0 MJ/kg (12,500 Btu/lb) and $28/metric ton ($25/short ton)

[h]Steam costs were assumed to be $0.011/kg ($5/10^3 lb). Steam credits were taken as $1/GJ ($1.05/10^6 Btu).

[i]Basis for capital related charges:
- Utility financing method
- Late-1977 dollars without inflation
- 25-year economic project lifetime
- 4% per year straightline depreciation of depreciable investment
- 100% equity financing
- 15% after tax return on equity
- 46% federal income tax rate
- 10% pretax return on working capital

various coal feedstocks. Costs of removing sulfur species from the low-Btu product gas are included in these cost estimates. However, pollution control equipment costs are not included.

As shown in Tables 2.2-15 and 2.2-16, the product gas costs are dependent upon coal feedstock, product gas specification (tar/sulfur content) and plant size. Product gas costs for producing a hot raw gas for on-site use (System 1) range from \$1.90 to \$3.80 per GJ (\$2.00 to \$4.00 per 10^6 Btu) depending upon the coal feedstock. For systems using a Stretford sulfur removal process, product gas costs range from \$3.40 to \$5.80 per GJ (\$3.60 to \$6.10 per 10^6 Btu) depending upon the coal and unit size. If an MEA sulfur removal process is used to remove gaseous sulfur species, product gas costs would range from \$3.80 to \$6.10 per GJ (\$4.00 to \$6.40 per 10^6 Btu) depending upon the product gas sulfur content and unit size.

For each of these gasification systems, the major cost item is the coal feedstock. For systems using anthracite coal, the coal costs represent 36 to 56 percent of the total costs of the product gas. For systems using low-sulfur bituminous coal, coal costs are between 36 to 70 percent of the product gas costs and for high-sulfur bituminous coals, 25 to 42 percent.

2.2.3 Detailed Description of Processes and Systems

As mentioned previously, Wellman-Galusha gasification systems have three basic operations: coal pretreatment, coal gasification, and gas purification. Details of these operations and the processes which comprise them are presented below:

Coal Preparation -

The coal preparation operation at Wellman-Galusha gasification facilities consists solely of coal storage, handling, and conveying. Because Wellman-Galusha gasification facilities may be limited in size, coal grinding and sizing will probably not be performed on-site. Instead, coal will be purchased presized from the coal mine or coal preparation plant.

Coal is transported by rail or truck to the gasification plant. At the gasification plant, it is stored in uncovered piles on the ground or possibly in covered or uncovered bins. Coal stockpiling could include coal supplies equal to 30 or more days of production. For facilities producing 17.6 to 87.9 MW (60 to 300 x 10^6 Btu/hr) of low-Btu gas from bituminous coal, a 30 day supply of coal is about 2 to 12 Gg (2000 to 13,000 short tons).

Front-end loaders or belt conveyors transport coal from storage to an underground bunker which empties into a bucket elevator. The bucket elevator then transports the coal to a main storage bin located above the coal hoppers that feed the gasifiers.

Emissions from coal preparation consist of rainwater runoff/leachate from uncovered storage piles or bins, and coal dust from coal handling and conveying.

Coal Gasification -

Figure 2.2-6 is a diagram of a Wellman-Galusha gasifier equipped with a coal bed agitator. In the Wellman-Galusha gasifier, low-Btu gas is produced from the countercurrent gasification of coal with a mixture of air and steam. Use of the agitator increases the gasifier capacity and permits the gasification of caking bituminous coals.

Coal Feeding - Coal is continuously fed by gravity from the coal hoppers to the gasifier via a set of coal pipes. Slide valves are located at both the top and bottom of the coal hoppers. Under regular operating conditions, the upper valves are closed and the lower ones are open. At periodic intervals, the bottom slide valves are closed and the top ones opened. This allows coal to gravity feed from the coal bin to the coal hoppers. After being replenished with coal, the coal hopper slide valves are returned to their regular operating positions.

Gasification - As coal flows downward through the gasifier, it passes countercurrently to the flow of gas. In the upper portion of the gasifier, the coal is preheated by the hot gas. As the coal flows downward, moisture in the coal evaporates and the coal undergoes a range of devolatilization reactions producing tars and oils.

In the gasification zone of the gasifier, various endothermic reactions occur between the coal and the hot gases passing upward from the combustion zone. The principal reactions are shown in Equations 2.2-1 to 2.2-3.

$$C + CO_2 \rightarrow 2CO \qquad (2.2\text{-}1)$$

$$C + H_2O \rightarrow CO + H_2 \qquad (2.2\text{-}2)$$

$$C + 2H_2 \rightarrow CH_4 \qquad (2.2\text{-}3)$$

Heat for the various endothermic reactions is provided by the sensible heat of the gases leaving the combustion zone. A fourth reaction, the water-gas shift reaction, occurs in the gas phase:

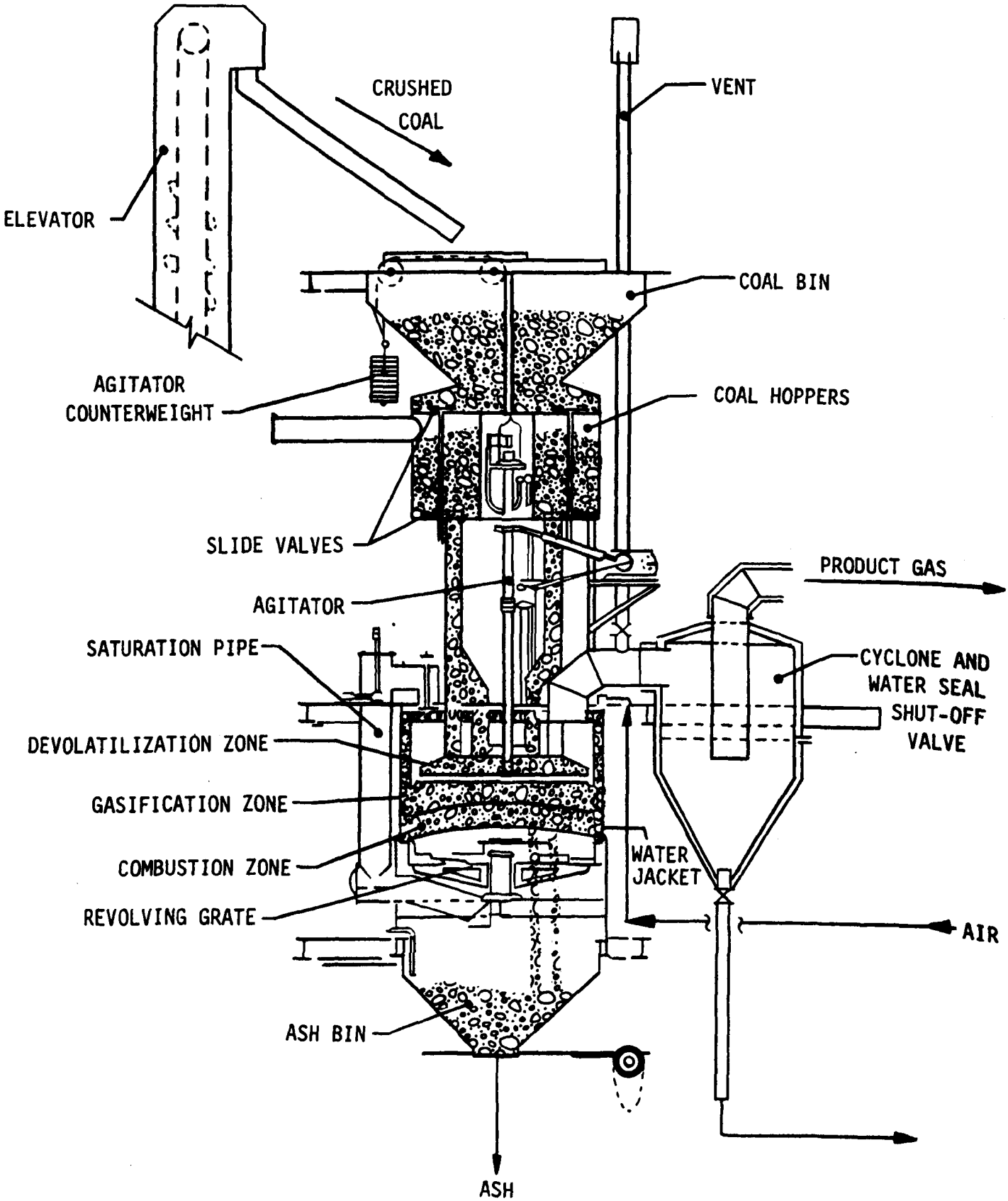

Figure 2.2-6. Diagram of a Wellman-Galusha Gasifier Equipped with a Coal Bed Agitator

70-1428-1

$$CO + H_2O \rightleftharpoons CO_2 + H_2 \qquad (2.2\text{-}4)$$

Equilibrium established by this reaction largely determines the composition of the raw product gas. Various reactions involving sulfur and nitrogen species also occur in the gasification zone.

Exothermic reactions occurring in the combustion zone produce the heat needed for the endothermic reactions in the gasification zone. The principal reactions occurring in the combustion zone are the complete and incomplete combustion of carbon:

$$C + \tfrac{1}{2}O_2 \rightarrow CO, \text{ and} \qquad (2.2\text{-}5)$$

$$C + O_2 \rightarrow CO_2. \qquad (2.2\text{-}6)$$

Steam fed to the gasifier with the inlet air absorbs some of the heat released during combustion, and helps to maintain the combustion temperature below the coal ash softening temperature. Some cooling is also provided by water circulating in a jacket that completely surrounds the gasifier.

The inner wall of the gasifier is steel plate, although the lower portion of the gasifier may be refractory-lined. The coal bed agitator has a revolving horizontal arm which also spirals vertically below the surface of the coal bed. The agitator prevents channeling in the coal bed by breaking up agglomerates and helps to maintain a uniform bed. The agitator arm and its shaft are made of water cooled heavy steel tubing. The arm can be revolved at varying speeds. Pokeholes are located on the top of the gasifier. Periodically, rods are inserted through the pokeholes to measure the depth and location of the "fire" and ash in the combustion zone. These rods can also be used to break up any agglomerates formed in the bed.

A fan supplies the air required for gasification. The air is passed over water in the water jacket and is nearly saturated with water vapor. The amount of water vapor added to the air is controlled by the temperature of the jacket water. The air/steam blast is then introduced into the ash bin beneath the ash grate. The grate distributes the blast to the coal bed above. The blast is preheated by contact with hot coal ash before entering the combustion zone.

Ash Removal - A revolving step-type grate at the bottom of the gasifier moves ash from the gasifier into the ash bin. The grates supports the ash and coal beds and distributes the air/steam mixture fed to the gasifier. The ash hopper is sealed with the atmosphere by a slide valve. Before ash is removed from the ash hopper, water is added to slurry the ash to aid in its removal and to help seal the ash hopper from the atmosphere.

Air emissions from the gasification operation include raw product gas which passes through the coal feeding mechanism and which leaks past the pokeholes, startup vent gases and fugitive emission from the ash bin during ash removal. Ash sluice water is a liquid effluent, while ash is the only solid waste.

Gas Purification -

The purpose of the gas purification operation is to remove undesirable constituents such as particulates, tars, oils, and sulfur compounds from the raw low-Btu gas. The performance specifications for the prcesses in this operation are defined by the intended use of the product gas. The product gas specifications examined in this environmental assessment are reported in Table 2.2-3. The processes needed to satisfy these product gas requirements include:

- particulate removal,
- gas quenching and cooling,
- tar and oil removal, and/or
- sulfur compound removal.

These processes are discussed below:

Particulate Removal - All proposed or operating Wellman-Galusha gasification systems feature cyclones as the initial cleanup step. Cyclones are preferred for the bulk removal of particulates because they are relatively inexpensive, low-energy consuming devices. Although cyclones are efficient in the removal of large particulates, other techniques are required to obtain efficient removal of small particulates. The efficiency range of conventional cyclones typically supplied with Wellman-Galusha gasifiers is summarized in Table 2.2-17.

Data from testing at low-Btu gasification facilities show overall removal efficiencies of 60 to 80% (Ref. 13). Removal of only 60% of the particulates from the raw low-Btu gas is sufficient for all but the most stringent product gas specifications examined. This is because most of the particulate matter is carbon, which should be burned with the product gas. Particulates not removed by the cyclone may be removed in downstream scrubbers and electrostatic precipitators. Potential waste streams from the cyclone include collected particulate matter and fugitive emissions.

TABLE 2.2-17. EFFICIENCY RANGE OF "CONVENTIONAL" CYCLONES

Particle size, μm	Efficiency range, wt % collected
5	50
5-20	50-80
15-40	80-95
40	95-99

Source: Ref. 19

Cas Quenching and Cooling - In the gas quenching and cooling module, tars and oils are condensed, and particulates and other impurities such as ammonia are scrubbed from the raw product gas. For systems described in this report, the principal purposes of the quenching/cooling process are:

- the removal of most of the tars and heavy oils from the product gas, and
- the cooling of the product gas to approximately 316 K (110°F).

These conditions are required by the downstream sulfur removal processes.

The gasification of anthracite coal produces a gas containing essentially no tars and oils. The absence of tars and oils simplifies the design of the quenching/cooling module and permits the use of waste heat boilers to recover a portion of the sensible heat of the product gas. In a system producing 17.6 MW (60×10^6 Btu/hr) of low-Btu gas, 0.32 kg/s (2500 lb/hr) of steam are recovered, with an energy content of 0.615 MW (2.1×10^6 Btu/hr).

Downstream of the waste heat boiler, the gas is quenched and cooled in a simple spray tower. Cooling liquor leaves the tower at 325 K (125°F) and is cooled to 308 K (95°F) for recycle to the spray tower. Sediment is periodically removed from the cooling loop.

Although waste heat recovery is always desirable, fouling problems from tar and oil condensation in the waste heat boiler may preclude the use of waste heat boilers in gasification systems gasifying tar-producing coals. Quenching of the gas occurs in an in-line quench. Further cooling and scrubbing of the gas occurs in vertical tray and spray towers. The quenching and cooling scheme chosen for nonanthracite gasification systems is similar to that of an existing Chapman facility (Ref. 13).

The quenching and cooling system is designed to remove about 60-70% of the tars and oils from the gas (Refs. 13, 15, 20). Although the system can be designed for more stringent recovery of tars and oils, it appears to be desirable to leave cleanup of residual tars and oils to an electrostatic precipitator. High energy scrubbers (like venturis) could conceivably replace part of the cooling system to provide greater collection efficiency of small tar particles and aerosols.

The tar-laden quench/cooling liquor is sent to a tar liquor separator. Tars and heavy oils collect in the bottom of the separator and are periodically removed and stored. Process condensate is removed from the system as a blowdown. Lighter oils can be skimmed from the tank.

Various organic and inorganic compounds are scrubbed from the raw product gas by the quenching and cooling processes. In the tar/liquor separator, some of the absorbed gases and vapors desorb from the quench liquor and fill the vapor space above the liquor. A vent stream from the separator would then contain constituents of the product gas, including H_2S, COS, CS_2, SO_2, H_2, CO_2, CO, NH_3, HCN, and organic vapors. The quenching and cooling systems used with the Stretford sulfur removal process feature a centrifugal blower to yield a product gas at 110 kPa (30 in W.G.). Systems used with the MEA sulfur removal process include turboblowers or compressors to attain the higher pressures needed for satisfactory operation.

Waste streams from the quenching and cooling processes include:

- vent gases from tar/liquor separator,
- process condensate, and
- fugitive gases and liquids.

Tar and Oil Removal - As previously described, the bulk removal of tars and oils from raw product gas occurs in the quenching and cooling process. However, both sulfur removal processes examined in this study have strict limits on the inlet gas tar and oil loadings. Electrostatic precipitators are used to achieve the final removal of tar and oil aerosols.

In similar processing of coke oven and carburetted water gases, ESP's have demonstrated removal efficiencies in excess of 99 percent, achieving outlet particulate/tar loadings as low as 0.003 g/m^3 (0.0131 gr/ft^3). In cleaning suspended matter from producer gas from lignite, loadings as low as 0.1 g/m^3 (0.0437 gr/ft^3) have been achieved (Refs. 21, 22). Recently, a vertical-flow dry ESP demonstrated removal efficiencies in excess of 99 percent in cleaning gas from a pilot-scale Riley Morgan gasifier (Ref. 15).

About 99 percent of the residual tar and oil aerosols and most of the remaining particulates in the gas are assumed to be removed in the ESP.

Sulfur Compounds Removal - A wide variety of processes is available for the removal of sulfur species from gas (Ref. 23). However, not all of these processes can effectively remove sulfur compounds from a low-pressure gas, nor can they remove both H_2S and COS.

Certain product gas specifications assessed in this report require the removal only of H_2S from the low-Btu gas. This is probably most easily accomplished in a sulfur removal process that directly converts the H_2S to sulfur, such as the Stretford or Thylox processes.

Product gas specifications requiring both COS and H_2S removal can use either amine and alkaline salt chemical solvent processes. These processes--represented by the monoethanolamine (MEA), diethanolamine (DEA), and diglycolamine (DGA) processes, and the Benfield process, respectively--form chemical complexes with the acid gas component. Subsequent thermal regeneration of the chemical complexes produces an acid gas stream that requires further treatment before release.

The Stretford process was selected as the sulfur removal process for those systems requiring the removal of H_2S only. The Stretford process which has been commercially applied to the treatment of a variety of gases (including coke oven and low-Btu), now appears to be among the most popular processes for removing H_2S from gas streams containing small concentrations of H_2S. Alternate processes (e.g., the iron oxide process) appear to be more costly and to have greater environmental impacts and land requirements.

The MEA process was selected as the sulfur removal process for those systems requiring the removal of both H_2S and COS. Although the MEA process has disadvantages such as solvent degradation caused by COS and its high steam regeneration requirements, it has been shown to be the most reactive of the chemical sorbents and much data are readily available. While the MEA process is examined here, other amine systems should have similar general characteristics.

Stretford Process - The Stretford process uses direct, liquid-phase oxidation to recover elemental sulfur from gas streams containing H_2S. Numerous commercial applications have successfully treated a variety of gas streams, including coke oven gas, refinery gas, synthesis gas, natural gas, Claus plant tail gas, and acid gas from physical absorption or amine absorption processes (Refs. 16, 24, 25, 26). H_2S removal efficiencies greater than 99 percent have been achieved, with residual

outlet H_2S loadings less than 10 ppmv (less than 1 ppmv in some cases) (Refs. 16, 27).

The overall reaction to produce sulfur is as follows:

$$2H_2S + O_2 \rightleftarrows 2S + 2H_2O \qquad (2.2\text{-}7)$$

This reaction takes place in several steps. First, H_2S is absorbed in a sodium salt solution of $CO_3^{=}$, HCO_3^-, metavanadate and anthraquinone disulfonic acid (ADA). The absorbed H_2S then reacts with the carbonate to form hydrosulfide (HS^-).

$$H_2S + CO_3^{=} \rightleftarrows HS^- + HCO_3^- \qquad (2.2\text{-}8)$$

Next, the HS^- is oxidized to elemental sulfur by the vanadium, which is reduced from the pentavalent to the quadrivalent form:

$$4VO_3^- + 2HS^- + H_2O \rightleftarrows V_4O_9^{=} + 2S + 4OH^- \qquad (2.2\text{-}9)$$

The vanadate is reoxidized to the pentavalent form by the ADA:

$$V_4O_9^{=} + 2OH^- + H_2O + 2ADA \rightleftarrows 4VO_3^- + 2ADA\ (\text{reduced}) \qquad (2.2\text{-}10)$$

The reduced ADA is then oxidized by air back to its original form:

$$2ADA\ (\text{reduced}) + O_2 \rightleftarrows 2ADA + 2H_2O \qquad (2.2\text{-}11)$$

A simplified flow diagram for the process is shown in Figure 2.2-7. Solution leaving the absorber is held in a delay tank to allow sufficient time for the HS^- to be oxidized to S. The solution is then sent to an oxidizer for the oxidation of ADA. Air bubbled through the solution also causes the sulfur particles to float to the top of the oxidizer. Regenerated solution is returned to the absorber, while the sulfur froth is sent to a surge tank for feed to a vacuum filter. The sulfur is dewatered to about 50 percent solids and then washed to recover the Stretford solution (Ref. 16). The sulfur may be further purified by autoclaving to produce a salable by-product. However, the quantities of sulfur produced in the systems described in this report are probably too small to justify recovery.

Alternatively, the sulfur cake can be disposed of as a solid waste. Depending on the amount of water used to wash the sulfur cake, some of the water may have to be evaporated before it is returned to the absorber (Ref. 16).

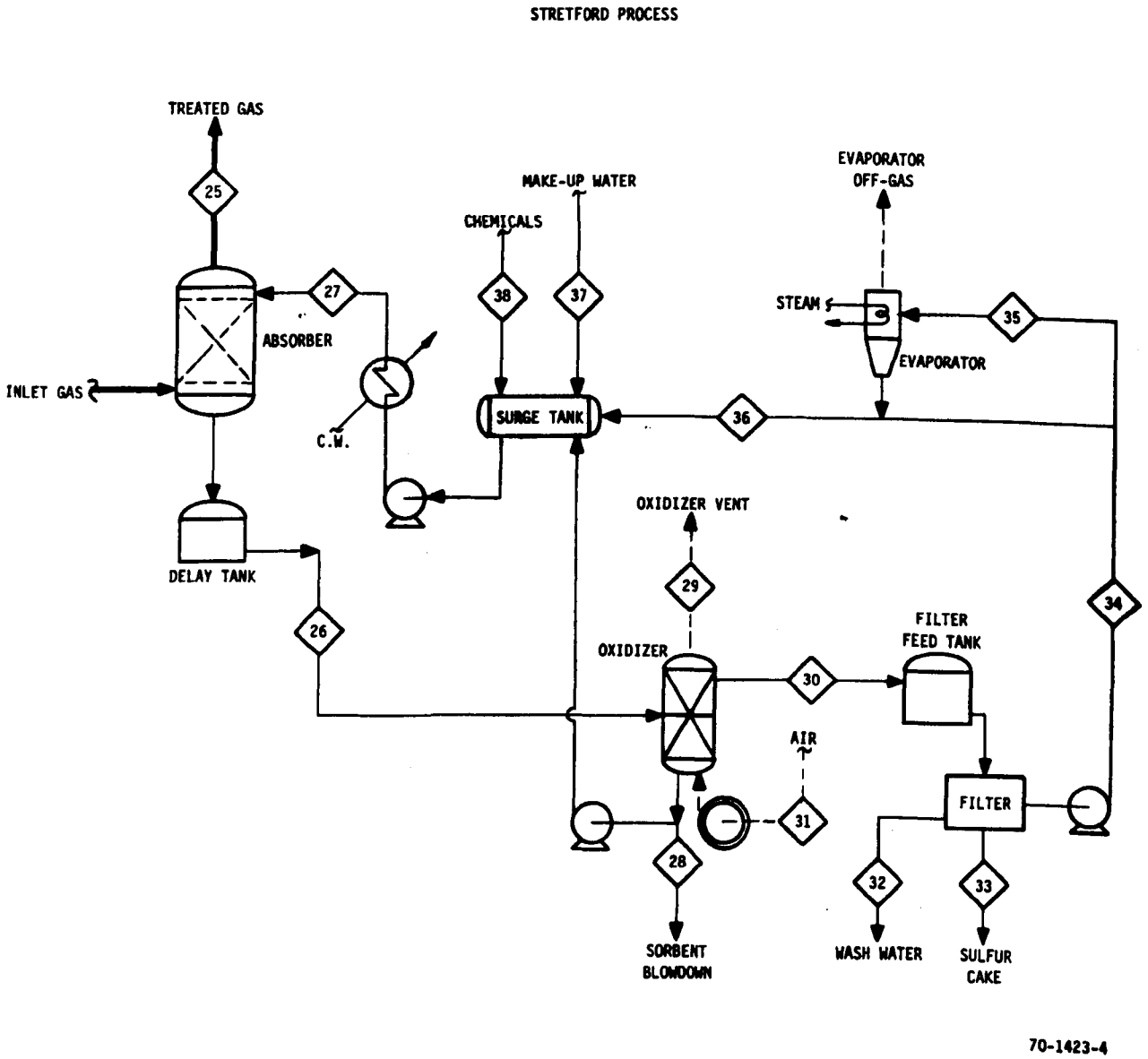

Figure 2.2-7. Schematic Flow Diagram for the Stretford Sulfur Removal Process

HCN in the feed gas is also absorbed by the Stretford solution, producing nonregenerable thiocyanate. In addition, about 1 to 2 percent of the H_2S absorbed is oxidized to nonregenerable thiosulfate (Ref. 16). These salts must be removed from the system. A small quantity will be removed with the sulfur cake; the remainder must be removed as a blowdown stream. Batch blowdowns are generally carried out when the total salts concentration reaches about 40 percent. Alternatively a continuous blowdown can be used to maintain the salts concentration at 20 to 25 percent (Ref. 28). Quantities and compositions of this blowdown are discussed in Section 3. Methods for treating this blowdown stream are discussed in Section 4.

More than 99 percent of the inlet H_2S can be removed by the Stretford process. Outlet H_2S concentrations of 10 ppmv are common with concentrations less the 1 ppmv achievable (Ref. 16). The H_2S removal reaction is very fast, and approaches equilibrium. Thus, for gases with low CO_2 concentrations it may not be practical to design a Stretford unit to leave more than about 100 ppmv of H_2S in the exit gas (Ref. 29). Depending on the concentration of CO_2 in the gas stream, some is absorbed along with the H_2S. The absorbed CO_2 lowers the solution pH and decreases the H_2S absorption rate. As a result, very tall absorbers are required to treat gas streams with high CO_2 partial pressures (Refs. 16, 30). The Stretford process does not remove significant amounts of organic sulfur compounds such as COS and CS_2 (Ref. 16).

One problem that may affect the use of the Stretford process for treating the low-Btu gas from the Wellman-Galusha gasifier results from the high level of tars produced by the gasifier. Tar in the gas fed to the Stretford can lead to foaming in the absorber, difficulty in sulfur flotation, and production of a contaminated sulfur product ("Black Sulfur") (Refs. 30, 31). An acceptable upper limit for tar loading to prevent these problems is unknown (Ref. 31). Tar removal in a quench system and electrostatic precipitator have been sufficient for applications involving coke oven gas. However, gas from Wellman-Galusha gasifiers contain more tar than coke oven gas. The Stretford process has yet to be successfully demonstrated on gas from such a system (Ref. 32).

Potential waste streams from the Stretford process include evaporator and oxidizer vent gases, process blowdown, and recovered sulfur.

Monoethanolamine (MEA) Process - Aqueous monoethanolamine solutions were once among the most widely used solutions for the removal of acid gases. Today, MEA systems are rapidly being replaced by more efficient systems, particularly for the treatment of high-pressure natural gases. However, MEA is still the

preferred solvent for treating sour gas streams containing relatively small amounts of H_2S and CO_2. MEA is especially preferred when low-pressure gas is treated and maximum removal of H_2S and CO_2 is required (Refs. 16, 33). Although MEA has not been used to remove acid gases from coal gases, a similar amine (diglycolamine) has been used for acid gas removal at the IGT pilot gasification plant (Ref. 34).

The removal effectiveness of MEA absorption processes depends mainly on operating pressure and the residual H_2S and CO_2 contents of the lean MEA solution fed to the absorber. The residual H_2S and CO_2 contents of the lean MEA solution determine the minimum H_2S and CO_2 loadings in the treated gas, as defined by gas-liquid equilibria. The operating pressure of the contactor determines the partial pressure of acid gases over the MEA solution. For given residual H_2S and CO_2 contents in lean MEA solution, the operating pressure determines the minimum levels of H_2S and CO_2 practically achieved in the treated gas.

The residual H_2S and CO_2 contents in lean MEA solutions are mainly determined by the amount of steam used to strip the acid gases from solution and by the height of the stripping column. The removal of CO_2 from rich solutions is the more difficult stripping operation because of the relative stability of the monoethanolamine-CO_2 complex. The lean solution recirculated to the absorber usually is stripped to a level of about 0.15 moles of CO_2 per mole of MEA. Although the H_2S content of the lean solution is low, the high CO_2 loadings increase the equilibrium partial pressure of H_2S over the solution, which reduces the effectiveness of H_2S removal (Ref. 16). Increased steam rates lower the residual contents of H_2S and CO_2 in the lean solution and thus increase the effectiveness of H_2S removal. The rate of desorption of CO_2 from MEA solutions is relatively slow, and is "not materially affected by the flow rate of stripping steam (Ref. 16).

H_2S concentrations of 6 mg/Nm^3 (0.25 gr/100 scf) or less in the treated gas can be practically obtained at operating pressures above 1.4 MPa (200 psi) (Ref. 16).

If the operating pressure is less than 0.7 MPa (100 psi), it is difficult to attain hydrogen sulfide loadings in the outlet gas of less than 24 mg/Nm^3 (1 gr/100 scf). Below 0.4 MPa (50 psi), it is difficult to attain H_2S loadings in the outlet gas of less than 50 mg/Nm^3 (2 gr/100 scf) (Ref. 17).

A flow scheme of the basic MEA process is shown in Figure 2.2-8. In operation, gas is contacted in the absorber by

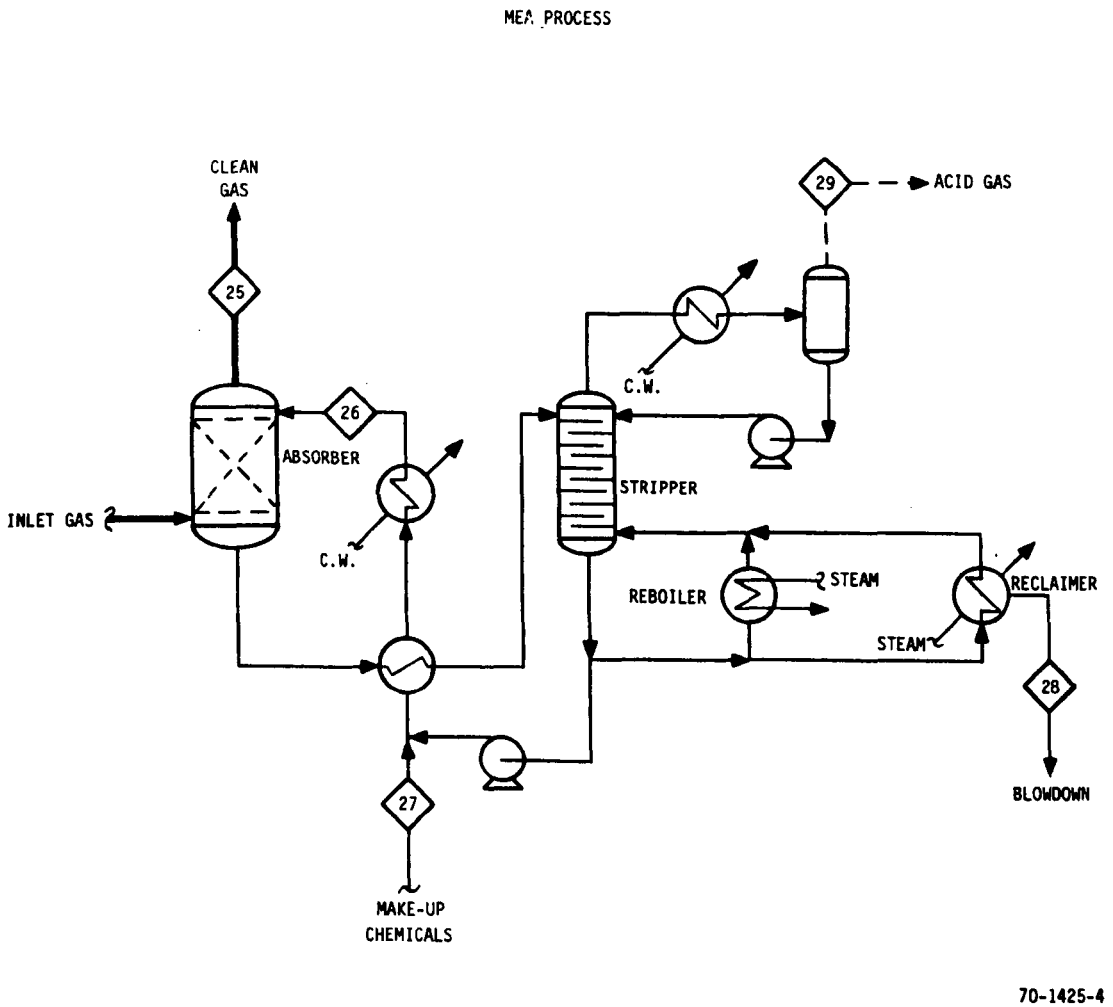

Figure 2.2-8. Schematic Flow Diagram for the MEA Acid Gas Removal Process

a 10 to 20 wt % MEA-water solution. Many units are designed to operate with 20 percent MEA solution, but a more conservative figure is 15 percent MEA in water. At the lower concentration, reduced corrosion and fouling are encountered (Ref. 17). The princiapl reactions occurring in the absorber are (Ref. 16):

$$2HOC_2H_4NH_2 + H_2S \rightleftarrows (HOC_2H_4NH_3)_2S \qquad (2.2\text{-}12)$$

$$(HOC_2H_4NH_3)_2S + H_2S \rightleftarrows 2HOC_2H_4NH_3HS \qquad (2.2\text{-}13)$$

$$2HOC_2H_4NH_2 + CO_2 + H_2O \rightleftarrows (HOC_2H_4NH_3)_2CO_3 \qquad (2.2\text{-}14)$$

$$(HOC_2H_4NH_3)_2CO_3 + CO_2 + H_2O \rightleftarrows 2HOC_2H_4NH_3HCO_3 \qquad (2.2\text{-}15)$$

$$2HOC_2H_4NH_2 + CO_2 \rightleftarrows HOC_2H_4NHCOONH_3C_2H_4OH \qquad (2.2\text{-}16)$$

From the bottom of the contactor, the rich MEA solution passes to a heat exchanger where it is heated by lean MEA solution from the stripping column. Systems operating at high pressure may incorporate a flash tank upstream of the heat exchanger to remove dissolved and entrained hydrocarbons and other non-acidic gases from the MEA solution. (The gases evolved in the flash tank(s) contain acid gas in varying concentrations. The acid gas can be recovered by contacting the flashed gases wtih a small stream of lean amine solution in a small column usually installed at the top of the disengaging vessel) (Ref. 16).

From the heat exchanger the rich MEA solution passes to the stripping column at some point near the top. The acid gases are desorbed from the MEA solution by heat (in the reverse of reactions 2.2-12 through 2.2-16) as the solution passes downward through the stripper. The acid gas stream taken overhead is cooled to condense most of the water vapor. The condensate is then fed back to the stripper. The acid gas stream requires further treatment for the removal of sulfur species before release to the atmosphere. The lean MEA solution, after partial cooling in the heat exchanger, is further cooled by exchange with water or air and fed back to the absorber.

The MEA absorption process and other amine processes are especially noted for the large amounts of energy required to strip the acid gases from the sorbent. Some of this energy could be supplied from the combustion of by-product tar. Most (if not all) of the energy is likely to be supplied by combusting a portion of the product low-Btu gas, reducing system efficiency and increasing the cost of the product gas.

The principal disadvantage of MEA absorption is solution degradation due to the formation of irreversible reaction products with carbonyl sulfide and carbon disulfide. Irreversible

reactions between CO_2 and MEA also occur. All ethanolamines, including MEA, are subject to oxidative degradation with the formation of dithiocarbamates, thioureas, thiosulfuric acid, formic acid, and other degradation products. Carboxylic acids, hydrochloric acid, and hydrogen cyanide also react irreversibly with MEA (Ref. 16).

Carbonyl sulfide reacts irreversibly with MEA to form oxazolidon-2, 1-(2-hydroxyethyl) imidazolidone-2, and diethanol urea. In commercial facilities, most of the COS present in the gas undergoes hydrolysis to form H_2S and CO_2, with 15 to 20 percent of the COS reacting irreversibly with the MEA (Ref. 16). At low pressures, residual COS in the clean gas may amount to about 30 ppmv (Ref. 18).

Carbon disulfide, present in the low-Btu gas in small amounts, reacts irreversibly to form substituted dithiocarbamates and thiocarbamides (Ref. 16).

Precipitates, sludge, and high-molecular weight degradation products are commonly removed from MEA solutions by filtration through activated carbon or by reclaiming. Reclaiming involves the distillation of a small side stream, usually 1.5 to 2 percent of the main flow of MEA. Sodium carbonate or hydroxide is added, if necessary, to free the amine from the acid salts and minimize corrosion. Reclaiming is a batch operation; at the completion of each reclaiming cycle, accumulated solids and high-boiling constituents are removed from the reclaimer and disposed (Refs. 16, 17, 33).

Advantages and disadvantages of MEA absorption have been summarized by Goar and Arrington (Ref. 35). Advantages of MEA absorption include:

- high reactivity,
- low solvent cost
- good chemical stability, and
- ease of reclamation.

Disadvantages include:

- irreversible degradation due to reaction with various contaminants,
- high solvent vaporization losses,
- low removal of mercaptans, and
- nonselectivity for H_2S absorption.

In this report, MEA absorption was selected as the sulfur-removal process when removal of both H_2S and COS is required.

Potential waste streams from the MEA process include an acid gas stream and solvent blowdown.

2.3 PROCESS AREAS OF CURRENT ENVIRONMENTAL CONCERN

Wellman-Galusha low-Btu gasification systems are sources of gaseous, liquid, and solid waste streams. Also associated with these systems are process and by-product streams that may contain toxic substances. The multimedia waste streams and pollutants of major concern are summarized in Tables 2.3-1 through 2.2-3. Potentially toxic compounds that may be present in product and by-product streams are summarized in Table 2.3-4.

Gaseous emissions from Wellman-Galusha systems contain a significant amount of pollutants that may have harmful health and ecological effects. Gaseous pollutants (CO, H_2S, HCN, NH_3, and light hydrocarbons) from the coal feeder and gasifier pokeholes need to be controlled. Start-up vent gases will contain compounds found in the raw product gas (CO, sulfur species, light hydrocarbons, tars and oils) which will require control before venting to the atmosphere. Vent gases from the by-product tar recovery process will contain significant amounts of potentially harmful pollutants and will, therefore, need to be controlled. Emissions from sulfur removal processes are not yet characterized since there are currently no sulfur recovery processes being used with fixed-bed, atmospheric pressure, low-Btu gasification systems.

The amount of liquid effluents from Wellman-Galusha systems will be limited to blowdown streams, ash sluice water, and coal pile runoff. Of these effluents, the blowdown streams will contain significant quantities of potentially harmful constituents. Ash sluice water and coal pile runoff will contain compounds leached from the ash and coal which may affect health and the environment.

Solid waste streams from Wellman-Galusha systems will consist of ash, collected particulates, sulfur, and blowdown from the MEA sulfur removal process. Ash and sulfur may contain leachable constituents that may be potentially harmful. Collected particulates resemble devolatilized coal and therefore, may be classified as a solid combustible material. MEA blowdown sludge contains potentially harmful constituents and needs to be treated before disposal.

The by-product tar and quench liquor represent process streams that contain potentially harmful organic and inorganic compounds. Worker exposure and accidental releases of these streams should be carefully controlled.

TABLE 2.3-1. GASEOUS WASTE STREAMS AND POLLUTANTS OF MAJOR CONCERN FROM WELLMAN-GALUSHA LOW-BTU GASIFICATION SYSTEMS

Operation Process	Gaseous Waste Stream	Pollutants of Major Concern	Remarks
Coal Preparation			
Coal Storage and Handling	Coal dust	Particulate matter similar in composition ot the coal feedstock.	Bituminous coal gave slightly positive results for the Ames test which indicates a potential for the coal being carcinogenic. Anthracite coal results were negative.
Coal Gasification			
Wellman-Galusha Gasifier	Coal feeder vent gases	Gaseous species in the product gas (CO, H_2S, NH_3, HCN, light hydrocarbons).	High levels of CO were found in the coal hopper area.
	Start-up vent gases	Raw product gas constituents. Particulate matter (coal dust, tar, oil aerosols) and gaseous species (CO, H_2, H_2S, COS, NH_3, HCN, light hydrocarbons, etc.). Organics of concern include fused aromatic hydrocarbons, heterocyclic nitrogen, sulfur and oxygen compounds, carboxylic acids, amines, sulfonic acids, sulfoxides, phenols, thiols, benzene, and substituted benzene hydrocarbons. Inorganics of concern include CO, ethylene, Cr, Hg, U, V, Al, P, As, Cu, Cd, H_2S, CO_2, HCN, Li, Tl, Si, Pb, Sb, SO_2, CS_2, Cl, Ti, Zr, Fe, Co, Ni, Ag and Zn.	The amount of tars and oils will depend upon the coal feedstock. Bituminous coals will have a significant amount of tars where anthracite will not. Tars from the gasification of bituminous coals gave positive results on the Ames test which indicates they may be carcinogenic.
	Fugitive emissions (pokehole gases)	Gaseous species in the product gas (CO, H_2S, NH_3, HCN, light hydrocarbons).	Emissions of tars and oils will occur when pokehole valves are open; however, the major emissions from the pokeholes will be from gaseous species in the product gas leaking from the pokehole valves.
Gas Purification			
Gas Quenching and Cooling (Tar/ Liquor Separation)	Separator vent gases	Organics of concern include fused aromatic hydrocarbons, amines, heterocyclic nitrogen and sulfur compounds, ethylene, phenols, methane, and carboxylic acids. Inorganics of concern include CO, NH_3, NO_2, CO_2, Cr, Ag, V, Cu, P, Li, As, Fe, Ni, and U.	These pollutants of concern are associated with bituminous coals.
Sulfur Removal-Stretford	Evaporator and oxidizer vent gases	Volatile compounds in the Stretford liquor (H_2O, CO_2, N_2, O_2, and possibly NH_3).	This stream has not been sampled because no Stretford processes are currently used or have been successfully demonstrated to remove sulfur species from low-Btu gas.
Sulfur Removal-MEA	Acid gas stream	CO_2, H_2S, COS, CS_2, mercaptans, and light hydrocarbons.	This stream is sent to a sulfur recovery unit consisting of a Claus process followed by a Claus tail gas clean-up process to remove the sulfur species in the acid gas stream. This stream has not been sampled since MEA processes have not been used to remove sulfur species from low-Btu gas. However, Koppers has used the MEA process to desulfurize medium-Btu gas.

TABLE 2.3-2. LIQUID WASTE STREAMS AND POLLUTANTS OF MAJOR CONCERN FROM WELLMAN-GALUSHA LOW-BTU GASIFICATION SYSTEMS

Operation Process	Liquid Waste Stream	Pollutants of Major Concern	Remarks
Coal Preparation			
Coal Handling and Storage	Coal pile runoff	Contain leachable organics and inorganics.	The composition of this stream will depend upon the coal feedstock and site-specific conditions (i.e. pH of leachate).
Coal Gasification			
Wellman-Galusha Gasifier	Ash sluice water	Inorganics of major concern include P, Ti, V, Cu, Fe, Ba, Cd, Cr, CN^-, Li and Ni. Organic concentrations of 65 mg/ℓ have been found; however, it is not certain whether these were present in the plant's service water used to sluice the ash from the gasifier.	The amount of sluice water is low and highly variable. Negative Ames tests were obtained with low to non-detectable results indicated for the cytotoxicity and rodent acute toxicity tests for sluice water from a facility gasifying anthracite coal. This indicates that the ash sluice water has a low potential for effecting health of the environment.
Gas Purification			
Gas Quenching and Cooling	Process condensate	May contain organic and inorganic pollutants found in the quench liquor (see Table 2.3-4).	The amount of process condensate produced will depend upon the system operation and type of processes used. Typical process condensate flow may range between 3.79×10^{-4} to 1.52×10^{-3} m^3/sec (5 to 20 gpm).
Sulfur Removal-Stretford	Solvent blowdown	Thiosulfate and thiocyanate salts.	The amount of these salts produced will depend upon the sulfur and cyanide content of the cooled product gas entering the Stretford process. Sulfur contents may range from 600 to 10,000 ppmv while cyanide may range from 50 to 200 ppmv.

TABLE 2.3-3. SOLID WASTE STREAMS AND POLLUTANTS OF MAJOR CONCERN FROM WELLMAN-GALUSHA LOW-BTU GASIFICATION SYSTEMS

Operation Process	Solid Waste Streams	Pollutants of Major Concern	Remarks
Coal Gasification			
Wellman-Galusha Gasifier	Gasifier ash	Inorganics of major concern include Be, P, Fe, Ca, Al, Li, Ba, Se, Pb, Cs, Cu, Ti, Cd, Sb, V, Co, U, Mg, Sr, Si, Hg, Zr, F, Rb, As, Mn, Cr, Ni, Th, Bi, Ag, Y. Total extractable organics in the ash is low ranging from 40-116 μg/g. Organics of potential concern include phthalate esters, phenols, nitrophenols, and fused aromatic hydrocarbons.	Results from the Ames, cytotoxicity, and rodent acute toxicity tests for ash produced from gasifying anthracite and bituminous coals were negative, low or nondetectable. Effects on soil microcosms were also low. This indicates that the ash may have a low potential for harmful health and ecological effects.
	Ash leachate (anthracite coal)	Inorganics of concern include P, Zn, Cd and Ag.	Results from the Ames, cytotoxicity and rodent acute toxicity tests of leachate from ash produced from gasifying anthracite coal were negative, low or nondetectable. This indicates that leachate resulting from ash may have a low potential for harmful health and ecological effects.
Gas Purification			
Particulate Removal-Hot Cyclone	Collected particulate matter	Inorganics of major concern include Ni, Pb, P, Mn, Fe, Cu, Ba, Sb, Ti, Cr, Ca, Al, V, Li, Mg, Zr, Co, As, Si, Se, Be, Cd, Ag, Th, Zn, F, Ga, Hf, Hg, Sr, Tl, Y. Low concentrations (40 to 800 μg/g) of extractable organics have been determined. Organics of concern include phthalate esters, phenols, nitrophenols, amines, cresols.	Negative results from the Ames test have been obtained with low to nondetectable results from cytotoxicity and rodent acute toxicity tests. High effects on soil microcosms were found. Collected particulates resemble devolatilized coal with carbon contents ranging from 70 to 80%. These may indicate that the cyclone dust may have a low potential for harmful health effects but a high potential for ecological effects.
	Collected particulate matter leachate (anthracite coal)	Inorganics of major concern include Mn, Pb, Li, Zn, Al, Cd, Co, Cu and Fe.	Negative Ames test results were obtained and cytotoxicity test results were nondetectable. This indicates that the leachate may have a low potential for harmful health effects.
Sulfur Removal-Stretford	Sulfur	Contain organics and inorganics including thiocyanate and thiosulfate salts.	No data is currently available on the chemical and biological aspects of the recovered sulfur.
Sulfur Removal-MEA	MEA sludge	Degradation products including oxazolidon-2, 1-(2-hydroxyethyl) imidazolindone-2, diethanol urea, dithiocarbamates, thiocarbamides and other high molecular weight nonregenerable compounds.	No data is currently available on the characteristics (chemical or biological) of MEA sludge.

TABLE 2.3-4. POTENTIAL TOXIC STREAMS AND COMPOUNDS OF MAJOR CONCERN FOR WELLMAN-GALUSHA LOW-BTU GASIFICATION SYSTEMS

Operation Process	Potential Toxic Stream	Compounds of Major Concern	Remarks
Gas Purification			
Gas Quenching and Cooling	By-product tar and oils	Organics of major concern include fused aromatic hydrocarbons, benzene, substituted benzene hydrocarbons, heterocyclic nitrogen, sulfur and oxygen compounds, carboxylic acids, aliphatic hydrocarbons, phenols and amines. Inorganics of concern include Cu, Pb, Sb, Cr, Cd, Ba, Hg, V, Mg, and As.	Tar will be produced from bituminous and lignite coals. Positive Ames test results have been obtained. This indicates that the tar may be carcinogenic. Safe handling and controlling tar leaks procedures are required.
	Quench liquor	Organics of major concern include phenols, fused aromatic hydrocarbons, heterocyclic nitrogen and sulfur compounds, carboxylic acids, thiols, glycols, and epoxides. Inorganics of concern include NH_3, cyanides, P, Se, As, F, Cl, Ca, Fe and Cd.	Results from aquatic bioassay tests indicated a high potential effect on aquatic species. Health effects tests were low; however, because of the chemical characteristics of the quench liquor, safe handling and control of leaks are required.

It should be emphasized that the chemical characteristics and potential biological effects of the multimedia waste streams are highly dependent upon the coal feedstock and processes used. For example, tars and oils will be produced when bituminous or lignite coal is gasified. However, if anthracite is the coal feedstock, tar and oils are not produced although some light oils may be present.

SECTION 3.0
CHARACTERIZATION OF INPUT MATERIALS, PRODUCTS, AND WASTE STREAMS

This section summarizes the best available information on the physical, chemical, and biological characteristics of input materials, products, by-products, and waste streams associated with Wellman-Galusha gasification systems. These data are results from test programs performed in the U.S. at various commercial-size low-Btu gasification facilities.

3.1 SUMMARY OF SAMPLING AND ANALYTICAL ACTIVITIES

The EPA's Industrial Environmental Research Laboratory at Research Triangle Park, NC (IERL/RTP) is conducting an environmental assessment of low- and medium-Btu gasification technology. As part of that assessment study, source test and evaluation programs have been conducted at the following low-Btu gasification facilities:

- The Wellman-Galusha facility (gasifying anthracite coal) at the York, PA plant of the Glen-Gery Brick, Co.,
- a Chapman facility which gasifies low-sulfur bituminous coal, and
- the Wellman-Galusha facility (gasifying lignite coal) at the U. S. Burea of Mines (BOM) facility in Ft. Snelling, MN.

Results of the first two test programs listed above were used extensively in this report. Results from the test program at the BOM facility were not available for inclusion in this report. Non-IERL/TRP sponsored test programs have been conducted at two other low-Btu gasification facilities.

- The Wellman-Galusha facility (gasifying low-sulfur bituminous coal) at the National Lime and Stone Plant near Carey, OH and
- the Riley-Morgan test facility (gasifying bituminous and lignite coals) in Worcester, MA.

3.1.1 IERL/RTP Environmental Assessment Activities

Wellman-Galusha Facility Using Anthracite Coal -

Radian Corporation, under contract to IERL/RTP has conducted environmental sampling acitivities at the Glen-Gery Brick, Co's gasification facility located in York, PA (Ref. 10). This facility gasifies anthracite coal to produce a low-Btu gas for combustion in a brick kiln. The gasification system includes three process operations:

- coal handling/conveying,
- coal gasification, and
- gas purification.

A simplified flow diagram of the system is given in Figure 3.1.1. A brief description of the system and its discharge streams is presented below.

Coal Handling/Conveying - Presized anthracite coal is received by truck and stored outside the brick warehouse in an uncovered coal receiving area. Coal is periodically moved from this area to an "active" storage pile inside the warehouse near the gasifier. At approximately 4-hour intervals, a small front-end loader is used to feed a bucket elevator which transports the coal to a hopper atop the gasifier. A weigh belt located at the bucket elevator discharge measures the amount of coal delivered to the hopper.

Gasification - The gas producer tested at the Glen-Gery facility is a single-stage, fixed-bed, atmospheric pressure Wellman-Galusha gasifier. It is normally kept full of coal at all times, with four coal pipes and the lower portion of the dual compartment coal hopper providing surge capacity. About once every four hours, slide valves at the top of the coal pipes are closed, isolating the gasifier from the coal hopper. A slide valve located in the partition in the coal hopper is then opened and the lower portion of the hopper is replenished with coal.

The gasifier is both water jacketed and lined with refractory brick (bottom portion). Air, saturated with water vapor by its passage over the top of the water jacket, is introduced at the bottom of the gasifier through a grate which also supports the ash and coal beds. Ash is removed through this grate and accumulates in a hopper at the bottom of the gasifier. Ash is normally dumped from this hopper twice a day. During ash removal, water is added to the ash hopper to help seal the gasifier from the atmosphere and to slurry the ash to aid in its removal.

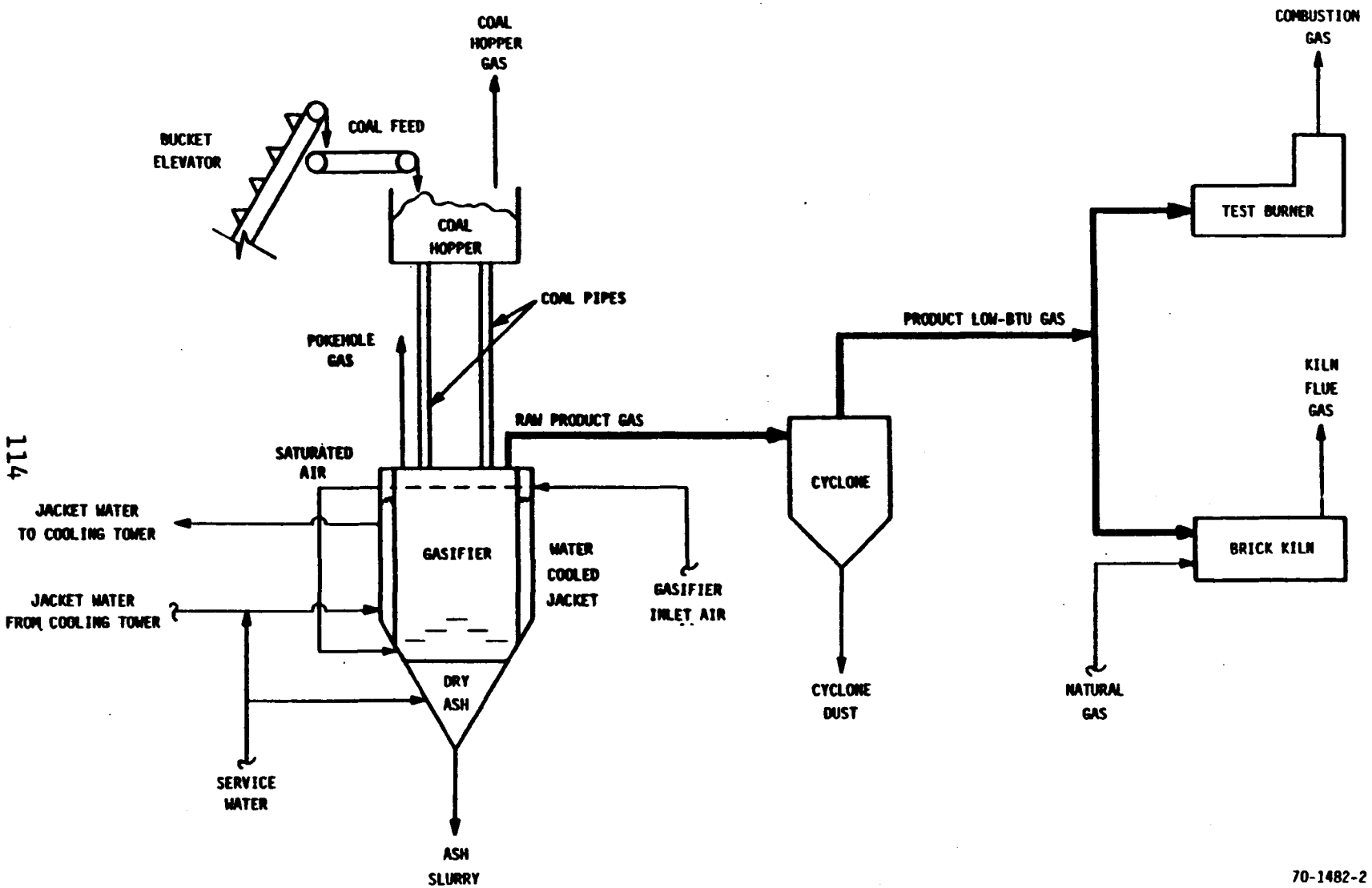

Figure 3.1-1. Flow diagram for Glen-Gery gasification facility.

Raw low-Btu gas exits the top of the gasifier at approximately 400°C (750°F). Pokeholes located on the top of the gasifier permit the insertion of rods used to monitor the position and depth of the "fire" and ash zones.

Gas Purification - The gas purification operation consists solely of a refractory brick-lined cyclone used to remove particulates from the hot, raw low-Btu gas. The removed particulates (cyclone dust) are disposed of with the gasifier ash.

The multimedia waste streams associated with this facility are listed in Table 3.1-1. The process and waste streams sampled during the test program are given in Table 3.1-2 (Ref. 10).

Wellman-Galusha Gasifier Using Lignite Coal -

Radian Corporation, under their environmental assessment program with IERL/RTP, recently sampled a Wellman-Galusha gasification test facility at the U.S. Bureau of Mines (BOM), Ft. Snelling, Minnesota. This facility was constructed to demonstrate the use of low-Btu gas as an acceptable fuel for an iron pelletizing kiln. The BOM plant had coal handling/conveying, gasification, and gas purification operations along with a start-up flare. The product gas was combusted in a pelletizing kiln and a test burner. Figure 3.1-2 shows a flow diagram of this gasification test facility.

Gasification - Coal is fed into the coal storage bin on top of the Wellman-Galush gasifier where it falls through two parallel valves at the bottom of the storage bin into the coal feeder. Coal flows through two parallel valves at the bottom of the coal feeder into two feed legs which drop the coal into the top of the gasifier. The valves in the bottom of the coal storage bin and coal feeder are not opened at the same time to minimize loss of product gas from the gasifier through the coal feed system.

In the 1.98 m (6.5 ft) diameter gasifier, a water cooled agitator distributes the coal evenly as it falls from the feed bin. Hot product gas from the bottom of the gasifier dries and devolatilizes the coal as it moves down the gasifier to the combustion zone. At the bottom of the gasifier, the coal is partially combusted by moist air to form a low-Btu product gas and ash. The ash falls through a rotating grate, is dumped through a valve at the bottom of the gasifier and is sent to disposal. Steam to the gasifier is provided by passing air over hot water in the gasifier cooling jacket before entering the bottom of the gasifier.

TABLE 3.1-1. MULTIMEDIA WASTE STREAMS FROM THE GLEN-GERY WELLMAN-GALUSHA GASIFICATION FACILITY*

Operation	Stream Description
Coal Handling/Conveying	Gaseous Emissions • Coal Dust
Gasification	Gaseous Emissions • Coal hopper gases • Pokehole gases Liquid Effluents • Ash sluice water Solid Wastes • Gasifier ash
Gas Purification	Solid Wastes • Cyclone dust
Product Gas Utilization	Gaseous Emissions • Brick kiln flue gas

*Anthracite is the coal feedstock for this facility

Source: Reference 10

TABLE 3.1-2. WASTE AND PROCESS STREAM SAMPLED AT THE GLEN-GERY WELLMAN-GALUSHA GASIFICATION FACILITY*

Operation	Stream Description
Gasification	Gaseous Emissions • Coal hopper gases • Pokehole gases Liquid Effluents • Ash sluice water Solid Wastes • Ash (dry) • Ash (wet) Process Streams • Coal feedstock • Gasifier jacket makeup water • Inlet air • Gasifier jacket cooling water • Raw product gas
Gas Purification	Solid Wastes • Cyclone dust Process Streams • Product low-Btu gas
Gas Utilization	Gaseous Emissions • Test kiln flue gas

*Anthracite is the coal feedstock for this facility

Source: Reference 10

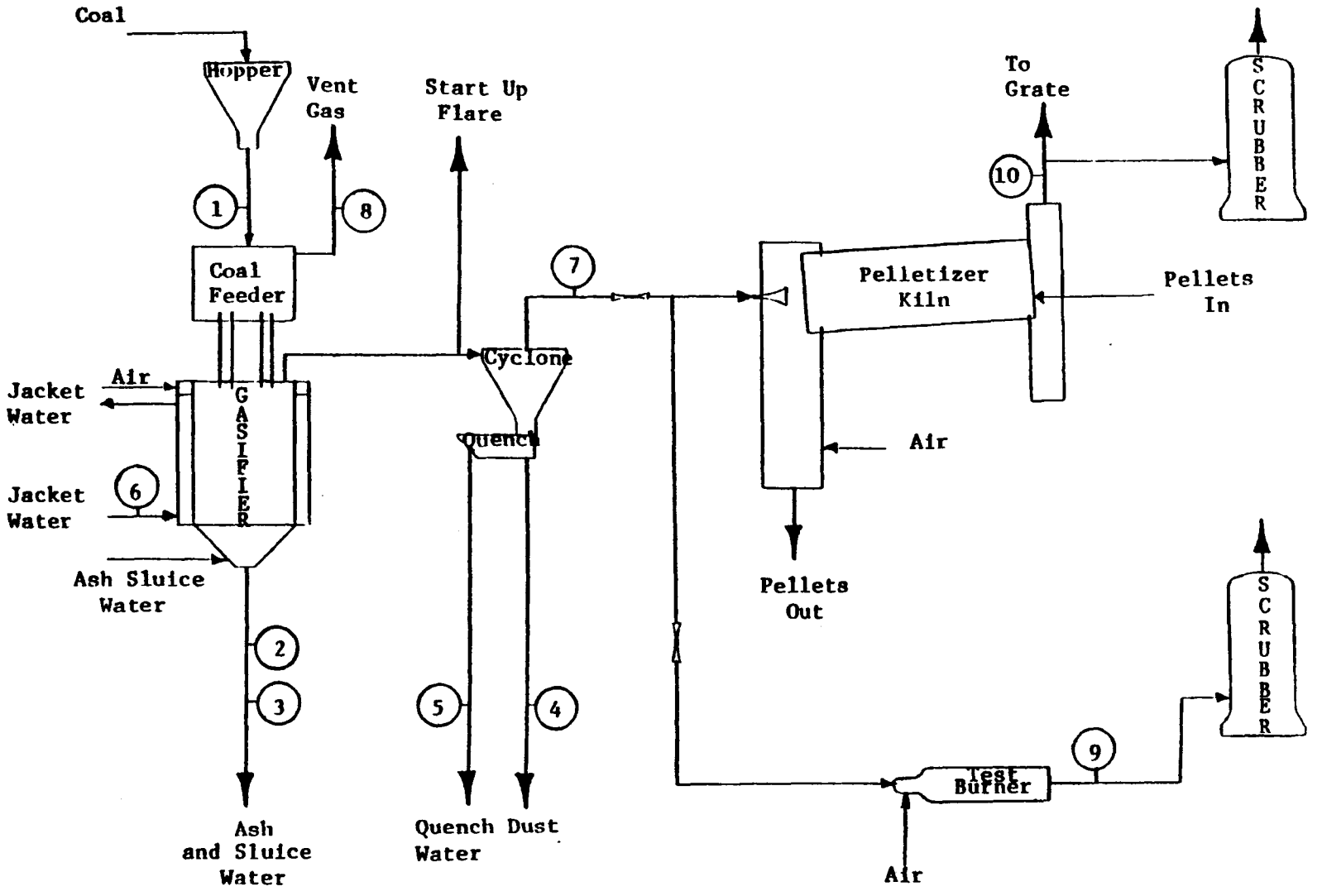

Figure 3.1-2. Bureau of Mines Wellman-Galusha facility, Fort Snelling, Minnesota.

The hot low-Btu product gas is cooled as it passes up through the coal in the gasifier. During start-up or banking of the gasifier, produced gas is diverted to the start-up incinerator.

Gas Purification - A cyclone is the only gas purification process used at the BOM plant. The particulates in the product gas fall to the bottom of the cyclone, down the cyclone leg and into a water quench. The quenched particulates are scrapped out of the quench trough, passed over a dewatering screen and disposed of. Water from the quench trough flows to the process sewer.

Test Burner - Most of the low-Btu gas produced in the BOM Wellman-Galusha gasifier is burned in a test burner. The test burner is a combustion chamber designed to study the burning characteristics of low-Btu gas. The combustion gases from the test burner are contacted with a caustic water solution for SO_2 removal before being discharged to the atmosphere through an exhaust fan. Spent caustic water solution from the combustion gas scrubber is discharged to the process sewer from the scrubber recycle tank.

Pelletizer - Low-Btu gas from the BOM Wellman-Galusha gasifier also is combusted in a pelletizer rotary kiln. The low-Btu gas is combusted with air heated by direct contact with hot iron ore pellets leaving the kiln. The hot combustion gases flow countercurrent to the iron ore pellets in the rotary kiln. A portion of the kiln exhaust gases flow to the pelletizer grate with the remainder going directly to the kiln exhaust system.

The kiln exhaust gas that goes to the pelletizer grate combines with hot combustion gases from three natural gas burners to harden the iron ore pellets before they pass to the kiln. The hot gases from the pelletizer grate combine with the rotary kiln exhaust gases, and are contacted with a caustic water solution for SO_2 removal before being discharged through a fan to the atmosphere. Spent caustic water solution from the scrubber is discharged to the process sewer from the scrubbing settling tank.

Table 3.1-3 shows the multimedia waste streams associated with the BOM Wellman-Galusha gasification facility. The streams that were sampled during the test program are given in Table 3.1-4.

Chapman Gasifier Using Low-Sulfur Bitminous Coal -

The Chapman facility produces low-Btu gas which is used as a combustion fuel for process heaters. The facility is equipped with twelve operational Chapman gasifiers. However, current

TABLE 3.1-3. MULTIMEDIA WASTE STREAMS FROM THE BUREAU OF MINES WELLMAN-GALUSHA GASIFICATION FACILITY*

Operation	Stream Description
Gasification	Gaseous Emissions • Coal hopper gases • Pokehole gases • Start-up flare gases Liquid Effluents • Gasifier jacket water • Ash sluice water Solid Wastes • Ash
Gas Purification	Liquid Effluents • Cyclone dust quench water Solid Wastes • Cyclone dust
Gas Utilization	Gaseous Emissions • Test kiln scrubber exhaust gas • Test burner scrubber exhaust gas Liquid Effluents • Test kiln scrubber blowdown • Test burner scrubber blowdown

*Lignite was the coal feedstock used during the test period

TABLE 3.1-4. WASTE AND PROCESS STREAMS SAMPLED AT THE BOM WELLMAN-GALUSHA GASIFICATION FACILITY*

Operation	Stream Description
Gasification	Gaseous Emissions • Coal hopper gases Liquid Effluents • Ash sluice water Solid Wastes • Ash Process Streams • Lignite coal feedstock • Service water
Gas Purification	Liquid Effluents • Cyclone dust quench water Solid Wastes • Cyclone dust Process Streams • Product low-Btu gas
Gas Utilization	Gaseous Emissions • Test burner combustion gases

*Lignite was the coal feedstock used during the test period

fuel demands are low and can be met by operating only two gasifiers at any specific time (Ref. 13).

Three basic operations are used in the gasification plant: a) coal handling, b) gasification, and c) gas purification. Water (process condensate) treatment is also practiced. A block diagram of the operations used at this plant is presented in Figure 3.1-3. This diagram also shows the major air, water, and solid waste streams associated with each operation. In the following text, each of these operations and their respective waste streams are discsussed in more detail.

Coal Handling/Conveying - The coal handling operation at the facility consists of: a) delivery and storage of presized Virginia bituminous coal in hopper cars, b) conveying, and c) storing this coal in the gasifier feed hoppers. No coal grinding, crushing, or sizing operations are performed at the plant site.

Gasification - The gas producers are single-stage, atmospheric pressure, fixed-bed, air-blown Chapman gasifiers. The coal feedstock enters the top of each gasifier through a rotating feeder. Steam and air are introduced into the bottom of the gasifier and pass through a grate which distributes these gases evenly and also supports the coal bed. Ash from the gasifier is collected in a water-sealed ash pan and removed from the unit using an ash plow. The hot raw gas exits the top of the gasifier at 840-950 K (1050-1250°F) and enters a cyclone. Pokeholes located on top of the gasifier are opened periodically to permit the insertion of rods to break up any coal agglomerates which form in the gasifier. The rods are also used to check the depth of the bed in the gasifier.

Gas Purification - Particulate matter is removed from the hot, raw, low-Btu gas in refractory-lined cyclones. Each gasifier at the Chapman facility is equipped with a cyclone. The particulates removed by the cyclones consist of devolatilized coal dust, ash and tar entrained in the raw gas. The particulates collect at the bottom of the cyclones. Pokeholes are located on the top of each cyclone and in the inlet and outlet hot gas ducts to permit insertion of steam lances which are used to break up agglomerated particulates.

Hot, low-Btu gas leaving the cyclones is quenched by spraying water into the exit lines from each cylone. Excess quench water is collected in a liquor trap (one trap for each gasifier/cyclone), while the cooled gas from all operating gasifiers enters a collecting main. Water sprayed inside this main

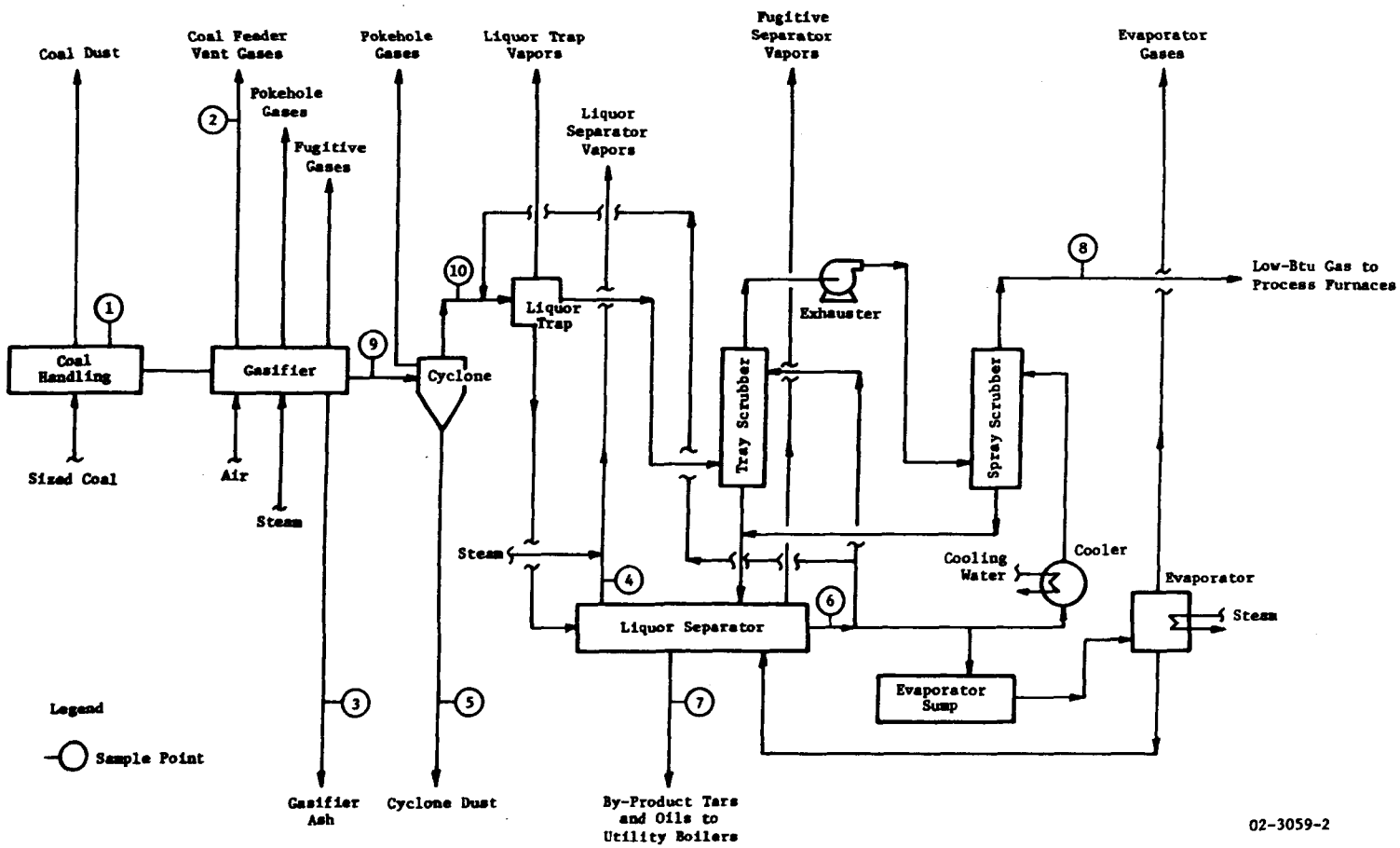

Figure 3.1-3. Simplified process flow diagram for the Chapman facility showing emission streams.

Source: Ref. 13

cools the gas to approximately 340 K (150°F). Tar and quench liquor from the liquor traps and the collecting main are sent to the liquor separator. Pitch (a lighter-than-water, tarry material) and agglomerated particulates which accumulate in the liquor traps are collected for periodic off-site disposal.

After the initial quenching step, the gas is cooled further by water in two tray scrubbers which are operated in parallel. Here, most of the tars, oils, and particulates are scrubbed from the gas as it is cooled to approximately 330 K (135°F).

The gases exiting the tray scrubbers are recombined and compressed before entering a spray scrubber. In the spray scrubber, some residual tars, oils, and particulates are removed as the gas is further cooled to about 320 K (120°F). The effluent scrubbing liquor from both the spray and tray scrubbers is sent to the liquor separator.

The liquor separator at the Chapman facility is a large concrete tank (5 x 12 x 2 meters or 16 x 40 x 6 feet). Process condensate and condensed tars and oils from the quenching/scrubbing steps enter at one end of the tank. A series of baffles minimizes the turbulence caused by the incoming liquor. The tars and oils settle to the bottom of the separator and are removed periodically for use as an auxiliary fuel in a coal-fired boiler. A portion of the water from the liquor separator is cooled in a set of cooling towers before being reused in the spray scrubber. The remainder of the water is recirculated to the other quenching and scrubbing steps.

Water Treatment - Water treatment problems are minimized at the Chapman gasification facility by operating the process such that there is no net accumulation of water. This is accomplished by regulating the temperature and hence the water content, of the product gas. If excess water (quench liquor) accumulates, it is directed to a set of evaporators. Emissions from this evaporation process should contain volatile materials found in the quench liquor.

The multimedia waste streams from the Chapman facility are listed in Table 3.1-5. The streams sampled and analyzed during the test program are indicated in Table 3.1-6 (Ref. 13). Criteria for selection of streams for sampling included accessibility, plant operation, and potential for pollution. For example, process heater flue gas was not sampled because the heater was located in a restricted area. Evaporator vapors were not sampled because no spent quench liquor was sent to the evaporator during the test period.

TABLE 3.1-5. MULTIMEDIA WASTE STREAMS FROM THE CHAPMAN GASIFICATION FACILITY*

Operation	Stream Description
Coal Handling/Conveying	Gaseous Emissions • Coal dust
Gasification	Gaseous Emissions • Coal feeder vent gases • Pokehole gases Solid Wastes • Ash
Gas Purification	Gaseous Emissions • Separator vent gases • Liquor trap vapors Liquid Effluents • Spent quench liquor Solid Wastes • Cyclone dust • Pitch from liquor traps • Separator sludge
Gas Utilization	Process Heater Flue Gases
Tar By-Product Utilization	Tar/Coal Flue Gases
Liquid Effluent Control	Evaporator Vapors

*Low-sulfur bituminous coal is the coal feedstock for this facility

Source: Reference 13

TABLE 3.1-6. WASTE AND PROCESS STREAMS SAMPLED AT THE CHAPMAN GASIFICATION FACILITY*

Operation	Stream Description
Gasification	Gaseous Emissions • Coal feeder vent gases Solid Wastes • Ash Process Streams • Raw product gas
Gas Purification	Gaseous Emissions • Separator vent gases Solid Wastes • Cyclone dust Process Streams • Product gas • Quench liquor • By-product tar

*Low-sulfur bituminous coal is the coal feedstock for this facility

Source: Reference 13

Analysis of Grab Samples -

Grab samples of selected effluents from five coal gasification plants were analyzed by Radian Corporation under contract to IERL/RTP (Ref. 36). All of the gasifiers were single-stage, atmospheric pressure, fixed-bed units fired with bituminous or anthracite coals. The purpose of the study was to gain insight into the nature of the samples that would be encountered in an ongoing test program and also to gain experience with the analytical methods proposed for use in the program. In general, EPA Level 1 methodology was used in the analyses of the samples, but some additional characterizations were also performed (Ref. 36).

3.1.2 Non-IERL/RTP Site Evaluations

Wellman-Galusha Gasifier Using Low-Sulfur Bituminous Coal -

The Institute for Mining and Minerals Research of the University of Kentucky has conducted tests at a Wellman-Galusha gasifier in Carey, Ohio (Ref. 11). The gasifier was fired with low-sulfur bituminous coal. A cyclone was used to remove particulates from the product gas, but not quench system was used. The purpose of the tests was to collect process data and to quantify the product gas compositon to aid in the design of gasifier and gas cleanup systems.

The coal feed, gasifier ash, cyclone dust, and product gas streams were measured and analyzed. Tars were not measured or analyzed. Some trace components in the gas phase (H_2S, NH_3, HCN) were measured, but COS was not (Ref. 11).

Riley Morgan Gasifier Using Various Coals -

The Riley Morgan gasifier, like the Wellman-Galusha, is a single-stage, atmospheric-pressure, fixed-bed gasifier. Riley Stoker has conducted various test in a pilot-scale Riley Morgan gasifier (Refs. 9, 15, 37, 38). Coals tested include anthracite; low-sulfur, high volatile A bituminous; medium volatile bituminous; and North Dakota lignite. Trace components in the product low-Btu gas stream (H_2S, COS, NH_3, HCN) were measured in some of the tests conducted. One set of tests investigated the formation of NH_3 in the product gas and the NO_x emissions obtained from the combustion of low-Btu gas. Other tests have considered control methods for removing tar aerosols from the product gas and the feasibility of using lignite as a coal feedstock.

3.2 INPUT MATERIALS

Raw materials required for the production and purification of 17.6 MW (60 x 10^6 Btu/hr) of low-Btu gas from the four coal feedstocks were estimated from the test data discussed in Section 3.1 and other data on H_2S removal processes. Extensive use was made of the test results obtained from the Glen-Gery Wellman-Galsuha facility (using anthracite) and the Chapman facility (using low-sulfur bituminous coal). The quantities and characteristics of the raw materials for coal preparation and handling, coal gasification, and gas purification are discussed in this section.

3.2.1 Coal Preparation and Handling

Presized coal is the only raw material required for coal preparation.

3.2.2 Coal Gasification

The major raw material for coal gasification is the coal feed. Steam, air, and possibly ash removal sluice water are also required. The quantities of raw materials required for production of 17.6 MW (60 x 10^6 Btu/hr) of raw product gas are presented in Table 3.2-1.

Coal -

Gasification of four differesnt types of coal with different compositions was consisdered in order to study the effects of various coal properties on multimedia emissions and their control. The four coal types consisdered were anthracite, low-sulfur bituminous, high-sulfur bituminous, and lignite. Anthracite and low-sulfur bituminous coals have been used in Wellman-Calusha gasifiers (Refs. 10, 11). High-sulfur bituminous coal should have gasification characteristics similar to those of low-sulfur bituminous, but will produce more sulfur compounds in the product gas and the gasification by-products. Lignite has been gasified in a thin-bed Riley Morgan gasifier (Ref. 9) and has undergone limited testing in a Wellman-Galusha gasifier.

Proximate and ultimate analyses of the four coals considered in this study are given in Table 3.2-2. The composition for high-sulfur bituminous coal is a "representative" composition

TABLE 3.2-1. INPUT MATERIAL REQUIREMENTS FOR THE GASIFICATION OPERATION IN WELLMAN-GALUSHA SYSTEMS PRODUCING 17.6 MW OF LOW-BTU GAS[a]

Input Material	Coal Feedstock Characteristics			
	Low-Sulfur Bituminous	High-Sulfur Bituminous	Anthracite	Lignite
Coal kg/s (lb/hr)	0.81 (6,410)	0.88 (7,000)	0.73 (5,800)	1.46 (11,570)
Steam[b] kg/s (lb/hr)	0.22 (1,750)	0.39 (3,090)	0.43 (3,400)	0.24 (1,920)
Air kg/s (lb/hr)	2.61 (20,710)	2.05 (16,200)	2.74 (21,700)	1.99 (15,740)
Temperature of Air/ Steam to the Gasifier °K (°F)	323 (122)	336 (147)	333 (140)	330 (134)

[a]Input material requirements were estimated using material balances obtained from environmental test data. For a low-Btu gas production rate of 87.9 MW (300 x 10^6 Btu/hr), all quantities would be multiplied by a factor of 5.

[b]Obtained by passing the inlet air stream over the gasifier cooling jacket water.

TABLE 3.2-2. COAL COMPOSITION DATA

	Low-Sulfur[a] Bituminous	High Sulfur[b] Bituminous	Anthracite[c]	Lignite[d]
Proximate Analysis (weight %)				
Moisture	2.5	6.1	0.94	35.0
Volatile Matter	36.7	34.5	5.15	27.8
Fixed Carbon	57.9	51.0	82.24	28.9
Ash	2.9	8.4	11.67	8.3
Ultimate Analysis (weight %)				
Carbon	79.1	67.9	81.2	41.5
Hydrogen	5.6	4.8	2.1	2.9
Nitrogen	1.6	2.1	0.8	1.0
Oxygen	7.6	6.8	2.6	10.5
Sulfur	0.7	3.9	0.6	0.9
Ash	2.9	8.4	11.7	8.3
Moisture	2.5	6.1	0.9	35.0
Heating Value (as received, MJ/kg)	33.2	29.2	29.9	16.0
(as received, Btu/lb)	14,300	12,600	12,900	6,900

[a]Coal used at a Wellman-Galusha gasifier (Ref. 11)

[b]"Representative" composition (Ref. 39)

[c]Coal used at a Wellman-Galusha gasifier (Ref. 10)

[d]The lignite composition chosen for this study is that of a lignite tested in a Riley Morgan gasifier (Ref. 9) and may not be representative of lignites that may be used in such gasifiers in the future. An analysis of 23 samples of North Dakota lignite has indicated an "average" sulfur composition of 0.6% and ash composition of 6.2% (Ref. 40). Ranges of these values were 0.2-1.4% for sulfur, and 4.4-8.0% for ash. The selected values of 0.9% for sulfur and 8.3% for ash may indicate more severe environmental impacts from gasification of lignite than may actually be encountered.

of this type of coal. The compositions for the low-sulfur bituminous, anthracite, and lignite coals are compositions of coals used in the gasification tests discussed in Section 3.1 (Refs. 9, 10, 11, 39).

In addition to the major elements reported in the ultimate compositions, coals contain various elements in trace amounts. These "trace elements" in the coal feedstock will ultimately be contained in the products, by-products, or waste products of the gasification or purification operations. Trace element concentrations in coals from different areas and from different locations in the same coal seam can be quite variable. In general, the elemental concentrations have been reported to be highest in coals from the Appalachian Basin (eastern coals), lowest in western coals and intermediate in coals from the Illinois Basin (Ref. 41). Thus, it is difficult to predict a trace element concentration for a certain coal. Trace element concentrations reported in a study by the Illinois State Geological Survey (Ref. 41) are given in Table 3.2-3, along with data from the U.S. Geological Survey (Ref. 42).

Steam -

Steam requirements (obtained from the gasifier cooling jacket water) for production of 17.6 MW (60 x 10^6 Btu/hr) of product gas from each coal feedstock are given in Table 3.2-1. These amounts are variable depending largely on the temperature control required to prevent ash slagging. Higher steam rates are required for coals with low ash deformation temperatures.

Air -

Air requirements for production of 17.6 MW (60 x 10^6 Btu/hr) of product gas from each coal feedstock are given in Table 3.2-1. The amount of air required depends on the carbon content of the coal.

Ash Removal Sluice Water -

Small amounts of water will be required to remove ash from the gasifier. The amount of water used is quite variable. At the Glen-Gery Wellman-Galusha gasifier, the amount of water used was roughly 4500 to 6800 l/day (1200 to 1800 gallons per day) (Ref. 10).

TABLE 3.2-3. REPORTED AVERAGE TRACE ELEMENT COMPOSITIONS OF U.S. COALS*

Element	Illinois Coal	Eastern U.S. Coal	Western U.S. Coal	Pennsylvania Anthracite	Lignite & Subbituminous Coal from Northern Great Plains	Bituminous Coal from Appalachian Region
Be	1.6	1.1	0.35	1.0	0.3	2.0
Se	2.0	3.4	1.3	2.7	0.5	3.5
Cd	0.59	0.19	0.15	0.19	0.2	0.3
Hg	0.16	0.17	0.07	0.11	0.06	0.14
As	7.4	15.0	1.5	4.0	2.0	11.0
Pb	15.0	4.7	2.6	7.5	4.3	10.9
B	98.0	28.0	48.0	10.0	70.0	20.0
Co	6.0	7.6	1.5	5.0	1.5	5.0
Cr	16.0	18.0	8.1	20.0	3.0	15.0
Cu	13.0	16.0	8.5	21.5	7.4	16.0
Ge	4.8	0.87	0.5	NR	NR	NR
Mn	40.0	12.0	28.0	4.2	34.0	200.0
Mo	6.2	1.8	0.59	1.5†	1.5†	2.0†
Ni	19.0	14.0	4.4	15.0	2.0	15.0
P	45.0	81.0	82.0	NR	NR	NR
Sb	0.81	1.1	0.45	0.6	0.4	0.8
Sn	0.94	0.97	0.43	NR	NR	NR
U	1.3	1.3	0.99	1.2	0.7	1.0
V	29.0	35.0	12.0	20.0†	7.0†	20.0†
Zn	87.0	19.0	5.0	10.0	12.8	12.8
Ba	75.0	170.0	430.0	70.0	300.0	70.0
Source:	Ref. 41	Ref. 41	Ref. 41	Ref. 42	Ref. 42	Ref. 42

*All concentrations are in ppm by weight, and are geometric means of a number of samples.

†Mo and V values for these coals may be low due to volatilization in ashing.

NR = Not reported in summary tables.

3.2.3 Gas Purification

Required input materials to the gas purification operation are make-up quench/cooling water and make-up sorbents or reactants for sulfur removal processes (Stretford or Monoethanolamine).

Make-Up Quench/Cooling Water -

Quenching and cooling water is used to scrub tars and oils from the raw gas and to cool the gas. In general, make-up water will be necessary only if the amount of water vapor in the raw product gas is less than the water vapor contained in the cooled gas. Other factors that will affect the make-up water requirements include blowdown frequency, water leaving with the by-product tar, evaporated water from separators, evaporators and oxidizers. For the Wellman-Galusha systems examined in this report, only gasification of anthracite and low-sulfur bituminous coals require make-up water. For producing 17.6 MW of low-Btu gas, these requirements are:

- Anthracite coal - 0.09 kg/sec (700 lb/hr), and
- Low-sulfur bituminous coal - 0.08 kg/sec (650 lb/hr).

Stretford Sulfur Removal Process -

Make-up chemical requirements for the Stretford process were estimated using the assumptions described in the Appendix. These requirements are summarized in Table 3.2-4.

Since the Stretford process uses a regenerable scrubbing solution, the make-up chemicals are only required to replace those lost in the sulfur cake and solution blowdown. Loss in the sulfur cake is generally small, since the cake is washed to recover most of the Stretford solution.

The blowdown is necessary to remove nonregenerable compounds formed by absorption of HCN from the feed gas (forming thiocyanates) and by oxidation of HS^- to thiosulfates. These compounds must be removed, either in the sulfur cake or in a continuous or batch blowdown stream. Batch blowdowns may be carried out when the solution reaches a salts concentration of 40%. Continuous blowdown typically maintains the salts concentration at 20 to 25%. The major factors affecting the size of the blowdown (and hence the chemical loss) are the HCN content of the feed gas and the rate of thiosulfate formation. An increase in either quantity necessitates an increased purge.

Several factors affect the rate of thiosulfate formation. The rate increases with increasing pH, increasing temperature, and increasing oxygen content in the feed gas.

TABLE 3.2-4. INPUT MATERIAL REQUIREMENTS FOR THE STRETFORD SULFUR REMOVAL PROCESS

Chemical Make-Up g/sec (lb/hr)[a]	Low-Sulfur Bituminous	High-Sulfur Bituminous	Anthracite	Lignite
Anthraquione Disulfonic Acid	0.034 (0.27)	0.076 (0.60)	0.018 (0.14)	0.037 (0.29)
Sodium Metavanadate	0.023 (0.18)	0.050 (0.40)	0.012 (0.094)	0.024 (0.19)
Sodium Carbonate	0.028 (0.22)	0.040 (0.32)	0.014 (0.11)	0.029 (0.23)
Sodium Bicarbonate	0.126 (1.00)	0.189 (1.50)	0.068 (0.54)	0.139 (1.10)
Ethylenediamine Tetraacetic Acid (EDTA)	0.014 (0.11)	0.020 (0.16)	0.007 (0.057)	0.015 (0.12)
Iron	0.0003 (0.002)	0.0004 (0.003)	0.0001 (0.001)	0.0003 (0.002)

Basis: (See Appendix for discussion and references).

[a]Treatment of 17.6 MW (60 x 10^6 Btu/hr) of gas

Chemical concentrations

$NaHCO_3$:	0.3N
Na_2OC_3:	0.1N
ADA:	1.2 times stoichiometric
$NaVO_3$:	1.2 times stoichiometric
Iron:	50 ppm
EDTA	2700 ppm

HS^- loading: 750 ppm for high sulfur bituminous
500 ppm for others

Total salts concentration in recirculating Stretford Solution: 25%

Sulfur cake washing efficiency: 66% of original chemicals recovered with one displacement wash; 96% with three washes

Insufficient hold time in the delay tank allows HS^- to be carried over into the oxidizer, which also results in increased thiosulfate formation. By proper operation, the thiosulfate formation can be limited to less than one percent of the sulfur in the feed gas (Ref. 16).

Other factors affecting the size of the blowdown and chemical requirements are the total salts concentration of the purge and the concentration of the Stretford chemicals in the purge. A decrease in the allowable total salts concentration results in an increase in the purge. For a given total salts concentration, an increase in the concentration of the Stretford chemicals would also result in increased chemical losses. The type of effluent treatment for the blowdown also affects the chemical make-up rate. Certain treatment processes recover the chemicals for recycle to the system, thus reducing make-up rates.

Monoethanolamine (MEA) Acid Gas Removal Process -

Raw materials for the absorption of acid gases by MEA (or other ethanolamines) mainly include water and sorbent (MEA). Depending on the operating circumstances, small quantities of chemicals may be added to inhibit foaming and reduce the accumulation of degradation products. Make-up chemicals for MEA solutions used to purify product gases from high-sulfur coals are summarized in Table 3.2-5.

The quantities of make-up chemicals for MEA absorption are dependent on losses due to entrainment, vaporization, and solution degradation. Entrainment losses can be minimized by use of efficient mist eliminators and application of foam inhibitors. Vapor losses are normally minor compared to losses due to the formation of degradation products.

The most serious solution loss is caused by chemical degradation of the amine sorbent. All ethanolamines are subject to oxidative degradation with the formation of dithiocarbamates, thioureas, thiosulfuric acid, formic acid, and other decomposition products. Oxidation inhibitors may be beneficial in avoiding these degradation products. Certain gas impurities react irreversibly with the amines. These compounds include carboxylic acids, sulfur compounds such as COS and CS_2, hydrochloric acid, and hydrogen cyanide. Some irreversible reactions between CO_2 and MEA also occur (Ref. 16).

Quantitative data on the degradation of MEA solutions are mostly unavailable. The reported chemical make-up may underestimate the actual requirement. Water make-up is assumed to be

TABLE 3.2-5. ESTIMATED MAKE-UP CHEMICAL REQUIREMENTS FOR MEA PROCESS[a]

Desired Low-Btu Gas	Chemical	Quantity[b] g/s (lb/hr)
"Clean" Industrial Fuel Gas[c]	Water	3.1 (25)
	MEA	1.5 (12)
"Very Clean" Gas[d]	Water	3.8 (30)
	MEA	1.4 (11)

[a]Gas is produced from gasification of 3.9% sulfur coal; 17.6 MW of gas is produced.

[b]Chemicals will be added periodically, depending on the schedule for batch reclaiming. The estimated requirements include only the requirements due to losses from vaporization, and degradation by COS and HCN. The requirements have been estimated by assuming that nearly all of the HCN is the raw gas and 20% of the COS form nonregenerable compounds. The reported values are average requirements.

[c]Gas is cleaned to limit SO_2 in the combustion products to 86 ng per Joule of low-Btu gas (0.2 lb per 10^6 Btu).

[d]Gas is cleaned to 4 ppmv H_2S.

dependent only on vaporization losses, although some water is needed for the reclaiming of degraded solutions. Degradation losses are discussed further in Section 3.7.

3.3 PROCESS STREAMS

Process streams from the coal gasification and gas purification operations are discussed in this section. These streams are not emission streams, but may have potential to result in emissions from leaks in the system or occasional blowdowns.

3.3.1. Coal Preparation and Handling

Because presized coal is purchased for use in the gasifier, the only process stream from coal handling is the coal feedstock.

3.3.2 Coal Gasification

Process streams from the coal gasification operation include the raw product gas and the water circulated through the gasifier cooling jacket.

Raw Product Gas -

Compositions, flow rates and temperatures of the raw low-Btu gas produced from each of the four coal feedstocks are given in Table 3.3-1. The hot, raw gases from bituminous and lignite coals have high dust and tar loadings, and the gases from high-sulfur bituminous and lignite coals have high sulfur contents. The gases also contain trace elements volatilized from the coal. These will be discussed in Section 3.4. The sulfur and nitrogen compounds in the gas will also be discussed in Section 3.4.

Jacket Water -

Concentrations of trace elements measured in the service water and the recirculating gasifier jacket water at the Glen-Gery Wellman-Galusha facility are given in Table 3.3-2 (Ref. 10). The concentrations of most of the elements are very similar for the two streams, but those in the jacket water are generally slightly higher. This is expected, since some of the water circulated through the jacket is evaporated and the dissolved species are thus somewhat concentrated.

3.3.3 Gas Purification

Process streams in the gas purification section include the quenched/cooled product gas and the recirculated quench water.

TABLE 3.3-1. COMPOSITIONS OF RAW LOW-BTU GAS EXITING A WELLMAN-GALUSHA GASIFIER

	Low-Sulfur Bituminous[a]	High-Sulfur Bituminous[b]	Anthracite[c]	Lignite[d]
Component (vol %, dry)				
CO	25.9	28.83	25.45	30.60
H_2	12.5	14.81	16.31	16.85
CO_2	4.9	3.42	5.51	3.89
N_2	53.4	48.90	51.48	46.55
CH_4	2.1	2.72	0.23	1.30
O_2	ND	ND	0.91	ND
Component (ppmv, dry)				
C_2H_4	2700	2700	} 1	3880
C_2H_6	1000	1000		858
C_3H_6	ND	ND	} 40	2530
C_3H_8	ND	ND		238
H_2S	1000	8400-8600	810	2490
COS	100	100-300	93	110
CS_2	ND	ND	1	ND
SO_2	20	20	21	ND
NH_3	300	300	195	300
HCN	100	100	43	100
Ar	6000	ND	ND	6000
HHV, MJ/Nm^3 (Btu/scf), dry	5.09 (144.5)	5.90 (167.6)	4.81 (136.5)	5.81 (165.0)
Water Content; mol/mole dry gas	0.058	0.140	0.064	0.300
Dust Loading, g/Nm^3 (gr/scf)	1.8 (0.75)	2.2 (0.91)	0.37 (0.15)	1.9 (0.80)
Tar Loading, g/Nm^3 (gr/scf)	39 (16.0)	40 (16.5)	– –	36 (15)
Temperature, °K (°F)	840 (1050)	640 (700)	700 (800)	420 (300)
Flow Rate, Nm^3/sec (scfm)	3.1 (7000)	2.9 (6420)	3.4 (7670)	3.4 (7630)

ND - not detected

[a]Based on data in Ref. 11

[b]Based on data in Ref. 39

[c]Based on data in Ref. 10

[d]Based on data in Ref. 9

TABLE 3.3-2. CONCENTRATIONS OF TRACE ELEMENTS IN JACKET AND SERVICE WATER AT THE GLEN-GERY WELLMAN-GALUSHA GASIFIER[a]

Element	Jacket Conc. (μg/mℓ)	Service (μg/mℓ)	Element	Jacket Conc. (μg/mℓ)	Service (μg/mℓ)
Uranium	0.02	0.008	Ruthenium		
Thorium			Molybdenum	0.01	0.004
Bismuth			Niobium	0.02	
Lead	0.2	0.07	Zirconium	0.008	0.001
Thallium			Yttrium	0.004	0.001
Mercury	NR	NR	Strontium	0.5	0.1
Gold	≤0.003		Tunifium	0.02	0.003
Platinum			Bromine	0.3	0.03
Iridium			Selenium	0.02	≤0.003
Osmium			Arsenic	0.04	0.006
Rhenium			Germanium	0.007	
Tungsten			Gallium	0.004	<0.081
Tantalum			Zinc	3	0.8
Hafnium			Copper	0.07	0.05
Lutetium			Nickel	0.01	0.02
Ytterbium			Cobalt	0.004	≤0.001
Thulium			Iron	9	0.2
Erbium			Manganese	0.3	0.02
Holmium			Chromium	0.04	≤0.02
Dysprosium			Vanadium	0.01	0.002
Terbium			Titanium	<0.03	≤0.02
Gadolinium			Scandium	≤0.001	≤0.001
Europium			Calcium	MC	MC
Samarium			Potassium	MC	MC
Neodymium			Chlorine	3	0.5
Praseodymium	0.003		Sulfur	>8	1
Cerium	0.007	0.001	Phosphorus	0.9	0.2
Lanthanum	0.01	0.002	Silicon	MC	0.6
Barium	0.5	0.2	Aluminum	>1	0.01
Cesium	<0.001		Magnesium	MC	MC
Iodine	0.06	0.001	Sodium	3	>2
Tellurium			Fluorine	≅3	∿0.3
Antimony	0.07		Oxygen	NR	NR
Tin	0.005		Nitrogen	NR	NR
Indium	STD	STD	Carbon	NR	NR
Cadmium	0.004	0.001	Boron	0.005	0.002
Silver	0.004	0.004	Beryllium		
Palladium			Lithium	0.001	0.001
Rhodium			Hydrogen	NR	NR

[a]Trace element concentrations will vary significantly from site to site.

Source: Reference 10

These gaseous and liquid streams will be discussed in the following text.

Gas Streams -

The quenched/cooled low-Btu gas streams are essentially unchanged in composition from the raw low-Btu gas with the exception of dust and tar loadings and water content. About 60-80 percent of the dust is removed in the hot cyclone. In the systems requiring quenching/cooling and electrostatic precipitation, essentially all of the residual dust is removed. For the bituminous and lignite coals about 60 to 70 percent of the tars and oils are removed in the quenching/cooling system, with about 99 percent of the residual tars and oils removed in an ESP. Some of the NH_3 and HCN in the gas is removed in the quenching steps, as indicated by the high levels of ammonia (or ammonium ion) and cyanide in the quench liquor at the Chapman gasifier (Ref. 13). However, data quantifying removal of these compounds were not available. Removal of these compounds in the quench system should be measured in future tests. These intermediate product gas streams may also contain various trace elements. These will be discussed in Section 3.4.

Liquid Stream -

Large quantities of water must be circulated to cool the hot gas down from the gasifier exit temperature to a temperature low enough for tar removal and for treatment in the sulfur removal process. This recirculating quench liquor will absorb various compounds from the gas as well as particulates and tars in the gas. No data were available on quench liquor from a Wellman-Galusha gasification system. However, quench liquor was sampled at a Chapman gasification facility (Ref. 13). Water quality parameters determined for the quench liquor are given in Table 3.3-3 (Ref. 13). Concentrations of various organic compounds and trace elements in the liquor are given in Tables 3.3-4 and 3.3-5, respectively (Ref. 43).

3.4 TOXIC SUBSTANCES IN PRODUCT AND BY-PRODUCT

The product gas and by-product tar and oil will contain various compounds that are potential pollutants or toxic substances. These will be discussed in this section.

3.4.1 Coal Gasification

Unquenched product gas from the cyclone will be the final product for two of the cases considered in this study - the use of low-sulfur bituminous and anthracite coals to produce a gas whose

TABLE 3.3-3. WATER QUALITY PARAMETERS OF QUENCH LIQUOR AT CHAPMAN GASIFIER

Parameter	Value
Color (Pt-Co units)	5,000
Odor (Threshold No.)	4,000
pH	7.66
TDS (ppm)	6,300
TSS (ppm)	144
COD (ppm)	22,200
BOD (ppm)	6,530
DO (ppm)	ND
Conductivity (mhos)	32,000
Hardness	ND
Alkalinity (as $CaCO_3$)	2,140

ND: Not determined due to interference in the analysis

Source: Ref. 13

TABLE 3.3-4. ORGANIC COMPOUNDS FOUND IN A CHAPMAN GASIFICATION FACILITY QUENCH LIQUOR

MEG Category No.	Compound Category / Organic Compound	Estimated Stream Concentration (μg/ℓ)
1	Alaphatic Hydrocarbons	
	$\geq C_6$ Alkanes (Nonane, Heptane)	1×10^5
	Methylcyclohexane	400
5	Alcohols	
	$>C_6$ Alkylalcohols	1.2×10^4
	$>C_{15}$ Alkylalcohols	5.4×10^3
8	Carboxylic Acids and Their Derivitives	
	Phthalic acid	4×10^3
	Phthalates	2.2×10^4
	Adipates	1.9×10^4
10	Amines	
	Aniline	3×10^3
	Aminotoluenes	3.8×10^3
	C_2 -Alkylaniline	1.0×10^3
	Methylpyrroline	1.3×10^3
15	Benzene, Substituted Benzene Hydrocarbons	
	Indene	8.2×10^3
	Methylindene	3.4×10^3
18	Phenols	
	Phenol	7.2×10^5
	Anisoles	1.3×10^6
	C_2 -Alkylphenols	3.7×10^5
	C_3 -Alkylphenols	5.0×10^4
21	Fused Aromatic Hydrocarbons and Their Derivitives	
	Naphthalene	1.7×10^4
	Methylnaphthalene	5.1×10^3
	Acenaphthylene	4.1×10^3
	Benzoperylene	3.0×10^4
23	Heterocyclic Nitrogen Compounds	
	Methylpyridine	3.0×10^3
	C_2 -Alkylpyridine	3.8×10^3
	C_3 -Alkylpyridine	1.0×10^3
	Indole	5.3×10^4
	Methylindole	8.9×10^3
	Quinoline	3.1×10^3
	Methylquinoline	1.8×10^3
	C_3 -Alkylquinoline	2.4×10^3
24	Heterocyclic Oxygen Compounds	
	Methylidioxolone	5.0×10^3

Source: Ref. 43

MEG: Multimedia Environmental Goals

TABLE 3.3-5. TRACE ELEMENT CONCENTRATIONS FOUND IN A CHAPMAN GASIFICATION FACILITY QUENCH LIQUOR

MEG Category No.	Element	Concentration (μg/ℓ)	MEG Category No.	Element	Concentration (μg/ℓ)
(27)	Lithium	3	(61)	Yttrium	5
(29)	Potassium	2×10^4	(62)	Titanium	100
(30)	Rubidium	10	(63)	Zirconium	10
(31)	Cesium	1	(66)	Niobium	8
(33)	Magnesium	2×10^3	(70)	Tungsten	10
(34)	Calcium	2×10^4	(72)	Iron	1×10^3
(35)	Strontium	80	(78)	Copper	10
(36)	Barium	300	(79)	Silver	2
(37)	Boron	9×10^3	(82)	Cadmium	5
(43)	Silicon	2×10^3	(83)	Mercury*	< 0.3
(45)	Tin	30	(84)	Lanthanum	7
(48)	Phosphorous	2×10^4	(85)	Cerium	3
(40)	Arsenic	800			
(50)	Antimony	70			
(53)	Sulfur	8×10^3			
(54)	Selenium	2×10^3			
(56)	Fluorine	2×10^3			
(57)	Chlorine	200			
(58)	Bromine	300			
(59)	Iodine	300			
(60)	Scandium	2			

Source: Ref. 43
* Mercury was analyzed by flameless atomic absorption spectrometry
MEG: Multimedia Environmental Goals
NOTE: Elements analyzed by SSMS that are not listed, had a concentration <1 μg/ℓ

combustion product have less than 520 ng SO_2/J (1.2 lb $SO_2/10^6$ Btu) of low-Btu gas. As discussed in Section 3.3.3, this gas will have essentially the same composition and flow rate as the raw gas from the gasifier, given in Table 3.3-1, but will have only about 20 to 40 percent of the original dust loading.

This gas stream will contain several potential pollutants including sulfur compounds, nitrogen compounds, metal carbonyls, various trace elements, and possibly hazardous organic compounds.

The predominant sulfur species is H_2S, but organic sulfur (such as COS and CS_2) is also present along with small amounts of SO_2 and free sulfur. Data on COS formation from gasification of anthracite, low-sulfur bituminous, and lignite coals are available from the test programs described previously (Refs. 9, 10, 13, 15). No data were available on COS formation from gasification of high-sulfur coals in at atmospheric pressure, fixed-bed gasifier. Research Triangle Institute (RTI) (Ref. 44) has reported very low (less than 100 ppmv) COS concentrations from the gasification of high-sulfur coal (Illinois No. 6) and char in a pressurized (1.52 MPa) gasifier. However, very high steam rates were used in the RTI tests. According to the hydrolysis reaction of H_2S and COS (Equation 3-1),

$$H_2S + CO_2 \rightleftarrows COS + H_2O \qquad (3\text{-}1)$$

it appears that high steam rates would suppress formation of COS.

A value of 315 ppmv for COS was reported for the Morgantown Energy Research Center pilot gasifier (Ref. 44). From consideration of the equilibrium of Equation 3-1 and from the H_2S/COS ratios reported in Riley Stoker's tests on low-sulfur bituminous and lignite coals (Refs. 9, 15), an H_2S/COS ratio of about 25 (COS concentration of about 300 ppmv) was estimated for the high-sulfur bituminous coal. The actual COS concentration, however, could be much higher than this. Actual data on COS production from high-sulfur coal under the proper operating conditions are needed.

During gasification, a portion of the coal-bound nitrogen forms ammonia and hydrogen cyanide. Smaller amounts of coal nitrogen are found as thiocyanates and certain organic compounds. These compounds could form NO_x when the low-Btu gas is burned.

Experimental data on the formation of NH_3 and HCN are available from tests in Wellman-Galusha, Chapman, and Riley-Morgan gasifiers. These data are for coals with nitrogen contents of about 1 to 2 percent. Steam rates of 0.5 to 0.9 kg steam/kg coal were used. Higher steam rates favor the formation of NH_3 by

increasing the hydrogen partial pressure in the gasifier. The time-temperature history of the coal in the gasifier also has an impact on NH_3 formation because it affects the amount and characteristics of nitrogen intermediates formed in the gasifier.

Data from the Glen-Cery Wellman-Galusha gasifier (anthracite coal feedstock) show NH_3 and HCN concentrations of about 200 ppmv and 40 ppmv, respectively. The coal was gasified with a steam input of about 0.9 kg steam/kg coal. The coal nitrogen content was about 0.8 percent (Ref. 10).

Data from a Chapman gasifier using bituminous coal shows NH_3 and HCN concentrations of about 400 ppmv and 80 ppmv respectively. The coal was gasified with a steam input of about 0.5 kg steam/kg coal. The coal nitrogen content was 1.9 percent (Ref. 13).

Data for a Riley-Morgan gasifier are available for both high and medium volatile bituminous coals. Ammonia concentrations for the high and medium volatile coals were 190 and 113 ppmv, respectively. Hydrogen cyanide concentrations were 113 and 129 ppmv, respectively. The steam rate for the high volatile coal was 0.6 kg steam/kg coal (Ref. 15).

The NH_3 and HCN contents in the raw gases from coal examined in this study are estimated based on the above data. The contents are shown in Table 3.3-1.

From the dust loadings shown in Table 3.3-1 it appears that particulate emissions from combustion of the raw product gas from low sulfur bituminous coal would be high. However, most of the dust is carbon, which will be burned along with the gas so that the actual particulate emissions fromm combustion of the gas should be well below 43 ng/J (0.1 lb/10^6 Btu). The dust loading in the gas from anthracite coal is lower than that from bituminous. Since it is also mostly carbon, particulate emissions from combustion of the gas should be less than 13 ng/J (0.03 lb/ 10^6 Btu).

Raw, low-Btu gas will also contain trace elements volatilized from the coal. Few data are available on these trace element levels. Trace element concentrations measured (by spark source mass spectroscopy or SSMS) in the product gas from the Glen-Cery Wellman-Galusha gasifier using anthracite are given in Table 3.4-1 (Ref. 10). These data indicate that trace element levels in the actual vapor phase are very low. Most of the trace elements in the product gas are contained in the particulates remaining in the gas after the cyclone. This is supported by measurements of the concentration of selected trace elements by

TABLE 3.4-1. TRACE ELEMENT CONCENTRATION (BY SSMS) IN THE PRODUCT GAS FROM A WELLMAN-GALUSHA GASIFIER USING ANTHRACITE COAL

	Particulates (μg/g) >3μ	Particulates (μg/g) <3μ	Gases (μg/m³ @ 25°C)		Particulates (μg/g) >3μ	Particulates (μg/g) <3μ	Gases (μg/m³ @ 25°C)
Al	>30	>4000		Mo	90	600	
Sb	200	2000	2	Nd	30	40	
As	≥900	2000	≤50	Ni	Int	200	20
Ba	600	≥9000		Nb	30	50	
Be	0.4	2		Os			
Bi	40	700		Pd			
B	0.6	300		P	>800	3000	10
Br	5	90		Pt			
Cd	20	300	10	K	>300	≥9000	*
Ca	≥900	≥9000	*	Pr	6	40	
Ce	40	300		Re	<0.1		
Cs	4	9		Rh			
Cl	≥900	≥9000	*	Rb	30	70	7
Cr	90	600	6	Ru			
Co	30	60		Sm	9	30	
Cu	200	500	10	Sc	4	40	
Dy	2	-		Se	80	500	20
Er	<0.9			Si	20	2000	
Eu	1.9	6.0		Ag	40	300	
F	≈200	≈900		Na	>90	≥9000	
Gd	2	9		Sr	200	600	
Ga	≥900	4000	10	S	>200	≥9000	*
Ge	0.9	20		Ta	≤0.9		
Au	<0.2			Te	20	≤30	
Hf	0.9			Tb	0.7	3	
Ho	0.9			Tl	90	≤20	
In	Std	Std		Th	9	≤80	
I	0.9	4		Tm	≤0.1		
Ir	-	-		Sn	200	3000	
Fe	≥900	≥9000		Ti	≥900	3000	800
La	50	200		W	9	90	
Pb	≥900	≥9000		U	6	≤90	
Li	70	50	50	V	30	300	0.8
Lu	0.3	-		Yb	0.9		
Mg	≥900	≥9000		Y	20	90	
Mn	300	400	3	Zn	≥900	≥9000	40
Hg	NR	NR		Zr	40	600	

NR - not reported

Int - interference

Std - standard

Elements not reported : Particulates >3μ, <0.093 μg/g
<3μ, <0.86 μg/g
Gas, <0.53 μg/m³

Sample was thermally ashed @ 350°C for one hour in a laboratory furnace in a quartz crucible prior to analysis.

*The concentration was indeterminable because the compound was a major component (>9000 μg/m³) in the sample and the blank.

Source: Reference 10

atomic absorption. For antimony (Sb), these measurements indicated that essentially no Sb remained in the vapor phase, while over 80 percent of the Sb in the coal was contained in the particulates remaining in the gas after the cyclone and about 10 to 11 percent was contained in the dust collected in the cyclone. For arsenic, less than 5 percent was found in the vapor phase, with more than 45 percent in the particulates in the product gas and 2 to 6 percent in the cyclone dust.

Because of the scarcity of measured data on trace elements in low-Btu gases, a computer equilibrium model was used to predict trace element volatilization. This model (discussed in more detail in the Appendix) predicts the equilibrium distribution of trace elements into various species at a given temperature and pressure. The results from using this model to predict gasifier exit compositions are presented in Table 3.4-2. This table gives the predicted trace species and the predicted degree of volatilization of the elements. As shown, the following elements were predicted to be completely volatilized for all four coals: Se, Hg, As, B, P, and Sb. The elements Be, Co, Cr, Cu, Mn, Ni, U, V, Zn, and Ba were not predicted to volatilize for any of the coals. Five other elements (Cd, Ge, Mo, Sn and Pb) were predicted to volatilize completely for the low sulfur bituminous coal (which had the highest gas temperature) but varied for the other coals depending on the gas temperature.

It is difficult to accurately compare these predictions to the SSMS measurements in Table 3.4-1. The SSMS measurements indicate a rough distribution of the trace elements among the gas phase, particulates in the gas phase, cyclone dust, and gasifier ash. According to these rough distributions, Cd, As, Sb, Sn, and Se were found mostly in the particulates in the product gas stream. It appears that these elements volatilize in the gasifier and then recondense on the particulates. The elements Pb, P, Zn, and Ba had uncertain distributions, with concentrations of two or more streams given as "major components," (greater than 1000 ppm in sample tested). One element (boron) was predicted to be completely volatilized, but apparently is not. The elements Be, Co, Cr, Cu, Ge, Mn, Mo, Ni, U, and V were found primarily in the ash phase, as expected from the model. Thus, although the computer model is incorrect in predicting complete or zero volatilization, the elements it predicts to be volatilized (with the exception of boron) do appear to be found primarily in the particulates in the gas stream (or the vapor phase itself) rather than in the gasifier ash. Most of the other trace elements that had concentrations in the coal of greater than 1 ppm appear to be primarily retained in the ash.

TABLE 3.4-2. PREDICTED EQUILIBRIUM TRACE ELEMENT DISTRIBUTIONS

Element	Conc in Coal ppm	Low Sulfur Bituminous at 839°K Major Species	% of Element	% of Element Volatilized	High Sulfur Bituminous at 644°K Major Species	% of Element	% of Element Volatilized	Anthracite at 700°K Major Species	% of Element	% of Element Volatilized	Lignite at 422°K Major Species	% of Element	% of Element Volatilized
Be	2	BeO(s)	100	0	BeO(s)	100	0	BeO(s)	100	0	BeO(s)	100	10
Se	3.5	SeH_2(g)	77	100	SeH_2(g)	93	100	SeH_2(g)	94	100	SeH_2(g)	100	100
		SeCO(g)	23		SeCO(g)	6.8		SeCO(g)	6.1				
Cd	0.59	Cd(g)	92	100	CdS(s)	100	0.1	CdS(s)	76	23.7	CdS(g)	100	0
		CdCl(g)	8		CdCl(g)	.071		Cd(g)	21				
					Cd(g)	.02		CdCl(g)	2.6				
Hg	17	Hg(g)	100	100	Hg(g)	100	100	Hg(g)	100	100	Hg(g)	100	100
As	15	H_3AsO_4(g)	38	100	H_3AsO_4(g)	100	100	H_3AsO_4(g)	100	100	H_3AsO_4(g)	100	100
		As_4(g)	61										
		As_2(g)	0.56										
		A_3Na(g)	0.57										
Pb	15	PbS(g)	72	100	PbS(s)	100	0.4	PbS(s)	100	0.4	PbS(s)	100	0.5
		PbCl(g)	16		$PbCl_4$(g)	.38		PbS(g)	0.27		$PbCl_4$(g)	0.49	
		Pb(g)	6.9										
		$PbCl_2$(g)	4.8										
B	98	BN_3O_3(g)	100	100	BN_3O_3(g)	100	100	BN_3O_3(g)	100	100	BN_3O_3(g)	100	100
Co	7.6	CoS(s)	100	0	CoS(s)	100	0	CoS(s)	100	0	CoS(s)	100	0
Cr	18	Cr_2O_3(s)	100	0	Cr_2O_3(s)	100	0	Cr_2O_3(s)	100	0	Cr_2O_3(s)	100	0
Cu	21.5	Cu_2S(s)	100	0	Cu_2S(s)	100	0	Cu_2S(s)	100	0	Cu_2S(s)	100	0
Ge	4.8	GeS(g)	90	100	GeS_2(s)	100	0.2	GeS(g)	74	100	GeS_2(s)	100	0
		GeO(g)	10		GeS(g)	0.2		GeO(g)	26				
Mn	200	MnS(s)	100	0	MnS_2(s)	100	0	MnS(s)	100	0	$MnCO_3$(s)	100	0
Mo	6.2	$MoCl_2$(g)	100	100	MoS_2(s)	100	0	MoS_2(s)	100	0	MoS_2(s)	100	0
Ni	19	Ni(s)	100	0	NiS(s)	100	0	NiS(s)	100	0	NiS(s)	100	0
P	82	P_4O_6(g)	100	100	P_4O_6(g)	100	100	P_4O_6(g)	100	100	P_4O_6(g)	100	100
Sb	1.1	SbCl(g)	84	100	H_3SbO_4(g)	100	100	H_3SbO_4(g)	100	100	N.C.*		
		H_3SbO_4(g)	16		Sn								
Sn	0.97	SnS(g)	95	100	SnS(s)	92	7.5	SnO_2(s)	77	22.6	SnS_2(s)	100	0
		$SnCl_2$(g)	4.6		SnCl(g)	6.9		SnS(g)	19				
					Sn(g)	0.62		$SnCl_2$(g)	3.2				
U	1.3	UO_2(s)	100	0	UO_2(s)	100	0	UO_2(s)	100	0	UO_2(s)	100	0
V	35	V_2S_3(s)	100	0	V_2S_3(s)	100	0	V_2S_3(s)	100	0	V_2S_3(s)	100	0
Zn	87	ZnS(s)	100	0	ZnS(s)	100	0	ZnS(s)	100	0	ZnS(s)	100	0
Be	430	$BeCl_2$(s)	100	0	$BeCl_2$(s)	100	0	$BeCl_2$(s)	100	0	$BeCl_2$(s)	100	0

*No convergence

Metal carbonyls (Fe and Ni) in the product gas were measured at the Glen-Gery Wellman-Galusha gasifier. These measurements indicated average concentrations of approximately 104 $\mu g/Nm^3$ of $Fe(CO)_5$ and 25 $\mu g/Nm^3$ of $Ni(CO)_4$ (Ref. 10).

3.4.2 Gas Purification

Product Gas -

Compositions of the final product gas are reported in Tables 3.4-3 and 3.4-4. As indicated, many of the potential pollutants present in the raw product gas (as discussed in Section 3.4.1) have been removed. The Stretford unit will remove most of the H_2S (down to 10 ppmv or less) and essentially all of the HCN, but will not remove the organic sulfur. MEA systems will remove organic sulfur as well as H_2S.

Most of the tars and particulates will probably be removed in the quench system and ESP, but the precise degree of removal is uncertain since few data are available on tar and particulate removal in an application such as this. Tar removals in the tray and spray scrubbers were calculated based on a tar aerosol size distribution from Riley Stoker tests. Indirect cooling rather than direct water quenching was reportedly used in these tests, however, so the size distribution may not accurately represent the system studied in this report. The electrostatic precipitator was designed to remove 99 percent of the remaining tar aerosols. Removals greater than 99 percent were reportedly achieved in the ESP in Riley Stoker's pilot system (Ref. 38). More data are needed on the tar removal efficiencies of the quench scrubber and the ESP in atmospheric pressure fixed-bed gasifier applications.

Data on removal of trace elements in the quench system and sulfur removal processes are not available. Since most of the trace elements in the gas are apparently in the small particulates, however, it appears that the final gas product, from which essentially all of the particulates are removed, may have few remaining trace elements.

Tars and Oils -

Tars and oils produced from gasification of bituminous and lignite coals will be predominantly organic material, but will also contain ash and various trace elements. Estimated ultimate compositions for the tars from the bituminous and lignite coals are given in Table 3.4-5. A more detailed analysis of the organics in the tar produced at the Chapman facility is given in Table

TABLE 3.4-3. COMPOSITION OF LOW-BTU PRODUCT GASES AFTER STRETFORD

	Low Sulfur Bituminous	High Sulfur Bituminous	Anthracite	Lignite
Component (vol %, dry)				
CO	25.9	28.83	25.45	30.6
H_2	12.5	14.81	16.31	16.85
CO_2	4.9	3.42	5.51	3.89
N_2	53.4	48.90	51.48	46.55
CH_4	2.1	2.72	0.23	1.30
C_2H_4	0.27	0.27	0.0001	0.388
C_2H_6	0.10	0.10		0.0858
C_3H_6	-	-	0.004	0.253
C_3H_8	-	-		0.0238
H_2S	0.001	0.001	0.001	0.001
COS	0.01	0.03	0.0093	0.011
CS_2	-	-	0.0001	-
SO_2	0.002	0.002	0.0021	-
NH_3	0.03	0.03	0.0195	0.03
HCN	0.01	0.01	0.0043	0.01
Ar	0.6	ND	ND	0.6
O_2	-	-	0.91	-
Water content, mole/mole dry gas	0.095	0.095	0.095	0.095
Tar loading, g/Nm^3 (gr/scf)	0.15 (.064)	0.16 (.066)	-	0.14 (.058)
Flow rate*, Nm^3/s (scfm)	3.2 (7240)	2.8 (6285)	3.5 (7830)	2.9 (6440)

*For 17.6 MW (60 x 10^6 Btu/hr) gas production
ND: Not Detected

TABLE 3.4-4. COMPOSITION OF LOW-BTU PRODUCT GAS FROM HIGH-SULFUR BITUMINOUS COAL AFTER TREATMENT IN MEA

Component (Vol. %)	Concentration, Vol. %	
	Case A[a]	Case B[b]
CO	28.6	29.8
H_2	14.1	15.5
CO_2	0.5	0.3
N_2	48.6	50.7
CH_4	2.7	2.8
C_2H_4	0.26	0.28
C_2H_6	0.1	0.10
H_2S	0.016	0.0004
COS	0.006	neg.
MEA	0.003	0.003
H_2O	4.5	0.56
Flow rate, Nm^3/s (scfm)[c]	2.5 (5630)	2.4 (5460)

[a]~200 ppmv sulfur species in product gas

[b]~10 ppmv sulfur species in product gas

[c]For production of 17.6 MW (60 x 10^6 Btu/hr) of low-Btu

TABLE 3.4-5. ULTIMATE ANALYSES OF BY-PRODUCT TAR

Ultimate Comp., Wt. % (dry basis)[a]	Low-Sulfur[b] Bituminous	High-Sulfur[c] Bituminous	Lignite[d]
C	85.2	88.8	78.1
H	7.9	7.8	7.2
O	5.1	1.4	10.0
N	1.2	0.8	
S	0.5	1.2	1.3
Ash	0.1	0.1	1.3

[a] Moisture contents are about 0.10 kg/kg tar.

[b] Source: Ref. 37

[c] Source: Ref. 45

[d] Source: Ref. 9

3.4-6 (Ref. 43). The major organic categories identified were polycyclic aromatic hydrocarbons and heterocyclic organics. A wide distribution of trace elements was found, with sulfur and potassium the predominant ones. Trace elements identified in the tar are given in Table 3.4-7 (Refs. 13, 36).

Bioassay tests have been performed on the by-product tar produced at the Chapman facility. Table 3.4-8 gives the results of these tests. The Ames test was positive which indicates that the tar is possibly carcinogenic. Toxic effects were also noted in the Rodent Acute Toxicity Test; however, an LD-50 was not obtained. The tar was the second most toxic sample in the soil microcosm test.

3.5 WASTE STREAMS TO AIR

Various waste streams will be emitted to the air from a Wellman-Galusha gasification facility. These include fugitive dust from coal handling; vent gases from coal feeding, ash removal, and gasifier start-up; fugitive emissions and pokehole gases from the gasifier; vent gases from the tar/water separator and Stretford oxidizer; acid gases from the MEA process; and combustion gases from burning the product gas. These streams are discussed in this section.

3.5.1 Coal Preparation and Handling

Since presized coal is received at the gasification facility, fugitive coal dust from coal receiving, storage, and conveying are the only air emissions. The quantities of these emissions will be variable, depending on factors such as wind velocities and coal size distribution.

3.5.2 Coal Gasification

Coal Feeding Gases -

Coal feeding gases are released when the slide valves at the bottom of the coal feed hopper open to allow the coal feed to enter the gasifier. As the coal is discharged, a small amount of raw product gas from the gasifier fills the space in the hopper. This gas escapes to the atmosphere when the slide valves at the top of the coal feed hopper open to admit another charge of coal. The composition of the major gaseous components in this stream should be similar to that of the raw product gas. However, minor gaseous species and tars may condense on the coal and not be emitted from the coal feeder. The composition of the coal feeder gases from the Glen-Gery Wellman-Galusha gasification facility is given in Table 3.5-1 (Ref. 10).

TABLE 3.4-6. ORGANIC COMPOUNDS IDENTIFIED IN THE TAR PRODUCED FROM A CHAPMAN FACILITY USING BITUMINOUS COAL

MEG Category No.	Organic Category / Organic Compound	Estimated Stream Concentration (µg/g)
1	Aliphatic Hydrocarbons	
	$>C_6$ Alkanes	4.0×10^2
	$\geq C_{10}$ Alkanes	9.0×10^2
5	Alcohols	
	$>C_6$ Alkylalcohols	3.4×10^3
8	Carboxylic Acids and Their Derivitives	
	Phthalic acid	1.0×10^3
	Phthalate esters	3.0×10^2
	Adipate esters	2.2×10^2
	$>C_6$ Aliphatic esters	4.8×10^2
10	Amines	
	Aminotetratin	9.0×10^2
	C_2-Alkylaniline	1.0×10^2
	C_3-Alkylaniline	2.0×10^2
	Benzofluoreneamine	6.0×10^2
	Methylbenzofluoreneamine	2.0×10^2
	Aminonaphthalene	1.0×10^2
	Methyl-aminoacenaphthylene	2.0×10^2
15	Benzene, Substituted Benzene Hydrocarbons	
	Indene	3.0×10^2
	C_2-Alkylindene	3.0×10^2
18	Phenols	
	Phenol	1.8×10^3
	Anisoles	8.4×10^1
	C_2-Alkylphenol	5.8×10^1
	C_3-Alkylphenol	1.0×10^3
	Indanol	3.0×10^3
	Naphthol	1.8×10^3
	Methylnaphthol	2.0×10^3
	C_2-Alkylnaphthol	3.0×10^3
	Acenaphthol	3.0×10^3
	Methylacenaphthol	9.0×10^3
	C_2-Alkylacenaphthol	1.6×10^3
	C_3-Alkylacenaphthol	7.0×10^3
	Hydroxyanthracene	1.5×10^3
	C_3-Alkylhydroxyanthracene	2.0×10^3
	C_2-Alkylhydroxypyrene	2.1×10^3
	Hydroxybenzofluorene	3.5×10^3
21	Fused Aromatic Hydrocarbons and Their Derivitives	
	Naphthalene	2.1×10^3
	Methylnaphthalene	4.2×10^3
	C_2-Alkylnaphthalene	4.4×10^3
	Acenaphthene	1.4×10^3
	Methylacenaphthene	6.0×10^3
	C_2-Alkylacenaphthene	1.2×10^3
	C_3-Alkylacenaphthene	5.0×10^3
	Acenaphthylene	4.3×10^3
	Methylacenaphthylene	2.8×10^3
	C_2-Alkylacenaphthylene	1.4×10^3
	Anthracene	6.3×10^1
	Methylanthracene	2.1×10^3
	C_2-Alkylanthracene	8.0×10^3
	Methylphenanthracene	2.1×10^3
	Chrysene	2.9×10^3
	Methylchrysene	1.2×10^3
	Perylene	8.0×10^3
	Pyrene	2.4×10^3
	Methylpyrene	3.8×10^3
	Benzoperylene	5.0×10^3
	Benzopyrene	8.0×10^3
	Triphenylene	2.9×10^3
	Methyltrophenylene	1.2×10^3
22	Fused Non-Alternant Polycyclic Hydrocarbons	
	Fluorene	2.4×10^3
	Methylfluorene	2.1×10^3
	Fluoranthene	1.4×10^3
	Benzofluorene	3.8×10^3
23	Heterocyclic Nitrogen Compounds	
	Carbozole	4.0×10^3
	Methylcarbozole	2.0×10^3
	C_2-Alkylpyridine	1.0×10^3
	C_4-Alkylpyridine	2.0×10^3
	Acridine	9.0×10^3
	Methylacridine	4.0×10^2
	C_2-Alkylacridine	4.0×10^2
	C_3-Alkylacridine	6.0×10^2
	Quinoline	1.9×10^2
	Methylquinoline	6.0×10^2
	C_2-Alkylquinoline	2.3×10^2
	C_3-Alkylquinoline	1.1×10^2
	Benzoquinoline	7.0×10^2
	Methylbenzoquinoline	1.1×10^2
	C_2-Alkylbenzoquinoline	3.0×10^2
	C_3-Alkylbenzoquinoline	6.0×10^2

MEG: Multimedia Environmental Goals
Source: Ref. 43

TABLE 3.4-7. TRACE ELEMENTS (BY SSMS) IN THE BY-PRODUCT TAR PRODUCED FROM LOW-SULFUR BITUMINOUS COAL

MEG Category Number	Element	Concentration (μg/g) Sample 1	Sample 2	MEG Category Number	Element	Concentration (μg/g) Sample 1	Sample 2
27	Lithium	ND	4	57	Chlorine	ND	6
28	Sodium	ND	71	58	Bromine	ND	2
29	Potassium	3000	100	59	Iodine	5	1
30	Rubidium	0.5	0.2	60	Scandium	<1	0.7
31	Cesium	ND	0.1	61	Yttrium	1	0.2
32	Beryllium	ND	0.1	62	Titanium	ND	29
33	Magnesium	200	23	63	Zirconium	ND	0.7
34	Calcium	ND	630	65	Vanadium	1	0.8
35	Strontium	20	10	66	Niobium	<5	ND
36	Barium	50	27	68	Chromium	50	3
37	Boron	1	19	69	Molybdenum	ND	1
38	Aluminum	ND	25	71	Manganese	ND	0.9
39	Galbium	<9	8	72	Iron	ND	120
43	Silicon	ND	170	74	Cobalt	ND	5
44	Germanium	ND	1	76	Nickel	ND	5
45	Tin	ND	0.9	78	Copper	300	3
46	Lead	50	10	81	Zinc	ND	7
48	Phosphorus	ND	17	82	Cadmium	<6	ND
49	Arsenic	<0.2	4	83	Mercury	0.06*	0.12
50	Antimony	80	0.8	84	Lanthanum	5	0.6
51	Bismuth	5	ND	84	Cerium	5	0.5
53	Sulfur	2000	520	84	Praseodymium	ND	0.3
54	Selenium	0.003*	3	84	Neodymium	ND	0.6
56	Fluorine	20	22				

Sample 1: Ref. 13
Sample 2: Ref. 36
*Determined by Atomic Adsorption Spectrometry

TABLE 3.4-8. BIOASSAY TEST RESULTS FOR THE TAR PRODUCED FROM A CHAPMAN FACILITY USING LOW-SULFUR BITUMINOUS COAL

Health Tests	
• Ames	Positive
• RAM, EC-50 (g/ml of cell culture)[a]	>1000
• RAT	High Toxicity
- LD-50 (g tar/kg rat)[b]	>10
Ecological Test	
• Soil Microcosm[c]	Second

Source: Ref. 13

[a]EC-50: Concentration at which growth was 50 percent of control

[b]LD-50: Dose per kg of test animal at which 50 percent died

[c]Soil Microcosm Test Ranking for Samples tested were:

1 - Most Toxic	Cyclone Dust
2 -	Tar
3 -	Coal
4 -	Ash
5 - Least Toxic	Quench Liquor

TABLE 3.5-1. COMPOSITION OF COAL FEEDER GAS FROM THE GLEN-GERY WELLMAN-GALUSHA GASIFIER*

Component	Concentration ($\mu g/m^3$ @ 25°C)
CO_2	8.5×10^7
H_2	1.2×10^7
O_2	4.8×10^7
N_2	6.5×10^8
CH_4	1.4×10^6
CO	2.7×10^8
H_2S	4.1×10^5
COS	1.5×10^5
SO_2	1.3×10^4
CS_2	1.6×10^3
$Fe(CO)_5$	1.3×10^5
NH_3	ND
HCN	ND
SCN	ND

*Anthracite coal feedstock

ND: Not Detected

Source: Reference 10

Ash Removal Vent Gas -

This gas stream is discharged when the ash hopper is opened in order to dump accumulated ash. Under normal operating conditions, this stream would consist mainly of steam and air, with traces of particulate matter. If the ash is quenched prior to being dumped from the hopper, this gas stream could also contain any volatile compounds in the quench water. No measured data on the flow rate or composition of this stream are available.

Start-Up Emissions -

About four hours are needed to bring the Wellman-Galusha gasifier from a "cold start" to normal operations (Ref. 7). During the start-up period, the gas initially contains mainly products of combustion such as CO_2 and SO_2. As the temperature of the gasifier increases, the gas begins to resemble the low-Btu gas.

Fugitive Emissions and Pokehole Gases -

Sources of product gas leakage from Wellman-Galusha gasifiers are pokeholes. Pokeholes are used as access ports for probing the coal bed with metal rods. These rods are used to monitor the position of the combustion zone in the coal bed and to breakup clinkers in the bed. Emissions from pokeholes consist of all components of the raw product gas.

3.5.3 Gas Purification

Several potential sources of gaseous emissions exist in the gas purification operation. These include fugitive emissions from the cyclone, vent gases from the tar/oil/water separator, vent gases from the oxidizer and evaporator in the Stretford process, and tail gases from the MEA acid gas removal process.

Fugitive Emissions from Cyclones -

Emissions from cyclones used for bulk particulate removal consist of leaks from the cyclone. These emissions have not been measured but may contain components found in the low-Btu gas. Additional emissions may arise if the cyclones are equipped with pokeholes. The cyclones at the Chapman gasification facility were outfitted with pokeholes (Ref. 13). However, the cyclones at the Wellman-Galusha gasification facility discussed in Section 3.1 did not have pokeholes. Emissions from cyclone pokeholes would be similar to the raw low-Btu gas.

Gaseous Emissions from Quench Liquor Separator -

Gaseous emissions from the quench liquor separator consist of volatile organic and inorganic compounds that have been scrubbed from the raw product gas in the quenching and cooling processes. In the separator, some of the absorbed gases and vapors desorb from the quench liquor. The vent stream from the separator would then contain constituents of the product gas including H_2S, COS, CS_2, SO_2, H_2, CO_2, CO, NH_3, HCN, and organic vapors.

At the Chapman gasification facility (using low-sulfur bituminous coal), a steam ejector is used to vent the vapor space above the tar/quench liquor separator. The organic vapors identified in the separator vent stream are given in Table 3.5-2 (Ref. 43). Trace elements found in the separator vent stream are shown in Table 3.5-3 while the results from water quality analyses of the condensables in this stream are given in Table 3.5-4 (Ref. 13).

Table 3.5-5 shows the gaseous components identified in the vent gases. Data obtained from the Chapman facility indicated that about 70 percent of the NH_3 and about 20 percent of the HCN in the raw product gas were in the separator vent gases. About 7 percent of the H_2S in the raw product gas was in this vent stream (Ref. 13).

Bioassay tests were performed on the XAD-2 extract of the separator vent gases from the Chapman facility. The results of these tests are given in Table 3.5-6. A slightly positive Ames test was obtained along with a moderately toxic response from the WI-38 test (Ref. 13).

If the separator were fitted with a steam ejector (as at the Chapman facility), the separator vent gas would have characteristics similar to those reported in Tables 3.5-2 through 3.5-5. A vent gas from a facility gasifying anthracite coal would contain fewer organics. Vent gas from a facility gasifying high-sulfur coal would contain more sulfur species.

Stretford Oxidizer Vent -

An air-blown oxidizer is used in the Stretford process to convert the reduced ADA back to its oxidized form. A large excess of air is used in the oxidizer, and subsequently vented to the atmosphere. The vent stream will contain primarily oxygen and nitrogen, along with water picked up from the solution. It can potentially contain small amounts of ammonia and possibly COS or HCN, if these components are presented in the inlet gas stream to the absorber. Hydrocarbons may be released when gases with high concentrations of tars are treated (Ref. 25). No test data are available on the composition of this gaseous emission (Ref. 25).

TABLE 3.5-2. ORGANIC COMPOUNDS IDENTIFIED IN THE SEPARATOR VENT STREAM FROM A CHAPMAN GASIFICATION FACILITY USING LOW-SULFUR BITUMINOUS COAL

MEG Category No.	Organic Category / Organic Compound	Estimated Stream Concentration ($\mu g/m^3$@298°K)
1	**Aliphatic Hydrocarbons**	
	>C_6 Alkanes	5.2×10^4
	Phenylacetylene	1.4×10^3
3	**Ethers**	
	Methylanisole	2.0×10^3
5	**Alcohols**	
	>C_6 Aliphatic alcohols	8.2×10^3
7	**Aldehydes, Ketones**	
	Acetophenone	1.8×10^3
8	**Carboxylic Acids and Their Derivitives**	
	Phthalic acid	1.6×10^3
	Adipate esters	4.9×10^3
	Phthalate esters	3.1×10^3
9	**Nitriles**	
	Benzonitrile	1.1×10^3
	Cyanotoluene	9.2×10^3
10	**Amines**	
	Aniline	9.2×10^3
	Aminotoluene	2.7×10^3
	C_3-Alkylaniline	3.7×10^3
15	**Benzene, Substituted Benzene Hydrocarbons**	
	C_2-Alkylbenzene	7.0×10^3
	Styrene	6.2×10^3
	C_3-Alkylbenzene	2.3×10^3
	Indene	2.0×10^3
	Methylindene	1.8×10^3
	C_2-Alkylindene	2.1×10^3
	C_3-Alkylindene	3.2×10^3
	Indene	9.2×10^3
	Methylindene	8.4×10^3
	C_2-Alkylindene	3.8×10^3
	C_3-Alkylindene	8.0×10^3
18	**Phenols**	
	Phenol	8.0×10^3
	Cresol	2.7×10^3
	C_2-Alkylphenol	2.3×10^3
	C_3-Alkylphenol	1.8×10^3
	C_4-Alkylphenol	2.1×10^3
21	**Fused Aromatic Hydrocarbons and Their Derivitives**	
	Naphthalene	8.8×10^3
	Methylnaphthalene	1.9×10^3
	C_2-Alkylnaphthalene	1.5×10^3
	Acenaphthene	4.1×10^3
	Methylacenaphthene	1.6×10^3
	C_2-Alkylacenaphthene	2.5×10^3
	C_3-Alkylacenaphthene	3.5×10^3
	Acenaphthylene	1.3×10^3
	Methylacenaphthylene	5.5×10^3
	C_2-Alkylacenaphthylene	2.5×10^3
	Anthracene	4.2×10^3
	Methylanthracene	1.0×10^3
22	**Fused Non-Alternant Polycyclic Hydrocarbons**	
	Fluorene	5.5×10^3
	Methylfluorene	2.5×10^3
23	**Heterocyclic Nitrogen Compounds**	
	Pyridine	9.2×10^3
	Methylpyridine	4.0×10^3
	C_2-Alkylpyridine	1.6×10^3
	C_3-Alkylpyridine	1.0×10^3
	Quinoline	9.2×10^3
	Methylquinoline	3.5×10^3
	C_2-Alkylquinoline	1.5×10^3
	C_3-Alkylquinoline	4.6×10^3

Source: Ref. 43
MEG: Multimedia Environmental Goals

TABLE 3.5-3. TRACE ELEMENTS (BY SSMS) FOUND IN THE SEPARATOR VENT STREAM FROM A CHAPMAN GASIFICATION FACILITY USING LOW-SULFUR BITUMINOUS COAL

MEG Category Number	Trace Element	Concentration ($\mu g/Nm^3$)	MEG Cagetory No.	Trace Element	Concentration ($\mu g/Nm^3$)
27	Lithium	40	60	Scandium	<2
28	Sodium	4000	62	Titanium	40
29	Potassium	2000	63	Zirconium	500
30	Rubidium	0.5	65	Vanadium	100
33	Magnesium	200	68	Chromium	300
34	Calcium	2000	69	Molybdenum	400
35	Strontium	20	70	Tungsten	<8
36	Barium	40	71	Manganese	50
37	Boron	3	72	Iron	2000
38	Aluminum	40	74	Cobalt	2
39	Gallium	3	76	Nickel	70
43	Silicon	300	78	Copper	2000
45	Tin	8	79	Silver	1000
46	Lead	30	81	Zinc	100
48	Phosphorus	3000	82	Cadmium	0.9
54	Selenium	10	83	Mercury	<0.3
56	Fluorine (as F^-)	<50	84	Lanthanum	3
57	Chlorine	200	84	Cerium	4
58	Bromine	9	85	Uranium	40
59	Iodine	1			

MEG: Multimedia Environmental Goals
Source: Ref. 13

TABLE 3.5-4. WATER QUALITY ANALYSES ON THE SEPARATOR VENT CONDENSABLE FROM A CHAPMAN GASIFICATION FACILITY USING LOW-SULFUR BITUMINOUS COAL

Water Quality Parameter	Value
pH	9.56
TDS (μg/ml)	218
TSS (μg/ml)	14.5
COD (μg/ml)	8200
BOD (μg/ml)	3900
Alkalinity (as $CaCO_3$) (μg/ml)	2880
Fluoride (μg/Nm^3 gas)	200

Source: Ref. 13

TABLE 3.5-5. GASEOUS COMPONENTS FOUND IN THE SEPARATOR UNIT STREAM FROM A CHAPMAN GASIFICATION FACILITY USING LOW-SULFUR BITUMINOUS COAL

Component	Concentration ($\mu g/Nm^3$)
Methane	2×10^6
C_2 Hydrocarbons	1×10^6
C_3 Hydrocarbons	4×10^5
C_4 Hydrocarbons	3×10^5
C_5 Hydrocarbons	1×10^5
C_6 Hydrocarbons	4×10^5
CO_2	3×10^7
CO	4×10^7
NO	4×10^4
NO_2	3×10^5
NH_3	7×10^5
CN^-	3×10^3
SO_2	9×10^3
COS	4×10^4
H_2S	2×10^5
CS_2	2×10^4

Source: Ref. 13

TABLE 3.5-6. BIOASSAY RESULTS OF THE XAD-2 RESIN EXTRACT OF THE SEPARATOR VENT GASES FROM THE CHAPMAN FACILITY USING LOW-SULFUR BITUMINOUS COAL

	Results
Health Tests	
• Ames	Slightly Positive
• WI-38, EC-50 (Nm^3/ml culture)[a]	7×10^6
• RAM, EC-50 (Nm^3/ml culture)[a]	$> 1 \times 10^5$

Source: Ref. 13

[a]EC-50: Concentration at which growth was 50 percent of control. EC-50's were calculated by:

$$EC_{50} = \begin{bmatrix} EC_{50} \text{ reported} \\ \text{in } \mu\ell \text{ of extract} \\ \text{per m}\ell \text{ culture} \end{bmatrix} \times \begin{bmatrix} \text{mg of organics} \\ \text{extracted per m}\ell \\ \text{of extract} \end{bmatrix} \div \begin{bmatrix} \text{mg of organics} \\ \text{per Nm}^3 \text{ of} \\ \text{vent gas} \end{bmatrix} = \text{Nm}^3 \text{ vent gas/m}\ell \text{ culture}$$

Stretford Evaporator -

In order to maintain a water balance in the Stretford unit, evaporation of excess water may be required (Ref. 16). Excess water may result from washing the sulfur cake or from condensation of water in the inlet gas stream. Since the quantities of water to be evaporated are not large, evaporator vent streams will be small. Along with water vapor, it may contain a small concentration of salts in the Stretford solution. In addition, it could contain low concentrations of other volatile components evolved from the liquor, but these should be small since most of these should be released in the oxidizer.

MEA Acid Gas -

The largest potential emission from the MEA acid gas removal process is the acid gas stream. The quantities and compositions of this stream are shown in Table 3.5-7 for purification of low-Btu gas produced from high-sulfur bituminous coal. Acid gases corresponding to two levels of purification have been examined: (1) removal of sulfur species to a residual of about 200 ppmv and (2) removal of sulfur species to a residual of 10 ppmv. The acid gas stream is mostly composed of the CO_2 and H_2S. Minor constituents may include other species found in the low-Btu gas.

In the removal of sulfur species to 10 ppmv, the basic MEA purification scheme can be modified to reduce the amount of non-acid gases released in the acid gas stream. This modification includes an intermediate-pressure flash of the rich H_2S-MEA solution. The desorbed components include both non-acid and acid gases. The stream would require further treatment before release.

3.5.4 Combustion Gas

Another significant air emission from the Wellman-Galusha gasification facilities results from combustion of the product gas. This combustion gas consists mainly of N_2, O_2, CO_2, and H_2O. It will also contain small amounts of other compounds, depending on their concentrations in the product gas. Sulfur species in the gas will be converted to SO_2 (and smaller amounts of SO_3). Part of the nitrogen compounds (NH_3, HCN) will be converted to NO_x. Few data are available on the actual composition of the combustion gas. The concentration of NO_x in the combustion gas depends on several factors, including the NH_3 and HCN content of the low-Btu gas, the amount of excess air used in the burner, and the combustion temperature. The dust in the raw product gas is primarily carbon. Since this will be burned along with the gas, particulate emissions from combustion of the low-Btu product gas should be low.

TABLE 3.5-7. ACID GAS FROM MEA UNIT PURIFYING GAS FROM HIGH-SULFUR BITUMINOUS COAL

Composition, Vol. %	Case A[a]	Case B[b]
CO_2	70.0	60.5
H_2S	18.6	15.9
CO	1.85	6.12
N_2	3.11	9.84
CH_4	0.30	0.92
C_2H_6	0.004	0.02
C_2H_4	0.02	0.04
NH_3	0.60	0.51
HCN	-	-
COS	-	-
H_2O	0.33	1.05
MEA	0.005	.005
H_2O	5.12	5.12
Flow rate, Nm^3/s (scfm)[c]	0.12 (270)	0.14 (324)

[a]MEA removes sulfur species to level of 200 ppmv in product gas

[b]MEA removes sulfur species to level of ∿10 ppmv in product gas

[c]Based on production of 17.6 MW (60 x 10^6 Btu/hr) of raw low-Btu gas

3.6 WASTE STREAMS TO WATER

Liquid effluents from the gasification and gas purification operations include quench liquor blowdown and blowdown of sorbents from the acid gas removal processes. Ash sluice water and leachate or runoff from the coal piles are the other possible wastewater streams.

3.6.1 Coal Preparation and Handling

There are no liquid effluents from coal handling and conveying. Runoff/leachate from rainfall and/or water sprays on coal storage piles are potential liquid effluents from coal storage.

3.6.2 Coal Gasification

Ash sluice water may be used to remove ash from the gasifier. The flow rate of this water is quite variable. At the Glen-Gery Wellman-Galusha facility using anthracite, the amount of sluice water used was approximately 4500 to 6800 l/day (1200 to 1800 gallons per day). This water will contain suspended solids as well as various dissolved inorganics. Leachate from the ash will also contain suspended solids and dissolved inorganics. Trace elements found in the ash sluice water and ash leachate (using leaching tests defined in Ref. 4) are shown in Table 3.6-1. Water quality parameters for the ash sluice water and ash leachate are given in Table 3.6-2 (Ref. 10).

The results of bioassay tests performed on the ash sluice water and ash leachate are given in Table 3.6-3. These results indicate a low potential for harmful health effects.

3.6.3 Gas Purification

Process Condensate -

A blowdown of quench liquor will be required if water is condensed from the product gas as it is cooled. In certain cases, a blowdown may also be required to remove particulates or other impurities from the quench system. The major factors affecting the size of the blowdown stream are the water content of the raw gas from the gasifier and the temperature to which the gas is cooled. These two factors set the minimum size of the blowdown stream.

For gasification of the high-sulfur bituminous and lignite coals considered in this study, blowdown rates of 0.13 kg/s (1000 lb/hr) and 0.43 kg/s (3400 lb/hr), respectively, were calculated due to water condensation. When an MEA acid gas removal

TABLE 3.6-1. TRACE ELEMENT CONCENTRATION (BY SSMS) OF ASH SLUICE WATER AND ASH LEACHATE

ELEMENT	ASH SLUICE WATER (μg/ℓ)	(μg/ℓ) LEACHATE	ELEMENT	ASH SLUICE WATER (μg/ℓ)	(μg/ℓ) LEACHATE
Uranium	2	7	Molybdenum	400	20
Thorium	40		Niobium	30	1
Bismuth			Zirconium	200	30
Lead		8	Yttrium	40	1
Thallium			Strontium	3000	60
Gold			Rubidium	200	2
Rhenium			Bromine		2
Tungsten	10	<1	Selenium	20	1
Tantalum			Arsenic	30	4
Hafnium			Germanium	1	1
Lutetium	1		Gallium	40	1
Ytterbium	2		Zinc		4000
Thulium	1		Copper	50	8
Erbium	1		Nickel	10	INT
Holmium	2		Cobalt	40	1
Dysprosium	3		Iron	5000	10
Terbium	1		Manganese		
Gadolinium	2		Chromium	500	2
Europium	1		Vanadium	550	3
Samarium	10		Titanium	MC	<10
Neodymium	10		Scandium	7	<1
Praseodymium	10		Calcium	MC	3000
Cerium	100	<1	Potassium		>6000
Lanthanum			Chlorine	500	5000
Barium			Sulfur	2000	300
Cesium			Phosphorus	200	100
Iodine		1	Silicon	MC	200
Tellurium			Aluminum	>500	6
Antimony	0.4		Magnesium		300
Tin	4	1	Sodium		>1000
Indium	STD	STD	Fluorine		60
Cadmium	2	1	Boron		20
Silver		5	Beryllium	<1	<1
			Lithium	40	30

ND: Not Detected MC: Major component concentration >1 x 10^6 μg/ℓ
*Ash leaching procedures used are those defined in Ref. 4. STD: Standard
Source: Ref. 10.

TABLE 3.6-2. WATER QUALITY PARAMETERS FOR THE ASH SLUICE WATER AND ASH LEACHATE FROM THE GLEN-GERY WELLMAN-GALUSHA GASIFICATION FACILITY*

Parameter	Concentration (μg/ℓ) Ash Sluice Water	Ash Leachate
CN^-	60	ND
SCN^-	<2,000	ND
$C\ell^-$	17,000	5700
F^-	0.0600	ND
$SO_3^= + SO_4^=$ as $SO_4^=$	95,000	2200
Sulfide	<3,000	ND
NO_3^-	17,000	50
NO_2^-	ND	30
PO_4^{-3}	1,700	500
NH_4^+	3,000	ND
Ca^{+2}	ND	4000
Mg^{+2}	ND	890
BOD	42.5 (ppm)	ND
TOC	140,000	ND
COD	20,000	ND
TDS	400,000	ND
TSS	550,000	ND

*Anthracite coal feedstock

Source: Reference 10

ND - Not determined

TABLE 3.6-3. RESULTS OF BIOASSAY TESTS ON THE ASH SLUICE WATER AND ASH LEACHATE FROM THE GLEN-GERY WELLMAN-GALUSHA GASIFICATION FACILITY

Bioassay Test	Ash Sluice Water	Ash Leachate
Ames	Negative	Negative
WI-38, EC-50 (μℓ/mℓ culture)	>600	>600
RAT		
Toxic response	Low	Low
LD-50 (g sample/kg rat)	>10	>10

Source: Reference 10
EC-50: Concentration at which growth was 50 percent of control
LD-50: Dose per kg of test animal at which 50 percent died

process is used, gas compression yields additional process condensate. The total process condensate for a system using low pressure MEA absorption amounts to 0.23 kg/s (1800 lb/hr); for high-pressure MEA absorption, the condensate amounts to 0.32 kg/s (2500 lb/hr). For low-sulfur and anthracite coals, no water is condensed from the gas. Particulates will be periodically removed from the liquor separator, but there will be no continuous liquor blowdown.

The quench liquor blowdown would have essentially the same composition as the circulating quench liquor, which was discussed in Section 3.3.3.

Bioassay test results for the quench liquor from the Chapman facility using low-sulfur bituminous coal are given in Table 3.6-4. These results indicate a low potential for harmful health effects. However, the liquor was highly toxic to aquatic species.

Spent Sorbents -

As discussed in Section 3.2.3, a blowdown of solution from the Stretford process is necessary to remove non-regenerable compounds formed by absorption of HCN (forming thiocyanates) and by oxidation of HS^- to thiosulfate. The major factors affecting the size of the blowdown stream are the HCN concentration of the feed gas and the thiosulfate formation rate. Other important factors (which were also discussed in Section 3.2.3) are the degree of washing of the sulfur cake and the total salts concentration of the solution.

Increases in HCN sorption and in thiosulfate formation increase the quantity of salts that must be purged. The salts concentration affects the size of the blowdown required to remove a given quantity of salts. The lower the allowable salts concentration, the larger the blowdown will have to be. The sulfur cake produced as a by-product will contain about 50 percent water. It would normally be washed to recover most of the Stretford chemicals, but some will remain in the cake. Some of the thiocyanate and thiosulfate salts will also remain in the cake, thus reducing the quantities of these materials that must be removed in the blowdown. The less the cake is washed, the more salts (along with desirable Stretford chemicals) are lost with the sulfur cake, and the smaller the blowdown required. Estimated quantities and compositions of the blowdown streams from the four coal feedstocks for two different levels of cake washing are given in Table 3.6-5. These numbers were calculated based on the design assumptions discussed in the Appendix.

TABLE 3.6-4. BIOASSAY TEST RESULTS FOR THE QUENCH LIQUOR FROM A CHAPMAN GASIFICATION FACILITY USING LOW-SULFUR BITUMINOUS COAL

Test	Value
Ames	Negative
RAM, EC-50 (μg liquor/mℓ culture)	>600
RAT	
• Toxicity response	Low
• LD-50 (g liquor/kg rat)	> 10
Fresh Water Tests	
• Algal, EC-50 (15 days) (wt%)	1.0 to 0.1%
• Daphnia, LC-50 (96h) (wt%)	0.11%
• Fathead Minnow, LC-50 (96h) (wt%)	0.02%
Salt Water Tests	
• Algal, EC-50 (12 days) (wt%)	0.53 / 0.41%[a]
• Shrimp, LC-50 (96h) (wt%)	0.25
• Sheepshead Minnow, LC-50 (96h) (wt%)	0.16
Soil Microcosm (Toxicity ranking)	Fifth

Source: Ref. 13
EC-50: Concentration at which growth was 50 percent of a control
LC-50: Concentration at which 50 percent of the experimental animals died
LD-50: Dose per kg of test animal at which 50 percent died
[a]Filtered/Unfiltered Sample
Soil microcosm toxicity rankings were:

High	1 - Cyclone dust
	2 - Tar
↓	3 - Coal
	4 - Ash
Low	5 - Quench Liquor

TABLE 3.6-5. QUANTITY AND COMPOSITION OF STRETFORD BLOWDOWN.

Component	Estimated Concentrations (μg/ℓ)			
	Low-Sulfur Bituminous	High-Sulfur Bituminous	Anthracite	Lignite
$Na_2S_2O_3$	2.1×10^7	1.03×10^8	3.49×10^7	4.24×10^7
Na CNS	1.97×10^8	1.10×10^8	1.83×10^8	1.76×10^8
Na VO_3	4.42×10^6	6.63×10^6	4.42×10^6	4.42×10^6
ADA	6.67×10^6	1.0×10^7	6.67×10^6	6.67×10^6
$NaHCO_3$	2.52×10^7	2.52×10^7	2.52×10^7	2.52×10^7
Na_2CO_3	5.3×10^6	5.2×10^6	5.3×10^6	5.3×10^6
Iron	5.0×10^4	5.0×10^4	5.0×10^4	5.0×10^4
EDTA	2.7×10^6	2.7×10^6	2.7×10^6	2.7×10^6
Flow Rate,* kg/sec	0.00397 - 0.000527	None - 0.00673	0.00154 - 0.00266	0.00256 - 0.00532
(lb/hr)	(31.5 - 41.8)	(None - 53.4)	(12.2 - 21.1)	(20.3 - 42.2)

*Low value refers to recovery of 66 percent of the salts from the sulfur cake by washing, while the higher value refers to recovery of 96 percent of the salts from the sulfur cake by washing.

Basis: See Appendix

Actual blowdown rates may exceed these estimated values. For example, upsets in process chemistry can result in increased thiosulfate formation, and, thus, increased blowdown requirements. Typical blowdown rates of 6 to 60 l (1.5 to 15 gallons) per 100 moles feed gas have been reported (Ref. 46). These figures are greater than the estimates given in this report.

3.7 WASTE STREAMS TO LAND

Waste streams sent to final disposal from the gasification and gas purification operations are gasifier ash, particulate matter collected from the product gas, sulfur produced by the sulfur recovery processes, and sludge from the MEA unit.

3.7.1 Coal Gasification

Gasifier ash is the only solid waste stream from the coal gasification operation. It consists primarily of the ash that was in the coal, but it also contains unreacted carbon, small amounts of sulfur, hydrogen, nitrogen, and oxygen, and various trace elements. Ash composition can be quite variable, depending on the coal feedstock and operating characteristics of the gasifier. Estimated quantities and compositions of the ash remaining after gasification of the four coal feedstocks are given in Table 3.7-1. The quantities of ash resulting from gasification of the four candidate feedstocks are also summarized in this table.

Trace element levels in the ash (measured by spark source mass spectroscopy) at the Glen-Gery Wellman-Galusha facility (anthracite coal) and a Chapman facility (low-sulfur bituminous coal) are given in Table 3.7-2. The concentrations for most of the elements are similar (within about an order of magnitude or less). However, a few elements (Sn, Sb, Rb, and Mn) show a much larger variation. The major trace elements in the ash were Na, K, Ba, Ca, Sn, Fe, Ti, P, Si, Al, Mg, and S. As discussed in Section 3.4.1, several elements (including Be, B, Co, Cr, Cu, Ge, Mn, Mo, Ni, U, and V) appear to be concentrated in the ash from the Wellman-Galusha gasifier.

Radioactive disintegration data have been obtained for ash produced from gasification of anthracite coal. These data are presented in Table 3.7-3.

The ash will also contain a certain amount of organics. Extractable organics found in ashes produced from the gasification of anthracite and low-sulfur bituminous coals are given in Table 3.7-4. The organic compounds identified in the extractable organics are also included in this table.

TABLE 3.7-1 ANALYSES OF ASH

	Low Sulfur[a] Bituminous	High Sulfur[b] Bituminous	Anthracite[c]	Lignite[d]
Ultimate Analysis, wt. % (dry basis)				
Carbon	11.3	5.7	33.06	9.8
Hydrogen	0.1	0.3	0.07	
Nitrogen	0.1	-	0.18	
Chlorine	-	-	0.01	
Sulfur	0.1	1.2	0.02	1.4
Ash	86.4	92.8	65.97	89.1
Oxygen	2.0	0.1	0.31	
Moisture, wt. %	NG	NG	0.25	
MJ/kg (Btu/lb)	3.8 (1650)	2.0 (870)	7.4 (3193)	
Quantity, kg/s (lb/hr)[e]	0.026 (210)	0.074 (585)	0.13 (1030)	0.134 (1060)

[a]From Wellman-Galusha gasifier (Reference 11)

[b]From Riley-Morgan gasifier (Reference 15)

[c]From Wellman-Galusha gasifier (Reference 10)

[d]Rough composition, estimated from material balance.

[e]For production of 17.6 MW (60×10^6 Btu/hr) of low-Btu gas.

NG = value not given

TABLE 3.7-2. TRACE ELEMENTS IN GASIFIER ASH FROM GASIFICATION OF ANTHRACITE AND LOW-SULFUR BITUMINOUS COALS

ELEMENT	ESTIMATED CONCENTRATION (μg/g)			ELEMENT	ESTIMATED CONCENTRATION (μg/g)		
	ANTHRACITE[a]	LOW-SULFUR BITUMINOUS[b]	LOW-SULFUR BITUMINOUS[b]		ANTHRACITE[a]	LOW-SULFUR BITUMINOUS[b]	LOW-SULFUR BITUMINOUS[c]
Uranium	32	400	56	Molybdenum	15	-	22
Thorium	29	-	86	Niobium	35	20	82
Bismuth	18	-	0.4	Zirconium	350	90	430
Lead	12	20	7	Yttrium	56	<20	260
Thallium	0.3	-	0.5	Strontium	490	2000	MC
Gold				Rubidium	150	20000	120
Rhenium	0.1	-	0.3	Bromine	6	-	12
Tungsten	2	-	10	Selenium	2	30	20
Tantalum	-	-	2.	Arsenic	3	<0.4	4
Hafnium	2.	-	10	Germanium	1	-	4
Lutetium	0.3	-	2.	Gallium	22	50	66
Ytterbium	2	-	12	Zinc	18	-	26
Thulium	0.2	-	1.	Copper	200	1000	540
Erbium	1	-	8.	Nickel	62	-	120
Holmium	2	-	11	Cobalt	23	50	61
Dysprosium	3	-	17	Iron	MC	10000	MC
Terbium	0.6	-	4.	Manganese	69	-	680
Gadolinium	2	-	10	Chromium	190	30	510
Europium	1	-	5	Vanadium	200	30	MC
Samarium	11	-	28	Titanium	MC	3000	MC
Neodymium	34	-	56	Scandium	9	50	29
Praseodymium	16	-	42	Calcium	MC	50000	MC
Cerium	180	90	260	Potassium	MC	10000	MC
Lanthanum	160	100	280	Chlorine	8	-	230
Barium	MC	2000	MC	Sulfur	MC	1000	250
Cesium	10	-	10	Phosphorus	MC	800	MC
Iodine	0.3	-	0.3	Silicon	MC	7000	MC
Tellurium	0.2	-	-	Aluminum	MC	3000	MC
Antimony	0.5	200	1	Magnesium	MC	6000	MC
Tin	2.0	300	4	Sodium	MC	MC	MC
Indium	STD	-	STD	Fluorine	59	<200	56
Cadmium	0.4	<9	3	Boron	13	20	130
Silver	1.0	-	20.3	Beryllium	1	10	22
				Lithium	240	70	190

MC = Major components concentration > 1000 μg/g
STD = Standard

[a]Source: Ref. 10
[b]Source: Ref. 13
[c]Source: Ref. 36

TABLE 3.7-3. RADIOACTIVE DISINTEGRATION DATA FOR ASH PRODUCED FROM THE GLEN-GERY WELLMAN-GALUSHA GASIFICATION FACILITY*

Parameter	Value (pCi/g)
Gross α emissions	4.3 ± 1.0
Gross β emissions	0.0 ± 3.4

*Anthracite coal feedstock

Source: Ref. 10

TABLE 3.7-4. CONCENTRATIONS OF EXTRACTABLE ORGANICS AND COMPOUNDS IDENTIFIED IN THE ASH PRODUCED FROM THE GASIFICATION OF ANTHRACITE AND LOW-SULFUR BITUMINOUS COALS

	Anthracite[a]	Low-Sulfur Bituminous[b]
Total Concentration of Extractable Organics, μg/g	39	60
Compounds Identified, μg/g		
• Bis-(2-Ethylhexyl) Phthalate	0.58	-
• Di-N-Butyl Phthalate	0.08	-
• Diethyl Phthalate	0.05	-
• > C_6 Alkanes	-	2.0
• > C_{13} Alkanes	-	2.0
• Phthalabs Esters	-	2.3
• C_2-Alkylbenzene	-	1.0
• Naphthalene	-	3.0
• Methylnaphthalene	-	2.0

- : Not detected

[a]Source: Ref. 10

[b]Source: Ref. 43

Leaching tests have been conducted on gasifier ash obtained from gasification of anthracite. Trace elements found in the leachate are given in Table 3.7-5.

Bioassay test results for ash from the gasification of anthracite and low-sulfur bituminous coals are shown in Table 3.7-6. These results indicate that the ash has a low potential for harmful health effects. The soil microcosm tests were not comparable between the two coals. The ash derived from anthracite was more toxic than the cyclone dust while the dust was more toxic than the ash for the low-sulfur bituminous coal feedstock.

3.7.2 Gas Purification

Collected Particulate Matter -

About 60 to 80 percent of the dust that is entrained with the raw product gas from the gasifier is removed in a cyclone. This cyclone dust contains mostly carbon (about 70 to 90 percent) along with up to about 25 percent ash and small amounts of H, N, O, S, and various trace elements. Ultimate analyses of cyclone dust from low-sulfur bituminous, anthracite, and lignite coals are given in Table 3.7-7. Most of the particulates not removed in the cyclone will be removed in the quench system and ESP. These particulates will either be discharged with a blowdown stream, or removed periodically from the separator.

Trace element concentrations (measured by spark source mass spectroscopy) in the cyclone dust from the gasification of anthracite and low-sulfur bituminous coals are given in Table 3.7-8. Trace element concentrations of the cyclone dust and the particulates not removed by the cyclone (anthracite coal case) are given in Table 3.7-9. These data indicate that many of the elements appear to be concentrated in the small (<3 μm) particulates. A few are more concentrated in the larger cyclone dust. Radioactive disintegration measurements have been obtained on collected particulates at the Glen-Gery Wellman-Galusha facility (using anthracite coal). These data are shown in Table 3.7-10.

Data on the extractable organics in particulates collected by hot cyclones from the gasification of anthracite and low-sulfur bituminous coals are summarized in Table 3.7-11.

Leaching tests have been performed on the cyclone dust from gasification of anthracite coal. The trace elements found in the leachate are given in Table 3.7-12.

TABLE 3.7-5. TRACE ELEMENT CONCENTRATIONS IN THE ASH LEACHATE FROM THE GASIFICATION OF ANTHRACITE COAL

Trace Element	Concentration (μg/ml)	Trace Element	Concentration (μg/ml)
Al	0.006	Sc	<0.001
As	0.004	I	<0.001
Ba	0.1	Si	0.2
Be	<0.001	Fe	0.01
B	0.02	Pb	0.008
Br	0.002	Li	0.03
Cd	0.001	Na	>1
Ca	0.099	Mg	0.036
Ce	<0.001	Mn	0.004
Cl	0.16	Mo	0.02
Cr	0.002	Sr	0.06
Co	0.001	Ni	Int
Cu	0.008	Nb	0.001
F	≈0.06	S	0.3
Ga	0.001	Sn	0.001
Ge	<0.001	V	0.003
Au	<0.001	Y	<0.001
Zn	4	Zr	0.03

Int - interference
All elements not reported: <0.001 μg/ml
Leaching procedures as defined in Ref. 4

Source: Ref. 10

TABLE 3.7-6. BIOASSAY RESULTS OF THE ASH FROM THE GASIFICATION OF ANTHRACITE AND LOW-SULFUR BITUMINOUS COAL

Test	Anthracite[a]	Low-Sulfur Bituminous[b]
Ames	Negative	Negative
RAM, EC-50 (μg ash/mil culture)	> 1000	> 300
RAT		
• Toxic response	Low	Low
• LD-50 (g ash/kg rat)	> 10	> 10
Soil Microcosm (Toxicity Ranking	First	Fourth

[a]Source: Ref. 10

[b]Source: Ref. 13

EC-50: Concentration of which growth was 50 percent of a control

Soil microcosm test rankings were:

Toxicity	Anthracite	Low-Sulfur Bituminous
High	1-Ash	1-Cyclone Dust
	2-Cyclone Dust	2-Tar
↓		3-Coal
		4-Ash
Low		5-Quench Liquor

TABLE 3.7-7. ULTIMATE ANALYSIS OF CYCLONE DUST

Ultimate Analysis Weight % (Dry Basis)	Low-Sulfur[a] Bituminous	Low-Sulfur[b] Bituminous	Anthracite[c]	Lignite[d]
Carbon	89	82.1	70.64	67.4
Hydrogen	1.3	0.83	1.37	1.7
Nitrogen	1.4	1.5	0.62	5.8[e]
Chlorine			0.01	
Sulfur	0.5	0.62	1.53	2.0
Oxygen	1.6	3.8	0.95	
Ash	6.2	11.1	24.88	22.3

[a]From Wellman-Galusha gasifier (Ref. 11)

[b]From Chapman gasifier (Ref. 13)

[c]From Wellman-Galusha gasifier (Ref. 10)

[d]From Riley-Morgan gasifier (Ref. 9)

[e]Nitrogen and oxygen

TABLE 3.7-8. TRACE ELEMENTS IN CYCLONE DUST

ELEMENT	CONCENTRATIONS (μg/g) ANTHRACITE[a]	LOW-SULFUR BITUMINOUS[b]	LOW-SULFUR BITUMINOUS[c]	ELEMENT	CONCENTRATIONS (μg/g) ANTHRACITE[a]	LOW-SULFUR BITUMINOUS[b]	LOW-SULFUR BITUMINOUS[c]
Uranium	45	-	-	Molybdenum	57	-	14
Thorium	97	-	-	Niobium	52	-	12
Bismuth	3	-	2	Zirconium	110	30	80
Lead	230	60	60	Yttrium	42	10	70
Thallium	22	-	-	Strontium	270	80	340
Gold				Rubidium	15	3	33
Rhenium	0.1	-	-	Bromine	11	-	20
Tungsten	5	-	-	Selenium	16	-	24
Tantalum				Arsenic	85	0.4	27
Hafnium	3	-	-	Germanium	11	-	5
Lutetium	0.3	-	-	Gallium	220	10	130
Ytterbium	2	-	-	Zinc	MC	-	85
Thulium	0.2	-	-	Copper	68	900	130
Erbium	0.9	-	-	Nickel	47	100	30
Holmium	1.	-	-	Cobalt	10	3	16
Dysprosium	2.	-	-	Iron	MC	1000	MC
Terbium	0.6	-	9	Manganese	570	200	120
Gadolinium	1.	-	2	Chromium	58	30	90
Europium	1.	-	1	Vanadium	150	20	100
Samarium	11.	-	9	Titanium	MC	200	MC
Neodymium	110	-	21	Scandium	7	2	12
Praseodymium	35	-	5	Calcium	MC	2000	MC
Cerium	99	20	45	Potassium	MC	1000	MC
Lanthanum	130	80	45	Chlorine	71	-	720
Barium	MC	500	460	Sulfur	MC	300	MC
Cesium	15	-	1	Phosphorus	MC	8000	MC
Iodine	24	-	4	Silicon	MC	2000	MC
Tellurium	0.9	-	-	Aluminum	MC	100	MC
Antimony	53	100	8	Magnesium	MC	500	MC
Tin	89	-	2	Sodium	MC	-	MC
Indium	STD	-	STD	Fluorine	∿240	100	∿720
Cadmium	2	-	2	Boron	5	7	720
Silver	5	-	3	Beryllium	0.8	7	6
				Lithium	160	2	27

MC = Major component; concentration >1000 μg/g
STD = Standard

[a]Ref. 10
[b]Ref. 13
[c]Ref. 36

TABLE 3.7-9. TRACE ELEMENT CONCENTRATIONS OF PARTICULATES COLLECTED BY THE CYCLONE AND THOSE NOT COLLECTED FOR THE GASIFICATION OF ANTHRACITE COAL

ELEMENT	CYCLONE DUST (μg/g)	PARTICULATES REMAINING IN CYCLONE EXIT GAS <3μm(μg/g)	<3μm(μg/g)	ELEMENT	CYCLONE DUST (μg/g)	PARTICULATES REMAINING IN CYCLONE EXIT GAS <3μm(μg/g)	<3μm(μg/g)
Uranium	45	6.5	≤86	Molybdenum	57	93.5	600
Thorium	97	9.4	≤77	Niobium	52	28.1	51
Bismuth	3	37.4	≤686	Zirconium	110	37.4	600
Lead	230	MC	MC	Yttrium	42	18.7	86
Thallium	22	93.5	<17	Strontium	270	187	600
Gold	≤0.1	≤.187		Rubidium	15	28.1	69
Rhenium	≤0.1	≤.094		Bromine	11	4.7	86
Tungsten	5	≤9.4	86	Selenium	16	74.8	514
Tantalum	-	<0.94	-	Arsenic	85	MC	1715
Hafnium	3	0.94	-	Germanium	11	.94	17
Lutetium	0.3	0.28	-	Gallium	220	MC	4286
Ytterbium	2	0.94	-	Zinc	MC	MC	MC
Thulium	0.2	<.094	-	Copper	68	187	514
Erbium	0.9	<.94	-	Nickel	47	INT	171
Holmium	1	0.94	-	Cobalt	10	28.1	60
Dysprosium	2	1.9	-	Iron	MC	MC	MC
Terbium	0.6	0.75	3.4	Manganese	570	281	429
Gadolinium	1	1.9	8.6	Chromium	58	93.5	600
Europium	1	1.9	6.0	Vanadium	150	28.1	257
Samarium	11	9.4	34	Titanium	MC	MC	3429
Neodymium	110	28	43	Scandium	7	3.7	43
Praseodymium	35	5.6	43	Calcium	MC	MC	MC
Cerium	99	37.4	257	Potassium	MC	281	MC
Lanthanum	130	46.8	171	Chlorine	71	MC	MC
Barium	MC	561	MC	Sulfur	MC	187	MC
Cesium	15	3.7	8.6	Phosphorus	MC	>842	3429
Iodine	24	0.94	4.3	Silicon	MC	18.7	1715
Tellurium	0.9	18.7	26	Aluminum	MC	>28.1	>4286
Antimony	53	187	1715	Magnesium	MC	MC	MC
Tin	39	187	2572	Sodium	MC	>93.5	MC
Indium	STD	STD	STD	Fluorine	∿240	∿187	∿857
Cadmium	2	18.7	257	Boron	5	0.56	257
Silver	5	37.4	343	Beryllium	0.8	0.37	1.7
				Lithium	160	65.5	51

Trace Elements by SSMS
MC = Major Component Concentration >1000 μg/g for cyclone dust (Ref. 10) MC = >85,700 μg/g for particulates <3 μm (Ref. 47)
MC = >9,350 μg/g for particulates >3 μm (Ref. 47)
INT = Interference
STD = Standard

TABLE 3.7-10. RADIOACTIVE DISINTEGRATION FOR THE CYCLONE DUST FROM THE GLEN-GERY WELLMAN-GALUSHA GASIFICATION FACILITY*

Parameter	Value (pCi/g)
Gross α emissions	280 ± 20
Gross β emissions	1120 ± 40

*Anthracite Coal Feedstock

Source: Ref. 10

TABLE 3.7-11. EXTRACTABLE ORGANICS FOUND IN THE CYCLONE DUST FROM THE GASIFICATION OF ANTHRACITE AND LOW-SULFUR BITUMINOUS COALS

	Anthracite[a]	Low-Sulfur Bituminous[b]
Total Concentration of Extractable Organics, μg/g	625	40
Compounds Identified, μg/g		
• Anthracene/Phenanthrene	0.1	-
• Fluorene	0.1	-
• Naphthalene	0.4	3.0
• Bis - (2-Ethylhexyl) Phthalate	2.0	-
• Di-N-Butyl Phthalate	0.2	-
• Diethyl Phthalate	0.2	-
• Adipate Esters	-	3.0
• Phthalate Esters	-	9.0

-: Not Detected

[a]Source: Ref. 10

[b]Source: Ref. 13

TABLE 3.7-12. TRACE ELEMENT CONCENTRATIONS IN THE CYCLONE DUST LEACHATE FROM THE GASIFICATION OF ANTHRACITE COAL

Trace Element	Concentration (μg/ml)	Trace Element	Concentration (μg/ml)
Al	2		
Sb	0.03	I	0.1
Ba	0.7	Si	2
Be	0.003	Fe	1*
		La	0.008
B	0.7	Pb	0.7
		Li	0.5
Cd	0.005	Na	>4
Ca	> 10	Mg	7
Ce	0.01	Mn	>10*
Cs	0.002	Hg	<0.0005
Cl	> 10	Mo	0.07*
Cr	0.004	Nd	0.005
Co	0.3	Ni	Int
Cu	0.09	Nb	0.002
		P	0.3
F	>10	S	>10
		K	>10
		Pr	0.002
		V	0.002*
		Sc	≤0.002
		Y	0.004
		Ag	0.002
Zn	>10	Zr	0.004
		Tl	≤0.001
		Ti	0.2
		U	<0.01

Int - interference
All elements not reported: <0.001 <μg/ml
*Heterogeneous
Leaching procedures as defined in Ref. 4
Source: Ref. 10

Bioassay test results for the cyclone dust from gasification of anthracite and low-sulfur bituminous coals are given in Table 3.7-13. These results indicate that the dust from anthracite coal gasification has a low potential for health effects while the dust from low-sulfur bituminous coal gasification may have moderate effects. The results of the soil microcosm tests were not comparable. The dust for the anthracite case had lower toxic effects than the ash while the dust had higher effects than the ash for the bituminous case.

Recovered Sulfur -

The H_2S removed from the low-Btu product gas and converted into elemental sulfur in the Stretford unit is treated as a waste stream. This is because the facility sizes examined in this study do not produce enough sulfur to warrant purification to make a salable by-product. The sulfur is disposed of as a wet cake containing about 50 percent water. It also contains some of the chemicals from the Stretford solution. The cake is washed (with one or more displacement washes) to recover most of these chemicals, but some are still retained with the cake. Few data are available on the degree of cake washing efficiency, but according to one reference (Ref. 48) 96 to 97 percent of the chemicals are recovered with three displacement washes. More salts would probably be left in the sulfur cake if less wash water were used. For the cases considered in this report, the liquor remaining with the cake will have about 1.0 to 8.5 percent total dissolved solids (TDS) consisting mainly of sodium thiocyanate and sodium thiosulfate along with smaller amounts of $NaHCO_3$, Na_2CO_3, ADA, iron, and EDTA. If the sulfur cake is not washed, it will contain as much as 25 percent TDS. The sulfur cake may also contain small amounts of tar picked up from the gas in the absorber. The sulfur cake will probably have less than 2 percent tar. The amounts of sulfur cake produced from cleaning gas from the four coal feedstocks are given in Table 3.7-14.

MEA Acid Gas Removal Blowdown -

In acid gas removal plants using the MEA process, degradation products and sludge are commonly removed by the semi-continuous steam distillation of a small side stream of stripped MEA solution. The high-boiling degradation products and sludge are then drained from the reclaiming kettle and disposed of. Table 3.7-15 presents estimates of the blowdown from MEA systems treating low-Btu gas from the gasification of 3.9 percent sulfur coal. The stream has not been characterized, but it includes decomposition products such as dithiocarbamates, thioureas, salts of thiosulfuric acid and formic acid, oxazolidone-2, 1-(2-hydroxeythl) imidazolidone-2, and N-(2-hydroxyethel)-ethylenediamine (Ref. 16).

TABLE 3.7-13. BIOASSAY TEST RESULTS FOR THE CYCLONE DUST FROM THE GASIFICATION OF ANTHRACITE AND LOW-SULFUR BITUMINOUS COALS

Test	Anthracite[a]	Low-Sulfur[b] Bituminous
Ames	Negative	Negative
RAM, EC-50 (μg dust/ml culture)	>1000	>1000
RAT		
• Toxicity response	Low	Moderate
• LD-50	> 10	> 10
Soil Microcosm (Toxicity ranking)	Second	First

EC-50: Concentration at which growth was 50 percent of control
LD-50: Dose per kg test animal at which 50 percent died.
Moderate toxic response: rates showed hair loss, eye discoloration, etc.
Soil microcosm toxicity rankings were:

Response	Anthracite	Low-Sulfur Bituminous
High	1 - ash	1 - cyclone dust
	2 - cyclone dust	2 - tar
↓		3 - coal
		4 - ash
Low		5 - Quench Liquor

[a]Source: Ref. 10

[b]Source: Ref. 13

TABLE 3.7-14. BY-PRODUCT SULFUR FROM STRETFORD PROCESS[a]

Coal Feedstock	Sulfur Cake Production kg/s (lb/hr)(50% Sulfur)
Low Sulfur Bituminous	0.009 (70)
High Sulfur Bituminous	0.06 (500)
Anthracite	0.008 (60)
Lignite	0.02 (150)

[a]For a gas production of 17.6 MW (60 x 10^6 Btu/hr)

TABLE 3.7-15. ESTIMATED BLOWDOWN FROM MEA ACID GAS REMOVAL PROCESS[a]

Specification	Quantity[b]
Combustion Gas[c]	0.002 Kg/s (13 lbs/h)
Clean Gas[d]	0.002 Kg/s (13 lbs/h)

[a]MEA process treats gas from gasification of 3.9% sulfur coal to produce 17.6 MW (60 x 10^6 Btu/hr) of low-Btu gas.

[b]These quantities are gross estimates of the blowdown from MEA systems. The blowdown includes degradation products, particulates, and sludge. This stream would be smaller for other ethanolamine systems, since those systems are not degraded by organic sulfur species such as COS. The other systems are also not as easily degraded by oxygen and carbon dioxide. About half of the blowdown is due to degradation products of COS. Water added to the purification kettles for cleaning is not included in the estimate. The estimates assume that 20% of the organic sulfur species and nearly all of the HCN react with MEA to form non-regenerable compounds.

[c]Gas is cleaned to meet combustion emission limit of 86 ng SO_2/J (0.2 lb $SO_2/10^6$ Btu).

[d]Gas is cleaned to 4 ppmv H_2S, 10 ppmv total sulfur.

Source: Refs. 16, 49

SECTION 4.0
PERFORMANCE AND COST OF CONTROL ALTERNATIVES

This section addresses the control alternatives for the multimedia waste streams and toxic substances associated with Wellman-Galusha low-Btu gasification facilities. Regional considerations affecting the selection of control alternatives and cost/energy usage tradeoffs for various controls are also presented.

4.1 PROCEDURES FOR EVALUATING CONTROL ALTERNATIVES

Control alternatives for Wellman-Galusha gasification plant waste streams were selected using the following procedures. First, target levels of desired control for each waste stream were obtained. Next, candidate control alternatives were identified. Finally, the proposed alternatives were evaluated.

Potential control levels were determined by assessing the potential environmental impacts of each waste stream. These impacts were assessed by comparing waste stream pollutant concentrations to appropriate target values (limits imposed by current regulations in related applications). These assessments are discussed in Section 5.0.

For the most part, control alternatives for gasification plant waste streams were identified from the literature or through expert contacts, although engineering judgement was used to suggest several additional alternatives. All proposed control alternatives were then compared with respect to the following criteria:

- applicability,
- control effectiveness,
- stage of development,
- secondary emissions,
- energy and material requirements,
- capital and operating costs, and
- operating reliability.

4.2 AIR EMISSIONS CONTROL ALTERNATIVES

This section discusses alternatives for the control of air emissions from Wellman-Galusha low-Btu coal gasification facilities. Alternatives for the control of the following emissions are considered:

- fugitive dust emissions from coal handling and storage,
- coal feeding system vent gases,
- ash removal system vent gases,
- start-up emissions,
- fugitive emissions and pokehole gases,
- fugitive emissions from particulate removal equipment,
- gas from tar/quench liquor separation,
- MEA unit acid gas stream,
- Stretford oxidizer vent gas, and
- Stretford evaporator vent gas.

4.2.1 Coal Preparation and Handling

Coal dust emissions from storage and handling will vary from site to site, depending primarily on wind velocities and coal properties. These emissions are not quantified in this report since available suppression and collection techniques, if used, appear to be adequate in controlling these emissions.

Asphalt and various polymer coatings have been used to control dust emissions from coal storage piles, with typical control efficiencies of about 80 percent. By using covered bins, coal dust emissions can be suppressed almost totally. Water sprays and enclosed equipment are commonly used to control coal handling emissions, with typical efficiencies of 50 percent and 80 percent, respectively. Dust-laden air from coal conveyors can be routed to the gasifier inlet air line, or transported to cyclones, baghouses, scrubbers, or electrostatic precipitators for dust removal. The costs of these controls are quite small compared to the cost of producing the low-Btu gas. Chemical fixation of storage piles with asphalt or polymers, for example, cost $20 to 55 per Gg (1000 metric tons) processed (Refs. 23, 50), or less than $0.01/GJ of low-Btu gas.

4.2.2 Gasification

Coal Feeder Vent Gas -

The composition of the coal feeding system vent gas will be very similar to that of the major gaseous species in the raw product gas. Minor species in the raw product gas (NH_3, HCN, H_2S, and organics) may condense on the coal before exiting the coal feed hopper. Because this stream will contain high concentrations of a number of toxic materials, it can be hazardous to plant workers. The stream can be collected in a hood and subsequently routed to the gasifier inlet air line, or incinerated.

A potential problem associated with either of these approaches is caused by the potential presence of tar aerosols in the raw gas which can condense and coat the collecting hood and other downstream equipment.

Because of its relatively small flow rate, the coal feeder vent gas stream can be collected and transported to the gasifier inlet air with negligible impact on the cost of the low-Btu gas (estimated at less than $0.01/GJ of product gas).

Generally coal feeding vent gases will be too small to justify a dedicated combustion device (incinerator or flare). If such devices are provided for other streams, the coal feeder vent gas could be disposed there. Currently, coal feeding gases are emitted without controls.

Ash Removal Gas -

No measured data are available on the flow rate or composition of this stream. However, emission controls may not be required due to its suspected low volume and anticipated nontoxic nature.

Start-Up Emissions -

Because of the magnitude of this stream, it must be considered a major emission despite the fact that it is produced intermittently. The stream can be controlled by using a flare to burn the combustible constituents. Heavy tars and coal particulates in this stream can affect the performance of the flare. Problems with tars and coal particles can be minimized by using oil, charcoal, or coke as the gasifier start-up fuel. Use of any of these as the start-up fuel will also reduce the emission of sulfur compounds. Costs of a start-up gas incineration system have not been estimated but are expected to be small.

Fugitive Emissions and Pokehole Gases -

Pokehole gases and other fugitive emissions can be reduced by establishing proper inspection and maintenance schedules for valves and flanges.

4.2.3 Gas Purification

Fugitive Emissions from Particulate Removal Equipment

Emissions from cyclones used for bulk particulate re moval mainly consist of leaks from the cyclone's water seal o pokeholes. Characterization data on these emissions are very

scarce. Again, sound maintenance programs can be used to minimize these emissions.

Gas from Tar/Quench Liquor Separator -

Gaseous emissions from the tar/quench liquor separator will consist of volatile organic and inorganic compunds that have been scrubbed from the raw product gas in the quenching and cooling processes. In the separator some of the absorbed and entrained gases and vapors will desorb from the quench liquor and fill the vapor space above the liquor. In removing these gases from the separator, additional vapors may be stripped from the quench liquor. These vapors can be released directly to the atmosphere, recycled to the gasifier inlet air line, combined with the cooled product gas, or combusted. If vapors are released directly to the atmosphere, they must be dispersed to reduce concentrations of potentially harmful components at ground level. However, this may not be an acceptable approach.

Recycling the separator gases to the gasifier inlet air should be an effective control approach although some of these gases could escape to the atmosphere along with the gasifier ash. While specific effects of recycling the separator gas to the gasifier inlet air have not been determined, slight adjustments in the amounts of steam and air fed to the gasifier may be required. And since the recycled gas contains nitrogen compounds, a portion will be combusted to form NO_x in the combustion zone of the gasifier. Therefore the concentration of NO_x, as well as NH_3 and HCN, in the product gas could be increased.

Because of the separator gas stream's relatively small size, it can be recycled with negligible impact on the cost of the low-Btu gas. Recycling also avoids the cost of a system (e.g., a tall stack) for dispersing the gas. However, specific effects and operating characteristics of recycling have not been determined.

Combining the separator gases with the product gas also increases the concentrations of nitrogen compounds in the product gas. Certain of these compounds (HCN for example) can affect the design and operation of a sulfur removal process. (Costs estimated in this report for sulfur removal systems are based on systems containing these nitrogen compounds.) Again, the costs of this control alternative are insignificant when compared with the cost of the low-Btu gas. In comparison to the alternative of recycling the gas to the inlet air, the alternative of combining separator and product gases involves smaller expenses for ductwork but possibly higher compression requirements. This latter

control alternative will also not affect the operation of the gasifier. This method is feasible however, only if the separator gases are not diluted by in-leakage air.

The separator gases could also be combusted in an on-site boiler or incinerator. The flow rate is probably too small to justify a separate combustion device dedicated solely to this stream. And, if incineration is chosen, the energy value of the separator gas is lost. This control alternative has no advantage over combining the separator gases with the product gas unless the separator gases are diluted by in-leakage air.

MEA Acid Gas -

The Claus and the Stretford processes appear to be the processes best suited for treating the acid gas stream from the MEA absorption unit. These processes are compared in the following text.

Claus - In the Claus process, H_2S in the gas stream is catalytically reacted with SO_2 to recover elemental sulfur. The required SO_2 is produced by first combusting a portion of the H_2S in a reaction furnace. A simplified flow diagram of the process is shown in Figure 4.2-1. For gas streams with low H_2S concentrations, like the MEA acid gas stream, the split stream configuration is used. In this configuration, one-third of the gas stream is fed to the furnace and its sulfur content completely combusted to SO_2. For higher H_2S concentrations, the entire gas stream is fed to the furnace along with just enough air to combust one-third of the H_2S to SO_2. This is the partial combustion configuration. After combustion, the remaining H_2S is reacted with the SO_2 over a bauxite catalyst at 530 to 590 K (500 to 600°F) to produce elemental sulfur, according to the following reaction:

$$2H_2S + SO_2 \quad 2H_2O + 3S + \text{heat}$$

Because this is a reversible reaction, equilibrium constraints limit the conversion. Lower temperatures favor elemental sulfur formation. However, at too low a temperature, the catalyst will become fouled by condensed sulfur. Because the above reaction is exothermic, the fractional conversion achievable in one stage is limited to about 80 percent in most systems. Therefore, two or more reactors are used in series in most applications with inter-stage cooling to remove the heat of reaction and condense the sulfur. Condensing the sulfur improves conversion by decreasing the sulfur back pressure (Refs. 23, 24).

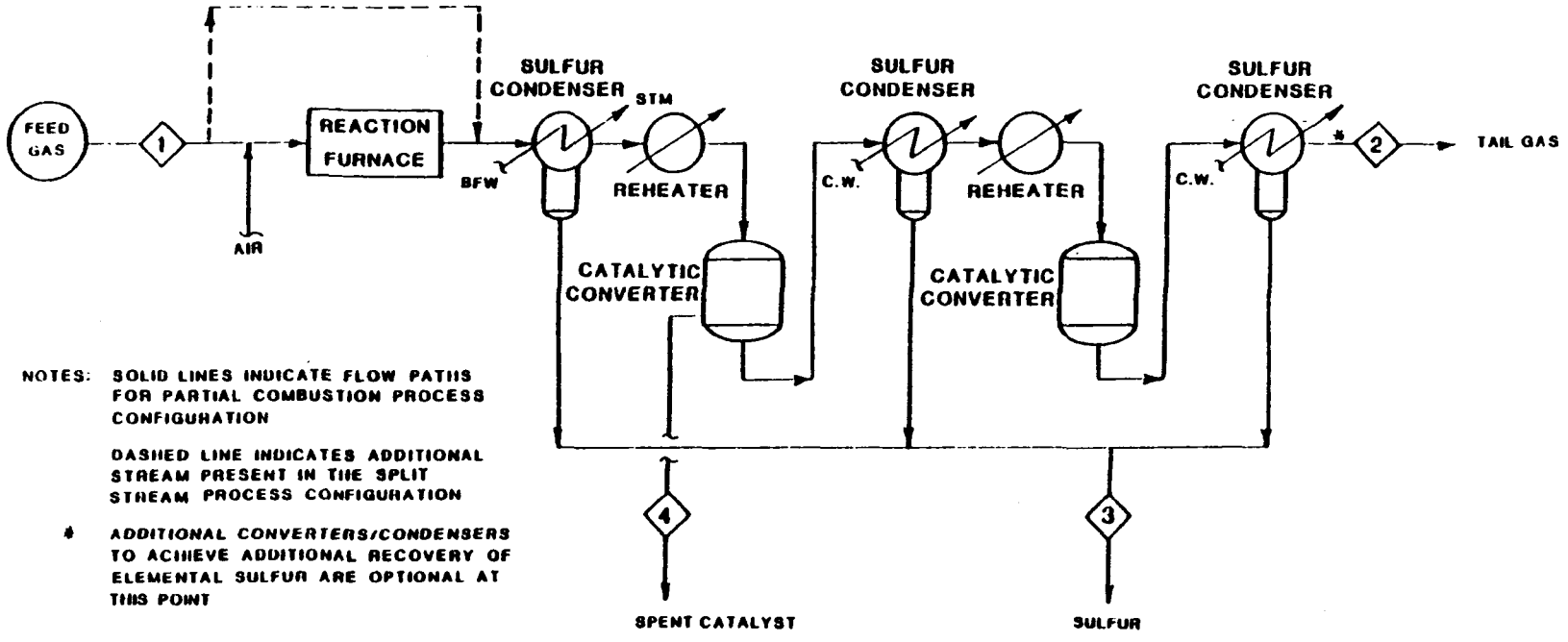

Source: Ref. 23

Figure 4.2-1. Typical Flow Diagram - Claus Sulfur Recovery Process

The sulfur recovery efficiency of a Claus plant depends on several factors. These include the following:

- number of catalytic stages,
- inlet gas composition,
- operating temperatures and catalyst maintenance,
- maintenance of proper H_2S/SO_2 ratio, and
- operating capacity factor.

The sulfur recovery efficiency decreases with decreasing H_2S concentration in the feed gas. For example, the recovery efficiency for a Claus plant with 2 or 3 catalytic stages may be about 95 percent for a gas stream containing 90 percent H_2S, 93 percent for a 50 percent H_2S stream and only about 90 percent for a 15 percent H_2S stream (Ref. 46). Contaminants such as hydrocarbons, carbon dioxide, and ammonia in the feed gas also reduce the Claus efficiency (Ref. 51). The efficiency of a two-stage Claus plant treating an acid gas stream from an MEA absorption unit applied to the treatment of a gas stream generated by gasifying high-sulfur coal (this acid gas stream might contain 16 to 19 percent H_2S) may be only 75 to 80 percent (Ref. 52).

Because of the low recovery efficiency of a Claus plant, the tail gas contains high concentrations of sulfur compounds. For 80 percent sulfur recovery, the tail gas from a 16 to 19 percent H_2S feed stream may contain roughly 20,000 ppmv of sulfur compounds, mostly H_2S and SO_2 (in roughly a 2:1 ratio), along with smaller concentrations of organic sulfur. In the past, Claus plant tail gases were incinerated and vented to the atmosphere. Tail gas treatment is now generally required. For example, new federal standards for Claus plants, effective March 1978, limit the concentration of SO_2 in tail gases from petroleum refinery Claus plants to 250 ppmv. Claus plants producing less than 20.3 Mg (20 long tons) per day of sulfur and located in small refineries are exempt from the regulation.

Tail gas treatment processes fall into three categories:

1) extension of the Claus reaction,
2) conversion of sulfur compounds to SO_2, followed by SO_2 removal, and
3) conversion of sulfur compounds to H_2S, followed by H_2S removal.

Processes in the first category include the IFP-1, Sulfreen, and Amoco CBA processes (Refs. 35, 46). Removal with these processes are limited, however, so that about 1500 to 2500 ppmv of sulfur compounds remain in the tail gas (Refs. 35, 53, 54).

Processes in the other two categories of tail gas treatment are more effective. With these processes, sulfur concentrations in the tail gas of less than 250 ppmv can be achieved (Ref. 35). Processes in the second category involve incineration of the tail gas to convert all sulfur compounds to SO_2 followed by removal of SO_2 from the incinerated tail gas. Various SO_2 removal processes, such as the Wellman-Lord are suitable for treating incinerated tail gas (Ref. 46).

In processes in the third category, the tail gas is mixed with a reducing gas and passed over a reducing catalyst (such as cobalt/molybdenum) to convert the sulfur compounds to H_2S. The H_2S is then removed. This H_2S removal is accomplished by a Stretford unit in the Beavon process, or by an amine scrubber in the SCOT process. The Stretford converts the H_2S directly to sulfur, while the amine produces a rich H_2S stream which is recycled to the Claus plant (Ref. 46).

The Claus process has been used extensively for recovering sulfur from H_2S rich streams in refineries and natural gas plants (Ref. 24). The Claus process is best suited for treating gas streams with H_2S concentrations greater than about 10 to 20 percent, but with certain modifications, it can also be used on lower H_2S streams. At low H_2S levels, however, other processes (such as the Stretford) are generally more economical than the Claus (Refs. 23, 24, 55, 56).

Stretford - The Stretford process, as discussed earlier in this report, directly oxidizes H_2S in the acid gas stream to sulfur. A system designed to treat the acid gas stream will be somewhat different than those discussed previously for treating the low-Btu gas directly. Because of the higher H_2S content of the inlet gas, a spray tower or venturi may be required before the packed tower to remove the bulk of the H_2S and prevent plugging of the packing with elemental sulfur (Ref. 16). In addition, the high CO_2 content of the gas lowers the pH of the scrubber liquor and, consequently, reduces mass transfer rates. Because of this reduced mass transfer, the H_2S absorbers in gasification plants will be much taller than those required to treat gases with low concentrations of CO_2 (Ref. 16).

Assessment - The Stretford process should probably be used for treatment of the acid gases from the anthracite, low-sulfur bituminous, and lignite coals because the H_2S content of these streams is too low to make treatment by the Claus process

economical. However, a selective ethanolamine process, such as MDEA, could produce an acid gas suitable for treatment with the Claus process. Either the Stretford or the Claus process could be used to treat the acid gas from high-sulfur bituminous coal. With tail gas treatment, the Claus tail gas sulfur concentration can be reduced to 250 ppmv or less. The Stretford process can reduce the H_2S in the tail gas to 10 ppmv or less (Ref. 57). The cost of the Stretford process may be somewhat less than the cost of the Claus process with tail gas treatment (Refs. 56, 58). Costs for the Stretford and Claus processes are summarized in Table 4.2-1. These costs describe the treatment of an acid gas from an MEA process resulting from the purification of a high-sulfur coal gas. The Claus plant cited is a two-stage unit without tail gas treatment. Some vendors recommend the Claus/tail gas system over the Stretford for H_2S levels of 20 percent or greater (Refs. 55, 58). If the 75 to 90 percent removal efficiency of the Claus plant alone would be acceptable, with the tail gas incinerated, the Claus plant would be much cheaper than the Stretford (Ref. 55). However, this alternative will probably not be environmentally acceptable. Thus, the ultimate choice between the Stretford and the Claus/tail gas processes will have to be made on an application-specific basis.

Stretford Oxidizer Vent Gas -

As discussed in Section 3.5.3, the Stretford oxidizer vent gas consists mostly of air and water vapor. Because the concentrations of pollutants in this stream are expected to be low, no controls should be required for the oxidizer vent.

Stretford Evaporator Vent Gas -

As discussed in Section 3.5.3, the Stretford evaporator vent gas is a small stream which consists mostly of water vapor. No control should be required for this stream.

4.3 WATER EFFLUENT CONTROL ALTERNATIVES

This section discusses the control of water effluents from Wellmna-Galusha gasification facilities. Alternatives for the control of the following effluents are discussed.

- water runoff from coal storage,
- ash sluicing water,
- process condensate, and
- blowdown from the Stretford process.

TABLE 4.2-1. COSTS FOR STRETFORD AND CLAUS PROCESSES TREATING AN ACID GAS PRODUCED FROM THE PURIFICATION OF A HIGH-SULFUR COAL GAS

Treatment Process • Low-Btu Gas Production Rate	Capital Costs	Annualized Costs[a]
Stretford		
• 15 MW (50 x 10^6 Btu/h)	\$1.9-2.9 million[b]	\$1.2-\$1.6/GJ
• 74 MW (250 x 10^6 Btu/h)	\$3.3-5.1 million[c]	\$0.60-\$0.8/GJ
Claus w/o Tail Gas Cleanup		
• 15 MW (50 x 10^6 Btu/h)	\$1.2-1.3 million[b]	\$0.5-\$0.6/GJ
• 74 MW (250 x 10^6 Btu/h)	\$1.9-2.1 million[c]	\$0.2/GJ

[a]Annualized costs include operating costs, capital charges @ 14% of capital costs and maintenance @ 5% of capital costs; annualized costs are expressed as increased gas costs.

[b]Range of estimates from vendors.

[c]Extrapolated from vendor costs.

Source: References 55, 59, 60

4.3.1 Coal Preparation and Handling

Runoff from coal storage piles or uncovered bins may contain a variety of leached organic and inorganic constituents. The composition and flow rate of this stream is very site-specific and therefore is not characterized in detail in this report.

Leaching from rainfall and/or water sprays can be suppressed with polymer spray coatings. Alternately, runoff water can be collected in ditches and then reused as spray water or ash sluice water. Costs for these controls are quite small compared to the costs of the low-Btu product gas.

4.3.2 Gasification

Selection of a treatment method for the ash sluice water depends on the quantity and quality of this stream, both of which are highly variable. The amount of sluice water used is generally not well controlled. The composition of the sluice water depends on the characteristics of the gasifier ash, and on the quality of the inlet sluice water. If plant service water is used for ash sluicing, the sluice water may be of a quality suitable for discharge into the plant sewer system. However, concentrations of suspended solids, various trace elements and other components (such as SCN^- and CN^-) in the sluice water may be too high to allow discharge into a sewer. As discussed in Section 5.3, effluent limitations and Discharge Severity (DS) values were exceeded in the ash sluice water stream sampled at a Wellman-Galusha gasifier using anthracite coal (Ref. 10).

If the sluice water cannot be discharged, it can be collected and recycled to the ash removal step. Suspended solids could be allowed to settle by gravity from the sluice water before it is recycled. The amount of sluice water that remains with the disposed ash may provide a sufficient blowdown to prevent excessive buildup of suspended or dissolved solids.

If the ash were ponded, the sluice water could be discharged to the pond along with the ash. However, the ash will probably be landfilled rather than ponded (see Section 4.4.2).

4.3.3 Gas Purification

Process Condensate -

Principally four options exist for the treatment and disposal of process condensate from Wellman-Galusha gasification facilities. These are:

- treatment in wastewater facilities located on-site,
- containment on-site with transport to facilities located off-site,
- evaporation on-site, and
- evaporation and combustion on-site.

Each of these options are discussed here; costs are provided for the second and third control options.

The principal contaminants in the process condensate are organic compounds (such as glycols, carboxylic acids, thiols, phenols, and fused aromatic hydrocarbons), nitrogen compounds (such as heterocyclic nitrogen compounds, ammonia, and hydrogen cyanide), and compounds containing phosphorous, arsenic, and selenium. These compounds are found in concentrations which are significantly larger than water quality standards and DS values (see Section 5.1.2 for explanation of DS values).

On-Site Treatment Facilities - If complete wastewater treatment facilities with excess capacity are already available on-site, the effluent stream might be treated at low cost. However, users of small gasification facilities are not likely to have extensive wastewater treatment facilities.

Off-Site Treatment Facilities - Because the condensate stream flow rate is relatively small, it could be contained on-site and subsequently shipped to off-site hazardous wastes treatment facilities. This control alternative avoids the need for expensive treatment facilities on-site, and takes advantage of the economics of scales provided by large treatment facilities.

A typical hazardous wastes facility has a broad treatment capability for both hazardous and non-hazardous wastes. Typical process operations inlcude:

- neutralization of acids and bases,
- oxidation of cyanides and other reductants,
- reduction of chromium VI and other oxidants,
- precipitation of heavy metals,
- separation of solids from liquids,
- removal of organics,
- incineration of combustible wastes,
- removal of ammonia, and
- disposal of waste brines.

Wastes processed at the facility can be segregated and processed accordingly. Sludge from the facility is secured in sanitary landfills (Ref. 61).

Costs for the containment and treatment of process condensate are based on escalated average treatment costs reported by Battelle (Ref. 61). These costs are shown in Table 4.3-1. While very expensive, these costs are less than those for similarly constructed small facilities located on-site. If a large waste treatment facility were located on-site, the costs (shown in Table 4.3-1) would be lowered by 10 to 20 percent due to the elimination of transportation costs.

Evaporation - An alternative to costly treatment processes is evaporation. This option features the elimination of the condensate effluent by reducing it to a concentrated brine or sludge. The process is not as effective in limiting secondary multimedia emissions as the first two options, since volatile organic and inorganic compounds can be relèased to the atmosphere from the evaporator. This type of secondary emission stream has not been characterized in detail, but it will contain ammonia, hydrogen sulfide, and other volatile compounds found in the quench liquor.

Costs for the evaporation of the process condensate are shown in Table 4.3-2. These costs are significantly lower than those for hazardous wastes treatment (off-site). However, secondary emissions from evaporation can be a problem. Sludge from the evaporator will mainly consist of the heavier organic compounds and metals, and can possibly be disposed of with the tars from the separator.

Evaporation/Incineration - A final control option is evaporation and incineration of the condensate. Combustion may occur in modified boilers or submerged combustion evaporators. In this control option, high-boiling organics are incineratesd and water is evaporated in a flame. Energy to ignite the combustibles and evaporate water is supplied by combustion of a gaseous fuel (for instance, low-Btu gas). In submerged combustion, the combustion produces heat and evaporates some of the water. High-boiling organics are thus concentrated in the unevaporated water, which are then injected into a flame.

In both submerged combustion evaporators and boilers, the mixture of air, water, and fuel needs to be within flamability zones. In practice, air and fuel are first ignited alone. After ignition, the concentrated wastes are atomized into the flame. Injection of the wastes directly into the flame is

TABLE 4.3-1. COSTS FOR THE CONTAINMENT AND TREATMENT OF PROCESS CONDENSATE IN A CENTRALLY-LOCATED HAZARDOUS WASTE TREATMENT FACILITY[a]

Coal Type/Sulfur Removal Process[c]	Costs, $/GJ ($/10^6 Btu)[b]	
	Medium-Size Treatment Facility[d]	Large-Size Treatment Facility[d]
High sulfur		
• Stretford	0.59 (0.62)	0.40 (0.42)
• MEA	1.32 (1.39)	0.88 (0.93)
• MEA (stringent sulfur removal)	1.69 (1.78)	1.16 (1.22)
Lignite		
• Stretford	2.01 (2.12)	1.43 (1.36)

[a]Facilities treat both hazardous and non-hazardous wastes.

[b]Costs in 4th quarter 1977 dollars.

[c]Operating parameters are defined in Sections 2 and 3.

[d]Medium-size facility processes a total of 0.0053 m^3/s (122,000 gpd); large size facility processes 0.044 m^3/s (1,000,000 gpd). Wastes are transported 800 km (500 miles) to medium-size facility; 1600 km (1000 miles) to large-size facility.

Source: Reference 61.

TABLE 4.3-2. COSTS FOR THE EVAPORATION OF PROCESS CONDENSATE IN SINGLE-EFFECT VERTICAL TUBE EVAPORATORS

Coal Type/ Sulfur Removal Process	Gasification Facility Size, MW (10^6 Btu/h)[a]	Capital Costs, $[b]	Capital and Maintenance Charges, $/GJ[b,c]	Operating Costs, $/GJ[b,c]	Total Annualized Costs, $/GJ[b]
High-Sulfur Bituminous					
• Stretford	17.6 (60)	43,000	0.02	0.05	0.07
• Stretford	87.9 (300)	102,000	0.01	0.05	0.06
• MEA	14.2 (48.3)	58,000	0.03	0.11	0.14
• MEA	70.9 (242)	139,000	0.01	0.11	0.12
• MEA (stringent sulfur removal)	15.1 (51.6)	70,000	0.03	0.15	0.18
• MEA (stringent sulfur removal)	75.6 (258)	165,000	0.01	0.15	0.16
Lignite					
• Stretford	17.6 (60)	83,000	0.03	0.17	0.20
• Stretford	87.9 (300)	194,000	0.01	0.17	0.18

[a] Facility size based on heating value of cooled and scrubbed gas.

[b] Costs in 12/77 dollars. Costs of exchangers estimated from steam usage, overall heat transfer coefficient, and mean temperature difference.

[c] Capital charges (depreciation and taxes) computed at 16% of the capital costs per year; maintenance costs calculated at 3% of capital costs per year. Gasification facility operates 7884 hours per year. Steam costs assumed to be $2.35/GJ ($2.30/1000 lbs.).

Sources: References 62, 63, 64

usually required since hot combustion products alone may not completely pyrolyze the heavy organics, especially in submerged combustion evaporators (Ref. 65).

Although combustion/incineration converts organics to CO_2 and H_2O, and disposes of the condensate (especially in submerged combustion evaporators), some volatile compounds may simply be volatilized. Boilers used for this function may be derated and require some modification. Submerged combustion evaporators are likely to have capital costs similar to those for vertical-tube evaporators. However, energy requirements are much higher for submerged combustion since some of the water must be heated to the combustion temperature of the organic compounds.

Stretford Blowdown -

In the past, the liquid blowdown from the Stretford process was considered innocuous, and the effluent was generally discharged to municipal sewers. In the future, however, it is doubtful that this stream could be discharged without treatment. Various processes have been proposed to treat this stream. These fall into three general categories:

- treatment and discharge of blowdown,
- regeneration of blowdown, and
- pretreatment to reduce size of blowdown.

These and other treatment alternatives for the Stretford blowdown are discussed below.

Treatment and Discharge - Processes involving treatment and discharge of blowdown include biodegradation, evaporation, and oxidative combustion. In biodegradation, bacteria are used to convert thiocyanate and thiosulfate ions in the effluent to biologically nontoxic forms. Tests of Stretford effluents have indicated that complete detoxification can be achieved if 1) the concentrations of the thiocyanate and thiosulfate ions are less than 1000 ppm and 500 ppm, respectively, 2) the pH is maintained betwewen 6.0 and 7.5, and 3) the temperature is kept between 20 and 25°C.

Evaporation of the blowdown by spray drying yields crystals and solids that reportedly can be disposed of by landfill if the thiocyanate concentration of the blowdown is low. If sodium thiocyanate is present, as it would be for the systems considered in this assessment, further treatment of the solids would be required before disposal (Ref. 30).

Oxidative combustion of Stretford blowdown with an excess of air yields a solid residue of sodium sulfate with traces of vanadium. Spray of an alkaline solution into the flame may be necessary to neutralize the sulfur dioxide formed and can represent a substantial operating cost. Capital costs for combustion are reportedly higher than those for biodegradation or evaporation; operating costs may also be higher because of the alkali required (Refs. 30, 66).

Sodium thiosulfate in the blowdown can be converted to sodium sulfate by the addition of sulfuric acid. The sodium sulfate can then be recovered by crystallization. However, this treatment method may not be feasible for blowdown streams containing thiocyanate (Ref. 25).

These treatment processes have two major disadvantages. They all require ultimate disposal of a waste stream, and they also decompose the sorbent solution.

Regeneration - In a regenerative process, blowdown is treated and returned to the system. The requirement for ultimate disposal of a waste stream is thus eliminated, and chemical make-up requirements are decreased.

The most promising regeneration method involves reacting the blowdown liquor at a high temperature under reducing conditions. A reducing atmosphere is obtained by the substoichiometric combustion of gas (low-Btu product gas could be used) or fuel oil. Under these conditions, the blowdown is cracked into a liquid stream containing reduced vanadium salts and a gas stream containing H_2S and CO_2. The gas is recycled to the Stretford absorber. Thiocyanate and thiosulfate salts are converted largely to H_2S and Na_2CO_3. The vanadium can be recovered in solid form, along with sodium carbonate, sodium sulfide, and some sodium sulfate. These solids can be redissolved and recycled to the absorber. Thus no make-up of sodium or vanadium salts is reportedly required. For the systems assessed in this report, however, a small amount of make-up would be required to replace salts lost in the filter cake (Refs. 25, 26, 27, 66, 67).

Regeneration processes based on this concept have been developed by Peabody Holmes (reductive incineration), Woodall Duckham (high temperature hydrolysis), and NCE Corporation. Capital costs for the Woodall-Duckham high temperature hydrolysis

process treating effluent from a 20 m^3/s (60 x 10^6 scfd) Stretford unit have been estimated at about $650,000 (1974 dollars) or about 20 percent of the capital cost of the Stretford without such treatment (Ref. 66). Capital costs for treating blowdown from a 55 m^3/s (168 x 10^6 scfd) plant by the NCE process have been reported at $1.2 million (1973 dollars, Japanese location) (Ref. 67). Operating cost data are unavailable. Fuel gas requirements for the Peabody reductive incineration process have been reported to be 100 kW (0.34 x 10^6 Btu/hr) per ton per day of sulfur recovered. The fuel gas requirement would be dependent on the amounts of thiocyanate and thiosulfate in the blowdown treated.

Regeneration of the Stretford blowdown by selective removal of thiocyanate has been investigated by Ontario Liquid Waste Disposal Limited and DOFASCO (Dominion Foundry and Steel Ltd.) (Ref. 66). The use of carbon adsorption and ion exchange processes to recover ADA and vanadium salt from Stretford waste liquor have also been investigated (Ref. 68).

Pretreatment - When gases containing HCN are treated by the Stretford process, the size of the blowdown stream can be substantially reduced by removing HCN from the gas before the Stretford absorber. This can be done by a polysulfide wash, in which HCN removals of greater than 95 percent have been achieved (Ref. 66). Aqueous wastes from the process contain high concentrations of thiocyanate, polysulfide, ammonia, hydrogen sulfide, and elemental sulfur, and should be treated prior to disposal (Ref. 66). The effluent can be treated by combustion (as discussed earlier). Conversion of the thiocyanate to carbonate or to a mixture of ammonium sulfate and carbon dioxide with sulfuric acid may be feasible. The applicability of this treatment depends on solving problems such as treatment of offgases containing COS and design of vessels to resist acid and salt attack. Catalytic hydrogenation of the wastes to form HN_3, H_2S and CO which would be recycled to the Stretford absorber has been proposed, but apparently has not been developed. Addition of the polysulfide wash alone could add about 25 percent to the capital cost of the Stretford system. Addition of the thiocyanate waste treatment along with the polysulfide process could increase capital costs by about 40 to 50 percent (Ref. 66).

Other Methods - Other methods of treatment may also be feasible. For example, the blowdown could be treated in existing wastewater treatment facilities, if they are available. It could also be concentrated (if necessary) and shipped away for treatment at a central waste treatment facility located off-site.

Another alternative may be to limit or eliminate washing of the sulfur cake so that the solution discharged with the cake would provide adequate blowdown. The increased potential for water pollution from disposal of sulfur cake containing the resulting high concentrations of dissolved solids may, however, make this technique environmentally unacceptable. Moreover, this would be feasible only in small systems (such as the ones considered in this assessment) where the sulfur is disposed of as a wet cake. A somewhat similar alternative, which has been previously proposed for application in coal gas plants, is to mix and dispose of the blowdown with the ash (Ref. 68). This would also increase the potential for water pollution from ash disposal and may be environmentally unacceptable. Moreover, it might be possible only if the ash is disposed of by ponding, since the excess water probably could not be handled in a landfill. As discussed in Section 4.4.2, the ash will probably be landfilled.

One method of treatment that may be feasible and should be investigated further is to use the gasifier as a reductive incinerator. The use of coke ovens in this manner has been proposed for small Stretford plants used for coke-oven gas treatment (Ref. 25). In the high temperature reducing atmosphere of the gasifier, the thiocyanates and thiosulfates would be broken down, as discussed earlier. The H_2S and CO_2 gases evolved would go out with the product gas. The solid salts would probably be removed with the gasifier ash, although some may be carried over into the product gas and be removed in the cyclone. This method of treatment has the advantage that existing equipment is used. In addition, although the sodium and vanadium salts are disposed of with the ash, the thiocyanates and thiosulfates originally contained in the blowdown are destroyed. Thus, the ash plus salts, should create less of a disposal problem than the ash plus the original blowdown.

Injecting the blowdown into the gasifier, however, would create several possible problems. First, a method for feeding the blowdown into the gasifier must be developed. Mixing the blowdown with the coal in the coal hopper is one option, but care must be taken to avoid creating "cold spots" in the gasifier. Carry-over of the reduced salts into the gas stream is another potential problem. If this occurs, the salts would be removed in the quench system. The salts would then dissolve, and could lead to a build-up of dissolved solids in the quench liquor.

Assessment of Alternatives - For small Stretford units considered in this assessment, the quantity of blowdown produced is very small. For these small quantities, installation of

equipment designed solely for treating the blowdown would be expensive. The most desirable disposal option appears to be treatment in existing wastewater treatment facilities, if they are available at the gasification site. If existing facilities are not available, concentrating the blowdown and shipping it to central treatment facilities off-site may be the best alternative. Another alternative that should be investigated further is reductive options, if it can be done without interfering with the performance of the gasifier. Disposal of the blowdown with the gasifier ash or sulfur cake would be economically attractive, but may be environmentally unacceptable.

For large Stretford installations, especially where HCN is present in the feed gas, regeneration of the blowdown at high temperature under reducing conditions may be the most desirable treatment method. With this option, there is no aqueous discharge and chemical make-up requirements are greatly reduced. Commercial application of this method has been reported (Refs. 27, 69). However, few details are available on their operation.

4.4 SOLID WASTE CONTROL ALTERNATIVES

Solid wastes produced from the gasification and gas purification operations include:

- gasifier ash,
- cyclone dust,
- sulfur cake, and
- blowdown from the MEA unit.

Alternatives for disposal of these solid wastes are discussed in this section. One of the most important factors influencing disposal alternatives is the classification of the wastes according to the Resource Conservation and Recovery Act (RCRA). This act is discussed in section 5.4. If the waste is classified as hazardous, restrictions will be placed on handling and disposal. More data on the specific waste streams which might be obtained are needed to determine whether the wastes will be classified as "hazardous".

4.4.1 Coal Preparation and Handling

Coal preparation and handling operations for Wellman-Galusha gasification systems considered in this report produce no solid waste streams requiring disposal.

4.4.2 Casification

Casifier ash is the only solid waste stream from gasification that will require disposal. The gasifier ash appears to be similar to ash resulting from coal combustion. Thus, disposal methods used for power plant ash should be applicable to disposal of the gasifier ash. However, the gasifier ash may have a higher organic content than ash from direct coal combustion, and may have a different particle size. The effect of these variables on disposal of the gasifier ash should be determined. Additional data are also needed on the structural characteristics, compaction properties, leaching characteristics, and chemical compositions of the gasifier ash.

Electric utilities have widely used ponding and landfill for disposal of fly ash and bottom ash from coal combustion (Ref. 70). Ponding is a land disposal technique in which the waste material is placed wet. Impoundments or other restraints are necessary for temporary and/or long-term stability. Both the gasifier ash and the ash sluice water could be placed directly in the pond. Basic design criteria for ponds are pond area and depth, ash volume and concentration, and pond life.

Prevention of surface and ground water contamination through measures such as liners and underdrainage systems is also an important design consideration. Because unlined disposal ponds may cause ground water contamination, a liner would probably be required for a gasifier ash disposal pond. Possible liners include natural materials such as compacted soils, clays, and asphaltic compounds and various synthetic materials (Ref. 70). A major disadvantage of ponded waste material is its lack of structural stability. Because of this, the pond likely can never be fully reclaimed and construction over the pond site would not be possible.

Landfill is a waste disposal operation in which the disposed material has sufficient structural integrity so that impoundments or other structural supports are not necessary (Ref. 70). Ultimate reclamation of the landfill site may be possible. Thus, landfill, where applicable, is a more desirable disposal option than ponding. Important design criteria for landfills are to prevent the accumulation of gas that may catch fire or explode and to prevent contamination of surface and ground water (Ref. 24). Proposed regulations of the Resource Conservation and Recovery Act specify restrictions on the location of landfills (Ref. 4). These regulations also require measures for preventing surface and ground water contamination, preventing impairment of air quality, and controlling disease vectors. These regulations are discussed in Section 5.4.

Use of landfill sealants is one possibility for preventing ground water contamination. Possible sealant materials are combinations of bentonite, red mud slurry (bauxite residue), latex, or asphalt with soil or sand. When such liners are used, leachate is trapped at the bottom of the landfill and can be collected and treated (if necessary) before being released (Ref. 70). Another method for controlling water contamination from landfills is the interception of subsurface flow by placement of grouted slurry-trench cutoffs and/or drains upstream of the entire area of the landfill (Ref. 70). Leachate collection systems can also be used. One type of leachate collection system consists of a network of gravel-packed drainage canals or perforated drainage pipes. Another type of leachate collection system consists of a system of perimeter wells around the disposal site. These wells form a geohydrologic core of depression. Leachate and uncontaminated ground water collected in the wells can be monitored and appropriately treated or released (Ref. 70).

Structural stability of the ash is an important criteria to be considered in evaluating disposal techniques. Some ashes self-stabilize into a structurally sound, low permeability material suitable for landfill. Other ashes must be treated in order to achieve the desired stability. In some cases, the permeability of the stabilized material may be low enough to serve as a liner. Self-stabilization of the ash is a function of the calcium and alkalinity present in the ash. Ashes from most bituminous and anthracite coals are low in calcium and alkalinity and will not self-stabilize without the addition of lime. Subbituminous coal ash generally achieves marginal self-stabilization. Lignite ash generally self-stabilizes, but high concentrations of sodium and magnesium in the ash may have an adverse effect on the stabilization. Ashes that do not self-stabilize can be made more structurally stable by fixation with lime.

Moisture content is critical to the stability of the ash. The ash appears to follow Abram's law; the strength increases exponentially with linear decreases in the water/fly ash ratio (Ref. 70). Thus, ash removed from the gasifier by sluicing will probably not be structurally stable. However, dewatered ash or ash removed dry with small amounts of water added to reach the optimum moisture content may be stable. Another consideration is the organic content of gasifier ash, which may result in unsoundness of the material in the short or long term. This effect should be investigated.

Costs for landfill disposal of the gasifier ash are affected by several site-specific factors. These include size of the landfill and distance to the disposal site. For small landfill facilities (less than about 3.15 kg/sec, or 300 tons per day), disposal costs per ton of solid waste increase diametrically with decreasing size (Ref. 71). The trend of increasing disposal costs with descreasing size has also been noted for landfill disposal of flue gas desulfurization (FGD) sludge (Ref. 72). Disposal costs increase with increasing distance to the disposal site because of increased transportation costs. Transportation costs per ton of solid waste per mile transported decrease somewhat with increasing distance (Ref. 72). Based on cost estimates for landfill disposal of FGD sludge, disposal costs for the ash may be in the range of $0.0055 to $0.0132/Gg ($5 to $12/ton) if no fixation is necessary, or $0.0088 to $0.0198/Gg ($8 to $18/ton) with fixation. The lower costs are based on a large disposal facility one mile from the gasification plant, and the higher costs are for a smaller facility 10 miles from the gasification plant (Ref. 72). Costs for disposal of ash from the gasification systems described in this report are shown in Table 4.4-1. If the ash is classified as toxic, additional costs would be incurred for monitoring, liners, leachate collection, etc.

4.4.3 Gas Purification

Potential solid waste streams from gas purification include cyclone dust, sulfur cake (recovered in the Stretford unit), and blowdown from the MEA unit.

Collected Particulates -

Possible alternatives for disposing of the cyclone dust include incineration and landfill. In the Glen-Gery Wellman-Galusha gasification facility and the Chapman gasification facility, cyclone dust is disposed of with the gasifier ash. However, the dust has a very high carbon content, and might be classified as a hazardous "ignitable" waste according to the Resource Conservation and Recovery Act (see Section 5.4). If it is "ignitable", it probably could not be landfilled, unless perhaps it could be mixed with the ash to form a mixture that is nonignitable. There is also a possibility that the dust could be classified as a hazardous "toxic" waste. If the dust is classified toxic and the gasifier ash is not, the dust should be disposed of separately from the ash. If the dust is not ignitable

TABLE 4.4-1. COSTS FOR LAND DISPOSAL OF GASIFIER ASH

Coal Type	Disposal Costs, $/GJ[a]	
	Without Fixation	With Fixation
Low Sulfur Bituminous	0.01-0.02	0.01-0.03
High Sulfur Bituminous		
• Stretford	0.02-0.06	0.04-0.08
• MEA	0.03-0.07	0.05-0.10
• MEA (stringent removal)	0.03-0.06	0.04-0.10
Anthracite	0.04-0.10	0.07-0.15
Lignite	0.04-0.10	0.07-0.15

[a]Based on facility producing a cooled low Btu product gas.

Source: Reference 72

and is either classified as not toxic or the ash is also classified as not toxic by RCRA guidelines (Ref. 4), the dust may be disposed of in a landfill along with the gasifier ash. The dust would add approximately 1 to 20 percent to the weight of the ash. Landfill of the dust/ash mixture would involve similar considerations as discussed in Section 4.4.2.

Because of the high carbon content of the dust, utilization of its heat content by combusting it would be preferable to landfilling it. If there is a coal-fired boiler near the gasifi-cation site, the dust could be burned along with the coal. It could also be incinerated in an existing or new incinerator. Because of the small quantities of dust produced (0.8 to 4 g/s for small facilities; 4 to 20 g/s for large facilities), installation of incineration equipment for the dust alone would be expensive. However, this may be necessary if the dust is "ignitable" and no suitable facilities for combusting it exist. For these small quantities of dust, a vortex (cyclone) or rotary kiln incinerator could be used. The vortex incinerator is designed for small capacities (63 g/s or less). The rotary kiln incinerator is built in a wide range of sizes (5 to 300 g/s) and has a low investment cost ($5,000 to $12,000, July 1977 dollars) (Ref. 24). Possible environmental problems from incineration include potential air emissions.

Recovered Sulfur -

Options for disposal of the sulfur removed from the low-Btu product gas include landfill and purification for possible sale. The wet sulfur cake produced in the Stretford process can be melted in an autoclave, separated from the scrubbing liquor, and recovered as pure liquid or solid sulfur, typically 99.5 percent sulfur and up to 99.9 percent with some feed gases (Refs. 16, 26, 68). Purifying the sulfur would be capital intensive, and marketing the small quantities of sulfur would be difficult. Typically, the sulfur from Stretford plants producing only small quantities is disposed of as a wet cake. Thus, the sulfur recovered from the facilities considered in this study would probably not be purified. The large facility producing 87.6 MW (300 x 10^6 Btu/hr) of low-Btu gas from high-sulfur coal generates 310 g/s (29 tons/day) of sulfur and may be an exception. However, tars present in the gas could make even the purified sulfur appear black in color, and thus make marketing the sulfur more difficult. Disposal costs for this material are estimated in Table 4.4-2.

TABLE 4.4-2. ESTIMATED COSTS FOR LAND DISPOSAL OF RECOVERED SULFUR

Coal Type	Disposal Cost, $/GJ[a]	
	Without Fixation	With Fixation
Low Sulfur Bituminous	0.002-0.006	0.004-0.009
High Sulfur Bituminous	0.02- 0.05	0.03-0.07
Anthracite	0.002-0.006	0.004-0.009
Lignite	0.005-.01	0.008-.02

[a]Based on facility producing a cooled, detarred low Btu product gas.

Source: Reference 72

Landfill disposal of the sulfur would involve consideration similar to those discussed in Section 4.4.2 for landfill of the gasifier ash. Because residual Stretford chemicals will be present in the sulfur cake to some degree even after it is washed, the sulfur cake may be classified as a hazardous "toxic" waste according to the RCRA (Ref. 4). This classification would impose severe restrictions on the handling and disposal of the waste, as discussed in Section 5.4.

MEA Blowdown -

Blowdown from an MEA process will contain potentially harmful compounds (as discussed in Section 3.7.2) and will probably be classified as a hazardous "toxic" waste according to the RCRA (Ref. 4). If the gasifier ash is also found to be a hazardous "toxic" waste, MEA blowdown could possibly be disposed of by landfill with the ash. If the gasifier ash is not hazardous, however, the MEA blowdown should be disposed of separately. Landfill of the blowdown would have to conform to regulations discussed in Section 5.4 for the disposal of hazardous wastes.

4.5 TOXIC SUBSTANCES

Tars and oils collected downstream of the cooling step are the principal by-products of low-Btu coal gasification. For the smallest facilities examined in this study, the heating value of the tars and oils amounts to about 4.5 MW (15×10^6 Btu/h), or roughly one-quarter of the energy content of the cooled, detarred low-Btu gas. Operators of gasifiers using bituminous, subbituminous, and lignite coals will recover the energy value of the tars and oils, probably by using them as a supplemental fuel in a coal-fired boiler or furnace.

Of principal concern during the combustion of the tars and oils are the emission of SO_2 and NO_x. Emission factors for the production of SO_2 are shown in Table 4.5-1. Factors for NO_x emissions are unavailable. Other emissions from the combustion of by-product tars and oils include particulates and trace elements.

TABLE 4.5-1. EMISSION FACTORS FOR SO_2 PRODUCED DURING THE COMBUSTION OF BY-PRODUCT TARS AND OILS

Coal Type	Emission Factor ng/J (lb/10^6 Btu)
Low-Sulfur Bituminous	260 (0.6)
High-Sulfur Bituminous	600 (1.4)
Lignite	690 (1.6)

Tars and oils are also potentially emitted as fugitive effluents (from spills and leaks). These effluents can be minimized with leak checks, pump sumps, safe handling procedures, and good maintenance programs.

4.6 SUMMARY OF MOST EFFECTIVE CONTROL ALTERNATIVES

The most effective control alternatives for the low-Btu gasification facilities examined in this study are summarized in Table 4.6-1. These are simply the most effective controls in eliminating or reducing multimedia emissions. Costs and energy considerations are not involved in selecting the most effective controls.

4.7 REGIONAL CONSIDERATIONS AFFECTING SELECTION OF ALTERNATIVES

Selection of the best control alternatives for each of the waste streams is affected by a variety of site and regional considerations. These include the types of waste streams generated by and treatment facilities provided for other operations in the area, the stringency of emission and effluent regulations in the area, and the existing air and water qualities.

Because the quantities of liquid and solid waste streams produced by low-Btu gasification facilities are small, installation of special equipment to treat them would be expensive. However, if acceptable treatment facilities designed for treating other, larger waste streams are available on-site, the small waste streams from the gasification facility could be treated in the existing facilities at a low cost. Similarly, if treatment facilities are not available on-site but a waste treatment complex capable of treating the waste is available near the site, the wastes can be shipped to the off-site complex for treatment. If such a complex does not exist but several plants in the area produce waste streams requiring similar treatment, construction of a central facility may be more economical than construction of separate treatment facilities at each site.

The degree of treatment required for the waste streams is affected by the existing air and water qualities and by the applicable environmental regulations in the area. For example, if the gasification plant is to be located in a non-attainment area for a pollutant (hydrocarbons, for example), very strict

TABLE 4.6-1. SUMMARY OF MOST EFFECTIVE EMISSION, EFFLUENT, SOLID WASTES AND TOXIC SUBSTANCES CONTROL ALTERNATIVES[a]

Waste Stream	Most Effective Control Technology
Air Emissions	
• Fugitive dust from coal storage	• Covered bins • Asphalt and polymer coatings
• Fugitive dust from coal handling	• Enclosed equipment, collect gas and recycle to gasifier inlet air or treat with baghouse
• Coal feeding system vent gas	• Collect gas and recycle to gasifier inlet air or combine with product gas
• Ash removal system vent gas	• No control necessary in a properly designed system
• Start-up emissions	• Incinerator
• Fugitive emissions and pokehole gases from gasifier	• Adherence to good operating and good maintenance procedures
• Fugitive emissions from hot cyclone	• Same as for gasifier
• Separator gas	• Combine with product gas • Recycle to gasifier
• MEA acid gas	• Stretford • Claus with tail gas cleanup
• Stretford oxidizer vent gas	• None required with existing applications. However, viability of this approach needs to be confirmed in a gasification process application.
• Stretford evaporator vent gas	• Same as for oxidizer vent gas
Liquid Effluents	
• Water runoff	• Use covered bins for coal storage • Contain, collect and reuse for process needs
• Ash sluice water	• Collect and recycle to ash sluice system
• Process condensate	• Containment and treatment at hazardous waste facility

(Continued)

4.6-1. (Continued)

Waste Stream	Most Effective Control Technology
• Stretford blowdown	• Containment and treatment at hazardous waste facility • Reductive incineration at high temperature
Solid Wastes	
• Ash	• Secured landfill
• Cyclone dust	• Combustion in incinerator or coal-fired boiler
• Recovered sulfur	• Purify for sale or disposal
• MEA blowdown	• Containment and treatment at hazardous waste facility
Toxic Substances	
• Tars and oils	• Combustion in boiler or furnace (Flue gas treatment may be required.

[a]Based only on effectiveness in eliminating or reducing emissions.

control of the gaseous emissions from the gasification plant would be required. Control of other sources in the area may also be required to offset emissions from the gasification plant. On the other hand, if the plant is located in an area where a large portion of the PSD increment remains, control targets could be somewhat less stringent. Similarly, discharge of the ash sluice water and possibly the Stretford blowdown to sewers for treatment in municipal wastewater treatment facilities may be allowed in certain areas resulting in significant cost savings.

4.8 SUMMARY OF COST AND ENERGY CONSIDERATIONS

Costs of the "best available" candidate methods which were just identified are summarized in Table 4.8-1. Most of the control alternatives have negligible costs when compared to the costs of the low-Btu product gas. The most costly control alternatives are those for treatment of the MEA acid gas vent stream and process condensate. The most costly control methods also have the largest energy consumption. Tars and oils represent a large energy credit.

One method to reduce the costs and energy consumption of process condensate treatment is to reduce the size of the condensate stream. This may be accomplished by drying the coal prior to gasification (the dryer off-gas could contain large amounts of coal volatiles). Alternately, the size of the stream could be reduced by minimizing the amount of steam fed to the gasifier.

TABLE 4.8-1. SUMMARY OF MAJOR COSTS AND ENERGY CONSUMPTION OF ALTERNATIVE CONTROL METHODS

Operation / Process	Waste Stream Media / Waste Stream	Control Method	Control Costs ($/GJ)[a]	Energy Consumption (J/J)[b]
Coal Preparation				
Coal Handling and Storage	**Gaseous Emissions**			
	• Fugitive dust	• Covered bins	<0.01	• Negligible
		• Asphalt and polymer coatings	<0.01	• Negligible
		• Enclosed equipment, collection systems	<0.01	• Negligible
	Liquid Effluents			
	• Coal pile runoff	• Covered bins	<0.01	• Negligible
		• Collection and reuse	<0.01	• Negligible
Coal Gasification				
Wellman-Galusha Gasifier	**Gaseous Emissions**			
	• Coal feeding vent gases	• Collection and recycle to gasifier inlet air or product gas	<0.01	• Negligible
	• Ash removal vent gases	• None required	—	—
	• Start-up vent gases	• Flare or incinerator	<0.1	• NA[c]
	• Fugitive emissions (pokehole gases)	• Good maintenance and operating practices[d]	—	—
	Liquid Effluents			
	• Ash sluice water	• Collection and reuse	<0.01	• Negligible
	Solid Wastes			
	• Ash (low-S Bituminous)	• Secured landfill	0.01-0.02(0.01-0.03)[i]	• Negligible
	• Ash (high-S Bituminous)			
	- Stretford		0.02-0.06(0.04-0.08)[i]	• Negligible
	- MEA[e]		0.03-0.07(0.05-0.10)[i]	• Negligible
	- MEA (Stringent)[f]		0.03-0.06(0.04-0.10)[i]	• Negligible
	• Ash (Anthracite)		0.04-0.10(0.07-0.15)[i]	• Negligible
	• Ash (Lignite)		0.04-0.10(0.07-0.15)[i]	• Negligible
Gas Purification				
Particulate Removal-Hot Cyclone	**Solid Wastes**			
	• Collected particulates	• Combustion	<0.01	• NA[g]
Gas Quenching and Cooling	**Gaseous Emissions**			
	• Quench liquor/tar separator vent	• Combine with the product gas	<0.01	• Negligible
	Liquid Effluents			
	• Process Condensate	• Containment and treatment off-site in a hazardous waste treatment facility		
	- High-S Bituminous			
	• Stretford		0.40-0.59	• NA[h]
	• MEA[e]		0.88-1.32	• NA[h]
	• MEA (Stringent)[f]		1.16-1.69	• NA[h]
	- Lignite		1.43-2.01	• NA[h]
	• Process Condensate	• Forced evaporation on-site		
	- High-S Bituminous			
	• Stretford		0.06-0.07	0.019
	• MEA[e]		0.12-0.14	0.042
	• MEA (Stringent)[f]		0.16-0.18	0.055
	- Lignite		0.18-0.20	0.065

Continued

TABLE 4.8-1. (CONTINUED)

Operation Process	Waste Stream Media Waste Stream	Control Method	Control Costs ($/GJ)[a]	Energy Consumption (J/J)[b]
Sulfur Removal-Stretford	Gaseous Emissions			
	• Oxidizer vent gas	• None required	--	--
	• Evaporator vent gas	• None required	--	--
	Liquid Effluents			
	• Blowdown solvent	• Reductive incineration	NA	NA
	Solid Wastes			
	• Sulfur	• Secured landfill		
	- Low-S Bituminous		0.002-0.009	• Negligible
	- High-S Bituminous		0.02-0.07	• Negligible
	- Anthracite		0.002-0.009	• Negligible
	- Lignite		0.003-0.020	• Negligible
Sulfur Removal-MEA	Gaseous Emissions			
	• Acid gas	• Stretford acid gas removal		
	- 15 MW product gas		1.2-1.6	0.007
	- 74 MW product gas		0.6-0.8	0.007
	• Acid gas	• Claus without tail gas cleanup		
	- 15 MW product gas		0.5-0.6	0.008
	- 74 MW product gas		0.2	0.008
	Solid Wastes			
	• MEA Blowdown	• Containment and treatment at a hazardous waste facility	<0.01	NA[h]
	• Sulfur	← Same as the Stretford sulfur removal case →		

NA - Data not available for calculation of energy consumptions.

[a]Costs are annualized costs per GJ of cooled, detarred product gas.

[b]Energy consumptions are J of energy required by the control method per J of cooled, detarred product gas.

[c]Energy consumption will depend upon the materials (coke, coal, wood, oil, etc.) used to start up the gasifier and the composition of the gas during the start up time period.

[d]Good maintenance and operating procedures should already be defined and included in the units operating costs.

[e]MEA produces a product gas to meet combustion limits of 86 ng SO_2/J (0.2) lb/10^6 Btu.

[f]MEA (stringent) produces a "very clean" product gas containing 6 ng/Nm^3 (10 ppmv) of sulfur species.

[g]Combustion characteristics of the collected particulates have not been determined.

[h]Data are not available on the energy consumption of treating process condensate at an off-site hazardous waste treatment facility.

[i]Control costs: Without fixation (with fixation)

SECTION 5.0
ANALYSIS OF REGULATORY REQUIREMENTS AND ENVIRONMENTAL IMPACTS

This section describes the range of regulations possibly affecting the design and operation of Wellman-Galusha coal gasification plants. To assess the environmental impacts of these plants, levels of contaminants in the plant's multimedia discharges are compared to regulations and Multimedia Environmental Goals (Ref. 3) which might possibly apply to these facilities. Bioassay test results are also discussed here as indicators of potential health and ecological effects associated with the plant waste streams.

5.1 ENVIRONMENTAL ASSESSMENT METHODOLOGIES

EPA's Industrial Environmental Research Laboratory in Research Triangle Park, NC (IERL/RTP) is developing a standard set of methodologies for environmental assessment of fossil energy processes. These methodologies will be used to:

- determine multimedia (air, water, and land) environmental loadings and environmental control costs from the application of existing and future sets of control/disposal options. These are directed toward specific sources, processes, and industries.
- compare the characteristics (chemical, physical, and biological) of these loadings with Multimedia Environmental Goals (MEG's) (Ref. 3) and bioassay tests in order to prioritize potential environmental problems and control needs.

By implementing a standard methodology, inefficiencies and proliferation of techniques for assessing and comparing environmental aspects and control needs for competing technologies can be minimized.

EPA's environmental assessment methodology consists of the following elements:

- current process technology background,
- environmental data acquisition,
- current environmental background,

- environmental objectives development (Multimedia Environmental Goals)
- control technology assessment,
- environmental alternatives analysis, (Source Analysis Models, SAM's), and
- bioassay interpretations.

The following text briefly summarizes these elements.

Work in the Current Process Technology Background area involves two major activities: conducting an information survey of literature and industry sources; and performing an engineering analysis of the available data. This analysis seeks to identify which aspects of the technology are most important and need further study and what information is missing or incomplete.

The purpose of Environmental Data Acquisition is to fill the data gaps identified by the engineering analysis effort. This information may be obtained from testing at commercial or pilot plant facilities or by conducting laboratory experiments. These data acquisition activities may also be used to verify data reported by industry or in the literature.

After a technology's discharge sources (i.e., its potential problem areas) have been identified, the next step in the EPA's environmental assessment program is determining which sources need to be controlled and to what levels. To answer these questions, environmental goals must be developed. These goals comprise the results of Environmental Objectives Development and may be based on:

- best available control technology (BACT)
- natural background pollutant levels,
- prevention of significant deterioration, and
- Multimedia Environmental Goals (MEG's).

Background data required in the development of environmental goals include existing standards and ambient pollutant levels. Obtaining this information is the purpose of the Current Environmental Background area.

The first four areas should define a technology's pollutant discharge sources which may require control and the control goals for those sources. Control Technology Assessment involves identifying applicable control techniques and assessing such factors as their effectiveness, costs, and energy requirements. If control techniques are not available, control technology development will precede the assessment activities.

Determining the best control option(s) for discharge sources and the best set(s) of control options for a given plant is the aim of the Environmental Alternatives Analysis area. This is accomplished by use of Source Analysis Models, which compare the discharges from a plant employing a set of control options to the environmental goals. Consideration must be given to the relative potential harmful health and/or ecological effects of the various pollutants and to cost vs. benefit of controlling the pollutants.

Bioassay Interpretations involve determining the potential health and ecological effects of waste streams sampled in the Environmental Data Acquisition area. The bioassay data are compared to the chemical data and to the models used in the MEG's to develop environmental goals for specific components.

A more detailed discussion of the Multimedia Environmental Goals (MEG's), Source Analysis Models (SAM's), and Bioassay Interpretations is given below.

5.1.1 Multimedia Environmental Goals

Multimedia Environmental Goals (MEG's) are levels of contaminants or degradents (in ambient air, water, or land or in discharges conveyed to ambient media) that are judged to be (1) appropriate for preventing certain negative effects in the surrounding populations or ecosystems, or (2) representative of the control limits achievable through technology.

To date a total of 650 chemical substances and physical agents (e.g., noise, heat), nearly all of which are expected to be associated with fossil fuel processes, have been selected as part of a "Master List" for which MEG's are to be established. The MEG's have already been established for 216 substances on the Master List. The MEG value(s) for a given substance may be based on several or all of the 12 criteria shown in Table 5.1-1. These criteria cover discharge level and ambient level goals. Depending on the data available, up to 12 MEG values may be generated for a given substance for each medium (air, water and land). One of the MEG criterion which is most currently used in environmental assessment work is the discharge MEG (DMEG). DMEG is the approximate concentration for contaminants in source discharges which may not evoke significant harmful or irreversible responses in exposed humans or ecology, when those exposures are limited to short durations (less than 8 hours per day). An example of a MEG chart for 2-Aminonapthalene is given in Table 5.1-2.

TABLE 5.1-1. MEG VALUE BASES FOR DISCHARGE AND AMBIENT LEVEL GOALS

Goal	Category	MEG Value Basis
Discharge Level Goals (Air, Water, Land)	Existing Standards	NSPS, BAT, BPT
	Developing Technology	Engineering Estimates
	Discharge Severity (DS)	Health Effects Ecological Effects
	Ambient Level Goal	Health Effects Ecological Effects
	Elimination of Discharge	Natural Background Level
Ambient Level Goals (Air, Water, Land)	Current or Proposed Ambient Standards on Criteria	Health Effects Ecological Effects
	Toxicity Based Ambient Severity	Health Effects Ecological Effects
	Zero Threshold Pollutants	Health Effects

NSPS: New Source Performance Standard
BAT: Best Available Technology
BPT: Best Practicable Technology

TABLE 5.1-2. MEG CHART FOR 2-AMINONAPHTHALENE

CATEGORY: 10C

WLN: L66J CZ

2-AMINONAPHTHALENE: $C_{10}H_9N$ (2-naphthylamine, B-naphthylamine).
White crystals that darken on exposure to light and air; volatile with steam.

STRUCTURE:

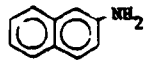

PROPERTIES:

Molecular wt: 143.19; mp: 113; bp: 306; d: 1.0614^{98}_{4} ; vap. press.: 1 mm at 108°C; volatile in steam; slightly soluble in cold water.

NATURAL OCCURRENCE, CHARACTERISTICS, ASSOCIATED COMPOUNDS:

2-Naphthylamine does not occur as such in nature, but is formed by the pyrolisis of nitrogen containing organic matter. It has been isolated from coal-tar (ref.44). It has, in general, the characteristics of primary aromatic amines. It is a weak base.

TOXIC PROPERTIES, HEALTH EFFECTS:

Epidemiological studies have shown that occupational exposure to 2-aminonaphthalene is strongly associated with the occurance of bladder cancer. There is no doubt that the compound is a human bladder carcinogen (ref.44) 2-Aminonaphthalene is also reported to cause cancer in several animal species.
The EPA/NIOSH ordering number is 7628. The lowest does to induce a carcinogenic response is reported as 18 mg/kg. The adjusted ordering number is 423.8.

LD_{50} (oral, rat): 727 mg/kg.
Aquatic toxicity: TLm 96: 10-1 ppm (ref. 2.)

REGULATORY ACTIONS, STANDARDS, CRITERIA, RECOGNITION, CANDIDATE STATUS FOR SPECIFIC REGULATION:

2-Aminonaphthalene is recognized by ACGIH as a carcinogenic agent in humans. No TLV has been assigned.
B-Naphthylamine was the subject of a NIOSH Hazard Review Document (ref. 43)
OSHA standards dealing with exposure of employees to 2-naphthylamine has been established taking into consideration substantial evidence that 2-naphthylamine is known to cause cancer (ref. 17).

MINIMUM ACUTE TOXICITY CONCENTRATIONS:

Air, Health; $7 \times 10^4/423.8 = 165\ \mu g/m^3$
Water, Health; $15 \times 165 = 2.5 \times 10^3\ \mu g/\ell$
Land, Health: $0.002 \times 2.5 \times 10^3 = 5\ \mu g/g$

Air, Ecology:
Water, Ecology: $100 \times 1 = 100\ \mu g/g$
Land, Ecology: $0.002 \times 100 = 0.2\ \mu g/g$

ESTIMATED PERMISSIBLE CONCENTRATIONS:

$EPC_{AH2} = 0.107 \times 727 = 78\ \mu g/m^3$
$EPC_{AH3} = 0.081 \times 727 = 59\ \mu g/m^3$
$EPC_{WH1} = 15 \times 59 = 3{,}500\ \mu g/\ell$
$EPC_{WH2} = 0.4 \times 727 = 291\ \mu g/\ell$
$EPC_{LH} = 0.002 \times 291 = 0.6\ \mu g/g$
$EPC_{AC2} = 10^3/(6 \times 423.8) = 0.4\ \mu g/m^3$
$EPC_{WC} = 15 \times 0.4 = 6\ \mu g/\ell$
$EPC_{LC} = 0.002 \times 6 = 0.012\ \mu g/g$

$EPC_{WE1} = 50 \times 1 = 50\ \mu g/\ell$
$EPC_{LE} = 0.002 \times 50 = 0.1\ \mu g/g$

TABLE 5.1-2. (Continued)

MULTIMEDIA ENVIRONMENTAL GOALS

10C220
2-AMINONAPTHALENE

EMISSION LEVEL GOALS							
	I. Based on Best Technology		II. Based on Ambient Factors				
	A. Economy Standards	B. Developing Technology	A. Maximum Acute Tolerable Effluent		B. Ambient Level Goal*		C. Elimination of Discharge
	NSPS, BPT, BAT	Engineering Estimates (R&D Goals)	Based on Health Effects	Based on Ecological Effects	Based on Health Effects	Based on Ecological Effects	Natural Background*
Air, $\mu g/m^3$ (ppm Vol)			1.65E2		0.4		
Water, $\mu g/l$ (ppm Wt)			2.5E3	1.0E2	6.0	50	
Land, $\mu g/g$ (ppm Wt)			5.0E2	2.0E1	1.20	10	

*To be multiplied by dilution factor

AMBIENT LEVEL GOALS					
	I. Current or Proposed Ambient Standards or Criteria		II. Toxicity Based Estimated Permissible Concentration		III. Zero Threshold Pollutants Estimated Permissible Concentration
	A. Based on Health Effects	B. Based on Ecological Effects	A. Based on Health Effects	B. Based on Ecological Effects	Based on Health Effects
Air, $\mu g/m^3$ (ppm Vol)			59		0.4
Water, $\mu g/l$ (ppm Wt)			291	50	6.0
Land, $\mu g/g$ (ppm Wt)			58.2	10	1.20

Source: Ref. 43

Most of the MEG's are derived from models which translate toxicological data, recommended concentration levels, and federal standards or criteria into discharge or ambient level goals. For most of the categories listed in Table 5.1-1, more than one model is available for obtaining the ambient MEG values (AMEG). Where different AMEG values can be obtained by using different models, the one with the lowest value is chosen as the AMEG value. An example of a model which translates Threshold Limit Values (TLV's) and NIOSH recommendations into AMEG's is shown in Table 5.1-3. Other models used to calculate MEG values can be found in the Multimedia Environmental Goals (Ref. 3).

As part of the methodology for evaluating the toxicity of the substances on the "MEG Master List," EPA has developed a "hazard indicator" system which assigns indicators (x = hazardous, xx = very hazardous, xxx = most hazardous, N. H. = non-hazardous) to the substances. The system provides one simple means of identifying, through cursory inspection, those pollutants most likely to pose a human health hazard. Numerical values which provide the basis for assigning hazard indicators are obtained by using an equation which considers toxic and genotoxic potentials as well as cumulative or chronic effect characteristics.

As discussed previously, MEG charts have been developed for 216 of the 650 substances in the "MEG Master List." Work is in progress to complete MEG charts for the remainder of these substances and to refine the models used to estimate discharge and ambient level goals.

The MEG methodology can also be used in evaluating data obtained from sampling and analysis programs. For example, DMEG values can be used to prioritize streams and stream components requiring more detailed characterization. This is further explained in the next section, Source Analysis Models.

5.1.2 Source Analysis Models

The Source Analysis Models (SAM's) are being developed by IERL/RTP to provide systematic methods of comparing the effectiveness of pollution control options. The SAM's are a set of various models which provide techniques for rapid screening of environmental data as well as intermediate or detailed approaches to relate waste stream physical, chemical, and biological characteristics to MEG values.

The simplest number of the SAM's is SAM/1A (Ref. 74). This model provides a rapid screening technique for identifying

TABLE 5.1-3. MODEL FOR TRANSLATING TLV'S AND NIOSH RECOMMENDATIONS INTO AMEG VALUES BASED ON HEALTH EFFECTS FOR EXPOSURE TO A COMPOUND IN THE AMBIENT AIR

Basic data
- TLV® or NIOSH recommendation:
- 40 hr. week occupational exposure (mg/m^3)

Assumptions
- Exposure adjustment factor = 40 hours work per week/ 168 total hours per week
- Safety factor - 0.01

Derivation

$$\text{- } AMEG_{air,\ health} = \begin{matrix}\text{TLV}\\ \text{or}\\ \text{NIOSH}\end{matrix} \times \underbrace{\overbrace{\frac{40\ hr}{168\ hr}}^{\text{Exposure Adjustment}} \times \overbrace{0.01}^{\text{Safety Factor}}}$$

$$\frac{40}{168} \times 0.01 = 0.00238 = \frac{1}{420}$$

Model

$$\text{- } AMEG_{air,\ health} = \begin{matrix}\text{TLV}\\ \text{or}\\ \text{NIOSH}\end{matrix} \quad 420$$

Source: Ref. 73

and prioritizing potentially harmful waste streams. Major simplifying assumptions implicit in the use of the SAM/1A methodolgy are:

- The substances currently in the MEG's are the only ones that must be addressed at this time (The MEG's are currently being updated to include new data, account for new or revised standards, and add new compounds).

- Transport of the components in the waste streams to the external environment occurs without chemical or physical transformation of those components.

- Actual dispersion of a pollutant from a source to a receptor will be equal to, or greater than, the safety factors normally applied to acute toxicity data to convert these data to estimated safe chronic exposure levels.

- Discharge Multimedia Environmental Goal (DMEG) values developed for each substance are adequate for estimating acute toxicity. A DMEG is a concentration of a substance estimatesd to cause minimal adverse effect in a healthy receptor exposed once or intermitttently for short periods. It relates either to human health or ecological effects.

- The waste stream components cause no synergistic effects.

These assumptions, along with the accuracy of the test data and assumptions used in developing DMEG values, must be considered when interpreting test results using a SAM/1A analysis scheme.

The following procedure is used in performing a SAM/1A analysis of the screening data (Level 1) obtained from an environmental sampling and analysis program to prioritize the waste streams and stream components for detailed analysis (Level 2).

1) Determine the concentration of compounds or compound classes in the MEG categories for each stream.

2) Determine the health and ecological DMEG value of each component identified. In the case of a class of compounds, select the component with the lowest DMEG value. In selecting this component, determine if it can actually be present in the waste stream.

3) Calculate health and ecological Discharge Severity (DS) values for the components or compound classes in the waste stream. The following defines DS for component "i":

$$(DS)_i = (DC)_i/(DMEG)_i$$

where DC_i = stream concentration of component "i"

$DMEG_i$ = DMEG value of component "i" obtained from the MEG's (Ref. 3). Both health and ecological DMEG values are listed.

The DS values are used to prioritize stream components for detailed analysis.

4) Calculate the Total Stream Discharge Severity (TDS) by summing the DS values for all the individual components (elements, compounds, or compound classes) in the stream.

5) Calculate the Weighted Discharge Severity (WDS) for the total stream by multiplying the TDS by the stream mass flow rate.

The WDS for each stream is used subjectively in conjunction with the total stream bioassay test results to prioritize the streams for detailed analysis.

Other SAM's are currently being developed by EPA. These include:

- SAM/1B will incorporate the results of bioassay tests.
- SAM/1 will take into consideration pollutant transport and transformation. The resulting ambient concentrations will be compared to AMEG values. An extended SAM/1 will consider urban and rural population densities and include background pollutant concentrations.
- SAM/II is the most detailed analysis method and is still in the planning stage. Ambient concentrations rather than source concentrations will be used. Transport and transformation models will be more rigorous than those used in SAM/1.

5.1.3 Bioassay Interpretations

Development of a methodology for reducing and formatting bioassay data is being carried out under EPA contracts to Research Triangle Institute, Research Triangle Park, NC., and Litton Bionetics, Kensington, MD. EPA has established the Bioassay Subcommittee of the Environmental Assessment Steering Committee to monitor and coordinate the methodology development effort.

The objectives of the EPA bioassay interpretations methodology development are as follows:

- Reduction and formatting of bioassay data into simple form.
- Presentation of the results of bioassays in a form useful to chemists and engineers involved with the technologies.
- Reduction of the data to a matrix which will "weight" the observed effects in terms of significant differences between exposed experimental organisms and their controls.
- Publication of the methodology in a manual which will enable uniformity of assessment of the pollution potential of the source.

Development of a methodology for handling bioassay data is necessary because of the complex and specialized information resulting from bioassay sampling and analysis. Reducing and formatting the data are particularly important because the information must be used by chemists and engineers who may not be familiar with bioassay techniques. However, the bioassay test results may be used as the basis for design and operation of plants to conform with applicable environmental regulations.

The test matrix in Table 5.1-4 is an example of the minimal bioassay protocol which will be followed in order to assess waste streams which may have harmful health and/or ecological effects. The large amount of information which must be gathered in order to produce credible bioassay results requires careful planning and sample treatment.

In general, dose/response models are used for defining numerical or "weighted" relationships between toxic substances and their effect on test organisms. These ratings, which are

TABLE 5.1-4. PROPOSED BIOASSAY TEST MATRIX FOR SAMPLES COLLECTED DURING ENVIRONMENTAL SAMPLING AND ANALSIS PROGRAMS

Sample Type	Mandatory Test	Recommended Test	Optional Test
Liquids (aqueous)	Ames mutagenicity CHO cytotoxicity Whole animal (rodent acute) toxicity Freshwater or marine aquatic‡	--†	Additional cytotoxicity Alternate freshwater or marine aquatic
Solids	Ames mutagenicity RAM cytotoxicity Whole animal freshwater or marine aquatic Aquatic vertebrate Aquatic algal Aquatic invertebrate	Soil test	Additional cytotoxicity Alternate freshwater or marine aquatic
Solid leachates (aqueous extract)	Ames mutagenicity CHO cytotoxicity Whole animal (rodent acute) toxicity Freshwater or marine aquatic	--	WI 38 cytotoxicity Alternate freshwater or marine aquatic
SASS Train particulates	Ames mutagenicity CHO cytotoxicity	--	CHO cytotoxicity
SASS Train organics	Ames mutagenicity CHO cytotoxicity	--	WI 38 cytotoxicity
Gases	--	Plants stress ethylene test	--

†Dash indicates no test recommended at this time.

‡Includes aquatic vertebrate, algal and invertebrate tests

Source: Ref. 75

designed to give an indication of the relative toxicities of waste streams, are subject to some of the intrinsic difficulties associated with dose/response models. A brief description of dose/response models follows.

The basis of most dose/response models is derived from biological effects data obtained in the laboratory. In order for these models to be useful in estimating health/ecological effects, it is necessary to extrapolate effects observed in the laboratory into an unknown area. This extension of knowledge assumes a continuity, similarity, or other parallelism between the two situations. Often biological effects need to be extrapolated from (1) laboratory to field - many differences make this difficult: (2) one species to another - no two species are alike: (3) one medium to another - ingestion is not the same as inhalation: and (4) one life state to another - ranges of sensitivity may differ by orders of magnitude. In the present state of the art, biological effects data are collected from a few life states of a few species for a few routes of entry in a few controlled conditions. On the other hand, the real world situation contains thousands of species in many stages of growth all of which may be continuously exposed to various types of doses.

Despite the technical difficulties involved in estimating permissible concentrations of pollutants in waste streams, various approaches are available for dealing with the problem. There are many potentially applicable models, some of them developed by or for the EPA and other governmental agencies. The models have two basic parts: a dose/response part and an adjustment part. The dose/response generally consists of one of the typical laboratory effects measurements:

- LD-50: Dose of sample per kg of test animal at which 50 percent died.
- EC-50: Concentration at which growth was 50 percent of a control.
- LC-50: Concentrations at which 50 percent of the experimental species died.
- LD_{LO}: Lowest dose of a substance introduced in one or more portions by a route other than inhalation over any period of time and reported to have caused death in a particular animal species.

Currently the interpretation of bioassay data is subjective. However, as more data are obtained, the basis for interpretation of these results will be more defined.

5.2 IMPACTS ON AIR

This section describes the air impacts of Wellman-Calusha gasification plants. In estimating those impacts, the emissions are compared to various emissions standards while results of dispersion modeling are compared to ambient air quality standards. Bioassay results are also discussed in this section.

5.2.1 Summary of Air Standards and Guidelines

Regulations possibly applying to air emissions from coal gasification facilities include:

- standards of performance for new stationary sources,
- national emission standards for hazardous air pollutants,
- state and federal emission standards,
- national ambient air quality standards, and
- guidelines for controlling air emissions from Lurgi high-Btu plants.

New Source Performance Standards -

Currently, no federal new source performance standards directly apply to emissions from coal gasification plants. New Mexico is the only state to have promulgated performance standards for gasification plants, but these standards are pertinent mainly to large gasification facilities. Also the New Mexico standards principally apply to firing of fuels within the gasification complex.

Other states have promulgated performance standards for sulfur recovery plants. However, these standards are generally not as stringent as regulations defining the maximum permissable concentrations in the effluent gas. Oklahoma and Ohio, for example, have established a performance standard for sulfur plants at 0.01 lb S/lb S feed. New Mexico has specified a limit of sulfur emissions from gasification plants as 3.4 ng/J (0.008 lb/10^6 Btu) of energy in the feed to the plant.

National Emission Standards for Hazardous Air Pollutants -

Hazardous air pollutants are those pollutants for which no ambient air quality standards have been specified but which

have been determined to cause or contribute to increased mortality or serious irreversible or incapacitating reversible illnesses. Hazardous air pollutant standards have been established for four pollutants: beryllium, asbestos, mercury, and vinyl chloride. However, these hazardous air pollutant standards apply only to a few source categories and are not directly pertinent to coal gasification. Although some beryllium and mercury are emitted from gasification plants, the quantities are very small.

State and Federal Emission Standards -

Emission standards establish a maximum permissable emission rate or concentration of a specific pollutant in an emission stream. The most stringent of the various federal and state standards are summarized in Table 5.2-1.

National Ambient Air Quality Standards -

National Ambient Air Quality Standards have been established for six criteria pollutants; these standards are summarized in Table 5.2-2. Primary standards are designed to protect public health; secondary standards are aimed at protecting public welfare.

State Implementation Plans are required to outline strategies for attaining and maintaining the National Ambient Air Quality Standards. Major new sources which could contribute to a violation of a national air quality standard are allowed to construct only if the new source's emissions are controlled to the greatest extent possible, if offsetting emissions reductions are obtained from existing sources, and if significant progress is made in achieving the NAAQS. Areas with air quality better than that defined by the NAAQS must prevent significant deterioration caused by new emission sources or modifications of old sources. Texas has established an air quality regulation for the maximum ground level concentration of H_2S of 0.08 ppm (30 min. average) (122 $\mu g/m^3$).

Performance Guidelines for Lurgi Gasification Plants -

EPA issued a guidelines document in March, 1978 to aid the EPA Regional Offices in reviewing applications for permits for Lurgi gasification plants. The guidelines were based on proposed high-Btu Lurgi plants using the Rectisol acid gas and Stretford/Claus sulfur removal processes. These guidelines are presented in Table 5.2-3.

TABLE 5.2-1. MOST STRINGENT EMISSION STANDARDS[a]

Pollutant	Standard
Particulates	43 mg/Nm^3 (0.018 gr/dry scf[b]
Particulates	72 mg/Nm^3 (0.03 gr/dry scf[c]
HCN	10 ppm[c]
NH_3	25 ppm[c]
HCl	5 ppm[c]
H_2S	10 ppm[c]
H_2S, CS_2, COS	10 ppm[c]
SO_2	250 ppm[d]

[a]Emission standards define maximum concentrations permitted in discharge.

[b]Federal standard for discharge gas from penumatic coal cleaning equipment.

[c]New Mexico standard for coal gasification plants.

[d]Federal standard for emission from large sulfur recovery plants located at petroleum refineries.

NOTE: Data valid as of October, 1977.

Source: Ref. 76

TABLE 5.2-2. NATIONAL AMBIENT AIR QUALITY STANDARDS
(40 CFR Part 50)

Pollutant	Primary Standards	Secondary Standards
Sulfur Oxides (measured as sulfur dioxide)	80 μgm/m^3 (aam)* 0.03 ppm ---------- 365 μgm/m^3 0.14 ppm (24 hr)[a]	1300 μgm/m^3 0.50 ppm (3 hr)[a]
Particulate	75 μgm/m^3 (agm)* 260 μgm/m^3 (24 hr)[a]	60 μgm/m^3 (agm)* (guide for 24 hr. std) 150 μgm/m^3 (24 hr)[a]
Carbon Monoxide	10 mgm/m^3 (8 hr)[a] 9 ppm ---------- 40 mgm/m^3 (1 hr)[a] 35 ppm	10 mgm/m^3 (8 hr)[a] 9 ppm ---------- 40 mgm/m^3 (1 hr)[a] 35 ppm
Photochemical Oxidants	160 μgm/m^3 (1 hr)[a] 0.08 ppm	160 μgm/m^3 (1 hr)[a] 0.08 ppm
Nonmethane Hydrocarbons (as guide for oxidant stds)	160 μgm/m^3 (3 hr)[a,b] 0.24 ppm	160 μgm/m^3 (3 hr)[a,b] 0.24 ppm
Nitrogen Oxide (measured as nitrogen dioxide)	100 μgm/m^3 (aam)* 0.05 ppm	100 μgm/m^3 (aam)* 0.05 ppm

[a]Concentration not to be exceeded more than once a year.

[b]6:00 a.m. to 9:00 a.m.

*aam = annual arithmetic mean; agm = annual geometric mean
40 C.F.R. Part 50, July 1976.

TABLE 5.2-3. PERFORMANCE GUIDELINES FOR LURGI GASIFICATION PLANTS

Emission	Standard
Sulfur Dioxide	$ES = 0.07\ (S_c)^{0.85}(HHV_c)^{0.15}$ For System I[a]
	$ES = 0.032(S_c)^{0.75}(HHV_c)^{0.25}$ For System II[b]
	Where:
	ES = total sulfur emissions
	S_c = coal sulfur input
	HHV_c = coal heat input
Non-Methane Hydrocarbons	$EHC = 0.07\ HHV_c$
	Where:
	EHC = emissions of non-methane hydrocarbons
	HHV_c = coal heat input

[a]System I is an emission control system consisting of a Stretford sulfur recovery plant and a Claus sulfur recovery plant.

[b]System II is an emission control system consisting of a Stretford sulfur recovery plant.

Source: Ref. 77

5.2.2 Comparisons of Waste Streams with Emission Standards

Potential emissions from Wellman-Galusha gasification facilities include:

- fugitive dust emissions from coal handling and storage,
- coal feeding system vent gases,
- ash removal system vent gases,
- start-up emissions,
- fugitive emissions (e.g., pokehole gases) from the gasifier and hot cyclone,
- vent gas from tar/quench liquor separation,
- acid gas from MEA absorption process,
- Stretford oxidizer vent gas, and
- Stretford evaporator vent gas.

In a well designed plant that considered environmental hazards most of these emission streams should not cause significant environmental problems. Detailed characterizations are available for coal feeding system vent gas and gas from the tar/liquor separator and techniques for controlling these emissions are available. Emissions from coal handling and storage, ash removal, fugitives from particulate removal, and Stretford oxidizer and evaporator vent gases are among those which have not been characterized in as great a detail. For this reason, there is some uncertainty in specifying realistic control alternatives for these streams. Gasifier start-up emissions are variable and of short duration. Combustion products resulting from flaring this stream will contain SO_2 and NO_x but these emissions will be small if oil or coke is used as the start-up fuel. Fugitive emissions from the gasifier will be similar to coal feeding system vent gases. Recovered MEA process acid gases have been characterized but not for a gasification plant application. Also, data on emissions from secondary emission control processes are lacking. The coal feeding system vent gas, gas from the tar/liquor separator, and MEA acid gas are discussed in the following paragraphs.

Coal Feeding Gas -

The coal feeding gas contains several constituents in concentrations exceeding the DMEG values for health effects by one or more orders of magnitude. These include: CO_2, CO, H_2S, HCN, NH_3, and particulates. If a hooding system is used with recycle of the collected gases to the gasifier inlet air line, emissions are reduced to those from leaks. In this case, the coal feeder is no longer an emission source.

Gas from Tar/Quench Liquor Separation -

If it is not controlled, the separator gas may be dispersed by a steam ejector. This emission contains CO_2, CO, H_2S, HCN, NH_3, amines, phenols, fused aromatic hydrocarbons, heterocyclic nitrogen compounds, heterocyclic sulfur compounds, and trace elements (compounds of P, Cr, Cu, and Ag) in concentrations exceeding their DMEG values (worse case DMEG values used when specific compounds were not identified) for health effects by one or more orders of magnitude. For systems gasifying high-sulfur coals, the level of H_2S will exceed the most stringent emission standard. If controlled by recycle to the gasifier inlet air line or product gas, the separator gas is eliminated as an emission source.

MEA Acid Gas -

The MEA acid gas contains most of the sulfur originally contained in the raw, low-Btu gas. This stream should not be released directly to the atmosphere. When the Stretford process is used to remove the sulfur compounds from this gas, the exhaust gas is cleaned to a very low level of H_2S. When the Claus process is used for sulfur recovery, a tail gas is produced that contains as much as 20,000 ppmv of H_2S and SO_2. As described in Section 4, various control options can reduce the amount of sulfur released, and reduce the level of SO_2 emission to less than 250 ppmv. This level is less than that of the most stringent emission standard.

5.2.3 Impacts on Ambient Air Quality

The impacts of Wellman-Galusha gasification facilities on ambient air quality are discussed in this section. Dispersion models used to predict the ambient air quality impacts assume worst-case meteorological conditions and are summarized in the Appendix. Because controlled Wellman-Galusha facilities have few emissions, relatively uncontrolled facilities have been modeled.

Model Gasification Plants -

To examine the impacts of Wellman-Galusha facilities on ambient air quality, dispersion modeling was performed for two of the smaller-sized (18 MW or 60 x 10^6 Btu/hr) plants. Impacts of larger facilities can be roughly estimated by scaling the calculated impacts of the smaller sized plants. The two plants modeled feature the gasification of low- and high-sulfur bituminous coals. The facility gasifying low-sulfur coal uses a Stretford sulfur process. The plant using high-sulfur coal has an MEA

acid gas removal process, with sulfur recovery by a Claus process. The tail gas from the Claus plant is incinerated before discharge to the atmosphere.

Significant emission sources for the plant using low-sulfur coal include:

- coal feeding gases,
- pokehole gases, and
- separator vent gases.

The plant using high-sulfur coal also includes the combustion gases from a Claus tail gas incinerator. Stack parameters for the four emission sources are summarized in Table 5.2-4. The stacks are located in a straight line, with the separataor vent 15 meters downwind of the gasifier, and the incinerator stack 15 meters downwind of the separator. Emission parameters are summarized in Table 5.2-5.

Incremental Ambient Loadings -

The maximum downwind concentrations projected for the small gasification facilities are summarized in Table 5.2-6. These concentrations describe the incremental impact on ambient air quality of relatively uncontrolled sources.

The National Ambient Air Quality Standards can be used to gauge the impact of the projected ambient loadings. With the exception of nonmethane hydrocarbons, the predicted pollutant concentrations for both the low- and high-sulfur coals are below the NAAQS. Carbon monoxide and SO_2 concentrations do not exceed the NAAQS; however, they are relatively high. H_2S concentrations were also modeled and compared to the Texas ambient air standards. For the high-sulfur coal case, H_2S concentrations exceed the Texas standard.

The separator vent gas and incinerator gas account for most of the potentially hazardous concentrations of air pollutants at ground level. Emissions from the separator vent contribute the most to the ground level concentrations of H_2S, CO, and NH_3. Table 5.2-7 shows percentage contributions of these components to the calculated maximum concentrations. The Claus tail-gas incinerator accounts for all of the SO_2.

Controlled facilities should have few of the emissions of the uncontrolled plants. The separator and coal feeder can be eliminated as emission sources. If the Stretford process is used

TABLE 5.2-4. STACK PARAMETERS FOR MODEL PLANTS

Parameter	Coal Feeder	Pokeholes	Separator Vent	Incinerator
Height, m (ft)	19.8 (65)	7.6 (25)	18.3 (60)	18.3 (60)
Temperature, °C	41	80	85	538
Flow rate, ACFM	18	5.2	430	2500
Velocity, m/s (ft/s)	3.05 (10)	0.31 (1)	15.24 (50)	12.2 (40)

TABLE 5.2-5. EMISSION PARAMETERS FOR MODEL PLANTS, g/s

Pollutant	Coal Feeding Gas	Pokehole Gases	Separator Gas	Incinerator Gas[a]
CO[b]	2.3	0.47	48.0	0.5
H_2S[c]	0.011[d] 0.083[a]	0.0024[d] 0.019[a]	0.24[d] 1.9[a]	- -
NH_3[b]	0.0017	0.00035	0.72	-
HCN[b]	0.00087	0.00019	0.06	-
COS[c]	0.0019[d] 0.0063[a]	0.00041[d] 0.0012[a]	0.02[d] 0.06[a]	- -
NO_x[b]	-	-	0.36	-
non-CH_4 hydrocarbons[b]	-	-	15.0	-
SO_2[a]	-	-	-	13.2

[a]Only applicable to high-sulfur case.

[b]Same emissions exist for both high- and low-sulfur cases.

[c]Differing emissions exist for high- and low-sulfur cases.

[d]Only applicable to low-sulfur case.

TABLE 5.2-6. MAXIMUM DOWN WIND CONCENTRATIONS FOR MODEL GASIFICATION PLANTS

Pollutant	24-Hour				3-Hour				1-Hour			
	Low Sulfur		High Sulfur		Low Sulfur		High Sulfur		Low Sulfur		High Sulfur	
	C max, μg/m³[a]	R max, m[b]	C max, μg/m³[a]	R max, m[b]	C max, μg/m³[a]	R max, m[b]	C max, μg/m³[a]	R max, m[b]	C max, μg/m³[a]	R max, m[b]	C max, μg/m³[a]	R max, m[b]
CO	2271	350	2274	350	9776	200	9789	200	13670	202	13679	202
H_2S	11.3	350	89.5	350	48.8	200	385.6	200	68.2	202	539.1	202
NH_3	31.4	350	31.4	350	134.6	250	134.6	250	189.7	205	189.7	205
HCN	2.7	350	2.7	350	11.5	250	11.5	250	16.2	204	16.2	204
COS	1.0	350	3.1	350	4.5	200	13.5	200	6.2	199	18.6	199
NO_x	15.6	350	15.6	350	67.0	250	67.0	250	94.6	220	94.3	220
non-CH_4 hydrocarbons	652	350	652	350	2792	250	2792	250	3940	220	3936	220
SO_2	-	-	105.3	950	-	-	382.8	550	-	-	562.0	571

[a]Maximum downwind concentrations.

[b]Distance downwind of the gasifier at which maximum concentrations occur.

TABLE 5.2-7. PERCENTAGE CONTRIBUTIONS OF H_2S, CO, AND NH_3 FROM THE SEPARATOR VENT STREAM TO THE CALCULATED MAXIMUM GROUND-LEVEL CONCENTRATION[a]

Component	% Contribution
H_2S	92%
CO	92%
NH_3	99.6%
HCN	97.4%
COS	85%

[a] See Appendix for Ground-Level Calculation Methods

in place of the Claus process for sulfur recovery, the incinerator is eliminated. Also, if tail gas treatment units were used instead of an incinerator, the SO_2 emissions would also be greatly reduced.

5.2.4 Bioassay Results

Bioassay tests have been conducted on coal feeder and separator vent gases at a Chapman-Wilputte gasification facility (Ref. 13). Results of these tests are shown in Table 5.2-8. Bioassay test results show that these streams have potentially hazardous health and ecological effects. Pokehole gases and fugitive emissions are similar to the coal feeder gas and will have similar effects.

5.3 IMPACTS ON WATER

This section describes the water impacts of Wellman-Galusha gasification plants. The most stringent effluent regulations and environmental goals that might be used to assess the hazard of effluents are discussed. Potential effluents from Wellman-Galusha plants are compared to these standards and goals. Bioassay test results are also presented for the quench liquor at the Chapman facility using low-sulfur bituminous coal.

5.3.1 Summary of Water Standards

Standards applicable to the discharge of aqueous wastes include water quality and effluent standards. Water quality standards define the minimum safe quality of receiving waters. Water effluent standards define the maximum permissible concentrations of contaminants in water effluents. Since the impacts of effluent discharging facilities on ambient water quality are very site-specific, further discussion is limited to water effluent (rather than quality) standards.

Various water effluent standards have been established or proposed. The EPA has developed water effluent limitation guidelines for 40 specific source categories (none for gasification). The only pertinent guidelines are the proposed rules for coal preparation plants and associated areas, including coal storage (40 CFR 434.2 Subpart B, 42 FR 21380, April 25, 1977 and 40 CFR 434.25 Subpart B, 42 FR 46932, September 1977). The proposed rules exempt rainfall or snowfall overflow from facilities designed to contain rainfall resulting from a 10-year, 24-hour precipitation event.

The EPA has proposed toxic effluent standards (40 CFR, Part 129) for aldrin/dieldrin, DDT (DDD, DDE), endrin, toxaphene, and benzidine. Many other substances are being examined for possible addition to the toxic pollutants list.

TABLE 5.2-8. BIOASSAY RESULTS FOR COAL FEEDING AND SEPARATOR VENT GASES

Waste Stream	Bioassay Tests	
	Health[a]	Ecological[b]
Coal Feeding Gas	High	High
Separator Vent Gas	High	NC

[a]Health tests include: Ames and Cytotoxicity (WI-38, RAM)

[b]Ecological tests include: Plant Stress Ethylene

NC - Test not conducted
Source: Ref. 13

The most stringent existing effluent standards (as of October, 1977) are summarized in Table 5.3-1. These standards prohibit the discharge of water contaminants in concentrations exceeding those in Table 5.3-1.

In practice, the discharge of effluents is controlled by the use of National Pollutant Discharge Elimination System (NPDES) permits. Those discharging into "navigable waters" must apply for and receive a NPDES permit establishing the allowable conditions for discharge. These permits are issued by the EPA except where a state has received authority from the EPA to administer its own NPDES. Before a NPDES permit is issued, the state must certify to the EPA that all discharges comply with the applicable effluent limitations.

5.3.2 Comparisons of Waste Streams with Effluent Standards

Potential aqueous effluents from Wellman-Galusha gasification facilities include:

- water runoff from coal storage,
- ash sluicing water,
- process condensate, and
- blowdown from the Stretford process.

Water runoff is not discussed in detail here because of its highly variable, site-specific nature. Provisions for handling this problem must be made in the design of a facility. The other three potential effluents are discussed below.

Ash Sluicing Water -

The ash sluicing water contains compounds of iron, calcium, and phosphorus in concentrations exceeding by one or more orders of magnitude their DMEC values based on health effects (worst case DMEC values were used when specific compounds were not identified). This stream also contains iron, chromium, cyanide, and suspended solids in concentrations exceeding the most stringent effluent standards. This water should be collected and reused.

Process Condensate -

The process condensate contains thiols, phenols, fused aromatic hydrocarbons, heterocyclic nitrogen compounds, ammonia, hydrogen cyanide, and selenium in concentrations exceeding by one or more orders of magnitude the DMEC values based on health effects. Carboxylic acids, phosphorus glycols and epoxides, and arsenic are found in concentrations exceeding by one or more

TABLE 5.3-1. MOST STRINGENT WATER EFFLUENT STANDARDS

Constituent or Parameter	Concentration, mg/ℓ
NH_3	2.5
As	0.05
Ba	1.0
Cd	0.01
Cr^{+6}	0.05
Cu	0.10
Cl^-	250
CN^-	0.02
B	1.0
F^-	1.0
Fe	0.3
Pb	0.05
Mn	0.1
Hg	0.002
Ni	1.0
Phenols	0.005
P	1.0
Se	0.01
Ag	0.05
$SO_4^=$	600
Zn	0.1
N	2.5[a] or 4.0[b]
BOD_5	30[c]
COD	125
Suspended Solids	15 or 37[c]
pH	5-10

[a]April to October.

[b]November to March.

[c]Deoxygenating wastes.

Note: Data valid as of October, 1977

Source: Ref. 76

orders of magnitude the DMEG values based on ecological effects. For both health and ecological effects, worst case DMEG values were used when specific compounds were not identified. The process condensate also contains ammonia, arsenic, chlorides, cyanides, boron, fluorides, iron, phenols, phosphorous, selenium, sulfates, BOD, COD, and suspended solids in excess of the most stringent effluent standards. Table 5.3-2 shows the Priority Pollutants along with other components with Discharge Severity (DS) values greater than one that were identified in the quench liquor (Ref. 13). Fifteen Priority Pollutants were identified along with five additional compounds with DS values greater than one.

Blowdown from the Stretford Process -

Blowdown from the Stretford process contains compounds of vanadium and iron, and EDTA in potentailly hazardous concentrations based on DMEG values for health effects (worst case DMEG values used for vanadium and iron). Iron is also found to be present in concentrations exceeding the most stringent effluent standards. Thiocyanate and thiosulfate are not regulated but may be potentially harmful.

5.3.3 Bioassay Results

Bioassay tests have been conducted on the process condensate at a Chapman gasification facility (Ref. 13) and the ash sluice water from a Wellman-Galusha facility using anthracite (Ref. 10). These results are summarized in Table 5.3-3.

5.4 IMPACTS OF LAND DISPOSAL

Although solid waste disposal has not received much attention until very recently, it will be a major focus of EPA and the states in coming years. The Resource Conservation and Recovery Act of 1976 (RCRA) provides a hazardous waste regulatory program in addition to the following:

- A system to eliminate open dumping,
- Technical and financial assistance for planning improved solid waste management programs,
- Grants to rural communities for improving solid waste management systems, and
- Authority for research, demonstration, and studies in solid waste management.

The regulations implementing RCRA are just now being developed and proposed. Thus, the draft regulations are preliminary in nature and subject to change. EPA has been working with the states

TABLE 5.3-2. COMPONENTS WITH DS's>1 AND PRIORITY POLLUTANTS IDENTIFIED IN THE QUENCH LIQUOR FROM A CHAPMAN FACILITY USING LOW-SULFUR BITUMINOUS COAL.

MEG Category	Compound Identified	Estimated Stream Concentration (μg/ℓ)*	DS Value*		Priority Pollutant
			Health	Ecological	
(1) Aliphatics	>C_6 Alkanes	1E5	<1	1E0	No
(8) Carboxylic Acids	Phthalates	2E4	<1	1E4	Yes
(10) Amines	Analine	3E3	<1	3E0	No
	Aminotoluene	4E3	2E0	NA	No
(18) Phenols	Phenol	7E5	1E5	1E3	Yes
	Anisoles	1E6	3E5	3E3	No
	Alkylphenols	4E5	8E4	8E2	Yes
(21) Fused Polycyclics	Naphthalene	2E4	<1	2E2	Yes
	Acenaphthalene	4E3	<1	<1	Yes
	Benzoperylene	3E4	NA	NA	Yes
(47) Nitrogen	Ammonia	5E6	2E3	1E5	Yes
	Cyanide	1E6	2E3	4E4	Yes
(49) Arsenic	As	8E2	3E0	2E1	Yes
(50) Antimony	Sb	7E1	<1	<1	Yes
(54) Selenium	Se	2E3	4E1	8E1	Yes
(72) Iron	Fe	1E3	<1	4E0	No
(78) Copper	Cu	1E1	<1	<1	Yes
(79) Silver	Ag	2E0	<1	<1	Yes
(82) Cadmium	Cd	5E0	<1	5E0	Yes
(83) Mercury	Hg	<3E4	<1	<1	Yes

*Stream concentrations and DS values; aEb = a x 10^b

NA - DMEG value not available

Worst case DMEG values used when specific compound were not identified

Source: Ref. 13

TABLE 5.3-3. BIOASSAY TEST RESULTS FOR ASH SLUICE WATER AND PROCESS CONDENSATE

	Bioassay Test Results	
Waste Stream	Health	Ecological
Ash Sluice Water[a]	Low[b]	NC
Process Condensate[c]	Low[d]	High[e]

[a]From a Wellman-Galusha facility gasifying anthracite coal (Ref. 10)
[b]Health Tests include: Ames, cytotoxicity (WI-38) and rodent acute toxicity
[c]From a Chapman facility gasifying low-sulfur bituminous coal (Ref. 13)
[d]Health Tests include: Ames, cytotoxicity (RAM), and rodent acute toxicity
[e]Ecological tests include: Fresh Water (algal, daphma, fathead minnows), salt water (algal, shrimp, sheepshead minnows) and terrestrial (soil microcosm)
NC - Tests not conducted

to develop the solid waste control programs and believes that the states are the preferred level of government for their implementation.

Under RCRA, EPA has issued guidelines for the land disposal of solid wastes (Ref. 4). These standards set minimum levels of performance for any solid waste land disposal site. The guidelines apply to the land disposal of all solid material excepting hazardous, agricultural, and mining wastes.

Additional standards have been proposed for hazardous solid waste substances (Ref. 4). A waste would be considered hazardous if it falls into either of the two following categories:

- Wastes which demonstrate ignitability, corrosivity, reactivity, or toxicity.

- Wastes included on EPA's hazardous waste list. These substances have shown any of the above characteristics. Additional hazardous wastes are known to contain infectious agents; radioactive substances; mutagenic, carcinogenic, or teratogenic substances; substances which bioaccumulate; and/or toxic organic substances.

The above criteria characteristics for hazardous wastes are defined in the proposed regulations, along with laboratory methods for their identification.

In identifying wastes as hazardous, EPA chose to emphasize waste streams rather than specific hazardous substances wherever possible. This is because industrial wastes are likely to be complex mixtures containing many components, only some of which may show hazardous characteristics.

Thus, although only 19 generalized solid waste streams are specifically included on the proposed list, they collectively represent about 400 hazardous substances. EPA also has listed approximately 160 different industrial processes which discharge hazardous wastes.

EPA has proposed hazardous waste standards which are designed to protect human health and the environment. EPA or authorized State agencies will be responsible for the implementation of these standards. The standards stipulate procedures for recordkeeping, labeling of waste containers, and the use of appropriate containers for hazardous waste. In addition, information on the general chemical composition of solid wastes must

be supplied to persons who transport, treat, store or dispose of hazardous waste. A system is required which assures the proper delivery, storage or disposal of solid wastes. Reports describing the quantities and disposition of hazardous waste must be submitted to EPA or authorized State Agencies.

Performance standards have been proposed which apply to owners and operators of hazardous waste treatment, storage, and disposal facilities. These include requirements for site location and design, operating methods, contingency plans, monitoring, inspection, reporting, and other practices.

A Hazardous Waste Management Facility permit will probably be mandatory for all new facilities or for modifications to existing facilities. A supplementary environmental analysis will be required in addition to information included in the permit application itself.

EPA has promulgated interim guidelines to help state and local governments identify areas with common waste management problems. The guidelines are designed to encourage and facilitate eventual regional implementation of solid waste management. No design criteria are specified in the present guidelines.

5.4.1 Comparisons of Waste Streams with Disposal Standards

The solid waste streams generated by the gasification facility could be regulated under the RCRA. Consideration of the composition of these solid wastes indicate that they may be classified as hazardous, as discussed below. Tests on the actual solid wastes will be necessary to determine their classification.

Gasifier Ash -

The gasifier ash contains various trace elements, organic constituents, and other compounds for which leachate concentrations defining a toxic waste have been set. Thus, the gasifier ash may be classified as toxic.

Cyclone Dust -

The cyclone dust also contains a variety of trace elements, and may be classified as toxic. In addition, the cyclone dust is composed mainly of carbon, and may be classified as ignitable.

Sulfur Cake -

The sulfur cake recovered in the Stretford unit will contain various dissolved components, including vanadium salts, thiocyanates, and thiosulfates. This sulfur cake may be classified as toxic.

MEA Blowdown -

The blowdown from the MEA unit will consist of a variety of compounds, and will probably be considered as toxic.

5.4.2 Evaluation of Unregulated Pollutants and Bioassay Results

Gasifier Ash -

The gasifier ash should not present significant health or ecological hazards. Bioassay tests conducted on ash from a Chapman facility gasifying low-sulfur bituminous coal showed low toxicities in the rodent acute toxicity and soil microcosm tests, and negative results in the Ames test (Ref. 13). The ash from a Wellman-Galusha facility gasifying anthracite coal had negative Ames test results and nondetectable cytotoxicity test results. The soil microcosm test indicated that ash had a higher toxicity than the cyclone dust (Ref. 10). For the ash from bituminous coal gasification, the dust had more toxic effects than the ash (Ref. 13). Leaching tests conducted on the ash from the Wellman-Galusha gasifier showed low levels of trace elements in the leachate, as discussed in Section 3.3 (Ref. 10). Further leaching tests should be conducted, especailly on ashes from bituminous and lignite coals.

Cyclone Dust -

The cylone dust may have a more significant ecological impact than the gasifier ash. Bioassay tests conducted on cyclone dust from a Chapman gasifier indicate low toxicities for health effects but high potential toxicities for ecological effects (based on soil microcosm tests). In soil microcosm tests, the cyclone dust was more toxic than the coal feed, ash, tar, and separator liquor (Ref. 13).

5.5 PRODUCT IMPACTS

Certain toxic substances may be present in the product low-Btu gas even after the gas purification operations, but few data are available on the presence of these substances. Potentially toxic substances may also be contained in the by-product

tar. At this time, there appear to be no standards regulating toxic substances in the gasification products. However, such standards may be issued in the future, under the Toxic Substances Control act or other laws.

5.5.1 Summary of Toxic Substance Standards

The toxic Substances Control Act of 1976 (TSCA) was designed to protect the public from chemicals posing "unreasonable risk of injury" to health or to the environment. Under the Act, EPA is authorized to obtain from industry data on the production, use, health effects, and other matters concerning chemical substances and mixtures. The EPA Administrator may require manufacturers or processors of potentially harmful chem-icals to conduct tests on the chemicals to evaluate their characteristics or clarify their health and environmental effects. If the manufacture, processing, distribution in commerce, use or disposal of a chemical substance or mixture is found to present an unreasonable risk of injury to health or the environment, the Administrator is empowered to take regulatory action. Possible regulatory measures include the following:

- total or limited ban on production, etc.,
- setting of concentration limits or limitation of users,
- labeling requirements,
- record keeping and monitoring requirements,
- regulation of use or disposal,
- requiring producers to give notice or recall substances, and
- revision of quality control procedures.

Polychlorinated biphenols (PCB's) and chlorofluorocarbons are currently the only specific substances for which regulations have been issued.

A list of 327 chemicals or chemical groups selected by the Toxic Substances Control Act Interagency Testing Committee as priority chemicals for further consideration was released in July, 1977. On October 4, 1977, the Interagency Testing Committee recommended the following ten chemicals and categories for priority testing:

- alkyl epoxides,
- alkyl phthalates,
- chlorinated benzenes, mono- and di-,
- chlorinated paraffins, 35-64% chlorine,
- chloromethane,
- cresols,

- hexachloro -1, 3-butadiene,
- nitrobenzene,
- toluene, and
- xylenes.

5.5.2 Comparisons of Product Characterization Data with Toxic Substances Standards

At this time, there appear to be no standards for toxic substances in the low-Btu product gas or the by-product tar. Moreover, there are few data available on potentially toxic substances in the product gas. However, it appears that several potentially toxic substances and certain chemicals that are on the TSCA list of priority chemicals for further evaluation may be present in the product gas and tar. Regulations controlling these substances may be issued in the future.

Toxic substances in the gasification products may be regulated under TSCA or other laws (such as the Occupational Safety and Health Administration regulations) administered by EPA and other agencies. If an "unreasonable risk" posed by gasification products may be prevented by a Federal low not administered by EPA, the EPA administrator will request the agency administering the other law to determine whether the risk exists and whether the agency's actions would sufficiently reduce the risk. Laws other than TSCA administered by EPA should be used to protect against unreasonable risks unless the Administrator determines that it is in the public interest to protect against such risks under TSCA.

5.5.3 Bioassay Results

Bioassay tests have not been conducted on the product low-Btu gas. This gas may have high health and ecological toxicities. Bioassay tests for the by-product tars have shown a high potential for harmful health and ecological effects. In soil microcosm tests conducted on samples from a Chapman facility gasifying low-sulfur bituminous coal (Ref. 13) the by-product tars were less toxic than the cyclone dust, but more toxic than the coal feed, ash, and separator liquor.

5.6 RADIATION AND NOISE IMPACTS

5.6.1 Noise

The principal sources of noise at Wellman-Calusha gasification facilities are process blowers and turboblowers, coal conveyors and bucket elevators, and pumps. Flighted conveyors

produce sound levels (at 50 feet from the source) ranging from 90 to 105 dBA; belted conveyors produce sound levels ranging from 75 to 85 dBA (Ref. 78). The process blowers and turboblowers produce levels ranging from 95 to 110 dBA. Pumps produce levels ranging from 85 to 95 dBA (Ref. 79). Each piece of equipment in the gasification plant is capable of radiating sound levels exceeding the noise exposure criterion specified by OSHA: 90 dBA for eight-hour exposures.

Noise abatement devices and practices can significantly reduce noise from the various process equipment. The type and design of noise abatement devices depends on the path of the sound energy transmission from the source to the receiver and the degree of reduction required to satisfy OSHA requirements. Abatement techniques for blowers and compressors include air intake silencers or acoustic plenums, and lagging. Techniques for controlling noise from fluid cavitation in pumps are mostly limited to enclosure.

5.6.2 Radiation

During gasification, some radioactive species may be concentrated in dust removed from the product gas. Hazards arising from these species have not been determined.

5.7 SUMMARY OF MAJOR ENVIRONMENTAL IMPACTS

5.7.1 Impacts on Air Quality

The potential air quality impacts of gaseous waste streams from Wellman-Galusha low-Btu gasification facilities were estimated and compared to the following air standards and guidelines:

- New Source Performance Standards (NSPS) for stationary sources,
- National Emissions Standards for Hazardous Air Pollutants (NESHAP),
- National Ambient Air Quality Standards (NAAQS), and
- State and Federal Emission Standards.

The major source of CO, H_2S, NH_3, HCN, and COS emissions is from the separator vent. Recycling the separator vent gas to the product gas would give an 85 to 98 percent reduction in the ground-level concentrations of those pollutants.

The Claus tail gas incinerator is the major source of SO_2 emissions. These emissions can be reduced by incorporating a Claus tail-gas clean up process.

In summary, the gaseous emissions from a well controlled Wellman-Galusha facility should not significantly impact air quality. This implies that the separator vent gases are recycled to the product gas and, for the high-sulfur case using MEA and Claus processes, a Claus tail gas clean-up process is used before incineration.

5.7.2 Impacts on Water

The quantity of liquid wastes from a Wellman-Galusha gasification facility will be small; however, the concentration of various constituents in those waste streams may exceed effluent standards. The liquid effluents associated with a Wellman-Galusha system are as follows:

- water runoff from coal storage,
- ash sluice water,
- process condensate, and
- blowdown from the Stretford process.

Water runoff may contain constituents exceeding effluent standards. The concentration of those constituents will be variable and highly site- and coal-specific.

Table 5.7-1 shows the constituents in the ash sluice water, process condensate, and Stretford blowdown that have either been found or estimated to exceed the most stringent effluent standards and DMEG values (Ref. 3). The amount and types of organic compounds found in the process condensate will vary depending upon the coal feedstock. High levels of organics will be present when bituminous and lignite coals are used. Low levels of organics will be present when anthracite coals are gasified.

5.7.3 Impacts on Land

Under the Resource Conservation and Recovery Act (RCRA), EPA has issued guidelines for the land disposal of solid wastes. These standards set minimum levels of performance for any solid waste land disposal site. The guidelines apply to the land disposal of all solid material.

The following solid waste streams from a Wellman-Galusha gasification facility could be regulated under the RCRA:

- gasifier ash,
- cyclone dust,
- sulfur cake, and
- MEA blowdown.

TABLE 5.7-1. LIQUID EFFLUENTS FROM WELLMAN-GALUSHA LOW-BTU GASIFICATION SYSTEMS EXCEEDING THE MOST STRINGENT EFFLUENT STANDARDS AND DMEG VALUES

Liquid Effluent	Constituents Exceeding Most Stringent Effluent Standards	Constituents Exceeding Health and Ecological DMEG Values in the Multimedia Environmental Goals[a]
Ash Sluice Water	Fe, Cr, CN^- and suspended solids	P, Fe, Ti, Ba, La, Li, Cd, Cu, CN^-, Ni and V
Process Condensate[b] (Bituminous Coal)	NH_3, As, Cl^-, CN^-, B, F^-, Fe, Phenols, P, Se, $SO_4^=$, BOD, COD, and suspended solids	Phenols, Fused Aromatic Hydrocarbons, Heterocyclic Nitrogen and Sulfur Compounds, Carboxylic Acids, Thiols, Glycols, Epxides, NH , CN^-, P, Se, As, F^-, Cl^-, Ca, Fe and Cd
Stretford Blowdown	Fe	Vanadate, Fe, EDTA and possibly Thiocyanates and Thiosulfates

[a]Worst case DMEG values were used when specific compounds were not identified.

[b]Process condensate produced from gasifying anthracite coal should not contain the high amounts of organic constituents found in process condensate from gasifying bituminous or lignite coals.

DMEG: Discharge Multimedia Environmental Goal

Table 5.7-2 shows the characteristics of these solid waste streams and how the proposed RCRA regulations may apply. All of the solid waste streams may be classified as hazardous wastes under the proposed RCRA regulations.

5.7.4 Product/By-Product Impacts

The product gas and by-product tar produced by Wellman-Galusha facilities may be regulated by the Toxic Substances Control Act (TSCA) of 1976. However, polychlorinated biphenols (PCB's) and chlorofluorocarbons are currently the only specific substances for which regulations have been issued.

The product low-Btu gas may contain toxic substances even after extensive purification. The by-product tar does contain toxic substances and positive Ames test results for mutagenicity have been obtained.

5.7.5 Radiation and Noise Impacts

Wellman-Galusha low-Btu gasification facilities may have radiation and noise impacts. Some radioactive species in the coal may be concentrated in the entrained particulate matter in the raw low-Btu gas and in the ash. Sources of potential noise impacts in Wellman-Galusha facilities are process blowers and turboblowers, coal conveyors, coal bucket elevators, and pumps.

TABLE 5.7-2. SOLID WASTES FROM WELLMAN-GALUSHA LOW-BTU GASIFICATION SYSTEMS THAT COULD BE REGULATED BY THE RCRA

Solid Waste Stream	Characteristics of the Waste Stream that may be Classified as Hazardous
Gasifier Ash	High levels of trace elements are present and may be leached from the ash.
Cyclone Dust	High levels of trace elements are present. The dust contains high levels of carbon (70-90%) and may be classified as ignitable.
Sulfur Cake	The sulfur will contain various components such as vanadium salts, thiocyanates, and thiosulfates.
MEA Blowdown	This stream will contain oxazolidin-2, 1-(2-hydroxyethyl) imidazolindone-2; diethyl urea; dithiocarbamates; thiocarbamides; and other high molecular weight compounds resulting from the formation of nonregenerable complexes.

SECTION 6
SUMMARY OF NEEDS FOR ADDITIONAL DATA

Data needs and recommendations for obtaining those data are divided into the following categories:

- gaseous, liquid, and solid waste stream characterizations and control,
- process and process streams, and
- health and environmental impact assessments.

The data needs for the multimedia waste streams and process streams associated with Wellman-Galusha gasification systems are summarized in Tables 6-1 and 6-2, respectively. In general, data associated with the gasification of high-sulfur bituminous coal are currently not available. Since existing and currently planned commercial Wellman-Galusha gasification plants use low-sulfur bituminous and anthracite coals, data on high-sulfur coals may have to be obtained from bench-scale units. Data on the performance of and waste streams from sulfur recovery processes are not available.

Data needs associated with performing health and environmental assessments include:

- data required by EPA Regional and Program Offices and,
- data required to assess health and environmental (air, water and land) impacts of nonregulated pollutants or streams.

Data needs of EPA Program Offices are shown in Table 6-3. In general, these needs involve detailed chemical characterizations (compound specific), long-term monitoring of the concentrations of those compounds, and detailed control technology assessment data.

Data requirements for assessing the health and environmental impacts of nonregulated pollutants and streams will involve pollutant-specific determinations, long-term monitoring and biological testing (including both acute and chronic tests for health and ecological effects). The specific methodologies to be used in performing these impact assessments are still under development. Therefore, the specific data needs are not totally defined.

TABLE 6-1. SUMMARY OF WASTE STREAM CHARACTERIZATION AND CONTROL DATA NEEDS AND PLANNED ACTIVITIES TO OBTAIN THOSE DATA

Waste Stream Media / Waste Stream	Additional Characterization Needed	Control Technology Performance Needed	Planned Activities to Obtain Data Needs
Gaseous Emissions			
Coal feeder vent gas	Compounds present for gasification of high-sulfur coal	Effectiveness and actual cost of recycling this stream to the gasifier inlet air	This control will be evaluated by Radian and ORNL at the University of Minnesota (Duluth) (UMD) Foster Wheeler/Stoic gasification facility
Start-up vent gas	Chemical characteristics during the start-up period for various start-up materials (i.e. coke, wood, oil, etc.)	Effectiveness and energy requirements using a flare to control these gases. Currently there are no good techniques for evaluating the control effectiveness of flares	The Wellman-Galusha test facility at the U.S. Bureau of Mines at Ft. Snelling Minn. has a start-up vent flare that may be available for testing
Pokehole gases	Compounds present for gasifying bituminous (high- and low-sulfur) coals	Effectiveness of injecting an inert gas (i.e. steam) into the pokehole during the poking operation	None
		Effectiveness of using automatic pokers	None
Tar/quench liquor separator vent gases	Chemical and biological characteristics for gasifying high-sulfur bituminous, anthracite and lignite coals	Effectiveness of recycling to the product gas	The UMD facility will use this for their tar storage tank. Vent gases will be characterized by Radian and ORNL
Stretford oxidizer vent gases	Chemical characterization	None should be required, however, this will depend on the results of characterization studies.	Potential test sites are currently being pursued by Radian.
MEA acid gas stream	Chemical characterization	Effectiveness of using a Claus and tail gas cleanup process for sulfur removal	None
Liquid Effluents[a]			
Ash sluice water	Chemical and biological characterizations for effluent guideline standards and comparison to the MEG's for high-sulfur bituminous and lignite coals	Effectiveness of collection and reuse of the ash sluice water	Ash sluice water for the gasification of lignite at the Ft. Snelling facility may be characterized by Radian.
Process condensate	Chemical and biological characterizations for effluent guidelines and comparison to the MEG's for high-sulfur bituminous, anthracite and lignite coals	Effectiveness of concentrating process condensate by forced evaporation	Laboratory tests may be performed to evaluate the gaseous emissions generated by forced evaporation
Stretford blowdown	Chemical and biological characterizations for effluent guidelines and comparison to the MEG's for high- and low-sulfur bituminous, anthracite and lignite coals	Effectiveness of reductive incineration	No reductive incineration processes are planned.
Solid Wastes			
Gasifier ash	Chemical and biological characterizations for high-sulfur bituminous and lignite coals. Leaching studies are needed to determine if the ash is classified as hazardous by the RCRA and determine any potential problems.	Control and disposal requirements will be defined by the RCRA based on chemical and biological characteristics. Permitting agencies will also define these requirements.	Leaching tests for lignite ash are planned. Other leaching tests for low-sulfur bituminous ash may also be performed
Cyclone dust	Chemical and biological characterizations of dust collected from gasifying high- and low-sulfur bituminous and lignite coals are needed for the RCRA and for determining potential problems.	Control requirements will be defined by the RCRA based on chemical and biological characteristics	Leaching tests for lignite are planned. Other leaching tests for low-sulfur bituminous coal may be performed
		Effectiveness of combusting the dust may be required	Laboratory tests may be performed to evaluate dust combustion characteristics
Sulfur	Chemical and biological characterizations of sulfur are needed for the RCRA and for determining potential problems.	Control requirements will be defined by the RCRA based on chemical and biological characteristics	Sulfur produced by the Stretford process will be characterized if a Stretford process is used at Pike County or if another test site can be obtained.
MEA blowdown	Chemical and biological characterizations are needed for the RCRA and for determining potential problems.	Control requirements will be defined by the RCRA based on chemical and biological characteristics	None

[a]Liquid effluents may fall under RCRA guidelines if they are disposed of on land.

TABLE 6-2. PROCESS AND PROCESS STREAM DATA NEEDS AND PLANNED ACTIVITIES TO OBTAIN THOSE DATA

Process	Data Needs	Planned Activities
Wellman-Galusha Gasifier	Fate of pollutants (sulfur species, nitrogen species, tars and oils) for various gasifier operating conditions and coal feedstocks. Operating conditions that need to be evaluated include steam/air ratio, coal throughput, and bed depth. High-sulfur bituminous coal has not been tested since all commercial facilities use low-sulfur bituminous and anthracite coals.	Research Triangle Institute and North Carolina State University will be performing parametric studies on bench-scale gasifiers using various coal feedstocks.
Particulate Removal - Hot Cyclone	Collection efficiencies of hot cyclones are needed since the particulates not removed will affect downstream gas purification processes and the raw gas combustion process characteristics and flue gases.	Particulate removal efficiency studies for the hot cyclone at the UMD facility are planned.
Gas Quenching/Cooling	Fate and distribution of sulfur species, nitrogen species, tars, oils and particulate matter are needed. The quenched and cooled gas characteristics will affect the performance and design of downstream purification processes.	The Can Do Wellman Galusha facility will have a gas quenching/cooling process. The Chapman facility may also be used to evaluate this process.
Tar Removal - Electrostatic Precipitation	Tar removal effectiveness needs to be determined since residual tar/oil aerosols will affect the performance and design of downstream sulfur removal processes.	The tar/oil removal effectiveness will be determined at the UMD gasification facility.
Sulfur Removal - Stretford	Sulfur removal effectiveness needs to be determined. There are currently no data on the performance of the Stretford process used to remove H_2S from low-Btu gas.	Stretford process performance will be evaluated by EPA and DOE if a Stretford unit is used at Pike County. Other test sites are currently being identified.
End Use - Combustion	Combustion gases from burning hot raw gas, quenched gas and desulfurized gas are needed along with tar combustion gases.	Combustion gases will be characterized at the Ft. Snelling and UMD facility.

TABLE 6-3. EPA PROGRAM OFFICE DATA NEEDS

EPA Program Office	Chemical Analyses	Biological Analyses	Physical Analyses	Control Technology
OAQPS	• Air Emissions - Long term monitoring and quantitative analyses for: • CO • NO_x • Nonmethane hydrocarbons • Photochemical oxidants • SO_x • Pb - Identification and quantification of other potentially harmful pollutants: • Sulfur species • Organics • Trace elements • Pollutant Monitoring - Development of continuous/semi-continuous monitoring devices	None	Air Emissions - Particulate loading and size distribution	• Control Effectiveness for Normal, Start-up, Upset and Shut-down Operation and for Operational Responses • Identification and Quantification of Liquid and/or Solid Waste Streams from Air Pollution Control Technology • Recommendations for Control Technology R&D Needs
OWP/Effluent Guidelines Div.	• Liquid Effluents - Long-term monitoring and quantitative analyses for: • 129 priority pollutants • BOD • pH • Grease/oils • P • COD - Identification and quantification of other potentially harmful pollutants • Pollutant Monitoring - Development of continuous/semi-continuous monitoring devices	None	• Liquid Effluents - Long-term monitoring and quantitative analysis for: • TSS • TDS	• Control Effectiveness for Normal, Start-up, Upset and Shut-down Operation and for Operational Responses • Identification and Quantification of Gaseous and/or Solid Waste Streams from Water Pollution Control Technology • Recommendations for Control Technology R&D Needs
OSW	• Solid Wastes or Waste Streams Sent to Land Disposal Sites - pH - Reactivity (explosion potential) - Radium-226 - Leachate • As • Cd • Pb • Se • Endrin • Methoxychlor • 2,4-D • Ba • Cr • Hg • Ag • Lindane • Toxaphane • 2,4,5-TP • Recommendations for New/Modified Methods	• Solid Wastes or Waste Streams Sent to Land Disposal Sites - Leachate • Mutagenicity • Bioaccumulativity • Toxic organic (LD-50)	• Solid Wastes or Waste Streams Sent to Land Disposal Sites - Flash point - Corrosion tests	• Identification and Quantification of Leachable matter from solid wastes • Control Effectiveness of leachate containment/control alternatives

TABLE 6-3. (Continued)

EPA Program Office	Chemical Analyses	Biological Analyses	Physical Analyses	Control Technology
OTS	• Products/By-Products and Streams not Regulated by other Program Offices - Identification and quantification of potentially harmful organic and inorganic species	• Products/By-Products and Streams not Regulated by other Program Offices - Health effects - Ecological effects		• Recommendations for Controlling Exposure to Potentially Harmful Streams
ORP	• Gaseous, Liquid and Solid Waste Streams - α, β and γ-ray measurements - Quantitative analyses for U-235 and Th-232	None	• Gaseous Emissions - Particulate loading and size distribution	
OE	Data needs are similar to those needed by other Program Offices. Data should be sufficient to evaluate permits and to issue permits for gasification plants.			
Office of Criteria and Standards	• Gaseous, Liquid and Solid Waste Streams - Identification and quantification of potentially harmful organic and inorganic species	• Gaseous, Liquid and Solid Waste Streams - Health effects - Ecological effects	• Gaseous Emissions - Particulate loading and size distribution • Liquid Effluents - TSS - TDS	• Control Effectiveness for Normal, Start-up, Upset and Shut-down Operation and for Operational Responses • Identification and Quantification of Pollutants in Gaseous, Liquid and/or Solid Waste Streams from Each Control Technology
Office of Noise Abatement and Control	Currently no data are needed for coal gasification technology. Noise sources should be identified.			

OAQPS: Office of Air Quality Planning and Standards
OWP: Office of Water Planning
OSW: Office of Solid Wastes
OTS: Office of Toxic Substances
ORP: Office of Radiation Planning
OE: Office of Enforcement

APPENDIX

NOMENCLATURE, STRETFORD DESIGN BASIS, TRACE ELEMENT PREDICTIONS, ATMOSPHERIC DISPERSION MODEL

A-1 NOMENCLATURE

The following definitions apply to the terms which are used thoughout this report to describe Wellman-Galusha gasification systems. Also presented are EPA's terminology for Environmental Impact Analyses.

Wellman-Galusha Gasification Systems Terminology -

Energy Technology - An energy technology is made up of systems which are capable of producing a fuel, electricity, or chemical feedstocks from fossil fuels, radioactive materials, or natural energy sources (geothermal or solar). A technology may be applicable to extraction of a fuel, e.g., underground gasification; or the processing of a fuel, e.g., low-Btu gasification, light water reactor, conventional boilers with fuel gas desulfurization.

Operation - An operation is a specific function associated with a technology and consists of a set of processes that are used to produce specific products from certain raw materials. For example, the operations for low/medium-Btu gasification technology are coal pretreatment, coal gasification, and gas purification. the processes which might be used in each of these operations are:

- Coal Pretreatment - drying, partial oxidation, crushing and sizing, briquetting, and pulverizing.
- Coal Gasification - fixed-bed/pressurized/slagging; fixed-bed/pressurized/dry ash; entrained-bed pressurized/slagging; fixed-bed/atmospheric/dry ash; fluid-bed/atmospheric/dry ash; and entrained-bed/atmospheric/slagging.
- Gas Purification - wet or dry particulate and tar removal, gas quenching, and acid gas removal.

Process - Processes are basic units that make up a technology. A process is used to produce chemical or physical transformations of input materials into specific output streams. Every process has a definable set of waste streams which are, for practical purposes, unique. The term "process" used without modifiers is used to describe generic processes. Where the term "process" is modified (e.g., Lurgi process), reference is made to

a specific process which falls in some generic class consisting of a set of similar processes. For example, a generic process in low/medium-Btu gasification technology is the fixed-bed/atmospheric/dry ash gasification process. Specific processes which are included in this generic class are Wellman-Galusha, Woodall-Duckham/Gas Integrale, Chapman (Wilputte), Riley-Morgan, Foster Wheeler/Stoic and Wellman-Incandescent.

Process Module - A process module is a representation of a process which is used to display process input and output streams. When used with other necessary process modules, they can be used to describe a technology, a system or a plant. A modular approach is well suited to environmental studies of complex energy technologies. For example, in the case of petroleum refining, the basic processes which make up a petroleum refinery are atmospheric distillation, catalytic cracking, etc. Information on emission rates, as a function of throughput, can be collected for each process module. Individual process modules can be used fairly interchangeably to describe plants with process configurations which are typical of specific areas of the country. For example, a refinery in the Southwest United States might maximize gasoline production while one in the Northeast might produce more fuel oil. Data on emissions, weather conditions, and air quality for assumed plant sites can then be used for diffusion modeling studies aimed at predicting air pollution impacts which would be experienced if a refinery was in operation at the assumed location.

Auxiliary Process - Auxiliary processes are used for purposes that are in some way incidental to the main functions involved in transforming raw materials into end-products. Auxiliary processes might be used to recovery by-products from waste streams, to furnish necessary utilities, or to furnish feed materials such as oxygen which may or may not be required depending on the form of the end-product which is desired. For example, some auxiliary processes for low/medium-Btu gasification technology include a) oxygen production used to produce medium-Btu gas, b) the Claus process used to recover sulfur from H_2S rich gaseous waste streams, and c) the Phenosolvan process used to recover phenols from liquid waste streams.

System - A system is a set of processes that can be used to produce a specific end-product of the technology, e.g., low- or medium-Btu gas. A technology is comprised of several alternate systems. The simplest gasification system is one capable of producing a hot combustion gas from coal using a small fixed-bed, atmospheric, dry ash gasifier. A more complex system would be required to produce a fuel clean enough to be fired in the gas turbines of a combined-cycle unit for production of electricity.

Plant - A plant is an existing system (or set of processes) that is used to produce a specific product of the technology from specific raw materials. For example, the Glen-Gery Brick Company operates several low-Btu gasification facilities that are plants which produce combustion gas from anthracite coal.

Input Streams - Input streams are materials that must be supplied to a process in order for it to perform its intended function. Input streams may include primary or secondary raw materials, streams from other processes, chemical additives, etc. For example, at a minimum the input streams to a Lurgi gasifier consist of sized coal, lock hopper filling gas, oxygen, steam, and boiler feedwater. For auxiliary processes, a waste stream from which a by-product is recovered is an input stream.

Output Streams - Output streams are confined product streams, waste streams, streams to other processes, or by-products. For example, output streams from a Lurgi gasifier include lock hopper (coal and ash) vent gases, wet ash, recovered steam, blowdown condensate, and crude medium-Btu gas.

Raw Materials - Raw materials are feed materials for processes. They are of two types: 1) primary raw materials that are used in the chemical form in which they were taken from the land, water or air, and 2) secondary raw materials that are produced by other industries or technologies. For example, primary raw materials for low/medium-Btu gasification technology include coal, air, and water. Secondary raw materials include fluxes, makeup solvent, catalysts, etc.

Process Streams - Process streams are output streams from a process that are input streams to another process in the technology. For example, the crude medium-Btu gas from the Lurgi gasification process is the feed (input) stream to a tar/particulate removal or quenching process.

Products - Products are process output streams that are marketed for use or consumed in the form that they exit the system. For example, the low-Btu gas exiting the final gas purification process is the major output stream from a low-Btu gasification facility.

By-Products - By-products are auxiliary process output streams that are produced from process waste streams and are marketed or consumed in the form in which they exit the process. For example, tar is a by-product produced by certain low-Btu gasification facilities. It may either be consumed (e.g., in a boiler) or sold.

Waste Streams - Waste streams are confined gaseous, liquid, or solid process output streams that are sent to 1) auxiliary processes for recovering by-products, 2) pollution control equipment or 3) ultimate disposal processes. Unconfined "fugitive" discharges of gaseous or aqueous wastes and accidental process discharges are also considered waste streams. The tail gas from an acid gas removal process is an example of a waste stream in low/medium-Btu gasification technology.

Source - An emission source is any equipment item which discharges either confined waste streams (solids, liquid, gaseous or combinations) or significant quantities of unconfined, potentially polluting substances in the form of leaks, spills, and the like. Examples of sources include gasifier coal feed lock hoppers which discharge emissions during coal feeding, and the Claus reactor which recovers sulfur and discharges tail gases containing polluting sulfur compounds.

Effluent streams - Effluent streams are confined aqueous waste streams which are potentially polluting. These will be discharged from a source.

Emission Streams - Emission streams are confined gaseous waste streams which are potentially polluting. These will also be discharged from a source.

Fugitive Emissions - Fugitive emissions are unconfined process-associated discharges, including accidential discharges, of potential air pollutants. These may escape from pump seals, flanges, etc., or as emissions in abnormal amounts when accidents occur and may be associated with storage, processing, or transport of materials as well as unit operations associated with a process. They will escape from a source.

Fugitive Effluents - Fugitve effluents are unconfined process-associated discharges, including accidental discharges, of potential water pollutants which are released as leaks, spills, washing waste, etc., or as effluents in abnormal amounts when accidents occur. These may be associated with storage, processing, or transport of materials as well as unit operations associated with industrial processes. They may be discharged to municipal sewers, and can lead to the generation of contaminated runoff water. They will escape from a source.

Accidental Discharge - Accidental discharges are abnormal discharges (solid, liquid, gaseous or combinations) which occur as a result of upset process conditions.

Unit Operation - Unit operations, like processes described above, are employed to take input materials and perform a specific physical or chemical transformation. The equipment making up a unit operation may or may not have one or more waste stream(s). A process is made up of one or more unit operations which have at least one source of waste material(s). Examples of unit operations are: distillation, evaporation, crushing, screening, etc.

Final Disposal Processes - Final disposal processes are used to ultimately dispose of liquid and solid wastes from processes, auxiliary processes, and control equipment employed in a technology. Examples of final disposal processes are landfills and evaporation ponds.

Control Equipment - The primary function of control equipment is to minimize the release of pollutants to air, water or land, resulting from process discharges. While the collected materials may be sold, recycled or sent to final disposal, control equipment is not essential to the economic viability of the process. Where such equipment is designed to be an integral part of a process, e.g., scrubbers which recycle process streams, they are considered a part of the basic process.

Residuals -Residuals are gaseous, liquid, or solid discharges from control equipment and final disposal processes. Examples of residuals include emissions from control equipment (such as scrubbers), auxiliary processes (e.g., tail gases from a Claus sulfur recovery unit) and evaporation ponds (which emit vapors).

Terminology for Environmental Impact Analysis -

EPA/IERL-RTP has developed a terminology for environmental impact analyses. It includes three categories of terms: primary, secondary, and component that can be applied to judge the environmental acceptability of waste streams or product/by-product discharges from industrial processes or energy systems. Primary terms, which have been used frequently in IERL-RTP environmental assessment projects are:

Discharge Severity (DS) - Discharge severity is a simple index of the potential harmful health or ecological effects of a single substance in a discharge. The DS does not require modeling or assumptions as to how the substance might disperse in the receiving medium.

Weighted Discharge Severity (WDS) - WDS is a simple index that reflects both the potential harmful health or ecolog-

ical effects of a single substance as well as the quantity of the total discharge. The WDS is similar to the DS except that it is intended for comparative evaluations of streams having significantly different discharge rates.

Total Discharge Severity (TDS) - TDS is a simplified index of the overall potential health or ecological impact of a discharge. The TDS is the sum of the individual human health or ecological DS values of a given stream; in terms of human effects, the TDS covers a broad range of physiological responses, and when applied in terms of ecological effects it includes both species and biological ramifications.

Ambient Severity (AS) - AS is an indicator of the potential harmful health or ecological effects of substances on the basis of estimated long-term ambient concentrations resulting from stream discharges.

Total Ambient Severity (TAS) - TAS is the ambient analog of TDS. Its uses are similar to those for TDS; in addition, it may be applied to compare impacts of two or more waste streams.

Component terms are used in the specific definitions of primary terms, as shown in the equation for DS:

$$DS = dc/DMEG$$

where dc is the component term for the discharge concentration of a substance, and DMEG is the component term referring to the Discharge Multimedia Environmental Goal for the same substance. Individual DMEG values for a substance are related to health or to ecological effects and specify the substance concentration estimated to cause minimal adverse effects in a healthy receptor (man, plant, or animal) exposed once or intermittently for short time periods.

Component terms for the WDS are used in the equation:

$$WDS = DS \circ mr$$

where mr is the total rate of stream discharge; i.e., the quantity (g, m^3 or l) of the total stream discharged per unit of time.

Component terms for the TDS appear in the equation:

$$TDS = DS = (dc/DMEG)$$

For AS the equation is:

$$AS = ac/AMEG$$

where the component term ac is the ambient concentration of a substance attributable to the discharge of concern, and AMEG is the component term for the Ambient Multimedia Environmental Goal for the same substance. The ac is estimated from mathematical models for environmental dispersion. AMEG values for specific substances are similar to DMEG values except that they are based on a continuous, rather than a single or intermittent, period of exposure.

For TAS the equation reads:

$$TAS = AS = (ac/DMEG)$$

The secondary terms of the IERL-RTP terminology are still being developed and have been used infrequently to date. However, they may gain prominence as risk assessment becomes more widely practiced in environmental assessment programs. Secondary terms include:

- Impact factor: a representation of the number of receptors (plants, animals, or humans) exposed to ambient severities (or total ambient severities) greater than some critical value.
- Ambient concentration profile: a tabular or graphic display of estimated ambient concentrations shown as a function of distance from the point of discharge.
- Exposure concentration profile: a tabular or graphic illustration of the number of receptors exposed to estimated ambient concentrations of substances attributable to a discharge of concern.

A-2 DESIGN BASIS FOR STRETFORD

Material balance calculations were made to determine the raw material requirements and the quality and composition of waste streams for the Stretford process in treating the four different product gases. These calculations were based on design information given in the literature and obtained from personal communications with licencees of the Stretford process. The major design assumptions are given and discussed in this appendix.

H_2S Loading -

The concentration of hydrosulfide ion (HS^-) in the Stretford solutuion achieved is an important design criteria. It can be controlled by controlling the ratio of the gas flow rate to the wash liquor flow rate. For a given gas flow rate, the HS^- loading determines the wash liquor flow rate and thus the size of the absorber, delay tank and oxidizer. Along with the stoichiometry of the chemicals used and the amount of impurities present, it also determines the wash liquor composition. Moyer and Wilkerson (Ref. 30) in 1974 reported that practical concentrations lie in the range of 400 to 750 ppm, although the process is not limited to this range. Kohl and Risenfield (Ref. 16) reported that loadings of 500 ppm are common, but can be as high as 1000 ppm. The standard British Gas Council design calls for loadings of 500 ppm (Ref. 31). Various loadings are given for different plants in the literature. For this study, a 500 ppm loading was used for the low-sulfur bituminous, anthracite, and lignite coals, and 750 ppm was used for high-sulfur bituminous, which had a much higher inlet H_2S loading.

Chemical Concentrations -

Concentrations of 0.3 N $NaHCO_3$ and 0.1 N Na_2CO_3 were assumed. These proportions, however, may be affected by the partial pressure of CO_2 in the gas stream. Sodium metavanadate and anthraquinone disulfonic acid concentrations were assumed to be 1.2 times the stoichiometric requirement. Small amounts of iron (50 ppm) and EDTA (2700 ppm) were also assumed to enhance the oxidation of ADA (Ref. 16).

Solution Blowdown -

A blowdown of Stretford solution is necessary to remove non-regenerable compounds such as sodium thiocyanate and sodium thiosulfate from the system. All HCN in the feed gas was assumed to be absorbed in the solution, forming thiocyanate. Thiosulfate formation depends on several factors. For example, it increases with increasing pH, increasing temperature, and increasing oxygen content of the feed gas. In a properly operated plant, it reportedly can be controlled to less than 1% of the sulfur in the feed gas (Ref. 16). For these calculations, a formation rate of 1% of the feed gas sulfur was assumed. Continuous purge is usually practiced when the solution reaches 20 to 25% total salts concentration. Twenty-five percent was assumed for these calculations.

Oxygen Utilization -

Various degrees of oxygen utilization in the oxidizer have been reported. A utilization of 15% was assumed for those calculation purposes (Ref. 16).

Sulfur Cake Filtration and Washing -

The sulfur cake from the vacuum filter was assumed to be 50% solids (Ref. 16). Information on the degree and effectiveness of cake washing to recover Stretford chemicals was difficult to find. Up to three displacement washes are generally used. With three washes, 96 to 97% of the chemicals are recovered. By assuming equal washing efficiencies for each wash, it was estimated that 66% of the original chemicals would be recovered by one displacement wash.

Operating Temperature -

Since the feed gas to the Stretford is saturated with water, it was assumed that the Stretford solution enters the absorber at the same temperature as the gas, 317 K (110°F), to avoid condensing water from the gas. This is within the operating temperature range of 294 to 317 K (70 to 110°F) given by Kohl and Risenfeld (Ref. 16).

A-3 PREDICTION OF TRACE ELEMENT DISTRIBUTION BY THERMODYNAMIC EQUILIBRIUM

A theoretical distribution of trace element species in gasification products was calculated by assuming that the trace elements are in equilibrium at the temperature and pressure of the gasifier outlet. The quantities for the major elements were established from the total coal, air, and steam fed to the gasifier. Concentrations of trace elements in the coals were assumed to be the highest values from Table 3.2-3.

With these inputs, free energy minimization was used to calculate the equilibrium distribution of the trace element species. This technique makes use of the fundamental principal of thermodynamic equilibrium--the minimization of free energy as a function of independent variables--with emphasis placed on species, elements, and the elemental composition of each species. The equilibrium species are calculated as those that make the total free energy of the system a minimum subject to the constraint of the conservation of all the chemical elements.

This technique is especially well-suited to calculation of the distribution of trace species. The trace elements are present in such small amounts that they do not contribute to the

total free energy of the system (to the closure error of the iterative minimization process). Thus, their distributions can be calculated independently from each other and from the major element distributions. A total of 21 trace elements and 334 trace species were considered in this analysis. These species are listed in Table A.3-1.

Certain limitations to the accuracy of these predictions should be noted. The assumption that all trace element species are at equilibrium is probably not valid. Moreover, the gasification process involves complex chemical reactions that cannot be adequately modeled with a single-stage equilibrium model. This is demonstrated by the deviation between the calculated major element distribution and the measured gas composition in operating gasifiers. The possible significant effect of the high temperature in the gasifier bed on the distribution of the trace species is not taken into account in this model. Kinetic and other limitations on the formation of certain trace species are not taken into account directly, although they can be reflected by omitting species that would not be expected to form at conditions normally encountered in gasification operations.

In spite of these limitations, this model does give an indication of which trace elements are potentially volatilized in a gasification process, and provides an insight into which species would be thermodynamically stable at the gasifier outlet conditions and may be present in the product gas.

A comparison of the calculated trace element distribution with measured data for the COED process is given in Table A.3-2. As shown, elements found experimentally to be vaporized to an extent greater than 60% (Hg, Se, As, Pb, and Cd) were calculated by the program to be completely vaporized. Most of those determined to be less than 30% vaporized were calculated to be condensed (Be is an exception). As more of this type of data becomes available, the utility and range of applicability of the model should be enhanced (Ref. 80).

A-4. DESCRIPTION OF THE ATMOSPHERIC DISPERSION MODELING TECHNIQUES USED TO CALCULATE THE AMBIENT AIR IMPACT DATA PRESENTESD IN SECTION 4.0

The maximum 1-hour, 3-hour, and 24-hour concentrations were computed using the Radian short-term and intermediate-term computer models, respectively. These models apply the Gaussian dispersion equation to compute the ground level pollutant concentrations and are consistent with the procedures suggested by the Environmental Protection Agency.

TABLE A.3-1. SPECIES CONSIDERED IN FREE ENERGY MINIMIZATION PROGRAM

1.	CO	37.	Mo (s)	73.	As_2O_3 (1)	109.	Be_3O_3 (g)	145.	Ni (s) B	181.	V_2O_4 (s)
2.	H_2O	38.	Mo (g)	74.	As_2S_3	110.	Be_4O_4 (g)	146.	Ni (g)	182.	V_2O_4 (1)
3.	CO_2	39.	MoO (g)	75.	As_2S_3 (1)	111.	BeCl (g)	147.	NiO (g)	183.	V (s)
4.	N_2	40.	MoO_2 (s)	76.	H_3AsO_4 (g)	112.	BeH_2 (g)	148.	NiO (s) B	184.	V (g)
5.	HCl	41.	MoO_2 (g)	77.	$HAsO_3$ (g)	113.	$BeCl_2$ (g)	149.	NiS (s)	185.	VO_2 (g)
6.	H_2S	42.	MoO_3 (s)	78.	$AsCl_3$ (g)	114.	$BeCl_2$ (1)	150.	$NiCO_3$ (s)	186.	VN (s)
7.	H_2	43.	MoO_3 (1)	79.	AsH_3	115.	$BeCl_2$ (s)	151.	$Ni(CO)_4$ (g)	187.	VN (g)
8.	O	44.	MoO_3 (g)	80.	AsN (g)	116.	BeS (s)	152.	$NiCl_2$ (s)	188.	V_2S_3 (s)
9.	OH	45.	MoO_2Cl_2 (g)	81.	Pb (g)	117.	BeOH (g)	153.	NiCl (g)	189.	V_2S_3 (1)
10.	H	46.	H_2MoO_4 (g)	82.	Pb (s)	118.	$Be(OH)_2$ (g)	154.	$NiCl_2$ (g)	190.	VS (s)
11.	S_2	47.	$MoCl_4$ (g)	83.	$(Pb)_2$	119.	$BeCO_3$ (s)	155.	$NiSO_4$	191.	VCl_2 (s)
12.	S_8 (g)	48.	MoS_2 (s)	84.	Pb (1)	120.	Be_3N_2 (s)	156.	Sb (s)	192.	VCl_2 (g)
13.	S_7 (g)	49.	MoS_3 (s)	85.	PbS (s)	121.	$BeSO_4$	157.	Sb (1)	193.	VCl_3 (s)
14.	S_6 (g)	50.	$Mo(SO_4)_3$	86.	PbS (1)	122.	Hg (g)	158.	Sb (g)	194.	VCl_4 (g)
15.	S_5 (g)	51.	CoCl (g)	87.	PbS (g)	123.	Hg (1)	159.	Sb_2 (g)	195.	$VOCl_3$ (g)
16.	S_4 (g)	52.	$CoCl_2$ (s)	88.	PbO (g)	124.	HgO (s)	160.	Sb_4 (g)	196.	$VOSO_4$
17.	S_3 (g)	53.	$CoCl_2$ (g)	89.	PbO Red	125.	HgO (g)	161.	SbO (g)	197.	Cr (g)
18.	S (g)	54.	$CoCl_3$ (g)	90.	PbO Yel	126.	HgS Red	162.	Sb_2O_3 (s)	198.	Cr (s)
19.	SO_2	55.	Co_2Cl_4 (g)	91.	PbO (1)	127.	HgCl (g)	163.	Sb_2O_3 (1)	199.	$CrCl_2$ (g)
20.	COS	56.	CoH (g)	92.	PbO_2 (s)	128.	$Hg(Cl)_2$ (s)	164.	Sb_2O_4 (s)	200.	CrN (g)
21.	SO_3 (g)	57.	Co (g)	93.	Pb_3O_4 (s)	129.	$Hg(Cl)_2$ (1)	165.	Sb_2S_3 (s)	201.	CrO (g)
22.	CS_2	58.	Co (s) A	94.	Pb(Cl)	130.	$Hg(Cl)_2$ (g)	166.	Sb_2S_3 (1)	202.	CrO_2 (g)
23.	SH	59.	Co (s) B	95.	$Pb(Cl)_2$ (s)	131.	Hg_2Cl_2 (s)	167.	SbH_3 (g)	203.	CrO_3 (g)
24.	SO	60.	Co (s) C	96.	$Pb(Cl)_2$ (1)	132.	HgH (g)	168.	SbCl (g)	204.	H_2CrO_4 (g)
25.	CS	61.	Co (1)	97.	$Pb(Cl)_2$ (g)	133.	Se (g)	169.	$SbCl_2$ (g)	205.	Cr_2O_3 (s)
26.	NO	62.	CoO (s)	98.	$Pb(Cl)_4$	134.	Se (s)	170.	$SbCl_3$ (g)	206.	CrO_3 (s)
27.	N_2O	63.	CoO (g)	99.	PbH	135.	SeH_2	171.	$SbCl_3$ (1)	207.	$CrCl_2$ (s)
28.	NO_2	64.	Co_3O_4 (s)	100.	$Pb(CH_3)_4$	136.	Se_2C	172.	$HSbO_3$ (g)	208.	$CrCl_3$ (s)
29.	HCN	65.	CoS (s)	101.	$PbCO_3$ (c)	137.	SeCO	173.	H_3SbO_4 (g)	209.	$Cr(SO_4)_3$
30.	NH_3	66.	$CoCO_3$ (s)	102.	$PbSO_4$	138.	SeO (g)	174.	$Sb_2(SO_4)_3$	210.	$CuCl_2$ (g)
31.	Cl	67.	$CoSO_4$	103.	Be (g)	139.	SeO_2 (g)	175.	VO_3H_2 (g)	211.	CuH (g)
32.	Cl_2	68.	As (g)	104.	Be (1)	140.	Se_2 (g)	176.	V_2O_5 (s)	212.	$CuCl_2$ (s)
33.	O_2 (g)	69.	As_2 (g)	105.	Be (s)	141.	$Se(CH_3)_2$	177.	V_2O_5 (1)	213.	Cu (s)
34.	CH_4	70.	As_4 (g)	106.	BeO (g)	142.	SeCS (g)	178.	VO (s)	214.	Cu (1)
35.	$MoCl_2$ (g)	71.	AsO (g)	107.	BeO (1)	143.	SeC (g)	179.	VO (g)	215.	Cu (g)
36.	MoCl (g)	72.	As_2O_3	108.	BeO (s)	144.	Ni (s) A	180.	V_2O_3 (s)	216.	CuO (s)

Continued

TABLE A.3-1. (Continued)

217.	CuO (g)	247.	SnO (g)	277.	ZnH (g)	307.	$Cd(CH_3)_2$	337.	Ba (1)
218.	Cu_2	248.	SnO_2 (s)	278.	ZnO (g)	308.	$CdCO_3$	338.	Ba (g)
219.	Cu_2O (s)	249.	SnS (s) A	279.	ZnO (s)	309.	$CdSO_4$	339.	BaCl (g)
220.	Cu_2O (1)	250.	SnS (s) B	280.	ZnS (s)	310.	B_2O_3 (g)	340.	$BaSO_4$ (s)
221.	CuCl (s)	251.	SnS_2 (s)	281.	$ZnCO_3$ (s)	311.	BH_3O_3 (g)	341.	UCl_3 (s)
222.	CuCl (1)	252.	SnS (g)	282.	$ZnCl_2$ (s)	312.	BHO_2 (g)	342.	UCl_3 (1)
223.	CuCl (g)	253.	$SnCl_2$ (g)	283.	$ZnSO_4$	313.	BO (g)	343.	UCl_3 (g)
224.	CuS (s)	254.	$SnCl_4$ (g)	284.	Ge (g)	314.	BO_2 (g)	344.	U (s) A
225.	Cu_2S (s)	255.	SnH (g)	285.	Ge (s)	315.	$B_2(OH)_4$ (g)	345.	U (s) B
226.	$CuCO_3$ (s)	256.	SnCl (g)	286.	GeH (g)	316.	B_2O_2 (g)	346.	U (s) C
227.	$CuSO_4$	257.	$Sn(SO_4)_2$	287.	GeO (g)	317.	B_2O_3 (s)	347.	U (1)
228.	P_2 (g)	258.	Mn (g)	288.	GeO_2 (s)	318.	B_2O_3 (1)	348.	$U(CO_3)_2$ (s)
229.	PCl_5 (g)	259.	MnO (s)	289.	GeS (s)	319.	BH_3 (g)	349.	$U(SO_4)_2$ (s)
230.	P (g)	260.	MnO (g)	290.	GeS_2 (s)	320.	BH_2 (g)	350.	UCl_5 (s)
231.	PS (g)	261.	$MnCl_2$ (g)	291.	GeS (g)	321.	$B(OH)_2$ (g)	351.	UCl_5 (1)
232.	PO (g)	262.	MnH (g)	292.	GeH_4 (g)	322.	BCl_3 (g)	352.	UCl_5 (g)
233.	PO_2 (g)	263.	Mn_2O_3 (s)	293.	GeCl (g)	323.	BOCl (g)	353.	UCl_4 (s)
234.	P_4O_6 (g)	264.	Mn_3O_4 (s)	294.	$GeCl_4$ (g)	324.	BaS (g)	354.	UCl_4 (1)
235.	P_4O_{10} (s)	265.	MnS (s)	295.	$Ge(SO_4)_2$	325.	BaS (s)	355.	UCl_4 (g)
236.	P_4O_{10} (g)	266.	$MnCO_3$ (s)	296.	Cd (g)	326.	$BaCl_2$ (s)	356.	$UOCl_2$ (s)
237.	PCl (g)	267.	MnS_2 (s)	297.	Cd (1)	327.	$BaCl_2$ (1)	357.	$UOCl_3$ (s)
238.	$POCl_3$ (g)	268.	MnCl (g)	298.	CdO (s)	328.	$BaCl_2$ (g)	358.	UOCl (s)
239.	PCl_3 (g)	269.	$MnCl_2$ (s)	299.	CdO (g)	329.	BaO (s)	359.	UCl_6 (1)
240.	$PSCl_3$ (g)	270.	$MnSO_4$	300.	CdS (s)	330.	BaO (g)	360.	UCl_6 (g)
241.	PH (g)	271.	$Mn_2(SO_4)_3$	301.	CdCl (g)	331.	BaH (g)	361.	US_2 (s)
242.	PH_2 (g)	272.	Zn (g)	302.	$CdCl_2$ (g)	332.	$BaCO_3$ (s) A	362.	US (s)
243.	PH_3 (g)	273.	Zn (s)	303.	$CdCl_2$ (1)	333.	$BaCO_3$ (s) B	363.	UO_3 (s)
244.	Sn (g)	274.	ZnCl (g)	304.	$CdCl_2$ (s)	334.	$BaCO_3$ (s) C	364.	U_4O_9 (s)
245.	Sn (1)	275.	$ZnCl_2$ (g)	305.	$Cd(OH)_2$ (g)	335.	Ba (s) A	365.	U_3O_8 (s)
246.	SnO (s)	276.	$ZnCl_2$ (1)	306.	CdH (g)	336.	Ba (s) B	366.	UO_2 (s)
								367.	UO_2Cl_2 (s)
								368.	UO_2 (g)

TABLE A.3-2. COMPARISON OF OBSERVED AND PREDICTED TRACE ELEMENT VOLATILIZATION IN THE COED PROCESS

Element	Coal wt, ppm	Important species, %	Percent volatilized: Observed	Percent volatilized: Equilibrium
Hg	0.27	Hg(g)	96	100
Se	1.7	H_2Se(97), COSe(2.9), Se(g)(0.22)	74	100
As	9.6	AsN(g)(30), $HAsO_3$(g)(27), H_3AsO_4(g)(23), As_2(g)(15), AsH_3(g)(3.1), As(g)(0.44), AsO(g)(0.24)		
Pb	5.9	Pb(g)(73), PbS(g)(27), PbCl(g)(0.21)	63	100
Cd	0.78	Cd(g)	62	100
Sb	0.15	SbCl(g)(51), H_3SbO_4(g)(45), Sb(g)(3.2), $HSbO_3$(g)(0.60)	33	100
V	33	V_2S_3(1)(100)	30	0.0
Ni	12	Ni(s)(100)	24	0.015
Be	0.92	$Be(OH)_2$(g)	18	100
Cr	15	Cr_2O_3(s)	0.0	0.0
B	102	H_3BO_3(g)(62), HBO_2(g)(38)		100
Co	9.6	Co(s)(59), CoH(g)(41)		41.2
Cu	15	Cu(s)(67), CuH(g)(25), Cu(g)(7), CuCl(g)(1.9)		33.4
Ge	6.9	GeO(g)(91), GeS(g)(9)		100
Mn	49	MnO(s)(100), Mn(g)(0.03)		0.03
Mo	7.5	H_2MoO_4(g)(73), Mo(s)(16), $MoCl_2$(g)(11)		83.8
P	71	P_4O_6(g)		100
Sn	4.8	SnS(g)(95), SnO(g)(3.7), SnH(g)(1.2)		100
U	1.3	UO_2(s)		0.0
Zn	272	Zn(g)		100
Ba	130	$BaCO_3$(s)(96), $BaCl_2$(g)(4)		4.0

Both the short- and intermediate-term models use the RAM formulation of the Gaussian dispersion equation and the RAM assumption for calculating plume reflections within the mixing layer. Plume rise is calculated using Briggs 1970 "X" formula. The Pasquill-Gifford coefficients of dispersion described in Turner's "Workbook" are used for all atmospheric stability conditions. Wind speeds were adjusted from the surface to the plume height using a power law relationship.

The short-term dispersion model used in this study is capable of predicting average concentrations for time period ranging from several minutes to several hours. The intermediate model has the option of subdividing a given averaging period into smaller time intervals with specified plant emissions and meteorological conditions which are assumed constant within that time interval, but which can change from interval to interval. The model solves the Gaussian dispersion equation for each of these intervals, and computes the final average concentration as a weighted average of the contributions from the individual time increments.

The model inputs consist of two classes of data. The first describes the atmospheric conditions during which the pollutant is being dispersed, while the second class deals with emission rates and stack parameters.

The EPA CRSTER model was used as a screening tool to identify worst-case meteorological conditions. CRSTER locates all emission sources and uses actual meteorological data. These consist of hourly surface observations with wind directions reported to the nearest 10 degrees and twice daily mixing depths determined from upper air soundings. Meteorological data in this format were not readily available for the Northeast part of the U.S.; hence data for Houston's Hobby Airport in 1970 were used instead. Since the current analysis is non-site specific, this is an acceptable procedure.

The worst-cases 1-, 3-, and 24-hour periods were identified with a CRSTER run for CO. The meteorological conditions so determined were then used in conjunction with the Radian short- and intermediate-term models to produce 1-, 3-, and 24-hour downwind concentration curves for the pollutants considered.

REFERENCES

1. McCaleb, T. L., and C. L. Chem. Coal Processing: Low B.t.u. Gas as an Industrial Fuel. Chem. Eng. Progress 73(6):82-88, 1977.

2. Woodruff, David D. McDowell-Wellman Engineering Company. Personal Communication. December 19, 1977.

3. Cleland, J. C., and C. L. Kingsbury. Multimedia Environmental Coals for Environmental Assessment, Volume I and Volume II - MEC Charts and Background Information. PB-276 919, v. I, PB-276 920, v. II, EPA-600/7-77-136a, b. Research Triangle Inst., Research Triangle Park, NC, November 1977.

4. Environmental Protection Agency. Hazardous Wastes, Proposed Guidelines and Regulations and Proposal on Identification and Listing. Federal Register 43(243):58946-59028, 1978.

5. McDowell Wellman Engineering Co. Wellman-Galusha Gas Producers. Form No. 576, Company Brochure. Cleveland, OH, 1976.

6. Ball, D., G. Smithson, R. Engdahl, and A. Putnam. Study of Potential Problems and Optimum Opportunities in Retrofitting Industrial Processes to Low- and Intermediate-Energy Gas from Coal. PB-237 116, EPA-650/2-74-052. Battelle Columbus Labs., Columbus, OH, May 1974.

7. Dravo Corp. Handbook of Gasifiers and Gas Treatment Systems. FE-1772-11. Pittsburgh, PA, February 1976.

8. Culbertson, R. W., and S. Kasper. Economic Advantages and Areas of Application of Small Gasifiers. Presented at the Fourth Annual International Conference on Coal Gasification, Liquefaction and Conversion to Electricity, Pittsburgh, PA, August 2-4, 1977.

9. Lisauskas, Robert A. Gasification of North Dakota Lignite in a Pilot Fixed Bed Gas Producer. Riley Research Report No. 086.83, American Natural Gas Contract No. 77007-08. Riley Stoker Corp., Worcester, MA, June 1, 1977.

10. Thomas, W. C., K. N. Trede, and G. C. Page. Environmental Assessment: Source Test and Evaluation Report--Wellman-Galusha (Glen Gery) Low-Btu Gasification. PB-80-102551, EPA-600/7-79-185. Radian Corp., Austin, TX, August 1979. 210 pp.

11. Hahn, O. J., D. P. Wesley, B. A. Swisshelm, and S. Maples. A Mass and Energy Balance of a Wellman-Galusha Gasifier. Fuel Process. Technol. 2:1-16, 1979.

12. Attar, Amir. Chemistry, Thermodynamics and Kinetics of Reactions of Sulphur in Coal-Gas Reactions: A Review. Fuel 57(4):201-212, 1978.

13. Page, Gordon C. Environmental Assessment: Source Test and Evaluation Report--Chapman Low-Btu Gasification. PB-289 940, EPA-600/7-78-202. Radian Corp., Austin, TX, October 1978.

14. Page, Gordon C. Fate of Pollutants in Industrial Gasifiers. Presented at the Environmental Aspects of Fuel Conversion Technology, III, Symposium, Hollywood, FL, September 13-16, 1977.

15. Rawdon, A. H., R. A. Lisauskas, and S. A. Johnson. Operation of a Commercial Size Riley-Morgan Coal Gasifier. Presented at the American Power Conference, Chicago, IL, April 19-21, 1976.

16. Riesenfeld, F. C., and A. C. Kohl. Gas Purification, Second ed. Gulf Publishing Co., Houston, TX, 1974.

17. Perry, Charles R. Basic Design and Cost Data on MEA Treating Units. In: Proceedings of the 1967 Gas Conditioning Conference, University of Oklahoma, Norman, OK.

18. Sigmund, Paul. Union Carbide Corp. Personal Communications. June 5 and 7, 1978.

19. Stern, Arthur C., ed. Air Pollution, Volume 4, Engineering Control of Air Pollution, Third ed. Academic Press, New York, NY, 1977.

20. Calvert, Seymour, Jhuda Goldshmid, David Leith, and Dilip Mehta. Wet Scrubber System Study. Volume I. Scrubber Handbook. PB-213 016. Ambient Purification Technology, Inc., Riverside, CA, 1972.

21. Heinrich, R. F., and J. R. Anderson. Electro-Precipitation, In: Chemical Engineering Practice, Vol. 3, H. W. Cremer, ed. Academic Press, New York, NY, 1975. pp. 484-534.

22. Oglesby, Sabert, Jr., and Grady B. Nichols. A Manual of Electrostatic Precipitator Technology. Part II. Application Areas. PB-196 381, APTD-0611. Southern Research Inst., Birmingham, AL, August 25, 1970.

23. Cavanaugh, E. C., W. E. Corbett, and G. C. Page. Environmental Assessment Data Base for Low/Medium-Btu Casification Technology. Volume I. Technical Discussion; Volume II. Appendices A-F. PB-274 844, V. I., PB-274 843, V. II, EPA-600/7-77-125a, b. Radian Corp., Austin, TX, November 1977.

24. Radian Corp. Environmental Control Selection Methodology for a Coal Conversion Demonstration Facility. DOE Contract No. EX-76-01-2314. Austin, TX, October 1978.

25. Kleeberg, Ulrich. Removal of Hydrogen Sulfide from Gases Using the Stretford Process. Presented at the Fifth International Conference on Coal Casification, Liquefaction and Conversion to Electricity, Pittsburgh, PA, August 8-10, 1978.

26. Woodall-Duckham Ltd. The Stretford Process. Company Brochure. Pittsburgh, PA, no date given.

27. Vasan, Srini. Holmes-Stretford Process Offers Economic H_2S Removal. Oil and Gas J. 76(1):78-30 (1978).

28. Ludberg, James E. Removal of Hydrogen Sulphide from Coke Oven Gas by the Stretford Process. Presented at the 64th Annual Air Pollution Control Association Meeting, Atlantic City, NJ, June 1971. Paper No. 71-161.

29. Hemmingway, John. Woodall-Duckham (USA). Personal Communication. August 24, 1978.

30. Moyes, A. J., and J. S. Wilkinson. Development of the Holmes-Stretford Process. Chemical Engineering (London) 282:84-90, 1974.

31. Zey, A. F. (Buzz). J. F. Pritchard & Co. Personal Communication. July 5, 1978.

32. Hemmingway, John. Woodall-Duckham (USA). Personal Communication. July 11, 1978.

33. Maddox, R. N. Gas and Liquid Sweetening. John M. Campbell Co., Norman, OK, 1974.

34. Moore, Tom. Jefferson Chemical Co. Personal Communications. June 2, July 13 and 18, 1978.

35. Goar, B. Gene, and Thomas O. Arrington. Guidelines Set for Handling Sour Gas. Oil and Gas J. 76(26):160-164, 1978.

36. Bombaugh, Karl J. Analyses of Grab Samples from Fixed-Bed Coal Gasification Processes. PB-276 608, EPA-600/7-77-141. Radian Corp., Austin, TX, December 1977.

37. Rawdon, A. H., R. A. Lisauskas, and S. A. Johnson. NO_x Formation in Low- and Intermediate-Btu Coal Gas Turbulent-Diffusion Flames. Presented at the NO_x Control Technology Seminar, sponsored by the Electric Power Research Inst., San Francisco, CA, February 5-6, 1976.

38. Lisauskas, Robert A., Stephen A. Johnson, and William P. Earley. Control of Condensable Tar Vapors From a Fixed-Bed Coal Gasification Process. In: Proceedings of the Fourth Energy Resources Conference, Lexington, KY, January 1976. pp. 31-37

39. Ball, D. A., A. A. Putnam, D. W. Hissong, J. Varga, B. C. Hsieh, J. H. Payer, and R. E. Barrent. Environmental Aspects of Retrofitting Two Industries to Low- and Intermediate-Energy Gas from Coal. PB-253 946, EPA-600/2-76-102. Battelle Columbus Labs., Columbus, OH, April 1976.

40. Nielsen, George F., ed. 1977 Keystone Coal Industry Manual. McGraw-Hill Book Co., New York, NY, 1977.

41. Gluskoter, H. J., R. R. Ruch, W. C. Miller, R. A. Cahill, G. B. Dreher, and J. K. Kuhn. TRACE ELEMENTS IN COAL: Occurrence and Distribution. EPA-600/7-77-064. Illinois State Geological Survey, Urbana, IL, June 1977.

42. Swanson, Vernon E., et al. Collection, Chemical Analysis and Evaluation of Coal Samples in 1975. Open File Report 76-468. U.S. Geological Survey, 1976.

43. Acurex Corporation. Environmental Assessment Methodology Workshop. Volume 1. Technical Presentations; and Volume 2. Background Information. Workshop was held January 16-18, 1979 at Arlie House, Virginia and was sponsored by EPA.

44. Cleland, John G., Duane G. Nichols, and Forest O. Mixon. Small Semi-Batch Gasifier Operation for Pollutant Determination and Control Evaluation. Presented at the 85th National Meeting of the American Institute of Chemical Engineers, Philadelphia, PA, June 4-8, 1978.

45. Waitzman, D. A., H. L. Faucett, E. E. Kindahl, S. V. Tomlinson, D. E. Nichols, and W. J. Broadfoot. Evaluation of Fixed-Bed, Low-Btu Coal Gasification Systems for Retrofitting Power Plants. PB-241 672, EPRI 203-1, TVA Bulletin Y-91. Electric Power Research Inst., Palo Alto, CA, and Tennessee Valley Authority, Muscle Shoals, AL, February 1975.

46. Environmental Protection Agency. Standards Support and Environmental Impact Statement, Volume I: Proposed Standards of Performance for Petroleum Refinery Sulfur Recovery Plants. PB-257 975, EPA-450/2-76-016a. Emission Standards and Engineering Div., Research Triangle Park, NC, September 1976.

47. Collins, R. V. Radian Corporation. Personal Communication. August 15, 1979.

48. Nicklin, T., and B. H. Holand. Removal of Hydrogen Sulfide from Coke-Oven Gas by the Stretford Process. DECHEMA Monograph 48(835-858):243-271, 1963.

49. Wendt, C. J., Jr., and L. W. Dailey. Gas Treating: The SNPA Process. Hydrocarbon Process. 46(10):155-157, 1967.

50. Environmental Protection Agency. Compilation of Air Pollutant Emission Factors, Second edition with Supplements. AP-42. Research Triangle Park, NC, 1973.

51. Coar, B. Gene. Impure Feeds Cause Claus Plant Problems. Hydrocarbon Process. 53(7):129-132, 1974.

52. Black, Cliff, and Earl Jarvis. Ralph M. Parsons Co. Personal Communication. August 17, 1978.

53. Barthel, Yves, Yaouda Bistri, Andre Deschamps, Philippe Renault, Jean Claude Simadoux, and Robert Dutriau. Treat Claus Tail Gas. Hydrocarbon Process. 50(5):89-91, 1971.

54. Cameron, L. C. Aquitaine Improves Sulfreen Process for More H_2S Recovery. Oil and Gas J. 72(25):110-112, 117, 120, 1974.

55. Stein, Manny. Ralph M. Parsons Co. Personal Communication. August 29, 1978.

56. Calliani, Omar. Black, Sivalls & Bryson. Personal Communication. August 15, 1978.

57. Zey, A. J. (Buzz), and Dale Williams. J. F. Pritchard & Co. Personal Communication. August 1, 1978.

58. Zey, A. J. (Buzz). J. F. Pritchard & Co. Personal Communication. August 15, 1978.

59. Leland, Roger S. J. F. Pritchard & Co. Personal Communication. July 25, 1978.

60. Williams, Dale. J. F. Pritchard & Co. Personal Communication. September 22, 1978.

61. Battelle Memorial Institute. Program for the Management of Hazardous Wastes, Volumes 1 and 2. PB-233 630 and PB-233 631. Columbus, OH, 1974.

62. Guthrie, Kenneth M. Process Plant Estimating Evaluation and Control. Craftsman Book Co., Solana Beach, CA, 1974.

63. Perry, John H., ed. Chemical Engineer's Handbook, Fourth ed. McGraw-Hill Book Co., New York, NY, 1963.

64. Peters, Max S., and Klaus D. Timmerhaus. Plant Design and Economics for Chemical Engineers, Second ed. McGraw-Hill Book Co., New York, NY, 1968.

65. Monroe, E. S. Burning Waste Waters. Chemical Engineering 75(20):215-220, 1968.

66. Massey, Michael J., and Robert W. Dunlap. Economics and Alternatives for Sulfur Removal from Coke Oven Gas. J. Air Pollut. Contr. Assoc. 25(10):1019-1027, 1975.

67. Mitachi, Kazuo. Cleaning Na Absorbents in Tailgas Recovery Circuits. Chemical Engineering 80(24):78-79, 1973.

68. Cicalese, Julius. Catalytic, Inc. Personal Communication. December 15, 1976.

69. NCE (Nittetu Chemical Engineering Ltd.) Incineration and Thermal Treatment Process Demonstrated by Over 100 Plants in 10 Countries. Chemical Engineering 85(18):107, 1978.

70. Duvel, W. A., Jr., R. A. Atwood, W. R. Gallagher, R. C. Knight, and R. J. McLaren. FGD Sludge Disposal Manual. EPRI-FP-977. Michael Baker, Jr., Inc., Beaver, PA, January 1979.

71. Wilson, David Gordon, ed. Handbook of Solid Waste Management. Van Nostrand, New York, NY, 1977.

72. Barrier, J. W., H. L. Faucett, and L. J. Henson. Economics of Disposal of Lime/Limestone Scrubbing Wastes: Untreated and Chemically Treated Wastes. EPA-600/7-78-023a, TVA Bulletin Y-123. Tennessee Valley Authority, National Fertilizer Development Center, Muscle Shoals, AL, February 1978.

73. Handy, Robert, and Anton Schindler. Estimation of Permissible Concentrations of Pollutants for Continuous Exposure. PB-253 959, EPA-600/2-76-155. Research Triangle Inst., Research Triangle Park, NC, June 1976.

74. Schalit, L. M., and K. J. Wolfe. SAM/1A: A Rapid Screening Method for Environmental Assessment of Fossil-Energy Process Effluents. PB-277 088, EPA-600/7-78-015. Acurex Corp./ Aerotherm Corp., Mountain View, CA, February 1978.

75. Ghassemi, M., K. Crawford, and S. Quinlivan. Environmental Assessment Report: Lurgi Coal Gasification Systems for SNG. PB-298 109, EPA-600/7-79-120. TRW Environmental Engineering Div., Redondo Beach, CA, May 1979.

76. Whittiker, Donald E. Pullman Kellogg. Personal Communication. August 21, 1979.

77. Environmental Protection Agency, Office of Air Quality Planning and Standards. Control of Emissions from Lurgi Coal Gasification Plants. PB-279 012, EPA-450/2-78-012. Research Triangle Park, NC, March 1978.

78. U.S. Department of the Interior, Bureau of Mines. Noise Control, Proceedings: Bureau of Mines Technology Transfer Seminar, Pittsburgh, PA, January 22, 1975. U.S. Bur. Mines, Inform. Cir. 8686. Pittsburgh, PA, 1975.

79. Tracor, Inc. Guidelines on Noise. Medical Research Report No. EA7301. American Petroleum Institute, Washington, DC 1973.

80. Wilde, Kenneth A. Chemical Equilibrium by Minimization of Free Energy. ERDA Contract No. E(49-18)-1795. Radian Corp., Austin, TX, 1975.

TECHNICAL REPORT DATA
(Please read Instructions on the reverse before completing)

1. REPORT NO. EPA-600/7-80-093	2.	3. RECIPIENT'S ACCESSION NO.
4. TITLE AND SUBTITLE Environmental Assessment Report: Wellman-Galusha Low-Btu Gasification Systems		5. REPORT DATE May 1980
		6. PERFORMING ORGANIZATION CODE
7. AUTHOR(S) Pat Murin, Theresa Sipes, and G.C. Page		8. PERFORMING ORGANIZATION REPORT NO.
9. PERFORMING ORGANIZATION NAME AND ADDRESS Radian Corporation 8500 Shoal Creek Boulevard Austin, Texas 78766		10. PROGRAM ELEMENT NO. INE825
		11. CONTRACT/GRANT NO. 68-02-2147, Exhibit A
12. SPONSORING AGENCY NAME AND ADDRESS EPA, Office of Research and Development Industrial Environmental Research Laboratory Research Triangle Park, NC 27711		13. TYPE OF REPORT AND PERIOD COVERED Final; 5/78-9/79
		14. SPONSORING AGENCY CODE EPA/600/13

15. SUPPLEMENTARY NOTES IERL-RTP project officer is William J. Rhodes, Mail Drop 61, 919/541-2851. EPA-600/7-78-202 and EPA-600/7-79-185 are related reports.

16. ABSTRACT The report, an Environmental Assessment Report (EAR) for Wellman-Galusha low-Btu gasification systems, is part of an overall environmental assessment program for low-medium-Btu gasification technology. This EAR provides EPA administrators and program offices with a document representing the Office of Research and Development's (ORD's) research input to standards support for Wellman-Galusha gasification facilities. This EAR is a detailed evaluation and presentation of process, control, and waste stream data collected from field tests, open literature, vendors, process licensors, and computer modeling. It gives an overview of Wellman-Galusha gasification systems, including estimates of the systems' energy conversion efficiencies and capital and operating costs. It provides data characterizing the systems' input materials, process streams, products, by-products, and multimedia discharges. It identifies pollution control alternatives for the multimedia discharges and toxic substances in the systems' products and by-products, and estimates their costs and energy impacts. It assesses regulatory requirements for the environmental impacts of the systems. It gives data needs and recommendations for obtaining those data, and discusses the EPA program office issues and areas of concern for the Wellman-Galusha low-Btu gasification technology.

17. KEY WORDS AND DOCUMENT ANALYSIS

a. DESCRIPTORS	b. IDENTIFIERS/OPEN ENDED TERMS	c. COSATI Field/Group
Pollution Expenses	Pollution Control	13B 05C,14A
Coal Gasification	Stationary Sources	13H
Assessments	Wellman-Galusha Process	14B
Energy Conversion Techniques	Environmental Assessment	10A
Efficiency		14B

18. DISTRIBUTION STATEMENT Release to Public	19. SECURITY CLASS (This Report) Unclassified	21. NO. OF PAGES 306
	20. SECURITY CLASS (This page) Unclassified	22. PRICE

EPA Form 2220-1 (9-73)