United States
Environmental Protection
Agency

Industrial Environmental Research
Laboratory
Research Triangle Park NC 27711

EPA-600/7-80-097
May 1980

EPA

# Environmental Assessment: Source Test and Evaluation Report — Wellman-Galusha (Ft. Snelling) Low-Btu Gasification

## Interagency Energy/Environment R&D Program Report

## RESEARCH REPORTING SERIES

Research reports of the Office of Research and Development, U.S. Environmental Protection Agency, have been grouped into nine series. These nine broad categories were established to facilitate further development and application of environmental technology. Elimination of traditional grouping was consciously planned to foster technology transfer and a maximum interface in related fields. The nine series are:

1. Environmental Health Effects Research
2. Environmental Protection Technology
3. Ecological Research
4. Environmental Monitoring
5. Socioeconomic Environmental Studies
6. Scientific and Technical Assessment Reports (STAR)
7. Interagency Energy-Environment Research and Development
8. "Special" Reports
9. Miscellaneous Reports

This report has been assigned to the INTERAGENCY ENERGY-ENVIRONMENT RESEARCH AND DEVELOPMENT series. Reports in this series result from the effort funded under the 17-agency Federal Energy/Environment Research and Development Program. These studies relate to EPA's mission to protect the public health and welfare from adverse effects of pollutants associated with energy systems. The goal of the Program is to assure the rapid development of domestic energy supplies in an environmentally-compatible manner by providing the necessary environmental data and control technology. Investigations include analyses of the transport of energy-related pollutants and their health and ecological effects; assessments of, and development of, control technologies for energy systems; and integrated assessments of a wide range of energy-related environmental issues.

## EPA REVIEW NOTICE

This report has been reviewed by the participating Federal Agencies, and approved for publication. Approval does not signify that the contents necessarily reflect the views and policies of the Government, nor does mention of trade names or commercial products constitute endorsement or recommendation for use.

This document is available to the public through the National Technical Information Service, Springfield, Virginia 22161.

EPA-600/7-80-097

May 1980

# Environmental Assessment: Source Test and Evaluation Report — Wellman-Galusha (Ft. Snelling) Low-Btu Gasification

by

M.P. Kilpatrick, R.A. Magee, T.E. Emmel,
and G.C. Page

Radian Corporation
P.O. Box 9948
Austin, Texas 78766

Contract No. 68-02-2147
Exhibit A
Program Element No. INE825

EPA Project Officer: William J. Rhodes

Industrial Environmental Research Laboratory
Office of Environmental Engineering and Technology
Research Triangle Park, NC 27711

Prepared for

U.S. ENVIRONMENTAL PROTECTION AGENCY
Office of Research and Development
Washington, DC 20460

## ABSTRACT

This report contains the results of a Source Test and Evaluation Program performed on a Wellman-Galusha gasification facility at the U.S. Bureau of Mines Twin Cities Metallurgy Research Center, Fort Snelling site. The gasifier is operated as part of a Bureau of Mines program to investigate the use of low-Btu gas as a fuel for iron ore pelletizing. The major objectives of this program were to provide survey data from which a preliminary assessment of potential environmental imact could be made, and to identify potential problem areas which would require further characterization or pollution control technology implementation. Operational difficulties with the test burner resulted in the product gas being vented to the start-up flare, bypassing the cyclone, during the majority of the lignite test (North Dakota, Indianhead), December 9-15, 1978. Therefore, data for the test burner is limited somewhat and the product gas characterization does not reflect the particulate removal capability of the process cyclone. Within these constraints, the test objectives were met.

The Source Analysis Model/1A was used to provide a rapid screening technique for identifying and prioritizing potentially harmful waste streams. Specifically identified as major contributors to the overall health discharge severity were benzopyrene and carbon monoxide in the product gas; arsenic and chromium in the test burner flue gas. The gasifier ash sluice water exceeded Federal drinking water standards for selenium, iron, sulfate, and total dissolved solids; and the cyclone dust quench water exceeded the standards for fluoride, arsenic, lead, and iron. Leachates of the gasifier ash and cyclone dust fall well below Resource Conservation and Recovery Act specified limits for trace elements. The product gas and the gasifier ash sluice water exhibited moderate in vitro cytotoxicity against WI-38 human lung fibroblast cells.

TABLE OF CONTENTS


| | | Page |
|---|---|---|
| Abstract | | ii |
| List of Figures | | v |
| List of Tables | | vi |
| Acknowledgments | | ix |
| 1 | INTRODUCTION | 1 |
| 1.1 | Test Overview | 1 |
| 1.2 | Results | 5 |
| 1.3 | Recommendations | 10 |
| 2 | PLANT DESCRIPTION | 14 |
| 2.1 | Process Description | 14 |
| 2.2 | Plant Operation | 18 |
| 2.3 | Process Flow Rates and Mass Balances | 18 |
| 3 | METHODOLOGIES | 23 |
| 3.1 | Sampling Methodologies | 23 |
| 3.1.1 | Product Gas Sampling | 23 |
| 3.1.2 | Electrostatic Precipitator Sampling | 25 |
| 3.1.3 | Trace Element Sampling | 29 |
| 3.1.4 | Ammonia and Cyanide Sampling | 29 |
| 3.1.5 | Gas Phase Sulfur Species Collection | 32 |
| 3.1.6 | Gas Sampling for Organics | 32 |
| 3.2 | Analytical Methodologies | 34 |
| 3.2.1 | Elemental Analysis | 34 |
| 3.2.2 | Organic Screening Analysis | 34 |
| 3.3 | Detailed Organic Analysis Approach | 44 |
| 3.3.1 | Specific Ion Monitoring GC/MS | 47 |
| 3.3.2 | Halogen-Specific Gas Chromatography | 49 |
| 3.4 | Quality Assurance | 49 |

TABLE OF CONTENTS

(Continued)


| | | Page |
|---|---|---|
| 4 | RESULTS | 52 |
| 4.1 | Source Analysis Model/1A Results | 52 |
| 4.2 | Bioassay Results Summary | 71 |
| 4.2.1 | Mutagenicity Test Results (Ames) | 71 |
| 4.2.2 | In Vitro Cytotoxicity Test Results (WI-38, RAM) | 72 |
| 4.2.3 | Acute In Vivo Toxicity Test Results (Rodent) | 72 |
| 4.2.4 | Ecological Testing | 72 |
| 4.3 | Chemical Analysis Results | 73 |
| 4.3.1 | Gasification System Overview | 73 |
| 4.3.2 | Gas Streams | 84 |
| 4.3.3 | Liquid Streams | 91 |
| 4.3.4 | Solid Streams | 94 |
| References | | 110 |

LIST OF FIGURES


| Number | | Page |
|---|---|---|
| 1-1 | Operating Schematic of the Wellman-Galusha Gasifier | 3 |
| 1-2 | Data Matrix for the Ft. Snelling Gasifier STE | 4 |
| 1-3 | Total Stream, Weighted Discharge Severities and Bioassay Test Results for the Fort Snelling Wellman-Galusha Process Streams | 6 |
| 1-4 | Elemental Distributions in the Gasifier Ash and Cyclone Dust Ordered by Increasing Elemental Boiling Point (up to 2212°C) | 8 |
| 1-5 | Elemental Distributions in the Gasifier Ash and Cyclone Dust Ordered by Increasing Elemental Boiling Point (2270 to 5927°C) | 9 |
| 2-1 | Operating Schematic of the Wellman-Galusha Gasifier | 15 |
| 2-2 | Diagram of a Wellman-Galusha Gasifier Equipped with a Coal Bed Agitator | 16 |
| 2-3 | Normal Operation Schematic of the Wellman-Galusha Gasifier | 19 |
| 2-4 | Operating Schematic of the Wellman-Galusha Gasifier with Product Gas Vented | 20 |
| 2-5 | Summary of Fort Snelling Gasifier Operation and Sampling Periods | 21 |
| 3-1 | Sampling Matrix for the Wellman-Galusha Gasifier at the U.S. Bureau of Mines Plant | 24 |
| 3-2 | Product Gas Sampling System with ESP | 26 |
| 3-3 | Schematic of ESP Used for Aerosol and Particulate Removal | 27 |
| 3-4 | Analysis Matrix for Solid Samples | 35 |
| 3-5 | Analysis Matrix for Liquid Samples | 36 |
| 3-6 | Organic Analysis Prioritization Logic Sequence | 46 |
| 3-7 | Specific Ion Monitoring Plot for Benzo(b)fluoranthene | 48 |
| 4-1 | Worst Case Weighted Discharge Severity Summary Based on Screening Analysis Results Only | 54 |
| 4-2 | Gasifier Ash Major Component Enrichment Ratio vs. Elemental Boiling Point | 98 |
| 4-3 | Gasifier Ash Trace Element Enrichment Ratio vs. Elemental Boiling Point | 99 |
| 4-4 | Cyclone Dust Major Component Enrichment Ratio vs. Elemental Boiling Point | 100 |
| 4-5 | Cyclone Dust Trace Element Enrichment Ratio vs. Elemental Boiling Point | 101 |

LIST OF TABLES


| Number | | Page |
|---|---|---|
| 1-1 | Comparison of Solid Waste Extracts and RCRA Extract Limits | 11 |
| 1-2 | Comparison of Wastewater Streams and Drinking Water Standards | 12 |
| 2-1 | Fort Snelling Process Flow Rates and Material Balances | 22 |
| 3-1 | ESP Collection Efficiency | 28 |
| 3-2 | Ammonia Collection Efficiency | 30 |
| 3-3 | Cyanide Collection Efficiency | 31 |
| 3-4 | Total Volatile Sulfur in Gas Streams by Impinger Collection | 33 |
| 3-5 | Comparison of ICP and SSMS Data for Liquids | 38 |
| 3-6 | Comparison of ICP and SSMS Data for Solids | 39 |
| 3-7 | Volatile Metal Comparison | 40 |
| 3-8 | Added Extraction Efficiency Using Ethyl Ether for Solids | 42 |
| 3-9 | Added Extraction Efficiency Using Ethyl Ether for Liquids | 43 |
| 3-10 | Comparison of Radian ICP Data and Reported Values for EPA Water Quality Control Sample #3 | 51 |
| 4-1 | Product Gas Particulate/Tar Major Contributions to DS and WDS for Health Effects Including Worst Case Assumptions | 56 |
| 4-2 | Product Gas Particulate/Tar Major Contributions to DS and WDS for Ecological Effects Including Worst Case Assumptions | 57 |
| 4-3 | Product Gas Organic Module Major Contributions to DS and WDS for Health Effects Including Worst Case Assumptions | 58 |
| 4-4 | Product Gas Organic Module Major Contributions to DS and WDS for Ecological Effects Including Worst Case Assumptions | 59 |
| 4-5 | Test Burner Flue Gas Major Contributions to DS and WDS for Health Effects Including Worst Case Assumptions | 60 |
| 4-6 | Test Burner Flue Gas Major Contributions to DS and WDS for Ecological Effects Including Worst Cast Assumptions | 61 |
| 4-7 | Gasifier Ash Major Contributions to DS and WDS for Health Effects Including Worst Case Assumptions | 62 |

LIST OF TABLES
(Continued)


| Number | | Page |
|---|---|---|
| 4-8 | Gasifier Ash Major Contributions to DS and WDS for Ecological Effects Including Worst Case Assumptions | 63 |
| 4-9 | Gasifier Ash Sluice Water Major Contributions to DS and WDS for Health Effects Including Worst Case Assumptions | 64 |
| 4-10 | Gasifier Ash Sluice Water Major Contributions to DS and WDS for Ecological Effects Including Worst Case Assumptions | 65 |
| 4-11 | Cyclone Dust Major Contributions to DS and WDS for Health Effects Including Worst Case Assumptions | 66 |
| 4-12 | Cyclone Dust Major Contributions to DS and WDS for Ecological Effects Including Worst Case Assumptions | 67 |
| 4-13 | Cyclone Dust Quench Water Major Contributions to DS and WDS for Health Effects Including Worst Case Assumptions | 68 |
| 4-14 | Cyclone Dust Quench Water Major Contributions to DS and WDS for Ecological Effects Including Worst Case Assumptions | 69 |
| 4-15 | Discharge Severity and Weighted Discharge Severity Summations for the Ft. Snelling Wellman-Galusha Process Streams Including Worst Case Assumptions | 70 |
| 4-16 | Bioassay Test/Results Matrix | 71 |
| 4-17 | Mass Flow for the Minor and Trace Elements | 74 |
| 4-18 | Percent Distribution of the Trace Elements and Minor Elements with the Product Gas Routed to the Start-Up Flare | 77 |
| 4-19 | Relative Elemental Distribution Estimated for Discharge Streams in Normal Operating Configuration | 80 |
| 4-20 | Extractable Organic Summary | 83 |
| 4-21 | Gaseous Species Analysis Summary | 85 |
| 4-22 | Trace and Minor Element Compositions of Product Gas and Test Burner Flue Gas | 87 |
| 4-23 | Organic Compounds Identified from the Product Gas | 90 |

LIST OF TABLES
(Continued)


| Number | | Page |
|---|---|---|
| 4-24 | Wastewater and RCRA Leachate General Composition Summary | 92 |
| 4-25 | Trace and Minor Elements in Ash Sluice Water, Cyclone Quench Water, and Service Water | 93 |
| 4-26 | Characterization Analysis Results for Solid Streams | 95 |
| 4-27 | Trace and Minor Elemental Results for Coal, Gasifier Ash, and Cyclone Dust | 96 |
| 4-28 | Enrichment Ratios for the Gasifier Ash and Cyclone Dust | 97 |
| 4-29 | Gasifier Ash Sluice Water and RCRA Leachate Elemental Composition | 103 |
| 4-30 | Cyclone Dust Quench Water and RCRA Leachate Elemental Composition | 104 |
| 4-31 | Gasifier Ash Total Element and Total Soluble Element Concentrations | 106 |
| 4-32 | Cyclone Dust Total Element and Total Soluble Element Concentrations | 107 |
| 4-33 | Comparison of Isotope Analysis and SSMS | 109 |
| 4-34 | Abundances for Uranium Isotopes | 109 |
| 4-35 | Gross Alpha and Beta Analysis and Specific Isotope Analysis Comparison | 109 |

ACKNOWLEDGMENT

The authors would like to express their appreciation to the operators and staff of the Bureau of Mines Twin Cities Metallurgy Research Center for assistance and advice during the performance of this effort. Guidance and review by W. J. Rhodes and T. K. Janes of EPA/IERL-RTP also contributed significantly to the successful completion of this source test and evaluation program.

In addition to the authors, the following members of the Radian staff were major contributors to the program:

E. A. Baker
R. V. Collins
G. M. Crawford
M. J. Kowalski
D. S. Lewis
W. A. Williams

# SECTION 1

# INTRODUCTION AND SUMMARY

Radian Corporation of Austin, Texas is performing a comprehensive assessment of low-Btu gasification technology under contract to the Environmental Protection Agency. A major portion of this assessment involves Source Test and Evaluation (STE) programs at operating low-Btu gasification facilities.

This report describes the results of a STE performed on a Wellman-Galusha gasification facility at the Bureau of Mines (BOM) Twin Cities Metallurgy Research Center at the Fort Snelling site. The gasifier is operated by BOM as part of a program to investigate the feasibility of using low-Btu gas as fuel for an iron ore pelletizing kiln. The BOM conducts the program and operates the facility in cooperation with the Pellet Energy Group Steering Committee which includes:

Allis Chalmers
American Natural Gas Service Company
Bechtel Corporation
Bureau of Mines
Burlington Northern
Cleveland-Cliffs Iron Company
Department of Energy
Dravo Corporation
Eveleth Expansion Company
Hanna Mining Company
Inland Steel Company
Inter-City Gas Ltd.
Mansfield Carbon Company
McDowell-Wellman Engineering Company
Davy McKee Corporation
Peoples Natural Gas
Pickens Mather and Company
Reserve Mining Company
U.S. Steel Corporation
Western Energy Company

## 1.1 TEST OVERVIEW

The objective of the Source Test and Evaluation was to provide survey data under normal operating conditions from which a preliminary assessment of potential environmental impacts could be made. In addition, the test was intended to identify potential problem areas which require

further characterization or application of pollution control technologies. Achievement of these objectives was limited primarily by operational difficulties during the sample collection period. No significant operational problems with the gasifier itself were experienced during the test period. However, difficulties with the test burner resulted in the venting of the product gas to the start-up flare upstream of the cyclone during the majority of the test. Therefore, only a limited amount of data was collected for the test burner, and the product gas results do not reflect the particulate removal capabilities of the cyclone. Product gas characterization was performed on the start-up vent. Within these constraints, the test objectives were achieved.

The Wellman-Galusha gasification system characterized during this test was a commercial scale system providing fuel gas for a pilot scale pelletizing kiln and a combustion test burner. Figure 1-1 provides a schematic of the system indicating the streams which were characterized. Figure 1-2 provides a summary of the data which were collected, and is presented in this report for each stream. Collection of samples and data was conducted during a test run of the system December 9-15, 1978, using North Dakota (Indianhead) lignite.

The major definitive findings of this source test and evaluation may be summarized:

- The two solid wastes (gasifier ash and cyclone dust) generated by operation with Indianhead lignite would be classified as nonhazardous under the RCRA guidelines of 12-18-78. Even though, for most of the trace elements in the coal, greater than 90 percent of the element mass existed in the solids, none of the elements were soluble enough in the RCRA leaching solution to exceed limits. In addition, neither solid waste exhibited a detectable biological response in any of the bioassay tests performed.

- Approximately 20 percent of the coal sulfur was retained by the ash materials. The remainder was converted to gaseous sulfur components in the product gas. Sulfur removal from the gas would be required to meet the current New Source Performance Standards for Utility Boilers.

- The wastewater streams (ash sluice and cyclone dust quench water) exceeded the National Drinking Water Standards for pH, TDS, and certain elemental components. Treatment of these streams prior to discharge would be required.

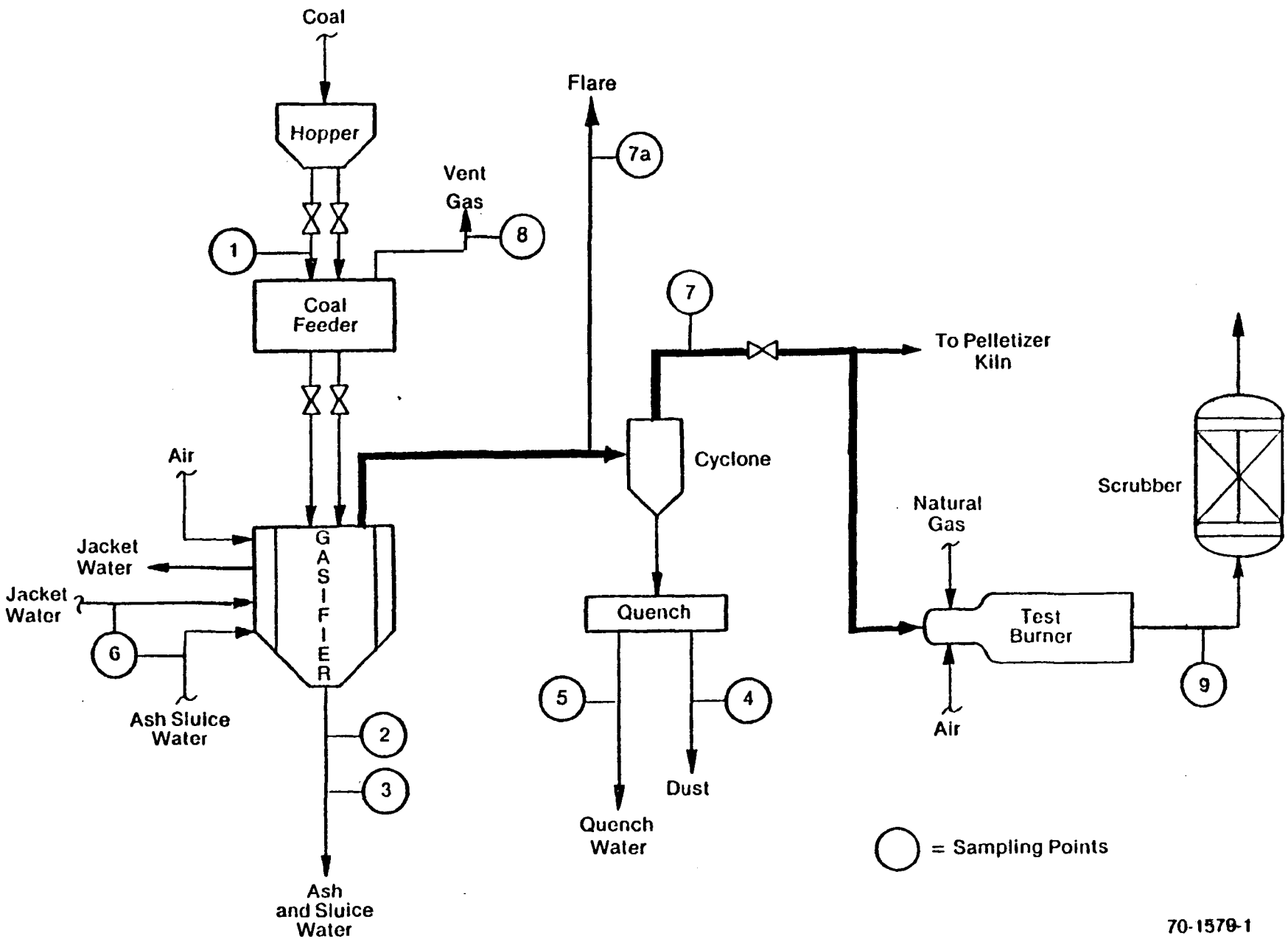


Figure 1-1. Operating Schematic of the Wellman-Galusha Gasifier

| | Stream | Flowrate | Fixed Gases | Prox./Ultimate | Gaseous Sulfur Species | Gaseous Nitrogen Species | $C_1$ - $C_6$ Hydrocarbon | Screening Organic | Detailed Organic | Trace Elements | Metal Carbonyls | Radioactivity | Water Quality | Leachability |
|---|---|---|---|---|---|---|---|---|---|---|---|---|---|---|
| 9 | Test Burner Flue Gas | ● | ● | | ● | ● | ● | ● | ● | ● | | | | |
| 7, 7a | Product Gas | ● | ● | | ● | ● | ● | ● | ● | ● | | | | |
| 8 | Coal Bin Vent Gas | | | | | ● | | | | | ● | | | |
| 2 | Gasifier Ash | ● | | ● | | | | ● | ● | ● | | ● | | ● |
| 3 | Gasifier Ash Sluice Water | ● | | | | | | ● | | ● | | | ● | |
| 4 | Cyclone Dust | ● | | ● | | | | ● | ● | ● | | ● | | ● |
| 5 | Cyclone Dust Quench Water | ● | | | | | | ● | | ● | | | ● | |
| 1 | Lignite | ● | | ● | | | | | | ● | | ● | | |
| 6 | Service Water | | | | | | | | | ● | | | | |

Figure 1-2. Data Matrix for the Ft. Snelling Gasifier STE

- Suspected carcinogenic or toxic compounds were identified in the product gas tar/oil aerosols. Bioassay results confirmed the toxic nature of this material.

- Use of the Source Analysis Model (SAM/1A) to evaluate the potential impacts of the process effluents, indicates, at this point, that organic components are the major contributors to the potential environmental impacts as measured by the estimated discharge severity ratio. Additional characterization will be required to confirm or disprove the presence of these components.

## 1.2 RESULTS

The results of the source test and evaluation program at the Fort Snelling gasification facility are summarized for the bioassay tests and the Source Analysis Model/1A evaluation of the process streams in Figure 1-3. All of the streams were found to contain constituents in potentially harmful concentrations, however, a low potential for adverse effects is indicated by the bioassay test results for all the streams except the product gas composite. The product gas composite exhibited moderate toxicity in the in vitro cytotoxicity test (RAM) and marked toxicity to the test cells used in the mutagenicity test (Ames). However, no mutagenicity nor any in vivo toxicity was reported from this sample. Over 3500 μg/SCM of polynuclear aromatic hydrocarbons were identified in the product gas samples analyzed.

The general organic character of the process streams followed a trend to more aromaticity in the gaseous streams and cyclone dust quench water. The cyclone dust was more aromatic than the ash and ash sluice water which were primarily aliphatic.

One of the primary concerns associated with the use of coal derived materials as combustion fuels is compliance with regulatory limitations on emissions of oxides of sulfur and nitrogen. Although there were significant operating problems with the test burner during the sampling effort, some useful information relating to these components was obtained. Analyses of the low-Btu product gas determined that 23 percent of the nitrogen in the coal was converted to nitrogen-containing compounds (ammonia and hydrogen cyanide) in the product gas. During combustion, these would be converted to oxides of nitrogen. The total $NO_x$ emission rate would be dependent on burner design since thermally formed $NO_x$ is a major contributor to the total emission.

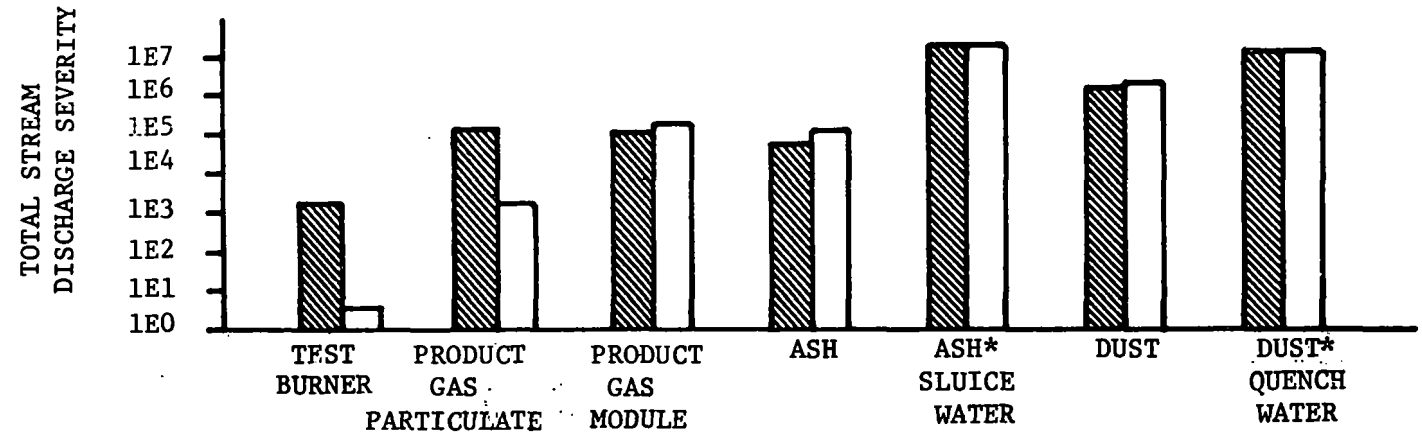


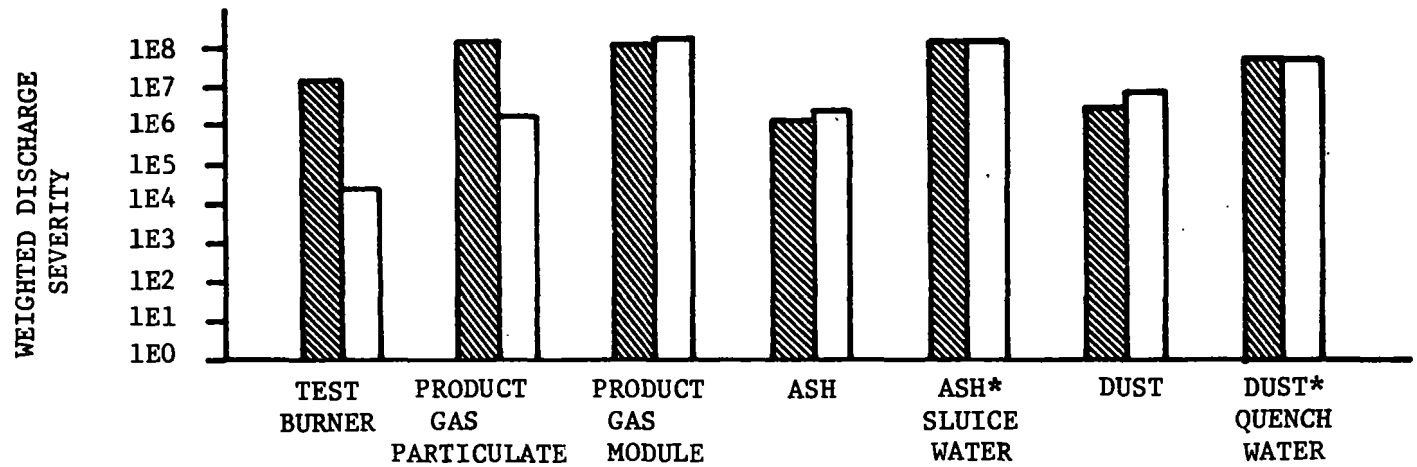


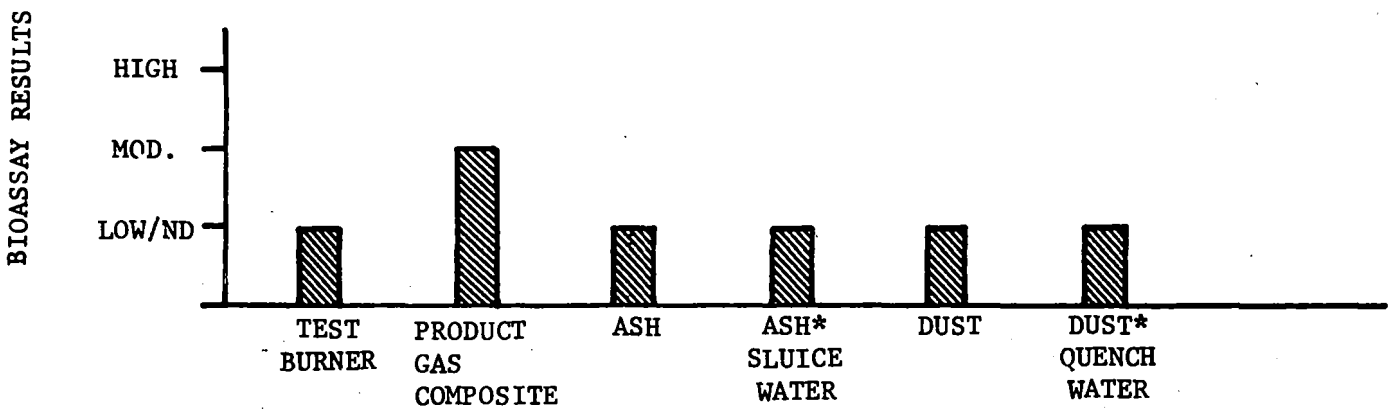


▨ = Health
▢ = Ecology

High: High effects
Mod.: Moderate effects
Low/ND: Low or nondetectable effects

*total sample organic loading expressed as single maximum worst case compound.

Figure 1-3. Total Stream, Weighted Discharge Severities and Bioassay Test Results for the Fort Snelling Wellman-Galusha Process Streams

The North Dakota lignite used during the test sampling had a sulfur content equivalent to 0.58 lb S/$10^6$ Btu. Under the proposed New Source Performance Standards (NSPS) this sulfur level in the fuel would require a sulfur removal efficiency of 70 percent in the process. Analyses of the product gas and test burner flue gas (prior to scrubbing) showed that the product gas contained 71 percent of the coal sulfur during sampling period two and the test burner flue gas contianed 72 percent of the coal sulfur during sampling period one. These results indicate that the gasification process alone is not adequate to meet the sulfur removal requirements of the proposed NSPS for combustion sources. Additional sulfur removal in the form of acid gas removal processes on the product gas or flue gas desulfurization will likely be required.

The results of the SAM/1A analysis of the data indicate that the trace and minor elemental components are secondary to the organics in health and ecological concern. These elements enter the process in the coal, and during the gasification reactions are distributed among the various streams leaving the gasifier. For almost all of the elements characterized, greater than 90 percent of the mass of the elements entering with the coal exited with the cyclone dust and gasifier ash. During gasification individual elements may (1) remain in the solids and be distributed in the same proportions as the coal ash or (2) be volatilized and exit with the product gas or (3) be volatilized and recondense as the gases leave the zones of very high temperature. Most of the elements fall in the first or third category.

Eight elements have significantly more than 25 percent of their total mass in the gas and may be considered to exhibit category two (volatile) behavior:

| | |
|---|---|
| Antimony | Lead |
| Arsenic | Mercury |
| Cobalt | Selenium |
| Iodine | Sulfur |

Figures 1-4 and 1-5 present the distribution of the elements in the gasifier ash and the cyclone dust. The elements are in ascending order of boiling point of each element. The difference between the sum of cyclone dust and gasifier ash from 100% represents the mass of each element which exits in the test burner flue gas.

Generally, the volatile elements are more concentrated in the test burner flue gas and the cyclone dust. This is not strictly true since the ordering does not consider compounds which may be more volatile than the element. Identification of specific compounds would be required for a more precise correlation.

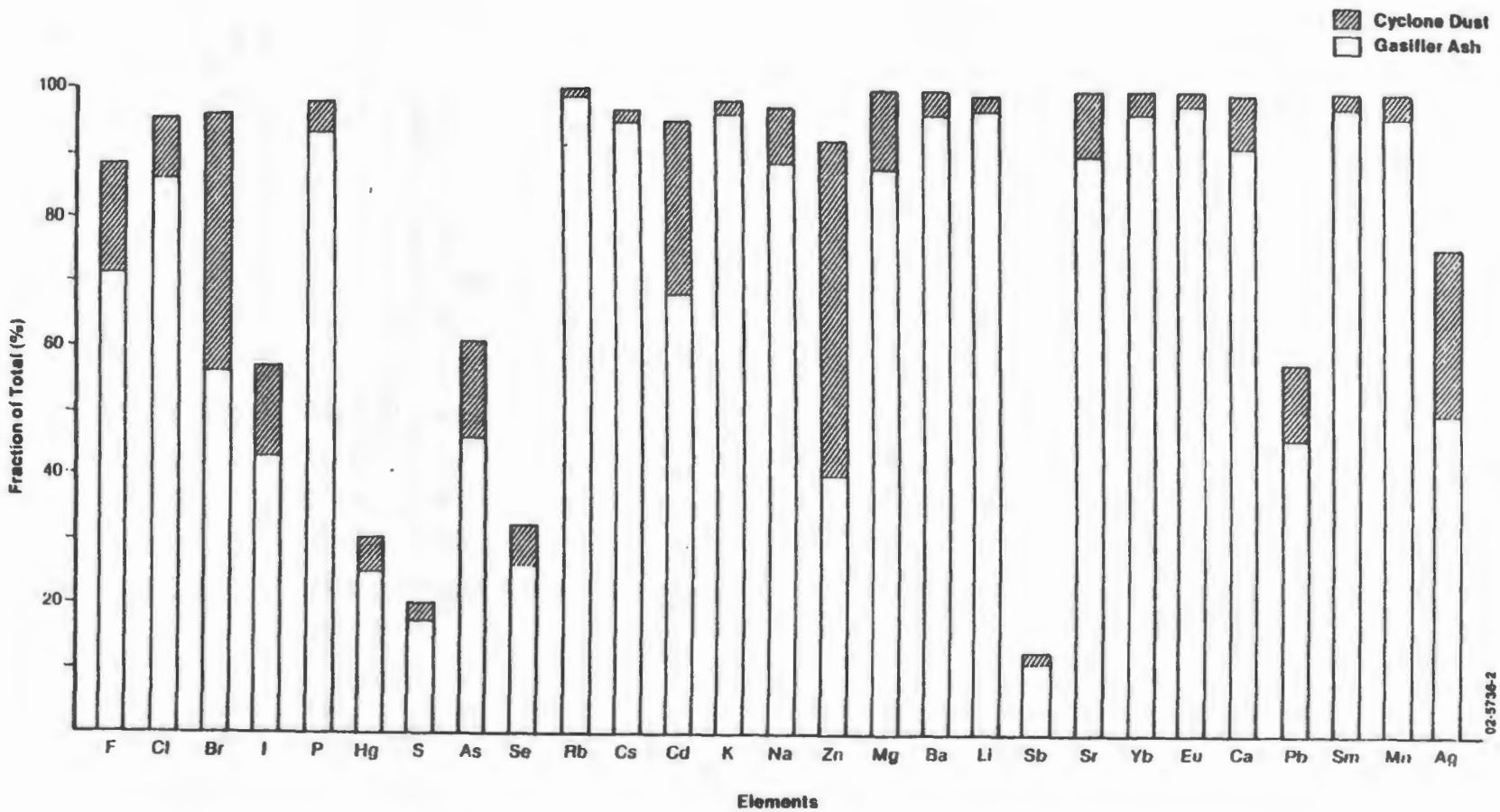


Figure 1-4. Elemental Distributions in the Gasifier Ash and Cyclone Dust Ordered by Increasing Elemental Boiling Point (up to 2212°C)

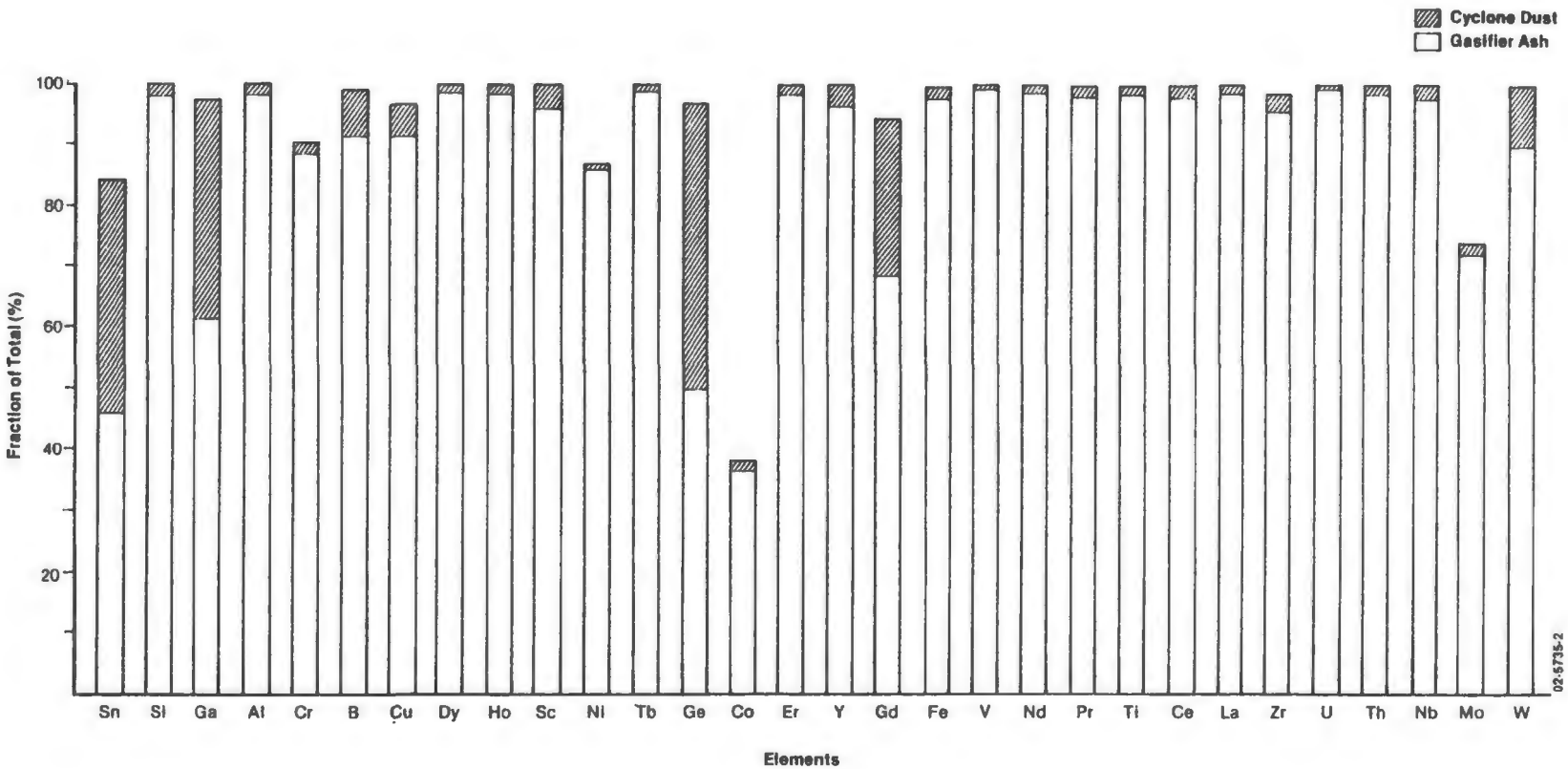


Figure 1-5. Elemental Distribution in the Gasifier Ash and Cyclone Dust Ordered by Increasing Elemental Boiling Point (2270 to 5927°C)

The form in which an element occurs naturally in the coal may be an additional determiner of its distribution. Elements associated preferentially with the organic phase of the coal are more likely to participate in reactions and be more readily volatilized than those found in the mineral phase. Many elements, however, have been found to be associated with the organic phase in one coal and with the inorganic phase in another. Variations can depend on mineral (ash) and sulfur content, which are directly affected by coal type and conditions of formation.

The impact of the trace element content of the two solid wastes on disposal of the material was evaluated using the extraction procedures specified by the Resource Conservation and Recovery Act (RCRA) (Ref. 1). Leachates produced by extraction of the gasifier ash and cyclone dust were analyzed for a number of trace elements and general water quality parameters. Table 1-1 presents the concentrations of those elements with RCRA specified limits. In all cases, the elemental concentrations are at least an order of magnitude below the RCRA limits.

The only two wastewaters in the gasification system are generated by using plant service water to sluice or quench solids. During contact with the solids, components may dissolve in the water which render it unsuitable for discharge without treatment. Table 1-2 presents a comparison of the wastewater compositions with Federal Drinking Water Standards. Both were more basic than allowable pH limits. The gasifier ash sluice water exceeded the standards in total dissolved solids, sulfate, selenium, and iron. Mercury and fluoride concentrations are 70 percent and 50 percent of the standards and will require additional data to insure that they will not exceed the limits. The cyclone dust quench water exceeded the standards for fluoride, arsenic, lead, and iron. In addition, the levels of total dissolved solids, selenium, and barium, appear to warrant further study.

## 1.3 RECOMMENDATIONS

Specific recommendations for consideration in future assessment activities fall into two categories:

(1) additional data needs, and
(2) methodology recommendations.

### Data Needs

The source test and evaluation conducted at the Fort Snelling site combined with the results of a similar effort at the Glen Gery Brick Company (Ref. 2), provide environmental and process data on Wellman-Galusha gasifiers operating on lignite and anthracite coal. Characterization of materials from a similar gasification system operating on bituminous or subbituminous coal would compliment the available data and vastly improve the existing data base for Wellman-Galusha gasifiers.

TABLE 1-1. COMPARISON OF SOLID WASTE EXTRACTS AND RCRA EXTRACT LIMITS

| Element | RCRA[1] Extract Limits (12/18/78) (mg/ℓ) | Gasifier Ash Leachate (mg/ℓ) | Cyclone Dust Leachate (mg/ℓ) |
|---|---|---|---|
| As | 0.50 | 0.019 | 0.033 |
| Ba | 10 | 1.0 | 1.0 |
| Cd | 0.10 | <0.007 | <0.001 |
| Cr | 0.50 | 0.001 | 0.001 |
| Pb | 0.50 | 0.007 | 0.008 |
| Hg | 0.02 | <0.001 | <0.001 |
| Se | 0.10 | 0.014 | 0.006 |
| Ag | 0.50 | <0.001 | <0.001 |

[1] RCRA = Resource Conservation and Recovery Act

TABLE 1-2. COMPARISON OF WASTEWATER STREAMS AND DRINKING WATER STANDARDS

| Element | NIPDWS[1] (mg/ℓ) | PNSDWR[2] (mg/ℓ) | Gasifier Ash Sluice Water (mg/ℓ)* | Cyclone Dust Quench Water (mg/ℓ)* |
|---|---|---|---|---|
| As | 0.05 | | 0.0033 | 0.12 |
| Ba | 1.0 | | 0.13 | 0.57 |
| Cd | 0.01 | | <0.002 | <0.005 |
| $Cl^-$ | | 250. | 78. | 34. |
| Cr | 0.05 | | 0.007 | <0.005 |
| Cu | | 1.0 | 0.017 | 0.012 |
| $F^-$ | 1.8 | | 0.87 | 2.0 |
| Fe | | 0.3 | 1.2 | 4.9 |
| Ph | 0.05 | | 0.008 | 0.099 |
| Mn | | 0.05 | 0.002 | <0.001 |
| Hg | 0.002 | | 0.0014 | 0.0004 |
| Se | 0.01 | | 0.020 | 0.006 |
| Ag | 0.05 | | 0.001 | 0.002 |
| Zn | | 5.0 | 0.044 | 0.035 |
| $SO_4^=$ | | 250. | 2860. | 55. |
| pH | | 6.5-8.5 | 9.3 | 10.0 |
| TDS | | 500. | 4300. | 390. |

[1]NIPDWS = National Interim Primary Drinking Water Standards, Federal Register (3/31/77)

[2]PNSDWR = Proposed National Secondary Drinking Water Regulations, Federal Register (3/31/77)

*Metal results by SSMS except As, Hg, and Se which were done by hydride AA. Non-metal species by Standard Methods.

Operational problems during the sample collection portion of this STE program precluded complete characterization of the test burner flue gas. The combustion effluents which were characterized were produced during combustion with extremely high excess air. Combustion data for low-Btu fuel gas under more typical commercial combustion conditions is required to adequately characterize the potential environmental impacts.

Additional analytical effort is required to confirm or disprove the presence of the assumed "worst case" chemical forms used in the Source Analysis Model/1A results presented in this report.

The variability of key components over long-term operation still requires definition. This will require longer periods of stable gasifier operation (on the order of 30 days) than have thus far been available.

Methodology

The detailed organic analysis approach based on the iterative use of the SAM/1A results proved to be a valuable tool in the planning of analytical activities. Computerization of the SAM/1A calculations makes this practical by reducing the effort required. Continued use of this approach in conjunction with the addition of generalized sample characterization techniques is recommended.

A small scale electrostatic precipitator (ESP) was used in the product gas sampling train, and was highly successful and efficient for the collection of particulates and aerosol tars. Continued use of the ESP for tar laden streams is recommended after modification of the equipment for operation at higher temperatures.

Both the silver persulfate collection solution and the acid/base collection trains were used during the Fort Snelling STE for collection of vaporous trace elements. However, direct comparison of the two was not possible. An evaluation of the collection efficiencies of the two approaches is recommended.

Two specific analytical recommendations resulted from this program. Addition of an ethyl ether extraction to the organic sample preparation significantly increased the extraction efficiency over extraction with methylene chloride only. Elemental analysis with inductively coupled argon plasma emission spectrometry (ICP) proved to be a complementary technique to spark source mass spectrometry and greatly extended the range of quantitation. Both of these additions should be continued.

## SECTION 2

## PLANT DESCRIPTION

A commercial size Wellman-Galusha gasifier was assembled at the Bureau of Mines Fort Snelling test facility to determine the feasibility of using low-Btu gas (5.6E6 J/m$^3$, 150 BTU/scf) to pelletize iron ore. During the late fall of 1978, several short test runs, approximately 5 days each, were made using coke, bituminous coal, semi-bituminous coal (ranking slightly higher than subbituminous), and a lignite as gasifier feedstocks. The gas produced during these tests was burned in a test burner designed to study the low-Btu gas combustion characteristics. The following sections provide a description of the Fort Snelling gasification facility configuration and operation during the source test and evaluation program conducted by Radian.

### 2.1 PROCESS DESCRIPTION

The following brief process description introduces the reader to the program test facility shown in Figure 2-1.

#### Coal Handling

At the Fort Snelling test facility, coal is stored in piles near the gasifier. A front-end loader moves the hopper. The coal is moved by the belt conveyor to a vibrating screen where coal fines less than 1.9 cm (3/4 inch) are removed for disposal. From the screen, the coal is moved to the top of the gasification building by a bucket elevator where it falls into a coal storage bin.

Coal from the coal bin flows by gravity into the two coal hoppers located atop the gasifier. The coal hoppers continuously feed coal into the gasifier by gravity flow through two vertical feed pipes. Four slide valves are used to control the coal flow rate.

#### Gasification/Gas Purification

In the gasifier (shown in Figure 2-2) a water-cooled agitator distributes the coal evenly as it falls from the feed bin. As the hot product gas rises from the bottom of the gasifier, it dries and devolatilizes the coal as the coal moves down in the gasifier to the gasification zone. At the bottom of the gasifier, the coal is partially combusted by moist air forming a low-Btu product gas and ash. The ash falls through a rotating grate, is dumped through a valve at the bottom of the gasifier, and is disposed. Steam to the gasifier is provided by passing air over hot water in the gasifier cooling jacket before the air enters the bottom of the gasifier.

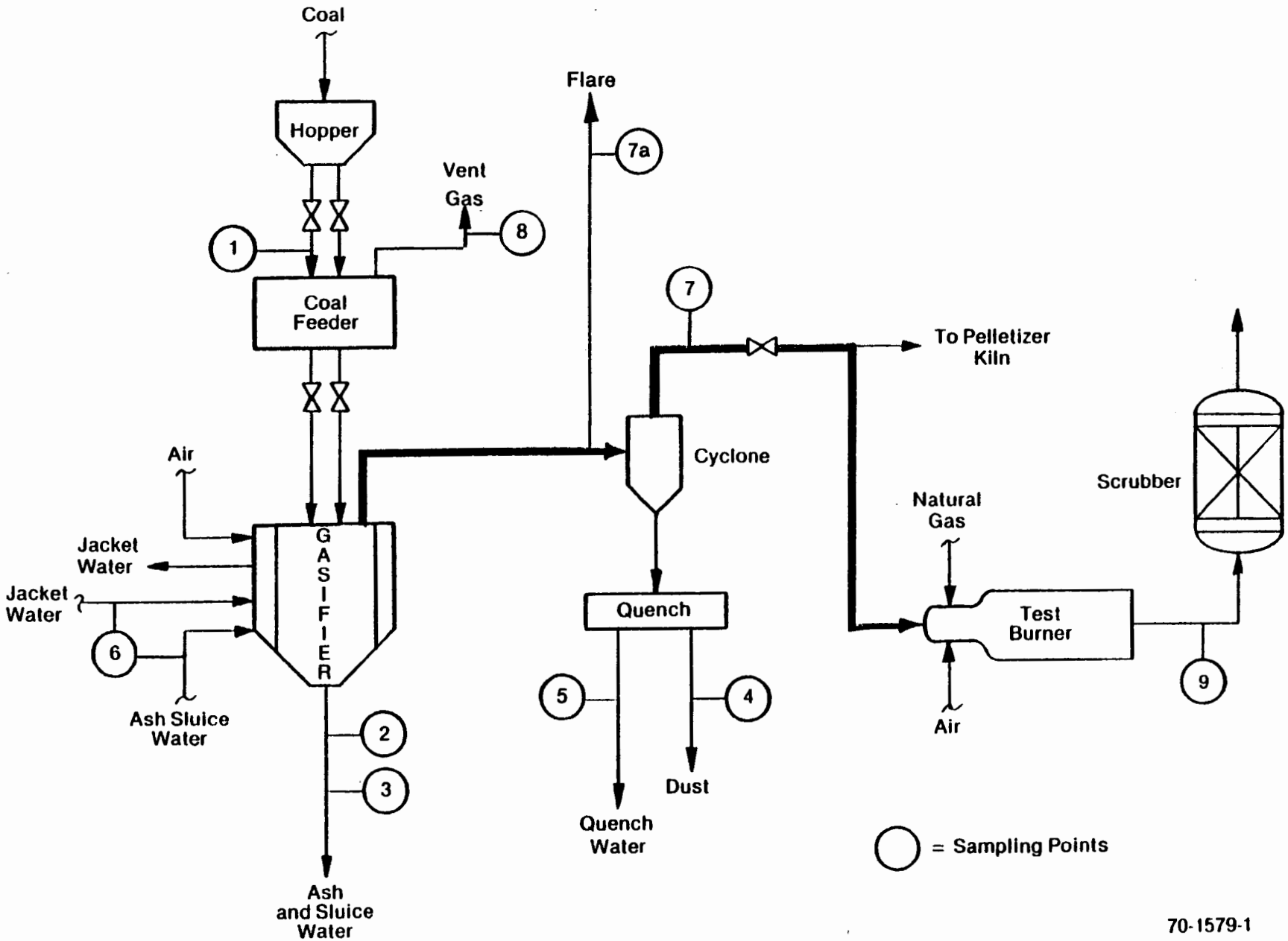


Figure 2-1. Operating Schematic of the Wellman-Galusha Gasifier

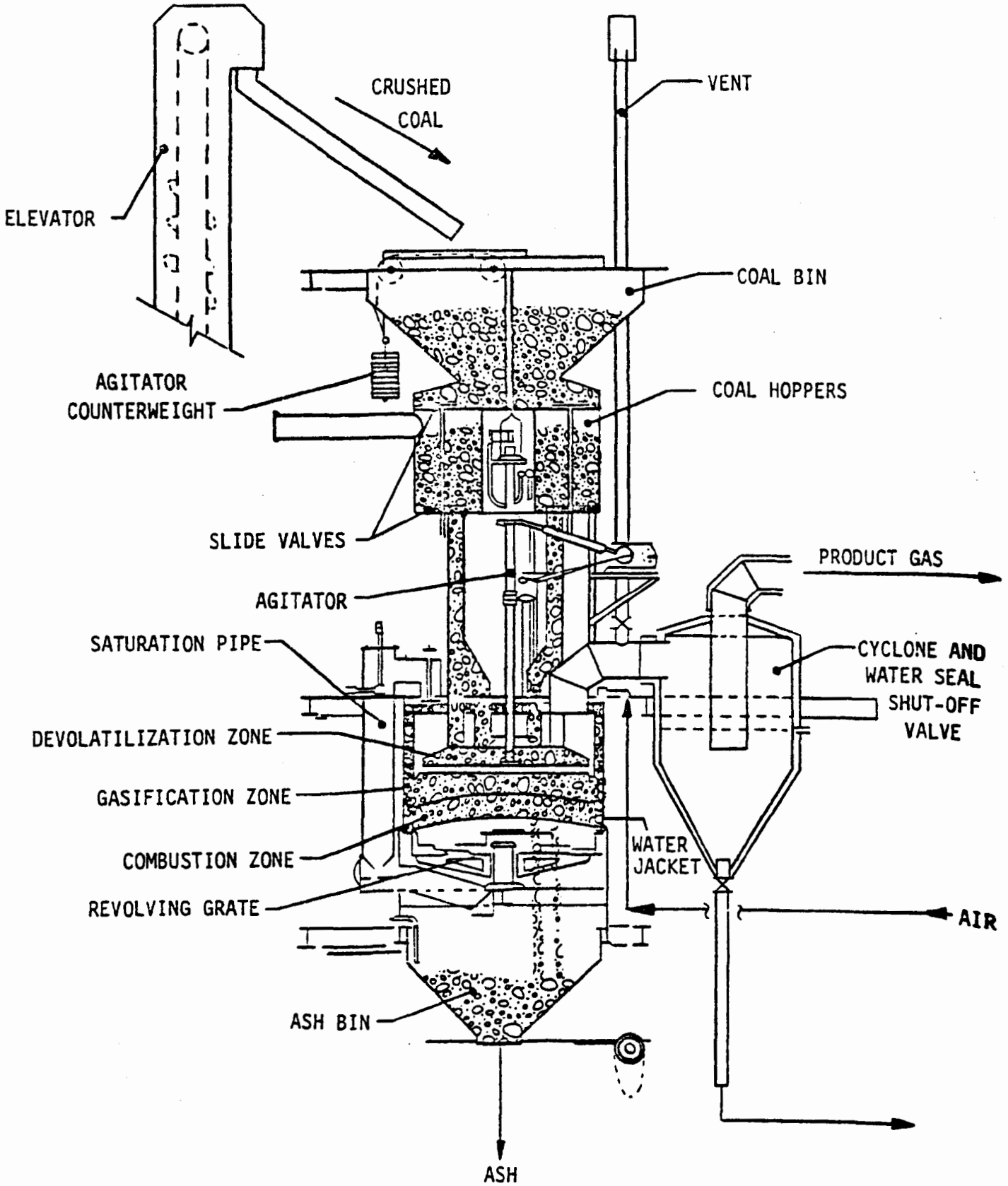


Figure 2-2. Diagram of a Wellman-Galusha Gasifier Equipped with a Coal Bed Agitator



70-1428-1

The hot low-Btu product gas is cooled as it passes up through the coal in the gasifier. During start-up or banking, the gasifier product gas is diverted to the start-up vent and flare. During normal operation, the product gas passes through a refractory-lined cyclone before going to the pelletizer kiln and test burner. Large particulates in the product gas fall to the bottom of the cyclone, down the cyclone leg, and into a water quench. The quenched particulates are scraped out of the quench trough, passed over a dewatering screen and disposed. Water from the quench trough flows to the process sewer.

Test Burner

Most of the low-Btu gas produced in the Wellman-Galusha gasifier is burned in a test burner. The test burner is a combustion chamber designed to study the burning characteristics of low-Btu gas. The combustion gases from the test burner are contacted with a caustic water solution which removes $SO_2$ before the gases are discharged to the atmosphere through an exhaust fan. Spent caustic water solution from the combustion gas scrubber is discharged to the process sewer from the scrubber recycle tank.

Waste Stream Summary

The Fort Snelling gasifier/test burner facility major waste streams are:

- Gaseous waste streams
  - coal feed system vent gases,
  - start-up flare combustion gases, and
  - test burner scrubber exhaust.

- Liquid waste streams
  - jacket water,
  - ash sluice water,
  - cyclone quench water, and
  - test burner flue gas scrubber blowdown.

- Solid waste streams
  - gasifier ash,
  - cyclone particulates, and
  - coal fines.

## 2.2 PLANT OPERATION

The Fort Snelling Wellman-Galusha gasifier was started up on coke December 8, 1978, after being shut down to repair a leak in the gasifier water jacket. After achieving stable operation on coke, a North Dakota lignite (Indianhead) was started to the gasifier feed system on December 10. Late on December 11, the lignite had displaced the coke, and the plant was operating as shown in Figure 2-3. However, before gas sampling was initiated, a sudden buildup in pressure in the gasifier test burner system caused the test burner to flame-out at ∿0200 hours on December 12. One set of solid and liquid samples was collected just before the flame-out (2300-2400 hours of December 11).

The gasifier was banked after the test burner flame-out and until the test burner system was checked. Normal plant operation was reestablished by noon of December 12. Sampling of solid and liquid streams (sample points 1, 2, 3, 4, 5, 6) and the test burner and product gas streams (points 7 and 9) was initiated. However, due to a pressure buildup in the gasifier system, the gasifier product gas to the test burner and the pelletizer kiln was automatically sent to the afterburner at ∿2200 hours on December 12. Sampling of the unit was suspended at this time.

Inspection of the product gas line to the test burner and pelletizer kiln revealed plugging due to the accumulation of tar and condensate (organic and aqueous). However, the gasifier operation was continued with the product gas being vented to the flare as shown in Figure 2-4. Sampling of the test burner exhaust gas and pelletizer kiln exhaust gases could not be completed under this mode of operation. However, sampling of the coal bin vent gases, the gasifier product gas, and gasifier solid and liquid streams (sample points 1, 2, 3, 6, 7a, and 8) was accomplished from ∿1700 hours on December 13 through ∿0200 hours on December 14.

Due to the early shutdown of the test burner, only a partial characterization of the combustion gases was made. In addition, the gasifier operation on December 13th and 14th was hindered by channeling in the gasifier resulting in oxidation at the top of the gasifier bed. Figure 2-5 summarizes the pertinent gasifier test burner operating conditions during the two sampling periods.

## 2.3 PROCESS FLOW RATES AND MASS BALANCES

Pertinent process data were collected by the Bureau of Mines personnel and computerized data gathering system. Flow rates and material balances provided by the Bureau of Mines were used to calculate the material balances for the two sampling periods as summarized in Table 2-1. Data presented for the second sampling period were averaged over two data segments provided by the Bureau. The data provided by the Bureau of Mines are presented in Appendix A; in addition, the estimated error limits for each of the process streams are presented.

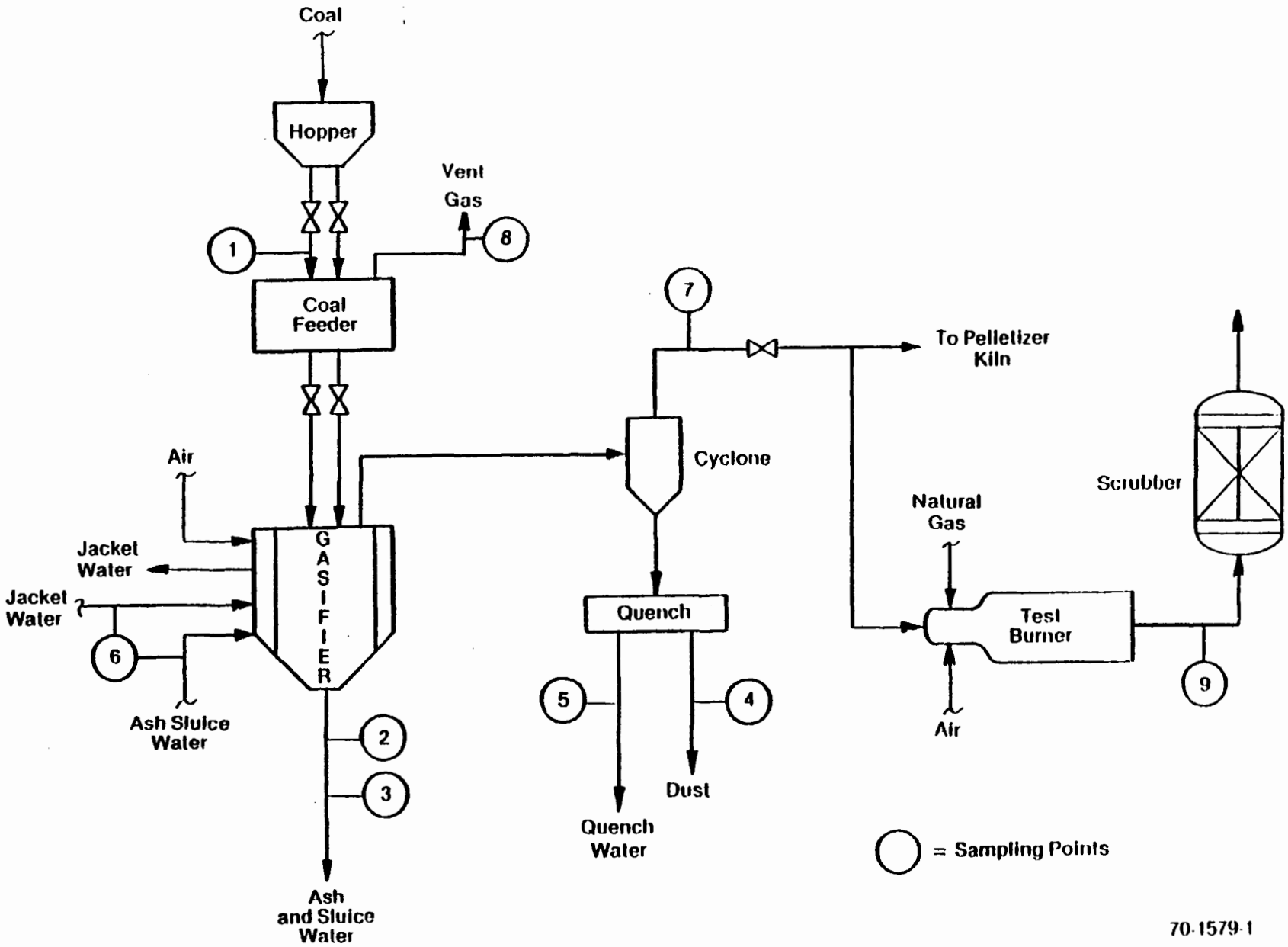


Figure 2-3. Normal Operation Schematic of the Wellman-Galusha Gasifier

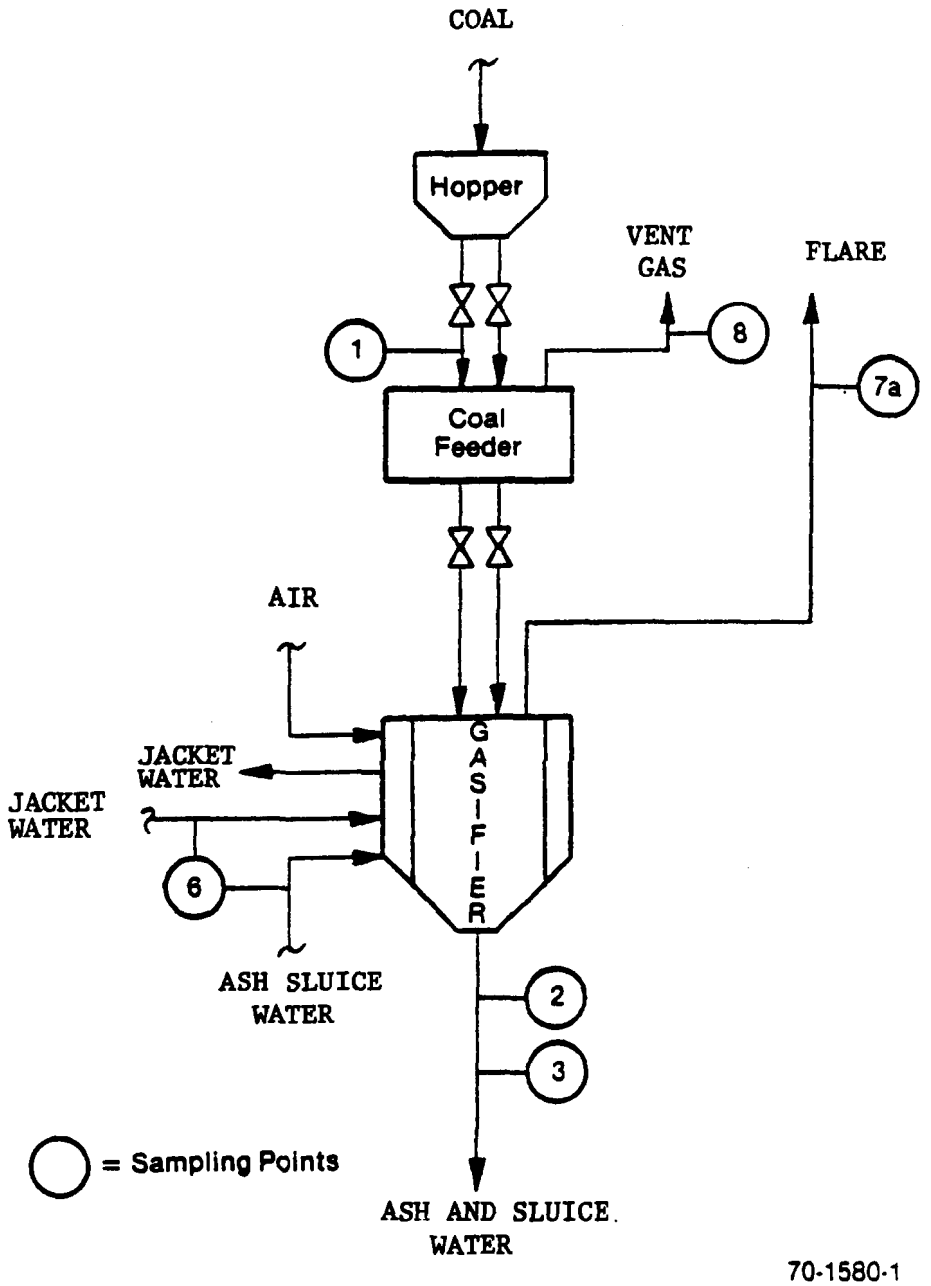


Figure 2-4. Operating Schematic of the Wellman-Galusha Gasifier with Product Gas Vented

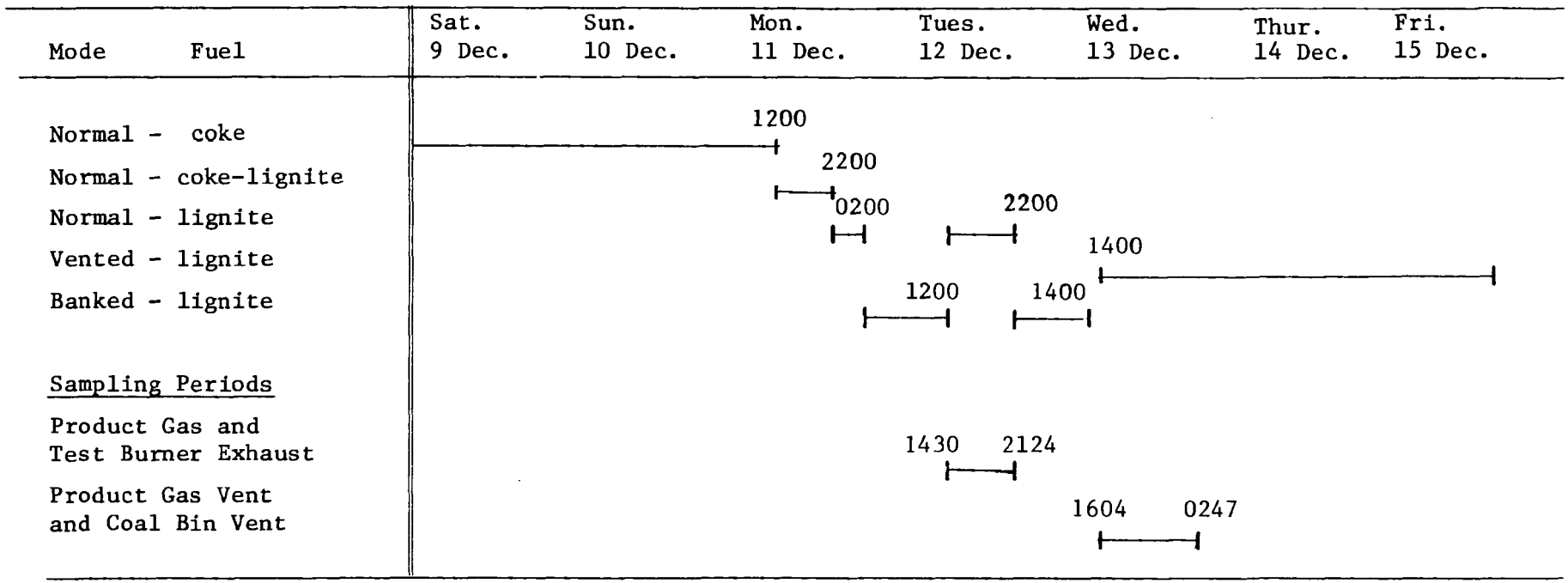


Figure 2-5. Summary of Fort Snelling Gasifier Operation and Sampling Periods

TABLE 2-1. FORT SNELLING PROCESS FLOW RATES AND MATERIAL BALANCES

| Stream Description | FLOW RATES (g/s) Sampling Period 1 | Sampling Period 2 |
|---|---|---|
| INPUT STREAMS | | |
| Air | 500 ± 50 | 440 ± 44 |
| Water | 67 ± 7 | 66 ± 7 |
| Coal | 320 ± 32 | 250 ± 25 |
| Total | 887 ± 60 | 756 ± 51 |
| OUTPUT STREAMS | | |
| Ash | 27 ± 3 | 21 ± 2 |
| Dust | 3.8 ± 2 | |
| Hot Product Gas | 860[1] ± 86 | 700[2] ± 70 |
| Total | 891 ± 86 | 721 ± 70 |
| RATIO INPUT TO OUTPUT | 0.99 | 1.05 |

[1] Includes product gas, steam, and tar.

[2] Includes product gas, steam, tar, and dust.

## SECTION 3

## METHODOLOGIES

The techniques cited (Ref. 3) and described in Appendix C formed the core of the approach to the source test and evaluation of the Fort Snelling facility. Additions to or deviations from these methods are described in the following sampling and analytical methodology sections.

### 3.1 SAMPLING METHODOLOGIES

Due to the plant operational problems encountered during the on-site sampling and analysis portion of this program, not all of the originally scheduled sampling could be implemented. A partial characterization of the test burner flue gas was completed; however, no samples of the pelletizer kiln exhaust gas were taken. In order to determine the fate of ammonia and cyanide in the test burner, test burner flue gas samples were obtained simultaneously with product gas samples for the determination of ammonia and cyanide concentration. During this sampling period, samples for $C_1$ to $C_6$ hydrocarbons, volatile sulfur species, and fixed gas content were also taken at both locations. A pressure build-up in the gasifier caused by an accumulation of particulates, tar, and condensate in the product gas line resulted in the product gas being sent to the start-up flare, bypassing the cyclone, test burner, and pelletizer kiln. Therefore, the bulk of the product gas sampling was done at the start-up vent to the flare prior to the cyclone. Samples of the coal bin vent gases, the gasifier ash and ash sluice water were taken during this mode of plant operation. Cyclone dust and dust quench water samples were only obtained during the period of normal cyclone operation. An overview of the samples taken and the sampling techniques used at the gasifier/test burner is given in Figure 3-1.

Sampling procedures for the test burner flue gas are discussed in Appendix B of this document. The grab samples of the liquid and solid streams were taken periodically during the sampling effort and are discussed also in Appendix B.

#### 3.1.1 Product Gas Sampling

Only the ammonia and cyanide impinger samples and gas samples for fixed gases, volatile sulfur species, and $C_1$ to $C_6$ hydrocarbons were taken of the product gas at the exit of the cyclone. Due to the pressure buildup, the product gas was then routed through the start-up vent to the flare thus bypassing the cyclone. A 51 mm port on the start-up vent was used for sampling; this port had no gate valve and was entered directly. The sampling at this site was essentially a continuation of the product gas sampling program. The product gas to the flare contained all the elements

| | SAMPLES | | | | | | | | | | | | | | | |
|---|---|---|---|---|---|---|---|---|---|---|---|---|---|---|---|---|
| | SASS particulate | ESP particulate | XAD-2 resin | Condensate | Trace Metals SASS | Trace metals - acid/base | Ammonia impingers | Cyanide impingers | Sulfur impingers | Metal carbonyl impingers | Fixed gases | Sulfur species | $C_1$-$C_6$ Hydrocarbons | Tenax resin | Inorganic - bulk | Organic - bulk | Bioassay - bulk |
| Test Burner | ● | | ● | ● | ● | | ● | ● | | | ● | ● | ● | | | | ● |
| Product Gas | | | | | | | ● | ● | | | ● | ● | ● | | | | |
| Product Gas (vent) | | ● | ● | ● | | ● | | | ● | | ● | ● | ● | ● | | | ● |
| Coal Bin Vent Gas | | | | | | | ● | ● | ● | ● | | | | ● | | | |
| Gasifier Ash | | | | | | | | | | | | | | | ● | ● | ● |
| Gasifier Ash Sluice Water | | | | | | | | | | | | | | | ● | ● | ● |
| Cyclone Dust | | | | | | | | | | | | | | | ● | ● | ● |
| Cyclone Dust Quench Water | | | | | | | | | | | | | | | ● | ● | ● |
| Lignite | | | | | | | | | | | | | | | ● | | |
| Service Water | | | | | | | | | | | | | | | ● | | |

Figure 3-1. Sampling Matrix for the Wellman-Galusha Gasifier at the U. S. Bureau of Mines Plant

of the product gas plus particulates and high molecular weight aerosol tars normally removed by the process cyclone.

The sampling train used at both product gas sampling locations is shown schematically in Figure 3-2. This system contained sample taps for gas chromatography grab samples and for sampling with two independent impinger trains behind an electrostatic precipitator.

### 3.1.2 Electrostatic Precipitator Sampling

Due to the high oils and tars concentration in the product gas, an electrostatic precipitator (ESP) was used instead of the SASS cyclones and filter for particulate removal during the product gas sampling. The ESP removes particulates and aerosol tars from the gas stream by creating an electron wind between the negatively-charged central electrode and the positively-charged outer wall. This electron wind imparts a negative charge to the aerosolized particles. These particles are then attracted to the outer wall of the ESP. As the gas stream passes through the collection zone, the particles migrate to the outer wall, discharge, and fall down to the collection cup at the bottom of the ESP. A schematic of the ESP used is shown in Figure 3-3.

The particulates collected by the ESP and filter would be common to any train used. However, the ESP was operated at 140°C (285°F), therefore, the vapor phase material collected in the organic module was that material which passed through the ESP at 140°C (285°F), not 200°C (400°F) as for other SASS runs. Due to this lower operating temperature of the ESP, some vapor phase material which would normally be collected in the organic module was collected in the ESP as tarry condensables in addition to the aerosol tars removed from the gas stream by electrostatic precipitation.

The material recovered from the ESP, the ESP rinse, and filter remained separate through a portion of the analytical matrix to enable the calculation of ESP efficiency. The quantity of methylene chloride insoluble material was also determined to distinguish between particulates and tars. The ESP efficiency in removing particulates and aerosol tars from the product gas was calculated to be 99.2% as shown in Table 3-1. Of the material collected, 32% was methylene chloride insoluble.

The SASS organic module was operated in the standard manner except the XAD-2 canister was separated from the condenser to reduce contact between resin and condensate. Due to the size of the ESP, the flow rate through the entire system was limited to 280 ml/sec. Also, due to the high organic loading of the product gas, the total gas volume of the sample was reduced from the recommended 30 SCM in order not to overload the organic module.

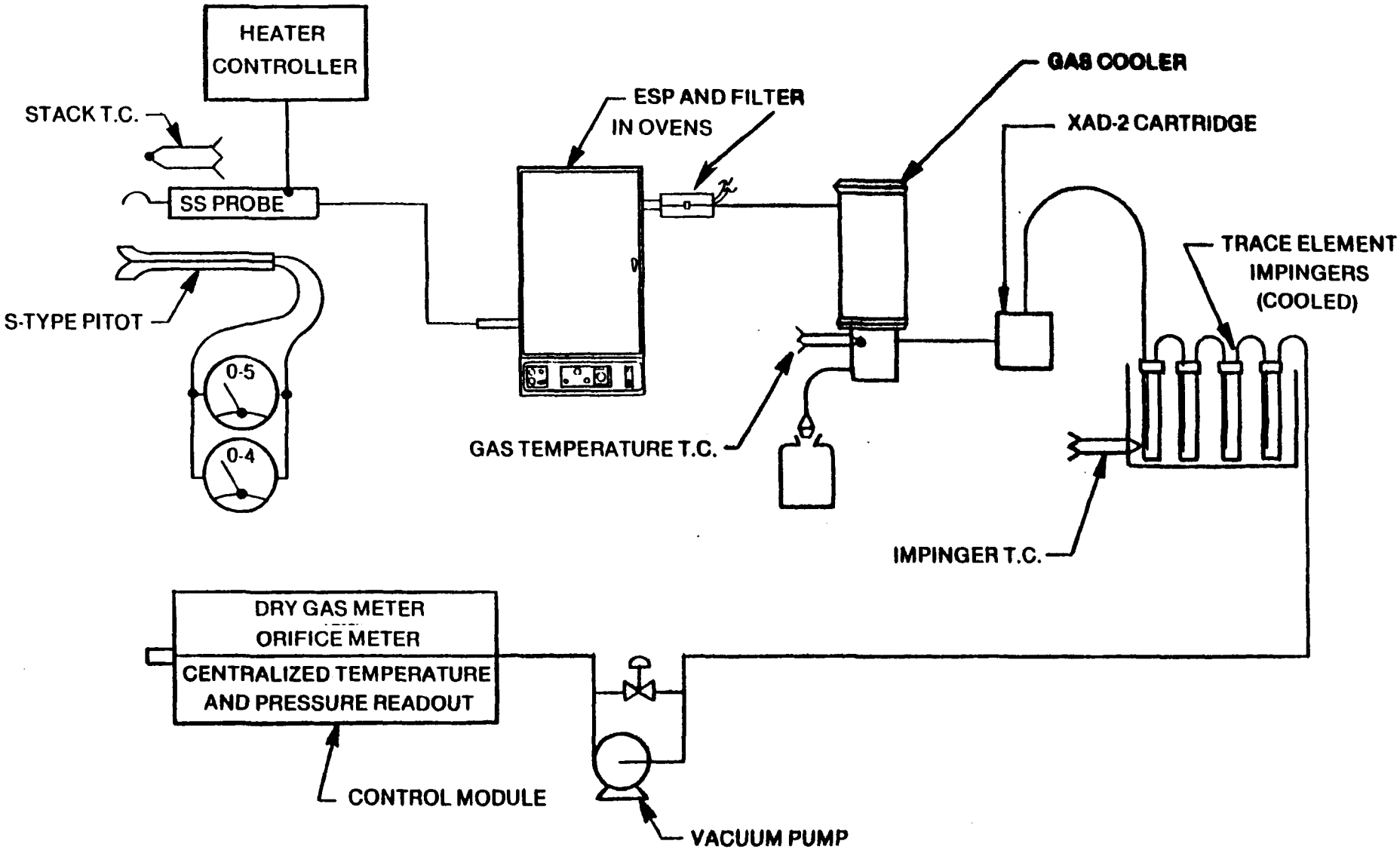


Figure 3-2. Product Gas Sampling System with ESP

'70-1596-1

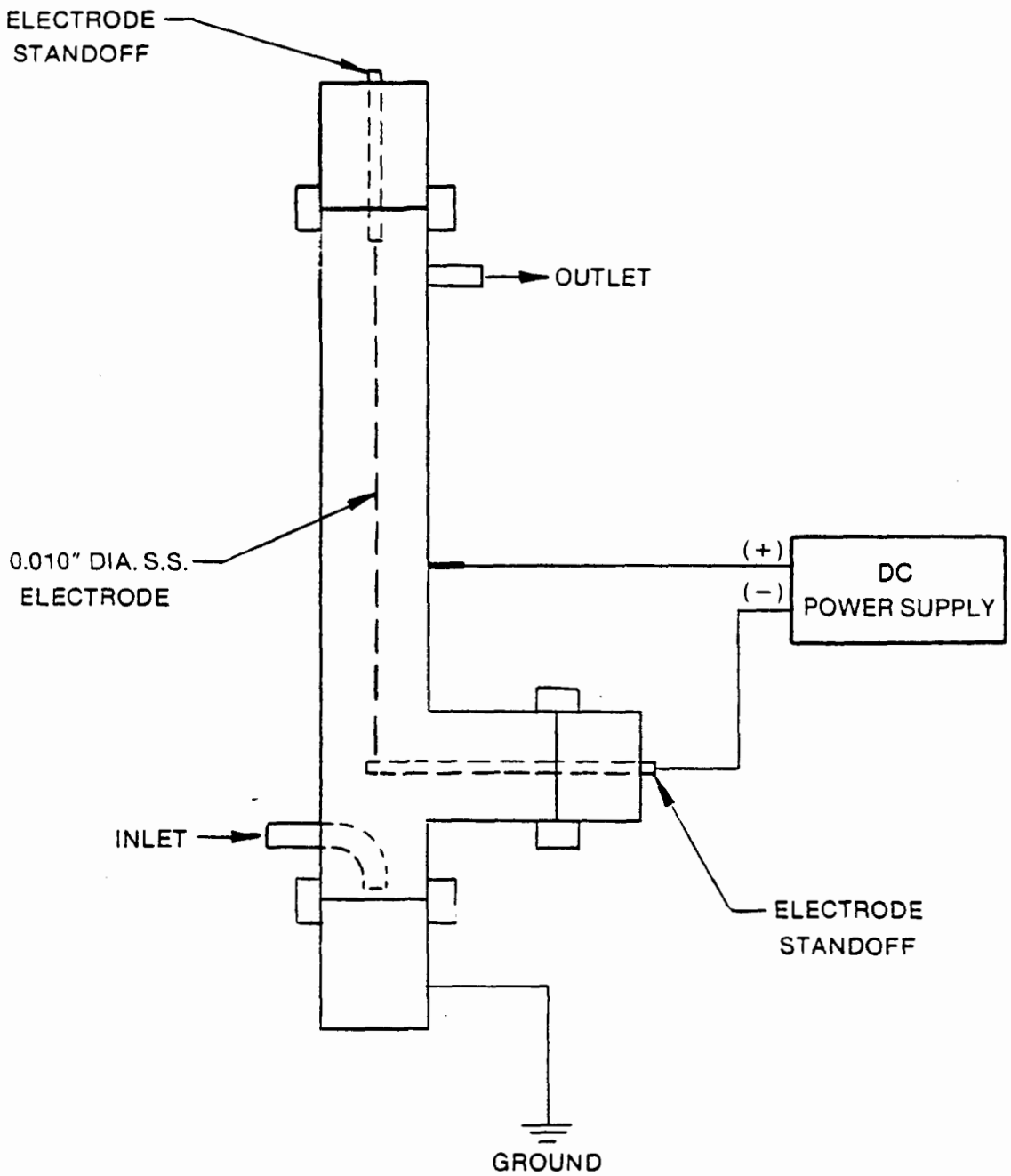


Figure 3-3. Schematic of ESP Used for Aerosol and Particulate Removal

TABLE 3-1. ESP COLLECTION EFFICIENCY

| | |
|---|---|
| Material Collected by the ESP: | 39.754g |
| Material Collected by the Filter: | 0.306g |
| TOTAL MATERIAL COLLECTED: | 40.060 |

$$\text{ESP Collection Efficiency (\%)} = \frac{\text{Material collected by the ESP}}{\text{Total material collected}} \times 100$$

$$= 99.2\%$$

Gas Volume Sampled: = 8.5 SCM[1]

Average Sampling Rate: = 0.28 ℓ/s

[1]SCM at 25°C (77°F) and 101 kPa (1 atm), dry basis.

Gas samples were taken for GC analysis at the inlet of the ESP and at the exit of the ESP to ascertain the effects of the ESP on gas composition. No measurable effects or discernible trends were seen. The results of these gas analyses are given in Appendix D.

### 3.1.3 Trace Element Sampling

Trace metals in the gas streams were collected using two different sampling systems. Two ammonium persulfate impingers were used to collect vaporous trace metals in the test burner flue gas upstream of the caustic scrubber. However, vaporous trace elements in the product gas exiting the ESP and organic module were collected by a series of impingers: two 10 percent nitric acid impingers and two 10 percent sodium hydroxide impingers.

The planned comparison of the two collection systems was not done because of operational problems with the gasifier. An evaluation of the collection efficiencies of the two trace element collection systems still needs to be made.

### 3.1.4 Ammonia and Cyanide Sampling

Each ammonia or hydrogen cyanide sampling train consisted of two absorbing impingers. Collection efficiencies of the absorbing solutions were calculated by analyzing both impingers in each sample run. Collection efficiency of the first impinger was defined as:

$$E = \frac{\mu g_I}{\mu g_I + \mu g_{II}} \times 100$$

where: $\mu g_I$ = total $\mu g$ of analyte in first impinger, and

$\mu g_{II}$ = total $\mu g$ of analyte in second impinger.

Ammonia was collected totally in the first impinger even at the high concentration of the product gas. Some carryover at high concentrations was detected in the cyanide impingers. Assuming the collection efficiency of the second impinger is the same as the first, the overall collection efficiency for the ammonia and cyanide absorbing systems was greater than 99 percent. The collection efficiency data for ammonia are summarized in Table 3-2 and for cyanide in Table 3-3.

TABLE 3-2. AMMONIA COLLECTION EFFICIENCY

| Stream | Run # | Impinger # | Total µg/Impinger | Collection Efficiency |
|---|---|---|---|---|
| Product Gas | 1 | 1 | 20,400 | > 99% |
| | 1 | 2 | ND | |
| | 2 | 1 | 18,000 | > 99% |
| | 2 | 2 | ND | |
| | 3 | 1 | 8,000 | > 99% |
| | 3 | 2 | ND | |
| Coal Bin Vent | 1 | 1 | 193 | > 88% |
| | 1 | 2 | ND | |
| | 2 | 1 | ND | — |
| | 2 | 2 | ND | |
| | 3 | 1 | ND | — |
| | 3 | 2 | ND | |
| Test Burner Flue Gas | Ammonia not detected | | | |

ND = not detected at less than 25 µg ammonia per impinger.

TABLE 3-3. CYANIDE COLLECTION EFFICIENCY

| Stream | Run # | Impinger # | Total µg/ Impinger | Collection Efficiency |
|---|---|---|---|---|
| Product Gas | 1 | 1 | 36,600 | 98% |
| | 1 | 2 | 760 | |
| | 2 | 1 | 26,000 | 94% |
| | 2 | 2 | 1,800 | |
| | 3 | 1 | 23,000 | 97% |
| | 3 | 2 | 760 | |
| Test Burner | 1 | 1 | ND | - |
| | 1 | 2 | ND | |
| | 2 | 1 | 325 | 98% |
| | 2 | 2 | 7 | |
| | 3 | 1 | 457 | 99% |
| | 3 | 2 | 2 | |
| Coal Bin Vent | 1 | 1 | 27 | >87% |
| | 1 | 2 | ND | |
| | 2 | 1 | 17 | >81% |
| | 2 | 2 | ND | |
| | 3 | 1 | 20 | >83% |
| | 3 | 2 | ND | |

ND = not detected at less than 4 µg cyanide per impinger.

### 3.1.5 Gas Phase Sulfur Species Collection

Two methods were employed to determine the concentration of the gaseous sulfur species present in the product gas and the coal bin vent gas. An impinger collection method using six percent hydrogen peroxide for the sulfur oxides, 2N zinc acetate to trap sulfide, and 0.2N potassium hydroxide in ethanol to collect carbon disulfide and carbonyl sulfide, was compared to the flame photometric GC (FPD-GC) determination which is discussed in detail in Appendix C. The results from the impinger methods are given in Table 3-4.

At the product gas start-up vent to the flare, the total volatile sulfur concentration by FPD-GC was 1280 vppm $\pm$ 200 ($2\sigma$) the average of six duplicate analyses performed over a six hour period, while the impinger collection method gave a total volatile sulfur concentration of 990 vppm. Although further evaluation of the selective speciation and trapping efficiency of the impinger method is called for, the total volatile sulfur concentration is in general agreement with the flame photometric-GC method.

Gas chromatography samples from the coal bin vent were not sufficiently pressurized to provide an analysis without the possibility of dilution occurring. The two impinger runs at this location yielded 1.5 and 2.1 vppm total volatile sulfur species, respectively.

### 3.1.6 Gas Sampling for Organics

Sampling for organics in the product gas and the test burner flue gas deviated from recommendations (Ref. 3) only by the arrangement of the condensate trap and the resin canister. At both of these locations, as previously stated, the condensate trap was prior to the XAD-2 resin canister.

To characterize the volatile organics present, a sorbent trap filled with Tenax GC/silica gel was used for the product gas prior to the cyclone. A 100 ml sample of the product gas was pumped through the tube for subsequent thermal desorption GC-MS analysis. Tenax trap samples of the coal bin vent gas were also taken; however, these samples were not analyzed due to the possibility of an unknown volume of diluent air entering the sampling system.

TABLE 3-4. TOTAL VOLATILE SULFUR IN GAS STREAMS BY IMPINGER COLLECTION

| STREAM | RUN | IMPINGER | IMPINGER WEIGHT, g | mg S/ IMPINGER | TOTAL mg S | TOTAL SCM | mg S/SCM | SULFUR vppm |
|---|---|---|---|---|---|---|---|---|
| Product Gas* | 1 | 2N ZnOAc | 282.06 | 452 | | | | |
| | | 0.1N KOH in EtOH | 159.49 | 4.67 | 459.7 | 0.3549 | 1295 | 990 |
| | | 6% $H_2O_2$ | 233.48 | 3.0 | | | | |
| Coal Bin Vent Gas | 2 | 2N ZnOAc | 198.95 | 1.08 | | | | |
| | | 0.1N KOH in EtOH | 147.47 | <.005 | 1.31 | 0.6875 | 1.9 | 1.5 |
| | | 6% $H_2O_2$ | 218.60 | 0.23 | | | | |
| Coal Bin Vent Gas | 3 | 2N ZnOAc | 186.90 | 0.20 | | | | |
| | | 0.1N KOH in EtOH | 147.47 | <.005 | 1.59 | 0.5675 | 2.8 | 2.1 |
| | | 6% $H_2O_2$ | 209.15 | 1.39 | | | | |

SCM at 25°C (77°F) and 101 kPa (1 atm), dry basis.
*at the vent to the flare.

## 3.2 ANALYTICAL METHODOLOGIES

Laboratory analyses of the solid and liquid samples followed the analysis matrices shown in Figures 3-4 and 3-5, respectively. The samples joined by brackets in the analyses diagrams were composited prior to the analyses. Descriptions of the analytical procedures used are given in Appendix C of this document.

### 3.2.1 Elemental Analysis

Analysis for 22 elements by inductively coupled argon plasma emission spectrophotometry (ICP) in addition to spark source mass spectrometry (SSMS) analysis was performed on the following samples:

- cyclone dust,
- gasifier ash,
- product gas particulates,
- gasifier ash sluice water, and
- cyclone dust quench water.

This comparison was done to determine the feasibility of using ICP for the screening of low-Btu gasification samples. The ICP requires the sample be in a liquid form for analysis, i.e., solids must be dissolved. Spark source can be run on either solid or liquid samples with little or no preparation. ICP has a greater analytical dynamic range ($10^5$) than SSMS, thus enabling quantification of the higher concentration components not possible with SSMS. The lower detection limits of ICP however can be limited because of dilution in the digestion process. Detection for the lanthanides and actinides using SSMS are far superior to those of ICP. Tables 3-5 and 3-6 present a comparison of available ICP and SSMS data. For the volatile elements, mercury, arsenic, antimony and selenium, the comparison is extended to ICP, SSMS, and atomic absorption spectrophotometry (AA) in Table 3-7. No clear trends toward a single analytical technique are apparent in these data.

### 3.2.2 Organic Screening Analysis

The organic screening analysis followed the procedures given in Appendix C. One significant deviation from the previously used procedures was the addition of ethyl ether as an extraction solvent. The ether was used after the regular methylene chloride extraction in order to recover the highly polar organics which are not as efficiently extracted by methylene chloride. All of the extracts were kept separate for preliminary total chromatographable organics (TCO) and gravimetric (GRAV) determinations to evaluate the added efficiency of the ether extractant.

| Sample | | | Analyses | | | | | | | | | | | |
|---|---|---|---|---|---|---|---|---|---|---|---|---|---|---|
| Log Number | Description | | Ultimate | Proximate | Mineral Analysis | Sizing | Morphology | SSMS* | Gross α & β | Specific Isotopes | Leaching | Organic | Bioassay | ICP |
| FS- 9 | Lignite | | ● | ● | | | | | | | | | | |
| FS- 11 | Lignite | | ● | ● | | | | | | | | | | |
| FS- 21 | Lignite | | ● | ● | ● | ● | | ● | ● | ● | | | | |
| FS- 24 | Lignite | | ● | ● | | | | | | | | | | |
| FS- 50 | Lignite | | ● | ● | | | | | | | | | | |
| FS- 72 | Lignite | | ● | ● | | | | | | | | | | |
| FS- 15 | Gasifier Ash | | | | | | | | | | | | | |
| FS- 47 | Gasifier Ash | | ● | ● | ● | ● | | ● | ● | ● | ● | ● | ● | ● |
| FS- 61 | Gasifier Ash | | | | | | | | | | | | | |
| FS- 70 | Gasifier Ash | | | | | | | | | | | | | |
| FS- 20 | Cyclone Dust | | ● | ● | ● | ● | | ● | ● | ● | ● | ● | ● | ● |
| FS- 28 | Cyclone Dust | | | | | | | | | | | | | |
| FS- 33 | TB SASS XAD Resin | | | | | | | ● | | | | ● | | |
| FS- 34 | TB SASS Cyclone | | | | | | | ● | | | | ● | | |
| FS-145 | TB SASS Filter | | | | | | | | | | | | | |
| FS-170 | PG Filter | Extract with $CH_2Cl_2$ and composite with solids from FS-75, FS-144, FS-168 | | | | | | ● | | | | | | ● |
| FS-171 | PG Filter | | | | | | | | | | | | | |

* Includes Hg, As, Sb, Se by AA.
TB: Test Burner.
PG: Product Gas.
Log numbers correspond to the sample log given in Appendix B.

Figure 3-4. Analysis Matrix for Solid Samples

| Sample | | Analyses | | | | | | | | | |
|---|---|---|---|---|---|---|---|---|---|---|---|
| Log Number | Description | BOD | pH, COD | TDS, TSS | TOC | Anions | Phenols | Ammonia | Cyanide | SSMS* | ICP |
| FS- 5 | Gasifier Ash Sluice Water | • | | | • | | | | | | |
| FS- 5 | Cyclone Quench Water | | | | | | | | | | |
| FS-26 | Cyclone Quench Water | • | | | • | | | | | | |
| FS-12 | Gasifier Ash Sluice Water | | | | | | | | | | |
| FS-43 | Gasifier Ash Sluice Water | | | | | | • | | | | |
| FS-51 | Gasifier Ash Sluice Water | | | | | | | | | | |
| FS-66 | Gasifier Ash Sluice Water | | | | | | | | | | |
| FS-13 | Gasifier Ash Sluice Water | | | | | | | | | | |
| FS-45 | Gasifier Ash Sluice Water | | | | | | | | | • | • |
| FS-52 | Gasifier Ash Sluice Water | | | | | | | | | | |
| FS-68 | Gasifier Ash Sluice Water | | | | | | | | | | |
| FS-14 | Gasifier Ash Sluice Water | | | | | | | | | | |
| FS-46 | Gasifier Ash Sluice Water | | • | • | • | • | | • | • | | |
| FS-53 | Gasifier Ash Sluice Water | | | | | | | | | | |
| FS-67 | Gasifier Ash Sluice Water | | | | | | | | | | |
| FS-17 | Cyclone Quench Water | | | | | | • | | | | |
| FS-25 | Cyclone Quench Water | | | | | | | | | | |
| FS-18 | Cyclone Quench Water | | | | | | | | | • | • |
| FS-19 | Cyclone Quench Water | | • | • | • | • | | • | • | | |
| FS-27 | Cyclone Quench Water | | | | | | | | | | |
| FS-16 | Service Water | | | | | | | | | • | |

Figure 3-5. Analysis Matrix for Liquid Samples

| Sample | | Analyses | | | | | | | | | | |
|---|---|---|---|---|---|---|---|---|---|---|---|---|
| Log Number | Description | BOD | pH, COD | TDS, TSS | TOC | Anions | Phenols | Ammonia | Cyanide | SSMS* | ICP | |
| | Ash Leachate | • | • | • | • | • | • | • | • | • | | |
| | Cyclone Dust Leachate | • | • | • | • | • | • | • | • | • | | |
| FS-38 | TB SASS Impingers | | | | | | | | | • | | |
| FS-39 | TB SASS Impingers | | | | | | | | | | | |
| FS-40 | TB SASS Impingers | | | | | | | | | • | | |
| FS-77 | PG TM Impingers | | | | | | | | | | | |
| FS-78 | PG TM Impingers | | | | | | | | | • | | |
| FS-79 | PG TM Impingers | | | | | | | | | | | |
| FS-80 | PG TM Impingers | | | | | | | | | • | | |
| FS-81 | PG TM Impingers | | | | | | | | | | | |
| 82-84 | Metal Carbonyl Impingers | | | | | | | | | | | Fe, Ni |
| 85-88 | Total Sulfur Impinger-KOH | | | | | | | | | | | Total S |
| 89-93 | Total Sulfur Impinger-$H_2O_2$ | | | | | | | | | | | Total S |
| 94-99 | Total Sulfur Impinger-Zn Acetate | | | | | | | | | | | Total S |
| 100-120 | Ammonia Impinger-$H_2SO_4$ | | | | | | | | | | | $NH_3$ |
| 121-139 | Cyanide Impinger-NaOH | | | | | | | | | | | HCN |
| FS-167 | $Ag_2S_2O_8$ Blank | | | | | | | | | • | | |
| FS-168 | PG Probe Rinse | | | | | | | | | | | |
| FS-144 | PG ESP Tar } $CH_2Cl_2$ Composite Extracts | | | | | | | | | • | | |
| FS-75 | PG ESP Rinse } $CH_2Cl_2$ Composite Extracts | | | | | | | | | | | |

*Includes Hg, As, Sb and Se by AA.
TB: Test Burner.
PG: Product Gas.
Log numbers correspond to the sample log given in Appendix B.

Figure 3-5. Analysis Matrix for Liquid Samples (Continued)

TABLE 3-5. COMPARISON OF ICP[1] AND SSMS[2] DATA FOR LIQUIDS

| Element | Gasifier Ash Sluice Water | | Cyclone Dust Quench Water | |
|---|---|---|---|---|
| | SSMS | ICP | SSMS | |
| Lead | 0.008 | <.07 | 0.02 | 0.10 |
| Barium | 0.1 | 0.14 | 0.002 | 0.57 |
| Tin | <.001 | 3.0 | <.001 | 2.9 |
| Cadmium | <.002 | <.005 | <.001 | <.005 |
| Silver | 0.001 | <.005 | <.002 | <.005 |
| Molybdenum | 0.1 | 0.31 | <.004 | <.04 |
| Strontium | 4.0 | 4.6 | 2.0 | 1.1 |
| Arsenic | 0.009 | 0.080 | 0.05 | <.08 |
| Zinc | 0.05 | 0.044 | 0.06 | 0.035 |
| Copper | 0.01 | 0.017 | 0.02 | 0.012 |
| Nickel | 0.02 | <.02 | 0.08 | <.02 |
| Cobalt | <.002 | <.15 | 0.009 | <.15 |
| Iron | 0.5 | 1.2 | 2.0 | 4.9 |
| Manganese | 0.005 | 0.002 | 0.005 | <.001 |
| Chromium | 0.009 | 0.007 | 0.01 | <.005 |
| Vanadium | 0.02 | 0.077 | 0.02 | 0.045 |
| Titanium | 0.05 | 0.044 | 0.06 | 0.18 |
| Calcium | >10 | 220 | >10 | 54 |
| Aluminum | > 1 | 11 | > 1 | 11 |
| Magnesium | 5 | 11 | 1 | 11 |
| Sodium | > 3 | 1720 | > 3 | 220 |
| Boron | 0.2 | 4.6 | 0.09 | 0.99 |

All values in μg/ml.

[2]SSMS: Spark Source Mass Spectrometry.

[1]ICP: Inductively Coupled Argon Plasma Emission Spectrometry.

TABLE 3-6. COMPARISON OF ICP[1] AND SSMS[2] DATA FOR SOLIDS

| | Cyclone Dust | | Gasifier Ash | | Product Gas Particulates | |
|---|---|---|---|---|---|---|
| | SSMS | ICP | SSMS | ICP | SSMS | ICP |
| Lead | 8 | <87 | 5 | <87 | 39 | <87 |
| Barium | >1000 | 2290 ± 25 | >1000 | 210 ± 10 | >1000 | 2320 ± 10 |
| Tin | 2 | <50 | 0.5 | 1200 ± 20 | 4 | <50 |
| Cadmium | 2 | <6 | 0.8 | <6 | 3 | 85± 3 |
| Silver | 2 | <6 | 0.6 | <6 | 30 | NA |
| Molybdenum | 2 | <50 | 15 | 50 ± 1 | 3 | <50 |
| Strontium | >1000 | 1180 ± 10 | >1000 | 1290 ± 10 | >1000 | 1200 ± 10 |
| Arsenic | 46 | <6 | 9 | 98 ± 1 | 89 | <100 |
| Zinc | 160 | 40 ± 6 | 20 | 15 ± 10 | 70 | 140 ± 6 |
| Copper | 30 | <6 | 81 | 25 ± 8 | 110 | 76 ± 6 |
| Nickel | 4 | <25 | 75 | 67 ± 4 | 35 | <33 |
| Cobalt | 5 | <180 | 23 | <180 | 4 | <180 |
| Iron | >1000 | 7730 ± 100 | >1000 | 30300 ± 200 | >1000 | 10300 ± 200 |
| Manganese | 20 | 18 ± 4 | 170 | 64 ± 1 | 13 | 35 ± 2 |
| Chromium | 11 | <6 | 100 | 21 ± 1 | 27 | 40 ± 11 |
| Vanadium | 19 | <12 | 410 | <12 | 11 | <13 |
| Titanium | 470 | 310 ± 10 | >1000 | 310 ± 7 | 550 | 290 ± 10 |
| Calcium | >1000 | 44000 ± 350 | >1000 | 48500 ± 400 | >1000 | 44900 ± 300 |
| Aluminum | >1000 | 7100 ± 100 | >1000 | 19000 ± 100 | >1000 | 8370 ± 40 |
| Magnesium | >1000 | 12200 ± 100 | >1000 | 12300 ± 100 | >1000 | 12200 ± 200 |
| Sodium | >1000 | <6200 | >1000 | <6200 | >1000 | 6350 ± 150 |
| Boron | 75 | 110 ± 5 | 320 | 210 ± 10 | 200 | 170 ± 5 |

All values in μg/g ± 2σ (where available).
NA = Not Analyzed.

[2]SSMS: Spark Source Mass Spectrometry.
[1]ICP: Inductively Coupled Argon Plasma Emisssion Spectrometry.

TABLE 3-7. VOLATILE METAL COMPARISON

| Stream | Method | Arsenic | Antimony | Selenium | Mercury |
|---|---|---|---|---|---|
| Cyclone Dust | AA | 64 | <0.4 | 13 | 2.1 |
| | SSMS | 46 | 3 | 5 | NA |
| | ICP | <6 | NA | NA | NA |
| Gasifier Ash | AA | <6.5 | 2 | 0.01 | 0.39 |
| | SSMS | 9 | <0.1 | 4 | NA |
| | ICP | 98 | NA | NA | NA |
| Product Gas Particulates | AA | 77 | <0.4 | 15 | 2.6 |
| | SSMS | 89 | 2 | 3 | NA |
| | ICP | <100 | NA | NA | NA |
| Gasifier Ash Sluice Water | AA | 0.33 | <0.06 | 0.02 | 0.0014 |
| | SSMS | 0.009 | 0.002 | 0.005 | NA |
| | ICP | 0.08 | NA | NA | NA |
| Cyclone Dust Quench Water | AA | 0.12 | <0.06 | 0.03 | 0.0004 |
| | SSMS | 0.05 | <0.001 | 0.006 | NA |
| | ICP | <0.08 | NA | NA | NA |

As ppm, solids μg/g; liquids μg/ml.

NA: Not analyzed.

SSMS: Spark Source Mass Spectrometry.

ICP: Inductively Coupled Argon Plasma Emission Spectrometry.

AA: Atomic Absorption Spectrometry.

For solids, the added extraction efficiency of ether is somewhat variable as shown in Table 3-8. The greater percentages of added efficiency correspond to TCO increases and, with the exception of the product gas particulates, none of the solids would be expected to retain TCO material. Since the product gas particulates were collected with an ESP at 140°C (285°F) instead of 200°C (400°F), some additional TCO material would be anticipated. The added extraction efficiency on the GRAV portions indicates that the particulates may have contained tarry material that was more soluble in the ether.

Liquid samples show the widest range of variability for the added extraction efficiency of ether. From the data in Table 3-9, there is no real advantage to the ether extractions for TCO material. It is clear though that the GRAV material recovery was enhanced by the ether extraction. From these data, following the methylene chloride extraction with ether extraction is recommended for added recovery efficiency for both solids and liquids.

Addition of an ether extraction step does not pose a problem for the liquid chromatography solvent exchanges due to the high volatility of ethyl ether. However, ether is often difficult to obtain at adequate purity for extraction and greater than 100-fold concentrations. Distilled-in-glass quality ether sometimes requires additional clean-up prior to use due to the presence of ethyl acetate.

TABLE 3-8. ADDED EXTRACTION EFFICIENCY USING ETHYL ETHER FOR SOLIDS

| | TCO | | GRAV | | Added Efficiency | |
|---|---|---|---|---|---|---|
| | $CH_2Cl_2$ | $Et_2O$ | $CH_2Cl_2$ | $Et_2O$ | TCO | GRAV |
| Gasifier Ash (mg/kg) | 18.5 | 2.57 | 526 | 38 | 12% | 7% |
| Cyclone Dust (mg/kg) | 163 | 60.2 | 1110 | 820 | 28% | 7% |
| Test Burner Particulates (μg/SCM) | 24.3 | 8.43 | 647 | 333 | 26% | 34% |
| Product Gas Particulates (mg/SCM) | 1.13 | 0.31 | 182 | 57.5 | 21% | 24% |
| Product Gas Resin (mg/SCM) | 2050 | 24 | 290 | 13 | 1% | 4% |

SCM at 25°C (77°F) and 101 kPa (1 atm), dry basis.

$$\text{Added Efficiency (\%)} = \frac{\text{Ether Extractable Mass}}{\text{Total Extractable Mass}} \times 100$$

TABLE 3-9. ADDED EXTRACTION EFFICIENCY USING ETHYL ETHER FOR LIQUIDS

| | pH=2 | | pH=12 | | Added Efficiency | |
|---|---|---|---|---|---|---|
| | $CH_2Cl_2$ | $Et_2O$ | $CH_2Cl_2$ | $Et_2O$ | pH=2 | pH=12 |
| TCO (in mg/l) | | | | | | |
| Gasifier Ash Sluice Water | 4.16 | ND | 9.38 | 0.17 | 0% | 2% |
| Cyclone Dust Quench Water | ND | ND | 3.31 | ND | - | 0% |
| GRAV (in mg/l) | | | | | | |
| Gasifier Ash Sluice Water | 63.2 | 44.5 | ND | 4.3 | 41% | 100% |
| Cyclone Dust Quench Water | 23.2 | 14.6 | 12.2 | 2.6 | 39% | 18% |

ND = less than 0.001 mg/ℓ detected.

$$\text{Added Efficiency (\%)} = \frac{\text{Ether Extractable Mass}}{\text{Total Extractable Mass}} \times 100$$

## 3.3 DETAILED ORGANIC ANALYSIS APPROACH

The fundamental objective of the detailed organic analysis approach followed on this project was the generation of data for process and effluent streams which would allow an assessment of the potential environmental and health effects of a stream by comparison to the discharge multimedia environmental goals (DMEG) for specific compounds (Ref. 4,5, and 6). To achieve this objective in the most comprehensive manner for specific organic compounds would be extremely expensive. Therefore, a phased logic sequence was followed to provide a means of prioritizing streams, fractions within each stream, and classes of compounds and specific compounds within each fraction. The logic sequence was intended to utilize techniques to eliminate as many compounds as possible from consideration in the compound-specific detailed analysis by insuring that they are not present at concentrations greater than their respective DMEG values.

The data from the preliminary screening analysis were used to eliminate from consideration as many classes of compounds or specific compounds for which DMEG values were available prior to the detailed analysis. This step simultaneously reduced the scope of the detailed analysis and prioritized the samples on the basis of weighted discharge severity (WDS) for further analysis. The decision criteria were based on worst case DMEG values for specific compounds which were potentially present.

The logic sequence implemented contained these decision elements:

1. With all available information about the stream such as process data, on-site analysis results, ultimate and proximate analyses, can any possible reduction in DMEG compounds or classes of compounds be made?

2a. With the determination of extractable organic content by total chromatographable organics (TCO) and gravimetric (GRAV) content, can any reduction be made on the basis of a Discharge Severity <1?

2b. With the infrared analysis data, can a reduction of compound classes be made on the basis of key functional group absence?

3. After fractionation of a sample by a separation scheme for which there are established relationships between compound classes and individual fraction, do the TCO and GRAV determinations in conjunction with the predicted compound class/fraction relationship reduce the number of compounds of concern?

4. On the basis of the infrared analysis for each LC fraction, can an elimination of compound classes be made? Must other compound classes not predicted by the LC relationship be introduced into consideration?

5. If the preceding decision criteria eliminate the possibility of hazardous materials, do the bioassay results indicate that a hazard not covered by the DMEG listings is present?

This phased logic sequence is presented graphically in Figure 3-6.

The detailed organic analysis approach implemented here was compound specific only for those compounds in the DMEG listings. Prioritization was done on the worst case basis which meant that the calculated total organic loading for a sample or an LC fraction was all assumed to be the specific compound having the lowest DMEG value in each predicted category. The specific analysis focused on:

- quantification of the first priority compound,
- calculating a new prioritization in case the second worst compound in that category might have a higher priority than the first priority compound from the next compound category of interest, and
- quantification of the next priority compound.

The necessary ranking between samples was done on a flow rate weighing, so the actual analysis prioritization was based on weighted discharge severity, where:

$$\frac{dc_{tot}}{DMEG} = DS$$

and,

$$DS \times mr = WDS.$$

where:

$dc_{tot}$ = discharge concentration of the measured total organic loading as the sum of TCO and GRAV

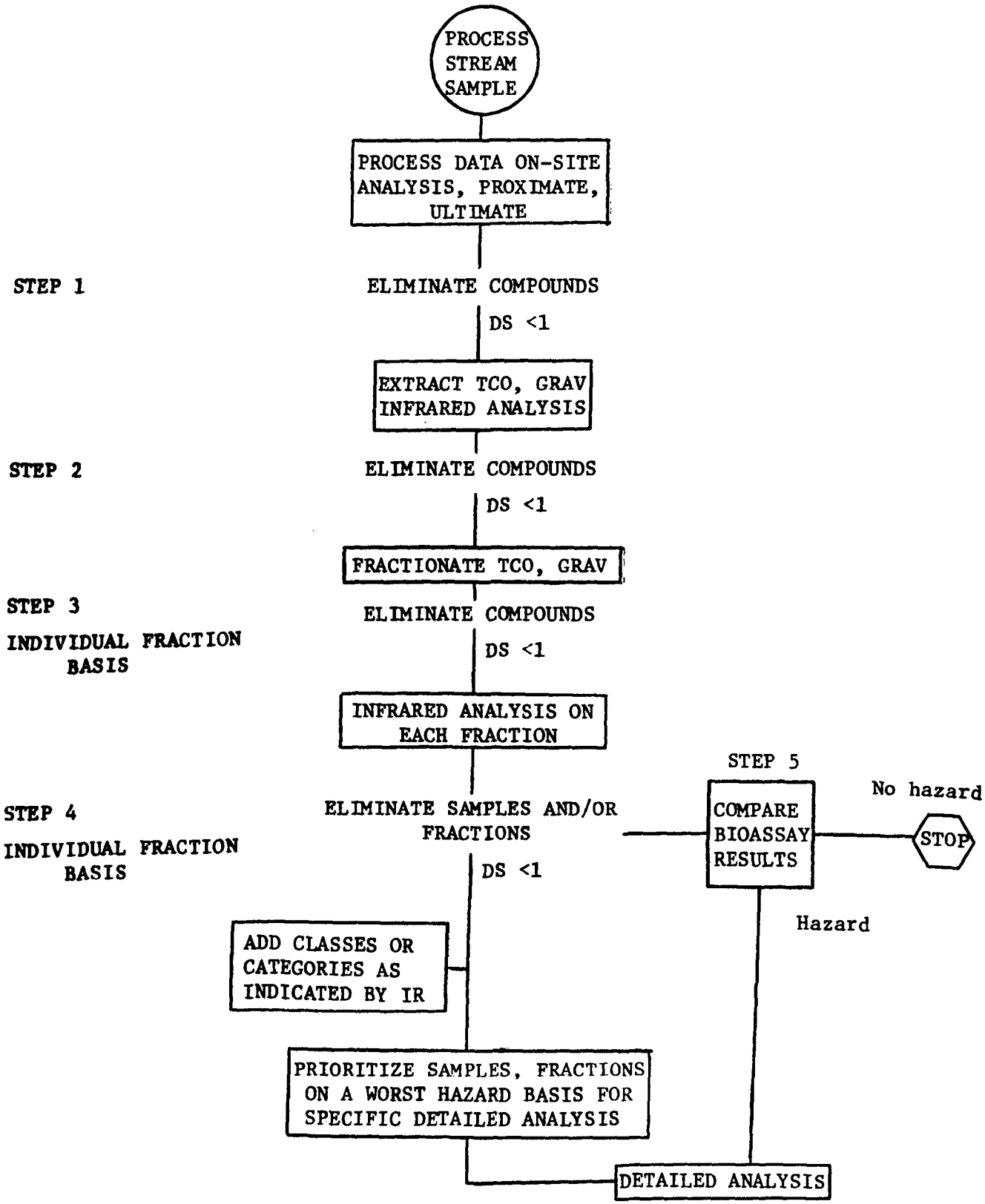


Figure 3-6. Organic Analysis Prioritization Logic Sequence

DMEG = discharge multimedia environmental goal, used here as the appropriate worst case value for each classs of compounds

DS = discharge severity

mr = mass flow rate of the stream analyzed

WDS = weighted discharge severity for each stream analyzed

### 3.3.1 Specific Ion Monitoring GC/MS

The method chosen for the detailed analysis was specific ion monitoring (SIM) gas chromatography/mass spectrometry (GC/MS). With this technique, the appearance of characteristic compound specific ions is monitored within known retention time windows for the compound of interest. In order to get confirmation for the designate compound:

- the primary ion must be present,
- the secondary ion must be present,
- both ions must be maximized at the correct retention time for the designated compound.

In as many cases as possible, standards of the designated compounds were obtained and their mass spectra and retention times were verified prior to analysis. Compounds for which no standards were available were monitored on the basis of characteristic ions from the literature during the entire mass spectrometer run time. An example of the specific ion monitoring technique is given in Figure 3-7, which shows a SIM GC/MS analysis for benzo(b)fluoranthene. The figure shows both the more intense primary ion, m/e = 252, and the secondary ion, m/e = 250, maximized at 35.0 minutes which was the established retention time for benzo(b)fluoranthene. Since all three confirmation criteria were met, the probability of correct identification was enhanced. The instrumental parameters for this analysis are given in Appendix C.

Specific ion monitoring GC/MS was chosen as the primary detailed analysis technique because it generates compound specific information which is required to implement the analysis approach concept. To obtain the same degree of compound specific information from a scanning GC/MS analysis, every peak in the total ion plot would have to be identified. The effort required for the identification of all the compounds eluting from the GC column would be prohibitive in this source test and evaluation program.

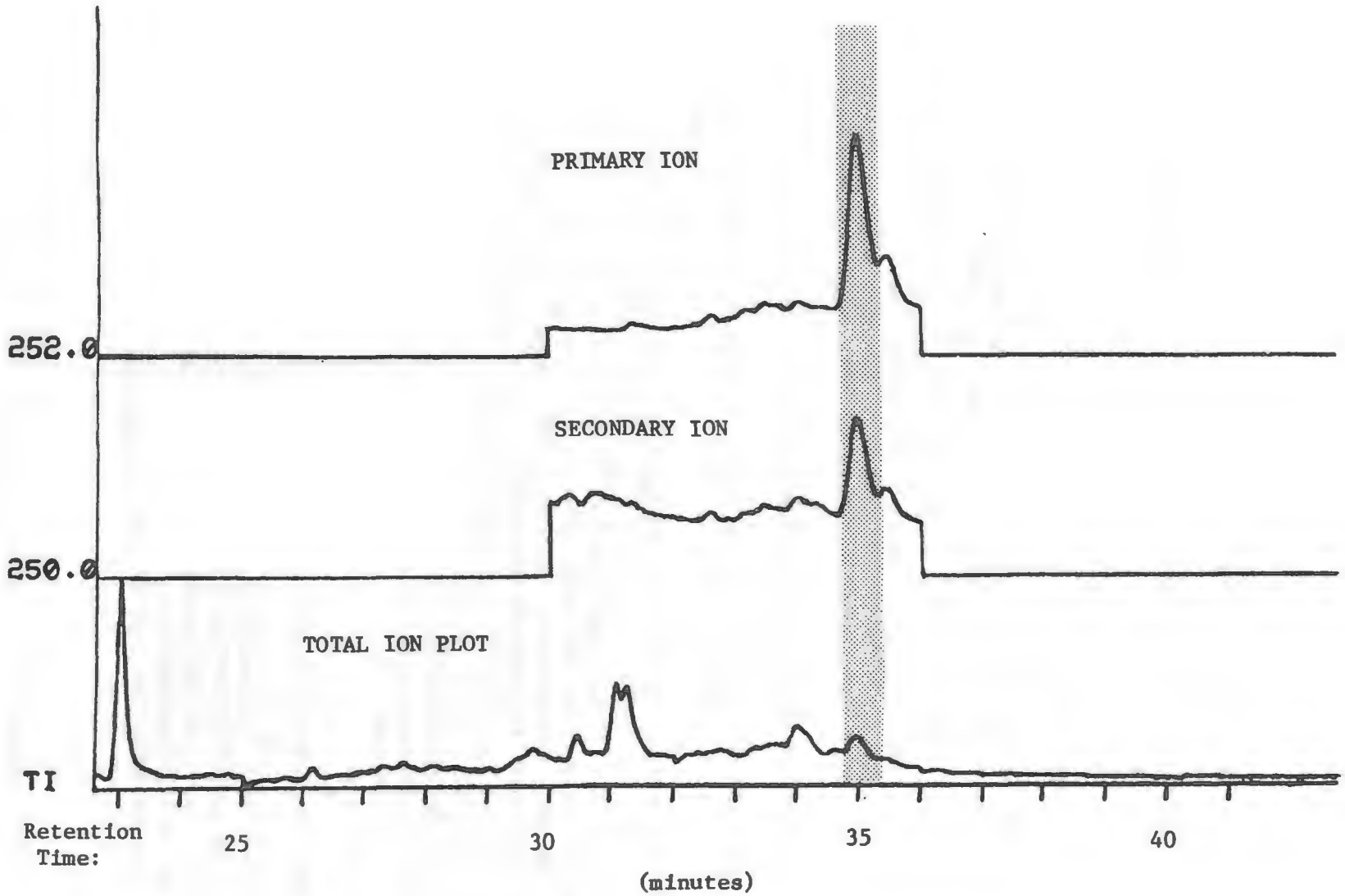


Figure 3-7 . Specific Ion Monitoring Plot for Benzo(b)fluoranthene

To identify the major components of a GC/MS scan gives a better overall view of the process stream components, but does not address the problems of extremely hazardous compounds present at very low concentrations as does SIM GC/MS. Low resolution mass spectrometry using the direct probe for sample injection also gives a better overall view of the process stream than SIM GC/MS, but has specificity deficiencies.

### 3.3.2 Halogen Specific Gas Chromatography

As an adjunct to the detailed analysis technique, a halogen-specific analysis was done prior to SIM GC/MS. This analysis was designed to give quantitative information about the compounds and classes of compounds that contain halogen moieties, since halogenated organic compounds are among the most hazardous in the DMEG listings. Aliquots of the unfractionated samples were analyzed by gas chromatography using a Hall electrolytic conductivity detector in the halogen-specific mode according to the procedure given in Appendix C.

## 3.4 QUALITY ASSURANCE

To provide quality assurance for the on-site analyses, certified gas standards and standard solutions were analyzed during the sampling effort. Also, GC samples were analyzed in duplicate on-site. During the on-site sampling, an evaluation of the affect the electrostatic precipitator had on the gas stream composition was made. No trends or indications of sample degradation were observed. The planned evaluation of trace element train collection efficiencies was not conducted due to process operational difficulties.

The samples which were not analyzed on-site were preserved according to the recommended procedures (Ref. 3). Liquid samples that had short lifetimes were returned for laboratory analysis within the preservation time limits. All samples were logged on-site and the log data entries were cross-verified upon receipt in the laboratory. The on-site log is presented in Appendix B of this document.

Solvent blanks, impinger solution blanks, and blank XAD-2 resin were analyzed in the laboratory and included in the appropriate subcontracted analyses. LC columns were run using a blank XAD-2 resin extract and solvent blanks from designated solvent lots. The same solvent lots were used throughout the organic analysis, and blanks were analyzed by IR as well as TCO and GRAV. TCO blanks were analyzed within each set of TCO determinations. An infrared spectrum of the blank XAD-2 resin extract is given in Appendix D for purposes of comparison with the infrared spectrum of XAD-2 sample extracts.

The EPA Water Quality control sample #3 was analyzed by ICP to provide the accuracy data for the method. Table 3-10 presents the comparison of the reported value and the Radian ICP value. Most values were within experimental errors. Arsenic and lead were above the prescribed level. This is due to the misalignment of the analytical lines of these elements on the present instrument.

Prior to the thermal desorption GC/MS analysis of the Tenax trap, a blank run was made to assure that no instrument contamination was present. Hexadeuterobenzene was used as an internal standard for the thermal desorption GC/MS analysis, and $d_{10}$-anthracene was used as the internal standard for the SIM GC/MS quantification.

TABLE 3-10. COMPARISON OF RADIAN ICP DATA AND REPORTED VALUES FOR EPA WATER QUALITY CONTROL SAMPLE #3

| Element | Reported µg/ml | Radian µg/ml |
|---|---|---|
| Aluminum | 0.904 | 1.15 |
| Arsenic | 0.154 | 0.301 |
| Cadmium | 0.073 | 0.083 |
| Cobalt | 0.396 | 0.547 |
| Chromium | 0.209 | 0.238 |
| Copper | 0.102 | 0.114 |
| Iron | 0.678 | 0.760 |
| Manganese | 0.397 | 0.425 |
| Lead | 0.352 | 0.546 |
| Vanadium | 0.157 | 0.186 |
| Zinc | 0.174 | 0.206 |

# SECTION 4

# RESULTS

An overview of the Source Analysis Model/1A results, the bioassay results, and the analytical results is contained in the following sections. Detailed tabulations of all data produced are provided in the appendices.

## 4.1 Source Analysis Model/1A Results

The Source Analysis Model/1A (Ref. 7) was used to provide a rapid screening technique for identifying and prioritizing potentially harmful waste streams. Major simplifying assumptions implicit in the use of the Source Analysis Model/1A (SAM/1A) methodology are:

- The substances currently in the Multimedia Environmental Goals (MEG) lists (Ref. 4, 5 and 6) are the only ones that must be addressed at this time (the MEG's are currently being updated to include new data, account for new or revised standards, and add new compounds).

- Transport of the components in the waste streams to the external environment occurs without chemical or physical transformation of those components.

- Actual dispersion of a pollutant from a source to a receptor will be equal to, or greater than the safety factors normally applied to acute toxicity data to convert these data to estimated safe chronic exposure levels.

- Discharge Multimedia Environmental Goals (DMEG) values (Ref. 4, 5, and 6) developed for each substance are adequate for estimating acute toxicity. A DMEG is a concentration of a substance estimated to cause an adverse effect in a health receptor exposed once or intermittently for short periods. It relates either to human health or ecological effects.

- The waste stream components cause no synergistic effects.

These assumptions, along with the accuracy of the test data and assumptions used in developing DMEG values, must be considered when interpreting test results using a SAM/1A analysis scheme.

In addition to the assumptions inherent in the SAM/1A, the summarized SAM/1A results given are based on these postulates:

- All streams are treated as if they were emission streams, and the flow rates are used for weighted discharge severity (WDS) calculations.

- The compounds or elements identified by a specific method preempt any screening results such as SSMS or LC.

- The maximum potential concentration of an organic compound not specifically identified is taken as the sum of the TCO and GRAV concentration of the established LC fraction.

The SAM/1A results calculated at the end of the organic screening analysis were used to prioritize LC fractions for specific ion monitoring (SIM) GC-MS. Using the established correlation between LC fractions and organic categories in the MEG listings (Ref. 8), the categories that could be present in each fraction were determined. Potential worst case weighted discharge severity (WDS) factors were then calculated for each LC fraction by assuming that the total organic loading (TCO + GRAV) is present as the worst case compound (smallest DMEG value) in the categories potentially present. These worst case weighted discharge severity factors were as shown in Figure 4-1. The detailed analysis then focused on those organic compounds potentially present which would generate WDS factors from $10^{10}$ to $10^{7}$. Utilizing this approach exerted a leveling effect on the resulting WDS factors.

The actual concentrations of specific organic compounds, as determined by SIM/GC-MS during the detailed analysis, were significantly less than the maximum potential concentration. The highest specific WDS for any stream, calculated from measured concentrations of specific compounds, is less than $10^{8}$. The SAM/1A results given in the Tables (4-1 to 4-14) are for the highest WDS factors from each stream and include both experimentally verified compounds and remaining worst case assumptions. The summations of these WDS factors to give total WDS for each stream are given in Table 4-15 for both the health and ecological effects. The analogous discharge severity (DS) summations are also given in the table. Further expenditure of effort to eliminate the remaining worst case assumptions could lower these WDS and DS factors even more.

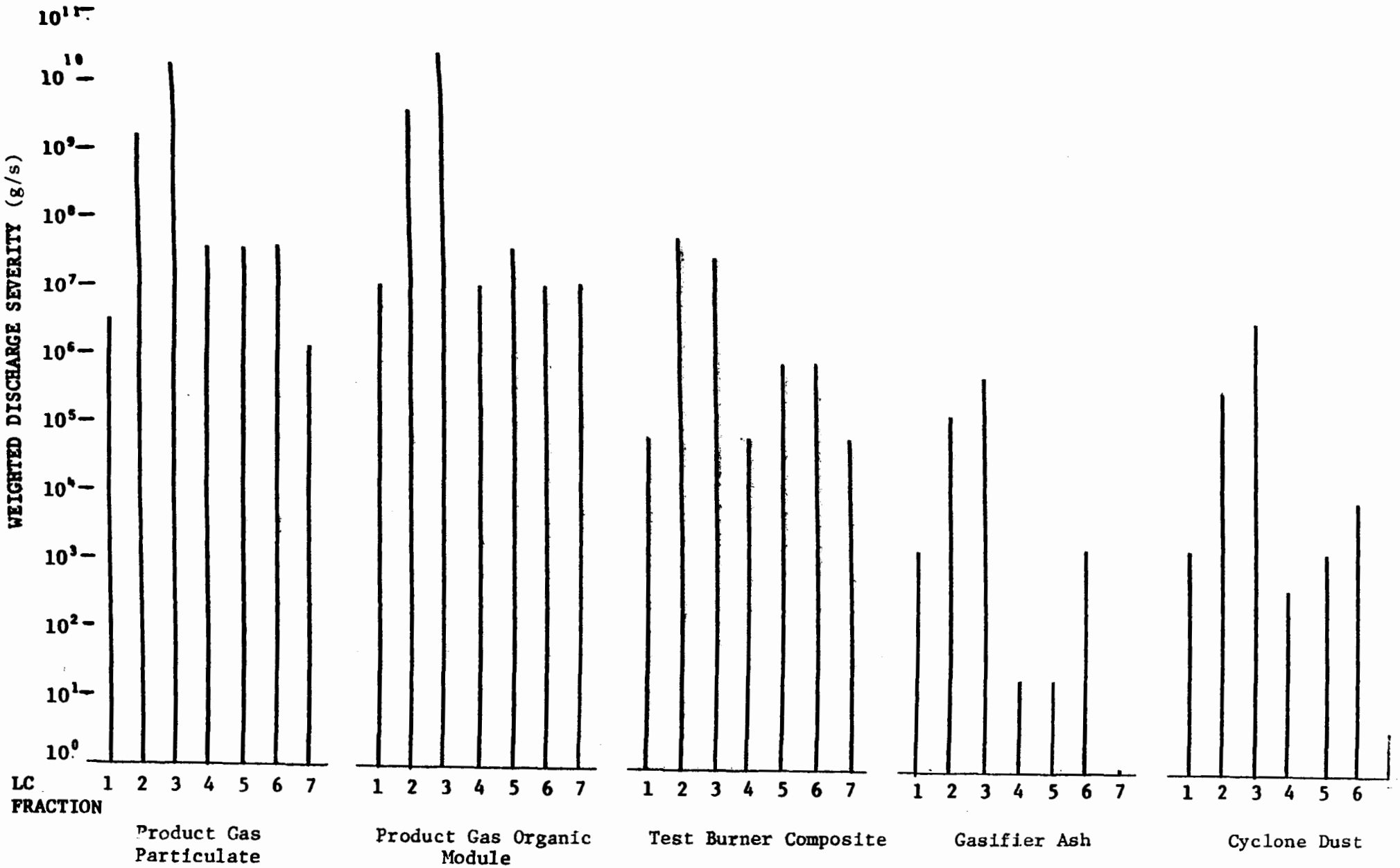


FIGURE 4-1. Worst Case Weighted Discharge Severity Summary Based on Screening Analysis Results Only

NOTES FOR THE FOLLOWING TABLES: 4-1 to 4-14

P = compound is on Priority Pollutant List

W = compound is the worst case within the appropriate matrix for that category/subcategory

T = concentration is total organic loading (TCO + GRAV) for the LC fraction

S = concentration is from SSMS

D = concentration is determined experimentally; from on-site analysis, SIM-GC/MS, Anion/Cation analysis ICP or AAS

Conc = concentration in μg/SCM at 25°C (77°F) and 101 kPa (1 atm) dry basis, for gases; μg/l (ppb) for liquids; and μg/g (ppm) for solids

WDS = units are g/s for all streams

LCCAT = established LC fraction if applicable

* = indicates that the compound appears more than once in the listing, i.e. in more than one LC fraction

TABLE 4-1. PRODUCT GAS PARTICULATE/TAR MAJOR CONTRIBUTIONS TO DS AND WDS FOR HEALTH EFFECTS INCLUDING WORST CASE ASSUMPTIONS

PRODUCT GAS PARTICULATE, HEALTH IMPACT

| DMEG NO. | | COMPOUND NAME | TYPE | CONC E-6 G/SCM | DS | WDS G/S | LCCAT |
|---|---|---|---|---|---|---|---|
| 04 B 020* | P W | 1,1'-DICHLOROMETHYL ETHER | T | 4.90E 05 | 9.80E 04 | 5.80E 07 | 5 |
| 04 B 020* | P W | 1,1'-DICHLOROMETHYL ETHER | T | 4.10E 05 | 8.20E 04 | 4.83E 07 | 4 |
| 10 C 100* | | 1,4-DIAMINOBENZENE | T | 3.60E 06 | 3.60E 04 | 2.12E 07 | 6 |
| 10 C 043* | | 4-AMINOTOLUENE | T | 3.60E 06 | 3.30E 04 | 1.93E 07 | 6 |
| 10 C 041* | | 2-AMINOTOLUENE | T | 3.60E 06 | 3.30E 04 | 1.93E 07 | 6 |
| 10 C 042* | | 3-AMINOTOLUENE | T | 3.60E 06 | 3.30E 04 | 1.93E 07 | 6 |
| 12 A 040* | P | N-NITROSODIETHYLAMINE | T | 3.60E 06 | 3.00E 04 | 1.80E 07 | 6 |
| 10 C 220* | | 2-AMINONAPHTHALENE | T | 3.60E 06 | 2.11E 04 | 1.24E 07 | 6 |
| 20 B 041* | | 3,5-DINITRO-P-CRESOL | T | 3.60E 06 | 1.80E 04 | 1.10E 07 | 6 |
| 20 B 020* | P W | 4,6-DINITRO-O-CRESOL | T | 3.60E 06 | 1.80E 04 | 1.10E 07 | 6 |
| 20 B 042* | | 2,6-DINITRO-P-CRESOL | T | 3.60E 06 | 1.80E 04 | 1.10E 07 | 6 |
| 21 C 100* | P W | BENZO(A)PYRENE | D | 1.90E 02 | 9.50E 03 | 5.60E 06 | 3 |
| 02 B 140* | P W | HEXACHLOROCYCLOPENTADIENE | T | 8.70E 05 | 7.90E 03 | 4.70E 06 | 1 |
| 10 C 082* | | M-ANISIDINE | T | 3.60E 06 | 7.20E 03 | 4.24E 06 | 6 |
| 10 C 083* | | P-ANISIDINE | T | 3.60E 06 | 7.20E 03 | 4.24E 06 | 6 |
| 10 C 080* | | ANISIDINES | T | 3.60E 06 | 7.20E 03 | 4.24E 06 | 6 |
| 10 C 081* | | O-ANISIDINE | T | 3.60E 06 | 7.20E 03 | 4.24E 06 | 6 |
| 19 A 060* | P W | PENTACHLOROPHENOL | T | 3.60E 06 | 7.20E 03 | 4.24E 06 | 6 |
| 13 A 100* | W | BENZENETHIOL | T | 3.60E 06 | 7.20E 03 | 4.24E 06 | 6 |
| 10 C 200* | | 1-AMINONAPHTHALENE | T | 3.60E 06 | 6.42E 03 | 3.80E 06 | 6 |
| 23 C 160* | W | DIBENZO(C,G)CARBAZOLE | T | 4.90E 05 | 4.90E 03 | 2.90E 06 | 5 |
| 10 C 100* | | 1,4-DIAMINOBENZENE | T | 4.90E 05 | 4.90E 03 | 2.90E 06 | 5 |
| 13 A 140* | | PERCHLOROMETHANETHIOL | T | 3.60E 06 | 4.50E 03 | 2.70E 06 | 6 |
| 10 C 042* | | 3-AMINOTOLUENE | T | 4.90E 05 | 4.50E 03 | 2.62E 06 | 5 |
| 10 C 043* | | 4-AMINOTOLUENE | T | 4.90E 05 | 4.50E 03 | 2.62E 06 | 5 |
| 10 C 041* | | 2-AMINOTOLUENE | T | 4.90E 05 | 4.50E 03 | 2.62E 06 | 5 |
| 23 C 160* | W | DIBENZO(C,G)CARBAZOLE | T | 4.10E 05 | 4.10E 03 | 2.41E 06 | 4 |
| 12 A 040* | P | N-NITROSODIETHYLAMINE | T | 4.90E 05 | 4.10E 03 | 2.40E 06 | 5 |
| 08 A 122* | | PALMITIC ACID | T | 3.60E 06 | 3.60E 03 | 2.12E 06 | 6 |
| 10 C 140* | P | BENZIDINE | T | 3.60E 06 | 3.60E 03 | 2.12E 06 | 6 |
| 08 A 121* | | MYRISTIC ACID | T | 3.60E 06 | 3.60E 03 | 2.12E 06 | 6 |
| 08 A 123* | | STEARIC ACID | T | 3.60E 06 | 3.60E 03 | 2.12E 06 | 6 |
| 08 A 120* | W | SATURATED LONG CHAIN ACIDS (MW:228-285) | T | 3.60E 06 | 3.60E 03 | 2.12E 06 | 6 |
| 08 C 060* | W | 6-HEXANELACTAM | T | 3.60E 06 | 3.60E 03 | 2.12E 06 | 6 |

TABLE 4-2. PRODUCT GAS PARTICULATE/TAR MAJOR CONTRIBUTIONS TO DS AND WDS FOR ECOLOGICAL EFFECTS INCLUDING WORST CASE ASSUMPTIONS

PRODUCT GAS PARTICULATE, ECOLOGY IMPACT

| DHEG NO. | | COMPOUND NAME | TYPE | CONC E-6 G/SCM | DS | WDS G/S | LCCAT |
|---|---|---|---|---|---|---|---|
| 83 A 010 | P | MERCURY | D | 6.50E 03 | 6.50E 02 | 3.83E 05 | |
| 15 A 120* | | ISOPROPYL BENZENE | T | 6.80E 05 | 5.70E 02 | 3.34E 05 | 3 |
| 15 A 040* | P | TOLUENE | T | 6.80E 05 | 1.50E 02 | 8.72E 04 | 3 |
| 15 A 120* | | ISOPROPYL BENZENE | T | 8.90E 04 | 7.41E 01 | 4.40E 04 | 2 |
| 65 A 010 | | VANADIUM | S | 3.60E 01 | 3.60E 01 | 2.12E 04 | |
| 15 A 040* | P | TOLUENE | T | 8.90E 04 | 1.45E 01 | 1.14E 04 | 2 |
| 01 B 080 | | BUTADIENES | T | 8.70E 05 | 4.00E-01 | 2.33E 02 | 1 |
| 01 B 060 | | BUTYLENES | T | 8.70E 05 | 3.80E-02 | 2.23E 01 | 1 |
| 16 A 220* | | POLYCHLORINATED BIPHENYLS | D | < 7.60E 00 | < 0.00E-01 | < 0.00E-01 | 2 |
| 22 C 080* | P | BENZO(B)FLUORANTHENE | D | 1.00E 01 | 0.00E-01 | 0.00E-01 | 2 |
| 21 C 100* | P | BENZO(A)PYRENE | D | 0.00E-01 | 0.00E-01 | 0.00E-01 | 2 |
| 16 A 220* | | POLYCHLORINATED BIPHENYLS | D | 0.00E-01 | 0.00E-01 | 0.00E-01 | 3 |
| 21 B 060* | | 7,12-DIMETHYLBENZ(A)ANTHRACENE | D | 1.60E 02 | 0.00E-01 | 0.00E-01 | 3 |
| 22 C 080* | P | BENZO(B)FLUORANTHENE | D | 3.70E 02 | 0.00E-01 | 0.00E-01 | 3 |
| 21 B 100* | | BENZO(C)PHENANTHRENE & ALKYL DERIVATIVES | D | 0.00E-01 | 0.00E-01 | 0.00E-01 | 2 |
| 21 B 060* | | 7,12-DIMETHYLBENZ(A)ANTHRACENE | D | 0.00E-01 | 0.00E-01 | 0.00E-01 | 2 |
| 21 C 100* | P | BENZO(A)PYRENE | D | 1.90E 02 | 0.00E-01 | 0.00E-01 | 3 |
| 21 D 040* | | DIBENZO(A,I)PYRENE | D | 0.00E-01 | 0.00E-01 | 0.00E-01 | 2 |
| 21 C 080* | P | DIBENZ(A,H)ANTHRACENE | D | 6.10E 00 | 0.00E-01 | 0.00E-01 | 3 |
| 17 B 040 | | 1-CHLORO-2-NITROBENZENE | D | 0.00E-01 | 0.00E-01 | 0.00E-01 | 4 |
| 21 B 080* | | 3-METHYLCHOLANTHRENE | D | 0.00E-01 | 0.00E-01 | 0.00E-01 | 2 |
| 21 C 080* | P | DIBENZ(A,H)ANTHRACENE | D | 0.00E-01 | 0.00E-01 | 0.00E-01 | 2 |
| 03 B 060 | | 2-ETHYL-4-METHYL-1,3-DIOXOLANE | D | 0.00E-01 | 0.00E-01 | 0.00E-01 | 4 |
| 09 A 120 | | TETRAMETHYLSUCCINONITRILE | D | 0.00E-01 | 0.00E-01 | 0.00E-01 | 4 |
| 25 B 040 | | BENZO(B)THIOPHENE | D | 0.00E-01 | 0.00E-01 | 0.00E-01 | 4 |
| 09 B 020 | | BENZONITRILE | D | 0.00E-01 | 0.00E-01 | 0.00E-01 | 4 |
| 12 A 020* | P | N-NITROSODIMETHYLAMINE | D | 0.00E-01 | 0.00E-01 | 0.00E-01 | 5 |
| 10 C 040* | | AMINOTOLUENES | D | 0.00E-01 | 0.00E-01 | 0.00E-01 | 5 |
| 08 B 060* | | B-PROPIOLACTONE | D | 0.00E-01 | 0.00E-01 | 0.00E-01 | 5 |
| 20 A 120* | | 2,4,6-TRINITROPHENOL | D | 0.00E-01 | 0.00E-01 | 0.00E-01 | 5 |
| 20 B 040* | | DINITRO-P-CRESOLS | D | 8.40E 02 | 0.00E-01 | 0.00E-01 | 5 |
| 23 B 100* | | DIHYDROACRIDINE | D | 2.30E 01 | 0.00E-01 | 0.00E-01 | 5 |
| 23 B 220* | | DIBENZ(A,J)ACRIDINE | D | 0.00E-01 | 0.00E-01 | 0.00E-01 | 5 |
| 23 B 240* | | DIBENZ(A,H)ACRIDINE | D | 0.00E-01 | 0.00E-01 | 0.00E-01 | 5 |

TABLE 4-3. PRODUCT GAS ORGANIC MODULE MAJOR CONTRIBUTIONS TO DS AND WDS FOR HEALTH EFFECTS INCLUDING WORST CASE ASSUMPTIONS

PRODUCT GAS ORGANIC MODULE COMPOSITE, HEALTH IMPACT

| DMEG NO. | | COMPOUND NAME | TYPE | CONC E-6 G/SCM | DS | WDS G/S | LCCAT |
|---|---|---|---|---|---|---|---|
| 04 B 020* P W | | 1,1'-DICHLOROMETHYL ETHER | T | 5.70E 05 | 1.14E 05 | 6.72E 07 | 5 |
| 04 B 020* P W | | 1,1'-DICHLOROMETHYL ETHER | T | 1.30E 05 | 2.60E 04 | 1.53E 07 | 4 |
| 02 B 140* P W | | HEXACHLOROCYCLOPENTADIENE | T | 1.60E 06 | 1.50E 04 | 8.60E 06 | 1 |
| 12 A 020* P W | | N-NITROSODIMETHYLAMINE | T | 7.10E 05 | 1.10E 04 | 6.44E 06 | 6 |
| 08 B 060* W | | B-PROPIOLACTONE | T | 2.50E 06 | 7.81E 03 | 4.60E 06 | 7 |
| 42 A 070 | | CARBON MONOXIDE | D | 3.00E 08 | 7.50E 03 | 4.42E 06 | |
| 20 A 120* W | | 2,4,6-TRINITROPHENOL | T | 7.10E 05 | 7.10E 03 | 4.20E 06 | 6 |
| 10 C 100* | | 1,4-DIAMINOBENZENE | T | 7.10E 05 | 7.10E 03 | 4.20E 06 | 6 |
| 10 C 040* | | AMINOTOLUENES | T | 7.10E 05 | 6.50E 03 | 3.80E 06 | 6 |
| 10 C 043* | | 4-AMINOTOLUENE | T | 7.10E 05 | 6.50E 03 | 3.80E 06 | 6 |
| 10 C 042* | | 3-AMINOTOLUENE | T | 7.10E 05 | 6.50E 03 | 3.80E 06 | 6 |
| 10 C 041* | | 2-AMINOTOLUENE | T | 7.10E 05 | 6.50E 03 | 3.80E 06 | 6 |
| 12 A 040* P | | N-NITROSODIETHYLAMINE | T | 7.10E 05 | 5.91E 03 | 3.50E 06 | 6 |
| 10 C 100* | | 1,4-DIAMINOBENZENE | T | 5.70E 05 | 5.70E 03 | 3.40E 06 | 5 |
| 23 C 160* W | | DIBENZO(C,G)CARBAZOLE | T | 5.70E 05 | 5.70E 03 | 3.40E 06 | 5 |
| 10 C 041* | | 2-AMINOTOLUENE | T | 5.70E 05 | 5.20E 03 | 3.10E 06 | 5 |
| 10 C 043* | | 4-AMINOTOLUENE | T | 5.70E 05 | 5.20E 03 | 3.10E 06 | 5 |
| 10 C 042* | | 3-AMINOTOLUENE | T | 5.70E 05 | 5.20E 03 | 3.10E 06 | 5 |
| 12 A 040* P | | N-NITROSODIETHYLAMINE | T | 5.70E 05 | 4.80E 03 | 2.80E 06 | 5 |
| 23 B 100* W | | DIHYDROACRIDINE | T | 7.10E 05 | 4.43E 03 | 2.61E 06 | 6 |
| 10 C 220* | | 2-AMINONAPHTHALENE | T | 7.10E 05 | 4.20E 03 | 2.50E 06 | 6 |
| 20 B 042* | | 2,6-DINITRO-P-CRESOL | T | 7.10E 05 | 3.60E 03 | 2.10E 06 | 6 |
| 20 B 041* | | 3,5-DINITRO-P-CRESOL | T | 7.10E 05 | 3.60E 03 | 2.10E 06 | 6 |
| 20 B 020* P W | | 4,6-DINITRO-O-CRESOL | T | 7.10E 05 | 3.60E 03 | 2.10E 06 | 6 |
| 20 B 040* W | | DINITRO-P-CRESOLS | T | 7.10E 05 | 3.60E 03 | 2.10E 06 | 6 |
| 10 C 220* | | 2-AMINONAPHTHALENE | T | 5.70E 05 | 3.40E 03 | 2.00E 06 | 5 |
| 23 B 240* | | DIBENZ(A,H)ACRIDINE | T | 7.10E 05 | 3.22E 03 | 1.90E 06 | 6 |
| 02 A 380* W | | HEXACHLOROCYCLOHEXANE | T | 1.60E 06 | 3.20E 03 | 1.90E 06 | 1 |
| 14 B 020 W | | DIMETHYL SULFOXIDE | T | 2.50E 06 | 3.10E 03 | 1.82E 06 | 7 |
| 21 B 106* | | 7-METHYL BENZO(C)PHENANTHRENE | T | 6.60E 05 | 3.00E 03 | 1.80E 06 | 3 |
| 21 B 102* | | 1-METHYL BENZO(C)PHENANTHRENE | T | 6.60E 05 | 3.00E 03 | 1.80E 06 | 3 |
| 21 B 103* | | 2-METHYL BENZO(C)PHENANTHRENE | T | 6.60E 05 | 3.00E 03 | 1.80E 06 | 3 |
| 21 B 108* | | 2-ETHYL BENZO(C)PHENANTHRENE | T | 6.60E 05 | 3.00E 03 | 1.80E 06 | 3 |
| 21 B 107* | | 8-METHYL BENZO(C)PHENANTHRENE | T | 6.60E 05 | 3.00E 03 | 1.80E 06 | 3 |

TABLE 4-4. PRODUCT GAS ORGANIC MODULE MAJOR CONTRIBUTIONS TO DS AND WDS FOR ECOLOGICAL EFFECTS INCLUDING WORST CASE ASSUMPTIONS

PRODUCT GAS ORGANIC MODULE COMPOSITE, ECOLOGY IMPACT

| DMEG NO. | | COMPOUND NAME | TYPE | CONC E-6 G/SCM | DS | WDS G/S | LCCAT |
|---|---|---|---|---|---|---|---|
| 01 B 020 | W | ETHYLENE | D | 3.60E 05 | 3.60E 05 | 2.11E 08 | |
| 47 A 060 | P | AMMONIA | D | 1.10E 07 | 3.03E 04 | 1.80E 07 | |
| 42 A 070 | | CARBON MONOXIDE | D | 3.00E 08 | 2.50E 03 | 1.50E 06 | |
| 15 A 120* | | ISOPROPYL BENZENE | T | 6.60E 05 | 5.50E 02 | 3.24E 05 | 3 |
| 15 A 120* | | ISOPROPYL BENZENE | T | 2.30E 05 | 1.91E 02 | 1.13E 05 | 2 |
| 15 A 020 | P | BENZENE | D | > 1.30E 04> | 1.80E 01> | 1.10E 04 | |
| 47 A 080 | P | HYDROGEN CYANIDE | D | 2.22E 05 | 6.52E 00 | 3.90E 03 | |
| 01 A 020 | W | METHANE | D | 6.30E 06 | 9.64E-01 | 5.70E 02 | |
| 65 A 010 | | VANADIUM | S | 9.20E-01 | 9.20E-01 | 5.42E 02 | |
| 01 B 080 | | BUTADIENES | T | 1.60E 06 | 7.30E-01 | 4.30E 02 | 1 |
| 83 A 010 | P | MERCURY | D | 3.30E 00 | 3.30E-01 | 1.94E 02 | |
| 01 B 060 | | BUTYLENES | T | 1.60E 06 | 7.00E-02 | 4.10E 01 | 1 |
| 01 A 040 | | ETHANE | D | 7.90E 05 | 6.60E-02 | 3.90E 01 | |
| 15 A 040 | P | TOLUENE | D | 2.60E 02 | 5.70E-02 | 3.33E 01 | |
| 01 A 060 | | PROPANE | D | 8.00E 05 | 4.44E-02 | 2.62E 01 | |
| 01 A 080 | | BUTANES | D | 4.60E 05 | 1.90E-02 | 1.12E 01 | |
| 15 B 080 | | XYLENES | D | 4.80E 01 | 0.00E-01 | 0.00E-01 | |
| 53 A 080 | | CARBONYL SULFIDE | D | 3.51E 05 | 0.00E-01 | 0.00E-01 | |
| 25 A 020 | | THIOPHENE | D | 1.90E 03 | 0.00E-01 | 0.00E-01 | |
| 42 A 080 | | CARBON DIOXIDE | D | 1.71E 08 | 0.00E-01 | 0.00E-01 | |
| 53 A 060 | | SULFUR DIOXIDE | D | 4.20E 04 | 0.00E-01 | 0.00E-01 | |
| 53 A 100 | | CARBON DISULFIDE | D | 3.73E 04 | 0.00E-01 | 0.00E-01 | |
| 21 B 040* | P | BENZ(A)ANTHRACENE | D | 8.10E 00 | 0.00E-01 | 0.00E-01 | 2 |
| 21 B 060* | | 7,12-DIMETHYLBENZ(A)ANTHRACENE | D | 0.00E-01 | 0.00E-01 | 0.00E-01 | 2 |
| 21 D 040* | | DIBENZO(A,I)PYRENE | D | 0.00E-01 | 0.00E-01 | 0.00E-01 | 2 |
| 21 B 100* | | BENZO(C)PHENANTHRENE & ALKYL DERIVATIVES | D | 0.00E-01 | 0.00E-01 | 0.00E-01 | 2 |
| 15 A 060 | P | ETHYL BENZENE | D | 3.90E 01 | 0.00E-01 | 0.00E-01 | |
| 21 B 080* | | 3-METHYLCHOLANTHRENE | D | 0.00E-01 | 0.00E-01 | 0.00E-01 | 2 |
| 21 C 080* | P | DIBENZ(A,H)ANTHRACENE | D | 0.00E-01 | 0.00E-01 | 0.00E-01 | 2 |
| 22 C 080* | P | BENZO(B)FLUORANTHENE | D | 0.00E-01 | 0.00E-01 | 0.00E-01 | 2 |
| 16 A 220* | | POLYCHLORINATED BIPHENYLS | D | 0.00E-01 | 0.00E-01 | 0.00E-01 | 3 |
| 15 A 160 | | BIPHENYL | D | 5.00E 03 | 0.00E-01 | 0.00E-01 | 3 |
| 21 B 040* | P | BENZ(A)ANTHRACENE | D | 1.40E 02 | 0.00E-01 | 0.00E-01 | 3 |
| 16 A 220* | | POLYCHLORINATED BIPHENYLS | D | < 7.20E 00< | 0.00E-01< | 0.00E-01 | 2 |

TABLE 4-5. TEST BURNER FLUE GAS MAJOR CONTRIBUTIONS TO DS AND WDS FOR HEALTH EFFECTS INCLUDING WORST CASE ASSUMPTIONS

TEST BURNER FLUE GAS COMPOSITE, HEALTH IMPACT

| OMEG NO. | | | | COMPOUND NAME | TYPE | CONC E-6 G/SCM | DS | WDS G/S | LCCAT |
|---|---|---|---|---|---|---|---|---|---|
| 21 C 100* | P | W | | BENZO(A)PYRENE | T | 4.40E 01 | 2.20E 03 | 1.80E 07 | 3 |
| 21 C 080* | P | | | DIBENZ(A,H)ANTHRACENE | T | 4.40E 01 | 4.73E 02 | 3.82E 06 | 3 |
| 04 B 020* | P | W | | 1,1'-DICHLOROMETHYL ETHER | T | 4.70E 02 | 9.40E 01 | 7.60E 05 | 5 |
| 16 A 220* | | W | | POLYCHLORINATED BIPHENYLS | T | 4.40E 01 | 4.40E 01 | 3.60E 05 | 3 |
| 49 A 010 | P | | | ARSENIC | D | 8.60E 01 | 4.30E 01 | 3.50E 05 | |
| 68 A 010 | P | | | CHROMIUM | S | 3.70E 01 | 3.70E 01 | 3.00E 05 | |
| 21 B 080* | | | | 3-METHYLCHOLANTHRENE | T | 1.30E 02 | 3.42E 01 | 2.80E 05 | 2 |
| 12 A 020* | P | W | | N-NITROSODIMETHYLAMINE | T | 2.20E 03 | 3.40E 01 | 2.73E 05 | 6 |
| 04 B 020* | P | W | | 1,1'-DICHLOROMETHYL ETHER | T | 1.30E 02 | 2.60E 01 | 2.10E 05 | 4 |
| 20 A 120* | | W | | 2,4,6-TRINITROPHENOL | T | 2.20E 03 | 2.20E 01 | 1.80E 05 | 6 |
| 10 C 100* | | | | 1,4-DIAMINOBENZENE | T | 2.20E 03 | 2.20E 01 | 1.80E 05 | 6 |
| 53 A 060 | | | | SULFUR DIOXIDE | D | 2.70E 05 | 2.10E 01 | 1.70E 05 | |
| 10 C 040* | | | | AMINOTOLUENES | T | 2.20E 03 | 2.00E 01 | 1.61E 05 | 6 |
| 10 C 043* | | | | 4-AMINOTOLUENE | T | 2.20E 03 | 2.00E 01 | 1.61E 05 | 6 |
| 10 C 041* | | | | 2-AMINOTOLUENE | T | 2.20E 03 | 2.00E 01 | 1.61E 05 | 6 |
| 10 C 042* | | | | 3-AMINOTOLUENE | T | 2.20E 03 | 2.00E 01 | 1.61E 05 | 6 |
| 12 A 040* | P | | | N-NITROSODIETHYLAMINE | T | 2.20E 03 | 1.83E 01 | 1.50E 05 | 6 |
| 23 B 100* | | W | | DIHYDROACRIDINE | T | 2.20E 03 | 1.40E 01 | 1.11E 05 | 6 |
| 10 C 220* | | | | 2-AMINONAPHTHALENE | T | 2.20E 03 | 1.30E 01 | 1.04E 05 | 6 |
| 21 B 080* | | | | 3-METHYLCHOLANTHRENE | T | 4.40E 01 | 1.20E 01 | 9.40E 04 | 3 |
| 20 B 042* | | | | 2,6-DINITRO-P-CRESOL | T | 2.20E 03 | 1.10E 01 | 8.90E 04 | 6 |
| 20 B 041* | | | | 3,5-DINITRO-P-CRESOL | T | 2.20E 03 | 1.10E 01 | 8.90E 04 | 6 |
| 20 B 020* | P | W | | 4,6-DINITRO-O-CRESOL | T | 2.20E 03 | 1.10E 01 | 8.90E 04 | 6 |
| 20 B 040* | | W | | DINITRO-P-CRESOLS | T | 2.20E 03 | 1.10E 01 | 8.90E 04 | 6 |
| 42 A 080 | | | | CARBON DIOXIDE | D | 9.80E 07 | 1.10E 01 | 8.80E 04 | |
| 21 B 040* | P | | | BENZ(A)ANTHRACENE | D | 4.50E 02 | 1.00E 01 | 8.10E 04 | 2 |
| 23 B 240* | | | | DIBENZ(A,H)ACRIDINE | T | 2.20E 03 | 1.00E 01 | 8.10E 04 | 6 |
| 23 B 220* | | | | DIBENZ(A,J)ACRIDINE | T | 2.20E 03 | 8.80E 00 | 7.11E 04 | 6 |
| 02 B 140* | P | W | | HEXACHLOROCYCLOPENTADIENE | T | 8.80E 02 | 8.00E 00 | 6.50E 04 | 1 |
| 12 A 020* | P | W | | N-NITROSODIMETHYLAMINE | T | 4.70E 02 | 7.23E 00 | 5.84E 04 | 5 |
| 08 B 060* | | W | | B-PROPIOLACTONE | T | 2.20E 03 | 6.90E 00 | 5.60E 04 | 6 |
| 20 A 120* | | W | | 2,4,6-TRINITROPHENOL | T | 4.70E 02 | 4.70E 00 | 3.80E 04 | 5 |
| 10 C 100* | | | | 1,4-DIAMINOBENZENE | T | 4.70E 02 | 4.70E 00 | 3.80E 04 | 5 |
| 23 C 160* | | W | | DIBENZO(C,G)CARBAZOLE | T | 4.70E 02 | 4.70E 00 | 3.80E 04 | 5 |

TABLE 4-6. TEST BURNER FLUE GAS MAJOR CONTRIBUTIONS TO DS AND WDS FOR ECOLOGICAL EFFECTS INCLUDING WORST CASE ASSUMPTIONS

TEST BURNER FLUE GAS COMPOSITE, ECOLOGY IMPACT

| DMEG NO. | | COMPOUND NAME | TYPE | CONC E-6 G/SCM | DS | WDS G/S | LCCAT |
|---|---|---|---|---|---|---|---|
| 65 A 010 | | VANADIUM | S | 3.60E 00 | 3.60E 00 | 2.90E 04 | |
| 83 A 010 | P | MERCURY | D | 1.60E 01 | 1.60E 00 | 1.30E 04 | |
| 15 A 120* | | ISOPROPYL BENZENE | T | 1.30E 02 | 1.10E-01 | 8.80E 02 | 2 |
| 15 A 120* | | ISOPROPYL BENZENE | T | 4.40E 01 | 3.70E-02 | 3.00E 02 | 3 |
| 47 A 080 | P | HYDROGEN CYANIDE | D | 1.02E 03 | 3.02E-02 | 2.44E 02 | |
| 47 A 060 | P | AMMONIA | D | < 1.00E 01 | < 2.90E-02 | < 2.30E 02 | |
| 15 A 040* | P | TOLUENE | T | 1.30E 02 | 2.82E-02 | 2.30E 02 | 2 |
| 15 A 040* | P | TOLUENE | T | 4.40E 01 | 9.60E-03 | 7.72E 01 | 3 |
| 42 A 080 | | CARBON DIOXIDE | D | 9.80E 07 | 0.00E-01 | 0.00E-01 | |
| 53 A 060 | | SULFUR DIOXIDE | D | 2.70E 05 | 0.00E-01 | 0.00E-01 | |
| 16 A 220 | | POLYCHLORINATED BIPHENYLS | D | 0.00E-01 | 0.00E-01 | 0.00E-01 | 2 |
| 01 A 060 | | PROPANE | D | 0.00E-01 | 0.00E-01 | 0.00E-01 | |
| 01 A 080 | | BUTANES | D | 0.00E-01 | 0.00E-01 | 0.00E-01 | |
| 01 A 100 | | PENTANES | D | 0.00E-01 | 0.00E-01 | 0.00E-01 | |
| 01 A 140 | | HEXANES | D | 0.00E-01 | 0.00E-01 | 0.00E-01 | |
| 21 B 040* | P | BENZ(A)ANTHRACENE | D | 4.50E 02 | 0.00E-01 | 0.00E-01 | 2 |
| 21 B 060 | | 7,12-DIMETHYLBENZ(A)ANTHRACENE | D | 0.00E-01 | 0.00E-01 | 0.00E-01 | 2 |
| 21 C 080* | P | DIBENZ(A,H)ANTHRACENE | D | 0.00E-01 | 0.00E-01 | 0.00E-01 | 2 |
| 21 C 100* | P | BENZO(A)PYRENE | D | 0.00E-01 | 0.00E-01 | 0.00E-01 | 2 |
| 54 A 010 | P | SELENIUM | D | < 1.30E 02 | < 0.00E-01 | < 0.00E-01 | |
| 01 A 020 | W | METHANE | D | 0.00E-01 | 0.00E-01 | 0.00E-01 | |
| 01 A 040 | | ETHANE | D | 0.00E-01 | 0.00E-01 | 0.00E-01 | |
| 37 A 010 | | BORON | S | 4.00E 00 | 0.00E-01 | 0.00E-01 | |
| 58 A 010 | | BROMINE | S | 4.40E-01 | 0.00E-01 | 0.00E-01 | |
| 82 A 010 | P | CADMIUM | S | > 2.00E-01 | > 0.00E-01 | > 0.00E-01 | |
| 34 A 010 | | CALCIUM (AS CA+2) | S | > 7.80E 02 | > 0.00E-01 | > 0.00E-01 | |
| 84 B 010 | | CERIUM | S | 6.20E-01 | 0.00E-01 | 0.00E-01 | |
| 31 A 010 | | CESIUM | S | 1.10E 00 | 0.00E-01 | 0.00E-01 | |
| 57 A 010 | | CHLORINE (AS CL-) | S | 3.30E 01 | 0.00E-01 | 0.00E-01 | |
| 68 A 010 | P | CHROMIUM | S | 3.70E 01 | 0.00E-01 | 0.00E-01 | |
| 74 A 010 | | COBALT | S | 1.30E 02 | 0.00E-01 | 0.00E-01 | |
| 78 A 010 | P | COPPER | S | 9.30E 00 | 0.00E-01 | 0.00E-01 | |
| 56 A 010 | | FLUORINE (AS F-) | S | 1.00E 02 | 0.00E-01 | 0.00E-01 | |
| 39 A 010 | | GALLIUM | S | < 1.30E 00 | < 0.00E-01 | < 0.00E-01 | |

TABLE 4-7. GASIFIER ASH MAJOR CONTRIBUTIONS TO DS AND WDS FOR HEALTH EFFECTS INCLUDING WORST CASE ASSUMPTIONS

GASIFIER ASH, HEALTH IMPACT

| DMEG NO. | | COMPOUND NAME | TYPE | CONC E-6 G/G | DS | WDS G/S | LCCAT |
|---|---|---|---|---|---|---|---|
| 16 A 220* | W | POLYCHLORINATED BIPHENYLS | T | 3.90E 01 | 3.90E 04 | 9.43E 05 | 3 |
| 72 A 010 | | IRON (AS FE+2) | D | 9.00E 04 | 3.00E 04 | 7.30E 05 | |
| 16 A 220* | W | POLYCHLORINATED BIPHENYLS | T | 1.50E 01 | 1.50E 04 | 3.62E 05 | 2 |
| 21 C 100* | P W | BENZO(A)PYRENE | T | 3.90E 01 | 6.50E 02 | 1.60E 04 | 3 |
| 38 A 010 | | ALUMINUM | D | 8.80E 04 | 5.50E 02 | 1.33E 04 | |
| 36 A 010 | | BARIUM | D | 5.50E 03 | 5.50E 02 | 1.33E 04 | |
| 43 A 010 | | SILICON | D | 1.40E 05 | 4.70E 02 | 1.12E 04 | |
| 71 A 010 | P | MANGANESE | D | 2.20E 02 | 4.40E 02 | 1.10E 04 | |
| 21 C 100* | P W | BENZO(A)PYRENE | T | 1.50E 01 | 2.50E 02 | 6.04E 03 | 2 |
| 68 A 010 | P | CHROMIUM | S | 1.00E 02 | 2.00E 02 | 4.83E 03 | |
| 76 A 010 | P | NICKEL | S | 7.50E 01 | 1.70E 02 | 4.03E 03 | |
| 32 A 010 | P | BERYLLIUM | S | 9.00E 00 | 1.50E 02 | 3.63E 03 | |
| 54 A 010 | P | SELENIUM | D | 1.50E 01 | 1.50E 02 | 3.62E 03 | |
| 21 C 080* | P | DIBENZ(A,H)ANTHRACENE | T | 3.90E 01 | 1.40E 02 | 3.40E 03 | 3 |
| 34 A 010 | | CALCIUM (AS CA+2) | D | 4.80E 04 | 1.00E 02 | 2.42E 03 | |
| 18 B 020* | W | CATECHOL | T | 1.00E 02 | 1.00E 02 | 2.42E 03 | 6 |
| 18 A 100* | W | PHENYLPHENOLS | T | 1.00E 02 | 1.00E 02 | 2.42E 03 | 6 |
| 18 A 140* | W | XYLENOLS | T | 1.00E 02 | 1.00E 02 | 2.42E 03 | 6 |
| 18 A 101* | | O-PHENYLPHENOL | T | 1.00E 02 | 1.00E 02 | 2.42E 03 | 6 |
| 18 C 040* | W | 2-NAPHTHOL | T | 1.00E 02 | 1.00E 02 | 2.42E 03 | 6 |
| 18 A 102* | | P-PHENYLPHENOL | T | 1.00E 02 | 1.00E 02 | 2.42E 03 | 6 |
| 18 C 081* | | 1-INDANOL | T | 1.00E 02 | 1.00E 02 | 2.42E 03 | 6 |
| 18 A 082* | | M-ETHYLPHENOL | T | 1.00E 02 | 1.00E 02 | 2.42E 03 | 6 |
| 18 A 144* | | 2,6-XYLENOL | T | 1.00E 02 | 1.00E 02 | 2.42E 03 | 6 |
| 18 A 083* | | P-ETHYLPHENOL | T | 1.00E 02 | 1.00E 02 | 2.42E 03 | 6 |
| 18 A 145* | | 3,5-XYLENOL | T | 1.00E 02 | 1.00E 02 | 2.42E 03 | 6 |
| 19 A 060* | P W | PENTACHLOROPHENOL | T | 1.00E 02 | 1.00E 02 | 2.42E 03 | 6 |
| 18 A 146* | | 3,4-XYLENOL | T | 1.00E 02 | 1.00E 02 | 2.42E 03 | 6 |
| 19 B 020* | W | CHLORINATED CRESOLS | T | 1.00E 02 | 1.00E 02 | 2.42E 03 | 6 |
| 18 A 160* | W | ETHYL CRESOLS | T | 1.00E 02 | 1.00E 02 | 2.42E 03 | 6 |
| 19 B 021* | | CHLORINATED-O-CRESOLS | T | 1.00E 02 | 1.00E 02 | 2.42E 03 | 6 |
| 18 A 103* | | M-PHENYLPHENOL | T | 1.00E 02 | 1.00E 02 | 2.42E 03 | 6 |
| 19 B 022* | P | CHLORINATED-M-CRESOLS | T | 1.00E 02 | 1.00E 02 | 2.42E 03 | 6 |
| 18 A 162* | | 4-ETHYL-O-CRESOL | T | 1.00E 02 | 1.00E 02 | 2.42E 03 | 6 |

TABLE 4-8. GASIFIER ASH MAJOR CONTRIBUTIONS TO DS AND WDS FOR ECOLOGICAL EFFECTS INCLUDING WORST CASE ASSUMPTIONS

GASIFIER ASH, ECOLOGY IMPACT

| DMEG NO. | | | COMPOUND NAME | TYPE | CONC E-6 G/G | DS | WDS G/S | LCCAT |
|---|---|---|---|---|---|---|---|---|
| 02 A 380* | | W | HEXACHLOROCYCLOHEXANE | T | 3.30E 02 | 8.24E 04 | 2.00E 06 | 1 |
| 16 A 220* | | W | POLYCHLORINATED BIPHENYLS | T | 3.90E 01 | 3.90E 04 | 9.43E 05 | 3 |
| 48 A 010 | | | PHOSPHORUS | D | 2.00E 03 | 2.00E 04 | 4.83E 05 | |
| 16 A 220* | | W | POLYCHLORINATED BIPHENYLS | T | 1.50E 01 | 1.50E 04 | 3.62E 05 | 2 |
| 02 A 380* | | W | HEXACHLOROCYCLOHEXANE | T | 1.50E 01 | 3.74E 03 | 9.10E 04 | 2 |
| 72 A 010 | | | IRON (AS FE+2) | D | 9.00E 04 | 1.80E 03 | 4.40E 04 | |
| 38 A 010 | | | ALUMINUM | D | 8.80E 04 | 4.40E 02 | 1.10E 04 | |
| 08 D 281* | | | DIMETHYL PHTHALATE | T | 1.00E 02 | 1.30E 02 | 3.02E 03 | 6 |
| 08 D 282* | | | DIETHYL PHTHALATE | T | 1.00E 02 | 1.30E 02 | 3.02E 03 | 6 |
| 08 D 280* | P | W | PHTHALATE ESTERS (MW:194-279) | T | 1.00E 02 | 1.30E 02 | 3.02E 03 | 6 |
| 08 D 283* | | | DI-N-BUTYL PHTHALATE | T | 1.00E 02 | 1.30E 02 | 3.02E 03 | 6 |
| 76 A 010 | P | | NICKEL | S | 7.50E 01 | 3.80E 01 | 9.10E 02 | |
| 08 D 280* | P | W | PHTHALATE ESTERS (MW:194-279) | T | 2.60E 01 | 3.24E 01 | 7.90E 02 | 5 |
| 08 D 283* | | | DI-N-BUTYL PHTHALATE | T | 2.60E 01 | 3.24E 01 | 7.90E 02 | 5 |
| 08 D 282* | | | DIETHYL PHTHALATE | T | 2.60E 01 | 3.24E 01 | 7.90E 02 | 5 |
| 08 D 281* | | | DIMETHYL PHTHALATE | T | 2.60E 01 | 3.24E 01 | 7.90E 02 | 5 |
| 62 A 010 | | | TITANIUM | D | 4.50E 03 | 2.81E 01 | 6.80E 02 | |
| 19 A 060* | P | W | PENTACHLOROPHENOL | T | 1.00E 02 | 2.00E 01 | 4.83E 02 | 6 |
| 01 B 220 | | W | DICYCLOPENTADIENE | T | 3.30E 02 | 1.70E 01 | 4.00E 02 | 1 |
| 34 A 010 | | | CALCIUM (AS CA+2) | D | 4.80E 04 | 1.50E 01 | 3.62E 02 | |
| 65 A 010 | | | VANADIUM | S | 4.10E 02 | 1.40E 01 | 3.30E 02 | |
| 36 A 010 | | | BARIUM | D | 5.50E 03 | 1.10E 01 | 2.70E 02 | |
| 71 A 010 | P | | MANGANESE | D | 2.20E 02 | 1.10E 01 | 2.70E 02 | |
| 78 A 010 | P | | COPPER | S | 8.10E 01 | 8.10E 00 | 2.00E 02 | |
| 19 A 060* | P | W | PENTACHLOROPHENOL | T | 2.60E 01 | 5.20E 00 | 1.30E 02 | 5 |
| 20 A 102* | | | 2,5-DINITROPHENOL | T | 1.00E 02 | 5.00E 00 | 1.21E 02 | 6 |
| 20 A 100* | | W | DINITROPHENOLS | T | 1.00E 02 | 5.00E 00 | 1.21E 02 | 6 |
| 10 C 140* | P | W | BENZIDINE | T | 1.00E 02 | 5.00E 00 | 1.21E 02 | 6 |
| 20 A 101* | P | | 2,4-DINITROPHENOL | T | 1.00E 02 | 5.00E 00 | 1.21E 02 | 6 |
| 20 A 080* | | W | 2-AMINO-4,6-DINITROPHENOL | T | 1.00E 02 | 5.00E 00 | 1.21E 02 | 6 |
| 10 C 220* | | W | 2-AMINONAPHTHALENE | T | 1.00E 02 | 5.00E 00 | 1.21E 02 | 6 |
| 10 C 200* | | W | 1-AMINONAPHTHALENE | T | 1.00E 02 | 5.00E 00 | 1.21E 02 | 6 |
| 20 A 103* | | | 2,6-DINITROPHENOL | T | 1.00E 02 | 5.00E 00 | 1.21E 02 | 6 |
| 82 A 010 | P | | CADMIUM | S | 8.00E-01 | 4.00E 00 | 9.70E 01 | |

TABLE 4-9. GASIFIER ASH SLUICE WATER MAJOR CONTRIBUTIONS TO DS AND WDS FOR HEALTH EFFECTS INCLUDING WORST CASE ASSUMPTIONS

GASIFIER ASH SLUICE WATER, HEALTH IMPACT

| DMEG NO. | COMPOUND NAME | TYPE | CONC E-6 G/L | DS | WDS G/S | LCCAT |
|---|---|---|---|---|---|---|
| 16 A 220 W | POLYCHLORINATED BIPHENYLS | T | 1.30E 05 | 2.51E 07 | 1.80E 08 | |
| 21 C 100* P W | BENZO(A)PYRENE | T | 1.30E 05 | 4.20E 05 | 2.93E 06 | |
| 21 C 080* P | DIBENZ(A,H)ANTHRACENE | T | 1.30E 05 | 9.00E 04 | 6.30E 05 | |
| 18 C 020 W | 1-NAPHTHOL | T | 1.30E 05 | 2.51E 04 | 1.80E 05 | |
| 18 A 142* P | 2,4-XYLENOL | T | 1.30E 05 | 2.51E 04 | 1.80E 05 | |
| 18 A 145 | 3,5-XYLENOL | T | 1.30E 05 | 2.51E 04 | 1.80E 05 | |
| 18 C 040 W | 2-NAPHTHOL | T | 1.30E 05 | 2.51E 04 | 1.80E 05 | |
| 18 A 160 W | ETHYL CRESOLS | T | 1.30E 05 | 2.51E 04 | 1.80E 05 | |
| 18 A 144 | 2,6-XYLENOL | T | 1.30E 05 | 2.51E 04 | 1.80E 05 | |
| 18 A 162 | 4-ETHYL-O-CRESOL | T | 1.30E 05 | 2.51E 04 | 1.80E 05 | |
| 18 A 163 | 2-ETHYL-P-CRESOL | T | 1.30E 05 | 2.51E 04 | 1.80E 05 | |
| 18 A 180 W | POLYALKYLPHENOLS (MW>135) | T | 1.30E 05 | 2.51E 04 | 1.80E 05 | |
| 18 A 181 | 2,4,6-TRIMETHYL METHYL PHENOL | T | 1.30E 05 | 2.51E 04 | 1.80E 05 | |
| 18 A 182 | 4,6-DI-TERT-BUTYL-M-CRESOL | T | 1.30E 05 | 2.51E 04 | 1.80E 05 | |
| 18 A 183 | 2,6-DIMETHYL-4-HEPTYL PHENOL | T | 1.30E 05 | 2.51E 04 | 1.80E 05 | |
| 18 B 020 W | CATECHOL | T | 1.30E 05 | 2.51E 04 | 1.80E 05 | |
| 18 B 040 W | 1,3-DIHYDROXYBENZENE | T | 1.30E 05 | 2.51E 04 | 1.80E 05 | |
| 18 B 060 W | 1,4-DIHYDROXYBENZENE | T | 1.30E 05 | 2.51E 04 | 1.80E 05 | |
| 18 B 080 W | 1,2,3-TRIHYDROXYBENZENE | T | 1.30E 05 | 2.51E 04 | 1.80E 05 | |
| 20 B 020* P W | 4,6-DINITRO-O-CRESOL | T | 1.30E 05 | 2.51E 04 | 1.80E 05 | |
| 18 A 083 | P-ETHYLPHENOL | T | 1.30E 05 | 2.51E 04 | 1.80E 05 | |
| 18 C 080 W | INDANOLS | T | 1.30E 05 | 2.51E 04 | 1.80E 05 | |
| 18 C 081 | 1-INDANOL | T | 1.30E 05 | 2.51E 04 | 1.80E 05 | |
| 18 C 082 | 4-INDANOL | T | 1.30E 05 | 2.51E 04 | 1.80E 05 | |
| 18 C 083 | 5-INDANOL | T | 1.30E 05 | 2.51E 04 | 1.80E 05 | |
| 19 A 020* P W | 2-CHLOROPHENOL | T | 1.30E 05 | 2.51E 04 | 1.80E 05 | |
| 18 A 161 | 6-ETHYL-M-CRESOL | T | 1.30E 05 | 2.51E 04 | 1.80E 05 | |
| 18 A 081 | O-ETHYLPHENOL | T | 1.30E 05 | 2.51E 04 | 1.80E 05 | |
| 19 A 040* P W | 2,4-DICHLOROPHENOL | T | 1.30E 05 | 2.51E 04 | 1.80E 05 | |
| 20 A 080 W | 2-AMINO-4,6-DINITROPHENOL | T | 1.30E 05 | 2.51E 04 | 1.80E 05 | |
| 18 A 100 W | PHENYLPHENOLS | T | 1.30E 05 | 2.51E 04 | 1.80E 05 | |
| 19 A 060* P W | PENTACHLOROPHENOL | T | 1.30E 05 | 2.51E 04 | 1.80E 05 | |
| 18 A 102 | P-PHENYLPHENOL | T | 1.30E 05 | 2.51E 04 | 1.80E 05 | |
| 18 A 103 | M-PHENYLPHENOL | T | 1.30E 05 | 2.51E 04 | 1.80E 05 | |

TABLE 4-10. GASIFIER ASH SLUICE WATER MAJOR CONTRIBUTIONS TO DS AND WDS FOR ECOLOGICAL EFFECTS INCLUDING WORST CASE ASSUMPTIONS

GASIFIER ASH SLUICE WATER, ECOLOGY IMPACT

| OMEG NO. | COMPOUND NAME | TYPE | CONC E-6 G/L | DS | WDS G/S | LCCAT |
|---|---|---|---|---|---|---|
| 16 A 220 W | POLYCHLORINATED BIPHENYLS | T | 1.30E 05 | 2.51E 07 | 1.80E 08 | |
| 02 A 380 W | HEXACHLOROCYCLOHEXANE | T | 1.30E 05 | 6.30E 06 | 4.40E 07 | |
| 08 D 283 | DI-N-BUTYL PHTHALATE | T | 1.30E 05 | 8.40E 04 | 5.90E 05 | |
| 08 D 282 | DIETHYL PHTHALATE | T | 1.30E 05 | 8.40E 04 | 5.90E 05 | |
| 08 D 281 | DIMETHYL PHTHALATE | T | 1.30E 05 | 8.40E 04 | 5.90E 05 | |
| 08 D 280* P W | PHTHALATE ESTERS (MW:194-279) | T | 1.30E 05 | 8.40E 04 | 5.90E 05 | |
| 19 A 060* P W | PENTACHLOROPHENOL | T | 1.30E 05 | 5.02E 03 | 3.51E 04 | |
| 16 A 040 | BROMOBENZENE | T | 1.30E 05 | 1.30E 03 | 8.80E 03 | |
| 26 B 040 W | TRITOTYL PHOSPHATES | T | 1.30E 05 | 1.30E 03 | 8.80E 03 | |
| 16 A 020* P | CHLOROBENZENE | T | 1.30E 05 | 1.30E 03 | 8.80E 03 | |
| 16 A 162 | HEXACHLOROBENZENE | T | 1.30E 05 | 1.30E 03 | 8.80E 03 | |
| 16 A 081 | 1-BROMO-2-CHLOROBENZENE | T | 1.30E 05 | 1.30E 03 | 8.80E 03 | |
| 16 A 082 | 1-BROMO-3-CHLOROBENZENE | T | 1.30E 05 | 1.30E 03 | 8.80E 03 | |
| 16 A 083 | 1-BROMO-4-CHLOROBENZENE | T | 1.30E 05 | 1.30E 03 | 8.80E 03 | |
| 16 A 100* P | 1,2-DICHLOROBENZENE | T | 1.30E 05 | 1.30E 03 | 8.80E 03 | |
| 10 C 200 W | 1-AMINONAPHTHALENE | T | 1.30E 05 | 1.30E 03 | 8.80E 03 | |
| 16 A 080 | BROMOCHLOROBENZENES | T | 1.30E 05 | 1.30E 03 | 8.80E 03 | |
| 16 A 120* P | 1,3-DICHLOROBENZENE | T | 1.30E 05 | 1.30E 03 | 8.80E 03 | |
| 20 A 101* P | 2,4-DINITROPHENOL | T | 1.30E 05 | 1.30E 03 | 8.80E 03 | |
| 10 C 140* P W | BENZIDINE | T | 1.30E 05 | 1.30E 03 | 8.80E 03 | |
| 16 A 062 | 1,3-DIBROMOBENZENE | T | 1.30E 05 | 1.30E 03 | 8.80E 03 | |
| 16 A 063 | 1,4-DIBROMOBENZENE | T | 1.30E 05 | 1.30E 03 | 8.80E 03 | |
| 20 A 080 W | 2-AMINO-4,6-DINITROPHENOL | T | 1.30E 05 | 1.30E 03 | 8.80E 03 | |
| 16 A 160* P | POLYCHLORINATED BENZENES | T | 1.30E 05 | 1.30E 03 | 8.80E 03 | |
| 16 B 043 | 1,4-BIS(CHLOROMETHYL)BENZENE | T | 1.30E 05 | 1.30E 03 | 8.80E 03 | |
| 21 A 020* P | NAPHTHALENE | T | 1.30E 05 | 1.30E 03 | 8.80E 03 | |
| 16 A 161 | 1,2,4-TRICHLOROBENZENE | T | 1.30E 05 | 1.30E 03 | 8.80E 03 | |
| 01 B 220 W | DICYCLOPENTADIENE | T | 1.30E 05 | 1.30E 03 | 8.80E 03 | |
| 20 A 103 | 2,6-DINITROPHENOL | T | 1.30E 05 | 1.30E 03 | 8.80E 03 | |
| 10 C 220 W | 2-AMINONAPHTHALENE | T | 1.30E 05 | 1.30E 03 | 8.80E 03 | |
| 20 A 100 W | DINITROPHENOLS | T | 1.30E 05 | 1.30E 03 | 8.80E 03 | |
| 16 A 061 | 1,2-DIBROMOBENZENE | T | 1.30E 05 | 1.30E 03 | 8.80E 03 | |
| 16 B 020 W | A-CHLOROTOLUENE | T | 1.30E 05 | 1.30E 03 | 8.80E 03 | |
| 16 B 040 | BIS(CHLOROMETHYL)BENZENES | T | 1.30E 05 | 1.30E 03 | 8.80E 03 | |

TABLE 4-11. CYCLONE DUST MAJOR CONTRIBUTIONS TO DS AND WDS FOR HEALTH EFFECTS INCLUDING WORST CASE ASSUMPTIONS

CYCLONE DUST, HEALTH IMPACT

| OMEG NO. | | | | COMPOUND NAME | TYPE | CONC E-6 G/G | DS | WDS G/S | LCCAT |
|---|---|---|---|---|---|---|---|---|---|
| 16 | A | 220* | W | POLYCHLORINATED BIPHENYLS | T | 1.30E 03 | 1.30E 06 | 4.94E 06 | 3 |
| 16 | A | 220* | W | POLYCHLORINATED BIPHENYLS | T | 1.40E 02 | 1.40E 05 | 5.32E 05 | 2 |
| 21 | C | 100* | P W | BENZO(A)PYRENE | T | 1.30E 03 | 2.20E 04 | 8.23E 04 | 3 |
| 21 | C | 080* | P | DIBENZ(A,H)ANTHRACENE | T | 1.30E 03 | 4.64E 03 | 1.80E 04 | 3 |
| 19 | A | 020* | P W | 2-CHLOROPHENOL | T | 3.40E 03 | 3.40E 03 | 1.30E 04 | 6 |
| 19 | A | 040* | P W | 2,4-DICHLOROPHENOL | T | 3.40E 03 | 3.40E 03 | 1.30E 04 | 6 |
| 20 | B | 041* | | 3,5-DINITRO-P-CRESOL | T | 3.40E 03 | 3.40E 03 | 1.30E 04 | 6 |
| 19 | A | 060* | P W | PENTACHLOROPHENOL | T | 3.40E 03 | 3.40E 03 | 1.30E 04 | 6 |
| 18 | A | 042* | | O-CRESOL | T | 3.40E 03 | 3.40E 03 | 1.30E 04 | 6 |
| 19 | B | 020* | W | CHLORINATED CRESOLS | T | 3.40E 03 | 3.40E 03 | 1.30E 04 | 6 |
| 18 | C | 083* | | 5-INDANOL | T | 3.40E 03 | 3.40E 03 | 1.30E 04 | 6 |
| 18 | A | 020* | P W | PHENOL | T | 3.40E 03 | 3.40E 03 | 1.30E 04 | 6 |
| 18 | A | 060* | W | 2-METHOXYPHENOL | T | 3.40E 03 | 3.40E 03 | 1.30E 04 | 6 |
| 18 | A | 040* | W | CRESOLS | T | 3.40E 03 | 3.40E 03 | 1.30E 04 | 6 |
| 18 | A | 080* | W | ETHYLPHENOLS | T | 3.40E 03 | 3.40E 03 | 1.30E 04 | 6 |
| 18 | A | 041* | | M-CRESOL | T | 3.40E 03 | 3.40E 03 | 1.30E 04 | 6 |
| 18 | A | 081* | | O-ETHYLPHENOL | T | 3.40E 03 | 3.40E 03 | 1.30E 04 | 6 |
| 20 | A | 020* | P W | 2-NITROPHENOL | T | 3.40E 03 | 3.40E 03 | 1.30E 04 | 6 |
| 18 | A | 082* | | M-ETHYLPHENOL | T | 3.40E 03 | 3.40E 03 | 1.30E 04 | 6 |
| 20 | A | 040* | W | 3-NITROPHENOL | T | 3.40E 03 | 3.40E 03 | 1.30E 04 | 6 |
| 18 | A | 083* | | P-ETHYLPHENOL | T | 3.40E 03 | 3.40E 03 | 1.30E 04 | 6 |
| 20 | A | 060* | P W | 4-NITROPHENOL | T | 3.40E 03 | 3.40E 03 | 1.30E 04 | 6 |
| 18 | A | 100* | W | PHENYLPHENOLS | T | 3.40E 03 | 3.40E 03 | 1.30E 04 | 6 |
| 20 | A | 080* | W | 2-AMINO-4,6-DINITROPHENOL | T | 3.40E 03 | 3.40E 03 | 1.30E 04 | 6 |
| 18 | A | 101* | | O-PHENYLPHENOL | T | 3.40E 03 | 3.40E 03 | 1.30E 04 | 6 |
| 20 | A | 100* | W | DINITROPHENOLS | T | 3.40E 03 | 3.40E 03 | 1.30E 04 | 6 |
| 18 | A | 102* | | P-PHENYLPHENOL | T | 3.40E 03 | 3.40E 03 | 1.30E 04 | 6 |
| 20 | A | 101* | P | 2,4-DINITROPHENOL | T | 3.40E 03 | 3.40E 03 | 1.30E 04 | 6 |
| 18 | A | 103* | | M-PHENYLPHENOL | T | 3.40E 03 | 3.40E 03 | 1.30E 04 | 6 |
| 20 | A | 102* | | 2,5-DINITROPHENOL | T | 3.40E 03 | 3.40E 03 | 1.30E 04 | 6 |
| 18 | A | 120* | W | 2,2'-DIHYDROXYDIPHENYL | T | 3.40E 03 | 3.40E 03 | 1.30E 04 | 6 |
| 20 | A | 103* | | 2,6-DINITROPHENOL | T | 3.40E 03 | 3.40E 03 | 1.30E 04 | 6 |
| 18 | A | 140* | W | XYLENOLS | T | 3.40E 03 | 3.40E 03 | 1.30E 04 | 6 |
| 20 | A | 120* | W | 2,4,6-TRINITROPHENOL | T | 3.40E 03 | 3.40E 03 | 1.30E 04 | 6 |

TABLE 4-12. CYCLONE DUST MAJOR CONTRIBUTIONS TO DS AND WDS FOR ECOLOGICAL EFFECTS INCLUDING WORST CASE ASSUMPTIONS

CYCLONE DUST, ECOLOGY IMPACT

| DMEG NO. | | COMPOUND NAME | TYPE | CONC E-6 G/G | DS | WDS G/S | LCCAT |
|---|---|---|---|---|---|---|---|
| 16 A 220* | W | POLYCHLORINATED BIPHENYLS | T | 1.30E 03 | 1.30E 06 | 4.94E 06 | 3 |
| 02 A 380* | W | HEXACHLOROCYCLOHEXANE | T | 2.60E 03 | 6.50E 05 | 2.50E 06 | 1 |
| 16 A 220* | W | POLYCHLORINATED BIPHENYLS | T | 1.40E 02 | 1.40E 05 | 5.32E 05 | 2 |
| 02 A 380* | W | HEXACHLOROCYCLOHEXANE | T | 1.40E 02 | 3.50E 04 | 1.32E 05 | 2 |
| 48 A 010 | | PHOSPHORUS | D | 5.90E 02 | 5.90E 03 | 2.24E 04 | |
| 08 D 281* | | DIMETHYL PHTHALATE | T | 3.40E 03 | 4.24E 03 | 1.61E 04 | 6 |
| 08 D 283* | | DI-N-BUTYL PHTHALATE | T | 3.40E 03 | 4.24E 03 | 1.61E 04 | 6 |
| 08 D 282* | | DIETHYL PHTHALATE | T | 3.40E 03 | 4.24E 03 | 1.61E 04 | 6 |
| 08 D 280* | P W | PHTHALATE ESTERS (MW:194-279) | T | 3.40E 03 | 4.24E 03 | 1.61E 04 | 6 |
| 08 D 283* | | DI-N-BUTYL PHTHALATE | T | 7.70E 02 | 9.62E 02 | 3.70E 03 | 5 |
| 08 D 282* | | DIETHYL PHTHALATE | T | 7.70E 02 | 9.62E 02 | 3.70E 03 | 5 |
| 08 D 281* | | DIMETHYL PHTHALATE | T | 7.70E 02 | 9.62E 02 | 3.70E 03 | 5 |
| 08 D 280* | P W | PHTHALATE ESTERS (MW:194-279) | T | 7.70E 02 | 9.62E 02 | 3.70E 03 | 5 |
| 19 A 060* | P W | PENTACHLOROPHENOL | T | 3.40E 03 | 6.80E 02 | 2.60E 03 | 6 |
| 72 A 010 | | IRON (AS FE+2) | D | 9.20E 03 | 1.84E 02 | 7.00E 02 | |
| 20 A 102* | | 2,5-DINITROPHENOL | T | 3.40E 03 | 1.70E 02 | 6.50E 02 | 6 |
| 20 A 101* | P | 2,4-DINITROPHENOL | T | 3.40E 03 | 1.70E 02 | 6.50E 02 | 6 |
| 20 A 100* | W | DINITROPHENOLS | T | 3.40E 03 | 1.70E 02 | 6.50E 02 | 6 |
| 20 A 080* | W | 2-AMINO-4,6-DINITROPHENOL | T | 3.40E 03 | 1.70E 02 | 6.50E 02 | 6 |
| 20 A 103* | | 2,6-DINITROPHENOL | T | 3.40E 03 | 1.70E 02 | 6.50E 02 | 6 |
| 10 C 220* | W | 2-AMINONAPHTHALENE | T | 3.40E 03 | 1.70E 02 | 6.50E 02 | 6 |
| 10 C 200* | W | 1-AMINONAPHTHALENE | T | 3.40E 03 | 1.70E 02 | 6.50E 02 | 6 |
| 10 C 140* | P W | BENZIDINE | T | 3.40E 03 | 1.70E 02 | 6.50E 02 | 6 |
| 19 A 060* | P W | PENTACHLOROPHENOL | T | 7.70E 02 | 1.54E 02 | 5.90E 02 | 5 |
| 01 B 220 | W | DICYCLOPENTADIENE | T | 2.60E 03 | 1.30E 02 | 4.94E 02 | 1 |
| 16 A 063* | | 1,4-DIBROMOBENZENE | T | 1.30E 03 | 6.50E 01 | 2.50E 02 | 3 |
| 16 A 162* | | HEXACHLOROBENZENE | T | 1.30E 03 | 6.50E 01 | 2.50E 02 | 3 |
| 16 A 061* | | 1,2-DIBROMOBENZENE | T | 1.30E 03 | 6.50E 01 | 2.50E 02 | 3 |
| 16 A 060* | | DIBROMOBENZENES | T | 1.30E 03 | 6.50E 01 | 2.50E 02 | 3 |
| 16 A 160* | P | POLYCHLORINATED BENZENES | T | 1.30E 03 | 6.50E 01 | 2.50E 02 | 3 |
| 16 B 020* | W | A-CHLOROTOLUENE | T | 1.30E 03 | 6.50E 01 | 2.50E 02 | 3 |
| 16 A 161* | | 1,2,4-TRICHLOROBENZENE | T | 1.30E 03 | 6.50E 01 | 2.50E 02 | 3 |
| 16 B 043* | | 1,4-BIS(CHLOROMETHYL)BENZENE | T | 1.30E 03 | 6.50E 01 | 2.50E 02 | 3 |
| 16 A 080* | | BROMOCHLOROBENZENES | T | 1.30E 03 | 6.50E 01 | 2.50E 02 | 3 |

TABLE 4-13. CYCLONE DUST QUENCH WATER MAJOR CONTRIBUTIONS TO DS AND WDS FOR HEALTH EFFECTS INCLUDING WORST CASE ASSUMPTIONS

CYCLONE DUST QUENCH WATER, HEALTH IMPACT

| DMEG NO. | COMPOUND NAME | TYPE | CONC E-6 G/L | DS | WDS G/S | LCCAT |
|---|---|---|---|---|---|---|
| 16 A 220 W | POLYCHLORINATED BIPHENYLS | T | 6.00E 04 | 1.20E 07 | 8.33E 07 | |
| 21 C 100* P W | BENZO(A)PYRENE | T | 6.00E 04 | 2.00E 05 | 1.40E 06 | |
| 21 C 080* P | DIBENZ(A,H)ANTHRACENE | T | 6.00E 04 | 4.30E 04 | 3.00E 05 | |
| 18 B 040 W | 1,3-DIHYDROXYBENZENE | T | 6.00E 04 | 1.20E 04 | 8.33E 04 | |
| 18 B 060 W | 1,4-DIHYDROXYBENZENE | T | 6.00E 04 | 1.20E 04 | 8.33E 04 | |
| 18 A 183 | 2,6-DIMETHYL-4-HEPTYL PHENOL | T | 6.00E 04 | 1.20E 04 | 8.33E 04 | |
| 18 B 020 W | CATECHOL | T | 6.00E 04 | 1.20E 04 | 8.33E 04 | |
| 18 C 040 W | 2-NAPHTHOL | T | 6.00E 04 | 1.20E 04 | 8.33E 04 | |
| 18 A 182 | 4,6-DI-TERT-BUTYL-M-CRESOL | T | 6.00E 04 | 1.20E 04 | 8.33E 04 | |
| 18 C 081 | 1-INDANOL | T | 6.00E 04 | 1.20E 04 | 8.33E 04 | |
| 18 C 082 | 4-INDANOL | T | 6.00E 04 | 1.20E 04 | 8.33E 04 | |
| 18 C 083 | 5-INDANOL | T | 6.00E 04 | 1.20E 04 | 8.33E 04 | |
| 19 A 020* P W | 2-CHLOROPHENOL | T | 6.00E 04 | 1.20E 04 | 8.33E 04 | |
| 18 B 080 W | 1,2,3-TRIHYDROXYBENZENE | T | 6.00E 04 | 1.20E 04 | 8.33E 04 | |
| 18 A 083 | P-ETHYLPHENOL | T | 6.00E 04 | 1.20E 04 | 8.33E 04 | |
| 19 A 040* P W | 2,4-DICHLOROPHENOL | T | 6.00E 04 | 1.20E 04 | 8.33E 04 | |
| 18 C 080 W | INDANOLS | T | 6.00E 04 | 1.20E 04 | 8.33E 04 | |
| 18 A 102 | P-PHENYLPHENOL | T | 6.00E 04 | 1.20E 04 | 8.33E 04 | |
| 19 A 060* P W | PENTACHLOROPHENOL | T | 6.00E 04 | 1.20E 04 | 8.33E 04 | |
| 18 A 120 W | 2,2'-DIHYDROXYDIPHENYL | T | 6.00E 04 | 1.20E 04 | 8.33E 04 | |
| 18 A 140 W | XYLENOLS | T | 6.00E 04 | 1.20E 04 | 8.33E 04 | |
| 19 B 020 W | CHLORINATED CRESOLS | T | 6.00E 04 | 1.20E 04 | 8.33E 04 | |
| 19 B 021 | CHLORINATED-O-CRESOLS | T | 6.00E 04 | 1.20E 04 | 8.33E 04 | |
| 19 B 022* P | CHLORINATED-M-CRESOLS | T | 6.00E 04 | 1.20E 04 | 8.33E 04 | |
| 18 A 041 | M-CRESOL | T | 6.00E 04 | 1.20E 04 | 8.33E 04 | |
| 18 A 143 | 2,5-XYLENOL | T | 6.00E 04 | 1.20E 04 | 8.33E 04 | |
| 19 B 023 | CHLORINATED-P-CRESOLS | T | 6.00E 04 | 1.20E 04 | 8.33E 04 | |
| 20 A 020* P W | 2-NITROPHENOL | T | 6.00E 04 | 1.20E 04 | 8.33E 04 | |
| 18 A 146 | 3,4-XYLENOL | T | 6.00E 04 | 1.20E 04 | 8.33E 04 | |
| 18 A 160 W | ETHYL CRESOLS | T | 6.00E 04 | 1.20E 04 | 8.33E 04 | |
| 18 A 082 | M-ETHYLPHENOL | T | 6.00E 04 | 1.20E 04 | 8.33E 04 | |
| 20 A 060* P W | 4-NITROPHENOL | T | 6.00E 04 | 1.20E 04 | 8.33E 04 | |
| 18 A 163 | 2-ETHYL-P-CRESOL | T | 6.00E 04 | 1.20E 04 | 8.33E 04 | |
| 18 A 101 | O-PHENYLPHENOL | T | 6.00E 04 | 1.20E 04 | 8.33E 04 | |

TABLE 4-14. CYCLONE DUST QUENCH WATER MAJOR CONTRIBUTIONS TO DS AND WDS FOR ECOLOGICAL EFFECTS INCLUDING WORST CASE ASSUMPTIONS

CYCLONE DUST QUENCH WATER, ECOLOGY IMPACT

| OMEG NO. | COMPOUND NAME | TYPE | CONC E-6 G/L | DS | WDS G/S | LCCAT |
|---|---|---|---|---|---|---|
| 16 A 220 W | POLYCHLORINATED BIPHENYLS | T | 6.00E 04 | 1.20E 07 | 8.33E 07 | |
| 02 A 380 W | HEXACHLOROCYCLOHEXANE | T | 6.00E 04 | 3.00E 06 | 2.10E 07 | |
| 08 D 282 | DIETHYL PHTHALATE | T | 6.00E 04 | 4.00E 04 | 2.80E 05 | |
| 08 D 283 | DI-N-BUTYL PHTHALATE | T | 6.00E 04 | 4.00E 04 | 2.80E 05 | |
| 08 D 281 | DIMETHYL PHTHALATE | T | 6.00E 04 | 4.00E 04 | 2.80E 05 | |
| 08 D 280* P W | PHTHALATE ESTERS (MW:194-279) | T | 6.00E 04 | 4.00E 04 | 2.80E 05 | |
| 19 A 060* P W | PENTACHLOROPHENOL | T | 6.00E 04 | 2.40E 03 | 1.70E 04 | |
| 48 A 010 | PHOSPHORUS | S | 4.00E 02 | 8.00E 02 | 5.60E 03 | |
| 16 A 082 | 1-BROMO-3-CHLOROBENZENE | T | 6.00E 04 | 6.00E 02 | 4.20E 03 | |
| 16 A 063 | 1,4-DIBROMOBENZENE | T | 6.00E 04 | 6.00E 02 | 4.20E 03 | |
| 21 A 020* P | NAPHTHALENE | T | 6.00E 04 | 6.00E 02 | 4.20E 03 | |
| 16 A 081 | 1-BROMO-2-CHLOROBENZENE | T | 6.00E 04 | 6.00E 02 | 4.20E 03 | |
| 16 A 060 | DIBROMOBENZENES | T | 6.00E 04 | 6.00E 02 | 4.20E 03 | |
| 16 A 083 | 1-BROMO-4-CHLOROBENZENE | T | 6.00E 04 | 6.00E 02 | 4.20E 03 | |
| 16 A 062 | 1,3-DIBROMOBENZENE | T | 6.00E 04 | 6.00E 02 | 4.20E 03 | |
| 16 B 040 | BIS(CHLOROMETHYL)BENZENES | T | 6.00E 04 | 6.00E 02 | 4.20E 03 | |
| 16 B 041 | 1,2-BIS(CHLOROMETHYBENZENE | T | 6.00E 04 | 6.00E 02 | 4.20E 03 | |
| 16 A 160* P | POLYCHLORINATED BENZENES | T | 6.00E 04 | 6.00E 02 | 4.20E 03 | |
| 01 B 220 W | DICYCLOPENTADIENE | T | 6.00E 04 | 6.00E 02 | 4.20E 03 | |
| 16 A 061 | 1,2-DIBROMOBENZENE | T | 6.00E 04 | 6.00E 02 | 4.20E 03 | |
| 16 A 140* P | 1,4-DICHLOROBENZENE | T | 6.00E 04 | 6.00E 02 | 4.20E 03 | |
| 16 A 162 | HEXACHLOROBENZENE | T | 6.00E 04 | 6.00E 02 | 4.20E 03 | |
| 20 A 101* P | 2,4-DINITROPHENOL | T | 6.00E 04 | 6.00E 02 | 4.20E 03 | |
| 16 A 120* P | 1,3-DICHLOROBENZENE | T | 6.00E 04 | 6.00E 02 | 4.20E 03 | |
| 16 A 040 | BROMOBENZENE | T | 6.00E 04 | 6.00E 02 | 4.20E 03 | |
| 26 B 040 W | TRITOTYL PHOSPHATES | T | 6.00E 04 | 6.00E 02 | 4.20E 03 | |
| 16 B 020 W | A-CHLOROTOLUENE | T | 6.00E 04 | 6.00E 02 | 4.20E 03 | |
| 20 A 103 | 2,6-DINITROPHENOL | T | 6.00E 04 | 6.00E 02 | 4.20E 03 | |
| 20 A 100 W | DINITROPHENOLS | T | 6.00E 04 | 6.00E 02 | 4.20E 03 | |
| 16 B 042 | 1,3-BIS(CHLOROMETHYL)BENZENE | T | 6.00E 04 | 6.00E 02 | 4.20E 03 | |
| 16 B 043 | 1,4-BIS(CHLOROMETHYL)BENZENE | T | 6.00E 04 | 6.00E 02 | 4.20E 03 | |
| 16 A 161 | 1,2,4-TRICHLOROBENZENE | T | 6.00E 04 | 6.00E 02 | 4.20E 03 | |
| 10 C 220 W | 2-AMINONAPHTHALENE | T | 6.00E 04 | 6.00E 02 | 4.20E 03 | |
| 10 C 140* P W | BENZIDINE | T | 6.00E 04 | 6.00E 02 | 4.20E 03 | |

TABLE 4-15. DISCHARGE SEVERITY & WEIGHTED DISCHARGE SEVERITY SUMMATIONS FOR THE FT. SNELLING WELLMAN-GALUSHA PROCESS STREAMS INCLUDING WORST CASE ASSUMPTIONS

| Stream | Health | | Ecology | |
|---|---|---|---|---|
| | ΣDS | ΣWDS (g/s) | ΣDS | ΣWDS (g/s) |
| Product Gas Particulate | 2.4E5 | 1.4E8 | 2.3E3 | 1.4E6 |
| P. G. Organic Module | 1.9E5 | 1.1E8 | 3.9E5 | 2.3E8 |
| Test Burner Flue Gas | 2.5E3 | 2.0E7 | 5.4 | 4.4E4 |
| Gasifier Ash | 8.7E4 | 2.1E6 | 1.6E5 | 3.8E6 |
| Gasifier Ash Sluice $H_2O$ | 2.5E7* | 1.8E8* | 2.5E7* | 1.8E8* |
| Cyclone Dust | 1.4E6 | 5.5E6 | 2.1E6 | 8.0E6 |
| Dust Quench Water | 1.2E7* | 8.3E7* | 1.2E7* | 8.3E7* |

$aEb = a \times 10^b$

* Total sample organic loading expressed as the single worst case organic compound for maximum DS and WDS.

## 4.2 BIOASSAY RESULTS SUMMARY

The bioassay tests conducted and a summary of the results obtained are shown in Table 4-16. The detailed results are given in Appendix F as received from the subcontractor, A. D. Little Inc.

TABLE 4-16. BIOASSAY TEST/RESULTS MATRIX

| SAMPLE | BIOASSAY TEST | | | |
|---|---|---|---|---|
| | AMES | WI-38 | RAM | RODENT |
| Product Gas Composite | Neg.* | Mod. | | None |
| Test Burner Composite | Neg. | None | | |
| Gasifier Ash | Neg. | | None | None |
| Gasifier Ash Sluice Water | Neg. | Mod. | | None |
| Cyclone Dust | Neg. | | None | None |
| Cyclone Dust Quench Water | Neg. | None | | None |

Neg. - no mutagenicity detected.
None - no in vitro or in vivo toxicity.
Mod. - moderate in vitro cytotoxicity.
* - toxic to test cells.

### 4.2.1 Mutagenicity Test Results (Ames)

The Ames test was performed on *Salmonella typhimurium* with and without metabolic activation in a histidine insufficient culture medium such that tester strains were not allowed to colonize. After incubation, the histidine-positive revertant colonies were counted as an indicator of mutagenicity. No sample appeared to be mutagenic in the presence or absence of metabolic activation. The product gas composite was extremely

toxic to the test cells and could only be tested at 0.08, 0.4, 2.0, and 10 µl/plate instead of the 100, 150, 200, and 250 µl/plate as was done for the test burner flue gas composite and liquid stream samples.

### 4.2.2 In Vitro Cytotoxicity Test Results (Wl-38, RAM)

In vitro cytotoxicity was assayed using Wl-38 human lung fibroblast cells and rabbit alveolar macrophages (RAM). For the Wl-38 assay, the cultured cells were incubated on media containing the sample extracts. After incubation, the cells were removed by trypsinization, diluted with culture medium and assayed for cell viability, protein, and adenosine triphosphate (ATP) levels. No detectable toxicity was found at the highest concentrations of cyclone dust quench water or test burner flue gas composite tested. The product gas composite and the gasifier ash sluice water caused moderate toxicity.

The cyclone dust and gasifier ash were tested for in vitro cytotoxicity using the RAM assay. Alveolar macrophages collected by lung lavage from specific pathogen-free albino rabbits were incubated in media containing finely ground particles of the dust and ash for 20 hours. The cells were subsequently trypsinized, and aliquots of the cell suspensions were assayed for viability and protein and ATP levels. There was no detectable toxicity for either solid tested.

### 4.2.3 Acute In Vivo Toxicity Test Results (Rodent)

Acute in vivo toxicity was evaluated by oral administration of the samples to fasted, adult albino Sprague-Dawley rats. No signs of toxicity or pharmacological effects were detected. No mortality was recorded and upon autopsy, after a two week observation period, no gross lesions or abnormalities were noted. The gasifier ash and cyclone dust were administered as suspensions in physiological saline; the product gas composite extract, the cyclone dust quench water, and the gasifier ash sluice water were administered by oral intubation without saline. The mortality data suggests that the oral $LD_{50}$ for each test substance is greater than 10.0 g/kg or 10.0 ml/kg.

### 4.2.4 Ecological Testing

Ecological testing was not conducted on these streams due to the uncertainties in the results interpretation. A ranking of high, medium, or low potential for hazard cannot be made from results of ecological tests. Previous ecological testing of Wellman-Galusha discharge streams with an anthracite coal indicated ecological toxicity from the gasifier ash and a lesser degree from the cyclone dust (Ref. 2). The SAM/1A results for these lignite feed discharge stream samples point to the product gas condensables and the ash sluice water as having the highest ecological WDS values.

## 4.3 CHEMICAL ANALYSIS RESULTS

The results of the inorganic analysis and both the organic screening and detailed analyses are summarized in this section. The data from these chemical analyses are presented in detail in Appendix D.

The inorganic analysis results describe the elemental composition of each stream and the distribution of these elemental species throughout the process streams. In addition, those results which address specific pollution problems such as water quality and solids leachability are provided here.

The organic analytical approach implemented during this project provided a general characterization of the streams and the distribution of organic classes throughout the process. The detailed organic analysis was prioritized on the basis of the weighted discharge severity (WDS) for each stream determined from the organic screening results. This imposes a limitation on the range of compound specific information that can be applied to the entire process, since some streams had low WDS values and were therefore not included in the detailed analysis.

### 4.3.1 Gasification System Overview

The mass flows of the minor and trace elements in the process and discharge streams are given in Table 4-17. These mass flows were calculated from analysis of samples and flow rate data collected during operation of the gasifier in two different configurations, as discussed in Section 2.0. Samples from the product gas, gasifier ash, and gasifier ash sluice water were collected during operation with the product gas vented. The distribution of elements among these three streams during product gas venting is presented in Table 4-18. Normal operation of the system includes passage of the product gas through the cyclone for removal of particulates and heavy tar aerosols. The distribution of elements among the test burner flue gas, gasifier ash, gasifier ash sluice water, cyclone dust, and cyclone dust quench water was estimated from the elemental flows for these five streams. This estimated elemental distribution during normal operation is given in Table 4-19. The total for normal operation is the sum of the mass flows in the five streams normally exiting the system.

The organic screening of the samples indicates that the gaseous streams and the cyclone dust quench water were higher in aromatics than the solid streams and the gasifier ash sluice water,which were primarily aliphatic. The product gas and the cyclone dust contained high concentrations of extractable organics compared to the test burner flue gas, the liquid streams, and the gasifier ash. A summary of the extractable organic content of the streams is given in Table 4-20.

TABLE 4-17. MASS FLOW FOR THE MINOR AND TRACE ELEMENTS

| | Test Burner Flue Gas g/h | Product Gas Particulate g/h | Product Gas Org. Module g/h | Ash Sluice Water g/h | Cyclone Quench Water g/h | Gasifier Ash g/h | Cyclone Dust g/h |
|---|---|---|---|---|---|---|---|
| Aluminum | 3.9E-1 | 5.5E1 | 8.6E-4 | 2.8E-1 | 2.8E-1 | 8.5E3 | 1.6E2 |
| Antimony | <2.7E-1 | <7.8E1 | <3.3E-2 | 5.0E-5 | | <3.9E-2 | <5.5E-3 |
| Arsenic | 2.1 | 7.6E-1 | >3.7E-2 | 8.3E-5 | 3.0E-3 | 2.9 | 8.6E-1 |
| Barium | >2.9 | 1.6E1 | 4.3E-2 | 3.3E-3 | 1.4E-2 | 5.3E2 | 1.8E1 |
| Beryllium | | 5.3E-3 | | | | 8.6E-1 | 5.5E-3 |
| Bismuth | | 5.3E-3 | | | | | 4.1E-3 |
| Boron | 9.7E-2 | 1.1 | >2.7E-2 | 1.2E-1 | 2.5E-2 | 2.0E1 | 1.5 |
| Bromine | 1.1E-2 | 2.7E-1 | 1.8E-3 | 5.0E-4 | 1.0E-3 | 1.9E-1 | 1.2E-1 |
| Cadmium | >4.9E-3 | 5.5E-1 | | <5.0E-5 | <1.3E-4 | 7.8E-2 | 2.7E-2 |
| Calcium | >1.9E1 | 3.1E2 | 9.4E-1 | 5.5 | 1.4 | 4.7E3 | 4.0E2 |
| Cerium | 1.5E-2 | 1.0E-1 | 1.8E-3 | 5.0E-5 | 5.0E-5 | 1.1E1 | 2.0E-1 |
| Cesium | 2.7E-2 | 4.7E-3 | | | 1.0E-4 | 7.8E-1 | 9.6E-3 |
| Chlorine | 8.0E-1 | >6.6 | 3.3E-2 | 2.0 | 8.6E-1 | 1.4E1 | 7.8E-1 |
| Chromium | 9.0E-1 | 1.8E-1 | 3.1E-2 | 1.8E-4 | <1.3E-4 | 9.7 | 1.5E-1 |
| Cobalt | 3.2 | 2.9E-2 | >1.6E-3 | <5.0E-5 | 2.3E-4 | 2.2 | 6.8E-2 |
| Copper | 2.3E-1 | 5.5E-1 | 2.3E-2 | 4.3E-4 | 3.0E-4 | 7.8 | 4.1E-1 |
| Dysprosium | | 3.5E-3 | | | | 6.8E-1 | 8.2E-3 |
| Erbium | | 1.3E-3 | | | | 2.9E-1 | 4.1E-3 |
| Europium | | 2.0E-3 | | | | 2.9E-1 | 5.5E-3 |
| Fluorine | 2.4 | 2.7 | 1.9E-2 | 2.2E-2 | 5.0E-2 | 1.8E1 | 3.8 |
| Gadolinium | | 3.9E-3 | | | | 3.9E-1 | 5.5E-3 |
| Gallium | <3.2E-2 | 4.7E-2 | 2.7E-2 | 2.0E-4 | 5.0E-4 | 8.6E-1 | 4.5E-1 |
| Germanium | 4.9E-3 | 1.5E-2 | | | 1.8E-4 | 8.7E-2 | 8.2E-2 |
| Gold | | | | | | | |
| Hafnium | | 5.9E-3 | | | | 9.7E-2 | |
| Holmium | | 2.0E-3 | | | | 3.9E-1 | 5.5E-3 |
| Iodine | 1.6E-2 | <8.2E-3 | | | 1.5E-4 | 1.9E-2 | 5.5E-3 |
| Iridium | | | | | | | |
| Iron | >7.6 | <6.8E1 | 9.4E-1 | 3.0E-2 | 1.2E-1 | 8.6E3 | 1.2E2 |
| Lanthanum | 2.0E-2 | 7.4E-2 | 2.7E-3 | <2.5E-5 | | 1.1E1 | 1.1E-1 |

TABLE 4-17. MASS FLOW FOR THE MINOR AND TRACE ELEMENTS (Cont'd)

| | Test Burner Flue Gas g/h | Product Gas Particulate g/h | Product Gas Org. Module g/h | Ash Sluice Water g/h | Cyclone Quench Water g/h | Gasifier Ash g/h | Cyclone Dust g/h |
|---|---|---|---|---|---|---|---|
| Lead | 3.7E-1 | 2.7E-1 | 5.9E-2 | 2.0E-4 | 2.5E-3 | 4.9E-1 | 1.1E-1 |
| Lithium | <3.4E-2 | 2.5E-1 | 1.3E-2 | 1.0E-2 | 1.0E-3 | 4.7 | 8.2E-2 |
| Lutetium | | | | | | 2.9E-2 | |
| Magnesium | >3.2 | 8.0E2 | 5.1E-2 | 2.8E-1 | 2.8E-1 | 1.2E3 | 1.0E2 |
| Manganese | 4.1E-1 | 2.5E-1 | 1.5E-2 | 5.0E-5 | <2.5E-5 | 2.1E1 | 2.6E-1 |
| Mercury | 3.9E-1 | 1.3E1 | 6.8E-3 | 3.5E-5 | 1.0E-5 | 1.7E-1 | 3.1E-2 |
| Molybdenum | 4.4E-1 | 2.0E-2 | | 7.8E-3 | 1.0E-4 | 1.4 | 2.7E-2 |
| Neodymium | 6.1E-4 | 2.0E-2 | | | | 2.9 | 4.1E-2 |
| Nickel | 1.1 | 2.3E-1 | 2.0E-2 | 5.0E-4 | <5.0E-4 | 7.2 | 5.5E-2 |
| Niobium | >2.4E-3 | 2.7E-2 | | 5.0E-5 | | 3.0 | 6.8E-2 |
| Osmium | | | | | | | |
| Palladium | | | | | | | |
| Phosphorus | 4.1 | >6.6 | 1.9E-1 | 1.0E-2 | 1.0E-2 | 1.9E2 | 8.1 |
| Platinum | 3.2E-2 | | | | | | |
| Potassium | >1.2E1 | <6.6 | 1.4E-1 | >2.5 | >2.5 | 8.3E2 | 1.7E1 |
| Praseodymium | 3.2E-4 | 1.3E-2 | | 2.5E-5 | | 1.6 | 2.7E-2 |
| Rhenium | | <6.2E-2 | | 1.0E-3 | 5.0E-4 | | |
| Rubidium | <8.5E-3 | <1.4E-2 | 4.1E-3 | | | 4.6 | 4.1E-2 |
| Ruthenium | | | | | | | |
| Samarium | | 1.3E-2 | | | | 1.2 | 2.7E-2 |
| Scandium | <1.2E-3 | 3.9E-2 | | | | 1.9 | 6.8E-2 |
| Selenium | <3.2 | 3.1E1 | >6.2E-3 | 5.0E-4 | 1.5E-4 | 1.4 | 1.9E-1 |
| Silicon | >7.1 | >1.4E1 | 6.8E-1 | 7.6E-3 | 5.0E-2 | 1.3E4 | 2.5E2 |
| Silver | 2.2E-2 | 2.3E-1 | 6.2E-2 | 2.5E-5 | 5.0E-5 | 5.8E-2 | 2.7E-2 |
| Sodium | >3.4 | 4.3E1 | 6.4E-2 | 4.3E1 | 5.5 | 1.8E3 | 1.5E2 |
| Strontium | 1.3E-1 | 8.0 | 8.6E-3 | 1.0E-1 | 2.8E-2 | 1.8E2 | 1.9E1 |
| Sulfur | 2.9 | >7.2 | 8.8 | 2.4E1 | 5.8E-1 | 8.5E2 | 1.5E2 |
| Tantalum | | | | | | <7.8E-2 | |
| Tellurium | | 2.0E-3 | | | | | 2.7E-3 |
| Terbium | | 1.3E-3 | | | | 9.6E-2 | 1.4E-3 |

TABLE 4-17. MASS FLOW FOR THE MINOR AND TRACE ELEMENTS (Cont'd)

| | Test Burner Flue Gas g/h | Product Gas Particulate g/h | Product Gas Org. Module g/h | Ash Sluice Water g/h | Cyclone Quench Water g/h | Gasifier Ash g/h | Cyclone Dust g/h |
|---|---|---|---|---|---|---|---|
| Thallium | | 6.6E-3 | | | | | 1.2E-2 |
| Thorium | | 1.3E-2 | | | | 2.2 | 2.7E-2 |
| Thulium | | <6.2E-4 | | | | 3.9E-2 | |
| Tin | 3.7E-2 | 2.7E-2 | 1.8E-3 | 7.6E-2 | 7.3E-2 | 4.9E-2 | 2.7E-2 |
| Titanium | 5.1E-1 | 1.9 | 4.9E-2 | 1.1E-3 | 4.5E-3 | 4.3E2 | 5.5 |
| Tungsten | | 6.6E-3 | | 5.0E-4 | | 9.6E-2 | <9.6E-3 |
| Uranium | <9.7E-4 | 6.6E-3 | 9.4E-3 | | | 1.6 | 1.2E-2 |
| Vanadium | 8.8E-2 | 7.4E-2 | 1.9E-3 | 1.9E-3 | 3.8E-4 | 4.0E1 | 2.6E-1 |
| Ytterbium | | | | | | 2.9E-1 | 8.2E-3 |
| Yttrium | <4.9E-4 | 6.2E-2 | | | 5.0E-5 | 5.7 | 1.8E-1 |
| Zinc | 3.2E-1 | 9.8E-1 | 6.4E-2 | 1.1E-3 | 8.8E-4 | 1.9 | 2.2 |
| Zirconium | 2.9E-1 | 1.8E-1 | 5.1E-4 | 5.0E-5 | 1.3E-4 | 1.8E1 | 4.0E-1 |
| Ash * | | | | | | 74.41% | 18.97% |

aEb = a x $10^b$

*Ash (mineral content) from proximate analysis, dry basis.

TABLE 4-18. PERCENT DISTRIBUTION OF THE TRACE ELEMENTS AND MINOR ELEMENTS WITH THE PRODUCT GAS ROUTED TO THE START-UP FLARE

| ELEMENT | TOTAL g/hr | % of Total | | | |
|---|---|---|---|---|---|
| | | PRODUCT GAS PARTICULATE | PRODUCT GAS ORGANIC MODULE COMPOSITE | ASH SLUICE WATER | ASH* |
| Aluminum | 6.8E3 | 0.8 | <0.1 | <0.1 | 99.2 |
| Antimony | 8.4E-1 | 92.5 | 3.9 | <0.1 | 3.6 |
| Arsenic | 3.1 | 24.5 | 1.2 | <0.1 | 74.3 |
| Barium | 4.4E2 | 3.7 | <0.1 | <0.1 | 96.3 |
| Beryllium | 6.9E-1 | 0.8 | | | 99.2 |
| Bismuth | 5.3E-3 | 100. | | | |
| Boron | 1.7E1 | 6.4 | 0.2 | 0.7 | 92.8 |
| Bromine | 4.2E-1 | 63.9 | 0.4 | 0.1 | 35.5 |
| Cadmium | 6.1E-1 | 90.0 | | <0.1 | 10.0 |
| Calcium | 3.9E3 | 7.9 | <0.1 | 0.1 | 91.9 |
| Cerium | 8.4 | 1.2 | <0.1 | <0.1 | 98.8 |
| Cesium | 6.1E-1 | 0.8 | | | 99.2 |
| Chlorine | 2.0E1 | 33.6 | 0.2 | 10.2 | 56.0 |
| Chromium | 7.7 | 2.3 | 0.4 | <0.1 | 97.3 |
| Cobalt | 1.7 | 1.7 | 0.1 | <0.1 | 98.2 |
| Copper | 6.7 | 8.2 | 0.3 | <0.1 | 91.4 |
| Dysprosium | 5.3E-1 | 0.7 | | | 99.3 |
| Erbium | 2.3E-1 | 0.6 | | | 99.4 |
| Europium | 2.3E-1 | 0.9 | | | 99.1 |
| Fluorine | 1.7E1 | 16.1 | 0.1 | 0.1 | 83.6 |
| Gadolinium | 3.0E-1 | 1.3 | | | 98.7 |
| Gallium | 7.5E-1 | 6.2 | 3.6 | <0.1 | 90.2 |
| Germanium | 9.0E-2 | 16.7 | | | 83.3 |
| Gold | | | | | |
| Hafnium | 8.1E-2 | 7.3 | | | 92.7 |
| Holmium | 3.0E-1 | 0.7 | | | 99.3 |
| Iodine | 2.3E-2 | 35.3 | | | 64.7 |
| Iridium | | | | | |
| Iron | 7.5E3 | 9.1 | <0.1 | <0.1 | 90.9 |
| Lanthanum | 8.4 | 0.9 | <0.1 | <0.1 | 99.1 |
| Lead | 7.1E-1 | 38.1 | 8.3 | <0.1 | 53.6 |
| Lithium | 3.9 | 6.5 | 0.3 | 0.3 | 93.0 |
| Lutetium | 2.3E-2 | | | | 100. |

TABLE 4-18. PERCENT DISTRIBUTION OF THE TRACE ELEMENTS AND MINOR ELEMENTS WITH THE PRODUCT GAS ROUTED TO THE START-UP FLARE (Cont'd)

| ELEMENT | TOTAL g/hr | % of Total | | | |
|---|---|---|---|---|---|
| | | PRODUCT GAS PARTICULATE | PRODUCT GAS ORGANIC MODULE COMPOSITE | ASH SLUICE WATER | ASH* |
| Magnesium | 1.0E3 | 7.8 | <0.1 | <0.1 | 92.2 |
| Manganese | 1.6E1 | 1.5 | 0.1 | <0.1 | 98.4 |
| Mercury | 1.3E1 | 99.0 | <0.1 | <0.1 | 1.0 |
| Molybdenum | 1.1 | 1.8 | | 0.7 | 97.5 |
| Neodymium | 2.3 | 0.9 | | | 99.1 |
| Nickel | 5.9 | 3.9 | 0.3 | <0.1 | 95.7 |
| Niobium | 2.3 | 1.2 | | <0.1 | 98.8 |
| Osmium | | | | | |
| Palladium | | | | | |
| Phosphorum | 1.6E2 | 4.2 | 0.1 | <0.1 | 95.7 |
| Platinum | | | | | |
| Potassium | 6.6E2 | 1.0 | <0.1 | 0.4 | 98.6 |
| Praseodymium | 1.2 | 1.1 | | <0.1 | 98.9 |
| Rhenium | 6.3E-2 | 98.4 | | 1.6 | |
| Rubidium | 3.6 | 0.4 | 0.1 | | 99.5 |
| Ruthenium | | | | | |
| Samarium | 9.6E-1 | 1.3 | | | 98.7 |
| Scandium | 1.5 | 2.5 | | | 97.5 |
| Selenium | 3.2E1 | 96.6 | <0.1 | <0.1 | 3.4 |
| Silicon | 1.0E4 | 0.1 | <0.1 | <0.1 | 99.9 |
| Silver | 3.4E-1 | 68.2 | 18.4 | <0.1 | 13.4 |
| Sodium | 1.5E3 | 2.9 | <0.1 | 2.9 | 94.2 |
| Strontium | 1.5E2 | 5.4 | <0.1 | 0.1 | 94.5 |
| Sulfur | 7.1E2 | 1.0 | 1.2 | 3.4 | 94.4 |
| Tantalum | 6.1E-2 | | | | 100. |
| Tellurium | 2.0E-3 | 100. | | | |
| Terbium | 7.6E-2 | 1.7 | | | 98.3 |
| Thallium | 6.6E-3 | 100. | | | |
| Thorium | 1.7 | 0.8 | | | 99.2 |
| Thulium | 3.1E-2 | 2.0 | | | 98.0 |

TABLE 4-18. PERCENT DISTRIBUTION OF THE TRACE ELEMENTS AND MINOR ELEMENTS WITH THE PRODUCT GAS ROUTED TO THE START-UP FLARE (Cont'd)

| ELEMENT | TOTAL g/hr | % of Total | | | |
|---|---|---|---|---|---|
| | | PRODUCT GAS PARTICULATE | PRODUCT GAS ORGANIC MODULE COMPOSITE | ASH SLUICE WATER | ASH* |
| Tin | 1.4E-1 | 18.9 | 1.3 | 53.2 | 26.6 |
| Titanium | 3.4E2 | 0.6 | <0.1 | <0.1 | 99.4 |
| Tungsten | 8.2E-2 | 8.0 | | 0.6 | 91.4 |
| Uranium | 1.2 | 0.5 | 0.8 | | 98.7 |
| Vanadium | 3.1E1 | 0.2 | 0.1 | 0.1 | 99.7 |
| Ytterbium | 2.3E-1 | | | | 100. |
| Yttrium | 4.5 | 1.4 | | | 98.6 |
| Zinc | 2.5 | 38.5 | 2.5 | <0.1 | 58.9 |
| Zirconium | 1.4E1 | 1.3 | <0.1 | <0.1 | 98.7 |

aEb = a x $10^b$

*Sampling period two, 1600 to 0300 on 12/13-14/78, ash mass flow = 21g/s

TABLE 4-19. RELATIVE ELEMENTAL DISTRIBUTION ESTIMATED FOR DISCHARGE STREAMS IN NORMAL OPERATING CONFIGURATION

| ELEMENT | TOTAL g/hr | % of Total | | | | |
|---|---|---|---|---|---|---|
| | | TEST BURNER FLUE GAS | ASH* | ASH SLUICE WATER | CYCLONE DUST | CYCLONE QUENCH WATER |
| Aluminum | 8.7E3 | <.1 | 98.1 | <.1 | 1.8 | <.1 |
| Antimony | 3.1E-1 | 85.8 | 12.4 | <.1 | 1.7 | |
| Arsenic | 5.9 | 35.8 | 49.5 | <.1 | 14.7 | <.1 |
| Barium | 5.5E2 | 0.5 | 96.2 | <.1 | 3.3 | <.1 |
| Beryllium | 8.7E-1 | | 100. | | <.1 | |
| Bismuth | 4.1E-3 | | | | 100. | |
| Boron | 2.2E1 | 0.4 | 92.0 | <.6 | 6.9 | .1 |
| Bromine | 3.2E-1 | 3.4 | 58.9 | .2 | 37.2 | .3 |
| Cadmium | 1.0E-1 | 4.5 | 70.9 | <.1 | 24.5 | .1 |
| Calcium | 5.1E3 | 0.4 | 91.7 | .1 | 7.8 | <.1 |
| Cerium | 1.1E1 | 0.1 | 98.1 | <.1 | 1.8 | <.1 |
| Cesium | 8.2E-1 | 3.3 | 95.5 | | 1.2 | <.1 |
| Chlorine | 1.8E1 | 4.3 | 75.9 | 10.8 | 4.2 | 4.7 |
| Chromium | 1.1E1 | 8.4 | 90.2 | <.1 | 1.4 | <.1 |
| Cobalt | 5.5 | 58.5 | 40.2 | <.1 | 1.2 | <.1 |
| Copper | 8.4 | 2.7 | 92.4 | <.1 | 4.9 | <.1 |
| Dysprosium | 6.9E-1 | | 98.8 | | 1.2 | |
| Erbium | 2.9E-1 | | 98.6 | | 1.4 | |
| Europium | 3.0E-1 | | 98.1 | | 1.9 | |
| Fluorine | 2.4E1 | 9.9 | 74.2 | <.1 | 15.7 | .2 |
| Gadolinium | 4.0E-1 | | 98.6 | | 1.4 | |
| Gallium | 1.3 | 2.5 | 61.8 | <.1 | 35.6 | <.1 |
| Germanium | 1.8E-1 | 2.7 | 52.7 | | 44.5 | .1 |
| Gold | | | | | | |
| Hafnium | 9.7E-2 | | 100. | | | |
| Holmium | 4.0E-1 | | 98.6 | | 1.4 | |
| Iodine | 4.1E-2 | 39.4 | 46.7 | | 13.5 | .4 |
| Iridium | | | | | | |
| Iron | 8.7E3 | 0.1 | 98.5 | <.1 | 1.4 | <.1 |

TABLE 4-19. RELATIVE ELEMENTAL DISTRIBUTION ESTIMATED FOR DISCHARGE STREAMS IN NORMAL OPERATING CONFIGURATION (Cont'd)

| ELEMENT | TOTAL g/hr | % of Total | | | | |
|---|---|---|---|---|---|---|
| | | TEST BURNER FLUE GAS | ASH* | ASH SLUICE WATER | CYCLONE DUST | CYCLONE QUENCH WATER |
| Lanthanum | 1.1E1 | .2 | 98.8 | <.1 | 1.0 | |
| Lead | 9.7E-1 | 38.0 | 50.4 | <.1 | 11.3 | .3 |
| Lithium | 4.8 | .7 | 97.4 | .2 | 1.7 | <.1 |
| Lutetium | 2.9E-2 | | 100. | | | |
| Magnesium | 1.3E3 | .2 | 92.0 | <.1 | 7.7 | <.1 |
| Manganese | 2.2E1 | 1.9 | 96.9 | <.1 | 1.2 | <.1 |
| Mercury | 5.9E-1 | 66.0 | 28.8 | <.1 | 5.2 | <.1 |
| Molybdenum | 1.9 | 23.5 | 74.7 | .4 | 1.4 | <.1 |
| Neodymium | 2.9 | <.1 | 98.6 | | 1.4 | |
| Nickel | 8.4 | 13.2 | 86.2 | <.1 | 0.7 | <.1 |
| Niobium | 3.1 | .1 | 97.7 | <.1 | 2.2 | |
| Osmium | | | | | | |
| Palladium | | | | | | |
| Phosphorus | 2.0E2 | 2.0 | 94.0 | <.1 | 4.0 | <.1 |
| Platinum | 3.2E-2 | 100. | | | | |
| Potassium | 7.8E2 | 1.5 | 96.1 | .3 | 2.2 | .3 |
| Praseodymium | 1.6 | <.1 | 98.3 | <.1 | 1.7 | |
| Rhenium | 1.5E-3 | | 66.7 | | | 33.3 |
| Rubidium | 4.7 | .2 | 98.9 | | .9 | |
| Ruthenium | | | | | | |
| Samarium | 1.2 | | 97.8 | | 2.2 | |
| Scandium | 2.0 | <.1 | 96.5 | | 3.5 | |
| Selenium | 4.8 | 66.8 | 29.2 | <.1 | 4.0 | <.1 |
| Silicon | 1.3E4 | <.1 | 98.1 | <.1 | 1.9 | <.1 |
| Silver | 1.1E-1 | 20.5 | 54.2 | <.1 | 25.2 | <.1 |
| Sodium | 2.0E3 | .2 | 89.9 | 2.2 | 7.5 | .3 |
| Strontium | 2.0E2 | <.1 | 90.3 | <.1 | 9.5 | <.1 |
| Sulfur | 3.9E3 | 74.0 | 21.7 | .6 | 3.8 | |

TABLE 4-19. RELATIVE ELEMENTAL DISTRIBUTION ESTIMATED FOR DISCHARGE STREAMS IN NORMAL OPERATING CONFIGURATION (Cont'd)

| ELEMENT | TOTAL g/hr | % of Total | | | | |
|---|---|---|---|---|---|---|
| | | TEST BURNER FLUE GAS | ASH* | ASH SLUICE WATER | CYCLONE DUST | CYCLONE QUENCH WATER |
| Tantalum | <7.8E-2 | | 100. | | | |
| Tellurium | 2.7E-3 | | | | 100. | |
| Terbium | 9.7E-2 | | 98.6 | | 1.4 | |
| Thallium | 1.2E-2 | | | | 100. | |
| Thorium | 2.2 | | 98.8 | | 1.2 | |
| Thulium | 3.5E-2 | | 100. | | | |
| Tin | 2.6E-1 | 14.1 | 18.7 | 29.0 | 10.3 | 27.9 |
| Titanium | 4.4E2 | .1 | 98.6 | <.1 | 1.3 | <.1 |
| Tungsten | 1.1E-1 | | 90.5 | .5 | 9.0 | |
| Uranium | 1.6 | <.1 | 99.2 | | 0.7 | |
| Vanadium | 4.0E1 | .2 | 99.1 | <.1 | 0.6 | <.1 |
| Ytterbium | 3.0E-1 | | 97.3 | | 2.7 | |
| Yttrium | 5.9 | <.1 | 96.9 | | 3.1 | <.1 |
| Zinc | 4.4 | 7.2 | 43.0 | <.1 | 49.8 | <.1 |
| Zirconium | 1.9E1 | 1.6 | 96.3 | <.1 | 2.1 | <.1 |

$aEb = a \times 10^b$

*Sampling period one, 1430 to 2130 on 12/12/78, ash mass flow = 27 g/s

TABLE 4-20. EXTRACTABLE ORGANIC SUMMARY

| STREAM | EXTRACTABLE ORGANICS | |
|---|---|---|
| | Concentration | Mass Flow |
| Product Gas Composite | 1.57E7 μg/SCM | 8.6 g/sec (68 lb/hr) |
| Test Burner Composite | 5.4E3 μg/SCM | 3.6E-2 g/sec (0.29 lb/hr) |
| Gasifier Ash | 6.4E2 μg/g | 1.5E-2 g/sec (0.12 lb/hr) |
| Gasifier Ash Sluice Water | 1.3E5 μg/l | <9E-4 g/sec (<7E-3 lb/hr) |
| Cyclone Dust | 1.3E4 μg/g | 4.9E-2 g/sec(0.4 lb/hr) |
| Cyclone Dust Quench Water | 6.0E4 μg/l | <4E-4 g/sec (<3E-3 lb/hr) |

SCM at 25°C (77°F) and 101 kPa (1 atm), dry basis.

aEb = a x $10^b$

The detailed organic analysis was prioritized on the basis of the weighted discharge severity (WDS) for each stream from the organic screening results. Neither the gasifier ash nor the cyclone dust had sufficiently high WDS factors to be included in the detailed analyses. The specific compounds that were quantified in the detailed organic analysis were primarily polynuclear aromatic hydrocarbons (PNA). A total of 3500 μg PNA/SCM was identified in the product gas and 450 μg PNA/SCM in the test burner flue gas. The tabulation of compounds specifically identified is given in Section 4.3.2, while the detailed information concerning the compounds of interest for which analyses were conducted but for which identifications were not made, is given in Appendix D, Section 4.0.

### 4.3.2 Gas Streams

The average gas compositions for the product gas, the test burner flue gas and the coal bin vent gas are given in Table 4-21. Values are presented along with the 95% confidence interval (2σ) for:

- Fixed gases ($H_2$, $O_2$+ Ar, $N_2$, CO, $CO_2$, and $CH_4$)
- Volatile sulfur species ($H_2S$, COS, $SO_2$, and $CS_2$)
- Light hydrocarbons ($CH_4$, $C_2H_4$, $C_2H_6$, and $C_3$ to $C_6$ isomers),
- Volatile nitrogenous species ($NH_3$ and HCN), and
- Metal carbonyls.

The values represent an average of the available data, taken during the sampling period. Therefore, the calculated confidence intervals include not only sampling and analytical variance but also a major contribution from process variability. Gas chromatography samples from the coal bin vent were not available due to problems encountered in pressurizing the sample bombs. Ammonia, cyanide, and total volatile sulfur concentrations were quite low, however, and it may be assumed that the vent gas is primarily dilution air.

During sampling period one, the sulfur exiting the process in the test burner flue gas, predominantly $SO_2$, was 72% of the sulfur in the lignite feed, or 0.94 g/s (7.4 lb/hr). During the secnd sampling period, the product gas contained 71% of the feed sulfur as volatile sulfur species, mainly $H_2S$. This corresponded to a sulfur mass flow of 0.74 g/s (5.8 lb/hr). The average sulfur mass flow exiting the system was 1.2 g/s (9.5 lb/hr).

Nitrogen in the product gas, calculated from the sum of ammonia and cyanide, is the equivalent of 0.34 g/sec (2.7 lb/hr) nitrogen. Based on the coal nitrogen of 0.91% and a coal feed rate to the gasifier of 170 g/sec (1360 lb/hr), nitrogen enters the system with the coal at a rate of 1.5 g/sec (11.9 lb/hr). From these data, the gasifier converts 23% of coal nitrogen to gaseous components that may contribute to emissions of nitrogen oxides from combustion.

TABLE 4-21. GASEOUS SPECIES ANALYSIS SUMMARY

| ANALYSIS | PRODUCT GAS | TEST BURNER | COAL BIN VENT GAS |
|---|---|---|---|
| Major Components (% ± 2σ) | | | NR |
| $CO_2$ | 9.5 ± 1.8† | 5.4 ± 2.2 | |
| $H_2$ | 15.4 ± 2.4 | ND* | |
| $O_2$ + Ar | 0.7 ± 0.4 | 16.0 ± 4.8 | |
| $N_2$ | 46.8 ± 4.1 | 77.8 ± 5.2 | |
| CO | 26.3 ± 4.6 | ND | |
| $CH_4$ | 1.3 ± 0.3 | ND | |
| Sulfur Species (Vppm ± 2σ) | | | NR |
| $H_2S$ | 1110 ± 130 | ND* | |
| COS | 143 ± 16 | ND* | |
| $SO_2$ | 16 ± 50 | 103 ± 122 | |
| $CS_2$ | 12 ± 4 | 2.8 ± 5.1 | |
| Total volatile sulfur | 990 | NR | 1.8 ± 0.4 |
| $C_1$-$C_6$ Hydrocarbons (Vppm ± 2σ) | | | |
| $CH_4$ | 9590 ± 1510† | ND | |
| $C_2H_6$ | 643 ± 132 | ND | |
| $C_2H_4$ | 314 ± 68 | ND | |
| $C_3$ + isomers | 445 ± 68 | ND* | |
| $C_4$ + isomers | 193 ± 42 | ND* | |
| $C_5$ + isomers | 202 ± 392 | ND* | |
| $C_6$ + isomers | 197 ± 100 | | |
| Nitrogen Species (Vppm ± 2σ) | | | |
| $NH_3$ | 842 ± 943 | <0.005 | 0.16 ± 0.56 |
| HCN | 200 ± 90 | 1.0 ± 1.0 | 0.039 ± 0.031 |
| Metal Carbonyls (Vppm) | NR | NR | |
| $Fe(CO)_5$ | | | 0.033 |
| $Ni(CO)_4$ | | | <0.001 |

ND = not detected.
*One detectable measurement out of four analyses.
†Samples at the product gas start-up vent; 12/13/78, 1715 hours-2320 hours.
NR = no results.

Particulates and liquid aerosols were collected from the product gas start-up vent with a small electrostatic precipitator (ESP) operated at 140°C (285°F). At this temperature, which was ∿20°C (36°F) lower than the product gas temperature, 9.2 g/SCM (4.0 gr/SCF) of solids and liquid aerosols were collected. Extraction of the collected material indicated that 68% was methylene chloride soluble. The product gas particulates and aerosol tars produced a particulate loading of 16.4 mg/SCM (0.007 gr/SCF) in the test burner flue gas prior to the scrubber.

The methylene chloride soluble material in the product gas particulates and tar aerosol represents 5% of the volatile material in the feed lignite, that is, 3.6 g/s (28 lb/hr) in the gas from 71 g/s (560 lb/hr) in the coal. The extractable organics from the XAD-2 resin catch and condensate of the product gas amount to an additional 6% of the lignite volatile matter (4.6 g/s, 36 lb/hr).

The results of analyses for trace and minor elements in samples from the product gas start up vent and the test burner flue gas are presented in Table 4-22. The particulate portion of each gas stream includes all material collected in the ESP at 140°C for the product gas and in the particulate collection components of ths SASS train at 120°C for the test burner flue gas. The vapor portions include material collected in the remaining components of each sampling system (see Appendix B for details).

The gas streams were characterized for a wide range of organic components, in addition to the $C_1$-$C_6$ hydrocarbons presented in Table 4-21. Infrared spectra and the distribution in the LC fractions indicate that the organic species present in the test burner flue gas were more highly carboxylated than those in the uncombusted product gas. The aromatics present were relatively simple ring systems, and the fractions contained fewer indications of nitrogenous compounds than the product gas. Benzo(a)anthracene was specifically identified in the test burner flue gas at 450 μg/SCM. Benzo(a)pyrene, dibenzo(a,h)anthracene, and 7,12 dimethylbenzo(a)anthracene were present in the product gas but did not appear in the fraction of the test burner flue gas that was analyzed.

The specific compounds of environmental concern which were identified in the product gas are listed in Table 4-23. Polynuclear aromatics, which have a high potential for causing adverse environmental effects, were identified and quantified at a combined concentration of over 3500 μg/SCM.

The organic character of the product gas particulate extract is quite similar to the product gas organic module composite of the condensate and XAD-2 resin extracts. This is consistent with the tarry nature of the particulate catch which included aerosol tars removed from the gas stream by the ESP and organics condensing in the ESP at 140°C (285°F). The unfractionated samples of the ESP particuates and the organic module condensables are heavily aliphatic, but contain phenolics and nitrogenous

TABLE 4-22. TRACE AND MINOR ELEMENT COMPOSITIONS OF PRODUCT GAS AND TEST BURNER FLUE GAS

| ELEMENT | PRODUCT GAS | | | TEST BURNER FLUE GAS | | |
|---|---|---|---|---|---|---|
| | PARTICULATE μg/SCM | VAPOR μg/SCM | TOTAL μg/SCM | PARTICULATE μg/SCM | VAPOR μg/SCM | TOTAL μg/SCM |
| Aluminum | 27,000 | 0.42 | 27,000 | 1.9 | 14 | 16 |
| Antimony | <380 | <16 | <400 | <0.3 | <11 | <11 |
| Arsenic | 370 | >18 | >390 | 0.40 | 86 | 86 |
| Barium | 7,600 | 21 | 7,600 | >120 | 4.6 | >120 |
| Beryllium | 2.6 | | 2.6 | | | |
| Bismuth | 2.6 | | 2.6 | | | |
| Boron | 550 | >13 | >560 | 0.16 | 3.8 | 4.0 |
| Bromine | 130 | 0.88 | 130 | 0.096 | 0.34 | 0.44 |
| Cadmium | 270 | | 270 | 0.024 | >0.2 | >0.2 |
| Calcium | 150,000 | 460 | 150,000 | >120 | 660 | >780 |
| Cerium | 51 | 0.88 | 53 | 0.34 | 0.28 | 0.62 |
| Cesium | 2.3 | | 2.3 | 0.0066 | 1.1 | 1.1 |
| Chlorine | >3,200 | 16 | >3,200 | 0.99 | 32 | 33 |
| Chromium | 88 | 15 | 100 | 0.59 | 36 | 37 |
| Cobalt | 14 | >0.8 | >15 | 0.14 | 130 | 130 |
| Copper | 270 | 11 | 280 | 1.2 | 8.1 | 9.3 |
| Dysprosium | 1.7 | | 1.7 | | | |
| Erbium | 0.64 | | 0.64 | | | |
| Europium | 0.97 | | 0.97 | | | |
| Fluorine | 1,300 | 9.2 | 1,300 | 1.0 | 99 | 100 |
| Gadolinium | 1.9 | | 1.9 | | | |
| Gallium | 23 | 13 | 36 | 0.29 | <1 | <1.3 |
| Germanium | 7.2 | | 7.2 | 0.20 | | 0.20 |
| Gold | | | | | | |
| Hafnium | 2.9 | | 2.9 | | | |
| Holmium | 0.97 | | 0.97 | | | |
| Iodine | <4 | | <4 | | 0.66 | 0.66 |
| Iridium | | | | | | |
| Iron | <33,000 | 460 | <33,000 | >120 | 190 | >310 |

TABLE 4-22. TRACE AND MINOR ELEMENT COMPOSITIONS OF PRODUCT GAS AND TEST BURNER FLUE GAS (Cont'd)

| ELEMENT | PRODUCT GAS | | | TEST BURNER FLUE GAS | | |
|---|---|---|---|---|---|---|
| | PARTICULATE µg/SCM | VAPOR µg/SCM | TOTAL µg/SCM | PARTICULATE µg/SCM | VAPOR µg/SCM | TOTAL µg/SCM |
| Lanthanum | 36 | 1.3 | 37 | 0.40 | 0.44 | 0.84 |
| Lead | 130 | 29 | 160 | 3.2 | 12 | 15 |
| Lithium | 120 | 6.3 | 130 | 1.3 | <0.07 | <1.4 |
| Lutetium | | | | | | |
| Magnesium | 39,000 | 25 | 39,000 | >120 | 16 | >130 |
| Manganese | 120 | 7.1 | 130 | 0.44 | 17 | 17 |
| Mercury | 6,500 | 3.3 | 6,500 | 0.0011 | 16 | 16 |
| Molybdenum | 9.7 | | 9.7 | <0.2 | 18 | 18 |
| Neodymium | 9.7 | | 9.7 | 0.025 | | 0.025 |
| Nickel | 110 | 9.6 | 120 | 1.4 | 44 | 45 |
| Niobium | 13 | | 13 | 0.037 | >0.07 | >.10 |
| Osmium | | | | | | |
| Palladium | | | | | | |
| Phosphorus | >3,200 | 94 | >3,300 | 6.8 | 160 | 170 |
| Platinum | | | | | 1.3 | 1.3 |
| Potassium | >3,200 | 69 | >3,300 | >120 | 370 | >490 |
| Praseodymium | 6.4 | | 6.4 | 0.013 | | 0.013 |
| Rhenium | <0.3 | | <0.3 | | | |
| Rubidium | <7 | 2.0 | <9 | 0.15 | <0.2 | <.35 |
| Ruthenium | | | | | | |
| Samarium | 6.4 | | 6.4 | | | |
| Scandium | 19 | | 19 | <0.01 | <0.04 | <.05 |
| Selenium | 15,000 | >3 | 15,000 | <0.3 | <130 | <130 |
| Silicon | >6,700 | 330 | >7,000 | >120 | 170 | >290 |
| Silver | 110 | 30 | 140 | 0.92 | * | 0.92* |
| Sodium | 21,000 | 31 | 21,000 | >120 | 23 | >140 |
| Strontium | 3,900 | 4.2 | 3,900 | 3.5 | 2.0 | 5.5 |
| Sulfur | >3,500 | 860 | >4,300 | >120 | * | >120* |

TABLE 4-22. TRACE AND MINOR ELEMENT COMPOSITIONS OF PRODUCT GAS AND TEST BURNER FLUE GAS (Cont'd)

| ELEMENT | PRODUCT GAS | | | TEST BURNER FLUE GAS | | |
|---|---|---|---|---|---|---|
| | PARTICULATE μg/SCM | VAPOR μg/SCM | TOTAL μg/SCM | PARTICULATE μg/SCM | VAPOR μg/SCM | TOTAL μg/SCM |
| Tantalum | | | | | | |
| Tellurium | 0.97 | | 0.97 | | | |
| Terbium | 0.64 | | 0.64 | | | |
| Thallium | 3.2 | | 3.2 | | | |
| Thorium | 6.4 | | 6.4 | | | |
| Thulium | <0.3 | | <0.3 | | | |
| Tin | 13 | 0.88 | 14 | 0.074 | 1.4 | 1.5 |
| Titanium | 940 | 24 | 960 | 2.7 | 18 | 21 |
| Tungsten | 3.2 | | 3.2 | | | |
| Uranium | 3.2 | 4.6 | 7.8 | <.04 | | <.04 |
| Vanadium | 36 | 0.92 | 37 | 0.15 | 3.4 | 3.6 |
| Ytterbium | | | | | | |
| Yttrium | 30 | | 30 | <0.02 | | <0.02 |
| Zinc | 480 | 31 | 510 | 0.99 | 12 | 13 |
| Zirconium | 87 | 0.25 | 87 | 0.25 | 12 | 12 |

*$Ag_2S_2O_8$ impinger solution.
Not listed: product gas <.1 μg/SCM
test burner flue gas <.01 μg/SCM
SCM at 25°C (77°F) and 101 kPa (1 atm), dry basis.

TABLE 4-23. ORGANIC COMPOUNDS IDENTIFIED FROM THE PRODUCT GAS BY SIM GC/MS

| COMPOUND IDENTIFIED | CONCENTRATION[Δ] µg/SCM | SAMPLE-LC FRACTION |
|---|---|---|
| Polychlorinated biphenyls[†] | ≤15.0 | PGP-2; PGC-2 |
| Benzo(a)anthracene | 1.8E3* | PGP-2,3; PGC-2,3 |
| Benzo(b)fluoranthene | 3.8E2* | PGP-2,3; PGC-3 |
| Biphenyl | 5.1E3 | PGP-3; PGC-3 |
| 7,12-Dimethylbenzo(a)anthracene | 1.6E2* | PGP-3 |
| Benzo(c)phenanthrene | 1.0E3* | PGP-3; PGC-3 |
| Benzo(a)pyrene | 1.9E2 | PGP-3 |
| 3-Methyl chloanthrene | 4.7 | PGP-3 |
| Dibenzo(a,h)anthracene | 6.1 | PGP-3 |
| Dinitrotoluenes | 2.2E3 | PGP-4 |
| Dinitrocresol | 1.8E3 | PGP-5; PGC-5 |
| Dihydroacridine[◇] | 1.1E2 | PGP-5,6 |

SCM at 25°C (77°F) and 101 kPa (1 atm), dry basis.
PGP = Product Gas Particulate
PGC = Product Gas Organic Module Composite

Δ aEb = a x $10^b$

* includes possible coeluting isomers

† based on PCB-3 Cl

◇ standard unavailable, based on dihydrophenanthridine

material. They have the same infrared profiles and the fractionations are quite similar. The ESP catch contains more material in LC-2 than does the organic module composite, which indicates more light aromatics, and relatively non-polar polynuclear aromatics. The mass distributions in LC-6 and LC-7 are reversed between the two samples, the module composite having significantly stronger absorbances in the most polar fraction (LC-7) than in LC-6.

### 4.3.3 Liquid Streams

Two wastewater streams from the Fort Snelling gasifier were characterized: gasifier ash sluice water and cyclone dust quench water. Both were comprised of plant service water that had been in contact with solids from the process. The suspended solids (i.e., ash and cyclone dust) were removed by filtration during sampling, so the water samples contained only dissolved components. Table 4-24 presents the results of a generalized characterization of the two wastewaters for many of the parameters associated with water quality. Leachate solutions from the associated gasifier solid wastes obtained by the RCRA procedures (Ref. 1) were analyzed for most of these parameters and are included here for comparison.

Trace and minor elemental concentrations for the plant service water, ash sluice water, and cyclone dust quench water are provided in Table 4-25. Generally, elements which appeared at higher concentration in the solids are found to have dissolved in the associated sluice or quench water. Solubilities of various elements in the solids are discussed further in conjunction with the results of the RCRA leaching tests in Section 3.4.4.

The gasifier ash sluice water was not fractionated by liquid chromatography during the organic screening. Comparison of the infrared spectra of the sluice water and the ash extracts indicates that the extractable organics in the two samples are quite similar. The extractable organics in both are approximately 90% GRAV material having boiling points greater than 250°C. The organics present in the ash sluice water at 125 mg/l are probably heterocyclic sulfur compounds, carboxylates, and some phenolates. A colorimetric phenol value of 0.4 mg/l phenols was also obtained on the ash sluice water.

The cyclone dust quench water was not taken through the column chromatography step of the organic screening. Due to the uncertainty in the flow rate data for this stream, a weighted discharge severity prioritization could be in error. The cyclone dust quench water contained 59 mg/l extractable organics, approximately half the total organic loading found in the gasifier ash sluice water. These organics, from the infrared analysis of the unfractionated sample, are primarily carboxylic acids and phenols. This is borne out by the colorimetric phenol determination of 9.6 mg/l phenols.

TABLE 4-24. WASTEWATER AND RCRA LEACHATE GENERAL COMPOSITION SUMMARY

| | GASIFIER ASH SLUICE WATER | GASIFIER ASH LEACHATE | CYCLONE DUST LEACHATE | CYCLONE DUST QUENCH WATER |
|---|---|---|---|---|
| pH | 9.3 | 4.13 | 4.04 | 10.0 |
| TDS | 4300 | 2130 | 2280 | 390 |
| TSS | NA | 36 | 17 | NA |
| Sulfate | 2860 | NA | NA | 55 |
| Sulfite | 47 | <10 | <10 | 12 |
| Nitrate | 3 | < 0.25 | < 0.25 | < 0.5* |
| Nitrite | < 0.01 | < 0.01 | < 0.01 | < 0.01 |
| Phosphate | < 0.1* | 0.1 | 0.2 | 0.1* |
| Cyanide | < 0.02 | < 0.02 | 0.05 | 0.36 |
| Ammonia | 5.4 | < 0.007 | 1.8 | 0.97 |
| COD | 76 | 1710 | 1410 | 800 |
| BOD | 28-64† | 2970 | 3150 | 62-85† |
| Phenol | 0.36 | 0.002 | 0.38 | 9.8 |
| Chloride | 78 | NA | NA | 34 |
| Fluoride | 0.87 | NA | NA | 2.0 |
| TOC | 16 | < 1 | < 1 | 185 |

*possible interference.

†possible toxic effects

NA = not analyzed.

All concentrations in μg/ml except pH.

TABLE 4-25. TRACE AND MINOR ELEMENTS IN ASH SLUICE WATER, CYCLONE QUENCH WATER, AND SERVICE WATER

| ELEMENT | SERVICE WATER | ASH SLUICE WATER | CYCLONE QUENCH WATER | ELEMENT | SERVICE WATER | ASH SLUICE WATER | CYCLONE QUENCH WATER |
|---|---|---|---|---|---|---|---|
| Aluminum | 100 | 11,000[2] | 11,000[2] | Molybdenum | | 310 | 4 |
| Antimony | | 2[3] | | Neodymium | | | |
| Arsenic | <1 | 3.3[3] | 120[3] | Nickel | 20 | 20 | <20[2] |
| Barium | 30 | 130[2] | 570[2] | Niobium | | 2 | |
| Beryllium | | | | Osmium | | | |
| Bismuth | | | | Palladium | | | |
| Boron | 10 | 4,600[2] | 990[2] | Phosphorus | 50 | 400 | 400 |
| Bromine | 20 | 20 | 40 | Platinum | | | |
| Cadmium | | <2 | <5[2] | Potassium | 7,000 | MC | MC |
| Calcium | MC | 220,000[2] | 54,000[2] | Praseodymium | | 1 | |
| Cerium | 4 | 2 | 2 | Rhenium | | | |
| Cesium | 2 | | 4 | Rubidium | 2 | 40 | 20 |
| Chlorine | 200 | 78,000[1] | 34,000[1] | Ruthenium | | | |
| Chromium | 10 | 7[2] | <5[2] | Samarium | | | |
| Cobalt | <4 | <2 | 9 | Scandium | <2 | | |
| Copper | 10 | 17[2] | 12[2] | Selenium | | 20[3] | 6 |
| Dysprosium | | | | Silicon | 900 | 300 | 2,000 |
| Erbium | | | | Silver | <1 | 1 | 2 |
| Europium | | | | Sodium | 7,000 | 1,700,000[2] | 220,000[2] |
| Fluorine | 400 | 870[1] | 2,000[1] | Strontium | 40 | 4,000[2] | 1,100[2] |
| Gadolinium | | | | Sulfur | 3,000 | 970,000[1] | 23,000[1] |
| Gallium | | 8 | 20 | Tantalum | | | |
| Germanium | | | 7 | Tellurium | | | |
| Gold | | | | Terbium | | | |
| Hafnium | | | | Thallium | | | |
| Holmium | | | | Thorium | | | |
| Iodine | | | 6 | Thulium | | | |
| Iridium | | | | Tin | | 3,000[2] | 2,900[2] |
| Iron | 300 | 1,200[2] | 4,900[2] | Titanium | <60 | 44[2] | 180[2] |
| Lanthanum | | <1 | | Tungsten | | 20 | |
| Lead | | 8 | 99[2] | Uranium | | | |
| Lithium | 10 | 400 | 40 | Vanadium | 2 | 77[2] | 15[2] |
| Lutetium | | | | Ytterbium | | | |
| Magnesium | 5,000 | 11,000[2] | 11,000[2] | Yttrium | | | 2 |
| Manganese | 6 | 2[2] | <1[2] | Zinc | 40 | 44[2] | 35[2] |
| Mercury | NR | 1.4[3] | 0.4[3] | Zirconium | <4 | 2 | 5 |

Concentrations in μg/1.
Not listed is <1 μg/1.

MC = >10,000 μg/1.
NR = not reported.

All analyses by SSMS except:

[1]Anion/cation analysis
[2]ICP
[3]AAS

The gasifier ash leachate and the cyclone dust leachate were not subjected to any organic screening analysis. The total organic carbon (TOC) content for either sample was less than 1 ppm. This low TOC implies that the organics present in these solids do not leach under the Resource Conservation and Recovery Act procedures (Ref. 1) even though an appreciable amount of organic mass can be solvent extracted.

### 4.3.4 Solid Streams

The composition of the two solid wastes from the gasifier, gasifier ash, and cyclone dust are primarily dependent on the coal composition and efficiency of gasifier operation (i.e., the extent of conversion of carbonaceous materials to gases). Table 4-26 presents the results of proximate and ultimate analyses of the feed coal, gasifier ash, and cyclone dust. Also included is a mineral analysis of the ash residue from each material resulting from elemental analysis of the ash residue, and mathematical conversion of the elemental concentrations to those for their equivalent oxides. The carbon contents of the gasifier ash and cyclone dust give an indication of the gasifier operating efficiency during the sampling period. Appendix D includes the results of proximate/ultimate analyses of six individual grab samples of the coal. These data give a measure of the variability of the coal composition over the sampling period. The data presented in Table 4-26 are for a composite coal sample consisting of portions of five of these individual samples.

The trace and minor element concentrations in the gasifier ash and cyclone duct follow a general trend that the more volatile metals and those that form volatile compounds appear at higher levels in the cyclone dust. Table 4-27 presents a side-by-side presentation of elemental concentrations in the coal and the two solid waste streams. Enrichment factors were calculated from the ratio of the solid waste concentration to the concentration in the coal. Table 4-28 presents these ratios for the cyclone dust and the gasifier ash. For comparison, the ratios are also presented for the ash residue contents of the gasifier ash and cyclone dust. The observed element enrichment may be the result of the volatilization of these elements or their compounds in the gasifier. This volatilization provides the mechanism for the selective partitioning of elements during the distribution of the ashed material between the cyclone dust and the gasifier ash.

Figures 4-2, 4-3, 4-4, and 4-5 present the enrichment ratios versus the boiling points of the elements. Some degree of enrichment (concentration increase relative to the coal) would be expected simply due to a loss of carbonaceous material during gasification. The enrichment due to this source is estimated by calculating enrichment ratios from the ash (mineral matter) contents of the coal gasifier ash and cyclone dust. These "ash residue" enrichment ratios are shown as horizontal lines in each figure. Individual elements whose enrichment ratios follow those of the ash residue may be assumed to be non-volatile and physically distributed

TABLE 4-26. CHARACTERIZATION ANALYSIS RESULTS FOR SOLID STREAMS

| | GASIFIER ASH | CYCLONE DUST | COAL FEED |
|---|---|---|---|
| Proximate (as received) | | | |
| % Moisture | 1.01 | 0.44 | 4.19 |
| % Ash | 73.66 | 18.89 | 10.45 |
| % Volatiles | 6.49 | 24.30 | 40.17 |
| % Fixed Carbon | 18.84 | 56.37 | 45.19 |
| Btu | 3709 | 10670 | 10036 |
| % Sulfur | 1.08 | 1.50 | 0.58 |
| Ultimate (dry basis) | | | |
| % Carbon | 24.64 | 67.18 | 60.06 |
| % Hydrogen | 0.41 | 2.32 | 4.41 |
| % Nitrogen | 0.17 | 0.93 | 0.87 |
| % Chlorine | 0.02 | 0.03 | 0.03 |
| % Sulfur | 1.09 | 1.51 | 0.58 |
| % Ash | 74.41 | 18.97 | 10.45 |
| % Oxygen (diff) | 0.60 | 9.06 | 19.41 |
| Mineral Composition of Ashed Residue | | | |
| % Silica, $SiO_2$ | 39.18 | 20.71 | 30.21 |
| Alumina, $Al_2O_3$ | 22.38 | 12.21 | 14.93 |
| Titania, $TiO_2$ | 1.02 | 0.35 | 0.46 |
| Ferric oxide, $Fe_2O_3$ | 13.40 | 6.95 | 6.36 |
| Lime, CaO | 9.02 | 21.55 | 16.39 |
| Magnesia, MgO | 2.89 | 6.82 | 6.46 |
| Potassium oxide, $K_2O$ | 1.39 | 0.81 | 1.49 |
| Sodium Oxide, $Na_2O$ | 3.26 | 7.83 | 9.00 |
| Sulfur Trioxide, $SO_3$ | 3.43 | 17.02 | 10.93 |
| Phosphorus pentoxide, $P_2O_5$ | 0.61 | 0.70 | 0.63 |
| Strontium oxide, SrO | 0.31 | 0.85 | 0.72 |
| Barium oxide, BaO | 0.83 | 2.01 | 1.32 |
| Manganese oxide, $Mn_3O_4$ | 0.04 | 0.01 | 0.01 |

TABLE 4-27. TRACE AND MINOR ELEMENTAL RESULTS FOR COAL, GASIFIER ASH, AND CYCLONE DUST

| ELEMENT | GASIFIER ASH | CYCLONE DUST | COAL | ELEMENT | GASIFIER ASH | CYCLONE DUST | COAL |
|---|---|---|---|---|---|---|---|
| Ash | 74.41%[2] | 18.97%[2] | 10.91%[2] | | | | |
| Aluminum | 88,000[2] | 12,000[2] | 8,600[2] | Molybdenum | 15 | 2 | 1 |
| Antimony | <0.4[1] | <0.4[1] | 0.06[1] | Neodymium | 30 | 3 | 1 |
| Arsenic | 30[1] | 63[1] | 6.5[1] | Nickel | 75 | 4 | 5 |
| Barium | 5,500[2] | 1,300[2] | 1,300[2] | Niobium | 31 | 5 | 2 |
| Beryllium | 9 | 0.4 | 0.4 | Osmium | | | |
| Bismuth | | 0.3 | | Palladium | | | |
| Boron | 210[3] | 110[3] | 25 | Phosphorus | 2,000[2] | 590[2] | 290[2] |
| Bromine | 2 | 9 | 1 | Platinum | | | |
| Cadmium | 0.8 | 2 | 0.4 | Potassium | 8,600[2] | 1,300[2] | 1,400[2] |
| Calcium | 48,000[2] | 29,000[2] | 13,000[2] | Praseodymium | 16 | 2 | 0.7 |
| Cerium | 110 | 15 | 8 | Rhenium | | | |
| Cesium | 8 | 0.7 | 0.9 | Rubidium | 47 | 3 | 9 |
| Chlorine | 150[2] | 57[2] | 33[2] | Ruthenium | | | |
| Chromium | 100 | 11 | 10 | Samarium | 13 | 2 | 1 |
| Cobalt | 23 | 5 | 2 | Scandium | 20 | 5 | 5 |
| Copper | 81 | 30 | 8 | Selenium | 15[1] | 14[1] | 1[1] |
| Dysprosium | 7 | 0.6 | | Silicon | 140,000[2] | 18,000[2] | 15,000[2] |
| Erbium | 3 | 0.3 | | Silver | 0.6 | 2 | 1 |
| Europium | 3 | 0.4 | 0.2 | Sodium | 18,000[2] | 11,000[2] | 7,300[2] |
| Fluorine | 190 | 280 | 210 | Strontium | 1,900[2] | 1,400[2] | 670[2] |
| Gadolinium | 4 | 0.4 | 0.4 | Sulfur | 8,800[2] | 11,000[2] | 4,100[2] |
| Gallium | 9 | 33 | 19 | Tantalum | <0.8 | | |
| Germanium | 1 | 6 | 0.7 | Tellurium | | 0.2 | |
| Gold | | | | Terbium | 1 | 0.1 | 0.1 |
| Hafnium | 1 | | | Thallium | | 0.9 | |
| Holmium | 4 | 0.4 | | Thorium | 23 | 2 | <1 |
| Iodine | 0.2 | 0.4 | 0.2 | Thulium | 0.4 | | |
| Iridium | | | | Tin | 0.5 | 2 | 0.5 |
| Iron | 90,000[2] | 9,200[2] | 4,900[2] | Titanium | 4,500[2] | 400[2] | 310[2] |
| Lanthanum | 110 | 8 | 6 | Tungsten | 1 | <0.7 | |
| Lead | 5 | 8 | 2 | Uranium | 16 | 0.9 | <0.9 |
| Lithium | 48 | 6 | 5 | Vanadium | 410 | 19 | 22 |
| Lutetium | 0.3 | | | Ytterbium | 3 | 0.6 | |
| Magnesium | 13,000[2] | 7,800[2] | 4,200[2] | Yttrium | 59 | 13 | 4 |
| Manganese | 220[2] | 19[2] | 11[2] | Zinc | 20 | 160 | 3 |
| Mercury | 1.7[1] | <2.3[1] | 0.39[1] | Zirconium | 180 | 29 | 17 |

All concentrations μg/g.
Not listed <0.1 μg/g.

All analyses by SSMS except:
[1]AAS
[2]Ultimate/mineral subcontracted
[3]ICP

TABLE 4-28. ENRICHMENT RATIOS FOR THE GASIFIER ASH AND CYCLONE DUST

| ELEMENT | GASIFIER ASH | CYCLONE DUST | ELEMENT | GASIFIER ASH | CYCLONE DUST |
|---|---|---|---|---|---|
| Ash | 6.8 | 1.7 | | | |
| Aluminum | 10 | 1.4 | Molybdenum | 15 | 2.0 |
| Antimony | <6.7 | <6.7 | Neodymium | 30 | 3.0 |
| Arsenic | 4.6 | 9.7 | Nickel | 15 | 0.8 |
| Barium | 4.2 | 1.0 | Niobium | 15 | 2.5 |
| Beryllium | 22 | 1.0 | Osmium | | |
| Bismuth | | >3 | Palladium | | |
| Boron | 8.4 | 4.4 | Phosphorus | 6.9 | 2.0 |
| Bromine | 2.0 | 9.0 | Platinum | | |
| Cadmium | 2.0 | 5.0 | Potassium | 6.1 | 0.9 |
| Calcium | 3.7 | 2.2 | Praseodymium | 23 | 2.9 |
| Cerium | 14 | 1.9 | Rhenium | | |
| Cesium | 8.9 | 0.8 | Rubidium | 5.2 | 0.3 |
| Chlorine | 4.5 | 1.7 | Ruthenium | | |
| Chromium | 10 | 1.1 | Samarium | 13 | 2 |
| Cobalt | 12 | 2.5 | Scandium | 4 | 1 |
| Copper | 10 | 3.8 | Selenium | 15 | 14 |
| Dysprosium | >70 | >6 | Silicon | 9.3 | 1.2 |
| Erbium | >30 | >3 | Silver | 0.6 | 2.0 |
| Europium | 15 | 2 | Sodium | 2.5 | 1.5 |
| Fluorine | 0.9 | 1.3 | Strontium | 2.8 | 2.1 |
| Gadolinium | 10 | 1.0 | Sulfur | 2.1 | 2.7 |
| Gallium | 0.5 | 1.7 | Tantalum | | |
| Germanium | 1.4 | 8.6 | Tellurium | | >2 |
| Gold | | | Terbium | 10 | 1 |
| Hafnium | >10 | | Thallium | | >9 |
| Holmium | >40 | >4 | Thorium | >23 | >2 |
| Iodine | 1.0 | 2.0 | Thulium | >4 | |
| Iridium | | | Tin | 1 | 4 |
| Iron | 18 | 1.9 | Titanium | 14 | 1.3 |
| Lanthanum | 18 | 1.3 | Tungsten | >10 | |
| Lead | 2.5 | 4.0 | Uranium | >16 | >1 |
| Lithium | 9.6 | 1.2 | Vanadium | 19 | 0.9 |
| Lutetium | >3 | | Ytterbium | >30 | >6 |
| Magnesium | 3.1 | 1.9 | Yttrium | 15 | 3.3 |
| Manganese | 20 | 1.7 | Zinc | 6.7 | 53 |
| Mercury | 4.3 | >5.9 | Zirconium | 10 | 1.7 |

$$\text{Enrichment Ratio} = \frac{\text{element concentration } (\mu g/g) \text{ in effluent stream}}{\text{element concentration } (\mu g/g) \text{ in coal}}$$

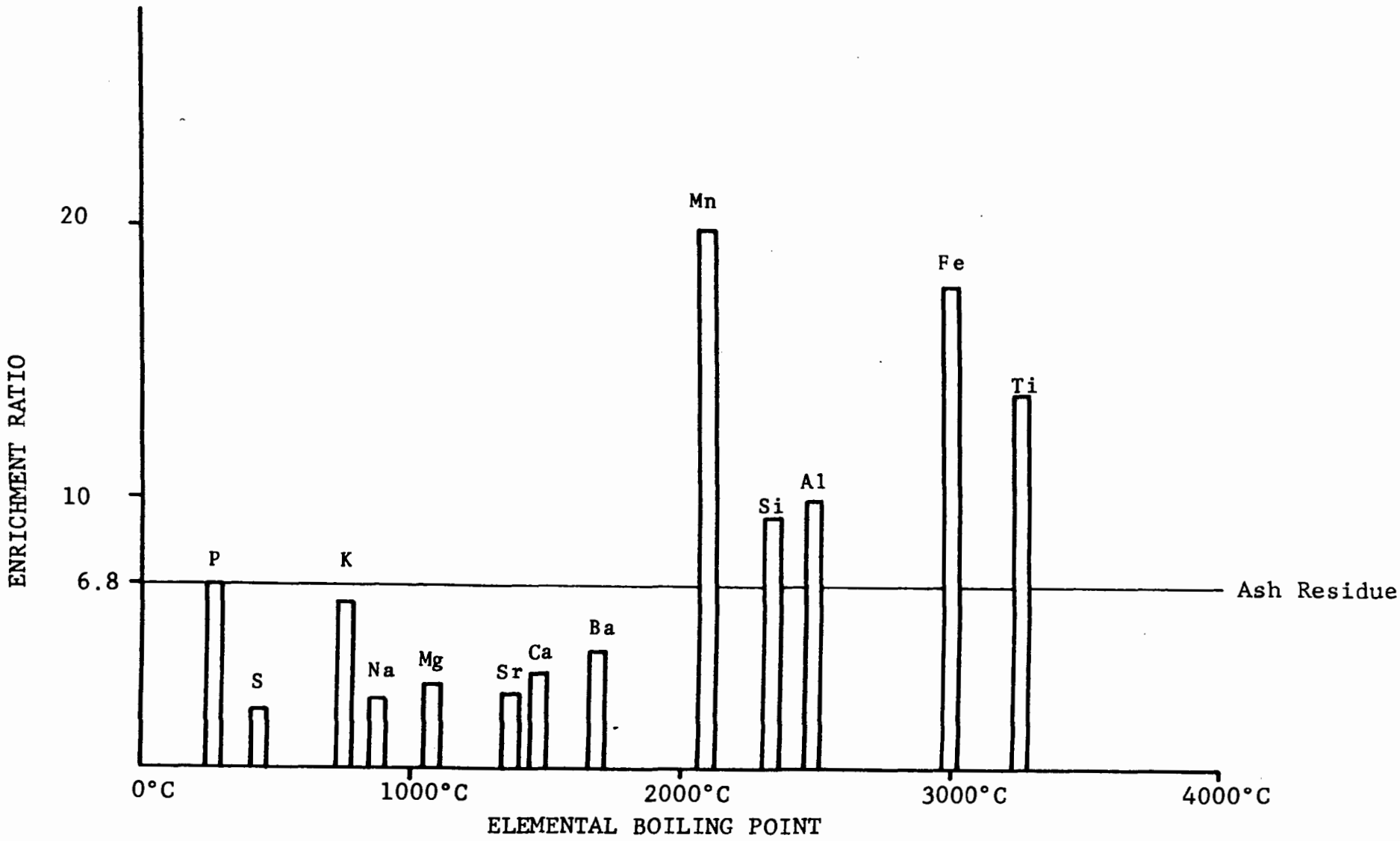


*Figure 4-2. Gasifier Ash Major Component Enrichment Ratio vs. Elemental Boiling Point*

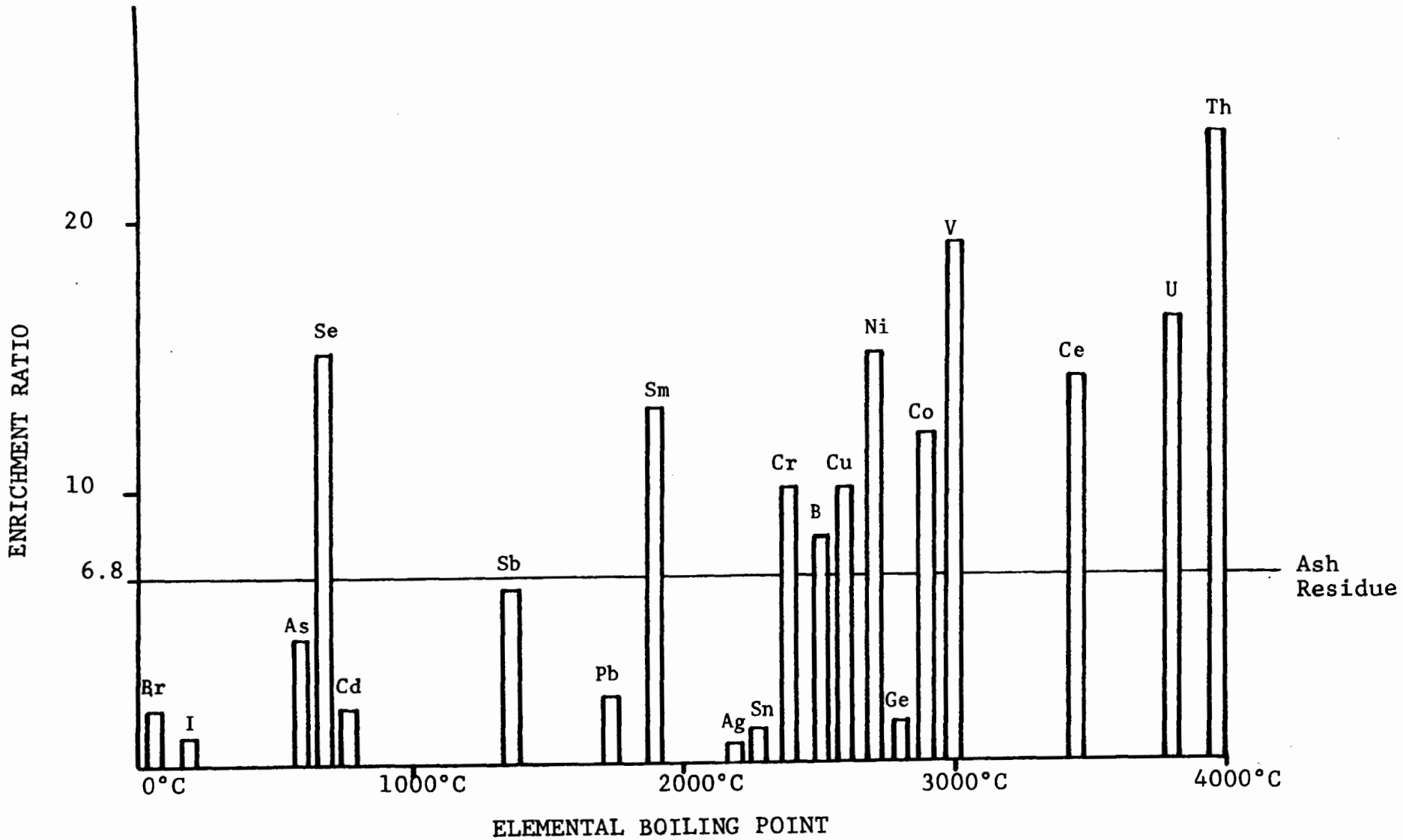


Figure 4-3. Gasifier Ash Trace Element Enrichment Ratio vs. Elemental Boiling Point

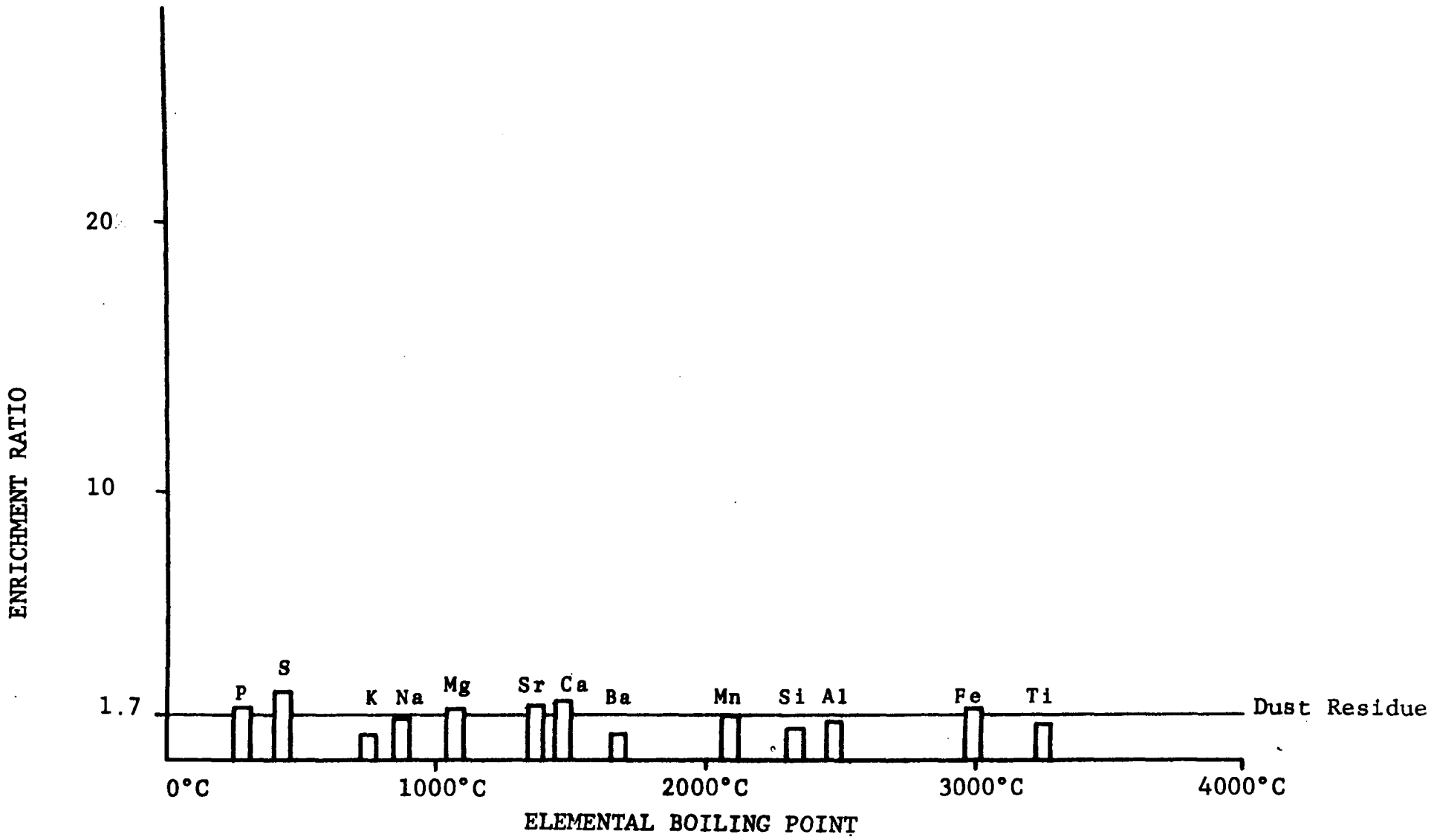


Figure 4-4. Cyclone Dust Major Component Enrichment Ratio vs. Elemental Boiling Point

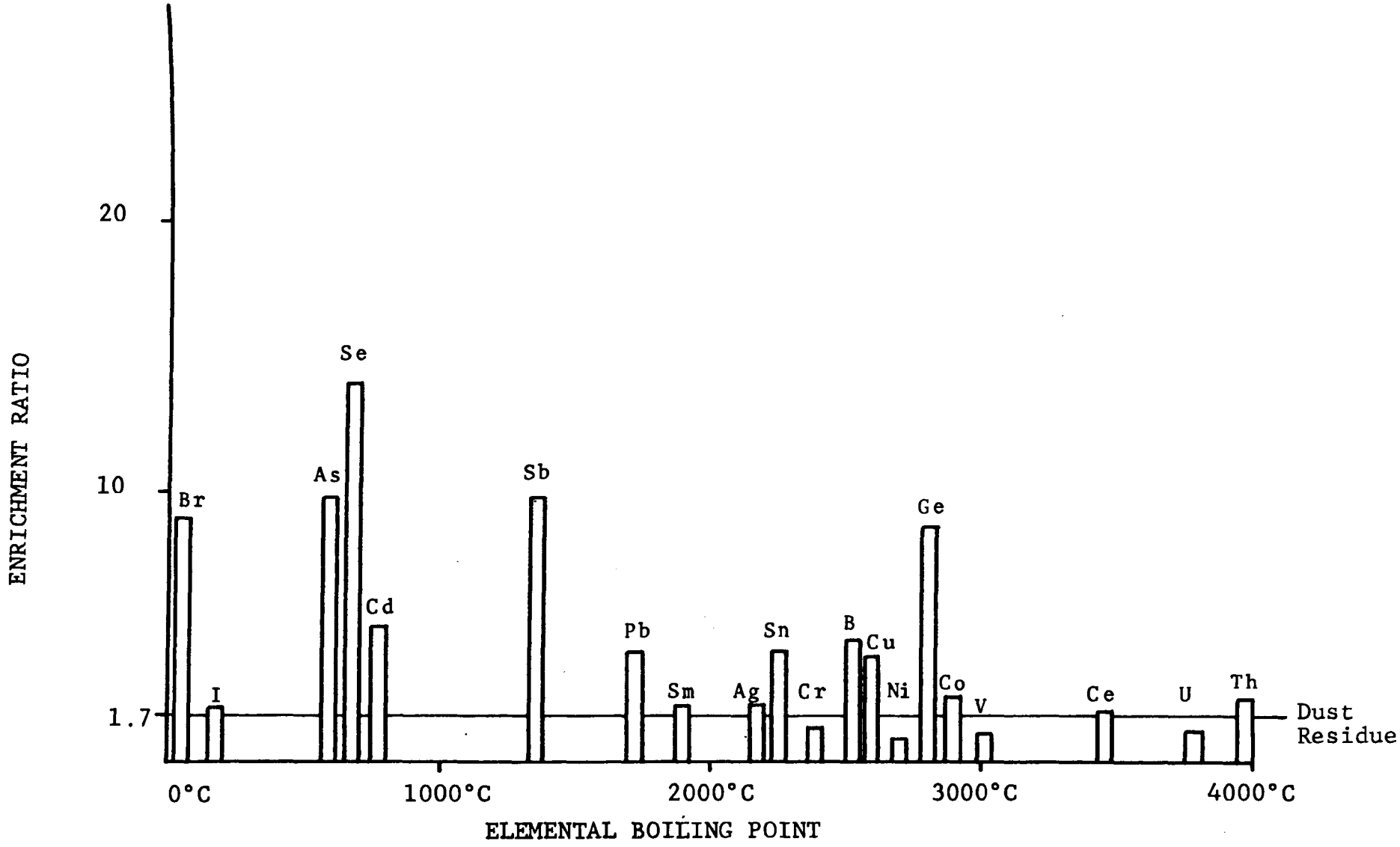


Figure 4-5. Cyclone Dust Trace Element Enrichment Ratio vs. Elemental Boiling Point

with the mineral matter in the coal. Elements deviating significantly from the ash residue are exhibiting some additional mechanism of mobility in the process. The most likely mechanism is volatiliztion resulting in depletion in the gasifier ash and increased concentrations in the cyclone dust. A general upward trend of enrichment with increasing boiling point is seen in the gasifier ash. Anomalies in the trend are present for silver, tin, and germanium which are depleted in the ash. These metals form hydrides or volatile organometallic compounds that would be found condensed in the cyclone dust. No unequivocable trend is seen in the cyclone dust. However, germanium and tin, in addition to lead, antimony, arsenic, selenium, and cadmium show significant enrichment in the cyclone dust. In general, elements with lower boiling points have higher enrichment in the cyclone dust.

The volatilized elements from the lignite feed will remain gaseous, condense partially, or condense completely. Condensation takes place by nucleation or deposition on available surfaces. Nucleation results in small particles if the residence time in the system is relatively low, and deposition is surface area dependent. Either phenomena may result in enriched elemental concentrations for those volatilized elements that condensed in the small particulate trapped by the cyclone. For those elements remaining in the gaseous phase, discharge will be through the gaseous emission streams and product gas. Partial or complete condensation will lead to increased concentration in the cyclone dust. The nonvolatilized elements will then be present in the gasifier ash at higher concentrations than in the cyclone dust.

Components present in the gasifier ash and cyclone dust are dissolved by the sluice or quench water and constitute a potential water pollution problem. In addition, materials may be leached from the discarded solid wastes by runoff rain water. The potential for contamination of surface and groundwater by the leachates may impose restrictions on the disposal of the solids. The extraction procedures specified in the RCRA were used to estimate the leaching potential of the two solid wastes. The results of characterization of these leachate solutions for general water quality are presented in Table 4-24. Tables 4-29 and 4-30 provide the concentrations of trace and minor elements in the leachate solutions from the gasifier ash and cyclone dust, respectively, and the blank extraction solution. The trace and minor element compositions of the sluice and quench waters are also presented for comparison. For many elements the lower pH of the RCRA extraction solution ($\sim$5 versus $\sim$10) resulted in higher concentrations in the leachates than in the corresponding process wastewater.

TABLE 4-29. GASIFIER ASH SLUICE WATER AND RCRA LEACHATE ELEMENTAL COMPOSITION

| ELEMENT | ASH SLUICE WATER (pH=9.3) | ASH LEACHATE (pH=4.3) | LEACHATE BLANK (pH=2.01) | ELEMENT | ASH SLUICE WATER (pH=9.3) | ASH LEACHATE (pH=4.3) | LEACHATE BLANK (pH=2.01) |
|---|---|---|---|---|---|---|---|
| Aluminum | 11,000[2] | 100 | 30 | Molybdenum | 310[2] | 10 | |
| Antimony | 2[3] | <60[3] | <60[3] | Neodymium | | | |
| Arsenic | 3.3[3] | 19[3] | <5[3] | Nickel | 20 | 40 | 7 |
| Barium | 130[2] | 1,000 | 200 | Niobium | 2 | | |
| Beryllium | | | | Osmium | | | |
| Bismuth | | | | Palladium | | | |
| Boron | 4,600[2] | 80 | | Phosphorus | 400 | 70 | 20 |
| Bromine | 20 | 4 | | Platinum | | | |
| Cadmium | <2 | <7 | | Potassium | MC | MC | 700 |
| Calcium | 220,000[2] | MC | 600 | Praseodymium | 1 | | |
| Cerium | 2 | 4 | | Rhenium | | | |
| Cesium | | 1 | | Rubidium | 40 | 20 | |
| Chlorine | 78,000[1] | 50 | 60 | Ruthenium | | | |
| Chromium | 7[2] | 1 | 1 | Samarium | | | |
| Cobalt | <2 | 7 | | Scandium | | | |
| Copper | 17[2] | 100 | 8 | Selenium | 20[3] | 14[3] | 12[3] |
| Dysprosium | | | | Silicon | 300 | MC | 80 |
| Erbium | | | | Silver | 1 | | |
| Europium | | | | Sodium | 1,700,000[2] | 2,000 | 300 |
| Fluorine | 870[1] | 3,000 | 40 | Strontium | 4,000[2] | 6,000 | 20 |
| Gadolinium | | | | Sulfur | 970,000[1] | 6,000 | 80 |
| Gallium | 8 | 1 | | Tantalum | | | |
| Germanium | | 2 | | Tellurium | | | |
| Gold | | | | Terbium | | | |
| Hafnium | | | | Thallium | | | |
| Holmium | | | | Thorium | | <8 | <20 |
| Iodine | | | | Thulium | | | |
| Iridium | | | | Tin | 3,000[2] | | |
| Iron | 1,200[2] | 2,000 | 60 | Titanium | 44[2] | 100 | 10 |
| Lanthanum | <1 | 4 | | Tungsten | 20 | | |
| Lead | 8 | 7 | 10 | Uranium | | <6 | <20 |
| Lithium | 400 | 6 | | Vanadium | 77[2] | 7 | |
| Lutetium | | | | Ytterbium | | | |
| Magnesium | 11,000[2] | MC | MC | Yttrium | | 7 | |
| Manganese | 2[2] | 500 | 3 | Zinc | 44[2] | 100 | 40 |
| Mercury | 1.4[3] | <0.6[3] | <0.2[3] | Zirconium | 2 | 5 | |

Concentration in μg/l.
Not listed <1 μg/l.
MC = >10,000 μg/l.

All analyses by SSMS except:
[1]Anion/cation
[2]ICP
[3]AAS

TABLE 4-30. CYCLONE DUST QUENCH WATER AND RCRA LEACHATE ELEMENTAL COMPOSITION

| ELEMENT | QUENCH WATER (pH=10.0) | DUST LEACHATE (pH=4.04) | LEACHATE BLANK (pH=2.01) | ELEMENT | QUENCH WATER (pH=10.0) | DUST LEACHATE (pH=4.04) | LEACHATE BLANK (pH=2.01) |
|---|---|---|---|---|---|---|---|
| Aluminum | 11,000[2] | >1,000 | 30 | Molybdenum | 4 | 2 | |
| Antimony | <60[3] | 8 | <60[3] | Neodymium | | | |
| Arsenic | 120[3] | 33[3] | <5[3] | Nickel | <20[2] | 10 | 7 |
| Barium | 570[2] | 1,000 | 200 | Niobium | | | |
| Beryllium | | | | Osmium | | | |
| Bismuth | | | | Palladium | | | |
| Boron | 990[2] | 100 | | Phosphorus | 400 | 400 | 20 |
| Bromine | 40 | <20 | | Platinum | | | |
| Cadmium | <5[2] | | | Potassium | MC | MC | 700 |
| Calcium | 54,000[2] | MC | 600 | Praseodymium | | | |
| Cerium | 2 | 1 | | Rhenium | | | |
| Cesium | 4 | 4 | | Rubidium | 20 | 20 | |
| Chlorine | 34,000[1] | 100 | 60 | Ruthenium | | | |
| Chromium | <5[2] | 1 | 1 | Samarium | | | |
| Cobalt | 9 | 2 | | Scandium | | | |
| Copper | 12[2] | 6 | 8 | Selenium | 6 | 6 | 12[3] |
| Dysprosium | | | | Silicon | 2,000 | MC | 80 |
| Erbium | | | | Silver | 2 | | |
| Europium | | | | Sodium | 220,000[2] | >3,000 | 300 |
| Fluorine | 2,000[1] | 4,000 | 40 | Strontium | 1,100[2] | 7,000 | 20 |
| Gadolinium | | | | Sulfur | 23,000[1] | >6,000 | 80 |
| Gallium | 20 | | | Tantalum | | | |
| Germanium | 7 | 2 | | Tellurium | | | |
| Gold | | | | Terbium | | | |
| Hafnium | | | | Thallium | | | |
| Holmium | | | | Thorium | | <10 | <20 |
| Iodine | 6 | | | Thulium | | | |
| Iridium | | | | Tin | 2,900[2] | 2 | |
| Iron | 4,900[2] | 600 | 60 | Titanium | 180[2] | 50 | 10 |
| Lanthanum | | | | Tungsten | | | |
| Lead | 99[2] | 8 | 10 | Uranium | | <10 | <20 |
| Lithium | 40 | 40 | | Vanadium | 15[2] | | |
| Lutetium | | | | Ytterbium | 2 | | |
| Magnesium | 11,000[2] | MC | MC | Yttrium | | 3 | |
| Manganese | <1[2] | 100 | 3 | Zinc | 35[2] | 70 | 40 |
| Mercury | 0.4[3] | <0.3[3] | <0.2[3] | Zirconium | 5 | 30 | |

Concentrations in μg/l.
Not listed <1 μg/l.
MC = >10,000 μg/l.

All analyses by SSMS except:
[1]Anion/cation
[2]ICP
[3]AAS

Tables 4-31 and 4-32 present the total element concentration and the total soluble element concentrations for gasifier ash and cyclone dust. Total concentration was calculated from the solid waste composition (Table 4-27), the solid-to-liquid ratio for the process wastewaters (from flow rates in Table 2-1), and the wastewater compositions (Table 4-25). Total solubles per unit mass of solid for each element was calculated from the wastewater and leachate compositions (Tables 4-29 and 4-30), and the solid-to-liquid ratios for these process waters and the RCRA extraction procedure. The calculations were performed as follows:

$$\text{Total element} = A + B$$

$$\text{Total soluble} = B + C$$

where: $A = \mu g/g$ of each element in solid

$$B = \mu g/l \text{ in wastewater} \times \left[\frac{l/s \text{ wastewater flow}}{\mu g/s \text{ solid flow}}\right]$$

$$C = \mu g/l \text{ in leachate} \times \left[\frac{2\ell \text{ leachate}}{100 \text{ g solid}}\right]$$

In most cases, the soluble portion of each element is less than one percent of the total originally available in the dry solid.

The gasifier ash contained 640 μg/g of extractable organics. From the mass distribution in the liquid chromatography (LC) fractions, the majority of these organics were non-polar, non-volatile aliphatics. Some heterocyclic material and some carbonyl containing material were present. There is very little evidence of aromatic character in the sample. The halogen content of the unfractionated material appeared to be 300 μg/g, but this is probably due to an interference; the highest halogen content measured in an LC fraction was ∿5 μg/g. From the halogen specific screening results of the LC fractions, the ∿300 μg/g halogenated value for the unfractionated samples could be in error by an order of magnitude.

The cyclone dust contained 13,000 μg/g of extractable organics. Upon fractionation, the majority of this material was found in LC-6 and LC-1, and was comprised of phenols, heterocyclic nitrogen compounds or amines; and non-polar, non-volatile aliphatics. The chromatographable halogen content was ∿35 μg/g.

TABLE 4-31. GASIFIER ASH TOTAL ELEMENT AND TOTAL SOLUBLE ELEMENT CONCENTRATIONS

| ELEMENT | TOTAL | SOLUBLE | PERCENT SOLUBLE | ELEMENT | TOTAL | SOLUBLE | PERCENT SOLUBLE |
|---|---|---|---|---|---|---|---|
| Aluminum | 88,000 | 4.4 | 0.005 | Molybdenum | 15 | 0.26 | 1.8 |
| Antimony | <0.4 | <0.24 | <1 | Neodymium | 30 | <0.004 | <0.01 |
| Arsenic | 30 | 0.24 | 0.08 | Nickel | 75 | 0.69 | 0.9 |
| Barium | 5,500 | 17 | 0.3 | Niobium | 31 | <0.005 | <0.01 |
| Beryllium | 9 | <0.004 | <0.05 | Osmium | <0.1 | | |
| Bismuth | <0.1 | | | Palladium | <0.1 | | |
| Boron | 210 | 2.8 | 1.3 | Phosphorus | 2,000 | 1.2 | 0.05 |
| Bromine | 2 | 0.07 | 3.5 | Platinum | 0.1 | | |
| Cadmium | 0.8 | <0.12 | <1.5 | Potassium | >8,600 | <200 | <2 |
| Calcium | 48,000 | <250 | <0.5 | Praseodymium | 16 | <0.004 | <0.03 |
| Cerium | 110 | 0.06 | 0.06 | Rhenium | <0.1 | | |
| Cesium | 8 | 0.005 | 0.05 | Rubidium | 47 | 0.39 | 0.8 |
| Chlorine | 170 | 20 | 12 | Ruthenium | <0.1 | | |
| Chromium | 100 | 0.006 | 0.006 | Samarium | 13 | <0.004 | <0.03 |
| Cobalt | 23 | 0.12 | 0.5 | Scandium | 20 | 0.004 | 0.02 |
| Copper | 81 | 1.9 | 2.3 | Selenium | 15 | 0.09 | 0.6 |
| Dysprosium | 7 | <0.004 | <0.006 | Silicon | 140,000 | 200 | 0.14 |
| Erbium | 3 | <0.004 | <0.1 | Silver | 0.6 | <0.004 | 0.6 |
| Europium | 3 | <0.004 | <0.1 | Sodium | 18,400 | 480 | 2.6 |
| Fluorine | 190 | 60 | 31 | Strontium | 1,900 | 120 | 6.3 |
| Gadolinium | 4 | <0.004 | <0.1 | Sulfur | 9,000 | 370 | 4.1 |
| Gallium | 9 | 0.006 | 0.07 | Tantalum | <0.8 | <0.004 | |
| Germanium | 1 | 0.024 | 2.4 | Tellurium | <0.1 | | |
| Gold | <0.1 | | | Terbium | 1 | <0.004 | <0.4 |
| Hafnium | 1 | <0.004 | <0.4 | Thallium | <0.1 | | |
| Holmium | 4 | <0.004 | <0.1 | Thorium | 23 | <0.0003 | <0.001 |
| Iodine | 0.2 | <0.004 | <2 | Thulium | 0.4 | <0.004 | <1 |
| Iridium | <0.1 | | | Tin | 1.3 | 0.77 | 60 |
| Iron | 90,000 | 39 | 0.04 | Titanium | 4,500 | 1.9 | 0.04 |
| Lanthanum | 110 | 0.064 | 0.06 | Tungsten | 1 | 0.009 | 0.9 |
| Lead | 5 | 0.002 | 0.04 | Uranium | 16 | <0.0003 | <0.002 |
| Lithium | 48 | 0.21 | 0.4 | Vanadium | 410 | 0.14 | 0.03 |
| Lutetium | 0.3 | <0.004 | <1.3 | Ytterbium | 3 | <0.004 | <0.1 |
| Magnesium | 13,000 | <43 | <0.3 | Yttrium | 59 | 0.12 | 0.2 |
| Manganese | 220 | 10 | 4.5 | Zinc | 20 | 1.4 | 6.9 |
| Mercury | 1.7 | <0.009 | <0.5 | Zirconium | 180 | 0.084 | 0.05 |

Concentrations in equivalent μg per g of solid.

TABLE 4-32. CYCLONE DUST TOTAL ELEMENT AND TOTAL SOLUBLE ELEMENT CONCENTRATIONS

| ELEMENT | TOTAL | SOLUBLE | PERCENT SOLUBLE | ELEMENT | TOTAL | SOLUBLE | PERCENT SOLUBLE |
|---|---|---|---|---|---|---|---|
| Aluminum | 12,000 | 40 | 0.3 | Molybdenum | 2 | 0.031 | 1.6 |
| Antimony | <0.5 | <0.1 | | Neodymium | 3 | <0.006 | <0.2 |
| Arsenic | 63 | 0.8 | 1.2 | Nickel | 4 | <0.12 | <3 |
| Barium | 1,300 | 18 | 1.4 | Niobium | 5 | <0.006 | <0.1 |
| Beryllium | 0.4 | <0.006 | <1.5 | Osmium | <0.1 | | |
| Bismuth | 0.3 | <0.006 | <2 | Palladium | <0.1 | | |
| Boron | 112 | 3.8 | 3.4 | Phosphorus | 590 | 8.4 | 1.4 |
| Bromine | 9 | <0.46 | 5 | Platinum | <0.1 | | |
| Cadmium | 2 | <0.13 | <0.7 | Potassium | >1,300 | >200 | |
| Calcium | 29,000 | >290 | >1 | Praseodymium | <0.1 | | |
| Cerium | 15 | 0.008 | 0.05 | Rhenium | <0.1 | | |
| Cesium | 0.7 | 0.07 | 10 | Rubidium | 3 | 0.42 | 0.14 |
| Chlorine | 120 | 64 | 53 | Ruthenium | <0.1 | | |
| Chromium | 11 | <0.013 | <0.12 | Samarium | 2 | | |
| Cobalt | 5 | 0.041 | 0.8 | Scandium | 5 | | |
| Copper | 30 | 0.022 | 0.07 | Selenium | 14 | 0.011 | 0.08 |
| Dysprosium | 0.6 | <0.006 | <1 | Silicon | 18,000 | >200 | >1.1 |
| Erbium | 0.3 | <0.006 | <2 | Silver | 2 | <0.008 | <0.4 |
| Europium | 0.4 | <0.006 | <1.5 | Sodium | 11,400 | >460 | >4.0 |
| Fluorine | 280 | 83 | 30 | Strontium | 1,400 | 140 | 10 |
| Gadolinium | 0.4 | <0.006 | <1.5 | Sulfur | 11,000 | >160 | >1.5 |
| Gallium | 33 | 0.04 | 0.12 | Tantalum | <0.1 | | |
| Germanium | 6 | 0.037 | 0.6 | Tellurium | 0.2 | <0.006 | <3 |
| Gold | <0.1 | | | Terbium | 0.1 | <0.006 | <6 |
| Hafnium | <0.1 | | | Thallium | 0.9 | <0.006 | <0.7 |
| Holmium | 0.4 | <0.006 | <1.5 | Thorium | 2 | <0.002 | <0.1 |
| Iodine | 0.4 | 0.015 | 3.8 | Thulium | <0.1 | | |
| Iridium | <0.1 | | | Tin | 52 | 5.4 | 10 |
| Iron | 9,200 | 20 | 0.2 | Titanium | 400 | 1.2 | 0.3 |
| Lanthanum | 8 | <0.006 | <0.08 | Tungsten | <0.7 | | |
| Lead | 8 | 0.18 | 2.3 | Uranium | 0.9 | <0.002 | <2 |
| Lithium | 6 | 0.86 | 14 | Vanadium | 19 | 0.032 | 0.17 |
| Lutetium | <0.1 | | | Ytterbium | 0.6 | <0.007 | <1.2 |
| Magnesium | 7,800 | >60 | >0.8 | Yttrium | 13 | 0.45 | 0.3 |
| Manganese | 19 | 1.9 | 10 | Zinc | 160 | 0.82 | 0.5 |
| Mercury | <2.3 | <0.004 | | Zirconium | 29 | 0.59 | 2.0 |

Concentrations in equivalent μg per g of solid.

Gross alpha and beta radioactivity was determined for the gasifier ash, cyclone dust, and lignite. In addition, gamma and alpha spectrometry was used to perform specific isotope analyses for each solid. Complete results for these determinations are provided in Appendix D. To provide a basis for comparison of the radioactivity results to the total element concentrations in Table 4-27, the weight fraction of each isotope of uranium and thorium was calculated from:

$$W = \frac{A\ M}{N_o\ \lambda}$$

where: $W$ = mass of nuclide per unit of mass of sample

$A$ = activity of nuclide per unit mass of sample

= Ci/g x 3.7 x $10^{10}$ atoms/sec/Ci

$M$ = nuclide mass (grams/mole)

$N_o$ = Avogadro constant

$\lambda$ = Decay constant

$= \frac{\ln 2}{t_{1/2}}$

$t_{1/2}$ = nuclide halflife in sec

The individual isotopes of each element were then summed to give an estimate of the total element concentration. Table 4-33 presents the results of this isotopic analysis and the SSMS results for uranium and thorium. In general, the results from the two techniques agree within the accepted confidence limits for the analysis techniques. In Table 4-34 the measured isotopic concentrations for the three isotopes of uranium are presented as isotopic abundances along with the natural isotopic abundances. The individual isotopes are present in the samples at approximately their natural abundance. The apparent enrichment of $U^{235}$ in the cyclone dust is due to the scatter in the counting measurement in the technique.

Specific isotopes identified in the specific isotope analysis, which decay by alpha and beta emissions, were summed to give an estimate of gross alpha and beta radioactivity. Except for the beta activity of the gasifier ash, these estimates compared well with the measured values as seen in Table 4-35.

TABLE 4-33. COMPARISON OF ISOTOPE ANALYSIS AND SSMS

| | | Feed Coal (μg/g) | Cyclone Dust (μg/g) | Gasifier Ash (μg/g) |
|---|---|---|---|---|
| Uranium | IA | 0.6 | 2.4 | 16 |
| | SSMS | <.9 | 0.9 | 16 |
| Thorium | IA | 1.1 | 3.8 | 24 |
| | SSMS | <1.0 | 2.0 | 23 |

TABLE 4-34. ABUNDANCES FOR URANIUM ISOTOPES

| | Natural Abundances (%) | Feed Coal (%) | Cyclone Dust (%) | Gasifier Ash (%) |
|---|---|---|---|---|
| $U^{234}$ | .0056 | .0055 | .0046 | .0052 |
| $U^{235}$ | .72 | 1.06 | 7.56 | .85 |
| $U^{238}$ | 99.27 | 98.94 | 92.43 | 99.14 |

TABLE 4-35. GROSS ALPHA AND BETA ANALYSIS AND SPECIFIC ISOTOPE ANALYSIS COMPARISON

| | ALPHA RADIATION* | | BETA RADIATION* | |
|---|---|---|---|---|
| | Gross | Specific Isotope | Gross | Specific Isotope |
| Feed Coal | 1.7 ± 3.6 | 1.5 ± 1.1 | 0 ± 13 | 1.6 ± 1.9 |
| Cyclone Dust | 11 ± 6 | 7.4 ± 1.9 | 0 ± 15 | 3.9 ± 1.0 |
| Gasifier Ash | 46 ± 11 | 32 ± 2 | 52 ± 15 | 1.0 ± 0.8 |

*pCi/g.

## REFERENCES


1. Environmental Protection Agency. Hazardous Waste, Proposed Guidelines and Regulations and Proposal on Identification and Listing. Federal Register, 43(243):58946-59028, 1978.

2. Thomas, W. C., K. N. Trede, and G. C. Page. Environmental Assessment: Source Test and Evaluation Report--Wellman-Galusha (Glen Gery) Low-Btu Gasification. EPA-600/7-79-185. Radian Corporation, Austin, Texas, August 1979.

3. Lentzen, D. E., D. E. Waggoner, E. D. Estes, and W. F. Gutknecht. IERL-RTP Procedures Manual: Level 1 Environmental Asssessment. EPA-600/7-78-201. Research Triangle Institute, Research Triangle Park, North Carolina, January 1979.

4. Cleland, J. G., and G. L. Kingsbury. Multimedia Environmental Goals for Environmental Assessment, Volumes I & II, Final Report. EPA-600/7-77-136a, Research Triangle Institute, Research Triangle Park, North Carolina, November 1977.

5. Kingsbury, G. L., and J. B. White. Multimedia Environmental Goals for Environmental Assessment: Volume III. MEG Charts and Background Information Summaries (Categories 1-12). EPA-600/7-79-176a, Research Triangle Institute, Research Triangle Park, North Carolina, August 1979.

6. Kingsbury, G. L., R. C. Sims, and J. B. White. Multimedia Environmental Goals for Environmental Assessment: Volume IV. MEG Charts and Background Information Summaries (Categories 13-26). EPA-600/7-79- 176b. Research Triangle Institute, Research Triangle Park, North Carolina, August 1979.

7. Schalit, L. M., and K. J. Wolfe. SAM/IA: A Rapid Screening Method for Environmental Assessment of Fossil Energy Process Effluents. EPA-600/7-78-015. Acurex Corporation/Aerotherm Division, Mountain View, California, February 1978.

8. Harris, J. C., M. J. Hayes, P. L. Levins, and D. B. Lindsay. EPA/IERL-RTP Procedures for Level 2 Sampling and Analysis of Organic Materials. EPA-600/7-79-033. Arthur D. Little, Inc., Cambridge, Massachusetts, February, 1979.

# APPENDIX A
# PROCESS MATERIAL AND ENERGY BALANCES

This appendix contains the process data characterizing the lignite gasification test run conducted by the Bureau of Mines in December of 1978. From this data, the process operation during the sampling periods was characterized and the effluent flow rates were developed.

Material and energy balance data provided by the Bureau of Mines for the lignite gasification test run conducted by the Bureau from December 11, 1978 through December 14, 1978 are presented in the following Tables A-1 through A-5. This information was developed from process data collected, stored, and calculated by the Bureau of Mines data acquisition system. Each table represents information averaged over distinct operating periods. The information contained in Tables A-1 through A-5 was used to develop most of the process data presented in Section 2.0 of this report.

Material balances presented in Tables A-6 and A-7 for carbon, hydrogen, oxygen, nitrogen, sulfur, ash, and total mass for the process streams during the two major sampling time periods were calculated from the Bureau of Mines material balances (Tables A-2, A-3, and A-4). Figure A-1 shows the relationship between the two sampling time periods and the Bureau material balance time periods. The first sampling time period 1430 to 2130 on December 12, 1978, occurred during the plant operating time period covered by Table A-2 and this table was used directly to obtain Table A-6. The second sampling time period, 1600 to 0300 on December 13 and 14, 1978 occurred during the plant operating time periods covered by Table A-3 and A-4. The data from these tables were simply averaged to obtain Table A-7. Table A-8 contains the flow rate data used in calculating Tables A-6 and A-7 as well as the calculated flow rates excluding moisture which were used in the body of this report to calculate mass flow. Gasifier ash sluice water and cyclone dust quench water rates (not part of Tables A-6 and A-7) were estimated at 0.007 $\ell$/s ($\sim$7 gph) each. These estimates were made from visual observations during the test run.

The test burner flue gas rate and composition presented in Table A-9 were estimated from process and sampling data because no direct measurement was made. The product gas rate to the burner was estimated by subtracting the product gas flow rate measured to the kiln from the total product gas produced as calculated by the Bureau material balances. The natural gas rate to the burner pilot and the combustion air rates to the burner were estimated using the design flow rates for the test burner. From this data and the product gas composition measured by GC analysis taken at 2010 on December 12, 1978, the test burner flue gas rate and composition was calculated. The estimated test burner dry flue gas composition compares favorably to the GC analysis of a sample taken at 2006 on December 12, 1978. This close agreement between the estimated and measured flue gas composition supports the assumptions.

TABLE A-1. PROCESS DATA SEGMENT 1, 12-11-78

GASIFIER MASS BALANCE- BKP-29 INDIANHEAD LIGNITE 12/11(345)-21:30 TO 346-01:30

| INPUT(LBS/HR) | C | H | O | N | S | ASH | TOTAL |
|---|---|---|---|---|---|---|---|
| COAL | 1833.2 | 263.1 | 1633.2 | 25.6 | 34.2 | 315.9 | 4101.0 |
| STEAM | .0 | 97.2 | 770.0 | .0 | .0 | .0 | 866.8 |
| DRY AIR | .8 | .0 | 1537.2 | 4996.7 | .0 | .0 | 6618.0 |
| TOTAL | 1834.0 | 360.3 | 3940.5 | 5022.4 | 34.2 | 315.9 | 11585.7 |

| OUTPUT(LBS/HR) | C | H | O | N | S | ASH | TOTAL |
|---|---|---|---|---|---|---|---|
| DRY GAS | 1701.1 | 160.6 | 2488.8 | 4768.9 | 27.3 | 1.4 | 9234.9 |
| BOT ASH | 24.4 | 1.4 | 7.0 | .3 | 5.2 | 309.5 | 347.8 |
| CYC DUST | 29.0 | 1.9 | 8.2 | .4 | .5 | 5.0 | 45.0 |
| WATER | .0 | 184.8 | 1463.4 | .0 | .0 | .0 | 1647.2 |
| TAR | 128.2 | 12.7 | 13.9 | 2.8 | 1.1 | .0 | 159.0 |
| TOTAL | 1882.7 | 361.4 | 3981.3 | 4772.4 | 34.2 | 315.9 | 11434.0 |

**********

OPERATING DATA

| COAL ANALYSIS | |
|---|---|
| C | 64.40 |
| H | 4.30 |
| O | 18.20 |
| N | .90 |
| S | 1.20 |
| MOISTURE | 30.60 |
| ASH | 11.10 |
| HHV | 10886. |
| LHV | 10373. |

| GAS ANALYSIS | | |
|---|---|---|
| | O2 | .000 |
| | A | .571 |
| | CO2 | 5.547 |
| | H2O | 19.400 |
| CALC | H2O | 19.229 |
| | N2 | 44.789 |
| | H2S | .224 |
| CALC | H2S | .224 |
| | CH4 | 1.505 |
| | C2H6 | .098 |
| | H2 | 17.208 |
| | CO | 29.843 |
| | C2H4 | .093 |
| GMS TAR/DRY SCF | | .500 |

| GAS PRODUCTION | WET SCFH | DRY SCFH |
|---|---|---|
| MEASURED | 179000. | 144274. |
| /SQ.FT.GRATE | 5394.82 | 4348.22 |
| /LB RAW COAL | 43.65 | 35.18 |
| /LB DRY COAL | 62.89 | 50.69 |
| /LB MAF COAL | 74.87 | 60.34 |
| CALCULATED (C BALANCE) | 174265. | 140458. |

| AIR: | SCFH | RH |
|---|---|---|
| AMBIENT | 87720. | 50.00 |
| TO GASIFIER | 105045. | 100.34 |
| WATER(GPM): | | |
| AGITATOR | 3.06 | |
| TO SHELL | 6.41 | |
| FROM SHELL | 4.77 | |
| EVAPORATED | 1.64 | |

| | LB/LB |
|---|---|
| STEAM/RAW COAL | .211 |
| TOTAL WATER/DRY COAL | .746 |
| AIR/RAW COAL | 1.625 |
| AIR/DRY COAL | 2.341 |
| AIR/MAF COAL | 2.787 |
| WATER REACTED/MAF COAL | .199 |

TABLE A-1. CONTINUED

GASIFIER HEAT BALANCE- GKP-29 INDIANHEAD LIGNITE 12/11(345)-21:30 TO 346-01:30

INPUT(BTU/HR)

| | SENSIBLE | COMBUSTION | TOTAL | PCT |
|---|---|---|---|---|
| COAL | .134367E+05 | .309829E+08 | .309964E+08 | 99.97 |
| AIR | .106348E+05 | .000000E+00 | .106348E+05 | .03 |
| TOTAL | .240715E+05 | .309829E+08 | .310070E+08 | 100.00 |

OUTPUT(BTU/HR)

| | SENSIBLE | COMBUSTION | TOTAL | PCT |
|---|---|---|---|---|
| HOT ASH | .786799E+04 | .395187E+06 | .403055E+06 | 1.30 |
| CYC DUST | .232370E+04 | .465494E+06 | .467818E+06 | 1.51 |
| AGIT H2O | .383357E+05 | .000000E+00 | .383357E+05 | .12 |
| JACKET H2O | .339635E+06 | .000000E+00 | .339635E+06 | 1.10 |
| HOT GAS (CYC OUTLET) | .912526E+06 | .271573E+08 | .280699E+08 | 90.53 |
| HEAT LOSS | .168831E+07 | .000000E+00 | .168831E+07 | 5.44 |
| TOTAL | .298900E+07 | .280180E+08 | .310070E+08 | 100.00 |

**********

OPERATING DATA

| INPUT | TEMP(DEG C) |
|---|---|
| COAL | 19.1 |
| AMBIENT AIR | 19.1 |
| SATURATED AIR | 58.4 |
| AGITATOR H2O | 6.0 |
| JACKET H2O | 6.0 |

| RAW GAS DATA | BTU/WET SCF | BTU/DRY SCF |
|---|---|---|
| AFTER CYC(60.DEG F) | 151.72 | 188.23 |
| AT CHAMB(140.DEG C) | 156.13 | 193.71 |
| AT KILN(147.DEG C) | 156.38 | 194.02 |
| TAR CONTRIBUTION(60 F) | 13.72 | 17.02(15441 BTU/LB TAR) |

| OUTPUT | |
|---|---|
| HOT ASH | 78.4 |
| CYC DUST | 159.0 |
| AGITATOR H2O | 19.9 |
| JACKET H2O | 85.0 |
| GASER OUTLET | 164.0 |
| CYCLONE OUTLET | 159.0 |
| MAIN FLOW | 150.0 |
| KILN FLOW | 150.0 |

| TRANSMISSION LOSSES | BTU/HR | PCT |
|---|---|---|
| CYCLONE | .32294E+05 | 21.72 |
| CYC-MAIN FLOW | .58046E+05 | 39.04 |
| MAIN FLOW-COMB CHAMB | .55739E+05 | 37.49 |
| MAIN FLOW-KILN FLOW | .31002E-01 | .00 |
| KILN FLOW-KILN | .25910E+04 | 1.74 |

TABLE A-2. PROCESS DATA SEGMENT 2, 12-12-78

GASIFIER MASS BALANCE- GKP-29 INDIANHEAD LIGNITE 12/12(346)-13:30 TO 21:00

| INPUT(LBS/HR) | C | H | O | N | S | ASH | TOTAL |
|---|---|---|---|---|---|---|---|
| COAL | 1144.3 | 164.2 | 1019.5 | 16.0. | 21.3 | 197.2 | 2560.0 |
| STEAM | .0 | 59.2 | 469.1 | .0 | .0 | .0 | 528.1 |
| DRY AIR | .5 | .0 | 921.9 | 2996.7 | .0 | .0 | 3969.0 |
| TOTAL | 1144.8 | 223.4 | 2410.6 | 3012.7 | 21.3 | 197.2 | 7057.0 |
| | 160 | 25 | 1200 | 420 | 3.0 | | |

| OUTPUT(LBS/HR) | C | H | O | N | S | ASH | TOTAL |
|---|---|---|---|---|---|---|---|
| DRY GAS | 1047.8 | 101.3 | 1553.8 | 2963.1 | 17.0 | 1.5 | 5736.2 |
| HOT ASH | 15.1 | .9 | 4.3 | .2 | 3.2 | 192.4 | 216.2 |
| CYC DUST 5% | 19.3 | 1.3 | 5.5 | .3 | .4. | 3.3 | 30.0 |
| WATER 10% | .0 | 114.6 | 907.5 | .0 | .0 | .0 | 1021.5 |
| TAR 10% | 79.5 | 7.9 | 9.6 | 1.8 | .7 | .0 | 98.6 |
| TOTAL | 1161.8 | 225.9 | 2479.5 | 2965.4 | 21.3 | 197.2 | 7102.5 |

**********

OPERATING DATA

| COAL ANALYSIS | |
|---|---|
| C | 64.40 |
| H | 4.30 |
| O | 14.20 |
| N | .90 |
| S | 1.20 |
| MOISTURE | 30.60 |
| ASH | 11.10 |
| HHV | 10886. |
| LHV | 10373. |

| GAS ANALYSIS | |
|---|---|
| O2 | .000 |
| A | .553 |
| CO2 | 6.203 |
| H2O | 19.400 |
| CALC H2O | 18.829 |
| N2 | 44.879 |
| H2S | .225 |
| CALC H2S | .225 |
| CH4 | 1.521 |
| C2H6 | .103 |
| H2 | 17.421 |
| CO | 28.806 |
| C2H4 | .145 |
| GMS TAR/DRY SCF | .500 |

| GAS PRODUCTION | WET SCFH | DRY SCFH |
|---|---|---|
| MEASURED | 111000. | 89466. |
| /SQ.FT.GRATE | 3345.39 | 2696.38 |
| /LB RAW COAL | 43.36 | 34.95 |
| /LB DRY COAL | 62.48 | 50.36 |
| /LB MAF COAL | 74.37 | 59.94 |
| CALCULATED (C BALANCE) | 109339. | 88127. |

| AIR: | SCFH | RH |
|---|---|---|
| AMBIENT | 52608. | 50.00 |
| TO GASIFIER | 63172. | 100.49 |
| WATER(GPM): | | |
| AGITATOR | 3.45 | |
| TO SHELL | 5.00 | |
| FROM SHELL | 4.00 | |
| EVAPORATED | 1.00 | |

| | LB/LB |
|---|---|
| STEAM/RAW COAL | .206 |
| TOTAL WATER/DRY COAL | .738 |
| AIR/RAW COAL | 1.561 |
| AIR/DRY COAL | 2.249 |
| AIR/MAF COAL | 2.677 |
| WATER REACTED/MAF COAL | .195 |

TABLE A-2. CONTINUED

GASIFIER HEAT BALANCE- GKP-24 INDIANHEAD LIGNITE 12/12(346)-13:30 TO 21:00

INPUT(BTU/HR)

| | SENSIBLE | COMBUSTION | TOTAL | PCT |
|---|---|---|---|---|
| COAL | .957241E+04 | .193407E+08 | .193503E+08 | 99.96 |
| AIR | .727954E+04 | .000000E+00 | .727954E+04 | .04 |
| TOTAL | .168520E+05 | .193407E+08 | .193576E+08 | 100.00 |

OUTPUT(BTU/HR)

| | SENSIBLE | COMBUSTION | TOTAL | PCT |
|---|---|---|---|---|
| HOT ASH | .489869E+04 | .245557E+05 | .250556E+06 | 1.29 |
| CYC DUST | .120354E+04 | .310330E+06 | .311533E+06 | 1.61 |
| AGIT H2O | .251867E+05 | .000000E+00 | .251867E+05 | .13 |
| JACKET H2O | .302836E+06 | .000000E+00 | .302836E+06 | 1.56 |
| HOT GAS (CYC OUTLET) | .438991E+06 | .167033E+08 | .171423E+08 | 88.56 |
| HEAT LOSS | .132514E+07 | .000000E+00 | .132514E+07 | 6.85 |
| TOTAL | .209826E+07 | .172593E+08 | .193576E+08 | 100.00 |

**********

OPERATING DATA

| INPUT | TEMP(DEG C) |
|---|---|
| COAL | 19.6 |
| AMBIENT AIR | 19.6 |
| SATURATED AIR | 58.5 |
| AGITATOR H2O | 6.0 |
| JACKET H2O | 6.1 |

| RAW GAS DATA | BTU/WET SCF | BTU/DRY SCF |
|---|---|---|
| AFTER CYC(60.DEG F) | 150.48 | 186.70 |
| AT CHAMB(110.DEG C) | 153.83 | 190.85 |
| AT KILN(112.DEG C) | 153.90 | 190.94 |
| TAR CONTRIBUTION(60 F) | 13.72 | 17.02(15441 BTU/LB TAR) |

| OUTPUT | |
|---|---|
| HOT ASH | 78.5 |
| CYC DUST | 127.0 |
| AGITATOR H2O | 14.1 |
| JACKET H2O | 90.1 |
| GASER OUTLET | 143.0 |
| CYCLONE OUTLET | 127.0 |
| MAIN FLOW | 120.0 |
| KILN FLOW | 115.0 |

| TRANSMISSION LOSSES | BTU/HR | PCT |
|---|---|---|
| CYCLONE | .63477E+05 | 49.21 |
| CYC-MAIN FLOW | .27878E+05 | 21.48 |
| MAIN FLOW-COMB CHAMB | .31249E+05 | 24.07 |
| MAIN FLOW-KILN FLOW | .42553E+04 | 3.28 |
| KILN FLOW-KILN | .25510E+04 | 1.97 |

TABLE A-3. PROCESS DATA SEGMENT 3, 12-13-78

GASIFIER MASS BALANCE- BKP-29 INDIANHEAD LIGNITE 12/13(347)-18:30 TO 20:30

| INPUT(LBS/HR) | C | H | O | N | S | ASH | TOTAL |
|---|---|---|---|---|---|---|---|
| COAL | 840.4 | 120.6 | 748.7 | 11.7 | 15.7 | 144.8 | 1880.0 |
| STEAM | .0 | 50.1 | 396.8 | .0 | .0 | .0 | 445.6 |
| DRY AIR | .4 | .0 | 693.6 | 2254.5 | .0 | .0 | 2948.0 |
| TOTAL | 840.8 | 170.7 | 1839.1 | 2266.2 | 15.7 | 144.8 | 5312.6 |

| OUTPUT(LBS/HR) | C | H | O | N | S | ASH | TOTAL |
|---|---|---|---|---|---|---|---|
| DRY GAS | 755.2 | 73.0 | 1119.9 | 2135.7 | 12.5 | 1.7 | 4135.6 |
| BOT ASH | 11.1 | .6 | 3.2 | .2 | 2.4 | 140.9 | 156.3 |
| CYC DUST | 12.9 | .9 | 3.6 | .2 | .2 | 2.2 | 20.0 |
| WATER | .0 | 98.5 | 780.0 | .0 | .0 | .0 | 878.0 |
| TAR | 57.3 | 5.7 | 6.2 | 1.3 | .5 | .0 | 71.1 |
| TOTAL | 836.5 | 178.7 | 1912.9 | 2137.4 | 15.7 | 144.8 | 5262.9 |

**********

OPERATING DATA

| COAL ANALYSIS | |
|---|---|
| C | 64.40 |
| H | 4.30 |
| O | 18.20 |
| N | .90 |
| S | 1.20 |
| MOISTURE | 30.60 |
| ASH | 11.10 |
| HHV | 10886. |
| LHV | 10373. |

| GAS ANALYSIS | | |
|---|---|---|
| | O2 | .000 |
| | A | .577 |
| | CO2 | 6.203 |
| | H2O | 22.300 |
| CALC | H2O | 19.922 |
| | N2 | 44.875 |
| | H2S | .230 |
| CALC | H2S | .230 |
| | CH4 | 1.521 |
| | C2H6 | .103 |
| | H2 | 17.419 |
| | CO | 28.803 |
| | C2H4 | .145 |
| GMS TAR/DRY SCF | | .500 |

| GAS PRODUCTION | WET SCFH | DRY SCFH |
|---|---|---|
| MEASURED | 83000. | 64491. |
| /SQ.FT.GRATE | 2501.51 | 1943.47 |
| /LB RAW COAL | 44.15 | 34.30 |
| /LB DRY COAL | 63.62 | 49.43 |
| /LB MAF COAL | 75.73 | 58.84 |
| CALCULATED (C BALANCE) | 83429. | 64424. |

| AIR: | SCFH | RH |
|---|---|---|
| AMBIENT | 39482. | 50.00 |
| TO GASIFIER | 48567. | 100.69 |
| WATER(GPM): | | |
| AGITATOR | 3.50 | |
| TO SHELL | 6.06 | |
| FROM SHELL | 5.20 | |
| EVAPORATED | .86 | |

| | LB/LB |
|---|---|
| STEAM/RAW COAL | .238 |
| TOTAL WATER/DRY COAL | .744 |
| AIR/RAW COAL | 1.597 |
| AIR/DRY COAL | 2.301 |
| AIR/MAF COAL | 2.739 |
| WATER REACTED/MAF COAL | .132 |

TABLE A-3. CONTINUED

GASIFIER HEAT BALANCE- GKP-29 INDIANHEAD LIGNITE 12/13(347)-10:30 TO 20:30

INPUT(BTU/HR)

| | SENSIBLE | COMBUSTION | TOTAL | PCT |
|---|---|---|---|---|
| COAL | .243607E+03 | .142033E+08 | .142036E+08 | 100.00 |
| AIR | .185649E+03 | .000000E+00 | .185649E+03 | .00 |
| TOTAL | .429256E+03 | .142033E+08 | .142038E+08 | 100.00 |

OUTPUT(BTU/HR)

| | SENSIBLE | COMBUSTION | TOTAL | PCT |
|---|---|---|---|---|
| BOT ASH | .368367E+04 | .179868E+06 | .183552E+06 | 1.29 |
| CYC DUST | .715960E+03 | .206886E+06 | .207602E+06 | 1.46 |
| AGIT H2O | .340690E+05 | .000000E+00 | .340690E+05 | .24 |
| JACKET H2O | .419463E+06 | .000000E+00 | .419463E+06 | 2.95 |
| HOT GAS (CYC OUTLET) | .293459E+06 | .120414E+08 | .123349E+08 | 86.84 |
| HEAT LOSS | .102410E+07 | .000000E+00 | .102410E+07 | 7.21 |
| TOTAL | .177557E+07 | .124282E+08 | .142038E+08 | 100.00 |

**********

OPERATING DATA

| INPUT | TEMP(DEG C) |
|---|---|
| COAL | 15.7 |
| AMBIENT AIR | 15.7 |
| SATURATED AIR | 60.2 |
| AGITATOR H2O | 6.0 |
| JACKET H2O | 5.5 |

| RAW GAS DATA | BTU/WET SCF | BTU/DRY SCF |
|---|---|---|
| AFTER CYC(60.DEG F) | 145.04 | 186.72 |
| AT CHAMB(100.DEG C) | 148.08 | 190.57 |
| AT KILN(115.DEG C) | 148.61 | 191.27 |
| TAR CONTRIBUTION(60 F) | 13.23 | 17.02(15441 BTU/LB TAR) |

| OUTPUT | |
|---|---|
| BOT ASH | 80.2 |
| CYC DUST | 115.0 |
| AGITATOR H2O | 16.8 |
| JACKET H2O | 95.0 |
| GASER OUTLET | 130.0 |
| CYCLONE OUTLET | 115.0 |
| MAIN FLOW | 110.0 |
| KILN FLOW | 115.0 |

| TRANSMISSION LOSSES | BTU/HR | PCT |
|---|---|---|
| CYCLONE | .44804E+05 | 50.08 |
| CYC-MAIN FLOW | .14903E+05 | 16.66 |
| MAIN FLOW-COMB CHAMB | .29758E+05 | 33.26 |
| MAIN FLOW-KILN FLOW | -.1796E+00 | -.00 |
| KILN FLOW-KILN | .00000E+00 | .00 |

## TABLE A-4. PROCESS DATA SEGMENT 4, 12-13-78

GASIFIER MASS BALANCE- RKP-80 INDIANHEAD LIGNITE 12/13(347)-20:30 TO 12/14-13:30

| INPUT(LBS/HR) | C | H | O | N | S | ASH | TOTAL |
|---|---|---|---|---|---|---|---|
| COAL | 938.7 | 134.7 | 836.3 | 13.1 | 17.5 | 161.8 | 2100.0 |
| STEAM | .0 | 66.9 | 529.7 | .0 | .0 | .0 | 596.3 |
| DRY AIR | .5 | .0 | 943.7 | 3067.4 | .0 | .0 | 4062.6 |
| TOTAL | 939.2 | 201.6 | 2309.7 | 3080.5 | 17.5 | 161.8 | 6758.9 |

| OUTPUT(LBS/HR) | C | H | O | N | S | ASH | TOTAL |
|---|---|---|---|---|---|---|---|
| DRY GAS | 892.0 | 86.2 | 1322.7 | 2522.4 | 13.9 | 1.1 | 4842.1 |
| BOT ASH | 12.4 | .7 | 3.5 | .2 | 2.7 | 157.9 | 177.4 |
| CYC DUST | 16.1 | 1.1 | 4.6 | .2 | .3 | 2.8 | 25.0 |
| WATER | .0 | 116.3 | 920.9 | .0 | .0 | .0 | 1036.6 |
| TAR | 67.7 | 6.7 | 7.4 | 1.5 | .6 | .0 | 83.9 |
| TOTAL | 988.2 | 211.0 | 2259.0 | 2524.3 | 17.5 | 161.8 | 6205.0 |

**********

OPERATING DATA

| COAL ANALYSIS | |
|---|---|
| C | 64.30 |
| H | 4.30 |
| O | 18.20 |
| N | .90 |
| S | 1.20 |
| MOISTURE | 30.60 |
| ASH | 11.10 |
| HHV | 10846. |
| LHV | 10373. |

| GAS ANALYSIS | |
|---|---|
| O2 | .080 |
| A | .665 |
| CO2 | 6.204 |
| H2O | 22.300 |
| CALC H2O | 19.939 |
| N2 | 44.887 |
| H2S | .217 |
| CALC H2S | .217 |
| CH4 | 1.521 |
| C2H6 | .103 |
| H2 | 17.424 |
| CO | 28.811 |
| C2H4 | .146 |
| GMS TAR/DRY SCF | .500 |

| GAS PRODUCTION | WET SCFH | DRY SCFH |
|---|---|---|
| MEASURED | 98000. | 76146. |
| /SQ.FT.GRATE | 2953.59 | 2294.94 |
| /LB RAW COAL | 46.67 | 36.26 |
| /LB DRY COAL | 67.24 | 52.25 |
| /LB MAF COAL | 80.05 | 62.20 |
| CALCULATED (C BALANCE) | 93030. | 72284. |

| AIR: | SCFH | RH |
|---|---|---|
| AMBIENT | 53489. | 50.00 |
| TO GASIFIER | 65837. | 99.90 |

| WATER(GPM): | |
|---|---|
| AGITATOR | 3.50 |
| TO SHELL | 8.40 |
| FROM SHELL | 7.65 |
| EVAPORATED | 1.15 |

| | LB/LB |
|---|---|
| STEAM/RAW COAL | .284 |
| TOTAL WATER/DRY COAL | .850 |
| AIR/RAW COAL | 1.944 |
| AIR/DRY COAL | 2.401 |
| AIR/MAF COAL | 3.335 |
| WATER REACTED/MAF COAL | .166 |

TABLE A-4. CONTINUED

GASIFIER HEAT BALANCE- GKP-29 INDIANHEAD LIGNITE 12/13(347)-20:30 TO 12/14-13:30

INPUT(BTU/HR)

| | SENSIBLE | COMBUSTION | TOTAL | PCT |
|---|---|---|---|---|
| COAL | -.147719E+04 | .158654E+08 | .158640E+08 | 100.01 |
| AIR | -.140288E+04 | .000000E+00 | -.140288E+04 | -.01 |
| TOTAL | -.288006E+04 | .158654E+08 | .158626E+08 | 100.00 |

OUTPUT(BTU/HR)

| | SENSIBLE | COMBUSTION | TOTAL | PCT |
|---|---|---|---|---|
| HOT ASH | .416644E+04 | .201570E+06 | .205737E+06 | 1.30 |
| CYC DUST | .120995E+04 | .258608E+06 | .259818E+06 | 1.64 |
| AGIT H2O | .249208E+05 | .000000E+00 | .249208E+05 | .16 |
| JACKET H2O | .617095E+06 | .000000E+00 | .617095E+06 | 3.89 |
| HOT GAS (CYC OUTLET) | .470442E+06 | .142145E+08 | .146850E+08 | 92.58 |
| HEAT LOSS | .700226E+05 | .000000E+00 | .700226E+05 | .44 |
| TOTAL | .118786E+07 | .146747E+08 | .158626E+08 | 100.00 |

**********

OPERATING DATA

| INPUT | TEMP(DEG C) |
|---|---|
| COAL | 14.8 |
| AMBIENT AIR | 14.8 |
| SATURATED AIR | 60.8 |
| AGITATOR H2O | 6.0 |
| JACKET H2O | 5.7 |

| RAW GAS DATA | BTU/WET SCF | BTU/DRY SCF |
|---|---|---|
| AFTER CYC(50.DEG F) | 145.05 | 186.67 |
| AT CHAMB(120.DEG C) | 148.76 | 191.46 |
| AT KILN(150.DEG C) | 149.85 | 192.85 |
| TAR CONTRIBUTION(60 F) | 13.23 | 17.02(15441 BTU/LB TAR) |

| OUTPUT | |
|---|---|
| HOT ASH | 80.8 |
| CYC DUST | 150.0 |
| AGITATOR H2O | 13.9 |
| JACKET H2O | 95.2 |
| GASER OUTLET | 167.0 |
| CYCLONE OUTLET | 150.0 |
| MAIN FLOW | 135.0 |
| KILN FLOW | 150.0 |

| TRANSMISSION LOSSES | BTU/HR | PCT |
|---|---|---|
| CYCLONE | .60447E+05 | 36.24 |
| CYC-MAIN FLOW | .53154E+05 | 31.91 |
| MAIN FLOW-COMB CHAMB | .52985E+05 | 31.81 |
| MAIN FLOW-KILN FLOW | -.5424E+00 | -.00 |
| KILN FLOW-KILN | .00000E+00 | .00 |

## TABLE A-5. PROCESS DATA SEGMENT 5, 12-14-78

GASIFIER MASS BALANCE- SKP-PG INDIANHEAD LIGNITE 12/14(349)-16:30 TO 349-08:30

| INPUT(LBS/HR) | C | H | O | N | S | ASH | TOTAL |
|---|---|---|---|---|---|---|---|
| COAL | 1537.7 | 220.7 | 1370.0 | 21.5 | 28.7 | 265.0 | 3440.0 |
| STEAM | .0 | 91.1 | 721.9 | .0 | .0 | .0 | 812.5 |
| DRY AIR | .7 | .0 | 1361.8 | 4426.4 | .0 | .0 | 5862.6 |
| TOTAL | 1538.4 | 311.8 | 3453.6 | 4447.9 | 28.7 | 265.0 | 10115.2 |

| OUTPUT(LBS/HR) | C | H | O | N | S | ASH | TOTAL |
|---|---|---|---|---|---|---|---|
| DRY GAS | 1419.7 | 137.3 | 2105.1 | 4014.7 | 22.9 | 1.3 | 7771.0 |
| BOT ASH | 20.4 | 1.2 | 5.9 | .3 | 4.4 | 259.8 | 291.9 |
| CYC DUST | 22.5 | 1.5 | 6.4 | .3 | .4 | 3.9 | 35.0 |
| WATER | .0 | 185.1 | 1465.0 | .0 | .0 | .0 | 1650.1 |
| TAR | 107.7 | 10.7 | 11.7 | 2.4 | .9 | .0 | 133.6 |
| TOTAL | 1570.4 | 335.7 | 3595.0 | 4017.7 | 28.7 | 265.0 | 9881.7 |

**********

OPERATING DATA

| COAL ANALYSIS | |
|---|---|
| C | 64.40 |
| H | 4.30 |
| O | 18.20 |
| N | .90 |
| S | 1.20 |
| MOISTURE | 30.60 |
| ASH | 11.10 |
| HHV | 10886. |
| LHV | 10373. |

| GAS ANALYSIS | |
|---|---|
| O2 | .000 |
| A | .602 |
| CO2 | 6.203 |
| H2O | 22.300 |
| CALC H2O | 18.536 |
| N2 | 44.881 |
| H2S | .224 |
| CALC H2S | .224 |
| CH4 | 1.521 |
| C2H6 | .103 |
| H2 | 17.421 |
| CO | 28.807 |
| C2H4 | .145 |
| GMS TAR/DRY SCF | .500 |

| GAS PRODUCTION | WET SCFH | DRY SCFH |
|---|---|---|
| MEASURED | 156000. | 121212. |
| /SQ.FT.GRATE | 4701.53 | 3653.17 |
| /LB RAW COAL | 45.35 | 35.24 |
| /LB DRY COAL | 65.34 | 50.77 |
| /LB MAF COAL | 77.79 | 60.44 |
| CALCULATED (C BALANCE) | 152754. | 118691. |

| AIR: | SCFH | RH |
|---|---|---|
| AMBIENT | 77518. | 50.00 |
| TO GASIFIER | 93998. | 100.85 |
| WATER(GPM): | | |
| AGITATOR | 3.50 | |
| TO SHELL | 6.41 | |
| FROM SHELL | 4.85 | |
| EVAPORATED | 1.56 | |

| | LB/LB |
|---|---|
| STEAM/RAW COAL | .236 |
| TOTAL WATER/DRY COAL | .782 |
| AIR/RAW COAL | 1.713 |
| AIR/DRY COAL | 2.469 |
| AIR/MAF COAL | 2.939 |
| WATER REACTED/MAF COAL | .108 |

TABLE A-5. CONTINUED

GASIFIER HEAT BALANCE- GKP-29 INDIANHEAD LIGNITE 12/14(348)-16:30 TO 349-00:30

INPUT(BTU/HR)

| | SENSIBLE | COMBUSTION | TOTAL | PCT |
|---|---|---|---|---|
| COAL | .127359E+03 | .259891E+08 | .259892E+08 | 100.00 |
| AIR | .988440E+02 | .000000E+00 | .988440E+02 | .00 |
| TOTAL | .226203E+03 | .259891E+08 | .259893E+08 | 100.00 |

OUTPUT(BTU/HR)

| | SENSIBLE | COMBUSTION | TOTAL | PCT |
|---|---|---|---|---|
| HOT ASH | .555646E+04 | .331671E+06 | .336337E+06 | 1.30 |
| CYC DUST | .200892E+04 | .362051E+06 | .364060E+06 | 1.40 |
| AGIT H2O | .151418E+05 | .000000E+00 | .151418E+05 | .06 |
| JACKET H2O | .377679E+06 | .000000E+00 | .377679E+06 | 1.45 |
| HOT GAS (CYC OUTLET) | .890170E+06 | .226298E+08 | .235199E+08 | 90.50 |
| HEAT LOSS | .137417E+07 | .000000E+00 | .137417E+07 | 5.29 |
| TOTAL | .266583E+07 | .233235E+08 | .259893E+08 | 100.00 |

**********

OPERATING DATA

| INPUT | TEMP(DEG C) |
|---|---|
| COAL | 15.6 |
| AMBIENT AIR | 15.6 |
| SATURATED AIR | 59.0 |
| AGITATOR H2O | 6.0 |
| JACKET H2O | 5.7 |

| RAW GAS DATA | BTU/WET SCF | BTU/DRY SCF |
|---|---|---|
| AFTER CYC(60.DEG F) | 145.05 | 186.70 |
| AT CHAMB(150.DEG C) | 149.86 | 192.87 |
| AT KILN(175.DEG C) | 150.77 | 194.04 |
| TAR CONTRIBUTION(60 F) | 13.23 | 17.02(15441 BTU/LB TAR) |

| OUTPUT | |
|---|---|
| HOT ASH | 79.0 |
| CYC DUST | 175.0 |
| AGITATOR H2O | 10.8 |
| JACKET H2O | 92.1 |
| GASER OUTLET | 157.0 |
| CYCLONE OUTLET | 175.0 |
| MAIN FLOW | 165.0 |
| KILN FLOW | 175.0 |

| TRANSMISSION LOSSES | BTU/HR | PCT |
|---|---|---|
| CYCLONE | .68224E+05 | 32.52 |
| CYC-MAIN FLOW | .56721E+05 | 27.04 |
| MAIN FLOW-COMB CHAMB | .84854E+05 | 40.45 |
| MAIN FLOW-KILN FLOW | -.3636E+00 | -.00 |
| KILN FLOW-KILN | .00000E+00 | .00 |

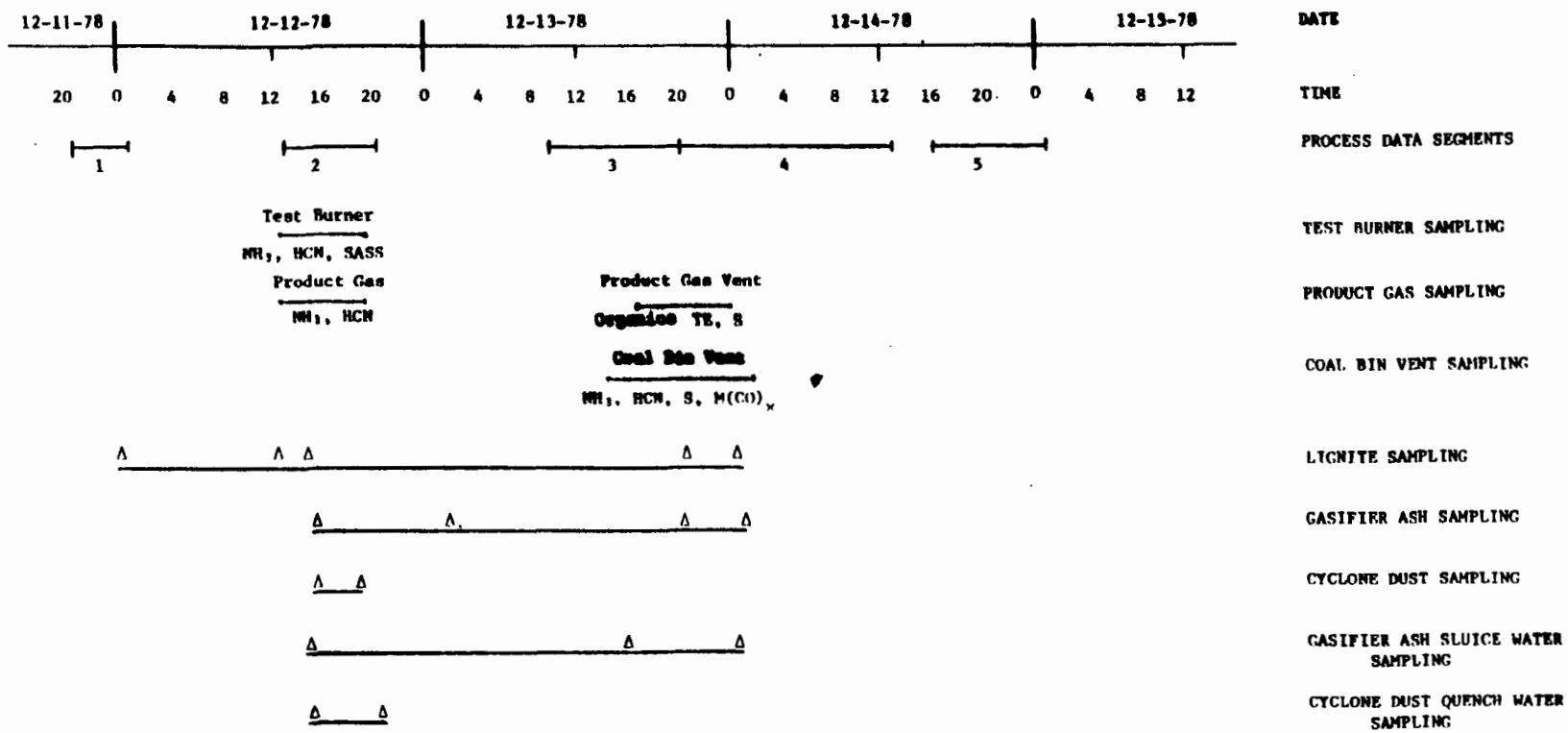


Δ - Grab Samples

Figure A-1. Process Data and Sampling Periods

TABLE A-6. MATERIAL BALANCES FOR FT. SNELLING PROCESS STREAMS

| | SAMPLING PERIOD 1 - 1430 to 2130 on 12/12/78 | | | | | | |
|---|---|---|---|---|---|---|---|
| | C | H | O | N | S | Ash | TOTAL |
| **Input (g/sec)** | | | | | | | |
| Coal | 140 | 21 | 130 | 2 | 2.7 | 25 | 320 ± 28 |
| Steam | | 7.5 | 59 | | | | 67 ± 8.4 |
| Dry Air | .06 | 120 | 120 | 380 | | | 500 ± 55 |
| Total | 140 ± 20 | 28 ± 3.2 | 304 ± 25 | 380 ± 25 | 2.7 ± .4 | 25 ± 2.8 | 890 ± 92 |
| **Output (g/sec)** | | | | | | | |
| Product Gas - | | | | | | | |
| Dry Gas | 130 | 13 | 200 | 370 | 2.1 | .19 | 720 ± 63 |
| Moisture | | 14 | 110 | | | | 130 ± 16 |
| Tar | 10 | 1.0 | 1.1 | .23 | .09 | | 12 ± 1.4 |
| Gasifier Ash | 1.9 | .11 | .54 | .03 | 0.4 | 24 | 27 ± 2.8 |
| Cyclone Dust | 2.4 | .16 | .69 | .04 | .05 | .42 | 3.8 ± 1.3 |
| Total | 150 ± 19 | 28 ± 2.8 | 310 ± 32 | 370 ± 53 | 2.7 ± 0.3 | 25 ± 2.8 | 900 ± 84 |

TABLE A-7. MATERIAL BALANCES FOR FT. SNELLING PROCESS STREAMS

| | SAMPLING PERIOD 2 - 1600 to 0300 on 12/13-14/78 | | | | | | |
|---|---|---|---|---|---|---|---|
| | C | H | O | N | S | Ash | TOTAL |
| **Input (g/sec)** | | | | | | | |
| Coal | 110 | 16 | 100 | 1.6 | 2.1 | 19 | 250 ± 21 |
| Steam | | 7.4 | 58 | | | | 66 ± 8.3 |
| Dry Air | .06 | | 103 | 340 | | | 444 ± 49 |
| Total | 110 ± 16 | 23 ± 2.5 | 260 ± 21 | 340 ± 48 | 2.1 ± 0.3 | 19 ± 2.1 | 760 ± 79 |
| **Output (g/sec)** | | | | | | | |
| Product Gas - | | | | | | | |
| Dry Gas | 104 | 10 | 150 | 290 | 1.7 | .18 | 570 ± 49 |
| Moisture | | 14 | 107 | | | | 120 ± 15 |
| Tar | 7.9 | .78 | .86 | .18 | .04 | | 9.8 ± 1.1 |
| Gasifier Ash | 1.5 | .08 | .42 | .03 | .32 | 19 | 21 ± 2.1 |
| Total | 110 ± 15 | 25 ± 2.4 | 260 ± 26 | 290 ± 42 | 2.1 ± 0.3 | 19 ± 2.1 | 721 ± 67 |

TABLE A-8. PROCESS STREAM FLOW RATE DATA

| STREAM | Sampling Period 1[1] | | Sampling Period 2[2] | |
|---|---|---|---|---|
| | ACTUAL | WITHOUT MOISTURE | ACTUAL | WITHOUT MOISTURE |
| Product Gas | 0.9 SCM/s | 0.73 SCM/s (720 g/s) | 0.69 SCM/s | 0.57 SCM/s (590 g/s) |
| Test Burner Flue Gas | 7.2 SCM/s | 6.77 SCM/s (8080 g/s) | | |
| Gasifier Ash | | 27 g/s | | 21 g/s |
| Cyclone Dust | | 3.8 g/s | | |
| Gasifier Ash Sluice Water | 0.007 ℓ/s (7 g/s) | | 0.007 ℓ/s (7 g/s) | |
| Cyclone Dust Quench Water | <0.007 ℓ/s (<7 g/s) | | | |
| Lignite | 323 g/s | 220 g/s | 250 g/s | 170 g/s |

SCM at 25°C (77°F) and 101 kPa (1 atm).

[1]12/12/78.

[2]12/13-14/78.

TABLE A-9. ESTIMATED TEST BURNER FLUE GAS FLOW RATE AND COMPOSITION

| COMPONENT | PRODUCT GAS VOL % | PRODUCT GAS SCM/SEC | NATURAL GAS[1] VOL % | NATURAL GAS[1] SCM/SEC | COMBUSTION AIR[1] VOL % | COMBUSTION AIR[1] SCM/SEC | TEST BURNER FLUE GAS[2] SCM/SEC | TEST BURNER FLUE GAS[2] ESTIMATED VOL % NET | TEST BURNER FLUE GAS[2] ESTIMATED VOL % DRY |
|---|---|---|---|---|---|---|---|---|---|
| $H_2$ | 14.4 | .099 | | | | | | | |
| $CH_4$ | 1.2 | .008 | 100.0 | .024 | | | | | |
| CO | 22.9 | .158 | | | | | | | |
| $CO_2$ | 5.7 | .039 | | | | | 0.23 | 3.2 | 3.4 |
| $H_2O$ | 23.7 | .163 | | | | | 0.32 | 4.6 | |
| $O_2$ | 0.0 | | | | 21.0 | 1.37 | 1.18 | 16.6 | 17.4 |
| $N_2$ | 32.1 | .221 | | | 79.0 | 5.14 | 5.36 | 75.6 | 79.2 |
| TOTALS | 100.0 | 0.688 | 100.0 | .024 | 100.0 | 6.51 | 7.09 | 100.0 | 100.0 |

SCM at 25°C (77°F) and 101 kPa (1 atm).

[1] Assumed values based on maximum design rates.

[2] GC analysis taken 2006 on 12/12/78 gave CO - 0.0%; $CO_2$ - 2.9%; $O_2$ - 17.2%; $N_2$ - 79.9% (dry basis).

## Error Propagation Analyses

An error propagation analysis was used to establish error limits for the calculated total inlet and outlet mass rates of major components. The values indicate the degree of variance to be expected due to random errors and should not be interpreted as variance over a set of data points.

A 95 percent confidence interval of 2S(Q) is calculated for a given value of Q according to the following standard definition:

$$S^2(Q) = \sum_{i}^{n} \frac{\partial Q}{\partial q_i} \quad S^2(q_i)$$

where:

$S^2(Q)$ = the variance in Q,

$Q$ = the mass flow rate of a given element into or out of the system

$q_i$ = the $i^{th}$ independent measured value (stream flow or elemental concentration), and

$S^2(q_i)$ = the variance of $q_i$.

The error limits, $2S(q_i)$, for the flow rates and analytical results are listed in Table A-10.

TABLE A-10. ESTIMATED ERROR LIMITS FOR FLOW RATES AND ANALYTICAL RESULTS

| STREAM | FLOW RATE ERROR LIMIT 2S (%) |
|---|---|
| Air | ± 10 |
| Steam | ± 10 |
| Coal | ± 10 |
| Ash | ± 10 |
| Dust | ± 10 |
| Hot Product Gas | ± 10 |

| ELEMENT | ANALYTICAL ERROR LIMIT 2S (%) |
|---|---|
| C | ±10 |
| H | ±10 |
| N | ±10 |
| O | ±10 |
| S | ±10 |
| Ash | ± 5 |

APPENDIX B
SAMPLE COLLECTION TECHNIQUES AND FIELD SAMPLING DATA

TABLE OF CONTENTS FOR APPENDIX B


| | | Page |
|---|---|---|
| B1.0 | INTRODUCTION | B-2 |
| B2.0 | TEST BURNER FLUE GAS - 9 | B-4 |
| | B2.1 Organics and Trace Elements | B-4 |
| | B2.2 Ammonia | B-7 |
| | B2.3 Cyanide | B-7 |
| | B2.4 Samples for Gas Chromatographic Analyses | B-9 |
| B3.0 | PRODUCT GAS - 7, 7a | B-10 |
| | B3.1 Ammonia and Cyanide | B-12 |
| | B3.2 Organics | B-12 |
| | B3.3 Trace Elements | B-16 |
| | B3.4 Total Sulfur Species | B-16 |
| | B3.5 Gas Samples for Gas Chromatography | B-17 |
| | B3.6 Volatile Organics | B-17 |
| B4.0 | COAL BIN VENT - 8 | B-18 |
| B5.0 | SOLID AND LIQUID SAMPLES | B-20 |
| | B5.1 Lignite | B-20 |
| | B5.2 Gasifier Ash | B-20 |
| | B5.3 Gasifier Ash Sluice Water | B-20 |
| | B5.4 Cyclone Dust | B-20 |
| | B5.5 Cyclone Dust Quench Water | B-21 |
| | B5.6 Service Water | B-21 |
| B6.0 | SAMPLE LOG | B-22 |
| | REFERENCE | B-32 |

## B1.0 INTRODUCTION

This appendix describes the techniques used to collect samples for the environmental assessment of the two meter Wellman-Galusha gasifier at the U.S. Bureau of Mines, Fort Snelling Iron Ore Pelletizing pilot plant. Figure B-1 provides a simplified schematic of the facility with sampling points numbered as follows:

Gas streams:

- Test Burner Flue Gas - 9
- Product Gas - 7
- Product Gas (at the start-up/emergency vent) - 7a
- Coal Bin Vent Gas - 8

Solid and liquid streams:

- Lignite - 1
- Gasifier Ash - 2
- Gasifier Ash Sluice Water - 3
- Cyclone Dust - 4
- Cyclone Dust Quench Water - 5
- Service Water - 6

The following sections describe the sample collection techniques used at each location and the on-site sample log is given as Section 6.0.

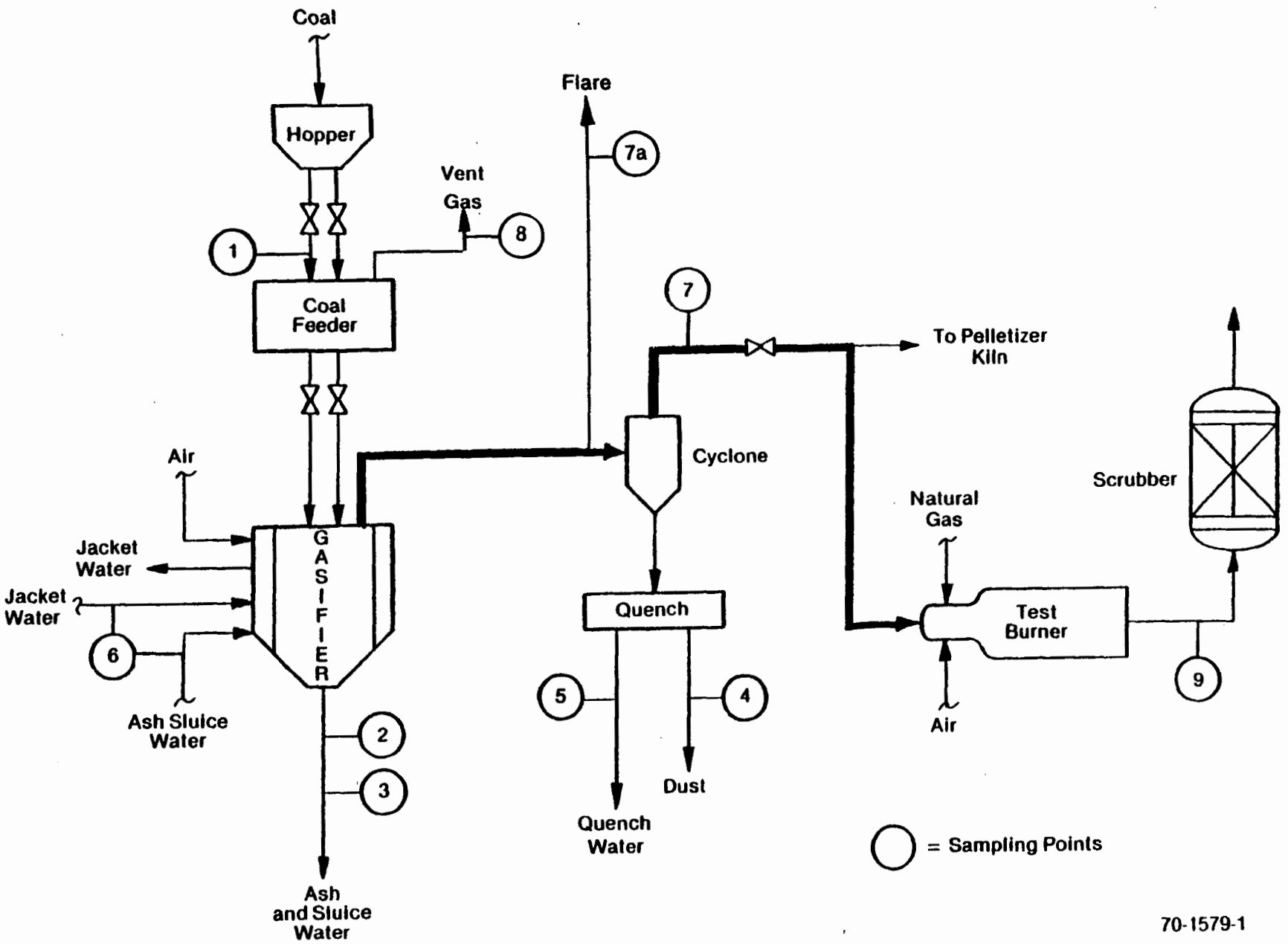


Figure B-1. Operating Schematic of the Wellman-Galusha Gasifier

## B2.0 TEST BURNER FLUE GAS - 9

Samples of the test burner flue gas were collected for:

- particulates
- organic characterization
- trace element characterization
- ammonia content
- cyanide content
- moisture content, and
- vapor phase concentration of:
  - $C_1$-$C_6$ hydrocarbons
  - sulfur species
  - fixed gases

Original plans were to sample the test burner flue gas at a point downstream of a 90° elbow at the exit of the burner and upstream of a 45° elbow prior to the scrubber. However, some of the quench spray nozzles located just downstream of this point were misdirected and sprayed upstream. These spray nozzles showered the original test plane with quench water which made sampling impractical.

A sight glass located in the 90° elbow and on the burner center line was disassembled and used as a sampling port. This port provided access to a single point in the center of the duct in the transition between the burner chamber and the 90° elbow.

Data from the sampling performed at the test burner exit is presented at the end of this section (Table B-1).

### B2.1 Organics and Trace Elements

The EPA-developed Hi Volume Source Assessment Sampling System (SASS train), Figure B-2; was used to collect samples for characterization of the organic and trace element content of the test burner flue gas. The particulate concentration of the gas stream was also determined from the sample collected during this run. The train configuration and method of operation met current specifications (Ref. B-1), except for the location of the XAD-2 canister in the organic module. These procedures currently require that the XAD-2 canister be positioned beneath the gas cooler. In this position large quantities of aqueous and organic phase condensate flow through the XAD-2 resin and are subsequently trapped in a knock-out below the resin. This arrangement could coat the resin early in the sampling effort and result in reduced collection efficiencies for vapor phase organic material.

The modified configuration shown in Figure B-2 traps condensed material before it passes through the resin, thus reducing the possibility of reduced resin collection efficiency. It also simplifies sample recovery and analysis.

TABLE B-1.

TEST BURNER FLUE GAS

Summary:

| | |
|---|---|
| Flow Rate | - 7.09 $m^3$/sec (25°C, 101 kPa)[1] |
| Velocity | - NA |
| Duct ID | - NA |
| Temperature | - 440°C (835°F) |
| Pressure | - Atmospheric |
| % Moisture | - 13.5% by volume |
| Sampling Period | - 1442-2115 12 Dec 1978 |

Sampling Data:

| SAMPLE | TIME | DATE | VOLUME (SCM*) |
|---|---|---|---|
| HCN #1 | 1847 - 1903 | 12 December | .2735 |
| | 2030 - 2045 | 12 December | .2721 |
| | 2105 - 2115 | 12 December | .2232 |
| $NH_3$ #1 | 1430 - 1440 | 12 December | .1751 |
| $NH_3$ #2 | 1513 - 1530 | 12 December | .2678 |
| $NH_3$ #3 | 1617 - 1634 | 12 December | .5672 |
| $NH_3$ #4 | 1715 - 1740 | 12 December | .3899 |
| SASS | 1442 - 2009 | 12 December | 29.686 |
| GC Sample #1 TB | 1300 | 12 December | |
| GC Sample #2 TB | 1535 | 12 December | |
| GC Sample #3 TB | 1551 | 12 December | |
| GC Sample #4 TB | 1715 | 12 December | |

[1] Calculated value, wet basis.

* At 25°C (77°F) and 101 kPa (1 atm), dry basis.

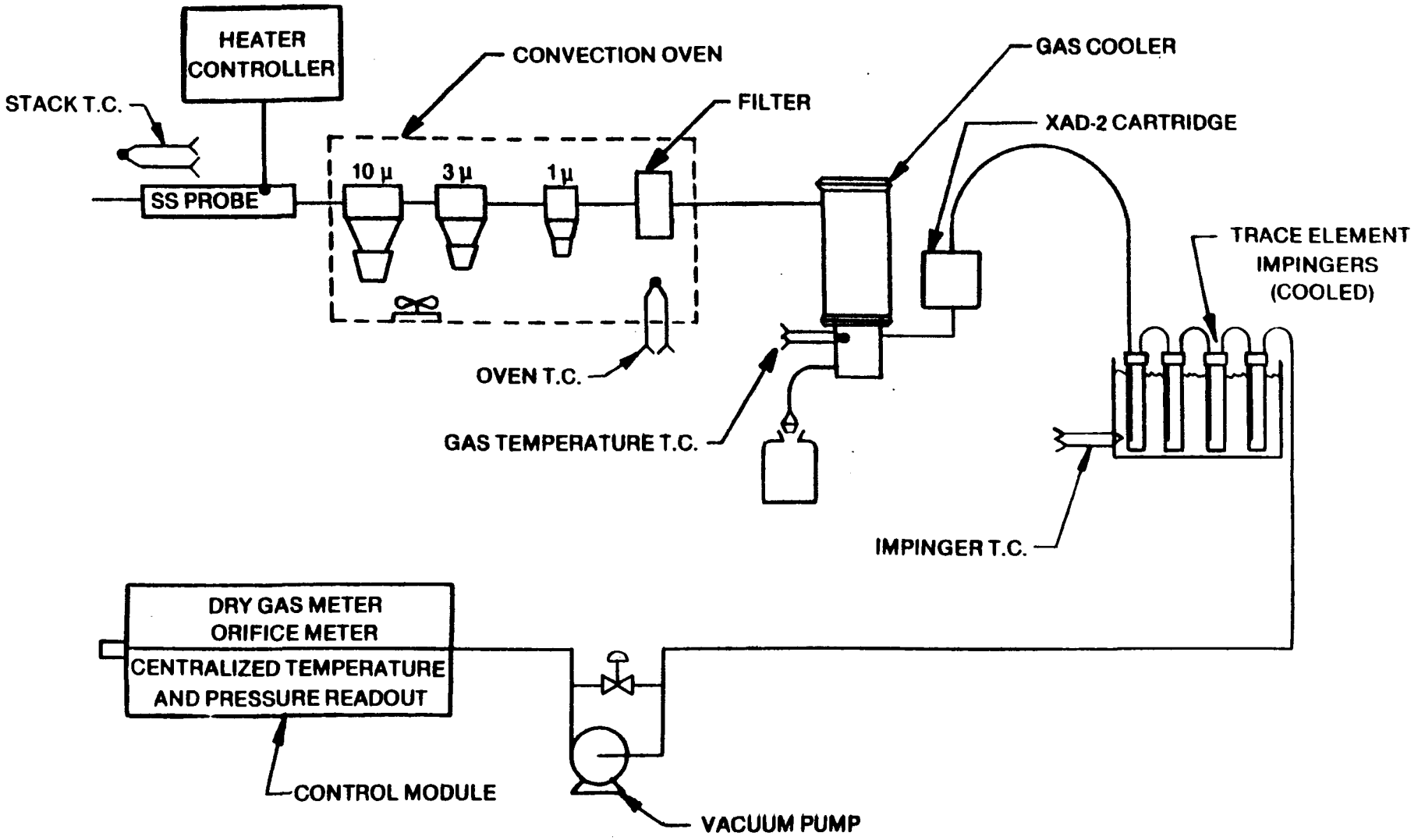


*Figure B-2. Source Assessment Sampling System (SASS) Schematic*

70-1594-1

The impinger solutions used for vapor phase trace element collection were:

| | | |
|---|---|---|
| 1. | 6% $H_2O$ | 750 ml |
| 2. | 2M $(NH_4)_2S_2O_8$ + 0.2M $AgNO_3$ | 750 ml |
| 3. | 2M $(NH_4)_2S_2O_8$ + 0.2M $AgNO_3$ | 750 ml |
| 4. | Preweighed silica gel | |

Sample recovered from the front half of the train (nozzle, probe, cyclones, and filter) were weighed and used to calculate the particulate concentration of the gas stream. A portion of this particulate and the material recovered from the organic module were analyzed to characterize the organic material collected. Portions from all three sections of the train (front half, organic module, and trace element collection impingers) were recovered for trace element analysis.

The mass of aqueous condensate collected by the train during this run plus the total volume of flue gas sampled were used to calculate a moisture fraction of 13.5% for the flue gas.

## B2.2 Ammonia

Samples for analysis of ammonia in the flue gas were collected during the SASS run. An auxiliary sampling train shown in Figure B-3 was used. It consisted of a stainless steel probe and a heated 47 mm glass fiber filter. The impinger contents were:

| | | |
|---|---|---|
| 1. | 10% $H_2SO_4$ | 100 ml |
| 2. | 10% $H_2SO_4$ | 100 ml |
| 3. | Dry | |
| 4. | Preweighed silica gel | |

The gas temperature was held at 120°C (250°F) until the gas had been filtered. Four sequential ammonia sampling runs were made simultaneously with ammonia sampling runs performed at the product gas duct. At the completion of each run the impinger contents were transferred to sample bottles and replaced with fresh solutions for the next runs. The impinger solutions were analyzed on-site by the analytical method described in Appendix C. Data pertinent to these ammonia sampling runs are presented at the end of this section (Table B-1).

## B2.3 Cyanide

Three samples for vapor phase cyanides were collected at the test burner simultaneously with cyanide sampling of the product gas. The auxiliary sampling assembly and sampling methodology used for ammonia collection was also used for cyanides. The impinger solutions used for cyanide collection were:

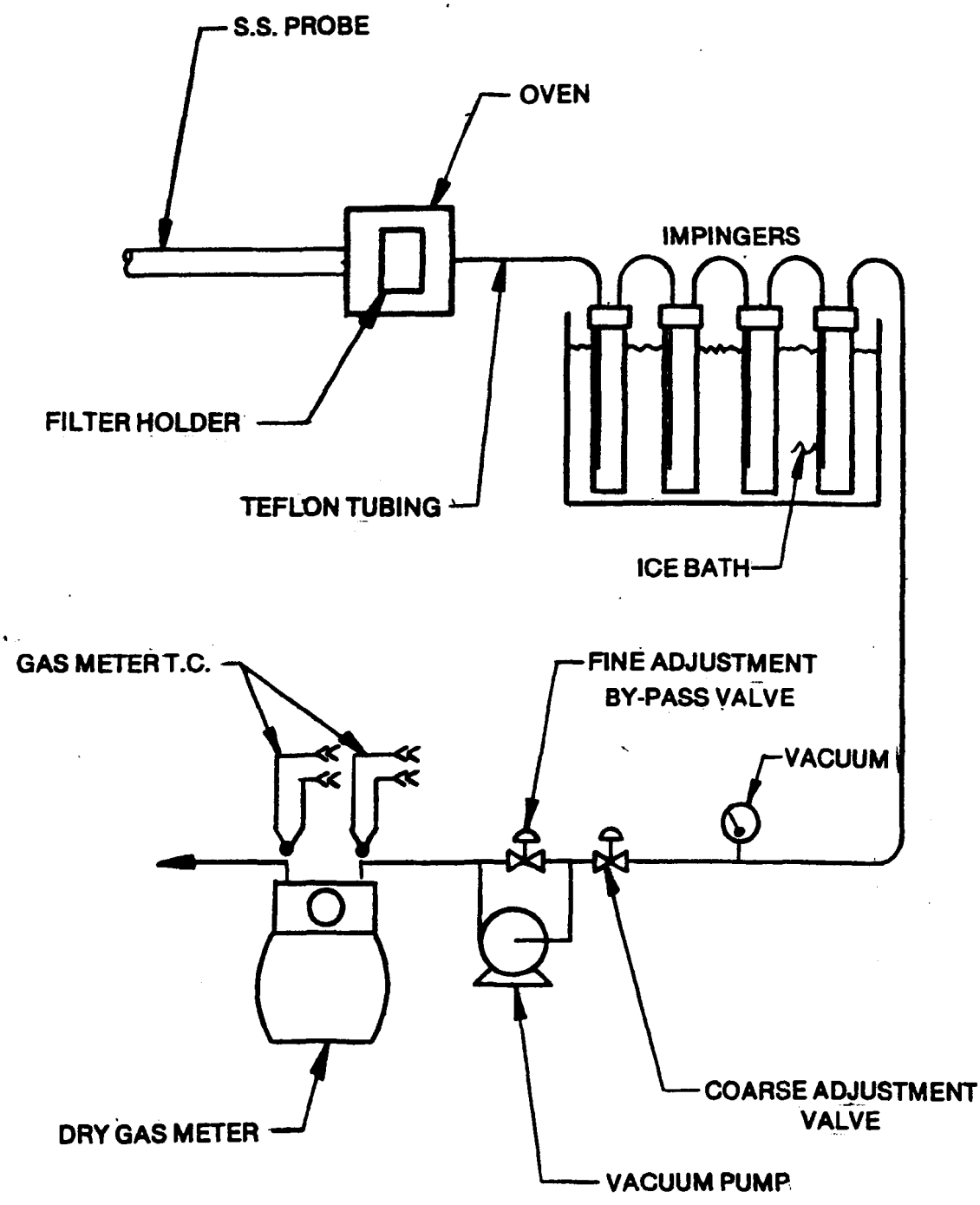


Figure B-3. Schematic Drawing of Impinger Sampling Train Used at the Test Burner

70-1588-1

1. 10% NaOH 100 ml
2. 10% NaOH 100 ml
3. Dry
4. Preweighed silica gel

The resulting impinger solutions from each of the three runs were treated to remove sulfides and then analyzed on-site, as described in Appendix C. Pertinent data for each of these runs is presented at the end of this section (Table B-1).

## B2.4 Samples for Gas Chromatographic Analyses

The test burner flue gas was analyzed on-site by gas chromatography for major (fixed) gases, gaseous sulfur species, and $C_1$-$C_6$ hydrocarbons as described in Appendix C. The gas samples were collected with a sampling and conditioning apparatus consisting of 1.2 meters of heat traced Teflon sample line followed by a Teflon® membrane filter in a stainless steel filter holder. These were followed by a Perma-Pure Drier®, a Teflon®-lined diaphragm pump and a flow meter. Silanized glass sample bombs were used to collect the conditioned gas at the exit of the train. Sample bombs were purged, pressurized to >135 kPa (5 psig) and immediately transported to the mobile laboratory for analysis.

## B3.0 PRODUCT GAS - 7, 7a

The product gas from the gasifier was sampled at two locations: the exit of the cyclone just prior to the venturi flow meter and in the duct to the start-up flare. The use of the second location was necessitated by plant operational problems. As a result of these problems, the product gas was directed to the start-up vent flare from a point upstream of the cyclone. The original sampling port was by-passed (see Figure B-1).

Samples of the product gas were collected for characterization of:

- ammonia concentration
- cyanide concentration
- vapor phase concentrations of:
  - $C_1$-$C_6$ hydrocarabons
  - volatile sulfur species
  - fixed gases
- organic content
- trace element content
- volatile organics

With the exception of ammonia and cyanide, all sampling was performed at the port in the start-up vent duct. For both locations an electrostatic precipitator (ESP) was used prior to the impingers in the sampling trains and the organic module. The ESP shown in Figure B-4 removed particulates and oil and tar aerosols from the product gas. These constituents would plug conventional filters.

The gas stream entered the lower portion of the ESP and was directed toward a catch cup at the bottom of the ESP, thus permitting the collection of any easily removed material (particulate and condensate) without fouling the upper portion of the ESP. As the gas stream moved upward through the ESP, electrostatic collection was induced by the 12 KVDC potential between the 0.025 mm center electrode and the cylindrical shell. Colloidal-sized aerosols were removed from the gas stream and forced to coalesce by their ultimate contact with the outer shell and other aerosol particles. Accumulated oils and tars flowed down the walls to the catch cup at the bottom of the ESP. The cleaned gas exited near the ESP top. Most collection occurred near the base of the ESP; the upper portions remained relatively free of material.

ESP's of this configuration have been shown to be 99+% efficient for dry material of colloidal size. However, the primary reason for the use of the ESP was its ability to remove particulates and oil and tar aerosols without frequent stops for servicing or changing filtering elements. A glass fiber filter was used at the exit of the ESP as a polish and a back-up in the event of an ESP failure. The ESP temperature was held

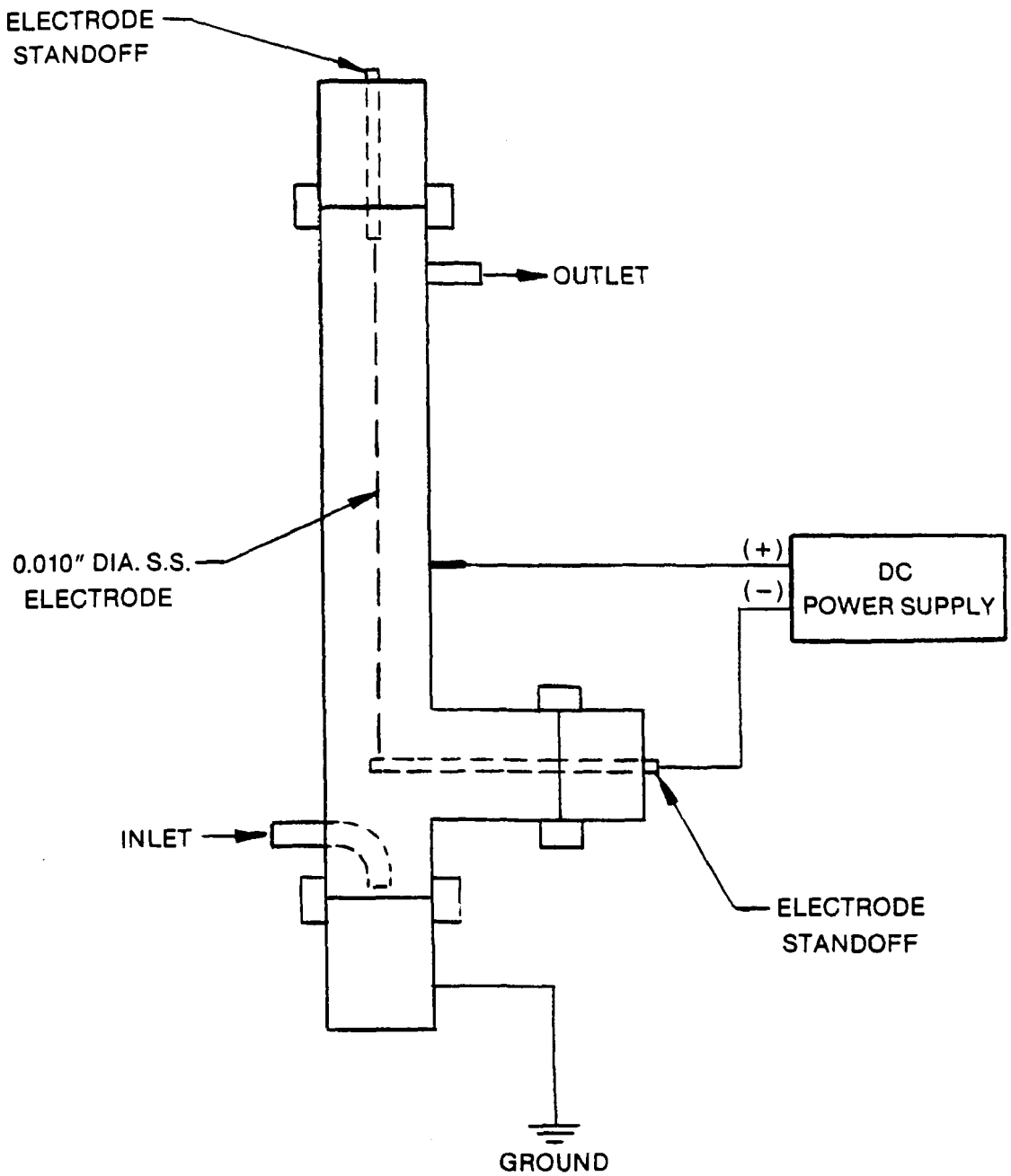


Figure B-4. Schematic of ESP Used for Aerosol and Particulate Removal

70-1596-1

at 140°C (285°F) and the filter at 150°C (300°F) to avoid further condensation of any oils remaining in the gas streams. Figure B-5 shows the ESP and filter in their respective ovens.

Material collected by the probe, ESP, and filter were common to all trains used at the product gas start-up vent (7a). These fractions remained separate through a portion of the analytical matrix to enable the calculation of an ESP collection efficiency of 99.2%. Of the 78.60 grams collected in the probe, ESP, and filter; 49.1% was collected in the probe, 50.5% was collected in the ESP, and 0.4% was collected by the filter. Methylene chloride soluble material was 68% of the total catch and the balance 32% was insoluble.

## B3.1 Ammonia and Cyanide

Samples for ammonia and cyanide analyses were collected at the original product gas sampling port. These collections were made simultaneously with those made at the test burner. The sampling trains and procedures were the same as those described for the test burner except that the ESP was used prior to the filter. These samples were also analyzed on-site using the procedures described in Appendix C. Pertinent data for these samples are presented at the end of Section 3 (Table B-2).

## B3.2 Organics

The SASS train shown in Figure B-6 was used to collect samples from the start-up vent for organic characterization. An ESP and filter were substituted for the three cyclones and filter normally used with the SASS train. The position of the XAD-2 canister, downstream of the condensate collector as used for the test burner, was retained. The gas flow rate through the SASS train was reduced to 0.017 cubic meters per minute (0.6 cubic feet per minute) from 0.11 cubic meters per minute (4 cubic feet per minute) for conventional SASS runs. The smaller gas flow rates permitted the use of a smaller ESP and also permitted sampling for a longer time. The total volume passed through the organic module was 5.08 $nM^3$ instead of 30 $nM^3$ for conventional SASS runs.

A lower oven temperture of 140°C, instead of 200°C for conventional SASS runs was used to prevent heavy tars from reaching a plastic state during filtration. Past experience has shown that even small quantities of heavy tars at temperatures above 150°C (300°F) tend to flow after isolation on the filter surface and cause a high pressure drop across the filter. The SASS train impingers with the 6% peroxide and silver persulfate solutions were used as pump and meter protection and as reserve analytical samples but were not analyzed.

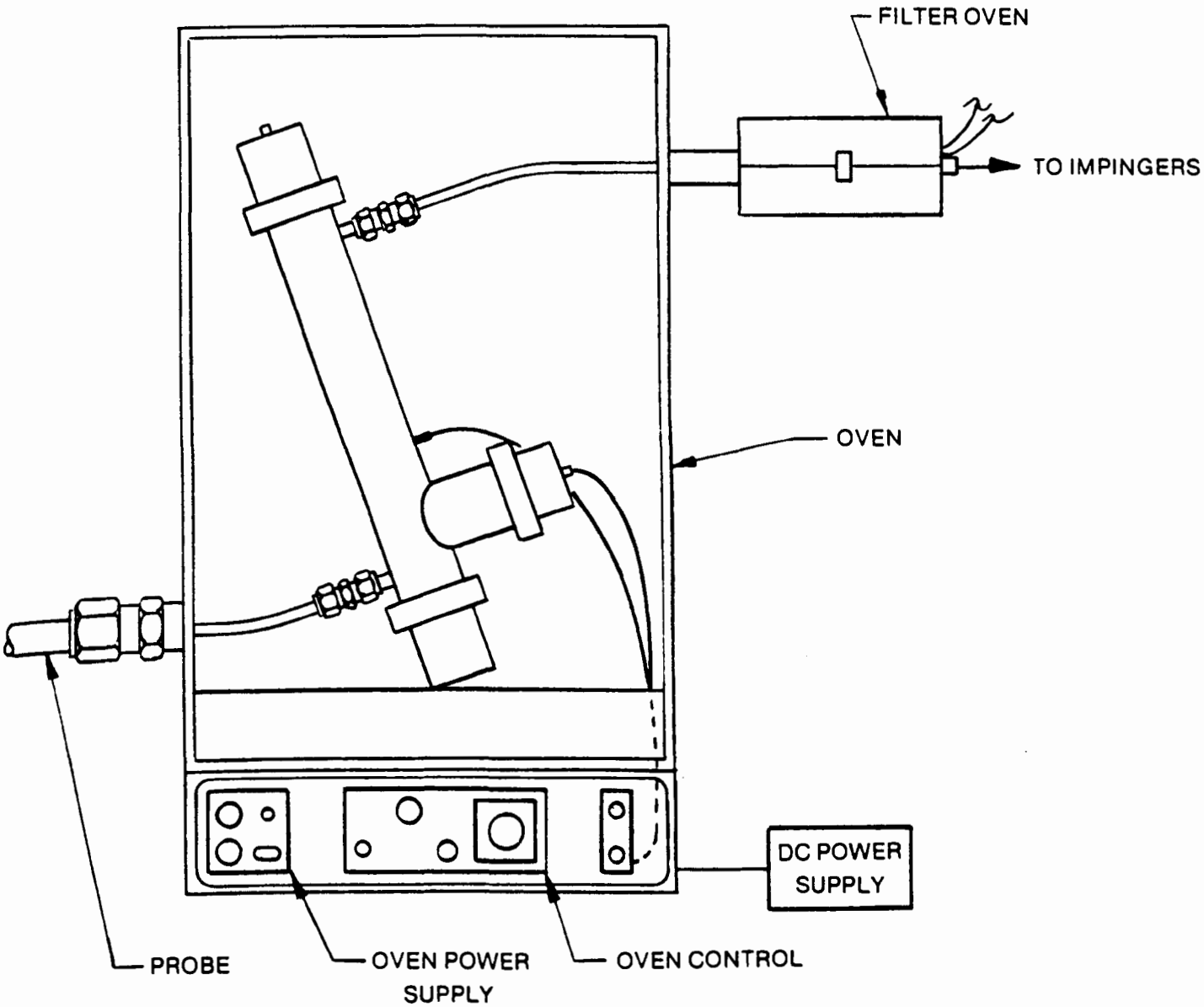


Figure B-5. ESP and Filter Assembly

70-1597-1

TABLE B-2

PRODUCT GAS (Main Duct)/(Vent)

Summary:

| | |
|---|---|
| Flow Rate | - 51.0m$^3$/min (@ 25°C, 101 kPa)[1] (1800 ncfm) |
| Velocity | - 30.4 m/s (99.8 fps) |
| Duct ID | - 3.05 cm (10 in.) |
| Temperature | - 160°C (321°F) |
| Pressure | - +3.8" $H_2O$ |
| % Moisture | - 25% by volume |
| Molecular Weight | - 26.68 dry (24.51 actual) |
| Sampling Period | - 1430 - 2124, 12 Dec 1978; 1722 - 0123, 13-14 Dec 1978 |

Sampling Data:

| SAMPLE ID | TIME | DATE | VOLUME (SCM*) |
|---|---|---|---|
| (Main Duct) | | | |
| HCN #1 | 1845 - 1907 | 12 December | .1434 |
| HCN #2 | 2030 - 2045 | 12 December | .1169 |
| HCN #3 | 2105 - 2124 | 12 December | .1338 |
| $NH_3$ #1 | 1430 - 1440 | 12 December | .02736 |
| $NH_3$ #2 | 1513 - 1523 | 12 December | .02981 |
| $NH_3$ #3 | 1714 - 1724 | 12 December | .03221 |
| (Vent) | | | |
| Total (ESP & Filter) | 1722 - 0123 | 13-14 December | 8.523 |
| Organic Module | 1722 - 0123 | 13-14 December | 5.555 |
| Vapor Trace Elements | 1725 - 2321 | 13 December | 2.613 |
| Sulfur Species | 0034 - 0117 | 14 December | 0.355 |
| GC Sample #5 PG | 2010 | 12 December | |
| GC Sample #6 PG | 2013 | 12 December | |
| GC Sample #7 PGV | 1715 | 13 December | |
| GC Sample #8 PGV | 1735 | 13 December | |
| GC Sample #9 PGV | 1910 | 13 December | |
| GC Sample #10 PGV | 1930 | 13 December | |
| GC Sample #11 PGV | 2200 | 13 December | |
| GC Sample #12 PGV | 2320 | 13 December | |

* At 25°C (77°F) and 101 kPa (1 atm), dry basis.

[1] Wet basis.

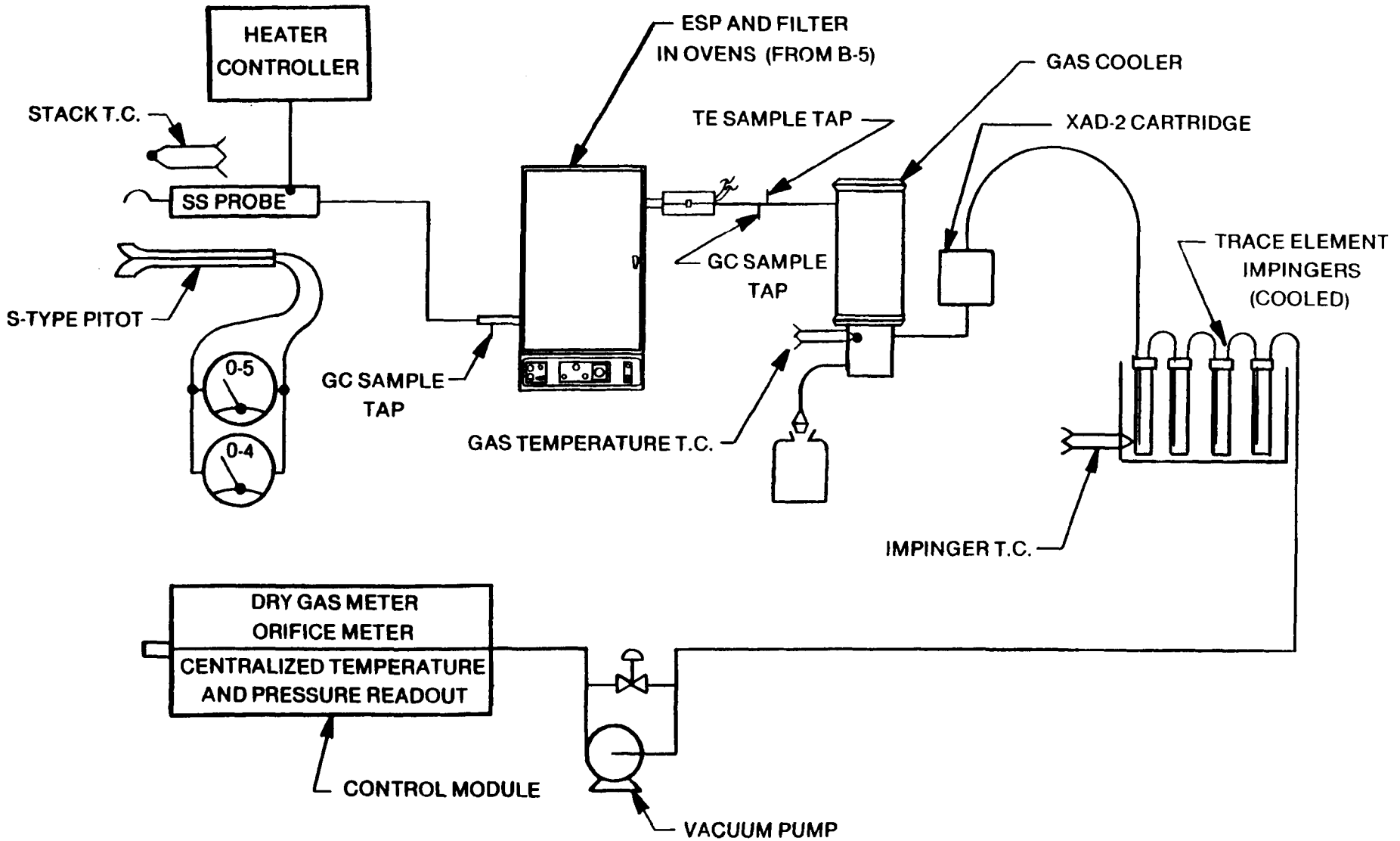


Figure B-6. Product Gas Sampling with ESP



70 1598 1

## B3.3 Trace Elements

Samples of the gas stream exiting the ESP shown in Figure B-6 were collected for trace element analysis. The gas exiting the ESP was carried directly to the impingers through a Teflon® tube. The organic module was bypassed. This arrangement permitted a simpler sample recovery scheme and also avoided the difficult process of obtaining an aliquot of the XAD-2, condensed organic mixture and condensate for trace element analysis. The contents of the impingers used for this collection were:

| | | |
|---|---|---|
| 1. | Dry | |
| 2. | 10% $HNO_3$ | 250 ml |
| 3. | 10% $HNO_3$ | 250 ml |
| 4. | Dry | |
| 5. | 10% KOH | 250 ml |
| 6. | 10% KOH | 250 ml |
| 7. | Dry | |
| 8. | Preweighed silica gel | |

The first empty impinger served as a knock-out for condensate (aqueous and organic) which formed as the gas was cooled from 140°C. Other dry impingers were used to separate the acidic and basic portions of the impinger train. Due to the high organic content of the gas streams, acid/base solutions were selected for trace element collection because of their increased oxidizing capacity over silver persulfate solutions were selected.

## B3.4 Total Sulfur Species

Samples for determination of the total sulfur concentration of the product gas stream were collected at the exit of the ESP filter system. The sulfur species were collected by a series of five impingers:

| | | |
|---|---|---|
| 1. | 6% $H_2O_2$ | 200 ml |
| 2. | 2N ZnOAc | 200 ml |
| 3. | 0.1N KOH in EtOH | 200 ml |
| 4. | Dry | |
| 5. | Preweighed silica gel | |

Sulfur oxides were collected in the peroxide solution, hydrogen sulfide was collected in the acetate solution, and carbon disulfide and carbonyl sulfide were collected in the alcoholic potassium hydroxide solution. The total sulfur concentration determined from these samples was found to be in good agreement with the value calculated from the on-site gas chromatographic analysis of the individual sulfur species.

## B3.5 Gas Samples for Gas Chromatography

Samples for GC analyses were collected with the gas sampling and conditioning train described in Section 2.4. This train was used at both the main product gas line and the start-up vent. Samples were obtained at a tap downstream of the ESP. The ESP removed most of the particulates and aerosols, thus permitting less frequent replacement of the filter in the gas sampling and conditioning train. To verify that the ESP had no effect on sample integrity, simultaneous samples were collected before and after the ESP. The gas compositions determined at these two sites agreed within experimental error. The locations of these two sample taps are shown in Figure B-6.

## B3.6 Volatile Organics

Gas samples for organic characterization were collected with Tenax tubes. The 0.32 cm o.d. x 28 cm glass-lined stainless steel tubes were packed with 10 cm of 60/80 mesh Tenax-GC followed by 5 cm of Davison Grade 15 silica gel. The sorbents were centered in the tube. A leakless diaphragm pump was used to draw samples through the Tenax tubes which were followed by a flow meter to monitor gas flow rate. An initial leak check was performed by plugging the tube entrance and setting the pump for maximum flow. The leak rate was measured at the flow meter.

Samples were collected by removing the plug at the tube inlet and inserting the tube into a tee downstream of the ESP. The sample flow rate (typically 30-60 $cm^3$/min) was determined by the pressure drop through the tube. The leak rate was rechecked after sampling. Due to the small sample volumes, the collection temperature was determined at ambient conditions rather than the temperature of the gas in the sampling line.

## B4.0 COAL BIN VENT - 8

The coal bin is located directly above the upper lock hopper valves. Gases from this bin are drawn through a hood and a 0.3 m duct by an in-line fan. A 2.5 cm hole in this duct upstream of the fan served as a sampling port. Samples were collected from the coal bin vent to characterize the following parameters:

- ammonia
- cyanide
- total volatile sulfur
- volatile sulfur species
- $C_1$-$C_6$ hydrocarbons
- fixed gases
- metal carbonyls

A stainless steel probe 0.64 cm o.d. followed by a 47 mm glass fiber filter in a stainless steel filter holder (Figure B-3) was used for all impinger sampling done at this location. The filter holder was connected to Smith-Greenburg impingers with Teflon® tubing. The gas stream was relatively clean and did not require the use of an ESP. The impinger solutions and sample handling procedures for the ammonia, cyanide, total sulfur, and gas samples for GC analysis have been described in previous sections. Sampling data for sampling at this site is given in Table B-3.

### Metal Carbonyls

Gas from the coal bin vent duct was filtered then passed through a series of impingers designed to collect iron and nickel carbonyls. Vapor phase iron and nickel collected by the impingers were analyzed and reported as the respective metal carbonyl. The impinger solutions were:

| | | |
|---|---|---|
| 1. | 3% Ultrex HCl | 100 ml |
| 2. | 3% Ultrex HCl | 100 ml |
| 3. | Dry | |
| 4. | Preweighed silica gel | |

The solutions were tranferred to polyethylene bottles for storage and subsequent off-site analysis.

TABLE B-3

COAL BIN VENT

Summary:

Flow rate - 27.9 $m^3$/min (@ 25°C, 101 kPa)[1] (984 ncfm)
Velocity - 6.62 mps (2.17 fps)
Duct ID - 0.3 M (12")
Temperature - Ambient 4°C (39°F)
Pressure - Ambient
% Moisture - 1% by volume
Sampling Period - 1604 - 0247 13-14 December

Sampling Data:

| RUN | TIME | DATE | VOLUME (SCM*) |
|---|---|---|---|
| HCN #1 | 1907 - 1930 | 13 December | .4298 |
| HCN #2 | 1940 - 2010 | 13 December | .5430 |
| HCN #3 | 2015 - 2048 | 13 December | .5740 |
| $NH_3$ #1 | 1604 - 1707 | 13 December | .5672 |
| $NH_3$ #2 | 1715 - 1800 | 13 December | .4749 |
| $NH_3$ #3 | 1805 - 1900 | 13 December | .4664 |
| Species #2 | 2245 - 2323 | 13 December | .6875 |
| Species #3 | 2330 - 2400 | 13 December | .5675 |
| $M(CO)_n$ | 0051 - 0247 | 14 December | 1.6736 |

* At 25°C (77°F) and 101 kPa (1 atm), dry basis.
[1] Wet basis.

## B5.0 SOLID AND LIQUID SAMPLES

The solid and liquid streams sampled during the lignite run (9-13 December 1979) were:

- Lignite - 1
- Gasifier Ash - 2
- Gasifier Ash Sluice Water - 3
- Cyclone Dust - 4
- Cyclone Dust Quench Water - 5
- Service Water - 6

### B5.1 Lignite

Lignite feed to the gasifier was brought from storage by front-end loaders, screened to remove the fines (<20 mm) and then conveyed to the coal bin above the gasifier. Grab samples were collected as the sized lignite fell from the conveyor belt to the receiving hopper of the bucket elevator. During the test effort, a one liter grab sample was taken during each batch loading operation (usually twice per eight hour shift).

### B5.2 Gasifier Ash

Gasifier ash was periodically (usually once per eight hour shift) transferred from the bottom of the gasifier into a bin. Service water was added to the bottom of the gasifier to aid in the removal of the ash. Once the ash was transferred to the bin, the water (gasifier ash sluice water) was decanted from the ash. A 2-3 liter sample of the dewatered ash was collected as it was dumped from the bin after the bin and ash had been weighed.

### B5.3 Gasifier Ash Sluice Water

As the gasifier ash sluice water (see Section 5.2) was decanted from the ash, samples of the water were collected. The water was collected in glass and plastic containers, transported to the on-site laboratory and preserved for analysis.

### B5.4 Cyclone Dust

A 1-2 liter cyclone dust sample was collected just after each gasifier ash sample was collected (once per eight hour shift). These samples were collected from a water quench trough at the bottom of the cyclone leg. The sample was raked from the trough, and the quench water was allowed to drain from the sample. The samples were then transferred to containers.

Water

During each cyclone dust sample collection, a 3-4 liter sample of quench water was also collected from the quench water trough. The samples were preserved, using the procedures described in Appendix C, immediately after collection.

B5.6 Service Water

Two one-liter service water samples were collected at a tap in the service water line. The analytical results from this sample were used to make background corrections for the ash sluice water and cyclone dust quench water results.

## B6.0 SAMPLE LOG

| Sample No. | Description | Date | Time | Analysis |
|---|---|---|---|---|
| FS-1 | ESP Impinger and $CH_2Cl_2$ | 12-9 | | Hold |
| FS-2 | ESP Filter | 12-9 | | Hold |
| FS-3 | ESP Tar | 12-9 | | Hold |
| FS-4 | Gasifier Cyclone Dust - Coke | 12-11 | 1500 | Hold |
| FS-5 | Gasifier Ash Quench Water | 12-11 | 2300 | BOD |
| FS-6 | Gasifier Ash Quench Water | 12-11 | 2300 | Hold |
| FS-7 | Green Pellets | 12-11 | 2400 | Hold |
| FS-8 | Finished Pellets | 12-11 | 2400 | Hold |
| FS-9 | Lignite | 12-12 | 0015 | Ult, Prox, composite with FS-11, 21, 24, 50, 72 for SSMS*, α & β, Size, mineral |
| FS-10 | Cyclone Quench Water | 12-12 | 0030 | Composited with FS-19, 27 for pH, TDS, COD, TOC, $CN^-$, $NH_4^+$, anions |
| FS-11 | Lignite | 12-12 | 1200 | Ult, Prox, composite with FS-9, 21, 24, 50, 72 for SSMS*, α & β, Size, mineral |
| FS-12 | Gasifier Ash Sluice water - glass | 12-12 | 1430 | Composited with FS-43, 51, 66 for Phenols |
| FS-13 | Gasifier Ash Sluice water - plas | 12-12 | 1430 | Composite with FS-45, 52, 68 for SSMS* |
| FS-14 | Gasifier Ash Sluice water - plas | 12-12 | 1430 | Composited with FS-46, 53, 67 for pH, TDS, COD, $CN^-$, $NH_4^+$, anions, TOC |
| FS-15 | Gasifier Ash | 12-12 | 1430 | Composite with FS-47, 61, 70 for BIO, SSMS*, Ult, Prox, α & β, Morph, ORG, Leaching, mineral |
| FS-16 | Service Water | 12-12 | 1445 | Trace elements by SSMS* |

*Includes Hg, As, Se, Sb by A.A.

| Sample No. | Description | Date | Time | Analysis |
|---|---|---|---|---|
| FS-17 | Cyclone Quench water - glass | 12-12 | 1500 | Composited with FS-25 for Phenols |
| FS-18 | Cyclone Quench water - plas | 12-12 | 1500 | Trace elements by SSMS |
| FS-19 | Cyclone Quench water - plas | 12-12 | 1500 | Composited with FS-27, 10 for pH, TDS, TSS, COD, TOC, $CN^-$, $NH_4^+$, anions |
| FS-20 | Cyclone Dust | 12-12 | 1500 | Composite with FS-28 for SSMS, ULT, PROX, α & β size, Morph, Org, Leaching, BIO |
| FS-21 | Lignite | 12-12 | 1510 | Ult, Prox, composite with FS-9, 11, 24, 50, 72 for SSMS, α & β size, mineral |
| FS-22 | Green Pellets | 12-12 | 1800 | Hold |
| FS-23 | Finished Pellets | 12-12 | 1800 | Hold |
| FS-24 | Lignite | 12-12 | 1945 | Ult, Prox, composite with FS-9, 11, 21, 50, 72 for SSMS,α & β, size, mineral |
| FS-25 | Cyclone Quench Water - glass | 12-12 | 2030 | Composited with FS-17 for phenols |
| FS-26 | Cyclone Quench water - plas | 12-12 | 2030 | Biological & BOD, TOC |
| FS-27 | Cyclone Quench water - plas | 12-12 | 2030 | Composited with FS-19, 10, for pH, TDS, COD, TOC, $CN^-$, $NH_4^+$, anions |
| FS-28 | Cyclone Dust | 12-12 | 2030 | Biological, composite with FS-20 for SSMS, Ult, Prox, α & β, size, Morph, Org and Leaching, BIO |
| FS-29 | Green Pellets | 12-12 | 2045 | Hold |
| FS-30 | Finished Pellets | 12-12 | 2045 | Hold |
| FS-31 | Gasifier Ash | 12-12 | 1430 | Hold |
| FS-32 | T.B. SASS Condensate<br>Aqueous phase 2107.04 grams | 12-12 | | Organic |

*Includes Hg, As, Se, Sb by A.A.

| Sample No. | Description | Date | Time | Analysis |
|---|---|---|---|---|
| FS-33 | T.B. SASS XAD-Resin | 12-12 | | SSMS* |
| FS-34 | T.B. SASS Cyclone Particulates > 3 μ 0.03 grams | 12-12 | | SSMS |
| FS-35 | T.B. SASS Condensate | 12-12 | | SSMS* |
| FS-36 | T.B. SASS Org. Module Wash | 12-12 | | Organic |
| FS-37 | T.B. SASS Cyclone Rinse | 12-12 | | Filter & Weigh |
| FS-38 | T.B. SASS 1st impinger | 12-12 | | Combine for SSMS* |
| FS-39 | T.B. SASS 2nd impinger | 12-12 | | Combine for SSMS* |
| FS-40 | T.B. SASS 3rd impinger | 12-12 | | Combine for SSMS* |
| FS-41 | See FS-49 | | | |
| FS-42 | See FS-145 | | | |
| FS-43 | Gasifier Ash sluice water-glass | 12-13 | 0030 | Composited with FS-12, 51, 66 for phenols |
| FS-44 | Gasifier ash sluice water | 12-13 | 0030 | Composite with FS-54 & 69 for organics and biological |
| FS-45 | Gasifier ash sluice water | 12-13 | 0030 | Composite with FS-13, 52, 68 for SSMS* |
| FS-46 | Gasifier ash sluice water | 12-13 | 0030 | Composited with FS-14, 53, 67 for pH, TDS, TSS, COD, TOC, $CN^-$, $NH_4^+$, anions |
| FS-47 | Gasifier ash | 12-13 | 0030 | Composite with FS-15, 61, 70 for BIO, mineral SSMS*, ULT, Prox, α & β, Morph, ORD, leaching |

*Includes Hg, As, Se, Sb by A.A.

| Sample No. | Description | Date | Time | Analysis |
|---|---|---|---|---|
| FS-48 | Gasifier Ash | 12-13 | 0030 | Hold |
| FS-49 | T.B. SASS Probe Wash | 12-12 | | Evaporate $MeCl_2$ and weigh |
| FS-50 | Lignite | 12-13 | 1730 | Ult, Prox, combine with FS-9, 11, 21, 24, 72 for SSMS*, α & β, size |
| FS-51 | Gasifier ash sluice water-glass | 12-13 | 1900 | Composited with FS-12, 43, 51, 66 for phenols |
| FS-52 | Gasifier ash sluice water-plas | 12-13 | 1900 | Composite with FS-13, 45, 68 for SSMS* |
| FS-53 | Gasifier ash sluice water - plas | 12-13 | 1900 | Composited with FS-14, 46, 67 for pH, TDS, TSS, COD, TOC, $CN^-$, $NH_4^+$, anions |
| FS-54 | Gasifier ash sluice water | 12-13 | 1900 | Composite with FS-44 and 69 for Bioassay and organic |
| FS-55 | Cyclone quench water - extra glass | 12-13 | 1900 | BOD, TOC, organic |
| FS-56 | Cyclone quench water-extra | 12-13 | 1900 | BOD, TOC, organic |
| FS-57 | Cyclone quench water-extra | 12-13 | 1900 | BOD, TOC, organic |
| FS-58 | Cyclone quench water-extra | 12-13 | 1900 | BOD, TOC, organic |
| FS-59 | Cyclone Dust | 12-13 | 1900 | Hold |
| FS-60 | Service Water | 12-13 | 1945 | Hold |
| FS-61 | Gasifier Ash | 12-13 | 1900 | Composite with FS-15, 47, 70 for SSMS*, mineral Ult, Prox, α & β, Morph, org, leaching, Bio |
| FS-62 | Gasifier ash | 12-13 | 1900 | Hold |
| FS-63 | Gasifier ash | 12-13 | 1900 | Hold |
| FS-64 | Tar deposits before test burner | 12-13 | | Hold |
| FS-65 | Tar deposits in line to kiln | 12-13 | | Hold |

*Includes Hg, As, Se, Sb by A.A.

| Sample No. | Description | Date | Time | Analysis |
|---|---|---|---|---|
| FS-66 | Gasifier ash sluice water-glass | 12-13 | 2330 | Composited with FS-12, 43, 51 for phenols |
| FS-67 | Gasifier ash sluice water-plas | 12-13 | 2330 | Composited with FS-14, 46, 53 for pH, TDS, TSS, COD, TOC, $CN^-$, $NH_4^+$, anions |
| FS-68 | Gasifier ash sluice water-plas | 12-13 | 2330 | Composite with FS-13, 45, 52 for SSMS* |
| FS-69 | Gasifier ash sluice water | 12-13 | 2330 | Composite with FS 44 and 54 for bio & org |
| FS-70 | Gasifier ash | 12-13 | 2330 | Composite with FS-15, 47, 62, for SSMS*, mineral Ult, Prox, α & β, Morph., org, leaching, Bio |
| FS-71 | Gasifier ash | 12-13 | 2330 | Hold |
| FS-72 | Lignite | 12-14 | 0030 | Ult, prox, combine with FS-9, 11, 21, 24, 50 for SSMS*, α & β, size, mineral |
| FS-73 | PG SASS condensate aqueous phase | 12-13 | | Organic, BIO |
| FS-74 | PG SASS org. module rinse | 12-13 | | Organic, BIO |
| FS-75 | PG SASS ESP Rinse | 12-13 | | SSMS*, Organic, BIO |
| FS-76 | Gasifier condensate before T.B. - 3 bottles | 12-13 | | Hold |
| FS-77 | P.G. trace metals 1st impinger - dry | 12-13 | | Combine for SSMS* |
| FS-78 | P.G. trace metals 2nd impinger- 10% $HNO_3$ | 12-13 | | Combine for SSMS* |
| FS-79 | P.G. trace metals 3rd impinger- 10% $HNO_3$ | 12-13 | | Combine for SSMS* |
| FS-80 | P.G. trace metals 4th impinger- NaOH | 12-13 | | Combine for SSMS* |
| FS-81 | P.G. trace metals 5th impinger- NaOH | 12-13 | | Combine for SSMS* |

*Includes Hg, As, Se, Sb by A.A.

| Sample No. | Description | Date | Time | Analysis |
|---|---|---|---|---|
| FS-82 | Coal Bin metal carbonyl-1st impinger | 12-13 | | Fe, Ni |
| FS-83 | Coal bin metal carbonyl - 2nd impinger | 12-13 | | Fe, Ni |
| FS-84 | Coal bin metal carbonyl-blanks | 12-13 | | Fe, Ni |
| FS-85 | P.G. total Sulfur impingers 1-3 | 12-13 | | Sulfur as $CS_2$ |
| FS-86 | C.B. total sulfur impingers 2-2 | 12-13 | | Sulfur as $CS_2$ |
| FS-87 | C.B. total sulfur impingers 3-2 | 12-13 | | Sulfur as $CS_2$ |
| FS-88 | Blank - alcoholic KOH for total sulfur | | | Sulfur as $CS_2$ |
| FS-89 | PG-6% $H_2O_2$ for total sulfur | 12-13 | | Sulfur as $SO_x$ sulfate |
| FS-90 | CB-6% $H_2O_2$ for total sulfur impinger 2-3 | 12-13 | | Sulfur as $SO_x$ sulfate |
| FS-91 | PG-6% $H_2O_2$ for total sulfur impinger 1-1 | 12-13 | | Sulfur as $SO_x$ sulfate |
| FS-92 | CB-6% $H_2O_2$ for total sulfur impinger 3-3 | 12-13 | | Sulfur as $SO_x$ sulfate |
| FS-93 | Blank-6% $H_2O_2$ for total sulfur | 12-13 | | Sulfur as $SO_x$ sulfate |
| FS-94 | CB zinc acetate for total sulfur imp. 3-1 | 12-13 | | Sulfur as $H_2S$ - Zn S |
| FS-95 | CB zinc acetate for total sulfur imp. 1-1 | 12-13 | | Sulfur as $H_2S$ - Zn S |
| FS-96 | CB zinc acetate for total sulfur imp 2-1 | 12-13 | | Sulfur as $H_2S$ - Zn S |

| Sample No. | Description | Date | Time | Analysis |
|---|---|---|---|---|
| FS-97 | PG zinc acetate for total sulfur imp 1-2 | 12-13 | | Sulfur as $H_2S$ - Zn S |
| FS-98 | Train Rinse | 12-13 | | Sulfur as - $H_2S$ - Zn S |
| FS-99 | Blank Rinse | 12-13 | | |
| FS-100 | TB - 5% $H_2SO_4$ for $NH_3$-Imp 1-1 | 12-12 | | $NH_3$ as $NH_3$ $NH_4^+$ |
| FS-101 | TB - 5% $H_2SO_4$ for $NH_3$-Imp 1-2 | 12-12 | | $NH_3$ as $NH_3$ $NH_4^+$ |
| FS-102 | TB - 5% $H_2SO_4$ for $NH_3$-Imp 2-1 | 12-12 | | $NH_3$ as $NH_3$ $NH_4^+$ |
| FS-103 | TB - 5% $H_2SO_4$ for $NH_3$-Imp 2-2 | 12-12 | | $NH_3$ as $NH_3$ $NH_4^+$ |
| FS-104 | TB - 5% $H_2SO_4$ for $NH_3$-Imp 3-1 | 12-12 | | $NH_3$ as $NH_3$ $NH_4^+$ |
| FS-105 | TB - 5% $H_2SO_4$ for $NH_3$-Imp 3-2 | 12-12 | | $NH_3$ as $NH_3$ $NH_4^+$ |
| FS-106 | PG - 5% $H_2SO_4$ for $NH_3$-Imp 1-1 | 12-13 | | $NH_3$ as $NH_3$ $NH_4^+$ |
| FS-107 | PG - 5% $H_2SO_4$ for $NH_3$-Imp 1-2 | 12-13 | | $NH_3$ as $NH_3$ $NH_4^+$ |
| FS-108 | PG - 5% $H_2SO_4$ for $NH_3$-Imp 2-1 | 12-13 | | $NH_3$ as $NH_3$ $NH_4^+$ |
| FS-109 | PG - 5% $H_2SO_4$ for $NH_3$-Imp 2-2 | 12-13 | | $NH_3$ as $NH_3$ $NH_4^+$ |
| FS-110 | PG - 5% $H_2SO_4$ for $NH_3$-Imp 3-1 | 12-13 | | $NH_3$ as $NH_3$ $NH_4^+$ |
| FS-111 | PG - 5% $H_2SO_4$ for $NH_3$-Imp 3-2 | 12-13 | | $NH_3$ as $NH_3$ $NH_4^+$ |
| FS-112 | TB - 5% $H_2SO_4$ for $NH_3$-Imp 4-1 | 12-13 | | $NH_3$ as $NH_3$ $NH_4^+$ |
| FS-113 | TB - 5% $H_2SO_4$ for $NH_3$-Imp 4-2 | 12-13 | | $NH_3$ as $NH_3$ $NH_4^+$ |
| FS-114 | TB - 5% $H_2SO_4$ for $NH_3$-Imp | | | |
| FS-115 | CB - 5% $H_2SO_4$ for $NH_3$-Imp 1-1 | 12-13 | | $NH_3$ as $NH_3$ $NH_4^+$ |
| FS-116 | CB - 5% $H_2SO_4$ for $NH_3$-Imp 1-2 | 12-13 | | $NH_3$ as $NH_3$ $NH_4^+$ |
| FS-117 | CB - 5% $H_2SO_4$ for $NH_3$-Imp 2-1 | 12-13 | | $NH_3$ as $NH_3$ $NH_4^+$ |
| FS-118 | CB - 5% $H_2SO_4$ for $NH_3$-Imp 2-2 | 12-13 | | $NH_3$ as $NH_3$ $NH_4^+$ |
| FS-119 | CB - 5% $H_2SO_4$ for $NH_3$-Imp 3-1 | 12-13 | | $NH_3$ as $NH_3$ $NH_4^+$ |
| FS-120 | CB - 5% $H_2SO_4$ for $NH_3$-Imp 3-2 | 12-13 | | $NH_3$ as $NH_3$ $NH_4^+$ |

| Sample No. | Description | Date | Time | Analysis |
|---|---|---|---|---|
| FS-121 | CB - 10% NaOH for CN Imp 1-1 | 12-13 | | $CN^-$ as HCN |
| FS-122 | CB - 10% NaOH for CN Imp 1-2 | 12-13 | | $CN^-$ as HCN |
| FS-123 | CB - 10% NaOH for CN Imp 2-1 | 12-13 | | $CN^-$ as HCN |
| FS-124 | CB - 10% NaOH for CN Imp 2-2 | 12-13 | | $CN^-$ as HCN |
| FS-125 | CB - 10% NaOH for CN Imp 3-1 | 12-13 | | $CN^-$ as HCN |
| FS-126 | CB - 10% NaOH for CN Imp 3-2 | 12-13 | | $CN^-$ as HCN |
| FS-127 | PG - 10% NaOH for CN Imp 1-1 | 12-13 | | $CN^-$ as HCN |
| FS-128 | PG - 10% NaOH for CN Imp 1-2 | 12-13 | | $CN^-$ as HCN |
| FS-129 | PG - 10% NaOH for CN Imp 1-2 | 12-13 | | $CN^-$ as HCN |
| FS-130 | PG - 10% NaOH for CN Imp 2-2 | 12-13 | | $CN^-$ as HCN |
| FS-131 | PG - 10% NaOH for CN Imp 3-1 | 12-13 | | $CN^-$ as HCN |
| FS-132 | PG - 10% NaOH for CN Imp 3-2 | 12-13 | | $CN^-$ as HCN |
| FS-133 | PG - CN Imp Rinse | 12-13 | | $CN^-$ as HCN |
| FS-134 | TB - 10% NaOH for CN Imp 1-1 | 12-12 | | $CN^-$ as HCN |
| FS-135 | TB - 10% NaOH for CN Imp 1-2 | 12-12 | | $CN^-$ as HCN |
| FS-136 | TB - 10% NaOH for CN Imp 2-1 | 12-12 | | $CN^-$ as HCN |
| FS-137 | TB - 10% NaOH for CN Imp 2-2 | 12-12 | | $CN^-$ as HCN |
| FS-138 | TB - 10% NaOH for CN Imp 3-1 | 12-12 | | $CN^-$ as HCN |
| FS-139 | TB - 10% NaOH for CN Imp 3-2 | 12-12 | | $CN^-$ as HCN |
| FS-140 | Trailer DI water | 12-13 | | Hold |
| FS-141 | PS SASS 6% $H_2O_2$ | 12-13 | | Hold |

| Sample No. | Description | Date | Time | Analysis |
|---|---|---|---|---|
| FS-142 | PG SASS $AgS_2O_8$ #1 | 12-13 | | Hold |
| FS-143 | PG SASS $AgS_2O_8$ #2 | 12-13 | | Hold |
| FS-144 | PG SASS ESP Tar | 12-13 | | SSMS*, Org, BIO |
| FS-145 | TB SASS Filter | 12-12 | | Organic |
| FS-146 | TB SASS Wash Bottle | 12-12 | | Hold, Blank |
| FS-147 | PG Tenax tube-100 ml @ 25 ml/M | 12-14 | 0215 | Organic |
| FS-148 | CB Tenax Tube-5 min @ 60 ml/M | 12-14 | 1525 | Hold |
| FS-149 | CB Tenax Tube-2 min @ 50 ml/M | 12-14 | 1450 | Hold |
| FS-150 | CB Tenax Tube-7 min @ 50 ml/M | 12-14 | 1515 | Hold |
| FS-151 | CB Tenax tube-5 min @ 50 ml/M | 12-14 | 1500 | Hold |
| FS-152 | CB Tenax tube-10 min @ 60 ml/M | 12-14 | 1530 | Organic |
| FS-153 | TB Bomb #1 | 12-12 | 0130 | Analysed by GC, majors S, $C_1$-$C_6$ |
| FS-154 | TB Bomb #2 | 12-12 | 1535 | Analyzed by GC, majors,S, $C_1$-$C_6$ |
| FS-155 | TB Bomb #3 | 12-12 | 1551 | Analyzed by GC, majors, S, $C_1$-$C_6$ |
| FS-156 | TB Bomb #4 | 12-12 | 1751 | Analyzed by GC, majors, S, $C_1$-$C_6$ |
| FS-157 | PG Bomb #5 | 12-12 | 2010 | Analyzed by GC, majors, S, $C_1$-$C_6$ |
| FS-158 | PG Bomb #6 | 12-12 | 2013 | Analyzed by GC, majors, S, $C_1$-$C_6$ |
| FS-159 | PG Bomb #7 after ESP | 12-13 | 1715 | Analyzed by GC, majors, S, $C_1$-$C_6$ |
| FS-160 | PG Bomb #8 before ESP | 12-13 | 1730 | Analyzed by GC, majors, S, $C_1$-$C_6$ |
| FS-161 | PG Bomb #9 before ESP | 12-13 | 1910 | Analyzed by GC, majors, S, $C_1$-$C_6$ |
| FS-162 | PG Bomb #10 after ESP | 12-13 | 1913 | Analyzed by GC, majors, S, $C_1$-$C_6$ |

*Includes Hg, As, Se, Sb by A.A.

| Sample No. | Description | Date | Time | Analysis |
|---|---|---|---|---|
| FS-163 | PG Bomb #11 after ESP | 12-13 | 2200 | Analyzed by GC, majors, S, $C_1$-$C_6$ |
| FS-164 | PG Bomb #12 before ESP | 12-13 | 2320 | Analyzed by GC, majors, S, $C_1$-$C_6$ |
| FS-165 | CB Bomb #13 | 12-14 | 1415 | Analyzed by GC, majors, S, $C_1$-$C_6$ |
| FS-166 | CB Bomb #14 | 12-14 | 1456 | Analyzed by GC, majors, S, $C_1$-$C_6$ |
| FS-167 | $AgS_2O_8$ Blank | | | TM - SSMS |
| FS-168 | PG Probe Rinse (lumpy) | | | Organic, SSMS*, BIO |
| FS-169 | PG XAD resin | 12-13 | | Organic, BIO |
| FS-170 | PG SASS Filter #122 (.3065g) | 12-13 | | SSMS*, Organic, BIO |
| FS-171 | PG SASS Filter #123 (.2389g) | 12-13 | | |

*Includes Hg, As, Se, Sb by A.A.

## REFERENCES

B-1 Lentzen, D.E., D.E. Waggoner, E.D. Estes, and W.F. Gutknecht. IERL-RTP Procedures Manual: Level 1 Environmental Assessment (Second Edition). NTIS No. PB-293 795. Research Triangle Institute, Research Triangle Park, North Carolina, 1978.

APPENDIX C
ANALYSIS METHODS

TABLE OF CONTENTS FOR APPENDIX C


| | | Page |
|---|---|---|
| C1.0 | ANION/CATION METHODS | C-2 |
| C1.1 | Ammonia | C-2 |
| C1.2 | Cyanide | C-2 |
| C1.3 | Chloride | C-2 |
| C1.4 | Fluoride | C-2 |
| C1.5 | Phosphate | C-3 |
| C1.6 | Nitrate | C-3 |
| C1.7 | Nitrite | C-3 |
| C1.8 | Sulfate | C-3 |
| C1.9 | Sulfite - Sulfide | C-3 |
| C1.10 | pH | C-4 |
| C1.11 | Total Dissolved Solids | C-4 |
| C2.0 | ELEMENTAL ANALYSIS | C-4 |
| C2.1 | Spark Source Mass Spectrometry | C-4 |
| C2.2 | Antimony, Arsenic, Selenium, and Mercury | C-4 |
| C2.3 | Metal Carbonyls | C-5 |
| C2.4 | Inductively Coupled Argon Plasma Emission Spectrometry (ICP) | C-5 |
| C2.5 | Proximate/Ultimate Analysis | C-5 |
| C2.6 | Mineral Analysis | C-5 |
| C2.7 | Gross Alpha and Beta Radiation | C-5 |
| C2.8 | Specific Isotope Analyses | C-6 |
| C3.0 | GAS CHROMATOGRAPHY | C-7 |
| C3.1 | Volatile Sulfur Species | C-7 |
| C3.2 | Fixed Gases | C-7 |
| C3.3 | Light Hydrocarbons | C-13 |
| C4.0 | ORGANIC ANALYSIS | C-21 |
| C4.1 | Extractions | C-21 |
| C4.2 | Total Chromatographable Organics (TCO) | C-21 |
| C4.3 | Gravimetric Analyses (GRAV) | C-22 |
| C4.4 | Liquid Chromatographic Separation | C-22 |
| C4.5 | Infrared Analysis | C-23 |
| C4.6 | Gas Chromatographic Analysis - Hall Dectector | C-23 |
| C4.7 | Mass Spectrometric Analysis | C-23 |
| C4.8 | Chemical Oxygen Demand (COD) | C-24 |
| C4.9 | Biochemical Oxygen Demand (BOD) | C-24 |
| C4.10 | Phenols | C-24 |
| C4.11 | Total Orgnaic Carbon (TOC) | C-25 |
| C5.0 | LEACHING STUDIES | C-26 |
| | REFERENCES | C-27 |

## C1.0 ANION/CATION METHODS

### C1.1 Ammonia

Ammonia in the sulfuric acid impinger solutions and water samples was determined on-site by the distillation/titrimetric procedure (Ref. C-1). The sample was initially distilled into an indicating boric acid absorbing solution. The collected distillate was then titrated with standard sulfuric acid. Detection limit for the procedure is 1.4 μg/ml ammonia. This is equivalent to 1.7 ppm ammonia by volume collected from 0.28 SCM of sample gas in 200 ml impinger solutions.

### C1.2 Cyanide

Interfering sulfide was precipitated from the caustic impinger solution and water samples with lead nitrate. An acid reflux distillation procedure was then used to remove interferences, and the cyanide concentration determined using the standard colorimetric method (Ref. C-1). Distilled cyanide collected in a caustic solution, was converted to cyanogen chloride by reaction with chloramine-T. Following complete conversion, a pyridine-barbituric acid reagent was added to produce a red-blue dye with absorbance at 578 nm. Cyanide in the range of 1-10 g was determined spectrophotometrically by comparison with a standard calibration curve generated with potassium cyanide standard solutions. Detection limit for the procedure is .02 μg/ml cyanide. This is equivalent to 0.15 ppm hydrogen cyanide by volume collected from 0.28 SCM sampled gas in 200 ml impinger solution.

### C1.3 Chloride

A Dionex Model 14 ion chromatograph with a conductivity detector was used to measure chloride concentration in aqueous samples. An injection volume of 100 μl of sample was used and eluted with 0.003M $Na_2CO_3$/0.003M $NaHCO_3$. A detection limit of 0.1 ppm was reported. Sample response was compared to a standard curve.

### C1.4 Fluoride

Baker (Ref. C-2), Bauman (Ref. C-3), and Thomas (Ref. C-4), describe standard addition techniques utilizing a specific ion electrode for the measurement of fluoride in aqueous samples. A citrate buffer was added to the sample to buffer both pH and ionic strength. Fluoride bound in metal complexes is released by the buffer. Fluoride concentration was related to potential changes which were measured using an Orion Model 94-09A solid state fluoride electrode and an Orion Model 701A Ion analyzer meter. A detection limit of 0.05 ppm was reported.

## C1.5 Phosphate

Phosphate was determined by the standard method (Ref. C-1) as the molybdenum blue complex. The aqueous sample was reacted with acidic ammonium molybdate to form a yellow phosphomolybdate complex. The addition of ascorbic acid develops the blue color which is measured with a spectrophotometer. A detection limit of 0.5 ppm was reported.

## C1.6 Nitrate

Nitrate was determined as in the standard method (Ref. C-1) by a colorimetric method in which nitrate reacts with chromotropic acid to form a yellow reaction product which was measured spectrophotometrically at 410 nm and compared to a set of standards. A detection limit of 0.1 ppm was reported.

## C1.7 Nitrite

Nitrite in solution was determined by a colorimetric procedure (Ref. C-1) in which a reddish-purple dye was produced by the coupling of diazotized sulfanilic acid with naphthylamine hydrochloride. The dye was measured colorimetrically at 543 nm and compared to a standard calibration curve. A detection limit of 0.01 ppm was reported.

## C1.8 Sulfate

In aqueous samples, sulfate was determined by the addition of barium chloride (Ref. C-1). The resulting turbid solution was analyzed spectrophotometrically at 450 nm. Standard curves were prepared for sample quantitation. A detection limit of 5 ppm was reported.

Sulfur dioxide and sulfur trioxide in gaseous streams were analyzed as the sulfate. Both gas species were adsorbed and oxidized to sulfate in hydrogen peroxide impinger solutions. The solutions were then boiled to remove the excess $H_2O_2$ and the sulfate oxidation product was analyzed. Carbon disulfide and carbonyl sulfide were trapped from gaseous streams in alcoholic KOH and also converted to sulfate by the addition of hydrogen peroxide and subsequent heating. The sulfate was analyzed on a Dionex Model 14 ion chromatograph and the sulfate peak compared to standard curves for quantitation. A 100 µl injection of sample was eluted using 0.003M $Na_2CO_3$/0.003M $NaHCO_3$. A detection limit of 0.1 ppm was reported.

## C1.9 Sulfite - Sulfide

Total sulfite and sulfide in aqueous samples were analyzed by titrating a 25 ml aliquot with a standardized potassium iodide-iodine solution with starch as an end-point indicator (Ref. C-1). Sulfide in the impinger solutions was precipitated as zinc sulfide with zinc acetate under alkaline conditions. The zinc sulfide was transferred to a flask and an excess of a standard iodine solution was added. The excess iodine was then back-titrated with sodium thiosulfate to a starch end-point to determine the amount of iodine consumed by the sulfide (Ref. C-1).

C1.10 pH

The pH of each sample was measured using an Orion 701 pH meter.

C1.11 Total Dissolved Solids

Total dissolved solids were measured by the standard method (Ref. C-1). A 100 ml aliquot of the aqueous sample was filtered through an 0.8 μ filter. The filtrate was poured into a pre-weighed beaker and taken to dryness. The salts and beaker were weighed and solids content calculated.

C2.0 ELEMENTAL ANALYSES

C2.1 Spark Source Mass Spectrometry

Trace metals in the gas streams were analyzed by spark source mass spectrometry (SSMS). Samples were collected in two different sampling trains; by the SASS silver persulfate method (Ref. C-5), and by the acid/base collection method. The impinger volumes were determined and aliquots that represented a constant volume of gas were removed from each impinger in the collection train. These aliquots of absorbing solution were composited for SSMS analysis to form a sample representative of each collection train. Aliquots of the liquid samples were sent directly for SSMS with no additional sample preparation. Solid samples were also sent directly for SSMS. XAD-2 resin samples were combusted in an oxygen combustion bomb. The resulting gas was absorbed in dilute nitric acid and analyzed like liquid samples by SSMS.

C2.2 Antimony, Arsenic, Selenium and Mercury

The volatile elements were analyzed directly from the composite impinger samples and aqueous samples by atomic absorption (AA) spectrophotometry. Solids, however, were first weighed into a Vycor cup and placed in a Parr combustion bomb. The bomb was sealed, pressurized with oxygen and the sample ignited. The resultant combustion products were absorbed in a 20% Ultrex nitric acid solution for analysis by atomic absorption.

Arsenic, antimony, and selenium were analyzed by the use of the hydride generation attachment of the atomic absorption spectrometer (Ref. C-5). An aliquot of sample was introduced into the system, acidified, and sodium borohydride was added to reduce the species to the hydride. The generated gas was purged into a hydrogen-argon flame for analysis.

The absorbances and detection limits are shown in the table below.

| Element | Wavelength | Detection Limit* |
|---|---|---|
| As | 193.7 nm | 3 ppb |
| Sb | 217.0 nm | 5 ppb |
| Se | 196.0 nm | 4 ppb |

* ng/ml of solution

Mercury was determined by the procedure of Hatch and Ott (Ref. C-6). Samples were acidified and the mercury oxidized with potassium permanganate. Hydroxylamine hydrochloride and stannous chloride were used to reduce the mercury to the metallic state. Then, air was bubbled through the solution. The mercury-entrained air was passed through the absorption cell of an AA and quantified at 263.7 nm. A detection limit of 0.2 ppb was reported.

## C2.3 Metal Carbonyls

Nickel and iron carbonyl trapped from gaseous streams in HCl impinger solutions were analyzed by direct injection into the flameless atomizer attachment of the AA. Instrumental parameters were:

| Element | Wavelength | Dry | Char | Atomizer | Detection Limit* |
|---|---|---|---|---|---|
| Fe | 248.3 nm | 100°C | 1100°C | 2500°C | 1 ppb |
| Ni | 232.0 nm | 100°C | 1100°C | 2700°C | 5 ppb |

*ng/ml of solution

## C2.4 Inductively Coupled Argon Plasma Emission Spectrometry (ICP)

Samples of cyclone quench water, gasifier ash sluice water, and perchloric acid digestions of gasifier ash, cyclone dust, and product gas solids were analyzed for twenty-two elements by ICP. The liquid sample was aspirated into an argon plasma. The high temperature of the plasma (∿10,000°C) induces electronic excitation of the atoms. The emitted light is passed through a slit and diffracted by a grating. Photomultiplier tubes are set at the characteristic wavelengths of the elements measured.

## C2.5 Proximate/Ultimate Analysis

Proximate/Ultimate analyses were done on solids by ASTM methods D-3172-73 and D-3176-74.

## C2.6 Mineral Analysis

Mineral analyses were performed on solid samples by solid dissolution and analysis by atomic absorption.

## C2.7 Gross Alpha and Beta Radiation

The amount of alpha and beta radiation emitted from the solid samples was measured by counting alpha and beta particles using a Geiger-Mueller tube. Differential absorbing plates were used to separate alpha particles from beta.

## C2.8 Specific Isotope Analyses

Samples of coal, gasifier ash, and cyclone dust were analyzed for Radian by ORP/EERF. Each isotope emits a characteristic radiation, therefore various counting techniques were employed. The following table lists the isotopes and the measurement technique.

TABLE C-1. ISOTOPE MEASUREMENT TECHNIQUE

| Isotope | Detector |
|---|---|
| U-234 | alpha spectrometry (surface barrier detector) |
| U-235 | alpha spectrometry (surface barrier detector) |
| U-238 | alpha spectrometry (surface barrier detector) |
| Th-227 | alpha spectrometry (surface barrier detector) |
| Th-230 | alpha spectrometry (surface barrier detector) |
| Th-232 | alpha spectrometry (surface barrier detector) |
| Po-210 | alpha spectrometry (surface barrier detector) |
| Pb-210 | alpha-beta detector (IPC) |
| Ra-226 | Lucas chamber |
| K-40 | Ge-Li gamma spectrometer |
| Pb-214 | Ge-Li gamma spectrometer |
| Bi-214 | Ge-Li gamma spectrometer |
| Th-232 (ash) | Ge-Li gamma spectrometer |

## C3.0 GAS CHROMATOGRAPHY

Grab samples of the product gas, product gas vent, test burner flue gas, and coal bin vent gas were taken for the gas chromatographic analysis of:

- major components: $H_2$, $O_2$ + Ar, $N_2$, $CO_2$, CO, and $CH_4$,
- volatile sulfur species: $H_2S$, COS, $SO_2$, $CH_3SH$, $C_2H_5SH$, $(CH_3)_2S$, and $CS_2$,
- light hydrocarbons: $C_1$ to $C_6$, boiling range -160°C to 80°C

Samples were taken at the product gas vent before and after an electrostatic precipitator (ESP) sampling device and evaluated for any compositional changes due to the ESP. The samples were taken in silanized glass sample bombs and analyzed immediately.

### C3.1 Volatile Sulfur Species

The instrument operating parameters for the analysis of the volatile sulfur species were:

| | |
|---|---|
| Instrument: | Tracor Model 560 FPD-GC |
| Column: | 3.05 m x 3.1 mm Teflon®, 1% TCEP [1,2,3-tris(cyanoethoxy) propane] and 0.5% $H_3PO_4$ on Carbopack B, 60/80 mesh |
| Carrier: | Nitrogen at 20 ml/min |
| Detector Temperature: | 150°C |
| Oven Program: | 30°C for 7 min; 10°C/min to 120°C; 120°C for 10 min |

Standard samples were generated on site using Metronics permeation tubes with certified permeation rates and zero grade nitrogen at known flows. The calibration curves for $H_2S$ at both high, 190 to 1650 vppm, and low, 5 to 25 vppm, concentration ranges are given in Figures C-1 and C-2. The calibration curves for COS, at 20 to 150 vppm, $SO_2$ at 50 to 450 vppm, and $CS_2$ at 1 to 10 vppm are given in Figures C-3 to C-5. The 95 percent confidence interval ($2\sigma$) and the number of determinations for each calibration point are given on the figures.

### C3.2 Fixed Gases

The fixed gas analyses were carried out under the following conditions:

| | |
|---|---|
| Instrument: | Fisher Gas Partitioner Model 1200 TCD-GC |
| Column 1: | 2 m x 3.1 mm, Porapak PQ |
| Column 2: | 3.4 m x 4.8 mm, Molecular Sieve 13X |
| Carrier: | 8.5% Hydrogen in Helium at 30 ml/min |
| Oven Temperature: | 50°C |
| Bridge Current: | 275 mA |

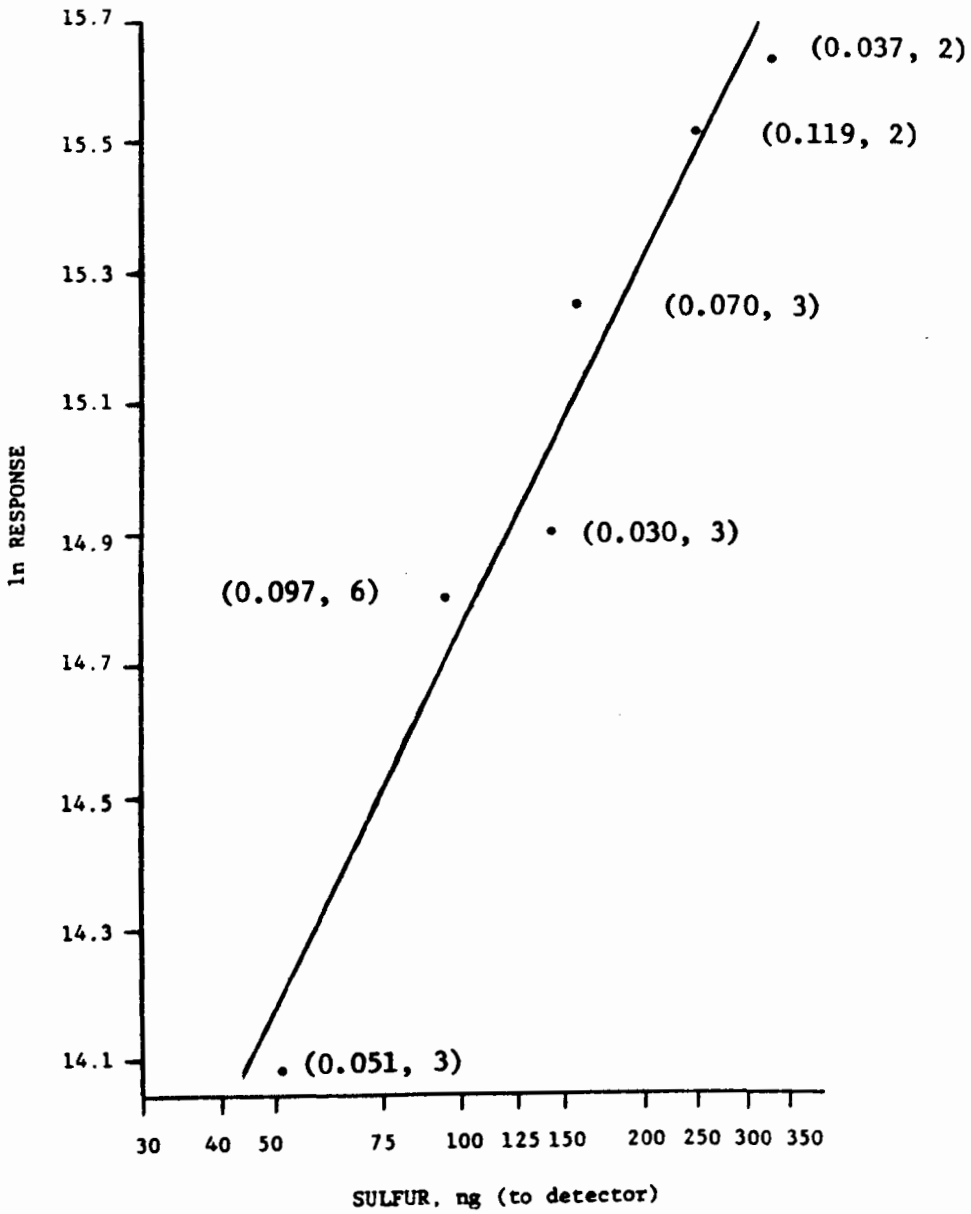


Figure C-1. $H_2S$ Calibration Curve, High Concentration Range

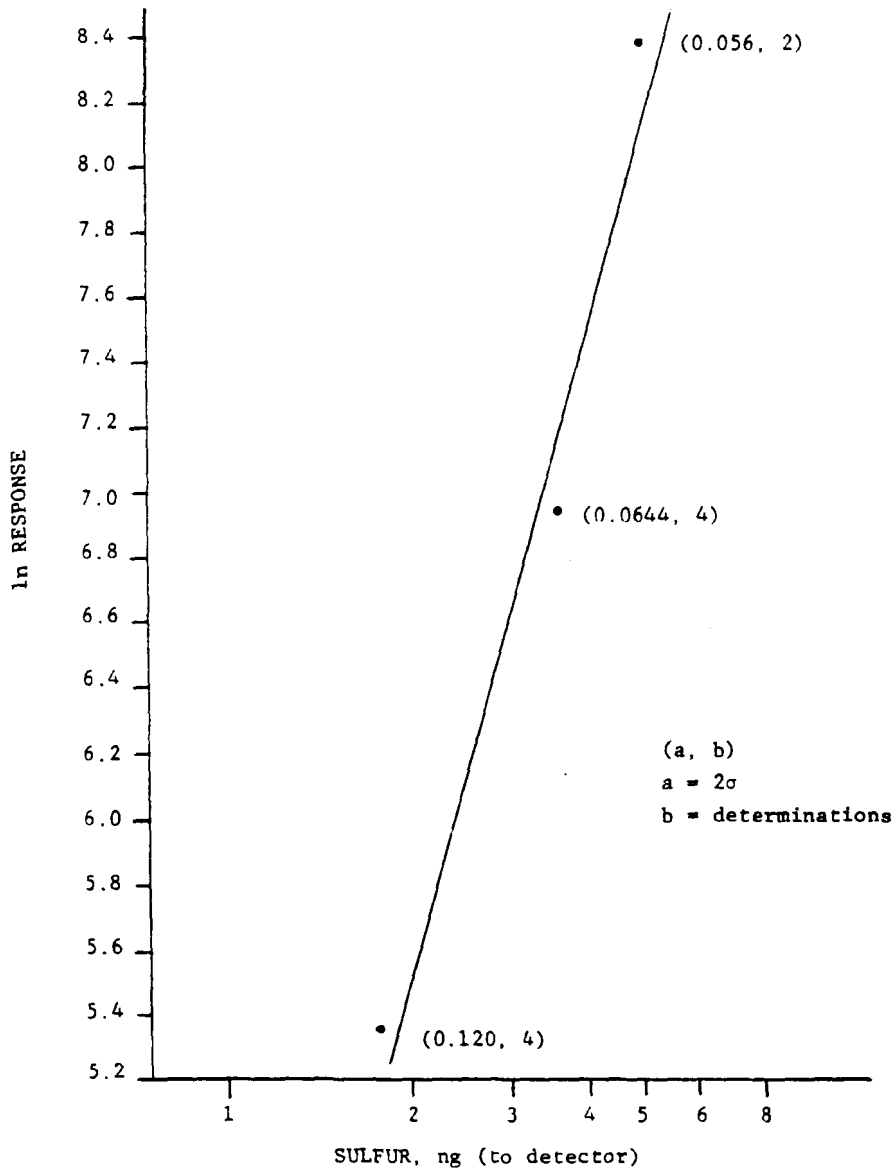


Figure C-2. $H_2S$ Calibration Curve, Low Concentration Range

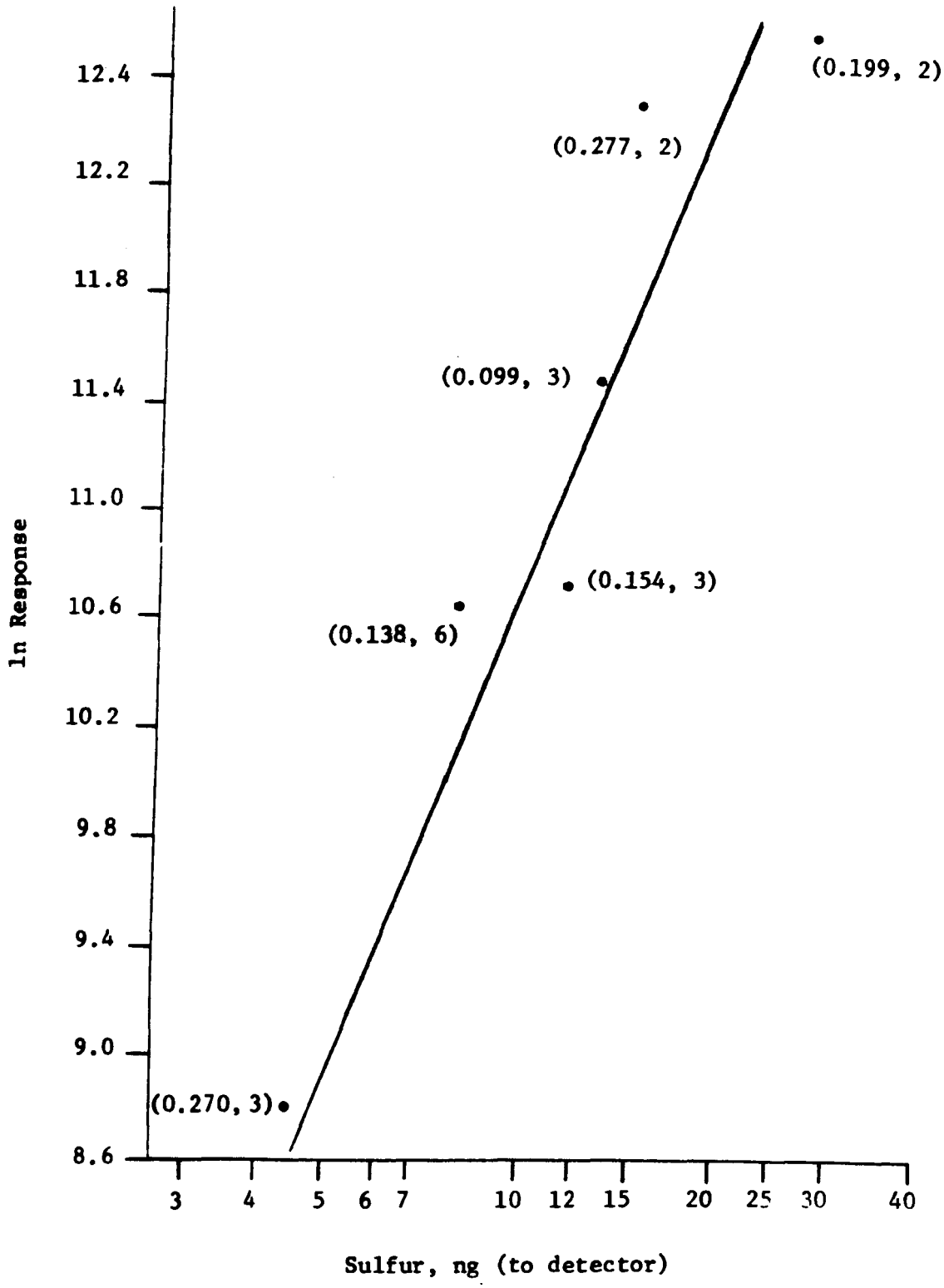


Figure C-3. COS Calibration Curve

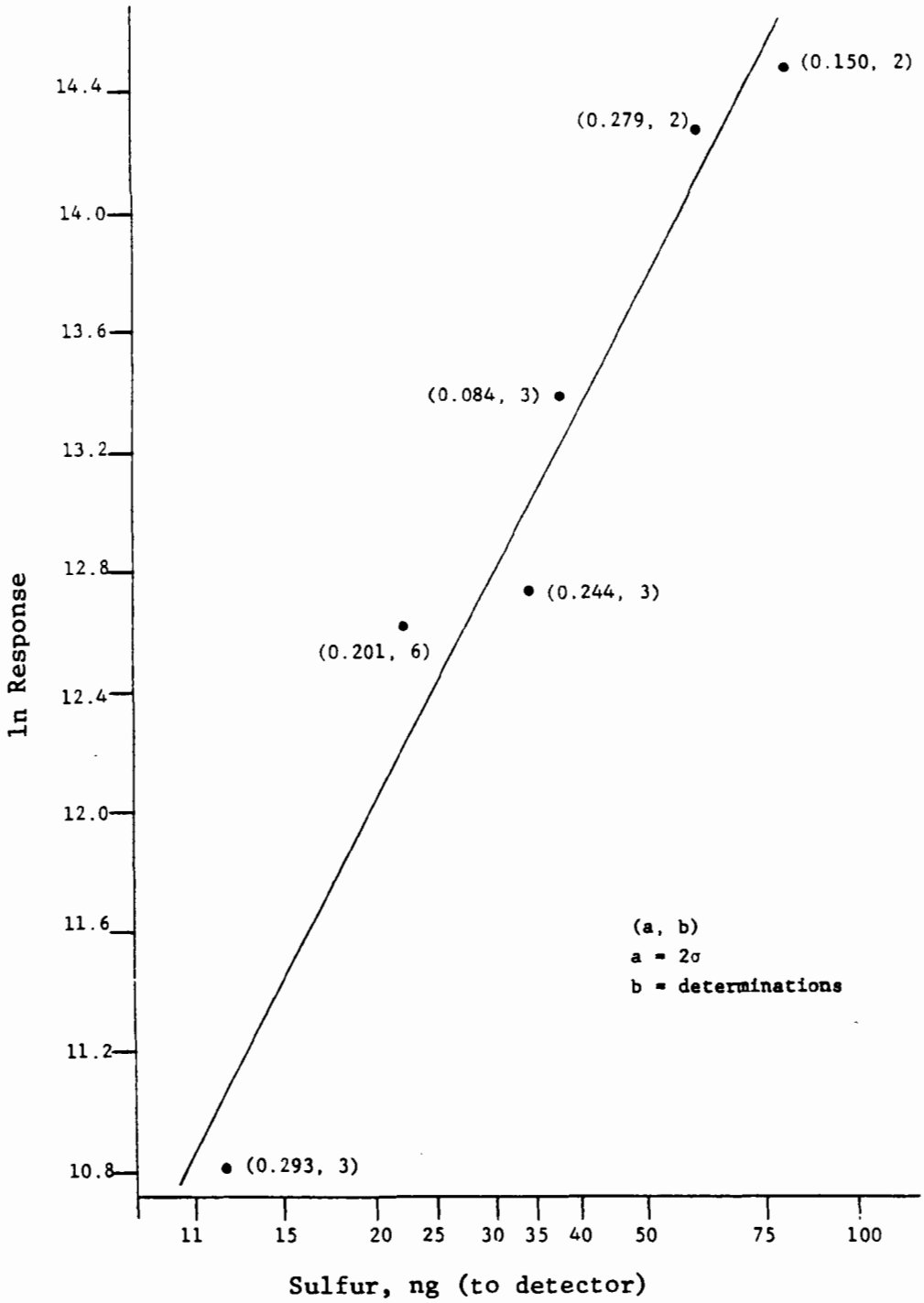


Figure C-4. $SO_2$ Calibration Curve

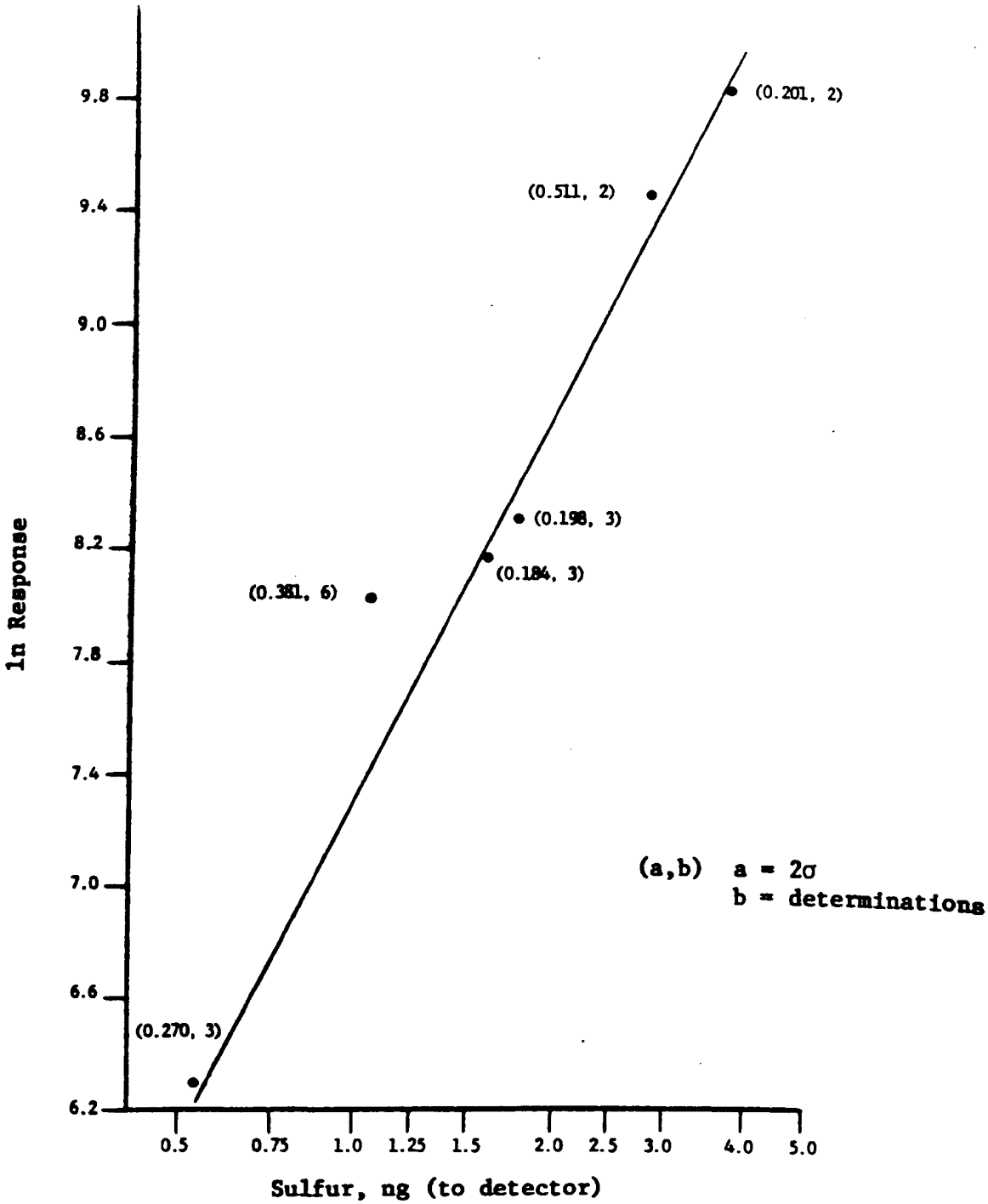


Figure C-5. $CS_2$ Calibration Curve

The instrument calibration for the fixed gases was performed on-site using standard gas mixtures supplied by Scientific Gas Products containing the species of interest. The certified mixtures used for on-site calibration have the following compositions:

| Species | Standard 1 | Standard 2 |
|---|---|---|
| $CO_2$ | 19.6% | 9.85% |
| $H_2$ | 13.1% | 48.6% |
| $O_2$ | 2.16% | 0 |
| $N_2$ | 34.9% | 12.9% |
| CO | 25.6% | 13.8% |
| $CH_4$ | 4.6% | 14.8% |

Figures C-6 to C-9 show the calibrations that were used. The 95 percent confidence limit ($2\sigma$) is given on each figure as is the number of individual determinations included in each calibration point.

## C3.3 Light Hydrocarbons

$C_1$-$C_6$ hydrocarbons were analyzed on site using the following operating parameters:

| | |
|---|---|
| Instrument: | Hewlett-Packard Model 5737A FID-GC |
| Column: | 3.05 m x 2 mm i.d. stainless steel, Porapak Q |
| Carrier: | Nitrogen at 30 ml/min |
| Detector Temperature: | 200°C |
| Oven Program: | 50°C for 8 min; 16°C/min to 200°C; 200°C for 16 min |

The calibration curves for this analysis are given in Figures C-10 to C-12. The number of determinations at each point and the 95 percent ($2\sigma$) confidence limits are given on each calibration curve.

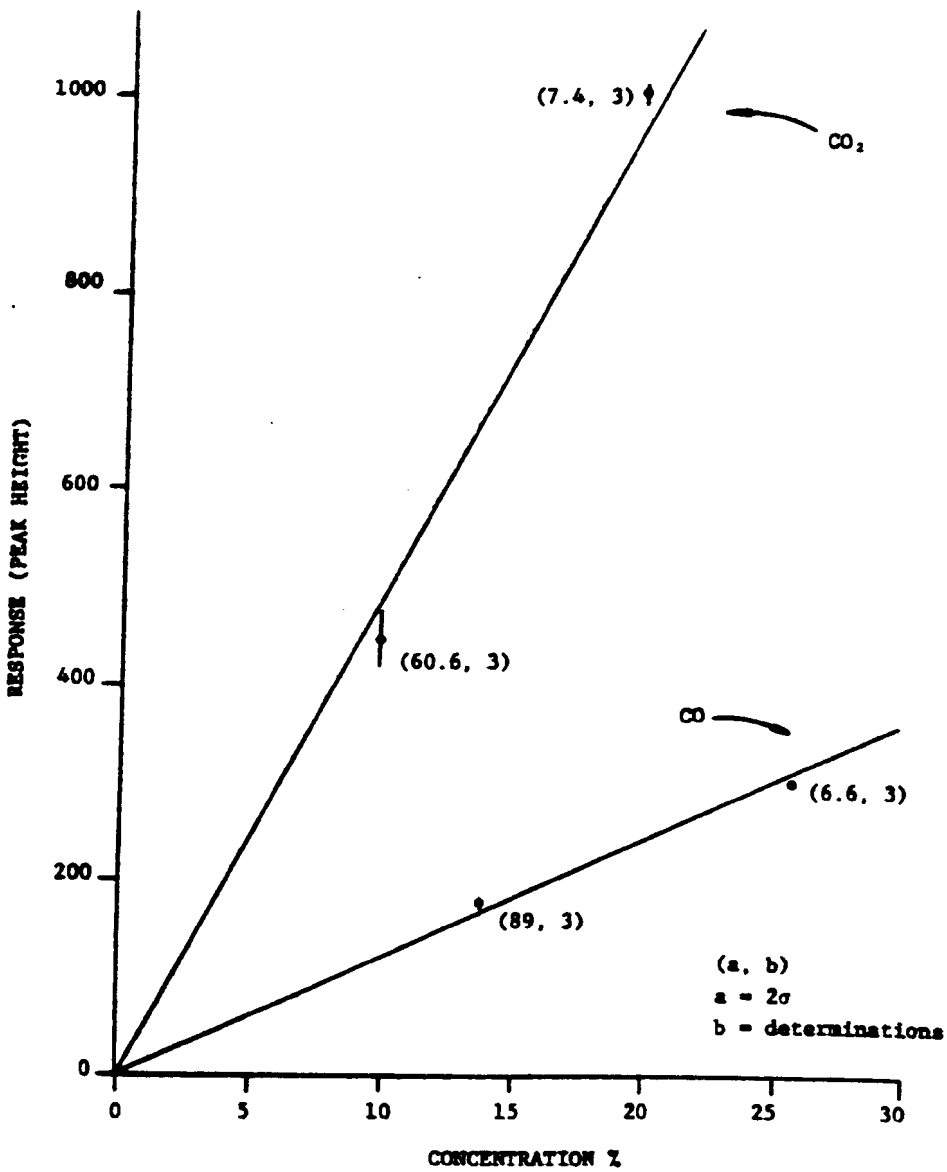


Figure C-6. $CO_2$ and CO Calibration Curve

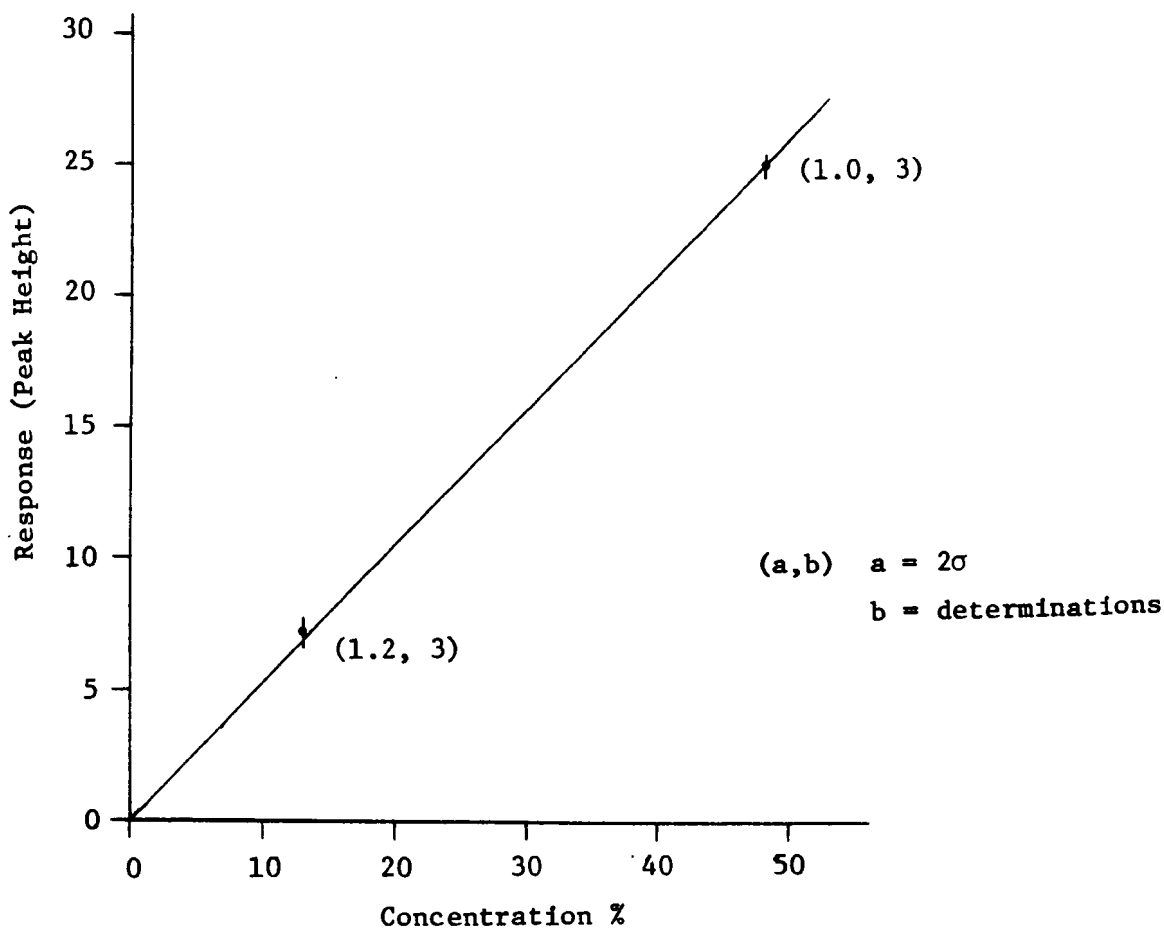


Figure C-7. $H_2$ Calibration Curve

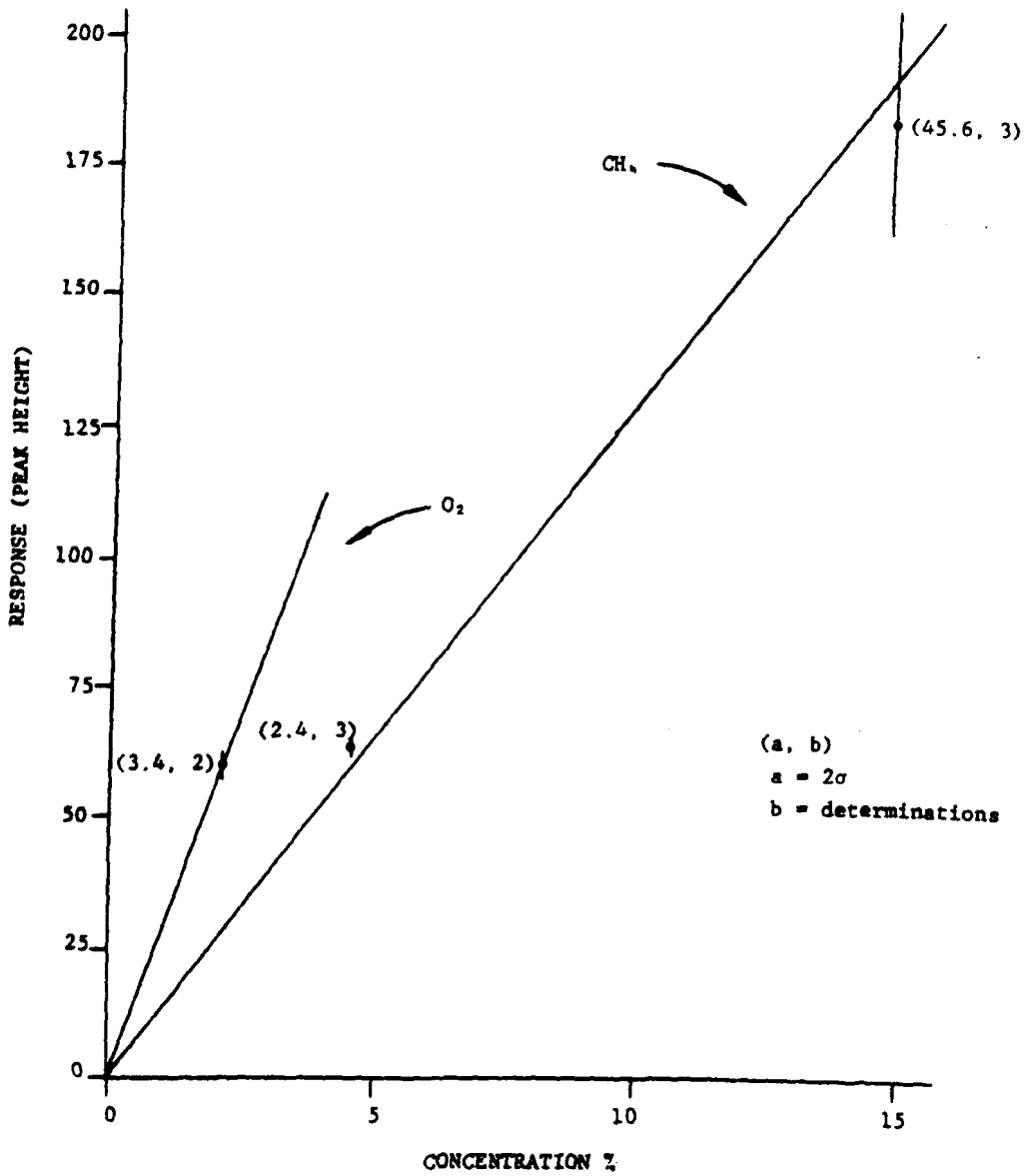


Figure C-8. $O_2$ and $CH_4$ Calibration Curve

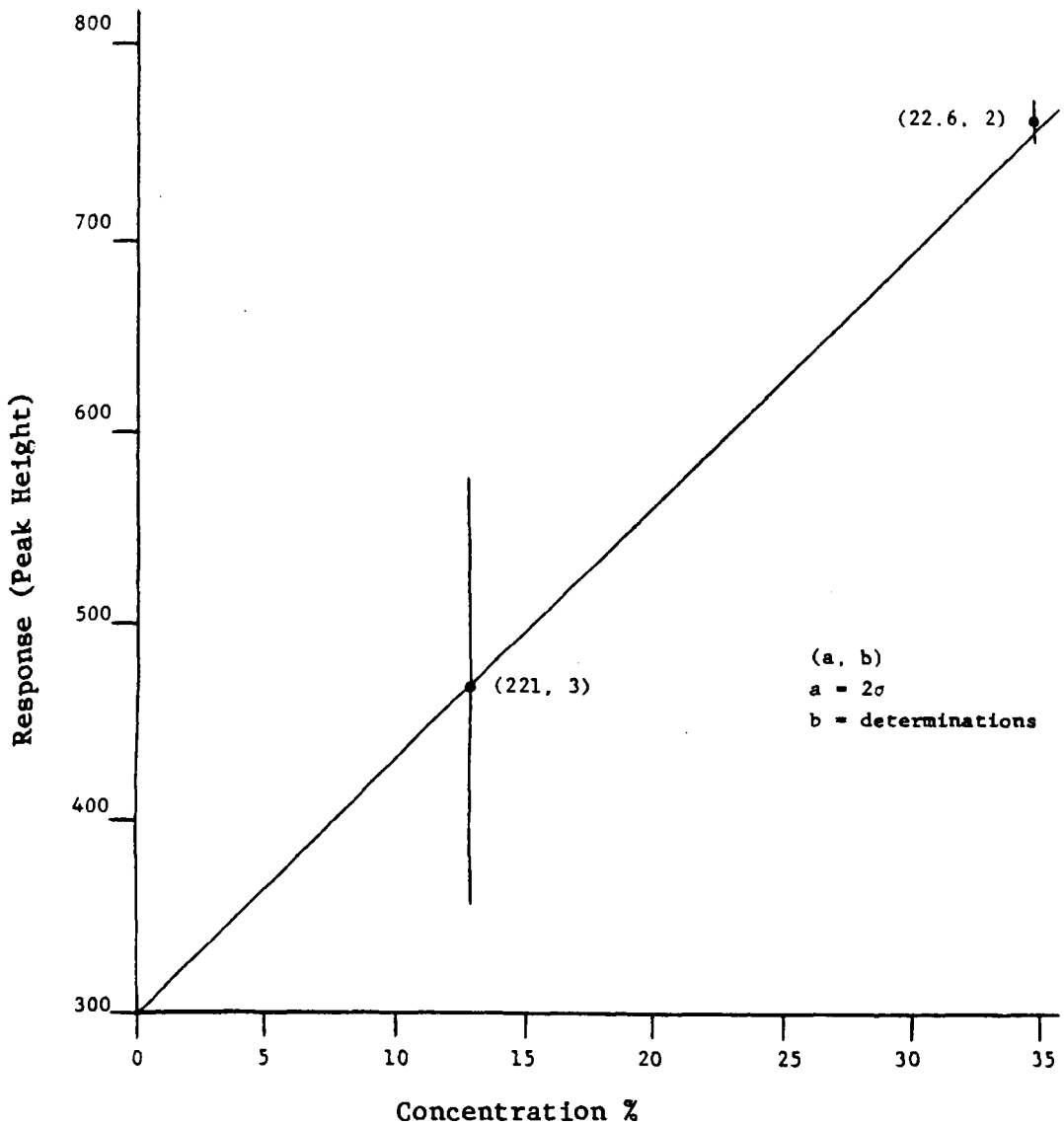


Figure C-9. $N_2$ Calibration Curve

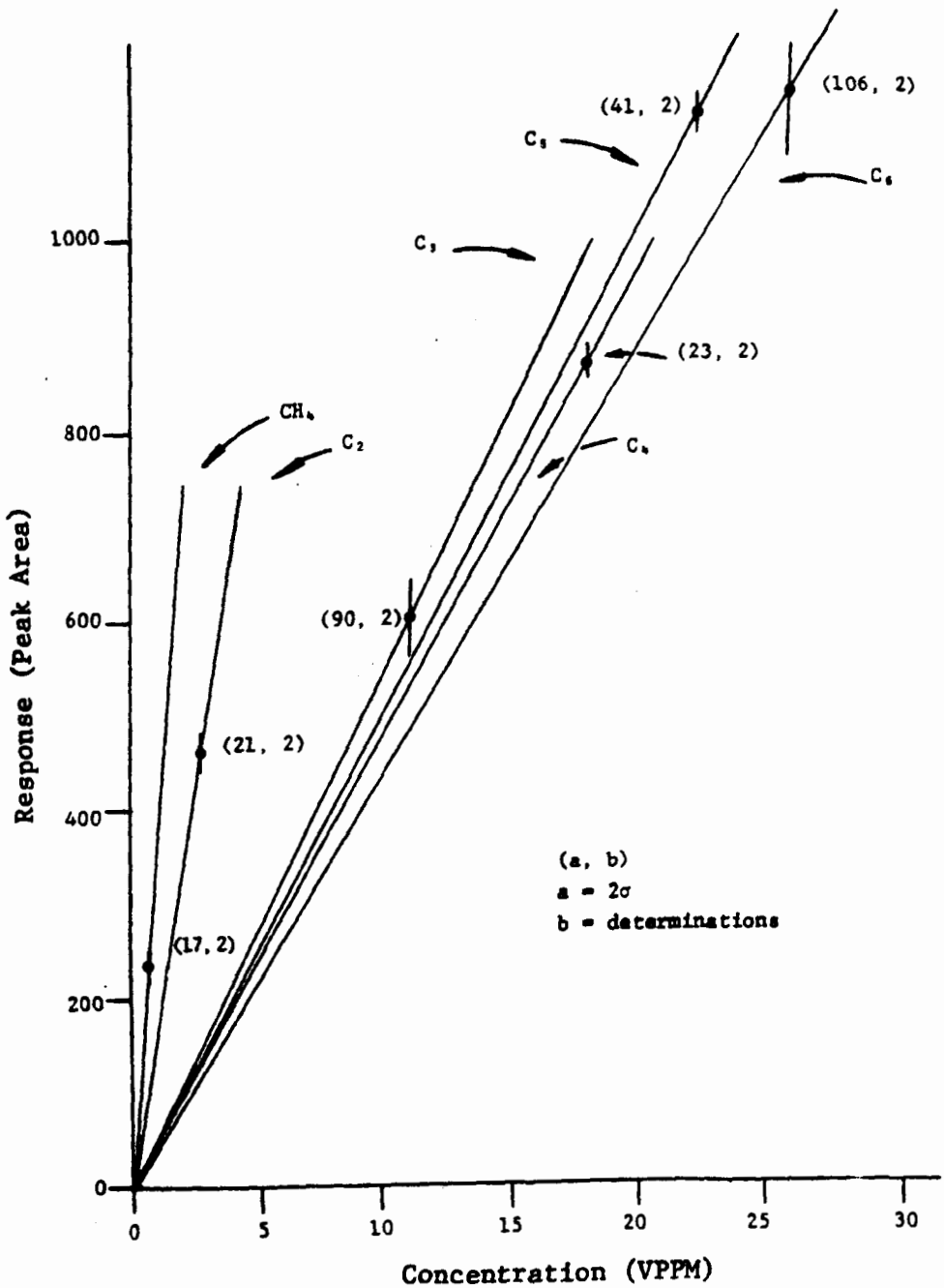


Figure C-10. $C_1$-$C_6$ Pariffins Calibration Curve

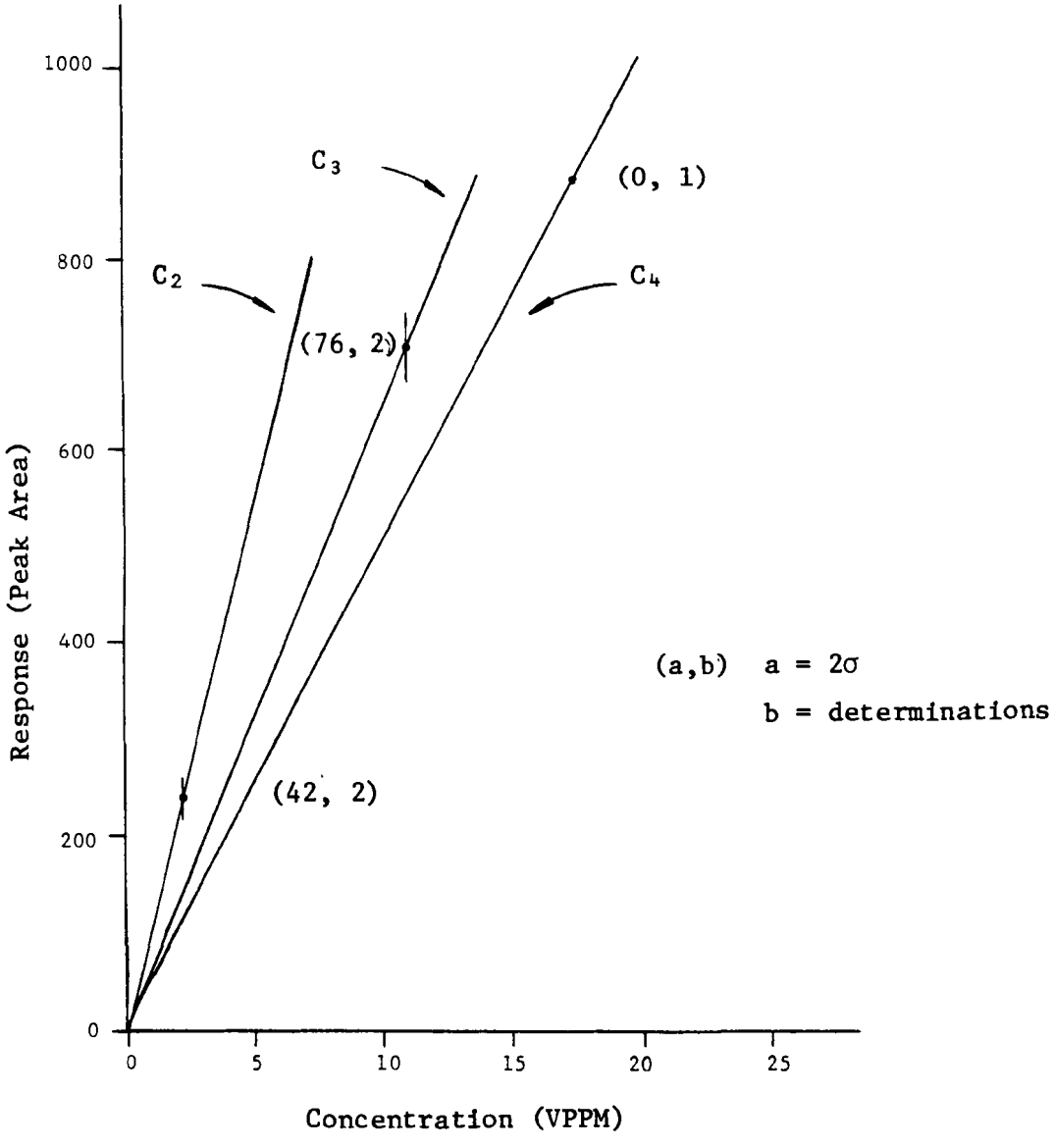


Figure C-11. $C_2$-$C_4$ Olefins Calibration Curve

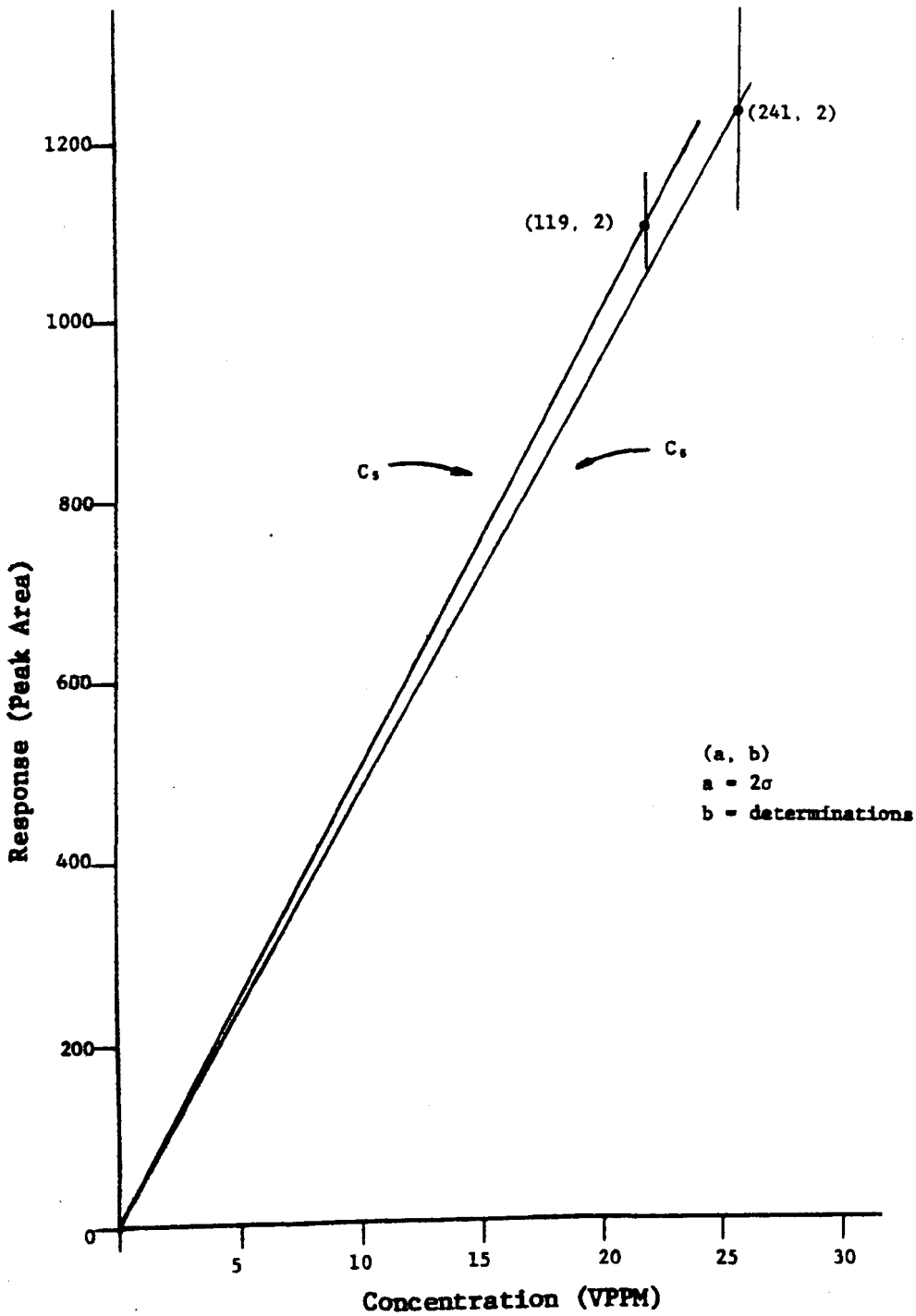


Figure C-12. $C_5$, $C_6$ Olefins Calibration Curve

## C4.0 ORGANIC ANALYSIS

Preliminary laboratory analysis of the samples was done using previously established methods (Ref. C-5). Modifications to these procedures are included with the following descriptions of the analytical methods. The detailed analysis was done using specific ion monitoring GC-MS, after a halogen-specific detector was used for gas chromatography. The halogen-specific GC was added as a means of obtaining information which could be used for specific compounds and classes of compounds at very low additional cost to the detailed phase of the analysis.

### C4.1 Extractions

Aliquots of the aqueous samples were extracted at both pH = 2 and pH = 12. The extractions were done serially with methylene chloride and ethyl ether in order to obtain the widest range of extractable organics. Solid samples were extracted in Soxhlet continuous extractors for 24 hours with methylene chloride followed by 24 hours with ethyl ether. The use of ethyl ether in these extractions was an addition to the previously cited procedures (Ref. C-5).

Following extractions, the solvent extracts were combined and concentrated using Kuderna-Danish concentrators equipped with Snyder columns.

### C4.2 Total Chromatographable Organics (TCO)

The TCO analysis provides a means of quantifying organics in the boiling range from 100°C to 300°C. The compounds eluted were quantified by comparison to n-paraffin standards of the $C_7$ to $C_{17}$ boiling range. TCO analyses were performed according to the following conditions:

| | |
|---|---|
| Instrument: | Tracor Model 560 FID-GC |
| Column: | 3.05 m x 2 mm o.d. glass, 10% OV-101 on Supelcoport 100/120 mesh |
| Carrier: | Nitrogen at 30 ml/min |
| Oven Program: | 50°C for 5 min; 20°C/min to 250°C; 250°C hold until baseline reestablished |
| Injector: | 275°C |
| Detector: | 300°C |

Chromatograms were integrated and stored using a Spectra-Physics Model 4000 with a Model 4050 printer-plotter. A $C_7$ through $C_{17}$ plus $C_{20}$ standard was run to establish retention times and boiling ranges while quantification was done using a $C_6$, $C_{12}$, and $C_{16}$ standard at concentrations approximating the sample values. Solvent blanks for all samples were run and subtracted from the samples.

## C4.3 Gravimetric Analyses (GRAV)

The GRAV analysis provides a quantification for the non-volatile components in a sample extract. Gravimetric analyses for unfractionated samples were done using a Mettler Model H20 five place analytical balance. A 5 ml aliquot of the sample extract was evaporated at room temperature in a dessicator. If less than 10 mg of material was present, volumetric aliquots were added until a reproducible ±0.1 mg weight in the 10 mg range was achieved. For concentrated extracts, a 1.0 ml aliquot was evaporated in Cargille microbeakers. For GRAV analysis of the LC fractions a Perkin-Elmer AD-2 electronic autobalance was used (Section 4.4). Sample aliquots were taken according to the standard procedure (Ref. C-5). Solvent blanks and LC fraction blanks were run in the same manner as the samples. Prior to use, all glassware was dichromate washed, rinsed with distilled water, then methanol and methylene chloride rinsed.

## C4.4 Liquid Chromatographic Separation (LC)

The LC separation gives a fractionation of the sample extract into compound classes based on the polarity. This separation then facilitates the subsequent detailed analysis. This is not a high resolution technique and compound classes may overlap in individual fractions. However with adequate care, reproducible, predictable separations can be achieved.

The samples were prepared for the liquid chromatography according to recommended procedures (Ref. C-5). Extracts which had no TCO portion such as the gasifier ash were evaporated to dryness on silica gel and the silica gel which contained the sample transferred to the head of a prepared LC column. Samples which had TCO content were exchanged from methylene chloride/ethyl ether into cyclopentane using the recommended three 1 ml exchange evaporations. After the exchange volume has been reduced to 1 ml for the last time, the solvent mixture should be less than five percent methylene chloride/ether. This should be sufficiently low not to alter the polarity of the elution series so that no aromatic components will break through into the aliphatic fraction. The LC column parameters were as follows:

| | |
|---|---|
| Column: | 200 mm x 10.5 mm o.d., glass with Teflon® stopcock, glass solvent reservoir, water jacketed, outlet water temperature 20°C |
| Absorbent: | Silica gel, 60-200 mesh, Davidson, Grade 950. Soxhlet extracted with methanol, methylene chloride and pentane, activated at 110°C for 2 hours |

The LC column was slurry packed and a flow rate of less than 1 ml/min used. Seven LC fractions were collected according to the appropriate elution sequence and volumes (Ref. C-5).

## C4.5 Infrared Analysis

Infrared analyses were done using a Perkin-Elmer Model 283 grating spectrophotometer. The GRAV aliquots were taken up in methylene chloride and run as thin films between two sodium chloride plates. Transmission spectra were run from 4000 $cm^{-1}$ to 400 $cm^{-1}$. Daily quality checks were made to verify that the instrument met the instrument operating requirements outlined (Ref. C-5).

## C4.6 Gas Chromatographic Analysis - Hall Detector

Gas chromatography was done using the Hall 700 electrolytic conductivity detector in halogen specific mode. This enabled a measurement to be made analogous to the TCO value that indicated a chromatographic halogen content. Aliquots of the samples prior to the LC separation were run as well as specific fractions which could potentially contain the bulk of the halogenated material. Dual injection mode was utilized as a means of correlating the halogen containing peaks with the FID results. The procedures used were:

| | |
|---|---|
| Instrument: | Tracor Model 560 Hall/FID/GC |
| Columns: | 3.05 m x 2 mm o.d., glass, 10% OV-101 on Supelcoport 100/120 mesh |
| Carrier: | Nitrogen at 25 ml/min |
| Oven Program: | 50°C for 5 min; 20°C/min to 300°C; 300°C until baseline |
| Injector: | 250°C |
| Detector: | Hall = 300°C, FID = 300°C |

Samples were solvent exchanged into acetonitrile prior to analysis in order not to overload the Hall detector with halogenated solvent. A chlorinated phenol standard was used as a reference for concentration correlations.

## C4.7 Mass Spectrometric Analysis

The LC fractions were submitted for mass spectral analysis following a prioritization scheme based on the MEG's which generated lists of some specific compounds of interest. Selected ion monitoring (SIM) searches were performed to identify organics of interest. This technique is based on the appearance of specific key fragmentation ions within a known GC retention time window. Quantitation was done by response factor comparison to a known amount of $d_{10}$-anthracene which was used as an internal standard. The selected ions monitored were varied as the gas chromatographic retention times of the various compounds of interest progressed. The mass spectral information obtained was stored on magnetic disk for reference.

The concentrated sample extracts were analyzed using a computer-controlled Hewlett-Packard Model 5985 mass spectrometer system in the specific ion monitoring mode. The analyses were carried out under the following gas chromatographic and mass spectrometer operating conditions:

| | |
|---|---|
| Column: | 1.8 m x 2 mm o.d., glass, 3% SP-2250 |
| Carrier: | Helium at 30 ml/min |
| Oven Program: | 50°C for 4 min; 8°C/min to 260°C; 260°C for 8 min |
| Ionization Voltage: | 70eV |

Tenax-GC with silica gel was used to trap components in the boiling range of 30°C to 150°C and allow analysis for benzene-toluene-xylene compounds at lower concentrations. The Tenax-GC tube was analyzed by thermal desorption gas chromatography-mass spectrometry (GC-MS). With this technique, the glass-lined steel tube which contains the volatile sample sorbed onto Tenax-GC and silica gel is heated while nitrogen flows through the tube. The nitrogen stream carries the thermally desorbed organics onto the GC column where they are separated and then into the mass spectrometer for quantification. Hexadeuterobenzene was used as the internal standard for this analysis.

## C4.8 Chemical Oxygen Demand (COD)

Chemical oxygen demand was determined by the standard method (Ref. C-1). Samples are refluxed for two hours with potassium dichromate and sulfuric acid. After cooling, the remaining dichromate is titrated with ferrous ammonium sulfate. The amount of potassium dichromate consumed is proportional to the amount of oxidizable organic matter in the sample. A detection limit of 5 ppm was reported.

## C4.9 Biochemical Oxygen Demand (BOD)

BOD was determined according to specified procedures (Ref. C-1). BOD is a measure of the change in dissolved oxygen after five days incubation at 20°C. An initial dissolved oxygen determination is made using the azide modification of the Winkler titration. In this procedure, iodine is liberated and titrated with a standard sodium thiosulfate solution. After five days a final concentration was determined. The change in dissolved oxygen is related to the amount of orgnaic mattter which is assimilated and oxidized by microorganisms.

## C4.10 Phenols

Phenols were analyzed in aqueous samples by standard methods (Ref. C-1). These methods include a distillation procedure in which phenols are removed from interferences and a colorimetric measurement. In the colorimetric procedure, phenols in the distillate react with 4-aminoantipyrine at pH 10 in the presence of potassium ferricyanide to form a colored antipyrine dye. This dye is extracted with chloroform and the absorbance is measured with a spectrophotometer at 460 nm. A detection limit of 10 ppb was reported.

## C4.11 Total Organic Carbon (TOC)

TOC was determined using a Dohrmann Model 54 TOC Analyzer. The sample was placed in a sparging reservoir and a potassium persulfate-phosphoric acid reagent was added. The inorganic carbon was purged from the sample, followed by UV oxidation of the organic carbon to $CO_2$. The $CO_2$ is then subjected to reductive pyrolysis to produce methane and FID detection of the methane determines the total organic carbon content of the sample. A calibration curve was generated by analyzing known solutions of potassium acid phthalate. A detection limit of 10 ppb was reported.

## C5.0 LEACHING STUDIES

Gasifier ash and cyclone dust were extracted using the Resource Conservation and Recovery Act (RCRA) procedure as outlined in the Federal Register of December 18, 1978, "Hazardous Waste, Proposed Guidelines and Regulations" (Ref. C-7). One hundred grams of the air dried solid was weighed into a polyethylene bottle along with a weight of deionized water equal to 16 times the weight of the solid. The pH was adjusted to 5.0 with Ultrex glacial acetic acid. The pH was monitored for one hour and adjusted as needed.

The sample was agitated for 24 hours with a rotary shaker. At the end of the 24 hour leaching, the samples were filtered through a 0.45 micron Millipore filter. The filtrate was diluted to 20 times the initial weight of the solid. The dilute filtrates and blanks were preserved for analysis. The total dissolved solids, total suspended solids, and the pH of the samples were measured. They were also analyzed for:

- Ammonia
- Cyanide
- Chloride
- Fluoride
- Phosphate
- Nitrate
- Nitrite
- Sulfate, and
- Sulfite

using the anion and cation analysis methods given in Section C1.0. Analyses for COD, BOD, TOC, and phenols were done by the methods described in Section C4.0; and trace element analysis were done by the methods outlined in Section C2.0.

## REFERENCES


C-1 American Public Health Association, American Water Works Association, and Water Pollution Control Federation, Standard Methods for the Examination of Water and Wastewater, 14th edition. Washington, D.C., American Public Health Association, 1975.

C-2 Baker, R.L., "Determination of Fluoride in Vegetation Using the Specific Ion Electrobe," Anal. Chem. 44(7), 1326, (1972).

C-3 Baumann, Elizabeth W., "Trace Fluoride Determination with Specific Ion Electrode," Anal. Chem. Acta 42, 127-132, (1968).

C-4 Thomas, Josephus, Jr. and Harold J. Gluskoter, "Determination of Fluoride in Coal with the Fluoride Ion-Selective Electrode," Anal. Chem. 46(9), 1321, (1974).

C-5 Lentzen, D.E., D.E. Waggoner, E.D. Estes, and W.F. Gutknecht, IERL-RTP Procedures Manual: Level 1 Environmental Assessment (Second Edition), NTIS No. Pb-293 795, Research Triangle Institute, Research Triangle Park, North Carolina, October 1978.

C-6 Hatch, W. Ronald and Welland L. Ott, "Determination of Submicrogram Quantities of Mercury by Atomic Absorption Spectrometry," Anal. Chem. 40(14), 2085-7, (1968).

C-7 Resource Conservation and Recovery Act, Public Law 95-580.

APPENDIX D
ANALYTICAL DATA

TABLE OF CONTENTS FOR APPENDIX D


| | | Page |
|---|---|---|
| D1.0 | ON-SITE GAS ANALYSIS RESULTS | D-2 |
| | Product Gas, Tables D1 to D3 | D-4 |
| | Test Burner Flue Gas, Tables D4 and D5 | D-7 |
| | Coal Bin Vent Gas, Table D6 | D-9 |
| D2.0 | INORGANIC ANALYSIS RESULTS | D-10 |
| | Product Gas, Tables D7 to D14 | D-14 |
| | Test Burner Flue Gas, Tables D15 to D26 | D-23 |
| | Gasifier Ash, Tables D27 to D35 | D-36 |
| | Cyclone Dust, Tables D36 to D44 | D-46 |
| | Lignite, Tables D45 to D55 | D-56 |
| | Service Water, Table D56 | D-68 |
| | Leachate, Tables D57 to D64 | D-70 |
| D3.0 | ORGANIC SCREENING ANALYSIS RESULTS | D-78 |
| | Product Gas Particulates, Tables D65 and D66 | D-80 |
| | Product Gas Organic Module Composite, Tables D67 and D68 | D-87 |
| | Test Burner Flue Gas Composite, Tables D69 and D70 | D-94 |
| | Gasifier Ash, Tables D71 and D72 | D-101 |
| | Cyclone Dust, Tables D73 and D74 | D-108 |
| | Gasifier Ash Sluice Water, Table D75 | D-116 |
| | Cyclone Dust Quench Water, Table D76 | D-119 |
| D4.0 | DETAILED ORGANIC ANALYSIS RESULTS | D-120 |
| | Product Gas Particulates, Tables D77 to D83 | D-122 |
| | Product Gas Organic Module Composite, Tables D84 to D87 | D-131 |
| | Test Burner Flue Gas Composite, Tables D88 and D89 | D-136 |
| | Gasifier Ash, Table D90 | D-139 |
| | Cyclone Dust, Table D91 | D-141 |

## D1.0 ON-SITE GAS ANALYSIS RESULTS

The gas streams analyzed on-site were the:

- Product Gas
  - prior to the test burner, and
  - at the start-up vent
- Test Burner Flue Gas
- Coal Bin Vent Gas

The anlaysis methods used on-site are given in Appendix C. The analytical data is summarized by gas stream and the analysis parameters for each stream are given in Figure D1.

| | Gas Chromatography | | | Impinger Analysis | |
|---|---|---|---|---|---|
| | Fixed Gases | Sulfur Species | Hydrocarbons | Ammonia | Cyanide |
| Product Gas | ● | ● | ● | ● | ● |
| Product Gas (Vent) | ● | ● | ● | | |
| Test Burner Flue Gas | ● | ● | ● | ● | ● |
| Coal Bin Vent Gas | | | | ● | ● |

Figure D1. On-Site Gas Analysis Matrix

TABLE D1. GAS CHROMATOGRAPHY ANALYSIS RESULTS: PRODUCT GAS

| | DATE: 12-12-78<br>TIME: 2010 | 12-12-78<br>2013 |
|---|---|---|
| **Major Components-%** | | |
| $CO_2$ | 7.5 | 7.6 |
| $H_2$ | 18.9 | 18.7 |
| $O_2$ + Ar | 0.38 | 0.41 |
| $N_2$ | 41.8 | 41.1 |
| CO | 30.0 | 31.1 |
| $CH_4$ | 1.4 | 1.2 |
| **Sulfur Species - Vppm** | | |
| $H_2S$ | 1033 | 1015 |
| COS | 130 | 137 |
| $SO_2$ | ND | 1.4 |
| $CS_2$ | 15.8 | 15.7 |
| **Hydrocarbons - Vppm** | | |
| $CH_4$ | 10222 | 10116 |
| $C_2H_6$ | 725 | 726 |
| $C_2H_4$ | 315 | 328 |
| $C_3$-isomers | 456 | 479 |
| $C_4$-isomers | 178 | 218 |
| $C_5$-isomers | 88 | 84 |
| $C_6$-isomers | 148 | 174 |

ND = not detected.

TABLE D2. AMMONIA AND CYANIDE ANALYSIS RESULTS: PRODUCT GAS

| Species | SCM* Sampled | Total µg | vppm |
|---|---|---|---|
| Ammonia | 0.0274 | 20400 | 1299 |
| Ammonia | 0.0298 | 659100 | 869 |
| Ammonia | 0.0322 | 271600 | 357 |
| Cyanide | 0.143 | 37400 | 236 |
| Cyanide | 0.117 | 27800 | 215 |
| Cyanide | 0.134 | 22100 | 150 |

*SCM at 25°C (77°F) and 101 kPa (1 atm), dry basis.

TABLE D3. GAS CHROMATOGRAPHY ANALYSIS RESULTS: PRODUCT GAS VENT

| DATE:<br>TIME: | 12-13-78<br>1715 | 12-13-78<br>1730 | 12-13-78<br>1910 | 12-13-78<br>1930 | 12-13-78<br>2200 | 12-13-78<br>2320 |
|---|---|---|---|---|---|---|
| **Major Components-%** | After ESP | Before ESP | Before ESP | After ESP | After ESP | Before ESP |
| $CO_2$ | 8.7 | 8.6 | 9.0 | 9.4 | 10.8 | 10.3 |
| $H_2$ | 14.4 | 16.0 | 15.8 | 16.8 | 13.4 | 15.8 |
| $O_2$+ Ar | 0.58 | 0.57 | 0.49 | 0.54 | 1.0 | 0.78 |
| $N_2$ | 46.02 | 45.4 | 46.4 | 45.0 | 50.6 | 47.7 |
| CO | 29.0 | 28.0 | 27.0 | 27.0 | 23.0 | 24.0 |
| $CH_4$ | 1.3 | 1.4 | 1.3 | 1.3 | 1.2 | 1.4 |
| **Sulfur Species - Vppm** | | | | | | |
| $H_2S$ | 1055 | 1140 | 1098 | 1209 | 1024 | 1121 |
| COS | 139 | 145 | 145 | 154 | 130 | 145 |
| $SO_2$ | 1.0 | 1.4 | 2.2 | ND | 61.9 | 30.2 |
| $CS_2$ | 12.9 | 15.5 | 10.6 | 12.9 | 9.4 | 9.8 |
| **Hydrocarbons - Vppm** | | | | | | |
| $CH_4$ | 9135☆ | 10257☆ | 10105☆ | 10227☆ | 8356 | 9477 |
| $C_2H_6$ | 618 | 701 | 697 | 694 | 540 | 606 |
| $C_2H_4$ | 288 | 307 | 347 | 361 | 274 | 307 |
| $C_3$ + isomers | 455 | 459 | 462 | 482 | 388 | 422 |
| $C_4$ + isomers | 191 | 184 | 199 | 231 | 177 | 174 |
| $C_5$ + isomers | 96 | 98 | 98 | 172 | 149 | 598 |
| $C_6$ + isomers | 169 | 186 | 199 | 253 | 123 | 250 |

ND = Not detected.
☆Single analysis only.

TABLE D4. GAS CHROMATOGRAPHY ANALYSIS RESULTS: TEST BURNER FLUE GAS

| | DATE: | 12/12/78 | 12/12/78 | 12/12/78 | 12/12/78 |
|---|---|---|---|---|---|
| | TIME: | 0130 | 1535 | 1551 | 1715 |
| | | | | | * |
| **Major Components - %** | | | | | |
| $CO_2$ | | 3.8 | 6.0 | 5.8 | 6.2 |
| $H_2$ | | 2.8 | ND | ND | ND |
| $O_2$ + Ar | | 16.3 | 14.1 | 14.2 | 19.2 |
| $N_2$ | | 77.1 | 79.8 | 80.0 | 74.5 |
| CO | | ND | ND | ND | ND |
| $CH_4$ | | ND | ND | ND | ND |
| **Sulfur Species - Vppm** | | | | ∇ | |
| $H_2S$ | | 19.5 | ND | ND | ND |
| COS | | 0.2 | ND | ND | ND |
| $SO_2$ | | 170.0 | 138.0 | 39.7 | 64.0 |
| $CS_2$ | | 5.0 | 4.8 | 1.2 | ND |
| **Hydrocarbons - Vppm†** | | | | | |
| $CH_4$ | | | | | |
| $C_2H_6$ | | | | | |
| $C_2H_4$ | | | | | |
| $C_3$ - isomers | | | | | |
| $C_4$ - isomers | | 5.9 | | | |
| $C_5$ - isomers | | | | | 3.6 |
| $C_6$ - isomers | | | | 8.0 | |

∇Single point analyses due to insufficient sample pressure, sample probably diluted with additional air

*Slight condensate visible in sample bomb.

ND = Not detected.

†Hydrocarbons not detected <1 Vppm

TABLE D5. AMMONIA AND CYANIDE ANALYSIS RESULTS: TEST BURNER FLUE GAS

| Species | SCM* Sampled | Total µg | Vppm |
|---|---|---|---|
| Ammonia | 0.175 | ND | <0.005 |
| Ammonia | 0.268 | ND | <0.005 |
| Ammonia | 0.567 | ND | <0.005 |
| Ammonia | 0.390 | ND | <0.005 |
| Cyanide | 0.274 | ND | <0.02 |
| Cyanide | 0.272 | 332 | 1.1 |
| Cyanide | 0.223 | 459 | 1.9 |

ND = Not detected.
*SCM at 25°C (77°F) and 101 kPa (1 atm), dry basis.

TABLE D6. AMMONIA AND CYANIDE ANALYSIS RESULTS: COAL BIN VENT GAS

| Species | SCM* Sampled | Total μg | Vppm |
|---|---|---|---|
| Ammonia | 0.567 | 193 | 0.49 |
| Ammonia | 0.475 | ND | <.005 |
| Ammonia | 0.466 | ND | <.005 |
| Cyanide | 0.430 | 27 | 0.057 |
| Cyanide | 0.543 | 17 | 0.028 |
| Cyanide | 0.574 | 20 | 0.032 |

*SCM at 25°C (77°F) and 101 kPa (1 atm), dry basis.

## D2.0 INORGANIC ANALYSIS RESULTS

The results of the laboratory analyses given in the following data sections were obtained using the analytical methods described in Appendix C. The individual samples and the analysis parameters are listed by stream in Figure D2. The analysis results for each sample are presented following the appropriate stream analysis diagrams. The streams analyzed were:

- Product Gas
  - particulates
  - impinger train
- Test Burner
  - particulates
  - resin catch
  - condensate
  - impinger composite
- Gasifier Ash
  - gasifier ash
  - gasifier ash sluice water
- Cyclone Dust
  - cyclone dust
  - cyclone dust quench water

The feed lignite, the service water, and the ash and dust leachate analysis results are also givn in the data sections. Analytical results for the quality assurance blanks are presented also.

| SAMPLE NUMBER | SAMPLE TYPE | SSMS | AAS | ICP | RADIO-ACTIVITY | PROX/ULT | ANION/CATION |
|---|---|---|---|---|---|---|---|
| | PRODUCT GAS | | | | | | |
| 2394 | - Particulates | ● | ● | ● | | | |
| 2395 | - Particulate extract | ● | ● | | | | |
| 2285 | - Acid impinger composite | ● | ● | | | | |
| 2296 | - Acid impinger blank | ● | ● | | | | |
| 2286 | - Base impinger composite | ● | ● | | | | |
| 2285 | - Base impinger blank | ● | ● | | | | |
| | TEST BURNER | | | | | | |
| 2298 | - SASS cyclone particulates <3 μm | ● | | | | | |
| 2299 | - SASS probe rinse | ● | ● | | | | |
| | - SASS condensate | ● | | | | | |
| 2396 | - Extracted XAD resin | ● | ● | | | | |
| 2398 | - XAD resin extract | ● | ● | | | | |
| 2283 | - SASS $Ag_2S_2O_8$ impinger composite | ● | ● | | | | |
| | - XAD resin blank | ● | | | | | |
| 2284 | - SASS impinger blank | ● | ● | | | | |
| | - $CH_2Cl_2$ blank | ● | | | | | |
| | - Ether blank | ● | | | | | |
| | GASIFIER ASH | | | | | | |
| 2274 | - Gasifier ash composite | ● | ● | ● | ● | ● | |
| 2280 | - Gasifier ash sluice water | ● | ● | ● | | | ● |
| | CYCLONE DUST | | | | | | |
| 2279 | - Cyclone dust | ● | ● | ● | ● | ● | |
| 2281 | - Cyclone dust quench water | ● | ● | ● | | | ● |

Figure D2. Inorganic Analysis Matrix

Figure D2. Continued

| SAMPLE NUMBER | SAMPLE TYPE | SSMS | AAS | ICP | RADIO-ACTIVITY | PROX/ ULT | ANION/ CATION |
|---|---|---|---|---|---|---|---|
| | LIGNITE | | | | | | |
| 2272 | - Lignite composite | ● | ● | | ● | ● | |
| 2266 | - Lignite | | | | | ● | |
| 2267 | - Lignite | | | | | ● | |
| 2268 | - Lignite | | | | | ● | |
| 2269 | - Lignite | | | | | ● | |
| 2270 | - Lignite | | | | | ● | |
| 2271 | - Lignite | | | | | ● | |
| | SERVICE WATER | | | | | | |
| 2282 | - Service water | ● | | | | | |
| | LEACHATES | | | | | | |
| 2352 | - Gasifier ash leachate | ● | ● | | | | ● |
| 2353 | - Cyclone dust leachate | ● | ● | | | | ● |
| 2354 | - Leachate blank | ● | ● | | | | ● |

| SAMPLE NUMBER | SAMPLE TYPE | SSMS | AAS | ICP | Radioactivity | Prox/ Ult | Anion/ Cation |
|---|---|---|---|---|---|---|---|
| 2394 | Particulates | ● | ● | ● | | | |
| 2395 | Particulate Extract | ● | ● | | | | |
| 2285 | Acid Impinger Composite | ● | ● | | | | |
| 2296 | Acid Impinger Blank | ● | ● | | | | |
| 2286 | Base Impinger Composite | ● | ● | | | | |
| 2297 | Base Impinger Blank | ● | ● | | | | |

Figure D3. Analysis Results Matrix: Product Gas

TABLE D7. SSMS ANALYSIS RESULTS: PRODUCT GAS PARTICULATES

Sample #2394 Concentration in ppm weight

| ELEMENT | CONC. | ELEMENT | CONC. | ELEMENT | CONC. | ELEMENT | CONC. |
|---|---|---|---|---|---|---|---|
| Uranium | 1 | Terbium | 0.2 | Ruthenium | | Vanadium | 11 |
| Thorium | 2 | Gadolinium | 0.6 | Molybdenum | 3 | Titanium | 550 |
| Bismuth | 0.8 | Europium | 0.3 | Niobium | 4 | Scandium | 6 |
| Lead | 39 | Samarium | 2 | Zirconium | 27 | Calcium | MC |
| Thallium | 1 | Neodymium | 3 | Yttrium | 9 | Potassium | MC |
| Mercury | NR | Praseodymium | 2 | Strontium | MC | Chlorine | MC |
| Gold | | Cerium | 16 | Rubidium | 2 | Sulfur | MC |
| Platinum | | Lanthanum | 11 | Bromine | 41 | Phosphorus | MC |
| Iridium | | Barium | MC | Selenium | 3 | Silicon | MC |
| Osmium | | Cesium | 0.7 | Arsenic | 89 | Aluminum | MC |
| Rhenium | ≤0.1 | Iodine | 1 | Germanium | 2 | Magnesium | MC |
| Tungsten | 1 | Tellurium | 0.3 | Gallium | 7 | Sodium | MC |
| Tantalum | | Antimony | 2 | Zinc | 70 | Fluorine | ≈370 |
| Hafnium | 0.9 | Tin | 4 | Copper | 110 | Oxygen | NR |
| Lutecium | | Indium | STD | Nickel | 35 | Nitrogen | NR |
| Ytterbium | | Cadmium | 3 | Cobalt | 4 | Carbon | NR |
| Thulium | <0.1 | Silver | *30 | Iron | MC | Boron | 200 |
| Erbium | 0.2 | Palladium | | Manganese | 13 | Beryllium | 0.8 |
| Holmium | 0.3 | Rhodium | | Chromium | 27 | Lithium | 37 |
| Dysprosium | 0.5 | | | | | Hydrogen | NR |

STD - Internal Standard
NR - Not Reported
All elements not detected <0.1 ppm weight

MC - Major Component MC >1000 ppm
INT - Interference
*Heterogeneous

$$\mu g/m^3 = \frac{\frac{\mu g_{element}}{g_{particulate}} \times 25.2\ g_{particulate}}{7.800\ m^3}$$

TABLE D8. SSMS ANALYSIS RESULTS: PRODUCT GAS PARTICULATE EXTRACT

Sample #2395 Concentration in μg/ml

| ELEMENT | CONC. | ELEMENT | CONC. | ELEMENT | CONC. | ELEMENT | CONC. |
|---|---|---|---|---|---|---|---|
| Uranium | | Terbium | | Ruthenium | | Vanadium | 0.002 |
| Thorium | | Gadolinium | | Molybdenum | 0.003 | Titanium | 0.04 |
| Bismuth | | Europium | | Niobium | | Scandium | ≤0.001 |
| Lead | 0.02 | Samarium | | Zirconium | 0.01 | Calcium | 0.6 |
| Thallium | | Neodymium | | Yttrium | 0.003 | Potassium | 0.2 |
| Mercury | NR | Praseodymium | | Strontium | 0.008 | Chlorine | 0.008 |
| Gold | | Cerium | | Rubidium | <0.001 | Sulfur | 0.7 |
| Platinum | | Lanthanum | | Bromine | | Phosphorus | 0.1 |
| Iridium | | Barium | 0.2 | Selenium | 0.003 | Silicon | 9 |
| Osmium | | Cesium | | Arsenic | 0.08 | Aluminum | 0.05 |
| Rhenium | | Iodine | | Germanium | 0.002 | Magnesium | 0.2 |
| Tungsten | | Tellurium | | Gallium | | Sodium | 0.2 |
| Tantalum | | Antimony | 0.003 | Zinc | 0.1 | Fluorine | ≈0.3 |
| Hafnium | | Tin | ≤0.002 | Copper | 0.06 | Oxygen | NR |
| Lutecium | | Indium | STD | Nickel | 0.02 | Nitrogen | NR |
| Ytterbium | | Cadmium | ≤0.002 | Cobalt | 0.003 | Carbon | NR |
| Thulium | | Silver | 0.04 | Iron | <0.002 | Boron | 0.01 |
| Erbium | | Palladium | | Manganese | 0.002 | Beryllium | |
| Holmium | | Rhodium | | Chromium | 0.009 | Lithium | 0.003 |
| Dysprosium | | | | | | Hydrogen | NR |

STD - Internal Standard
NR - Not Reported
All elements not detected <0.001 μg/ml

MC - Major Component
INT - Interference

$$\mu g/m^3 = \frac{\left(\frac{\mu g_{element}}{ml_{extractant}} \times 3009\ ml_{extractant}\right) - \left(\frac{\mu g_{element}}{ml_{CH_2Cl_2\ blank}} \times 300\ ml_{CH_2Cl_2\ blank}\right)}{7.800\ m^3}$$

TABLE D9. SSMS ANALYSIS RESULTS: PRODUCT GAS ACID IMPINGER COMPOSITE

Sample #2285 Concentration in μg/ml

| ELEMENT | CONC. | ELEMENT | CONC. | ELEMENT | CONC. | ELEMENT | CONC. |
|---|---|---|---|---|---|---|---|
| Uranium | 0.01 | Terbium | | Ruthenium | | Vanadium | 0.004 |
| Thorium | | Gadolinium | | Molybdenum | | Titanium | 0.06 |
| Bismuth | | Europium | | Niobium | | Scandium | ≤ 0.001 |
| Lead | 0.02 | Samarium | | Zirconium | 0.003 | Calcium | 2 |
| Thallium | | Neodymium | | Yttrium | | Potassium | 0.3 |
| Mercury | NR | Praseodymium | | Strontium | 0.006 | Chlorine | 0.06 |
| Gold | | Cerium | 0.002 | Rubidium | | Sulfur | 2 |
| Platinum | | Lanthanum | 0.003 | Bromine | 0.002 | Phosphorus | 0.2 |
| Iridium | | Barium | 0.03 | Selenium | 0.01 | Silicon | 0.9 |
| Osmium | | Cesium | | Arsenic | 0.05 | Aluminum | 0.02 |
| Rhenium | | Iodine | | Germanium | | Magnesium | 0.1 |
| Tungsten | | Tellurium | | Gallium | < 0.001 | Sodium | 0.1 |
| Tantalum | | Antimony | | Zinc | 0.07 | Fluorine | ≈ 0.05 |
| Hafnium | | Tin | 0.002 | Copper | 0.03 | Oxygen | NR |
| Lutecium | | Indium | STD | Nickel | 0.03 | Nitrogen | NR |
| Ytterbium | | Cadmium | | Cobalt | 0.007 | Carbon | NR |
| Thulium | | Silver | 0.002 | Iron | 0.6 | Boron | 0.002 |
| Erbium | | Palladium | | Manganese | 0.01 | Beryllium | |
| Holmium | | Rhodium | | Chromium | 0.03 | Lithium | < 0.001 |
| Dysprosium | | | | | | Hydrogen | NR |

STD - Internal Standard
NR - Not Reported
All elements not detected <0.001 μg/ml
MC - Major Component MC >10 μg/ml
INT - Interference

$$\mu g/m^3 = \frac{\left(\frac{\mu g_{element}}{ml_{acid\ soln}} \times 1048\ ml_{acid\ soln}\right) - \left(\frac{\mu g_{element}}{ml_{acid\ blank}} \times 500\ ml_{acid\ blank}\right)}{2.394\ m^3}$$

TABLE D10. SSMS ANALYSIS RESULTS: PRODUCT GAS ACID IMPINGER BLANK

Sample #2296 Concentration in μg/ml

| ELEMENT | CONC. | ELEMENT | CONC. | ELEMENT | CONC. | ELEMENT | CONC. |
|---|---|---|---|---|---|---|---|
| Uranium | | Terbium | | Ruthenium | | Vanadium | 0.004 |
| Thorium | | Gadolinium | | Molybdenum | | Titanium | 0.02 |
| Bismuth | | Europium | | Niobium | | Scandium | <0.001 |
| Lead | | Samarium | | Zirconium | 0.005 | Calcium | 2 |
| Thallium | | Neodymium | | Yttrium | | Potassium | 0.3 |
| Mercury | NR | Praseodymium | | Strontium | 0.003 | Chlorine | 0.05 |
| Gold | | Cerium | | Rubidium | | Sulfur | 0.06 |
| Platinum | | Lanthanum | | Bromine | | Phosphorus | 0.03 |
| Iridium | | Barium | 0.01 | Selenium | | Silicon | 0.3 |
| Osmium | | Cesium | | Arsenic | | Aluminum | 0.04 |
| Rhenium | | Iodine | | Germanium | | Magnesium | 0.09 |
| Tungsten | | Tellurium | | Gallium | | Sodium | 0.06 |
| Tantalum | | Antimony | | Zinc | 0.05 | Fluorine | ≈0.06 |
| Hafnium | | Tin | | Copper | 0.009 | Oxygen | NR |
| Lutecium | | Indium | STD | Nickel | 0.08 | Nitrogen | NR |
| Ytterbium | | Cadmium | | Cobalt | <0.001 | Carbon | NR |
| Thulium | | Silver | 0.02 | Iron | 0.4 | Boron | 0.002 |
| Erbium | | Palladium | | Manganese | 0.005 | Beryllium | |
| Holmium | | Rhodium | | Chromium | 0.009 | Lithium | <0.001 |
| Dysprosium | | | | | | Hydrogen | NR |

STD - Internal Standard
NR - Not Reported
All elements not detected <0.002 μg/ml
MC - Major Component MC >10 μg/ml
INT - Interference

TABLE D11. SSMS ANALYSIS RESULTS: PRODUCT GAS BASE IMPINGER COMPOSITE

Sample #2286 Concentration in μg/ml

| ELEMENT | CONC. | ELEMENT | CONC. | ELEMENT | CONC. | ELEMENT | CONC. |
|---|---|---|---|---|---|---|---|
| Uranium | | Terbium | | Ruthenium | | Vanadium | 0.03 |
| Thorium | | Gadolinium | | Molybdenum | | Titanium | 0.03 |
| Bismuth | | Europium | | Niobium | | Scandium | ≤0.01 |
| Lead | 0.08 | Samarium | | Zirconium | | Calcium | 4 |
| Thallium | | Neodymium | | Yttrium | | Potassium | 0.3 |
| Mercury | NR | Praseodymium | | Strontium | 0.009 | Chlorine | 1 |
| Gold | | Cerium | | Rubidium | 0.008 | Sulfur | MC |
| Platinum | | Lanthanum | | Bromine | | Phosphorus | 0.08 |
| Iridium | | Barium | 0.04 | Selenium | | Silicon | 3 |
| Osmium | | Cesium | | Arsenic | 0.02 | Aluminum | 0.02 |
| Rhenium | | Iodine | | Germanium | | Magnesium | ≤0.09 |
| Tungsten | | Tellurium | | Gallium | 0.1 | Sodium | MC |
| Tantalum | 0.8 | Antimony | | Zinc | 0.1 | Fluorine | ≈2 |
| Hafnium | | Tin | | Copper | 0.06 | Oxygen | NR |
| Lutecium | | Indium | STD | Nickel | 0.07 | Nitrogen | NR |
| Ytterbium | | Cadmium | | Cobalt | 0.002 | Carbon | NR |
| Thulium | | Silver | 0.2 | Iron | 1 | Boron | 0.09 |
| Erbium | | Palladium | | Manganese | 0.02 | Beryllium | |
| Holmium | | Rhodium | | Chromium | 0.03 | Lithium | 0.03 |
| Dysprosium | | | | | | Hydrogen | NR |

STD - Internal Standard
NR - Not Reported
All elements not detected <0.009 μg/ml
MC - Major Component MC >10 μg/ml
INT - Interference

$$\mu g/m^3 = \frac{\left(\frac{\mu g_{element}}{ml_{base\ soln}} \times 617\ ml_{base\ soln}\right) - \left(\frac{\mu g_{element}}{ml_{base\ blank}} \times 500\ ml_{base\ blank}\right)}{2.394\ m^3}$$

TABLE D12. SSMS ANALYSIS RESULTS: PRODUCT GAS BASE IMPINGER BLANK

Sample #2297 Concentration in μg/ml

| ELEMENT | CONC. | ELEMENT | CONC. | ELEMENT | CONC. | ELEMENT | CONC. |
|---|---|---|---|---|---|---|---|
| Uranium | | Terbium | | Ruthenium | | Vanadium | 0.08 |
| Thorium | | Gadolinium | | Molybdenum | | Titanium | 0.03 |
| Bismuth | | Europium | | Niobium | | Scandium | ≤0.03 |
| Lead | | Samarium | | Zirconium | | Calcium | 5 |
| Thallium | | Neodymium | | Yttrium | | Potassium | 3 |
| Mercury | NR | Praseodymium | | Strontium | | Chlorine | 3 |
| Gold | | Cerium | | Rubidium | | Sulfur | MC |
| Platinum | | Lanthanum | | Bromine | | Phosphorus | 0.04 |
| Iridium | | Barium | | Selenium | ≤0.06 | Silicon | MC |
| Osmium | | Cesium | | Arsenic | 0.04 | Aluminum | 0.2 |
| Rhenium | | Iodine | | Germanium | | Magnesium | 1 |
| Tungsten | | Tellurium | | Gallium | 0.06 | Sodium | MC |
| Tantalum | 7 | Antimony | | Zinc | 0.07 | Fluorine | MC |
| Hafnium | | Tin | | Copper | 0.08 | Oxygen | NR |
| Lutecium | | Indium | STD | Nickel | 0.04 | Nitrogen | NR |
| Ytterbium | | Cadmium | | Cobalt | 0.004 | Carbon | NR |
| Thulium | | Silver | 0.1 | Iron | 0.3 | Boron | 0.05 |
| Erbium | | Palladium | | Manganese | 0.006 | Beryllium | |
| Holmium | | Rhodium | | Chromium | 0.02 | Lithium | 0.008 |
| Dysprosium | | | | | | Hydrogen | NR |

STD - Internal Standard
NR - Not Reported
All elements not detected <0.02 μg/ml
MC - Major Component MC >10 μg/ml
INT - Interference

TABLE D13. VOLATILE METALS BY AAS: PRODUCT GAS

| SAMPLE NUMBER | SAMPLE TYPE | As | Hg | Sb | Se |
|---|---|---|---|---|---|
| 2394 | Particulates | 77 | 2.6 | <.4 | 15 |
| 2395 | Particulate Extract | .31 | 17 | <1 | .40 |
| 2285 | Acid Impinger Composite | .043 | .007 | <.06 | .011 |
| 2296 | Acid Impinger Blank | <.005 | <.0002 | <.06 | .018 |
| 2286 | Base Impinger Composite | .005 | .0013 | <.06 | .015 |
| 2297 | Base Impinger Blank | <.005 | <.0002 | <.06 | <.01 |

As ppm: solids µg/g; liquids µg/ml.

TABLE D14. ICP RESULTS: PRODUCT GAS PARTICULATES

Concentration in ppm weight (μg/g)

| | Analysis #1 | Analysis #2 |
|---|---|---|
| Ag | <6.20 | 24. |
| Ca | 45100 | 44600 |
| Fe | 10100 | 10500 |
| Ni | <25. | 41.22 |
| V | <12. | 15. |
| Al | 8400 | 8300 |
| Cd | 81. | 87. |
| Mg | 12200 | 12100 |
| Pb | <87. | <87. |
| Zn | 130 | 140 |
| As | <99. | <99. |
| Co | <190 | <190 |
| Mn | 33. | 37. |
| Sn | <50. | <20. |
| B | 170. | 170. |
| Cr | 30. | 50. |
| Mo | <50. | <50. |
| Sr | 1200 | 1200 |
| Ba | 2300 | 23000 |
| Cu | 82. | 70. |
| Na | <6200 | 6500 |
| Ti | 290 | 280 |

Sample #2394

| SAMPLE NUMBER | SAMPLE TYPE | SSMS | AAS | ICP | Radioactivity | Prox/ Ult | Anion/ Cation |
|---|---|---|---|---|---|---|---|
| 2298 | SASS Cyclone Particulates < 3 μm | ● | | | | | |
| 2299 | SASS Probe Rinse | ● | ● | | | | |
| | SASS Condensate | ● | | | | | |
| 2396 | Extracted XAD-2 Resin | ● | ● | | | | |
| | Extracted XAD-2 Resin, duplicate | ● | | | | | |
| | XAD-2 Resin Blank | ● | | | | | |
| 2398 | XAD-2 Resin Extract | ● | ● | | | | |
| 2283 | SASS $Ag_2S_2O_8$ Impinger | ● | ● | | | | |
| 2284 | SASS $Ag_2S_2O_8$ Impinger Blank | ● | ● | | | | |
| | Methylene Chloride Blank | ● | | | | | |
| | Ether Blank | ● | | | | | |

Figure D3. Analysis Results Matrix: Test Burner

TABLE D15. SSMS ANALYSIS RESULTS: TEST BURNER SASS CYCLONE PARTICULATES

<3 μm

Sample #2298 Concentration in ppm weight

| ELEMENT | CONC. | ELEMENT | CONC. | ELEMENT | CONC. | ELEMENT | CONC. |
|---|---|---|---|---|---|---|---|
| Uranium | | Terbium | | Ruthenium | | Vanadium | 12 |
| Thorium | | Gadolinium | | Molybdenum | ≤16 | Titanium | 210 |
| Bismuth | | Europium | | Niobium | 3 | Scandium | ≤0.8 |
| Lead | 260 | Samarium | | Zirconium | 20 | Calcium | MC |
| Thallium | | Neodymium | 2 | Yttrium | 1 | Potassium | MC |
| Mercury | NR | Praseodymium | 1 | Strontium | 280 | Chlorine | 79 |
| Gold | | Cerium | 27 | Rubidium | 12 | Sulfur | MC |
| Platinum | | Lanthanum | 32 | Bromine | 6 | Phosphorus | 540 |
| Iridium | | Barium | MC | Selenium | ≤17 | Silicon | MC |
| Osmium | | Cesium | 0.5 | Arsenic | 33 | Aluminum | 140 |
| Rhenium | | Iodine | | Germanium | 16 | Magnesium | MC |
| Tungsten | | Tellurium | | Gallium | 23 | Sodium | MC |
| Tantalum | | Antimony | 2 | Zinc | 79 | Fluorine | ≈82 |
| Hafnium | | Tin | 6 | Copper | 95 | Oxygen | NR |
| Lutecium | | Indium | STD | Nickel | 110 | Nitrogen | NR |
| Ytterbium | | Cadmium | 2 | Cobalt | 11 | Carbon | NR |
| Thulium | | Silver | 73 | Iron | MC | Boron | 13 |
| Erbium | | Palladium | | Manganese | 36 | Beryllium | |
| Holmium | | Rhodium | | Chromium | 36 | Lithium | 99 |
| Dysprosium | | | | | | Hydrogen | NR |

STD - Internal Standard
NR - Not Reported
All elements not detected <0.9 ppm
MC - Major Component MC >1000 ppm
INT - Interference

$$\mu g/m^3 = \frac{\frac{\mu g_{element}}{g_{particulate}} \times 0.03\ g_{particulate}}{27.196\ m^3}$$

TABLE D16. SSMS ANALYSIS RESULTS: TEST BURNER SASS PROBE RINSE

Sample #2299 Concentration in μg/ml

| ELEMENT | CONC. | ELEMENT | CONC. | ELEMENT | CONC. | ELEMENT | CONC. |
|---|---|---|---|---|---|---|---|
| Uranium | ≤0.008 | Terbium | | Ruthenium | | Vanadium | <0.001 |
| Thorium | | Gadolinium | | Molybdenum | | Titanium | 0.02 |
| Bismuth | | Europium | | Niobium | ≤0.001 | Scandium | <0.001 |
| Lead | ≤0.005 | Samarium | | Zirconium | 0.002 | Calcium | 0.6 |
| Thallium | | Neodymium | | Yttrium | <0.001 | Potassium | 0.3 |
| Mercury | NR | Praseodymium | | Strontium | 0.003 | Chlorine | 0.04 |
| Gold | | Cerium | | Rubidium | | Sulfur | 0.2 |
| Platinum | | Lanthanum | | Bromine | 0.004 | Phosphorus | 0.009 |
| Iridium | | Barium | 0.003 | Selenium | 0.002 | Silicon | 0.4 |
| Osmium | | Cesium | | Arsenic | <0.001 | Aluminum | *0.04 |
| Rhenium | | Iodine | | Germanium | | Magnesium | 0.05 |
| Tungsten | | Tellurium | | Gallium | 0.001 | Sodium | 1 |
| Tantalum | 0.004 | Antimony | | Zinc | 0.02 | Fluorine | ≈0.02 |
| Hafnium | | Tin | | Copper | 0.007 | Oxygen | NR |
| Lutecium | | Indium | STD | Nickel | 0.01 | Nitrogen | NR |
| Ytterbium | | Cadmium | | Cobalt | <0.001 | Carbon | NR |
| Thulium | | Silver | 0.004 | Iron | 0.05 | Boron | <0.001 |
| Erbium | | Palladium | | Manganese | 0.001 | Beryllium | |
| Holmium | | Rhodium | | Chromium | 0.03 | Lithium | <0.001 |
| Dysprosium | | | | | | Hydrogen | NR |

STD - Internal Standard
NR - Not Reported
All elements not detected <0.001 μg/ml

MC - Major Component
INT - Interference
*Heterogeneous

$$\mu g/m^3 = \frac{\left(\frac{\mu g_{element}}{ml_{probe\ rinse}} \times 150\ ml_{probe\ rinse}\right) - \left(\frac{\mu g_{element}}{ml_{CH_2Cl_2\ blank}} \times 150\ ml_{CH_2Cl_2\ blank}\right)}{27.196\ m^3}$$

TABLE D17. SSMS ANALYSIS RESULTS: TEST BURNER SASS TRAIN CONDENSATE

Sample # Concentration in μg/ml

| ELEMENT | CONC. | ELEMENT | CONC. | ELEMENT | CONC. | ELEMENT | CONC. |
|---|---|---|---|---|---|---|---|
| Uranium | | Terbium | | Ruthenium | | Vanadium | 0.001 |
| Thorium | | Gadolinium | | Molybdenum | 0.03 | Titanium | 0.03 |
| Bismuth | | Europium | | Niobium | | Scandium | <0.001 |
| Lead | | Samarium | | Zirconium | 0.006 | Calcium | 1 |
| Thallium | | Neodymium | | Yttrium | | Potassium | 0.1 |
| Mercury | NR | Praseodymium | | Strontium | 0.003 | Chlorine | 0.1 |
| Gold | | Cerium | 0.005 | Rubidium | | Sulfur | 3 |
| Platinum | 0.02 | Lanthanum | 0.008 | Bromine | | Phosphorus | 0.03 |
| Iridium | | Barium | 0.02 | Selenium | | Silicon | 0.3 |
| Osmium | | Cesium | | Arsenic | ≤0.002 | Aluminum | 0.04 |
| Rhenium | | Iodine | | Germanium | | Magnesium | ≤0.04 |
| Tungsten | | Tellurium | | Gallium | ≤0.003 | Sodium | 0.1 |
| Tantalum | | Antimony | | Zinc | 0.01 | Fluorine | ≈0.3 |
| Hafnium | | Tin | | Copper | 0.007 | Oxygen | NR |
| Lutecium | | Indium | STD | Nickel | 0.02 | Nitrogen | NR |
| Ytterbium | | Cadmium | | Cobalt | <0.001 | Carbon | NR |
| Thulium | | Silver | | Iron | 0.05 | Boron | 0.001 |
| Erbium | | Palladium | | Manganese | 0.002 | Beryllium | |
| Holmium | | Rhodium | | Chromium | 0.004 | Lithium | <0.001 |
| Dysprosium | | | | | | Hydrogen | NR |

STD - Internal Standard
NR - Not Reported
All elements not detected <0.003 μg/ml
MC - Major Component MC >10 μg/ml
INT - Interference

$$\mu g/m^3 = \frac{\frac{\mu g_{element}}{ml_{condensate}} \times 1507\ ml_{condensate}}{27.196\ m^3}$$

TABLE D18. SSMS ANALYSIS RESULTS: TEST BURNER EXTRACTED XAD-2 RESIN

Sample #2396 — Concentration in ppm weight

| ELEMENT | CONC. | ELEMENT | CONC. | ELEMENT | CONC. | ELEMENT | CONC. |
|---|---|---|---|---|---|---|---|
| Uranium | *1 | Terbium | | Ruthenium | | Vanadium | 0.02 |
| Thorium | | Gadolinium | | Molybdenum | 0.4 | Titanium | 1 |
| Bismuth | 0.03 | Europium | | Niobium | 0.02 | Scandium | ≤0.01 |
| Lead | 0.4 | Samarium | | Zirconium | 0.5 | Calcium | 20 |
| Thallium | | Neodymium | | Yttrium | 0.01 | Potassium | 2 |
| Mercury | NR | Praseodymium | | Strontium | 0.3 | Chlorine | 1 |
| Gold | | Cerium | 0.04 | Rubidium | 0.009 | Sulfur | 4 |
| Platinum | | Lanthanum | 0.09 | Bromine | 0.03 | Phosphorus | 0.2 |
| Iridium | | Barium | 1 | Selenium | ≤0.01 | Silicon | 6 |
| Osmium | | Cesium | | Arsenic | 0.02 | Aluminum | 0.2 |
| Rhenium | | Iodine | | Germanium | | Magnesium | 8 |
| Tungsten | | Tellurium | | Gallium | 0.01 | Sodium | 1 |
| Tantalum | | Antimony | 0.02 | Zinc | 2 | Fluorine | ≈1 |
| Hafnium | | Tin | | Copper | 0.4 | Oxygen | NR |
| Lutecium | | Indium | STD | Nickel | 1 | Nitrogen | NR |
| Ytterbium | | Cadmium | 0.03 | Cobalt | 2 | Carbon | NR |
| Thulium | | Silver | 0.2 | Iron | 2 | Boron | 0.2 |
| Erbium | | Palladium | | Manganese | 0.2 | Beryllium | |
| Holmium | | Rhodium | | Chromium | 0.3 | Lithium | 0.006 |
| Dysprosium | | | | | | Hydrogen | NR |

STD - Internal Standard
NR - Not Reported
All elements not detected <0.008 ppm weight
MC - Major Component MC >1000 ppm
INT - Interference
*Heterogeneous

NOTE: Sample was low temperature plasma ashed prior to analysis.

TABLE D19. SSMS ANALYSIS RESULTS: TEST BURNER EXTRACTED XAD-2 RESIN DUPLICATE

Concentration in ppm weight

| ELEMENT | CONC. | ELEMENT | CONC. | ELEMENT | CONC. | ELEMENT | CONC. |
|---|---|---|---|---|---|---|---|
| Uranium | 0.8 | Terbium | | Ruthenium | | Vanadium | 0.07 |
| Thorium | | Gadolinium | | Molybdenum | 2 | Titanium | 0.6 |
| Bismuth | | Europium | | Niobium | 0.09 | Scandium | ≤0.03 |
| Lead | 0.4 | Samarium | | Zirconium | 1 | Calcium | 28 |
| Thallium | | Neodymium | | Yttrium | 0.03 | Potassium | 3 |
| Mercury | NR | Praseodymium | 0.03 | Strontium | 0.3 | Chlorine | 2 |
| Gold | | Cerium | 0.06 | Rubidium | 0.02 | Sulfur | 17 |
| Platinum | | Lanthanum | 0.09 | Bromine | 0.2 | Phosphorus | 8 |
| Iridium | | Barium | 0.5 | Selenium | 0.07 | Silicon | 8 |
| Osmium | | Cesium | | Arsenic | 0.06 | Aluminum | 0.5 |
| Rhenium | | Iodine | 0.05 | Germanium | | Magnesium | 4 |
| Tungsten | | Tellurium | | Gallium | 0.03 | Sodium | 1 |
| Tantalum | | Antimony | | Zinc | 1 | Fluorine | ≈8 |
| Hafnium | | Tin | 0.08 | Copper | 2 | Oxygen | NR |
| Lutecium | | Indium | STD | Nickel | 0.7 | Nitrogen | NR |
| Ytterbium | | Cadmium | | Cobalt | 2 | Carbon | NR |
| Thulium | | Silver | 0.07 | Iron | 21 | Boron | 0.04 |
| Erbium | | Palladium | | Manganese | 0.1 | Beryllium | |
| Holmium | | Rhodium | | Chromium | 3 | Lithium | 0.02 |
| Dysprosium | | | | | | Hydrogen | NR |

STD - Internal Standard
NR - Not Reported
All elements not detected <0.02 ppm weight

MC - Major Component
INT - Interference

NOTE: Sample was low temperature plasma ashed prior to analysis.

$$\mu g/m^3 = \frac{\left(\frac{\mu g_{element}}{g_{XAD-2}} \times 205\ g_{XAD-2}\right) - \left(\frac{\mu g_{element}}{g_{XAD-2\ blank}} \times 205\ g_{XAD-2\ blank}\right)}{27.196\ m^3}$$

TABLE D20. SSMS ANALYSIS RESULTS: XAD-2 RESIN BLANK

Sample # Concentration in ppm weight

| ELEMENT | CONC. | ELEMENT | CONC. | ELEMENT | CONC. | ELEMENT | CONC. |
|---|---|---|---|---|---|---|---|
| Uranium | 3 | Terbium | | Ruthenium | | Vanadium | <0.1 |
| Thorium | 2 | Gadolinium | | Molybdenum | 0.6 | Titanium | 6 |
| Bismuth | | Europium | | Niobium | ≤0.1 | Scandium | <0.1 |
| Lead | 1 | Samarium | | Zirconium | 0.3 | Calcium | 120 |
| Thallium | | Neodymium | | Yttrium | <0.1 | Potassium | >270 |
| Mercury | NR | Praseodymium | <0.1 | Strontium | 0.9 | Chlorine | 0.9 |
| Gold | | Cerium | 0.6 | Rubidium | <0.1 | Sulfur | >140 |
| Platinum | | Lanthanum | 0.9 | Bromine | 0.5 | Phosphorus | 250 |
| Iridium | | Barium | 2 | Selenium | | Silicon | 17 |
| Osmium | | Cesium | <0.1 | Arsenic | <0.1 | Aluminum | >22 |
| Rhenium | | Iodine | <0.1 | Germanium | | Magnesium | MC |
| Tungsten | | Tellurium | | Gallium | <0.1 | Sodium | >56 |
| Tantalum | | Antimony | | Zinc | 4 | Fluorine | ≈2 |
| Hafnium | | Tin | <0.1 | Copper | 1 | Oxygen | NR |
| Lutecium | | Indium | STD | Nickel | 2 | Nitrogen | NR |
| Ytterbium | | Cadmium | | Cobalt | 0.2 | Carbon | NR |
| Thulium | | Silver | | Iron | 5 | Boron | 0.2 |
| Erbium | | Palladium | | Manganese | 0.5 | Beryllium | <0.1 |
| Holmium | | Rhodium | | Chromium | 0.1 | Lithium | <0.1 |
| Dysprosium | | | | | | Hydrogen | NR |

STD - Internal Standard
NR - Not Reported
All elements not detected 0.02 ppm
MC - Major Component
INT - Interference

NOTE: Sample was plasma ashed prior to analysis.

TABLE D21. SSMS ANALYSIS RESULTS: TEST BURNER XAD-2 RESIN EXTRACT

Sample #2398 Concentration in μg/ml

| ELEMENT | CONC. | ELEMENT | CONC. | ELEMENT | CONC. | ELEMENT | CONC. |
|---|---|---|---|---|---|---|---|
| Uranium | | Terbium | | Ruthenium | | Vanadium | <0.001 |
| Thorium | | Gadolinium | | Molybdenum | 0.1 | Titanium | 0.02 |
| Bismuth | | Europium | | Niobium | | Scandium | <0.001 |
| Lead | | Samarium | | Zirconium | 0.007 | Calcium | 6 |
| Thallium | | Neodymium | | Yttrium | 0.005 | Potassium | *6 |
| Mercury | NR | Praseodymium | | Strontium | 0.006 | Chlorine | 0.3 |
| Gold | | Cerium | | Rubidium | 0.002 | Sulfur | 0.1 |
| Platinum | | Lanthanum | | Bromine | | Phosphorus | 2 |
| Iridium | | Barium | 0.02 | Selenium | | Silicon | 0.2 |
| Osmium | | Cesium | | Arsenic | 0.008 | Aluminum | *0.2 |
| Rhenium | | Iodine | | Germanium | | Magnesium | 0.09 |
| Tungsten | | Tellurium | | Gallium | | Sodium | 0.3 |
| Tantalum | | Antimony | | Zinc | 0.01 | Fluorine | ≈0.7 |
| Hafnium | | Tin | | Copper | 0.003 | Oxygen | NR |
| Lutecium | | Indium | STD | Nickel | 0.02 | Nitrogen | NR |
| Ytterbium | | Cadmium | | Cobalt | 0.002 | Carbon | NR |
| Thulium | | Silver | 0.004 | Iron | 0.07 | Boron | 0.009 |
| Erbium | | Palladium | | Manganese | 0.006 | Beryllium | |
| Holmium | | Rhodium | | Chromium | 0.02 | Lithium | <0.001 |
| Dysprosium | | | | | | Hydrogen | NR |

STD - Internal Standard
NR - Not Reported
All elements not detected <0.004 μg/ml

MC - Major Component MC >10 μg/ml
INT - Interference
*Heterogeneous

$$\mu g/m^3 = \frac{\left(\frac{\mu g_{element}}{ml_{extract}} \times 1652\ ml_{extract}\right) - \left[\left(\frac{\mu g_{element}}{ml_{CH_2Cl_2\ blank}} \times 790\ ml_{CH_2Cl_2\ blank} + \frac{\mu g_{element}}{ml_{Et_2O\ blank}} \times 862\ ml_{Et_2O\ blank}\right)\right]}{27.196\ m^3}$$

TABLE D22. SSMS ANALYSIS RESULTS: METHYLENE CHLORIDE BLANK

Sample # Concentration in μg/ml

| ELEMENT | CONC. | ELEMENT | CONC. | ELEMENT | CONC. | ELEMENT | CONC. |
|---|---|---|---|---|---|---|---|
| Uranium | | Terbium | | Ruthenium | | Vanadium | ≤0.004 |
| Thorium | | Gadolinium | | Molybdenum | 0.02 | Titanium | 0.01 |
| Bismuth | | Europium | | Niobium | | Scandium | <0.001 |
| Lead | | Samarium | | Zirconium | 0.01 | Calcium | 0.2 |
| Thallium | | Neodymium | *0.01 | Yttrium | | Potassium | 0.04 |
| Mercury | NR | Praseodymium | *0.006 | Strontium | | Chlorine | 0.1 |
| Gold | | Cerium | *0.007 | Rubidium | | Sulfur | 0.2 |
| Platinum | | Lanthanum | *0.01 | Bromine | | Phosphorus | 0.009 |
| Iridium | | Barium | *0.01 | Selenium | | Silicon | 0.9 |
| Osmium | | Cesium | | Arsenic | 0.002 | Aluminum | 0.005 |
| Rhenium | | Iodine | | Germanium | | Magnesium | 0.03 |
| Tungsten | | Tellurium | | Gallium | ≤0.004 | Sodium | 0.01 |
| Tantalum | | Antimony | | Zinc | 0.02 | Fluorine | ≈0.09 |
| Hafnium | | Tin | | Copper | 0.004 | Oxygen | NR |
| Lutecium | | Indium | STD | Nickel | 0.02 | Nitrogen | NR |
| Ytterbium | | Cadmium | | Cobalt | <0.001 | Carbon | NR |
| Thulium | | Silver | 0.004 | Iron | 0.03 | Boron | 0.001 |
| Erbium | | Palladium | | Manganese | 0.003 | Beryllium | |
| Holmium | | Rhodium | | Chromium | 0.007 | Lithium | <0.001 |
| Dysprosium | | | | | | Hydrogen | NR |

STD - Internal Standard
NR - Not Reported
All elements not detected <0.02 ppm
MC - Major Component
INT - Interference

NOTE: Sample was plasma ashed prior to analysis.

TABLE D23. SSMS ANALYSIS RESULTS: ETHER BLANK

Sample # Concentration in μg/ml

| ELEMENT | CONC. | ELEMENT | CONC. | ELEMENT | CONC. | ELEMENT | CONC. |
|---|---|---|---|---|---|---|---|
| Uranium | | Terbium | | Ruthenium | | Vanadium | ≤0.001 |
| Thorium | | Gadolinium | | Molybdenum | 0.03 | Titanium | 0.02 |
| Bismuth | | Europium | | Niobium | | Scandium | <0.001 |
| Lead | | Samarium | | Zirconium | 0.01 | Calcium | 0.6 |
| Thallium | | Neodymium | | Yttrium | | Potassium | 0.05 |
| Mercury | NR | Praseodymium | | Strontium | 0.003 | Chlorine | 0.09 |
| Gold | | Cerium | | Rubidium | | Sulfur | 0.01 |
| Platinum | | Lanthanum | | Bromine | | Phosphorus | 0.02 |
| Iridium | | Barium | | Selenium | | Silicon | 0.3 |
| Osmium | | Cesium | | Arsenic | | Aluminum | 0.005 |
| Rhenium | | Iodine | | Germanium | | Magnesium | 0.05 |
| Tungsten | | Tellurium | | Gallium | ≤0.003 | Sodium | 0.02 |
| Tantalum | | Antimony | | Zinc | 0.02 | Fluorine | ≈0.1 |
| Hafnium | | Tin | | Copper | 0.002 | Oxygen | NR |
| Lutecium | | Indium | STD | Nickel | 0.02 | Nitrogen | NR |
| Ytterbium | | Cadmium | | Cobalt | <0.001 | Carbon | NR |
| Thulium | | Silver | | Iron | 0.02 | Boron | 0.001 |
| Erbium | | Palladium | | Manganese | 0.002 | Beryllium | |
| Holmium | | Rhodium | | Chromium | 0.002 | Lithium | <0.001 |
| Dysprosium | | | | | | Hydrogen | NR |

STD - Internal Standard
NR - Not Reported
All elements not detected <0.002 μg/ml

MC - Major Component MC >10 μg/ml
INT - Interference
*Heterogeneous

TABLE D24. SSMS ANALYSIS RESULTS: SASS $Ag_2S_2O_8$ IMPINGER COMPOSITE

Sample #2283 — Concentration in µg/ml

| ELEMENT | CONC. | ELEMENT | CONC. | ELEMENT | CONC. | ELEMENT | CONC. |
|---|---|---|---|---|---|---|---|
| Uranium | | Terbium | | Ruthenium | | Vanadium | 0.02 |
| Thorium | | Gadolinium | | Molybdenum | 0.01 | Titanium | 0.1 |
| Bismuth | | Europium | | Niobium | | Scandium | ≤0.001 |
| Lead | 0.07 | Samarium | | Zirconium | 0.01 | Calcium | 2 |
| Thallium | | Neodymium | | Yttrium | | Potassium | 1 |
| Mercury | NR | Praseodymium | | Strontium | 0.01 | Chlorine | 0.05 |
| Gold | | Cerium | 0.001 | Rubidium | <0.001 | Sulfur | >6 |
| Platinum | 0.003 | Lanthanum | 0.002 | Bromine | 0.002 | Phosphorus | 0.3 |
| Iridium | | Barium | 0.02 | Selenium | 0.009 | Silicon | 1 |
| Osmium | | Cesium | 0.01 | Arsenic | 0.004 | Aluminum | 0.04 |
| Rhenium | | Iodine | 0.004 | Germanium | | Magnesium | 0.1 |
| Tungsten | | Tellurium | | Gallium | 0.007 | Sodium | 0.8 |
| Tantalum | | Antimony | | Zinc | 0.1 | Fluorine | ≈0.1 |
| Hafnium | | Tin | 0.008 | Copper | 0.05 | Oxygen | NR |
| Lutecium | | Indium | STD | Nickel | 0.3 | Nitrogen | NR |
| Ytterbium | | Cadmium | 0.003 | Cobalt | 0.7 | Carbon | NR |
| Thulium | | Silver | MC | Iron | 0.5 | Boron | 0.02 |
| Erbium | | Palladium | | Manganese | 0.1 | Beryllium | |
| Holmium | | Rhodium | | Chromium | 0.1 | Lithium | <0.001 |
| Dysprosium | | | | | | Hydrogen | NR |

STD - Internal Standard
NR - Not Reported
All elements not detected <0.001 µg/ml
MC - Major Component MC >10 µg/ml
INT - Interference

NOTE: Sample was thermally ashed prior to analysis at 300°C.

$$\mu g/m^3 = \frac{\left(\frac{\mu g_{element}}{ml_{imp\ sol'n}} \times 4575\ ml_{imp\ sol'n}\right) - \left(\frac{\mu g_{element}}{ml_{imp\ sol'n}} \times 2250\ ml_{imp\ blank}\right)}{27.196\ m^3}$$

TABLE D25. SSMS ANALYSIS RESULTS: SASS $Ag_2S_2O_8$ IMPINGER BLANK

Sample #2284 Concentration in μg/ml

| ELEMENT | CONC. | ELEMENT | CONC. | ELEMENT | CONC. | ELEMENT | CONC. |
|---|---|---|---|---|---|---|---|
| Uranium | | Terbium | | Ruthenium | | Vanadium | <0.001 |
| Thorium | | Gadolinium | | Molybdenum | | Titanium | 0.01 |
| Bismuth | | Europium | | Niobium | | Scandium | ≤0.003 |
| Lead | 0.02 | Samarium | | Zirconium | | Calcium | 0.9 |
| Thallium | | Neodymium | | Yttrium | | Potassium | 6 |
| Mercury | NR | Praseodymium | | Strontium | 0.001 | Chlorine | 0.03 |
| Gold | | Cerium | 0.003 | Rubidium | <0.001 | Sulfur | MC |
| Platinum | | Lanthanum | 0.005 | Bromine | | Phosphorus | 0.2 |
| Iridium | | Barium | 0.01 | Selenium | 0.003 | Silicon | 0.2 |
| Osmium | | Cesium | 0.007 | Arsenic | | Aluminum | 0.2 |
| Rhenium | | Iodine | | Germanium | | Magnesium | 0.05 |
| Tungsten | | Tellurium | | Gallium | | Sodium | 6 |
| Tantalum | | Antimony | | Zinc | 0.07 | Fluorine | ≈0.6 |
| Hafnium | | Tin | | Copper | 0.1 | Oxygen | NR |
| Lutecium | | Indium | STD | Nickel | 0.09 | Nitrogen | NR |
| Ytterbium | | Cadmium | ≤0.004 | Cobalt | 0.001 | Carbon | NR |
| Thulium | | Silver | MC | Iron | 0.2 | Boron | 0.002 |
| Erbium | | Palladium | | Manganese | 0.003 | Beryllium | |
| Holmium | | Rhodium | | Chromium | 0.05 | Lithium | 0.003 |
| Dysprosium | | | | | | Hydrogen | NR |

STD - Internal Standard
NR - Not Reported
All elements not detected <0.002 μg/ml
MC - Major Component MC >10 μg/ml
INT - Interference

TABLE D26. VOLATILE METALS BY AAS: TEST BURNER

| SAMPLE NUMBER | SAMPLE TYPE | As | Hg | Sb | Se |
|---|---|---|---|---|---|
| 2299 | SASS Probe Rinse | 0.005 | 0.0002 | <0.06 | 0.015 |
| 2396 | Extracted XAD-2 Resin | 2.7 | 0.18 | <0.3 | <1.1 |
| 2398 | XAD-2 Resin Extract | 1.0 | 0.27 | <0.06 | <2.0 |
| 2283 | SASS $Ag_2S_2O_8$ Impinger Composite | 0.033 | 0.0007 | <0.06 | 0.032 |
| 2284 | SSAS $Ag_2S_2O_8$ Impinger Blank | 0.014 | 0.0048 | <0.06 | <0.01 |

As ppm: solids µg/g; liquids µg/ml.

| SAMPLE NUMBER | SAMPLE TYPE | SSMS | AAS | ICP | Radioactivity | Prox/ Ult | Anion/ Cation |
|---|---|---|---|---|---|---|---|
| 2274 | Gasifier Ash Composite | ● | ● | ● | ● | ● | |
| 2280 | Gasifier Ash Sluice Water | ● | ● | ● | | | ● |

Figure D4. Analysis Results Matrix: Gasifier Ash

TABLE D27. SSMS ANALYSIS RESULTS: GASIFIER ASH COMPOSITE

Sample #2274 Concentration in ppm weight

| ELEMENT | CONC. | ELEMENT | CONC. | ELEMENT | CONC. | ELEMENT | CONC. |
|---|---|---|---|---|---|---|---|
| Uranium | 16 | Terbium | 1 | Ruthenium | | Vanadium | 410 |
| Thorium | 23 | Gadolinium | 4 | Molybdenum | 15 | Titanium | MC |
| Bismuth | | Europium | 3 | Niobium | 31 | Scandium | 20 |
| Lead | 5 | Samarium | 13 | Zirconium | 180 | Calcium | MC |
| Thallium | | Neodymium | 30 | Yttrium | 59 | Potassium | MC |
| Mercury | NR | Praseodymium | 16 | Strontium | MC | Chlorine | 34 |
| Gold | | Cerium | 110 | Rubidium | 47 | Sulfur | MC |
| Platinum | | Lanthanum | 110 | Bromine | 2 | Phosphorus | MC |
| Iridium | | Barium | MC | Selenium | 4 | Silicon | MC |
| Osmium | | Cesium | 8 | Arsenic | 9 | Aluminum | MC |
| Rhenium | | Iodine | 0.2 | Germanium | 1 | Magnesium | MC |
| Tungsten | 1 | Tellurium | | Gallium | 9 | Sodium | MC |
| Tantalum | ≤0.8 | Antimony | 2 | Zinc | 20 | Fluorine | ≈190 |
| Hafnium | 1 | Tin | 0.5 | Copper | 81 | Oxygen | NR |
| Lutecium | 0.3 | Indium | STD | Nickel | 75 | Nitrogen | NR |
| Ytterbium | 3 | Cadmium | 0.8 | Cobalt | 23 | Carbon | NR |
| Thulium | 0.4 | Silver | 0.6 | Iron | MC | Boron | 320 |
| Erbium | 3 | Palladium | | Manganese | 170 | Beryllium | 9 |
| Holmium | 4 | Rhodium | | Chromium | 100 | Lithium | 48 |
| Dysprosium | 7 | | | | | Hydrogen | NR |

STD - Internal Standard
NR - Not Reported
MC - Major Component MC >1000 ppm
INT - Interference
All elements not detected <0.1 ppm

TABLE D28. SSMS ANALYSIS RESULTS: GASIFIER ASH SLUICE WATER

Sample #2280 Concentration in μg/ml

| ELEMENT | CONC. | ELEMENT | CONC. | ELEMENT | CONC. | ELEMENT | CONC. |
|---|---|---|---|---|---|---|---|
| Uranium | | Terbium | | Ruthenium | | Vanadium | 0.02 |
| Thorium | | Gadolinium | | Molybdenum | 0.1 | Titanium | 0.05 |
| Bismuth | | Europium | | Niobium | 0.002 | Scandium | ≤0.001 |
| Lead | 0.008 | Samarium | | Zirconium | 0.002 | Calcium | MC |
| Thallium | | Neodymium | | Yttrium | <0.001 | Potassium | MC |
| Mercury | NR | Praseodymium | 0.001 | Strontium | 4 | Chlorine | 0.5 |
| Gold | | Cerium | 0.002 | Rubidium | 0.04 | Sulfur | >6 |
| Platinum | | Lanthanum | <0.001 | Bromine | 0.02 | Phosphorus | 0.4 |
| Iridium | | Barium | 0.1 | Selenium | 0.005 | Silicon | 0.3 |
| Osmium | | Cesium | <0.001 | Arsenic | 0.009 | Aluminum | >1 |
| Rhenium | | Iodine | | Germanium | <0.001 | Magnesium | 5 |
| Tungsten | 0.02 | Tellurium | | Gallium | 0.008 | Sodium | >3 |
| Tantalum | | Antimony | 0.002 | Zinc | 0.05 | Fluorine | ≈1 |
| Hafnium | | Tin | | Copper | 0.01 | Oxygen | NR |
| Lutecium | | Indium | STD | Nickel | 0.02 | Nitrogen | NR |
| Ytterbium | | Cadmium | ≤0.002 | Cobalt | ≤0.002 | Carbon | NR |
| Thulium | | Silver | 0.001 | Iron | 0.5 | Boron | 0.2 |
| Erbium | | Palladium | | Manganese | 0.005 | Beryllium | <0.001 |
| Holmium | | Rhodium | | Chromium | 0.009 | Lithium | 0.4 |
| Dysprosium | | | | | | Hydrogen | NR |

STD - Internal Standard
NR - Not Reported
All elements not detected <0.001 μg/ml
MC - Major Component MC >10 μg/ml
INT - Interference

TABLE D29. VOLATILE METALS BY AAS: GASIFIER ASH

| SAMPLE NUMBER | SAMPLE TYPE | As | Hg | Sb | Se |
|---|---|---|---|---|---|
| 2274 | Gasifier Ash | 30 | 1.7 | <0.4 | 15 |
| 2280 | Gasifier Ash Sluice Water | 0.033 | .0014 | <0.06 | .020 |

As ppm: solids µg/g; liquids µg/ml.

TABLE D30. ICP RESULTS: GASIFIER ASH

Concentration in ppm weight (μg/g)

| | Analysis #1 | Analysis #2 |
|---|---|---|
| Ag | <6.2 | <6.2 |
| Ca | 48800 | 48100 |
| Fe | 30400 | 30100 |
| Ni | 71. | 62. |
| V | 38. | 37. |
| Al | 19100 | 18900 |
| Cd | <6.2 | <6.2 |
| Mg | 12300 | 12100 |
| Pb | <87. | <87. |
| Zn | 25. | 4.6 |
| As | <100 | <100 |
| Co | <190 | <190 |
| Mn | 64. | 64. |
| Sn | <50. | <50. |
| B | 220 | 200 |
| Cr | 22. | 20. |
| Mo | <50. | <50. |
| Sr | 1300 | 1300 |
| Ba | 1900 | 1900 |
| Cu | 33. | 47. |
| Na | <6300 | <6200 |
| Ti | 1200 | 1200 |

Sample #2274

TABLE D31. ICP RESULTS: GASIFIER ASH SLUICE WATER

| | Concentration in ppm (μg/ml) |
|---|---|
| Ag | <0.005 |
| Ca | 220. |
| Fe | 1.2 |
| Ni | <0.020 |
| V | 0.077 |
| Al | 11. |
| Cd | <0.005 |
| Mg | 11. |
| Pb | <0.07 |
| Zn | 0.044 |
| As | <0.08 |
| Co | <0.15 |
| Mn | 0.002 |
| Sn | 3.0 |
| B | 4.6 |
| Cr | 0.007 |
| Mo | 0.31 |
| Sr | 4. |
| Ba | 0.13 |
| Cu | 0.017 |
| Na | 1700 |
| Ti | 0.044 |

Sample #2280

TABLE D32. ALPHA & BETA EMISSION ANALYSIS RESULTS: GASIFIER ASH

| Determination | pCi/g ± Precision* |
|---|---|
| Gross Alpha | 46 ± 11 |
| Gross Beta | 52 ± 15 |

Sample #2278

*Variability of the radioactive disintegration process (counting error) at the 95 percent confidence level, 1.96σ.

TABLE D33. SPECIFIC ISOTOPE ANALYSIS RESULTS: GASIFIER ASH

| NUCLIDE | ACTIVITY pCi/g | PRECISION 2σ | COUNTING SYSTEM | SAMPLE SIZE |
|---|---|---|---|---|
| Po-210 | 0.496 | 0.108 | AS02 | 1.000 g |
| Ra-226 | 5.500 | 0.110 | LC | 0.500 g |
| Pb-210 | 0.539 | 0.734 | ABET | 1.000 g |
| U-234 | 4.8600 | 0.5832 | AS | 1.000 g |
| U-235 | 0.284 | 0.05936 | AS | 1.000 g |
| U-238 | 4.9600 | 0.5952 | AS | 1.000 g |
| K-40 | 8.8600 | 1.1518 | GEL2 | 410.0 g |
| Pb-214 | 4.330 | 0.866 | GEL2 | 410.0 g |
| Bi-214 | 4.3500 | 0.9135 | GEL2 | 410.0 g |
| Th-232 | 2.1100 | 0.3587 | GEL2 | 410.0 g |
| Th-227 | 0.43100 | 0.08189 | AS | 1.000 g |
| Th-228 | 2.6400 | 0.1584 | AS | 1.000 g |
| Th-230 | 5.500 | 0.220 | AS | 1.000 g |
| Th-232 | 2.6100 | 0.1566 | AS | 1.000 g |

Sample ashed prior to analysis except for Po-210, Pb-210, K-40, Pb-214, Bi-214, and Th-232.

Counting duration of 1000 minutes.

TABLE D34. PROXIMATE, ULTIMATE, AND MINERAL ANALYSIS RESULTS: GASIFIER ASH

| PROXIMATE ANALYSIS | As received | Dry Basis |
|---|---|---|
| % Moisture | 1.01 | ------ |
| % Ash | 73.66 | 74.41 |
| % Volatile | 6.49 | 6.56 |
| % Fixed Carbon | 18.84 | 19.03 |
| | 100.00 | 100.00 |
| Btu | 3709 | 3747 |
| % Sulfur | 1.08 | 1.09 |
| % Alk. as $Na_2O$ | N/A | N/A |

| ULTIMATE ANALYSIS | As received | Dry Basis |
|---|---|---|
| Moisture | 1.01 | ------ |
| Carbon | 24.39 | 24.64 |
| Hydrogen | 0.41 | 0.41 |
| Nitrogen | 0.17 | 0.17 |
| Chlorine | 0.02 | 0.02 |
| Sulfur | 1.08 | 1.09 |
| Ash | 73.66 | 74.41 |
| Oxygen (diff) | 0.60 | 0.60 |
| | 100.00 | 100.00 |

| MINERAL ANALYSIS | % Wt. Ignited Basis |
|---|---|
| Silica, $SiO_2$ | 39.18 |
| Alumina, $Al_2O_3$ | 22.38 |
| Titania, $TiO_2$ | 1.02 |
| Ferric oxide, $Fe_2O_3$ | 13.40 |
| Lime, CaO | 9.02 |
| Magnesia, MgO | 2.89 |
| Potassium oxide, $K_2O$ | 1.39 |
| Sodium oxide, $Na_2O$ | 3.26 |
| Sulfur Trioxide, $SO_3$ | 3.43 |
| Phos. pentoxide, $P_2O_5$ | 0.61 |
| Strontium oxide, SrO | 0.31 |
| Barium oxide, BaO | 0.83 |
| Manganese oxide, $Mn_3O_4$ | 0.04 |
| Sum | 97.76 |

Sample #2274

TABLE D35. ANION/CATION ANALYSIS RESULTS: GASIFIER ASH SLUICE WATER

| Parameter | Concentration (ppm) |
|---|---|
| pH | 9.3 |
| TDS | 4300 |
| TSS | - |
| Sulfate | 2860 |
| Sulfite | 47 |
| Nitrate | 3 |
| Nitrite | <.01 |
| Phosphate | <.1* |
| Cyanide | <.02 |
| Ammonia | 5.4 |
| COD | 76 |
| BOD | 28 - 64† |
| Phenol | .36 |
| Chloride | 78 |
| Fluoride | .87 |
| TOC | 16 |

Sample #2280

* Possible interference

† Possible toxic effect

| SAMPLE NUMBER | SAMPLE TYPE | SSMS | AAS | ICP | Radioactivity | Prox/ Ult | Anion/ Cation |
|---|---|---|---|---|---|---|---|
| 2279 | Cyclone Dust | ● | ● | ● | ● | ● | |
| 2281 | Cyclone Dust Quench Water | ● | ● | ● | | | ● |

Figure D5. Analysis Results Matrix: Cyclone Dust

TABLE D36. SSMS ANALYSIS RESULTS: CYCLONE DUST

Sample #2279 Concentration in ppm weight

| ELEMENT | CONC. | ELEMENT | CONC. | ELEMENT | CONC. | ELEMENT | CONC. |
|---|---|---|---|---|---|---|---|
| Uranium | 0.9 | Terbium | 0.1 | Ruthenium | | Vanadium | 19 |
| Thorium | 2 | Gadolinium | 0.4 | Molybdenum | 2 | Titanium | 470 |
| Bismuth | 0.3 | Europium | 0.4 | Niobium | 5 | Scandium | 5 |
| Lead | 8 | Samarium | 2 | Zirconium | 29 | Calcium | MC |
| Thallium | 0.9 | Neodymium | 3 | Yttrium | 13 | Potassium | MC |
| Mercury | NR | Praseodymium | 2 | Strontium | MC | Chlorine | 75 |
| Gold | | Cerium | 15 | Rubidium | 3 | Sulfur | MC |
| Platinum | | Lanthanum | 8 | Bromine | 9 | Phosphorus | MC |
| Iridium | | Barium | MC | Selenium | 5 | Silicon | MC |
| Osmium | | Cesium | 0.7 | Arsenic | 46 | Aluminum | MC |
| Rhenium | | Iodine | 0.4 | Germanium | 6 | Magnesium | MC |
| Tungsten | ≤0.7 | Tellurium | 0.2 | Gallium | 33 | Sodium | MC |
| Tantalum | | Antimony | 3 | Zinc | 160 | Fluorine | ≈280 |
| Hafnium | | Tin | 2 | Copper | 30 | Oxygen | NR |
| Lutecium | <0.1 | Indium | STD | Nickel | 4 | Nitrogen | NR |
| Ytterbium | 0.6 | Cadmium | 2 | Cobalt | 5 | Carbon | NR |
| Thulium | <0.1 | Silver | 2 | Iron | MC | Boron | 75 |
| Erbium | 0.3 | Palladium | | Manganese | 20 | Beryllium | 0.4 |
| Holmium | 0.4 | Rhodium | | Chromium | 11 | Lithium | 6 |
| Dysprosium | 0.6 | | | | | Hydrogen | NR |

STD - Internal Standard
NR - Not Reported
All elements not detected <0.1 ppm
MC - Major Component
INT - Interference

TABLE D37. SSMS ANALYSIS RESULTS: CYCLONE DUST QUENCH WATER

Sample #2281 Concentration in μg/ml

| ELEMENT | CONC. | ELEMENT | CONC. | ELEMENT | CONC. | ELEMENT | CONC. |
|---|---|---|---|---|---|---|---|
| Uranium | | Terbium | | Ruthenium | | Vanadium | 0.02 |
| Thorium | | Gadolinium | | Molybdenum | ≤0.004 | Titanium | 0.06 |
| Bismuth | | Europium | | Niobium | | Scandium | ≤0.001 |
| Lead | 0.02 | Samarium | | Zirconium | 0.005 | Calcium | MC |
| Thallium | | Neodymium | | Yttrium | 0.002 | Potassium | MC |
| Mercury | NR | Praseodymium | | Strontium | 2 | Chlorine | 0.3 |
| Gold | | Cerium | 0.002 | Rubidium | 0.02 | Sulfur | >7 |
| Platinum | | Lanthanum | | Bromine | 0.04 | Phosphorus | 0.4 |
| Iridium | | Barium | 0.002 | Selenium | 0.006 | Silicon | 2 |
| Osmium | | Cesium | 0.004 | Arsenic | *0.05 | Aluminum | >1 |
| Rhenium | | Iodine | 0.006 | Germanium | 0.007 | Magnesium | 1 |
| Tungsten | | Tellurium | | Gallium | *0.02 | Sodium | >3 |
| Tantalum | | Antimony | | Zinc | 0.06 | Fluorine | ≈2 |
| Hafnium | | Tin | | Copper | 0.02 | Oxygen | NR |
| Lutecium | | Indium | STD | Nickel | 0.08 | Nitrogen | NR |
| Ytterbium | | Cadmium | | Cobalt | 0.009 | Carbon | NR |
| Thulium | | Silver | 0.002 | Iron | 2 | Boron | 0.09 |
| Erbium | | Palladium | | Manganese | 0.005 | Beryllium | <0.001 |
| Holmium | | Rhodium | | Chromium | 0.01 | Lithium | 0.04 |
| Dysprosium | | | | | | Hydrogen | NR |

STD - Internal Standard
NR - Not Reported
All elements not detected <0.001 μg/ml
MC - Major Component MC >10 μg/ml

INT - Interference
*Heterogeneous

TABLE D38. VOLATILE METALS BY AAS: CYCLONE DUST

| SAMPLE NUMBER | SAMPLE TYPE | As | Hg | Sb | Se |
|---|---|---|---|---|---|
| 2279 | Cyclone Dust | 63 | <2.3 | <.4 | 14 |
| 2281 | Cyclone Dust Quench Water | 0.12 | .0004 | <.06 | <.025 |

As ppm: solids μg/g; liquids μg/ml.

TABLE D39. ICP RESULTS: CYCLONE DUST

Concentration in ppm (μg/g)

| | Analysis #1 | Analysis #2 |
|---|---|---|
| Ag | <6.2 | <6.2 |
| Ca | 11300 | 13600 |
| Fe | 7900 | 7600 |
| Ni | <25. | <25. |
| V | <12. | <13. |
| Al | 7200 | 7000 |
| Cd | <6.2 | <6.2 |
| Mg | 12300 | 12100 |
| Pb | <86. | <87. |
| Zn | 15. | 34. |
| As | <100 | <100 |
| Co | <190 | <190 |
| Mn | 23. | 14. |
| Sn | <19. | <50. |
| B | 118 | 110 |
| Cr | <6.2 | <6.2 |
| Mo | <49. | <50. |
| Sr | 1180 | 1170 |
| Ba | 2300 | 2300 |
| Cu | <6.2 | <6.2 |
| Na | 6200 | 6200 |
| Ti | 317 | 300 |

Sample #2279

TABLE D40. ICP RESULTS: CYCLONE DUST QUENCH WATER

| | Concentration in µg/ml (ppm) |
|---|---|
| Ag | <0.005 |
| Ca | 54. |
| Fe | 4.9 |
| Ni | <0.02 |
| V | 0.015 |
| Al | 11. |
| Cd | <0.005 |
| Mg | 11. |
| Pb | 0.099 |
| Zn | 0.035 |
| As | <0.08 |
| Co | <0.15 |
| Mn | <0.001 |
| Sn | 2.9 |
| B | 0.99 |
| Cr | <0.005 |
| Mo | <0.04 |
| Sr | 1.1 |
| Ba | 0.57 |
| Cu | 0.012 |
| Na | 220 |
| Ti | 0.18 |

Sample #2281

TABLE D41. ALPHA AND BETA EMISSION ANALYSIS RESULTS: CYCLONE DUST

| Determination | pCi/g ± Precision* |
|---|---|
| Gross Alpha | 11.1 ± 6.1 |
| Gross Beta | 0 ± 15 |

Sample #2279

*Variability of the radioactive disintegration process (counting error) at the 95% confidence level, 1.96σ.

TABLE D42. SPECIFIC ISOTOPE ANALYSIS RESULTS: CYCLONE DUST

| NUCLIDE | ACTIVITY pCi/g | PRECISION 2σ | COUNTING SYSTEM | SAMPLE SIZE |
|---|---|---|---|---|
| Po-210 | 2.500 | 0.585 | AS03 | 1.00 g |
| Ra-226 | 2.000 | 0.080 | LC | 0.500 g |
| Pb-210 | 1.392 | 1.283 | ABET | 1.000 g |
| U-234 | 0.675 | 0.10125 | AS | 1.000 g |
| U-235 | 0.388 | 0.20564 | AS | 1.000 g |
| U-238 | 0.731 | 0.10965 | AS | 1.000 g |
| Th-227 | ND | ND | AS | 1.000 g |
| Th-228 | 0.528 | 0.12672 | AS | 1.000 g |
| Th-230 | 0.639 | 0.14697 | AS | 1.000 g |
| Th-232 | 0.417 | 0.10842 | AS | 1.000 g |

Sample ashed prior to analysis for U-234, U-235, and U-238.
Counting duration of 1000 minutes.

TABLE D43. PROXIMATE, ULTIMATE, AND MINERAL ANALYSIS RESULTS: CYCLONE DUST

| PROXIMATE ANALYSIS | As received | Dry Basis |
|---|---|---|
| % Moisture | 0.44 | ------ |
| % Ash | 18.89 | 18.97 |
| % Volatile | 24.30 | 24.41 |
| % Fixed Carbon | 56.37 | 56.62 |
| | 100.00 | 100.00 |
| Btu | 10670 | 10717 |
| % Sulfur | 1.50 | 1.51 |
| % Alk. as $Na_2O$ | N/A | N/A |

| ULTIMATE ANALYSIS | As received | Dry Basis |
|---|---|---|
| Moisture | 0.44 | ------ |
| Carbon | 66.88 | 67.18 |
| Hydrogen | 2.31 | 2.32 |
| Nitrogen | 0.93 | 0.93 |
| Chlorine | 0.03 | 0.03 |
| Sulfur | 1.50 | 1.51 |
| Ash | 18.89 | 18.97 |
| Oxygen (diff) | 9.02 | 9.06 |
| | 100.00 | 100.00 |

| MINERAL ANALYSIS | % Wt. Ignited Basis |
|---|---|
| Silica, $SiO_2$ | 20.71 |
| Alumina, $Al_2O_3$ | 12.21 |
| Titania, $TiO_2$ | 0.35 |
| Ferric oxide, $Fe_2O_3$ | 6.95 |
| Lime, CaO | 21.55 |
| Magnesia, MgO | 6.82 |
| Potassium oxide, $K_2O$ | 0.81 |
| Sodium oxide, $Na_2O$ | 7.83 |
| Sulfur Trioxide, $SO_3$ | 17.02 |
| Phos. pentoxide, $P_2O_5$ | 0.70 |
| Strontium oxide, SrO | 0.85 |
| Barium oxide, BaO | 2.01 |
| Manganese oxide, $Mn_3O_4$ | 0.01 |
| Sum | 97.82 |

Sample #2279

TABLE D44. ANION/CATION ANALYSIS RESULTS: CYCLONE DUST QUENCH WATER

| Parameter | Concentration (ppm) |
|---|---|
| pH | 10.0 |
| TDS | 390 |
| TSS | - |
| Sulfate | 55 |
| Sulfite | 12 |
| Nitrate | <.5* |
| Nitrite | <.01 |
| Phosphate | <.1* |
| Cyanide | .36 |
| Ammonia | .97 |
| COD | 800 |
| BOD | 62 - 85† |
| Phenol | 9.8 |
| Chloride | 34 |
| Fluoride | 2.0 |
| TOC | 185 |

Sample # 2281

* Possible interference

† Possible toxic effects

| SAMPLE NUMBER | SAMPLE TYPE | SSMS | AAS | ICP | Radioactivity | Prox/ Ult | Anion/ Cation |
|---|---|---|---|---|---|---|---|
| 2272 | Lignite Composite | ● | ● | | ● | ● | |
| 2266 | Lignite | | | | | ● | |
| 2267 | Lignite | | | | | ● | |
| 2268 | Lignite | | | | | ● | |
| 2269 | Lignite | | | | | ● | |
| 2270 | Lignite | | | | | ● | |
| 2271 | Lignite | | | | | ● | |

Figure D6. Analysis Results Matrix: Lignite Composite

TABLE D45. SSMS ANALYSIS RESULTS: LIGNITE COMPOSITE

Sample #2272 Concentration in ppm weight

| ELEMENT | CONC. | ELEMENT | CONC. | ELEMENT | CONC. | ELEMENT | CONC. |
|---|---|---|---|---|---|---|---|
| Uranium | ≤0.9 | Terbium | 0.1 | Ruthenium | | Vanadium | 22 |
| Thorium | ≤1 | Gadolinium | 0.4 | Molybdenum | 1 | Titanium | 350 |
| Bismuth | | Europium | 0.2 | Niobium | 2 | Scandium | 5 |
| Lead | 2 | Samarium | 1 | Zirconium | 17 | Calcium | MC |
| Thallium | | Neodymium | 1 | Yttrium | 4 | Potassium | MC |
| Mercury | NR | Praseodymium | 0.7 | Strontium | 280 | Chlorine | 15 |
| Gold | | Cerium | 8 | Rubidium | 9 | Sulfur | MC |
| Platinum | | Lanthanum | 6 | Bromine | 1 | Phosphorus | 910 |
| Iridium | | Barium | 630 | Selenium | 0.7 | Silicon | MC |
| Osmium | | Cesium | 0.9 | Arsenic | 12 | Aluminum | MC |
| Rhenium | | Iodine | 0.2 | Germanium | 0.7 | Magnesium | MC |
| Tungsten | | Tellurium | | Gallium | *19 | Sodium | MC |
| Tantalum | | Antimony | 0.2 | Zinc | 3 | Fluorine | ≈ 210 |
| Hafnium | | Tin | 0.5 | Copper | 8 | Oxygen | NR |
| Lutecium | | Indium | STD | Nickel | 5 | Nitrogen | NR |
| Ytterbium | | Cadmium | 0.4 | Cobalt | 2 | Carbon | NR |
| Thulium | | Silver | 1 | Iron | MC | Boron | 25 |
| Erbium | | Palladium | | Manganese | 13 | Beryllium | 0.4 |
| Holmium | | Rhodium | | Chromium | 10 | Lithium | 5 |
| Dysprosium | | | | | | Hydrogen | NR |

STD - Internal Standard
NR - Not Reported
MC - Major Component MC >1000 ppm
INT - Interference
All elements not detected <0.1 ppm
*Heterogeneous

TABLE D46. VOLATILE METALS BY AAS: LIGNITE COMPOSITE

| SAMPLE NUMBER | SAMPLE TYPE | As | Hg | Sb | Se |
|---|---|---|---|---|---|
| 2272 | Lignite | 6.5 | .39 | <.06 | 1.0 |

As ppm: solids μg/g

TABLE D47. ALPHA AND BETA EMISSION ANALYSIS RESULTS: LIGNITE COMPOSITE

| Determination | pCi/g ± Precision* |
|---|---|
| Gross Alpha | 1.7 ± 3.6 |
| Gross Beta | 0 ± 13 |

Sample #2273

*Variability of the radioactive disintegration process (counting error) at the 95% confidence level, 1.96σ.

TABLE D48. SPECIFIC ISOTOPE ANALYSIS RESULTS: LIGNITE COMPOSITE

| NUCLIDE | ACTIVITY pCi/g | PRECISION 2σ | COUNTING SYSTEM | SAMPLE SIZE |
|---|---|---|---|---|
| Po-210 | 0.627 | 0.146 | AS07 | 1.000 g |
| Ra-226 | 0.280 | 0.008 | LC | 0.500 g |
| Pb-210 | 0.984 | 0.441 | ABET | 1.000 g |
| U-234 | 0.211 | 0.0295 | AS | 1.000 g |
| U-235 | 0.014 | 0.0029 | AS | 1.000 g |
| U-238 | 0.205 | 1.000 | AS | 1.000 g |
| Th-227 | 0.041 | 0.00779 | AS | 1.000 g |
| Th-228 | 0.134 | 0.01072 | AS | 1.000 g |
| Th-230 | 0.186 | 0.01488 | AS | 1.000 g |
| Th-232 | 0.126 | 0.01008 | AS | 1.000 g |

Sample ashed prior to analysis except for Po-210 and Pb-210 determinations.

Counting duration of 1000 minutes.

TABLE D49. PROXIMATE, ULTIMATE, AND MINERAL ANALYSIS RESULTS: LIGNITE COMPOSITE

| PROXIMATE ANALYSIS | As received | Dry Basis |
|---|---|---|
| % Moisture | 4.19 | ------ |
| % Ash | 10.45 | 10.91 |
| % Volatile | 40.17 | 41.93 |
| % Fixed Carbon | 45.19 | 47.16 |
| | 100.00 | 100.00 |
| Btu | 10036 | 10475 |
| % Sulfur | 0.58 | 0.61 |
| % Alk. as $Na_2O$ | N/A | N/A |

| ULTIMATE ANALYSIS | As received | Dry Basis |
|---|---|---|
| Moisture | 4.19 | ------ |
| Carbon | 60.06 | 62.69 |
| Hydrogen | 4.41 | 4.60 |
| Nitrogen | 0.87 | 0.91 |
| Chlorine | 0.03 | 0.03 |
| Sulfur | 0.58 | 0.61 |
| Ash | 10.45 | 10.91 |
| Oxygen (diff) | 19.41 | 20.25 |
| | 100.00 | 100.00 |

| MINERAL ANALYSIS | % Wt. Ignited Basis |
|---|---|
| Silica, $SiO_2$ | 30.21 |
| Alumina, $Al_2O_3$ | 14.93 |
| Titania, $TiO_2$ | 0.46 |
| Ferric oxide, $Fe_2O_3$ | 6.36 |
| Lime, CaO | 16.39 |
| Magnesia, MgO | 6.46 |
| Potassium oxide, $K_2O$ | 1.49 |
| Sodium oxide, $Na_2O$ | 9.00 |
| Sulfur Trioxide, $SO_3$ | 10.93 |
| Phos. pentoxide, $P_2O_5$ | 0.63 |
| Strontium oxide, SrO | 0.72 |
| Barium oxide, BaO | 1.32 |
| Manganese oxide, $Mn_3O_4$ | 0.01 |
| Sum | 98.91 |

Sample #2272

TABLE D50. PROXIMATE, ULTIMATE, AND MINERAL ANALYSIS RESULTS: LIGNITE FS-9

| PROXIMATE ANALYSIS | As Received | Dry Basis |
|---|---|---|
| % Moisture | 6.82 | ----- |
| % Ash | 6.29 | 6.75 |
| % Volatile | 41.18 | 44.19 |
| % Fixed Carbon | 45.71 | 49.06 |
| | 100.00 | 100.00 |
| Btu | 10090 | 10829 |
| % Sulfur | 0.39 | 0.42 |

| | % Weight | |
|---|---|---|
| ULTIMATE ANALYSIS | As Received | Dry Basis |
| Moisture | 6.82 | ----- |
| Carbon | 60.59 | 65.02 |
| Hydrogen | 4.20 | 4.51 |
| Nitrogen | 0.85 | 0.91 |
| Chlorine | 0.03 | 0.03 |
| Sulfur | 0.39 | 0.42 |
| Ash | 6.29 | 6.75 |
| Oxygen (diff) | 20.83 | 22.36 |
| | 100.00 | 100.00 |

Sample #2266.

TABLE D51. PROXIMATE, ULTIMATE, AND MINERAL ANALYSIS RESULTS: LIGNITE FS-11

| PROXIMATE ANALYSIS | As Received | Dry Basis |
|---|---|---|
| % Moisture | 7.79 | ----- |
| % Ash | 6.20 | 6.72 |
| % Volatile | 41.15 | 44.63 |
| % Fixed Carbon | 44.86 | 48.65 |
| | 100.00 | 100.00 |
| Btu | 10071 | 10922 |
| % Sulfur | 0.44 | 0.48 |

| | % Weight | |
|---|---|---|
| ULTIMATE ANALYSIS | As Received | Dry Basis |
| Moisture | 7.79 | ----- |
| Carbon | 60.07 | 65.14 |
| Hydrogen | 4.44 | 4.82 |
| Nitrogen | 0.81 | 0.88 |
| Chlorine | 0.02 | 0.02 |
| Sulfur | 0.44 | 0.48 |
| Ash | 6.20 | 6.72 |
| Oxygen (diff) | 20.23 | 21.94 |
| | 100.00 | 100.00 |

Sample #2267.

TABLE D52. PROXIMATE, ULTIMATE, AND MINERAL ANALYSIS RESULTS: LIGNITE FS-21

| PROXIMATE ANALYSIS | As Received | Dry Basis |
|---|---|---|
| % Moisture | 3.79 | ----- |
| % Ash | 6.54 | 6.80 |
| % Volatile | 42.56 | 44.24 |
| % Fixed Carbon | 47.11 | 48.96 |
| | 100.00 | 100.00 |
| Btu | 10663 | 11083 |
| % Sulfur | 0.44 | 0.46 |

| | % Weight | |
|---|---|---|
| ULTIMATE ANALYSIS | As Received | Dry Basis |
| Moisture | 3.79 | ----- |
| Carbon | 63.10 | 65.59 |
| Hydrogen | 4.73 | 4.92 |
| Nitrogen | 0.90 | 0.94 |
| Chlorine | 0.03 | 0.03 |
| Sulfur | 0.44 | 0.46 |
| Ash | 6.54 | 6.80 |
| Oxygen (diff) | 20.47 | 21.26 |
| | 100.00 | 100.00 |

Sample #2268.

TABLE D53. PROXIMATE AND ULTIMATE ANALYSIS RESULTS: LIGNITE FS-24

| PROXIMATE ANALYSIS | As Received | Dry Basis |
|---|---|---|
| % Moisture | 2.06 | ----- |
| % Ash | 6.83 | 6.97 |
| % Volatile | 44.65 | 45.59 |
| % Fixed Carbon | 46.46 | 47.44 |
| | 100.00 | 100.00 |
| Btu | 10828 | 11056 |
| % Sulfur | 0.57 | 0.58 |

| | % Weight | |
|---|---|---|
| ULTIMATE ANALYSIS | As Received | Dry Basis |
| Moisture | 2.06 | ----- |
| Carbon | 64.00 | 65.35 |
| Hydrogen | 4.31 | 4.40 |
| Nitrogen | 0.87 | 0.89 |
| Chlorine | 0.84 | 0.04 |
| Sulfur | 0.57 | 0.58 |
| Ash | 6.83 | 6.97 |
| Oxygen (diff) | 21.32 | 21.77 |
| | 100.00 | 100.00 |

Sample #2269.

TABLE D54. PROXIMATE, ULTIMATE, AND MINERAL ANALYSIS RESULTS: LIGNITE FS-50

| PROXIMATE ANALYSIS* | As Received | Dry Basis |
|---|---|---|
| % Moisture | 1.83 | ----- |
| % Ash | 17.50 | 17.83 |
| % Volatile | 39.89 | 40.63 |
| % Fixed Carbon | 40.78 | 41.54 |
| | 100.00 | 100.00 |
| Btu | 9744 | 9926 |
| % Sulfur | 7.12 | 7.25 |

| | % Weight | |
|---|---|---|
| ULTIMATE ANALYSIS | As Received | Dry Basis |
| Moisture | 1.83 | ----- |
| Carbon | 55.79 | 56.83 |
| Hydrogen | 3.62 | 3.69 |
| Nitrogen | 0.81 | 0.83 |
| Chlorine | 0.02 | 0.02 |
| Sulfur | 7.12 | 7.25 |
| Ash | 17.50 | 17.83 |
| Oxygen (diff) | 13.31 | 13.55 |
| | 100.00 | 100.00 |

Sample #2270

*Duplicate analysis results (2-8-1980)

| | As Received | Dry Basis |
|---|---|---|
| % Moisture | 6.81 | ----- |
| % Ash | 14.52 | 15.58 |
| % Volatile | 38.00 | 40.78 |
| % Fixed Carbon | 40.67 | 43.64 |
| | 100.00 | 100.00 |
| Btu | 9242 | 9917 |
| % Sulfur | 4.87 | 5.23 |

TABLE D55. PROXIMATE, ULTIMATE, AND MINERAL ANALYSIS RESULTS: LIGNITE FS-72

| PROXIMATE ANALYSIS | As Received | Dry Basis |
|---|---|---|
| % Moisture | 2.08 | ----- |
| % Ash | 10.93 | 11.16 |
| % Volatile | 45.06 | 46.02 |
| % Fixed Carbon | 41.93 | 42.82 |
| | 100.00 | 100.00 |
| Btu | 10143 | 10358 |
| % Sulfur | 0.51 | 0.52 |

| | % Weight | |
|---|---|---|
| ULTIMATE ANALYSIS | As Received | Dry Basis |
| Moisture | 2.08 | ----- |
| Carbon | 60.92 | 62.21 |
| Hydrogen | 4.50 | 4.60 |
| Nitrogen | 0.79 | 0.81 |
| Chlorine | 0.04 | 0.04 |
| Sulfur | 0.51 | 0.52 |
| Ash | 10.93 | 11.16 |
| Oxygen (diff) | 20.23 | 20.66 |
| | 100.00 | 100.00 |

Sample #2271

| SAMPLE NUMBER | SAMPLE TYPE | SSMS | AAS | ICP | Radioactivity | Prox/ Ult | Anion/ Cation |
|---|---|---|---|---|---|---|---|
| 2282 | Service Water | ● | | | | | |

Figure D7. Analysis Results Matrix: Service Water

TABLE D56. SSMS ANALYSIS RESULTS: SERVICE WATER

Sample #2282 Concentration in μg/ml

| ELEMENT | CONC. | ELEMENT | CONC. | ELEMENT | CONC. | ELEMENT | CONC. |
|---|---|---|---|---|---|---|---|
| Uranium | | Terbium | | Ruthenium | | Vanadium | 0.002 |
| Thorium | | Gadolinium | | Molybdenum | | Titanium | ≤0.06 |
| Bismuth | | Europium | | Niobium | | Scandium | ≤0.002 |
| Lead | | Samarium | | Zirconium | ≤0.004 | Calcium | MC |
| Thallium | | Neodymium | | Yttrium | | Potassium | 7 |
| Mercury | NR | Praseodymium | | Strontium | 0.04 | Chlorine | 0.2 |
| Gold | | Cerium | 0.004 | Rubidium | 0.002 | Sulfur | 3 |
| Platinum | | Lanthanum | | Bromine | 0.02 | Phosphorus | 0.05 |
| Iridium | | Barium | 0.03 | Selenium | | Silicon | 0.9 |
| Osmium | | Cesium | 0.002 | Arsenic | ≤0.001 | Aluminum | 0.1 |
| Rhenium | | Iodine | | Germanium | | Magnesium | 5 |
| Tungsten | | Tellurium | | Gallium | | Sodium | 7 |
| Tantalum | | Antimony | | Zinc | 0.04 | Fluorine | ≈0.4 |
| Hafnium | | Tin | | Copper | 0.01 | Oxygen | NR |
| Lutecium | | Indium | STD | Nickel | 0.02 | Nitrogen | NR |
| Ytterbium | | Cadmium | | Cobalt | ≤0.004 | Carbon | NR |
| Thulium | | Silver | ≤0.003 | Iron | 0.3 | Boron | 0.01 |
| Erbium | | Palladium | | Manganese | 0.006 | Beryllium | |
| Holmium | | Rhodium | | Chromium | 0.01 | Lithium | 0.01 |
| Dysprosium | | | | | | Hydrogen | NR |

STD - Internal Standard
NR - Not Reported
All elements not detected <0.002 μg/ml
MC - Major Component MC >10 μg/ml
INT - Interference

| SAMPLE NUMBER | SAMPLE TYPE | SSMS | AAS | ICP | Radioactivity | Prox/ Ult | Anion/ Cation |
|---|---|---|---|---|---|---|---|
| 2352 | Gasifier Ash Leachate | ● | ● | | | | ● |
| 2353 | Cyclone Dust Leachate | ● | ● | | | | ● |
| 2354 | Leachate Blank | ● | ● | | | | ● |

Figure D8. Analysis Results Matrix: Leachates

TABLE D57. SSMS ANALYSIS RESULTS: GASIFIER ASH LEACHATE

Sample #2352 Concentration in µg/ml

| ELEMENT | CONC. | ELEMENT | CONC. | ELEMENT | CONC. | ELEMENT | CONC. |
|---|---|---|---|---|---|---|---|
| Uranium | ≤0.006 | Terbium | | Ruthenium | | Vanadium | 0.007 |
| Thorium | ≤0.008 | Gadolinium | | Molybdenum | 0.01 | Titanium | 0.1 |
| Bismuth | | Europium | | Niobium | | Scandium | ≤0.001 |
| Lead | 0.007 | Samarium | | Zirconium | 0.005 | Calcium | MC |
| Thallium | | Neodymium | | Yttrium | 0.007 | Potassium | MC |
| Mercury | NR | Praseodymium | | Strontium | 6 | Chlorine | 0.05 |
| Gold | | Cerium | 0.004 | Rubidium | 0.02 | Sulfur | 6 |
| Platinum | | Lanthanum | 0.004 | Bromine | 0.004 | Phosphorus | 0.07 |
| Iridium | | Barium | 1 | Selenium | 0.005 | Silicon | MC |
| Osmium | | Cesium | 0.001 | Arsenic | 0.005 | Aluminum | 0.1 |
| Rhenium | | Iodine | | Germanium | 0.002 | Magnesium | MC |
| Tungsten | | Tellurium | | Gallium | <0.001 | Sodium | 2 |
| Tantalum | | Antimony | | Zinc | 0.1 | Fluorine | ≈3 |
| Hafnium | | Tin | | Copper | 0.1 | Oxygen | NR |
| Lutecium | | Indium | STD | Nickel | 0.04 | Nitrogen | NR |
| Ytterbium | | Cadmium | ≤0.007 | Cobalt | 0.007 | Carbon | NR |
| Thulium | | Silver | | Iron | *2 | Boron | 0.08 |
| Erbium | | Palladium | | Manganese | 0.5 | Beryllium | |
| Holmium | | Rhodium | | Chromium | 0.001 | Lithium | 0.006 |
| Dysprosium | | | | | | Hydrogen | NR |

STD - Internal Standard
NR - Not Reported
All elements not detected <0.001 µg/ml

MC - Major Component MC >10 µg/ml
INT - Interference
*Heterogeneous

TABLE D58. SSMS ANALYSIS RESULTS: CYCLONE DUST LEACHATE

Sample #2353 Concentration in μg/ml

| ELEMENT | CONC. | ELEMENT | CONC. | ELEMENT | CONC. | ELEMENT | CONC. |
|---|---|---|---|---|---|---|---|
| Uranium | ≤0.01 | Terbium | | Ruthenium | | Vanadium | <0.001 |
| Thorium | ≤0.01 | Gadolinium | | Molybdenum | 0.002 | Titanium | 0.05 |
| Bismuth | | Europium | | Niobium | | Scandium | ≤0.001 |
| Lead | 0.008 | Samarium | | Zirconium | 0.03 | Calcium | MC |
| Thallium | | Neodymium | | Yttrium | 0.003 | Potassium | MC |
| Mercury | NR | Praseodymium | | Strontium | 7 | Chlorine | 0.1 |
| Gold | | Cerium | 0.001 | Rubidium | 0.02 | Sulfur | >6 |
| Platinum | | Lanthanum | | Bromine | ≤0.02 | Phosphorus | 0.4 |
| Iridium | | Barium | 1 | Selenium | 0.006 | Silicon | MC |
| Osmium | | Cesium | 0.004 | Arsenic | 0.02 | Aluminum | >1 |
| Rhenium | | Iodine | | Germanium | 0.002 | Magnesium | MC |
| Tungsten | | Tellurium | | Gallium | <0.001 | Sodium | >3 |
| Tantalum | | Antimony | 0.008 | Zinc | 0.07 | Fluorine | ≈4 |
| Hafnium | | Tin | 0.002 | Copper | 0.006 | Oxygen | NR |
| Lutecium | | Indium | STD | Nickel | 0.01 | Nitrogen | NR |
| Ytterbium | | Cadmium | | Cobalt | 0.002 | Carbon | NR |
| Thulium | | Silver | | Iron | 0.6 | Boron | 0.1 |
| Erbium | | Palladium | | Manganese | 0.1 | Beryllium | |
| Holmium | | Rhodium | | Chromium | 0.001 | Lithium | 0.04 |
| Dysprosium | | | | | | Hydrogen | NR |

STD - Internal Standard
NR - Not Reported
All elements not detected <0.001 μg/ml
MC - Major Component MC >10 μg/ml
INT - Interference

TABLE D59. SSMS ANALYSIS RESULTS: LEACHATE BLANK

Sample #2354 Concentration in μg/ml

| ELEMENT | CONC. | ELEMENT | CONC. | ELEMENT | CONC. | ELEMENT | CONC. |
|---|---|---|---|---|---|---|---|
| Uranium | ≤0.02 | Terbium | | Ruthenium | | Vanadium | <0.001 |
| Thorium | ≤0.02 | Gadolinium | | Molybdenum | | Titanium | 0.01 |
| Bismuth | | Europium | | Niobium | | Scandium | <0.001 |
| Lead | 0.01 | Samarium | | Zirconium | | Calcium | 0.6 |
| Thallium | | Neodymium | | Yttrium | | Potassium | *0.7 |
| Mercury | NR | Praseodymium | | Strontium | 0.02 | Chlorine | 0.06 |
| Gold | | Cerium | | Rubidium | | Sulfur | 0.08 |
| Platinum | | Lanthanum | | Bromine | | Phosphorus | 0.02 |
| Iridium | | Barium | 0.2 | Selenium | | Silicon | 0.08 |
| Osmium | | Cesium | | Arsenic | | Aluminum | *0.03 |
| Rhenium | | Iodine | | Germanium | | Magnesium | MC |
| Tungsten | | Tellurium | | Gallium | | Sodium | *0.3 |
| Tantalum | | Antimony | | Zinc | 0.04 | Fluorine | ≈0.04 |
| Hafnium | | Tin | | Copper | 0.008 | Oxygen | NR |
| Lutecium | | Indium | STD | Nickel | 0.007 | Nitrogen | NR |
| Ytterbium | | Cadmium | | Cobalt | <0.001 | Carbon | NR |
| Thulium | | Silver | | Iron | 0.06 | Boron | |
| Erbium | | Palladium | | Manganese | 0.003 | Beryllium | |
| Holmium | | Rhodium | | Chromium | 0.001 | Lithium | |
| Dysprosium | | | | | | Hydrogen | NR |

STD - Internal Standard
NR - Not Reported
All elements not detected <0.002 μg/ml

MC - Major Component MC >10 μg/ml
INT - Interference
*Heterogeneous

TABLE D60. VOLATILE METALS BY AAS: LEACHATES

| SAMPLE NUMBER | SAMPLE TYPE | As | Hg | Sb | Se |
|---|---|---|---|---|---|
| 2352 | Gasifier Ash Leachate | .019 | <.0006 | <.06 | .014 |
| 2353 | Cyclone Dust Leachate | .033 | <.0003 | <.06 | <.01 |
| 2354 | Leachate Blank | <.005 | <.0002 | <.06 | .012 |

As ppm: μg/ml.

TABLE D61. ANION/CATION ANALYSIS RESULTS: GASIFIER ASH LEACHATE

| Parameter | Concentration (ppm) |
|---|---|
| pH | 4.13 |
| TDS | 2131 |
| TSS | 36.1 |
| Sulfite | <10 |
| Nitrate | <.25 |
| Nitrite | <.01 |
| Phosphate | .1 |
| Cyanide | <.02 |
| Ammonia | <.007 |
| COD | 1710 |
| BOD | 2970 |
| Phenol | .002 |

Sample #2352

TABLE D62. ANION/CATION ANALYSIS RESULTS: CYCLONE DUST LEACHATE

| Parameter | Concentration (ppm) |
|---|---|
| pH | 4.04 |
| TDS | 2281 |
| TSS | 16.7 |
| Sulfite | <10 |
| Nitrate | <.25 |
| Nitrite | <.01 |
| Phosphate | .2 |
| Cyanide | .05 |
| Ammonia | 1.8 |
| COD | 1410 |
| BOD | 3150 |
| Phenol | .038 |

Sample #2353

TABLE D63. ANION/CATION ANALYSIS RESULTS: LEACHATE BLANK

| Parameter | Concentration (ppm) |
|---|---|
| pH | 2.01 |
| TDS | 15 |
| TSS | 3 |
| Sulfite | <10 |
| Nitrate | <.25 |
| Nitrite | <.01 |
| Phosphate | .1 |
| Cyanide | <.02 |
| Ammonia | <.007 |
| COD | 1430 |
| BOD | 2661 |
| Phenol | <.002 |
| TOC | 1.3 |

Sample #2354

TABLE D64. IRON AND NICKEL CARBONYL ANALYSIS RESULTS: COAL BIN VENT GAS

| CARBONYL | SCM* SAMPLED | TOTAL μg | Vppm |
|---|---|---|---|
| $Fe(CO)_5$ | 1.533 | 50 | .033 |
| $Ni(CO)_4$ | 1.533 | <.2 | <.001 |

*SCM at 25°C (77°F) and 101 kPa (1 atm), dry basis.

## D3.0 ORGANIC SCREENING ANALYSIS RESULTS

The screening analyses were accomplished using the methods described in Appendix C of this document. The analytical results are presented in the following tables by stream:

- Product Gas
  - product gas particulates
  - product gas organic module composite
- Test Burner Flue Gas
- Gasifier Ash
  - gasifier ash
  - gasifier ash sluice water
- Cyclone Dust
  - cyclone dust
  - cyclone dust quench water

An analytical flow diagram of the sample compositing and the screening analysis steps preceeds each sample results section. Each sample results section contains the LC fractionation and infrared analysis results. The gasifier ash sluice water and cyclone dust quench water flow rates were not well known for the on-site sampling periods, and the cyclone dust quench wtaer was allowed to remain the contact with the cyclone dust for an extended period of time. Therefore, fractionation of these non-representative samples was not undertaken. The IR of each aqueous sample is compared with the IR of the corresponding solid and the total extractable organic content is given on the analytical flow diagram for each aqueous sample.

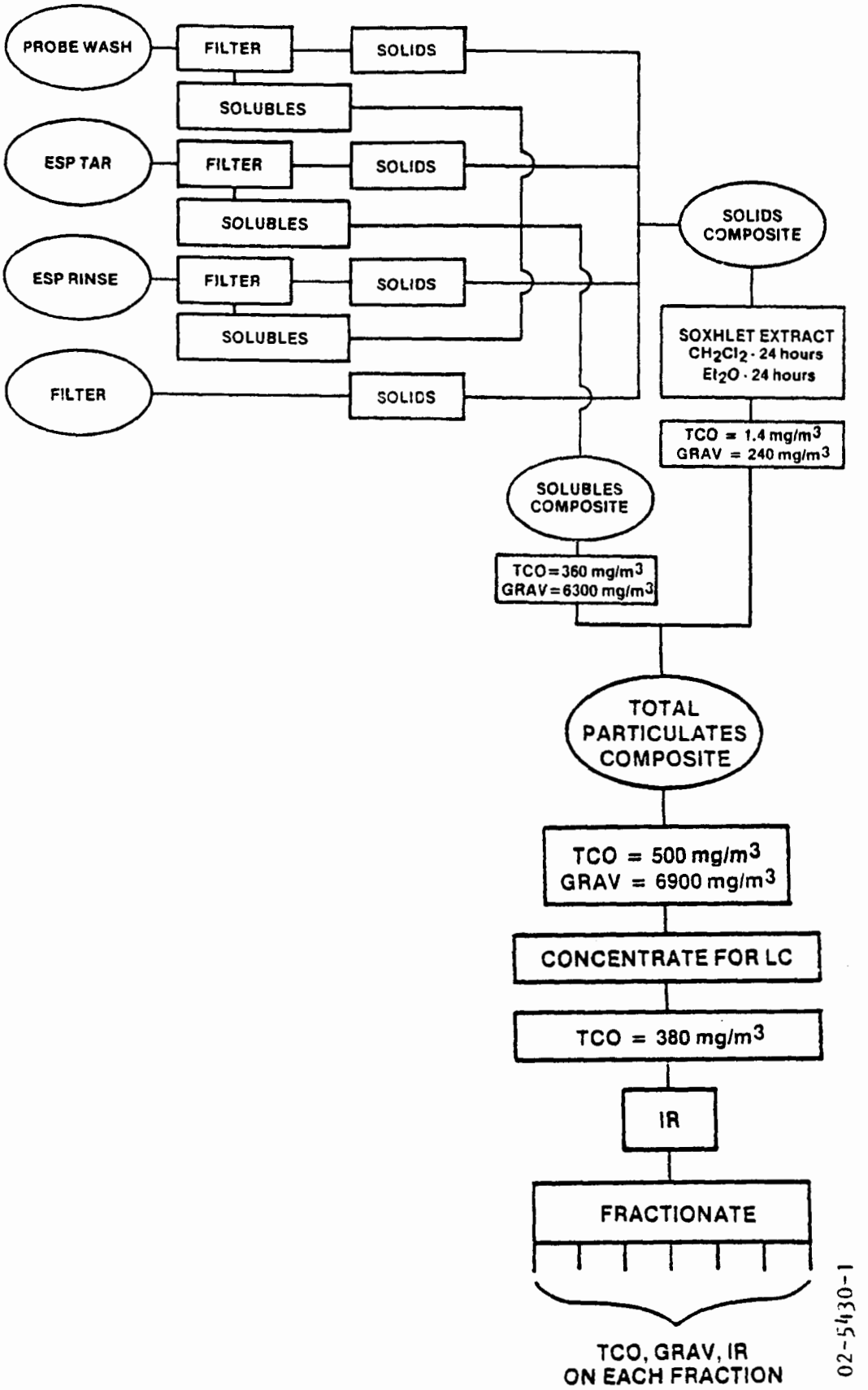


Figure D9. Product Gas Particulate Screening Analysis Schematic

TABLE D65 . LC ANALYSIS RESULTS: PRODUCT GAS PARTICULATES

| | TCO mg | GRAV mg | TOTAL mg | CONCENTRATION mg/SCM |
|---|---|---|---|---|
| Total Sample | 3200 | 5900 | 6200 | 7300 |
| Taken for LC | 5.3 | 97.6 | 102.9 | |
| Recovered | 3.3 | 90.0 | 93.3 | 6500 |

| | TCO mg | GRAV mg | SAMPLE TOTAL mg | CONCENTRATION mg/SCM |
|---|---|---|---|---|
| LC 1 | 0.26 | 12.2 | 7400 | 870 |
| LC 2 | ND | 1.3 | 760 | 89 |
| LC 3 | 0.17 | 9.6 | 5800 | 680 |
| LC 4 | ND | 5.9 | 3500 | 410 |
| LC 5 | 0.16 | 6.9 | 4200 | 490 |
| LC 6 | 2.74 | 49.6 | 31000 | 3600 |
| LC 7 | ND | 4.5 | 2600 | 300 |
| % Recovery | 62% | 92% | 89% | |

ND - Less than 0.01 mg total TCO.

SCM at 25°C (77°F) and 101 kPa (1 atm), dry basis.

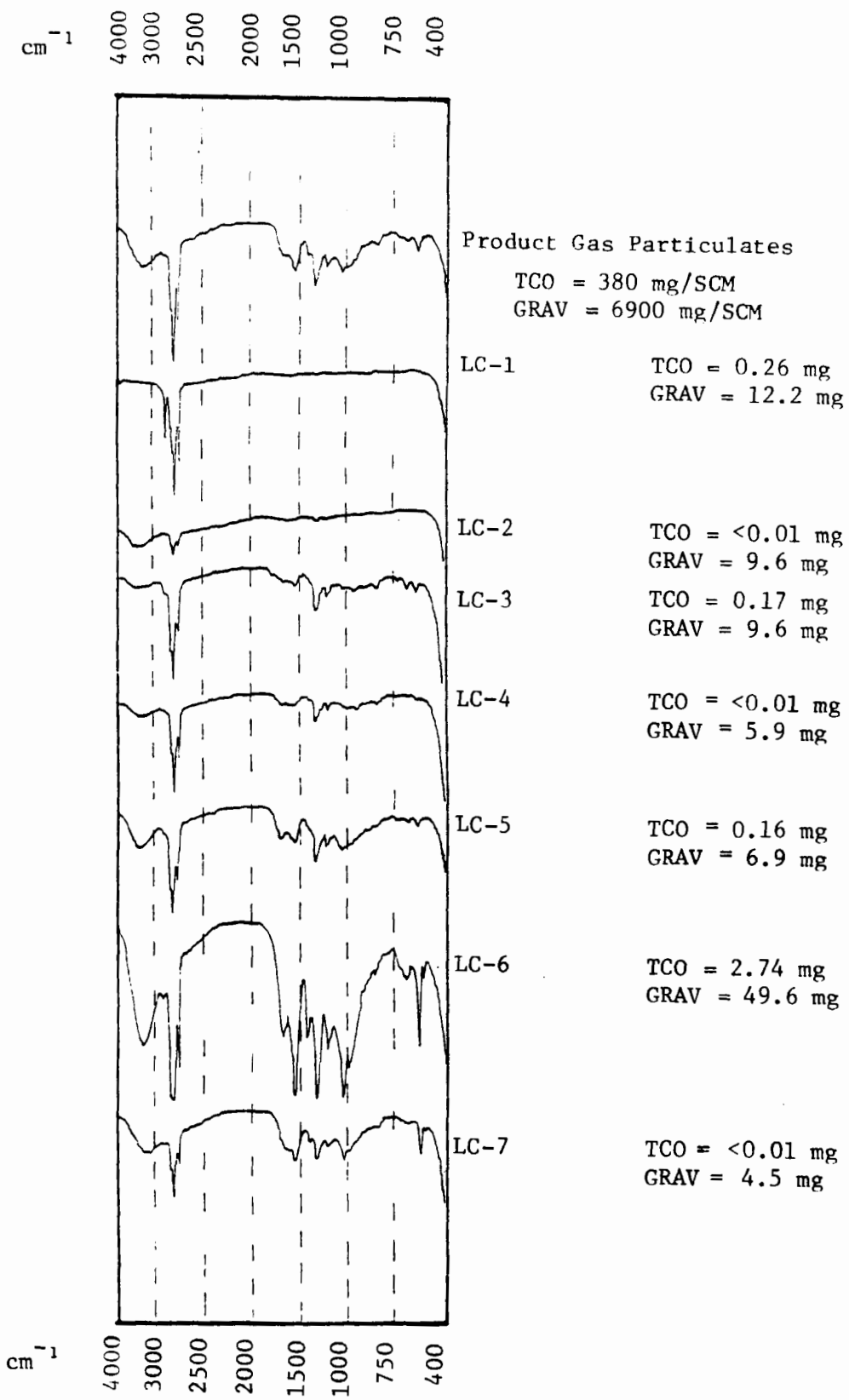


Figure D10. Infrared Spectra, Product Gas Particulates

TABLE D66. INFRARED ANALYSIS: PRODUCT GAS PARTICULATE

IR REPORT

Sample: PRODUCT GAS PARTICULATE

| WAVE NUMBER ($cm^{-1}$) | INTENSITY | ASSIGNMENT |
|---|---|---|
| 3350 | M | -OH, -NH |
| 3050 | W | Aromatic CH |
| 2960, 2920 | S | Aliphatic CH |
| 2850 | S | Aliphatic CH |
| 1680 | M Br | Carbonyls |
| 1600 | M | Aromatic ring, COOH, amides, amines |
| 1510 | W | Aromatic ring, C-N |
| 1460 | S | Aliphatic CH, C-O |
| 1380 | M | Aliphatic CH, C-O, C-N |
| 1270 | M Br | C-O, C-N, Aromatic overtones |
| 1020 | W | Aromatic overtones, C-O |
| 740 | W | Aromatic substitution, C-N, C-Cl |

Comments: Contains aromatic and oxygenated material as well as nitrogenous species.

IR REPORT

Sample: PRODUCT GAS PARTICULATE LC 1

| WAVE NUMBER ($cm^{-1}$) | INTENSITY | ASSIGNMENT |
|---|---|---|
| 3050 | S | Aromatic CH |
| 2920 | S | Aliphatic CH |
| 2850 | S | Aliphatic CH |

Comments: Aliphatic hydrocarbons, some non-substituted aromatics possible.

TABLE D66. CONTINUED

IR REPORT

Sample: PRODUCT GAS PARTICULATE LC2

| WAVE NUMBER ($cm^{-1}$) | INTENSITY | ASSIGNMENT |
|---|---|---|
| 3400 | S | -OH, -NH |
| 2950, 2920 | S | Aliphatic CH |
| 2850 | S | Aliphatic CH |
| 1450 | M | Aliphatic CH, C-O, C-N |

Comments: Appears to be primarily aliphatic. Very weak spectrum.

IR REPORT

Sample: PRODUCT GAS PARTICULATE LC3

| WAVE NUMBER ($cm^{-1}$) | INTENSITY | ASSIGNMENT |
|---|---|---|
| 3400 | W | -OH, -NH |
| 3050 | W | Aromatic CH |
| 2960, 2930 | S | Aliphatic CH |
| 2860 | S | Aliphatic CH |
| 1730 | W | Carbonyls |
| 1690 | W Br | Esters, aldehydes, amides |
| 1600 | W | Aromatic ring stretch, C-N |
| 1460 | M | Aliphatic CH |
| 1380 | M | Aliphatic CH, C-O, amides |
| 1270 | W | C-O amides, aromatic, amines |
| 1190 | W | Aromatic overtones, esters, C-O, C-N |
| 1020 | W | Aromatic overtones C-O |
| 880 | W | Aliphatic CH, aromatic substitution, C-S, amines |
| 815 | W | Aliphatic CH, aromatic substitution, C-S |
| 750 | W | Aliphatic CH, aromatic substitution, C-Cl |

Comments: Aromatics and aliphatics present. Considerable indications of substitution, oxygenated.

TABLE D66. CONTINUED

## IR REPORT

Sample: PRODUCT GAS PARTICULATE LC 4

| WAVE NUMBER ($cm^{-1}$) | INTENSITY | ASSIGNMENT |
|---|---|---|
| 3400 | W | -OH, -NH |
| 2960, 2920 | S | Aliphatic CH |
| 2850 | S | Aliphatic CH |
| 1700 | W Br | Carbonyls |
| 1600 | W Br | Aromatic ring stretch, C-N |
| 1460 | M | Aliphatic CH |
| 1380 | W | Aliphatic CH, C-O amides, C-S |
| 1240 | W Br | C-O, amines |
| 1160 | W Br | Aromatic overtones, esters, C-N |
| 1020 | W | Aromatic overtones, C-O |
| 740, 720 | W | Aromatic substitution, C-N, C-Cl |

Comments: Possibly weak aromatic, heterocyclic - O and -N probable. Similar to LC3 and LC5.

## IR REPORT

Sample: PRODUCT GAS PARTICULATE LC 5

| WAVE NUMBER ($cm^{-1}$) | INTENSITY | ASSIGNMENT |
|---|---|---|
| 3400 | M | -OH, -NH |
| 3050 | W | Aromatic CH |
| 2960, 2920 | S | Aliphatic CH |
| 2850 | S | Aliphatic CH |
| 1700 | M | Carbonyls |
| 1600 | M | Aromatic ring stretch, C-N |
| 1460 | S | Aliphatic CH, alcohols |
| 1380 | M | Aliphatic CH, alcohols, aldehydes, amides |
| 1270 | M | Aromatic C-O esters, C-N |
| 890 | W | Aromatic substitution, C-N, C-S |
| 820 | W | Aromatic substitution, C-N, C-S |
| 750 | W | Aromatic substitution, C-N, C-Cl |

Comments: Contains aromatic material, strong indication of heterocyclics and oxygenated material.

TABLE 66. CONTINUED

IR REPORT

Sample: PRODUCT GAS PARTICULATE LC 6

| WAVE NUMBER ($cm^{-1}$) | INTENSITY | ASSIGNMENT |
|---|---|---|
| 3400 | S | -OH, -NH |
| 3050 | W | Aromatic CH |
| 2950 | S | Aliphatic CH |
| 2850 | S | Aliphatic CH |
| 1680 | M | Carbonyls |
| 1610 | S | Aromatic ring stretch, C-N |
| 1520 | W | Aromatic ring stretch |
| 1460 | S | Aliphatic CH, primary alcohols |
| 1380 | M | Aliphatic CH, alcohols, amides, aldehydes |
| 1270 | S | Aromatic C-O, esters, C-N |
| 1040 | W | Aromatic overtones C-O |
| 810 | W | Aromatic substitution, C-N |
| 740 | M | Aromatic substitution, C-N |
| 700 | W | Aromatic substitution, C-Cl |

Comments: Aromatics, amines and possibly carboxylic acids.

IR REPORT

Sample: PRODUCT GAS PARTICULATE LC 7

| WAVE NUMBER ($cm^{-1}$) | INTENSITY | ASSIGNMENT |
|---|---|---|
| 3300 | M | -OH, -NH |
| 3060 | W | Aromatic CH |
| 2960, 2920 | S | Aliphatic CH |
| 2850 | S | Aliphatic CH |
| 1610 | M | Aromatic ring stretch, C-N |
| 1520 | W | Aromatic ring stretch, C-N, salts |
| 1460 | M | Aliphatic CH |
| 1380 | W | Aliphatic CH, C-O |
| 1270 | M | C-O, amides |
| 740 | M | Aromatic substitution, C-Cl, C-N |
| 700 | W | Aromatic substitution, C-Cl, C-N |

Comments: Similar to LC 6.

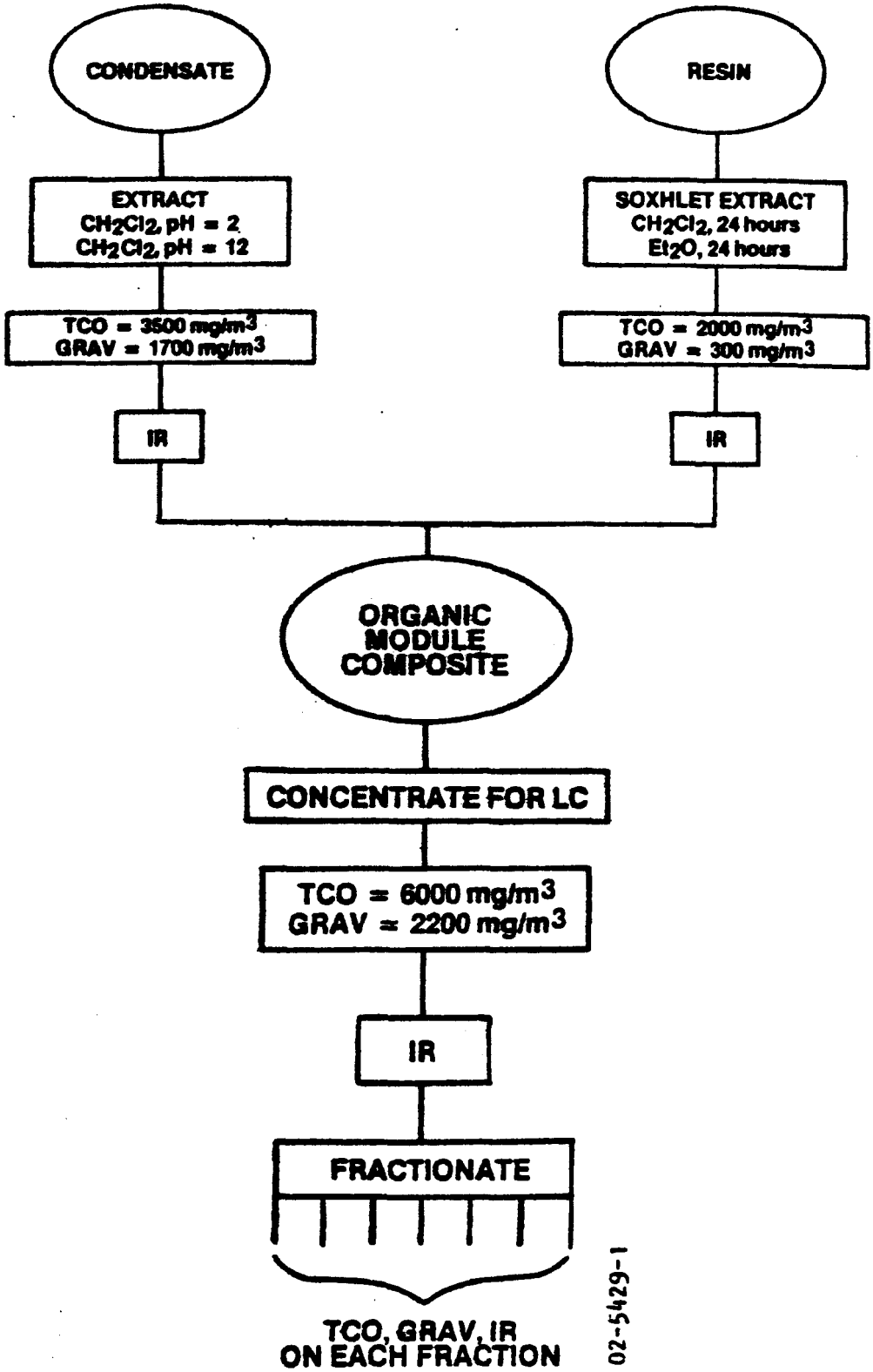


Figure D11. Product Gas Organic Module Composite Screening Analysis Schematic

TABLE D67. LC ANALYSIS RESULTS: PRODUCT GAS ORGANIC MODULE COMPOSITE

| | TCO mg | GRAV mg | TOTAL mg | CONCENTRATION mg/SCM |
|---|---|---|---|---|
| Total Sample | 33000 | 12000 | 45000 | 8100 |
| Taken for LC | 64.7 | 24.0 | 88.7 | |
| Recovered | 39.3 | 30.4 | 69.7 | 6400 |

| | TCO mg | GRAV mg | SAMPLE TOTAL mg | CONCENTRATION mg/SCM |
|---|---|---|---|---|
| LC 1 | 6.4 | 11.5 | 9200 | 1600 |
| LC 2 | 1.5 | 1.0 | 1300 | 230 |
| LC 3 | 5.3 | 2.0 | 3700 | 660 |
| LC 4 | 0.4 | 1.0 | 720 | 130 |
| LC 5 | 4.8 | 1.4 | 3200 | 570 |
| LC 6 | 5.3 | 2.5 | 4000 | 710 |
| LC 7 | 15.6 | 11.0 | 14000 | 2500 |
| % Recovery | 61% | 127% | 80% | |

SCM at 25°C (77°F) and 101 kPa (1 atm), dry basis.

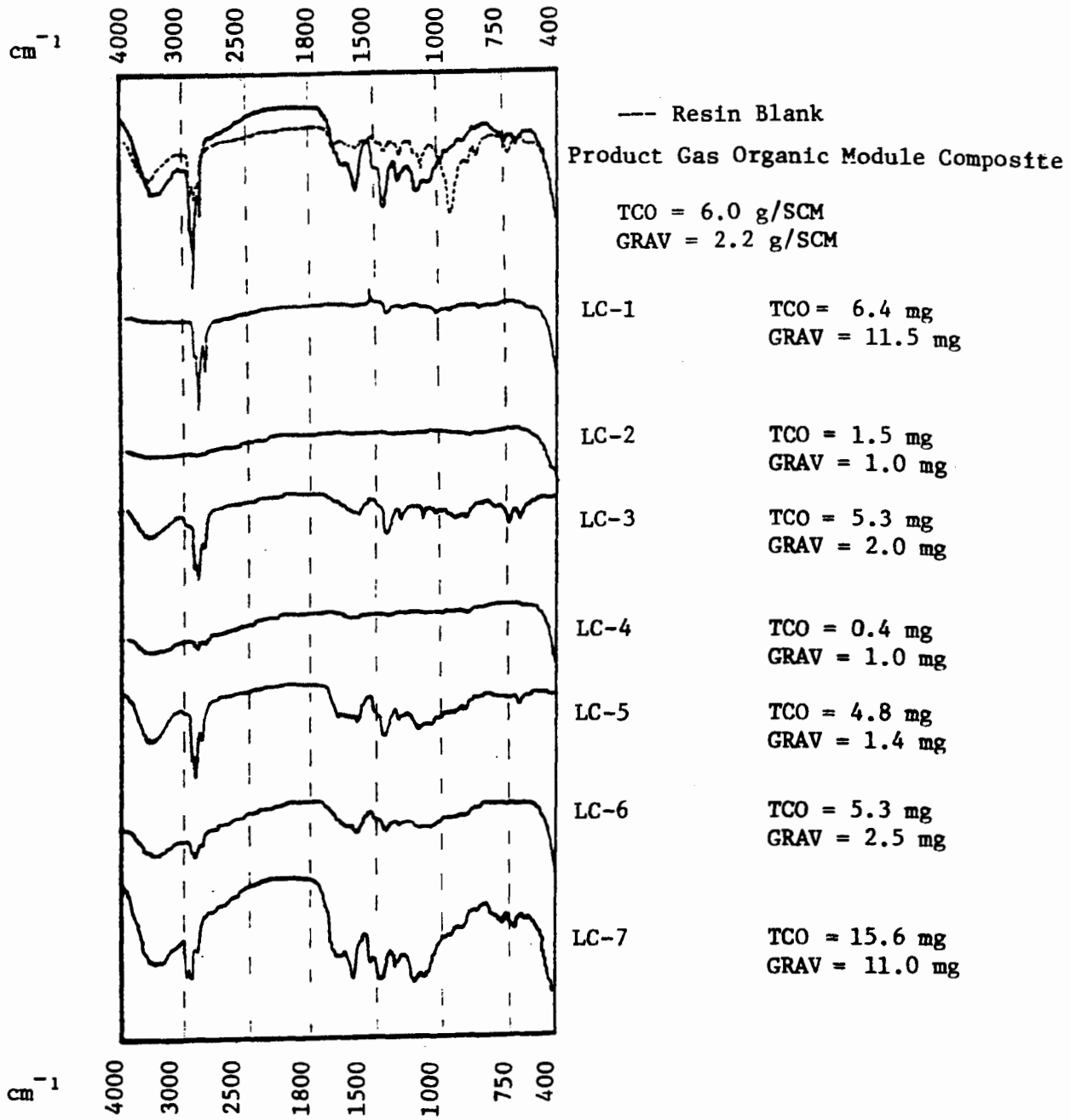


Figure D12 . Infrared Spectra, Product Gas Organic Module Composite

TABLE D68. INFRARED ANALYSIS: PRODUCT GAS COMPOSITE

IR REPORT

Sample: PRODUCT GAS COMPOSITE

| WAVE NUMBER ($cm^{-1}$) | INTENSITY | ASSIGNMENT |
|---|---|---|
| 3350 | M | -OH, -NH |
| 3050 | W | Aromatic CH |
| 2960, 2920 | S | Aliphatic CH |
| 2860 | M | Aliphatic CH |
| 1710 | W Br | Carbonyls |
| 1680 | M Br | Carbonyls |
| 1600 | M | Aromatic ring stretch, acids, amides, amines |
| 1500 | M Br | Aromatic ring stretch, C-N |
| 1455 | S | Aliphatic CH, primary alcohols, acids |
| 1380 | M | Aliphatic CH, C-O, C-S |
| 1280 | M | Aliphatic CH, esters, C-N |
| 1220 | W Br | C-O |
| 1115 | W Br | Aromatic overtones, C-N |
| 1040 | W | Aromatic overtones, C-O, C-N |
| 810 | W | Aromatic substitution, C-N |
| 750 | W | Aromatic substitution, C-N, C-Cl |

Comments: Not heavily aromatic, contains significant oxygenated and nitrogenous material.

IR REPORT

Sample: PRODUCT GAS COMPOSITE LC 1

| WAVE NUMBER ($cm^{-1}$) | INTENSITY | ASSIGNMENT |
|---|---|---|
| 2960, 2920 | S | Aliphatic CH |
| 2850 | S | Aliphatic CH |
| 1460 | M | Aliphatic CH |
| 1380 | W | Aliphatic CH |
| 1200 | W | Aromatic overtones |
| 1120 | W | Aromatic overtones, aliphatic CH |
| 960 | W | Aliphatic CH |

Comments: Aliphatic hydrocarbons.

TABLE D68. CONTINUED

IR REPORT

Sample: PRODUCT GAS COMPOSITE LC 2

| WAVE NUMBER ($cm^{-1}$) | INTENSITY | ASSIGNMENT |
|---|---|---|
| Insufficient material for spectrum | | |

IR REPORT

Sample: PRODUCT GAS COMPOSITE LC 3

| WAVE NUMBER ($cm^{-1}$) | INTENSITY | ASSIGNMENT |
|---|---|---|
| 3450 | M | -OH, -NH |
| 3050 | W | Aromatic CH |
| 2960, 2920 | S | Aliphatic CH |
| 2860 | S | Aliphatic CH |
| 1600 | M Br | Aromatic ring stretch, -NH |
| 1450 | M | Aliphatic CH |
| 1380 | M | Aliphatic CH, C-O, C-S |
| 1260 | M | C-O, C-N |
| 1180 | W | Aromatic overtones, C-O, C-N |
| 810 | M | Aromatic substitution, C-N |
| 745 | W | Aromatic substitution, C-N, C-Cl |

Comments: Some aromatic character, primarily aliphatics with strong indications of oxygenated material.

IR REPORT

Sample: PRODUCT GAS COMPOSITE LC-4

| WAVE NUMBER ($cm^{-1}$) | INTENSITY | ASSIGNMENT |
|---|---|---|
| 3400 | S | -OH, -NH |
| 2970, 2910 | S | Aliphatic CH |
| 2850 | S | Aliphatic CH |

Comments: Very weak spectrum

TABLE D68. CONTINUED

IR REPORT

Sample: PRODUCT GAS COMPOSITE LC 5

| WAVE NUMBER ($cm^{-1}$) | INTENSITY | ASSIGNMENT |
|---|---|---|
| 3400 | S | -OH, -NH |
| 3050 | W | Aromatic CH |
| 2970, 2930 | S | Aliphatic CH |
| 2860 | S | Aliphatic CH |
| 1700 | M Br | Carbonyls |
| 1600 | M | Aromatic ring stretch, C-N |
| 1500 | W Br | Aromatic ring stretch |
| 1460 | M | Aliphatic CH |
| 1380 | W | Aliphatic CH, C-O |
| 1260 | W | C-O, esters, C-N |
| 750 | W | Aromatic substitution, C-N, C-Cl |

Comments: Weakly aromatic, strong indications of oxygenated compounds, amines and heterocyclic-N probable.

IR REPORT

Sample: PRODUCT GAS COMPOSITE LC 6

| WAVE NUMBER ($cm^{-1}$) | INTENSITY | ASSIGNMENT |
|---|---|---|
| 3350 | S | -OH, -NH |
| 2970, 2930 | S | Aliphatic CH |
| 2860 | M | Aliphatic CH |
| 1600 | M | Aromatic ring stretch, C-N |
| 1450 | M | Aliphatic CH |
| 1380 | W | Aliphatic CH, C-O, C-N |

Comments: Weak spectrum

TABLE D68. CONTINUED

IR REPORT

Sample: PRODUCT GAS COMPOSITE LC 7

| WAVE NUMBER ($cm^{-1}$) | INTENSITY | ASSIGNMENT |
|---|---|---|
| 3300 | S | -OH, -NH |
| 3050 | W Br | Aromatic CH |
| 2970, 2930 | S | Aliphatic CH |
| 2860 | M | Aliphatic CH |
| 1710 | M Br | Carbonyls |
| 1680 | M Br | Carbonyls |
| 1600 | S | Aromatic ring stretch, C-N |
| 1510 | M | Aromatic ring stretch, C-N |
| 1450 | S Br | Aliphatic CH |
| 1380 | M | Aliphatic CH |
| 1280 | S | C-O |
| 1215 | M | C-O |
| 1030 | W | Aromatic overtones, C-O |
| 810 | W | Aromatic substitution, C-N |
| 740 | W | Aromatic substitution, C-Cl |
| 680 | W | Aromatic substitution, C-Cl |

Comments: Carboxylic acids and amines probable.

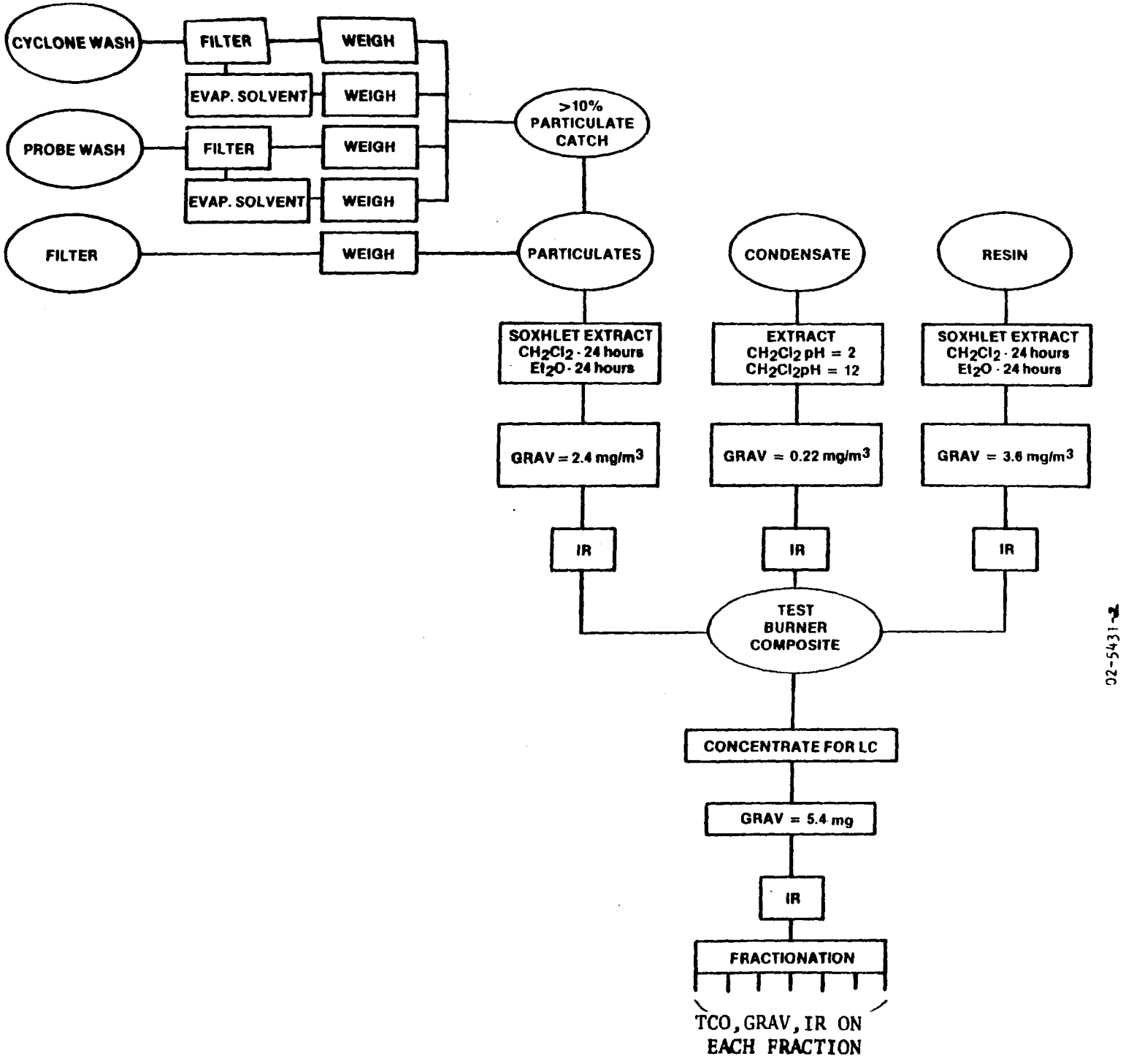


Figure D13. Test Burner Composite Screening Analysis Schematic

TABLE D69 . LC ANALYSIS RESULTS: TEST BURNER COMPOSITE

| | TCO mg | GRAV mg | TOTAL mg | CONCENTRATION µg/SCM |
|---|---|---|---|---|
| Total Sample | * | 160 | 160 | 5400 |
| Taken for LC | * | 90.3 | 90.3 | |
| Recovered | * | 78.2 | 78.2 | 4700 |

| | TCO mg | GRAV mg | SAMPLE TOTAL mg | CONCENTRATION µg/SCM |
|---|---|---|---|---|
| LC 1 | * | 14.2 | 26 | 880 |
| LC 2 | * | 2.2 | 4.0 | 130 |
| LC 3 | * | 0.7 | 1.3 | 44 |
| LC 4 | * | 2.1 | 3.8 | 130 |
| LC 5 | * | 8.0 | 14 | 470 |
| LC 6 | * | 36.2 | 66 | 2200 |
| LC 7 | * | 14.8 | 27 | 910 |
| % Recovery | | 87% | 87% | |

* Not required by protocol

SCM at 25°C (77°F) and 101 kPa (1 atm), dry basis.

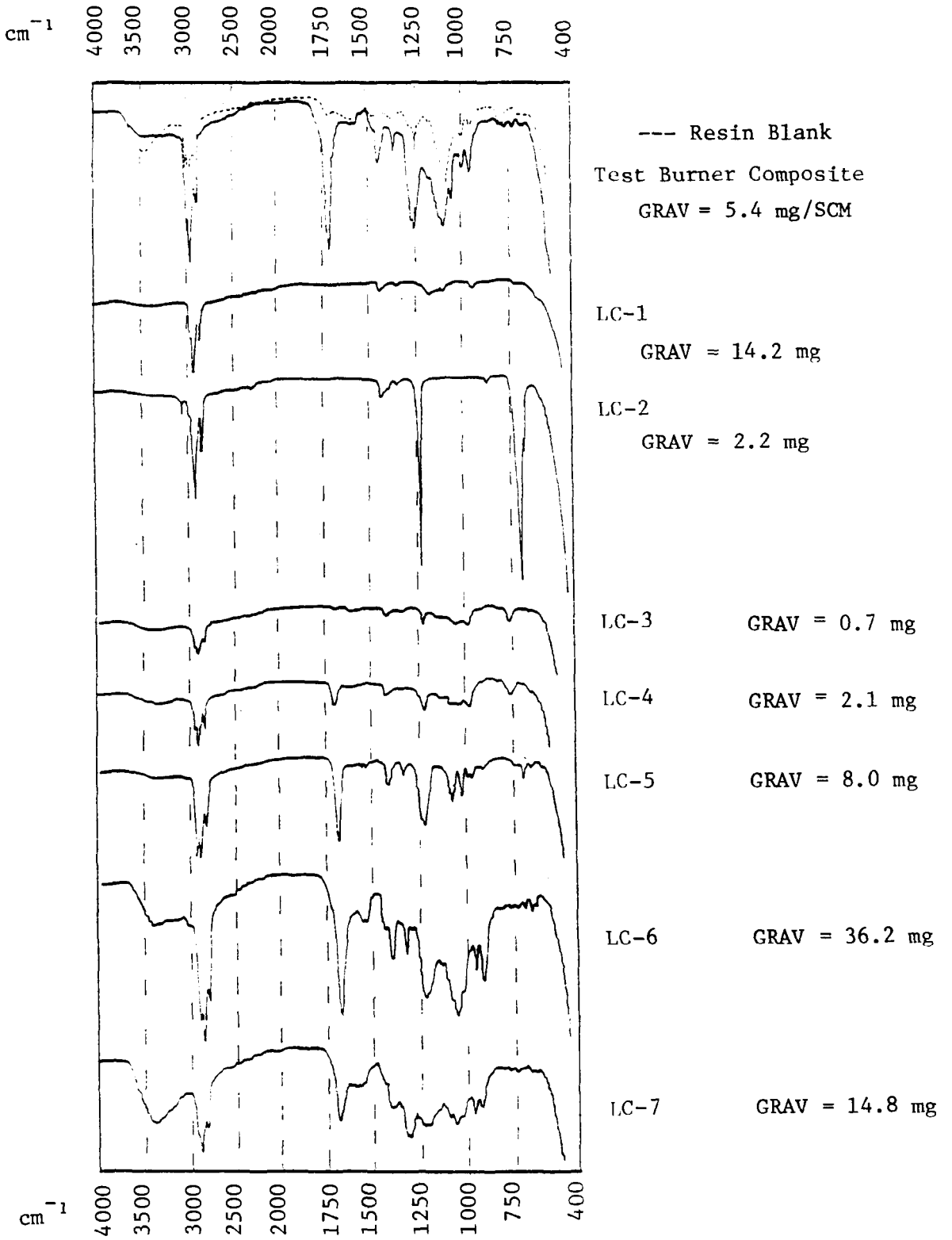


Figure D14. Infrared Spectra, Test Burner Composite

TABLE D70. INFRARED ANALYSIS: TEST BURNER COMPOSITE

IR REPORT

Sample: TEST BURNER COMPOSITE

| WAVE NUMBER ($cm^{-1}$) | INTENSITY | ASSIGNMENT |
|---|---|---|
| 2960 | S | Aliphatic CH |
| 2930 | S | Aliphatic CH |
| 2880 | S | Aliphatic CH |
| 1730 | S | Carbonyl |
| 1600 | W | Aromatic ring, amines, amides, acids |
| 1460 | M | In resin blank |
| 1380 | M | In resin blank |
| 1275 | S | C-O, ether, esters, alcohols |
| 1120 | S | In resin blank |
| 1015 | M | In resin blank |
| 975 | M | In resin blank |

Comments: Negligible N-H and O-H stretch and no aromatic C-H stretch make assignments conflicting. Aliphatic ethers, esters, alcohols, aldehydes, etc., are the only potential assignments

IR REPORT

Sample: TEST BURNER COMPOSITE LC 1

| WAVE NUMBER ($cm^{-1}$) | INTENSITY | ASSIGNMENT |
|---|---|---|
| 2950 | S | Aliphatic CH |
| 2920 | S | Aliphatic CH |
| 2850 | S | Aliphatic CH |
| 1460 | M | Aliphatic CH |
| 1375 | W | Aliphatic CH |
| 1200, 1120 | M | Aromatic overtones |
| 965 | M | Aromatic overtones, aliphatic, bending |

Comments: Weak spectrum, probably just aliphatics

TABLE D70. CONTINUED

IR REPORT

Sample: TEST BURNER COMPOSITE LC 2

| WAVE NUMBER ($cm^{-1}$) | INTENSITY | ASSIGNMENT |
|---|---|---|
| 3050 | M | Aromatic CH |
| 2020, 2850 | S | Aliphatic CH |
| 2300 | W | Nitriles, Si-H, C≡C |
| 1660, 1640 | W | Alkenes, aromatics |
| 1465 | M, Br | Aliphatics |
| 1375 | W | Aliphatics |
| 1265 | S | Inorganic sulfur, methyl silicones, phosphorous, esters, C-O |
| 895 | W | Alkenes, aromatic substibution |
| 735 | S | Aromatic substitution |
| 700 | M | Aromatic substitution |

Comments: Absence of aromatic ring patterns surprising with good aromatic C-H. Heavy alkene possible but seems unlikely. Possible inorganic compounds present from weak peaks. Most probable is fused aromatic ring systems.

IR REPORT

Sample: TEST BURNER COMPOSITE LC 3

| WAVE NUMBER ($cm^{-1}$) | INTENSITY | ASSIGNMENT |
|---|---|---|
| 3400 | W | -OH, -NH |
| 2960, 2930, 2850 | S | Aliphatic CH |
| 1740 | W | Carbonyls |
| 1450 | M | Aliphatics |
| 1375 | W | Aliphatics, strong in resin blank |
| 1260 | S | C-O |
| 1100 | W | C-O, C-N, strong in resin blank |
| 1020 | W | C-H, C-O |
| 800 | S | Aromatics, amines, silicone, strong in resin blank |

Comments: Very weak spectrum, possibly heterocyclic-N, carbonyl very poor, -OH stretch could be moisture. Possible heterocyclic-O or other oxygen containing compounds.

TABLE D70. CONTINUED

IR REPORT

Sample: TEST BURNER COMPOSITE LC 4

| WAVE NUMBER ($cm^{-1}$) | INTENSITY | ASSIGNMENT |
|---|---|---|
| 3350 | W | -OH, -NH |
| 2960, 2930, 2860 | S | Aliphatic CH |
| 1740 | S | Carbonyls |
| 1460 | M, Br | Aliphatic CH, in resin blank |
| 1260 | S | C-O, strong in resin blank |
| 1020 | W | C-H, C-O |
| 800 | M | Aromatics, amines, silicones, strong in resin blank |

Comments: Weak spectrum, only the presence of the carbonyl distinguishes it from LC 3.

IR REPORT

Sample: TEST BURNER COMPOSITE LC 5

| WAVE NUMBER ($cm^{-1}$) | INTENSITY | ASSIGNMENT |
|---|---|---|
| 3400 | W | -OH, -NH |
| 2970, 2920 | S | Aliphatic CH |
| 2860, 2850 | S | Aliphatic CH |
| 1725 | S | Carbonyl |
| 1600, 1580 | W | Aromatic ring stretch, amines, amides |
| 1460 | M | Amides, alkane CH, primary alcohols |
| 1380 | W | Aliphatic C-H, alcohols, heterocyclic-O, -N |
| 1260 | S | Aromatic ethers, esters, heterocyclic-O, amides, carboxylics |
| 1130 | M | Alkenes, aromatic overtones, aldehydes, alcohols |
| 1070 | M | Aromatic overtones C-O |
| 1020, 1040 | W | Aromatic overtones C-O |
| 730 | W | Aromatic substitution, amines |

Comments: No strong indication of aromatics. Amines probable, heterocyclic -O and -N probable.

IR REPORT

Sample: TEST BURNER COMPOSITE LC 6

| WAVE NUMBER ($cm^{-1}$) | INTENSITY | ASSIGNMENT |
|---|---|---|
| 3400 | M | -OH, -NH |
| 3030 | W | Aromatic CH |
| 2970, 2930 | S | Aliphatic CH |
| 2870 | S | Aliphatic CH |
| 1730 | S | Carbonyls |
| 1620, 1580 | M | Aromatic ring stretch, amides, amines |
| 1460 | M | Aliphatic CH, alcohols, aldehydes, amines |
| 1370 | M | Aliphatic CH, alcohols, aldehydes, amines |
| 1280 | S | Esters, ketones, heterocyclic-O, -N |
| 1115 | S | Aromatic overtones, C-O, C-N |
| 1015 | M | Aromatic overtones, C-O |
| 970 | S | Aliphatic CH |
| 710 | W | Aromatic substitution C-N, C-Cl |
| 680 | W | Aromatic substitution C-S, C-Cl |

Comments: Similar to LC 5 but has more aromatic character.

IR REPORT

Sample: TEST BURNER COMPOSITE LC 7

| WAVE NUMBER ($cm^{-1}$) | INTENSITY | ASSIGNMENT |
|---|---|---|
| 3400 | S | -OH, -NH |
| 2960, 2930 | S | Aliphatic CH |
| 2860 | S | Aliphatic CH |
| 1730 | S | Carbonyls |
| 1630 | M Br | Alkenes, aromatic ring, amides, amines |
| 1450 | W Br | Aliphatics, C-O |
| 1360 | S | Aliphatics, C-O, C-N |
| 1275 | M Br | C-O, esters, C-N |
| 1100 | M Br | Aromatic overtones, C-O, C-N |
| 1010 | M | C-O, C-N stretch |
| 970 | M | Aliphatic CH, C-O, C-N stretch |

Comments: Heavily oxygenated, carboxylic acids, and amines, probable.

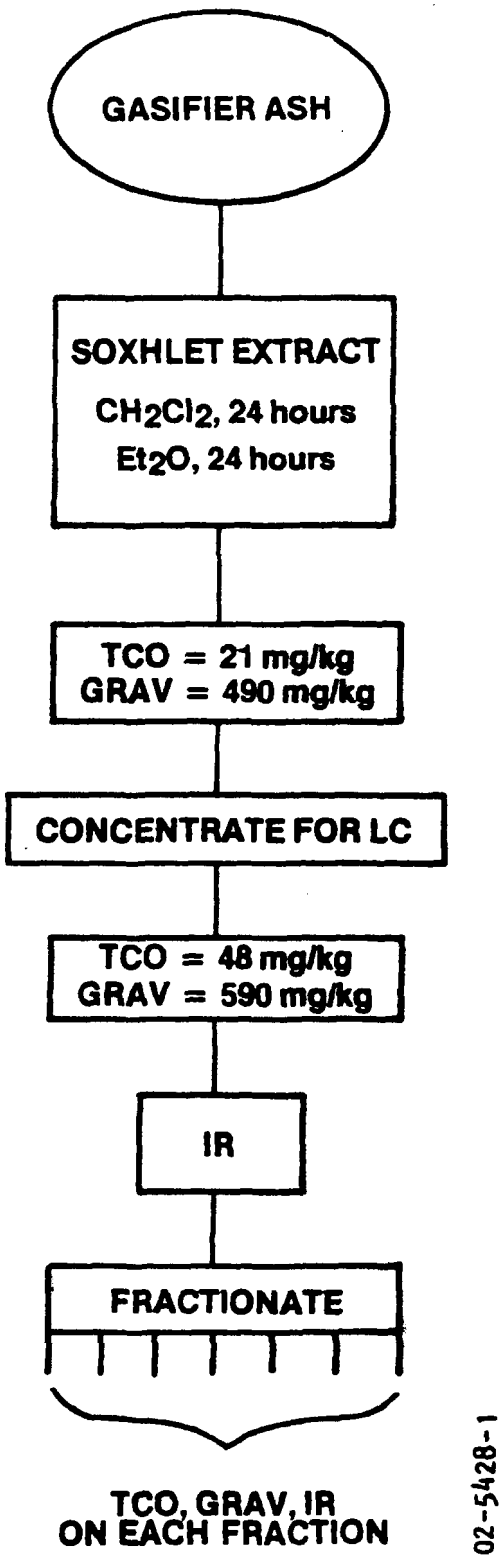


Figure D15. Gasifier Ash Screening Analysis Schematic

TABLE D71. LC ANALYSIS RESULTS: GASIFIER ASH

| | TCO* mg | GRAV mg | TOTAL mg | CONCENTRATION mg/kg |
|---|---|---|---|---|
| Total Sample | 46 | 550 | 600 | 640 |
| Taken for LC | 9.7 | 117.4 | 127.1 | |
| Recovered | 9.9 | 99.9 | 109.8 | 550 |

| | TCO* mg | GRAV mg | SAMPLE TOTAL mg | CONCENTRATION mg/kg |
|---|---|---|---|---|
| LC 1 | 6.4 | 59.6 | 310 | 330 |
| LC 2 | 1.0 | 2.0 | 14 | 15 |
| LC 3 | 2.3 | 5.6 | 37 | 39 |
| LC 4 | ND | 4.0 | 19 | 20 |
| LC 5 | 0.04 | 5.2 | 24 | 26 |
| LC 6 | 0.12 | 20.1 | 95 | 100 |
| LC 7 | ND | 3.4 | 16 | 17 |
| % Recovery | 102% | 85% | 86% | |

* Not required by protocol.

ND - Less than 0.01 mg total TCO.

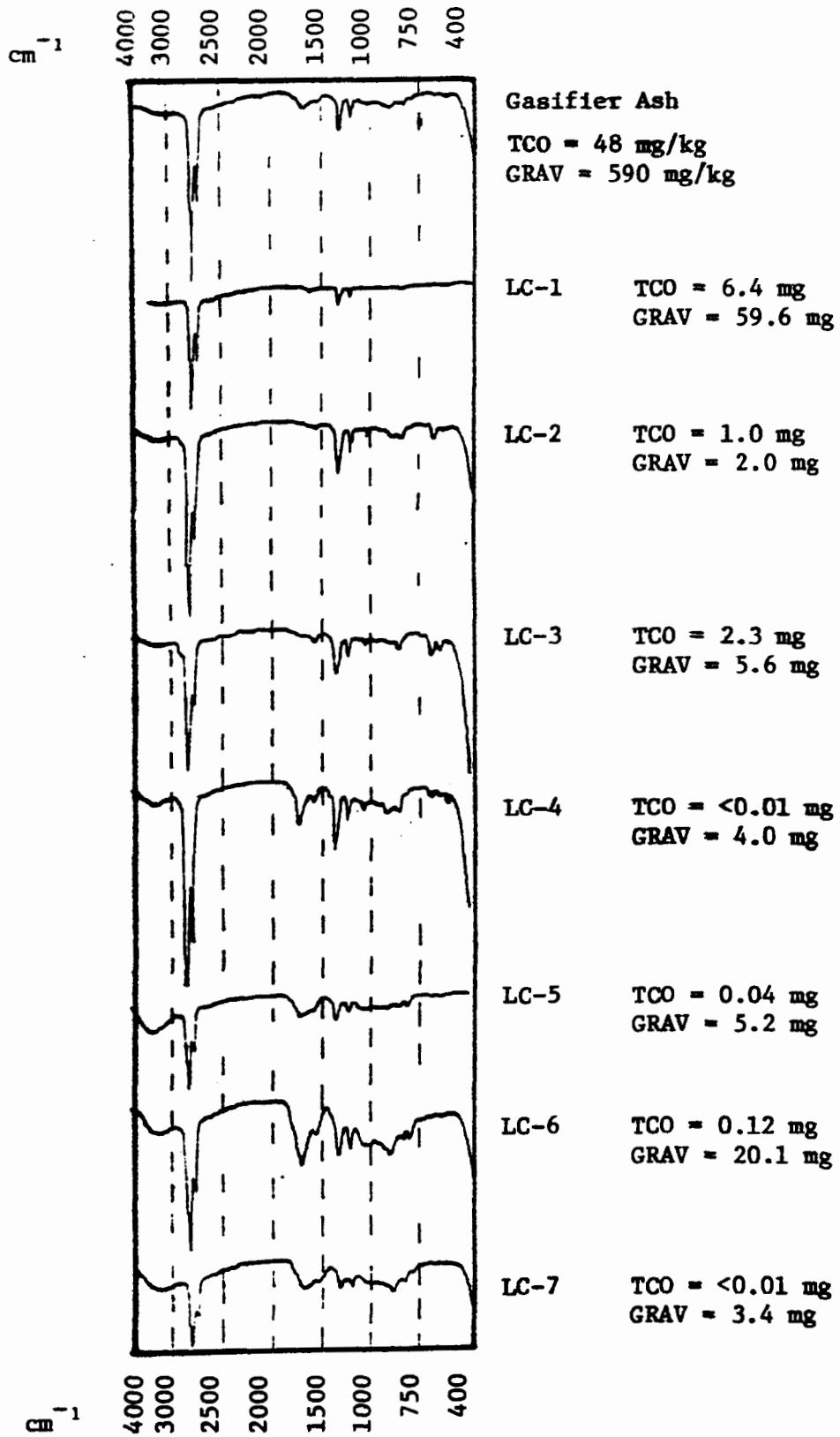


Figure D16. Infrared Spectra, Gasifier Ash

TABLE D72. INFRARED ANALYSIS: GASIFIER ASH

IR REPORT

Sample: GASIFIER ASH

| WAVE NUMBER ($cm^{-1}$) | INTENSITY | ASSIGNMENT |
|---|---|---|
| 2970, 2930 | S | Aliphatic CH |
| 2860 | S | Aliphatic CH |
| 1700 | W | Carbonyls |
| 1600 | W | Aromatic ring stretch |
| 1460 | M | Aliphatic CH, C-O |
| 1380 | M | Aliphatic CH, C-O |
| 1265 | W | C-O |
| 1020 | W | Aromatic overtones, C-O |
| 810 | W | Aromatic substitution |
| 740 | W | Aromatic substitution, C-Cl |

Comments: Aliphatic material predominates, oxygenation present.

IR REPORT

Sample: GASIFIER ASH LC 1

| WAVE NUMBER ($cm^{-1}$) | INTENSITY | ASSIGNMENT |
|---|---|---|
| 2960, 2920 | S | Aliphatic CH |
| 2850 | S | Aliphatic CH |
| 1650 | W | Aliphatic C=C |
| 1460 | M | Aliphatic CH |
| 1380 | W | Aliphatic CH |

Comments: Aliphatic hydrocarbons, some alkenes

TABLE D72. CONTINUED

IR REPORT

Sample: GASIFIER ASH LC 2

| WAVE NUMBER ($cm^{-1}$) | INTENSITY | ASSIGNMENT |
|---|---|---|
| 3050 | W | Aromatic CH |
| 2960, 2920 | S | Aliphatic CH |
| 2850 | S | Aliphatic CH |
| 1600 | W | Aromatic ring stretch |
| 1460 | M | Aliphatic CH |
| 1370 | M | Aliphatic CH |
| 1260 | S | C-O, C-N |
| 1070 | W Br | Aromatic overtones, C-O, C-N |
| 1030 | W Br | Aromatic overtones, C-O, C-N |
| 810 | W | Aromatic substitution, C-N |

Comments: Weakly aromatic, no evidence of carbonyls. Heterocyclic-O or heterocyclic-N a possibility. Branched chain aliphatics predominate.

IR REPORT

Sample: GASIFIER ASH LC 3

| WAVE NUMBER ($cm^{-1}$) | INTENSITY | ASSIGNMENT |
|---|---|---|
| 3050 | W Br | Aromatic CH |
| 2960, 2915 | S | Aliphatic CH |
| 2850 | S | Aliphatic CH |
| 1700 | W Br | Carbonyls |
| 1600 | W Br | Aromatic ring stretch, C-N |
| 1460 | M | Aliphatic CH |
| 1375 | M | Aliphatic CH |
| 1260 | W | C-O, C-N |
| 1030 | W Br | Aromatic overtones, C-O, C-N |
| 870 | W Br | Aromatic overtones, C-S, C-O, C-N |
| 850 | M | Aromatic overtones, C-O, C-N |
| 750 | W | Aromatic overtones, C-O, C-N, C-Cl |
| 700 | W | Aromatic overtones, C-O, C-N, C-Cl |

Comments: Very similar to LC 2 except more aromatics, some weak carbonyl and some evidence for sulfur and halogens.

TABLE D72. CONTINUED

IR REPORT

Sample: GASIFIER ASH LC 4

| WAVE NUMBER ($cm^{-1}$) | INTENSITY | ASSIGNMENT |
|---|---|---|
| 3400 | W | -OH, -NH |
| 2960, 2920 | S | Aliphatic CH |
| 2860 | S | Aliphatic CH |
| 1710 | M | Carbonyls |
| 1600 | W | Aromatic ring stretch, C-N |
| 1460 | S | Aliphatic CH |
| 1380 | M | Aliphatic CH |
| 1265 | W | C-O, C-N |
| 1120 | W | Aromatic overtones, C-O, C-N |
| 1030 | W | Aromatic overtones, C-O, C-N |
| 810 | W | Aromatic substitution, C-S |
| 750 | W | Aromatic substitution, C-Cl |
| 730 | W | Aromatic substitution, C-Cl |
| 700 | W | Aromatic substitution, C-Cl |

Comments: Heterocyclic-N, heterocyclic-O, heterocyclic-S all possible, some carbonyl compounds, still a lot of brached aliphatics. Some evidence of aromatic substitution but no significant aromatic CH absorbances. Evidence of halogens.

IR REPORT

Sample: GASIFIER ASH LC 5

| WAVE NUMBER ($cm^{-1}$) | INTENSITY | ASSIGNMENT |
|---|---|---|
| 3400 | M | -OH, -NH |
| 2950, 2920 | S | Aliphatic CH |
| 2850 | M | Aliphatic CH |
| 1700 | M Br | Carbonyls |
| 1600 | M Br | Aromatic ring stretch, C-N |
| 1460 | M | Aliphatic CH |
| 1360 | W | Aliphatic CH, C-O |
| 970 | W | C-O, C-N, C-S, Aliphatic CH |

Comments: Rather weak spectrum. No strong indication of aromatics, probably not much heterocyclic material.

TABLE D72. CONTINUED

IR REPORT

Sample: GASIFIER ASH LC 6

| WAVE NUMBER ($cm^{-1}$) | INTENSITY | ASSIGNMENT |
|---|---|---|
| 3350 | W | -OH, -NH |
| 2970, 2920 | S | Aliphatic CH |
| 2850 | S | Aliphatic CH |
| 1710 | S Br | Carbonyls |
| 1510 | M | Amines, aromatic ring stretch |
| 1460 | M | Aliphatic CH |
| 1380 | M | Aliphatics, C-O, C-S |
| 1100 | W Br | Aromatic overtones, C-O |
| 1020 | W | C-O, C-N |
| 975 | W | C-O, C-N |

Comments: Similar to LC 5 and LC 7.

IR REPORT

Sample: GASIFIER ASH LC 7

| WAVE NUMBER ($cm^{-1}$) | INTENSITY | ASSIGNMENT |
|---|---|---|
| 3350 | W | -OH, -NH |
| 2960, 2915 | S | Aliphatic CH |
| 2850 | S | Aliphatic CH |
| 1700 | M Br | Carbonyls |
| 1600 | M Sh | Amines, aromatic ring stretch |
| 1460 | M | Aliphatics |
| 1380 | M | Aliphatics, alcohols, amides |
| 1100 | W | Phthalates, aromatic overtones, C-O, C-N |

Comments: Quite similar to LC 5 and 6, probably contains carboxylic acids.

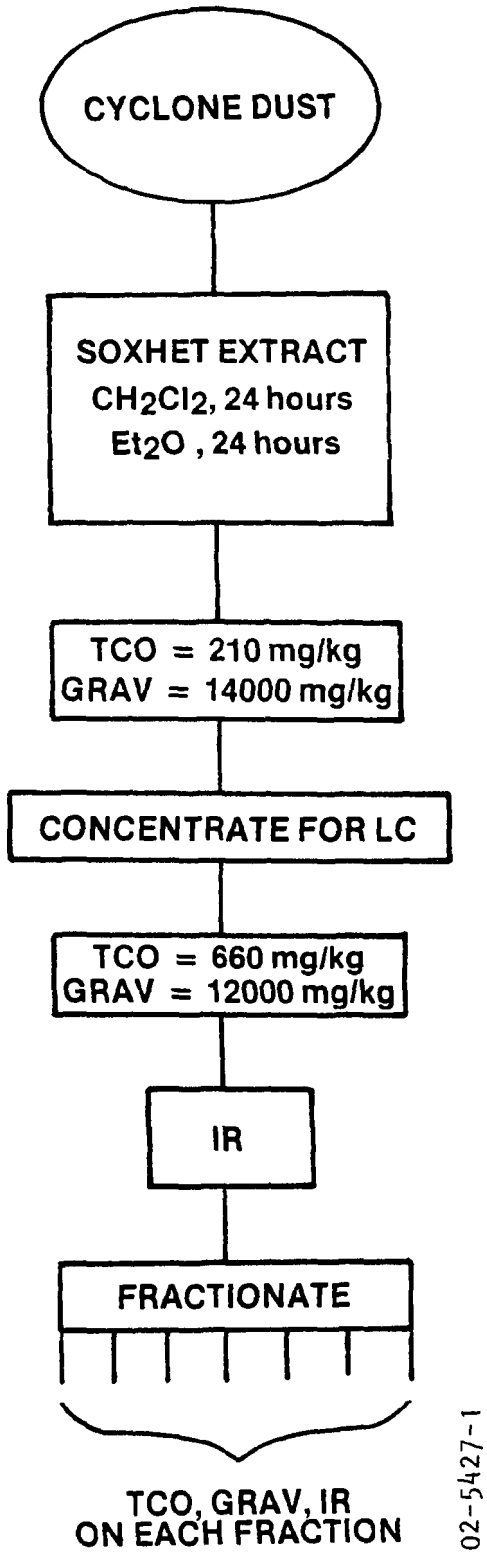


Figure D17. Cyclone Dust Organic Screening Analysis Schemtaic

TABLE D73. LC ANALYSIS RESULTS: CYCLONE DUST

| | TCO* mg | GRAV mg | TOTAL mg | CONCENTRATION mg/kg |
|---|---|---|---|---|
| Total Sample | 94 | 2600 | 2700 | 13000 |
| Taken for LC | 3.2 | 88.2 | 91.4 | |
| Recovered | 1.7 | 75.3 | 77.0 | 11000 |

| | TCO* mg | GRAV mg | SAMPLE TOTAL mg | CONCENTRATION mg/kg |
|---|---|---|---|---|
| LC 1 | 1.4 | 17.3 | 550 | 2600 |
| LC 2 | ND | 1.0 | 29 | 140 |
| LC 3 | 0.12 | 9.6 | 280 | 1300 |
| LC 4 | ND | 10.3 | 300 | 1400 |
| LC 5 | 0.09 | 5.4 | 160 | 770 |
| LC 6 | 0.05 | 23.8 | 700 | 3400 |
| LC 7 | ND | 7.9 | 230 | 1100 |
| % Recovery | 53% | 85% | 83% | |

* Not required by protocol.

ND - Less than 0.01 mg total TCO.

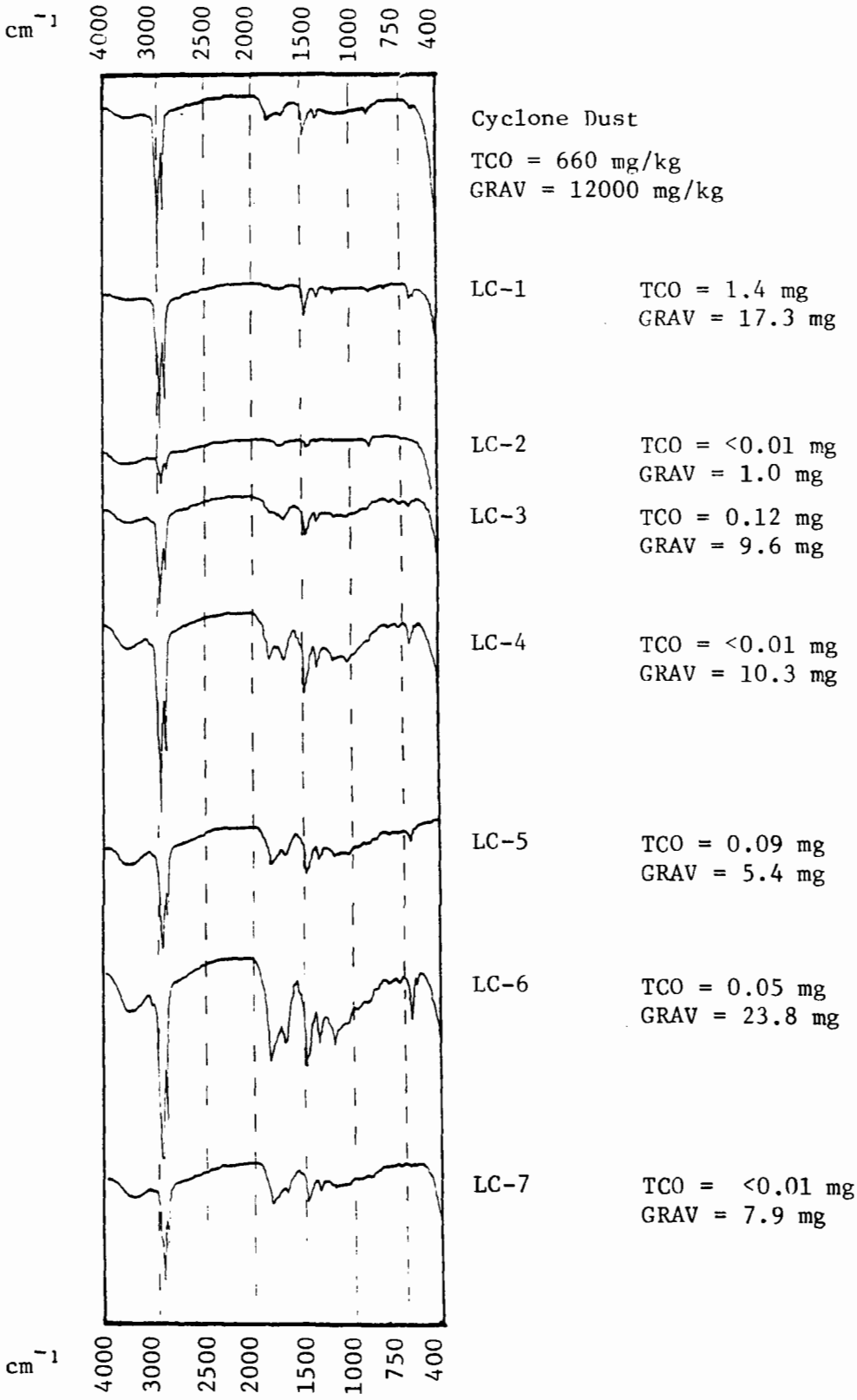


Figure D18 . Infrared Spectra, Cyclone Dust

TABLE D74. INFRARED ANALYSIS: CYCLONE DUST

IR REPORT

Sample: CYCLONE DUST

| WAVE NUMBER ($cm^{-1}$) | INTENSITY | ASSIGNMENT |
|---|---|---|
| 2970, 2915 | S | Aliphatic CH |
| 2850 | S | Aliphatic CH |
| 1720 | M | Carbonyls |
| 1600 | W | Amines, aromatic ring stretch |
| 1460 | M | Aliphatic CH |
| 1380 | W | Aliphatic CH |
| 1020 | W | C-O, C-C stretch |
| 730, 720 | W | Aromatic substitution |

Comments: Primarily aliphatic material, some carbonyls present.

IR REPORT

Sample: CYCLONE DUST, LC 1

| WAVE NUMBER ($cm^{-1}$ | INTENSITY | ASSIGNMENT |
|---|---|---|
| 2950 | M | Aliphatic CH |
| 2920, 2850 | S | Aliphatic CH |
| 1430 | M | Alkanes |
| 1360 | W | Alkanes |
| 1260 | W | Aliphatics |
| 720, 740 | W | Alkenes |

Comments: Aliphatic hydrocarbons. Peaks at 1430 & 1360 present in all fractions. Not present in q.c. check of cells and instrument

TABLE D74. CONTINUED

IR REPORT

Sample: CYCLONE DUST, LC 2

| WAVE NUMBER ($cm^{-1}$) | INTENSITY | ASSIGNMENT |
|---|---|---|
| 2980 | M | Aliphatic CH |
| 2920, 2860 | S | Aliphatic CH |
| 1020 | W | C-O |

Comments: No indication of aromatics, appears to be slight band spreading from LC-1. Possibly some ether residue.

IR REPORT

Sample: CYCLONE DUST, LC 3

| WAVE NUMBER ($cm^{-1}$) | INTENSITY | ASSIGNMENT |
|---|---|---|
| 2950 | M | Aliphatic CH |
| 2920, 2850 | S | Aliphatic CH |
| 1700 | W Br | Carbonyls |
| 1600 | W Br | C=C |
| 1465 | M | Alkanes |
| 1380 | W | Alkanes |
| 750 | W | Alkanes |

Comments: Retains a great deal of aliphatic character, possibly some aromatics present.

IR REPORT

Sample: CYCLONE DUST, LC 4

| WAVE NUMBER ($cm^{-1}$) | INTENSITY | ASSIGNMENT |
|---|---|---|
| 3400 | W | -OH, -NH |
| 2920, 2850 | S | Aliphatic CH |
| 1700 | M | Carbonyls |
| 1600 | M | C=C |
| 1465 | S | Alkanes |
| 1380 | M | Alkanes |
| 1170 | W | C-O |
| 740 | M | Alkenes, aromatic substitution |

Comments: Still strongly aliphatic, more oxygenated substitution. Heterocyclic-O probable, heterocyclic-N possible, phthalates probably present.

IR REPORT

Sample: CYCLONE DUST, LC 5

| WAVE NUMBER ($cm^{-1}$) | INTENSITY | ASSIGNMENT |
|---|---|---|
| 3400 | W | -OH, -NH |
| 2920, 2850 | S | Aliphatic CH |
| 1700 | M Br | Carbonyls |
| 1600 | M Br | C=C |
| 1460 | M | Alkanes |
| 1380 | M | Alkanes |
| 740 | W | Alkenes, aromatic substitution |

Comments: Very similar to LC-4

TABLE D74. CONTINUED

IR REPORT

Sample: CYCLONE DUST, LC 6

| WAVE NUMBER ($cm^{-1}$) | INTENSITY | ASSIGNMENT |
|---|---|---|
| 3400 | M | -OH, -NH |
| 3050 | W | Aromatic CH |
| 2930, 2860 | S | Aliphatic CH |
| 1710 | S Br | Carbonyls |
| 1610 | S Br | C=C, C=N |
| 1465 | S | Alkanes |
| 1380 | S | Alkanes |
| 1270 | M | C-O |
| 890 | W | Aromatics, acids |
| 820 | W | Aromatics, amines |
| 740 | M | Aromatics, amines |
| 710 | W | Aromatics, amines |

Comments: Similar to LC-5 but showing more aromatic character. Phthalates, carboxylic acids, heterocyclic-N compounds probable.

IR REPORT

Sample: CYCLONE DUST, LC 7

| WAVE NUMBER ($cm^{-1}$) | INTENSITY | ASSIGNMENT |
|---|---|---|
| 3450 | W | -OH, -NH |
| 2960 | M | Aliphatic CH |
| 2920, 7860 | S | Aliphatic CH |
| 1710 | M Br | Carbonyls |
| 1600 | W Br | C=C, C=N |
| 1465 | M | Alkanes |
| 1380 | W | Alkanes |
| 1270 | W | C-O |

Comments: Similar to LC-6 except no strong aromatic character.

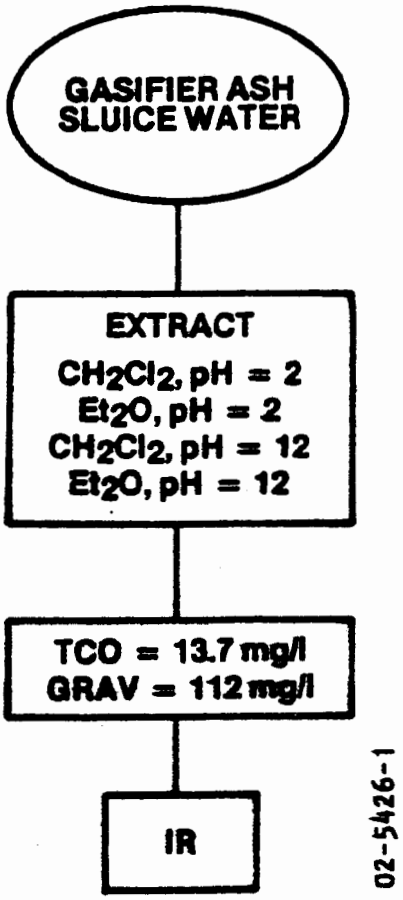


**Figure D19. Gasifier Ash Sluice Water Screening Analysis Schematic**

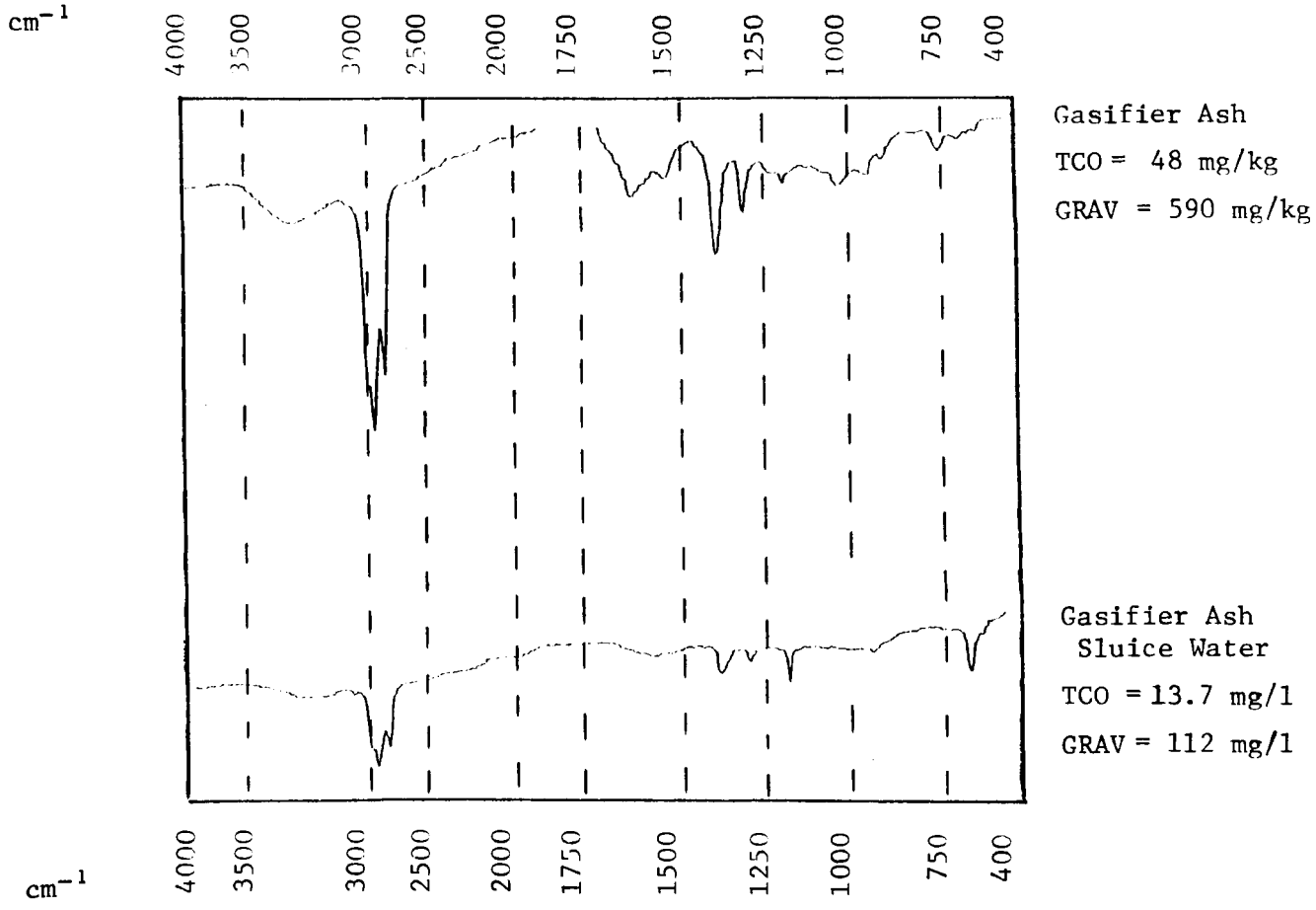


Figure D20. Infrared Spectrum, Gasifier Ash Sluice Water

TABLE D75. INFRARED ANALYSIS: GASIFIER ASH SLUICE WATER

**IR REPORT**

**Sample:** GASIFIER ASH SLUICE WATER

| WAVE NUMBER ($cm^{-1}$) | INTENSITY | ASSIGNMENT |
|---|---|---|
| 3050 | W | Aromatic CH |
| 2960, 2930, 2920 | S | Aliphatic CH |
| 2850 | S | Aliphatic CH |
| 1455 | M Br | Aliphatic CH |
| 1375 | W | Aliphatic CH |
| 1265 | M | C-O |
| 1030 | W | C-O |
| 740 | M | Aromatic substitution, C-Cl |
| 700 | W | Aromatic substitution, C-Cl |

**Comments:** Slightly enriched in aromatics from the gasifier ash, carbonyl absent.

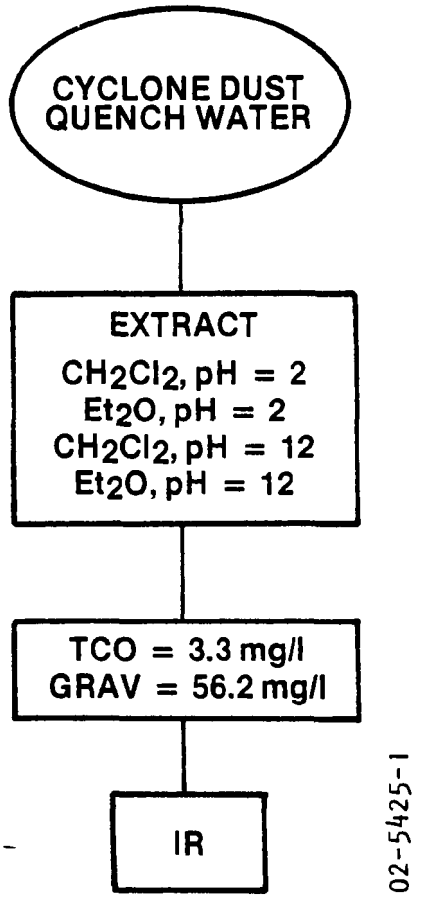


Figure D21. Cyclone Dust Quench Water Screening Analysis Schematic

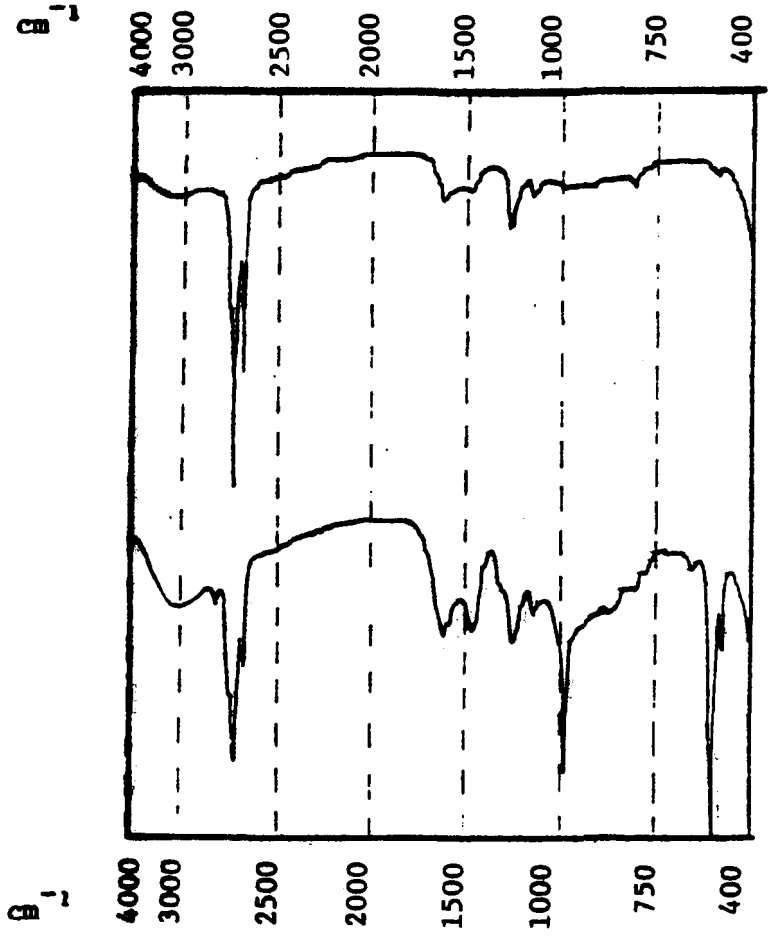


Cyclone Dust

TCO = 660 mg/kg
GRAV = 12000 mg/kg

Cyclone Dust Quench Water

TCO = 3.3 mg/l
GRAV = 56.2 mg/l

Figure D22 . Infrared Spectra, Cyclone Dust Quench Water

TABLE D76. INFRARED ANALYSIS: CYCLONE DUST QUENCH WATER

IR REPORT

Sample: CYCLONE DUST QUENCH WATER

| WAVE NUMBER ($cm^{-1}$) | INTENSITY | ASSIGNMENT |
|---|---|---|
| 3350 | M | -OH, -NH |
| 3060 | W | Aromatic CH |
| 2960 | M | Aliphatic CH |
| 2920 | S | Aliphatic CH |
| 2860 | M | Aliphatic CH |
| 1710 | M Br | Carbonyls |
| 1610 | M Br | C=C, C-N |
| 1500 | W Sh | Aromatic ring overtones |
| 1460 | M | Alkanes |
| 1380 | W | Alkanes |
| 1270 | S | C-O |
| 810 | W | Aromatic substitution, amines |
| 740 | S | Aromatic substitution, amines |
| 710 | M | Aromatic substitution, amines |

Comments: Considerably enriched in aromatics from the cyclone dust, but otherwise quite similar.

## D4.0 DETAILED ORGANIC ANALYSIS RESULTS

The results of the instrumental analyses given in the following data section were obtained using the analytical methods described in Section 4.0 of Appendix C. The results of the thermal desorption GC-MS analysis of the Tenax GC/silica gel trap sample of the product gas are given in Table D77. Also given in this data section are the results of the halogen-specific GC analysis using the Hall electrolytic conductivity detector. Samples for specific ion monitoring GC/MS were prioritized on the basis of the weighted discharge severity (WDS) and the results of thse anlayses are given along with the concentration of the compounds of concern. The sample and analysis methods are listed by stream in the detailed organic anlaysis results matrix which is Figure D23. The results tables follow in the order shown in the Figure.

| SAMPLE | HALL GC | SIM GC-MS |
|---|---|---|
| **Product Gas Particulates** | | |
| Total Sample | ● | |
| LC-1 | | |
| LC-2 | | ● |
| LC-3 | ● | ● |
| LC-4 | ● | ● |
| LC-5 | | ● |
| LC-6 | ● | ● |
| LC-7 | | |
| **Product Gas Organic Module Composite** | | |
| Total Sample | ● | |
| LC-1 | | |
| LC-2 | | ● |
| LC-3 | ● | ● |
| LC-4 | | |
| LC-5 | ● | ● |
| LC-6 | | |
| LC-7 | | |
| **Test Burner Composite** | | |
| Total Sample | ● | |
| LC-1 | | |
| LC-2 | ● | ● |
| LC-3 | ● | |
| LC-4 | | |
| LC-5 | | |
| LC-6 | | |
| LC-7 | | |
| **Gasifier Ash** | | |
| Total Sample | ● | |
| LC-1 | | |
| LC-2 | | |
| LC-3 | ● | |
| LC-4 | | |
| LC-5 | ● | |
| LC-6 | ● | |
| LC-7 | ● | |
| **Cyclone Dust** | | |
| Total Sample | ● | |
| LC-1 | | |
| LC-2 | ● | |
| LC-3 | ● | |
| LC-4 | | |
| LC-5 | | |
| LC-6 | | |
| LC-7 | | |

Figure D23. Detailed Organic Analysis Results Matrix

TABLE D77. THERMAL DESORPTION GC-MS ANALYSIS RESULTS: PRODUCT GAS TENAX GC/SILICA GEL TRAP

| Compounds Identified | Amount ng | Concentration µg/SCM* |
|---|---|---|
| Benzene | >1300 | >13,000 |
| Thiophene | 190 | 1,900 |
| Toluene | 26 | 260 |
| Ethyl Benzene | 3.9 | 39 |
| *m*- and *p*-Xylene | 4.8 | 48 |
| *o*-Xylene | 4.8 | 48 |

*SCM at 25°C (77°F) and 101 kPa (1 atm), dry basis.

| SAMPLE | HALL GC | SIM GC-MS |
|---|---|---|
| Total Sample | ● | |
| LC-1 | | |
| LC-2 | | ● |
| LC-3 | ● | ● |
| LC-4 | ● | ● |
| LC-5 | | ● |
| LC-6 | ● | ● |
| LC-7 | | |

Figure D24. Product Gas Particulates

TABLE D78. HALOGEN-SPECIFIC GC ANALYSIS RESULTS: PRODUCT GAS PARTICULATES

| SAMPLE | HALOGENATED CONCENTRATION* |
|---|---|
| Total Sample | <200 μg/SCM |
| LC-3 | ND |
| LC-4 | ND |
| LC-6 | ND |

SCM at 25°C (77°F) and 101 kPa (1 atm), dry basis.

ND - no detectable response.

*Weighed response factor approximating a monochlorinated compound MW = 180.

TABLE D79. SPECIFIC ION MONITORING GC-MS ANALYSIS RESULTS: PRODUCT GAS PARTICULATES, LC-2

| COMPOUND | RETENTION TIME | QUANTIFICATION IONS | AMOUNT PPM | CONCENTRATION ¤ µg/SCM |
|---|---|---|---|---|
| Polychlorinated biphenyls† | 23.3 | 222, 224, 256, 258 | ≤0.033 | ≤7.6 |
| Benzo(a)anthracene | 31.3 | 228, 226 | 0.12* | 28 |
| 7,12-Dimethylbenzo(a)anthracene | | 256, 241 | ND | |
| Benzo(b)fluoranthene | 35.1 | 252, 250 | 0.044* | 10 |
| Dibenzo(a,i)pyrene | | 302, 300 | ND | |
| Benzo(c)phenanthrene ☆ | | 228, 226 | ND | |
| Benzo(a)pyrene | | 252, 250 | ND | |
| 3-Methyl cholanthrene | | 268, 253 | ND | |
| Dibenzo(a,h)anthracene | | 178, 176 | ND | |

SCM at 25°C (77°F) and 101 kPa (1 atm), dry basis.

ND = not detected.

¤aEB = a x $10^b$.

*Includes possible coeluting isomers.

☆Standard unavilable, based on benzo(a)anthracene and chrysene.

†Based on PCB-3 Cl.

TABLE D60. SPECIFIC ION MONITORING GC-MS ANALYSIS RESULTS: PRODUCT GAS PARTICULATES, LC-3

| COMPOUND | RETENTION TIME | QUANTIFICATION IONS | AMOUNT PPM | CONCENTRATION ¤ µg/SCM |
|---|---|---|---|---|
| Polychlorinated biphenyls† | | 222, 224, 256, 258 | ND | |
| Biphenyl | 16.5 | 154, 153 | 0.9 | 1.2E2 |
| Benzo(a)anthracene | 31.1 | 228, 226 | 12.6* | 1.7E3 |
| 7,12-Dimethylbenzo(a)anthracene | 34.6 | 256, 241 | 1.17* | 1.6E2 |
| Benzo(b)fluoranthene | 35.0 | 252, 250 | 2.7* | 3.7E2 |
| Dibenzo(a,i)pyrene | | 302, 300 | ND | |
| Benzo(c)phenanthrene☆ | 30.4 | 228, 226 | 7.04* | 9.7E2 |
| Benzo(a)pyrene | 35.4 | 252, 250 | 1.4 | 1.9E2 |
| 3-Methyl cholanthrene | 36.8 | 268, 253 | 0.034 | 4.7 |
| Dibenzo(a,h)anthracene | 43.1 | 278, 276 | 0.044 | 6.1 |

SCM at 25°C (77°F) and 101 kPa (1 atm), dry basis.

ND = not detected.

¤ aEb = a x $10^b$.

*Includes possible coeluting isomers.

†Based on PCB-3 Cl.

☆Standard unavailable, based on benzo(a)anthracene and chrysene.

TABLE D81. SPECIFIC ION MONITORING GC-MS ANALYSIS RESULTS: PRODUCT GAS PARTICULATES, LC-4

| COMPOUND | RETENTION TIME | QUANTIFICATION IONS | AMOUNT PPM | CONCENTRATION μg/SCM |
|---|---|---|---|---|
| Chloronitrobenzene | | 157, 159 | ND | |
| Dinitrotoluenes | 19.8, 20.2, 21.2 | 165, 89 | 16* | 2.2E3 |
| Ethyl methyl dioxolane | | 101, 87 | ND | |
| Tetramethyl succinonitrile† | | 136, 121 | ND | |
| Benzothiophene | | 134, 89 | ND | |
| Benzonitrile | | 103, 76 | ND | |

SCM at 25°C (77°F) and 101 kPa (1 atm), dry basis.

ND = not detected.

¤ aEB = a x $10^b$.

*All possible isomers included.

†No standard mass spectrum available.

TABLE D82 SPECIFIC ION MONITORING GC-MS ANALYSIS RESULTS: PRODUCT GAS PARTICULATES, LC-5

| COMPOUND | RETENTION TIME | QUANTIFICATION IONS | AMOUNT PPM | CONCENTRATION[¤] µg/SCM |
|---|---|---|---|---|
| N-Nitrosodimethylamine | | 74, 42 | ND | |
| Aminotoluene | | 107, 106 | ND | |
| β-propiolactone[†] | | 42, 43 | ND | |
| Trinitrophenol[α] | | 229, 91 | ND | |
| Dinitrocresol[α] | 12.5 | 198, 182 | 6.1 | 8.4E2 |
| Dihydroacridine[*] | 20.8 | 181, 180 | 0.17 | 23 |
| Dibenzoacridine | | 279, 277 | ND | |

SCM at 25°C (77°F) and 101 kPa (1 atm), dry basis.

ND = not detected.

[¤] aEb = a x $10^b$.

*Standard unavailable, based on dihydrophenanthridine.

†No standard available.

[α] GC column: 1% SP-1240 DA for acidic compounds.

TABLE D83. SPECIFIC ION MONITORING GC-MS ANALYSIS RESULTS: PRODUCT GAS PARTICULATES, LC-6

| COMPOUND | RETENTION TIME | QUANTIFICATION IONS | AMOUNT PPM | CONCENTRATION μg/SCM |
|---|---|---|---|---|
| N-Nitrosodimethylamine | | 74, 42 | ND | |
| Aminotoluene | | 107, 106 | ND | |
| β-propiolactone† | | 42, 43 | ND | |
| Trinitrophenol[α] | | 229, 91 | ND | |
| Dinitrocresol[α] | | 198, 182 | ND | |
| Dihydroacridine* | 20.3, 21.33 | 181, 180 | 0.66 | 91 |
| Dibenzoacridine | | 279, 277 | ND | |

SCM at 25°C (77°F) and 101 kPa (1 atm), dry basis.

ND = not detected.

*Standard unavailable, based on dihydrophenanthridine.

†No standard available.

[α]GC column: 1% SP-1240 DA for acidic compounds.

| SAMPLE | HALL GC | SIM GC-MS |
|---|---|---|
| Total Sample | ● | |
| LC-1 | | |
| LC-2 | | ● |
| LC-3 | ● | ● |
| LC-4 | | |
| LC-5 | ● | ● |
| LC-6 | | |
| LC-7 | | |

Figure D25. Product Gas Organic Module Composite

TABLE D84. HALOGEN-SPECIFIC GC ANALYSIS RESULTS: PRODUCT GAS MODULE COMPOSITE

| SAMPLE | HALOGENATED CONCENTRATION* |
|---|---|
| Total Sample | <2 mg/SCM |
| LC-3 | ND |
| LC-5 | ND |

SCM at 25°C (77°F) and 101 kPa (1 atm), dry basis.

ND - no detectable response.

*Weighed response factor approximating a monochlorinated compound MW = 180.

TABLE D85. SPECIFIC ION MONITORING GC-MS ANALYSIS RESULTS: PRODUCT GAS ORGANIC MODULE COMPOSITE, LC-2

| COMPOUND | RETENTION TIME | QUANTIFICATION IONS | AMOUNT PPM | CONCENTRATION μg/SCM |
|---|---|---|---|---|
| Polychlorinated Biphenyls† | 23.3 | 222, 224, 256, 258 | ≤0.031 | ≤7.2 |
| Benzo(a)anthracene | 31.3 | 228, 226 | 0.035* | 8.1 |
| 7,12-Dimethylbenzo(a) anthracene | | 256, 241 | ND | |
| Benzo(b)fluoranthene | | 252, 250 | ND | |
| Dibenzo(a,i)pyrene | | 302, 300 | ND | |
| Benzo(c)phenanthrene☆ | | 228, 226 | ND | |
| Benzo(a)pyrene | | 252, 250 | ND | |
| 3-Methyl cholanthrene | | 268, 253 | ND | |
| Dibenzo(a,h)anthracene | | 278, 276 | ND | |

SCM at 25°C (77°F) and 101 kPa (1 atm), dry basis.

ND = not detected.

*Includes possible coeluting isomers.

†Based on PCB-3 Cl.

☆Standard unavailable, based on benzo(a)anthracene and chrysene.

TABLE D86. SPECIFIC ION MONITORING GC-MS ANALYSIS RESULTS: PRODUCT GAS ORGANIC MODULE COMPOSITE, LC-3

| COMPOUND | RETENTION TIME | QUANTIFICATION IONS | AMOUNT PPM | CONCENTRATION ¤ µg/SCM |
|---|---|---|---|---|
| Polychlorinated biphenyls† | | 222, 224, 256, 258 | ND | |
| Biphenyl | 16.5 | 154, 153 | 16.1 | 5E3 |
| Benzo(a)anthracene | 31.3 | 228, 226 | 0.46* | 140 |
| 7,12-Dimethylbenzo(a)anthracene | | 256, 241 | ND | |
| Benzo(b)fluoranthene | 35.0 | 252, 250 | 0.033* | 10 |
| Dibenzo(a,i)pyrene | | 302, 300 | ND | |
| Benzo(c)phenanthrene☆ | 30.5 | 228, 226 | 0.21 | 65 |
| Benzo(a)pyrene | | 252, 250 | ND | |
| 3-Methyl cholanthrene | | 268, 253 | ND | |
| Dibenzo(a,h)anthracene | | 278, 276 | ND | |

SCM at 25°C (77°F) and 101 kPa (1 atm), dry basis.

ND = not detected.

¤aEb = a x $10^b$

*Includes possible coeluting isomers.

†Based on PCB-3 Cl.

☆Standard unavailable, based on benzo(a)anthracene and chrysene.

TABLE D87. SPECIFIC ION MONITORING GC-MS ANALYSIS RESULTS: PRODUCT GAS ORGANIC MODULE COMPOSITE, LC-5

| COMPOUND | RETENTION TIME | QUANTIFICATION IONS | AMOUNT PPM | CONCENTRATION[¤] µg/SCM |
|---|---|---|---|---|
| N-Nitrosodimethylamine | | 74, 42 | ND | |
| Aminotoluene | | 107, 106 | ND | |
| β-propiolactone[†] | | 42, 43 | ND | |
| Trinitrophenol[α] | | 229, 91 | ND | |
| Dinitrocresol[α] | 12.5 | 198, 182 | 3.2 | 9.8E2 |
| Dihydroacridine | | 181, 180 | ND | |
| Dibenzoacridine | | 279, 277 | ND | |

SCM at 25°C (77°F) and 101 kPa (1 atm), dry basis.

ND = not detected.

¤aEb = a x $10^b$.

†No standard available.

[α]GC column: 1% SP-1240 DA for acidic compounds.

| SAMPLE | HALL GC | SIM GC-MS |
|---|---|---|
| Total Sample | ● | |
| LC-1 | | |
| LC-2 | ● | ● |
| LC-3 | ● | |
| LC-4 | | |
| LC-5 | | |
| LC-6 | | |
| LC-7 | | |

Figure D26. Test Burner Composite

TABLE D88. HALOGEN-SPECIFIC GC ANALYSIS RESULTS: TEST BURNER COMPOSITE

| SAMPLE | HALOGENATED CONCENTRATION* |
|---|---|
| Total Sample | <30 μg/SCM |
| LC-2 | <2 μg/SCM |
| LC-3 | <5 μg/SCM |

SCM at 25°C (77°F) and 101 kPa (1 atm), dry basis.

*Weighed response factor approximating a monochlorinated compound MW = 180.

TABLE D89. SPECIFIC ION MONITORING GC-MS ANALYSIS RESULTS: TEST BURNER COMPOSITE, LC-2

| COMPOUND | RETENTION TIME | QUANTIFICATION IONS | AMOUNT PPM | CONCENTRATION[¤] µg/SCM |
|---|---|---|---|---|
| Benzo(a)pyrene | | 252, 250 | ND | |
| Dibenzo(a,h)anthracene | | 278, 276 | ND | |
| 7,12-Dimethylbenzo(a)anthracene | | 256, 258 | ND | |
| Benzo(a)anthracene | 31.8 | 228, 226 | 0.17* | 4.5E2 |
| Polychlorinated biphenyls† | | 188, 190, 222, 224, 256, 258 | ND | |

SCM at 25°C (77°F) and 101 kPa (1 atm), dry basis.

ND = not detected.

[¤] aEb = a x $10^b$.

*Includes possible coeluting isomers.

†Based on PCB-3 Cl.

| SAMPLE | HALL GC | SIM GC-MS |
|---|---|---|
| Total Sample | ● | |
| LC-1 | | |
| LC-2 | | |
| LC-3 | ● | |
| LC-4 | | |
| LC-5 | ● | |
| LC-6 | ● | |
| LC-7 | ● | |

**Figure D27. Gasifier Ash**

TABLE D90. HALOGEN-SPECIFIC GC ANALYSIS RESULTS: GASIFIER ASH

| SAMPLE | HALOGENATED CONCENTRATION* |
|---|---|
| Total Sample | <300 mg/kg† |
| LC-3 | <30 μg/kg |
| LC-5 | <25 μg/kg |
| LC-6 | <5 mg/kg |
| LC-7 | <150 μg/kg |

†Possible interference.

*Weighed response factor approximating a monochlorinated compound MW = 180.

| SAMPLE | HALL GC | SIM GC-MS |
|---|---|---|
| Total Sample | ● | |
| LC-1 | | |
| LC-2 | ● | |
| LC-3 | ● | |
| LC-4 | | |
| LC-5 | | |
| LC-6 | | |
| LC-7 | | |

Figure D28. Cyclone Dust

TABLE D91. HALOGEN-SPECIFIC GC ANALYSIS RESULTS: CYCLONE DUST

| SAMPLE | HALOGENATED CONCENTRATION* |
|---|---|
| Total Sample | <35 mg/kg |
| LC-2 | ND |
| LC-3 | ND |

*Weighed response factor approximating a monochlorinated compoung MW = 180.

ND = no detectable response.

APPENDIX E
SOURCE ANALYSIS MODEL/1A RESULTS

TABLE OF CONTENTS FOR APPENDIX E


| | | Page |
|---|---|---|
| Notes for the Tables | | E-2 |
| E1.0 | GASEOUS STREAMS | E-3 |
| | Product Gas Particulates, Health Impact | E-3 |
| | Product Gas Particulates, Ecology Impact | E-33 |
| | Product Gas Organic Module Composite, Health Impact | E-41 |
| | Product Gas Organic Module Composite, Ecology Impact | E-70 |
| | Test Burner Flue Gas Composite, Health Impact | E-77 |
| | Test Burner Flue Gas Composite, Ecology Impact | E-97 |
| E2.0 | LIQUID STREAMS | E-104 |
| | Gasifier Ash Sluice Water, Health Impact | E-104 |
| | Gasifier Ash Sluice Water, Ecology Impact | E-123 |
| | Cyclone Dust Quench Water, Health Impact | E-136 |
| | Cyclone Dust Quench Water, Ecology Impact | E-154 |
| E3.0 | SOLID STREAMS | E-167 |
| | Gasifier Ash, Health Impact | E-167 |
| | Gasifier Ash, Ecology Impact | E-179 |
| | Cyclone Dust, Health Impact | E-195 |
| | Cyclone Dust, Ecology Impact | E-215 |

NOTES FOR THE FOLLOWING TABLES:

P = compound is on Priority Pollutant List

W = compound is the worst case within the appropriate matrix for that category/subcategory

T = concentration is total organic loading (TCO + GRAV) for the LC fraction

S = concentration is from SSMS

D = concentration is determined experimentally; from on-site analysis, SIM-GC/MS, Anion/Cation analysis ICP or AAS

Conc = concentration in μg/SCM at 25°C (77°F) and 101 kPa (1 atm) dry basis, for gases; μg/l (ppb) for liquids; and μg/g (ppm) for solids

WDS = units are g/s for all streams

LCCAT = established LC fraction if applicable

* = indicates that the compound appears more than once in the listing, i.e. in more than one LC fraction

PRODUCT GAS PARTICULATE

FLOW RATE 590 G/S (0.57 SCM/S, DRY BASIS)

8.523 SCM AT 25C AND 760 MM HG SAMPLED

TOTAL ORGANIC LOADING = 7.3 G/SCM

TOTAL TCO = 380 MG/SCM  TOTAL GRAV = 6900 MG/SCM

0.17% ORIGINAL SAMPLE TO LC

LC TCO = 5.3 MG  LC GRAV = 97.6 MG  LC TOTAL = 102.9 MG

| LCCAT | ORGANIC LOADING |
|---|---|
| 1 | 870000.0 |
| 2 | 89000.0 |
| 3 | 680000.0 |
| 4 | 410000.0 |
| 5 | 490000.0 |
| 6 | 3600000.0 |
| 7 | 300000.0 |

FLOW RATE = 590.00

STATE: GAS, UNITS IN MICROGRAMS/SCM

IMPACT: HEALTH

EXPERIMENTALY DETERMINED DATA

SPARK SOURCE DATA

# PRODUCT GAS PARTICULATE, HEALTH IMPACT

| DMEG NO. | | COMPOUND NAME | TYPE | CONC E-6 G/SCM | DS | WDS G/S | LCCAT |
|---|---|---|---|---|---|---|---|
| 04 B 020* | P W | 1,1'-DICHLOROMETHYL ETHER | T | 4.90E 05 | 9.80E 04 | 5.80E 07 | 5 |
| 04 B 020* | P W | 1,1'-DICHLOROMETHYL ETHER | T | 4.10E 05 | 8.20E 04 | 4.83E 07 | 4 |
| 10 C 100* | | 1,4-DIAMINOBENZENE | T | 3.60E 06 | 3.60E 04 | 2.12E 07 | 6 |
| 10 C 043* | | 4-AMINOTOLUENE | T | 3.60E 06 | 3.30E 04 | 1.93E 07 | 6 |
| 10 C 041* | | 2-AMINOTOLUENE | T | 3.60E 06 | 3.30E 04 | 1.93E 07 | 6 |
| 10 C 042* | | 3-AMINOTOLUENE | T | 3.60E 06 | 3.30E 04 | 1.93E 07 | 6 |
| 12 A 040* | P | N-NITROSODIETHYLAMINE | T | 3.60E 06 | 3.00E 04 | 1.80E 07 | 6 |
| 10 C 220* | | 2-AMINONAPHTHALENE | T | 3.60E 06 | 2.11E 04 | 1.24E 07 | 6 |
| 20 B 041* | | 3,5-DINITRO-P-CRESOL | T | 3.60E 06 | 1.80E 04 | 1.10E 07 | 6 |
| 20 B 020* | P W | 4,6-DINITRO-O-CRESOL | T | 3.60E 06 | 1.80E 04 | 1.10E 07 | 6 |
| 20 B 042* | | 2,6-DINITRO-P-CRESOL | T | 3.60E 06 | 1.80E 04 | 1.10E 07 | 6 |
| 21 C 100* | P W | BENZO(A)PYRENE | D | 1.90E 02 | 9.50E 03 | 5.60E 06 | 3 |
| 02 B 140* | P W | HEXACHLOROCYCLOPENTADIENE | T | 8.70E 05 | 7.90E 03 | 4.70E 06 | 1 |
| 10 C 082* | | M-ANISIDINE | T | 3.60E 06 | 7.20E 03 | 4.24E 06 | 6 |
| 10 C 083* | | P-ANISIDINE | T | 3.60E 06 | 7.20E 03 | 4.24E 06 | 6 |
| 10 C 080* | | ANISIDINES | T | 3.60E 06 | 7.20E 03 | 4.24E 06 | 6 |
| 10 C 081* | | O-ANISIDINE | T | 3.60E 06 | 7.20E 03 | 4.24E 06 | 6 |
| 19 A 060* | P W | PENTACHLOROPHENOL | T | 3.60E 06 | 7.20E 03 | 4.24E 06 | 6 |
| 13 A 100* | W | BENZENETHIOL | T | 3.60E 06 | 7.20E 03 | 4.24E 06 | 6 |
| 10 C 200* | | 1-AMINONAPHTHALENE | T | 3.60E 06 | 6.42E 03 | 3.80E 06 | 6 |
| 23 C 160* | W | DIBENZO(C,G)CARBAZOLE | T | 4.90E 05 | 4.90E 03 | 2.90E 06 | 5 |
| 10 C 100* | | 1,4-DIAMINOBENZENE | T | 4.90E 05 | 4.90E 03 | 2.90E 06 | 5 |
| 13 A 140* | | PERCHLOROMETHANETHIOL | T | 3.60E 06 | 4.50E 03 | 2.70E 06 | 6 |
| 10 C 042* | | 3-AMINOTOLUENE | T | 4.90E 05 | 4.50E 03 | 2.62E 06 | 5 |
| 10 C 043* | | 4-AMINOTOLUENE | T | 4.90E 05 | 4.50E 03 | 2.62E 06 | 5 |
| 10 C 041* | | 2-AMINOTOLUENE | T | 4.90E 05 | 4.50E 03 | 2.62E 06 | 5 |
| 23 C 160* | W | DIBENZO(C,G)CARBAZOLE | T | 4.10E 05 | 4.10E 03 | 2.41E 06 | 4 |
| 12 A 040* | P | N-NITROSODIETHYLAMINE | T | 4.90E 05 | 4.10E 03 | 2.40E 06 | 5 |
| 08 A 122* | | PALMITIC ACID | T | 3.60E 06 | 3.60E 03 | 2.12E 06 | 6 |
| 10 C 140* | P | BENZIDINE | T | 3.60E 06 | 3.60E 03 | 2.12E 06 | 6 |
| 08 A 121* | | MYRISTIC ACID | T | 3.60E 06 | 3.60E 03 | 2.12E 06 | 6 |
| 08 A 123* | | STEARIC ACID | T | 3.60E 06 | 3.60E 03 | 2.12E 06 | 6 |
| 08 A 120* | W | SATURATED LONG CHAIN ACIDS (MW:228-285) | T | 3.60E 06 | 3.60E 03 | 2.12E 06 | 6 |
| 08 C 060* | W | 6-HEXANELACTAM | T | 3.60E 06 | 3.60E 03 | 2.12E 06 | 6 |

PRODUCT GAS PARTICULATE, HEALTH IMPACT

| DMEG NO. | | COMPOUND NAME | TYPE | CONC E-6 G/SCM | DS | WDS G/S | LCCAT |
|---|---|---|---|---|---|---|---|
| 21 B 106* | | 7-METHYL BENZO(C)PHENANTHRENE | T | 6.80E 05 | 3.10E 03 | 1.82E 06 | 3 |
| 21 B 103* | | 2-METHYL BENZO(C)PHENANTHRENE | T | 6.80E 05 | 3.10E 03 | 1.82E 06 | 3 |
| 21 B 108* | | 2-ETHYL BENZO(C)PHENANTHRENE | T | 6.80E 05 | 3.10E 03 | 1.82E 06 | 3 |
| 21 B 105* | | 6-METHYL BENZO(C)PHENANTHRENE | T | 6.80E 05 | 3.10E 03 | 1.82E 06 | 3 |
| 21 B 108* | | ISOPROPYL BENZO(C)PHENANTHRENE | T | 6.80E 05 | 3.10E 03 | 1.82E 06 | 3 |
| 21 B 107* | | 8-METHYL BENZO(C)PHENANTHRENE | T | 6.80E 05 | 3.10E 03 | 1.82E 06 | 3 |
| 21 B 104* | | 5-METHYL BENZO(C)PHENANTHRENE | T | 6.80E 05 | 3.10E 03 | 1.82E 06 | 3 |
| 21 B 109* | | 6-ETHYL BENZO(C)PHENANTHRENE | T | 6.80E 05 | 3.10E 03 | 1.82E 06 | 3 |
| 21 B 102* | | 1-METHYL BENZO(C)PHENANTHRENE | T | 6.80E 05 | 3.10E 03 | 1.82E 06 | 3 |
| 21 B 10A* | | N-PROPYL BENZO(C)PHENANTHRENE | T | 6.80E 05 | 3.10E 03 | 1.82E 06 | 3 |
| 21 B 101* | | BENZO(C)PHENANTHRENE | T | 4.90E 05 | 2.90E 03 | 1.70E 06 | 5 |
| 10 C 220* | | 2-AMINONAPHTHALENE | T | 3.60E 06 | 2.80E 03 | 1.63E 06 | 6 |
| 10 C 120* | | 4-AMINOBIPHENYL | T | 3.60E 06 | 2.80E 03 | 1.63E 06 | 6 |
| 12 B 020* | W | N-METHYL-N-NITROSOANILINE | T | 3.60E 06 | 2.60E 03 | 1.51E 06 | 6 |
| 20 A 102* | | 2,5-DINITROPHENOL | T | 3.60E 06 | 2.60E 03 | 1.51E 06 | 6 |
| 20 A 101* | P | 2,4-DINITROPHENOL | T | 3.60E 06 | 2.60E 03 | 1.51E 06 | 6 |
| 20 A 100* | | DINITROPHENOLS | T | 3.60E 06 | 2.60E 03 | 1.51E 06 | 6 |
| 20 A 103* | | 2,6-DINITROPHENOL | T | 3.60E 06 | 2.60E 03 | 1.51E 06 | 6 |
| 20 A 080* | | 2-AMINO-4,6-DINITROPHENOL | T | 4.90E 05 | 2.50E 03 | 1.44E 06 | 5 |
| 20 B 041* | | 3,5-DINITRO-P-CRESOL | T | 4.90E 05 | 2.50E 03 | 1.44E 06 | 5 |
| 20 B 042* | | 2,6-DINITRO-P-CRESOL | T | 4.90E 05 | 2.50E 03 | 1.44E 06 | 5 |
| 20 B 020* | P W | 4,6-DINITRO-O-CRESOL | T | 3.60E 06 | 1.80E 03 | 1.10E 06 | 6 |
| 18 B 060* | W | 1,4-DIHYDROXYBENZENE | T | 8.70E 05 | 1.74E 03 | 1.02E 06 | 1 |
| 02 A 380* | W | HEXACHLOROCYCLOHEXANE | T | 3.60E 06 | 1.50E 03 | 8.90E 05 | 6 |
| 12 A 060* | P | N-NITROSODIPROPYLAMINE | T | 3.60E 06 | 1.10E 03 | 6.43E 05 | 6 |
| 08 A 140* | | OLEIC ACID | T | 4.90E 05 | 9.80E 02 | 5.80E 05 | 5 |
| 10 C 082* | | M-ANISIDINE | T | 4.90E 05 | 9.80E 02 | 5.80E 05 | 5 |
| 10 C 083* | | P-ANISIDINE | T | 4.90E 05 | 9.80E 02 | 5.80E 05 | 5 |
| 19 A 060* | P W | PENTACHLOROPHENOL | T | 4.90E 05 | 9.80E 02 | 5.80E 05 | 5 |
| 10 C 081* | | O-ANISIDINE | T | 4.90E 05 | 9.80E 02 | 5.80E 05 | 5 |
| 13 A 100* | W | BENZENETHIOL | T | 4.90E 05 | 9.80E 02 | 5.80E 05 | 5 |
| 10 C 080* | | ANISIDINES | T | 3.00E 05 | 9.40E 02 | 5.53E 05 | 7 |
| 08 B 060* | W | B-PROPIOLACTONE | T | 4.90E 05 | 8.80E 02 | 5.20E 05 | 5 |
| 10 C 200* | | 1-AMINONAPHTHALENE | | | | | |

## PRODUCT GAS PARTICULATE, HEALTH IMPACT

| DMEG NO. | | | COMPOUND NAME | TYPE | CONC E-6 G/SCM | DS | WDS G/S | LCCAT |
|---|---|---|---|---|---|---|---|---|
| 23 D 020* | | W | BENZOTHIAZOLE | T | 3.60E 06 | 8.40E 02 | 4.93E 05 | 6 |
| 02 B 140* | P | W | HEXACHLOROCYCLOPENTADIENE | T | 8.90E 04 | 8.10E 02 | 4.80E 05 | 2 |
| 23 D 040* | | | METHYL BENZOTHIAZOLE | T | 3.60E 06 | 7.70E 02 | 4.51E 05 | 6 |
| 08 D 281* | | | DIMETHYL PHTHALATE | T | 3.60E 06 | 7.20E 02 | 4.24E 05 | 6 |
| 08 D 283* | | | DI-N-BUTYL PHTHALATE | T | 3.60E 06 | 7.20E 02 | 4.24E 05 | 6 |
| 08 D 282* | | | DIETHYL PHTHALATE | T | 3.60E 06 | 7.20E 02 | 4.24E 05 | 6 |
| 08 D 280* | P | W | PHTHALATE ESTERS (MW:194-279) | T | 3.60E 06 | 7.20E 02 | 4.24E 05 | 6 |
| 08 D 300* | P | | DI-2-ETHYLHEXYL PHTHALATE | T | 3.60E 06 | 7.20E 02 | 4.24E 05 | 6 |
| 02 A 180* | | | DIBROMODICHLOROMETHANE | T | 8.70E 05 | 6.21E 02 | 3.70E 05 | 1 |
| 08 A 101* | | | CAPROIC ACID | T | 3.60E 06 | 6.20E 02 | 3.70E 05 | 6 |
| 08 A 102* | | | CAPRYLIC ACID | T | 3.60E 06 | 6.20E 02 | 3.70E 05 | 6 |
| 08 A 104* | | | LAURIC ACID | T | 3.60E 06 | 6.20E 02 | 3.70E 05 | 6 |
| 08 A 100* | | | SATURATED LONG CHAIN ACIDS (MW:116-201) | T | 3.60E 06 | 6.20E 02 | 3.70E 05 | 6 |
| 08 A 103* | | | CAPRIC ACID | T | 3.60E 06 | 6.20E 02 | 3.70E 05 | 6 |
| 21 D 060* | | | DIBENZO(A,L)PYRENE | T | 6.80E 05 | 6.20E 02 | 3.64E 05 | 3 |
| 21 B 060* | | W | 7,12-DIMETHYLBENZ(A)ANTHRACENE | D | 1.60E 02 | 6.20E 02 | 3.63E 05 | 3 |
| 13 A 140* | | | PERCHLOROMETHANETHIOL | T | 4.90E 05 | 6.12E 02 | 3.61E 05 | 5 |
| 23 A 102* | | | 3-CHLOROPYRIDINE | T | 3.60E 06 | 6.10E 02 | 3.60E 05 | 6 |
| 23 A 100* | | W | CHLOROPYRIDINES | T | 3.60E 06 | 6.10E 02 | 3.60E 05 | 6 |
| 23 A 103* | | | 4-CHLOROPYRIDINE | T | 3.60E 06 | 6.10E 02 | 3.60E 05 | 6 |
| 23 A 101* | | | 2-CHLOROPYRIDINE | T | 3.60E 06 | 6.10E 02 | 3.60E 05 | 6 |
| 10 A 060* | | | ETHANOLAMINE | T | 3.60E 06 | 6.00E 02 | 3.54E 05 | 6 |
| 19 A 040* | P | | 2,4-DICHLOROPHENOL | T | 3.60E 06 | 5.14E 02 | 3.03E 05 | 6 |
| 08 A 121* | | | MYRISTIC ACID | T | 4.90E 05 | 4.90E 02 | 2.90E 05 | 5 |
| 17 B 060* | | W | 1-CHLORO-4-NITROBENZENE | T | 4.90E 05 | 4.90E 02 | 2.90E 05 | 5 |
| 17 B 040* | | W | 1-CHLORO-2-NITROBENZENE | T | 4.90E 05 | 4.90E 02 | 2.90E 05 | 5 |
| 08 A 123* | | | STEARIC ACID | T | 4.90E 05 | 4.90E 02 | 2.90E 05 | 5 |
| 08 A 122* | | | PALMITIC ACID | T | 4.90E 05 | 4.90E 02 | 2.90E 05 | 5 |
| 08 C 060* | | W | 6-HEXANELACTAM | T | 4.90E 05 | 4.90E 02 | 2.90E 05 | 5 |
| 10 C 140* | P | | BENZIDINE | T | 4.90E 05 | 4.90E 02 | 2.90E 05 | 5 |
| 08 A 120* | | W | SATURATED LONG CHAIN ACIDS (MW:228-285) | T | 4.90E 05 | 4.90E 02 | 2.90E 05 | 5 |
| 22 D 020* | P | W | INDENO(1,2,3-CD)PYRENE | T | 6.80E 05 | 4.30E 02 | 2.50E 05 | 3 |
| 22 C 020* | P | | BENZO(K)FLUORANTHENE | T | 6.80E 05 | 4.30E 02 | 2.50E 05 | 3 |
| 21 A 180* | P | W | PHENANTHRENE | T | 6.80E 05 | 4.30E 02 | 2.50E 05 | 3 |

PRODUCT GAS PARTICULATE, HEALTH IMPACT

| DMEG NO. | | COMPOUND NAME | TYPE | CONC E-6 G/SCM | DS | WDS G/S | LCCAT |
|---|---|---|---|---|---|---|---|
| 21 B 109* | | 6-ETHYL BENZO(C)PHENANTHRENE | T | 8.90E 04 | 4.04E 02 | 2.40E 05 | 2 |
| 21 B 102* | | 1-METHYL BENZO(C)PHENANTHRENE | T | 8.90E 04 | 4.04E 02 | 2.40E 05 | 2 |
| 21 B 10A* | | N-PROPYL BENZO(C)PHENANTHRENE | T | 8.90E 04 | 4.04E 02 | 2.40E 05 | 2 |
| 21 B 107* | | 8-METHYL BENZO(C)PHENANTHRENE | T | 8.90E 04 | 4.04E 02 | 2.40E 05 | 2 |
| 21 B 104* | | 5-METHYL BENZO(C)PHENANTHRENE | T | 8.90E 04 | 4.04E 02 | 2.40E 05 | 2 |
| 21 B 106* | | 7-METHYL BENZO(C)PHENANTHRENE | T | 8.90E 04 | 4.04E 02 | 2.40E 05 | 2 |
| 21 B 103* | | 2-METHYL BENZO(C)PHENANTHRENE | T | 8.90E 04 | 4.04E 02 | 2.40E 05 | 2 |
| 21 B 101* | | BENZO(C)PHENANTHRENE | T | 8.90E 04 | 4.04E 02 | 2.40E 05 | 2 |
| 21 B 108* | | ISOPROPYL BENZO(C)PHENANTHRENE | T | 8.90E 04 | 4.04E 02 | 2.40E 05 | 2 |
| 21 B 105* | | 6-METHYL BENZO(C)PHENANTHRENE | T | 8.90E 04 | 4.04E 02 | 2.40E 05 | 2 |
| 21 B 108* | | 2-ETHYL BENZO(C)PHENANTHRENE | T | 8.90E 04 | 4.04E 02 | 2.40E 05 | 2 |
| 21 B 142* | | 5-METHYL CHRYSENE | T | 6.80E 05 | 3.80E 02 | 2.22E 05 | 3 |
| 21 B 141* | | 4-METHYL CHRYSENE | T | 6.80E 05 | 3.80E 02 | 2.22E 05 | 3 |
| 21 B 140* | | METHYL CHRYSENES | T | 6.80E 05 | 3.80E 02 | 2.22E 05 | 3 |
| 10 C 120* | | 4-AMINOBIPHENYL | T | 4.90E 05 | 3.80E 02 | 2.22E 05 | 5 |
| 17 A 060* | W | 4-NITROBIPHENYL | T | 4.90E 05 | 3.80E 02 | 2.22E 05 | 5 |
| 12 B 020* | W | N-METHYL-N-NITROSOANILINE | T | 4.90E 05 | 3.80E 02 | 2.22E 05 | 5 |
| 14 B 020 | W | DIMETHYL SULFOXIDE | T | 3.00E 05 | 3.70E 02 | 2.20E 05 | 7 |
| 18 A 083* | | P-ETHYLPHENOL | T | 3.60E 06 | 3.60E 02 | 2.12E 05 | 6 |
| 18 A 082* | | M-ETHYLPHENOL | T | 3.60E 06 | 3.60E 02 | 2.12E 05 | 6 |
| 06 A 020* | W | ETHYLENE GLYCOL | T | 3.60E 06 | 3.60E 02 | 2.12E 05 | 6 |
| 18 A 041* | | M-CRESOL | T | 3.60E 06 | 3.60E 02 | 2.12E 05 | 6 |
| 18 A 043* | | P-CRESOL | T | 3.60E 06 | 3.60E 02 | 2.12E 05 | 6 |
| 18 A 080* | W | ETHYLPHENOLS | T | 3.60E 06 | 3.60E 02 | 2.12E 05 | 6 |
| 18 A 040* | W | CRESOLS | T | 3.60E 06 | 3.60E 02 | 2.12E 05 | 6 |
| 18 A 081* | | O-ETHYLPHENOL | T | 3.60E 06 | 3.60E 02 | 2.12E 05 | 6 |
| 18 A 042* | | O-CRESOL | T | 4.90E 05 | 3.50E 02 | 2.10E 05 | 5 |
| 20 A 102* | | 2,5-DINITROPHENOL | T | 4.90E 05 | 3.50E 02 | 2.10E 05 | 5 |
| 20 A 080* | | 2-AMINO-4,6-DINITROPHENOL | T | 4.90E 05 | 3.50E 02 | 2.10E 05 | 5 |
| 20 A 103* | | 2,6-DINITROPHENOL | T | 4.90E 05 | 3.50E 02 | 2.10E 05 | 5 |
| 20 A 100* | | DINITROPHENOLS | T | 4.90E 05 | 3.50E 02 | 2.10E 05 | 5 |
| 20 A 101* | P | 2,4-DINITROPHENOL | T | 6.80E 05 | 3.40E 02 | 2.00E 05 | 3 |
| 15 B 060* | W | 4,4'-DIPHENYLBIPHENYL | T | 3.60E 06 | 3.30E 02 | 1.93E 05 | 6 |
| 23 B 200* | | BENZ(C)ACRIDINE | | | | | |

## PRODUCT GAS PARTICULATE, HEALTH IMPACT

| DMEG NO. | | COMPOUND NAME | TYPE | CONC E-6 G/SCM | DS | WDS G/S | LCCAT |
|---|---|---|---|---|---|---|---|
| 17 A 084* | P | 2,4-DINITROTOLUENE | T | 4.90E 05 | 3.30E 02 | 1.92E 05 | 5 |
| 17 A 085* | | 2,5-DINITROTOLUENE | T | 4.90E 05 | 3.30E 02 | 1.92E 05 | 5 |
| 17 A 083* | | 2,3-DINITROTOLUENE | T | 4.90E 05 | 3.30E 02 | 1.92E 05 | 5 |
| 17 A 086* | | 3,5-DINITROTOLUENE | T | 4.90E 05 | 3.30E 02 | 1.92E 05 | 5 |
| 17 A 081* | P | 2,6-DINITROTOLUENE | T | 4.90E 05 | 3.30E 02 | 1.92E 05 | 5 |
| 17 A 082* | | 3,4-DINITROTOLUENE | T | 4.90E 05 | 3.30E 02 | 1.92E 05 | 5 |
| 17 A 080* | | DINITROTOLUENES | T | 4.90E 05 | 3.30E 02 | 1.92E 05 | 5 |
| 17 A 060* | W | 4-NITROBIPHENYL | T | 4.10E 05 | 3.20E 02 | 1.90E 05 | 4 |
| 21 B 120* | P | CHRYSENE | T | 6.80E 05 | 3.10E 02 | 1.82E 05 | 3 |
| 08 A 123* | | STEARIC ACID | T | 3.00E 05 | 3.00E 02 | 1.80E 05 | 7 |
| 08 A 120* | W | SATURATED LONG CHAIN ACIDS (MW:228-285) | T | 3.00E 05 | 3.00E 02 | 1.80E 05 | 7 |
| 08 A 121* | | MYRISTIC ACID | T | 3.00E 05 | 3.00E 02 | 1.80E 05 | 7 |
| 08 A 122* | | PALMITIC ACID | T | 3.00E 05 | 3.00E 02 | 1.80E 05 | 7 |
| 07 B 100* | W | CAMPHOR | T | 3.60E 06 | 3.00E 02 | 1.80E 05 | 6 |
| 18 A 143* | | 2,5-XYLENOL | T | 3.60E 06 | 2.80E 02 | 1.63E 05 | 6 |
| 18 A 141* | | 2,3-XYLENOL | T | 3.60E 06 | 2.80E 02 | 1.63E 05 | 6 |
| 18 A 144* | | 2,6-XYLENOL | T | 3.60E 06 | 2.80E 02 | 1.63E 05 | 6 |
| 18 A 146* | | 3,4-XYLENOL | T | 3.60E 06 | 2.80E 02 | 1.63E 05 | 6 |
| 18 A 142* | P | 2,4-XYLENOL | T | 3.60E 06 | 2.80E 02 | 1.63E 05 | 6 |
| 18 A 145* | | 3,5-XYLENOL | T | 3.60E 06 | 2.80E 02 | 1.63E 05 | 6 |
| 18 A 140* | | XYLENOLS | T | 3.60E 06 | 2.80E 02 | 1.63E 05 | 6 |
| 17 A 086* | | 3,5-DINITROTOLUENE | T | 4.10E 05 | 2.73E 02 | 1.61E 05 | 4 |
| 17 A 085* | | 2,5-DINITROTOLUENE | T | 4.10E 05 | 2.73E 02 | 1.61E 05 | 4 |
| 17 A 083* | | 2,3-DINITROTOLUENE | T | 4.10E 05 | 2.73E 02 | 1.61E 05 | 4 |
| 17 A 084* | P | 2,4-DINITROTOLUENE | T | 4.10E 05 | 2.73E 02 | 1.61E 05 | 4 |
| 17 A 082* | | 3,4-DINITROTOLUENE | T | 4.10E 05 | 2.73E 02 | 1.61E 05 | 4 |
| 17 A 081* | P | 2,6-DINITROTOLUENE | T | 4.10E 05 | 2.73E 02 | 1.61E 05 | 4 |
| 21 C 160* | | PICENE | T | 6.80E 05 | 2.72E 02 | 1.60E 05 | 3 |
| 08 D 080* | | METHYL METHACRYLATE | T | 3.60E 06 | 2.60E 02 | 1.51E 05 | 6 |
| 04 A 050* | W | EPICHLORHYDRIN | T | 4.90E 05 | 2.50E 02 | 1.44E 05 | 5 |
| 04 A 060* | W | 1-CHLORO-1,3-EPOXYPROPANE | T | 4.90E 05 | 2.50E 02 | 1.44E 05 | 5 |
| 04 A 040* | W | 2-CHLORO-1,2-EPOXYPROPANE | T | 4.90E 05 | 2.50E 02 | 1.44E 05 | 5 |
| 18 B 060* | W | 1,4-DIHYDROXYBENZENE | T | 4.90E 05 | 2.50E 02 | 1.44E 05 | 5 |
| 23 A 020* | | PYRIDINE | T | 3.60E 06 | 2.40E 02 | 1.41E 05 | 6 |

PRODUCT GAS PARTICULATE, HEALTH IMPACT

| DMEG NO. | | COMPOUND NAME | TYPE | CONC E-6 G/SCM | DS | WDS G/S | LCCAT |
|---|---|---|---|---|---|---|---|
| 21 C 120* | | BENZO(E)PYRENE | T | 6.80E 05 | 2.30E 02 | 1.33E 05 | 3 |
| 23 B 020* | | QUINOLINES | T | 3.60E 06 | 2.30E 02 | 1.32E 05 | 6 |
| 23 B 022* | | ISOQUINOLINE | T | 3.60E 06 | 2.30E 02 | 1.32E 05 | 6 |
| 20 A 060* | P | 4-NITROPHENOL | T | 3.60E 06 | 2.30E 02 | 1.32E 05 | 6 |
| 23 B 021* | | QUINOLINE | T | 3.60E 06 | 2.30E 02 | 1.32E 05 | 6 |
| 02 B 120* | P | HEXACHLOROBUTADIENE | T | 8.70E 05 | 2.12E 02 | 1.30E 05 | 1 |
| 04 A 050* | W | EPICHLORHYDRIN | T | 4.10E 05 | 2.10E 02 | 1.20E 05 | 4 |
| 04 A 040* | W | 2-CHLORO-1,2-EPOXYPROPANE | T | 4.10E 05 | 2.10E 02 | 1.20E 05 | 4 |
| 04 A 060* | W | 1-CHLORO-1,3-EPOXYPROPANE | T | 4.10E 05 | 2.10E 02 | 1.20E 05 | 4 |
| 12 A 060* | P | N-NITROSODIPROPYLAMINE | T | 4.90E 05 | 2.04E 02 | 1.20E 05 | 5 |
| 23 A 141* | | 2,3-DIMETHYLPYRIDINE | T | 3.60E 06 | 2.00E 02 | 1.20E 05 | 6 |
| 23 A 144* | | 2,6-DIMETHYLPYRIDINE | T | 3.60E 06 | 2.00E 02 | 1.20E 05 | 6 |
| 23 A 143* | | 2,5-DIMETHYLPYRIDINE | T | 3.60E 06 | 2.00E 02 | 1.20E 05 | 6 |
| 23 A 142* | | 2,4-DIMETHYLPYRIDINE | T | 3.60E 06 | 2.00E 02 | 1.20E 05 | 6 |
| 23 A 140* | | DISUBSTITUTED POLYSUBSTITUTED ALKYL PYRIDINES | T | 3.60E 06 | 2.00E 02 | 1.20E 05 | 6 |
| 23 A 145* | | 3,4-DIMETHYLPYRIDINE | T | 3.60E 06 | 2.00E 02 | 1.20E 05 | 6 |
| 05 B 100* | W | 1-PHENYLETHANOL | T | 3.60E 06 | 2.00E 02 | 1.20E 05 | 6 |
| 23 A 146* | | 2,3,4,6-TETRAMETHYL PYRIDINE | T | 3.60E 06 | 2.00E 02 | 1.20E 05 | 6 |
| 10 C 020* | | ANILINE | T | 3.60E 06 | 1.90E 02 | 1.11E 05 | 6 |
| 18 A 020* | P | PHENOL | T | 3.60E 06 | 1.90E 02 | 1.11E 05 | 6 |
| 49 A 010 | P | ARSENIC | D | 3.70E 02 | 1.90E 02 | 1.10E 05 | |
| 21 D 020* | | DIBENZO(A,H)PYRENE | T | 6.80E 05 | 1.63E 02 | 1.10E 05 | 3 |
| 23 C 020* | | PYRROLE | T | 4.90E 05 | 1.81E 02 | 1.10E 05 | 5 |
| 18 B 020* | | CATECHOL | T | 3.60E 06 | 1.80E 02 | 1.10E 05 | 6 |
| 20 A 040* | | 3-NITROPHENOL | T | 3.60E 06 | 1.80E 02 | 1.10E 05 | 6 |
| 02 A 380* | W | HEXACHLOROCYCLOHEXANE | T | 8.90E 04 | 1.80E 02 | 1.10E 05 | 2 |
| 02 A 160* | P | BROMOFORM | T | 8.70E 05 | 1.74E 02 | 1.02E 05 | 1 |
| 09 A 120* | W | TETRAMETHYLSUCCINONITRILE | T | 4.90E 05 | 1.63E 02 | 9.63E 04 | 5 |
| 18 A 100* | | PHENYLPHENOLS | T | 3.60E 06 | 1.60E 02 | 9.23E 04 | 6 |
| 23 B 260* | | DIBENZ(C,H)ACRIDINE | T | 3.60E 06 | 1.60E 02 | 9.23E 04 | 6 |
| 19 B 022* | P | CHLORINATED-M-CRESOLS | T | 3.60E 06 | 1.60E 02 | 9.23E 04 | 6 |
| 16 A 102* | | P-PHENYLPHENOL | T | 3.60E 06 | 1.60E 02 | 9.23E 04 | 6 |
| 08 A 080* | | VALERIC ACID | T | 3.60E 06 | 1.60E 02 | 9.23E 04 | 6 |
| 19 B 023* | | CHLORINATED-P-CRESOLS | T | 3.60E 06 | 1.60E 02 | 9.23E 04 | 6 |

## PRODUCT GAS PARTICULATE, HEALTH IMPACT

| DMEG NO. | | COMPOUND NAME | TYPE | CONC E-6 G/SCM | DS | WDS G/S | LCCAT |
|---|---|---|---|---|---|---|---|
| 19 B 021* | | CHLORINATED-O-CRESOLS | T | 3.60E 06 | 1.60E 02 | 9.23E 04 | 6 |
| 18 A 103* | | M-PHENYLPHENOL | T | 3.60E 06 | 1.60E 02 | 9.23E 04 | 6 |
| 19 B 020* | W | CHLORINATED CRESOLS | T | 3.60E 06 | 1.60E 02 | 9.23E 04 | 6 |
| 18 A 101* | | O-PHENYLPHENOL | T | 3.60E 06 | 1.60E 02 | 9.23E 04 | 6 |
| 23 C 020* | | PYRROLE | T | 4.10E 05 | 1.51E 02 | 9.00E 04 | 4 |
| 18 A 162* | | 4-ETHYL-O-CRESOL | T | 3.60E 06 | 1.50E 02 | 8.90E 04 | 6 |
| 18 A 161* | | 6-ETHYL-M-CRESOL | T | 3.60E 06 | 1.50E 02 | 8.90E 04 | 6 |
| 18 A 163* | | 2-ETHYL-P-CRESOL | T | 3.60E 06 | 1.50E 02 | 8.90E 04 | 6 |
| 18 A 160* | | ETHYL CRESOLS | T | 3.60E 06 | 1.50E 02 | 8.90E 04 | 6 |
| 08 A 140* | | OLEIC ACID | T | 4.90E 05 | 1.50E 02 | 8.80E 04 | 5 |
| 08 A 040* | | ACETIC ACID | T | 3.60E 06 | 1.44E 02 | 8.50E 04 | 6 |
| 10 C 061* | | 2,3-XYLIDINE | T | 3.60E 06 | 1.44E 02 | 8.50E 04 | 6 |
| 07 B 080* | P | ISOPHORONE | T | 3.60E 06 | 1.44E 02 | 8.50E 04 | 6 |
| 10 C 062* | | 2,4-XYLIDINE | T | 3.60E 06 | 1.44E 02 | 8.50E 04 | 6 |
| 10 C 064* | | 2,6-XYLIDINE | T | 3.60E 06 | 1.44E 02 | 8.50E 04 | 6 |
| 10 C 063* | | 2,5-XYLIDINE | T | 3.60E 06 | 1.44E 02 | 8.50E 04 | 6 |
| 10 A 080* | | 1,2-DIAMINOETHANE | T | 3.60E 06 | 1.44E 02 | 8.50E 04 | 6 |
| 10 C 065* | | 3,4-XYLIDINE | T | 3.60E 06 | 1.44E 02 | 8.50E 04 | 6 |
| 10 C 066* | | 3,5-XYLIDINE | T | 3.60E 06 | 1.44E 02 | 8.50E 04 | 6 |
| 10 D 020* | W | N,N-DIMETHYLANILINE | T | 3.60E 06 | 1.44E 02 | 8.50E 04 | 6 |
| 10 C 060* | | DIMETHYLANILINES | T | 3.60E 06 | 1.44E 02 | 8.50E 04 | 6 |
| 03 B 020* | W | 1,4-DIOXANE | T | 4.90E 05 | 1.40E 02 | 8.03E 04 | 5 |
| 03 B 040* | W | 1,3-DIOXANE | T | 4.90E 05 | 1.40E 02 | 8.03E 04 | 5 |
| 16 B 020* | W | A-CHLOROTOLUENE | T | 6.80E 05 | 1.40E 02 | 8.02E 04 | 3 |
| 83 A 010 | P | MERCURY | D | 6.50E 03 | 1.30E 02 | 7.70E 04 | |
| 19 A 020* | P | 2-CHLOROPHENOL | T | 3.60E 06 | 1.20E 02 | 7.10E 04 | 6 |
| 08 C 020* | | FORMAMIDE | T | 3.60E 06 | 1.20E 02 | 7.10E 04 | 6 |
| 23 D 020* | W | BENZOTHIAZOLE | T | 4.90E 05 | 1.13E 02 | 6.72E 04 | 5 |
| 03 B 020* | W | 1,4-DIOXANE | T | 4.10E 05 | 1.13E 02 | 6.71E 04 | 4 |
| 03 B 040* | W | 1,3-DIOXANE | T | 4.10E 05 | 1.13E 02 | 6.71E 04 | 4 |
| 08 A 060* | | MALEIC ACID | T | 3.60E 06 | 1.12E 02 | 6.63E 04 | 6 |
| 18 A 060* | | 2-METHOXYPHENOL | T | 3.60E 06 | 1.10E 02 | 6.51E 04 | 6 |
| 22 C 040* | | BENZO(J)FLUORANTHENE | T | 6.80E 05 | 1.04E 02 | 6.20E 04 | 3 |
| 23 D 040* | | METHYL BENZOTHIAZOLE | T | 4.90E 05 | 1.04E 02 | 6.20E 04 | 5 |

PRODUCT GAS PARTICULATE, HEALTH IMPACT

| DMEG NO. | | COMPOUND NAME | TYPE | CONC E-6 G/SCM | DS | WDS G/S | LCCAT |
|---|---|---|---|---|---|---|---|
| 18 A 120* | | 2,2'-DIHYDROXYDIPHENYL | T | 3.60E 06 | 1.02E 02 | 6.10E 04 | 6 |
| 10 A 123* | | 1-AMINO-2-PROPANOL | T | 3.60E 06 | 1.00E 02 | 5.90E 04 | 6 |
| 18 B 080* | | 1,2,3-TRIHYDROXYBENZENE | T | 3.60E 06 | 1.00E 02 | 5.90E 04 | 6 |
| 10 A 122* | | 3-AMINO-1-PROPANOL | T | 3.60E 06 | 1.00E 02 | 5.90E 04 | 6 |
| 10 A 121* | | 2-AMINO-1-PROPANOL | T | 3.60E 06 | 1.00E 02 | 5.90E 04 | 6 |
| 08 B 080* | | Y-BUTYROLACTONE | T | 3.60E 06 | 1.00E 02 | 5.90E 04 | 6 |
| 10 A 120* | | PROPANOLAMINES | T | 3.60E 06 | 1.00E 02 | 5.90E 04 | 6 |
| 16 B 041* | | 1,2-BIS(CHLOROMETHYBENZENE | T | 6.80E 05 | 9.90E 01 | 5.81E 04 | 3 |
| 16 B 040* | | BIS(CHLOROMETHYL)BENZENES | T | 6.80E 05 | 9.90E 01 | 5.81E 04 | 3 |
| 16 B 042* | | 1,3-BIS(CHLOROMETHYL)BENZENE | T | 6.80E 05 | 9.90E 01 | 5.81E 04 | 3 |
| 16 B 043* | | 1,4-BIS(CHLOROMETHYL)BENZENE | T | 6.80E 05 | 9.90E 01 | 5.81E 04 | 3 |
| 17 A 020* | P | NITROBENZENE | T | 4.90E 05 | 9.80E 01 | 5.80E 04 | 5 |
| 08 D 283* | | DI-N-BUTYL PHTHALATE | T | 4.90E 05 | 9.80E 01 | 5.80E 04 | 5 |
| 08 D 280* | P W | PHTHALATE ESTERS (MW:194-279) | T | 4.90E 05 | 9.80E 01 | 5.80E 04 | 5 |
| 08 D 282* | | DIETHYL PHTHALATE | T | 4.90E 05 | 9.80E 01 | 5.80E 04 | 5 |
| 08 D 281* | | DIMETHYL PHTHALATE | T | 4.90E 05 | 9.80E 01 | 5.80E 04 | 5 |
| 08 D 300* | P | DI-2-ETHYLHEXYL PHTHALATE | T | 4.90E 05 | 9.80E 01 | 5.80E 04 | 5 |
| 12 A 080* | | N-NITROSODIISOPROPYLAMINE | T | 3.60E 06 | 9.50E 01 | 5.60E 04 | 6 |
| 08 A 140* | | OLEIC ACID | T | 3.00E 05 | 9.10E 01 | 5.40E 04 | 7 |
| 10 A 160* | | CYCLOHEXYLAMINE | T | 3.60E 06 | 9.00E 01 | 5.31E 04 | 6 |
| 08 B 041* | | 2-HYDROXYBENZOIC ACID | T | 3.60E 06 | 9.00E 01 | 5.31E 04 | 6 |
| 15 A 160* | W | BIPHENYL | T | 8.90E 04 | 8.90E 01 | 5.30E 04 | 2 |
| 68 A 010 | P | CHROMIUM | S | 8.80E 01 | 8.80E 01 | 5.20E 04 | |
| 07 B 120* | | ACETOPHENONE | T | 3.60E 06 | 8.80E 01 | 5.20E 04 | 6 |
| 02 A 320* | P | HEXACHLOROETHANE | T | 8.70E 05 | 8.70E 01 | 5.13E 04 | 1 |
| 08 A 100* | | SATURATED LONG CHAIN ACIDS (MW:116-201) | T | 4.90E 05 | 8.44E 01 | 5.00E 04 | 5 |
| 08 A 103* | | CAPRIC ACID | T | 4.90E 05 | 8.44E 01 | 5.00E 04 | 5 |
| 08 A 101* | | CAPROIC ACID | T | 4.90E 05 | 8.44E 01 | 5.00E 04 | 5 |
| 08 A 104* | | LAURIC ACID | T | 4.90E 05 | 8.44E 01 | 5.00E 04 | 5 |
| 08 A 102* | | CAPRYLIC ACID | T | 4.90E 05 | 8.44E 01 | 5.00E 04 | 5 |
| 23 A 101* | | 2-CHLOROPYRIDINE | T | 4.90E 05 | 8.30E 01 | 4.90E 04 | 5 |
| 23 A 102* | | 3-CHLOROPYRIDINE | T | 4.90E 05 | 8.30E 01 | 4.90E 04 | 5 |
| 23 A 103* | | 4-CHLOROPYRIDINE | T | 4.90E 05 | 8.30E 01 | 4.90E 04 | 5 |
| 23 A 100* | W | CHLOROPYRIDINES | T | 4.90E 05 | 8.30E 01 | 4.90E 04 | 5 |

## PRODUCT GAS PARTICULATE, HEALTH IMPACT

| DMEG NO. | | | COMPOUND NAME | TYPE | CONC E-6 G/SCM | DS | WDS G/S | LCCAT |
|---|---|---|---|---|---|---|---|---|
| 17 A 020* | P | | NITROBENZENE | T | 4.10E 05 | 8.20E 01 | 4.83E 04 | 4 |
| 10 A 060* | | | ETHANOLAMINE | T | 4.90E 05 | 8.20E 01 | 4.81E 04 | 5 |
| 23 C 180* | | | DIBENZO(A,G)CARBAZOLE | T | 4.90E 05 | 8.20E 01 | 4.81E 04 | 5 |
| 21 D 060* | | | DIBENZO(A,L)PYRENE | T | 8.90E 04 | 8.10E 01 | 4.80E 04 | 2 |
| 05 C 040* | | W | T-PENTANOL | T | 3.60E 06 | 8.00E 01 | 4.72E 04 | 6 |
| 18 B 040* | | | 1,3-DIHYDROXYBENZENE | T | 3.60E 06 | 8.00E 01 | 4.72E 04 | 6 |
| 02 B 104* | | | TRANS-1,3-DICHLOROPROPENE | T | 8.70E 05 | 7.90E 01 | 4.70E 04 | 1 |
| 02 B 103* | | | CIS-1,3-DICHLOROPROPENE | T | 8.70E 05 | 7.90E 01 | 4.70E 04 | 1 |
| 02 B 100* | P | | DICHLOROPROPENES | T | 8.70E 05 | 7.90E 01 | 4.70E 04 | 1 |
| 15 B 160* | | | TERPHENYLS | T | 6.80E 05 | 7.60E 01 | 4.50E 04 | 3 |
| 15 B 163* | | | P-TERPHENYL | T | 6.80E 05 | 7.60E 01 | 4.50E 04 | 3 |
| 15 B 162* | | | M-TERPHENYL | T | 6.80E 05 | 7.60E 01 | 4.50E 04 | 3 |
| 15 B 161* | | | O-TERPHENYL | T | 6.80E 05 | 7.60E 01 | 4.50E 04 | 3 |
| 54 A 010 | P | | SELENIUM | D | 1.50E 04 | 7.50E 01 | 4.42E 04 | |
| 19 A 040* | P | | 2,4-DICHLOROPHENOL | T | 4.90E 05 | 7.00E 01 | 4.13E 04 | 5 |
| 23 A 101* | | | 2-CHLOROPYRIDINE | T | 4.10E 05 | 6.94E 01 | 4.10E 04 | 4 |
| 23 A 100* | | W | CHLOROPYRIDINES | T | 4.10E 05 | 6.94E 01 | 4.10E 04 | 4 |
| 23 A 103* | | | 4-CHLOROPYRIDINE | T | 4.10E 05 | 6.94E 01 | 4.10E 04 | 4 |
| 23 A 102* | | | 3-CHLOROPYRIDINE | T | 4.10E 05 | 6.94E 01 | 4.10E 04 | 4 |
| 21 C 060* | | | DIBENZ(A,C)ANTHRACENE | T | 6.80E 05 | 6.90E 01 | 4.10E 04 | 3 |
| 23 C 180* | | | DIBENZO(A,G)CARBAZOLE | T | 4.10E 05 | 6.83E 01 | 4.03E 04 | 4 |
| 21 C 080* | P | | DIBENZ(A,H)ANTHRACENE | D | 6.10E 00 | 6.60E 01 | 3.90E 04 | 3 |
| 23 B 062* | | | 2,6-DIMETHYLQUINOLINE | T | 3.60E 06 | 6.54E 01 | 3.90E 04 | 6 |
| 23 B 061* | | | 2,3-DIMETHYLQUINOLINE | T | 3.60E 06 | 6.54E 01 | 3.90E 04 | 6 |
| 23 B 063* | | | 2,8-DIMETHYLQUINOLINE | T | 3.60E 06 | 6.54E 01 | 3.90E 04 | 6 |
| 23 B 067* | | | 1,5-DIMETHYLISOQUINOLINE | T | 3.60E 06 | 6.54E 01 | 3.90E 04 | 6 |
| 23 B 060* | | | DIMETHYLQUINOLINES | T | 3.60E 06 | 6.54E 01 | 3.90E 04 | 6 |
| 23 B 066* | | | 1,3-DIMETHYLISOQUINOLINE | T | 3.60E 06 | 6.54E 01 | 3.90E 04 | 6 |
| 23 B 040* | | | 2-METHYLQUINOLINE | T | 3.60E 06 | 6.54E 01 | 3.90E 04 | 6 |
| 05 A 140* | | W | BENZYL ALCOHOL | T | 3.60E 06 | 6.54E 01 | 3.90E 04 | 6 |
| 23 B 065* | | | 6,8-DIMETHYLQUINOLINE | T | 3.60E 06 | 6.54E 01 | 3.90E 04 | 6 |
| 23 B 064* | | | 3,4-DIMETHYLQUINOLINE | T | 3.60E 06 | 6.54E 01 | 3.90E 04 | 6 |
| 02 A 180* | | | DIBROMODICHLOROMETHANE | T | 8.90E 04 | 6.40E 01 | 3.80E 04 | 2 |
| 20 A 020* | P | | 2-NITROPHENOL | T | 3.60E 06 | 6.20E 01 | 3.70E 04 | 6 |

PRODUCT GAS PARTICULATE, HEALTH IMPACT

| DMEG NO. | | COMPOUND NAME | TYPE | CONC E-6 G/SCM | DS | WDS G/S | LCCAT |
|---|---|---|---|---|---|---|---|
| 18 A 181* | | 2,4,6-TRIMETHYL METHYL PHENOL | T | 3.60E 06 | 6.10E 01 | 3.60E 04 | 6 |
| 18 A 180* | | POLYALKYLPHENOLS (MW>135) | T | 3.60E 06 | 6.10E 01 | 3.60E 04 | 6 |
| 18 A 183* | | 2,6-DIMETHYL-4-HEPTYL PHENOL | T | 3.60E 06 | 6.10E 01 | 3.60E 04 | 6 |
| 18 A 182* | | 4,6-DI-TERT-BUTYL-M-CRESOL | T | 3.60E 06 | 6.10E 01 | 3.60E 04 | 6 |
| 08 D 160* | | METHYL BENZOATE | T | 3.60E 06 | 5.90E 01 | 3.50E 04 | 6 |
| 16 A 161* | | 1,2,4-TRICHLOROBENZENE | T | 6.80E 05 | 5.70E 01 | 3.34E 04 | 3 |
| 16 A 160* | P | POLYCHLORINATED BENZENES | T | 6.80E 05 | 5.70E 01 | 3.34E 04 | 3 |
| 16 A 162* | | HEXACHLOROBENZENE | T | 6.80E 05 | 5.70E 01 | 3.34E 04 | 3 |
| 22 D 020* | P W | INDENO(1,2,3-CD)PYRENE | T | 8.90E 04 | 5.60E 01 | 3.30E 04 | 2 |
| 22 C 020* | P | BENZO(K)FLUORANTHENE | T | 8.90E 04 | 5.60E 01 | 3.30E 04 | 2 |
| 21 A 180* | P W | PHENANTHRENE | T | 8.90E 04 | 5.60E 01 | 3.30E 04 | 2 |
| 23 A 083* | | 4-PHENYLPYRIDINE | T | 3.60E 06 | 5.21E 01 | 3.10E 04 | 6 |
| 23 A 120* | | COLLIDINES | T | 3.60E 06 | 5.21E 01 | 3.10E 04 | 6 |
| 23 A 081* | | 2-PHENYLPYRIDINE | T | 3.60E 06 | 5.21E 01 | 3.10E 04 | 6 |
| 23 A 121* | | 5-ETHYL-2-METHYLPYRIDINE | T | 3.60E 06 | 5.21E 01 | 3.10E 04 | 6 |
| 23 A 062* | | 3-ETHYLPYRIDINE | T | 3.60E 06 | 5.21E 01 | 3.10E 04 | 6 |
| 23 A 082* | | 3-PHENYLPYRIDINE | T | 3.60E 06 | 5.21E 01 | 3.10E 04 | 6 |
| 23 A 080* | | PHENYLPYRIDINES | T | 3.60E 06 | 5.21E 01 | 3.10E 04 | 6 |
| 23 A 061* | | 2-ETHYLPYRIDINE | T | 3.60E 06 | 5.21E 01 | 3.10E 04 | 6 |
| 23 A 060* | | MONOSUBSTITUTED ALKYL PYRIDINES | T | 3.60E 06 | 5.21E 01 | 3.10E 04 | 6 |
| 23 A 063* | | 4-ETHYLPYRIDINE | T | 3.60E 06 | 5.21E 01 | 3.10E 04 | 6 |
| 23 A 064* | | 4-N-PROPYLPYRIDINE | T | 3.60E 06 | 5.21E 01 | 3.10E 04 | 6 |
| 23 A 122* | | 2,4,6-COLLIDINE | T | 3.60E 06 | 5.21E 01 | 3.10E 04 | 6 |
| 08 A 104* | | LAURIC ACID | T | 3.00E 05 | 5.20E 01 | 3.10E 04 | 7 |
| 08 A 100* | | SATURATED LONG CHAIN ACIDS (MW:116-201) | T | 3.00E 05 | 5.20E 01 | 3.10E 04 | 7 |
| 08 A 102* | | CAPRYLIC ACID | T | 3.00E 05 | 5.20E 01 | 3.10E 04 | 7 |
| 08 A 101* | | CAPROIC ACID | T | 3.00E 05 | 5.20E 01 | 3.10E 04 | 7 |
| 08 A 103* | | CAPRIC ACID | T | 3.00E 05 | 5.20E 01 | 3.10E 04 | 7 |
| 10 B 100* | | MORPHOLINE | T | 3.60E 06 | 5.14E 01 | 3.03E 04 | 6 |
| 08 D 200* | | DIETHYL ADIPATE | T | 3.60E 06 | 5.00E 01 | 3.00E 04 | 6 |
| 21 B 140* | | METHYL CHRYSENES | T | 8.90E 04 | 4.94E 01 | 2.91E 04 | 2 |
| 21 B 141* | | 4-METHYL CHRYSENE | T | 8.90E 04 | 4.94E 01 | 2.91E 04 | 2 |
| 21 B 142* | | 5-METHYL CHRYSENE | T | 8.90E 04 | 4.94E 01 | 2.91E 04 | 2 |
| 18 A 043* | | P-CRESOL | T | 4.90E 05 | 4.90E 01 | 2.90E 04 | 5 |

PRODUCT GAS PARTICULATE, HEALTH IMPACT

| OMEG NO. | | COMPOUND NAME | TYPE | CONC E-6 G/SCM | DS | WDS G/S | LCCAT |
|---|---|---|---|---|---|---|---|
| 18 A 083* | | P-ETHYLPHENOL | T | 4.90E 05 | 4.90E 01 | 2.90E 04 | 5 |
| 18 A 041* | | M-CRESOL | T | 4.90E 05 | 4.90E 01 | 2.90E 04 | 5 |
| 18 A 040* | W | CRESOLS | T | 4.90E 05 | 4.90E 01 | 2.90E 04 | 5 |
| 06 A 020* | W | ETHYLENE GLYCOL | T | 4.90E 05 | 4.90E 01 | 2.90E 04 | 5 |
| 18 A 080* | W | ETHYLPHENOLS | T | 4.90E 05 | 4.90E 01 | 2.90E 04 | 5 |
| 18 A 081* | | O-ETHYLPHENOL | T | 4.90E 05 | 4.90E 01 | 2.90E 04 | 5 |
| 18 A 042* | | O-CRESOL | T | 4.90E 05 | 4.90E 01 | 2.90E 04 | 5 |
| 18 A 082* | | M-ETHYLPHENOL | T | 4.90E 05 | 4.90E 01 | 2.90E 04 | 5 |
| 07 B 180* | | CARVONES | T | 3.60E 06 | 4.90E 01 | 2.90E 04 | 6 |
| 07 B 182* | | DIHYDRO-(D OR L)CARVONE | T | 3.60E 06 | 4.90E 01 | 2.90E 04 | 6 |
| 07 B 181* | | CARVONE(D OR L) | T | 3.60E 06 | 4.90E 01 | 2.90E 04 | 6 |
| 12 A 100* | | N-NITROSODIPENTYLAMINE | T | 3.60E 06 | 4.60E 01 | 2.70E 04 | 6 |
| 04 A 140* | P | 2-CHLOROETHYL VINYL ETHER | T | 4.90E 05 | 4.50E 01 | 2.62E 04 | 5 |
| 23 C 040* | | INDOLE | T | 4.90E 05 | 4.50E 01 | 2.62E 04 | 5 |
| 23 B 200* | | BENZ(C)ACRIDINE | T | 4.90E 05 | 4.50E 01 | 2.62E 04 | 5 |
| 04 B 100* | | 2,2'-DICHLORODIISOPROPYL ETHER | T | 4.90E 05 | 4.50E 01 | 2.62E 04 | 5 |
| 15 B 060* | W | 4,4'-DIPHENYLBIPHENYL | T | 8.90E 04 | 4.50E 01 | 2.62E 04 | 2 |
| 05 A 160* | | PHENETHYL ALCOHOL | T | 3.60E 06 | 4.44E 01 | 2.62E 04 | 6 |
| 21 C 040* | | BENZO(G)CHRYSENE | T | 6.80E 05 | 4.30E 01 | 2.50E 04 | 3 |
| 07 B 100* | W | CAMPHOR | T | 4.90E 05 | 4.10E 01 | 2.40E 04 | 5 |
| 23 C 140* | | DIBENZO(A,I)CARBAZOLE | T | 4.90E 05 | 4.10E 01 | 2.40E 04 | 5 |
| 21 B 120* | P | CHRYSENE | T | 8.90E 04 | 4.04E 01 | 2.40E 04 | 2 |
| 13 B 080* | | METHYL DISULFIDE | T | 3.60E 06 | 4.00E 01 | 2.40E 04 | 6 |
| 05 B 120* | | BORNEOL | T | 3.60E 06 | 4.00E 01 | 2.40E 04 | 6 |
| 23 B 160* | | BENZO(H)QUINOLINE | T | 3.60E 06 | 4.00E 01 | 2.40E 04 | 6 |
| 23 B 120* | | PHENANTHRIDINE | T | 3.60E 06 | 4.00E 01 | 2.40E 04 | 6 |
| 23 B 080* | | ACRIDINE | T | 3.60E 06 | 4.00E 01 | 2.40E 04 | 6 |
| 23 B 140* | | BENZO(F)QUINOLINE | T | 3.60E 06 | 4.00E 01 | 2.40E 04 | 6 |
| 21 B 040* | P | BENZ(A)ANTHRACENE | D | 1.70E 03 | 3.80E 01 | 2.22E 04 | 3 |
| 18 A 143* | | 2,5-XYLENOL | T | 4.90E 05 | 3.80E 01 | 2.22E 04 | 5 |
| 18 A 142* | P | 2,4-XYLENOL | T | 4.90E 05 | 3.80E 01 | 2.22E 04 | 5 |
| 18 A 141* | | 2,3-XYLENOL | T | 4.90E 05 | 3.80E 01 | 2.22E 04 | 5 |
| 18 A 145* | | 3,5-XYLENOL | T | 4.90E 05 | 3.80E 01 | 2.22E 04 | 5 |
| 18 A 140* | | XYLENOLS | T | 4.90E 05 | 3.80E 01 | 2.22E 04 | 5 |

PRODUCT GAS PARTICULATE, HEALTH IMPACT

| DMEG NO. | | COMPOUND NAME | TYPE | CONC E-6 G/SCM | US | WDS G/S | LCCAT |
|---|---|---|---|---|---|---|---|
| 18 A 146* | | 3,4-XYLENOL | T | 4.90E 05 | 3.80E 01 | 2.22E 04 | 5 |
| 18 A 144* | | 2,6-XYLENOL | T | 4.90E 05 | 3.80E 01 | 2.22E 04 | 5 |
| 13 B 060* | | DIPHENYL SULFIDE | T | 3.60E 06 | 3.80E 01 | 2.21E 04 | 6 |
| 04 B 100* | | 2,2'-DICHLORODIISOPROPYL ETHER | T | 4.10E 05 | 3.72E 01 | 2.20E 04 | 4 |
| 23 C 040* | | INDOLE | T | 4.10E 05 | 3.72E 01 | 2.20E 04 | 4 |
| 04 A 140* | P | 2-CHLOROETHYL VINYL ETHER | T | 4.10E 05 | 3.72E 01 | 2.20E 04 | 4 |
| 21 C 160* | | PICENE | T | 8.90E 04 | 3.60E 01 | 2.10E 04 | 2 |
| 08 D 080* | | METHYL METHACRYLATE | T | 4.90E 05 | 3.50E 01 | 2.10E 04 | 5 |
| 23 C 140* | | DIBENZO(A,I)CARBAZOLE | T | 4.10E 05 | 3.41E 01 | 2.01E 04 | 4 |
| 72 A 010 | | IRON (AS FE+2) | D | < 3.30E 04 | < 3.30E 01 | < 1.94E 04 | |
| 18 C 040* | W | 2-NAPHTHOL | T | 3.60E 06 | 3.30E 01 | 1.93E 04 | 6 |
| 23 A 020* | | PYRIDINE | T | 4.90E 05 | 3.30E 01 | 1.92E 04 | 5 |
| 48 A 010 | | PHOSPHORUS | S | > 3.20E 03 | > 3.20E 01 | > 1.90E 04 | |
| 23 B 021* | | QUINOLINE | T | 4.90E 05 | 3.10E 01 | 1.80E 04 | 5 |
| 23 B 020* | | QUINOLINES | T | 4.90E 05 | 3.10E 01 | 1.80E 04 | 5 |
| 20 A 060* | P | 4-NITROPHENOL | T | 4.90E 05 | 3.10E 01 | 1.80E 04 | 5 |
| 23 B 022* | | ISOQUINOLINE | T | 4.90E 05 | 3.10E 01 | 1.80E 04 | 5 |
| 18 C 020* | | 1-NAPHTHOL | T | 3.60E 06 | 3.00E 01 | 1.80E 04 | 6 |
| 21 C 120* | | BENZO(E)PYRENE | T | 8.90E 04 | 3.00E 01 | 1.80E 04 | 2 |
| 01 B 220 | W | DICYCLOPENTADIENE | T | 8.70E 05 | 2.90E 01 | 1.71E 04 | 1 |
| 23 A 020* | | PYRIDINE | T | 4.10E 05 | 2.73E 01 | 1.61E 04 | 4 |
| 23 A 143* | | 2,5-DIMETHYLPYRIDINE | T | 4.90E 05 | 2.72E 01 | 1.60E 04 | 5 |
| 23 A 140* | | DISUBSTITUTED POLYSUBSTITUTED ALKYL PYRIDINES | T | 4.90E 05 | 2.72E 01 | 1.60E 04 | 5 |
| 23 A 144* | | 2,6-DIMETHYLPYRIDINE | T | 4.90E 05 | 2.72E 01 | 1.60E 04 | 5 |
| 23 A 145* | | 3,4-DIMETHYLPYRIDINE | T | 4.90E 05 | 2.72E 01 | 1.60E 04 | 5 |
| 23 A 141* | | 2,3-DIMETHYLPYRIDINE | T | 4.90E 05 | 2.72E 01 | 1.60E 04 | 5 |
| 23 A 142* | | 2,4-DIMETHYLPYRIDINE | T | 4.90E 05 | 2.72E 01 | 1.60E 04 | 5 |
| 23 A 146* | | 2,3,4,6-TETRAMETHYL PYRIDINE | T | 4.90E 05 | 2.72E 01 | 1.60E 04 | 5 |
| 05 B 100* | W | 1-PHENYLETHANOL | T | 4.90E 05 | 2.72E 01 | 1.60E 04 | 5 |
| 82 A 010 | P | CADMIUM | D | 2.70E 02 | 2.70E 01 | 1.60E 04 | |
| 18 A 020* | P | PHENOL | T | 4.90E 05 | 2.60E 01 | 1.52E 04 | 5 |
| 23 C 120* | | BENZO(A)CARBAZOLE | T | 4.90E 05 | 2.60E 01 | 1.52E 04 | 5 |
| 10 C 020* | | ANILINE | T | 4.90E 05 | 2.60E 01 | 1.52E 04 | 5 |
| 08 D 320* | P | BUTYL BENZYL PHTHALATE | T | 3.60E 06 | 2.60E 01 | 1.51E 04 | 6 |

PRODUCT GAS PARTICULATE, HEALTH IMPACT

| DMEG NO. | | COMPOUND NAME | TYPE | CONC E-6 G/SCM | DS | WDS G/S | LCCAT |
|---|---|---|---|---|---|---|---|
| 08 A 160* | | BENZOIC ACID | T | 3.60E 06 | 2.60E 01 | 1.51E 04 | 6 |
| 18 B 020* | | CATECHOL | T | 4.90E 05 | 2.50E 01 | 1.44E 04 | 5 |
| 20 A 040* | | 3-NITROPHENOL | T | 4.90E 05 | 2.50E 01 | 1.44E 04 | 5 |
| 21 D 020* | | DIBENZO(A,H)PYRENE | T | 8.90E 04 | 2.40E 01 | 1.41E 04 | 2 |
| 18 C 082* | | 4-INDANOL | T | 3.60E 06 | 2.40E 01 | 1.41E 04 | 6 |
| 18 C 083* | | 5-INDANOL | T | 3.60E 06 | 2.40E 01 | 1.41E 04 | 6 |
| 18 C 080* | | INDANOLS | T | 3.60E 06 | 2.40E 01 | 1.41E 04 | 6 |
| 05 A 080* | | N-BUTANOL | T | 3.60E 06 | 2.40E 01 | 1.41E 04 | 6 |
| 18 C 081* | | 1-INDANOL | T | 3.60E 06 | 2.40E 01 | 1.41E 04 | 6 |
| 05 A 100* | | ISOBUTYL ALCOHOL | T | 3.60E 06 | 2.40E 01 | 1.41E 04 | 6 |
| 23 A 140* | | DISUBSTITUTED POLYSUBSTITUTED ALKYL PYRIDINES | T | 4.10E 05 | 2.30E 01 | 1.34E 04 | 4 |
| 23 A 141* | | 2,3-DIMETHYLPYRIDINE | T | 4.10E 05 | 2.30E 01 | 1.34E 04 | 4 |
| 23 A 144* | | 2,6-DIMETHYLPYRIDINE | T | 4.10E 05 | 2.30E 01 | 1.34E 04 | 4 |
| 23 A 142* | | 2,4-DIMETHYLPYRIDINE | T | 4.10E 05 | 2.30E 01 | 1.34E 04 | 4 |
| 23 A 146* | | 2,3,4,6-TETRAMETHYL PYRIDINE | T | 4.10E 05 | 2.30E 01 | 1.34E 04 | 4 |
| 23 A 143* | | 2,5-DIMETHYLPYRIDINE | T | 4.10E 05 | 2.30E 01 | 1.34E 04 | 4 |
| 23 A 145* | | 3,4-DIMETHYLPYRIDINE | T | 4.10E 05 | 2.30E 01 | 1.34E 04 | 4 |
| 05 B 080* | | 2,6-DIMETHYL-4-HEPTANOL | T | 3.60E 06 | 2.30E 01 | 1.32E 04 | 6 |
| 08 A 180* | | ADIPIC ACID | T | 3.60E 06 | 2.30E 01 | 1.32E 04 | 6 |
| 09 A 100* | | 1,3-DICYANO-1-HYDROXYBUTANE | T | 4.90E 05 | 2.22E 01 | 1.31E 04 | 5 |
| 02 B 120* | P | HEXACHLOROBUTADIENE | T | 8.90E 04 | 2.20E 01 | 1.30E 04 | 2 |
| 23 C 120* | | BENZO(A)CARBAZOLE | T | 4.10E 05 | 2.20E 01 | 1.30E 04 | 4 |
| 25 A 040* | | METHYLTHIOPHENES | T | 4.90E 05 | 2.13E 01 | 1.30E 04 | 5 |
| 25 A 041* | | 2-METHYLTHIOPHENE | T | 4.90E 05 | 2.13E 01 | 1.30E 04 | 5 |
| 18 A 103* | | M-PHENYLPHENOL | T | 4.90E 05 | 2.13E 01 | 1.30E 04 | 5 |
| 23 C 102* | | 9-METHYLCARBAZOLE | T | 4.90E 05 | 2.13E 01 | 1.30E 04 | 5 |
| 19 B 020* | W | CHLORINATED CRESOLS | T | 4.90E 05 | 2.13E 01 | 1.30E 04 | 5 |
| 18 A 101* | | O-PHENYLPHENOL | T | 4.90E 05 | 2.13E 01 | 1.30E 04 | 5 |
| 19 B 023* | | CHLORINATED-P-CRESOLS | T | 4.90E 05 | 2.13E 01 | 1.30E 04 | 5 |
| 19 B 022* | P | CHLORINATED-M-CRESOLS | T | 4.90E 05 | 2.13E 01 | 1.30E 04 | 5 |
| 25 A 042* | | 3-METHYLTHIOPHENE | T | 4.90E 05 | 2.13E 01 | 1.30E 04 | 5 |
| 23 C 100* | | METHYLCARBAZOLES | T | 4.90E 05 | 2.13E 01 | 1.30E 04 | 5 |
| 09 A 080* | | BUTYRONITRILE | T | 4.90E 05 | 2.13E 01 | 1.30E 04 | 5 |
| 18 A 102* | | P-PHENYLPHENOL | T | 4.90E 05 | 2.13E 01 | 1.30E 04 | 5 |

PRODUCT GAS PARTICULATE, HEALTH IMPACT

| DMEG NO. | | COMPOUND NAME | TYPE | CONC E-6 G/SCM | DS | WDS G/S | LCCAT |
|---|---|---|---|---|---|---|---|
| 23 C 101* | | 3-METHYLCARBAZOLE | T | 4.90E 05 | 2.13E 01 | 1.30E 04 | 5 |
| 23 B 260* | | DIBENZ(C,H)ACRIDINE | T | 4.90E 05 | 2.13E 01 | 1.30E 04 | 5 |
| 18 A 100* | | PHENYLPHENOLS | T | 4.90E 05 | 2.13E 01 | 1.30E 04 | 5 |
| 19 B 021* | | CHLORINATED-O-CRESOLS | T | 4.90E 05 | 2.13E 01 | 1.30E 04 | 5 |
| 08 A 080* | | VALERIC ACID | T | 4.90E 05 | 2.13E 01 | 1.30E 04 | 5 |
| 23 C 080* | | CARBAZOLE | T | 4.90E 05 | 2.13E 01 | 1.30E 04 | 5 |
| 25 B 040* | W | BENZO(B)THIOPHENE | T | 4.90E 05 | 2.04E 01 | 1.20E 04 | 5 |
| 18 A 162* | | 4-ETHYL-O-CRESOL | T | 4.90E 05 | 2.04E 01 | 1.20E 04 | 5 |
| 18 A 163* | | 2-ETHYL-P-CRESOL | T | 4.90E 05 | 2.04E 01 | 1.20E 04 | 5 |
| 18 A 161* | | 6-ETHYL-M-CRESOL | T | 4.90E 05 | 2.04E 01 | 1.20E 04 | 5 |
| 18 A 160* | | ETHYL CRESOLS | T | 4.90E 05 | 2.00E 01 | 1.20E 04 | 5 |
| 08 A 040* | | ACETIC ACID | T | 4.90E 05 | 2.00E 01 | 1.20E 04 | 5 |
| 10 C 064* | | 2,6-XYLIDINE | T | 4.90E 05 | 2.00E 01 | 1.20E 04 | 5 |
| 10 A 080* | | 1,2-DIAMINOETHANE | T | 4.90E 05 | 2.00E 01 | 1.20E 04 | 5 |
| 07 B 080* | P | ISOPHORONE | T | 4.90E 05 | 2.00E 01 | 1.20E 04 | 5 |
| 10 D 020* | W | N,N-DIMETHYLANILINE | T | 4.90E 05 | 2.00E 01 | 1.20E 04 | 5 |
| 10 C 065* | | 3,4-XYLIDINE | T | 4.90E 05 | 2.00E 01 | 1.20E 04 | 5 |
| 10 C 063* | | 2,5-XYLIDINE | T | 4.90E 05 | 2.00E 01 | 1.20E 04 | 5 |
| 10 C 060* | | DIMETHYLANILINES | T | 4.90E 05 | 2.00E 01 | 1.20E 04 | 5 |
| 10 C 062* | | 2,4-XYLIDINE | T | 4.90E 05 | 2.00E 01 | 1.20E 04 | 5 |
| 10 C 061* | | 2,3-XYLIDINE | T | 4.90E 05 | 2.00E 01 | 1.20E 04 | 5 |
| 10 C 066* | | 3,5-XYLIDINE | T | 8.70E 05 | 1.93E 01 | 1.14E 04 | 1 |
| 02 A 140* | P | DIBROMOCHLOROMETHANE | T | 3.60E 06 | 1.90E 01 | 1.11E 04 | 6 |
| 05 C 060* | | A-TERPINEOL | T | 4.90E 05 | 1.90E 01 | 1.11E 04 | 5 |
| 25 A 060* | | DIMETHYLTHIOPHENES | T | 4.90E 05 | 1.90E 01 | 1.11E 04 | 5 |
| 25 A 064* | | 3,4-DIMETHYLTHIOPHENE | T | 4.90E 05 | 1.90E 01 | 1.11E 04 | 5 |
| 25 A 063* | | 2,5-DIMETHYLTHIOPHENE | T | 4.90E 05 | 1.90E 01 | 1.11E 04 | 5 |
| 25 A 062* | | 2,4-DIMETHYLTHIOPHENE | T | 4.90E 05 | 1.90E 01 | 1.11E 04 | 5 |
| 25 A 061* | | 2,3-DIMETHYLTHIOPHENE | T | 4.10E 05 | 1.90E 01 | 1.10E 04 | 4 |
| 09 A 100* | | 1,3-DICYANO-1-HYDROXYBUTANE | T | 4.90E 05 | 1.81E 01 | 1.10E 04 | 5 |
| 04 A 180* | P | CHLOROPHENYL PHENYL ETHER | T | 4.90E 05 | 1.81E 01 | 1.10E 04 | 5 |
| 04 A 200* | | 4-BROMOPHENYL PHENYL ETHER | T | 4.10E 05 | 1.80E 01 | 1.10E 04 | 4 |
| 23 C 101* | | 3-METHYLCARBAZOLE | T | 4.10E 05 | 1.80E 01 | 1.10E 04 | 4 |
| 23 C 102* | | 9-METHYLCARBAZOLE | | | | | |

PRODUCT GAS PARTICULATE, HEALTH IMPACT

| DMEG NO. | | COMPOUND NAME | TYPE | CONC E-6 G/SCM | DS | WDS G/S | LCCAT |
|---|---|---|---|---|---|---|---|
| 23 C 080* | | CARBAZOLE | T | 4.10E 05 | 1.80E 01 | 1.10E 04 | 4 |
| 25 A 041* | | 2-METHYLTHIOPHENE | T | 4.10E 05 | 1.80E 01 | 1.10E 04 | 4 |
| 23 C 100* | | METHYLCARBAZOLES | T | 4.10E 05 | 1.80E 01 | 1.10E 04 | 4 |
| 09 A 080* | | BUTYRONITRILE | T | 4.10E 05 | 1.80E 01 | 1.10E 04 | 4 |
| 25 A 042* | | 3-METHYLTHIOPHENE | T | 4.10E 05 | 1.80E 01 | 1.10E 04 | 4 |
| 25 A 040* | | METHYLTHIOPHENES | T | 4.10E 05 | 1.80E 01 | 1.10E 04 | 4 |
| 02 A 160* | P | BROMOFORM | T | 8.90E 04 | 1.80E 01 | 1.10E 04 | 2 |
| 16 B 020* | W | A-CHLOROTOLUENE | T | 8.90E 04 | 1.80E 01 | 1.10E 04 | 2 |
| 25 A 080* | | TRIMETHYL AND TETRAMETHYL THIOPHENES | T | 4.90E 05 | 1.70E 01 | 1.00E 04 | 5 |
| 25 A 081* | | 2,3,5-TRIMETHYLTHIOPHENE | T | 4.90E 05 | 1.70E 01 | 1.00E 04 | 5 |
| 04 B 040* | P | 1,1'-DICHLORODIETHYL ETHER | T | 4.90E 05 | 1.63E 01 | 9.63E 03 | 5 |
| 17 A 042* | | 3-NITROTOLUENE | T | 4.90E 05 | 1.63E 01 | 9.63E 03 | 5 |
| 17 A 040* | | NITROTOLUENES | T | 4.90E 05 | 1.63E 01 | 9.63E 03 | 5 |
| 17 A 041* | | 2-NITROTOLUENE | T | 4.90E 05 | 1.63E 01 | 9.63E 03 | 5 |
| 04 B 080* | | 2,2'-DICHLORODIETHYL ETHER | T | 4.90E 05 | 1.63E 01 | 9.63E 03 | 5 |
| 19 A 020* | P | 2-CHLOROPHENOL | T | 4.90E 05 | 1.63E 01 | 9.63E 03 | 5 |
| 17 A 043* | | 4-NITROTOLUENE | T | 4.90E 05 | 1.63E 01 | 9.63E 03 | 5 |
| 08 C 020* | | FORMAMIDE | T | 4.90E 05 | 1.63E 01 | 9.63E 03 | 5 |
| 25 A 060* | | DIMETHYLTHIOPHENES | T | 4.10E 05 | 1.60E 01 | 9.30E 03 | 4 |
| 25 A 063* | | 2,5-DIMETHYLTHIOPHENE | T | 4.10E 05 | 1.60E 01 | 9.30E 03 | 4 |
| 25 A 064* | | 3,4-DIMETHYLTHIOPHENE | T | 4.10E 05 | 1.60E 01 | 9.30E 03 | 4 |
| 25 A 062* | | 2,4-DIMETHYLTHIOPHENE | T | 4.10E 05 | 1.60E 01 | 9.30E 03 | 4 |
| 25 A 061* | | 2,3-DIMETHYLTHIOPHENE | T | 4.10E 05 | 1.60E 01 | 9.30E 03 | 4 |
| 02 A 361* | | 1-BROMOBUTANE | T | 8.70E 05 | 1.60E 01 | 9.20E 03 | 1 |
| 02 A 360* | | BROMOBUTANES | T | 8.70E 05 | 1.60E 01 | 9.20E 03 | 1 |
| 09 B 042* | | B-NAPHTHONITRILES | T | 4.90E 05 | 1.53E 01 | 9.03E 03 | 5 |
| 09 B 040* | W | NAPHTHONITRILES | T | 4.90E 05 | 1.53E 01 | 9.03E 03 | 5 |
| 08 A 060* | | MALEIC ACID | T | 4.90E 05 | 1.53E 01 | 9.03E 03 | 5 |
| 09 B 041* | | A-NAPHTHONITRILES | T | 4.90E 05 | 1.53E 01 | 9.03E 03 | 5 |
| 09 B 020* | W | BENZONITRILE | T | 4.90E 05 | 1.53E 01 | 9.03E 03 | 5 |
| 36 A 010 | | BARIUM | D | 7.60E 03 | 1.52E 01 | 9.00E 03 | |
| 04 A 200* | | 4-BROMOPHENYL PHENYL ETHER | T | 4.10E 05 | 1.51E 01 | 9.00E 03 | 4 |
| 04 A 180* | P | CHLOROPHENYL PHENYL ETHER | T | 4.10E 05 | 1.51E 01 | 9.00E 03 | 4 |
| 22 A 010* | W | INDENE | T | 6.80E 05 | 1.51E 01 | 8.91E 03 | 3 |

PRODUCT GAS PARTICULATE, HEALTH IMPACT

| DMEG NO. | | COMPOUND NAME | TYPE | CONC E-6 G/SCM | DS | WDS G/S | LCCAT |
|---|---|---|---|---|---|---|---|
| 18 A 060* | | 2-METHOXYPHENOL | T | 4.90E 05 | 1.50E 01 | 8.90E 03 | 5 |
| 08 D 240* | | DI-2-ETHYLBUTYL ADIPATE | T | 3.60E 06 | 1.44E 01 | 8.50E 03 | 6 |
| 25 A 081* | | 2,3,5-TRIMETHYLTHIOPHENE | T | 4.10E 05 | 1.41E 01 | 8.34E 03 | 4 |
| 25 A 080* | | TRIMETHYL AND TETRAMETHYL THIOPHENES | T | 4.10E 05 | 1.41E 01 | 8.34E 03 | 4 |
| 18 A 120* | | 2,2'-DIHYDROXYDIPHENYL | T | 4.90E 05 | 1.40E 01 | 8.30E 03 | 5 |
| 22 C 040* | | BENZO(J)FLUORANTHENE | T | 8.90E 04 | 1.40E 01 | 8.10E 03 | 2 |
| 04 B 040* | P | 1,1'-DICHLORODIETHYL ETHER | T | 4.10E 05 | 1.40E 01 | 8.10E 03 | 4 |
| 17 A 042* | | 3-NITROTOLUENE | T | 4.10E 05 | 1.40E 01 | 8.10E 03 | 4 |
| 17 A 043* | | 4-NITROTOLUENE | T | 4.10E 05 | 1.40E 01 | 8.10E 03 | 4 |
| 17 A 040* | | NITROTOLUENES | T | 4.10E 05 | 1.40E 01 | 8.10E 03 | 4 |
| 17 A 041* | | 2-NITROTOLUENE | T | 4.10E 05 | 1.40E 01 | 8.10E 03 | 4 |
| 04 B 080* | | 2,2'-DICHLORODIETHYL ETHER | T | 4.10E 05 | 1.40E 01 | 8.10E 03 | 4 |
| 16 B 080* | | 1,2,3-TRIHYDROXYBENZENE | T | 4.90E 05 | 1.40E 01 | 8.03E 03 | 5 |
| 10 A 122* | | 3-AMINO-1-PROPANOL | T | 4.90E 05 | 1.40E 01 | 8.03E 03 | 5 |
| 10 A 121* | | 2-AMINO-1-PROPANOL | T | 4.90E 05 | 1.40E 01 | 8.03E 03 | 5 |
| 08 B 080* | | Y-BUTYROLACTONE | T | 4.90E 05 | 1.40E 01 | 8.03E 03 | 5 |
| 10 A 120* | | PROPANOLAMINES | T | 4.90E 05 | 1.40E 01 | 8.03E 03 | 5 |
| 10 A 123* | | 1-AMINO-2-PROPANOL | T | 4.90E 05 | 1.40E 01 | 8.03E 03 | 5 |
| 21 A 020* | P | NAPHTHALENE | T | 6.80E 05 | 1.40E 01 | 8.02E 03 | 3 |
| 08 A 080* | | VALERIC ACID | T | 3.00E 05 | 1.30E 01 | 7.70E 03 | 7 |
| 16 B 041* | | 1,2-BIS(CHLOROMETHYBENZENE | T | 8.90E 04 | 1.30E 01 | 7.61E 03 | 2 |
| 16 B 042* | | 1,3-BIS(CHLOROMETHYL)BENZENE | T | 8.90E 04 | 1.30E 01 | 7.61E 03 | 2 |
| 16 B 040* | | BIS(CHLOROMETHYL)BENZENES | T | 8.90E 04 | 1.30E 01 | 7.61E 03 | 2 |
| 16 B 043* | | 1,4-BIS(CHLOROMETHYL)BENZENE | T | 8.90E 04 | 1.30E 01 | 7.61E 03 | 2 |
| 12 A 080* | | N-NITROSODIISOPROPYLAMINE | T | 4.90E 05 | 1.30E 01 | 7.60E 03 | 5 |
| 09 B 040* | W | NAPHTHONITRILES | T | 4.10E 05 | 1.30E 01 | 7.60E 03 | 4 |
| 09 B 041* | | A-NAPHTHONITRILES | T | 4.10E 05 | 1.30E 01 | 7.60E 03 | 4 |
| 09 B 042* | | B-NAPHTHONITRILES | T | 4.10E 05 | 1.30E 01 | 7.60E 03 | 4 |
| 10 A 160* | | CYCLOHEXYLAMINE | T | 4.90E 05 | 1.22E 01 | 7.22E 03 | 5 |
| 08 B 041* | | 2-HYDROXYBENZOIC ACID | T | 4.90E 05 | 1.22E 01 | 7.22E 03 | 5 |
| 21 A 140* | P | ANTHRACENE | T | 6.80E 05 | 1.21E 01 | 7.20E 03 | 3 |
| 08 A 040* | | ACETIC ACID | T | 3.00E 05 | 1.20E 01 | 7.10E 03 | 7 |
| 07 B 120* | | ACETOPHENONE | T | 4.90E 05 | 1.20E 01 | 7.10E 03 | 5 |
| 79 A 010 | P | SILVER | S | 1.10E 02 | 1.10E 01 | 6.50E 03 | |

PRODUCT GAS PARTICULATE, HEALTH IMPACT

| DMEG NO. | | COMPOUND NAME | TYPE | CONC E-6 G/SCM | DS | WDS G/S | LCCAT |
|---|---|---|---|---|---|---|---|
| 05 C 040* | W | T-PENTANOL | T | 4.90E 05 | 1.10E 01 | 6.42E 03 | 5 |
| 23 C 061* | | 2-METHYLINDOLE | T | 4.90E 05 | 1.10E 01 | 6.42E 03 | 5 |
| 18 B 040* | | 1,3-DIHYDROXYBENZENE | T | 4.90E 05 | 1.10E 01 | 6.42E 03 | 5 |
| 23 C 060* | | METHYLINDOLES | T | 4.90E 05 | 1.10E 01 | 6.42E 03 | 5 |
| 05 A 124* | | 3-METHYL-1-BUTANOL | T | 3.60E 06 | 1.00E 01 | 5.90E 03 | 6 |
| 05 A 123* | | 2,2-DIMETHYL-1-PROPANOL | T | 3.60E 06 | 1.00E 01 | 5.90E 03 | 6 |
| 05 B 060* | | PENTANOLS (SECONDARY) | T | 3.60E 06 | 1.00E 01 | 5.90E 03 | 6 |
| 05 B 061* | | 2-PENTANOL | T | 3.60E 06 | 1.00E 01 | 5.90E 03 | 6 |
| 23 A 043* | | 4-METHYLPYRIDINE | T | 3.60E 06 | 1.00E 01 | 5.90E 03 | 6 |
| 05 B 062* | | 3-PENTANOL | T | 3.60E 06 | 1.00E 01 | 5.90E 03 | 6 |
| 05 A 121* | | N-PENTANOL | T | 3.60E 06 | 1.00E 01 | 5.90E 03 | 6 |
| 05 B 063* | | 3-METHYL-2-BUTANOL | T | 3.60E 06 | 1.00E 01 | 5.90E 03 | 6 |
| 05 A 120* | | PENTANOLS (PRIMARY) | T | 3.60E 06 | 1.00E 01 | 5.90E 03 | 6 |
| 23 A 041* | | 2-METHYLPYRIDINE | T | 3.60E 06 | 1.00E 01 | 5.90E 03 | 6 |
| 23 A 042* | | 3-METHYLPYRIDINE | T | 3.60E 06 | 1.00E 01 | 5.90E 03 | 6 |
| 05 A 122* | | 2-METHYL-1-BUTANOL | T | 3.60E 06 | 1.00E 01 | 5.90E 03 | 6 |
| 15 B 161* | | O-TERPHENYL | T | 8.90E 04 | 9.90E 00 | 5.83E 03 | 2 |
| 15 B 160* | | TERPHENYLS | T | 8.90E 04 | 9.90E 00 | 5.83E 03 | 2 |
| 15 B 163* | | P-TERPHENYL | T | 8.90E 04 | 9.90E 00 | 5.83E 03 | 2 |
| 15 B 162* | | M-TERPHENYL | T | 8.90E 04 | 9.90E 00 | 5.83E 03 | 2 |
| 16 A 201* | | 1-CHLORONAPHTHALENE | T | 6.80E 05 | 9.90E 00 | 5.81E 03 | 3 |
| 16 A 202* | | 2-CHLORONAPHTHALENE | T | 6.80E 05 | 9.90E 00 | 5.81E 03 | 3 |
| 16 A 200* | P | CHLORONAPHTHALENES | T | 6.80E 05 | 9.90E 00 | 5.81E 03 | 3 |
| 34 A 010 | | CALCIUM (AS CA+2) | D | 1.50E 05 | 9.40E 00 | 5.53E 03 | |
| 08 A 060* | | MALEIC ACID | T | 3.00E 05 | 9.40E 00 | 5.53E 03 | 7 |
| 23 C 060* | | METHYLINDOLES | T | 4.10E 05 | 9.11E 00 | 5.40E 03 | 4 |
| 23 C 061* | | 2-METHYLINDOLE | T | 4.10E 05 | 9.11E 00 | 5.40E 03 | 4 |
| 21 C 060* | | DIBENZ(A,C)ANTHRACENE | T | 8.90E 04 | 9.00E 00 | 5.30E 03 | 2 |
| 23 B 062* | | 2,6-DIMETHYLQUINOLINE | T | 4.90E 05 | 8.90E 00 | 5.30E 03 | 5 |
| 23 B 066* | | 1,3-DIMETHYLISOQUINOLINE | T | 4.90E 05 | 8.90E 00 | 5.30E 03 | 5 |
| 23 B 040* | | 2-METHYLQUINOLINE | T | 4.90E 05 | 8.90E 00 | 5.30E 03 | 5 |
| 23 B 061* | | 2,3-DIMETHYLQUINOLINE | T | 4.90E 05 | 8.90E 00 | 5.30E 03 | 5 |
| 05 A 140* | W | BENZYL ALCOHOL | T | 4.90E 05 | 8.90E 00 | 5.30E 03 | 5 |
| 23 B 064* | | 3,4-DIMETHYLQUINOLINE | T | 4.90E 05 | 8.90E 00 | 5.30E 03 | 5 |

PRODUCT GAS PARTICULATE, HEALTH IMPACT

| DMEG NO. | | | COMPOUND NAME | TYPE | CONC E-6 G/SCM | DS | WDS G/S | LCCAT |
|---|---|---|---|---|---|---|---|---|
| 23 B 067* | | | 1,5-DIMETHYLISOQUINOLINE | T | 4.90E 05 | 8.90E 00 | 5.30E 03 | 5 |
| 23 B 060* | | | DIMETHYLQUINOLINES | T | 4.90E 05 | 8.90E 00 | 5.30E 03 | 5 |
| 23 B 065* | | | 6,8-DIMETHYLQUINOLINE | T | 4.90E 05 | 8.90E 00 | 5.30E 03 | 5 |
| 23 B 063* | | | 2,8-DIMETHYLQUINOLINE | T | 4.90E 05 | 8.90E 00 | 5.30E 03 | 5 |
| 02 A 320* | P | | HEXACHLOROETHANE | T | 8.90E 04 | 8.90E 00 | 5.30E 03 | 2 |
| 08 D 260* | | | DI-2-ETHYLHEXYL ADIPATE | T | 3.60E 06 | 8.80E 00 | 5.20E 03 | 6 |
| 20 A 020* | P | | 2-NITROPHENOL | T | 4.90E 05 | 8.44E 00 | 5.00E 03 | 5 |
| 26 A 020 | | W | TRIETHYL PHOSPHATE | T | 3.00E 05 | 8.33E 00 | 4.91E 03 | 7 |
| 08 B 080* | | | Y-BUTYROLACTONE | T | 3.00E 05 | 8.33E 00 | 4.91E 03 | 7 |
| 18 A 180* | | | POLYALKYLPHENOLS (MW>135) | T | 4.90E 05 | 8.30E 00 | 4.90E 03 | 5 |
| 18 A 183* | | | 2,6-DIMETHYL-4-HEPTYL PHENOL | T | 4.90E 05 | 8.30E 00 | 4.90E 03 | 5 |
| 07 A 140* | | | BENZALDEHYDE | T | 4.90E 05 | 8.30E 00 | 4.90E 03 | 5 |
| 18 A 182* | | | 4,6-DI-TERT-BUTYL-M-CRESOL | T | 4.90E 05 | 8.30E 00 | 4.90E 03 | 5 |
| 18 A 181* | | | 2,4,6-TRIMETHYL METHYL PHENOL | T | 4.90E 05 | 8.30E 00 | 4.90E 03 | 5 |
| 02 B 100* | P | | DICHLOROPROPENES | T | 8.90E 04 | 8.10E 00 | 4.80E 03 | 2 |
| 02 B 104* | | | TRANS-1,3-DICHLOROPROPENE | T | 8.90E 04 | 8.10E 00 | 4.80E 03 | 2 |
| 02 B 103* | | | CIS-1,3-DICHLOROPROPENE | T | 8.90E 04 | 8.10E 00 | 4.80E 03 | 2 |
| 08 D 160* | | | METHYL BENZOATE | T | 4.90E 05 | 8.03E 00 | 4.73E 03 | 5 |
| 16 A 220* | | W | POLYCHLORINATED BIPHENYLS | D | < 7.60E 00 | < 7.60E 00 | < 4.50E 03 | 2 |
| 22 B 040* | P | W | FLUORANTHENE | T | 6.80E 05 | 7.60E 00 | 4.50E 03 | 3 |
| 08 B 041* | | | 2-HYDROXYBENZOIC ACID | T | 3.00E 05 | 7.50E 00 | 4.42E 03 | 7 |
| 14 A 020 | | W | BENZENESULFONIC ACID | T | 3.00E 05 | 7.50E 00 | 4.42E 03 | 7 |
| 16 A 160* | P | | POLYCHLORINATED BENZENES | T | 8.90E 04 | 7.41E 00 | 4.40E 03 | 2 |
| 16 A 162* | | | HEXACHLOROBENZENE | T | 8.90E 04 | 7.41E 00 | 4.40E 03 | 2 |
| 16 A 161* | | | 1,2,4-TRICHLOROBENZENE | T | 8.90E 04 | 7.41E 00 | 4.40E 03 | 2 |
| 76 A 010 | P | | NICKEL | S | 1.10E 02 | 7.33E 00 | 4.32E 03 | |
| 23 A 064* | | | 4-N-PROPYLPYRIDINE | T | 4.90E 05 | 7.10E 00 | 4.20E 03 | 5 |
| 23 A 063* | | | 4-ETHYLPYRIDINE | T | 4.90E 05 | 7.10E 00 | 4.20E 03 | 5 |
| 23 A 121* | | | 5-ETHYL-2-METHYLPYRIDINE | T | 4.90E 05 | 7.10E 00 | 4.20E 03 | 5 |
| 23 A 082* | | | 3-PHENYLPYRIDINE | T | 4.90E 05 | 7.10E 00 | 4.20E 03 | 5 |
| 23 A 120* | | | COLLIDINES | T | 4.90E 05 | 7.10E 00 | 4.20E 03 | 5 |
| 23 A 080* | | | PHENYLPYRIDINES | T | 4.90E 05 | 7.10E 00 | 4.20E 03 | 5 |
| 23 A 060* | | | MONOSUBSTITUTED ALKYL PYRIDINES | T | 4.90E 05 | 7.10E 00 | 4.20E 03 | 5 |
| 23 A 061* | | | 2-ETHYLPYRIDINE | T | 4.90E 05 | 7.10E 00 | 4.20E 03 | 5 |

PRODUCT GAS PARTICULATE, HEALTH IMPACT

| DMEG NO. | COMPOUND NAME | TYPE | CONC E-6 G/SCM | DS | WDS G/S | LCCAT |
|---|---|---|---|---|---|---|
| 23 A 122* | 2,4,6-COLLIDINE | T | 4.90E 05 | 7.10E 00 | 4.20E 03 | 5 |
| 23 A 083* | 4-PHENYLPYRIDINE | T | 4.90E 05 | 7.10E 00 | 4.20E 03 | 5 |
| 23 A 062* | 3-ETHYLPYRIDINE | T | 4.90E 05 | 7.10E 00 | 4.20E 03 | 5 |
| 23 A 081* | 2-PHENYLPYRIDINE | T | 4.90E 05 | 7.10E 00 | 4.20E 03 | 5 |
| 10 B 100* | MORPHOLINE | T | 4.90E 05 | 7.00E 00 | 4.13E 03 | 5 |
| 07 A 140* | BENZALDEHYDE | T | 4.10E 05 | 6.94E 00 | 4.10E 03 | 4 |
| 08 D 140* | AMYL ACETATES | T | 3.60E 06 | 6.92E 00 | 4.10E 03 | 6 |
| 08 D 141* | N-AMYL ACETATE | T | 3.60E 06 | 6.92E 00 | 4.10E 03 | 6 |
| 08 D 142* | SEC-AMYL ACETATE | T | 3.60E 06 | 6.92E 00 | 4.10E 03 | 6 |
| 08 D 143* | ISOAMYL ACETATE | T | 3.60E 06 | 6.92E 00 | 4.10E 03 | 6 |
| 08 D 200* | DIETHYL ADIPATE | T | 4.90E 05 | 6.80E 00 | 4.01E 03 | 5 |
| 15 A 141* | N-BUTYL BENZENE | T | 6.80E 05 | 6.80E 00 | 4.01E 03 | 3 |
| 15 A 140* | BUTYL BENZENES | T | 6.80E 05 | 6.80E 00 | 4.01E 03 | 3 |
| 15 A 143* | TERT-BUTYL BENZENE | T | 6.80E 05 | 6.80E 00 | 4.01E 03 | 3 |
| 15 A 142* | SEC-BUTYL BENZENE | T | 6.80E 05 | 6.80E 00 | 4.01E 03 | 3 |
| 07 B 182* | DIHYDRO-(D OR L)CARVONE | T | 4.90E 05 | 6.62E 00 | 3.90E 03 | 5 |
| 07 B 180* | CARVONES | T | 4.90E 05 | 6.62E 00 | 3.90E 03 | 5 |
| 07 B 181* | CARVONE(D OR L) | T | 4.90E 05 | 6.62E 00 | 3.90E 03 | 5 |
| 33 A 010 | MAGNESIUM | D | 3.90E 04 | 6.50E 00 | 3.83E 03 | |
| 08 D 220* | DIBUTYL ADIPATE | T | 3.60E 06 | 6.20E 00 | 3.70E 03 | 6 |
| 12 A 100* | N-NITROSODIPENTYLAMINE | T | 4.90E 05 | 6.20E 00 | 3.70E 03 | 5 |
| 05 A 160* | PHENETHYL ALCOHOL | T | 4.90E 05 | 6.04E 00 | 3.60E 03 | 5 |
| 23 A 082* | 3-PHENYLPYRIDINE | T | 4.10E 05 | 5.94E 00 | 3.50E 03 | 4 |
| 23 A 061* | 2-ETHYLPYRIDINE | T | 4.10E 05 | 5.94E 00 | 3.50E 03 | 4 |
| 23 A 060* | MONOSUBSTITUTED ALKYL PYRIDINES | T | 4.10E 05 | 5.94E 00 | 3.50E 03 | 4 |
| 23 A 121* | 5-ETHYL-2-METHYLPYRIDINE | T | 4.10E 05 | 5.94E 00 | 3.50E 03 | 4 |
| 23 A 122* | 2,4,6-COLLIDINE | T | 4.10E 05 | 5.94E 00 | 3.50E 03 | 4 |
| 23 A 063* | 4-ETHYLPYRIDINE | T | 4.10E 05 | 5.94E 00 | 3.50E 03 | 4 |
| 23 A 080* | PHENYLPYRIDINES | T | 4.10E 05 | 5.94E 00 | 3.50E 03 | 4 |
| 23 A 120* | COLLIDINES | T | 4.10E 05 | 5.94E 00 | 3.50E 03 | 4 |
| 23 A 081* | 2-PHENYLPYRIDINE | T | 4.10E 05 | 5.94E 00 | 3.50E 03 | 4 |
| 23 A 083* | 4-PHENYLPYRIDINE | T | 4.10E 05 | 5.94E 00 | 3.50E 03 | 4 |
| 23 A 064* | 4-N-PROPYLPYRIDINE | T | 4.10E 05 | 5.94E 00 | 3.50E 03 | 4 |
| 23 A 062* | 3-ETHYLPYRIDINE | T | 4.10E 05 | 5.94E 00 | 3.50E 03 | 4 |

PRODUCT GAS PARTICULATE, HEALTH IMPACT

| DMEG NO. | | COMPOUND NAME | TYPE | CONC E-6 G/SCM | DS | WDS G/S | LCCAT |
|---|---|---|---|---|---|---|---|
| 15 B 181* | | 1,2,3-TRIMETHYLBENZENE | T | 6.80E 05 | 5.70E 00 | 3.34E 03 | 3 |
| 15 B 182* | | 1,2,4-TRIMETHYLBENZENE | T | 6.80E 05 | 5.70E 00 | 3.34E 03 | 3 |
| 15 B 202* | | 1,2,3,5-TETRAMETHYLBENZENE | T | 6.80E 05 | 5.70E 00 | 3.34E 03 | 3 |
| 15 B 180* | | TRIMETHYLBENZENES | T | 6.80E 05 | 5.70E 00 | 3.34E 03 | 3 |
| 15 B 201* | | 1,2,3,4-TETRAMETHYLBENZENE | T | 6.80E 05 | 5.70E 00 | 3.34E 03 | 3 |
| 15 B 200* | | TETRAMETHYLBENZENES | T | 6.80E 05 | 5.70E 00 | 3.34E 03 | 3 |
| 15 B 183* | | 1,3,5-TRIMETHYLBENZENE | T | 6.80E 05 | 5.70E 00 | 3.34E 03 | 3 |
| 15 B 203* | | 1,2,4,5-TETRAMETHYLBENZENE | T | 6.80E 05 | 5.70E 00 | 3.34E 03 | 3 |
| 21 C 040* | | BENZO(G)CHRYSENE | T | 8.90E 04 | 5.60E 00 | 3.30E 03 | 2 |
| 27 A 010 | | LITHIUM | S | 1.20E 02 | 5.50E 00 | 3.21E 03 | |
| 23 B 160* | | BENZO(H)QUINOLINE | T | 4.90E 05 | 5.44E 00 | 3.21E 03 | 5 |
| 23 B 080* | | ACRIDINE | T | 4.90E 05 | 5.44E 00 | 3.21E 03 | 5 |
| 23 B 140* | | BENZO(F)QUINOLINE | T | 4.90E 05 | 5.44E 00 | 3.21E 03 | 5 |
| 13 B 080* | | METHYL DISULFIDE | T | 4.90E 05 | 5.44E 00 | 3.21E 03 | 5 |
| 05 B 120* | | BORNEOL | T | 4.90E 05 | 5.44E 00 | 3.21E 03 | 5 |
| 23 B 120* | | PHENANTHRIDINE | T | 4.90E 05 | 5.44E 00 | 3.21E 03 | 5 |
| 15 B 142* | | 1,4-DIHYDRONAPHTHALENE | T | 6.80E 05 | 5.23E 00 | 3.10E 03 | 3 |
| 15 B 141* | | 1,2-DIHYDRONAPHTHALENE | T | 6.80E 05 | 5.23E 00 | 3.10E 03 | 3 |
| 15 B 120* | | TETRAHYDRONAPHTHALENE | T | 6.80E 05 | 5.23E 00 | 3.10E 03 | 3 |
| 15 B 140* | | DIHYDRONAPHTHALENES | T | 6.80E 05 | 5.23E 00 | 3.10E 03 | 3 |
| 38 A 010 | | ALUMINUM | D | 2.70E 04 | 5.20E 00 | 3.10E 03 | |
| 08 D 121* | | N-BUTYL ACETATE | T | 3.60E 06 | 5.14E 00 | 3.03E 03 | 6 |
| 08 D 122* | | SEC-BUTYL ACETATE | T | 3.60E 06 | 5.14E 00 | 3.03E 03 | 6 |
| 08 D 123* | | ISOBUTYL ACETATE | T | 3.60E 06 | 5.14E 00 | 3.03E 03 | 6 |
| 08 D 120* | | BUTYL ACETATES | T | 3.60E 06 | 5.14E 00 | 3.03E 03 | 6 |
| 13 B 060* | | DIPHENYL SULFIDE | T | 4.90E 05 | 5.10E 00 | 3.01E 03 | 5 |
| 18 C 040* | W | 2-NAPHTHOL | T | 4.90E 05 | 4.50E 00 | 2.62E 03 | 5 |
| 21 B 100* | | BENZO(C)PHENANTHRENE & ALKYL DERIVATIVES | D | 9.70E 02 | 4.40E 00 | 2.60E 03 | 3 |
| 08 D 101* | | N-PROPYL ACETATE | T | 3.60E 06 | 4.30E 00 | 2.52E 03 | 6 |
| 08 D 100* | | PROPYL ACETATES | T | 3.60E 06 | 4.30E 00 | 2.52E 03 | 6 |
| 20 B 040* | W | DINITRO-P-CRESOLS | D | 8.40E 02 | 4.20E 00 | 2.50E 03 | 5 |
| 18 C 020* | | 1-NAPHTHOL | T | 4.90E 05 | 4.10E 00 | 2.40E 03 | 5 |
| 06 A 040* | | PROPYLENE GLYCOL | T | 3.60E 06 | 3.80E 00 | 2.23E 03 | 6 |
| 03 B 060* | | 2-ETHYL-4-METHYL-1,3-DIOXOLANE | T | 4.90E 05 | 3.80E 00 | 2.22E 03 | 5 |

## PRODUCT GAS PARTICULATE, HEALTH IMPACT

| DMEG NO. | | | COMPOUND NAME | TYPE | CONC E-6 G/SCM | DS | WDS G/S | LCCAT |
|---|---|---|---|---|---|---|---|---|
| 08 A 160* | | | BENZOIC ACID | T | 4.90E 05 | 3.50E 00 | 2.10E 03 | 5 |
| 08 D 320* | P | | BUTYL BENZYL PHTHALATE | T | 4.90E 05 | 3.50E 00 | 2.10E 03 | 5 |
| 06 B 020* | | W | 2,3-EPOXY-1-PROPANOL | T | 4.90E 05 | 3.30E 00 | 1.92E 03 | 5 |
| 18 C 082* | | | 4-INDANOL | T | 4.90E 05 | 3.30E 00 | 1.92E 03 | 5 |
| 18 C 081* | | | 1-INDANOL | T | 4.90E 05 | 3.30E 00 | 1.92E 03 | 5 |
| 18 C 080* | | | INDANOLS | T | 4.90E 05 | 3.30E 00 | 1.92E 03 | 5 |
| 05 A 100* | | | ISOBUTYL ALCOHOL | T | 4.90E 05 | 3.30E 00 | 1.92E 03 | 5 |
| 05 A 080* | | | N-BUTANOL | T | 4.90E 05 | 3.30E 00 | 1.92E 03 | 5 |
| 18 C 083* | | | 5-INDANOL | T | 4.90E 05 | 3.30E 00 | 1.92E 03 | 5 |
| 05 B 080* | | | 2,6-DIMETHYL-4-HEPTANOL | T | 4.90E 05 | 3.10E 00 | 1.80E 03 | 5 |
| 08 A 180* | | | ADIPIC ACID | T | 4.90E 05 | 3.10E 00 | 1.80E 03 | 5 |
| 03 A 040* | | W | 3-METHOXYBIPHENYL | T | 4.90E 05 | 3.10E 00 | 1.80E 03 | 5 |
| 21 A 041* | | | 1-METHYLNAPHTHALENE | T | 6.80E 05 | 3.00E 00 | 1.74E 03 | 3 |
| 21 B 180* | P | | PYRENE | T | 6.80E 05 | 3.00E 00 | 1.74E 03 | 3 |
| 21 A 081* | | | 1,4-DIMETHYLNAPHTHALENE | T | 6.80E 05 | 3.00E 00 | 1.74E 03 | 3 |
| 21 A 080* | | | DIMETHYLNAPHTHALENES | T | 6.80E 05 | 3.00E 00 | 1.74E 03 | 3 |
| 15 B 020* | | | INDAN | T | 6.80E 05 | 3.00E 00 | 1.74E 03 | 3 |
| 21 A 083* | | | 2,6-DIMETHYLNAPHTHALENE | T | 6.80E 05 | 3.00E 00 | 1.74E 03 | 3 |
| 21 A 082* | | | 2,3-DIMETHYLNAPHTHALENE | T | 6.80E 05 | 3.00E 00 | 1.74E 03 | 3 |
| 21 A 044* | | | 2-ETHYLNAPHTHALENE | T | 6.80E 05 | 3.00E 00 | 1.74E 03 | 3 |
| 21 A 043* | | | 1-ETHYLNAPHTHALENE | T | 6.80E 05 | 3.00E 00 | 1.74E 03 | 3 |
| 21 A 040* | | | MONOALKYL NAPHTHALENES | T | 6.80E 05 | 3.00E 00 | 1.74E 03 | 3 |
| 21 A 042* | | | 2-METHYLNAPHTHALENE | T | 6.80E 05 | 3.00E 00 | 1.74E 03 | 3 |
| 06 B 020* | | W | 2,3-EPOXY-1-PROPANOL | T | 4.10E 05 | 2.73E 00 | 1.61E 03 | 4 |
| 15 A 120* | | | ISOPROPYL BENZENE | T | 6.80E 05 | 2.71E 00 | 1.60E 03 | 3 |
| 16 A 180* | | | 2-CHLOROTOLUENE | T | 6.80E 05 | 2.71E 00 | 1.60E 03 | 3 |
| 15 A 100* | | | PROPYL BENZENE | T | 6.80E 05 | 2.71E 00 | 1.60E 03 | 3 |
| 05 C 060* | | | A-TERPINEOL | T | 4.90E 05 | 2.60E 00 | 1.52E 03 | 5 |
| 08 C 040* | | | ACETAMIDE | T | 3.60E 06 | 2.60E 00 | 1.51E 03 | 6 |
| 03 A 040* | | W | 3-METHOXYBIPHENYL | T | 4.10E 05 | 2.60E 00 | 1.51E 03 | 4 |
| 02 A 343* | | | 1,3-DICHLOROPROPANE | T | 8.70E 05 | 2.50E 00 | 1.50E 03 | 1 |
| 02 A 340* | P | | DICHLOROPROPANES | T | 8.70E 05 | 2.50E 00 | 1.50E 03 | 1 |
| 01 A 201 | | | N-OCTANE | T | 8.70E 05 | 2.50E 00 | 1.50E 03 | 1 |
| 01 A 200 | | W | OCTANES | T | 8.70E 05 | 2.50E 00 | 1.50E 03 | 1 |

PRODUCT GAS PARTICULATE, HEALTH IMPACT

| DMEG NO. | | COMPOUND NAME | TYPE | CONC E-6 G/SCM | DS | WDS G/S | LCCAT |
|---|---|---|---|---|---|---|---|
| 17 B 023* | | 1-METHOXY-4-NITROBENZENE | T | 4.90E 05 | 2.33E 00 | 1.40E 03 | 5 |
| 17 B 020* | | METHOXYNITROBENZENES | T | 4.90E 05 | 2.33E 00 | 1.40E 03 | 5 |
| 17 B 022* | | 1-METHOXY-3-NITROBENZENE | T | 4.90E 05 | 2.33E 00 | 1.40E 03 | 5 |
| 17 B 021* | | 1-METHOXY-2-NITROBENZENE | T | 4.90E 05 | 2.33E 00 | 1.40E 03 | 5 |
| 16 A 100* | P | 1,2-DICHLOROBENZENE | T | 6.80E 05 | 2.30E 00 | 1.33E 03 | 3 |
| 16 A 120* | P | 1,3-DICHLOROBENZENE | T | 6.80E 05 | 2.30E 00 | 1.33E 03 | 3 |
| 14 A 041 | | 9,10-ANTHRAQUINONE-1,5-DISULFONIC ACID | T | 3.00E 05 | 2.14E 00 | 1.30E 03 | 7 |
| 14 A 043 | | 9,10-ANTHRAQUINONE-1,7-DISULFONIC ACID | T | 3.00E 05 | 2.14E 00 | 1.30E 03 | 7 |
| 26 B 040 | W | TRITOTYL PHOSPHATES | T | 3.00E 05 | 2.14E 00 | 1.30E 03 | 7 |
| 08 A 160* | | BENZOIC ACID | T | 3.00E 05 | 2.14E 00 | 1.30E 03 | 7 |
| 14 A 044 | | 9,10-ANTHRAQUINONE-1,8-DISULFONIC ACID | T | 3.00E 05 | 2.14E 00 | 1.30E 03 | 7 |
| 02 A 140* | P | DIBROMOCHLOROMETHANE | T | 8.90E 04 | 2.00E 00 | 1.20E 03 | 2 |
| 22 A 010* | W | INDENE | T | 8.90E 04 | 2.00E 00 | 1.20E 03 | 2 |
| 08 D 240* | | DI-2-ETHYLBUTYL ADIPATE | T | 4.90E 05 | 2.00E 00 | 1.20E 03 | 5 |
| 17 B 021* | | 1-METHOXY-2-NITROBENZENE | T | 4.10E 05 | 2.00E 00 | 1.20E 03 | 4 |
| 17 B 020* | | METHOXYNITROBENZENES | T | 4.10E 05 | 2.00E 00 | 1.20E 03 | 4 |
| 17 B 022* | | 1-METHOXY-3-NITROBENZENE | T | 4.10E 05 | 2.00E 00 | 1.20E 03 | 4 |
| 17 B 023* | | 1-METHOXY-4-NITROBENZENE | T | 4.10E 05 | 2.00E 00 | 1.20E 03 | 4 |
| 16 A 020* | P | CHLOROBENZENE | T | 6.80E 05 | 1.94E 00 | 1.14E 03 | 3 |
| 08 A 180* | | ADIPIC ACID | T | 3.00E 05 | 1.90E 00 | 1.10E 03 | 7 |
| 15 A 040* | P | TOLUENE | T | 6.80E 05 | 1.80E 00 | 1.10E 03 | 3 |
| 21 A 020* | P | NAPHTHALENE | T | 8.90E 04 | 1.80E 00 | 1.10E 03 | 2 |
| 16 A 080* | | BROMOCHLOROBENZENES | T | 6.80E 05 | 1.74E 00 | 1.02E 03 | 3 |
| 16 A 083* | | 1-BROMO-4-CHLOROBENZENE | T | 6.80E 05 | 1.74E 00 | 1.02E 03 | 3 |
| 16 A 081* | | 1-BROMO-2-CHLOROBENZENE | T | 6.80E 05 | 1.74E 00 | 1.02E 03 | 3 |
| 16 A 082* | | 1-BROMO-3-CHLOROBENZENE | T | 6.80E 05 | 1.74E 00 | 1.02E 03 | 3 |
| 15 A 080* | | STYRENE | T | 6.80E 05 | 1.61E 00 | 9.60E 02 | 3 |
| 02 A 361* | | 1-BROMOBUTANE | T | 8.90E 04 | 1.60E 00 | 9.40E 02 | 2 |
| 21 A 140* | P | ANTHRACENE | T | 8.90E 04 | 1.60E 00 | 9.40E 02 | 2 |
| 02 A 360* | | BROMOBUTANES | T | 8.90E 04 | 1.60E 00 | 9.40E 02 | 2 |
| 15 B 083* | | P-XYLENE | T | 6.80E 05 | 1.54E 00 | 9.11E 02 | 3 |
| 15 B 100* | | DIALKYL BENZENES (MW:134-191) | T | 6.80E 05 | 1.54E 00 | 9.11E 02 | 3 |
| 15 B 081* | | O-XYLENE | T | 6.80E 05 | 1.54E 00 | 9.11E 02 | 3 |
| 15 B 103* | | P-DIETHYL BENZENE | T | 6.80E 05 | 1.54E 00 | 9.11E 02 | 3 |

PRODUCT GAS PARTICULATE, HEALTH IMPACT

| DMEG NO. | | COMPOUND NAME | TYPE | CONC E-6 G/SCM | DS | WDS G/S | LCCAT |
|---|---|---|---|---|---|---|---|
| 15 B 106* | | 1,4-DI-TERT-BUTYL BENZENE | T | 6.80E 05 | 1.54E 00 | 9.11E 02 | 3 |
| 15 B 104* | | O-DIISOPROPYL BENZENE | T | 6.80E 05 | 1.54E 00 | 9.11E 02 | 3 |
| 15 B 082* | | M-XYLENE | T | 6.80E 05 | 1.54E 00 | 9.11E 02 | 3 |
| 15 B 105* | | M-DIISOPROPYL BENZENE | T | 6.80E 05 | 1.54E 00 | 9.11E 02 | 3 |
| 15 B 102* | | M-DIETHYL BENZENE | T | 6.80E 05 | 1.54E 00 | 9.11E 02 | 3 |
| 15 A 060* | P | ETHYL BENZENE | T | 6.80E 05 | 1.54E 00 | 9.11E 02 | 3 |
| 15 B 080* | | XYLENES | T | 6.80E 05 | 1.54E 00 | 9.11E 02 | 3 |
| 15 B 101* | | O-DIETHYL BENZENE | T | 6.80E 05 | 1.54E 00 | 9.11E 02 | 3 |
| 16 A 140* | P | 1,4-DICHLOROBENZENE | T | 6.80E 05 | 1.51E 00 | 8.91E 02 | 3 |
| 17 A 080* | | DINITROTOLUENES | D | 2.20E 03 | 1.50E 00 | 8.70E 02 | 4 |
| 16 A 063* | | 1,4-DIBROMOBENZENE | T | 6.80E 05 | 1.41E 00 | 8.40E 02 | 3 |
| 16 A 061* | | 1,2-DIBROMOBENZENE | T | 6.80E 05 | 1.41E 00 | 8.40E 02 | 3 |
| 16 A 062* | | 1,3-DIBROMOBENZENE | T | 6.80E 05 | 1.41E 00 | 8.40E 02 | 3 |
| 16 A 060* | | DIBROMOBENZENES | T | 6.80E 05 | 1.41E 00 | 8.40E 02 | 3 |
| 16 A 040* | | BROMOBENZENE | T | 6.80E 05 | 1.40E 00 | 8.20E 02 | 3 |
| 05 B 062* | | 3-PENTANOL | T | 4.90E 05 | 1.40E 00 | 8.03E 02 | 5 |
| 05 A 122* | | 2-METHYL-1-BUTANOL | T | 4.90E 05 | 1.40E 00 | 8.03E 02 | 5 |
| 05 A 124* | | 3-METHYL-1-BUTANOL | T | 4.90E 05 | 1.40E 00 | 8.03E 02 | 5 |
| 05 A 123* | | 2,2-DIMETHYL-1-PROPANOL | T | 4.90E 05 | 1.40E 00 | 8.03E 02 | 5 |
| 23 A 041* | | 2-METHYLPYRIDINE | T | 4.90E 05 | 1.40E 00 | 8.03E 02 | 5 |
| 05 B 060* | | PENTANOLS (SECONDARY) | T | 4.90E 05 | 1.40E 00 | 8.03E 02 | 5 |
| 23 A 042* | | 3-METHYLPYRIDINE | T | 4.90E 05 | 1.40E 00 | 8.03E 02 | 5 |
| 05 B 061* | | 2-PENTANOL | T | 4.90E 05 | 1.40E 00 | 8.03E 02 | 5 |
| 23 A 043* | | 4-METHYLPYRIDINE | T | 4.90E 05 | 1.40E 00 | 8.03E 02 | 5 |
| 05 B 063* | | 3-METHYL-2-BUTANOL | T | 4.90E 05 | 1.40E 00 | 8.03E 02 | 5 |
| 05 A 120* | | PENTANOLS (PRIMARY) | T | 4.90E 05 | 1.40E 00 | 8.03E 02 | 5 |
| 05 A 121* | | N-PENTANOL | T | 4.90E 05 | 1.40E 00 | 8.03E 02 | 5 |
| 78 A 010 | P | COPPER | D | 2.70E 02 | 1.34E 00 | 8.00E 02 | |
| 32 A 010 | P | BERYLLIUM | S | 2.60E 00 | 1.30E 00 | 7.70E 02 | |
| 02 B 080* | P | TETRACHLOROETHENE | T | 8.70E 05 | 1.30E 00 | 7.70E 02 | 1 |
| 16 A 200* | P | CHLORONAPHTHALENES | T | 8.90E 04 | 1.30E 00 | 7.61E 02 | 2 |
| 16 A 202* | | 2-CHLORONAPHTHALENE | T | 8.90E 04 | 1.30E 00 | 7.61E 02 | 2 |
| 16 A 201* | | 1-CHLORONAPHTHALENE | T | 8.90E 04 | 1.30E 00 | 7.61E 02 | 2 |
| 35 A 010 | | STRONTIUM | D | 3.90E 03 | 1.30E 00 | 7.42E 02 | |

PRODUCT GAS PARTICULATE, HEALTH IMPACT

| OMEG NO. | | COMPOUND NAME | TYPE | CONC E-6 G/SCM | DS | WDS G/S | LCCAT |
|---|---|---|---|---|---|---|---|
| 21 B 080* | | 3-METHYLCHOLANTHRENE | D | 4.70E 00 | 1.23E 00 | 7.30E 02 | 3 |
| 08 D 260* | | DI-2-ETHYLHEXYL ADIPATE | T | 4.90E 05 | 1.20E 00 | 7.10E 02 | 5 |
| 23 A 042* | | 3-METHYLPYRIDINE | T | 4.10E 05 | 1.13E 00 | 6.71E 02 | 4 |
| 23 A 043* | | 4-METHYLPYRIDINE | T | 4.10E 05 | 1.13E 00 | 6.71E 02 | 4 |
| 23 A 041* | | 2-METHYLPYRIDINE | T | 4.10E 05 | 1.13E 00 | 6.71E 02 | 4 |
| 23 C 062* | | 3-METHYLINDOLE | T | 4.90E 05 | 1.10E 00 | 6.42E 02 | 5 |
| 26 B 020 | | TRIPHENYL PHOSPHATE | T | 3.00E 05 | 1.03E 00 | 6.10E 02 | 7 |
| 22 B 040* | P W | FLUORANTHENE | T | 8.90E 04 | 9.90E-01 | 5.83E 02 | 2 |
| 08 D 140* | | AMYL ACETATES | T | 4.90E 05 | 9.42E-01 | 5.60E 02 | 5 |
| 08 D 141* | | N-AMYL ACETATE | T | 4.90E 05 | 9.42E-01 | 5.60E 02 | 5 |
| 08 D 142* | | SEC-AMYL ACETATE | T | 4.90E 05 | 9.42E-01 | 5.60E 02 | 5 |
| 08 D 143* | | ISOAMYL ACETATE | T | 4.90E 05 | 9.42E-01 | 5.60E 02 | 5 |
| 23 C 062* | | 3-METHYLINDOLE | T | 4.10E 05 | 9.11E-01 | 5.40E 02 | 4 |
| 15 A 142* | | SEC-BUTYL BENZENE | T | 8.90E 04 | 8.90E-01 | 5.30E 02 | 2 |
| 15 A 143* | | TERT-BUTYL BENZENE | T | 8.90E 04 | 8.90E-01 | 5.30E 02 | 2 |
| 15 A 141* | | N-BUTYL BENZENE | T | 8.90E 04 | 8.90E-01 | 5.30E 02 | 2 |
| 15 A 140* | | BUTYL BENZENES | T | 8.90E 04 | 8.90E-01 | 5.30E 02 | 2 |
| 01 A 242 | | N-UNDECANE | T | 8.70E 05 | 8.70E-01 | 5.13E 02 | 1 |
| 01 A 240 | | ALKANES(C=10,11) | T | 8.70E 05 | 8.70E-01 | 5.13E 02 | 1 |
| 01 A 241 | | N-DECANE | T | 8.70E 05 | 8.70E-01 | 5.13E 02 | 1 |
| 01 A 220 | | NONANES | T | 8.70E 05 | 8.70E-01 | 5.13E 02 | 1 |
| 01 A 260 | | N-DODECANE | T | 8.70E 05 | 8.70E-01 | 5.13E 02 | 1 |
| 01 A 222 | | ISONONANE | T | 8.70E 05 | 8.70E-01 | 5.13E 02 | 1 |
| 01 A 221 | | N-NONANE | T | 8.70E 05 | 8.70E-01 | 5.13E 02 | 1 |
| 46 A 010 | P | LEAD | S | 1.30E 02 | 8.70E-01 | 5.11E 02 | |
| 08 D 220* | | DIBUTYL ADIPATE | T | 4.90E 05 | 8.44E-01 | 5.00E 02 | 5 |
| 50 A 010 | P | ANTIMONY | D | < 3.80E 02 | < 7.60E-01 | < 4.50E 02 | |
| 15 B 203* | | 1,2,4,5-TETRAMETHYLBENZENE | T | 8.90E 04 | 7.41E-01 | 4.40E 02 | 2 |
| 15 B 181* | | 1,2,3-TRIMETHYLBENZENE | T | 8.90E 04 | 7.41E-01 | 4.40E 02 | 2 |
| 15 B 182* | | 1,2,4-TRIMETHYLBENZENE | T | 8.90E 04 | 7.41E-01 | 4.40E 02 | 2 |
| 15 B 180* | | TRIMETHYLBENZENES | T | 8.90E 04 | 7.41E-01 | 4.40E 02 | 2 |
| 15 B 201* | | 1,2,3,4-TETRAMETHYLBENZENE | T | 8.90E 04 | 7.41E-01 | 4.40E 02 | 2 |
| 15 B 183* | | 1,3,5-TRIMETHYLBENZENE | T | 8.90E 04 | 7.41E-01 | 4.40E 02 | 2 |
| 15 B 200* | | TETRAMETHYLBENZENES | T | 8.90E 04 | 7.41E-01 | 4.40E 02 | 2 |

PRODUCT GAS PARTICULATE, HEALTH IMPACT

| DMEG NO. | | COMPOUND NAME | TYPE | CONC E-6 G/SCM | DS | WDS G/S | LCCAT |
|---|---|---|---|---|---|---|---|
| 15 B 202* | | 1,2,3,5-TETRAMETHYLBENZENE | T | 8.90E 04 | 7.41E-01 | 4.40E 02 | 2 |
| 08 D 122* | | SEC-BUTYL ACETATE | T | 4.90E 05 | 7.00E-01 | 4.12E 02 | 5 |
| 08 D 123* | | ISOBUTYL ACETATE | T | 4.90E 05 | 7.00E-01 | 4.12E 02 | 5 |
| 08 D 121* | | N-BUTYL ACETATE | T | 4.90E 05 | 7.00E-01 | 4.12E 02 | 5 |
| 08 D 120* | | BUTYL ACETATES | T | 4.90E 05 | 7.00E-01 | 4.12E 02 | 5 |
| 15 B 120* | | TETRAHYDRONAPHTHALENE | T | 8.90E 04 | 6.84E-01 | 4.03E 02 | 2 |
| 15 B 141* | | 1,2-DIHYDRONAPHTHALENE | T | 8.90E 04 | 6.84E-01 | 4.03E 02 | 2 |
| 15 B 140* | | DIHYDRONAPHTHALENES | T | 8.90E 04 | 6.84E-01 | 4.03E 02 | 2 |
| 15 B 142* | | 1,4-DIHYDRONAPHTHALENE | T | 8.90E 04 | 6.84E-01 | 4.03E 02 | 2 |
| 43 A 010 | | SILICON | S | > 6.70E 03> | 6.70E-01> | 4.00E 02 | |
| 21 B 040* | P | BENZ(A)ANTHRACENE | D | 2.80E 01 | 6.22E-01 | 3.70E 02 | 2 |
| 08 D 101* | | N-PROPYL ACETATE | T | 4.90E 05 | 5.83E-01 | 3.44E 02 | 5 |
| 08 D 100* | | PROPYL ACETATES | T | 4.90E 05 | 5.83E-01 | 3.44E 02 | 5 |
| 23 B 100* | W | DIHYDROACRIDINE | D | 9.10E 01 | 5.70E-01 | 3.40E 02 | 6 |
| 56 A 010 | | FLUORINE (AS F-) | S | 1.30E 03 | 5.20E-01 | 3.10E 02 | |
| 06 A 040* | | PROPYLENE GLYCOL | T | 4.90E 05 | 5.20E-01 | 3.04E 02 | 5 |
| 22 C 080* | P W | BENZO(B)FLUORANTHENE | D | 3.70E 02 | 4.11E-01 | 2.42E 02 | 3 |
| 28 A 010 | | SODIUM | D | 2.10E 04 | 4.00E-01 | 2.33E 02 | |
| 01 B 080 | | BUTADIENES | T | 8.70E 05 | 4.00E-01 | 2.33E 02 | 1 |
| 21 A 040* | | MONOALKYL NAPHTHALENES | T | 8.90E 04 | 3.90E-01 | 2.30E 02 | 2 |
| 21 B 180* | P | PYRENE | T | 8.90E 04 | 3.90E-01 | 2.30E 02 | 2 |
| 21 A 042* | | 2-METHYLNAPHTHALENE | T | 8.90E 04 | 3.90E-01 | 2.30E 02 | 2 |
| 21 A 081* | | 1,4-DIMETHYLNAPHTHALENE | T | 8.90E 04 | 3.90E-01 | 2.30E 02 | 2 |
| 21 A 043* | | 1-ETHYLNAPHTHALENE | T | 8.90E 04 | 3.90E-01 | 2.30E 02 | 2 |
| 21 A 082* | | 2,3-DIMETHYLNAPHTHALENE | T | 8.90E 04 | 3.90E-01 | 2.30E 02 | 2 |
| 21 A 083* | | 2,6-DIMETHYLNAPHTHALENE | T | 8.90E 04 | 3.90E-01 | 2.30E 02 | 2 |
| 21 A 044* | | 2-ETHYLNAPHTHALENE | T | 8.90E 04 | 3.90E-01 | 2.30E 02 | 2 |
| 21 A 041* | | 1-METHYLNAPHTHALENE | T | 8.90E 04 | 3.90E-01 | 2.30E 02 | 2 |
| 15 B 020* | | INDAN | T | 8.90E 04 | 3.90E-01 | 2.30E 02 | 2 |
| 21 A 080* | | DIMETHYLNAPHTHALENES | T | 8.90E 04 | 3.90E-01 | 2.30E 02 | 2 |
| 15 A 100* | | PROPYL BENZENE | T | 8.90E 04 | 3.60E-01 | 2.10E 02 | 2 |
| 16 A 180* | | 2-CHLOROTOLUENE | T | 8.90E 04 | 3.60E-01 | 2.10E 02 | 2 |
| 15 A 120* | | ISOPROPYL BENZENE | T | 8.90E 04 | 3.60E-01 | 2.10E 02 | 2 |
| 85 A 010 | | URANIUM | S | 3.20E 00 | 3.60E-01 | 2.10E 02 | |

PRODUCT GAS PARTICULATE, HEALTH IMPACT

| DMEG NO. | | COMPOUND NAME | TYPE | CONC E-6 G/SCM | DS | WDS G/S | LCCAT |
|---|---|---|---|---|---|---|---|
| 08 C 040* | | ACETAMIDE | T | 4.90E 05 | 3.50E-01 | 2.10E 02 | 5 |
| 16 A 100* | P | 1,2-DICHLOROBENZENE | T | 8.90E 04 | 3.00E-01 | 1.80E 02 | 2 |
| 16 A 120* | P | 1,3-DICHLOROBENZENE | T | 8.90E 04 | 3.00E-01 | 1.80E 02 | 2 |
| 74 A 010 | | COBALT | S | 1.40E 01 | 2.80E-01 | 1.70E 02 | |
| 02 A 340* | P | DICHLOROPROPANES | T | 8.90E 04 | 2.54E-01 | 1.50E 02 | 2 |
| 16 A 020* | P | CHLOROBENZENE | T | 8.90E 04 | 2.54E-01 | 1.50E 02 | 2 |
| 02 A 343* | | 1,3-DICHLOROPROPANE | T | 8.90E 04 | 2.54E-01 | 1.50E 02 | 2 |
| 15 A 040* | P | TOLUENE | T | 8.90E 04 | 2.34E-01 | 1.40E 02 | 2 |
| 16 A 082* | | 1-BROMO-3-CHLOROBENZENE | T | 8.90E 04 | 2.30E-01 | 1.34E 02 | 2 |
| 16 A 083* | | 1-BROMO-4-CHLOROBENZENE | T | 8.90E 04 | 2.30E-01 | 1.34E 02 | 2 |
| 16 A 081* | | 1-BROMO-2-CHLOROBENZENE | T | 8.90E 04 | 2.30E-01 | 1.34E 02 | 2 |
| 16 A 080* | | BROMOCHLOROBENZENES | T | 8.90E 04 | 2.30E-01 | 1.34E 02 | 2 |
| 15 A 080* | | STYRENE | T | 8.90E 04 | 2.11E-01 | 1.30E 02 | 2 |
| 15 B 101* | | O-DIETHYL BENZENE | T | 8.90E 04 | 2.02E-01 | 1.20E 02 | 2 |
| 15 B 083* | | P-XYLENE | T | 8.90E 04 | 2.02E-01 | 1.20E 02 | 2 |
| 15 B 104* | | O-DIISOPROPYL BENZENE | T | 8.90E 04 | 2.02E-01 | 1.20E 02 | 2 |
| 15 B 100* | | DIALKYL BENZENES (MW:134-191) | T | 8.90E 04 | 2.02E-01 | 1.20E 02 | 2 |
| 15 B 082* | | M-XYLENE | T | 8.90E 04 | 2.02E-01 | 1.20E 02 | 2 |
| 15 A 060* | P | ETHYL BENZENE | T | 8.90E 04 | 2.02E-01 | 1.20E 02 | 2 |
| 15 B 105* | | M-DIISOPROPYL BENZENE | T | 8.90E 04 | 2.02E-01 | 1.20E 02 | 2 |
| 15 B 106* | | 1,4-DI-TERT-BUTYL BENZENE | T | 8.90E 04 | 2.02E-01 | 1.20E 02 | 2 |
| 15 B 081* | | O-XYLENE | T | 8.90E 04 | 2.02E-01 | 1.20E 02 | 2 |
| 15 B 103* | | P-DIETHYL BENZENE | T | 8.90E 04 | 2.02E-01 | 1.20E 02 | 2 |
| 15 B 080* | | XYLENES | T | 8.90E 04 | 2.02E-01 | 1.20E 02 | 2 |
| 15 B 102* | | M-DIETHYL BENZENE | T | 8.90E 04 | 2.02E-01 | 1.20E 02 | 2 |
| 16 A 140* | P | 1,4-DICHLOROBENZENE | T | 8.90E 04 | 2.00E-01 | 1.20E 02 | 2 |
| 16 A 063* | | 1,4-DIBROMOBENZENE | T | 8.90E 04 | 1.90E-01 | 1.10E 02 | 2 |
| 16 A 060* | | DIBROMOBENZENES | T | 8.90E 04 | 1.90E-01 | 1.10E 02 | 2 |
| 16 A 062* | | 1,3-DIBROMOBENZENE | T | 8.90E 04 | 1.90E-01 | 1.10E 02 | 2 |
| 16 A 061* | | 1,2-DIBROMOBENZENE | T | 8.90E 04 | 1.90E-01 | 1.10E 02 | 2 |
| 16 A 040* | | BROMOBENZENE | T | 8.90E 04 | 1.81E-01 | 1.10E 02 | 2 |
| 37 A 010 | | BORON | D | 5.50E 02 | 1.80E-01 | 1.04E 02 | |
| 62 A 010 | | TITANIUM | D | 9.40E 02 | 1.60E-01 | 9.24E 01 | |
| 23 B 100* | W | DIHYDROACRIDINE | D | 2.30E 01 | 1.43E-01 | 8.50E 01 | 5 |

## PRODUCT GAS PARTICULATE, HEALTH IMPACT

| DMEG NO. | | COMPOUND NAME | TYPE | CONC E-6 G/SCM | DS | WDS G/S | LCCAT |
|---|---|---|---|---|---|---|---|
| 02 B 080* | P | TETRACHLOROETHENE | T | 8.90E 04 | 1.32E-01 | 7.83E 01 | 2 |
| 15 A 160* | W | BIPHENYL | D | 1.20E 02 | 1.20E-01 | 7.10E 01 | 3 |
| 81 A 010 | P | ZINC | D | 4.80E 02 | 1.20E-01 | 7.10E 01 | |
| 01 B 060 | | BUTYLENES | T | 8.70E 05 | 9.60E-02 | 5.64E 01 | 1 |
| 65 A 010 | | VANADIUM | S | 3.60E 01 | 7.20E-02 | 4.24E 01 | |
| 41 A 010 | P | THALLIUM | S | 3.20E 00 | 3.20E-02 | 1.90E 01 | |
| 61 A 010 | | YTTRIUM (AS Y+3) | S | 3.00E 01 | 3.00E-02 | 1.60E 01 | |
| 71 A 010 | P | MANGANESE | D | 1.20E 02 | 2.40E-02 | 1.41E 01 | |
| 63 A 010 | | ZIRCONIUM (AS ZR+4) | S | 8.70E 01 | 1.74E-02 | 1.02E 01 | |
| 85 B 010 | | THORIUM | S | 6.40E 00 | 1.52E-02 | 9.00E 00 | |
| 44 A 010 | | GERMANIUM | S | 7.20E 00 | 1.30E-02 | 7.60E 00 | |
| 22 C 080* | P W | BENZO(B)FLUORANTHENE | D | 1.00E 01 | 1.11E-02 | 6.60E 00 | 2 |
| 55 A 010 | | TELLURIUM | S | 9.70E-01 | 9.70E-03 | 5.72E 00 | |
| 51 A 010 | | BISMUTH | S | 2.60E 00 | 6.34E-03 | 3.74E 00 | |
| 64 A 010 | | HAFNIUM, (AS HF+4) | S | 2.90E 00 | 5.80E-03 | 3.42E 00 | |
| 39 A 010 | | GALLIUM | S | 2.30E 01 | 4.60E-03 | 2.71E 00 | |
| 70 A 010 | | TUNGSTEN | S | 3.20E 00 | 3.20E-03 | 1.90E 00 | |
| 69 A 010 | | MOLYBDENUM | S | 9.70E 00 | 1.94E-03 | 1.14E 00 | |
| 84 B 010 | | CERIUM | S | 5.10E 01 | 1.40E-03 | 8.13E-01 | |
| 66 A 010 | | NIOBIUM (AS NB+3) | S | 1.30E 01 | 5.90E-04 | 3.50E-01 | |
| 60 A 010 | | SCANDIUM | S | 1.90E 01 | 3.60E-04 | 2.11E-01 | |
| 84 A 010 | | LANTHANUM | S | 3.60E 01 | 3.30E-04 | 1.93E-01 | |
| 84 F 010 | | DYSPROSIUM | S | 1.70E 00 | 1.82E-04 | 1.10E-01 | |
| 84 C 010 | | PRASEODYMIUM | S | 6.40E 00 | 1.30E-04 | 7.40E-02 | |
| 84 E 010 | | SAMARIUM | S | 6.40E 00 | 1.20E-04 | 7.12E-02 | |
| 30 A 010 | | RUBIDIUM (AS RB+) | S | < 7.00E 00< | 5.83E-05< | 3.44E-02 | |
| 31 A 010 | | CESIUM | S | 2.30E 00 | 2.80E-05 | 1.70E-02 | |
| 21 C 100* | P W | BENZO(A)PYRENE | D | 0.00E-01 | 0.00E-01 | 0.00E-01 | 2 |
| 20 A 120* | W | 2,4,6-TRINITROPHENOL | D | 0.00E-01 | 0.00E-01 | 0.00E-01 | 6 |
| 21 A 120* | PH | ACENAPHTHYLENE | T | 6.80E 05 | 0.00E-01 | 0.00E-01 | 3 |
| 21 B 080* | | 3-METHYLCHOLANTHRENE | D | 0.00E-01 | 0.00E-01 | 0.00E-01 | 2 |
| 57 A 010 | | CHLORINE (AS CL-) | S | > 3.20E 03> | 0.00E-01> | 0.00E-01 | |
| 16 A 220* | W | POLYCHLORINATED BIPHENYLS | D | 0.00E-01 | 0.00E-01 | 0.00E-01 | 3 |
| 21 A 120* | PH | ACENAPHTHYLENE | T | 8.90E 04 | 0.00E-01 | 0.00E-01 | 2 |

PRODUCT GAS PARTICULATE, HEALTH IMPACT

| DMEG NO. | | COMPOUND NAME | TYPE | CONC E-6 G/SCM | DS | WDS G/S | LOCAT |
|---|---|---|---|---|---|---|---|
| 21 C 080* | P | DIBENZ(A,H)ANTHRACENE | D | 0.00E-01 | 0.00E-01 | 0.00E-01 | 2 |
| 12 A 020* | P W | N-NITROSODIMETHYLAMINE | D | 0.00E-01 | 0.00E-01 | 0.00E-01 | 5 |
| 10 C 040* | | AMINOTOLUENES | D | 0.00E-01 | 0.00E-01 | 0.00E-01 | 5 |
| 20 A 120* | W | 2,4,6-TRINITROPHENOL | D | 0.00E-01 | 0.00E-01 | 0.00E-01 | 5 |
| 21 B 100* | | BENZO(C)PHENANTHRENE & ALKYL DERIVATIVES | D | 0.00E-01 | 0.00E-01 | 0.00E-01 | 2 |
| 23 B 240* | | DIBENZ(A,H)ACRIDINE | D | 0.00E-01 | 0.00E-01 | 0.00E-01 | 5 |
| 21 A 100* | PH | ACENAPHTHENE | T | 8.90E 04 | 0.00E-01 | 0.00E-01 | 2 |
| 08 B 060* | W | B-PROPIOLACTONE | D | 0.00E-01 | 0.00E-01 | 0.00E-01 | 6 |
| 45 A 010 | | TIN | S | 1.30E 01 | 0.00E-01 | 0.00E-01 | |
| 12 A 020* | P W | N-NITROSODIMETHYLAMINE | D | 0.00E-01 | 0.00E-01 | 0.00E-01 | 6 |
| 10 C 040* | | AMINOTOLUENES | D | 0.00E-01 | 0.00E-01 | 0.00E-01 | 6 |
| 04 A 160* | P | A-CHLOROBUTYL ETHYL ETHER | T | 4.10E 05 | 0.00E-01 | 0.00E-01 | 4 |
| 04 A 160* | P | A-CHLOROBUTYL ETHYL ETHER | T | 4.90E 05 | 0.00E-01 | 0.00E-01 | 5 |
| 20 B 040* | W | DINITRO-P-CRESOLS | D | 0.00E-01 | 0.00E-01 | 0.00E-01 | 6 |
| 21 A 100* | PH | ACENAPHTHENE | T | 6.80E 05 | 0.00E-01 | 0.00E-01 | 3 |
| 23 B 220* | | DIBENZ(A,J)ACRIDINE | D | 0.00E-01 | 0.00E-01 | 0.00E-01 | 6 |
| 23 B 240* | | DIBENZ(A,H)ACRIDINE | D | 0.00E-01 | 0.00E-01 | 0.00E-01 | 6 |
| 59 A 010 | | IODINE (AS I-) | S | < 4.00E 00< | 0.00E-01< | 0.00E-01 | |
| 21 D 040* | W | DIBENZO(A,I)PYRENE | D | 0.00E-01 | 0.00E-01 | 0.00E-01 | 3 |
| 21 D 040* | W | DIBENZO(A,I)PYRENE | D | 0.00E-01 | 0.00E-01 | 0.00E-01 | 2 |
| 21 B 060* | W | 7,12-DIMETHYLBENZ(A)ANTHRACENE | D | 0.00E-01 | 0.00E-01 | 0.00E-01 | 2 |
| 23 B 220* | | DIBENZ(A,J)ACRIDINE | D | 0.00E-01 | 0.00E-01 | 0.00E-01 | 5 |
| 84 D 010 | | NEODYMIUM | S | 9.70E 00 | 0.00E-01 | 0.00E-01 | |
| 17 B 040* | W | 1-CHLORO-2-NITROBENZENE | D | 0.00E-01 | 0.00E-01 | 0.00E-01 | 4 |
| 17 B 060* | W | 1-CHLORO-4-NITROBENZENE | D | 0.00E-01 | 0.00E-01 | 0.00E-01 | 4 |
| 03 B 060* | | 2-ETHYL-4-METHYL-1,3-DIOXOLANE | D | 0.00E-01 | 0.00E-01 | 0.00E-01 | 4 |
| 29 A 010 | | POTASSIUM | S | > 3.20E 03> | 0.00E-01> | 0.00E-01 | |
| 09 A 120* | W | TETRAMETHYLSUCCINONITRILE | D | 0.00E-01 | 0.00E-01 | 0.00E-01 | 4 |
| 25 B 040* | W | BENZO(B)THIOPHENE | D | 0.00E-01 | 0.00E-01 | 0.00E-01 | 4 |
| 09 B 020* | W | BENZONITRILE | D | 0.00E-01 | 0.00E-01 | 0.00E-01 | 4 |
| 21 D 080* | PH | BENZO(GHI)PERYLENE | T | 8.90E 04 | 0.00E-01 | 0.00E-01 | 2 |
| 21 D 080* | PH | BENZO(GHI)PERYLENE | T | 6.80E 05 | 0.00E-01 | 0.00E-01 | 3 |
| 08 B 060* | W | B-PROPIOLACTONE | D | 0.00E-01 | 0.00E-01 | 0.00E-01 | 5 |
| 53 A 010 | | SULFUR | S | > 3.50E 03> | 0.00E-01> | 0.00E-01 | |

PRODUCT GAS PARTICULATE, HEALTH IMPACT

| OMEG NO. | COMPOUND NAME | TYPE | CONC E-6 G/SCM | DS | WDS G/S | LOCAT |
|---|---|---|---|---|---|---|
| 22 A 020* PH | FLUORENE | T | 8.90E 04 | 0.00E-01 | 0.00E-01 | 2 |
| 22 A 020* PH | FLUORENE | T | 6.80E 05 | 0.00E-01 | 0.00E-01 | 3 |
| 58 A 010 | BROMINE | S | 1.30E 02 | 0.00E-01 | 0.00E-01 | |

PRODUCT GAS PARTICULATE

FLOW RATE = 590 G/S (0.57 SCM/S, DRY BASIS)

8.523 SCM AT 25C AND 760 MM HG SAMPLED

TOTAL ORGANIC LOADING = 7.3 G/SCM

TOTAL TCO = 380 MG/SCM  TOTAL GRAV = 6900 MG/SCM

0.17% ORIGINAL SAMPLE TO LC

LC TCO = 5.3 MG  LC GRAV = 97.6 MG  LC TOTAL = 102.9 MG

| LCCAT | ORGANIC LOADING |
|---|---|
| 1 | 870000.0 |
| 2 | 89000.0 |
| 3 | 680000.0 |
| 4 | 410000.0 |
| 5 | 490000.0 |
| 6 | 3600000.0 |
| 7 | 300000.0 |

FLOW RATE = 590.00

STATE: GAS, UNITS IN MICROGRAMS/SCM

IMPACT: ECOLOGY

EXPERIMENTALY DETERMINED DATA

SPARK SOURCE DATA

## PRODUCT GAS PARTICULATE, ECOLOGY IMPACT

| OMEG NO. | | COMPOUND NAME | TYPE | CONC E-6 G/SCM | DS | WDS G/S | LOCAT |
|---|---|---|---|---|---|---|---|
| 83 A 010 | P | MERCURY | D | 6.50E 03 | 6.50E 02 | 3.83E 05 | |
| 15 A 120* | | ISOPROPYL BENZENE | T | 6.80E 05 | 5.70E 02 | 3.34E 05 | 3 |
| 15 A 040* | P | TOLUENE | T | 6.80E 05 | 1.50E 02 | 8.72E 04 | 3 |
| 15 A 120* | | ISOPROPYL BENZENE | T | 8.90E 04 | 7.41E 01 | 4.40E 04 | 2 |
| 65 A 010 | | VANADIUM | S | 3.60E 01 | 3.60E 01 | 2.12E 04 | |
| 15 A 040* | P | TOLUENE | T | 8.90E 04 | 1.93E 01 | 1.14E 04 | 2 |
| 01 B 080 | | BUTADIENES | T | 8.70E 05 | 4.00E-01 | 2.33E 02 | 1 |
| 01 B 060 | | BUTYLENES | T | 8.70E 05 | 3.80E-02 | 2.23E 01 | 1 |
| 16 A 220* | | POLYCHLORINATED BIPHENYLS | D | < 7.60E 00< | 0.00E-01< | 0.00E-01 | 2 |
| 22 C 080* | P | BENZO(B)FLUORANTHENE | D | 1.00E 01 | 0.00E-01 | 0.00E-01 | 2 |
| 21 C 100* | P | BENZO(A)PYRENE | D | 0.00E-01 | 0.00E-01 | 0.00E-01 | 2 |
| 16 A 220* | | POLYCHLORINATED BIPHENYLS | D | 0.00E-01 | 0.00E-01 | 0.00E-01 | 3 |
| 21 B 060* | | 7,12-DIMETHYLBENZ(A)ANTHRACENE | D | 1.60E 02 | 0.00E-01 | 0.00E-01 | 3 |
| 22 C 080* | P | BENZO(B)FLUORANTHENE | D | 3.70E 02 | 0.00E-01 | 0.00E-01 | 3 |
| 21 B 100* | | BENZO(C)PHENANTHRENE & ALKYL DERIVATIVES | D | 0.00E-01 | 0.00E-01 | 0.00E-01 | 2 |
| 21 B 060* | | 7,12-DIMETHYLBENZ(A)ANTHRACENE | D | 0.00E-01 | 0.00E-01 | 0.00E-01 | 2 |
| 21 C 100* | P | BENZO(A)PYRENE | D | 1.90E 02 | 0.00E-01 | 0.00E-01 | 3 |
| 21 D 040* | | DIBENZO(A,I)PYRENE | D | 0.00E-01 | 0.00E-01 | 0.00E-01 | 2 |
| 21 C 060* | P | DIBENZ(A,H)ANTHRACENE | D | 6.10E 00 | 0.00E-01 | 0.00E-01 | 3 |
| 17 B 040 | | 1-CHLORO-2-NITROBENZENE | D | 0.00E-01 | 0.00E-01 | 0.00E-01 | 4 |
| 21 B 080* | | 3-METHYLCHOLANTHRENE | D | 0.00E-01 | 0.00E-01 | 0.00E-01 | 2 |
| 21 C 080* | P | DIBENZ(A,H)ANTHRACENE | D | 0.00E-01 | 0.00E-01 | 0.00E-01 | 2 |
| 03 B 060 | | 2-ETHYL-4-METHYL-1,3-DIOXOLANE | D | 0.00E-01 | 0.00E-01 | 0.00E-01 | 4 |
| 09 A 120 | | TETRAMETHYLSUCCINONITRILE | D | 0.00E-01 | 0.00E-01 | 0.00E-01 | 4 |
| 25 B 040 | | BENZO(B)THIOPHENE | D | 0.00E-01 | 0.00E-01 | 0.00E-01 | 4 |
| 09 B 020 | | BENZONITRILE | D | 0.00E-01 | 0.00E-01 | 0.00E-01 | 4 |
| 12 A 020* | P | N-NITROSODIMETHYLAMINE | D | 0.00E-01 | 0.00E-01 | 0.00E-01 | 5 |
| 10 C 040* | | AMINOTOLUENES | D | 0.00E-01 | 0.00E-01 | 0.00E-01 | 5 |
| 08 B 060* | | B-PROPIOLACTONE | D | 0.00E-01 | 0.00E-01 | 0.00E-01 | 5 |
| 20 A 120* | | 2,4,6-TRINITROPHENOL | D | 0.00E-01 | 0.00E-01 | 0.00E-01 | 5 |
| 20 B 040* | | DINITRO-P-CRESOLS | D | 8.40E 02 | 0.00E-01 | 0.00E-01 | 5 |
| 23 B 100* | | DIHYDROACRIDINE | D | 2.30E 01 | 0.00E-01 | 0.00E-01 | 5 |
| 23 B 220* | | DIBENZ(A,J)ACRIDINE | D | 0.00E-01 | 0.00E-01 | 0.00E-01 | 5 |
| 23 B 240* | | DIBENZ(A,H)ACRIDINE | D | 0.00E-01 | 0.00E-01 | 0.00E-01 | 5 |

PRODUCT GAS PARTICULATE, ECOLOGY IMPACT

| DMEG NO. | | COMPOUND NAME | TYPE | CONC E-6 G/SCM | DS | WDS G/S | LOCAT |
|---|---|---|---|---|---|---|---|
| 12 A 020* | P | N-NITROSODIMETHYLAMINE | D | 0.00E-01 | 0.00E-01 | 0.00E-01 | 6 |
| 10 C 040* | | AMINOTOLUENES | D | 0.00E-01 | 0.00E-01 | 0.00E-01 | 6 |
| 15 A 100 | | BIPHENYL | D | 1.20E 02 | 0.00E-01 | 0.00E-01 | 3 |
| 21 B 040* | P | BENZ(A)ANTHRACENE | D | 1.70E 03 | 0.00E-01 | 0.00E-01 | 3 |
| 20 B 040* | | DINITRO-P-CRESOLS | D | 0.00E-01 | 0.00E-01 | 0.00E-01 | 6 |
| 23 B 100* | | DIHYDROACRIDINE | D | 9.10E 01 | 0.00E-01 | 0.00E-01 | 6 |
| 21 D 040* | | DIBENZO(A,I)PYRENE | D | 0.00E-01 | 0.00E-01 | 0.00E-01 | 3 |
| 21 B 100* | | BENZO(C)PHENANTHRENE & ALKYL DERIVATIVES | D | 9.70E 02 | 0.00E-01 | 0.00E-01 | 3 |
| 38 A 010 | | ALUMINUM | D | 2.70E 04 | 0.00E-01 | 0.00E-01 | |
| 21 B 080* | | 3-METHYLCHOLANTHRENE | D | 4.70E 00 | 0.00E-01 | 0.00E-01 | 3 |
| 49 A 010 | P | ARSENIC | D | 3.70E 02 | 0.00E-01 | 0.00E-01 | |
| 36 A 010 | | BARIUM | D | 7.60E 03 | 0.00E-01 | 0.00E-01 | |
| 17 B 060 | | 1-CHLORO-4-NITROBENZENE | D | 0.00E-01 | 0.00E-01 | 0.00E-01 | 4 |
| 17 A 080 | | DINITROTOLUENES | D | 2.20E 03 | 0.00E-01 | 0.00E-01 | 4 |
| 34 A 010 | | CALCIUM (AS CA+2) | D | 1.50E 05 | 0.00E-01 | 0.00E-01 | |
| 78 A 010 | P | COPPER | D | 2.70E 02 | 0.00E-01 | 0.00E-01 | |
| 72 A 010 | | IRON (AS FE+2) | D | < 3.30E 04< | 0.00E-01< | 0.00E-01 | |
| 33 A 010 | | MAGNESIUM | D | 3.90E 04 | 0.00E-01 | 0.00E-01 | |
| 71 A 010 | P | MANGANESE | D | 1.20E 02 | 0.00E-01 | 0.00E-01 | |
| 21 B 040* | P | BENZ(A)ANTHRACENE | D | 2.80E 01 | 0.00E-01 | 0.00E-01 | 2 |
| 54 A 010 | P | SELENIUM | D | 1.50E 04 | 0.00E-01 | 0.00E-01 | |
| 28 A 010 | | SODIUM | D | 2.10E 04 | 0.00E-01 | 0.00E-01 | |
| 35 A 010 | | STRONTIUM | D | 3.90E 03 | 0.00E-01 | 0.00E-01 | |
| 62 A 010 | | TITANIUM | D | 9.40E 02 | 0.00E-01 | 0.00E-01 | |
| 81 A 010 | P | ZINC | D | 4.80E 02 | 0.00E-01 | 0.00E-01 | |
| 32 A 010 | P | BERYLLIUM | S | 2.60E 00 | 0.00E-01 | 0.00E-01 | |
| 51 A 010 | | BISMUTH | S | 2.60E 00 | 0.00E-01 | 0.00E-01 | |
| 58 A 010 | | BROMINE | S | 1.30E 02 | 0.00E-01 | 0.00E-01 | |
| 84 B 010 | | CERIUM | S | 5.10E 01 | 0.00E-01 | 0.00E-01 | |
| 31 A 010 | | CESIUM | S | 2.30E 00 | 0.00E-01 | 0.00E-01 | |
| 57 A 010 | | CHLORINE (AS CL-) | S | > 3.20E 03> | 0.00E-01> | 0.00E-01 | |
| 66 A 010 | P | CHROMIUM | S | 8.80E 01 | 0.00E-01 | 0.00E-01 | |
| 74 A 010 | | COBALT | S | 1.40E 01 | 0.00E-01 | 0.00E-01 | |
| 84 F 010 | | DYSPROSIUM | S | 1.70E 00 | 0.00E-01 | 0.00E-01 | |

PRODUCT GAS PARTICULATE, ECOLOGY IMPACT

| OMEG NO. | | COMPOUND NAME | TYPE | CONC E-6 G/SCM | OS | WOS G/S | LOCAT |
|---|---|---|---|---|---|---|---|
| 56 A 010 | | FLUORINE (AS F-) | S | 1.30E 03 | 0.00E-01 | 0.00E-01 | |
| 39 A 010 | | GALLIUM | S | 2.30E 01 | 0.00E-01 | 0.00E-01 | |
| 44 A 010 | | GERMANIUM | S | 7.20E 00 | 0.00E-01 | 0.00E-01 | |
| 64 A 010 | | HAFNIUM, (AS HF+4) | S | 2.90E 00 | 0.00E-01 | 0.00E-01 | |
| 59 A 010 | | IODINE (AS I-) | S | < 4.00E 00< | 0.00E-01< | 0.00E-01 | |
| 84 A 010 | | LANTHANUM | S | 3.60E 01 | 0.00E-01 | 0.00E-01 | |
| 46 A 010 | P | LEAD | S | 1.30E 02 | 0.00E-01 | 0.00E-01 | |
| 27 A 010 | | LITHIUM | S | 1.20E 02 | 0.00E-01 | 0.00E-01 | |
| 69 A 010 | | MOLYBDENUM | S | 9.70E 00 | 0.00E-01 | 0.00E-01 | |
| 84 D 010 | | NEODYMIUM | S | 9.70E 00 | 0.00E-01 | 0.00E-01 | |
| 76 A 010 | P | NICKEL | S | 1.10E 02 | 0.00E-01 | 0.00E-01 | |
| 66 A 010 | | NIOBIUM (AS NB+3) | S | 1.30E 01 | 0.00E-01 | 0.00E-01 | |
| 48 A 010 | | PHOSPHORUS | S | > 3.20E 03> | 0.00E-01> | 0.00E-01 | |
| 29 A 010 | | POTASSIUM | S | > 3.20E 03> | 0.00E-01> | 0.00E-01 | |
| 84 C 010 | | PRASEODYMIUM | S | 6.40E 00 | 0.00E-01 | 0.00E-01 | |
| 30 A 010 | | RUBIDIUM (AS RB+) | S | < 7.00E 00< | 0.00E-01< | 0.00E-01 | |
| 84 E 010 | | SAMARIUM | S | 6.40E 00 | 0.00E-01 | 0.00E-01 | |
| 60 A 010 | | SCANDIUM | S | 1.90E 01 | 0.00E-01 | 0.00E-01 | |
| 43 A 010 | | SILICON | S | > 6.70E 03> | 0.00E-01> | 0.00E-01 | |
| 79 A 010 | P | SILVER | S | 1.10E 02 | 0.00E-01 | 0.00E-01 | |
| 53 A 010 | | SULFUR | S | > 3.50E 03> | 0.00E-01> | 0.00E-01 | |
| 55 A 010 | | TELLURIUM | S | 9.70E-01 | 0.00E-01 | 0.00E-01 | |
| 41 A 010 | P | THALLIUM | S | 3.20E 00 | 0.00E-01 | 0.00E-01 | |
| 85 B 010 | | THORIUM | S | 6.40E 00 | 0.00E-01 | 0.00E-01 | |
| 45 A 010 | | TIN | S | 1.30E 01 | 0.00E-01 | 0.00E-01 | |
| 70 A 010 | | TUNGSTEN | S | 3.20E 00 | 0.00E-01 | 0.00E-01 | |
| 85 A 010 | | URANIUM | S | 3.20E 00 | 0.00E-01 | 0.00E-01 | |
| 50 A 010 | P | ANTIMONY | D | < 3.80E 02< | 0.00E-01< | 0.00E-01 | |
| 61 A 010 | | YTTRIUM (AS Y+3) | S | 3.00E 01 | 0.00E-01 | 0.00E-01 | |
| 63 A 010 | | ZIRCONIUM (AS ZR+4) | S | 8.70E 01 | 0.00E-01 | 0.00E-01 | |
| 37 A 010 | | BORON | D | 5.50E 02 | 0.00E-01 | 0.00E-01 | |
| 82 A 010 | P | CADMIUM | D | 2.70E 02 | 0.00E-01 | 0.00E-01 | |
| 02 A 140* | P | DIBROMOCHLOROMETHANE | T | 8.70E 05 | 0.00E-01 | 0.00E-01 | 1 |
| 02 A 140* | P | DIBROMOCHLOROMETHANE | T | 8.90E 04 | 0.00E-01 | 0.00E-01 | 2 |

PRODUCT GAS PARTICULATE, ECOLOGY IMPACT

| DMEG NO. | | COMPOUND NAME | TYPE | CONC E-6 G/SCM | DS | MDS G/S | LOCAT |
|---|---|---|---|---|---|---|---|
| 02 A 160* | P | BROMOFORM | T | 8.70E 05 | 0.00E-01 | 0.00E-01 | 1 |
| 02 A 160* | P | BROMOFORM | T | 8.90E 04 | 0.00E-01 | 0.00E-01 | 2 |
| 02 A 320* | P | HEXACHLOROETHANE | T | 8.70E 05 | 0.00E-01 | 0.00E-01 | 1 |
| 02 A 320* | P | HEXACHLOROETHANE | T | 8.90E 04 | 0.00E-01 | 0.00E-01 | 2 |
| 02 A 340* | P | DICHLOROPROPANES | T | 8.70E 05 | 0.00E-01 | 0.00E-01 | 1 |
| 02 A 340* | P | DICHLOROPROPANES | T | 8.90E 04 | 0.00E-01 | 0.00E-01 | 2 |
| 02 B 080* | P | TETRACHLOROETHENE | T | 8.70E 05 | 0.00E-01 | 0.00E-01 | 1 |
| 02 B 080* | P | TETRACHLOROETHENE | T | 8.90E 04 | 0.00E-01 | 0.00E-01 | 2 |
| 02 B 100* | P | DICHLOROPROPENES | T | 8.70E 05 | 0.00E-01 | 0.00E-01 | 1 |
| 02 B 100* | P | DICHLOROPROPENES | T | 8.90E 04 | 0.00E-01 | 0.00E-01 | 2 |
| 02 B 120* | P | HEXACHLOROBUTADIENE | T | 8.70E 05 | 0.00E-01 | 0.00E-01 | 1 |
| 02 B 120* | P | HEXACHLOROBUTADIENE | T | 8.90E 04 | 0.00E-01 | 0.00E-01 | 2 |
| 02 B 140* | P | HEXACHLOROCYCLOPENTADIENE | T | 8.70E 05 | 0.00E-01 | 0.00E-01 | 1 |
| 02 B 140* | P | HEXACHLOROCYCLOPENTADIENE | T | 8.90E 04 | 0.00E-01 | 0.00E-01 | 2 |
| 04 A 140* | P | 2-CHLOROETHYL VINYL ETHER | T | 4.10E 05 | 0.00E-01 | 0.00E-01 | 4 |
| 04 A 140* | P | 2-CHLOROETHYL VINYL ETHER | T | 4.90E 05 | 0.00E-01 | 0.00E-01 | 5 |
| 04 A 160* | P | 4-CHLOROBUTYL ETHYL ETHER | T | 4.10E 05 | 0.00E-01 | 0.00E-01 | 4 |
| 04 A 160* | P | 4-CHLOROBUTYL ETHYL ETHER | T | 4.90E 05 | 0.00E-01 | 0.00E-01 | 5 |
| 04 A 180* | P | CHLOROPHENYL PHENYL ETHER | T | 4.10E 05 | 0.00E-01 | 0.00E-01 | 4 |
| 04 A 180* | P | CHLOROPHENYL PHENYL ETHER | T | 4.90E 05 | 0.00E-01 | 0.00E-01 | 5 |
| 04 B 020* | P | 1,1'-DICHLOROMETHYL ETHER | T | 4.10E 05 | 0.00E-01 | 0.00E-01 | 4 |
| 04 B 020* | P | 1,1'-DICHLOROMETHYL ETHER | T | 4.90E 05 | 0.00E-01 | 0.00E-01 | 5 |
| 04 B 040* | P | 1,1'-DICHLORODIETHYL ETHER | T | 4.10E 05 | 0.00E-01 | 0.00E-01 | 4 |
| 04 B 040* | P | 1,1'-DICHLORODIETHYL ETHER | T | 4.90E 05 | 0.00E-01 | 0.00E-01 | 5 |
| 07 B 080* | P | ISOPHORONE | T | 4.90E 05 | 0.00E-01 | 0.00E-01 | 5 |
| 07 B 080* | P | ISOPHORONE | T | 3.60E 06 | 0.00E-01 | 0.00E-01 | 6 |
| 08 D 280* | P | PHTHALATE ESTERS (MW:194-279) | T | 4.90E 05 | 0.00E-01 | 0.00E-01 | 5 |
| 08 D 280* | P | PHTHALATE ESTERS (MW:194-279) | T | 3.60E 06 | 0.00E-01 | 0.00E-01 | 6 |
| 08 D 300* | P | DI-2-ETHYLHEXYL PHTHALATE | T | 4.90E 05 | 0.00E-01 | 0.00E-01 | 5 |
| 08 D 300* | P | DI-2-ETHYLHEXYL PHTHALATE | T | 3.60E 06 | 0.00E-01 | 0.00E-01 | 6 |
| 08 D 320* | P | BUTYL BENZYL PHTHALATE | T | 4.90E 05 | 0.00E-01 | 0.00E-01 | 5 |
| 08 D 320* | P | BUTYL BENZYL PHTHALATE | T | 3.60E 06 | 0.00E-01 | 0.00E-01 | 6 |
| 10 C 140* | P | BENZIDINE | T | 4.90E 05 | 0.00E-01 | 0.00E-01 | 5 |
| 10 C 140* | P | BENZIDINE | T | 3.60E 06 | 0.00E-01 | 0.00E-01 | 6 |

PRODUCT GAS PARTICULATE, ECOLOGY IMPACT

| DMEG NO. | COMPOUND NAME | TYPE | CONC E-6 G/SCM | DS | WDS G/S | LOCAT |
|---|---|---|---|---|---|---|
| 12 A 040* P | N-NITROSODIETHYLAMINE | T | 4.90E 05 | 0.00E-01 | 0.00E-01 | 5 |
| 12 A 040* P | N-NITROSODIETHYLAMINE | T | 3.60E 06 | 0.00E-01 | 0.00E-01 | 6 |
| 12 A 060* P | N-NITROSODIPROPYLAMINE | T | 4.90E 05 | 0.00E-01 | 0.00E-01 | 5 |
| 12 A 060* P | N-NITROSODIPROPYLAMINE | T | 3.60E 06 | 0.00E-01 | 0.00E-01 | 6 |
| 08 B 060* | B-PROPIOLACTONE | D | 0.00E-01 | 0.00E-01 | 0.00E-01 | 6 |
| 20 A 120* | 2,4,6-TRINITROPHENOL | D | 0.00E-01 | 0.00E-01 | 0.00E-01 | 6 |
| 15 A 060* P | ETHYL BENZENE | T | 8.90E 04 | 0.00E-01 | 0.00E-01 | 2 |
| 15 A 060* P | ETHYL BENZENE | T | 6.80E 05 | 0.00E-01 | 0.00E-01 | 3 |
| 23 B 220* | DIBENZ(A,J)ACRIDINE | D | 0.00E-01 | 0.00E-01 | 0.00E-01 | 6 |
| 23 B 240* | DIBENZ(A,H)ACRIDINE | D | 0.00E-01 | 0.00E-01 | 0.00E-01 | 6 |
| 16 A 020* P | CHLOROBENZENE | T | 8.90E 04 | 0.00E-01 | 0.00E-01 | 2 |
| 16 A 020* P | CHLOROBENZENE | T | 6.80E 05 | 0.00E-01 | 0.00E-01 | 3 |
| 16 A 100* P | 1,2-DICHLOROBENZENE | T | 8.90E 04 | 0.00E-01 | 0.00E-01 | 2 |
| 16 A 100* P | 1,2-DICHLOROBENZENE | T | 6.80E 05 | 0.00E-01 | 0.00E-01 | 3 |
| 16 A 120* P | 1,3-DICHLOROBENZENE | T | 8.90E 04 | 0.00E-01 | 0.00E-01 | 2 |
| 16 A 120* P | 1,3-DICHLOROBENZENE | T | 6.80E 05 | 0.00E-01 | 0.00E-01 | 3 |
| 16 A 140* P | 1,4-DICHLOROBENZENE | T | 8.90E 04 | 0.00E-01 | 0.00E-01 | 2 |
| 16 A 140* P | 1,4-DICHLOROBENZENE | T | 6.80E 05 | 0.00E-01 | 0.00E-01 | 3 |
| 16 A 160* P | POLYCHLORINATED BENZENES | T | 8.90E 04 | 0.00E-01 | 0.00E-01 | 2 |
| 16 A 160* P | POLYCHLORINATED BENZENES | T | 6.80E 05 | 0.00E-01 | 0.00E-01 | 3 |
| 16 A 200* P | CHLORONAPHTHALENES | T | 8.90E 04 | 0.00E-01 | 0.00E-01 | 2 |
| 16 A 200* P | CHLORONAPHTHALENES | T | 6.80E 05 | 0.00E-01 | 0.00E-01 | 3 |
| 17 A 020* P | NITROBENZENE | T | 4.10E 05 | 0.00E-01 | 0.00E-01 | 4 |
| 17 A 020* P | NITROBENZENE | T | 4.90E 05 | 0.00E-01 | 0.00E-01 | 5 |
| 17 A 081* P | 2,6-DINITROTOLUENE | T | 4.10E 05 | 0.00E-01 | 0.00E-01 | 4 |
| 17 A 081* P | 2,6-DINITROTOLUENE | T | 4.90E 05 | 0.00E-01 | 0.00E-01 | 5 |
| 17 A 084* P | 2,4-DINITROTOLUENE | T | 4.10E 05 | 0.00E-01 | 0.00E-01 | 4 |
| 17 A 084* P | 2,4-DINITROTOLUENE | T | 4.90E 05 | 0.00E-01 | 0.00E-01 | 5 |
| 18 A 020* P | PHENOL | T | 4.90E 05 | 0.00E-01 | 0.00E-01 | 5 |
| 18 A 020* P | PHENOL | T | 3.60E 06 | 0.00E-01 | 0.00E-01 | 6 |
| 18 A 142* P | 2,4-XYLENOL | T | 4.90E 05 | 0.00E-01 | 0.00E-01 | 5 |
| 18 A 142* P | 2,4-XYLENOL | T | 3.60E 06 | 0.00E-01 | 0.00E-01 | 6 |
| 19 A 020* P | 2-CHLOROPHENOL | T | 4.90E 05 | 0.00E-01 | 0.00E-01 | 5 |
| 19 A 020* P | 2-CHLOROPHENOL | T | 3.60E 06 | 0.00E-01 | 0.00E-01 | 6 |

PRODUCT GAS PARTICULATE, ECOLOGY IMPACT

| OMEG NO. | | COMPOUND NAME | TYPE | CONC E-6 G/SCM | DS | ADS G/S | LOCAT |
|---|---|---|---|---|---|---|---|
| 19 A 040* | P | 2,4-DICHLOROPHENOL | T | 4.90E 05 | 0.00E-01 | 0.00E-01 | 5 |
| 19 A 040* | P | 2,4-DICHLOROPHENOL | T | 3.60E 06 | 0.00E-01 | 0.00E-01 | 6 |
| 19 A 060* | P | PENTACHLOROPHENOL | T | 4.90E 05 | 0.00E-01 | 0.00E-01 | 5 |
| 19 A 060* | P | PENTACHLOROPHENOL | T | 3.60E 06 | 0.00E-01 | 0.00E-01 | 6 |
| 19 B 022* | P | CHLORINATED-M-CRESOLS | T | 4.90E 05 | 0.00E-01 | 0.00E-01 | 5 |
| 19 B 022* | P | CHLORINATED-M-CRESOLS | T | 3.60E 06 | 0.00E-01 | 0.00E-01 | 6 |
| 20 A 020* | P | 2-NITROPHENOL | T | 4.90E 05 | 0.00E-01 | 0.00E-01 | 5 |
| 20 A 020* | P | 2-NITROPHENOL | T | 3.60E 06 | 0.00E-01 | 0.00E-01 | 6 |
| 20 A 060* | P | 4-NITROPHENOL | T | 4.90E 05 | 0.00E-01 | 0.00E-01 | 5 |
| 20 A 060* | P | 4-NITROPHENOL | T | 3.60E 06 | 0.00E-01 | 0.00E-01 | 6 |
| 20 A 101* | P | 2,4-DINITROPHENOL | T | 4.90E 05 | 0.00E-01 | 0.00E-01 | 5 |
| 20 A 101* | P | 2,4-DINITROPHENOL | T | 3.60E 06 | 0.00E-01 | 0.00E-01 | 6 |
| 20 B 020* | P | 4,6-DINITRO-O-CRESOL | T | 4.90E 05 | 0.00E-01 | 0.00E-01 | 5 |
| 20 B 020* | P | 4,6-DINITRO-O-CRESOL | T | 3.60E 06 | 0.00E-01 | 0.00E-01 | 6 |
| 21 A 020* | P | NAPHTHALENE | T | 8.90E 04 | 0.00E-01 | 0.00E-01 | 2 |
| 21 A 020* | P | NAPHTHALENE | T | 6.80E 05 | 0.00E-01 | 0.00E-01 | 3 |
| 21 A 100* | PH | ACENAPHTHENE | T | 8.90E 04 | 0.00E-01 | 0.00E-01 | 2 |
| 21 A 100* | PH | ACENAPHTHENE | T | 6.80E 05 | 0.00E-01 | 0.00E-01 | 3 |
| 21 A 120* | PH | ACENAPHTHYLENE | T | 8.90E 04 | 0.00E-01 | 0.00E-01 | 2 |
| 21 A 120* | PH | ACENAPHTHYLENE | T | 6.80E 05 | 0.00E-01 | 0.00E-01 | 3 |
| 21 A 140* | P | ANTHRACENE | T | 8.90E 04 | 0.00E-01 | 0.00E-01 | 2 |
| 21 A 140* | P | ANTHRACENE | T | 6.80E 05 | 0.00E-01 | 0.00E-01 | 3 |
| 21 A 180* | P | PHENANTHRENE | T | 8.90E 04 | 0.00E-01 | 0.00E-01 | 2 |
| 21 A 180* | P | PHENANTHRENE | T | 6.80E 05 | 0.00E-01 | 0.00E-01 | 3 |
| 21 B 120* | P | CHRYSENE | T | 8.90E 04 | 0.00E-01 | 0.00E-01 | 2 |
| 21 B 120* | P | CHRYSENE | T | 6.80E 05 | 0.00E-01 | 0.00E-01 | 3 |
| 21 B 180* | P | PYRENE | T | 8.90E 04 | 0.00E-01 | 0.00E-01 | 2 |
| 21 B 180* | P | PYRENE | T | 6.80E 05 | 0.00E-01 | 0.00E-01 | 3 |
| 21 D 080* | PH | BENZO(GHI)PERYLENE | T | 8.90E 04 | 0.00E-01 | 0.00E-01 | 2 |
| 21 D 080* | PH | BENZO(GHI)PERYLENE | T | 6.80E 05 | 0.00E-01 | 0.00E-01 | 3 |
| 22 A 020* | PH | FLUORENE | T | 8.90E 04 | 0.00E-01 | 0.00E-01 | 2 |
| 22 A 020* | PH | FLUORENE | T | 6.80E 05 | 0.00E-01 | 0.00E-01 | 3 |
| 22 B 040* | P | FLUORANTHENE | T | 8.90E 04 | 0.00E-01 | 0.00E-01 | 2 |
| 22 B 040* | P | FLUORANTHENE | T | 6.80E 05 | 0.00E-01 | 0.00E-01 | 3 |

PRODUCT GAS PARTICULATE, ECOLOGY IMPACT

| OMEG NO. | | COMPOUND NAME | TYPE | CONC E-6 G/SCM | DS | WDS G/S | LOCAT |
|---|---|---|---|---|---|---|---|
| 22 C 020* | P | BENZO(K)FLUORANTHENE | T | 8.90E 04 | 0.00E-01 | 0.00E-01 | 2 |
| 22 C 020* | P | BENZO(K)FLUORANTHENE | T | 6.80E 05 | 0.00E-01 | 0.00E-01 | 3 |
| 22 D 020* | P | INDENO(1,2,3-CD)PYRENE | T | 8.90E 04 | 0.00E-01 | 0.00E-01 | 2 |
| 22 D 020* | P | INDENO(1,2,3-CD)PYRENE | T | 6.80E 05 | 0.00E-01 | 0.00E-01 | 3 |

PRODUCT GAS ORGANIC MODULE COMPOSITE

FLOW RATE = 590 G/S (0.57 SCM/S, DRY BASIS)

5.555 SCM AT 25C AND 760 MM HG SAMPLED

TOTAL ORGANIC LOADING = 8.1 G/SCM

TOTAL TCO = 6.0 G/SCM  TOTAL GRAV = 2.2 G/SCM

0.195% ORIGINAL SAMPLE TO LC

LC TCO = 64.7 MG  LC GRAV = 24.0 MG  LC TOTAL = 88.7 MG

| LCCAT | ORGANIC LOADING |
|---|---|
| 1 | 1600000.0 |
| 2 | 230000.0 |
| 3 | 660000.0 |
| 4 | 130000.0 |
| 5 | 570000.0 |
| 6 | 710000.0 |
| 7 | 2500000.0 |

FLOW RATE = 590.00

MINIMUM DISCHARGE SEVERITY = .010

STATE: GAS, UNITS IN MICROGRAMS/SCM

IMPACT: HEALTH

EXPERIMENTALY DETERMINED DATA

SPARK SOURCE DATA

## PRODUCT GAS ORGANIC MODULE COMPOSITE, HEALTH IMPACT

| DMEG NO. | | | COMPOUND NAME | TYPE | CONC E-6 G/SCM | DS | WDS G/S | LCCAT |
|---|---|---|---|---|---|---|---|---|
| 04 B 020* | P | W | 1,1'-DICHLOROMETHYL ETHER | T | 5.70E 05 | 1.14E 05 | 6.72E 07 | 5 |
| 04 B 020* | P | W | 1,1'-DICHLOROMETHYL ETHER | T | 1.30E 05 | 2.60E 04 | 1.53E 07 | 4 |
| 02 B 140* | P | W | HEXACHLOROCYCLOPENTADIENE | T | 1.60E 06 | 1.50E 04 | 8.60E 06 | 1 |
| 12 A 020* | P | W | N-NITROSODIMETHYLAMINE | T | 7.10E 05 | 1.10E 04 | 6.44E 06 | 6 |
| 08 B 060* | | W | B-PROPIOLACTONE | T | 2.50E 06 | 7.81E 03 | 4.60E 06 | 7 |
| 42 A 070 | | | CARBON MONOXIDE | D | 3.00E 08 | 7.50E 03 | 4.42E 06 | |
| 20 A 120* | | W | 2,4,6-TRINITROPHENOL | T | 7.10E 05 | 7.10E 03 | 4.20E 06 | 6 |
| 10 C 100* | | | 1,4-DIAMINOBENZENE | T | 7.10E 05 | 7.10E 03 | 4.20E 06 | 6 |
| 10 C 040* | | | AMINOTOLUENES | T | 7.10E 05 | 6.50E 03 | 3.80E 06 | 6 |
| 10 C 043* | | | 4-AMINOTOLUENE | T | 7.10E 05 | 6.50E 03 | 3.80E 06 | 6 |
| 10 C 042* | | | 3-AMINOTOLUENE | T | 7.10E 05 | 6.50E 03 | 3.80E 06 | 6 |
| 10 C 041* | | | 2-AMINOTOLUENE | T | 7.10E 05 | 6.50E 03 | 3.80E 06 | 6 |
| 12 A 040* | P | | N-NITROSODIETHYLAMINE | T | 7.10E 05 | 5.91E 03 | 3.50E 06 | 6 |
| 10 C 100* | | | 1,4-DIAMINOBENZENE | T | 5.70E 05 | 5.70E 03 | 3.40E 06 | 5 |
| 23 C 160* | | W | DIBENZO(C,G)CARBAZOLE | T | 5.70E 05 | 5.70E 03 | 3.40E 06 | 5 |
| 10 C 041* | | | 2-AMINOTOLUENE | T | 5.70E 05 | 5.20E 03 | 3.10E 06 | 5 |
| 10 C 043* | | | 4-AMINOTOLUENE | T | 5.70E 05 | 5.20E 03 | 3.10E 06 | 5 |
| 10 C 042* | | | 3-AMINOTOLUENE | T | 5.70E 05 | 5.20E 03 | 3.10E 06 | 5 |
| 12 A 040* | P | | N-NITROSODIETHYLAMINE | T | 5.70E 05 | 4.80E 03 | 2.80E 06 | 5 |
| 23 B 100* | | W | DIHYDROACRIDINE | T | 7.10E 05 | 4.43E 03 | 2.61E 06 | 6 |
| 10 C 220* | | | 2-AMINONAPHTHALENE | T | 7.10E 05 | 4.20E 03 | 2.50E 06 | 6 |
| 20 B 042* | | | 2,6-DINITRO-P-CRESOL | T | 7.10E 05 | 3.60E 03 | 2.10E 06 | 6 |
| 20 B 041* | | | 3,5-DINITRO-P-CRESOL | T | 7.10E 05 | 3.60E 03 | 2.10E 06 | 6 |
| 20 B 020* | P | W | 4,6-DINITRO-O-CRESOL | T | 7.10E 05 | 3.60E 03 | 2.10E 06 | 6 |
| 20 B 040* | | W | DINITRO-P-CRESOLS | T | 7.10E 05 | 3.60E 03 | 2.10E 06 | 6 |
| 10 C 220* | | | 2-AMINONAPHTHALENE | T | 5.70E 05 | 3.40E 03 | 2.00E 06 | 5 |
| 23 B 240* | | | DIBENZ(A,H)ACRIDINE | T | 7.10E 05 | 3.22E 03 | 1.90E 06 | 6 |
| 02 A 380* | | W | HEXACHLOROCYCLOHEXANE | T | 1.60E 06 | 3.20E 03 | 1.90E 06 | 1 |
| 14 B 020 | | W | DIMETHYL SULFOXIDE | T | 2.50E 06 | 3.10E 03 | 1.82E 06 | 7 |
| 21 B 106* | | | 7-METHYL BENZO(C)PHENANTHRENE | T | 6.60E 05 | 3.00E 03 | 1.80E 06 | 3 |
| 21 B 102* | | | 1-METHYL BENZO(C)PHENANTHRENE | T | 6.60E 05 | 3.00E 03 | 1.80E 06 | 3 |
| 21 B 103* | | | 2-METHYL BENZO(C)PHENANTHRENE | T | 6.60E 05 | 3.00E 03 | 1.80E 06 | 3 |
| 21 B 108* | | | 2-ETHYL BENZO(C)PHENANTHRENE | T | 6.60E 05 | 3.00E 03 | 1.80E 06 | 3 |
| 21 B 107* | | | 8-METHYL BENZO(C)PHENANTHRENE | T | 6.60E 05 | 3.00E 03 | 1.80E 06 | 3 |

PRODUCT GAS ORGANIC MODULE COMPOSITE, HEALTH IMPACT

| OMEG NO. | | COMPOUND NAME | TYPE | CONC E-6 G/SCM | DS | WDS G/S | LCCAT |
|---|---|---|---|---|---|---|---|
| 21 B 104* | | 5-METHYL BENZO(C)PHENANTHRENE | T | 6.60E 05 | 3.00E 03 | 1.80E 06 | 3 |
| 21 B 10A* | | N-PROPYL BENZO(C)PHENANTHRENE | T | 6.60E 05 | 3.00E 03 | 1.80E 06 | 3 |
| 21 B 105* | | 6-METHYL BENZO(C)PHENANTHRENE | T | 6.60E 05 | 3.00E 03 | 1.80E 06 | 3 |
| 21 B 109* | | 6-ETHYL BENZO(C)PHENANTHRENE | T | 6.60E 05 | 3.00E 03 | 1.80E 06 | 3 |
| 21 B 101* | | BENZO(C)PHENANTHRENE | T | 6.60E 05 | 3.00E 03 | 1.80E 06 | 3 |
| 21 B 10B* | | ISOPROPYL BENZO(C)PHENANTHRENE | T | 5.70E 05 | 2.90E 03 | 1.70E 06 | 5 |
| 20 B 042* | | 2,6-DINITRO-P-CRESOL | T | 5.70E 05 | 2.90E 03 | 1.70E 06 | 5 |
| 20 B 020* | P W | 4,6-DINITRO-O-CRESOL | T | 5.70E 05 | 2.90E 03 | 1.70E 06 | 5 |
| 20 B 041* | | 3,5-DINITRO-P-CRESOL | T | 7.10E 05 | 2.84E 03 | 1.70E 06 | 6 |
| 23 B 220* | | DIBENZ(A,J)ACRIDINE | T | 2.50E 06 | 2.50E 03 | 1.50E 06 | 7 |
| 08 A 121* | | MYRISTIC ACID | T | 2.50E 06 | 2.50E 03 | 1.50E 06 | 7 |
| 08 A 123* | | STEARIC ACID | T | 2.50E 06 | 2.50E 03 | 1.50E 06 | 7 |
| 08 A 120* | W | SATURATED LONG CHAIN ACIDS (MW:228-285) | T | 2.50E 06 | 2.50E 03 | 1.50E 06 | 7 |
| 08 A 122* | | PALMITIC ACID | T | 7.10E 05 | 2.21E 03 | 1.30E 06 | 6 |
| 08 B 060* | W | B-PROPIOLACTONE | T | 2.30E 05 | 2.10E 03 | 1.23E 06 | 2 |
| 02 B 140* | P W | HEXACHLOROCYCLOPENTADIENE | T | 7.10E 05 | 1.42E 03 | 8.40E 05 | 6 |
| 10 C 081* | | O-ANISIDINE | T | 7.10E 05 | 1.42E 03 | 8.40E 05 | 6 |
| 10 C 080* | | ANISIDINES | T | 7.10E 05 | 1.42E 03 | 8.40E 05 | 6 |
| 10 C 082* | | M-ANISIDINE | T | 7.10E 05 | 1.42E 03 | 8.40E 05 | 6 |
| 19 A 060* | P W | PENTACHLOROPHENOL | T | 7.10E 05 | 1.42E 03 | 8.40E 05 | 6 |
| 10 C 083* | | P-ANISIDINE | T | 7.10E 05 | 1.42E 03 | 8.40E 05 | 6 |
| 13 A 100* | W | BENZENETHIOL | T | 1.30E 05 | 1.30E 03 | 7.70E 05 | 4 |
| 23 C 160* | W | DIBENZO(C,G)CARBAZOLE | T | 7.10E 05 | 1.30E 03 | 7.50E 05 | 6 |
| 10 C 200* | | 1-AMINONAPHTHALENE | T | 1.60E 06 | 1.14E 03 | 6.74E 05 | 1 |
| 02 A 180* | | DIBROMODICHLOROMETHANE | T | 5.70E 05 | 1.14E 03 | 6.72E 05 | 5 |
| 13 A 100* | W | BENZENETHIOL | T | 5.70E 05 | 1.14E 03 | 6.72E 05 | 5 |
| 10 C 081* | | O-ANISIDINE | T | 5.70E 05 | 1.14E 03 | 6.72E 05 | 5 |
| 10 C 082* | | M-ANISIDINE | T | 5.70E 05 | 1.14E 03 | 6.72E 05 | 5 |
| 10 C 083* | | P-ANISIDINE | T | 5.70E 05 | 1.14E 03 | 6.72E 05 | 5 |
| 19 A 060* | P W | PENTACHLOROPHENOL | T | 5.70E 05 | 1.14E 03 | 6.72E 05 | 5 |
| 10 C 080* | | ANISIDINES | T | 2.30E 05 | 1.04E 03 | 6.20E 05 | 2 |
| 21 B 10B* | | ISOPROPYL BENZO(C)PHENANTHRENE | T | 2.30E 05 | 1.04E 03 | 6.20E 05 | 2 |
| 21 B 102* | | 1-METHYL BENZO(C)PHENANTHRENE | T | 2.30E 05 | 1.04E 03 | 6.20E 05 | 2 |
| 21 B 101* | | BENZO(C)PHENANTHRENE | T | 2.30E 05 | 1.04E 03 | 6.20E 05 | 2 |

PRODUCT GAS ORGANIC MODULE COMPOSITE, HEALTH IMPACT

| OMEG NO. | | COMPOUND NAME | TYPE | CONC E-6 G/SCM | DS | WDS G/S | LCCAT |
|---|---|---|---|---|---|---|---|
| 21 B 103* | | 2-METHYL BENZO(C)PHENANTHRENE | T | 2.30E 05 | 1.04E 03 | 6.20E 05 | 2 |
| 21 B 109* | | 6-ETHYL BENZO(C)PHENANTHRENE | T | 2.30E 05 | 1.04E 03 | 6.20E 05 | 2 |
| 21 B 10A* | | N-PROPYL BENZO(C)PHENANTHRENE | T | 2.30E 05 | 1.04E 03 | 6.20E 05 | 2 |
| 21 B 108* | | 2-ETHYL BENZO(C)PHENANTHRENE | T | 2.30E 05 | 1.04E 03 | 6.20E 05 | 2 |
| 21 B 107* | | 8-METHYL BENZO(C)PHENANTHRENE | T | 2.30E 05 | 1.04E 03 | 6.20E 05 | 2 |
| 21 B 105* | | 6-METHYL BENZO(C)PHENANTHRENE | T | 2.30E 05 | 1.04E 03 | 6.20E 05 | 2 |
| 21 B 106* | | 7-METHYL BENZO(C)PHENANTHRENE | T | 2.30E 05 | 1.04E 03 | 6.20E 05 | 2 |
| 21 B 104* | | 5-METHYL BENZO(C)PHENANTHRENE | T | 2.30E 05 | 1.04E 03 | 6.20E 05 | 2 |
| 10 C 200* | | 1-AMINONAPHTHALENE | T | 5.70E 05 | 1.01E 03 | 6.00E 05 | 5 |
| 13 A 140* | | PERCHLOROMETHANETHIOL | T | 7.10E 05 | 8.90E 02 | 5.23E 05 | 6 |
| 08 A 140* | | OLEIC ACID | T | 2.50E 06 | 7.60E 02 | 4.50E 05 | 7 |
| 13 A 140* | | PERCHLOROMETHANETHIOL | T | 5.70E 05 | 7.12E 02 | 4.20E 05 | 5 |
| 08 A 120* | W | SATURATED LONG CHAIN ACIDS (MW:228-285) | T | 7.10E 05 | 7.10E 02 | 4.20E 05 | 6 |
| 08 A 121* | | MYRISTIC ACID | T | 7.10E 05 | 7.10E 02 | 4.20E 05 | 6 |
| 08 C 060* | W | 6-HEXANELACTAM | T | 7.10E 05 | 7.10E 02 | 4.20E 05 | 6 |
| 08 A 122* | | PALMITIC ACID | T | 7.10E 05 | 7.10E 02 | 4.20E 05 | 6 |
| 10 C 140* | P | BENZIDINE | T | 7.10E 05 | 7.10E 02 | 4.20E 05 | 6 |
| 08 A 123* | | STEARIC ACID | T | 7.10E 05 | 7.10E 02 | 4.20E 05 | 6 |
| 21 D 060* | | DIBENZO(A,L)PYRENE | T | 6.60E 05 | 6.00E 02 | 3.54E 05 | 3 |
| 47 A 060 | P | AMMONIA | D | 1.10E 07 | 5.91E 02 | 3.50E 05 | |
| 08 A 120* | W | SATURATED LONG CHAIN ACIDS (MW:228-285) | T | 5.70E 05 | 5.70E 02 | 3.40E 05 | 5 |
| 08 A 122* | | PALMITIC ACID | T | 5.70E 05 | 5.70E 02 | 3.40E 05 | 5 |
| 08 A 123* | | STEARIC ACID | T | 5.70E 05 | 5.70E 02 | 3.40E 05 | 5 |
| 08 A 121* | | MYRISTIC ACID | T | 5.70E 05 | 5.70E 02 | 3.40E 05 | 5 |
| 08 C 060* | W | 6-HEXANELACTAM | T | 5.70E 05 | 5.70E 02 | 3.40E 05 | 5 |
| 17 B 040* | W | 1-CHLORO-2-NITROBENZENE | T | 5.70E 05 | 5.70E 02 | 3.40E 05 | 5 |
| 10 C 140* | P | BENZIDINE | T | 5.70E 05 | 5.70E 02 | 3.40E 05 | 5 |
| 17 B 060* | W | 1-CHLORO-4-NITROBENZENE | T | 5.70E 05 | 5.70E 02 | 3.40E 05 | 5 |
| 12 B 020* | W | N-METHYL-N-NITROSOANILINE | T | 7.10E 05 | 5.50E 02 | 3.22E 05 | 6 |
| 10 C 120* | | 4-AMINOBIPHENYL | T | 7.10E 05 | 5.50E 02 | 3.22E 05 | 6 |
| 20 A 100* | | DINITROPHENOLS | T | 7.10E 05 | 5.10E 02 | 3.00E 05 | 6 |
| 20 A 102* | | 2,5-DINITROPHENOL | T | 7.10E 05 | 5.10E 02 | 3.00E 05 | 6 |
| 20 A 101* | P | 2,4-DINITROPHENOL | T | 7.10E 05 | 5.10E 02 | 3.00E 05 | 6 |
| 20 A 080* | | 2-AMINO-4,6-DINITROPHENOL | T | 7.10E 05 | 5.10E 02 | 3.00E 05 | 6 |

PRODUCT GAS ORGANIC MODULE COMPOSITE, HEALTH IMPACT

| DMEG NO. | | | COMPOUND NAME | TYPE | CONC E-6 G/SCM | DS | WDS G/S | LCCAT |
|---|---|---|---|---|---|---|---|---|
| 20 A 103* | | | 2,6-DINITROPHENOL | I | 7.10E 05 | 5.10E 02 | 3.00E 05 | 6 |
| 02 A 380* | | W | HEXACHLOROCYCLOHEXANE | T | 2.30E 05 | 4.60E 02 | 2.71E 05 | 2 |
| 12 B 020* | | W | N-METHYL-N-NITROSOANILINE | T | 5.70E 05 | 4.40E 02 | 2.60E 05 | 5 |
| 17 A 060* | | W | 4-NITROBIPHENYL | T | 5.70E 05 | 4.40E 02 | 2.60E 05 | 5 |
| 10 C 120* | | | 4-AMINOBIPHENYL | T | 5.70E 05 | 4.40E 02 | 2.60E 05 | 5 |
| 08 A 103* | | | CAPRIC ACID | T | 2.50E 06 | 4.31E 02 | 2.54E 05 | 7 |
| 08 A 104* | | | LAURIC ACID | T | 2.50E 06 | 4.31E 02 | 2.54E 05 | 7 |
| 08 A 102* | | | CAPRYLIC ACID | T | 2.50E 06 | 4.31E 02 | 2.54E 05 | 7 |
| 08 A 100* | | | SATURATED LONG CHAIN ACIDS (MW:116-201) | T | 2.50E 06 | 4.31E 02 | 2.54E 05 | 7 |
| 08 A 101* | | | CAPROIC ACID | T | 2.50E 06 | 4.31E 02 | 2.54E 05 | 7 |
| 22 C 020* | P | | BENZO(K)FLUORANTHENE | T | 6.60E 05 | 4.12E 02 | 2.43E 05 | 3 |
| 22 D 020* | P | W | INDENO(1,2,3-CD)PYRENE | T | 6.60E 05 | 4.12E 02 | 2.43E 05 | 3 |
| 21 A 180* | P | W | PHENANTHRENE | T | 6.60E 05 | 4.12E 02 | 2.43E 05 | 3 |
| 20 A 100* | | | DINITROPHENOLS | T | 5.70E 05 | 4.10E 02 | 2.40E 05 | 5 |
| 20 A 103* | | | 2,6-DINITROPHENOL | T | 5.70E 05 | 4.10E 02 | 2.40E 05 | 5 |
| 20 A 101* | P | | 2,4-DINITROPHENOL | T | 5.70E 05 | 4.10E 02 | 2.40E 05 | 5 |
| 20 A 080* | | | 2-AMINO-4,6-DINITROPHENOL | T | 5.70E 05 | 4.10E 02 | 2.40E 05 | 5 |
| 20 A 102* | | | 2,5-DINITROPHENOL | T | 5.70E 05 | 4.10E 02 | 2.40E 05 | 5 |
| 02 B 120* | P | | HEXACHLOROBUTADIENE | T | 1.60E 06 | 3.90E 02 | 2.30E 05 | 1 |
| 17 A 082* | | | 3,4-DINITROTOLUENE | T | 5.70E 05 | 3.80E 02 | 2.24E 05 | 5 |
| 17 A 083* | | | 2,3-DINITROTOLUENE | T | 5.70E 05 | 3.80E 02 | 2.24E 05 | 5 |
| 17 A 080* | | | DINITROTOLUENES | T | 5.70E 05 | 3.80E 02 | 2.24E 05 | 5 |
| 17 A 084* | P | | 2,4-DINITROTOLUENE | T | 5.70E 05 | 3.80E 02 | 2.24E 05 | 5 |
| 17 A 086* | | | 3,5-DINITROTOLUENE | T | 5.70E 05 | 3.80E 02 | 2.24E 05 | 5 |
| 17 A 081* | P | | 2,6-DINITROTOLUENE | T | 5.70E 05 | 3.80E 02 | 2.24E 05 | 5 |
| 17 A 085* | | | 2,5-DINITROTOLUENE | T | 5.70E 05 | 3.80E 02 | 2.24E 05 | 5 |
| 21 B 142* | | | 5-METHYL CHRYSENE | T | 6.60E 05 | 3.70E 02 | 2.20E 05 | 3 |
| 21 B 141* | | | 4-METHYL CHRYSENE | T | 6.60E 05 | 3.70E 02 | 2.20E 05 | 3 |
| 21 B 140* | | | METHYL CHRYSENES | T | 6.60E 05 | 3.70E 02 | 2.20E 05 | 3 |
| 18 B 060* | | W | 1,4-DIHYDROXYBENZENE | T | 7.10E 05 | 3.60E 02 | 2.10E 05 | 6 |
| 15 B 060* | | W | 4,4'-DIPHENYLBIPHENYL | T | 6.60E 05 | 3.30E 02 | 1.94E 05 | 3 |
| 02 A 160* | P | | BROMOFORM | T | 1.60E 06 | 3.20E 02 | 1.90E 05 | 1 |
| 21 B 120* | P | | CHRYSENE | T | 6.60E 05 | 3.00E 02 | 1.80E 05 | 3 |
| 12 A 060* | P | | N-NITROSODIPROPYLAMINE | T | 7.10E 05 | 3.00E 02 | 1.74E 05 | 6 |

PRODUCT GAS ORGANIC MODULE COMPOSITE, HEALTH IMPACT

| DMEG NO. | | | COMPOUND NAME | TYPE | CONC E-6 G/SCM | US | WDS G/S | LCCAT |
|---|---|---|---|---|---|---|---|---|
| 04 A 050* | | W | EPICHLORHYDRIN | T | 5.70E 05 | 2.90E 02 | 1.70E 05 | 5 |
| 04 A 040* | | W | 2-CHLORO-1,2-EPOXYPROPANE | T | 5.70E 05 | 2.90E 02 | 1.70E 05 | 5 |
| 04 A 060* | | W | 1-CHLORO-1,3-EPOXYPROPANE | T | 5.70E 05 | 2.90E 02 | 1.70E 05 | 5 |
| 18 B 060* | | W | 1,4-DIHYDROXYBENZENE | T | 5.70E 05 | 2.90E 02 | 1.70E 05 | 5 |
| 21 C 160* | | | PICENE | T | 6.60E 05 | 2.64E 02 | 1.60E 05 | 3 |
| 12 A 060* | P | | N-NITROSODIPROPYLAMINE | T | 5.70E 05 | 2.40E 02 | 1.40E 05 | 5 |
| 15 A 160* | | W | BIPHENYL | T | 2.30E 05 | 2.30E 02 | 1.40E 05 | 2 |
| 21 C 120* | | | BENZO(E)PYRENE | T | 6.60E 05 | 2.20E 02 | 1.30E 05 | 3 |
| 08 A 140* | | | OLEIC ACID | T | 7.10E 05 | 2.20E 02 | 1.30E 05 | 6 |
| 23 C 020* | | | PYRROLE | T | 5.70E 05 | 2.11E 02 | 1.24E 05 | 5 |
| 21 D 060* | | | DIBENZO(A,L)PYRENE | T | 2.30E 05 | 2.10E 02 | 1.23E 05 | 2 |
| 09 A 120* | | W | TETRAMETHYLSUCCINONITRILE | T | 5.70E 05 | 1.90E 02 | 1.12E 05 | 5 |
| 21 D 020* | | | DIBENZO(A,H)PYRENE | T | 6.60E 05 | 1.80E 02 | 1.10E 05 | 3 |
| 08 A 140* | | | OLEIC ACID | T | 5.70E 05 | 1.72E 02 | 1.01E 05 | 5 |
| 23 D 020* | | W | BENZOTHIAZOLE | T | 7.10E 05 | 1.70E 02 | 9.74E 04 | 6 |
| 02 A 180* | | | DIBROMODICHLOROMETHANE | T | 2.30E 05 | 1.64E 02 | 9.70E 04 | 2 |
| 02 A 320* | P | | HEXACHLOROETHANE | T | 1.60E 06 | 1.60E 02 | 9.44E 04 | 1 |
| 03 B 020* | | W | 1,4-DIOXANE | T | 5.70E 05 | 1.60E 02 | 9.34E 04 | 5 |
| 03 B 040* | | W | 1,3-DIOXANE | T | 5.70E 05 | 1.60E 02 | 9.34E 04 | 5 |
| 23 D 040* | | | METHYL BENZOTHIAZOLE | T | 7.10E 05 | 1.51E 02 | 8.91E 04 | 6 |
| 02 B 100* | P | | DICHLOROPROPENES | T | 1.60E 06 | 1.50E 02 | 8.60E 04 | 1 |
| 02 B 103* | | | CIS-1,3-DICHLOROPROPENE | T | 1.60E 06 | 1.50E 02 | 8.60E 04 | 1 |
| 02 B 104* | | | TRANS-1,3-DICHLOROPROPENE | T | 1.60E 06 | 1.50E 02 | 8.60E 04 | 1 |
| 22 D 020* | P | W | INDENO(1,2,3-CD)PYRENE | T | 2.30E 05 | 1.43E 02 | 8.50E 04 | 2 |
| 22 C 020* | P | | BENZO(K)FLUORANTHENE | T | 2.30E 05 | 1.43E 02 | 8.50E 04 | 2 |
| 21 A 180* | P | W | PHENANTHRENE | T | 2.30E 05 | 1.43E 02 | 8.50E 04 | 2 |
| 08 D 281* | | | DIMETHYL PHTHALATE | T | 7.10E 05 | 1.42E 02 | 8.40E 04 | 6 |
| 08 D 300* | P | | DI-2-ETHYLHEXYL PHTHALATE | T | 7.10E 05 | 1.42E 02 | 8.40E 04 | 6 |
| 08 D 283* | | | DI-N-BUTYL PHTHALATE | T | 7.10E 05 | 1.42E 02 | 8.40E 04 | 6 |
| 08 D 280* | P | W | PHTHALATE ESTERS (MW:194-279) | T | 7.10E 05 | 1.42E 02 | 8.40E 04 | 6 |
| 08 D 282* | | | DIETHYL PHTHALATE | T | 7.10E 05 | 1.42E 02 | 8.40E 04 | 6 |
| 23 D 020* | | W | BENZOTHIAZOLE | T | 5.70E 05 | 1.32E 02 | 7.82E 04 | 5 |
| 16 B 020* | | W | A-CHLOROTOLUENE | T | 6.60E 05 | 1.32E 02 | 7.80E 04 | 3 |
| 17 B 060* | | W | 1-CHLORO-4-NITROBENZENE | T | 1.30E 05 | 1.30E 02 | 7.70E 04 | 4 |

PRODUCT GAS ORGANIC MODULE COMPOSITE, HEALTH IMPACT

| DMEG NO. | | COMPOUND NAME | TYPE | CONC E-6 G/SCM | DS | WDS G/S | LCCAT |
|---|---|---|---|---|---|---|---|
| 17 B 040* | W | 1-CHLORO-2-NITROBENZENE | T | 1.30E 05 | 1.30E 02 | 7.70E 04 | 4 |
| 21 B 141* | | 4-METHYL CHRYSENE | T | 2.30E 05 | 1.30E 02 | 7.53E 04 | 2 |
| 21 B 142* | | 5-METHYL CHRYSENE | T | 2.30E 05 | 1.30E 02 | 7.53E 04 | 2 |
| 21 B 140* | | METHYL CHRYSENES | T | 2.30E 05 | 1.30E 02 | 7.53E 04 | 2 |
| 08 A 102* | | CAPRYLIC ACID | T | 7.10E 05 | 1.22E 02 | 7.22E 04 | 6 |
| 08 A 101* | | CAPROIC ACID | T | 7.10E 05 | 1.22E 02 | 7.22E 04 | 6 |
| 08 A 104* | | LAURIC ACID | T | 7.10E 05 | 1.22E 02 | 7.22E 04 | 6 |
| 08 A 103* | | CAPRIC ACID | T | 7.10E 05 | 1.22E 02 | 7.22E 04 | 6 |
| 08 A 100* | | SATURATED LONG CHAIN ACIDS (MW:116-201) | T | 7.10E 05 | 1.22E 02 | 7.22E 04 | 6 |
| 23 D 040* | | METHYL BENZOTHIAZOLE | T | 5.70E 05 | 1.21E 02 | 7.20E 04 | 5 |
| 23 A 102* | | 3-CHLOROPYRIDINE | T | 7.10E 05 | 1.20E 02 | 7.10E 04 | 6 |
| 23 A 101* | | 2-CHLOROPYRIDINE | T | 7.10E 05 | 1.20E 02 | 7.10E 04 | 6 |
| 23 A 100* | W | CHLOROPYRIDINES | T | 7.10E 05 | 1.20E 02 | 7.10E 04 | 6 |
| 23 A 103* | | 4-CHLOROPYRIDINE | T | 7.10E 05 | 1.20E 02 | 7.10E 04 | 6 |
| 10 A 060* | | ETHANOLAMINE | T | 7.10E 05 | 1.20E 02 | 7.00E 04 | 6 |
| 15 B 060* | W | 4,4'-DIPHENYLBIPHENYL | T | 2.30E 05 | 1.20E 02 | 6.80E 04 | 2 |
| 17 A 020* | P | NITROBENZENE | T | 5.70E 05 | 1.14E 02 | 6.72E 04 | 5 |
| 08 D 282* | | DIETHYL PHTHALATE | T | 5.70E 05 | 1.14E 02 | 6.72E 04 | 5 |
| 08 D 280* | P W | PHTHALATE ESTERS (MW:194-279) | T | 5.70E 05 | 1.14E 02 | 6.72E 04 | 5 |
| 08 D 281* | | DIMETHYL PHTHALATE | T | 5.70E 05 | 1.14E 02 | 6.72E 04 | 5 |
| 08 D 283* | | DI-N-BUTYL PHTHALATE | T | 5.70E 05 | 1.14E 02 | 6.72E 04 | 5 |
| 08 D 300* | P | DI-2-ETHYLHEXYL PHTHALATE | T | 5.70E 05 | 1.14E 02 | 6.72E 04 | 5 |
| 08 A 080* | | VALERIC ACID | T | 2.50E 06 | 1.10E 02 | 6.41E 04 | 7 |
| 21 B 120* | P | CHRYSENE | T | 2.30E 05 | 1.04E 02 | 6.20E 04 | 2 |
| 53 A 090 | | HYDROGEN SULFIDE | D | 1.54E 06 | 1.02E 02 | 6.10E 04 | |
| 22 C 040* | | BENZO(J)FLUORANTHENE | T | 6.60E 05 | 1.01E 02 | 6.00E 04 | 3 |
| 19 A 040* | P | 2,4-DICHLOROPHENOL | T | 7.10E 05 | 1.01E 02 | 6.00E 04 | 6 |
| 08 A 040* | | ACETIC ACID | T | 2.50E 06 | 1.00E 02 | 5.90E 04 | 7 |
| 17 A 060* | W | 4-NITROBIPHENYL | T | 1.30E 05 | 1.00E 02 | 5.90E 04 | 4 |
| 08 A 104* | | LAURIC ACID | T | 5.70E 05 | 9.82E 01 | 5.80E 04 | 5 |
| 08 A 102* | | CAPRYLIC ACID | T | 5.70E 05 | 9.82E 01 | 5.80E 04 | 5 |
| 08 A 100* | | SATURATED LONG CHAIN ACIDS (MW:116-201) | T | 5.70E 05 | 9.82E 01 | 5.80E 04 | 5 |
| 08 A 101* | | CAPROIC ACID | T | 5.70E 05 | 9.82E 01 | 5.80E 04 | 5 |
| 08 A 103* | | CAPRIC ACID | T | 5.70E 05 | 9.82E 01 | 5.80E 04 | 5 |

PRODUCT GAS ORGANIC MODULE COMPOSITE, HEALTH IMPACT

| DMEG NO. | | COMPOUND NAME | TYPE | CONC E-6 G/SCM | DS | WDS G/S | LCCAT |
|---|---|---|---|---|---|---|---|
| 23 A 101* | | 2-CHLOROPYRIDINE | T | 5.70E 05 | 9.70E 01 | 5.70E 04 | 5 |
| 23 A 103* | | 4-CHLOROPYRIDINE | T | 5.70E 05 | 9.70E 01 | 5.70E 04 | 5 |
| 23 A 102* | | 3-CHLOROPYRIDINE | T | 5.70E 05 | 9.70E 01 | 5.70E 04 | 5 |
| 23 A 100* | W | CHLOROPYRIDINES | T | 5.70E 05 | 9.70E 01 | 5.70E 04 | 5 |
| 16 B 043* | | 1,4-BIS(CHLOROMETHYL)BENZENE | T | 6.60E 05 | 9.60E 01 | 5.64E 04 | 3 |
| 16 B 042* | | 1,3-BIS(CHLOROMETHYL)BENZENE | T | 6.60E 05 | 9.60E 01 | 5.64E 04 | 3 |
| 16 B 041* | | 1,2-BIS(CHLOROMETHYBENZENE | T | 6.60E 05 | 9.60E 01 | 5.64E 04 | 3 |
| 16 B 040* | | BIS(CHLOROMETHYL)BENZENES | T | 6.60E 05 | 9.60E 01 | 5.64E 04 | 3 |
| 10 A 060* | | ETHANOLAMINE | T | 5.70E 05 | 9.50E 01 | 5.60E 04 | 5 |
| 23 C 180* | | DIBENZO(A,G)CARBAZOLE | T | 5.70E 05 | 9.50E 01 | 5.60E 04 | 5 |
| 21 C 160* | | PICENE | T | 2.30E 05 | 9.20E 01 | 5.42E 04 | 2 |
| 17 A 081* | P | 2,6-DINITROTOLUENE | T | 1.30E 05 | 8.70E 01 | 5.11E 04 | 4 |
| 17 A 085* | | 2,5-DINITROTOLUENE | T | 1.30E 05 | 8.70E 01 | 5.11E 04 | 4 |
| 17 A 082* | | 3,4-DINITROTOLUENE | T | 1.30E 05 | 8.70E 01 | 5.11E 04 | 4 |
| 17 A 086* | | 3,5-DINITROTOLUENE | T | 1.30E 05 | 8.70E 01 | 5.11E 04 | 4 |
| 17 A 084* | P | 2,4-DINITROTOLUENE | T | 1.30E 05 | 8.70E 01 | 5.11E 04 | 4 |
| 17 A 083* | | 2,3-DINITROTOLUENE | T | 1.30E 05 | 8.70E 01 | 5.11E 04 | 4 |
| 17 A 080* | | DINITROTOLUENES | T | 1.30E 05 | 8.70E 01 | 5.11E 04 | 4 |
| 19 A 040* | P | 2,4-DICHLOROPHENOL | T | 5.70E 05 | 8.14E 01 | 4.80E 04 | 5 |
| 08 A 060* | | MALEIC ACID | T | 2.50E 06 | 7.81E 01 | 4.60E 04 | 7 |
| 21 C 120* | | BENZO(E)PYRENE | T | 2.30E 05 | 7.70E 01 | 4.52E 04 | 2 |
| 15 B 163* | | P-TERPHENYL | T | 6.60E 05 | 7.33E 01 | 4.32E 04 | 3 |
| 15 B 161* | | O-TERPHENYL | T | 6.60E 05 | 7.33E 01 | 4.32E 04 | 3 |
| 15 B 160* | | TERPHENYLS | T | 6.60E 05 | 7.33E 01 | 4.32E 04 | 3 |
| 15 B 162* | | M-TERPHENYL | T | 6.60E 05 | 7.33E 01 | 4.32E 04 | 3 |
| 18 A 080* | W | ETHYLPHENOLS | T | 7.10E 05 | 7.10E 01 | 4.20E 04 | 6 |
| 18 A 043* | | P-CRESOL | T | 7.10E 05 | 7.10E 01 | 4.20E 04 | 6 |
| 18 A 082* | | M-ETHYLPHENOL | T | 7.10E 05 | 7.10E 01 | 4.20E 04 | 6 |
| 18 A 083* | | P-ETHYLPHENOL | T | 7.10E 05 | 7.10E 01 | 4.20E 04 | 6 |
| 18 A 041* | | M-CRESOL | T | 7.10E 05 | 7.10E 01 | 4.20E 04 | 6 |
| 18 A 040* | W | CRESOLS | T | 7.10E 05 | 7.10E 01 | 4.20E 04 | 6 |
| 18 A 042* | | O-CRESOL | T | 7.10E 05 | 7.10E 01 | 4.20E 04 | 6 |
| 18 A 081* | | O-ETHYLPHENOL | T | 7.10E 05 | 7.10E 01 | 4.20E 04 | 6 |
| 06 A 020* | W | ETHYLENE GLYCOL | T | 7.10E 05 | 7.10E 01 | 4.20E 04 | 6 |

PRODUCT GAS ORGANIC MODULE COMPOSITE, HEALTH IMPACT

| DMEG NO. | | COMPOUND NAME | TYPE | CONC E-6 G/SCM | DS | WDS G/S | LCCAT |
|---|---|---|---|---|---|---|---|
| 26 A 020 | W | TRIETHYL PHOSPHATE | T | 2.50E 06 | 6.94E 01 | 4.10E 04 | 7 |
| 08 B 080* | | Y-BUTYROLACTONE | T | 2.50E 06 | 6.94E 01 | 4.10E 04 | 7 |
| 21 C 060* | | DIBENZ(A,C)ANTHRACENE | T | 6.60E 05 | 6.70E 01 | 3.93E 04 | 3 |
| 04 A 050* | W | EPICHLORHYDRIN | T | 1.30E 05 | 6.50E 01 | 3.83E 04 | 4 |
| 04 A 040* | W | 2-CHLORO-1,2-EPOXYPROPANE | T | 1.30E 05 | 6.50E 01 | 3.83E 04 | 4 |
| 04 A 060* | W | 1-CHLORO-1,3-EPOXYPROPANE | T | 1.30E 05 | 6.50E 01 | 3.83E 04 | 4 |
| 23 B 200* | | BENZ(C)ACRIDINE | T | 7.10E 05 | 6.50E 01 | 3.80E 04 | 6 |
| 14 A 020 | W | BENZENESULFONIC ACID | T | 2.50E 06 | 6.30E 01 | 3.70E 04 | 7 |
| 08 B 041* | | 2-HYDROXYBENZOIC ACID | T | 2.50E 06 | 6.30E 01 | 3.70E 04 | 7 |
| 21 D 020* | | DIBENZO(A,H)PYRENE | T | 2.30E 05 | 6.21E 01 | 3.70E 04 | 2 |
| 07 B 100* | W | CAMPHOR | T | 7.10E 05 | 5.91E 01 | 3.50E 04 | 6 |
| 18 A 040* | W | CRESOLS | T | 5.70E 05 | 5.70E 01 | 3.40E 04 | 5 |
| 18 A 080* | W | ETHYLPHENOLS | T | 5.70E 05 | 5.70E 01 | 3.40E 04 | 5 |
| 18 A 043* | | P-CRESOL | T | 5.70E 05 | 5.70E 01 | 3.40E 04 | 5 |
| 18 A 041* | | M-CRESOL | T | 5.70E 05 | 5.70E 01 | 3.40E 04 | 5 |
| 18 A 083* | | P-ETHYLPHENOL | T | 5.70E 05 | 5.70E 01 | 3.40E 04 | 5 |
| 06 A 020* | W | ETHYLENE GLYCOL | T | 5.70E 05 | 5.70E 01 | 3.40E 04 | 5 |
| 18 A 042* | | O-CRESOL | T | 5.70E 05 | 5.70E 01 | 3.40E 04 | 5 |
| 18 A 082* | | M-ETHYLPHENOL | T | 5.70E 05 | 5.70E 01 | 3.40E 04 | 5 |
| 18 A 081* | | O-ETHYLPHENOL | T | 2.30E 05 | 5.60E 01 | 3.30E 04 | 2 |
| 02 B 120* | P | HEXACHLOROBUTADIENE | T | 6.60E 05 | 5.50E 01 | 3.24E 04 | 3 |
| 16 A 160* | P | POLYCHLORINATED BENZENES | T | 6.60E 05 | 5.50E 01 | 3.24E 04 | 3 |
| 16 A 162* | | HEXACHLOROBENZENE | T | 6.60E 05 | 5.50E 01 | 3.24E 04 | 3 |
| 16 A 161* | | 1,2,4-TRICHLOROBENZENE | T | 7.10E 05 | 5.50E 01 | 3.22E 04 | 6 |
| 18 A 144* | | 2,6-XYLENOL | T | 7.10E 05 | 5.50E 01 | 3.22E 04 | 6 |
| 18 A 143* | | 2,5-XYLENOL | T | 7.10E 05 | 5.50E 01 | 3.22E 04 | 6 |
| 18 A 140* | | XYLENOLS | T | 7.10E 05 | 5.50E 01 | 3.22E 04 | 6 |
| 18 A 146* | | 3,4-XYLENOL | T | 7.10E 05 | 5.50E 01 | 3.22E 04 | 6 |
| 18 A 145* | | 3,5-XYLENOL | T | 7.10E 05 | 5.50E 01 | 3.22E 04 | 6 |
| 18 A 141* | | 2,3-XYLENOL | T | 7.10E 05 | 5.50E 01 | 3.22E 04 | 6 |
| 18 A 142* | P | 2,4-XYLENOL | T | 1.60E 06 | 5.33E 01 | 3.14E 04 | 1 |
| 01 B 220 | W | DICYCLOPENTADIENE | T | 5.70E 05 | 5.20E 01 | 3.10E 04 | 5 |
| 04 B 100* | | 2,2'-DICHLORODIISOPROPYL ETHER | T | 5.70E 05 | 5.20E 01 | 3.10E 04 | 5 |
| 23 B 200* | | BENZ(C)ACRIDINE | | | | | |

PRODUCT GAS ORGANIC MODULE COMPOSITE, HEALTH IMPACT

| DMEG NO. | | COMPOUND NAME | TYPE | CONC E-6 G/SCM | DS | WDS G/S | LCCAT |
|---|---|---|---|---|---|---|---|
| 23 C 040* | | INDOLE | T | 5.70E 05 | 5.20E 01 | 3.10E 04 | 5 |
| 04 A 140* | P | 2-CHLOROETHYL VINYL ETHER | T | 5.70E 05 | 5.20E 01 | 3.10E 04 | 5 |
| 08 D 080* | | METHYL METHACRYLATE | T | 7.10E 05 | 5.10E 01 | 3.00E 04 | 6 |
| 23 C 020* | | PYRROLE | T | 1.30E 05 | 4.81E 01 | 2.84E 04 | 4 |
| 23 C 140* | | DIBENZO(A,I)CARBAZOLE | T | 5.70E 05 | 4.80E 01 | 2.80E 04 | 5 |
| 07 B 100* | W | CAMPHOR | T | 5.70E 05 | 4.80E 01 | 2.80E 04 | 5 |
| 23 A 020* | | PYRIDINE | T | 7.10E 05 | 4.73E 01 | 2.80E 04 | 6 |
| 02 A 160* | P | BROMOFORM | T | 2.30E 05 | 4.60E 01 | 2.71E 04 | 2 |
| 16 B 020* | W | A-CHLOROTOLUENE | T | 2.30E 05 | 4.60E 01 | 2.71E 04 | 2 |
| 23 B 021* | | QUINOLINE | T | 7.10E 05 | 4.43E 01 | 2.61E 04 | 6 |
| 20 A 060* | P | 4-NITROPHENOL | T | 7.10E 05 | 4.43E 01 | 2.61E 04 | 6 |
| 23 B 020* | | QUINOLINES | T | 7.10E 05 | 4.43E 01 | 2.61E 04 | 6 |
| 23 B 022* | | ISOQUINOLINE | T | 7.10E 05 | 4.43E 01 | 2.61E 04 | 6 |
| 18 A 141* | | 2,3-XYLENOL | T | 5.70E 05 | 4.40E 01 | 2.60E 04 | 5 |
| 18 A 143* | | 2,5-XYLENOL | T | 5.70E 05 | 4.40E 01 | 2.60E 04 | 5 |
| 18 A 140* | | XYLENOLS | T | 5.70E 05 | 4.40E 01 | 2.60E 04 | 5 |
| 18 A 144* | | 2,6-XYLENOL | T | 5.70E 05 | 4.40E 01 | 2.60E 04 | 5 |
| 18 A 142* | P | 2,4-XYLENOL | T | 5.70E 05 | 4.40E 01 | 2.60E 04 | 5 |
| 18 A 145* | | 3,5-XYLENOL | T | 5.70E 05 | 4.40E 01 | 2.60E 04 | 5 |
| 18 A 146* | | 3,4-XYLENOL | T | 5.70E 05 | 4.40E 01 | 2.60E 04 | 5 |
| 09 A 120* | W | TETRAMETHYLSUCCINONITRILE | T | 1.30E 05 | 4.33E 01 | 2.60E 04 | 4 |
| 21 C 040* | | BENZO(G)CHRYSENE | T | 6.60E 05 | 4.12E 01 | 2.43E 04 | 3 |
| 08 D 080* | | METHYL METHACRYLATE | T | 5.70E 05 | 4.10E 01 | 2.40E 04 | 5 |
| 23 A 145* | | 3,4-DIMETHYLPYRIDINE | T | 7.10E 05 | 3.94E 01 | 2.32E 04 | 6 |
| 05 B 100* | W | 1-PHENYLETHANOL | T | 7.10E 05 | 3.94E 01 | 2.32E 04 | 6 |
| 23 A 140* | | DISUBSTITUTED POLYSUBSTITUTED ALKYL PYRIDINES | T | 7.10E 05 | 3.94E 01 | 2.32E 04 | 6 |
| 23 A 144* | | 2,6-DIMETHYLPYRIDINE | T | 7.10E 05 | 3.94E 01 | 2.32E 04 | 6 |
| 23 A 141* | | 2,3-DIMETHYLPYRIDINE | T | 7.10E 05 | 3.94E 01 | 2.32E 04 | 6 |
| 23 A 146* | | 2,3,4,6-TETRAMETHYL PYRIDINE | T | 7.10E 05 | 3.94E 01 | 2.32E 04 | 6 |
| 23 A 142* | | 2,4-DIMETHYLPYRIDINE | T | 7.10E 05 | 3.94E 01 | 2.32E 04 | 6 |
| 23 A 143* | | 2,5-DIMETHYLPYRIDINE | T | 7.10E 05 | 3.94E 01 | 2.32E 04 | 6 |
| 23 A 020* | | PYRIDINE | T | 5.70E 05 | 3.80E 01 | 2.24E 04 | 5 |
| 18 A 020* | P | PHENOL | T | 7.10E 05 | 3.73E 01 | 2.20E 04 | 6 |
| 10 C 020* | | ANILINE | T | 7.10E 05 | 3.73E 01 | 2.20E 04 | 6 |

PRODUCT GAS ORGANIC MODULE COMPOSITE, HEALTH IMPACT

| DMEG NO. | | COMPOUND NAME | TYPE | CONC E-6 G/SCM | DS | WDS G/S | LCCAT |
|---|---|---|---|---|---|---|---|
| 03 B 040* | W | 1,3-DIOXANE | T | 1.30E 05 | 3.61E 01 | 2.13E 04 | 4 |
| 03 B 020* | W | 1,4-DIOXANE | T | 1.30E 05 | 3.61E 01 | 2.13E 04 | 4 |
| 23 B 022* | | ISOQUINOLINE | T | 5.70E 05 | 3.60E 01 | 2.10E 04 | 5 |
| 23 B 020* | | QUINOLINES | T | 5.70E 05 | 3.60E 01 | 2.10E 04 | 5 |
| 23 B 021* | | QUINOLINE | T | 5.70E 05 | 3.60E 01 | 2.10E 04 | 5 |
| 20 A 060* | P | 4-NITROPHENOL | T | 5.70E 05 | 3.60E 01 | 2.10E 04 | 5 |
| 02 A 140* | P | DIBROMOCHLOROMETHANE | T | 1.60E 06 | 3.60E 01 | 2.10E 04 | 1 |
| 18 B 020* | | CATECHOL | T | 7.10E 05 | 3.60E 01 | 2.10E 04 | 6 |
| 20 A 040* | | 3-NITROPHENOL | T | 7.10E 05 | 3.60E 01 | 2.10E 04 | 6 |
| 22 C 040* | | BENZO(J)FLUORANTHENE | T | 2.30E 05 | 3.53E 01 | 2.10E 04 | 2 |
| 16 B 043* | | 1,4-BIS(CHLOROMETHYL)BENZENE | T | 2.30E 05 | 3.53E 01 | 2.00E 04 | 2 |
| 16 B 042* | | 1,3-BIS(CHLOROMETHYL)BENZENE | T | 2.30E 05 | 3.53E 01 | 2.00E 04 | 2 |
| 16 B 040* | | BIS(CHLOROMETHYL)BENZENES | T | 2.30E 05 | 3.53E 01 | 2.00E 04 | 2 |
| 16 B 041* | | 1,2-BIS(CHLOROMETHYBENZENE | T | 2.30E 05 | 3.53E 01 | 2.00E 04 | 2 |
| 23 A 146* | | 2,3,4,6-TETRAMETHYL PYRIDINE | T | 5.70E 05 | 3.20E 01 | 1.90E 04 | 5 |
| 23 A 141* | | 2,3-DIMETHYLPYRIDINE | T | 5.70E 05 | 3.20E 01 | 1.90E 04 | 5 |
| 23 A 145* | | 3,4-DIMETHYLPYRIDINE | T | 5.70E 05 | 3.20E 01 | 1.90E 04 | 5 |
| 23 A 143* | | 2,5-DIMETHYLPYRIDINE | T | 5.70E 05 | 3.20E 01 | 1.90E 04 | 5 |
| 23 A 144* | | 2,6-DIMETHYLPYRIDINE | T | 5.70E 05 | 3.20E 01 | 1.90E 04 | 5 |
| 05 B 100* | W | 1-PHENYLETHANOL | T | 5.70E 05 | 3.20E 01 | 1.90E 04 | 5 |
| 23 A 140* | | DISUBSTITUTED POLYSUBSTITUTED ALKYL PYRIDINES | T | 5.70E 05 | 3.20E 01 | 1.90E 04 | 5 |
| 23 A 142* | | 2,4-DIMETHYLPYRIDINE | T | 5.70E 05 | 3.20E 01 | 1.90E 04 | 5 |
| 18 A 102* | | P-PHENYLPHENOL | T | 7.10E 05 | 3.10E 01 | 1.82E 04 | 6 |
| 18 A 100* | | PHENYLPHENOLS | T | 7.10E 05 | 3.10E 01 | 1.82E 04 | 6 |
| 08 A 080* | | VALERIC ACID | T | 7.10E 05 | 3.10E 01 | 1.82E 04 | 6 |
| 18 A 101* | | O-PHENYLPHENOL | T | 7.10E 05 | 3.10E 01 | 1.82E 04 | 6 |
| 19 B 023* | | CHLORINATED-P-CRESOLS | T | 7.10E 05 | 3.10E 01 | 1.82E 04 | 6 |
| 19 B 021* | | CHLORINATED-O-CRESOLS | T | 7.10E 05 | 3.10E 01 | 1.82E 04 | 6 |
| 19 B 022* | P | CHLORINATED-M-CRESOLS | T | 7.10E 05 | 3.10E 01 | 1.82E 04 | 6 |
| 23 B 260* | | DIBENZ(C,H)ACRIDINE | T | 7.10E 05 | 3.10E 01 | 1.82E 04 | 6 |
| 18 A 103* | | M-PHENYLPHENOL | T | 7.10E 05 | 3.10E 01 | 1.82E 04 | 6 |
| 19 B 020* | W | CHLORINATED CRESOLS | T | 5.70E 05 | 3.00E 01 | 1.80E 04 | 5 |
| 18 A 020* | P | PHENOL | T | 5.70E 05 | 3.00E 01 | 1.80E 04 | 5 |
| 10 C 020* | | ANILINE | | | | | |

PRODUCT GAS ORGANIC MODULE COMPOSITE, HEALTH IMPACT

| DMEG NO. | | | COMPOUND NAME | TYPE | CONC E-6 G/SCM | DS | WDS G/S | LCCAT |
|---|---|---|---|---|---|---|---|---|
| 23 C 120* | | | BENZO(A)CARBAZOLE | T | 5.70E 05 | 3.00E 01 | 1.80E 04 | 5 |
| 18 A 162* | | | 4-ETHYL-O-CRESOL | T | 7.10E 05 | 3.00E 01 | 1.74E 04 | 6 |
| 18 A 163* | | | 2-ETHYL-P-CRESOL | T | 7.10E 05 | 3.00E 01 | 1.74E 04 | 6 |
| 18 A 161* | | | 6-ETHYL-M-CRESOL | T | 7.10E 05 | 3.00E 01 | 1.74E 04 | 6 |
| 18 A 160* | | | ETHYL CRESOLS | T | 7.10E 05 | 3.00E 01 | 1.74E 04 | 6 |
| 02 A 360* | | | BROMOBUTANES | T | 1.60E 06 | 2.90E 01 | 1.70E 04 | 1 |
| 02 A 361* | | | 1-BROMOBUTANE | T | 1.60E 06 | 2.90E 01 | 1.70E 04 | 1 |
| 20 A 040* | | | 3-NITROPHENOL | T | 5.70E 05 | 2.90E 01 | 1.70E 04 | 5 |
| 18 B 020* | | | CATECHOL | T | 5.70E 05 | 2.90E 01 | 1.70E 04 | 5 |
| 10 D 020* | | W | N,N-DIMETHYLANILINE | T | 7.10E 05 | 2.83E 01 | 1.70E 04 | 6 |
| 07 B 080* | P | | ISOPHORONE | T | 7.10E 05 | 2.83E 01 | 1.70E 04 | 6 |
| 10 C 060* | | | DIMETHYLANILINES | T | 7.10E 05 | 2.83E 01 | 1.70E 04 | 6 |
| 10 C 065* | | | 3,4-XYLIDINE | T | 7.10E 05 | 2.83E 01 | 1.70E 04 | 6 |
| 10 C 062* | | | 2,4-XYLIDINE | T | 7.10E 05 | 2.83E 01 | 1.70E 04 | 6 |
| 10 C 063* | | | 2,5-XYLIDINE | T | 7.10E 05 | 2.83E 01 | 1.70E 04 | 6 |
| 10 C 066* | | | 3,5-XYLIDINE | T | 7.10E 05 | 2.83E 01 | 1.70E 04 | 6 |
| 10 A 080* | | | 1,2-DIAMINOETHANE | T | 7.10E 05 | 2.83E 01 | 1.70E 04 | 6 |
| 10 C 061* | | | 2,3-XYLIDINE | T | 7.10E 05 | 2.83E 01 | 1.70E 04 | 6 |
| 10 C 064* | | | 2,6-XYLIDINE | T | 7.10E 05 | 2.83E 01 | 1.70E 04 | 6 |
| 08 A 040* | | | ACETIC ACID | T | 7.10E 05 | 2.83E 01 | 1.70E 04 | 6 |
| 17 A 020* | P | | NITROBENZENE | T | 1.30E 05 | 2.60E 01 | 1.53E 04 | 4 |
| 09 A 100* | | | 1,3-DICYANO-1-HYDROXYBUTANE | T | 5.70E 05 | 2.60E 01 | 1.52E 04 | 5 |
| 15 B 163* | | | P-TERPHENYL | T | 2.30E 05 | 2.60E 01 | 1.50E 04 | 2 |
| 15 B 160* | | | TERPHENYLS | T | 2.30E 05 | 2.60E 01 | 1.50E 04 | 2 |
| 15 B 162* | | | M-TERPHENYL | T | 2.30E 05 | 2.60E 01 | 1.50E 04 | 2 |
| 15 B 161* | | | O-TERPHENYL | T | 2.30E 05 | 2.60E 01 | 1.50E 04 | 2 |
| 23 C 100* | | | METHYLCARBAZOLES | T | 5.70E 05 | 2.50E 01 | 1.50E 04 | 5 |
| 19 B 021* | | | CHLORINATED-O-CRESOLS | T | 5.70E 05 | 2.50E 01 | 1.50E 04 | 5 |
| 19 B 020* | | W | CHLORINATED CRESOLS | T | 5.70E 05 | 2.50E 01 | 1.50E 04 | 5 |
| 25 A 042* | | | 3-METHYLTHIOPHENE | T | 5.70E 05 | 2.50E 01 | 1.50E 04 | 5 |
| 18 A 103* | | | M-PHENYLPHENOL | T | 5.70E 05 | 2.50E 01 | 1.50E 04 | 5 |
| 18 A 100* | | | PHENYLPHENOLS | T | 5.70E 05 | 2.50E 01 | 1.50E 04 | 5 |
| 25 B 040* | | W | BENZO(B)THIOPHENE | T | 5.70E 05 | 2.50E 01 | 1.50E 04 | 5 |
| 18 A 102* | | | P-PHENYLPHENOL | T | 5.70E 05 | 2.50E 01 | 1.50E 04 | 5 |

PRODUCT GAS ORGANIC MODULE COMPOSITE, HEALTH IMPACT

| DMEG NO. | | COMPOUND NAME | TYPE | CONC E-6 G/SCM | DS | WDS G/S | LCCAT |
|---|---|---|---|---|---|---|---|
| 23 C 101* | | 3-METHYLCARBAZOLE | T | 5.70E 05 | 2.50E 01 | 1.50E 04 | 5 |
| 25 A 040* | | METHYLTHIOPHENES | T | 5.70E 05 | 2.50E 01 | 1.50E 04 | 5 |
| 25 A 041* | | 2-METHYLTHIOPHENE | T | 5.70E 05 | 2.50E 01 | 1.50E 04 | 5 |
| 08 A 080* | | VALERIC ACID | T | 5.70E 05 | 2.50E 01 | 1.50E 04 | 5 |
| 18 A 101* | | O-PHENYLPHENOL | T | 5.70E 05 | 2.50E 01 | 1.50E 04 | 5 |
| 19 B 022* | P | CHLORINATED-M-CRESOLS | T | 5.70E 05 | 2.50E 01 | 1.50E 04 | 5 |
| 23 C 102* | | 9-METHYLCARBAZOLE | T | 5.70E 05 | 2.50E 01 | 1.50E 04 | 5 |
| 09 A 080* | | BUTYRONITRILE | T | 5.70E 05 | 2.50E 01 | 1.50E 04 | 5 |
| 19 B 023* | | CHLORINATED-P-CRESOLS | T | 5.70E 05 | 2.50E 01 | 1.50E 04 | 5 |
| 23 C 080* | | CARBAZOLE | T | 5.70E 05 | 2.40E 01 | 1.40E 04 | 5 |
| 18 A 162* | | 4-ETHYL-O-CRESOL | T | 5.70E 05 | 2.40E 01 | 1.40E 04 | 5 |
| 18 A 163* | | 2-ETHYL-P-CRESOL | T | 5.70E 05 | 2.40E 01 | 1.40E 04 | 5 |
| 18 A 160* | | ETHYL CRESOLS | T | 5.70E 05 | 2.40E 01 | 1.40E 04 | 5 |
| 18 A 161* | | 6-ETHYL-M-CRESOL | T | 7.10E 05 | 2.40E 01 | 1.40E 04 | 6 |
| 19 A 020* | P | 2-CHLOROPHENOL | T | 7.10E 05 | 2.40E 01 | 1.40E 04 | 6 |
| 08 C 020* | | FORMAMIDE | T | 2.30E 05 | 2.32E 01 | 1.40E 04 | 2 |
| 21 C 060* | | DIBENZ(A,C)ANTHRACENE | T | 2.30E 05 | 2.30E 01 | 1.40E 04 | 2 |
| 02 A 320* | P | HEXACHLOROETHANE | T | 5.70E 05 | 2.30E 01 | 1.34E 04 | 5 |
| 10 C 063* | | 2,5-XYLIDINE | T | 5.70E 05 | 2.30E 01 | 1.34E 04 | 5 |
| 10 C 060* | | DIMETHYLANILINES | T | 5.70E 05 | 2.30E 01 | 1.34E 04 | 5 |
| 10 D 020* | W | N,N-DIMETHYLANILINE | T | 5.70E 05 | 2.30E 01 | 1.34E 04 | 5 |
| 10 C 062* | | 2,4-XYLIDINE | T | 5.70E 05 | 2.30E 01 | 1.34E 04 | 5 |
| 08 A 040* | | ACETIC ACID | T | 5.70E 05 | 2.30E 01 | 1.34E 04 | 5 |
| 10 A 080* | | 1,2-DIAMINOETHANE | T | 5.70E 05 | 2.30E 01 | 1.34E 04 | 5 |
| 10 C 064* | | 2,6-XYLIDINE | T | 5.70E 05 | 2.30E 01 | 1.34E 04 | 5 |
| 07 B 080* | P | ISOPHORONE | T | 5.70E 05 | 2.30E 01 | 1.34E 04 | 5 |
| 10 C 061* | | 2,3-XYLIDINE | T | 5.70E 05 | 2.30E 01 | 1.34E 04 | 5 |
| 10 C 065* | | 3,4-XYLIDINE | T | 5.70E 05 | 2.30E 01 | 1.34E 04 | 5 |
| 10 C 066* | | 3,5-XYLIDINE | T | 7.10E 05 | 2.21E 01 | 1.30E 04 | 6 |
| 08 A 060* | | MALEIC ACID | T | 1.30E 05 | 2.20E 01 | 1.30E 04 | 4 |
| 23 A 102* | | 3-CHLOROPYRIDINE | T | 1.30E 05 | 2.20E 01 | 1.30E 04 | 4 |
| 23 A 100* | W | CHLOROPYRIDINES | T | 1.30E 05 | 2.20E 01 | 1.30E 04 | 4 |
| 23 A 103* | | 4-CHLOROPYRIDINE | T | 1.30E 05 | 2.20E 01 | 1.30E 04 | 4 |
| 23 A 101* | | 2-CHLOROPYRIDINE | | | | | |

PRODUCT GAS ORGANIC MODULE COMPOSITE, HEALTH IMPACT

| DMEG NO. | | COMPOUND NAME | TYPE | CONC E-6 G/SCM | DS | WDS G/S | LCCAT |
|---|---|---|---|---|---|---|---|
| 25 A 062* | | 2,4-DIMETHYLTHIOPHENE | T | 5.70E 05 | 2.20E 01 | 1.30E 04 | 5 |
| 25 A 064* | | 3,4-DIMETHYLTHIOPHENE | T | 5.70E 05 | 2.20E 01 | 1.30E 04 | 5 |
| 25 A 060* | | DIMETHYLTHIOPHENES | T | 5.70E 05 | 2.20E 01 | 1.30E 04 | 5 |
| 25 A 061* | | 2,3-DIMETHYLTHIOPHENE | T | 5.70E 05 | 2.20E 01 | 1.30E 04 | 5 |
| 25 A 063* | | 2,5-DIMETHYLTHIOPHENE | T | 5.70E 05 | 2.20E 01 | 1.30E 04 | 5 |
| 18 A 060* | | 2-METHOXYPHENOL | T | 7.10E 05 | 2.20E 01 | 1.30E 04 | 6 |
| 23 C 180* | | DIBENZO(A,G)CARBAZOLE | T | 1.30E 05 | 2.20E 01 | 1.30E 04 | 4 |
| 04 A 200* | | 4-BROMOPHENYL PHENYL ETHER | T | 5.70E 05 | 2.11E 01 | 1.24E 04 | 5 |
| 04 A 180* | P | CHLOROPHENYL PHENYL ETHER | T | 5.70E 05 | 2.11E 01 | 1.24E 04 | 5 |
| 02 B 103* | | CIS-1,3-DICHLOROPROPENE | T | 2.30E 05 | 2.10E 01 | 1.23E 04 | 2 |
| 02 B 104* | | TRANS-1,3-DICHLOROPROPENE | T | 2.30E 05 | 2.10E 01 | 1.23E 04 | 2 |
| 02 B 100* | P | DICHLOROPROPENES | T | 2.30E 05 | 2.10E 01 | 1.23E 04 | 2 |
| 18 A 120* | | 2,2'-DIHYDROXYDIPHENYL | T | 7.10E 05 | 2.02E 01 | 1.20E 04 | 6 |
| 47 A 080 | P | HYDROGEN CYANIDE | D | 2.22E 05 | 2.01E 01 | 1.20E 04 | |
| 08 B 080* | | Y-BUTYROLACTONE | T | 7.10E 05 | 2.00E 01 | 1.20E 04 | 6 |
| 10 A 121* | | 2-AMINO-1-PROPANOL | T | 7.10E 05 | 2.00E 01 | 1.20E 04 | 6 |
| 10 A 120* | | PROPANOLAMINES | T | 7.10E 05 | 2.00E 01 | 1.20E 04 | 6 |
| 10 A 122* | | 3-AMINO-1-PROPANOL | T | 7.10E 05 | 2.00E 01 | 1.20E 04 | 6 |
| 10 A 123* | | 1-AMINO-2-PROPANOL | T | 7.10E 05 | 2.00E 01 | 1.20E 04 | 6 |
| 18 B 080* | | 1,2,3-TRIHYDROXYBENZENE | T | 7.10E 05 | 2.00E 01 | 1.20E 04 | 6 |
| 25 A 080* | | TRIMETHYL AND TETRAMETHYL THIOPHENES | T | 5.70E 05 | 2.00E 01 | 1.20E 04 | 5 |
| 25 A 081* | | 2,3,5-TRIMETHYLTHIOPHENE | T | 5.70E 05 | 2.00E 01 | 1.20E 04 | 5 |
| 16 A 161* | | 1,2,4-TRICHLOROBENZENE | T | 2.30E 05 | 1.91E 01 | 1.13E 04 | 2 |
| 16 A 160* | P | POLYCHLORINATED BENZENES | T | 2.30E 05 | 1.91E 01 | 1.13E 04 | 2 |
| 16 A 162* | | HEXACHLOROBENZENE | T | 2.30E 05 | 1.91E 01 | 1.13E 04 | 2 |
| 04 B 080* | | 2,2'-DICHLORODIETHYL ETHER | T | 5.70E 05 | 1.90E 01 | 1.12E 04 | 5 |
| 19 A 020* | P | 2-CHLOROPHENOL | T | 5.70E 05 | 1.90E 01 | 1.12E 04 | 5 |
| 08 C 020* | | FORMAMIDE | T | 5.70E 05 | 1.90E 01 | 1.12E 04 | 5 |
| 17 A 040* | | NITROTOLUENES | T | 5.70E 05 | 1.90E 01 | 1.12E 04 | 5 |
| 17 A 041* | | 2-NITROTOLUENE | T | 5.70E 05 | 1.90E 01 | 1.12E 04 | 5 |
| 17 A 042* | | 3-NITROTOLUENE | T | 5.70E 05 | 1.90E 01 | 1.12E 04 | 5 |
| 04 B 040* | P | 1,1'-DICHLORODIETHYL ETHER | T | 5.70E 05 | 1.90E 01 | 1.12E 04 | 5 |
| 17 A 043* | | 4-NITROTOLUENE | T | 5.70E 05 | 1.90E 01 | 1.12E 04 | 5 |
| 42 A 080 | | CARBON DIOXIDE | D | 1.71E 08 | 1.90E 01 | 1.12E 04 | |

PRODUCT GAS ORGANIC MODULE COMPOSITE, HEALTH IMPACT

| DMEG NO. | | COMPOUND NAME | TYPE | CONC E-6 G/SCM | DS | WDS G/S | LCCAT |
|---|---|---|---|---|---|---|---|
| 12 A 080* | | N-NITROSODIISOPROPYLAMINE | T | 7.10E 05 | 1.90E 01 | 1.10E 04 | 6 |
| 14 A 041 | | 9,10-ANTHRAQUINONE-1,5-DISULFONIC ACID | T | 2.50E 06 | 1.80E 01 | 1.10E 04 | 7 |
| 08 A 160* | | BENZOIC ACID | T | 2.50E 06 | 1.80E 01 | 1.10E 04 | 7 |
| 26 B 040 | W | TRITOTYL PHOSPHATES | T | 2.50E 06 | 1.80E 01 | 1.10E 04 | 7 |
| 14 A 043 | | 9,10-ANTHRAQUINONE-1,7-DISULFONIC ACID | T | 2.50E 06 | 1.80E 01 | 1.10E 04 | 7 |
| 14 A 044 | | 9,10-ANTHRAQUINONE-1,8-DISULFONIC ACID | T | 2.50E 06 | 1.80E 01 | 1.10E 04 | 7 |
| 09 B 040* | W | NAPHTHONITRILES | T | 5.70E 05 | 1.80E 01 | 1.10E 04 | 5 |
| 08 A 060* | | MALEIC ACID | T | 5.70E 05 | 1.80E 01 | 1.10E 04 | 5 |
| 09 B 042* | | B-NAPHTHONITRILES | T | 5.70E 05 | 1.80E 01 | 1.10E 04 | 5 |
| 09 B 020* | W | BENZONITRILE | T | 5.70E 05 | 1.80E 01 | 1.10E 04 | 5 |
| 09 B 041* | | A-NAPHTHONITRILES | T | 5.70E 05 | 1.80E 01 | 1.10E 04 | 5 |
| 10 A 160* | | CYCLOHEXYLAMINE | T | 7.10E 05 | 1.80E 01 | 1.04E 04 | 6 |
| 08 B 041* | | 2-HYDROXYBENZOIC ACID | T | 7.10E 05 | 1.80E 01 | 1.04E 04 | 6 |
| 18 A 060* | | 2-METHOXYPHENOL | T | 5.70E 05 | 1.74E 01 | 1.03E 04 | 5 |
| 07 B 120* | | ACETOPHENONE | T | 7.10E 05 | 1.73E 01 | 1.02E 04 | 6 |
| 18 A 120* | | 2,2'-DIHYDROXYDIPHENYL | T | 5.70E 05 | 1.62E 01 | 9.60E 03 | 5 |
| 08 B 080* | | Y-BUTYROLACTONE | T | 5.70E 05 | 1.60E 01 | 9.34E 03 | 5 |
| 10 A 123* | | 1-AMINO-2-PROPANOL | T | 5.70E 05 | 1.60E 01 | 9.34E 03 | 5 |
| 10 A 122* | | 3-AMINO-1-PROPANOL | T | 5.70E 05 | 1.60E 01 | 9.34E 03 | 5 |
| 18 B 080* | | 1,2,3-TRIHYDROXYBENZENE | T | 5.70E 05 | 1.60E 01 | 9.34E 03 | 5 |
| 10 A 121* | | 2-AMINO-1-PROPANOL | T | 5.70E 05 | 1.60E 01 | 9.34E 03 | 5 |
| 10 A 120* | | PROPANOLAMINES | T | 5.70E 05 | 1.60E 01 | 9.34E 03 | 5 |
| 05 C 040* | W | T-PENTANOL | T | 7.10E 05 | 1.60E 01 | 9.30E 03 | 6 |
| 18 B 040* | | 1,3-DIHYDROXYBENZENE | T | 7.10E 05 | 1.60E 01 | 9.30E 03 | 6 |
| 08 A 180* | | ADIPIC ACID | T | 2.50E 06 | 1.60E 01 | 9.21E 03 | 7 |
| 68 A 010 | P | CHROMIUM | S | 1.50E 01 | 1.50E 01 | 8.90E 03 | |
| 12 A 080* | | N-NITROSODIISOPROPYLAMINE | T | 5.70E 05 | 1.50E 01 | 8.90E 03 | 5 |
| 22 A 010* | W | INDENE | T | 6.60E 05 | 1.50E 01 | 8.70E 03 | 3 |
| 21 C 040* | | BENZO(G)CHRYSENE | T | 2.30E 05 | 1.43E 01 | 8.50E 03 | 2 |
| 10 A 160* | | CYCLOHEXYLAMINE | T | 5.70E 05 | 1.42E 01 | 8.40E 03 | 5 |
| 08 B 041* | | 2-HYDROXYBENZOIC ACID | T | 5.70E 05 | 1.42E 01 | 8.40E 03 | 5 |
| 07 B 120* | | ACETOPHENONE | T | 5.70E 05 | 1.40E 01 | 8.20E 03 | 5 |
| 21 A 020* | P | NAPHTHALENE | T | 6.60E 05 | 1.32E 01 | 7.80E 03 | 3 |
| 23 B 061* | | 2,3-DIMETHYLQUINOLINE | T | 7.10E 05 | 1.30E 01 | 7.61E 03 | 6 |

PRODUCT GAS ORGANIC MODULE COMPOSITE, HEALTH IMPACT

| DMEG NO. | | COMPOUND NAME | TYPE | CONC E-6 G/SCM | DS | WDS G/S | LCCAT |
|---|---|---|---|---|---|---|---|
| 23 B 060* | | DIMETHYLQUINOLINES | T | 7.10E 05 | 1.30E 01 | 7.61E 03 | 6 |
| 23 B 062* | | 2,6-DIMETHYLQUINOLINE | T | 7.10E 05 | 1.30E 01 | 7.61E 03 | 6 |
| 23 B 065* | | 6,8-DIMETHYLQUINOLINE | T | 7.10E 05 | 1.30E 01 | 7.61E 03 | 6 |
| 23 B 064* | | 3,4-DIMETHYLQUINOLINE | T | 7.10E 05 | 1.30E 01 | 7.61E 03 | 6 |
| 23 B 067* | | 1,5-DIMETHYLISOQUINOLINE | T | 7.10E 05 | 1.30E 01 | 7.61E 03 | 6 |
| 23 B 066* | | 1,3-DIMETHYLISOQUINOLINE | T | 7.10E 05 | 1.30E 01 | 7.61E 03 | 6 |
| 23 B 040* | | 2-METHYLQUINOLINE | T | 7.10E 05 | 1.30E 01 | 7.61E 03 | 6 |
| 23 B 063* | | 2,8-DIMETHYLQUINOLINE | T | 7.10E 05 | 1.30E 01 | 7.61E 03 | 6 |
| 05 A 140* | W | BENZYL ALCOHOL | T | 7.10E 05 | 1.30E 01 | 7.61E 03 | 6 |
| 23 C 060* | | METHYLINDOLES | T | 5.70E 05 | 1.30E 01 | 7.50E 03 | 5 |
| 05 C 040* | W | T-PENTANOL | T | 5.70E 05 | 1.30E 01 | 7.50E 03 | 5 |
| 23 C 061* | | 2-METHYLINDOLE | T | 5.70E 05 | 1.30E 01 | 7.50E 03 | 5 |
| 18 B 040* | | 1,3-DIHYDROXYBENZENE | T | 5.70E 05 | 1.30E 01 | 7.50E 03 | 5 |
| 20 A 020* | P | 2-NITROPHENOL | T | 7.10E 05 | 1.22E 01 | 7.22E 03 | 6 |
| 18 A 182* | | 4,6-DI-TERT-BUTYL-M-CRESOL | T | 7.10E 05 | 1.20E 01 | 7.10E 03 | 6 |
| 18 A 183* | | 2,6-DIMETHYL-4-HEPTYL PHENOL | T | 7.10E 05 | 1.20E 01 | 7.10E 03 | 6 |
| 18 A 181* | | 2,4,6-TRIMETHYL METHYL PHENOL | T | 7.10E 05 | 1.20E 01 | 7.10E 03 | 6 |
| 18 A 180* | | POLYALKYLPHENOLS (MW>135) | T | 7.10E 05 | 1.20E 01 | 7.10E 03 | 6 |
| 23 C 040* | | INDOLE | T | 1.30E 05 | 1.20E 01 | 7.00E 03 | 4 |
| 04 A 140* | P | 2-CHLOROETHYL VINYL ETHER | T | 1.30E 05 | 1.20E 01 | 7.00E 03 | 4 |
| 04 B 100* | | 2,2'-DICHLORODIISOPROPYL ETHER | T | 1.30E 05 | 1.20E 01 | 7.00E 03 | 4 |
| 21 A 140* | P | ANTHRACENE | T | 6.60E 05 | 1.20E 01 | 7.00E 03 | 3 |
| 08 D 160* | | METHYL BENZOATE | T | 7.10E 05 | 1.20E 01 | 6.90E 03 | 6 |
| 23 C 140* | | DIBENZO(A,I)CARBAZOLE | T | 1.30E 05 | 1.10E 01 | 6.40E 03 | 4 |
| 23 B 060* | | DIMETHYLQUINOLINES | T | 5.70E 05 | 1.03E 01 | 6.11E 03 | 5 |
| 05 A 140* | W | BENZYL ALCOHOL | T | 5.70E 05 | 1.03E 01 | 6.11E 03 | 5 |
| 23 B 062* | | 2,6-DIMETHYLQUINOLINE | T | 5.70E 05 | 1.03E 01 | 6.11E 03 | 5 |
| 23 B 040* | | 2-METHYLQUINOLINE | T | 5.70E 05 | 1.03E 01 | 6.11E 03 | 5 |
| 23 B 064* | | 3,4-DIMETHYLQUINOLINE | T | 5.70E 05 | 1.03E 01 | 6.11E 03 | 5 |
| 23 B 061* | | 2,3-DIMETHYLQUINOLINE | T | 5.70E 05 | 1.03E 01 | 6.11E 03 | 5 |
| 23 B 065* | | 6,8-DIMETHYLQUINOLINE | T | 5.70E 05 | 1.03E 01 | 6.11E 03 | 5 |
| 23 B 067* | | 1,5-DIMETHYLISOQUINOLINE | T | 5.70E 05 | 1.03E 01 | 6.11E 03 | 5 |
| 23 B 063* | | 2,8-DIMETHYLQUINOLINE | T | 5.70E 05 | 1.03E 01 | 6.11E 03 | 5 |
| 23 B 066* | | 1,3-DIMETHYLISOQUINOLINE | T | 5.70E 05 | 1.03E 01 | 6.11E 03 | 5 |

PRODUCT GAS ORGANIC MODULE COMPOSITE, HEALTH IMPACT

| DMEG NO. | | COMPOUND NAME | TYPE | CONC E-6 G/SCM | DS | WDS G/S | LCCAT |
|---|---|---|---|---|---|---|---|
| 23 A 064* | | 4-N-PROPYLPYRIDINE | T | 7.10E 05 | 1.02E 01 | 6.10E 03 | 6 |
| 23 A 061* | | 2-ETHYLPYRIDINE | T | 7.10E 05 | 1.02E 01 | 6.10E 03 | 6 |
| 23 A 080* | | PHENYLPYRIDINES | T | 7.10E 05 | 1.02E 01 | 6.10E 03 | 6 |
| 23 A 063* | | 4-ETHYLPYRIDINE | T | 7.10E 05 | 1.02E 01 | 6.10E 03 | 6 |
| 23 A 082* | | 3-PHENYLPYRIDINE | T | 7.10E 05 | 1.02E 01 | 6.10E 03 | 6 |
| 23 A 122* | | 2,4,6-COLLIDINE | T | 7.10E 05 | 1.02E 01 | 6.10E 03 | 6 |
| 23 A 120* | | COLLIDINES | T | 7.10E 05 | 1.02E 01 | 6.10E 03 | 6 |
| 23 A 121* | | 5-ETHYL-2-METHYLPYRIDINE | T | 7.10E 05 | 1.02E 01 | 6.10E 03 | 6 |
| 23 A 083* | | 4-PHENYLPYRIDINE | T | 7.10E 05 | 1.02E 01 | 6.10E 03 | 6 |
| 23 A 062* | | 3-ETHYLPYRIDINE | T | 7.10E 05 | 1.02E 01 | 6.10E 03 | 6 |
| 23 A 060* | | MONOSUBSTITUTED ALKYL PYRIDINES | T | 7.10E 05 | 1.02E 01 | 6.10E 03 | 6 |
| 23 A 081* | | 2-PHENYLPYRIDINE | T | 7.10E 05 | 1.02E 01 | 6.10E 03 | 6 |
| 10 B 100* | | MORPHOLINE | T | 7.10E 05 | 1.01E 01 | 6.00E 03 | 6 |
| 08 D 200* | | DIETHYL ADIPATE | T | 7.10E 05 | 9.90E 00 | 5.81E 03 | 6 |
| 20 A 020* | P | 2-NITROPHENOL | T | 5.70E 05 | 9.82E 00 | 5.80E 03 | 5 |
| 18 A 183* | | 2,6-DIMETHYL-4-HEPTYL PHENOL | T | 5.70E 05 | 9.70E 00 | 5.70E 03 | 5 |
| 18 A 181* | | 2,4,6-TRIMETHYL METHYL PHENOL | T | 5.70E 05 | 9.70E 00 | 5.70E 03 | 5 |
| 18 A 180* | | POLYALKYLPHENOLS (MW>135) | T | 5.70E 05 | 9.70E 00 | 5.70E 03 | 5 |
| 07 A 140* | | BENZALDEHYDE | T | 5.70E 05 | 9.70E 00 | 5.70E 03 | 5 |
| 18 A 182* | | 4,6-DI-TERT-BUTYL-M-CRESOL | T | 7.10E 05 | 9.60E 00 | 5.70E 03 | 6 |
| 07 B 182* | | DIHYDRO-(D OR L)CARVONE | T | 7.10E 05 | 9.60E 00 | 5.70E 03 | 6 |
| 07 B 181* | | CARVONE(D OR L) | T | 7.10E 05 | 9.60E 00 | 5.70E 03 | 6 |
| 07 B 180* | | CARVONES | T | 6.60E 05 | 9.60E 00 | 5.64E 03 | 3 |
| 16 A 200* | P | CHLORONAPHTHALENES | T | 6.60E 05 | 9.60E 00 | 5.64E 03 | 3 |
| 16 A 202* | | 2-CHLORONAPHTHALENE | T | 6.60E 05 | 9.60E 00 | 5.64E 03 | 3 |
| 16 A 201* | | 1-CHLORONAPHTHALENE | T | 5.70E 05 | 9.34E 00 | 5.51E 03 | 5 |
| 08 D 160* | | METHYL BENZOATE | D | > 1.80E 01> | 9.00E 00> | 5.31E 03 | |
| 49 A 010 | P | ARSENIC | T | 7.10E 05 | 9.00E 00 | 5.30E 03 | 6 |
| 12 A 100* | | N-NITROSODIPENTYLAMINE | T | 7.10E 05 | 8.80E 00 | 5.20E 03 | 6 |
| 05 A 160* | | PHENETHYL ALCOHOL | T | 1.30E 05 | 8.70E 00 | 5.11E 03 | 4 |
| 23 A 020* | | PYRIDINE | T | 2.50E 06 | 8.62E 00 | 5.10E 03 | 7 |
| 26 B 020 | | TRIPHENYL PHOSPHATE | T | 5.70E 05 | 8.30E 00 | 4.90E 03 | 5 |
| 23 A 064* | | 4-N-PROPYLPYRIDINE | T | 5.70E 05 | 8.30E 00 | 4.90E 03 | 5 |
| 23 A 120* | | COLLIDINES | | | | | |

## PRODUCT GAS ORGANIC MODULE COMPOSITE, HEALTH IMPACT

| DMEG NO. | | COMPOUND NAME | TYPE | CONC E-6 G/SCM | DS | WDS G/S | LCCAT |
|---|---|---|---|---|---|---|---|
| 23 A 061* | | 2-ETHYLPYRIDINE | T | 5.70E 05 | 8.30E 00 | 4.90E 03 | 5 |
| 23 A 060* | | MONOSUBSTITUTED ALKYL PYRIDINES | T | 5.70E 05 | 8.30E 00 | 4.90E 03 | 5 |
| 23 A 080* | | PHENYLPYRIDINES | T | 5.70E 05 | 8.30E 00 | 4.90E 03 | 5 |
| 23 A 063* | | 4-ETHYLPYRIDINE | T | 5.70E 05 | 8.30E 00 | 4.90E 03 | 5 |
| 23 A 122* | | 2,4,6-COLLIDINE | T | 5.70E 05 | 8.30E 00 | 4.90E 03 | 5 |
| 23 A 082* | | 3-PHENYLPYRIDINE | T | 5.70E 05 | 8.30E 00 | 4.90E 03 | 5 |
| 23 A 121* | | 5-ETHYL-2-METHYLPYRIDINE | T | 5.70E 05 | 8.30E 00 | 4.90E 03 | 5 |
| 23 A 081* | | 2-PHENYLPYRIDINE | T | 5.70E 05 | 8.30E 00 | 4.90E 03 | 5 |
| 23 A 062* | | 3-ETHYLPYRIDINE | T | 5.70E 05 | 8.30E 00 | 4.90E 03 | 5 |
| 23 A 083* | | 4-PHENYLPYRIDINE | T | 5.70E 05 | 8.30E 00 | 4.90E 03 | 5 |
| 10 B 100* | | MORPHOLINE | T | 5.70E 05 | 8.14E 00 | 4.80E 03 | 5 |
| 08 D 200* | | DIETHYL ADIPATE | T | 5.70E 05 | 7.91E 00 | 4.70E 03 | 5 |
| 23 B 160* | | BENZO(H)QUINOLINE | T | 7.10E 05 | 7.90E 00 | 4.70E 03 | 6 |
| 05 B 120* | | BORNEOL | T | 7.10E 05 | 7.90E 00 | 4.70E 03 | 6 |
| 23 B 080* | | ACRIDINE | T | 7.10E 05 | 7.90E 00 | 4.70E 03 | 6 |
| 23 B 140* | | BENZO(F)QUINOLINE | T | 7.10E 05 | 7.90E 00 | 4.70E 03 | 6 |
| 23 B 120* | | PHENANTHRIDINE | T | 7.10E 05 | 7.90E 00 | 4.70E 03 | 6 |
| 13 B 080* | | METHYL DISULFIDE | T | 7.10E 05 | 7.90E 00 | 4.70E 03 | 6 |
| 07 B 181* | | CARVONE(D OR L) | T | 5.70E 05 | 7.70E 00 | 4.54E 03 | 5 |
| 07 B 180* | | CARVONES | T | 5.70E 05 | 7.70E 00 | 4.54E 03 | 5 |
| 07 B 182* | | DIHYDRO-(D OR L)CARVONE | T | 5.70E 05 | 7.70E 00 | 4.54E 03 | 5 |
| 13 B 060* | | DIPHENYL SULFIDE | T | 7.10E 05 | 7.40E 00 | 4.40E 03 | 6 |
| 22 B 040* | P W | FLUORANTHENE | T | 6.60E 05 | 7.35E 00 | 4.32E 03 | 3 |
| 23 A 146* | | 2,3,4,6-TETRAMETHYL PYRIDINE | T | 1.30E 05 | 7.22E 00 | 4.30E 03 | 4 |
| 23 A 145* | | 3,4-DIMETHYLPYRIDINE | T | 1.30E 05 | 7.22E 00 | 4.30E 03 | 4 |
| 23 A 140* | | DISUBSTITUTED POLYSUBSTITUTED ALKYL PYRIDINES | T | 1.30E 05 | 7.22E 00 | 4.30E 03 | 4 |
| 23 A 144* | | 2,6-DIMETHYLPYRIDINE | T | 1.30E 05 | 7.22E 00 | 4.30E 03 | 4 |
| 23 A 142* | | 2,4-DIMETHYLPYRIDINE | T | 1.30E 05 | 7.22E 00 | 4.30E 03 | 4 |
| 23 A 143* | | 2,5-DIMETHYLPYRIDINE | T | 1.30E 05 | 7.22E 00 | 4.30E 03 | 4 |
| 23 A 141* | | 2,3-DIMETHYLPYRIDINE | T | 1.30E 05 | 7.22E 00 | 4.30E 03 | 4 |
| 12 A 100* | | N-NITROSODIPENTYLAMINE | T | 5.70E 05 | 7.21E 00 | 4.30E 03 | 5 |
| 16 A 220* | W | POLYCHLORINATED BIPHENYLS | D | < 7.20E 00 | < 7.20E 00 | < 4.24E 03 | 2 |
| 05 A 160* | | PHENETHYL ALCOHOL | T | 5.70E 05 | 7.03E 00 | 4.20E 03 | 5 |
| 23 C 120* | | BENZO(A)CARBAZOLE | T | 1.30E 05 | 6.84E 00 | 4.03E 03 | 4 |

PRODUCT GAS ORGANIC MODULE COMPOSITE, HEALTH IMPACT

| DMEG NO. | | COMPOUND NAME | TYPE | CONC E-6 G/SCM | DS | WDS G/S | LCCAT |
|---|---|---|---|---|---|---|---|
| 15 A 143* | | TERT-BUTYL BENZENE | T | 6.60E 05 | 6.60E 00 | 3.90E 03 | 3 |
| 15 A 141* | | N-BUTYL BENZENE | T | 6.60E 05 | 6.60E 00 | 3.90E 03 | 3 |
| 15 A 140* | | BUTYL BENZENES | T | 6.60E 05 | 6.60E 00 | 3.90E 03 | 3 |
| 15 A 142* | | SEC-BUTYL BENZENE | T | 6.60E 05 | 6.60E 00 | 3.90E 03 | 3 |
| 18 C 040* | W | 2-NAPHTHOL | T | 7.10E 05 | 6.50E 00 | 3.80E 03 | 6 |
| 13 B 080* | | METHYL DISULFIDE | T | 5.70E 05 | 6.33E 00 | 3.73E 03 | 5 |
| 23 B 140* | | BENZO(F)QUINOLINE | T | 5.70E 05 | 6.33E 00 | 3.73E 03 | 5 |
| 23 B 120* | | PHENANTHRIDINE | T | 5.70E 05 | 6.33E 00 | 3.73E 03 | 5 |
| 23 B 080* | | ACRIDINE | T | 5.70E 05 | 6.33E 00 | 3.73E 03 | 5 |
| 23 B 160* | | BENZO(H)QUINOLINE | T | 5.70E 05 | 6.33E 00 | 3.73E 03 | 5 |
| 05 B 120* | | BORNEOL | T | 5.70E 05 | 6.33E 00 | 3.73E 03 | 5 |
| 13 B 060* | | DIPHENYL SULFIDE | T | 5.70E 05 | 5.93E 00 | 3.50E 03 | 5 |
| 18 C 020* | | 1-NAPHTHOL | T | 7.10E 05 | 5.91E 00 | 3.50E 03 | 6 |
| 09 A 100* | | 1,3-DICYANO-1-HYDROXYBUTANE | T | 1.30E 05 | 5.90E 00 | 3.50E 03 | 4 |
| 23 C 080* | | CARBAZOLE | T | 1.30E 05 | 5.70E 00 | 3.33E 03 | 4 |
| 23 C 102* | | 9-METHYLCARBAZOLE | T | 1.30E 05 | 5.70E 00 | 3.33E 03 | 4 |
| 23 C 101* | | 3-METHYLCARBAZOLE | T | 1.30E 05 | 5.70E 00 | 3.33E 03 | 4 |
| 25 A 041* | | 2-METHYLTHIOPHENE | T | 1.30E 05 | 5.70E 00 | 3.33E 03 | 4 |
| 23 C 100* | | METHYLCARBAZOLES | T | 1.30E 05 | 5.70E 00 | 3.33E 03 | 4 |
| 25 A 040* | | METHYLTHIOPHENES | T | 1.30E 05 | 5.70E 00 | 3.33E 03 | 4 |
| 09 A 080* | | BUTYRONITRILE | T | 1.30E 05 | 5.70E 00 | 3.33E 03 | 4 |
| 25 B 040* | W | BENZO(B)THIOPHENE | T | 1.30E 05 | 5.70E 00 | 3.33E 03 | 4 |
| 25 A 042* | | 3-METHYLTHIOPHENE | T | 1.30E 05 | 5.70E 00 | 3.33E 03 | 4 |
| 15 B 182* | | 1,2,4-TRIMETHYLBENZENE | T | 6.60E 05 | 5.50E 00 | 3.24E 03 | 3 |
| 15 B 200* | | TETRAMETHYLBENZENES | T | 6.60E 05 | 5.50E 00 | 3.24E 03 | 3 |
| 15 B 181* | | 1,2,3-TRIMETHYLBENZENE | T | 6.60E 05 | 5.50E 00 | 3.24E 03 | 3 |
| 15 B 180* | | TRIMETHYLBENZENES | T | 6.60E 05 | 5.50E 00 | 3.24E 03 | 3 |
| 15 B 183* | | 1,3,5-TRIMETHYLBENZENE | T | 6.60E 05 | 5.50E 00 | 3.24E 03 | 3 |
| 15 B 202* | | 1,2,3,5-TETRAMETHYLBENZENE | T | 6.60E 05 | 5.50E 00 | 3.24E 03 | 3 |
| 15 B 201* | | 1,2,3,4-TETRAMETHYLBENZENE | T | 6.60E 05 | 5.50E 00 | 3.24E 03 | 3 |
| 15 B 203* | | 1,2,4,5-TETRAMETHYLBENZENE | T | 6.60E 05 | 5.50E 00 | 3.24E 03 | 3 |
| 18 C 040* | W | 2-NAPHTHOL | T | 5.70E 05 | 5.20E 00 | 3.10E 03 | 5 |
| 02 A 140* | P | DIBROMOCHLOROMETHANE | T | 2.30E 05 | 5.11E 00 | 3.01E 03 | 2 |
| 22 A 010* | W | INDENE | T | 2.30E 05 | 5.11E 00 | 3.01E 03 | 2 |

PRODUCT GAS ORGANIC MODULE COMPOSITE, HEALTH IMPACT

| DMEG NO. | | COMPOUND NAME | TYPE | CONC E-6 G/SCM | DS | WDS G/S | LCCAT |
|---|---|---|---|---|---|---|---|
| 15 B 142* | | 1,4-DIHYDRONAPHTHALENE | T | 6.60E 05 | 5.10E 00 | 3.00E 03 | 3 |
| 15 B 141* | | 1,2-DIHYDRONAPHTHALENE | T | 6.60E 05 | 5.10E 00 | 3.00E 03 | 3 |
| 15 B 140* | | DIHYDRONAPHTHALENES | T | 6.60E 05 | 5.10E 00 | 3.00E 03 | 3 |
| 15 B 120* | | TETRAHYDRONAPHTHALENE | T | 6.60E 05 | 5.10E 00 | 3.00E 03 | 3 |
| 08 A 160* | | BENZOIC ACID | T | 7.10E 05 | 5.10E 00 | 3.00E 03 | 6 |
| 08 D 320* | P | BUTYL BENZYL PHTHALATE | T | 7.10E 05 | 5.10E 00 | 3.00E 03 | 6 |
| 25 A 062* | | 2,4-DIMETHYLTHIOPHENE | T | 1.30E 05 | 5.00E 00 | 3.00E 03 | 4 |
| 25 A 064* | | 3,4-DIMETHYLTHIOPHENE | T | 1.30E 05 | 5.00E 00 | 3.00E 03 | 4 |
| 15 A 160* | W | BIPHENYL | D | 5.00E 03 | 5.00E 00 | 3.00E 03 | 3 |
| 25 A 063* | | 2,5-DIMETHYLTHIOPHENE | T | 1.30E 05 | 5.00E 00 | 3.00E 03 | 4 |
| 25 A 061* | | 2,3-DIMETHYLTHIOPHENE | T | 1.30E 05 | 5.00E 00 | 3.00E 03 | 4 |
| 25 A 060* | | DIMETHYLTHIOPHENES | T | 1.30E 05 | 5.00E 00 | 3.00E 03 | 4 |
| 20 B 040* | W | DINITRO-P-CRESOLS | D | 9.80E 02 | 4.90E 00 | 2.90E 03 | 5 |
| 04 A 180* | P | CHLOROPHENYL PHENYL ETHER | T | 1.30E 05 | 4.81E 00 | 2.84E 03 | 4 |
| 04 A 200* | | 4-BROMOPHENYL PHENYL ETHER | T | 1.30E 05 | 4.81E 00 | 2.84E 03 | 4 |
| 18 C 020* | | 1-NAPHTHOL | T | 5.70E 05 | 4.80E 00 | 2.80E 03 | 5 |
| 18 C 083* | | 5-INDANOL | T | 7.10E 05 | 4.73E 00 | 2.80E 03 | 6 |
| 18 C 082* | | 4-INDANOL | T | 7.10E 05 | 4.73E 00 | 2.80E 03 | 6 |
| 05 A 100* | | ISOBUTYL ALCOHOL | T | 7.10E 05 | 4.73E 00 | 2.80E 03 | 6 |
| 18 C 080* | | INDANOLS | T | 7.10E 05 | 4.73E 00 | 2.80E 03 | 6 |
| 05 A 080* | | N-BUTANOL | T | 7.10E 05 | 4.73E 00 | 2.80E 03 | 6 |
| 18 C 081* | | 1-INDANOL | T | 7.10E 05 | 4.73E 00 | 2.80E 03 | 6 |
| 21 A 020* | P | NAPHTHALENE | T | 2.30E 05 | 4.60E 00 | 2.71E 03 | 2 |
| 01 A 200 | W | OCTANES | T | 1.60E 06 | 4.60E 00 | 2.70E 03 | 1 |
| 01 A 201 | | N-OCTANE | T | 1.60E 06 | 4.60E 00 | 2.70E 03 | 1 |
| 02 A 343* | | 1,3-DICHLOROPROPANE | T | 1.60E 06 | 4.60E 00 | 2.70E 03 | 1 |
| 02 A 340* | P | DICHLOROPROPANES | T | 1.60E 06 | 4.60E 00 | 2.70E 03 | 1 |
| 25 A 080* | | TRIMETHYL AND TETRAMETHYL THIOPHENES | T | 1.30E 05 | 4.50E 00 | 2.64E 03 | 4 |
| 25 A 081* | | 2,3,5-TRIMETHYLTHIOPHENE | T | 1.30E 05 | 4.50E 00 | 2.64E 03 | 4 |
| 05 B 080* | | 2,6-DIMETHYL-4-HEPTANOL | T | 7.10E 05 | 4.43E 00 | 2.61E 03 | 6 |
| 08 A 180* | | ADIPIC ACID | T | 7.10E 05 | 4.43E 00 | 2.61E 03 | 6 |
| 03 B 060* | | 2-ETHYL-4-METHYL-1,3-DIOXOLANE | T | 5.70E 05 | 4.40E 00 | 2.60E 03 | 5 |
| 04 B 080* | | 2,2'-DICHLORODIETHYL ETHER | T | 1.30E 05 | 4.33E 00 | 2.60E 03 | 4 |
| 15 A 020 | P | BENZENE | D | > 1.30E 04> | 4.33E 00> | 2.60E 03 | |

PRODUCT GAS ORGANIC MODULE COMPOSITE, HEALTH IMPACT

| DMEG NO. | | COMPOUND NAME | TYPE | CONC E-6 G/SCM | DS | WDS G/S | LCCAT |
|---|---|---|---|---|---|---|---|
| 17 A 040* | | NITROTOLUENES | T | 1.30E 05 | 4.33E 00 | 2.60E 03 | 4 |
| 17 A 041* | | 2-NITROTOLUENE | T | 1.30E 05 | 4.33E 00 | 2.60E 03 | 4 |
| 17 A 042* | | 3-NITROTOLUENE | T | 1.30E 05 | 4.33E 00 | 2.60E 03 | 4 |
| 17 A 043* | | 4-NITROTOLUENE | T | 1.30E 05 | 4.33E 00 | 2.60E 03 | 4 |
| 04 B 040* | P | 1,1'-DICHLORODIETHYL ETHER | T | 2.30E 05 | 4.10E 00 | 2.42E 03 | 2 |
| 02 A 360* | | BROMOBUTANES | T | 2.30E 05 | 4.10E 00 | 2.42E 03 | 2 |
| 21 A 140* | P | ANTHRACENE | T | 2.30E 05 | 4.10E 00 | 2.42E 03 | 2 |
| 02 A 361* | | 1-BROMOBUTANE | T | 5.70E 05 | 4.10E 00 | 2.40E 03 | 5 |
| 08 A 160* | | BENZOIC ACID | T | 5.70E 05 | 4.10E 00 | 2.40E 03 | 5 |
| 08 D 320* | P | BUTYL BENZYL PHTHALATE | T | 1.30E 05 | 4.10E 00 | 2.40E 03 | 4 |
| 09 B 040* | W | NAPHTHONITRILES | T | 1.30E 05 | 4.10E 00 | 2.40E 03 | 4 |
| 09 B 042* | | B-NAPHTHONITRILES | T | 1.30E 05 | 4.10E 00 | 2.40E 03 | 4 |
| 09 B 020* | W | BENZONITRILE | T | 1.30E 05 | 4.10E 00 | 2.40E 03 | 4 |
| 09 B 041* | | A-NAPHTHONITRILES | T | 5.70E 05 | 3.80E 00 | 2.24E 03 | 5 |
| 05 A 080* | | N-BUTANOL | T | 5.70E 05 | 3.80E 00 | 2.24E 03 | 5 |
| 18 C 081* | | 1-INDANOL | T | 5.70E 05 | 3.80E 00 | 2.24E 03 | 5 |
| 18 C 083* | | 5-INDANOL | T | 5.70E 05 | 3.80E 00 | 2.24E 03 | 5 |
| 06 B 020* | W | 2,3-EPOXY-1-PROPANOL | T | 5.70E 05 | 3.80E 00 | 2.24E 03 | 5 |
| 05 A 100* | | ISOBUTYL ALCOHOL | T | 5.70E 05 | 3.80E 00 | 2.24E 03 | 5 |
| 18 C 082* | | 4-INDANOL | T | 5.70E 05 | 3.80E 00 | 2.24E 03 | 5 |
| 18 C 080* | | INDANOLS | T | 7.10E 05 | 3.73E 00 | 2.20E 03 | 6 |
| 05 C 060* | | A-TERPINEOL | T | 5.70E 05 | 3.60E 00 | 2.10E 03 | 5 |
| 05 B 080* | | 2,6-DIMETHYL-4-HEPTANOL | T | 5.70E 05 | 3.60E 00 | 2.10E 03 | 5 |
| 08 A 180* | | ADIPIC ACID | T | 5.70E 05 | 3.60E 00 | 2.10E 03 | 5 |
| 03 A 040* | W | 3-METHOXYBIPHENYL | T | 2.30E 05 | 3.33E 00 | 2.00E 03 | 2 |
| 16 A 201* | | 1-CHLORONAPHTHALENE | T | 2.30E 05 | 3.33E 00 | 2.00E 03 | 2 |
| 16 A 202* | | 2-CHLORONAPHTHALENE | T | 2.30E 05 | 3.33E 00 | 2.00E 03 | 2 |
| 16 A 200* | P | CHLORONAPHTHALENES | D | 4.20E 04 | 3.21E 00 | 1.90E 03 | |
| 53 A 060 | | SULFUR DIOXIDE | D | 1.40E 02 | 3.11E 00 | 1.83E 03 | 3 |
| 21 B 040* | P | BENZ(A)ANTHRACENE | S | 3.00E 01 | 3.00E 00 | 1.80E 03 | |
| 79 A 010 | P | SILVER | T | 5.70E 05 | 3.00E 00 | 1.80E 03 | 5 |
| 05 C 060* | | A-TERPINEOL | T | 1.30E 05 | 2.90E 00 | 1.70E 03 | 4 |
| 23 C 061* | | 2-METHYLINDOLE | T | 1.30E 05 | 2.90E 00 | 1.70E 03 | 4 |
| 23 C 060* | | METHYLINDOLES | | | | | |

PRODUCT GAS ORGANIC MODULE COMPOSITE, HEALTH IMPACT

| DMEG NO. | | COMPOUND NAME | TYPE | CONC E-6 G/SCM | DS | WDS G/S | LCCAT |
|---|---|---|---|---|---|---|---|
| 21 A 044* | | 2-ETHYLNAPHTHALENE | T | 6.60E 05 | 2.90E 00 | 1.70E 03 | 3 |
| 21 A 040* | | MONOALKYL NAPHTHALENES | T | 6.60E 05 | 2.90E 00 | 1.70E 03 | 3 |
| 21 A 080* | | DIMETHYLNAPHTHALENES | T | 6.60E 05 | 2.90E 00 | 1.70E 03 | 3 |
| 21 B 180* | P | PYRENE | T | 6.60E 05 | 2.90E 00 | 1.70E 03 | 3 |
| 21 A 081* | | 1,4-DIMETHYLNAPHTHALENE | T | 6.60E 05 | 2.90E 00 | 1.70E 03 | 3 |
| 21 A 041* | | 1-METHYLNAPHTHALENE | T | 6.60E 05 | 2.90E 00 | 1.70E 03 | 3 |
| 21 A 082* | | 2,3-DIMETHYLNAPHTHALENE | T | 6.60E 05 | 2.90E 00 | 1.70E 03 | 3 |
| 21 A 083* | | 2,6-DIMETHYLNAPHTHALENE | T | 6.60E 05 | 2.90E 00 | 1.70E 03 | 3 |
| 15 B 020* | | INDAN | T | 6.60E 05 | 2.90E 00 | 1.70E 03 | 3 |
| 21 A 042* | | 2-METHYLNAPHTHALENE | T | 6.60E 05 | 2.90E 00 | 1.70E 03 | 3 |
| 21 A 043* | | 1-ETHYLNAPHTHALENE | T | 6.60E 05 | 2.90E 00 | 1.70E 03 | 3 |
| 08 D 240* | | DI-2-ETHYLBUTYL ADIPATE | T | 7.10E 05 | 2.83E 00 | 1.70E 03 | 6 |
| 17 B 020* | | METHOXYNITROBENZENES | T | 5.70E 05 | 2.71E 00 | 1.60E 03 | 5 |
| 17 B 021* | | 1-METHOXY-2-NITROBENZENE | T | 5.70E 05 | 2.71E 00 | 1.60E 03 | 5 |
| 17 B 022* | | 1-METHOXY-3-NITROBENZENE | T | 5.70E 05 | 2.71E 00 | 1.60E 03 | 5 |
| 17 B 023* | | 1-METHOXY-4-NITROBENZENE | T | 5.70E 05 | 2.71E 00 | 1.60E 03 | 5 |
| 15 A 100* | | PROPYL BENZENE | T | 6.60E 05 | 2.63E 00 | 1.60E 03 | 3 |
| 15 A 120* | | ISOPROPYL BENZENE | T | 6.60E 05 | 2.63E 00 | 1.60E 03 | 3 |
| 16 A 180* | | 2-CHLOROTOLUENE | T | 6.60E 05 | 2.63E 00 | 1.60E 03 | 3 |
| 22 B 040* | P W | FLUORANTHENE | T | 2.30E 05 | 2.60E 00 | 1.50E 03 | 2 |
| 02 B 080* | P | TETRACHLOROETHENE | T | 1.60E 06 | 2.40E 00 | 1.40E 03 | 1 |
| 15 A 142* | | SEC-BUTYL BENZENE | T | 2.30E 05 | 2.30E 00 | 1.40E 03 | 2 |
| 15 A 143* | | TERT-BUTYL BENZENE | T | 2.30E 05 | 2.30E 00 | 1.40E 03 | 2 |
| 15 A 140* | | BUTYL BENZENES | T | 2.30E 05 | 2.30E 00 | 1.40E 03 | 2 |
| 15 A 141* | | N-BUTYL BENZENE | T | 2.30E 05 | 2.30E 00 | 1.40E 03 | 2 |
| 08 D 240* | | DI-2-ETHYLBUTYL ADIPATE | T | 5.70E 05 | 2.30E 00 | 1.34E 03 | 5 |
| 07 A 140* | | BENZALDEHYDE | T | 1.30E 05 | 2.20E 00 | 1.30E 03 | 4 |
| 16 A 120* | P | 1,3-DICHLOROBENZENE | T | 6.60E 05 | 2.20E 00 | 1.30E 03 | 3 |
| 16 A 100* | P | 1,2-DICHLOROBENZENE | T | 6.60E 05 | 2.20E 00 | 1.30E 03 | 3 |
| 01 A 140 | | HEXANES | D | 6.92E 05 | 2.00E 00 | 1.20E 03 | |
| 05 B 062* | | 3-PENTANOL | T | 7.10E 05 | 2.00E 00 | 1.20E 03 | 6 |
| 05 A 122* | | 2-METHYL-1-BUTANOL | T | 7.10E 05 | 2.00E 00 | 1.20E 03 | 6 |
| 05 B 061* | | 2-PENTANOL | T | 7.10E 05 | 2.00E 00 | 1.20E 03 | 6 |
| 05 A 121* | | N-PENTANOL | T | 7.10E 05 | 2.00E 00 | 1.20E 03 | 6 |

PRODUCT GAS ORGANIC MODULE COMPOSITE, HEALTH IMPACT

| DMEG NO. | | COMPOUND NAME | TYPE | CONC E-6 G/SCM | DS | WDS G/S | LCCAT |
|---|---|---|---|---|---|---|---|
| 23 A 043* | | 4-METHYLPYRIDINE | T | 7.10E 05 | 2.00E 00 | 1.20E 03 | 6 |
| 05 A 120* | | PENTANOLS (PRIMARY) | T | 7.10E 05 | 2.00E 00 | 1.20E 03 | 6 |
| 05 A 123* | | 2,2-DIMETHYL-1-PROPANOL | T | 7.10E 05 | 2.00E 00 | 1.20E 03 | 6 |
| 05 B 060* | | PENTANOLS (SECONDARY) | T | 7.10E 05 | 2.00E 00 | 1.20E 03 | 6 |
| 05 A 124* | | 3-METHYL-1-BUTANOL | T | 7.10E 05 | 2.00E 00 | 1.20E 03 | 6 |
| 23 A 042* | | 3-METHYLPYRIDINE | T | 7.10E 05 | 2.00E 00 | 1.20E 03 | 6 |
| 23 A 041* | | 2-METHYLPYRIDINE | T | 7.10E 05 | 2.00E 00 | 1.20E 03 | 6 |
| 05 B 063* | | 3-METHYL-2-BUTANOL | T | 2.30E 05 | 1.91E 00 | 1.13E 03 | 2 |
| 15 B 180* | | TRIMETHYLBENZENES | T | 2.30E 05 | 1.91E 00 | 1.13E 03 | 2 |
| 15 B 182* | | 1,2,4-TRIMETHYLBENZENE | T | 2.30E 05 | 1.91E 00 | 1.13E 03 | 2 |
| 15 B 203* | | 1,2,4,5-TETRAMETHYLBENZENE | T | 2.30E 05 | 1.91E 00 | 1.13E 03 | 2 |
| 15 B 183* | | 1,3,5-TRIMETHYLBENZENE | T | 2.30E 05 | 1.91E 00 | 1.13E 03 | 2 |
| 15 B 202* | | 1,2,3,5-TETRAMETHYLBENZENE | T | 2.30E 05 | 1.91E 00 | 1.13E 03 | 2 |
| 15 B 200* | | TETRAMETHYLBENZENES | T | 2.30E 05 | 1.91E 00 | 1.13E 03 | 2 |
| 15 B 201* | | 1,2,3,4-TETRAMETHYLBENZENE | T | 2.30E 05 | 1.91E 00 | 1.13E 03 | 2 |
| 15 B 181* | | 1,2,3-TRIMETHYLBENZENE | D | 6.30E 06 | 1.90E 00 | 1.12E 03 | |
| 01 A 020 | | METHANE | T | 6.60E 05 | 1.90E 00 | 1.11E 03 | 3 |
| 16 A 020* | P | CHLOROBENZENE | T | 1.30E 05 | 1.90E 00 | 1.11E 03 | 4 |
| 23 A 062* | | 3-ETHYLPYRIDINE | T | 1.30E 05 | 1.90E 00 | 1.11E 03 | 4 |
| 23 A 122* | | 2,4,6-COLLIDINE | T | 1.30E 05 | 1.90E 00 | 1.11E 03 | 4 |
| 23 A 082* | | 3-PHENYLPYRIDINE | T | 1.30E 05 | 1.90E 00 | 1.11E 03 | 4 |
| 23 A 081* | | 2-PHENYLPYRIDINE | T | 1.30E 05 | 1.90E 00 | 1.11E 03 | 4 |
| 23 A 121* | | 5-ETHYL-2-METHYLPYRIDINE | T | 1.30E 05 | 1.90E 00 | 1.11E 03 | 4 |
| 23 A 063* | | 4-ETHYLPYRIDINE | T | 1.30E 05 | 1.90E 00 | 1.11E 03 | 4 |
| 23 A 064* | | 4-N-PROPYLPYRIDINE | T | 1.30E 05 | 1.90E 00 | 1.11E 03 | 4 |
| 23 A 083* | | 4-PHENYLPYRIDINE | T | 1.30E 05 | 1.90E 00 | 1.11E 03 | 4 |
| 23 A 061* | | 2-ETHYLPYRIDINE | T | 1.30E 05 | 1.90E 00 | 1.11E 03 | 4 |
| 23 A 080* | | PHENYLPYRIDINES | T | 1.30E 05 | 1.90E 00 | 1.11E 03 | 4 |
| 23 A 120* | | COLLIDINES | T | 1.30E 05 | 1.90E 00 | 1.11E 03 | 4 |
| 23 A 060* | | MONOSUBSTITUTED ALKYL PYRIDINES | T | 2.30E 05 | 1.80E 00 | 1.04E 03 | 2 |
| 15 B 120* | | TETRAHYDRONAPHTHALENE | T | 2.30E 05 | 1.80E 00 | 1.04E 03 | 2 |
| 15 B 140* | | DIHYDRONAPHTHALENES | T | 2.30E 05 | 1.80E 00 | 1.04E 03 | 2 |
| 15 B 141* | | 1,2-DIHYDRONAPHTHALENE | T | 2.30E 05 | 1.80E 00 | 1.04E 03 | 2 |
| 15 B 142* | | 1,4-DIHYDRONAPHTHALENE | | | | | |

PRODUCT GAS ORGANIC MODULE COMPOSITE, HEALTH IMPACT

| DMEG NO. | COMPOUND NAME | TYPE | CONC E-6 G/SCM | DS | WDS G/S | LCCAT |
|---|---|---|---|---|---|---|
| 08 D 260* | DI-2-ETHYLHEXYL ADIPATE | T | 7.10E 05 | 1.73E 00 | 1.02E 03 | 6 |
| 01 A 100 | PENTANES | D | 5.94E 05 | 1.70E 00 | 1.00E 03 | |
| 16 A 083* | 1-BROMO-4-CHLOROBENZENE | T | 6.60E 05 | 1.70E 00 | 1.00E 03 | 3 |
| 16 A 082* | 1-BROMO-3-CHLOROBENZENE | T | 6.60E 05 | 1.70E 00 | 1.00E 03 | 3 |
| 16 A 081* | 1-BROMO-2-CHLOROBENZENE | T | 6.60E 05 | 1.70E 00 | 1.00E 03 | 3 |
| 16 A 080* | BROMOCHLOROBENZENES | T | 6.60E 05 | 1.70E 00 | 1.00E 03 | 3 |
| 01 A 242 | N-UNDECANE | T | 1.60E 06 | 1.60E 00 | 9.43E 02 | 1 |
| 01 A 241 | N-DECANE | T | 1.60E 06 | 1.60E 00 | 9.43E 02 | 1 |
| 01 A 222 | ISONONANE | T | 1.60E 06 | 1.60E 00 | 9.43E 02 | 1 |
| 01 A 220 | NONANES | T | 1.60E 06 | 1.60E 00 | 9.43E 02 | 1 |
| 01 A 221 | N-NONANE | T | 1.60E 06 | 1.60E 00 | 9.43E 02 | 1 |
| 01 A 260 | N-DODECANE | T | 1.60E 06 | 1.60E 00 | 9.43E 02 | 1 |
| 01 A 240 | ALKANES(C=10,11) | T | 1.60E 06 | 1.60E 00 | 9.43E 02 | 1 |
| 05 A 123* | 2,2-DIMETHYL-1-PROPANOL | T | 5.70E 05 | 1.60E 00 | 9.34E 02 | 5 |
| 05 A 120* | PENTANOLS (PRIMARY) | T | 5.70E 05 | 1.60E 00 | 9.34E 02 | 5 |
| 23 A 041* | 2-METHYLPYRIDINE | T | 5.70E 05 | 1.60E 00 | 9.34E 02 | 5 |
| 05 B 062* | 3-PENTANOL | T | 5.70E 05 | 1.60E 00 | 9.34E 02 | 5 |
| 23 A 042* | 3-METHYLPYRIDINE | T | 5.70E 05 | 1.60E 00 | 9.34E 02 | 5 |
| 05 A 122* | 2-METHYL-1-BUTANOL | T | 5.70E 05 | 1.60E 00 | 9.34E 02 | 5 |
| 05 B 063* | 3-METHYL-2-BUTANOL | T | 5.70E 05 | 1.60E 00 | 9.34E 02 | 5 |
| 05 A 124* | 3-METHYL-1-BUTANOL | T | 5.70E 05 | 1.60E 00 | 9.34E 02 | 5 |
| 05 B 061* | 2-PENTANOL | T | 5.70E 05 | 1.60E 00 | 9.34E 02 | 5 |
| 05 B 060* | PENTANOLS (SECONDARY) | T | 5.70E 05 | 1.60E 00 | 9.34E 02 | 5 |
| 05 A 121* | N-PENTANOL | T | 5.70E 05 | 1.60E 00 | 9.34E 02 | 5 |
| 23 A 043* | 4-METHYLPYRIDINE | T | 5.70E 05 | 1.60E 00 | 9.34E 02 | 5 |
| 15 A 080* | STYRENE | T | 6.60E 05 | 1.60E 00 | 9.30E 02 | 3 |
| 15 B 082* | M-XYLENE | T | 6.60E 05 | 1.50E 00 | 8.90E 02 | 3 |
| 15 B 102* | M-DIETHYL BENZENE | T | 6.60E 05 | 1.50E 00 | 8.90E 02 | 3 |
| 15 B 104* | O-DIISOPROPYL BENZENE | T | 6.60E 05 | 1.50E 00 | 8.90E 02 | 3 |
| 15 B 101* | O-DIETHYL BENZENE | T | 6.60E 05 | 1.50E 00 | 8.90E 02 | 3 |
| 15 B 100* | DIALKYL BENZENES (MW:134-191) | T | 6.60E 05 | 1.50E 00 | 8.90E 02 | 3 |
| 15 B 103* | P-DIETHYL BENZENE | T | 6.60E 05 | 1.50E 00 | 8.90E 02 | 3 |
| 15 B 106* | 1,4-DI-TERT-BUTYL BENZENE | T | 6.60E 05 | 1.50E 00 | 8.90E 02 | 3 |
| 15 B 105* | M-DIISOPROPYL BENZENE | T | 6.60E 05 | 1.50E 00 | 8.90E 02 | 3 |

PRODUCT GAS ORGANIC MODULE COMPOSITE, HEALTH IMPACT

| OMEG NO. | | COMPOUND NAME | TYPE | CONC E-6 G/SCM | DS | WDS G/S | LCCAT |
|---|---|---|---|---|---|---|---|
| 15 B 083* | | P-XYLENE | T | 6.60E 05 | 1.50E 00 | 8.90E 02 | 3 |
| 16 A 140* | P | 1,4-DICHLOROBENZENE | T | 6.60E 05 | 1.50E 00 | 8.70E 02 | 3 |
| 08 D 260* | | DI-2-ETHYLHEXYL ADIPATE | T | 5.70E 05 | 1.40E 00 | 8.20E 02 | 5 |
| 16 A 063* | | 1,4-DIBROMOBENZENE | T | 6.60E 05 | 1.40E 00 | 8.11E 02 | 3 |
| 16 A 061* | | 1,2-DIBROMOBENZENE | T | 6.60E 05 | 1.40E 00 | 8.11E 02 | 3 |
| 16 A 062* | | 1,3-DIBROMOBENZENE | T | 6.60E 05 | 1.40E 00 | 8.11E 02 | 3 |
| 16 A 060* | | DIBROMOBENZENES | T | 6.60E 05 | 1.40E 00 | 8.11E 02 | 3 |
| 08 D 142* | | SEC-AMYL ACETATE | T | 7.10E 05 | 1.40E 00 | 8.10E 02 | 6 |
| 08 D 141* | | N-AMYL ACETATE | T | 7.10E 05 | 1.40E 00 | 8.10E 02 | 6 |
| 08 D 143* | | ISOAMYL ACETATE | T | 7.10E 05 | 1.40E 00 | 8.10E 02 | 6 |
| 08 D 140* | | AMYL ACETATES | T | 7.10E 05 | 1.40E 00 | 8.10E 02 | 6 |
| 16 A 040* | | BROMOBENZENE | T | 6.60E 05 | 1.34E 00 | 7.94E 02 | 3 |
| 23 C 062* | | 3-METHYLINDOLE | T | 5.70E 05 | 1.30E 00 | 7.50E 02 | 5 |
| 08 D 220* | | DIBUTYL ADIPATE | T | 7.10E 05 | 1.22E 00 | 7.22E 02 | 6 |
| 08 D 141* | | N-AMYL ACETATE | T | 5.70E 05 | 1.10E 00 | 6.50E 02 | 5 |
| 08 D 142* | | SEC-AMYL ACETATE | T | 5.70E 05 | 1.10E 00 | 6.50E 02 | 5 |
| 08 D 140* | | AMYL ACETATES | T | 5.70E 05 | 1.10E 00 | 6.50E 02 | 5 |
| 08 D 143* | | ISOAMYL ACETATE | T | 5.70E 05 | 1.10E 00 | 6.50E 02 | 5 |
| 08 D 122* | | SEC-BUTYL ACETATE | T | 7.10E 05 | 1.01E 00 | 6.00E 02 | 6 |
| 08 D 120* | | BUTYL ACETATES | T | 7.10E 05 | 1.01E 00 | 6.00E 02 | 6 |
| 08 D 123* | | ISOBUTYL ACETATE | T | 7.10E 05 | 1.01E 00 | 6.00E 02 | 6 |
| 08 D 121* | | N-BUTYL ACETATE | T | 7.10E 05 | 1.01E 00 | 6.00E 02 | 6 |
| 03 B 060* | | 2-ETHYL-4-METHYL-1,3-DIOXOLANE | T | 1.30E 05 | 1.00E 00 | 5.90E 02 | 4 |
| 21 A 042* | | 2-METHYLNAPHTHALENE | T | 2.30E 05 | 1.00E 00 | 5.90E 02 | 2 |
| 21 A 082* | | 2,3-DIMETHYLNAPHTHALENE | T | 2.30E 05 | 1.00E 00 | 5.90E 02 | 2 |
| 21 A 041* | | 1-METHYLNAPHTHALENE | T | 2.30E 05 | 1.00E 00 | 5.90E 02 | 2 |
| 21 A 081* | | 1,4-DIMETHYLNAPHTHALENE | T | 2.30E 05 | 1.00E 00 | 5.90E 02 | 2 |
| 21 A 044* | | 2-ETHYLNAPHTHALENE | T | 2.30E 05 | 1.00E 00 | 5.90E 02 | 2 |
| 21 A 040* | | MONOALKYL NAPHTHALENES | T | 2.30E 05 | 1.00E 00 | 5.90E 02 | 2 |
| 21 A 080* | | DIMETHYLNAPHTHALENES | T | 2.30E 05 | 1.00E 00 | 5.90E 02 | 2 |
| 15 B 020* | | INDAN | T | 2.30E 05 | 1.00E 00 | 5.90E 02 | 2 |
| 21 B 180* | P | PYRENE | T | 2.30E 05 | 1.00E 00 | 5.90E 02 | 2 |
| 21 A 083* | | 2,6-DIMETHYLNAPHTHALENE | T | 2.30E 05 | 1.00E 00 | 5.90E 02 | 2 |
| 21 A 043* | | 1-ETHYLNAPHTHALENE | T | 2.30E 05 | 1.00E 00 | 5.90E 02 | 2 |

PRODUCT GAS ORGANIC MODULE COMPOSITE, HEALTH IMPACT

| DMEG NO. | | COMPOUND NAME | TYPE | CONC E-6 G/SCM | DS | WDS G/S | LCCAT |
|---|---|---|---|---|---|---|---|
| 08 D 220* | | DIBUTYL ADIPATE | T | 5.70E 05 | 9.82E-01 | 5.80E 02 | 5 |
| 48 A 010 | | PHOSPHORUS | S | 9.40E 01 | 9.40E-01 | 5.54E 02 | |
| 16 A 180* | | 2-CHLOROTOLUENE | T | 2.30E 05 | 9.20E-01 | 5.42E 02 | 2 |
| 15 A 120* | | ISOPROPYL BENZENE | T | 2.30E 05 | 9.20E-01 | 5.42E 02 | 2 |
| 15 A 100* | | PROPYL BENZENE | T | 2.30E 05 | 9.20E-01 | 5.42E 02 | 2 |
| 06 B 020* | W | 2,3-EPOXY-1-PROPANOL | T | 1.30E 05 | 8.70E-01 | 5.11E 02 | 4 |
| 08 D 100* | | PROPYL ACETATES | T | 7.10E 05 | 8.50E-01 | 5.00E 02 | 6 |
| 08 D 101* | | N-PROPYL ACETATE | T | 7.10E 05 | 8.50E-01 | 5.00E 02 | 6 |
| 08 D 123* | | ISOBUTYL ACETATE | T | 5.70E 05 | 8.14E-01 | 4.80E 02 | 5 |
| 08 D 122* | | SEC-BUTYL ACETATE | T | 5.70E 05 | 8.14E-01 | 4.80E 02 | 5 |
| 08 D 120* | | BUTYL ACETATES | T | 5.70E 05 | 8.14E-01 | 4.80E 02 | 5 |
| 08 D 121* | | N-BUTYL ACETATE | T | 5.70E 05 | 8.14E-01 | 4.80E 02 | 5 |
| 03 A 040* | W | 3-METHOXYBIPHENYL | T | 1.30E 05 | 8.12E-01 | 4.80E 02 | 4 |
| 53 A 080 | | CARBONYL SULFIDE | D | 3.51E 05 | 8.00E-01 | 4.70E 02 | |
| 16 A 100* | P | 1,2-DICHLOROBENZENE | T | 2.30E 05 | 7.70E-01 | 4.52E 02 | 2 |
| 16 A 120* | P | 1,3-DICHLOROBENZENE | T | 2.30E 05 | 7.70E-01 | 4.52E 02 | 2 |
| 06 A 040* | | PROPYLENE GLYCOL | T | 7.10E 05 | 7.50E-01 | 4.40E 02 | 6 |
| 01 B 080 | | BUTADIENES | T | 1.60E 06 | 7.30E-01 | 4.30E 02 | 1 |
| 08 D 101* | | N-PROPYL ACETATE | T | 5.70E 05 | 6.80E-01 | 4.00E 02 | 5 |
| 08 D 100* | | PROPYL ACETATES | T | 5.70E 05 | 6.80E-01 | 4.00E 02 | 5 |
| 02 A 340* | P | DICHLOROPROPANES | T | 2.30E 05 | 6.60E-01 | 3.90E 02 | 2 |
| 16 A 020* | P | CHLOROBENZENE | T | 2.30E 05 | 6.60E-01 | 3.90E 02 | 2 |
| 02 A 343* | | 1,3-DICHLOROPROPANE | T | 2.30E 05 | 6.60E-01 | 3.90E 02 | 2 |
| 76 A 010 | P | NICKEL | S | 9.60E 00 | 6.40E-01 | 3.80E 02 | |
| 53 A 100 | | CARBON DISULFIDE | D | 3.73E 04 | 6.21E-01 | 3.70E 02 | |
| 17 B 023* | | 1-METHOXY-4-NITROBENZENE | T | 1.30E 05 | 6.20E-01 | 3.70E 02 | 4 |
| 17 B 020* | | METHOXYNITROBENZENES | T | 1.30E 05 | 6.20E-01 | 3.70E 02 | 4 |
| 17 B 021* | | 1-METHOXY-2-NITROBENZENE | T | 1.30E 05 | 6.20E-01 | 3.70E 02 | 4 |
| 17 B 022* | | 1-METHOXY-3-NITROBENZENE | T | 1.30E 05 | 6.20E-01 | 3.70E 02 | 4 |
| 06 A 040* | | PROPYLENE GLYCOL | T | 5.70E 05 | 6.00E-01 | 3.53E 02 | 5 |
| 16 A 083* | | 1-BROMO-4-CHLOROBENZENE | T | 2.30E 05 | 5.90E-01 | 3.50E 02 | 2 |
| 16 A 080* | | BROMOCHLOROBENZENES | T | 2.30E 05 | 5.90E-01 | 3.50E 02 | 2 |
| 16 A 081* | | 1-BROMO-2-CHLOROBENZENE | T | 2.30E 05 | 5.90E-01 | 3.50E 02 | 2 |
| 16 A 082* | | 1-BROMO-3-CHLOROBENZENE | T | 2.30E 05 | 5.90E-01 | 3.50E 02 | 2 |

## PRODUCT GAS ORGANIC MODULE COMPOSITE, HEALTH IMPACT

| DMEG NO. | | COMPOUND NAME | TYPE | CONC E-6 G/SCM | DS | WDS G/S | LCCAT |
|---|---|---|---|---|---|---|---|
| 15 A 080* | | STYRENE | T | 2.30E 05 | 5.50E-01 | 3.23E 02 | 2 |
| 15 B 101* | | O-DIETHYL BENZENE | T | 2.30E 05 | 5.22E-01 | 3.10E 02 | 2 |
| 15 B 102* | | M-DIETHYL BENZENE | T | 2.30E 05 | 5.22E-01 | 3.10E 02 | 2 |
| 15 B 083* | | P-XYLENE | T | 2.30E 05 | 5.22E-01 | 3.10E 02 | 2 |
| 15 B 100* | | DIALKYL BENZENES (MW:134-191) | T | 2.30E 05 | 5.22E-01 | 3.10E 02 | 2 |
| 15 B 105* | | M-DIISOPROPYL BENZENE | T | 2.30E 05 | 5.22E-01 | 3.10E 02 | 2 |
| 15 B 104* | | O-DIISOPROPYL BENZENE | T | 2.30E 05 | 5.22E-01 | 3.10E 02 | 2 |
| 15 B 103* | | P-DIETHYL BENZENE | T | 2.30E 05 | 5.22E-01 | 3.10E 02 | 2 |
| 15 B 082* | | M-XYLENE | T | 2.30E 05 | 5.22E-01 | 3.10E 02 | 2 |
| 15 B 106* | | 1,4-DI-TERT-BUTYL BENZENE | S | 4.60E 00 | 5.11E-01 | 3.01E 02 | |
| 85 A 010 | | URANIUM | T | 2.30E 05 | 5.11E-01 | 3.01E 02 | 2 |
| 16 A 140* | P | 1,4-DICHLOROBENZENE | T | 7.10E 05 | 5.10E-01 | 3.00E 02 | 6 |
| 08 C 040* | | ACETAMIDE | T | 2.30E 05 | 4.80E-01 | 2.82E 02 | 2 |
| 16 A 060* | | DIBROMOBENZENES | T | 2.30E 05 | 4.80E-01 | 2.82E 02 | 2 |
| 16 A 061* | | 1,2-DIBROMOBENZENE | T | 2.30E 05 | 4.80E-01 | 2.82E 02 | 2 |
| 16 A 063* | | 1,4-DIBROMOBENZENE | T | 2.30E 05 | 4.80E-01 | 2.82E 02 | 2 |
| 16 A 062* | | 1,3-DIBROMOBENZENE | T | 2.30E 05 | 4.70E-01 | 2.80E 02 | 2 |
| 16 A 040* | | BROMOBENZENE | S | 4.60E 02 | 4.60E-01 | 2.71E 02 | |
| 72 A 010 | | IRON (AS FE+2) | D | 1.90E 03 | 4.22E-01 | 2.50E 02 | |
| 25 A 020 | W | THIOPHENE | T | 5.70E 05 | 4.10E-01 | 2.40E 02 | 5 |
| 08 C 040* | | ACETAMIDE | T | 1.30E 05 | 3.61E-01 | 2.13E 02 | 4 |
| 23 A 043* | | 4-METHYLPYRIDINE | T | 1.30E 05 | 3.61E-01 | 2.13E 02 | 4 |
| 23 A 042* | | 3-METHYLPYRIDINE | T | 1.30E 05 | 3.61E-01 | 2.13E 02 | 4 |
| 23 A 041* | | 2-METHYLPYRIDINE | T | 2.30E 05 | 3.43E-01 | 2.02E 02 | 2 |
| 02 B 080* | P | TETRACHLOROETHENE | D | 4.60E 05 | 3.30E-01 | 1.93E 02 | |
| 01 A 080 | | BUTANES | D | 6.50E 01 | 3.00E-01 | 1.74E 02 | 3 |
| 21 B 100* | | BENZO(C)PHENANTHRENE & ALKYL DERIVATIVES | T | 1.30E 05 | 2.90E-01 | 1.70E 02 | 4 |
| 23 C 062* | | 3-METHYLINDOLE | S | 6.30E 00 | 2.90E-01 | 1.70E 02 | |
| 27 A 010 | | LITHIUM | S | 2.90E 01 | 1.93E-01 | 1.14E 02 | |
| 46 A 010 | P | LEAD | D | 8.10E 00 | 1.80E-01 | 1.10E 02 | 2 |
| 21 B 040* | P | BENZ(A)ANTHRACENE | T | 1.60E 06 | 1.80E-01 | 1.03E 02 | 1 |
| 01 B 060 | | BUTYLENES | D | 7.90E 05 | 1.30E-01 | 7.62E 01 | |
| 01 A 040 | | ETHANE | D | 8.00E 05 | 8.90E-02 | 5.24E 01 | |
| 01 A 060 | | PROPANE | | | | | |

## PRODUCT GAS ORGANIC MODULE COMPOSITE, HEALTH IMPACT

| DMEG NO. | | COMPOUND NAME | TYPE | CONC E-6 G/SCM | DS | WDS G/S | LCCAT |
|---|---|---|---|---|---|---|---|
| 83 A 010 | P | MERCURY | D | 3.30E 00 | 6.60E-02 | 3.90E 01 | |
| 01 B 020 | | ETHYLENE | D | 3.60E 05 | 6.30E-02 | 3.71E 01 | |
| 78 A 010 | P | COPPER | S | 1.10E 01 | 5.50E-02 | 3.24E 01 | |
| 36 A 010 | | BARIUM | S | 2.10E 01 | 4.20E-02 | 2.50E 01 | |
| 43 A 010 | | SILICON | S | 3.30E 02 | 3.30E-02 | 1.94E 01 | |
| 50 A 010 | P | ANTIMONY | D | < 1.60E 01< | 3.20E-02< | 1.90E 01 | |
| 34 A 010 | | CALCIUM (AS CA+2) | S | 4.60E 02 | 2.90E-02 | 1.70E 01 | |
| 74 A 010 | | COBALT | S | > 8.00E-01> | 1.60E-02> | 9.43E 00 | |
| 54 A 010 | P | SELENIUM | D | > 3.00E 00> | 1.50E-02> | 8.84E 00 | |
| 22 C 080* | P W | BENZO(B)FLUORANTHENE | D | 1.00E 01 | 1.11E-02 | 6.60E 00 | 3 |
| 81 A 010 | P | ZINC | S | 3.10E 01 | 7.74E-03 | 4.60E 00 | |
| 37 A 010 | | BORON | S | > 1.30E 01> | 4.20E-03> | 2.50E 00 | |
| 33 A 010 | | MAGNESIUM | S | 2.50E 01 | 4.20E-03 | 2.50E 00 | |
| 62 A 010 | | TITANIUM | S | 2.40E 01 | 4.00E-03 | 2.40E 00 | |
| 56 A 010 | | FLUORINE (AS F-) | S | 9.20E 00 | 3.70E-03 | 2.20E 00 | |
| 39 A 010 | | GALLIUM | S | 1.30E 01 | 2.60E-03 | 1.53E 00 | |
| 65 A 010 | | VANADIUM | S | 9.20E-01 | 1.84E-03 | 1.10E 00 | |
| 71 A 010 | P | MANGANESE | S | 7.10E 00 | 1.42E-03 | 8.40E-01 | |
| 35 A 010 | | STRONTIUM | S | 4.20E 00 | 1.40E-03 | 8.00E-01 | |
| 15 A 040 | P | TOLUENE | D | 2.60E 02 | 6.84E-04 | 4.03E-01 | |
| 28 A 010 | | SODIUM | S | 3.10E 01 | 5.84E-04 | 3.50E-01 | |
| 15 B 080 | | XYLENES | D | 4.80E 01 | 1.10E-04 | 6.43E-02 | |
| 15 B 081 | | O-XYLENE | D | 4.80E 01 | 1.10E-04 | 6.43E-02 | |
| 15 A 060 | P | ETHYL BENZENE | D | 3.90E 01 | 8.90E-05 | 5.22E-02 | |
| 38 A 010 | | ALUMINUM | S | 4.20E-01 | 8.10E-05 | 4.80E-02 | |
| 63 A 010 | | ZIRCONIUM (AS ZR+4) | S | 2.50E-01 | 5.00E-05 | 2.94E-02 | |
| 84 B 010 | | CERIUM | S | 8.80E-01 | 2.40E-05 | 1.40E-02 | |
| 30 A 010 | | RUBIDIUM (AS RB+) | S | 2.00E 00 | 1.70E-05 | 9.83E-03 | |
| 84 A 010 | | LANTHANUM | S | 1.30E 00 | 1.20E-05 | 7.00E-03 | |
| 57 A 010 | | CHLORINE (AS CL-) | S | 1.60E 01 | 0.00E-01 | 0.00E-01 | |
| 21 B 080* | | 3-METHYLCHOLANTHRENE | D | 0.00E-01 | 0.00E-01 | 0.00E-01 | 2 |
| 04 A 160* | P | A-CHLOROBUTYL ETHYL ETHER | T | 1.30E 05 | 0.00E-01 | 0.00E-01 | 4 |
| 29 A 010 | | POTASSIUM | S | 6.90E 01 | 0.00E-01 | 0.00E-01 | |
| 21 A 120* | PH | ACENAPHTHYLENE | T | 6.60E 05 | 0.00E-01 | 0.00E-01 | 3 |

PRODUCT GAS ORGANIC MODULE COMPOSITE, HEALTH IMPACT

| DMEG NO. | | | COMPOUND NAME | TYPE | CONC E-6 G/SCM | DS | WDS G/S | LCCAT |
|---|---|---|---|---|---|---|---|---|
| 45 A 010 | | | TIN | S | 8.80E-01 | 0.00E-01 | 0.00E-01 | |
| 21 C 100* | P | W | BENZO(A)PYRENE | D | 0.00E-01 | 0.00E-01 | 0.00E-01 | 2 |
| 21 B 100* | | | BENZO(C)PHENANTHRENE & ALKYL DERIVATIVES | D | 0.00E-01 | 0.00E-01 | 0.00E-01 | 2 |
| 21 B 060* | | W | 7,12-DIMETHYLBENZ(A)ANTHRACENE | D | 0.00E-01 | 0.00E-01 | 0.00E-01 | 3 |
| 04 A 160* | P | | A-CHLOROBUTYL ETHYL ETHER | T | 5.70E 05 | 0.00E-01 | 0.00E-01 | 5 |
| 21 D 040* | | W | DIBENZO(A,I)PYRENE | D | 0.00E-01 | 0.00E-01 | 0.00E-01 | 3 |
| 22 C 080* | P | W | BENZO(B)FLUORANTHENE | D | 0.00E-01 | 0.00E-01 | 0.00E-01 | 2 |
| 21 C 100* | P | W | BENZO(A)PYRENE | D | 0.00E-01 | 0.00E-01 | 0.00E-01 | 3 |
| 21 B 080* | | | 3-METHYLCHOLANTHRENE | D | 0.00E-01 | 0.00E-01 | 0.00E-01 | 3 |
| 21 C 080* | P | | DIBENZ(A,H)ANTHRACENE | D | 0.00E-01 | 0.00E-01 | 0.00E-01 | 3 |
| 12 A 020* | P | W | N-NITROSODIMETHYLAMINE | D | 0.00E-01 | 0.00E-01 | 0.00E-01 | 5 |
| 10 C 040* | | | AMINOTOLUENES | D | 0.00E-01 | 0.00E-01 | 0.00E-01 | 5 |
| 08 B 060* | | W | B-PROPIOLACTONE | D | 0.00E-01 | 0.00E-01 | 0.00E-01 | 5 |
| 20 A 120* | | W | 2,4,6-TRINITROPHENOL | D | 0.00E-01 | 0.00E-01 | 0.00E-01 | 5 |
| 16 A 220* | | W | POLYCHLORINATED BIPHENYLS | D | 0.00E-01 | 0.00E-01 | 0.00E-01 | 3 |
| 23 B 100* | | W | DIHYDROACRIDINE | D | 0.00E-01 | 0.00E-01 | 0.00E-01 | 5 |
| 23 B 220* | | | DIBENZ(A,J)ACRIDINE | D | 0.00E-01 | 0.00E-01 | 0.00E-01 | 5 |
| 23 B 240* | | | DIBENZ(A,H)ACRIDINE | D | 0.00E-01 | 0.00E-01 | 0.00E-01 | 5 |
| 23 B 260* | | | DIBENZ(C,H)ACRIDINE | D | 0.00E-01 | 0.00E-01 | 0.00E-01 | 5 |
| 53 A 010 | | | SULFUR | S | 8.60E 02 | 0.00E-01 | 0.00E-01 | |
| 21 D 080* | PH | | BENZO(GHI)PERYLENE | T | 2.30E 05 | 0.00E-01 | 0.00E-01 | 2 |
| 21 D 080* | PH | | BENZO(GHI)PERYLENE | T | 6.60E 05 | 0.00E-01 | 0.00E-01 | 3 |
| 21 B 060* | | W | 7,12-DIMETHYLBENZ(A)ANTHRACENE | D | 0.00E-01 | 0.00E-01 | 0.00E-01 | 2 |
| 21 D 040* | | W | DIBENZO(A,I)PYRENE | D | 0.00E-01 | 0.00E-01 | 0.00E-01 | 2 |
| 22 A 020* | PH | | FLUORENE | T | 2.30E 05 | 0.00E-01 | 0.00E-01 | 2 |
| 22 A 020* | PH | | FLUORENE | T | 6.60E 05 | 0.00E-01 | 0.00E-01 | 3 |
| 58 A 010 | | | BROMINE | S | 8.80E-01 | 0.00E-01 | 0.00E-01 | |
| 21 C 080* | P | | DIBENZ(A,H)ANTHRACENE | D | 0.00E-01 | 0.00E-01 | 0.00E-01 | 2 |
| 21 A 100* | PH | | ACENAPHTHENE | T | 2.30E 05 | 0.00E-01 | 0.00E-01 | 2 |
| 21 A 100* | PH | | ACENAPHTHENE | T | 6.60E 05 | 0.00E-01 | 0.00E-01 | 3 |
| 21 A 120* | PH | | ACENAPHTHYLENE | T | 2.30E 05 | 0.00E-01 | 0.00E-01 | 2 |

PRODUCT GAS ORGANIC MODULE COMPOSITE

FLOW RATE = 590 G/S (0.57 SCM/S, DRY BASIS)

5.555 SCM AT 25C AND 760 MM HG SAMPLED

TOTAL ORGANIC LOADING = 8.1 G/SCM

TOTAL TCO = 6.0 G/SCM  TOTAL GRAV = 2.2 G/SCM

0.195% ORIGINAL SAMPLE TO LC

LC TCO = 64.7 MG  LC GRAV = 24.0 MG  LC TOTAL = 88.7 MG

| LCCAT | ORGANIC LOADING |
|---|---|
| 1 | 1600000.0 |
| 2 | 230000.0 |
| 3 | 660000.0 |
| 4 | 130000.0 |
| 5 | 570000.0 |
| 6 | 710000.0 |
| 7 | 2500000.0 |

FLOW RATE = 590.00

MINIMUM DISCHARGE SEVERITY = .010

STATE: GAS, UNITS IN MICROGRAMS/SCM

IMPACT: ECOLOGY

EXPERIMENTALY DETERMINED DATA

SPARK SOURCE DATA

PRODUCT GAS ORGANIC MODULE COMPOSITE, ECOLOGY IMPACT

| DMEG NO. | | COMPOUND NAME | TYPE | CONC E-6 G/SCM | DS | WDS G/S | LCCAT |
|---|---|---|---|---|---|---|---|
| 01 B 020 | W | ETHYLENE | D | 3.60E 05 | 3.60E 05 | 2.11E 08 | |
| 47 A 060 | P | AMMONIA | D | 1.10E 07 | 3.03E 04 | 1.80E 07 | |
| 42 A 070 | | CARBON MONOXIDE | D | 3.00E 08 | 2.50E 03 | 1.50E 06 | |
| 15 A 120* | | ISOPROPYL BENZENE | T | 6.60E 05 | 5.50E 02 | 3.24E 05 | 3 |
| 15 A 120* | | ISOPROPYL BENZENE | T | 2.30E 05 | 1.91E 02 | 1.13E 05 | 2 |
| 15 A 020 | P | BENZENE | D | > 1.30E 04> | 1.80E 01> | 1.10E 04 | |
| 47 A 080 | P | HYDROGEN CYANIDE | D | 2.22E 05 | 6.52E 00 | 3.90E 03 | |
| 01 A 020 | W | METHANE | D | 6.30E 06 | 9.64E-01 | 5.70E 02 | |
| 65 A 010 | | VANADIUM | S | 9.20E-01 | 9.20E-01 | 5.42E 02 | |
| 01 B 080 | | BUTADIENES | T | 1.60E 06 | 7.30E-01 | 4.30E 02 | 1 |
| 83 A 010 | P | MERCURY | D | 3.30E 00 | 3.30E-01 | 1.94E 02 | |
| 01 B 060 | | BUTYLENES | T | 1.60E 06 | 7.00E-02 | 4.10E 01 | 1 |
| 01 A 040 | | ETHANE | D | 7.90E 05 | 6.60E-02 | 3.90E 01 | |
| 15 A 040 | P | TOLUENE | D | 2.60E 02 | 5.70E-02 | 3.33E 01 | |
| 01 A 060 | | PROPANE | D | 8.00E 05 | 4.44E-02 | 2.62E 01 | |
| 01 A 080 | | BUTANES | D | 4.60E 05 | 1.90E-02 | 1.12E 01 | |
| 15 B 080 | | XYLENES | D | 4.80E 01 | 0.00E-01 | 0.00E-01 | |
| 53 A 080 | | CARBONYL SULFIDE | D | 3.51E 05 | 0.00E-01 | 0.00E-01 | |
| 25 A 020 | | THIOPHENE | D | 1.90E 03 | 0.00E-01 | 0.00E-01 | |
| 42 A 080 | | CARBON DIOXIDE | D | 1.71E 08 | 0.00E-01 | 0.00E-01 | |
| 53 A 060 | | SULFUR DIOXIDE | D | 4.20E 04 | 0.00E-01 | 0.00E-01 | |
| 53 A 100 | | CARBON DISULFIDE | D | 3.73E 04 | 0.00E-01 | 0.00E-01 | |
| 21 B 040* | P | BENZ(A)ANTHRACENE | D | 8.10E 00 | 0.00E-01 | 0.00E-01 | 2 |
| 21 B 060* | | 7,12-DIMETHYLBENZ(A)ANTHRACENE | D | 0.00E-01 | 0.00E-01 | 0.00E-01 | 2 |
| 21 D 040* | | DIBENZO(A,I)PYRENE | D | 0.00E-01 | 0.00E-01 | 0.00E-01 | 2 |
| 21 B 100* | | BENZO(C)PHENANTHRENE & ALKYL DERIVATIVES | D | 0.00E-01 | 0.00E-01 | 0.00E-01 | 2 |
| 15 A 060 | P | ETHYL BENZENE | D | 3.90E 01 | 0.00E-01 | 0.00E-01 | |
| 21 B 080* | | 3-METHYLCHOLANTHRENE | D | 0.00E-01 | 0.00E-01 | 0.00E-01 | 2 |
| 21 C 080* | P | DIBENZ(A,H)ANTHRACENE | D | 0.00E-01 | 0.00E-01 | 0.00E-01 | 2 |
| 22 C 080* | P | BENZO(B)FLUORANTHENE | D | 0.00E-01 | 0.00E-01 | 0.00E-01 | 2 |
| 16 A 220* | | POLYCHLORINATED BIPHENYLS | D | 0.00E-01 | 0.00E-01 | 0.00E-01 | 3 |
| 15 A 160 | | BIPHENYL | D | 5.00E 03 | 0.00E-01 | 0.00E-01 | 3 |
| 21 B 040* | P | BENZ(A)ANTHRACENE | D | 1.40E 02 | 0.00E-01 | 0.00E-01 | 3 |
| 16 A 220* | | POLYCHLORINATED BIPHENYLS | D | < 7.20E 00< | 0.00E-01< | 0.00E-01 | 2 |

PRODUCT GAS ORGANIC MODULE COMPOSITE, ECOLOGY IMPACT

| DMEG NO. | | COMPOUND NAME | TYPE | CONC E-6 G/SCM | DS | WDS G/S | LCCAT |
|---|---|---|---|---|---|---|---|
| 01 A 100 | | PENTANES | D | 5.94E 05 | 0.00E-01 | 0.00E-01 | |
| 01 A 140 | | HEXANES | D | 6.92E 05 | 0.00E-01 | 0.00E-01 | |
| 21 B 100* | | BENZO(C)PHENANTHRENE & ALKYL DERIVATIVES | D | 6.50E 01 | 0.00E-01 | 0.00E-01 | 3 |
| 21 C 100* | P | BENZO(A)PYRENE | D | 0.00E-01 | 0.00E-01 | 0.00E-01 | 3 |
| 21 C 100* | P | BENZO(A)PYRENE | D | 0.00E-01 | 0.00E-01 | 0.00E-01 | 2 |
| 53 A 090 | | HYDROGEN SULFIDE | D | 1.54E 06 | 0.00E-01 | 0.00E-01 | |
| 12 A 020* | P | N-NITROSODIMETHYLAMINE | D | 0.00E-01 | 0.00E-01 | 0.00E-01 | 5 |
| 10 C 040 | | AMINOTOLUENES | D | 0.00E-01 | 0.00E-01 | 0.00E-01 | 5 |
| 08 B 060 | | B-PROPIOLACTONE | D | 0.00E-01 | 0.00E-01 | 0.00E-01 | 5 |
| 20 A 120 | | 2,4,6-TRINITROPHENOL | D | 0.00E-01 | 0.00E-01 | 0.00E-01 | 5 |
| 20 B 040 | | DINITRO-P-CRESOLS | D | 9.80E 02 | 0.00E-01 | 0.00E-01 | 5 |
| 23 B 100 | | DIHYDROACRIDINE | D | 0.00E-01 | 0.00E-01 | 0.00E-01 | 5 |
| 23 B 220 | | DIBENZ(A,J)ACRIDINE | D | 0.00E-01 | 0.00E-01 | 0.00E-01 | 5 |
| 23 B 240 | | DIBENZ(A,H)ACRIDINE | D | 0.00E-01 | 0.00E-01 | 0.00E-01 | 5 |
| 23 B 260 | | DIBENZ(C,H)ACRIDINE | D | 0.00E-01 | 0.00E-01 | 0.00E-01 | 5 |
| 50 A 010 | P | ANTIMONY | D | < 1.60E 01< | 0.00E-01< | 0.00E-01 | |
| 49 A 010 | P | ARSENIC | D | > 1.80E 01> | 0.00E-01> | 0.00E-01 | |
| 15 B 081 | | O-XYLENE | D | 4.80E 01 | 0.00E-01 | 0.00E-01 | |
| 54 A 010 | P | SELENIUM | D | > 3.00E 00> | 0.00E-01> | 0.00E-01 | |
| 38 A 010 | | ALUMINUM | S | 4.20E-01 | 0.00E-01 | 0.00E-01 | |
| 36 A 010 | | BARIUM | S | 2.10E 01 | 0.00E-01 | 0.00E-01 | |
| 37 A 010 | | BORON | S | > 1.30E 01> | 0.00E-01> | 0.00E-01 | |
| 58 A 010 | | BROMINE | S | 8.80E-01 | 0.00E-01 | 0.00E-01 | |
| 34 A 010 | | CALCIUM (AS CA+2) | S | 4.60E 02 | 0.00E-01 | 0.00E-01 | |
| 84 B 010 | | CERIUM | S | 8.80E-01 | 0.00E-01 | 0.00E-01 | |
| 57 A 010 | | CHLORINE (AS CL-) | S | 1.60E 01 | 0.00E-01 | 0.00E-01 | |
| 68 A 010 | P | CHROMIUM | S | 1.50E 01 | 0.00E-01 | 0.00E-01 | |
| 74 A 010 | | COBALT | S | > 8.00E-01> | 0.00E-01> | 0.00E-01 | |
| 78 A 010 | P | COPPER | S | 1.10E 01 | 0.00E-01 | 0.00E-01 | |
| 56 A 010 | | FLUORINE (AS F-) | S | 9.20E 00 | 0.00E-01 | 0.00E-01 | |
| 39 A 010 | | GALLIUM | S | 1.30E 01 | 0.00E-01 | 0.00E-01 | |
| 72 A 010 | | IRON (AS FE+2) | S | 4.60E 02 | 0.00E-01 | 0.00E-01 | |
| 84 A 010 | | LANTHANUM | S | 1.30E 00 | 0.00E-01 | 0.00E-01 | |
| 46 A 010 | P | LEAD | S | 2.90E 01 | 0.00E-01 | 0.00E-01 | |

PRODUCT GAS ORGANIC MODULE COMPOSITE, ECOLOGY IMPACT

| DMEG NO. | | COMPOUND NAME | TYPE | CONC E-6 G/SCM | DS | WDS G/S | LCCAT |
|---|---|---|---|---|---|---|---|
| 27 A 010 | | LITHIUM | S | 6.30E 00 | 0.00E-01 | 0.00E-01 | |
| 33 A 010 | | MAGNESIUM | S | 2.50E 01 | 0.00E-01 | 0.00E-01 | |
| 71 A 010 | P | MANGANESE | S | 7.10E 00 | 0.00E-01 | 0.00E-01 | |
| 76 A 010 | P | NICKEL | S | 9.60E 00 | 0.00E-01 | 0.00E-01 | |
| 48 A 010 | | PHOSPHORUS | S | 9.40E 01 | 0.00E-01 | 0.00E-01 | |
| 29 A 010 | | POTASSIUM | S | 6.90E 01 | 0.00E-01 | 0.00E-01 | |
| 30 A 010 | | RUBIDIUM (AS RB+) | S | 2.00E 00 | 0.00E-01 | 0.00E-01 | |
| 43 A 010 | | SILICON | S | 5.30E 02 | 0.00E-01 | 0.00E-01 | |
| 79 A 010 | P | SILVER | S | 3.00E 01 | 0.00E-01 | 0.00E-01 | |
| 28 A 010 | | SODIUM | S | 3.10E 01 | 0.00E-01 | 0.00E-01 | |
| 35 A 010 | | STRONTIUM | S | 4.20E 00 | 0.00E-01 | 0.00E-01 | |
| 53 A 010 | | SULFUR | S | 8.60E 02 | 0.00E-01 | 0.00E-01 | |
| 45 A 010 | | TIN | S | 8.80E-01 | 0.00E-01 | 0.00E-01 | |
| 62 A 010 | | TITANIUM | S | 2.40E 01 | 0.00E-01 | 0.00E-01 | |
| 85 A 010 | | URANIUM | S | 4.60E 00 | 0.00E-01 | 0.00E-01 | |
| 21 D 040* | | DIBENZO(A,I)PYRENE | D | 0.00E-01 | 0.00E-01 | 0.00E-01 | 3 |
| 81 A 010 | P | ZINC | S | 3.10E 01 | 0.00E-01 | 0.00E-01 | |
| 63 A 010 | | ZIRCONIUM (AS ZR+4) | S | 2.50E-01 | 0.00E-01 | 0.00E-01 | |
| 21 B 080* | | 3-METHYLCHOLANTHRENE | D | 0.00E-01 | 0.00E-01 | 0.00E-01 | 3 |
| 21 C 080* | P | DIBENZ(A,H)ANTHRACENE | D | 0.00E-01 | 0.00E-01 | 0.00E-01 | 3 |
| 02 A 140* | P | DIBROMOCHLOROMETHANE | T | 1.60E 06 | 0.00E-01 | 0.00E-01 | 1 |
| 02 A 140* | P | DIBROMOCHLOROMETHANE | T | 2.30E 05 | 0.00E-01 | 0.00E-01 | 2 |
| 02 A 160* | P | BROMOFORM | T | 1.60E 06 | 0.00E-01 | 0.00E-01 | 1 |
| 02 A 160* | P | BROMOFORM | T | 2.30E 05 | 0.00E-01 | 0.00E-01 | 2 |
| 02 A 320* | P | HEXACHLOROETHANE | T | 1.60E 06 | 0.00E-01 | 0.00E-01 | 1 |
| 02 A 320* | P | HEXACHLOROETHANE | T | 2.30E 05 | 0.00E-01 | 0.00E-01 | 2 |
| 02 A 340* | P | DICHLOROPROPANES | T | 1.60E 06 | 0.00E-01 | 0.00E-01 | 1 |
| 02 A 340* | P | DICHLOROPROPANES | T | 2.30E 05 | 0.00E-01 | 0.00E-01 | 2 |
| 02 B 080* | P | TETRACHLOROETHENE | T | 1.60E 06 | 0.00E-01 | 0.00E-01 | 1 |
| 02 B 080* | P | TETRACHLOROETHENE | T | 2.30E 05 | 0.00E-01 | 0.00E-01 | 2 |
| 02 B 100* | P | DICHLOROPROPENES | T | 1.60E 06 | 0.00E-01 | 0.00E-01 | 1 |
| 02 B 100* | P | DICHLOROPROPENES | T | 2.30E 05 | 0.00E-01 | 0.00E-01 | 2 |
| 02 B 120* | P | HEXACHLOROBUTADIENE | T | 1.60E 06 | 0.00E-01 | 0.00E-01 | 1 |
| 02 B 120* | P | HEXACHLOROBUTADIENE | T | 2.30E 05 | 0.00E-01 | 0.00E-01 | 2 |

PRODUCT GAS ORGANIC MODULE COMPOSITE, ECOLOGY IMPACT

| DMEG NO. | COMPOUND NAME | TYPE | CONC E-6 G/SCM | DS | WDS G/S | LCCAT |
|---|---|---|---|---|---|---|
| 02 B 140* P | HEXACHLOROCYCLOPENTADIENE | T | 1.60E 06 | 0.00E-01 | 0.00E-01 | 1 |
| 02 B 140* P | HEXACHLOROCYCLOPENTADIENE | T | 2.30E 05 | 0.00E-01 | 0.00E-01 | 2 |
| 04 A 140* P | 2-CHLOROETHYL VINYL ETHER | T | 1.30E 05 | 0.00E-01 | 0.00E-01 | 4 |
| 04 A 140* P | 2-CHLOROETHYL VINYL ETHER | T | 5.70E 05 | 0.00E-01 | 0.00E-01 | 5 |
| 04 A 160* P | A-CHLOROBUTYL ETHYL ETHER | T | 1.30E 05 | 0.00E-01 | 0.00E-01 | 4 |
| 04 A 160* P | A-CHLOROBUTYL ETHYL ETHER | T | 5.70E 05 | 0.00E-01 | 0.00E-01 | 5 |
| 04 A 180* P | CHLOROPHENYL PHENYL ETHER | T | 1.30E 05 | 0.00E-01 | 0.00E-01 | 4 |
| 04 A 180* P | CHLOROPHENYL PHENYL ETHER | T | 5.70E 05 | 0.00E-01 | 0.00E-01 | 5 |
| 04 B 020* P | 1,1'-DICHLOROMETHYL ETHER | T | 1.30E 05 | 0.00E-01 | 0.00E-01 | 4 |
| 04 B 020* P | 1,1'-DICHLOROMETHYL ETHER | T | 5.70E 05 | 0.00E-01 | 0.00E-01 | 5 |
| 04 B 040* P | 1,1'-DICHLORODIETHYL ETHER | T | 1.30E 05 | 0.00E-01 | 0.00E-01 | 4 |
| 04 B 040* P | 1,1'-DICHLORODIETHYL ETHER | T | 5.70E 05 | 0.00E-01 | 0.00E-01 | 5 |
| 07 B 080* P | ISOPHORONE | T | 5.70E 05 | 0.00E-01 | 0.00E-01 | 5 |
| 07 B 080* P | ISOPHORONE | T | 7.10E 05 | 0.00E-01 | 0.00E-01 | 6 |
| 08 D 280* P | PHTHALATE ESTERS (MW:194-279) | T | 5.70E 05 | 0.00E-01 | 0.00E-01 | 5 |
| 08 D 280* P | PHTHALATE ESTERS (MW:194-279) | T | 7.10E 05 | 0.00E-01 | 0.00E-01 | 6 |
| 08 D 300* P | DI-2-ETHYLHEXYL PHTHALATE | T | 5.70E 05 | 0.00E-01 | 0.00E-01 | 5 |
| 08 D 300* P | DI-2-ETHYLHEXYL PHTHALATE | T | 7.10E 05 | 0.00E-01 | 0.00E-01 | 6 |
| 08 D 320* P | BUTYL BENZYL PHTHALATE | T | 5.70E 05 | 0.00E-01 | 0.00E-01 | 5 |
| 08 D 320* P | BUTYL BENZYL PHTHALATE | T | 7.10E 05 | 0.00E-01 | 0.00E-01 | 6 |
| 10 C 140* P | BENZIDINE | T | 5.70E 05 | 0.00E-01 | 0.00E-01 | 5 |
| 10 C 140* P | BENZIDINE | T | 7.10E 05 | 0.00E-01 | 0.00E-01 | 6 |
| 12 A 020* P | N-NITROSODIMETHYLAMINE | T | 7.10E 05 | 0.00E-01 | 0.00E-01 | 6 |
| 12 A 040* P | N-NITROSODIETHYLAMINE | T | 5.70E 05 | 0.00E-01 | 0.00E-01 | 5 |
| 12 A 040* P | N-NITROSODIETHYLAMINE | T | 7.10E 05 | 0.00E-01 | 0.00E-01 | 6 |
| 12 A 060* P | N-NITROSODIPROPYLAMINE | T | 5.70E 05 | 0.00E-01 | 0.00E-01 | 5 |
| 12 A 060* P | N-NITROSODIPROPYLAMINE | T | 7.10E 05 | 0.00E-01 | 0.00E-01 | 6 |
| 21 B 060* | 7,12-DIMETHYLBENZ(A)ANTHRACENE | D | 0.00E-01 | 0.00E-01 | 0.00E-01 | 3 |
| 22 C 080* P | BENZO(B)FLUORANTHENE | D | 1.00E 01 | 0.00E-01 | 0.00E-01 | 3 |
| 16 A 020* P | CHLOROBENZENE | T | 2.30E 05 | 0.00E-01 | 0.00E-01 | 2 |
| 16 A 020* P | CHLOROBENZENE | T | 6.60E 05 | 0.00E-01 | 0.00E-01 | 3 |
| 16 A 100* P | 1,2-DICHLOROBENZENE | T | 2.30E 05 | 0.00E-01 | 0.00E-01 | 2 |
| 16 A 100* P | 1,2-DICHLOROBENZENE | T | 6.60E 05 | 0.00E-01 | 0.00E-01 | 3 |
| 16 A 120* P | 1,3-DICHLOROBENZENE | T | 2.30E 05 | 0.00E-01 | 0.00E-01 | 2 |

PRODUCT GAS ORGANIC MODULE COMPOSITE, ECOLOGY IMPACT

| DMEG NO. | COMPOUND NAME | TYPE | CONC E-6 G/SCM | DS | WDS G/S | LCCAT |
|---|---|---|---|---|---|---|
| 16 A 120* P | 1,3-DICHLOROBENZENE | T | 6.60E 05 | 0.00E-01 | 0.00E-01 | 3 |
| 16 A 140* P | 1,4-DICHLOROBENZENE | T | 2.30E 05 | 0.00E-01 | 0.00E-01 | 2 |
| 16 A 140* P | 1,4-DICHLOROBENZENE | T | 6.60E 05 | 0.00E-01 | 0.00E-01 | 3 |
| 16 A 160* P | POLYCHLORINATED BENZENES | T | 2.30E 05 | 0.00E-01 | 0.00E-01 | 2 |
| 16 A 160* P | POLYCHLORINATED BENZENES | T | 6.60E 05 | 0.00E-01 | 0.00E-01 | 3 |
| 16 A 200* P | CHLORONAPHTHALENES | T | 2.30E 05 | 0.00E-01 | 0.00E-01 | 2 |
| 16 A 200* P | CHLORONAPHTHALENES | T | 6.60E 05 | 0.00E-01 | 0.00E-01 | 3 |
| 17 A 020* P | NITROBENZENE | T | 1.30E 05 | 0.00E-01 | 0.00E-01 | 4 |
| 17 A 020* P | NITROBENZENE | T | 5.70E 05 | 0.00E-01 | 0.00E-01 | 5 |
| 17 A 081* P | 2,6-DINITROTOLUENE | T | 1.30E 05 | 0.00E-01 | 0.00E-01 | 4 |
| 17 A 081* P | 2,6-DINITROTOLUENE | T | 5.70E 05 | 0.00E-01 | 0.00E-01 | 5 |
| 17 A 084* P | 2,4-DINITROTOLUENE | T | 1.30E 05 | 0.00E-01 | 0.00E-01 | 4 |
| 17 A 084* P | 2,4-DINITROTOLUENE | T | 5.70E 05 | 0.00E-01 | 0.00E-01 | 5 |
| 18 A 020* P | PHENOL | T | 5.70E 05 | 0.00E-01 | 0.00E-01 | 5 |
| 18 A 020* P | PHENOL | T | 7.10E 05 | 0.00E-01 | 0.00E-01 | 6 |
| 18 A 142* P | 2,4-XYLENOL | T | 5.70E 05 | 0.00E-01 | 0.00E-01 | 5 |
| 18 A 142* P | 2,4-XYLENOL | T | 7.10E 05 | 0.00E-01 | 0.00E-01 | 6 |
| 19 A 020* P | 2-CHLOROPHENOL | T | 5.70E 05 | 0.00E-01 | 0.00E-01 | 5 |
| 19 A 020* P | 2-CHLOROPHENOL | T | 7.10E 05 | 0.00E-01 | 0.00E-01 | 6 |
| 19 A 040* P | 2,4-DICHLOROPHENOL | T | 5.70E 05 | 0.00E-01 | 0.00E-01 | 5 |
| 19 A 040* P | 2,4-DICHLOROPHENOL | T | 7.10E 05 | 0.00E-01 | 0.00E-01 | 6 |
| 19 A 060* P | PENTACHLOROPHENOL | T | 5.70E 05 | 0.00E-01 | 0.00E-01 | 5 |
| 19 A 060* P | PENTACHLOROPHENOL | T | 7.10E 05 | 0.00E-01 | 0.00E-01 | 6 |
| 19 B 022* P | CHLORINATED-M-CRESOLS | T | 5.70E 05 | 0.00E-01 | 0.00E-01 | 5 |
| 19 B 022* P | CHLORINATED-M-CRESOLS | T | 7.10E 05 | 0.00E-01 | 0.00E-01 | 6 |
| 20 A 020* P | 2-NITROPHENOL | T | 5.70E 05 | 0.00E-01 | 0.00E-01 | 5 |
| 20 A 020* P | 2-NITROPHENOL | T | 7.10E 05 | 0.00E-01 | 0.00E-01 | 6 |
| 20 A 060* P | 4-NITROPHENOL | T | 5.70E 05 | 0.00E-01 | 0.00E-01 | 5 |
| 20 A 060* P | 4-NITROPHENOL | T | 7.10E 05 | 0.00E-01 | 0.00E-01 | 6 |
| 20 A 101* P | 2,4-DINITROPHENOL | T | 5.70E 05 | 0.00E-01 | 0.00E-01 | 5 |
| 20 A 101* P | 2,4-DINITROPHENOL | T | 7.10E 05 | 0.00E-01 | 0.00E-01 | 6 |
| 20 B 020* P | 4,6-DINITRO-O-CRESOL | T | 5.70E 05 | 0.00E-01 | 0.00E-01 | 5 |
| 20 B 020* P | 4,6-DINITRO-O-CRESOL | T | 7.10E 05 | 0.00E-01 | 0.00E-01 | 6 |
| 21 A 020* P | NAPHTHALENE | T | 2.30E 05 | 0.00E-01 | 0.00E-01 | 2 |

PRODUCT GAS ORGANIC MODULE COMPOSITE, ECOLOGY IMPACT

| DMEG NO. | COMPOUND NAME | TYPE | CONC E-6 G/SCM | DS | WDS G/S | LCCAT |
|---|---|---|---|---|---|---|
| 21 A 020* P | NAPHTHALENE | T | 6.60E 05 | 0.00E-01 | 0.00E-01 | 3 |
| 21 A 100* PH | ACENAPHTHENE | T | 2.30E 05 | 0.00E-01 | 0.00E-01 | 2 |
| 21 A 100* PH | ACENAPHTHENE | T | 6.60E 05 | 0.00E-01 | 0.00E-01 | 3 |
| 21 A 120* PH | ACENAPHTHYLENE | T | 2.30E 05 | 0.00E-01 | 0.00E-01 | 2 |
| 21 A 120* PH | ACENAPHTHYLENE | T | 6.60E 05 | 0.00E-01 | 0.00E-01 | 3 |
| 21 A 140* P | ANTHRACENE | T | 2.30E 05 | 0.00E-01 | 0.00E-01 | 2 |
| 21 A 140* P | ANTHRACENE | T | 6.60E 05 | 0.00E-01 | 0.00E-01 | 3 |
| 21 A 180* P | PHENANTHRENE | T | 2.30E 05 | 0.00E-01 | 0.00E-01 | 2 |
| 21 A 180* P | PHENANTHRENE | T | 6.60E 05 | 0.00E-01 | 0.00E-01 | 3 |
| 21 B 120* P | CHRYSENE | T | 2.30E 05 | 0.00E-01 | 0.00E-01 | 2 |
| 21 B 120* P | CHRYSENE | T | 6.60E 05 | 0.00E-01 | 0.00E-01 | 3 |
| 21 B 180* P | PYRENE | T | 2.30E 05 | 0.00E-01 | 0.00E-01 | 2 |
| 21 B 180* P | PYRENE | T | 6.60E 05 | 0.00E-01 | 0.00E-01 | 3 |
| 21 D 080* PH | BENZO(GHI)PERYLENE | T | 2.30E 05 | 0.00E-01 | 0.00E-01 | 2 |
| 21 D 080* PH | BENZO(GHI)PERYLENE | T | 6.60E 05 | 0.00E-01 | 0.00E-01 | 3 |
| 22 A 020* PH | FLUORENE | T | 2.30E 05 | 0.00E-01 | 0.00E-01 | 2 |
| 22 A 020* PH | FLUORENE | T | 6.60E 05 | 0.00E-01 | 0.00E-01 | 3 |
| 22 B 040* P | FLUORANTHENE | T | 2.30E 05 | 0.00E-01 | 0.00E-01 | 2 |
| 22 B 040* P | FLUORANTHENE | T | 6.60E 05 | 0.00E-01 | 0.00E-01 | 3 |
| 22 C 020* P | BENZO(K)FLUORANTHENE | T | 2.30E 05 | 0.00E-01 | 0.00E-01 | 2 |
| 22 C 020* P | BENZO(K)FLUORANTHENE | T | 6.60E 05 | 0.00E-01 | 0.00E-01 | 3 |
| 22 D 020* P | INDENO(1,2,3-CD)PYRENE | T | 2.30E 05 | 0.00E-01 | 0.00E-01 | 2 |
| 22 D 020* P | INDENO(1,2,3-CD)PYRENE | T | 6.60E 05 | 0.00E-01 | 0.00E-01 | 3 |

TEST BURNER FLUE GAS COMPOSITE

FLOW RATE = 8080 G/S (6.77 SCM/S, DRY BASIS)

29.686 SCM AT 25C AND 760 MM HG SAMPLED

TOTAL ORGANIC LOADING = 5.4 MG/SCM

TOTAL TCO = NR  TOTAL GRAV = 5.4 MG/SCM

55.0% ORIGINAL SAMPLE TO LC

LC TCO = NR  LC GRAV = 90.3 MG  LC TOTAL = 90.3 MG

| LCCAT | ORGANIC LOADING |
|---|---|
| 1 | 880.0 |
| 2 | 130.0 |
| 3 | 44.0 |
| 4 | 130.0 |
| 5 | 470.0 |
| 6 | 2200.0 |
| 7 | 910.0 |

FLOW RATE = 8080.00

STATE: GAS, UNITS IN MICROGRAMS/SCM

IMPACT: HEALTH

EXPERIMENTALY DETERMINED DATA

SPARK SOURCE DATA

TEST BURNER FLUE GAS COMPOSITE, HEALTH IMPACT

| DMEG NO. | | | COMPOUND NAME | TYPE | CONC E-6 G/SCM | DS | WDS G/S | LCCAT |
|---|---|---|---|---|---|---|---|---|
| 21 C 100* | P | W | BENZO(A)PYRENE | T | 4.40E 01 | 2.20E 03 | 1.80E 07 | 3 |
| 21 C 080* | P | | DIBENZ(A,H)ANTHRACENE | T | 4.40E 01 | 4.73E 02 | 3.82E 06 | 3 |
| 04 B 020* | P | W | 1,1'-DICHLOROMETHYL ETHER | T | 4.70E 02 | 9.40E 01 | 7.60E 05 | 5 |
| 16 A 220* | | W | POLYCHLORINATED BIPHENYLS | T | 4.40E 01 | 4.40E 01 | 3.60E 05 | 3 |
| 49 A 010 | P | | ARSENIC | D | 8.60E 01 | 4.30E 01 | 3.50E 05 | |
| 68 A 010 | P | | CHROMIUM | S | 3.70E 01 | 3.70E 01 | 3.00E 05 | |
| 21 B 080* | | | 3-METHYLCHOLANTHRENE | T | 1.30E 02 | 3.42E 01 | 2.80E 05 | 2 |
| 12 A 020* | P | W | N-NITROSODIMETHYLAMINE | T | 2.20E 03 | 3.40E 01 | 2.73E 05 | 6 |
| 04 B 020* | P | W | 1,1'-DICHLOROMETHYL ETHER | T | 1.30E 02 | 2.60E 01 | 2.10E 05 | 4 |
| 20 A 120* | | W | 2,4,6-TRINITROPHENOL | T | 2.20E 03 | 2.20E 01 | 1.80E 05 | 6 |
| 10 C 100* | | | 1,4-DIAMINOBENZENE | T | 2.20E 03 | 2.20E 01 | 1.80E 05 | 6 |
| 53 A 060 | | | SULFUR DIOXIDE | D | 2.70E 05 | 2.10E 01 | 1.70E 05 | |
| 10 C 040* | | | AMINOTOLUENES | T | 2.20E 03 | 2.00E 01 | 1.61E 05 | 6 |
| 10 C 043* | | | 4-AMINOTOLUENE | T | 2.20E 03 | 2.00E 01 | 1.61E 05 | 6 |
| 10 C 041* | | | 2-AMINOTOLUENE | T | 2.20E 03 | 2.00E 01 | 1.61E 05 | 6 |
| 10 C 042* | | | 3-AMINOTOLUENE | T | 2.20E 03 | 2.00E 01 | 1.61E 05 | 6 |
| 12 A 040* | P | | N-NITROSODIETHYLAMINE | T | 2.20E 03 | 1.83E 01 | 1.50E 05 | 6 |
| 23 B 100* | | W | DIHYDROACRIDINE | T | 2.20E 03 | 1.40E 01 | 1.11E 05 | 6 |
| 10 C 220* | | | 2-AMINONAPHTHALENE | T | 2.20E 03 | 1.30E 01 | 1.04E 05 | 6 |
| 21 B 080* | | | 3-METHYLCHOLANTHRENE | T | 4.40E 01 | 1.20E 01 | 9.40E 04 | 3 |
| 20 B 042* | | | 2,6-DINITRO-P-CRESOL | T | 2.20E 03 | 1.10E 01 | 8.90E 04 | 6 |
| 20 B 041* | | | 3,5-DINITRO-P-CRESOL | T | 2.20E 03 | 1.10E 01 | 8.90E 04 | 6 |
| 20 B 020* | P | W | 4,6-DINITRO-O-CRESOL | T | 2.20E 03 | 1.10E 01 | 8.90E 04 | 6 |
| 20 B 040* | | W | DINITRO-P-CRESOLS | T | 2.20E 03 | 1.10E 01 | 8.90E 04 | 6 |
| 42 A 080 | | | CARBON DIOXIDE | D | 9.80E 07 | 1.10E 01 | 8.80E 04 | |
| 21 B 040* | P | | BENZ(A)ANTHRACENE | D | 4.50E 02 | 1.00E 01 | 8.10E 04 | 2 |
| 23 B 240* | | | DIBENZ(A,H)ACRIDINE | T | 2.20E 03 | 1.00E 01 | 8.10E 04 | 6 |
| 23 B 220* | | | DIBENZ(A,J)ACRIDINE | T | 2.20E 03 | 8.80E 00 | 7.11E 04 | 6 |
| 02 B 140* | P | W | HEXACHLOROCYCLOPENTADIENE | T | 8.80E 02 | 8.00E 00 | 6.50E 04 | 1 |
| 12 A 020* | P | W | N-NITROSODIMETHYLAMINE | T | 4.70E 02 | 7.23E 00 | 5.84E 04 | 5 |
| 08 B 060* | | W | B-PROPIOLACTONE | T | 2.20E 03 | 6.90E 00 | 5.60E 04 | 6 |
| 20 A 120* | | W | 2,4,6-TRINITROPHENOL | T | 4.70E 02 | 4.70E 00 | 3.80E 04 | 5 |
| 10 C 100* | | | 1,4-DIAMINOBENZENE | T | 4.70E 02 | 4.70E 00 | 3.80E 04 | 5 |
| 23 C 160* | | W | DIBENZO(C,G)CARBAZOLE | T | 4.70E 02 | 4.70E 00 | 3.80E 04 | 5 |

TEST BURNER FLUE GAS COMPOSITE, HEALTH IMPACT

| DMEG NO. | | COMPOUND NAME | TYPE | CONC E-6 G/SCM | DS | WDS G/S | LCCAT |
|---|---|---|---|---|---|---|---|
| 10 C 080* | | ANISIDINES | T | 2.20E 03 | 4.40E 00 | 3.60E 04 | 6 |
| 19 A 060* | P W | PENTACHLOROPHENOL | T | 2.20E 03 | 4.40E 00 | 3.60E 04 | 6 |
| 10 C 081* | | O-ANISIDINE | T | 2.20E 03 | 4.40E 00 | 3.60E 04 | 6 |
| 10 C 083* | | P-ANISIDINE | T | 2.20E 03 | 4.40E 00 | 3.60E 04 | 6 |
| 10 C 082* | | M-ANISIDINE | T | 2.20E 03 | 4.40E 00 | 3.60E 04 | 6 |
| 13 A 100* | W | BENZENETHIOL | T | 4.70E 02 | 4.30E 00 | 3.50E 04 | 5 |
| 10 C 043* | | 4-AMINOTOLUENE | T | 4.70E 02 | 4.30E 00 | 3.50E 04 | 5 |
| 10 C 042* | | 3-AMINOTOLUENE | T | 4.70E 02 | 4.30E 00 | 3.50E 04 | 5 |
| 10 C 040* | | AMINOTOLUENES | T | 4.70E 02 | 4.30E 00 | 3.50E 04 | 5 |
| 10 C 041* | | 2-AMINOTOLUENE | T | 2.20E 03 | 3.92E 00 | 3.20E 04 | 6 |
| 10 C 200* | | 1-AMINONAPHTHALENE | T | 4.70E 02 | 3.91E 00 | 3.20E 04 | 5 |
| 12 A 040* | P | N-NITROSODIETHYLAMINE | T | 1.30E 02 | 3.02E 00 | 2.44E 04 | 2 |
| 21 D 040* | W | DIBENZO(A,I)PYRENE | S | 4.50E 01 | 3.00E 00 | 2.42E 04 | |
| 76 A 010 | P | NICKEL | T | 4.70E 02 | 2.93E 00 | 2.40E 04 | 5 |
| 23 B 100* | W | DIHYDROACRIDINE | T | 9.10E 02 | 2.84E 00 | 2.30E 04 | 7 |
| 08 B 060* | W | B-PROPIOLACTONE | T | 4.70E 02 | 2.80E 00 | 2.23E 04 | 5 |
| 10 C 220* | | 2-AMINONAPHTHALENE | T | 2.20E 03 | 2.80E 00 | 2.22E 04 | 6 |
| 13 A 140* | | PERCHLOROMETHANETHIOL | S | 1.30E 02 | 2.60E 00 | 2.10E 04 | |
| 74 A 010 | | COBALT | T | 4.70E 02 | 2.34E 00 | 1.90E 04 | 5 |
| 20 B 042* | | 2,6-DINITRO-P-CRESOL | T | 4.70E 02 | 2.34E 00 | 1.90E 04 | 5 |
| 20 B 020* | P W | 4,6-DINITRO-O-CRESOL | T | 4.70E 02 | 2.34E 00 | 1.90E 04 | 5 |
| 20 B 040* | W | DINITRO-P-CRESOLS | T | 4.70E 02 | 2.34E 00 | 1.90E 04 | 5 |
| 20 B 041* | | 3,5-DINITRO-P-CRESOL | T | 2.20E 03 | 2.20E 00 | 1.80E 04 | 6 |
| 08 A 121* | | MYRISTIC ACID | T | 2.20E 03 | 2.20E 00 | 1.80E 04 | 6 |
| 08 A 122* | | PALMITIC ACID | T | 2.20E 03 | 2.20E 00 | 1.80E 04 | 6 |
| 10 C 140* | P | BENZIDINE | T | 2.20E 03 | 2.20E 00 | 1.80E 04 | 6 |
| 08 C 060* | W | 6-HEXANELACTAM | T | 2.20E 03 | 2.20E 00 | 1.80E 04 | 6 |
| 08 A 120* | W | SATURATED LONG CHAIN ACIDS (MW:228-285) | T | 2.20E 03 | 2.20E 00 | 1.80E 04 | 6 |
| 08 A 123* | | STEARIC ACID | T | 4.70E 02 | 2.13E 00 | 1.72E 04 | 5 |
| 23 B 240* | | DIBENZ(A,H)ACRIDINE | T | 4.70E 02 | 1.90E 00 | 1.51E 04 | 5 |
| 23 B 220* | | DIBENZ(A,J)ACRIDINE | T | 8.80E 02 | 1.80E 00 | 1.42E 04 | 1 |
| 02 A 380* | W | HEXACHLOROCYCLOHEXANE | S | 1.70E 02 | 1.70E 00 | 1.40E 04 | |
| 48 A 010 | | PHOSPHORUS | T | 2.20E 03 | 1.70E 00 | 1.40E 04 | 6 |
| 12 B 020* | W | N-METHYL-N-NITROSOANILINE | | | | | |

TEST BURNER FLUE GAS COMPOSITE, HEALTH IMPACT

| DMEG NO. | | | COMPOUND NAME | TYPE | CONC E-6 G/SCM | DS | WDS G/S | LCCAT |
|---|---|---|---|---|---|---|---|---|
| 10 C 120* | | | 4-AMINOBIPHENYL | T | 2.20E 03 | 1.70E 00 | 1.40E 04 | 6 |
| 20 A 080* | | | 2-AMINO-4,6-DINITROPHENOL | T | 2.20E 03 | 1.60E 00 | 1.30E 04 | 6 |
| 20 A 101* | P | | 2,4-DINITROPHENOL | T | 2.20E 03 | 1.60E 00 | 1.30E 04 | 6 |
| 20 A 102* | | | 2,5-DINITROPHENOL | T | 2.20E 03 | 1.60E 00 | 1.30E 04 | 6 |
| 20 A 103* | | | 2,6-DINITROPHENOL | T | 2.20E 03 | 1.60E 00 | 1.30E 04 | 6 |
| 20 A 100* | | | DINITROPHENOLS | T | 2.20E 03 | 1.60E 00 | 1.30E 04 | 6 |
| 08 B 060* | | W | B-PROPIOLACTONE | T | 4.70E 02 | 1.50E 00 | 1.20E 04 | 5 |
| 23 C 160* | | W | DIBENZO(C,G)CARBAZOLE | T | 1.30E 02 | 1.30E 00 | 1.10E 04 | 4 |
| 02 B 140* | P | W | HEXACHLOROCYCLOPENTADIENE | T | 1.30E 02 | 1.20E 00 | 9.54E 03 | 2 |
| 14 B 020 | | W | DIMETHYL SULFOXIDE | T | 9.10E 02 | 1.12E 00 | 9.10E 03 | 7 |
| 18 B 060* | | W | 1,4-DIHYDROXYBENZENE | T | 2.20E 03 | 1.10E 00 | 8.90E 03 | 6 |
| 21 D 040* | | W | DIBENZO(A,I)PYRENE | T | 4.40E 01 | 1.02E 00 | 8.30E 03 | 3 |
| 21 B 040* | P | | BENZ(A)ANTHRACENE | T | 4.40E 01 | 9.80E-01 | 7.90E 03 | 3 |
| 19 A 060* | P | W | PENTACHLOROPHENOL | T | 4.70E 02 | 9.40E-01 | 7.60E 03 | 5 |
| 10 C 080* | | | ANISIDINES | T | 4.70E 02 | 9.40E-01 | 7.60E 03 | 5 |
| 10 C 081* | | | O-ANISIDINE | T | 4.70E 02 | 9.40E-01 | 7.60E 03 | 5 |
| 10 C 083* | | | P-ANISIDINE | T | 4.70E 02 | 9.40E-01 | 7.60E 03 | 5 |
| 10 C 082* | | | M-ANISIDINE | T | 4.70E 02 | 9.40E-01 | 7.60E 03 | 5 |
| 13 A 100* | | W | BENZENETHIOL | T | 4.70E 02 | 9.40E-01 | 7.60E 03 | 5 |
| 12 A 060* | P | | N-NITROSODIPROPYLAMINE | T | 2.20E 03 | 9.20E-01 | 7.40E 03 | 6 |
| 08 A 121* | | | MYRISTIC ACID | T | 9.10E 02 | 9.10E-01 | 7.40E 03 | 7 |
| 08 A 122* | | | PALMITIC ACID | T | 9.10E 02 | 9.10E-01 | 7.40E 03 | 7 |
| 08 A 120* | | W | SATURATED LONG CHAIN ACIDS (MW:228-285) | T | 9.10E 02 | 9.10E-01 | 7.40E 03 | 7 |
| 08 A 123* | | | STEARIC ACID | T | 9.10E 02 | 9.10E-01 | 7.40E 03 | 7 |
| 10 C 200* | | | 1-AMINONAPHTHALENE | T | 4.70E 02 | 8.40E-01 | 6.80E 03 | 5 |
| 08 A 140* | | | OLEIC ACID | T | 2.20E 03 | 6.70E-01 | 5.40E 03 | 6 |
| 77 A 010 | | | PLATINUM | S | 1.30E 00 | 6.50E-01 | 5.30E 03 | |
| 54 A 010 | P | | SELENIUM | D | < 1.30E 02< | 6.50E-01< | 5.30E 03 | |
| 02 A 180* | | | DIBROMODICHLOROMETHANE | T | 8.80E 02 | 6.30E-01 | 5.10E 03 | 1 |
| 21 B 108* | | | 2-ETHYL BENZO(C)PHENANTHRENE | T | 1.30E 02 | 5.90E-01 | 4.80E 03 | 2 |
| 21 B 102* | | | 1-METHYL BENZO(C)PHENANTHRENE | T | 1.30E 02 | 5.90E-01 | 4.80E 03 | 2 |
| 21 B 100* | | | BENZO(C)PHENANTHRENE & ALKYL DERIVATIVES | T | 1.30E 02 | 5.90E-01 | 4.80E 03 | 2 |
| 21 B 10A* | | | N-PROPYL BENZO(C)PHENANTHRENE | T | 1.30E 02 | 5.90E-01 | 4.80E 03 | 2 |
| 21 B 10B* | | | ISOPROPYL BENZO(C)PHENANTHRENE | T | 1.30E 02 | 5.90E-01 | 4.80E 03 | 2 |

TEST BURNER FLUE GAS COMPOSITE, HEALTH IMPACT

| DMEG NO. | | COMPOUND NAME | TYPE | CONC E-6 G/SCM | DS | WDS G/S | LCCAT |
|---|---|---|---|---|---|---|---|
| 21 B 106* | | 7-METHYL BENZO(C)PHENANTHRENE | T | 1.30E 02 | 5.90E-01 | 4.80E 03 | 2 |
| 21 B 104* | | 5-METHYL BENZO(C)PHENANTHRENE | T | 1.30E 02 | 5.90E-01 | 4.80E 03 | 2 |
| 21 B 107* | | 8-METHYL BENZO(C)PHENANTHRENE | T | 1.30E 02 | 5.90E-01 | 4.80E 03 | 2 |
| 21 B 103* | | 2-METHYL BENZO(C)PHENANTHRENE | T | 1.30E 02 | 5.90E-01 | 4.80E 03 | 2 |
| 21 B 101* | | BENZO(C)PHENANTHRENE | T | 1.30E 02 | 5.90E-01 | 4.80E 03 | 2 |
| 21 B 105* | | 6-METHYL BENZO(C)PHENANTHRENE | T | 1.30E 02 | 5.90E-01 | 4.80E 03 | 2 |
| 21 B 109* | | 6-ETHYL BENZO(C)PHENANTHRENE | T | 1.30E 02 | 5.90E-01 | 4.80E 03 | 2 |
| 13 A 140* | | PERCHLOROMETHANETHIOL | T | 4.70E 02 | 5.90E-01 | 4.74E 03 | 5 |
| 23 D 020* | W | BENZOTHIAZOLE | T | 2.20E 03 | 5.11E-01 | 4.13E 03 | 6 |
| 08 A 123* | | STEARIC ACID | T | 4.70E 02 | 4.70E-01 | 3.80E 03 | 5 |
| 08 A 122* | | PALMITIC ACID | T | 4.70E 02 | 4.70E-01 | 3.80E 03 | 5 |
| 10 C 140* | P | BENZIDINE | T | 4.70E 02 | 4.70E-01 | 3.80E 03 | 5 |
| 17 B 040* | W | 1-CHLORO-2-NITROBENZENE | T | 4.70E 02 | 4.70E-01 | 3.80E 03 | 5 |
| 08 A 120* | W | SATURATED LONG CHAIN ACIDS (MW:228-285) | T | 4.70E 02 | 4.70E-01 | 3.80E 03 | 5 |
| 17 B 060* | W | 1-CHLORO-4-NITROBENZENE | T | 4.70E 02 | 4.70E-01 | 3.80E 03 | 5 |
| 08 C 060* | W | 6-HEXANELACTAM | T | 4.70E 02 | 4.70E-01 | 3.80E 03 | 5 |
| 08 A 121* | | MYRISTIC ACID | T | 2.20E 03 | 4.70E-01 | 3.80E 03 | 6 |
| 23 D 040* | | METHYL BENZOTHIAZOLE | T | 2.20E 03 | 4.40E-01 | 3.60E 03 | 6 |
| 08 D 281* | | DIMETHYL PHTHALATE | T | 2.20E 03 | 4.40E-01 | 3.60E 03 | 6 |
| 08 D 282* | | DIETHYL PHTHALATE | T | 2.20E 03 | 4.40E-01 | 3.60E 03 | 6 |
| 08 D 283* | | DI-N-BUTYL PHTHALATE | T | 2.20E 03 | 4.40E-01 | 3.60E 03 | 6 |
| 08 D 280* | P W | PHTHALATE ESTERS (MW:194-279) | T | 2.20E 03 | 4.40E-01 | 3.60E 03 | 6 |
| 08 D 300* | P | DI-2-ETHYLHEXYL PHTHALATE | T | 2.20E 03 | 3.80E-01 | 3.10E 03 | 6 |
| 08 A 100* | | SATURATED LONG CHAIN ACIDS (MW:116-201) | T | 2.20E 03 | 3.80E-01 | 3.10E 03 | 6 |
| 08 A 103* | | CAPRIC ACID | T | 2.20E 03 | 3.80E-01 | 3.10E 03 | 6 |
| 08 A 101* | | CAPROIC ACID | T | 2.20E 03 | 3.80E-01 | 3.10E 03 | 6 |
| 08 A 104* | | LAURIC ACID | T | 2.20E 03 | 3.80E-01 | 3.10E 03 | 6 |
| 08 A 102* | | CAPRYLIC ACID | T | 2.20E 03 | 3.72E-01 | 3.01E 03 | 6 |
| 23 A 103* | | 4-CHLOROPYRIDINE | T | 2.20E 03 | 3.72E-01 | 3.01E 03 | 6 |
| 23 A 102* | | 3-CHLOROPYRIDINE | T | 2.20E 03 | 3.72E-01 | 3.01E 03 | 6 |
| 23 A 101* | | 2-CHLOROPYRIDINE | T | 2.20E 03 | 3.72E-01 | 3.01E 03 | 6 |
| 23 A 100* | W | CHLOROPYRIDINES | T | 2.20E 03 | 3.70E-01 | 3.00E 03 | 6 |
| 10 A 060* | | ETHANOLAMINE | T | 4.70E 02 | 3.61E-01 | 2.92E 03 | 5 |
| 10 C 120* | | 4-AMINOBIPHENYL | | | | | |

TEST BURNER FLUE GAS COMPOSITE, HEALTH IMPACT

| DMEG NO. | | COMPOUND NAME | TYPE | CONC E-6 G/SCM | DS | WDS G/S | LCCAT |
|---|---|---|---|---|---|---|---|
| 12 B 020* | W | N-METHYL-N-NITROSOANILINE | T | 4.70E 02 | 3.61E-01 | 2.92E 03 | 5 |
| 17 A 060* | W | 4-NITROBIPHENYL | T | 4.70E 02 | 3.61E-01 | 2.92E 03 | 5 |
| 20 A 102* | | 2,5-DINITROPHENOL | T | 4.70E 02 | 3.40E-01 | 2.71E 03 | 5 |
| 20 A 100* | | DINITROPHENOLS | T | 4.70E 02 | 3.40E-01 | 2.71E 03 | 5 |
| 20 A 103* | | 2,6-DINITROPHENOL | T | 4.70E 02 | 3.40E-01 | 2.71E 03 | 5 |
| 20 A 080* | | 2-AMINO-4,6-DINITROPHENOL | T | 4.70E 02 | 3.40E-01 | 2.71E 03 | 5 |
| 20 A 101* | P | 2,4-DINITROPHENOL | T | 4.70E 02 | 3.40E-01 | 2.71E 03 | 5 |
| 83 A 010 | P | MERCURY | D | 1.60E 01 | 3.20E-01 | 2.60E 03 | |
| 19 A 040* | P | 2,4-DICHLOROPHENOL | T | 2.20E 03 | 3.14E-01 | 2.53E 03 | 6 |
| 17 A 085* | | 2,5-DINITROTOLUENE | T | 4.70E 02 | 3.13E-01 | 2.53E 03 | 5 |
| 17 A 083* | | 2,3-DINITROTOLUENE | T | 4.70E 02 | 3.13E-01 | 2.53E 03 | 5 |
| 17 A 080* | | DINITROTOLUENES | T | 4.70E 02 | 3.13E-01 | 2.53E 03 | 5 |
| 17 A 082* | | 3,4-DINITROTOLUENE | T | 4.70E 02 | 3.13E-01 | 2.53E 03 | 5 |
| 17 A 081* | P | 2,6-DINITROTOLUENE | T | 4.70E 02 | 3.13E-01 | 2.53E 03 | 5 |
| 17 A 084* | P | 2,4-DINITROTOLUENE | T | 4.70E 02 | 3.13E-01 | 2.53E 03 | 5 |
| 17 A 086* | | 3,5-DINITROTOLUENE | T | 4.70E 02 | 3.13E-01 | 2.53E 03 | 5 |
| 72 A 010 | | IRON (AS FE+2) | S | > 3.10E 02> | 3.10E-01> | 2.50E 03 | |
| 08 A 140* | | OLEIC ACID | T | 9.10E 02 | 2.80E-01 | 2.22E 03 | 7 |
| 02 A 380* | W | HEXACHLOROCYCLOHEXANE | T | 1.30E 02 | 2.60E-01 | 2.10E 03 | 2 |
| 36 A 010 | | BARIUM | S | > 1.20E 02> | 2.40E-01> | 1.93E 03 | |
| 18 B 060* | W | 1,4-DIHYDROXYBENZENE | T | 4.70E 02 | 2.40E-01 | 1.90E 03 | 5 |
| 04 A 060* | W | 1-CHLORO-1,3-EPOXYPROPANE | T | 4.70E 02 | 2.40E-01 | 1.90E 03 | 5 |
| 04 A 040* | W | 2-CHLORO-1,2-EPOXYPROPANE | T | 4.70E 02 | 2.40E-01 | 1.90E 03 | 5 |
| 04 A 050* | W | EPICHLORHYDRIN | T | 4.70E 02 | 2.40E-01 | 1.90E 03 | 5 |
| 18 A 043* | | P-CRESOL | T | 2.20E 03 | 2.20E-01 | 1.80E 03 | 6 |
| 18 A 083* | | P-ETHYLPHENOL | T | 2.20E 03 | 2.20E-01 | 1.80E 03 | 6 |
| 18 A 081* | | O-ETHYLPHENOL | T | 2.20E 03 | 2.20E-01 | 1.80E 03 | 6 |
| 18 A 040* | W | CRESOLS | T | 2.20E 03 | 2.20E-01 | 1.80E 03 | 6 |
| 06 A 020* | W | ETHYLENE GLYCOL | T | 2.20E 03 | 2.20E-01 | 1.80E 03 | 6 |
| 18 A 042* | | O-CRESOL | T | 2.20E 03 | 2.20E-01 | 1.80E 03 | 6 |
| 18 A 041* | | M-CRESOL | T | 2.20E 03 | 2.20E-01 | 1.80E 03 | 6 |
| 18 A 082* | | M-ETHYLPHENOL | T | 2.20E 03 | 2.20E-01 | 1.80E 03 | 6 |
| 18 A 080* | W | ETHYLPHENOLS | T | 2.20E 03 | 2.20E-01 | 1.80E 03 | 6 |
| 02 B 120* | P | HEXACHLOROBUTADIENE | T | 8.80E 02 | 2.14E-01 | 1.73E 03 | 1 |

TEST BURNER FLUE GAS COMPOSITE, HEALTH IMPACT

| DMEG NO. | | COMPOUND NAME | TYPE | CONC E-6 G/SCM | DS | WDS G/S | LCCAT |
|---|---|---|---|---|---|---|---|
| 21 B 107* | | 8-METHYL BENZO(C)PHENANTHRENE | T | 4.40E 01 | 2.00E-01 | 1.61E 03 | 3 |
| 23 B 200* | | BENZ(C)ACRIDINE | T | 2.20E 03 | 2.00E-01 | 1.61E 03 | 6 |
| 21 B 101* | | BENZO(C)PHENANTHRENE | T | 4.40E 01 | 2.00E-01 | 1.61E 03 | 3 |
| 21 B 105* | | 6-METHYL BENZO(C)PHENANTHRENE | T | 4.40E 01 | 2.00E-01 | 1.61E 03 | 3 |
| 21 B 102* | | 1-METHYL BENZO(C)PHENANTHRENE | T | 4.40E 01 | 2.00E-01 | 1.61E 03 | 3 |
| 21 B 108* | | ISOPROPYL BENZO(C)PHENANTHRENE | T | 4.40E 01 | 2.00E-01 | 1.61E 03 | 3 |
| 21 B 108* | | 2-ETHYL BENZO(C)PHENANTHRENE | T | 4.40E 01 | 2.00E-01 | 1.61E 03 | 3 |
| 21 B 109* | | 6-ETHYL BENZO(C)PHENANTHRENE | T | 4.40E 01 | 2.00E-01 | 1.61E 03 | 3 |
| 21 B 103* | | 2-METHYL BENZO(C)PHENANTHRENE | T | 4.40E 01 | 2.00E-01 | 1.61E 03 | 3 |
| 21 B 100* | | BENZO(C)PHENANTHRENE & ALKYL DERIVATIVES | T | 4.40E 01 | 2.00E-01 | 1.61E 03 | 3 |
| 21 B 104* | | 5-METHYL BENZO(C)PHENANTHRENE | T | 4.40E 01 | 2.00E-01 | 1.61E 03 | 3 |
| 21 B 106* | | 7-METHYL BENZO(C)PHENANTHRENE | T | 4.40E 01 | 2.00E-01 | 1.61E 03 | 3 |
| 21 B 10A* | | N-PROPYL BENZO(C)PHENANTHRENE | T | 4.70E 02 | 2.00E-01 | 1.60E 03 | 5 |
| 12 A 060* | P | N-NITROSODIPROPYLAMINE | T | 2.20E 03 | 1.83E-01 | 1.50E 03 | 6 |
| 07 B 100* | W | CAMPHOR | T | 8.80E 02 | 1.80E-01 | 1.42E 03 | 1 |
| 02 A 160* | P | BROMOFORM | T | 4.70E 02 | 1.74E-01 | 1.40E 03 | 5 |
| 23 C 020* | | PYRROLE | T | 2.20E 03 | 1.70E-01 | 1.40E 03 | 6 |
| 18 A 144* | | 2,6-XYLENOL | T | 2.20E 03 | 1.70E-01 | 1.40E 03 | 6 |
| 18 A 141* | | 2,3-XYLENOL | T | 2.20E 03 | 1.70E-01 | 1.40E 03 | 6 |
| 18 A 140* | | XYLENOLS | T | 2.20E 03 | 1.70E-01 | 1.40E 03 | 6 |
| 18 A 143* | | 2,5-XYLENOL | T | 2.20E 03 | 1.70E-01 | 1.40E 03 | 6 |
| 18 A 145* | | 3,5-XYLENOL | T | 2.20E 03 | 1.70E-01 | 1.40E 03 | 6 |
| 18 A 142* | P | 2,4-XYLENOL | T | 2.20E 03 | 1.70E-01 | 1.40E 03 | 6 |
| 18 A 146* | | 3,4-XYLENOL | T | 2.20E 03 | 1.60E-01 | 1.30E 03 | 6 |
| 08 D 080* | | METHYL METHACRYLATE | T | 9.10E 02 | 1.60E-01 | 1.30E 03 | 7 |
| 08 A 103* | | CAPRIC ACID | T | 9.10E 02 | 1.60E-01 | 1.30E 03 | 7 |
| 08 A 104* | | LAURIC ACID | T | 9.10E 02 | 1.60E-01 | 1.30E 03 | 7 |
| 08 A 102* | | CAPRYLIC ACID | T | 9.10E 02 | 1.60E-01 | 1.30E 03 | 7 |
| 08 A 101* | | CAPROIC ACID | T | 9.10E 02 | 1.60E-01 | 1.30E 03 | 7 |
| 08 A 100* | | SATURATED LONG CHAIN ACIDS (MW:116-201) | T | 4.70E 02 | 1.60E-01 | 1.30E 03 | 5 |
| 09 A 120* | W | TETRAMETHYLSUCCINONITRILE | T | 2.20E 03 | 1.50E-01 | 1.20E 03 | 6 |
| 23 A 020* | | PYRIDINE | T | 1.30E 02 | 1.44E-01 | 1.20E 03 | 2 |
| 22 C 080* | P W | BENZO(B)FLUORANTHENE | T | 4.70E 02 | 1.42E-01 | 1.20E 03 | 5 |
| 08 A 140* | | OLEIC ACID | | | | | |

TEST BURNER FLUE GAS COMPOSITE, HEALTH IMPACT

| DMEG NO. | | COMPOUND NAME | TYPE | CONC E-6 G/SCM | DS | WDS G/S | LCCAT |
|---|---|---|---|---|---|---|---|
| 23 B 021* | | QUINOLINE | T | 2.20E 03 | 1.40E-01 | 1.11E 03 | 6 |
| 23 B 022* | | ISOQUINOLINE | T | 2.20E 03 | 1.40E-01 | 1.11E 03 | 6 |
| 23 B 020* | | QUINOLINES | T | 2.20E 03 | 1.40E-01 | 1.11E 03 | 6 |
| 20 A 060* | P | 4-NITROPHENOL | T | 2.20E 03 | 1.40E-01 | 1.11E 03 | 6 |
| 03 B 020* | W | 1,4-DIOXANE | T | 4.70E 02 | 1.30E-01 | 1.10E 03 | 5 |
| 03 B 040* | W | 1,3-DIOXANE | T | 4.70E 02 | 1.30E-01 | 1.10E 03 | 5 |
| 17 B 040* | W | 1-CHLORO-2-NITROBENZENE | T | 1.30E 02 | 1.30E-01 | 1.10E 03 | 4 |
| 15 A 160* | W | BIPHENYL | T | 1.30E 02 | 1.30E-01 | 1.10E 03 | 2 |
| 17 B 060* | W | 1-CHLORO-4-NITROBENZENE | T | 1.30E 02 | 1.30E-01 | 1.10E 03 | 4 |
| 23 A 146* | | 2,3,4,6-TETRAMETHYL PYRIDINE | T | 2.20E 03 | 1.22E-01 | 9.90E 02 | 6 |
| 23 A 143* | | 2,5-DIMETHYLPYRIDINE | T | 2.20E 03 | 1.22E-01 | 9.90E 02 | 6 |
| 23 A 145* | | 3,4-DIMETHYLPYRIDINE | T | 2.20E 03 | 1.22E-01 | 9.90E 02 | 6 |
| 23 A 144* | | 2,6-DIMETHYLPYRIDINE | T | 2.20E 03 | 1.22E-01 | 9.90E 02 | 6 |
| 05 B 100* | W | 1-PHENYLETHANOL | T | 2.20E 03 | 1.22E-01 | 9.90E 02 | 6 |
| 23 A 142* | | 2,4-DIMETHYLPYRIDINE | T | 2.20E 03 | 1.22E-01 | 9.90E 02 | 6 |
| 23 A 140* | | DISUBSTITUTED POLYSUBSTITUTED ALKYL PYRIDINES | T | 2.20E 03 | 1.22E-01 | 9.90E 02 | 6 |
| 23 A 141* | | 2,3-DIMETHYLPYRIDINE | T | 2.20E 03 | 1.22E-01 | 9.90E 02 | 6 |
| 21 D 060* | | DIBENZO(A,L)PYRENE | T | 1.30E 02 | 1.20E-01 | 9.54E 02 | 2 |
| 10 C 020* | | ANILINE | T | 2.20E 03 | 1.20E-01 | 9.40E 02 | 6 |
| 18 A 020* | P | PHENOL | T | 2.20E 03 | 1.20E-01 | 9.40E 02 | 6 |
| 18 B 020* | | CATECHOL | T | 2.20E 03 | 1.10E-01 | 8.90E 02 | 6 |
| 20 A 040* | | 3-NITROPHENOL | T | 2.20E 03 | 1.10E-01 | 8.90E 02 | 6 |
| 23 D 020* | W | BENZOTHIAZOLE | T | 4.70E 02 | 1.10E-01 | 8.83E 02 | 5 |
| 17 A 060* | W | 4-NITROBIPHENYL | T | 1.30E 02 | 1.00E-01 | 8.10E 02 | 4 |
| 23 D 040* | | METHYL BENZOTHIAZOLE | T | 4.70E 02 | 1.00E-01 | 8.10E 02 | 5 |
| 46 A 010 | P | LEAD | S | 1.50E 01 | 1.00E-01 | 8.10E 02 | |
| 23 B 260* | | DIBENZ(C,H)ACRIDINE | T | 2.20E 03 | 9.60E-02 | 7.72E 02 | 6 |
| 19 B 020* | W | CHLORINATED CRESOLS | T | 2.20E 03 | 9.60E-02 | 7.72E 02 | 6 |
| 18 A 103* | | M-PHENYLPHENOL | T | 2.20E 03 | 9.60E-02 | 7.72E 02 | 6 |
| 18 A 101* | | O-PHENYLPHENOL | T | 2.20E 03 | 9.60E-02 | 7.72E 02 | 6 |
| 19 B 023* | | CHLORINATED-P-CRESOLS | T | 2.20E 03 | 9.60E-02 | 7.72E 02 | 6 |
| 19 B 022* | P | CHLORINATED-M-CRESOLS | T | 2.20E 03 | 9.60E-02 | 7.72E 02 | 6 |
| 18 A 100* | | PHENYLPHENOLS | T | 2.20E 03 | 9.60E-02 | 7.72E 02 | 6 |
| 08 A 080* | | VALERIC ACID | T | 2.20E 03 | 9.60E-02 | 7.72E 02 | 6 |

TEST BURNER FLUE GAS COMPOSITE, HEALTH IMPACT

| DMEG NO. | | COMPOUND NAME | TYPE | CONC E-6 G/SCM | DS | WDS G/S | LCCAT |
|---|---|---|---|---|---|---|---|
| 19 B 021* | | CHLORINATED-O-CRESOLS | T | 2.20E 03 | 9.60E-02 | 7.72E 02 | 6 |
| 18 A 102* | | P-PHENYLPHENOL | T | 2.20E 03 | 9.60E-02 | 7.72E 02 | 6 |
| 08 D 300* | P | DI-2-ETHYLHEXYL PHTHALATE | T | 4.70E 02 | 9.40E-02 | 7.60E 02 | 5 |
| 08 D 282* | | DIETHYL PHTHALATE | T | 4.70E 02 | 9.40E-02 | 7.60E 02 | 5 |
| 08 D 280* | P W | PHTHALATE ESTERS (MW:194-279) | T | 4.70E 02 | 9.40E-02 | 7.60E 02 | 5 |
| 17 A 020* | P | NITROBENZENE | T | 4.70E 02 | 9.40E-02 | 7.60E 02 | 5 |
| 08 D 281* | | DIMETHYL PHTHALATE | T | 4.70E 02 | 9.40E-02 | 7.60E 02 | 5 |
| 08 D 283* | | DI-N-BUTYL PHTHALATE | T | 4.70E 02 | 9.40E-02 | 7.60E 02 | 5 |
| 47 A 080 | P | HYDROGEN CYANIDE | D | 1.02E 03 | 9.33E-02 | 7.54E 02 | |
| 02 A 180* | | DIBROMODICHLOROMETHANE | T | 1.30E 02 | 9.30E-02 | 7.50E 02 | 2 |
| 79 A 010 | P | SILVER | S | 9.20E-01 | 9.20E-02 | 7.43E 02 | |
| 18 A 161* | | 6-ETHYL-M-CRESOL | T | 2.20E 03 | 9.20E-02 | 7.40E 02 | 6 |
| 18 A 162* | | 4-ETHYL-O-CRESOL | T | 2.20E 03 | 9.20E-02 | 7.40E 02 | 6 |
| 18 A 163* | | 2-ETHYL-P-CRESOL | T | 2.20E 03 | 9.20E-02 | 7.40E 02 | 6 |
| 18 A 160* | | ETHYL CRESOLS | T | 2.20E 03 | 9.20E-02 | 7.40E 02 | 6 |
| 02 A 320* | P | HEXACHLOROETHANE | T | 8.80E 02 | 8.80E-02 | 7.11E 02 | 1 |
| 10 A 080* | | 1,2-DIAMINOETHANE | T | 2.20E 03 | 8.80E-02 | 7.11E 02 | 6 |
| 07 B 060* | P | ISOPHORONE | T | 2.20E 03 | 8.80E-02 | 7.11E 02 | 6 |
| 08 A 040* | | ACETIC ACID | T | 2.20E 03 | 8.80E-02 | 7.11E 02 | 6 |
| 10 C 065* | | 3,4-XYLIDINE | T | 2.20E 03 | 8.80E-02 | 7.11E 02 | 6 |
| 10 C 060* | | DIMETHYLANILINES | T | 2.20E 03 | 8.80E-02 | 7.11E 02 | 6 |
| 10 C 064* | | 2,6-XYLIDINE | T | 2.20E 03 | 8.80E-02 | 7.11E 02 | 6 |
| 10 C 063* | | 2,5-XYLIDINE | T | 2.20E 03 | 8.80E-02 | 7.11E 02 | 6 |
| 10 C 062* | | 2,4-XYLIDINE | T | 2.20E 03 | 8.80E-02 | 7.11E 02 | 6 |
| 10 D 020* | W | N,N-DIMETHYLANILINE | T | 2.20E 03 | 8.80E-02 | 7.11E 02 | 6 |
| 10 C 066* | | 3,5-XYLIDINE | T | 2.20E 03 | 8.80E-02 | 7.11E 02 | 6 |
| 10 C 061* | | 2,3-XYLIDINE | T | 2.20E 03 | 8.80E-02 | 7.11E 02 | 6 |
| 17 A 082* | | 3,4-DINITROTOLUENE | T | 1.30E 02 | 8.70E-02 | 7.00E 02 | 4 |
| 17 A 084* | P | 2,4-DINITROTOLUENE | T | 1.30E 02 | 8.70E-02 | 7.00E 02 | 4 |
| 17 A 081* | P | 2,6-DINITROTOLUENE | T | 1.30E 02 | 8.70E-02 | 7.00E 02 | 4 |
| 17 A 083* | | 2,3-DINITROTOLUENE | T | 1.30E 02 | 8.70E-02 | 7.00E 02 | 4 |
| 17 A 086* | | 3,5-DINITROTOLUENE | T | 1.30E 02 | 8.70E-02 | 7.00E 02 | 4 |
| 17 A 085* | | 2,5-DINITROTOLUENE | T | 1.30E 02 | 8.70E-02 | 7.00E 02 | 4 |
| 17 A 080* | | DINITROTOLUENES | T | 1.30E 02 | 8.70E-02 | 7.00E 02 | 4 |

TEST BURNER FLUE GAS COMPOSITE, HEALTH IMPACT

| DMEG NO. | | | COMPOUND NAME | TYPE | CONC E-6 G/SCM | DS | WDS G/S | LCCAT |
|---|---|---|---|---|---|---|---|---|
| 21 A 180* | P | W | PHENANTHRENE | T | 1.30E 02 | 8.12E-02 | 6.60E 02 | 2 |
| 22 D 020* | P | W | INDENO(1,2,3-CD)PYRENE | T | 1.30E 02 | 8.12E-02 | 6.60E 02 | 2 |
| 22 C 020* | P | | BENZO(K)FLUORANTHENE | T | 1.30E 02 | 8.12E-02 | 6.60E 02 | 2 |
| 08 A 101* | | | CAPROIC ACID | T | 4.70E 02 | 8.10E-02 | 6.54E 02 | 5 |
| 08 A 102* | | | CAPRYLIC ACID | T | 4.70E 02 | 8.10E-02 | 6.54E 02 | 5 |
| 08 A 100* | | | SATURATED LONG CHAIN ACIDS (MW:116-201) | T | 4.70E 02 | 8.10E-02 | 6.54E 02 | 5 |
| 08 A 103* | | | CAPRIC ACID | T | 4.70E 02 | 8.10E-02 | 6.54E 02 | 5 |
| 08 A 104* | | | LAURIC ACID | T | 4.70E 02 | 8.10E-02 | 6.54E 02 | 5 |
| 02 B 100* | P | | DICHLOROPROPENES | T | 8.80E 02 | 8.00E-02 | 6.50E 02 | 1 |
| 02 B 104* | | | TRANS-1,3-DICHLOROPROPENE | T | 8.80E 02 | 8.00E-02 | 6.50E 02 | 1 |
| 02 B 103* | | | CIS-1,3-DICHLOROPROPENE | T | 8.80E 02 | 8.00E-02 | 6.50E 02 | 1 |
| 23 A 101* | | | 2-CHLOROPYRIDINE | T | 4.70E 02 | 8.00E-02 | 6.43E 02 | 5 |
| 23 A 102* | | | 3-CHLOROPYRIDINE | T | 4.70E 02 | 8.00E-02 | 6.43E 02 | 5 |
| 23 A 100* | | W | CHLOROPYRIDINES | T | 4.70E 02 | 8.00E-02 | 6.43E 02 | 5 |
| 23 A 103* | | | 4-CHLOROPYRIDINE | T | 4.70E 02 | 8.00E-02 | 6.43E 02 | 5 |
| 23 C 180* | | | DIBENZO(A,G)CARBAZOLE | T | 4.70E 02 | 7.83E-02 | 6.32E 02 | 5 |
| 10 A 060* | | | ETHANOLAMINE | T | 4.70E 02 | 7.83E-02 | 6.32E 02 | 5 |
| 19 A 020* | P | | 2-CHLOROPHENOL | T | 2.20E 03 | 7.33E-02 | 5.92E 02 | 6 |
| 08 C 020* | | | FORMAMIDE | T | 2.20E 03 | 7.33E-02 | 5.92E 02 | 6 |
| 21 B 141* | | | 4-METHYL CHRYSENE | T | 1.30E 02 | 7.22E-02 | 5.83E 02 | 2 |
| 21 B 140* | | | METHYL CHRYSENES | T | 1.30E 02 | 7.22E-02 | 5.83E 02 | 2 |
| 21 B 142* | | | 5-METHYL CHRYSENE | T | 1.30E 02 | 7.22E-02 | 5.83E 02 | 2 |
| 08 A 060* | | | MALEIC ACID | T | 2.20E 03 | 6.90E-02 | 5.60E 02 | 6 |
| 18 A 060* | | | 2-METHOXYPHENOL | T | 2.20E 03 | 6.74E-02 | 5.50E 02 | 6 |
| 19 A 040* | P | | 2,4-DICHLOROPHENOL | T | 4.70E 02 | 6.71E-02 | 5.42E 02 | 5 |
| 04 A 050* | | W | EPICHLORHYDRIN | T | 1.30E 02 | 6.50E-02 | 5.30E 02 | 4 |
| 04 A 060* | | W | 1-CHLORO-1,3-EPOXYPROPANE | T | 1.30E 02 | 6.50E-02 | 5.30E 02 | 4 |
| 15 B 060* | | W | 4,4'-DIPHENYLBIPHENYL | T | 1.30E 02 | 6.50E-02 | 5.30E 02 | 2 |
| 04 A 040* | | W | 2-CHLORO-1,2-EPOXYPROPANE | T | 1.30E 02 | 6.50E-02 | 5.30E 02 | 4 |
| 27 A 010 | | | LITHIUM | S | < 1.40E 00< | 6.40E-02< | 5.14E 02 | |
| 18 A 120* | | | 2,2'-DIHYDROXYDIPHENYL | T | 2.20E 03 | 6.30E-02 | 5.10E 02 | 6 |
| 10 A 122* | | | 3-AMINO-1-PROPANOL | T | 2.20E 03 | 6.11E-02 | 4.93E 02 | 6 |
| 10 A 120* | | | PROPANOLAMINES | T | 2.20E 03 | 6.11E-02 | 4.93E 02 | 6 |
| 18 B 080* | | | 1,2,3-TRIHYDROXYBENZENE | T | 2.20E 03 | 6.11E-02 | 4.93E 02 | 6 |

TEST BURNER FLUE GAS COMPOSITE, HEALTH IMPACT

| DMEG NO. | | | COMPOUND NAME | TYPE | CONC E-6 G/SCM | DS | WDS G/S | LCCAT |
|---|---|---|---|---|---|---|---|---|
| 08 B 080* | | | Y-BUTYROLACTONE | T | 2.20E 03 | 6.11E-02 | 4.93E 02 | 6 |
| 10 A 121* | | | 2-AMINO-1-PROPANOL | T | 2.20E 03 | 6.11E-02 | 4.93E 02 | 6 |
| 10 A 123* | | | 1-AMINO-2-PROPANOL | T | 2.20E 03 | 6.11E-02 | 4.93E 02 | 6 |
| 21 B 120* | P | | CHRYSENE | T | 1.30E 02 | 5.90E-02 | 4.80E 02 | 2 |
| 12 A 080* | | | N-NITROSODIISOPROPYLAMINE | T | 2.20E 03 | 5.80E-02 | 4.70E 02 | 6 |
| 08 B 041* | | | 2-HYDROXYBENZOIC ACID | T | 2.20E 03 | 5.50E-02 | 4.44E 02 | 6 |
| 10 A 160* | | | CYCLOHEXYLAMINE | T | 2.20E 03 | 5.50E-02 | 4.44E 02 | 6 |
| 07 B 120* | | | ACETOPHENONE | T | 2.20E 03 | 5.40E-02 | 4.33E 02 | 6 |
| 21 C 160* | | | PICENE | T | 1.30E 02 | 5.20E-02 | 4.20E 02 | 2 |
| 22 C 080* | P | W | BENZO(B)FLUORANTHENE | T | 4.40E 01 | 4.90E-02 | 4.00E 02 | 3 |
| 18 B 040* | | | 1,3-DIHYDROXYBENZENE | T | 2.20E 03 | 4.90E-02 | 4.00E 02 | 6 |
| 05 C 040* | | W | T-PENTANOL | T | 2.20E 03 | 4.90E-02 | 4.00E 02 | 6 |
| 34 A 010 | | | CALCIUM (AS CA+2) | S | > 7.80E 02> | 4.90E-02> | 3.93E 02 | |
| 23 C 020* | | | PYRROLE | T | 1.30E 02 | 4.81E-02 | 3.90E 02 | 4 |
| 18 A 083* | | | P-ETHYLPHENOL | T | 4.70E 02 | 4.70E-02 | 3.80E 02 | 5 |
| 18 A 041* | | | M-CRESOL | T | 4.70E 02 | 4.70E-02 | 3.80E 02 | 5 |
| 18 A 042* | | | O-CRESOL | T | 4.70E 02 | 4.70E-02 | 3.80E 02 | 5 |
| 18 A 080* | | W | ETHYLPHENOLS | T | 4.70E 02 | 4.70E-02 | 3.80E 02 | 5 |
| 18 A 040* | | W | CRESOLS | T | 4.70E 02 | 4.70E-02 | 3.80E 02 | 5 |
| 18 A 082* | | | M-ETHYLPHENOL | T | 4.70E 02 | 4.70E-02 | 3.80E 02 | 5 |
| 18 A 081* | | | O-ETHYLPHENOL | T | 4.70E 02 | 4.70E-02 | 3.80E 02 | 5 |
| 18 A 043* | | | P-CRESOL | T | 4.70E 02 | 4.70E-02 | 3.80E 02 | 5 |
| 06 A 020* | | W | ETHYLENE GLYCOL | S | 9.30E 00 | 4.70E-02 | 3.80E 02 | |
| 78 A 010 | P | | COPPER | T | 4.40E 01 | 4.40E-02 | 3.60E 02 | 3 |
| 15 A 160* | | W | BIPHENYL | T | 1.30E 02 | 4.33E-02 | 3.50E 02 | 4 |
| 09 A 120* | | W | TETRAMETHYLSUCCINONITRILE | T | 1.30E 02 | 4.33E-02 | 3.50E 02 | 2 |
| 21 C 120* | | | BENZO(E)PYRENE | T | 4.70E 02 | 4.30E-02 | 3.50E 02 | 5 |
| 23 B 200* | | | BENZ(C)ACRIDINE | T | 4.70E 02 | 4.30E-02 | 3.50E 02 | 5 |
| 23 C 040* | | | INDOLE | T | 4.70E 02 | 4.30E-02 | 3.50E 02 | 5 |
| 04 B 100* | | | 2,2'-DICHLORODIISOPROPYL ETHER | T | 4.70E 02 | 4.30E-02 | 3.50E 02 | 5 |
| 04 A 140* | P | | 2-CHLOROETHYL VINYL ETHER | T | 2.20E 03 | 4.00E-02 | 3.23E 02 | 6 |
| 23 B 061 | | | 2,3-DIMETHYLQUINOLINE | T | 2.20E 03 | 4.00E-02 | 3.23E 02 | 6 |
| 23 B 063 | | | 2,8-DIMETHYLQUINOLINE | T | 2.20E 03 | 4.00E-02 | 3.23E 02 | 6 |
| 05 A 140 | | W | BENZYL ALCOHOL | | | | | |

TEST BURNER FLUE GAS COMPOSITE, HEALTH IMPACT

| DMEG NO. | | COMPOUND NAME | TYPE | CONC E-6 G/SCM | DS | WDS G/S | LCCAT |
|---|---|---|---|---|---|---|---|
| 23 B 064 | | 3,4-DIMETHYLQUINOLINE | T | 2.20E 03 | 4.00E-02 | 3.23E 02 | 6 |
| 23 B 066 | | 1,3-DIMETHYLISOQUINOLINE | T | 2.20E 03 | 4.00E-02 | 3.23E 02 | 6 |
| 23 B 067 | | 1,5-DIMETHYLISOQUINOLINE | T | 2.20E 03 | 4.00E-02 | 3.23E 02 | 6 |
| 23 B 060 | | DIMETHYLQUINOLINES | T | 2.20E 03 | 4.00E-02 | 3.23E 02 | 6 |
| 56 A 010 | | FLUORINE (AS F-) | S | 1.00E 02 | 4.00E-02 | 3.23E 02 | |
| 23 B 065 | | 6,8-DIMETHYLQUINOLINE | T | 2.20E 03 | 4.00E-02 | 3.23E 02 | 6 |
| 21 D 060* | | DIBENZO(A,L)PYRENE | T | 4.40E 01 | 4.00E-02 | 3.23E 02 | 3 |
| 23 B 062 | | 2,6-DIMETHYLQUINOLINE | T | 2.20E 03 | 4.00E-02 | 3.23E 02 | 6 |
| 23 B 040 | | 2-METHYLQUINOLINE | T | 2.20E 03 | 4.00E-02 | 3.23E 02 | 6 |
| 08 A 080* | | VALERIC ACID | T | 9.10E 02 | 4.00E-02 | 3.20E 02 | 7 |
| 23 C 140* | | DIBENZO(A,I)CARBAZOLE | T | 4.70E 02 | 3.91E-02 | 3.20E 02 | 5 |
| 07 B 100* | W | CAMPHOR | T | 4.70E 02 | 3.91E-02 | 3.20E 02 | 5 |
| 20 A 020* | P | 2-NITROPHENOL | T | 2.20E 03 | 3.80E-02 | 3.10E 02 | 6 |
| 18 A 182 | | 4,6-DI-TERT-BUTYL-M-CRESOL | T | 2.20E 03 | 3.72E-02 | 3.01E 02 | 6 |
| 18 A 183 | | 2,6-DIMETHYL-4-HEPTYL PHENOL | T | 2.20E 03 | 3.72E-02 | 3.01E 02 | 6 |
| 18 A 181 | | 2,4,6-TRIMETHYL METHYL PHENOL | T | 2.20E 03 | 3.72E-02 | 3.01E 02 | 6 |
| 18 A 180 | | POLYALKYLPHENOLS (MW>135) | T | 2.20E 03 | 3.72E-02 | 3.01E 02 | 6 |
| 08 A 040* | | ACETIC ACID | T | 9.10E 02 | 3.64E-02 | 2.94E 02 | 7 |
| 18 A 140* | | XYLENOLS | T | 4.70E 02 | 3.61E-02 | 2.92E 02 | 5 |
| 18 A 141* | | 2,3-XYLENOL | T | 4.70E 02 | 3.61E-02 | 2.92E 02 | 5 |
| 18 A 146* | | 3,4-XYLENOL | T | 4.70E 02 | 3.61E-02 | 2.92E 02 | 5 |
| 18 A 144* | | 2,6-XYLENOL | T | 4.70E 02 | 3.61E-02 | 2.92E 02 | 5 |
| 18 A 145* | | 3,5-XYLENOL | T | 4.70E 02 | 3.61E-02 | 2.92E 02 | 5 |
| 18 A 143* | | 2,5-XYLENOL | T | 4.70E 02 | 3.61E-02 | 2.92E 02 | 5 |
| 18 A 142* | P | 2,4-XYLENOL | T | 4.70E 02 | 3.61E-02 | 2.92E 02 | 5 |
| 03 B 020* | W | 1,4-DIOXANE | T | 1.30E 02 | 3.61E-02 | 2.91E 02 | 4 |
| 03 B 040* | W | 1,3-DIOXANE | T | 1.30E 02 | 3.61E-02 | 2.91E 02 | 4 |
| 08 D 160 | | METHYL BENZOATE | T | 2.20E 03 | 3.60E-02 | 2.91E 02 | 6 |
| 21 D 020* | | DIBENZO(A,H)PYRENE | T | 1.30E 02 | 3.51E-02 | 2.83E 02 | 2 |
| 08 D 080* | | METHYL METHACRYLATE | T | 4.70E 02 | 3.40E-02 | 2.71E 02 | 5 |
| 23 A 081 | | 2-PHENYLPYRIDINE | T | 2.20E 03 | 3.20E-02 | 2.60E 02 | 6 |
| 23 A 064 | | 4-N-PROPYLPYRIDINE | T | 2.20E 03 | 3.20E-02 | 2.60E 02 | 6 |
| 23 A 122 | | 2,4,6-COLLIDINE | T | 2.20E 03 | 3.20E-02 | 2.60E 02 | 6 |
| 23 A 062 | | 3-ETHYLPYRIDINE | T | 2.20E 03 | 3.20E-02 | 2.60E 02 | 6 |

TEST BURNER FLUE GAS COMPOSITE, HEALTH IMPACT

| DMEG NO. | | COMPOUND NAME | TYPE | CONC E-6 G/SCM | DS | WDS G/S | LCCAT |
|---|---|---|---|---|---|---|---|
| 23 A 082 | | 3-PHENYLPYRIDINE | T | 2.20E 03 | 3.20E-02 | 2.60E 02 | 6 |
| 23 A 063 | | 4-ETHYLPYRIDINE | T | 2.20E 03 | 3.20E-02 | 2.60E 02 | 6 |
| 23 A 121 | | 5-ETHYL-2-METHYLPYRIDINE | T | 2.20E 03 | 3.20E-02 | 2.60E 02 | 6 |
| 23 A 060 | | MONOSUBSTITUTED ALKYL PYRIDINES | T | 2.20E 03 | 3.20E-02 | 2.60E 02 | 6 |
| 23 A 061 | | 2-ETHYLPYRIDINE | T | 2.20E 03 | 3.20E-02 | 2.60E 02 | 6 |
| 23 A 083 | | 4-PHENYLPYRIDINE | T | 2.20E 03 | 3.20E-02 | 2.60E 02 | 6 |
| 23 A 120 | | COLLIDINES | T | 2.20E 03 | 3.20E-02 | 2.60E 02 | 6 |
| 23 A 080 | | PHENYLPYRIDINES | T | 2.20E 03 | 3.20E-02 | 2.60E 02 | 6 |
| 02 B 120* | P | HEXACHLOROBUTADIENE | T | 1.30E 02 | 3.20E-02 | 2.60E 02 | 2 |
| 10 B 100 | | MORPHOLINE | T | 2.20E 03 | 3.14E-02 | 2.53E 02 | 6 |
| 23 A 020* | | PYRIDINE | T | 4.70E 02 | 3.13E-02 | 2.53E 02 | 5 |
| 08 D 200 | | DIETHYL ADIPATE | T | 2.20E 03 | 3.10E-02 | 2.50E 02 | 6 |
| 07 B 181 | | CARVONE(D OR L) | T | 2.20E 03 | 3.00E-02 | 2.40E 02 | 6 |
| 07 B 182 | | DIHYDRO-(D OR L)CARVONE | T | 2.20E 03 | 3.00E-02 | 2.40E 02 | 6 |
| 07 B 180 | | CARVONES | T | 2.20E 03 | 3.00E-02 | 2.40E 02 | 6 |
| 23 B 020* | | QUINOLINES | T | 4.70E 02 | 2.93E-02 | 2.40E 02 | 5 |
| 23 B 021* | | QUINOLINE | T | 4.70E 02 | 2.93E-02 | 2.40E 02 | 5 |
| 20 A 060* | P | 4-NITROPHENOL | T | 4.70E 02 | 2.93E-02 | 2.40E 02 | 5 |
| 23 B 022* | | ISOQUINOLINE | T | 4.70E 02 | 2.93E-02 | 2.40E 02 | 5 |
| 01 B 220 | W | DICYCLOPENTADIENE | T | 8.80E 02 | 2.93E-02 | 2.40E 02 | 1 |
| 43 A 010 | | SILICON | S | > 2.90E 02> | 2.90E-02> | 2.34E 02 | |
| 08 A 060* | | MALEIC ACID | T | 9.10E 02 | 2.84E-02 | 2.30E 02 | 7 |
| 12 A 100 | | N-NITROSODIPENTYLAMINE | T | 2.20E 03 | 2.80E-02 | 2.30E 02 | 6 |
| 22 C 020* | P | BENZO(K)FLUORANTHENE | T | 4.40E 01 | 2.80E-02 | 2.22E 02 | 3 |
| 21 A 180* | P W | PHENANTHRENE | T | 4.40E 01 | 2.80E-02 | 2.22E 02 | 3 |
| 22 D 020* | P W | INDENO(1,2,3-CD)PYRENE | T | 4.40E 01 | 2.80E-02 | 2.22E 02 | 3 |
| 05 A 160 | | PHENETHYL ALCOHOL | T | 2.20E 03 | 2.71E-02 | 2.20E 02 | 6 |
| 23 A 143* | | 2,5-DIMETHYLPYRIDINE | T | 4.70E 02 | 2.61E-02 | 2.10E 02 | 5 |
| 23 A 146* | | 2,3,4,6-TETRAMETHYL PYRIDINE | T | 4.70E 02 | 2.61E-02 | 2.10E 02 | 5 |
| 23 A 142* | | 2,4-DIMETHYLPYRIDINE | T | 4.70E 02 | 2.61E-02 | 2.10E 02 | 5 |
| 23 A 141* | | 2,3-DIMETHYLPYRIDINE | T | 4.70E 02 | 2.61E-02 | 2.10E 02 | 5 |
| 23 A 140* | | DISUBSTITUTED POLYSUBSTITUTED ALKYL PYRIDINES | T | 4.70E 02 | 2.61E-02 | 2.10E 02 | 5 |
| 23 A 144* | | 2,6-DIMETHYLPYRIDINE | T | 4.70E 02 | 2.61E-02 | 2.10E 02 | 5 |
| 05 B 100* | W | 1-PHENYLETHANOL | T | 4.70E 02 | 2.61E-02 | 2.10E 02 | 5 |

TEST BURNER FLUE GAS COMPOSITE, HEALTH IMPACT

| OMEG NO. | | | COMPOUND NAME | TYPE | CONC E-6 G/SCM | DS | WDS G/S | LCCAT |
|---|---|---|---|---|---|---|---|---|
| 23 A 145* | | | 3,4-DIMETHYLPYRIDINE | T | 4.70E 02 | 2.61E-02 | 2.10E 02 | 5 |
| 17 A 020* | P | | NITROBENZENE | T | 1.30E 02 | 2.60E-02 | 2.10E 02 | 4 |
| 02 A 160* | P | | BROMOFORM | T | 1.30E 02 | 2.60E-02 | 2.10E 02 | 2 |
| 16 B 020 | | W | A-CHLOROTOLUENE | T | 1.30E 02 | 2.60E-02 | 2.10E 02 | 2 |
| 08 B 080* | | | Y-BUTYROLACTONE | T | 9.10E 02 | 2.52E-02 | 2.04E 02 | 7 |
| 26 A 020 | | W | TRIETHYL PHOSPHATE | T | 9.10E 02 | 2.52E-02 | 2.04E 02 | 7 |
| 18 A 020* | P | | PHENOL | T | 4.70E 02 | 2.50E-02 | 2.00E 02 | 5 |
| 10 C 020* | | | ANILINE | T | 4.70E 02 | 2.50E-02 | 2.00E 02 | 5 |
| 23 C 120 | | | BENZO(A)CARBAZOLE | T | 4.70E 02 | 2.50E-02 | 2.00E 02 | 5 |
| 21 B 142* | | | 5-METHYL CHRYSENE | T | 4.40E 01 | 2.44E-02 | 2.00E 02 | 3 |
| 23 B 140 | | | BENZO(F)QUINOLINE | T | 2.20E 03 | 2.44E-02 | 2.00E 02 | 6 |
| 23 B 160 | | | BENZO(H)QUINOLINE | T | 2.20E 03 | 2.44E-02 | 2.00E 02 | 6 |
| 21 B 140* | | | METHYL CHRYSENES | T | 4.40E 01 | 2.44E-02 | 2.00E 02 | 3 |
| 23 B 120 | | | PHENANTHRIDINE | T | 2.20E 03 | 2.44E-02 | 2.00E 02 | 6 |
| 13 B 080 | | | METHYL DISULFIDE | T | 2.20E 03 | 2.44E-02 | 2.00E 02 | 6 |
| 21 B 141* | | | 4-METHYL CHRYSENE | T | 4.40E 01 | 2.44E-02 | 2.00E 02 | 3 |
| 05 B 120 | | | BORNEOL | T | 2.20E 03 | 2.44E-02 | 2.00E 02 | 6 |
| 23 B 080 | | | ACRIDINE | T | 2.20E 03 | 2.44E-02 | 2.00E 02 | 6 |
| 18 B 020* | | | CATECHOL | T | 4.70E 02 | 2.40E-02 | 1.90E 02 | 5 |
| 20 A 040* | | | 3-NITROPHENOL | T | 4.70E 02 | 2.40E-02 | 1.90E 02 | 5 |
| 13 B 060 | | | DIPHENYL SULFIDE | T | 2.20E 03 | 2.30E-02 | 1.90E 02 | 6 |
| 08 B 041* | | | 2-HYDROXYBENZOIC ACID | T | 9.10E 02 | 2.30E-02 | 1.83E 02 | 7 |
| 14 A 020 | | W | BENZENESULFONIC ACID | T | 9.10E 02 | 2.30E-02 | 1.83E 02 | 7 |
| 23 A 103* | | | 4-CHLOROPYRIDINE | T | 1.30E 02 | 2.20E-02 | 1.80E 02 | 4 |
| 23 A 102* | | | 3-CHLOROPYRIDINE | T | 1.30E 02 | 2.20E-02 | 1.80E 02 | 4 |
| 23 A 100* | | W | CHLOROPYRIDINES | T | 1.30E 02 | 2.20E-02 | 1.80E 02 | 4 |
| 23 A 101* | | | 2-CHLOROPYRIDINE | T | 1.30E 02 | 2.20E-02 | 1.80E 02 | 4 |
| 50 A 010 | P | | ANTIMONY | D | < 1.10E 01< | 2.20E-02< | 1.80E 02 | |
| 15 B 060* | | W | 4,4'-DIPHENYLBIPHENYL | T | 4.40E 01 | 2.20E-02 | 1.80E 02 | 3 |
| 23 C 180* | | | DIBENZO(A,G)CARBAZOLE | T | 1.30E 02 | 2.20E-02 | 1.80E 02 | 4 |
| 33 A 010 | | | MAGNESIUM | S | > 1.30E 02> | 2.20E-02> | 1.80E 02 | |
| 09 A 100 | | | 1,3-DICYANO-1-HYDROXYBUTANE | T | 4.70E 02 | 2.13E-02 | 1.72E 02 | 5 |
| 25 A 042 | | | 3-METHYLTHIOPHENE | T | 4.70E 02 | 2.04E-02 | 1.70E 02 | 5 |
| 08 A 080* | | | VALERIC ACID | T | 4.70E 02 | 2.04E-02 | 1.70E 02 | 5 |

TEST BURNER FLUE GAS COMPOSITE, HEALTH IMPACT

| DMEG NO. | | COMPOUND NAME | TYPE | CONC E-6 G/SCM | DS | WDS G/S | LCCAT |
|---|---|---|---|---|---|---|---|
| 19 B 023* | | CHLORINATED-P-CRESOLS | T | 4.70E 02 | 2.04E-02 | 1.70E 02 | 5 |
| 18 A 100* | | PHENYLPHENOLS | T | 4.70E 02 | 2.04E-02 | 1.70E 02 | 5 |
| 25 B 040 | W | BENZO(B)THIOPHENE | T | 4.70E 02 | 2.04E-02 | 1.70E 02 | 5 |
| 18 A 103* | | M-PHENYLPHENOL | T | 4.70E 02 | 2.04E-02 | 1.70E 02 | 5 |
| 23 B 260* | | DIBENZ(C,H)ACRIDINE | T | 4.70E 02 | 2.04E-02 | 1.70E 02 | 5 |
| 19 B 021* | | CHLORINATED-O-CRESOLS | T | 4.70E 02 | 2.04E-02 | 1.70E 02 | 5 |
| 23 C 101 | | 3-METHYLCARBAZOLE | T | 4.70E 02 | 2.04E-02 | 1.70E 02 | 5 |
| 19 B 022* | P | CHLORINATED-M-CRESOLS | T | 4.70E 02 | 2.04E-02 | 1.70E 02 | 5 |
| 23 C 080 | | CARBAZOLE | T | 4.70E 02 | 2.04E-02 | 1.70E 02 | 5 |
| 18 A 102* | | P-PHENYLPHENOL | T | 4.70E 02 | 2.04E-02 | 1.70E 02 | 5 |
| 09 A 080 | | BUTYRONITRILE | T | 4.70E 02 | 2.04E-02 | 1.70E 02 | 5 |
| 25 A 040 | | METHYLTHIOPHENES | T | 4.70E 02 | 2.04E-02 | 1.70E 02 | 5 |
| 25 A 041 | | 2-METHYLTHIOPHENE | T | 4.70E 02 | 2.04E-02 | 1.70E 02 | 5 |
| 23 C 102 | | 9-METHYLCARBAZOLE | T | 4.70E 02 | 2.04E-02 | 1.70E 02 | 5 |
| 19 B 020* | W | CHLORINATED CRESOLS | T | 4.70E 02 | 2.04E-02 | 1.70E 02 | 5 |
| 18 A 101* | | O-PHENYLPHENOL | T | 4.70E 02 | 2.04E-02 | 1.70E 02 | 5 |
| 23 C 100 | | METHYLCARBAZOLES | T | 2.20E 03 | 2.00E-02 | 1.61E 02 | 6 |
| 18 C 040 | W | 2-NAPHTHOL | T | 4.40E 01 | 2.00E-02 | 1.61E 02 | 3 |
| 21 B 120* | P | CHRYSENE | T | 1.30E 02 | 2.00E-02 | 1.61E 02 | 2 |
| 22 C 040 | | BENZO(J)FLUORANTHENE | S | > 2.00E-01> | 2.00E-02> | 1.61E 02 | |
| 82 A 010 | P | CADMIUM | T | 4.70E 02 | 2.00E-02 | 1.60E 02 | 5 |
| 18 A 162* | | 4-ETHYL-O-CRESOL | T | 4.70E 02 | 2.00E-02 | 1.60E 02 | 5 |
| 18 A 163* | | 2-ETHYL-P-CRESOL | T | 4.70E 02 | 2.00E-02 | 1.60E 02 | 5 |
| 18 A 160* | | ETHYL CRESOLS | T | 4.70E 02 | 2.00E-02 | 1.60E 02 | 5 |
| 18 A 161* | | 6-ETHYL-M-CRESOL | T | 8.80E 02 | 2.00E-02 | 1.60E 02 | 1 |
| 02 A 140* | P | DIBROMOCHLOROMETHANE | T | 1.30E 02 | 1.90E-02 | 1.52E 02 | 2 |
| 16 B 040 | | BIS(CHLOROMETHYL)BENZENES | T | 1.30E 02 | 1.90E-02 | 1.52E 02 | 2 |
| 16 B 043 | | 1,4-BIS(CHLOROMETHYL)BENZENE | T | 1.30E 02 | 1.90E-02 | 1.52E 02 | 2 |
| 16 B 041 | | 1,2-BIS(CHLOROMETHYBENZENE | T | 1.30E 02 | 1.90E-02 | 1.52E 02 | 2 |
| 16 B 042 | | 1,3-BIS(CHLOROMETHYL)BENZENE | T | 4.70E 02 | 1.90E-02 | 1.51E 02 | 5 |
| 07 B 080* | P | ISOPHORONE | T | 4.70E 02 | 1.90E-02 | 1.51E 02 | 5 |
| 10 A 080* | | 1,2-DIAMINOETHANE | T | 4.70E 02 | 1.90E-02 | 1.51E 02 | 5 |
| 10 C 062* | | 2,4-XYLIDINE | T | 4.70E 02 | 1.90E-02 | 1.51E 02 | 5 |
| 10 C 064* | | 2,6-XYLIDINE | | | | | |

## TEST BURNER FLUE GAS COMPOSITE, HEALTH IMPACT

| DMEG NO. | | COMPOUND NAME | TYPE | CONC E-6 G/SCM | DS | WDS G/S | LCCAT |
|---|---|---|---|---|---|---|---|
| 10 C 065* | | 3,4-XYLIDINE | T | 4.70E 02 | 1.90E-02 | 1.51E 02 | 5 |
| 10 C 061* | | 2,3-XYLIDINE | T | 4.70E 02 | 1.90E-02 | 1.51E 02 | 5 |
| 08 A 040* | | ACETIC ACID | T | 4.70E 02 | 1.90E-02 | 1.51E 02 | 5 |
| 10 C 066* | | 3,5-XYLIDINE | T | 4.70E 02 | 1.90E-02 | 1.51E 02 | 5 |
| 10 C 060* | | DIMETHYLANILINES | T | 4.70E 02 | 1.90E-02 | 1.51E 02 | 5 |
| 10 C 063* | | 2,5-XYLIDINE | T | 4.70E 02 | 1.90E-02 | 1.51E 02 | 5 |
| 10 D 020* | W | N,N-DIMETHYLANILINE | T | 4.70E 02 | 1.90E-02 | 1.51E 02 | 5 |
| 18 C 020 | | 1-NAPHTHOL | T | 2.20E 03 | 1.83E-02 | 1.50E 02 | 6 |
| 25 A 061 | | 2,3-DIMETHYLTHIOPHENE | T | 4.70E 02 | 1.80E-02 | 1.50E 02 | 5 |
| 25 A 060 | | DIMETHYLTHIOPHENES | T | 4.70E 02 | 1.80E-02 | 1.50E 02 | 5 |
| 25 A 064 | | 3,4-DIMETHYLTHIOPHENE | T | 4.70E 02 | 1.80E-02 | 1.50E 02 | 5 |
| 25 A 062 | | 2,4-DIMETHYLTHIOPHENE | T | 4.70E 02 | 1.80E-02 | 1.50E 02 | 5 |
| 25 A 063 | | 2,5-DIMETHYLTHIOPHENE | T | 4.70E 02 | 1.80E-02 | 1.50E 02 | 5 |
| 21 C 160* | | PICENE | T | 4.40E 01 | 1.80E-02 | 1.42E 02 | 3 |
| 04 A 200 | | 4-BROMOPHENYL PHENYL ETHER | T | 4.70E 02 | 1.74E-02 | 1.40E 02 | 5 |
| 04 A 180* | P | CHLOROPHENYL PHENYL ETHER | T | 4.70E 02 | 1.74E-02 | 1.40E 02 | 5 |
| 25 A 081 | | 2,3,5-TRIMETHYLTHIOPHENE | T | 4.70E 02 | 1.62E-02 | 1.30E 02 | 5 |
| 25 A 080 | | TRIMETHYL AND TETRAMETHYL THIOPHENES | T | 4.70E 02 | 1.62E-02 | 1.30E 02 | 5 |
| 08 D 320* | P | BUTYL BENZYL PHTHALATE | T | 2.20E 03 | 1.60E-02 | 1.30E 02 | 6 |
| 08 A 160 | | BENZOIC ACID | T | 2.20E 03 | 1.60E-02 | 1.30E 02 | 6 |
| 02 A 360 | | BROMOBUTANES | T | 8.80E 02 | 1.60E-02 | 1.30E 02 | 1 |
| 02 A 361 | | 1-BROMOBUTANE | T | 8.80E 02 | 1.60E-02 | 1.30E 02 | 1 |
| 17 A 043 | | 4-NITROTOLUENE | T | 4.70E 02 | 1.60E-02 | 1.30E 02 | 5 |
| 17 A 040 | | NITROTOLUENES | T | 4.70E 02 | 1.60E-02 | 1.30E 02 | 5 |
| 04 B 040* | P | 1,1'-DICHLORODIETHYL ETHER | T | 4.70E 02 | 1.60E-02 | 1.30E 02 | 5 |
| 17 A 042 | | 3-NITROTOLUENE | T | 4.70E 02 | 1.60E-02 | 1.30E 02 | 5 |
| 17 A 041 | | 2-NITROTOLUENE | T | 4.70E 02 | 1.60E-02 | 1.30E 02 | 5 |
| 04 B 080 | | 2,2'-DICHLORODIETHYL ETHER | T | 4.70E 02 | 1.60E-02 | 1.30E 02 | 5 |
| 19 A 020* | P | 2-CHLOROPHENOL | T | 4.70E 02 | 1.60E-02 | 1.30E 02 | 5 |
| 08 C 020* | | FORMAMIDE | T | 4.70E 02 | 1.60E-02 | 1.30E 02 | 5 |
| 09 B 042 | | B-NAPHTHONITRILES | T | 4.70E 02 | 1.50E-02 | 1.20E 02 | 5 |
| 09 B 020 | W | BENZONITRILE | T | 4.70E 02 | 1.50E-02 | 1.20E 02 | 5 |
| 08 A 060* | | MALEIC ACID | T | 4.70E 02 | 1.50E-02 | 1.20E 02 | 5 |
| 09 B 040 | W | NAPHTHONITRILES | T | 4.70E 02 | 1.50E-02 | 1.20E 02 | 5 |

TEST BURNER FLUE GAS COMPOSITE, HEALTH IMPACT

| DMEG NO. | | COMPOUND NAME | TYPE | CONC E-6 G/SCM | DS | WDS G/S | LCCAT |
|---|---|---|---|---|---|---|---|
| 09 B 041 | | A-NAPHTHONITRILES | T | 4.70E 02 | 1.50E-02 | 1.20E 02 | 5 |
| 21 C 120* | | BENZO(E)PYRENE | T | 4.40E 01 | 1.50E-02 | 1.20E 02 | 3 |
| 18 C 083 | | 5-INDANOL | T | 2.20E 03 | 1.50E-02 | 1.20E 02 | 6 |
| 05 A 080 | | N-BUTANOL | T | 2.20E 03 | 1.50E-02 | 1.20E 02 | 6 |
| 05 A 100 | | ISOBUTYL ALCOHOL | T | 2.20E 03 | 1.50E-02 | 1.20E 02 | 6 |
| 18 C 081 | | 1-INDANOL | T | 2.20E 03 | 1.50E-02 | 1.20E 02 | 6 |
| 18 C 082 | | 4-INDANOL | T | 2.20E 03 | 1.50E-02 | 1.20E 02 | 6 |
| 18 C 080 | | INDANOLS | T | 2.20E 03 | 1.50E-02 | 1.20E 02 | 6 |
| 15 B 163 | | P-TERPHENYL | T | 1.30E 02 | 1.44E-02 | 1.20E 02 | 2 |
| 15 B 161 | | O-TERPHENYL | T | 1.30E 02 | 1.44E-02 | 1.20E 02 | 2 |
| 15 B 162 | | M-TERPHENYL | T | 1.30E 02 | 1.44E-02 | 1.20E 02 | 2 |
| 15 B 160 | | TERPHENYLS | T | 1.30E 02 | 1.44E-02 | 1.20E 02 | 2 |
| 18 A 060* | | 2-METHOXYPHENOL | T | 4.70E 02 | 1.44E-02 | 1.20E 02 | 5 |
| 08 A 180 | | ADIPIC ACID | T | 2.20E 03 | 1.40E-02 | 1.11E 02 | 6 |
| 05 B 080 | | 2,6-DIMETHYL-4-HEPTANOL | T | 2.20E 03 | 1.40E-02 | 1.11E 02 | 6 |
| 18 A 120* | | 2,2'-DIHYDROXYDIPHENYL | T | 4.70E 02 | 1.34E-02 | 1.10E 02 | 5 |
| 21 C 060 | | DIBENZ(A,C)ANTHRACENE | T | 1.30E 02 | 1.31E-02 | 1.10E 02 | 2 |
| 10 A 122* | | 3-AMINO-1-PROPANOL | T | 4.70E 02 | 1.30E-02 | 1.10E 02 | 5 |
| 18 B 080* | | 1,2,3-TRIHYDROXYBENZENE | T | 4.70E 02 | 1.30E-02 | 1.10E 02 | 5 |
| 08 B 080* | | Y-BUTYROLACTONE | T | 4.70E 02 | 1.30E-02 | 1.10E 02 | 5 |
| 10 A 120* | | PROPANOLAMINES | T | 4.70E 02 | 1.30E-02 | 1.10E 02 | 5 |
| 10 A 121* | | 2-AMINO-1-PROPANOL | T | 4.70E 02 | 1.30E-02 | 1.10E 02 | 5 |
| 10 A 123* | | 1-AMINO-2-PROPANOL | T | 4.70E 02 | 1.30E-02 | 1.10E 02 | 5 |
| 02 A 320* | P | HEXACHLOROETHANE | T | 1.30E 02 | 1.30E-02 | 1.10E 02 | 2 |
| 12 A 080* | | N-NITROSODIISOPROPYLAMINE | T | 4.70E 02 | 1.23E-02 | 1.00E 02 | 5 |
| 21 D 020* | | DIBENZO(A,H)PYRENE | T | 4.40E 01 | 1.20E-02 | 9.60E 01 | 3 |
| 23 C 040* | | INDOLE | T | 1.30E 02 | 1.20E-02 | 9.54E 01 | 4 |
| 02 B 103* | | CIS-1,3-DICHLOROPROPENE | T | 1.30E 02 | 1.20E-02 | 9.54E 01 | 2 |
| 02 B 104* | | TRANS-1,3-DICHLOROPROPENE | T | 1.30E 02 | 1.20E-02 | 9.54E 01 | 2 |
| 04 A 140* | P | 2-CHLOROETHYL VINYL ETHER | T | 1.30E 02 | 1.20E-02 | 9.54E 01 | 4 |
| 02 B 100* | P | DICHLOROPROPENES | T | 1.30E 02 | 1.20E-02 | 9.54E 01 | 2 |
| 04 B 100* | | 2,2'-DICHLORODIISOPROPYL ETHER | T | 1.30E 02 | 1.20E-02 | 9.54E 01 | 4 |
| 10 A 160* | | CYCLOHEXYLAMINE | T | 4.70E 02 | 1.20E-02 | 9.50E 01 | 5 |
| 08 B 041* | | 2-HYDROXYBENZOIC ACID | T | 4.70E 02 | 1.20E-02 | 9.50E 01 | 5 |

TEST BURNER FLUE GAS COMPOSITE, HEALTH IMPACT

| DMEG NO. | | COMPOUND NAME | TYPE | CONC E-6 G/SCM | US | WDS G/S | LCCAT |
|---|---|---|---|---|---|---|---|
| 05 C 060 | | A-TERPINEOL | T | 2.20E 03 | 1.20E-02 | 9.40E 01 | 6 |
| 07 B 120* | | ACETOPHENONE | T | 4.70E 02 | 1.14E-02 | 9.30E 01 | 5 |
| 23 C 140* | | DIBENZO(A,I)CARBAZOLE | T | 1.30E 02 | 1.10E-02 | 8.80E 01 | 4 |
| 16 A 161 | | 1,2,4-TRICHLOROBENZENE | T | 1.30E 02 | 1.10E-02 | 8.80E 01 | 2 |
| 16 A 162 | | HEXACHLOROBENZENE | T | 1.30E 02 | 1.10E-02 | 8.80E 01 | 2 |
| 16 A 160* | P | POLYCHLORINATED BENZENES | T | 1.30E 02 | 1.10E-02 | 8.80E 01 | 2 |
| 05 C 040* | W | T-PENTANOL | T | 4.70E 02 | 1.04E-02 | 8.43E 01 | 5 |
| 18 B 040* | | 1,3-DIHYDROXYBENZENE | T | 4.70E 02 | 1.04E-02 | 8.43E 01 | 5 |
| 23 C 060 | | METHYLINDOLES | T | 4.70E 02 | 1.04E-02 | 8.43E 01 | 5 |
| 23 C 061 | | 2-METHYLINDOLE | T | 4.70E 02 | 1.04E-02 | 8.43E 01 | 5 |
| 20 A 020* | P | 2-NITROPHENOL | T | 4.70E 02 | 8.10E-03 | 6.54E 01 | 5 |
| 65 A 010 | | VANADIUM | S | 3.60E 00 | 7.20E-03 | 5.81E 01 | |
| 04 A 180* | P | CHLOROPHENYL PHENYL ETHER | T | 1.30E 02 | 4.81E-03 | 3.90E 01 | 4 |
| 85 A 010 | | URANIUM | S | < 4.00E-02 | < 4.44E-03 | < 3.60E 01 | |
| 04 B 040* | P | 1,1'-DICHLORODIETHYL ETHER | T | 1.30E 02 | 4.33E-03 | 3.50E 01 | 4 |
| 16 A 160* | P | POLYCHLORINATED BENZENES | T | 4.40E 01 | 3.70E-03 | 3.00E 01 | 3 |
| 69 A 010 | | MOLYBDENUM | S | 1.80E 01 | 3.60E-03 | 2.90E 01 | |
| 62 A 010 | | TITANIUM | S | 2.10E 01 | 3.50E-03 | 2.82E 01 | |
| 71 A 010 | P | MANGANESE | S | 1.70E 01 | 3.40E-03 | 2.74E 01 | |
| 08 D 320* | P | BUTYL BENZYL PHTHALATE | T | 4.70E 02 | 3.40E-03 | 2.71E 01 | 5 |
| 81 A 010 | P | ZINC | S | 1.30E 01 | 3.30E-03 | 2.62E 01 | |
| 38 A 010 | | ALUMINUM | S | 1.60E 01 | 3.10E-03 | 2.50E 01 | |
| 02 A 140* | P | DIBROMOCHLOROMETHANE | T | 1.30E 02 | 2.90E-03 | 2.33E 01 | 2 |
| 28 A 010 | | SODIUM | S | > 1.40E 02 | > 2.64E-03 | > 2.13E 01 | |
| 21 A 020* | P | NAPHTHALENE | T | 1.30E 02 | 2.60E-03 | 2.10E 01 | 2 |
| 02 A 340* | P | DICHLOROPROPANES | T | 8.80E 02 | 2.51E-03 | 2.03E 01 | 1 |
| 63 A 010 | | ZIRCONIUM (AS ZR+4) | S | 1.20E 01 | 2.40E-03 | 1.93E 01 | |
| 21 A 140* | P | ANTHRACENE | T | 1.30E 02 | 2.32E-03 | 1.90E 01 | 2 |
| 16 A 200* | P | CHLORONAPHTHALENES | T | 1.30E 02 | 1.90E-03 | 1.52E 01 | 2 |
| 35 A 010 | | STRONTIUM | S | 5.50E 00 | 1.80E-03 | 1.43E 01 | |
| 22 B 040* | P W | FLUORANTHENE | T | 1.30E 02 | 1.44E-03 | 1.20E 01 | 2 |
| 02 B 080* | P | TETRACHLOROETHENE | T | 8.80E 02 | 1.31E-03 | 1.10E 01 | 1 |
| 37 A 010 | | BORON | S | 4.00E 00 | 1.30E-03 | 1.04E 01 | |
| 21 A 020* | P | NAPHTHALENE | T | 4.40E 01 | 8.80E-04 | 7.11E 00 | 3 |

TEST BURNER FLUE GAS COMPOSITE, HEALTH IMPACT

| DMEG NO. | COMPOUND NAME | TYPE | CONC E-6 G/SCM | DS | WDS G/S | LCCAT |
|---|---|---|---|---|---|---|
| 21 A 140* P | ANTHRACENE | T | 4.40E 01 | 7.90E-04 | 6.34E 00 | 3 |
| 16 A 200* P | CHLORONAPHTHALENES | T | 4.40E 01 | 6.40E-04 | 5.20E 00 | 3 |
| 21 B 180* P | PYRENE | T | 1.30E 02 | 5.70E-04 | 4.60E 00 | 2 |
| 47 A 060 P | AMMONIA | D | < 1.00E 01 | < 5.60E-04 | < 4.50E 00 | |
| 22 B 040* P W | FLUORANTHENE | T | 4.40E 01 | 4.90E-04 | 4.00E 00 | 3 |
| 16 A 120* P | 1,3-DICHLOROBENZENE | T | 1.30E 02 | 4.33E-04 | 3.50E 00 | 2 |
| 16 A 100* P | 1,2-DICHLOROBENZENE | T | 1.30E 02 | 4.33E-04 | 3.50E 00 | 2 |
| 16 A 020* P | CHLOROBENZENE | T | 1.30E 02 | 3.71E-04 | 3.00E 00 | 2 |
| 02 A 340* P | DICHLOROPROPANES | T | 1.30E 02 | 3.71E-04 | 3.00E 00 | 2 |
| 44 A 010 | GERMANIUM | S | 2.00E-01 | 3.60E-04 | 2.90E 00 | |
| 15 A 040* P | TOLUENE | T | 1.30E 02 | 3.42E-04 | 2.80E 00 | 2 |
| 15 A 060* P | ETHYL BENZENE | T | 1.30E 02 | 3.00E-04 | 2.40E 00 | 2 |
| 16 A 140* P | 1,4-DICHLOROBENZENE | T | 1.30E 02 | 2.90E-04 | 2.33E 00 | 2 |
| 39 A 010 | GALLIUM | S | < 1.30E 00 | < 2.60E-04 | < 2.10E 00 | |
| 02 B 080* P | TETRACHLOROETHENE | T | 1.30E 02 | 1.94E-04 | 1.60E 00 | 2 |
| 21 B 180* P | PYRENE | T | 4.40E 01 | 1.91E-04 | 1.54E 00 | 3 |
| 16 A 120* P | 1,3-DICHLOROBENZENE | T | 4.40E 01 | 1.50E-04 | 1.20E 00 | 3 |
| 16 A 100* P | 1,2-DICHLOROBENZENE | T | 4.40E 01 | 1.50E-04 | 1.20E 00 | 3 |
| 16 A 020* P | CHLOROBENZENE | T | 4.40E 01 | 1.30E-04 | 1.01E 00 | 3 |
| 15 A 040* P | TOLUENE | T | 4.40E 01 | 1.20E-04 | 9.40E-01 | 3 |
| 15 A 060* P | ETHYL BENZENE | T | 4.40E 01 | 1.00E-04 | 8.10E-01 | 3 |
| 16 A 140* P | 1,4-DICHLOROBENZENE | T | 4.40E 01 | 9.80E-05 | 7.90E-01 | 3 |
| 61 A 010 | YTTRIUM (AS Y+3) | S | < 2.00E-02 | < 2.00E-05 | < 1.61E-01 | |
| 84 B 010 | CERIUM | S | 6.20E-01 | 1.70E-05 | 1.40E-01 | |
| 31 A 010 | CESIUM | S | 1.10E 00 | 1.34E-05 | 1.10E-01 | |
| 66 A 010 | NIOBIUM (AS NB+3) | S | > 1.00E-01 | > 4.54E-06 | > 3.70E-02 | |
| 30 A 010 | RUBIDIUM (AS RB+) | S | < 3.50E-01 | < 2.91E-06 | < 2.40E-02 | |
| 60 A 010 | SCANDIUM | S | < 5.00E-02 | < 9.43E-07 | < 7.62E-03 | |
| 84 C 010 | PRASEODYMIUM | S | 1.30E-02 | 2.54E-07 | 2.10E-03 | |
| 57 A 010 | CHLORINE (AS CL-) | S | 3.30E 01 | 0.00E-01 | 0.00E-01 | |
| 01 A 020 | METHANE | D | 0.00E-01 | 0.00E-01 | 0.00E-01 | |
| 21 B 060 W | 7,12-DIMETHYLBENZ(A)ANTHRACENE | D | 0.00E-01 | 0.00E-01 | 0.00E-01 | 2 |
| 16 A 220* W | POLYCHLORINATED BIPHENYLS | D | 0.00E-01 | 0.00E-01 | 0.00E-01 | 2 |
| 22 A 020* PH | FLUORENE | T | 4.40E 01 | 0.00E-01 | 0.00E-01 | 3 |

TEST BURNER FLUE GAS COMPOSITE, HEALTH IMPACT

| DMEG NO. | COMPOUND NAME | TYPE | CONC E-6 G/SCM | DS | WDS G/S | LCCAT |
|---|---|---|---|---|---|---|
| 21 C 100* P W | BENZO(A)PYRENE | D | 0.00E-01 | 0.00E-01 | 0.00E-01 | 2 |
| 53 A 010 | SULFUR | S | > 1.20E 02> | 0.00E-01> | 0.00E-01 | |
| 22 A 020* PH | FLUORENE | T | 1.30E 02 | 0.00E-01 | 0.00E-01 | 2 |
| 21 C 080* P | DIBENZ(A,H)ANTHRACENE | D | 0.00E-01 | 0.00E-01 | 0.00E-01 | 2 |
| 04 A 160* P | A-CHLOROBUTYL ETHYL ETHER | T | 1.30E 02 | 0.00E-01 | 0.00E-01 | 4 |
| 04 A 160* P | A-CHLOROBUTYL ETHYL ETHER | T | 4.70E 02 | 0.00E-01 | 0.00E-01 | 5 |
| 21 D 080* PH | BENZO(GHI)PERYLENE | T | 1.30E 02 | 0.00E-01 | 0.00E-01 | 2 |
| 21 D 080* PH | BENZO(GHI)PERYLENE | T | 4.40E 01 | 0.00E-01 | 0.00E-01 | 3 |
| 21 A 100* PH | ACENAPHTHENE | T | 1.30E 02 | 0.00E-01 | 0.00E-01 | 2 |
| 01 A 040 | ETHANE | D | 0.00E-01 | 0.00E-01 | 0.00E-01 | |
| 01 A 060 | PROPANE | D | 0.00E-01 | 0.00E-01 | 0.00E-01 | |
| 29 A 010 | POTASSIUM | S | > 4.90E 02> | 0.00E-01> | 0.00E-01 | |
| 84 D 010 | NEODYMIUM | S | 2.50E-02 | 0.00E-01 | 0.00E-01 | |
| 01 A 100 | PENTANES | D | 0.00E-01 | 0.00E-01 | 0.00E-01 | |
| 01 A 140 | HEXANES | D | 0.00E-01 | 0.00E-01 | 0.00E-01 | |
| 01 B 020 | ETHYLENE | D | 0.00E-01 | 0.00E-01 | 0.00E-01 | |
| 59 A 010 | IODINE (AS I-) | S | 6.60E-01 | 0.00E-01 | 0.00E-01 | |
| 45 A 010 | TIN | S | 1.50E 00 | 0.00E-01 | 0.00E-01 | |
| 21 A 100* PH | ACENAPHTHENE | T | 4.40E 01 | 0.00E-01 | 0.00E-01 | 3 |
| 21 A 120* PH | ACENAPHTHYLENE | T | 1.30E 02 | 0.00E-01 | 0.00E-01 | 2 |
| 21 A 120* PH | ACENAPHTHYLENE | T | 4.40E 01 | 0.00E-01 | 0.00E-01 | 3 |
| 01 A 080 | BUTANES | D | 0.00E-01 | 0.00E-01 | 0.00E-01 | |
| 58 A 010 | BROMINE | S | 4.40E-01 | 0.00E-01 | 0.00E-01 | |

TEST BURNER FLUE GAS COMPOSITE

FLOW RATE = 8080 G/S (6.77 SCM/S, DRY BASIS)

29.686 SCM AT 25C AND 760 MM HG SAMPLED

TOTAL ORGANIC LOADING = 5.4 MG/SCM

TOTAL TCO = NR  TOTAL GRAV = 5.4 MG/SCM

55.0% ORIGINAL SAMPLE TO LC

LC TCO = NR  LC GRAV = 90.3 MG  LC TOTAL = 90.3 MG

| LCCAT | ORGANIC LOADING |
|---|---|
| 1 | 880.0 |
| 2 | 130.0 |
| 3 | 44.0 |
| 4 | 130.0 |
| 5 | 470.0 |
| 6 | 2200.0 |
| 7 | 910.0 |

FLOW RATE = 8080.00

STATE: GAS, UNITS IN MICROGRAMS/SCM

IMPACT: ECOLOGY

EXPERIMENTALY DETERMINED DATA

SPARK SOURCE DATA

TEST BURNER FLUE GAS COMPOSITE, ECOLOGY IMPACT

| DMEG NO. | | COMPOUND NAME | TYPE | CONC E-6 G/SCM | DS | WDS G/S | LCCAT |
|---|---|---|---|---|---|---|---|
| 65 A 010 | | VANADIUM | S | 3.60E 00 | 3.60E 00 | 2.90E 04 | |
| 83 A 010 | P | MERCURY | D | 1.60E 01 | 1.60E 00 | 1.30E 04 | |
| 15 A 120* | | ISOPROPYL BENZENE | T | 1.30E 02 | 1.10E-01 | 8.80E 02 | 2 |
| 15 A 120* | | ISOPROPYL BENZENE | T | 4.40E 01 | 3.70E-02 | 3.00E 02 | 3 |
| 47 A 080 | P | HYDROGEN CYANIDE | D | 1.02E 03 | 3.02E-02 | 2.44E 02 | |
| 47 A 060 | P | AMMONIA | D | < 1.00E 01< | 2.90E-02< | 2.30E 02 | |
| 15 A 040* | P | TOLUENE | T | 1.30E 02 | 2.82E-02 | 2.30E 02 | 2 |
| 15 A 040* | P | TOLUENE | T | 4.40E 01 | 9.60E-03 | 7.72E 01 | 3 |
| 42 A 080 | | CARBON DIOXIDE | D | 9.80E 07 | 0.00E-01 | 0.00E-01 | |
| 53 A 060 | | SULFUR DIOXIDE | D | 2.70E 05 | 0.00E-01 | 0.00E-01 | |
| 16 A 220 | | POLYCHLORINATED BIPHENYLS | D | 0.00E-01 | 0.00E-01 | 0.00E-01 | 2 |
| 01 A 060 | | PROPANE | D | 0.00E-01 | 0.00E-01 | 0.00E-01 | |
| 01 A 080 | | BUTANES | D | 0.00E-01 | 0.00E-01 | 0.00E-01 | |
| 01 A 100 | | PENTANES | D | 0.00E-01 | 0.00E-01 | 0.00E-01 | |
| 01 A 140 | | HEXANES | D | 0.00E-01 | 0.00E-01 | 0.00E-01 | |
| 21 B 040* | P | BENZ(A)ANTHRACENE | D | 4.50E 02 | 0.00E-01 | 0.00E-01 | 2 |
| 21 B 060 | | 7,12-DIMETHYLBENZ(A)ANTHRACENE | D | 0.00E-01 | 0.00E-01 | 0.00E-01 | 2 |
| 21 C 080* | P | DIBENZ(A,H)ANTHRACENE | D | 0.00E-01 | 0.00E-01 | 0.00E-01 | 2 |
| 21 C 100* | P | BENZO(A)PYRENE | D | 0.00E-01 | 0.00E-01 | 0.00E-01 | 2 |
| 54 A 010 | P | SELENIUM | D | < 1.30E 02< | 0.00E-01< | 0.00E-01 | |
| 01 A 020 | W | METHANE | D | 0.00E-01 | 0.00E-01 | 0.00E-01 | |
| 01 A 040 | | ETHANE | D | 0.00E-01 | 0.00E-01 | 0.00E-01 | |
| 37 A 010 | | BORON | S | 4.00E 00 | 0.00E-01 | 0.00E-01 | |
| 58 A 010 | | BROMINE | S | 4.40E-01 | 0.00E-01 | 0.00E-01 | |
| 82 A 010 | P | CADMIUM | S | > 2.00E-01> | 0.00E-01> | 0.00E-01 | |
| 34 A 010 | | CALCIUM (AS CA+2) | S | > 7.80E 02> | 0.00E-01> | 0.00E-01 | |
| 84 B 010 | | CERIUM | S | 6.20E-01 | 0.00E-01 | 0.00E-01 | |
| 31 A 010 | | CESIUM | S | 1.10E 00 | 0.00E-01 | 0.00E-01 | |
| 57 A 010 | | CHLORINE (AS CL-) | S | 3.30E 01 | 0.00E-01 | 0.00E-01 | |
| 68 A 010 | P | CHROMIUM | S | 3.70E 01 | 0.00E-01 | 0.00E-01 | |
| 74 A 010 | | COBALT | S | 1.30E 02 | 0.00E-01 | 0.00E-01 | |
| 78 A 010 | P | COPPER | S | 9.30E 00 | 0.00E-01 | 0.00E-01 | |
| 56 A 010 | | FLUORINE (AS F-) | S | 1.00E 02 | 0.00E-01 | 0.00E-01 | |
| 39 A 010 | | GALLIUM | S | < 1.30E 00< | 0.00E-01< | 0.00E-01 | |

TEST BURNER FLUE GAS COMPOSITE, ECOLOGY IMPACT

| DMEG NO. | | COMPOUND NAME | TYPE | CONC E-6 G/SCM | DS | WDS G/S | LCCAT |
|---|---|---|---|---|---|---|---|
| 44 A 010 | | GERMANIUM | S | 2.00E-01 | 0.00E-01 | 0.00E-01 | |
| 59 A 010 | | IODINE (AS I-) | S | 6.60E-01 | 0.00E-01 | 0.00E-01 | |
| 72 A 010 | | IRON (AS FE+2) | S | > 3.10E 02> | 0.00E-01> | 0.00E-01 | |
| 46 A 010 | P | LEAD | S | 1.50E 01 | 0.00E-01 | 0.00E-01 | |
| 27 A 010 | | LITHIUM | S | < 1.40E 00< | 0.00E-01< | 0.00E-01 | |
| 33 A 010 | | MAGNESIUM | S | > 1.30E 02> | 0.00E-01> | 0.00E-01 | |
| 71 A 010 | P | MANGANESE | S | 1.70E 01 | 0.00E-01 | 0.00E-01 | |
| 69 A 010 | | MOLYBDENUM | S | 1.80E 01 | 0.00E-01 | 0.00E-01 | |
| 84 D 010 | | NEODYMIUM | S | 2.50E-02 | 0.00E-01 | 0.00E-01 | |
| 76 A 010 | P | NICKEL | S | 4.50E 01 | 0.00E-01 | 0.00E-01 | |
| 66 A 010 | | NIOBIUM (AS NB+3) | S | > 1.00E-01> | 0.00E-01> | 0.00E-01 | |
| 48 A 010 | | PHOSPHORUS | S | 1.70E 02 | 0.00E-01 | 0.00E-01 | |
| 77 A 010 | | PLATINUM | S | 1.30E 00 | 0.00E-01 | 0.00E-01 | |
| 29 A 010 | | POTASSIUM | S | > 4.90E 02> | 0.00E-01> | 0.00E-01 | |
| 84 C 010 | | PRASEODYMIUM | S | 1.30E-02 | 0.00E-01 | 0.00E-01 | |
| 30 A 010 | | RUBIDIUM (AS RB+) | S | < 3.50E-01< | 0.00E-01< | 0.00E-01 | |
| 60 A 010 | | SCANDIUM | S | < 5.00E-02< | 0.00E-01< | 0.00E-01 | |
| 43 A 010 | | SILICON | S | > 2.90E 02> | 0.00E-01> | 0.00E-01 | |
| 79 A 010 | P | SILVER | S | 9.20E-01 | 0.00E-01 | 0.00E-01 | |
| 28 A 010 | | SODIUM | S | > 1.40E 02> | 0.00E-01> | 0.00E-01 | |
| 35 A 010 | | STRONTIUM | S | 5.50E 00 | 0.00E-01 | 0.00E-01 | |
| 53 A 010 | | SULFUR | S | > 1.20E 02> | 0.00E-01> | 0.00E-01 | |
| 45 A 010 | | TIN | S | 1.50E 00 | 0.00E-01 | 0.00E-01 | |
| 62 A 010 | | TITANIUM | S | 2.10E 01 | 0.00E-01 | 0.00E-01 | |
| 85 A 010 | | URANIUM | S | < 4.00E-02< | 0.00E-01< | 0.00E-01 | |
| 01 B 020 | W | ETHYLENE | D | 0.00E-01 | 0.00E-01 | 0.00E-01 | |
| 61 A 010 | | YTTRIUM (AS Y+3) | S | < 2.00E-02< | 0.00E-01< | 0.00E-01 | |
| 81 A 010 | P | ZINC | S | 1.30E 01 | 0.00E-01 | 0.00E-01 | |
| 63 A 010 | | ZIRCONIUM (AS ZR+4) | S | 1.20E 01 | 0.00E-01 | 0.00E-01 | |
| 02 A 140* | P | DIBROMOCHLOROMETHANE | T | 8.80E 02 | 0.00E-01 | 0.00E-01 | 1 |
| 02 A 140* | P | DIBROMOCHLOROMETHANE | T | 1.30E 02 | 0.00E-01 | 0.00E-01 | 2 |
| 02 A 160* | P | BROMOFORM | T | 8.80E 02 | 0.00E-01 | 0.00E-01 | 1 |
| 02 A 160* | P | BROMOFORM | T | 1.30E 02 | 0.00E-01 | 0.00E-01 | 2 |
| 02 A 320* | P | HEXACHLOROETHANE | T | 8.80E 02 | 0.00E-01 | 0.00E-01 | 1 |

TEST BURNER FLUE GAS COMPOSITE, ECOLOGY IMPACT

| DMEG NO. | COMPOUND NAME | TYPE | CONC E-6 G/SCM | DS | WDS G/S | LCCAT |
|---|---|---|---|---|---|---|
| 02 A 320* P | HEXACHLOROETHANE | T | 1.30E 02 | 0.00E-01 | 0.00E-01 | 2 |
| 02 A 340* P | DICHLOROPROPANES | T | 8.80E 02 | 0.00E-01 | 0.00E-01 | 1 |
| 02 A 340* P | DICHLOROPROPANES | T | 1.30E 02 | 0.00E-01 | 0.00E-01 | 2 |
| 02 B 080* P | TETRACHLOROETHENE | T | 8.80E 02 | 0.00E-01 | 0.00E-01 | 1 |
| 02 B 080* P | TETRACHLOROETHENE | T | 1.30E 02 | 0.00E-01 | 0.00E-01 | 2 |
| 02 B 100* P | DICHLOROPROPENES | T | 8.80E 02 | 0.00E-01 | 0.00E-01 | 1 |
| 02 B 100* P | DICHLOROPROPENES | T | 1.30E 02 | 0.00E-01 | 0.00E-01 | 2 |
| 02 B 120* P | HEXACHLOROBUTADIENE | T | 8.80E 02 | 0.00E-01 | 0.00E-01 | 1 |
| 02 B 120* P | HEXACHLOROBUTADIENE | T | 1.30E 02 | 0.00E-01 | 0.00E-01 | 2 |
| 02 B 140* P | HEXACHLOROCYCLOPENTADIENE | T | 8.80E 02 | 0.00E-01 | 0.00E-01 | 1 |
| 02 B 140* P | HEXACHLOROCYCLOPENTADIENE | T | 1.30E 02 | 0.00E-01 | 0.00E-01 | 2 |
| 04 A 140* P | 2-CHLOROETHYL VINYL ETHER | T | 1.30E 02 | 0.00E-01 | 0.00E-01 | 4 |
| 04 A 140* P | 2-CHLOROETHYL VINYL ETHER | T | 4.70E 02 | 0.00E-01 | 0.00E-01 | 5 |
| 04 A 160* P | A-CHLOROBUTYL ETHYL ETHER | T | 1.30E 02 | 0.00E-01 | 0.00E-01 | 4 |
| 04 A 160* P | A-CHLOROBUTYL ETHYL ETHER | T | 4.70E 02 | 0.00E-01 | 0.00E-01 | 5 |
| 04 A 180* P | CHLOROPHENYL PHENYL ETHER | T | 1.30E 02 | 0.00E-01 | 0.00E-01 | 4 |
| 04 A 180* P | CHLOROPHENYL PHENYL ETHER | T | 4.70E 02 | 0.00E-01 | 0.00E-01 | 5 |
| 04 B 020* P | 1,1'-DICHLOROMETHYL ETHER | T | 1.30E 02 | 0.00E-01 | 0.00E-01 | 4 |
| 04 B 020* P | 1,1'-DICHLOROMETHYL ETHER | T | 4.70E 02 | 0.00E-01 | 0.00E-01 | 5 |
| 04 B 040* P | 1,1'-DICHLORODIETHYL ETHER | T | 1.30E 02 | 0.00E-01 | 0.00E-01 | 4 |
| 04 B 040* P | 1,1'-DICHLORODIETHYL ETHER | T | 4.70E 02 | 0.00E-01 | 0.00E-01 | 5 |
| 07 B 080* P | ISOPHORONE | T | 4.70E 02 | 0.00E-01 | 0.00E-01 | 5 |
| 07 B 080* P | ISOPHORONE | T | 2.20E 03 | 0.00E-01 | 0.00E-01 | 6 |
| 08 D 280* P | PHTHALATE ESTERS (MW:194-279) | T | 4.70E 02 | 0.00E-01 | 0.00E-01 | 5 |
| 08 D 280* P | PHTHALATE ESTERS (MW:194-279) | T | 2.20E 03 | 0.00E-01 | 0.00E-01 | 6 |
| 08 D 300* P | DI-2-ETHYLHEXYL PHTHALATE | T | 4.70E 02 | 0.00E-01 | 0.00E-01 | 5 |
| 08 D 300* P | DI-2-ETHYLHEXYL PHTHALATE | T | 2.20E 03 | 0.00E-01 | 0.00E-01 | 6 |
| 08 D 320* P | BUTYL BENZYL PHTHALATE | T | 4.70E 02 | 0.00E-01 | 0.00E-01 | 5 |
| 08 D 320* P | BUTYL BENZYL PHTHALATE | T | 2.20E 03 | 0.00E-01 | 0.00E-01 | 6 |
| 10 C 140* P | BENZIDINE | T | 4.70E 02 | 0.00E-01 | 0.00E-01 | 5 |
| 10 C 140* P | BENZIDINE | T | 2.20E 03 | 0.00E-01 | 0.00E-01 | 6 |
| 12 A 020* P | N-NITROSODIMETHYLAMINE | T | 4.70E 02 | 0.00E-01 | 0.00E-01 | 5 |
| 12 A 020* P | N-NITROSODIMETHYLAMINE | T | 2.20E 03 | 0.00E-01 | 0.00E-01 | 6 |
| 12 A 040* P | N-NITROSODIETHYLAMINE | T | 4.70E 02 | 0.00E-01 | 0.00E-01 | 5 |

TEST BURNER FLUE GAS COMPOSITE, ECOLOGY IMPACT

| DMEG NO. | | COMPOUND NAME | TYPE | CONC E-6 G/SCM | DS | WDS G/S | LCCAT |
|---|---|---|---|---|---|---|---|
| 12 A 040* | P | N-NITROSODIETHYLAMINE | T | 2.20E 03 | 0.00E-01 | 0.00E-01 | 6 |
| 12 A 060* | P | N-NITROSODIPROPYLAMINE | T | 4.70E 02 | 0.00E-01 | 0.00E-01 | 5 |
| 12 A 060* | P | N-NITROSODIPROPYLAMINE | T | 2.20E 03 | 0.00E-01 | 0.00E-01 | 6 |
| 50 A 010 | P | ANTIMONY | D | < 1.10E 01< | 0.00E-01< | 0.00E-01 | |
| 49 A 010 | P | ARSENIC | D | 8.60E 01 | 0.00E-01 | 0.00E-01 | |
| 15 A 060* | P | ETHYL BENZENE | T | 1.30E 02 | 0.00E-01 | 0.00E-01 | 2 |
| 15 A 060* | P | ETHYL BENZENE | T | 4.40E 01 | 0.00E-01 | 0.00E-01 | 3 |
| 38 A 010 | | ALUMINUM | S | 1.60E 01 | 0.00E-01 | 0.00E-01 | |
| 36 A 010 | | BARIUM | S | > 1.20E 02> | 0.00E-01> | 0.00E-01 | |
| 16 A 020* | P | CHLOROBENZENE | T | 1.30E 02 | 0.00E-01 | 0.00E-01 | 2 |
| 16 A 020* | P | CHLOROBENZENE | T | 4.40E 01 | 0.00E-01 | 0.00E-01 | 3 |
| 16 A 100* | P | 1,2-DICHLOROBENZENE | T | 1.30E 02 | 0.00E-01 | 0.00E-01 | 2 |
| 16 A 100* | P | 1,2-DICHLOROBENZENE | T | 4.40E 01 | 0.00E-01 | 0.00E-01 | 3 |
| 16 A 120* | P | 1,3-DICHLOROBENZENE | T | 1.30E 02 | 0.00E-01 | 0.00E-01 | 2 |
| 16 A 120* | P | 1,3-DICHLOROBENZENE | T | 4.40E 01 | 0.00E-01 | 0.00E-01 | 3 |
| 16 A 140* | P | 1,4-DICHLOROBENZENE | T | 1.30E 02 | 0.00E-01 | 0.00E-01 | 2 |
| 16 A 140* | P | 1,4-DICHLOROBENZENE | T | 4.40E 01 | 0.00E-01 | 0.00E-01 | 3 |
| 16 A 160* | P | POLYCHLORINATED BENZENES | T | 1.30E 02 | 0.00E-01 | 0.00E-01 | 2 |
| 16 A 160* | P | POLYCHLORINATED BENZENES | T | 4.40E 01 | 0.00E-01 | 0.00E-01 | 3 |
| 16 A 200* | P | CHLORONAPHTHALENES | T | 1.30E 02 | 0.00E-01 | 0.00E-01 | 2 |
| 16 A 200* | P | CHLORONAPHTHALENES | T | 4.40E 01 | 0.00E-01 | 0.00E-01 | 3 |
| 17 A 020* | P | NITROBENZENE | T | 1.30E 02 | 0.00E-01 | 0.00E-01 | 4 |
| 17 A 020* | P | NITROBENZENE | T | 4.70E 02 | 0.00E-01 | 0.00E-01 | 5 |
| 17 A 081* | P | 2,6-DINITROTOLUENE | T | 1.30E 02 | 0.00E-01 | 0.00E-01 | 4 |
| 17 A 081* | P | 2,6-DINITROTOLUENE | T | 4.70E 02 | 0.00E-01 | 0.00E-01 | 5 |
| 17 A 084* | P | 2,4-DINITROTOLUENE | T | 1.30E 02 | 0.00E-01 | 0.00E-01 | 4 |
| 17 A 084* | P | 2,4-DINITROTOLUENE | T | 4.70E 02 | 0.00E-01 | 0.00E-01 | 5 |
| 18 A 020* | P | PHENOL | T | 4.70E 02 | 0.00E-01 | 0.00E-01 | 5 |
| 18 A 020* | P | PHENOL | T | 2.20E 03 | 0.00E-01 | 0.00E-01 | 6 |
| 18 A 142* | P | 2,4-XYLENOL | T | 4.70E 02 | 0.00E-01 | 0.00E-01 | 5 |
| 18 A 142* | P | 2,4-XYLENOL | T | 2.20E 03 | 0.00E-01 | 0.00E-01 | 6 |
| 19 A 020* | P | 2-CHLOROPHENOL | T | 4.70E 02 | 0.00E-01 | 0.00E-01 | 5 |
| 19 A 020* | P | 2-CHLOROPHENOL | T | 2.20E 03 | 0.00E-01 | 0.00E-01 | 6 |
| 19 A 040* | P | 2,4-DICHLOROPHENOL | T | 4.70E 02 | 0.00E-01 | 0.00E-01 | 5 |

TEST BURNER FLUE GAS COMPOSITE, ECOLOGY IMPACT

| DMEG NO. | COMPOUND NAME | TYPE | CONC E-6 G/SCM | DS | WDS G/S | LCCAT |
|---|---|---|---|---|---|---|
| 19 A 040* P | 2,4-DICHLOROPHENOL | T | 2.20E 03 | 0.00E-01 | 0.00E-01 | 6 |
| 19 A 060* P | PENTACHLOROPHENOL | T | 4.70E 02 | 0.00E-01 | 0.00E-01 | 5 |
| 19 A 060* P | PENTACHLOROPHENOL | T | 2.20E 03 | 0.00E-01 | 0.00E-01 | 6 |
| 19 B 022* P | CHLORINATED-M-CRESOLS | T | 4.70E 02 | 0.00E-01 | 0.00E-01 | 5 |
| 19 B 022* P | CHLORINATED-M-CRESOLS | T | 2.20E 03 | 0.00E-01 | 0.00E-01 | 6 |
| 20 A 020* P | 2-NITROPHENOL | T | 4.70E 02 | 0.00E-01 | 0.00E-01 | 5 |
| 20 A 020* P | 2-NITROPHENOL | T | 2.20E 03 | 0.00E-01 | 0.00E-01 | 6 |
| 20 A 060* P | 4-NITROPHENOL | T | 4.70E 02 | 0.00E-01 | 0.00E-01 | 5 |
| 20 A 060* P | 4-NITROPHENOL | T | 2.20E 03 | 0.00E-01 | 0.00E-01 | 6 |
| 20 A 101* P | 2,4-DINITROPHENOL | T | 4.70E 02 | 0.00E-01 | 0.00E-01 | 5 |
| 20 A 101* P | 2,4-DINITROPHENOL | T | 2.20E 03 | 0.00E-01 | 0.00E-01 | 6 |
| 20 B 020* P | 4,6-DINITRO-O-CRESOL | T | 4.70E 02 | 0.00E-01 | 0.00E-01 | 5 |
| 20 B 020* P | 4,6-DINITRO-O-CRESOL | T | 2.20E 03 | 0.00E-01 | 0.00E-01 | 6 |
| 21 A 020* P | NAPHTHALENE | T | 1.30E 02 | 0.00E-01 | 0.00E-01 | 2 |
| 21 A 020* P | NAPHTHALENE | T | 4.40E 01 | 0.00E-01 | 0.00E-01 | 3 |
| 21 A 100* PH | ACENAPHTHENE | T | 1.30E 02 | 0.00E-01 | 0.00E-01 | 2 |
| 21 A 100* PH | ACENAPHTHENE | T | 4.40E 01 | 0.00E-01 | 0.00E-01 | 3 |
| 21 A 120* PH | ACENAPHTHYLENE | T | 1.30E 02 | 0.00E-01 | 0.00E-01 | 2 |
| 21 A 120* PH | ACENAPHTHYLENE | T | 4.40E 01 | 0.00E-01 | 0.00E-01 | 3 |
| 21 A 140* P | ANTHRACENE | T | 1.30E 02 | 0.00E-01 | 0.00E-01 | 2 |
| 21 A 140* P | ANTHRACENE | T | 4.40E 01 | 0.00E-01 | 0.00E-01 | 3 |
| 21 A 180* P | PHENANTHRENE | T | 1.30E 02 | 0.00E-01 | 0.00E-01 | 2 |
| 21 A 180* P | PHENANTHRENE | T | 4.40E 01 | 0.00E-01 | 0.00E-01 | 3 |
| 21 B 040* P | BENZ(A)ANTHRACENE | T | 4.40E 01 | 0.00E-01 | 0.00E-01 | 3 |
| 21 B 120* P | CHRYSENE | T | 1.30E 02 | 0.00E-01 | 0.00E-01 | 2 |
| 21 B 120* P | CHRYSENE | T | 4.40E 01 | 0.00E-01 | 0.00E-01 | 3 |
| 21 B 180* P | PYRENE | T | 1.30E 02 | 0.00E-01 | 0.00E-01 | 2 |
| 21 B 180* P | PYRENE | T | 4.40E 01 | 0.00E-01 | 0.00E-01 | 3 |
| 21 C 080* P | DIBENZ(A,H)ANTHRACENE | T | 4.40E 01 | 0.00E-01 | 0.00E-01 | 3 |
| 21 C 100* P | BENZO(A)PYRENE | T | 4.40E 01 | 0.00E-01 | 0.00E-01 | 3 |
| 21 D 080* PH | BENZO(GHI)PERYLENE | T | 1.30E 02 | 0.00E-01 | 0.00E-01 | 2 |
| 21 D 080* PH | BENZO(GHI)PERYLENE | T | 4.40E 01 | 0.00E-01 | 0.00E-01 | 3 |
| 22 A 020* PH | FLUORENE | T | 1.30E 02 | 0.00E-01 | 0.00E-01 | 2 |
| 22 A 020* PH | FLUORENE | T | 4.40E 01 | 0.00E-01 | 0.00E-01 | 3 |

TEST BURNER FLUE GAS COMPOSITE, ECOLOGY IMPACT

| DMEG NO. | | COMPOUND NAME | TYPE | CONC E-6 G/SCM | DS | WDS G/S | LCCAT |
|---|---|---|---|---|---|---|---|
| 22 B 040* | P | FLUORANTHENE | T | 1.30E 02 | 0.00E-01 | 0.00E-01 | 2 |
| 22 B 040* | P | FLUORANTHENE | T | 4.40E 01 | 0.00E-01 | 0.00E-01 | 3 |
| 22 C 020* | P | BENZO(K)FLUORANTHENE | T | 1.30E 02 | 0.00E-01 | 0.00E-01 | 2 |
| 22 C 020* | P | BENZO(K)FLUORANTHENE | T | 4.40E 01 | 0.00E-01 | 0.00E-01 | 3 |
| 22 C 080* | P | BENZO(B)FLUORANTHENE | T | 1.30E 02 | 0.00E-01 | 0.00E-01 | 2 |
| 22 C 080* | P | BENZO(B)FLUORANTHENE | T | 4.40E 01 | 0.00E-01 | 0.00E-01 | 3 |
| 22 D 020* | P | INDENO(1,2,3-CD)PYRENE | T | 1.30E 02 | 0.00E-01 | 0.00E-01 | 2 |
| 22 D 020* | P | INDENO(1,2,3-CD)PYRENE | T | 4.40E 01 | 0.00E-01 | 0.00E-01 | 3 |

GASIFIER ASH SLUICE WATER

APPROXIMATE FLOW RATE = 7.0 G/S (0.007 L/S)

TOTAL ORGANIC LOADING 125.7 MG/L

ORGANIC LOADING

125700.0

FLOW RATE = 7.00

STATE: LIQUID, UNITS IN MICROGRAMS/L

IMPACT: HEALTH

EXPERIMENTALY DETERMINED DATA

SPARK SOURCE DATA

GASIFIER ASH SLUICE WATER, HEALTH IMPACT

| DMEG NO. | | COMPOUND NAME | TYPE | CONC E-6 G/L | DS | WDS G/S | LCCAT |
|---|---|---|---|---|---|---|---|
| 16 A 220 | W | POLYCHLORINATED BIPHENYLS | T | 1.30E 05 | 2.51E 07 | 1.80E 08 | |
| 21 C 100* | P W | BENZO(A)PYRENE | T | 1.30E 05 | 4.20E 05 | 2.93E 06 | |
| 21 C 080* | P | DIBENZ(A,H)ANTHRACENE | T | 1.30E 05 | 9.00E 04 | 6.30E 05 | |
| 18 C 020 | W | 1-NAPHTHOL | T | 1.30E 05 | 2.51E 04 | 1.80E 05 | |
| 18 A 142* | P | 2,4-XYLENOL | T | 1.30E 05 | 2.51E 04 | 1.80E 05 | |
| 18 A 145 | | 3,5-XYLENOL | T | 1.30E 05 | 2.51E 04 | 1.80E 05 | |
| 18 C 040 | W | 2-NAPHTHOL | T | 1.30E 05 | 2.51E 04 | 1.80E 05 | |
| 18 A 160 | W | ETHYL CRESOLS | T | 1.30E 05 | 2.51E 04 | 1.80E 05 | |
| 18 A 144 | | 2,6-XYLENOL | T | 1.30E 05 | 2.51E 04 | 1.80E 05 | |
| 18 A 162 | | 4-ETHYL-O-CRESOL | T | 1.30E 05 | 2.51E 04 | 1.80E 05 | |
| 18 A 163 | | 2-ETHYL-P-CRESOL | T | 1.30E 05 | 2.51E 04 | 1.80E 05 | |
| 18 A 180 | W | POLYALKYLPHENOLS (MW>135) | T | 1.30E 05 | 2.51E 04 | 1.80E 05 | |
| 18 A 181 | | 2,4,6-TRIMETHYL METHYL PHENOL | T | 1.30E 05 | 2.51E 04 | 1.80E 05 | |
| 18 A 182 | | 4,6-DI-TERT-BUTYL-M-CRESOL | T | 1.30E 05 | 2.51E 04 | 1.80E 05 | |
| 18 A 183 | | 2,6-DIMETHYL-4-HEPTYL PHENOL | T | 1.30E 05 | 2.51E 04 | 1.80E 05 | |
| 18 B 020 | W | CATECHOL | T | 1.30E 05 | 2.51E 04 | 1.80E 05 | |
| 18 B 040 | W | 1,3-DIHYDROXYBENZENE | T | 1.30E 05 | 2.51E 04 | 1.80E 05 | |
| 18 B 060 | W | 1,4-DIHYDROXYBENZENE | T | 1.30E 05 | 2.51E 04 | 1.80E 05 | |
| 18 B 080 | W | 1,2,3-TRIHYDROXYBENZENE | T | 1.30E 05 | 2.51E 04 | 1.80E 05 | |
| 20 B 020* | P W | 4,6-DINITRO-O-CRESOL | T | 1.30E 05 | 2.51E 04 | 1.80E 05 | |
| 18 A 083 | | P-ETHYLPHENOL | T | 1.30E 05 | 2.51E 04 | 1.80E 05 | |
| 18 C 080 | W | INDANOLS | T | 1.30E 05 | 2.51E 04 | 1.80E 05 | |
| 18 C 081 | | 1-INDANOL | T | 1.30E 05 | 2.51E 04 | 1.80E 05 | |
| 18 C 082 | | 4-INDANOL | T | 1.30E 05 | 2.51E 04 | 1.80E 05 | |
| 18 C 083 | | 5-INDANOL | T | 1.30E 05 | 2.51E 04 | 1.80E 05 | |
| 19 A 020* | P W | 2-CHLOROPHENOL | T | 1.30E 05 | 2.51E 04 | 1.80E 05 | |
| 18 A 161 | | 6-ETHYL-M-CRESOL | T | 1.30E 05 | 2.51E 04 | 1.80E 05 | |
| 18 A 081 | | O-ETHYLPHENOL | T | 1.30E 05 | 2.51E 04 | 1.80E 05 | |
| 19 A 040* | P W | 2,4-DICHLOROPHENOL | T | 1.30E 05 | 2.51E 04 | 1.80E 05 | |
| 20 A 080 | W | 2-AMINO-4,6-DINITROPHENOL | T | 1.30E 05 | 2.51E 04 | 1.80E 05 | |
| 18 A 100 | W | PHENYLPHENOLS | T | 1.30E 05 | 2.51E 04 | 1.80E 05 | |
| 19 A 060* | P W | PENTACHLOROPHENOL | T | 1.30E 05 | 2.51E 04 | 1.80E 05 | |
| 18 A 102 | | P-PHENYLPHENOL | T | 1.30E 05 | 2.51E 04 | 1.80E 05 | |
| 18 A 103 | | M-PHENYLPHENOL | T | 1.30E 05 | 2.51E 04 | 1.80E 05 | |

GASIFIER ASH SLUICE WATER, HEALTH IMPACT

| DMEG NO. | | | COMPOUND NAME | TYPE | CONC E-6 G/L | DS | WDS G/S | LCCAT |
|---|---|---|---|---|---|---|---|---|
| 19 B 020 | | W | CHLORINATED CRESOLS | T | 1.30E 05 | 2.51E 04 | 1.80E 05 | |
| 19 B 021 | | | CHLORINATED-O-CRESOLS | T | 1.30E 05 | 2.51E 04 | 1.80E 05 | |
| 19 B 022* | P | | CHLORINATED-M-CRESOLS | T | 1.30E 05 | 2.51E 04 | 1.80E 05 | |
| 18 A 082 | | | M-ETHYLPHENOL | T | 1.30E 05 | 2.51E 04 | 1.80E 05 | |
| 18 A 146 | | | 3,4-XYLENOL | T | 1.30E 05 | 2.51E 04 | 1.80E 05 | |
| 18 A 143 | | | 2,5-XYLENOL | T | 1.30E 05 | 2.51E 04 | 1.80E 05 | |
| 20 A 020* | P | W | 2-NITROPHENOL | T | 1.30E 05 | 2.51E 04 | 1.80E 05 | |
| 18 A 042 | | | O-CRESOL | T | 1.30E 05 | 2.51E 04 | 1.80E 05 | |
| 20 B 040 | | W | DINITRO-P-CRESOLS | T | 1.30E 05 | 2.51E 04 | 1.80E 05 | |
| 20 A 040 | | W | 3-NITROPHENOL | T | 1.30E 05 | 2.51E 04 | 1.80E 05 | |
| 20 A 060* | P | W | 4-NITROPHENOL | T | 1.30E 05 | 2.51E 04 | 1.80E 05 | |
| 20 A 120 | | W | 2,4,6-TRINITROPHENOL | T | 1.30E 05 | 2.51E 04 | 1.80E 05 | |
| 18 A 141 | | | 2,3-XYLENOL | T | 1.30E 05 | 2.51E 04 | 1.80E 05 | |
| 18 A 043 | | | P-CRESOL | T | 1.30E 05 | 2.51E 04 | 1.80E 05 | |
| 20 A 100 | | W | DINITROPHENOLS | T | 1.30E 05 | 2.51E 04 | 1.80E 05 | |
| 20 A 101* | P | | 2,4-DINITROPHENOL | T | 1.30E 05 | 2.51E 04 | 1.80E 05 | |
| 18 A 041 | | | M-CRESOL | T | 1.30E 05 | 2.51E 04 | 1.80E 05 | |
| 18 A 101 | | | O-PHENYLPHENOL | T | 1.30E 05 | 2.51E 04 | 1.80E 05 | |
| 20 A 102 | | | 2,5-DINITROPHENOL | T | 1.30E 05 | 2.51E 04 | 1.80E 05 | |
| 20 A 103 | | | 2,6-DINITROPHENOL | T | 1.30E 05 | 2.51E 04 | 1.80E 05 | |
| 18 A 080 | | W | ETHYLPHENOLS | T | 1.30E 05 | 2.51E 04 | 1.80E 05 | |
| 18 A 140 | | W | XYLENOLS | T | 1.30E 05 | 2.51E 04 | 1.80E 05 | |
| 20 B 041 | | | 3,5-DINITRO-P-CRESOL | T | 1.30E 05 | 2.51E 04 | 1.80E 05 | |
| 18 A 040 | | W | CRESOLS | T | 1.30E 05 | 2.51E 04 | 1.80E 05 | |
| 18 A 120 | | W | 2,2'-DIHYDROXYDIPHENYL | T | 1.30E 05 | 2.51E 04 | 1.80E 05 | |
| 20 B 042 | | | 2,6-DINITRO-P-CRESOL | T | 1.30E 05 | 2.51E 04 | 1.80E 05 | |
| 19 B 023 | | | CHLORINATED-P-CRESOLS | T | 1.30E 05 | 2.51E 04 | 1.80E 05 | |
| 18 A 060 | | W | 2-METHOXYPHENOL | T | 1.30E 05 | 2.51E 04 | 1.80E 05 | |
| 02 A 380 | | W | HEXACHLOROCYCLOHEXANE | T | 1.30E 05 | 6.30E 03 | 4.40E 04 | |
| 21 B 080 | | | 3-METHYLCHOLANTHRENE | T | 1.30E 05 | 2.24E 03 | 1.60E 04 | |
| 04 B 020* | P | W | 1,1'-DICHLOROMETHYL ETHER | T | 1.30E 05 | 1.70E 03 | 1.20E 04 | |
| 21 D 040 | | W | DIBENZO(A,I)PYRENE | T | 1.30E 05 | 1.93E 02 | 1.40E 03 | |
| 21 B 040* | P | | BENZ(A)ANTHRACENE | T | 1.30E 05 | 1.90E 02 | 1.31E 03 | |
| 12 A 020* | P | W | N-NITROSODIMETHYLAMINE | T | 1.30E 05 | 1.30E 02 | 8.80E 02 | |

GASIFIER ASH SLUICE WATER, HEALTH IMPACT

| DMEG NO. | | | COMPOUND NAME | TYPE | CONC E-6 G/L | DS | WDS G/S | LCCAT |
|---|---|---|---|---|---|---|---|---|
| 23 C 160 | | W | DIBENZO(C,G)CARBAZOLE | T | 1.30E 05 | 8.40E 01 | 5.90E 02 | |
| 10 C 100 | | | 1,4-DIAMINOBENZENE | T | 1.30E 05 | 8.40E 01 | 5.90E 02 | |
| 02 B 140* | P | W | HEXACHLOROCYCLOPENTADIENE | T | 1.30E 05 | 7.90E 01 | 5.50E 02 | |
| 10 C 041 | | | 2-AMINOTOLUENE | T | 1.30E 05 | 7.40E 01 | 5.20E 02 | |
| 10 C 040 | | | AMINOTOLUENES | T | 1.30E 05 | 7.40E 01 | 5.20E 02 | |
| 10 C 042 | | | 3-AMINOTOLUENE | T | 1.30E 05 | 7.40E 01 | 5.20E 02 | |
| 10 C 043 | | | 4-AMINOTOLUENE | T | 1.30E 05 | 7.40E 01 | 5.20E 02 | |
| 18 A 020 | P | W | PHENOL | D | 3.60E 02 | 7.20E 01 | 5.04E 02 | |
| 12 A 040* | P | | N-NITROSODIETHYLAMINE | T | 1.30E 05 | 7.00E 01 | 4.90E 02 | |
| 10 C 220 | | | 2-AMINONAPHTHALENE | T | 1.30E 05 | 5.02E 01 | 3.51E 02 | |
| 23 B 100 | | W | DIHYDROACRIDINE | T | 1.30E 05 | 5.02E 01 | 3.51E 02 | |
| 21 B 106 | | | 7-METHYL BENZO(C)PHENANTHRENE | T | 1.30E 05 | 3.70E 01 | 2.60E 02 | |
| 21 B 103 | | | 2-METHYL BENZO(C)PHENANTHRENE | T | 1.30E 05 | 3.70E 01 | 2.60E 02 | |
| 21 B 108 | | | ISOPROPYL BENZO(C)PHENANTHRENE | T | 1.30E 05 | 3.70E 01 | 2.60E 02 | |
| 21 B 107 | | | 8-METHYL BENZO(C)PHENANTHRENE | T | 1.30E 05 | 3.70E 01 | 2.60E 02 | |
| 21 B 104 | | | 5-METHYL BENZO(C)PHENANTHRENE | T | 1.30E 05 | 3.70E 01 | 2.60E 02 | |
| 21 B 105 | | | 6-METHYL BENZO(C)PHENANTHRENE | T | 1.30E 05 | 3.70E 01 | 2.60E 02 | |
| 21 B 100 | | | BENZO(C)PHENANTHRENE & ALKYL DERIVATIVES | T | 1.30E 05 | 3.70E 01 | 2.60E 02 | |
| 21 B 10A | | | N-PROPYL BENZO(C)PHENANTHRENE | T | 1.30E 05 | 3.70E 01 | 2.60E 02 | |
| 21 B 102 | | | 1-METHYL BENZO(C)PHENANTHRENE | T | 1.30E 05 | 3.70E 01 | 2.60E 02 | |
| 21 B 101 | | | BENZO(C)PHENANTHRENE | T | 1.30E 05 | 3.70E 01 | 2.60E 02 | |
| 23 B 240 | | | DIBENZ(A,H)ACRIDINE | T | 1.30E 05 | 3.70E 01 | 2.60E 02 | |
| 21 B 109 | | | 6-ETHYL BENZO(C)PHENANTHRENE | T | 1.30E 05 | 3.70E 01 | 2.60E 02 | |
| 21 B 108 | | | 2-ETHYL BENZO(C)PHENANTHRENE | T | 1.30E 05 | 3.40E 01 | 2.40E 02 | |
| 23 B 220 | | | DIBENZ(A,J)ACRIDINE | T | 1.30E 05 | 2.61E 01 | 1.83E 02 | |
| 08 B 060 | | W | B-PROPIOLACTONE | T | 1.30E 05 | 1.70E 01 | 1.20E 02 | |
| 10 C 083 | | | P-ANISIDINE | T | 1.30E 05 | 1.70E 01 | 1.20E 02 | |
| 10 C 080 | | | ANISIDINES | T | 1.30E 05 | 1.70E 01 | 1.20E 02 | |
| 10 C 081 | | | O-ANISIDINE | T | 1.30E 05 | 1.70E 01 | 1.20E 02 | |
| 10 C 082 | | | M-ANISIDINE | T | 1.30E 05 | 1.70E 01 | 1.20E 02 | |
| 13 A 100 | | W | BENZENETHIOL | T | 1.30E 05 | 1.50E 01 | 1.03E 02 | |
| 10 C 200 | | | 1-AMINONAPHTHALENE | T | 1.30E 05 | 1.04E 01 | 7.33E 01 | |
| 14 B 020 | | W | DIMETHYL SULFOXIDE | T | 1.30E 05 | 1.04E 01 | 7.33E 01 | |
| 13 A 140 | | | PERCHLOROMETHANETHIOL | | | | | |

GASIFIER ASH SLUICE WATER, HEALTH IMPACT

| DMEG NO. | COMPOUND NAME | TYPE | CONC E-6 G/L | DS | WDS G/S | LOCAT |
|---|---|---|---|---|---|---|
| 22 C 080* P W | BENZO(B)FLUORANTHENE | T | 1.30E 05 | 9.70E 00 | 6.80E 01 | |
| 08 C 060 W | 6-HEXANELACTAM | T | 1.30E 05 | 8.40E 00 | 5.90E 01 | |
| 15 A 160 W | BIPHENYL | T | 1.30E 05 | 8.40E 00 | 5.90E 01 | |
| 10 C 140* P | BENZIDINE | T | 1.30E 05 | 8.40E 00 | 5.90E 01 | |
| 17 B 040 W | 1-CHLORO-2-NITROBENZENE | T | 1.30E 05 | 8.40E 00 | 5.90E 01 | |
| 17 B 060 W | 1-CHLORO-4-NITROBENZENE | T | 1.30E 05 | 8.40E 00 | 5.90E 01 | |
| 21 D 060 | DIBENZO(A,L)PYRENE | T | 1.30E 05 | 7.90E 00 | 5.50E 01 | |
| 08 A 122 | PALMITIC ACID | T | 1.30E 05 | 7.90E 00 | 5.50E 01 | |
| 08 A 121 | MYRISTIC ACID | T | 1.30E 05 | 7.90E 00 | 5.50E 01 | |
| 08 A 120 W | SATURATED LONG CHAIN ACIDS (MW:228-285) | T | 1.30E 05 | 7.90E 00 | 5.50E 01 | |
| 08 A 123 | STEARIC ACID | T | 1.30E 05 | 7.90E 00 | 5.50E 01 | |
| 12 B 020 W | N-METHYL-N-NITROSOANILINE | T | 1.30E 05 | 6.61E 00 | 4.63E 01 | |
| 17 A 060 W | 4-NITROBIPHENYL | T | 1.30E 05 | 6.30E 00 | 4.40E 01 | |
| 10 C 120 | 4-AMINOBIPHENYL | T | 1.30E 05 | 6.30E 00 | 4.40E 01 | |
| 02 A 180 | DIBROMODICHLOROMETHANE | T | 1.30E 05 | 6.00E 00 | 4.20E 01 | |
| 17 A 086 | 3,5-DINITROTOLUENE | T | 1.30E 05 | 5.50E 00 | 3.82E 01 | |
| 17 A 085 | 2,5-DINITROTOLUENE | T | 1.30E 05 | 5.50E 00 | 3.82E 01 | |
| 17 A 080 | DINITROTOLUENES | T | 1.30E 05 | 5.50E 00 | 3.82E 01 | |
| 17 A 081* P | 2,6-DINITROTOLUENE | T | 1.30E 05 | 5.50E 00 | 3.82E 01 | |
| 17 A 083 | 2,3-DINITROTOLUENE | T | 1.30E 05 | 5.50E 00 | 3.82E 01 | |
| 17 A 084* P | 2,4-DINITROTOLUENE | T | 1.30E 05 | 5.50E 00 | 3.82E 01 | |
| 17 A 082 | 3,4-DINITROTOLUENE | T | 1.30E 05 | 5.50E 00 | 3.82E 01 | |
| 21 A 180* P W | PHENANTHRENE | T | 1.30E 05 | 5.23E 00 | 3.70E 01 | |
| 22 D 020* P W | INDENO(1,2,3-CD)PYRENE | T | 1.30E 05 | 5.23E 00 | 3.70E 01 | |
| 22 C 020* P | BENZO(K)FLUORANTHENE | T | 1.30E 05 | 5.23E 00 | 3.70E 01 | |
| 21 B 142 | 5-METHYL CHRYSENE | T | 1.30E 05 | 4.70E 00 | 3.30E 01 | |
| 21 B 140 | METHYL CHRYSENES | T | 1.30E 05 | 4.70E 00 | 3.30E 01 | |
| 21 B 141 | 4-METHYL CHRYSENE | T | 1.30E 05 | 4.70E 00 | 3.30E 01 | |
| 04 A 050 W | EPICHLORHYDRIN | T | 1.30E 05 | 4.20E 00 | 2.93E 01 | |
| 04 A 040 W | 2-CHLORO-1,2-EPOXYPROPANE | T | 1.30E 05 | 4.20E 00 | 2.93E 01 | |
| 15 B 060 W | 4,4'-DIPHENYLBIPHENYL | T | 1.30E 05 | 4.20E 00 | 2.93E 01 | |
| 04 A 060 W | 1-CHLORO-1,3-EPOXYPROPANE | T | 1.30E 05 | 4.20E 00 | 2.93E 01 | |
| 21 B 120* P | CHRYSENE | T | 1.30E 05 | 3.80E 00 | 2.70E 01 | |
| 12 A 060* P | N-NITROSODIPROPYLAMINE | T | 1.30E 05 | 3.50E 00 | 2.44E 01 | |

GASIFIER ASH SLUICE WATER, HEALTH IMPACT

| DMEG NO. | | COMPOUND NAME | TYPE | CONC E-6 G/L | DS | WDS G/S | LCCAT |
|---|---|---|---|---|---|---|---|
| 21 C 160 | | PICENE | T | 1.30E 05 | 3.30E 00 | 2.31E 01 | |
| 23 C 020 | | PYRROLE | T | 1.30E 05 | 3.10E 00 | 2.14E 01 | |
| 09 A 120 | W | TETRAMETHYLSUCCINONITRILE | T | 1.30E 05 | 2.80E 00 | 2.00E 01 | |
| 21 C 120 | | BENZO(E)PYRENE | T | 1.30E 05 | 2.73E 00 | 1.91E 01 | |
| 08 A 140 | | OLEIC ACID | T | 1.30E 05 | 2.51E 00 | 1.80E 01 | |
| 03 B 020 | W | 1,4-DIOXANE | T | 1.30E 05 | 2.32E 00 | 1.62E 01 | |
| 03 B 040 | W | 1,3-DIOXANE | T | 1.30E 05 | 2.32E 00 | 1.62E 01 | |
| 21 D 020 | | DIBENZO(A,H)PYRENE | T | 1.30E 05 | 2.24E 00 | 1.60E 01 | |
| 47 A 060 | P | AMMONIA | D | 5.40E 03 | 2.20E 00 | 1.51E 01 | |
| 28 A 010 | | SODIUM | D | 1.70E 06 | 2.12E 00 | 1.50E 01 | |
| 02 B 120* | P | HEXACHLOROBUTADIENE | T | 1.30E 05 | 2.10E 00 | 1.44E 01 | |
| 23 D 020 | W | BENZOTHIAZOLE | T | 1.30E 05 | 2.00E 00 | 1.40E 01 | |
| 23 D 040 | | METHYL BENZOTHIAZOLE | T | 1.30E 05 | 1.80E 00 | 1.23E 01 | |
| 02 A 160* | P | BROMOFORM | T | 1.30E 05 | 1.70E 00 | 1.20E 01 | |
| 08 D 283 | | DI-N-BUTYL PHTHALATE | T | 1.30E 05 | 1.70E 00 | 1.20E 01 | |
| 17 A 020* | P | NITROBENZENE | T | 1.30E 05 | 1.70E 00 | 1.20E 01 | |
| 08 D 282 | | DIETHYL PHTHALATE | T | 1.30E 05 | 1.70E 00 | 1.20E 01 | |
| 16 B 020 | W | A-CHLOROTOLUENE | T | 1.30E 05 | 1.70E 00 | 1.20E 01 | |
| 08 D 281 | | DIMETHYL PHTHALATE | T | 1.30E 05 | 1.70E 00 | 1.20E 01 | |
| 08 D 300* | P | DI-2-ETHYLHEXYL PHTHALATE | T | 1.30E 05 | 1.70E 00 | 1.20E 01 | |
| 08 D 280* | P W | PHTHALATE ESTERS (MW:194-279) | T | 1.30E 05 | 1.44E 00 | 1.01E 01 | |
| 08 A 102 | | CAPRYLIC ACID | T | 1.30E 05 | 1.44E 00 | 1.01E 01 | |
| 08 A 100 | | SATURATED LONG CHAIN ACIDS (MW:116-201) | T | 1.30E 05 | 1.44E 00 | 1.01E 01 | |
| 08 A 104 | | LAURIC ACID | T | 1.30E 05 | 1.44E 00 | 1.01E 01 | |
| 08 A 101 | | CAPROIC ACID | T | 1.30E 05 | 1.44E 00 | 1.01E 01 | |
| 08 A 103 | | CAPRIC ACID | T | 1.30E 05 | 1.42E 00 | 1.00E 01 | |
| 23 A 100 | W | CHLOROPYRIDINES | T | 1.30E 05 | 1.42E 00 | 1.00E 01 | |
| 23 A 102 | | 3-CHLOROPYRIDINE | T | 1.30E 05 | 1.42E 00 | 1.00E 01 | |
| 23 A 101 | | 2-CHLOROPYRIDINE | T | 1.30E 05 | 1.42E 00 | 1.00E 01 | |
| 23 A 103 | | 4-CHLOROPYRIDINE | T | 1.30E 05 | 1.40E 00 | 9.80E 00 | |
| 23 C 180 | | DIBENZO(A,G)CARBAZOLE | T | 1.30E 05 | 1.40E 00 | 9.80E 00 | |
| 10 A 060 | | ETHANOLAMINE | T | 1.30E 05 | 1.30E 00 | 9.00E 00 | |
| 22 C 040 | | BENZO(J)FLUORANTHENE | T | 1.30E 05 | 1.30E 00 | 8.80E 00 | |
| 16 B 041 | | 1,2-BIS(CHLOROMETHYBENZENE | | | | | |

## GASIFIER ASH SLUICE WATER, HEALTH IMPACT

| DMEG NO. | | COMPOUND NAME | TYPE | CONC E-6 G/L | DS | WDS G/S | LCCAT |
|---|---|---|---|---|---|---|---|
| 16 B 042 | | 1,3-BIS(CHLOROMETHYL)BENZENE | T | 1.30E 05 | 1.30E 00 | 8.80E 00 | |
| 16 B 040 | | BIS(CHLOROMETHYL)BENZENES | T | 1.30E 05 | 1.30E 00 | 8.80E 00 | |
| 16 B 043 | | 1,4-BIS(CHLOROMETHYL)BENZENE | T | 1.30E 05 | 1.30E 00 | 8.80E 00 | |
| 27 A 010 | | LITHIUM | S | 4.00E 02 | 1.21E 00 | 8.50E 00 | |
| 34 A 010 | | CALCIUM (AS CA+2) | D | 2.20E 05 | 9.20E-01 | 6.41E 00 | |
| 15 B 163 | | P-TERPHENYL | T | 1.30E 05 | 9.00E-01 | 6.30E 00 | |
| 15 B 161 | | O-TERPHENYL | T | 1.30E 05 | 9.00E-01 | 6.30E 00 | |
| 15 B 160 | | TERPHENYLS | T | 1.30E 05 | 9.00E-01 | 6.30E 00 | |
| 15 B 162 | | M-TERPHENYL | T | 1.30E 05 | 9.00E-01 | 6.30E 00 | |
| 21 C 060 | | DIBENZ(A,C)ANTHRACENE | T | 1.30E 05 | 8.40E-01 | 5.90E 00 | |
| 06 A 020 | W | ETHYLENE GLYCOL | T | 1.30E 05 | 8.40E-01 | 5.90E 00 | |
| 02 A 320* | P | HEXACHLOROETHANE | T | 1.30E 05 | 8.40E-01 | 5.90E 00 | |
| 72 A 010 | | IRON (AS FE+2) | D | 1.20E 03 | 8.00E-01 | 5.60E 00 | |
| 04 B 100 | | 2,2'-DICHLORODIISOPROPYL ETHER | T | 1.30E 05 | 7.90E-01 | 5.50E 00 | |
| 23 B 200 | | BENZ(C)ACRIDINE | T | 1.30E 05 | 7.90E-01 | 5.50E 00 | |
| 23 C 040 | | INDOLE | T | 1.30E 05 | 7.40E-01 | 5.20E 00 | |
| 02 B 103 | | CIS-1,3-DICHLOROPROPENE | T | 1.30E 05 | 7.40E-01 | 5.20E 00 | |
| 02 B 100* | P | DICHLOROPROPENES | T | 1.30E 05 | 7.40E-01 | 5.20E 00 | |
| 02 B 104 | | TRANS-1,3-DICHLOROPROPENE | T | 1.30E 05 | 7.40E-01 | 5.20E 00 | |
| 04 A 140* | P | 2-CHLOROETHYL VINYL ETHER | T | 1.30E 05 | 7.40E-01 | 5.20E 00 | |
| 07 B 100 | W | CAMPHOR | T | 1.30E 05 | 7.00E-01 | 4.90E 00 | |
| 23 C 140 | | DIBENZO(A,I)CARBAZOLE | T | 1.30E 05 | 7.00E-01 | 4.90E 00 | |
| 16 A 162 | | HEXACHLOROBENZENE | T | 1.30E 05 | 7.00E-01 | 4.90E 00 | |
| 16 A 160* | P | POLYCHLORINATED BENZENES | T | 1.30E 05 | 7.00E-01 | 4.90E 00 | |
| 16 A 161 | | 1,2,4-TRICHLOROBENZENE | T | 1.30E 05 | 7.00E-01 | 4.90E 00 | |
| 08 D 080 | | METHYL METHACRYLATE | T | 1.30E 05 | 6.00E-01 | 4.20E 00 | |
| 23 A 020 | | PYRIDINE | T | 1.30E 05 | 5.50E-01 | 3.82E 00 | |
| 21 C 040 | | BENZO(G)CHRYSENE | T | 1.30E 05 | 5.23E-01 | 3.70E 00 | |
| 23 B 021 | | QUINOLINE | T | 1.30E 05 | 5.23E-01 | 3.70E 00 | |
| 23 B 022 | | ISOQUINOLINE | T | 1.30E 05 | 5.23E-01 | 3.70E 00 | |
| 23 B 020 | | QUINOLINES | T | 1.30E 05 | 5.23E-01 | 3.70E 00 | |
| 23 A 143 | | 2,5-DIMETHYLPYRIDINE | T | 1.30E 05 | 4.70E-01 | 3.30E 00 | |
| 23 A 142 | | 2,4-DIMETHYLPYRIDINE | T | 1.30E 05 | 4.70E-01 | 3.30E 00 | |
| 23 A 146 | | 2,3,4,6-TETRAMETHYL PYRIDINE | T | 1.30E 05 | 4.70E-01 | 3.30E 00 | |

GASIFIER ASH SLUICE WATER, HEALTH IMPACT

| DMEG NO. | | COMPOUND NAME | TYPE | CONC E-6 G/L | DS | WDS G/S | LCCAT |
|---|---|---|---|---|---|---|---|
| 23 A 145 | | 3,4-DIMETHYLPYRIDINE | T | 1.30E 05 | 4.70E-01 | 3.30E 00 | |
| 05 B 100 | W | 1-PHENYLETHANOL | T | 1.30E 05 | 4.70E-01 | 3.30E 00 | |
| 23 A 141 | | 2,3-DIMETHYLPYRIDINE | T | 1.30E 05 | 4.70E-01 | 3.30E 00 | |
| 23 A 140 | | DISUBSTITUTED POLYSUBSTITUTED ALKYL PYRIDINES | T | 1.30E 05 | 4.70E-01 | 3.30E 00 | |
| 23 A 144 | | 2,6-DIMETHYLPYRIDINE | T | 1.30E 05 | 4.70E-01 | 3.30E 00 | |
| 23 C 120 | | BENZO(A)CARBAZOLE | T | 1.30E 05 | 4.50E-01 | 3.14E 00 | |
| 10 C 020 | | ANILINE | T | 1.30E 05 | 4.33E-01 | 3.03E 00 | |
| 54 A 010 | P | SELENIUM | D | 2.00E 01 | 4.00E-01 | 2.80E 00 | |
| 09 A 100 | | 1,3-DICYANO-1-HYDROXYBUTANE | T | 1.30E 05 | 3.80E-01 | 2.70E 00 | |
| 09 A 080 | | BUTYRONITRILE | T | 1.30E 05 | 3.80E-01 | 2.70E 00 | |
| 25 A 040 | | METHYLTHIOPHENES | T | 1.30E 05 | 3.70E-01 | 2.60E 00 | |
| 25 A 041 | | 2-METHYLTHIOPHENE | T | 1.30E 05 | 3.70E-01 | 2.60E 00 | |
| 23 C 101 | | 3-METHYLCARBAZOLE | T | 1.30E 05 | 3.70E-01 | 2.60E 00 | |
| 23 C 100 | | METHYLCARBAZOLES | T | 1.30E 05 | 3.70E-01 | 2.60E 00 | |
| 23 C 102 | | 9-METHYLCARBAZOLE | T | 1.30E 05 | 3.70E-01 | 2.60E 00 | |
| 08 A 080 | | VALERIC ACID | T | 1.30E 05 | 3.70E-01 | 2.60E 00 | |
| 25 A 042 | | 3-METHYLTHIOPHENE | T | 1.30E 05 | 3.60E-01 | 2.51E 00 | |
| 23 B 260 | | DIBENZ(C,H)ACRIDINE | T | 1.30E 05 | 3.60E-01 | 2.51E 00 | |
| 23 C 080 | | CARBAZOLE | T | 1.30E 05 | 3.60E-01 | 2.51E 00 | |
| 25 B 040 | W | BENZO(B)THIOPHENE | T | 1.30E 05 | 3.30E-01 | 2.31E 00 | |
| 10 C 064 | | 2,6-XYLIDINE | T | 1.30E 05 | 3.30E-01 | 2.31E 00 | |
| 10 C 065 | | 3,4-XYLIDINE | T | 1.30E 05 | 3.30E-01 | 2.31E 00 | |
| 10 C 063 | | 2,5-XYLIDINE | T | 1.30E 05 | 3.30E-01 | 2.31E 00 | |
| 10 A 080 | | 1,2-DIAMINOETHANE | T | 1.30E 05 | 3.30E-01 | 2.31E 00 | |
| 10 C 061 | | 2,3-XYLIDINE | T | 1.30E 05 | 3.30E-01 | 2.31E 00 | |
| 08 A 040 | | ACETIC ACID | T | 1.30E 05 | 3.30E-01 | 2.31E 00 | |
| 10 D 020 | W | N,N-DIMETHYLANILINE | T | 1.30E 05 | 3.30E-01 | 2.31E 00 | |
| 10 C 060 | | DIMETHYLANILINES | T | 1.30E 05 | 3.30E-01 | 2.31E 00 | |
| 07 B 080* | P | ISOPHORONE | T | 1.30E 05 | 3.30E-01 | 2.31E 00 | |
| 10 C 066 | | 3,5-XYLIDINE | T | 1.30E 05 | 3.30E-01 | 2.31E 00 | |
| 10 C 062 | | 2,4-XYLIDINE | T | 1.30E 05 | 3.22E-01 | 2.30E 00 | |
| 25 A 061 | | 2,3-DIMETHYLTHIOPHENE | T | 1.30E 05 | 3.22E-01 | 2.30E 00 | |
| 25 A 064 | | 3,4-DIMETHYLTHIOPHENE | T | 1.30E 05 | 3.22E-01 | 2.30E 00 | |
| 25 A 063 | | 2,5-DIMETHYLTHIOPHENE | | | | | |

GASIFIER ASH SLUICE WATER, HEALTH IMPACT

| DMEG NO. | | COMPOUND NAME | TYPE | CONC E-6 G/L | DS | WDS G/S | LCCAT |
|---|---|---|---|---|---|---|---|
| 25 A 060 | | DIMETHYLTHIOPHENES | T | 1.30E 05 | 3.22E-01 | 2.30E 00 | |
| 25 A 062 | | 2,4-DIMETHYLTHIOPHENE | T | 1.30E 05 | 3.22E-01 | 2.30E 00 | |
| 04 A 180* | P | CHLOROPHENYL PHENYL ETHER | T | 1.30E 05 | 3.10E-01 | 2.14E 00 | |
| 04 A 200 | | 4-BROMOPHENYL PHENYL ETHER | T | 1.30E 05 | 3.10E-01 | 2.14E 00 | |
| 25 A 081 | | 2,3,5-TRIMETHYLTHIOPHENE | T | 1.30E 05 | 2.90E-01 | 2.00E 00 | |
| 25 A 080 | | TRIMETHYL AND TETRAMETHYL THIOPHENES | T | 1.30E 05 | 2.90E-01 | 2.00E 00 | |
| 01 B 220 | W | DICYCLOPENTADIENE | T | 1.30E 05 | 2.80E-01 | 2.00E 00 | |
| 17 A 041 | | 2-NITROTOLUENE | T | 1.30E 05 | 2.80E-01 | 2.00E 00 | |
| 08 C 020 | | FORMAMIDE | T | 1.30E 05 | 2.80E-01 | 2.00E 00 | |
| 04 B 080 | | 2,2'-DICHLORODIETHYL ETHER | T | 1.30E 05 | 2.80E-01 | 2.00E 00 | |
| 17 A 043 | | 4-NITROTOLUENE | T | 1.30E 05 | 2.80E-01 | 2.00E 00 | |
| 17 A 042 | | 3-NITROTOLUENE | T | 1.30E 05 | 2.80E-01 | 2.00E 00 | |
| 17 A 040 | | NITROTOLUENES | T | 1.30E 05 | 2.80E-01 | 2.00E 00 | |
| 04 B 040* | P | 1,1'-DICHLORODIETHYL ETHER | T | 1.30E 05 | 2.80E-01 | 2.00E 00 | |
| 08 A 060 | | MALEIC ACID | T | 1.30E 05 | 2.61E-01 | 1.83E 00 | |
| 09 B 041 | | A-NAPHTHONITRILES | T | 1.30E 05 | 2.60E-01 | 1.80E 00 | |
| 09 B 020 | W | BENZONITRILE | T | 1.30E 05 | 2.60E-01 | 1.80E 00 | |
| 09 B 042 | | B-NAPHTHONITRILES | T | 1.30E 05 | 2.60E-01 | 1.80E 00 | |
| 09 B 040 | W | NAPHTHONITRILES | T | 1.30E 05 | 2.60E-01 | 1.80E 00 | |
| 23 A 043 | | 4-METHYLPYRIDINE | T | 1.30E 05 | 2.40E-01 | 1.70E 00 | |
| 23 A 042 | | 3-METHYLPYRIDINE | T | 1.30E 05 | 2.40E-01 | 1.70E 00 | |
| 23 A 041 | | 2-METHYLPYRIDINE | T | 1.30E 05 | 2.40E-01 | 1.70E 00 | |
| 10 A 123 | | 1-AMINO-2-PROPANOL | T | 1.30E 05 | 2.32E-01 | 1.62E 00 | |
| 10 A 122 | | 3-AMINO-1-PROPANOL | T | 1.30E 05 | 2.32E-01 | 1.62E 00 | |
| 08 B 080 | | Y-BUTYROLACTONE | T | 1.30E 05 | 2.32E-01 | 1.62E 00 | |
| 10 A 120 | | PROPANOLAMINES | T | 1.30E 05 | 2.32E-01 | 1.62E 00 | |
| 10 A 121 | | 2-AMINO-1-PROPANOL | T | 1.30E 05 | 2.32E-01 | 1.62E 00 | |
| 26 A 020 | W | TRIETHYL PHOSPHATE | T | 1.30E 05 | 2.32E-01 | 1.62E 00 | |
| 12 A 080 | | N-NITROSODIISOPROPYLAMINE | T | 1.30E 05 | 2.20E-01 | 1.54E 00 | |
| 08 B 041 | | 2-HYDROXYBENZOIC ACID | T | 1.30E 05 | 2.10E-01 | 1.50E 00 | |
| 14 A 020 | W | BENZENESULFONIC ACID | T | 1.30E 05 | 2.10E-01 | 1.50E 00 | |
| 10 A 160 | | CYCLOHEXYLAMINE | T | 1.30E 05 | 2.10E-01 | 1.50E 00 | |
| 07 B 120 | | ACETOPHENONE | T | 1.30E 05 | 2.10E-01 | 1.44E 00 | |
| 23 C 061 | | 2-METHYLINDOLE | T | 1.30E 05 | 1.84E-01 | 1.30E 00 | |

## GASIFIER ASH SLUICE WATER, HEALTH IMPACT

| DMEG NO. | | COMPOUND NAME | TYPE | CONC E-6 G/L | DS | WDS G/S | LCCAT |
|---|---|---|---|---|---|---|---|
| 05 C 040 | W | T-PENTANOL | T | 1.30E 05 | 1.84E-01 | 1.30E 00 | |
| 22 A 010 | W | INDENE | T | 1.30E 05 | 1.84E-01 | 1.30E 00 | |
| 02 A 140* | P | DIBROMOCHLOROMETHANE | T | 1.30E 05 | 1.84E-01 | 1.30E 00 | |
| 23 C 062 | | 3-METHYLINDOLE | T | 1.30E 05 | 1.84E-01 | 1.30E 00 | |
| 23 C 060 | | METHYLINDOLES | T | 1.30E 05 | 1.84E-01 | 1.30E 00 | |
| 21 A 020* | P | NAPHTHALENE | T | 1.30E 05 | 1.70E-01 | 1.20E 00 | |
| 23 B 062 | | 2,6-DIMETHYLQUINOLINE | T | 1.30E 05 | 1.51E-01 | 1.10E 00 | |
| 23 B 061 | | 2,3-DIMETHYLQUINOLINE | T | 1.30E 05 | 1.51E-01 | 1.10E 00 | |
| 23 B 067 | | 1,5-DIMETHYLISOQUINOLINE | T | 1.30E 05 | 1.51E-01 | 1.10E 00 | |
| 23 B 065 | | 6,8-DIMETHYLQUINOLINE | T | 1.30E 05 | 1.51E-01 | 1.10E 00 | |
| 23 B 063 | | 2,8-DIMETHYLQUINOLINE | T | 1.30E 05 | 1.51E-01 | 1.10E 00 | |
| 23 B 064 | | 3,4-DIMETHYLQUINOLINE | T | 1.30E 05 | 1.51E-01 | 1.10E 00 | |
| 23 B 066 | | 1,3-DIMETHYLISOQUINOLINE | T | 1.30E 05 | 1.51E-01 | 1.10E 00 | |
| 05 A 140 | W | BENZYL ALCOHOL | T | 1.30E 05 | 1.51E-01 | 1.10E 00 | |
| 23 B 040 | | 2-METHYLQUINOLINE | T | 1.30E 05 | 1.51E-01 | 1.10E 00 | |
| 23 B 060 | | DIMETHYLQUINOLINES | T | 1.30E 05 | 1.50E-01 | 1.04E 00 | |
| 21 A 140* | P | ANTHRACENE | T | 1.30E 05 | 1.50E-01 | 1.03E 00 | |
| 02 A 361 | | 1-BROMOBUTANE | T | 1.30E 05 | 1.50E-01 | 1.03E 00 | |
| 02 A 360 | | BROMOBUTANES | T | 1.30E 05 | 1.42E-01 | 1.00E 00 | |
| 07 A 140 | | BENZALDEHYDE | D | 1.40E 00 | 1.40E-01 | 9.80E-01 | |
| 83 A 010 | P | MERCURY | T | 1.30E 05 | 1.40E-01 | 9.70E-01 | |
| 08 D 160 | | METHYL BENZOATE | D | 1.10E 04 | 1.40E-01 | 9.62E-01 | |
| 38 A 010 | | ALUMINUM | T | 1.30E 05 | 1.30E-01 | 8.80E-01 | |
| 23 A 083 | | 4-PHENYLPYRIDINE | T | 1.30E 05 | 1.30E-01 | 8.80E-01 | |
| 23 A 122 | | 2,4,6-COLLIDINE | T | 1.30E 05 | 1.30E-01 | 8.80E-01 | |
| 23 A 082 | | 3-PHENYLPYRIDINE | T | 1.30E 05 | 1.30E-01 | 8.80E-01 | |
| 23 A 064 | | 4-N-PROPYLPYRIDINE | T | 1.30E 05 | 1.30E-01 | 8.80E-01 | |
| 23 A 120 | | COLLIDINES | T | 1.30E 05 | 1.30E-01 | 8.80E-01 | |
| 23 A 061 | | 2-ETHYLPYRIDINE | T | 1.30E 05 | 1.30E-01 | 8.80E-01 | |
| 23 A 121 | | 5-ETHYL-2-METHYLPYRIDINE | T | 1.30E 05 | 1.30E-01 | 8.80E-01 | |
| 23 A 063 | | 4-ETHYLPYRIDINE | T | 1.30E 05 | 1.30E-01 | 8.80E-01 | |
| 23 A 060 | | MONOSUBSTITUTED ALKYL PYRIDINES | T | 1.30E 05 | 1.30E-01 | 8.80E-01 | |
| 10 B 100 | | MORPHOLINE | T | 1.30E 05 | 1.30E-01 | 8.80E-01 | |
| 16 A 201 | | 1-CHLORONAPHTHALENE | T | 1.30E 05 | 1.30E-01 | 8.80E-01 | |

GASIFIER ASH SLUICE WATER, HEALTH IMPACT

| DMEG NO. | | COMPOUND NAME | TYPE | CONC E-6 G/L | DS | WDS G/S | LOCAT |
|---|---|---|---|---|---|---|---|
| 23 A 081 | | 2-PHENYLPYRIDINE | T | 1.30E 05 | 1.30E-01 | 8.80E-01 | |
| 23 A 062 | | 3-ETHYLPYRIDINE | T | 1.30E 05 | 1.30E-01 | 8.80E-01 | |
| 16 A 202 | | 2-CHLORONAPHTHALENE | T | 1.30E 05 | 1.30E-01 | 8.80E-01 | |
| 16 A 200* | P | CHLORONAPHTHALENES | T | 1.30E 05 | 1.30E-01 | 8.80E-01 | |
| 23 A 080 | | PHENYLPYRIDINES | T | 1.30E 05 | 1.30E-01 | 8.80E-01 | |
| 33 A 010 | | MAGNESIUM | D | 1.10E 04 | 1.22E-01 | 8.60E-01 | |
| 08 D 200 | | DIETHYL ADIPATE | T | 1.30E 05 | 1.14E-01 | 8.00E-01 | |
| 07 B 182 | | DIHYDRO-(D OR L)CARVONE | T | 1.30E 05 | 1.14E-01 | 8.00E-01 | |
| 07 B 181 | | CARVONE(D OR L) | T | 1.30E 05 | 1.14E-01 | 8.00E-01 | |
| 07 B 180 | | CARVONES | T | 1.30E 05 | 1.14E-01 | 8.00E-01 | |
| 05 A 160 | | PHENETHYL ALCOHOL | T | 1.30E 05 | 1.04E-01 | 7.33E-01 | |
| 12 A 100 | | N-NITROSODIPENTYLAMINE | T | 1.30E 05 | 1.04E-01 | 7.33E-01 | |
| 37 A 010 | | BORON | D | 4.60E 03 | 9.80E-02 | 6.90E-01 | |
| 13 B 060 | | DIPHENYL SULFIDE | T | 1.30E 05 | 9.00E-02 | 6.30E-01 | |
| 13 B 080 | | METHYL DISULFIDE | T | 1.30E 05 | 9.00E-02 | 6.30E-01 | |
| 05 B 120 | | BORNEOL | T | 1.30E 05 | 9.00E-02 | 6.30E-01 | |
| 23 B 080 | | ACRIDINE | T | 1.30E 05 | 9.00E-02 | 6.30E-01 | |
| 23 B 160 | | BENZO(H)QUINOLINE | T | 1.30E 05 | 9.00E-02 | 6.30E-01 | |
| 23 B 140 | | BENZO(F)QUINOLINE | T | 1.30E 05 | 9.00E-02 | 6.30E-01 | |
| 23 B 120 | | PHENANTHRIDINE | T | 1.30E 05 | 9.00E-02 | 6.30E-01 | |
| 22 B 040* | P W | FLUORANTHENE | T | 1.30E 05 | 9.00E-02 | 6.30E-01 | |
| 35 A 010 | | STRONTIUM | D | 4.00E 03 | 8.70E-02 | 6.10E-01 | |
| 76 A 010 | P | NICKEL | S | 2.00E 01 | 8.70E-02 | 6.10E-01 | |
| 15 A 141 | | N-BUTYL BENZENE | T | 1.30E 05 | 8.40E-02 | 5.90E-01 | |
| 15 A 143 | | TERT-BUTYL BENZENE | T | 1.30E 05 | 8.40E-02 | 5.90E-01 | |
| 15 A 142 | | SEC-BUTYL BENZENE | T | 1.30E 05 | 8.40E-02 | 5.90E-01 | |
| 15 A 140 | | BUTYL BENZENES | T | 1.30E 05 | 8.40E-02 | 5.90E-01 | |
| 15 B 203 | | 1,2,4,5-TETRAMETHYLBENZENE | T | 1.30E 05 | 7.00E-02 | 4.90E-01 | |
| 15 B 202 | | 1,2,3,5-TETRAMETHYLBENZENE | T | 1.30E 05 | 7.00E-02 | 4.90E-01 | |
| 15 B 200 | | TETRAMETHYLBENZENES | T | 1.30E 05 | 7.00E-02 | 4.90E-01 | |
| 15 B 180 | | TRIMETHYLBENZENES | T | 1.30E 05 | 7.00E-02 | 4.90E-01 | |
| 15 B 183 | | 1,3,5-TRIMETHYLBENZENE | T | 1.30E 05 | 7.00E-02 | 4.90E-01 | |
| 15 B 182 | | 1,2,4-TRIMETHYLBENZENE | T | 1.30E 05 | 7.00E-02 | 4.90E-01 | |
| 15 B 201 | | 1,2,3,4-TETRAMETHYLBENZENE | T | 1.30E 05 | 7.00E-02 | 4.90E-01 | |

GASIFIER ASH SLUICE WATER, HEALTH IMPACT

| DMEG NO. | | COMPOUND NAME | TYPE | CONC E-6 G/L | DS | WDS G/S | LCCAT |
|---|---|---|---|---|---|---|---|
| 15 B 181 | | 1,2,3-TRIMETHYLBENZENE | T | 1.30E 05 | 7.00E-02 | 4.90E-01 | |
| 15 B 141 | | 1,2-DIHYDRONAPHTHALENE | T | 1.30E 05 | 6.61E-02 | 4.63E-01 | |
| 15 B 142 | | 1,4-DIHYDRONAPHTHALENE | T | 1.30E 05 | 6.61E-02 | 4.63E-01 | |
| 15 B 140 | | DIHYDRONAPHTHALENES | T | 1.30E 05 | 6.61E-02 | 4.63E-01 | |
| 03 B 060 | | 2-ETHYL-4-METHYL-1,3-DIOXOLANE | T | 1.30E 05 | 6.61E-02 | 4.63E-01 | |
| 15 B 120 | | TETRAHYDRONAPHTHALENE | T | 1.30E 05 | 6.30E-02 | 4.40E-01 | |
| 26 B 040 | W | TRITOTYL PHOSPHATES | T | 1.30E 05 | 6.30E-02 | 4.40E-01 | |
| 57 A 010 | | CHLORINE (AS CL-) | D | 7.80E 04 | 6.00E-02 | 4.20E-01 | |
| 08 D 320* | P | BUTYL BENZYL PHTHALATE | T | 1.30E 05 | 6.00E-02 | 4.20E-01 | |
| 08 A 160 | | BENZOIC ACID | T | 1.30E 05 | 6.00E-02 | 4.20E-01 | |
| 14 A 043 | | 9,10-ANTHRAQUINONE-1,7-DISULFONIC ACID | T | 1.30E 05 | 5.71E-02 | 4.00E-01 | |
| 14 A 044 | | 9,10-ANTHRAQUINONE-1,8-DISULFONIC ACID | T | 1.30E 05 | 5.71E-02 | 4.00E-01 | |
| 14 A 041 | | 9,10-ANTHRAQUINONE-1,5-DISULFONIC ACID | T | 1.30E 05 | 5.71E-02 | 4.00E-01 | |
| 05 A 100 | | ISOBUTYL ALCOHOL | T | 1.30E 05 | 5.50E-02 | 3.82E-01 | |
| 06 B 020 | W | 2,3-EPOXY-1-PROPANOL | T | 1.30E 05 | 5.50E-02 | 3.82E-01 | |
| 05 A 080 | | N-BUTANOL | T | 1.30E 05 | 5.50E-02 | 3.82E-01 | |
| 08 A 180 | | ADIPIC ACID | T | 1.30E 05 | 5.23E-02 | 3.70E-01 | |
| 03 A 040 | W | 3-METHOXYBIPHENYL | T | 1.30E 05 | 5.23E-02 | 3.70E-01 | |
| 05 B 080 | | 2,6-DIMETHYL-4-HEPTANOL | T | 1.30E 05 | 5.23E-02 | 3.70E-01 | |
| 05 C 060 | | A-TERPINEOL | T | 1.30E 05 | 4.33E-02 | 3.03E-01 | |
| 47 A 080 | P | HYDROGEN CYANIDE | D | < 2.00E 01 | < 4.00E-02 | < 2.80E-01 | |
| 82 A 010 | P | CADMIUM | S | < 2.00E 00 | < 4.00E-02 | < 2.80E-01 | |
| 17 B 023 | | 1-METHOXY-4-NITROBENZENE | T | 1.30E 05 | 3.92E-02 | 2.74E-01 | |
| 17 B 022 | | 1-METHOXY-3-NITROBENZENE | T | 1.30E 05 | 3.92E-02 | 2.74E-01 | |
| 17 B 020 | | METHOXYNITROBENZENES | T | 1.30E 05 | 3.92E-02 | 2.74E-01 | |
| 17 B 021 | | 1-METHOXY-2-NITROBENZENE | T | 1.30E 05 | 3.92E-02 | 2.74E-01 | |
| 21 A 080 | | DIMETHYLNAPHTHALENES | T | 1.30E 05 | 3.70E-02 | 2.60E-01 | |
| 21 A 044 | | 2-ETHYLNAPHTHALENE | T | 1.30E 05 | 3.70E-02 | 2.60E-01 | |
| 21 A 042 | | 2-METHYLNAPHTHALENE | T | 1.30E 05 | 3.70E-02 | 2.60E-01 | |
| 15 B 020 | | INDAN | T | 1.30E 05 | 3.70E-02 | 2.60E-01 | |
| 21 A 043 | | 1-ETHYLNAPHTHALENE | T | 1.30E 05 | 3.70E-02 | 2.60E-01 | |
| 21 A 041 | | 1-METHYLNAPHTHALENE | T | 1.30E 05 | 3.70E-02 | 2.60E-01 | |
| 21 A 083 | | 2,6-DIMETHYLNAPHTHALENE | T | 1.30E 05 | 3.70E-02 | 2.60E-01 | |
| 21 A 082 | | 2,3-DIMETHYLNAPHTHALENE | T | 1.30E 05 | 3.70E-02 | 2.60E-01 | |

GASIFIER ASH SLUICE WATER, HEALTH IMPACT

| DMEG NO. | | COMPOUND NAME | TYPE | CONC E-6 G/L | DS | WDS G/S | LCCAT |
|---|---|---|---|---|---|---|---|
| 21 A 040 | | MONOALKYL NAPHTHALENES | T | 1.30E 05 | 3.70E-02 | 2.60E-01 | |
| 21 A 081 | | 1,4-DIMETHYLNAPHTHALENE | T | 1.30E 05 | 3.70E-02 | 2.60E-01 | |
| 21 B 180* | P | PYRENE | T | 1.30E 05 | 3.60E-02 | 2.51E-01 | |
| 15 A 120 | | ISOPROPYL BENZENE | T | 1.30E 05 | 3.40E-02 | 2.34E-01 | |
| 15 A 100 | | PROPYL BENZENE | T | 1.30E 05 | 3.40E-02 | 2.34E-01 | |
| 08 D 240 | | DI-2-ETHYLBUTYL ADIPATE | T | 1.30E 05 | 3.30E-02 | 2.31E-01 | |
| 16 A 180 | | 2-CHLOROTOLUENE | T | 1.30E 05 | 3.30E-02 | 2.31E-01 | |
| 46 A 010 | P | LEAD | S | 8.00E 00 | 3.20E-02 | 2.24E-01 | |
| 65 A 010 | | VANADIUM | D | 7.70E 01 | 3.10E-02 | 2.20E-01 | |
| 26 B 020 | | TRIPHENYL PHOSPHATE | T | 1.30E 05 | 2.92E-02 | 2.04E-01 | |
| 68 A 010 | P | CHROMIUM | D | 7.00E 00 | 2.80E-02 | 2.00E-01 | |
| 16 A 120* | P | 1,3-DICHLOROBENZENE | T | 1.30E 05 | 2.80E-02 | 2.00E-01 | |
| 16 A 100* | P | 1,2-DICHLOROBENZENE | T | 1.30E 05 | 2.80E-02 | 2.00E-01 | |
| 48 A 010 | | PHOSPHORUS | S | 4.00E 02 | 2.70E-02 | 1.90E-01 | |
| 36 A 010 | | BARIUM | D | 1.30E 02 | 2.60E-02 | 1.81E-01 | |
| 01 A 201 | | N-OCTANE | T | 1.30E 05 | 2.40E-02 | 1.70E-01 | |
| 02 A 343 | | 1,3-DICHLOROPROPANE | T | 1.30E 05 | 2.40E-02 | 1.70E-01 | |
| 02 A 340* | P | DICHLOROPROPANES | T | 1.30E 05 | 2.40E-02 | 1.70E-01 | |
| 01 A 200 | W | OCTANES | T | 1.30E 05 | 2.40E-02 | 1.70E-01 | |
| 16 A 020* | P | CHLOROBENZENE | T | 1.30E 05 | 2.40E-02 | 1.70E-01 | |
| 05 A 123 | | 2,2-DIMETHYL-1-PROPANOL | T | 1.30E 05 | 2.32E-02 | 1.62E-01 | |
| 05 A 120 | | PENTANOLS (PRIMARY) | T | 1.30E 05 | 2.32E-02 | 1.62E-01 | |
| 05 A 124 | | 3-METHYL-1-BUTANOL | T | 1.30E 05 | 2.32E-02 | 1.62E-01 | |
| 05 A 122 | | 2-METHYL-1-BUTANOL | T | 1.30E 05 | 2.32E-02 | 1.62E-01 | |
| 05 B 063 | | 3-METHYL-2-BUTANOL | T | 1.30E 05 | 2.32E-02 | 1.62E-01 | |
| 05 B 060 | | PENTANOLS (SECONDARY) | T | 1.30E 05 | 2.32E-02 | 1.62E-01 | |
| 05 A 121 | | N-PENTANOL | T | 1.30E 05 | 2.32E-02 | 1.62E-01 | |
| 05 B 062 | | 3-PENTANOL | T | 1.30E 05 | 2.32E-02 | 1.62E-01 | |
| 05 B 061 | | 2-PENTANOL | T | 1.30E 05 | 2.32E-02 | 1.62E-01 | |
| 56 A 010 | | FLUORINE (AS F-) | D | 8.70E 02 | 2.30E-02 | 1.60E-01 | |
| 15 A 040* | P | TOLUENE | T | 1.30E 05 | 2.24E-02 | 1.60E-01 | |
| 16 A 080 | | BROMOCHLOROBENZENES | T | 1.30E 05 | 2.13E-02 | 1.50E-01 | |
| 16 A 082 | | 1-BROMO-3-CHLOROBENZENE | T | 1.30E 05 | 2.13E-02 | 1.50E-01 | |
| 16 A 083 | | 1-BROMO-4-CHLOROBENZENE | T | 1.30E 05 | 2.13E-02 | 1.50E-01 | |

GASIFIER ASH SLUICE WATER, HEALTH IMPACT

| DMEG NO. | | COMPOUND NAME | TYPE | CONC E-6 G/L | DS | WDS G/S | LOCAT |
|---|---|---|---|---|---|---|---|
| 16 A 081 | | 1-BROMO-2-CHLOROBENZENE | T | 1.30E 05 | 2.13E-02 | 1.50E-01 | |
| 08 D 260 | | DI-2-ETHYLHEXYL ADIPATE | T | 1.30E 05 | 2.02E-02 | 1.41E-01 | |
| 15 A 080 | | STYRENE | T | 1.30E 05 | 2.00E-02 | 1.40E-01 | |
| 15 B 102 | | M-DIETHYL BENZENE | T | 1.30E 05 | 1.93E-02 | 1.40E-01 | |
| 15 B 082 | | M-XYLENE | T | 1.30E 05 | 1.93E-02 | 1.40E-01 | |
| 15 B 104 | | O-DIISOPROPYL BENZENE | T | 1.30E 05 | 1.93E-02 | 1.40E-01 | |
| 15 B 101 | | O-DIETHYL BENZENE | T | 1.30E 05 | 1.93E-02 | 1.40E-01 | |
| 15 B 100 | | DIALKYL BENZENES (MW:134-191) | T | 1.30E 05 | 1.93E-02 | 1.40E-01 | |
| 15 A 060* | P | ETHYL BENZENE | T | 1.30E 05 | 1.93E-02 | 1.40E-01 | |
| 15 B 103 | | P-DIETHYL BENZENE | T | 1.30E 05 | 1.93E-02 | 1.40E-01 | |
| 15 B 083 | | P-XYLENE | T | 1.30E 05 | 1.93E-02 | 1.40E-01 | |
| 15 B 106 | | 1,4-DI-TERT-BUTYL BENZENE | T | 1.30E 05 | 1.93E-02 | 1.40E-01 | |
| 15 B 081 | | O-XYLENE | T | 1.30E 05 | 1.93E-02 | 1.40E-01 | |
| 15 B 105 | | M-DIISOPROPYL BENZENE | T | 1.30E 05 | 1.93E-02 | 1.40E-01 | |
| 15 B 080 | | XYLENES | T | 1.30E 05 | 1.84E-02 | 1.30E-01 | |
| 16 A 140* | P | 1,4-DICHLOROBENZENE | T | 1.30E 05 | 1.74E-02 | 1.22E-01 | |
| 16 A 061 | | 1,2-DIBROMOBENZENE | T | 1.30E 05 | 1.74E-02 | 1.22E-01 | |
| 16 A 063 | | 1,4-DIBROMOBENZENE | T | 1.30E 05 | 1.74E-02 | 1.22E-01 | |
| 16 A 062 | | 1,3-DIBROMOBENZENE | T | 1.30E 05 | 1.74E-02 | 1.22E-01 | |
| 16 A 060 | | DIBROMOBENZENES | T | 1.30E 05 | 1.72E-02 | 1.20E-01 | |
| 16 A 040 | | BROMOBENZENE | T | 1.30E 05 | 1.60E-02 | 1.11E-01 | |
| 08 D 142 | | SEC-AMYL ACETATE | T | 1.30E 05 | 1.60E-02 | 1.11E-01 | |
| 08 D 143 | | ISOAMYL ACETATE | T | 1.30E 05 | 1.60E-02 | 1.11E-01 | |
| 08 D 141 | | N-AMYL ACETATE | T | 1.30E 05 | 1.60E-02 | 1.11E-01 | |
| 08 D 140 | | AMYL ACETATES | T | 1.30E 05 | 1.44E-02 | 1.01E-01 | |
| 08 D 220 | | DIBUTYL ADIPATE | D | 3.30E 00 | 1.32E-02 | 9.23E-02 | |
| 49 A 010 | P | ARSENIC | T | 1.30E 05 | 1.30E-02 | 8.80E-02 | |
| 02 B 080* | P | TETRACHLOROETHENE | T | 1.30E 05 | 1.14E-02 | 8.00E-02 | |
| 08 D 122 | | SEC-BUTYL ACETATE | T | 1.30E 05 | 1.14E-02 | 8.00E-02 | |
| 08 D 123 | | ISOBUTYL ACETATE | T | 1.30E 05 | 1.14E-02 | 8.00E-02 | |
| 08 D 120 | | BUTYL ACETATES | T | 1.30E 05 | 1.14E-02 | 8.00E-02 | |
| 08 D 121 | | N-BUTYL ACETATE | D | 2.00E 00 | 8.00E-03 | 5.60E-02 | |
| 71 A 010 | P | MANGANESE | D | 3.10E 02 | 4.13E-03 | 2.90E-02 | |
| 69 A 010 | | MOLYBDENUM | | | | | |

GASIFIER ASH SLUICE WATER, HEALTH IMPACT

| DMEG NO. | | COMPOUND NAME | TYPE | CONC E-6 G/L | DS | WDS G/S | LOCAT |
|---|---|---|---|---|---|---|---|
| 79 A 010 | P | SILVER | S | 1.00E 00 | 4.00E-03 | 2.80E-02 | |
| 78 A 010 | P | COPPER | D | 1.70E 01 | 3.40E-03 | 2.40E-02 | |
| 74 A 010 | | COBALT | S | < 2.00E 00< | 2.70E-03< | 1.90E-02 | |
| 43 A 010 | | SILICON | S | 3.00E 02 | 2.00E-03 | 1.40E-02 | |
| 81 A 010 | P | ZINC | D | 4.40E 01 | 1.80E-03 | 1.23E-02 | |
| 70 A 010 | | TUNGSTEN | S | 2.00E 01 | 1.33E-03 | 9.33E-03 | |
| 62 A 010 | | TITANIUM | D | 4.40E 01 | 4.90E-04 | 3.42E-03 | |
| 50 A 010 | P | ANTIMONY | D | 2.00E 00 | 2.70E-04 | 1.90E-03 | |
| 39 A 010 | | GALLIUM | S | 8.00E 00 | 1.10E-04 | 7.60E-04 | |
| 63 A 010 | | ZIRCONIUM (AS ZR+4) | S | 2.00E 00 | 2.70E-05 | 1.90E-04 | |
| 30 A 010 | | RUBIDIUM (AS RB+) | S | 4.00E 01 | 2.22E-05 | 1.60E-04 | |
| 66 A 010 | | NIOBIUM (AS NB+3) | S | 2.00E 00 | 6.10E-06 | 4.24E-05 | |
| 84 B 010 | | CERIUM | S | 2.00E 00 | 3.63E-06 | 2.54E-05 | |
| 84 C 010 | | PRASEODYMIUM | S | 1.00E 00 | 1.30E-06 | 9.10E-06 | |
| 84 A 010 | | LANTHANUM | S | < 1.00E 00< | 5.90E-07< | 4.11E-06 | |
| 16 A 120* | P | 1,3-DICHLOROBENZENE | T | 0.00E-01 | 0.00E-01 | 0.00E-01 | 3 |
| 07 B 080* | P | ISOPHORONE | T | 0.00E-01 | 0.00E-01 | 0.00E-01 | 5 |
| 02 A 160* | P | BROMOFORM | T | 0.00E-01 | 0.00E-01 | 0.00E-01 | 1 |
| 53 A 010 | | SULFUR | D | 9.70E 05 | 0.00E-01 | 0.00E-01 | |
| 21 A 120* | PH | ACENAPHTHYLENE | T | 0.00E-01 | 0.00E-01 | 0.00E-01 | 3 |
| 16 A 100* | P | 1,2-DICHLOROBENZENE | T | 0.00E-01 | 0.00E-01 | 0.00E-01 | 3 |
| 04 B 020* | P W | 1,1'-DICHLOROMETHYL ETHER | T | 0.00E-01 | 0.00E-01 | 0.00E-01 | 5 |
| 45 A 010 | | TIN | D | 3.00E 03 | 0.00E-01 | 0.00E-01 | |
| 08 D 280* | P W | PHTHALATE ESTERS (MW:194-279) | T | 0.00E-01 | 0.00E-01 | 0.00E-01 | 6 |
| 19 A 040* | P W | 2,4-DICHLOROPHENOL | T | 0.00E-01 | 0.00E-01 | 0.00E-01 | 5 |
| 53 A 040 | | SULFITE, SO3 -2 | D | 4.70E 04 | 0.00E-01 | 0.00E-01 | |
| 47 A 030 | | NITRITE, NO2- | D | < 1.00E 01< | 0.00E-01< | 0.00E-01 | |
| 16 A 200* | P | CHLORONAPHTHALENES | T | 0.00E-01 | 0.00E-01 | 0.00E-01 | 2 |
| 17 A 020* | P | NITROBENZENE | T | 0.00E-01 | 0.00E-01 | 0.00E-01 | 4 |
| 08 D 300* | P | DI-2-ETHYLHEXYL PHTHALATE | T | 0.00E-01 | 0.00E-01 | 0.00E-01 | 6 |
| 02 B 140* | P W | HEXACHLOROCYCLOPENTADIENE | T | 0.00E-01 | 0.00E-01 | 0.00E-01 | 1 |
| 08 D 280* | P W | PHTHALATE ESTERS (MW:194-279) | T | 0.00E-01 | 0.00E-01 | 0.00E-01 | 5 |
| 02 B 100* | P | DICHLOROPROPENES | T | 0.00E-01 | 0.00E-01 | 0.00E-01 | 2 |
| 21 A 100* | PH | ACENAPHTHENE | T | 0.00E-01 | 0.00E-01 | 0.00E-01 | 2 |

GASIFIER ASH SLUICE WATER, HEALTH IMPACT

| DMEG NO. | COMPOUND NAME | TYPE | CONC E-6 G/L | DS | WDS G/S | LCCAT |
|---|---|---|---|---|---|---|
| 21 A 100* PH | ACENAPHTHENE | T | 0.00E-01 | 0.00E-01 | 0.00E-01 | 3 |
| 47 A 020 | NITRATE, NO3- | D | 3.00E 03 | 0.00E-01 | 0.00E-01 | |
| 02 B 120* P | HEXACHLOROBUTADIENE | T | 0.00E-01 | 0.00E-01 | 0.00E-01 | 1 |
| 21 C 080* P | DIBENZ(A,H)ANTHRACENE | T | 0.00E-01 | 0.00E-01 | 0.00E-01 | 3 |
| 16 A 100* P | 1,2-DICHLOROBENZENE | T | 0.00E-01 | 0.00E-01 | 0.00E-01 | 2 |
| 19 A 020* P W | 2-CHLOROPHENOL | T | 0.00E-01 | 0.00E-01 | 0.00E-01 | 5 |
| 21 A 140* P | ANTHRACENE | T | 0.00E-01 | 0.00E-01 | 0.00E-01 | 3 |
| 16 A 120* P | 1,3-DICHLOROBENZENE | T | 0.00E-01 | 0.00E-01 | 0.00E-01 | 2 |
| 21 A 180* P W | PHENANTHRENE | T | 0.00E-01 | 0.00E-01 | 0.00E-01 | 2 |
| 21 A 180* P W | PHENANTHRENE | T | 0.00E-01 | 0.00E-01 | 0.00E-01 | 3 |
| 29 A 010 | POTASSIUM | S | > 1.00E 04> | 0.00E-01> | 0.00E-01 | |
| 04 B 040* P | 1,1'-DICHLORODIETHYL ETHER | T | 0.00E-01 | 0.00E-01 | 0.00E-01 | 5 |
| 16 A 140* P | 1,4-DICHLOROBENZENE | T | 0.00E-01 | 0.00E-01 | 0.00E-01 | 3 |
| 21 D 080* PH | BENZO(GHI)PERYLENE | T | 0.00E-01 | 0.00E-01 | 0.00E-01 | 2 |
| 21 A 140* P | ANTHRACENE | T | 0.00E-01 | 0.00E-01 | 0.00E-01 | 2 |
| 08 D 320* P | BUTYL BENZYL PHTHALATE | T | 0.00E-01 | 0.00E-01 | 0.00E-01 | 5 |
| 02 A 140* P | DIBROMOCHLOROMETHANE | T | 0.00E-01 | 0.00E-01 | 0.00E-01 | 2 |
| 53 A 030 | SULFATE, SO4 -2 | D | 2.90E 06 | 0.00E-01 | 0.00E-01 | |
| 22 A 020* PH | FLUORENE | T | 0.00E-01 | 0.00E-01 | 0.00E-01 | 3 |
| 02 A 160* P | BROMOFORM | T | 0.00E-01 | 0.00E-01 | 0.00E-01 | 2 |
| 22 B 040* P W | FLUORANTHENE | T | 0.00E-01 | 0.00E-01 | 0.00E-01 | 2 |
| 48 A 020 | PHOSPHATE, PO4 -3 | D | < 1.00E 02< | 0.00E-01< | 0.00E-01 | |
| 17 A 081* P | 2,6-DINITROTOLUENE | T | 0.00E-01 | 0.00E-01 | 0.00E-01 | 4 |
| 04 A 180* P | CHLOROPHENYL PHENYL ETHER | T | 0.00E-01 | 0.00E-01 | 0.00E-01 | 5 |
| 22 C 020* P | BENZO(K)FLUORANTHENE | T | 0.00E-01 | 0.00E-01 | 0.00E-01 | 3 |
| 02 A 340* P | DICHLOROPROPANES | T | 0.00E-01 | 0.00E-01 | 0.00E-01 | 1 |
| 04 B 020* P W | 1,1'-DICHLOROMETHYL ETHER | T | 0.00E-01 | 0.00E-01 | 0.00E-01 | 4 |
| 21 B 120* P | CHRYSENE | T | 0.00E-01 | 0.00E-01 | 0.00E-01 | 2 |
| 21 B 120* P | CHRYSENE | T | 0.00E-01 | 0.00E-01 | 0.00E-01 | 3 |
| 58 A 010 | BROMINE | S | 2.00E 01 | 0.00E-01 | 0.00E-01 | |
| 08 D 300* P | DI-2-ETHYLHEXYL PHTHALATE | T | 0.00E-01 | 0.00E-01 | 0.00E-01 | 5 |
| 22 D 020* P W | INDENO(1,2,3-CD)PYRENE | T | 0.00E-01 | 0.00E-01 | 0.00E-01 | 3 |
| 17 A 081* P | 2,6-DINITROTOLUENE | T | 0.00E-01 | 0.00E-01 | 0.00E-01 | 5 |
| 02 B 080* P | TETRACHLOROETHENE | T | 0.00E-01 | 0.00E-01 | 0.00E-01 | 2 |

GASIFIER ASH SLUICE WATER, HEALTH IMPACT

| DMEG NO. | COMPOUND NAME | TYPE | CONC E-6 G/L | DS | WDS G/S | LOCAT |
|---|---|---|---|---|---|---|
| 08 D 320* P | BUTYL BENZYL PHTHALATE | T | 0.00E-01 | 0.00E-01 | 0.00E-01 | 6 |
| 02 B 100* P | DICHLOROPROPENES | T | 0.00E-01 | 0.00E-01 | 0.00E-01 | 1 |
| 18 A 142* P | 2,4-XYLENOL | T | 0.00E-01 | 0.00E-01 | 0.00E-01 | 5 |
| 18 A 142* P | 2,4-XYLENOL | T | 0.00E-01 | 0.00E-01 | 0.00E-01 | 6 |
| 21 A 120* PH | ACENAPHTHYLENE | T | 0.00E-01 | 0.00E-01 | 0.00E-01 | 2 |
| 12 A 020* P W | N-NITROSODIMETHYLAMINE | T | 0.00E-01 | 0.00E-01 | 0.00E-01 | 5 |
| 12 A 020* P W | N-NITROSODIMETHYLAMINE | T | 0.00E-01 | 0.00E-01 | 0.00E-01 | 6 |
| 02 A 320* P | HEXACHLOROETHANE | T | 0.00E-01 | 0.00E-01 | 0.00E-01 | 2 |
| 12 A 040* P | N-NITROSODIETHYLAMINE | T | 0.00E-01 | 0.00E-01 | 0.00E-01 | 5 |
| 12 A 040* P | N-NITROSODIETHYLAMINE | T | 0.00E-01 | 0.00E-01 | 0.00E-01 | 6 |
| 02 B 140* P W | HEXACHLOROCYCLOPENTADIENE | T | 0.00E-01 | 0.00E-01 | 0.00E-01 | 2 |
| 12 A 060* P | N-NITROSODIPROPYLAMINE | T | 0.00E-01 | 0.00E-01 | 0.00E-01 | 5 |
| 12 A 060* P | N-NITROSODIPROPYLAMINE | T | 0.00E-01 | 0.00E-01 | 0.00E-01 | 6 |
| 16 A 140* P | 1,4-DICHLOROBENZENE | T | 0.00E-01 | 0.00E-01 | 0.00E-01 | 2 |
| 21 D 080* PH | BENZO(GHI)PERYLENE | T | 1.30E 05 | 0.00E-01 | 0.00E-01 | |
| 21 B 040* P | BENZ(A)ANTHRACENE | T | 0.00E-01 | 0.00E-01 | 0.00E-01 | 3 |
| 02 B 120* P | HEXACHLOROBUTADIENE | T | 0.00E-01 | 0.00E-01 | 0.00E-01 | 2 |
| 16 A 160* P | POLYCHLORINATED BENZENES | T | 0.00E-01 | 0.00E-01 | 0.00E-01 | 2 |
| 16 A 160* P | POLYCHLORINATED BENZENES | T | 0.00E-01 | 0.00E-01 | 0.00E-01 | 3 |
| 04 A 140* P | 2-CHLOROETHYL VINYL ETHER | T | 0.00E-01 | 0.00E-01 | 0.00E-01 | 4 |
| 04 A 140* P | 2-CHLOROETHYL VINYL ETHER | T | 0.00E-01 | 0.00E-01 | 0.00E-01 | 5 |
| 04 A 160* P | A-CHLOROBUTYL ETHYL ETHER | T | 1.30E 05 | 0.00E-01 | 0.00E-01 | |
| 04 A 160* P | A-CHLOROBUTYL ETHYL ETHER | T | 0.00E-01 | 0.00E-01 | 0.00E-01 | 4 |
| 04 A 160* P | A-CHLOROBUTYL ETHYL ETHER | T | 0.00E-01 | 0.00E-01 | 0.00E-01 | 5 |
| 16 A 200* P | CHLORONAPHTHALENES | T | 0.00E-01 | 0.00E-01 | 0.00E-01 | 3 |
| 04 A 180* P | CHLOROPHENYL PHENYL ETHER | T | 0.00E-01 | 0.00E-01 | 0.00E-01 | 4 |
| 15 A 040* P | TOLUENE | T | 0.00E-01 | 0.00E-01 | 0.00E-01 | 2 |
| 15 A 040* P | TOLUENE | T | 0.00E-01 | 0.00E-01 | 0.00E-01 | 3 |
| 19 A 020* P W | 2-CHLOROPHENOL | T | 0.00E-01 | 0.00E-01 | 0.00E-01 | 6 |
| 15 A 060* P | ETHYL BENZENE | T | 0.00E-01 | 0.00E-01 | 0.00E-01 | 2 |
| 15 A 060* P | ETHYL BENZENE | T | 0.00E-01 | 0.00E-01 | 0.00E-01 | 3 |
| 19 A 040* P W | 2,4-DICHLOROPHENOL | T | 0.00E-01 | 0.00E-01 | 0.00E-01 | 6 |
| 22 D 020* P W | INDENO(1,2,3-CD)PYRENE | T | 0.00E-01 | 0.00E-01 | 0.00E-01 | 2 |
| 19 A 060* P W | PENTACHLOROPHENOL | T | 0.00E-01 | 0.00E-01 | 0.00E-01 | 5 |

GASIFIER ASH SLUICE WATER, HEALTH IMPACT

| DMEG NO. | | COMPOUND NAME | TYPE | CONC E-6 G/L | DS | WDS G/S | LCCAT |
|---|---|---|---|---|---|---|---|
| 19 A 060* | P W | PENTACHLOROPHENOL | T | 0.00E-01 | 0.00E-01 | 0.00E-01 | 6 |
| 17 A 020* | P | NITROBENZENE | T | 0.00E-01 | 0.00E-01 | 0.00E-01 | 5 |
| 21 B 180* | P | PYRENE | T | 0.00E-01 | 0.00E-01 | 0.00E-01 | 2 |
| 21 B 180* | P | PYRENE | T | 0.00E-01 | 0.00E-01 | 0.00E-01 | 3 |
| 19 B 022* | P | CHLORINATED-M-CRESOLS | T | 0.00E-01 | 0.00E-01 | 0.00E-01 | 5 |
| 19 B 022* | P | CHLORINATED-M-CRESOLS | T | 0.00E-01 | 0.00E-01 | 0.00E-01 | 6 |
| 21 A 120* | PH | ACENAPHTHYLENE | T | 1.30E 05 | 0.00E-01 | 0.00E-01 | |
| 21 C 080* | P | DIBENZ(A,H)ANTHRACENE | T | 0.00E-01 | 0.00E-01 | 0.00E-01 | 2 |
| 20 A 020* | P W | 2-NITROPHENOL | T | 0.00E-01 | 0.00E-01 | 0.00E-01 | 5 |
| 20 A 020* | P W | 2-NITROPHENOL | T | 0.00E-01 | 0.00E-01 | 0.00E-01 | 6 |
| 21 C 100* | P W | BENZO(A)PYRENE | T | 0.00E-01 | 0.00E-01 | 0.00E-01 | 2 |
| 21 C 100* | P W | BENZO(A)PYRENE | T | 0.00E-01 | 0.00E-01 | 0.00E-01 | 3 |
| 20 A 060* | P W | 4-NITROPHENOL | T | 0.00E-01 | 0.00E-01 | 0.00E-01 | 5 |
| 20 A 060* | P W | 4-NITROPHENOL | T | 0.00E-01 | 0.00E-01 | 0.00E-01 | 6 |
| 17 A 084* | P | 2,4-DINITROTOLUENE | T | 0.00E-01 | 0.00E-01 | 0.00E-01 | 4 |
| 17 A 084* | P | 2,4-DINITROTOLUENE | T | 0.00E-01 | 0.00E-01 | 0.00E-01 | 5 |
| 21 B 040* | P | BENZ(A)ANTHRACENE | T | 0.00E-01 | 0.00E-01 | 0.00E-01 | 2 |
| 20 A 101* | P | 2,4-DINITROPHENOL | T | 0.00E-01 | 0.00E-01 | 0.00E-01 | 5 |
| 20 A 101* | P | 2,4-DINITROPHENOL | T | 0.00E-01 | 0.00E-01 | 0.00E-01 | 6 |
| 21 D 080* | PH | BENZO(GHI)PERYLENE | T | 0.00E-01 | 0.00E-01 | 0.00E-01 | 3 |
| 02 A 140* | P | DIBROMOCHLOROMETHANE | T | 0.00E-01 | 0.00E-01 | 0.00E-01 | 1 |
| 22 A 020* | PH | FLUORENE | T | 1.30E 05 | 0.00E-01 | 0.00E-01 | |
| 22 A 020* | PH | FLUORENE | T | 0.00E-01 | 0.00E-01 | 0.00E-01 | 2 |
| 20 B 020* | P W | 4,6-DINITRO-O-CRESOL | T | 0.00E-01 | 0.00E-01 | 0.00E-01 | 5 |
| 20 B 020* | P W | 4,6-DINITRO-O-CRESOL | T | 0.00E-01 | 0.00E-01 | 0.00E-01 | 6 |
| 07 B 080* | P | ISOPHORONE | T | 0.00E-01 | 0.00E-01 | 0.00E-01 | 6 |
| 22 B 040* | P W | FLUORANTHENE | T | 0.00E-01 | 0.00E-01 | 0.00E-01 | 3 |
| 02 A 320* | P | HEXACHLOROETHANE | T | 0.00E-01 | 0.00E-01 | 0.00E-01 | 1 |
| 22 C 020* | P | BENZO(K)FLUORANTHENE | T | 0.00E-01 | 0.00E-01 | 0.00E-01 | 2 |
| 21 A 020* | P | NAPHTHALENE | T | 0.00E-01 | 0.00E-01 | 0.00E-01 | 2 |
| 21 A 020* | P | NAPHTHALENE | T | 0.00E-01 | 0.00E-01 | 0.00E-01 | 3 |
| 02 A 340* | P | DICHLOROPROPANES | T | 0.00E-01 | 0.00E-01 | 0.00E-01 | 2 |
| 22 C 080* | P W | BENZO(B)FLUORANTHENE | T | 0.00E-01 | 0.00E-01 | 0.00E-01 | 2 |
| 22 C 080* | P W | BENZO(B)FLUORANTHENE | T | 0.00E-01 | 0.00E-01 | 0.00E-01 | 3 |

## GASIFIER ASH SLUICE WATER, HEALTH IMPACT

| DMEG NO. | COMPOUND NAME | TYPE | CONC E-6 G/L | DS | WDS G/S | LCCAT |
|---|---|---|---|---|---|---|
| 04 B 040* P | 1,1'-DICHLORODIETHYL ETHER | T | 0.00E-01 | 0.00E-01 | 0.00E-01 | 4 |
| 16 A 020* P | CHLOROBENZENE | T | 0.00E-01 | 0.00E-01 | 0.00E-01 | 2 |
| 16 A 020* P | CHLOROBENZENE | T | 0.00E-01 | 0.00E-01 | 0.00E-01 | 3 |
| 02 B 080* P | TETRACHLOROETHENE | T | 0.00E-01 | 0.00E-01 | 0.00E-01 | 1 |
| 10 C 140* P | BENZIDINE | T | 0.00E-01 | 0.00E-01 | 0.00E-01 | 5 |
| 10 C 140* P | BENZIDINE | T | 0.00E-01 | 0.00E-01 | 0.00E-01 | 6 |
| 21 A 100* PH | ACENAPHTHENE | T | 1.30E 05 | 0.00E-01 | 0.00E-01 | |

GASIFIER ASH SLUICE WATER

APPROXIMATE FLOW RATE = 7.0 G/S (0.007 L/S)

TOTAL ORGANIC LOADING 125.7 MG/L

ORGANIC LOADING

125700.0

FLOW RATE = 7.00

STATE: LIQUID, UNITS IN MICROGRAMS/L

IMPACT: ECOLOGY

EXPERIMENTALY DETERMINED DATA

SPARK SOURCE DATA

## GASIFIER ASH SLUICE WATER, ECOLOGY IMPACT

| DMEG NO. | | COMPOUND NAME | TYPE | CONC E-6 G/L | DS | WDS G/S | LCCAT |
|---|---|---|---|---|---|---|---|
| 16 A 220 | W | POLYCHLORINATED BIPHENYLS | T | 1.30E 05 | 2.51E 07 | 1.80E 08 | |
| 02 A 380 | W | HEXACHLOROCYCLOHEXANE | T | 1.30E 05 | 6.30E 06 | 4.40E 07 | |
| 08 D 283 | | DI-N-BUTYL PHTHALATE | T | 1.30E 05 | 8.40E 04 | 5.90E 05 | |
| 08 D 282 | | DIETHYL PHTHALATE | T | 1.30E 05 | 8.40E 04 | 5.90E 05 | |
| 08 D 281 | | DIMETHYL PHTHALATE | T | 1.30E 05 | 8.40E 04 | 5.90E 05 | |
| 08 D 280* | P W | PHTHALATE ESTERS (MW:194-279) | T | 1.30E 05 | 8.40E 04 | 5.90E 05 | |
| 19 A 060* | P W | PENTACHLOROPHENOL | T | 1.30E 05 | 5.02E 03 | 3.51E 04 | |
| 16 A 040 | | BROMOBENZENE | T | 1.30E 05 | 1.30E 03 | 8.80E 03 | |
| 26 B 040 | W | TRITOTYL PHOSPHATES | T | 1.30E 05 | 1.30E 03 | 8.80E 03 | |
| 16 A 020* | P | CHLOROBENZENE | T | 1.30E 05 | 1.30E 03 | 8.80E 03 | |
| 16 A 162 | | HEXACHLOROBENZENE | T | 1.30E 05 | 1.30E 03 | 8.80E 03 | |
| 16 A 081 | | 1-BROMO-2-CHLOROBENZENE | T | 1.30E 05 | 1.30E 03 | 8.80E 03 | |
| 16 A 082 | | 1-BROMO-3-CHLOROBENZENE | T | 1.30E 05 | 1.30E 03 | 8.80E 03 | |
| 16 A 083 | | 1-BROMO-4-CHLOROBENZENE | T | 1.30E 05 | 1.30E 03 | 8.80E 03 | |
| 16 A 100* | P | 1,2-DICHLOROBENZENE | T | 1.30E 05 | 1.30E 03 | 8.80E 03 | |
| 10 C 200 | W | 1-AMINONAPHTHALENE | T | 1.30E 05 | 1.30E 03 | 8.80E 03 | |
| 16 A 080 | | BROMOCHLOROBENZENES | T | 1.30E 05 | 1.30E 03 | 8.80E 03 | |
| 16 A 120* | P | 1,3-DICHLOROBENZENE | T | 1.30E 05 | 1.30E 03 | 8.80E 03 | |
| 20 A 101* | P | 2,4-DINITROPHENOL | T | 1.30E 05 | 1.30E 03 | 8.80E 03 | |
| 10 C 140* | P W | BENZIDINE | T | 1.30E 05 | 1.30E 03 | 8.80E 03 | |
| 16 A 062 | | 1,3-DIBROMOBENZENE | T | 1.30E 05 | 1.30E 03 | 8.80E 03 | |
| 16 A 063 | | 1,4-DIBROMOBENZENE | T | 1.30E 05 | 1.30E 03 | 8.80E 03 | |
| 20 A 080 | W | 2-AMINO-4,6-DINITROPHENOL | T | 1.30E 05 | 1.30E 03 | 8.80E 03 | |
| 16 A 160* | P | POLYCHLORINATED BENZENES | T | 1.30E 05 | 1.30E 03 | 8.80E 03 | |
| 16 B 043 | | 1,4-BIS(CHLOROMETHYL)BENZENE | T | 1.30E 05 | 1.30E 03 | 8.80E 03 | |
| 21 A 020* | P | NAPHTHALENE | T | 1.30E 05 | 1.30E 03 | 8.80E 03 | |
| 16 A 161 | | 1,2,4-TRICHLOROBENZENE | T | 1.30E 05 | 1.30E 03 | 8.80E 03 | |
| 01 B 220 | W | DICYCLOPENTADIENE | T | 1.30E 05 | 1.30E 03 | 8.80E 03 | |
| 20 A 103 | | 2,6-DINITROPHENOL | T | 1.30E 05 | 1.30E 03 | 8.80E 03 | |
| 10 C 220 | W | 2-AMINONAPHTHALENE | T | 1.30E 05 | 1.30E 03 | 8.80E 03 | |
| 20 A 100 | W | DINITROPHENOLS | T | 1.30E 05 | 1.30E 03 | 8.80E 03 | |
| 16 A 061 | | 1,2-DIBROMOBENZENE | T | 1.30E 05 | 1.30E 03 | 8.80E 03 | |
| 16 B 020 | W | A-CHLOROTOLUENE | T | 1.30E 05 | 1.30E 03 | 8.80E 03 | |
| 16 B 040 | | BIS(CHLOROMETHYL)BENZENES | T | 1.30E 05 | 1.30E 03 | 8.80E 03 | |

GASIFIER ASH SLUICE WATER, ECOLOGY IMPACT

| DMEG NO. | | | COMPOUND NAME | TYPE | CONC E-6 G/L | DS | WDS G/S | LCCAT |
|---|---|---|---|---|---|---|---|---|
| 16 B 041 | | | 1,2-BIS(CHLOROMETHYBENZENE | T | 1.30E 05 | 1.30E 03 | 8.80E 03 | |
| 16 B 042 | | | 1,3-BIS(CHLOROMETHYL)BENZENE | T | 1.30E 05 | 1.30E 03 | 8.80E 03 | |
| 16 A 060 | | | DIBROMOBENZENES | T | 1.30E 05 | 1.30E 03 | 8.80E 03 | |
| 16 A 140* | P | | 1,4-DICHLOROBENZENE | T | 1.30E 05 | 1.30E 03 | 8.80E 03 | |
| 20 A 102 | | | 2,5-DINITROPHENOL | S | 4.00E 02 | 8.00E 02 | 5.60E 03 | |
| 48 A 010 | | | PHOSPHORUS | T | 1.30E 05 | 2.51E 02 | 1.80E 03 | |
| 20 A 040 | | | 3-NITROPHENOL | T | 1.30E 05 | 2.51E 02 | 1.80E 03 | |
| 18 B 020 | | W | CATECHOL | T | 1.30E 05 | 2.51E 02 | 1.80E 03 | |
| 20 B 020* | P | W | 4,6-DINITRO-O-CRESOL | T | 1.30E 05 | 2.51E 02 | 1.80E 03 | |
| 19 A 020* | P | | 2-CHLOROPHENOL | T | 1.30E 05 | 2.51E 02 | 1.80E 03 | |
| 18 A 183 | | | 2,6-DIMETHYL-4-HEPTYL PHENOL | T | 1.30E 05 | 2.51E 02 | 1.80E 03 | |
| 18 A 120 | | W | 2,2'-DIHYDROXYDIPHENYL | T | 1.30E 05 | 2.51E 02 | 1.80E 03 | |
| 18 C 081 | | | 1-INDANOL | T | 1.30E 05 | 2.51E 02 | 1.80E 03 | |
| 18 C 082 | | | 4-INDANOL | T | 1.30E 05 | 2.51E 02 | 1.80E 03 | |
| 18 B 080 | | W | 1,2,3-TRIHYDROXYBENZENE | T | 1.30E 05 | 2.51E 02 | 1.80E 03 | |
| 18 A 142* | P | | 2,4-XYLENOL | T | 1.30E 05 | 2.51E 02 | 1.80E 03 | |
| 18 A 080 | | W | ETHYLPHENOLS | T | 1.30E 05 | 2.51E 02 | 1.80E 03 | |
| 19 A 040* | P | | 2,4-DICHLOROPHENOL | T | 1.30E 05 | 2.51E 02 | 1.80E 03 | |
| 20 A 020* | P | | 2-NITROPHENOL | T | 1.30E 05 | 2.51E 02 | 1.80E 03 | |
| 20 A 120 | | | 2,4,6-TRINITROPHENOL | T | 1.30E 05 | 2.51E 02 | 1.80E 03 | |
| 18 A 145 | | | 3,5-XYLENOL | T | 1.30E 05 | 2.51E 02 | 1.80E 03 | |
| 20 A 060* | P | | 4-NITROPHENOL | T | 1.30E 05 | 2.51E 02 | 1.80E 03 | |
| 18 A 160 | | W | ETHYL CRESOLS | T | 1.30E 05 | 2.51E 02 | 1.80E 03 | |
| 18 A 040 | | W | CRESOLS | T | 1.30E 05 | 2.51E 02 | 1.80E 03 | |
| 18 A 041 | | | M-CRESOL | T | 1.30E 05 | 2.51E 02 | 1.80E 03 | |
| 18 A 042 | | | O-CRESOL | T | 1.30E 05 | 2.51E 02 | 1.80E 03 | |
| 18 A 043 | | | P-CRESOL | T | 1.30E 05 | 2.51E 02 | 1.80E 03 | |
| 23 B 080 | | W | ACRIDINE | T | 1.30E 05 | 2.51E 02 | 1.80E 03 | |
| 18 A 060 | | W | 2-METHOXYPHENOL | T | 1.30E 05 | 2.51E 02 | 1.80E 03 | |
| 18 A 081 | | | O-ETHYLPHENOL | T | 1.30E 05 | 2.51E 02 | 1.80E 03 | |
| 19 B 023 | | | CHLORINATED-P-CRESOLS | T | 1.30E 05 | 2.51E 02 | 1.80E 03 | |
| 18 A 144 | | | 2,6-XYLENOL | T | 1.30E 05 | 2.51E 02 | 1.80E 03 | |
| 18 A 100 | | W | PHENYLPHENOLS | T | 1.30E 05 | 2.51E 02 | 1.80E 03 | |
| 18 A 101 | | | O-PHENYLPHENOL | | | | | |

GASIFIER ASH SLUICE WATER, ECOLOGY IMPACT

| DMEG NO. | | COMPOUND NAME | TYPE | CONC E-6 G/L | DS | WDS G/S | LOCAT |
|---|---|---|---|---|---|---|---|
| 18 A 102 | | P-PHENYLPHENOL | T | 1.30E 05 | 2.51E 02 | 1.80E 03 | |
| 18 A 103 | | M-PHENYLPHENOL | T | 1.30E 05 | 2.51E 02 | 1.80E 03 | |
| 18 C 080 | W | INDANOLS | T | 1.30E 05 | 2.51E 02 | 1.80E 03 | |
| 18 A 140 | W | XYLENOLS | T | 1.30E 05 | 2.51E 02 | 1.80E 03 | |
| 18 C 083 | | 5-INDANOL | T | 1.30E 05 | 2.51E 02 | 1.80E 03 | |
| 18 A 141 | | 2,3-XYLENOL | T | 1.30E 05 | 2.51E 02 | 1.80E 03 | |
| 18 A 181 | | 2,4,6-TRIMETHYL METHYL PHENOL | T | 1.30E 05 | 2.51E 02 | 1.80E 03 | |
| 18 A 161 | | 6-ETHYL-M-CRESOL | T | 1.30E 05 | 2.51E 02 | 1.80E 03 | |
| 18 A 162 | | 4-ETHYL-O-CRESOL | T | 1.30E 05 | 2.51E 02 | 1.80E 03 | |
| 18 A 143 | | 2,5-XYLENOL | T | 1.30E 05 | 2.51E 02 | 1.80E 03 | |
| 18 B 060 | W | 1,4-DIHYDROXYBENZENE | T | 1.30E 05 | 2.51E 02 | 1.80E 03 | |
| 18 A 146 | | 3,4-XYLENOL | T | 1.30E 05 | 2.51E 02 | 1.80E 03 | |
| 18 C 020 | W | 1-NAPHTHOL | T | 1.30E 05 | 2.51E 02 | 1.80E 03 | |
| 18 C 040 | W | 2-NAPHTHOL | T | 1.30E 05 | 2.51E 02 | 1.80E 03 | |
| 18 A 182 | | 4,6-DI-TERT-BUTYL-M-CRESOL | T | 1.30E 05 | 2.51E 02 | 1.80E 03 | |
| 18 A 163 | | 2-ETHYL-P-CRESOL | T | 1.30E 05 | 2.51E 02 | 1.80E 03 | |
| 18 A 180 | W | POLYALKYLPHENOLS (MW>135) | T | 1.30E 05 | 2.51E 02 | 1.80E 03 | |
| 18 A 083 | | P-ETHYLPHENOL | T | 1.30E 05 | 2.51E 02 | 1.80E 03 | |
| 18 B 040 | W | 1,3-DIHYDROXYBENZENE | T | 1.30E 05 | 2.51E 02 | 1.80E 03 | |
| 19 B 021 | | CHLORINATED-O-CRESOLS | T | 1.30E 05 | 2.51E 02 | 1.80E 03 | |
| 19 B 022* | P | CHLORINATED-M-CRESOLS | T | 1.30E 05 | 2.51E 02 | 1.80E 03 | |
| 19 B 020 | W | CHLORINATED CRESOLS | T | 1.30E 05 | 2.51E 02 | 1.80E 03 | |
| 20 B 041 | | 3,5-DINITRO-P-CRESOL | T | 1.30E 05 | 2.51E 02 | 1.80E 03 | |
| 20 B 042 | | 2,6-DINITRO-P-CRESOL | T | 1.30E 05 | 2.51E 02 | 1.80E 03 | |
| 18 A 082 | | M-ETHYLPHENOL | T | 1.30E 05 | 2.51E 02 | 1.80E 03 | |
| 20 B 040 | W | DINITRO-P-CRESOLS | T | 1.30E 05 | 2.51E 02 | 1.80E 03 | |
| 15 A 040* | P W | TOLUENE | T | 1.30E 05 | 1.30E 02 | 8.80E 02 | |
| 17 A 085 | | 2,5-DINITROTOLUENE | T | 1.30E 05 | 1.30E 02 | 8.80E 02 | |
| 08 D 142 | | SEC-AMYL ACETATE | T | 1.30E 05 | 1.30E 02 | 8.80E 02 | |
| 08 D 143 | | ISOAMYL ACETATE | T | 1.30E 05 | 1.30E 02 | 8.80E 02 | |
| 17 A 083 | | 2,3-DINITROTOLUENE | T | 1.30E 05 | 1.30E 02 | 8.80E 02 | |
| 02 A 340* | P | DICHLOROPROPANES | T | 1.30E 05 | 1.30E 02 | 8.80E 02 | |
| 02 B 100* | P W | DICHLOROPROPENES | T | 1.30E 05 | 1.30E 02 | 8.80E 02 | |
| 02 B 080* | P W | TETRACHLOROETHENE | T | 1.30E 05 | 1.30E 02 | 8.80E 02 | |

GASIFIER ASH SLUICE WATER, ECOLOGY IMPACT

| DMEG NO. | | COMPOUND NAME | TYPE | CONC E-6 G/L | DS | WDS G/S | LCCAT |
|---|---|---|---|---|---|---|---|
| 17 A 086 | | 3,5-DINITROTOLUENE | T | 1.30E 05 | 1.30E 02 | 8.80E 02 | |
| 15 B 082 | | M-XYLENE | T | 1.30E 05 | 1.30E 02 | 8.80E 02 | |
| 02 B 103 | | CIS-1,3-DICHLOROPROPENE | T | 1.30E 05 | 1.30E 02 | 8.80E 02 | |
| 08 A 040 | W | ACETIC ACID | T | 1.30E 05 | 1.30E 02 | 8.80E 02 | |
| 10 A 080 | W | 1,2-DIAMINOETHANE | T | 1.30E 05 | 1.30E 02 | 8.80E 02 | |
| 17 A 041 | | 2-NITROTOLUENE | T | 1.30E 05 | 1.30E 02 | 8.80E 02 | |
| 02 A 343 | | 1,3-DICHLOROPROPANE | T | 1.30E 05 | 1.30E 02 | 8.80E 02 | |
| 15 A 060* | P W | ETHYL BENZENE | T | 1.30E 05 | 1.30E 02 | 8.80E 02 | |
| 17 A 082 | | 3,4-DINITROTOLUENE | T | 1.30E 05 | 1.30E 02 | 8.80E 02 | |
| 08 D 141 | | N-AMYL ACETATE | T | 1.30E 05 | 1.30E 02 | 8.80E 02 | |
| 15 B 081 | | O-XYLENE | T | 1.30E 05 | 1.30E 02 | 8.80E 02 | |
| 15 B 083 | | P-XYLENE | T | 1.30E 05 | 1.30E 02 | 8.80E 02 | |
| 17 A 040 | W | NITROTOLUENES | T | 1.30E 05 | 1.30E 02 | 8.80E 02 | |
| 17 A 042 | | 3-NITROTOLUENE | T | 1.30E 05 | 1.30E 02 | 8.80E 02 | |
| 17 A 020* | P W | NITROBENZENE | T | 1.30E 05 | 1.30E 02 | 8.80E 02 | |
| 17 A 043 | | 4-NITROTOLUENE | T | 1.30E 05 | 1.30E 02 | 8.80E 02 | |
| 17 A 080 | W | DINITROTOLUENES | T | 1.30E 05 | 1.30E 02 | 8.80E 02 | |
| 15 B 106 | | 1,4-DI-TERT-BUTYL BENZENE | T | 1.30E 05 | 1.30E 02 | 8.80E 02 | |
| 15 B 120 | W | TETRAHYDRONAPHTHALENE | T | 1.30E 05 | 1.30E 02 | 8.80E 02 | |
| 17 A 084* | P | 2,4-DINITROTOLUENE | T | 1.30E 05 | 1.30E 02 | 8.80E 02 | |
| 10 C 020 | | ANILINE | T | 1.30E 05 | 1.30E 02 | 8.80E 02 | |
| 15 B 080 | W | XYLENES | T | 1.30E 05 | 1.30E 02 | 8.80E 02 | |
| 08 D 123 | | ISOBUTYL ACETATE | T | 1.30E 05 | 1.30E 02 | 8.80E 02 | |
| 08 D 140 | | AMYL ACETATES | T | 1.30E 05 | 1.30E 02 | 8.80E 02 | |
| 15 B 105 | | M-DIISOPROPYL BENZENE | T | 1.30E 05 | 1.30E 02 | 8.80E 02 | |
| 15 B 101 | | O-DIETHYL BENZENE | T | 1.30E 05 | 1.30E 02 | 8.80E 02 | |
| 04 A 060 | W | 1-CHLORO-1,3-EPOXYPROPANE | T | 1.30E 05 | 1.30E 02 | 8.80E 02 | |
| 15 B 102 | | M-DIETHYL BENZENE | T | 1.30E 05 | 1.30E 02 | 8.80E 02 | |
| 08 D 120 | | BUTYL ACETATES | T | 1.30E 05 | 1.30E 02 | 8.80E 02 | |
| 17 A 081* | P | 2,6-DINITROTOLUENE | T | 1.30E 05 | 1.30E 02 | 8.80E 02 | |
| 15 A 100 | W | PROPYL BENZENE | T | 1.30E 05 | 1.30E 02 | 8.80E 02 | |
| 02 B 104 | | TRANS-1,3-DICHLOROPROPENE | T | 1.30E 05 | 1.30E 02 | 8.80E 02 | |
| 08 D 121 | | N-BUTYL ACETATE | T | 1.30E 05 | 1.30E 02 | 8.80E 02 | |
| 08 D 122 | | SEC-BUTYL ACETATE | T | 1.30E 05 | 1.30E 02 | 8.80E 02 | |

GASIFIER ASH SLUICE WATER, ECOLOGY IMPACT

| DMEG NO. | | COMPOUND NAME | TYPE | CONC E-6 G/L | DS | WDS G/S | LCCAT |
|---|---|---|---|---|---|---|---|
| 15 B 103 | | P-DIETHYL BENZENE | T | 1.30E 05 | 1.30E 02 | 8.80E 02 | |
| 15 B 104 | | O-DIISOPROPYL BENZENE | T | 1.30E 05 | 1.30E 02 | 8.80E 02 | |
| 04 A 050 | W | EPICHLORHYDRIN | T | 1.30E 05 | 1.30E 02 | 8.80E 02 | |
| 15 B 100 | W | DIALKYL BENZENES (MW:134-191) | T | 1.30E 05 | 1.30E 02 | 8.80E 02 | |
| 15 A 080 | W | STYRENE | T | 1.30E 05 | 1.30E 02 | 8.80E 02 | |
| 15 A 120 | W | ISOPROPYL BENZENE | T | 1.30E 05 | 1.30E 02 | 8.80E 02 | |
| 04 A 040 | W | 2-CHLORO-1,2-EPOXYPROPANE | T | 1.30E 05 | 1.30E 02 | 8.80E 02 | |
| 47 A 060 | P | AMMONIA | D | 5.40E 03 | 1.10E 02 | 7.60E 02 | |
| 15 B 020 | | INDAN | T | 1.30E 05 | 9.00E 01 | 6.30E 02 | |
| 08 A 080 | | VALERIC ACID | T | 1.30E 05 | 1.63E 01 | 1.14E 02 | |
| 09 B 042 | | B-NAPHTHONITRILES | T | 1.30E 05 | 1.61E 01 | 1.12E 02 | |
| 09 B 040 | W | NAPHTHONITRILES | T | 1.30E 05 | 1.61E 01 | 1.12E 02 | |
| 09 B 020 | W | BENZONITRILE | T | 1.30E 05 | 1.61E 01 | 1.12E 02 | |
| 09 B 041 | | A-NAPHTHONITRILES | T | 1.30E 05 | 1.61E 01 | 1.12E 02 | |
| 08 A 104 | | LAURIC ACID | T | 1.30E 05 | 1.42E 01 | 1.00E 02 | |
| 08 A 103 | | CAPRIC ACID | T | 1.30E 05 | 1.42E 01 | 1.00E 02 | |
| 08 A 102 | | CAPRYLIC ACID | T | 1.30E 05 | 1.42E 01 | 1.00E 02 | |
| 08 A 101 | | CAPROIC ACID | T | 1.30E 05 | 1.42E 01 | 1.00E 02 | |
| 08 A 100 | | SATURATED LONG CHAIN ACIDS (MW:116-201) | T | 1.30E 05 | 1.42E 01 | 1.00E 02 | |
| 34 A 010 | | CALCIUM (AS CA+2) | D | 2.20E 05 | 1.40E 01 | 9.62E 01 | |
| 08 A 180 | | ADIPIC ACID | T | 1.30E 05 | 1.30E 01 | 9.10E 01 | |
| 05 A 120 | W | PENTANOLS (PRIMARY) | T | 1.30E 05 | 1.30E 01 | 8.80E 01 | |
| 08 B 060 | W | B-PROPIOLACTONE | T | 1.30E 05 | 1.30E 01 | 8.80E 01 | |
| 23 A 062 | | 3-ETHYLPYRIDINE | T | 1.30E 05 | 1.30E 01 | 8.80E 01 | |
| 23 A 120 | W | COLLIDINES | T | 1.30E 05 | 1.30E 01 | 8.80E 01 | |
| 17 B 060 | W | 1-CHLORO-4-NITROBENZENE | T | 1.30E 05 | 1.30E 01 | 8.80E 01 | |
| 23 A 060 | W | MONOSUBSTITUTED ALKYL PYRIDINES | T | 1.30E 05 | 1.30E 01 | 8.80E 01 | |
| 05 A 100 | W | ISOBUTYL ALCOHOL | T | 1.30E 05 | 1.30E 01 | 8.80E 01 | |
| 08 D 080 | | METHYL METHACRYLATE | T | 1.30E 05 | 1.30E 01 | 8.80E 01 | |
| 05 A 123 | | 2,2-DIMETHYL-1-PROPANOL | T | 1.30E 05 | 1.30E 01 | 8.80E 01 | |
| 10 A 060 | | ETHANOLAMINE | T | 1.30E 05 | 1.30E 01 | 8.80E 01 | |
| 15 B 201 | | 1,2,3,4-TETRAMETHYLBENZENE | T | 1.30E 05 | 1.30E 01 | 8.80E 01 | |
| 23 A 082 | | 3-PHENYLPYRIDINE | T | 1.30E 05 | 1.30E 01 | 8.80E 01 | |
| 23 A 121 | | 5-ETHYL-2-METHYLPYRIDINE | T | 1.30E 05 | 1.30E 01 | 8.80E 01 | |

GASIFIER ASH SLUICE WATER, ECOLOGY IMPACT

| DMEG NO. | | COMPOUND NAME | TYPE | CONC E-6 G/L | DS | WDS G/S | LCCAT |
|---|---|---|---|---|---|---|---|
| 05 A 121 | | N-PENTANOL | T | 1.30E 05 | 1.30E 01 | 8.80E 01 | |
| 08 D 101 | | N-PROPYL ACETATE | T | 1.30E 05 | 1.30E 01 | 8.80E 01 | |
| 01 A 201 | | N-OCTANE | T | 1.30E 05 | 1.30E 01 | 8.80E 01 | |
| 23 A 061 | | 2-ETHYLPYRIDINE | T | 1.30E 05 | 1.30E 01 | 8.80E 01 | |
| 10 A 160 | | CYCLOHEXYLAMINE | T | 1.30E 05 | 1.30E 01 | 8.80E 01 | |
| 23 A 083 | | 4-PHENYLPYRIDINE | T | 1.30E 05 | 1.30E 01 | 8.80E 01 | |
| 23 A 064 | | 4-N-PROPYLPYRIDINE | T | 1.30E 05 | 1.30E 01 | 8.80E 01 | |
| 04 B 080 | W | 2,2'-DICHLORODIETHYL ETHER | T | 1.30E 05 | 1.30E 01 | 8.80E 01 | |
| 08 D 100 | | PROPYL ACETATES | T | 1.30E 05 | 1.30E 01 | 8.80E 01 | |
| 23 A 020 | W | PYRIDINE | T | 1.30E 05 | 1.30E 01 | 8.80E 01 | |
| 03 B 020 | | 1,4-DIOXANE | T | 1.30E 05 | 1.30E 01 | 8.80E 01 | |
| 10 B 100 | | MORPHOLINE | T | 1.30E 05 | 1.30E 01 | 8.80E 01 | |
| 23 A 063 | | 4-ETHYLPYRIDINE | T | 1.30E 05 | 1.30E 01 | 8.80E 01 | |
| 15 B 202 | | 1,2,3,5-TETRAMETHYLBENZENE | T | 1.30E 05 | 1.30E 01 | 8.80E 01 | |
| 01 A 200 | | OCTANES | T | 1.30E 05 | 1.30E 01 | 8.80E 01 | |
| 05 A 124 | | 3-METHYL-1-BUTANOL | T | 1.30E 05 | 1.30E 01 | 8.80E 01 | |
| 04 B 040* | P W | 1,1'-DICHLORODIETHYL ETHER | T | 1.30E 05 | 1.30E 01 | 8.80E 01 | |
| 23 A 080 | W | PHENYLPYRIDINES | T | 1.30E 05 | 1.30E 01 | 8.80E 01 | |
| 15 B 203 | | 1,2,4,5-TETRAMETHYLBENZENE | T | 1.30E 05 | 1.30E 01 | 8.80E 01 | |
| 06 A 020 | W | ETHYLENE GLYCOL | T | 1.30E 05 | 1.30E 01 | 8.80E 01 | |
| 15 B 200 | | TETRAMETHYLBENZENES | T | 1.30E 05 | 1.30E 01 | 8.80E 01 | |
| 05 A 122 | | 2-METHYL-1-BUTANOL | T | 1.30E 05 | 1.30E 01 | 8.80E 01 | |
| 17 B 040 | W | 1-CHLORO-2-NITROBENZENE | T | 1.30E 05 | 1.30E 01 | 8.80E 01 | |
| 05 A 140 | W | BENZYL ALCOHOL | T | 1.30E 05 | 1.30E 01 | 8.80E 01 | |
| 23 A 122 | | 2,4,6-COLLIDINE | T | 1.30E 05 | 1.30E 01 | 8.80E 01 | |
| 23 A 081 | | 2-PHENYLPYRIDINE | T | 1.30E 05 | 1.14E 01 | 8.00E 01 | |
| 07 B 100 | W | CAMPHOR | D | 1.10E 04 | 1.10E 01 | 7.70E 01 | |
| 38 A 010 | | ALUMINUM | T | 1.30E 05 | 7.90E 00 | 5.50E 01 | |
| 07 B 120 | | ACETOPHENONE | T | 1.30E 05 | 6.00E 00 | 4.20E 01 | |
| 08 A 140 | | OLEIC ACID | D | 1.20E 03 | 4.80E 00 | 3.40E 01 | |
| 72 A 010 | | IRON (AS FE+2) | S | < 2.00E 00 | < 2.00E 00 | < 1.40E 01 | |
| 82 A 010 | P | CADMIUM | S | 2.00E 01 | 2.00E 00 | 1.40E 01 | |
| 76 A 010 | P | NICKEL | T | 1.30E 05 | 1.30E 00 | 8.80E 00 | |
| 05 A 080 | | N-BUTANOL | | | | | |

## GASIFIER ASH SLUICE WATER, ECOLOGY IMPACT

| DMEG NO. | | COMPOUND NAME | TYPE | CONC E-6 G/L | DS | WDS G/S | LCCAT |
|---|---|---|---|---|---|---|---|
| 06 A 040 | | PROPYLENE GLYCOL | T | 1.30E 05 | 1.30E 00 | 8.80E 00 | |
| 08 D 320* | P | BUTYL BENZYL PHTHALATE | T | 1.30E 05 | 1.30E 00 | 8.80E 00 | |
| 05 C 040 | W | T-PENTANOL | T | 1.30E 05 | 1.30E 00 | 8.80E 00 | |
| 08 B 080 | | Y-BUTYROLACTONE | T | 1.30E 05 | 1.30E 00 | 8.80E 00 | |
| 27 A 010 | | LITHIUM | S | 4.00E 02 | 1.10E 00 | 7.40E 00 | |
| 54 A 010 | P | SELENIUM | D | 2.00E 01 | 8.00E-01 | 5.60E 00 | |
| 47 A 080 | P | HYDROGEN CYANIDE | D | < 2.00E 01< | 8.00E-01< | 5.60E 00 | |
| 18 A 020 | P W | PHENOL | D | 3.60E 02 | 7.20E-01 | 5.03E 00 | |
| 65 A 010 | | VANADIUM | D | 7.70E 01 | 5.13E-01 | 3.60E 00 | |
| 81 A 010 | P | ZINC | D | 4.40E 01 | 4.40E-01 | 3.10E 00 | |
| 78 A 010 | P | COPPER | D | 1.70E 01 | 3.40E-01 | 2.40E 00 | |
| 79 A 010 | P | SILVER | S | 1.00E 00 | 2.00E-01 | 1.40E 00 | |
| 37 A 010 | | BORON | D | 4.60E 03 | 1.84E-01 | 1.30E 00 | |
| 46 A 010 | P | LEAD | S | 8.00E 00 | 1.60E-01 | 1.11E 00 | |
| 33 A 010 | | MAGNESIUM | D | 1.10E 04 | 1.30E-01 | 8.90E-01 | |
| 49 A 010 | P | ARSENIC | D | 3.30E 00 | 6.60E-02 | 4.61E-01 | |
| 62 A 010 | | TITANIUM | D | 4.40E 01 | 5.40E-02 | 3.80E-01 | |
| 36 A 010 | | BARIUM | D | 1.30E 02 | 5.20E-02 | 3.64E-01 | |
| 69 A 010 | | MOLYBDENUM | D | 3.10E 02 | 4.42E-02 | 3.10E-01 | |
| 68 A 010 | P | CHROMIUM | D | 7.00E 00 | 2.80E-02 | 2.00E-01 | |
| 71 A 010 | P | MANGANESE | D | 2.00E 00 | 2.00E-02 | 1.40E-01 | |
| 50 A 010 | P | ANTIMONY | D | 2.00E 00 | 1.00E-02 | 7.00E-02 | |
| 74 A 010 | | COBALT | S | < 2.00E 00< | 8.00E-03< | 5.60E-02 | |
| 83 A 010 | P | MERCURY | D | 1.40E 00 | 5.60E-03 | 3.91E-02 | |
| 53 A 010 | | SULFUR | D | 9.70E 05 | 0.00E-01 | 0.00E-01 | |
| 16 A 100* | P | 1,2-DICHLOROBENZENE | T | 0.00E-01 | 0.00E-01 | 0.00E-01 | 3 |
| 47 A 030 | | NITRITE, NO2- | D | < 1.00E 01< | 0.00E-01< | 0.00E-01 | |
| 15 A 040* | P W | TOLUENE | T | 0.00E-01 | 0.00E-01 | 0.00E-01 | 3 |
| 16 A 020* | P | CHLOROBENZENE | T | 0.00E-01 | 0.00E-01 | 0.00E-01 | 3 |
| 63 A 010 | | ZIRCONIUM (AS ZR+4) | S | 2.00E 00 | 0.00E-01 | 0.00E-01 | |
| 47 A 020 | | NITRATE, NO3- | D | 3.00E 03 | 0.00E-01 | 0.00E-01 | |
| 12 A 040* | P | N-NITROSODIETHYLAMINE | T | 0.00E-01 | 0.00E-01 | 0.00E-01 | 6 |
| 28 A 010 | | SODIUM | D | 1.70E 06 | 0.00E-01 | 0.00E-01 | |
| 08 D 280* | P W | PHTHALATE ESTERS (MW:194-279) | T | 0.00E-01 | 0.00E-01 | 0.00E-01 | 5 |

## GASIFIER ASH SLUICE WATER, ECOLOGY IMPACT

| DMEG NO. | COMPOUND NAME | TYPE | CONC E-6 G/L | DS | WDS G/S | LCCAT |
|---|---|---|---|---|---|---|
| 02 A 140* P | DIBROMOCHLOROMETHANE | T | 1.30E 05 | 0.00E-01 | 0.00E-01 | |
| 15 A 060* P W | ETHYL BENZENE | T | 0.00E-01 | 0.00E-01 | 0.00E-01 | 3 |
| 12 A 040* P | N-NITROSODIETHYLAMINE | T | 1.30E 05 | 0.00E-01 | 0.00E-01 | |
| 53 A 040 | SULFITE, SO3 -2 | D | 4.70E 04 | 0.00E-01 | 0.00E-01 | |
| 16 A 140* P | 1,4-DICHLOROBENZENE | T | 0.00E-01 | 0.00E-01 | 0.00E-01 | 2 |
| 12 A 060* P | N-NITROSODIPROPYLAMINE | T | 1.30E 05 | 0.00E-01 | 0.00E-01 | |
| 12 A 020* P | N-NITROSODIMETHYLAMINE | T | 0.00E-01 | 0.00E-01 | 0.00E-01 | 6 |
| 53 A 030 | SULFATE, SO4 -2 | D | 2.90E 06 | 0.00E-01 | 0.00E-01 | |
| 16 A 160* P | POLYCHLORINATED BENZENES | T | 0.00E-01 | 0.00E-01 | 0.00E-01 | 3 |
| 15 A 040* P W | TOLUENE | T | 0.00E-01 | 0.00E-01 | 0.00E-01 | 2 |
| 17 A 084* P | 2,4-DINITROTOLUENE | T | 0.00E-01 | 0.00E-01 | 0.00E-01 | 4 |
| 17 A 084* P | 2,4-DINITROTOLUENE | T | 0.00E-01 | 0.00E-01 | 0.00E-01 | 5 |
| 15 A 060* P W | ETHYL BENZENE | T | 0.00E-01 | 0.00E-01 | 0.00E-01 | 2 |
| 02 A 140* P | DIBROMOCHLOROMETHANE | T | 0.00E-01 | 0.00E-01 | 0.00E-01 | 2 |
| 02 A 160* P | BROMOFORM | T | 1.30E 05 | 0.00E-01 | 0.00E-01 | |
| 02 A 160* P | BROMOFORM | T | 0.00E-01 | 0.00E-01 | 0.00E-01 | 1 |
| 70 A 010 | TUNGSTEN | S | 2.00E 01 | 0.00E-01 | 0.00E-01 | |
| 08 D 300* P | DI-2-ETHYLHEXYL PHTHALATE | T | 0.00E-01 | 0.00E-01 | 0.00E-01 | 5 |
| 35 A 010 | STRONTIUM | D | 4.00E 03 | 0.00E-01 | 0.00E-01 | |
| 02 B 120* P | HEXACHLOROBUTADIENE | T | 0.00E-01 | 0.00E-01 | 0.00E-01 | 1 |
| 10 C 140* P W | BENZIDINE | T | 0.00E-01 | 0.00E-01 | 0.00E-01 | 6 |
| 08 D 320* P | BUTYL BENZYL PHTHALATE | T | 0.00E-01 | 0.00E-01 | 0.00E-01 | 6 |
| 02 A 340* P | DICHLOROPROPANES | T | 0.00E-01 | 0.00E-01 | 0.00E-01 | 2 |
| 16 A 100* P | 1,2-DICHLOROBENZENE | T | 0.00E-01 | 0.00E-01 | 0.00E-01 | 2 |
| 02 A 140* P | DIBROMOCHLOROMETHANE | T | 0.00E-01 | 0.00E-01 | 0.00E-01 | 1 |
| 12 A 020* P | N-NITROSODIMETHYLAMINE | T | 0.00E-01 | 0.00E-01 | 0.00E-01 | 5 |
| 02 B 080* P W | TETRACHLOROETHENE | T | 0.00E-01 | 0.00E-01 | 0.00E-01 | 1 |
| 02 B 080* P W | TETRACHLOROETHENE | T | 0.00E-01 | 0.00E-01 | 0.00E-01 | 2 |
| 12 A 040* P | N-NITROSODIETHYLAMINE | T | 0.00E-01 | 0.00E-01 | 0.00E-01 | 5 |
| 02 B 100* P W | DICHLOROPROPENES | T | 0.00E-01 | 0.00E-01 | 0.00E-01 | 1 |
| 12 A 020* P | N-NITROSODIMETHYLAMINE | T | 1.30E 05 | 0.00E-01 | 0.00E-01 | |
| 02 B 120* P | HEXACHLOROBUTADIENE | T | 1.30E 05 | 0.00E-01 | 0.00E-01 | |
| 12 A 060* P | N-NITROSODIPROPYLAMINE | T | 0.00E-01 | 0.00E-01 | 0.00E-01 | 6 |
| 18 A 142* P | 2,4-XYLENOL | T | 0.00E-01 | 0.00E-01 | 0.00E-01 | 5 |

## GASIFIER ASH SLUICE WATER, ECOLOGY IMPACT

| DMEG NO. | COMPOUND NAME | TYPE | CONC E-6 G/L | DS | WDS G/S | LOCAT |
|---|---|---|---|---|---|---|
| 18 A 142* P | 2,4-XYLENOL | T | 0.00E-01 | 0.00E-01 | 0.00E-01 | 6 |
| 02 B 120* P | HEXACHLOROBUTADIENE | T | 0.00E-01 | 0.00E-01 | 0.00E-01 | 2 |
| 02 B 140* P | HEXACHLOROCYCLOPENTADIENE | T | 1.30E 05 | 0.00E-01 | 0.00E-01 | |
| 02 B 140* P | HEXACHLOROCYCLOPENTADIENE | T | 0.00E-01 | 0.00E-01 | 0.00E-01 | 1 |
| 02 B 140* P | HEXACHLOROCYCLOPENTADIENE | T | 0.00E-01 | 0.00E-01 | 0.00E-01 | 2 |
| 58 A 010 | BROMINE | S | 2.00E 01 | 0.00E-01 | 0.00E-01 | |
| 02 A 160* P | BROMOFORM | T | 0.00E-01 | 0.00E-01 | 0.00E-01 | 2 |
| 02 A 320* P | HEXACHLOROETHANE | T | 1.30E 05 | 0.00E-01 | 0.00E-01 | |
| 02 B 100* P W | DICHLOROPROPENES | T | 0.00E-01 | 0.00E-01 | 0.00E-01 | 2 |
| 12 A 060* P | N-NITROSODIPROPYLAMINE | T | 0.00E-01 | 0.00E-01 | 0.00E-01 | 5 |
| 10 C 140* P W | BENZIDINE | T | 0.00E-01 | 0.00E-01 | 0.00E-01 | 5 |
| 02 A 340* P | DICHLOROPROPANES | T | 0.00E-01 | 0.00E-01 | 0.00E-01 | 1 |
| 17 A 020* P W | NITROBENZENE | T | 0.00E-01 | 0.00E-01 | 0.00E-01 | 4 |
| 17 A 020* P W | NITROBENZENE | T | 0.00E-01 | 0.00E-01 | 0.00E-01 | 5 |
| 66 A 010 | NIOBIUM (AS NB+3) | S | 2.00E 00 | 0.00E-01 | 0.00E-01 | |
| 08 D 280* P W | PHTHALATE ESTERS (MW:194-279) | T | 0.00E-01 | 0.00E-01 | 0.00E-01 | 6 |
| 84 C 010 | PRASEODYMIUM | S | 1.00E 00 | 0.00E-01 | 0.00E-01 | |
| 30 A 010 | RUBIDIUM (AS RB+) | S | 4.00E 01 | 0.00E-01 | 0.00E-01 | |
| 43 A 010 | SILICON | S | 3.00E 02 | 0.00E-01 | 0.00E-01 | |
| 08 D 300* P | DI-2-ETHYLHEXYL PHTHALATE | T | 1.30E 05 | 0.00E-01 | 0.00E-01 | |
| 17 A 081* P | 2,6-DINITROTOLUENE | T | 0.00E-01 | 0.00E-01 | 0.00E-01 | 4 |
| 08 D 300* P | DI-2-ETHYLHEXYL PHTHALATE | T | 0.00E-01 | 0.00E-01 | 0.00E-01 | 6 |
| 29 A 010 | POTASSIUM | S | > 1.00E 04> | 0.00E-01> | 0.00E-01 | |
| 08 D 320* P | BUTYL BENZYL PHTHALATE | T | 0.00E-01 | 0.00E-01 | 0.00E-01 | 5 |
| 19 A 020* P | 2-CHLOROPHENOL | T | 0.00E-01 | 0.00E-01 | 0.00E-01 | 5 |
| 19 A 020* P | 2-CHLOROPHENOL | T | 0.00E-01 | 0.00E-01 | 0.00E-01 | 6 |
| 16 A 020* P | CHLOROBENZENE | T | 0.00E-01 | 0.00E-01 | 0.00E-01 | 2 |
| 19 A 040* P | 2,4-DICHLOROPHENOL | T | 0.00E-01 | 0.00E-01 | 0.00E-01 | 5 |
| 19 A 040* P | 2,4-DICHLOROPHENOL | T | 0.00E-01 | 0.00E-01 | 0.00E-01 | 6 |
| 57 A 010 | CHLORINE (AS CL-) | D | 7.80E 04 | 0.00E-01 | 0.00E-01 | |
| 19 A 060* P W | PENTACHLOROPHENOL | T | 0.00E-01 | 0.00E-01 | 0.00E-01 | 5 |
| 19 A 060* P W | PENTACHLOROPHENOL | T | 0.00E-01 | 0.00E-01 | 0.00E-01 | 6 |
| 56 A 010 | FLUORINE (AS F-) | D | 8.70E 02 | 0.00E-01 | 0.00E-01 | |
| 07 B 080* P | ISOPHORONE | T | 1.30E 05 | 0.00E-01 | 0.00E-01 | |

GASIFIER ASH SLUICE WATER, ECOLOGY IMPACT

| DMEG NO. | COMPOUND NAME | TYPE | CONC E-6 G/L | DS | WDS G/S | LCCAT |
|---|---|---|---|---|---|---|
| 02 A 320* P | HEXACHLOROETHANE | T | 0.00E-01 | 0.00E-01 | 0.00E-01 | 2 |
| 19 B 022* P | CHLORINATED-M-CRESOLS | T | 0.00E-01 | 0.00E-01 | 0.00E-01 | 5 |
| 19 B 022* P | CHLORINATED-M-CRESOLS | T | 0.00E-01 | 0.00E-01 | 0.00E-01 | 6 |
| 07 B 080* P | ISOPHORONE | T | 0.00E-01 | 0.00E-01 | 0.00E-01 | 5 |
| 07 B 080* P | ISOPHORONE | T | 0.00E-01 | 0.00E-01 | 0.00E-01 | 6 |
| 20 A 020* P | 2-NITROPHENOL | T | 0.00E-01 | 0.00E-01 | 0.00E-01 | 5 |
| 20 A 020* P | 2-NITROPHENOL | T | 0.00E-01 | 0.00E-01 | 0.00E-01 | 6 |
| 16 A 120* P | 1,3-DICHLOROBENZENE | T | 0.00E-01 | 0.00E-01 | 0.00E-01 | 2 |
| 16 A 120* P | 1,3-DICHLOROBENZENE | T | 0.00E-01 | 0.00E-01 | 0.00E-01 | 3 |
| 20 A 060* P | 4-NITROPHENOL | T | 0.00E-01 | 0.00E-01 | 0.00E-01 | 5 |
| 20 A 060* P | 4-NITROPHENOL | T | 0.00E-01 | 0.00E-01 | 0.00E-01 | 6 |
| 16 A 140* P | 1,4-DICHLOROBENZENE | T | 0.00E-01 | 0.00E-01 | 0.00E-01 | 3 |
| 48 A 020 | PHOSPHATE, PO4 -3 | D | < 1.00E 02 | < 0.00E-01 | < 0.00E-01 | |
| 16 A 160* P | POLYCHLORINATED BENZENES | T | 0.00E-01 | 0.00E-01 | 0.00E-01 | 2 |
| 20 A 101* P | 2,4-DINITROPHENOL | T | 0.00E-01 | 0.00E-01 | 0.00E-01 | 5 |
| 20 A 101* P | 2,4-DINITROPHENOL | T | 0.00E-01 | 0.00E-01 | 0.00E-01 | 6 |
| 45 A 010 | TIN | D | 3.00E 03 | 0.00E-01 | 0.00E-01 | |
| 16 A 200* P | CHLORONAPHTHALENES | T | 1.30E 05 | 0.00E-01 | 0.00E-01 | |
| 16 A 200* P | CHLORONAPHTHALENES | T | 0.00E-01 | 0.00E-01 | 0.00E-01 | 2 |
| 16 A 200* P | CHLORONAPHTHALENES | T | 0.00E-01 | 0.00E-01 | 0.00E-01 | 3 |
| 20 B 020* P W | 4,6-DINITRO-O-CRESOL | T | 0.00E-01 | 0.00E-01 | 0.00E-01 | 5 |
| 20 B 020* P W | 4,6-DINITRO-O-CRESOL | T | 0.00E-01 | 0.00E-01 | 0.00E-01 | 6 |
| 84 B 010 | CERIUM | S | 2.00E 00 | 0.00E-01 | 0.00E-01 | |
| 02 A 320* P | HEXACHLOROETHANE | T | 0.00E-01 | 0.00E-01 | 0.00E-01 | 1 |
| 39 A 010 | GALLIUM | S | 8.00E 00 | 0.00E-01 | 0.00E-01 | |
| 84 A 010 | LANTHANUM | S | < 1.00E 00 | < 0.00E-01 | < 0.00E-01 | |
| 21 A 020* P | NAPHTHALENE | T | 0.00E-01 | 0.00E-01 | 0.00E-01 | 2 |
| 21 A 020* P | NAPHTHALENE | T | 0.00E-01 | 0.00E-01 | 0.00E-01 | 3 |
| 21 A 100* PH | ACENAPHTHENE | T | 1.30E 05 | 0.00E-01 | 0.00E-01 | |
| 21 A 100* PH | ACENAPHTHENE | T | 0.00E-01 | 0.00E-01 | 0.00E-01 | 2 |
| 21 A 100* PH | ACENAPHTHENE | T | 0.00E-01 | 0.00E-01 | 0.00E-01 | 3 |
| 21 A 120* PH | ACENAPHTHYLENE | T | 1.30E 05 | 0.00E-01 | 0.00E-01 | |
| 21 A 120* PH | ACENAPHTHYLENE | T | 0.00E-01 | 0.00E-01 | 0.00E-01 | 2 |
| 21 A 120* PH | ACENAPHTHYLENE | T | 0.00E-01 | 0.00E-01 | 0.00E-01 | 3 |

## GASIFIER ASH SLUICE WATER, ECOLOGY IMPACT

| DMEG NO. | COMPOUND NAME | TYPE | CONC E-6 G/L | DS | WDS G/S | LCCAT |
|---|---|---|---|---|---|---|
| 21 A 140* P | ANTHRACENE | T | 1.30E 05 | 0.00E-01 | 0.00E-01 | |
| 21 A 140* P | ANTHRACENE | T | 0.00E-01 | 0.00E-01 | 0.00E-01 | 2 |
| 17 A 081* P | 2,6-DINITROTOLUENE | T | 0.00E-01 | 0.00E-01 | 0.00E-01 | 5 |
| 21 A 180* P | PHENANTHRENE | T | 1.30E 05 | 0.00E-01 | 0.00E-01 | |
| 21 A 180* P | PHENANTHRENE | T | 0.00E-01 | 0.00E-01 | 0.00E-01 | 2 |
| 21 A 180* P | PHENANTHRENE | T | 0.00E-01 | 0.00E-01 | 0.00E-01 | 3 |
| 21 B 040* P | BENZ(A)ANTHRACENE | T | 1.30E 05 | 0.00E-01 | 0.00E-01 | |
| 21 B 040* P | BENZ(A)ANTHRACENE | T | 0.00E-01 | 0.00E-01 | 0.00E-01 | 2 |
| 21 B 040* P | BENZ(A)ANTHRACENE | T | 0.00E-01 | 0.00E-01 | 0.00E-01 | 3 |
| 21 B 120* P | CHRYSENE | T | 1.30E 05 | 0.00E-01 | 0.00E-01 | |
| 21 B 120* P | CHRYSENE | T | 0.00E-01 | 0.00E-01 | 0.00E-01 | 2 |
| 21 B 120* P | CHRYSENE | T | 0.00E-01 | 0.00E-01 | 0.00E-01 | 3 |
| 21 B 180* P | PYRENE | T | 1.30E 05 | 0.00E-01 | 0.00E-01 | |
| 21 B 180* P | PYRENE | T | 0.00E-01 | 0.00E-01 | 0.00E-01 | 2 |
| 21 B 180* P | PYRENE | T | 0.00E-01 | 0.00E-01 | 0.00E-01 | 3 |
| 21 C 080* P | DIBENZ(A,H)ANTHRACENE | T | 1.30E 05 | 0.00E-01 | 0.00E-01 | |
| 21 C 080* P | DIBENZ(A,H)ANTHRACENE | T | 0.00E-01 | 0.00E-01 | 0.00E-01 | 2 |
| 21 C 080* P | DIBENZ(A,H)ANTHRACENE | T | 0.00E-01 | 0.00E-01 | 0.00E-01 | 3 |
| 21 C 100* P | BENZO(A)PYRENE | T | 1.30E 05 | 0.00E-01 | 0.00E-01 | |
| 21 C 100* P | BENZO(A)PYRENE | T | 0.00E-01 | 0.00E-01 | 0.00E-01 | 2 |
| 21 C 100* P | BENZO(A)PYRENE | T | 0.00E-01 | 0.00E-01 | 0.00E-01 | 3 |
| 21 D 080* PH | BENZO(GHI)PERYLENE | T | 1.30E 05 | 0.00E-01 | 0.00E-01 | |
| 21 D 080* PH | BENZO(GHI)PERYLENE | T | 0.00E-01 | 0.00E-01 | 0.00E-01 | 2 |
| 21 D 080* PH | BENZO(GHI)PERYLENE | T | 0.00E-01 | 0.00E-01 | 0.00E-01 | 3 |
| 22 A 020* PH | FLUORENE | T | 1.30E 05 | 0.00E-01 | 0.00E-01 | |
| 22 A 020* PH | FLUORENE | T | 0.00E-01 | 0.00E-01 | 0.00E-01 | 2 |
| 22 A 020* PH | FLUORENE | T | 0.00E-01 | 0.00E-01 | 0.00E-01 | 3 |
| 22 B 040* P | FLUORANTHENE | T | 1.30E 05 | 0.00E-01 | 0.00E-01 | |
| 22 B 040* P | FLUORANTHENE | T | 0.00E-01 | 0.00E-01 | 0.00E-01 | 2 |
| 22 B 040* P | FLUORANTHENE | T | 0.00E-01 | 0.00E-01 | 0.00E-01 | 3 |
| 22 C 020* P | BENZO(K)FLUORANTHENE | T | 1.30E 05 | 0.00E-01 | 0.00E-01 | |
| 22 C 020* P | BENZO(K)FLUORANTHENE | T | 0.00E-01 | 0.00E-01 | 0.00E-01 | 2 |
| 22 C 020* P | BENZO(K)FLUORANTHENE | T | 0.00E-01 | 0.00E-01 | 0.00E-01 | 3 |
| 22 C 080* P | BENZO(B)FLUORANTHENE | T | 1.30E 05 | 0.00E-01 | 0.00E-01 | |

## GASIFIER ASH SLUICE WATER, ECOLOGY IMPACT

| DMEG NO. | | COMPOUND NAME | TYPE | CONC E-6 G/L | DS | WDS G/S | LCCAT |
|---|---|---|---|---|---|---|---|
| 22 C 080* | P | BENZO(B)FLUORANTHENE | T | 0.00E-01 | 0.00E-01 | 0.00E-01 | 2 |
| 22 C 080* | P | BENZO(B)FLUORANTHENE | T | 0.00E-01 | 0.00E-01 | 0.00E-01 | 3 |
| 22 D 020* | P | INDENO(1,2,3-CD)PYRENE | T | 1.30E 05 | 0.00E-01 | 0.00E-01 | |
| 22 D 020* | P | INDENO(1,2,3-CD)PYRENE | T | 0.00E-01 | 0.00E-01 | 0.00E-01 | 2 |
| 22 D 020* | P | INDENO(1,2,3-CD)PYRENE | T | 0.00E-01 | 0.00E-01 | 0.00E-01 | 3 |
| 04 A 140* | P | 2-CHLOROETHYL VINYL ETHER | T | 1.30E 05 | 0.00E-01 | 0.00E-01 | |
| 04 A 140* | P | 2-CHLOROETHYL VINYL ETHER | T | 0.00E-01 | 0.00E-01 | 0.00E-01 | 4 |
| 04 A 140* | P | 2-CHLOROETHYL VINYL ETHER | T | 0.00E-01 | 0.00E-01 | 0.00E-01 | 5 |
| 04 A 160* | P | A-CHLOROBUTYL ETHYL ETHER | T | 1.30E 05 | 0.00E-01 | 0.00E-01 | |
| 04 A 160* | P | A-CHLOROBUTYL ETHYL ETHER | T | 0.00E-01 | 0.00E-01 | 0.00E-01 | 4 |
| 04 A 160* | P | A-CHLOROBUTYL ETHYL ETHER | T | 0.00E-01 | 0.00E-01 | 0.00E-01 | 5 |
| 04 A 180* | P | CHLOROPHENYL PHENYL ETHER | T | 1.30E 05 | 0.00E-01 | 0.00E-01 | |
| 04 A 180* | P | CHLOROPHENYL PHENYL ETHER | T | 0.00E-01 | 0.00E-01 | 0.00E-01 | 4 |
| 04 A 180* | P | CHLOROPHENYL PHENYL ETHER | T | 0.00E-01 | 0.00E-01 | 0.00E-01 | 5 |
| 04 B 020* | P | 1,1'-DICHLOROMETHYL ETHER | T | 1.30E 05 | 0.00E-01 | 0.00E-01 | |
| 04 B 020* | P | 1,1'-DICHLOROMETHYL ETHER | T | 0.00E-01 | 0.00E-01 | 0.00E-01 | 4 |
| 04 B 020* | P | 1,1'-DICHLOROMETHYL ETHER | T | 0.00E-01 | 0.00E-01 | 0.00E-01 | 5 |
| 21 A 140* | P | ANTHRACENE | T | 0.00E-01 | 0.00E-01 | 0.00E-01 | 3 |
| 04 B 040* | P W | 1,1'-DICHLORODIETHYL ETHER | T | 0.00E-01 | 0.00E-01 | 0.00E-01 | 4 |
| 04 B 040* | P W | 1,1'-DICHLORODIETHYL ETHER | T | 0.00E-01 | 0.00E-01 | 0.00E-01 | 5 |

CYCLONE DUST QUENCH WATER

APPROXIMATE FLOW RATE = 7.0 (0.007 L/S)

TOTAL ORGANIC LOADING = 59.9 MG/L

ORGANIC LOADING

59500.0

FLOW RATE = 7.00

MINIMUM DISCHARGE SEVERITY = .010

STATE: LIQUID, UNITS IN MICROGRAMS/L

IMPACT: HEALTH

EXPERIMENTALY DETERMINED DATA

SPARK SOURCE DATA

## CYCLONE DUST QUENCH WATER, HEALTH IMPACT

| DMEG NO. | | | COMPOUND NAME | TYPE | CONC E-6 G/L | DS | WDS G/S | LCCAT |
|---|---|---|---|---|---|---|---|---|
| 16 A 220 | | W | POLYCHLORINATED BIPHENYLS | T | 6.00E 04 | 1.20E 07 | 8.33E 07 | |
| 21 C 100* | P | W | BENZO(A)PYRENE | T | 6.00E 04 | 2.00E 05 | 1.40E 06 | |
| 21 C 080* | P | | DIBENZ(A,H)ANTHRACENE | T | 6.00E 04 | 4.30E 04 | 3.00E 05 | |
| 18 B 040 | | W | 1,3-DIHYDROXYBENZENE | T | 6.00E 04 | 1.20E 04 | 8.33E 04 | |
| 18 B 060 | | W | 1,4-DIHYDROXYBENZENE | T | 6.00E 04 | 1.20E 04 | 8.33E 04 | |
| 18 A 183 | | | 2,6-DIMETHYL-4-HEPTYL PHENOL | T | 6.00E 04 | 1.20E 04 | 8.33E 04 | |
| 18 B 020 | | W | CATECHOL | T | 6.00E 04 | 1.20E 04 | 8.33E 04 | |
| 18 C 040 | | W | 2-NAPHTHOL | T | 6.00E 04 | 1.20E 04 | 8.33E 04 | |
| 18 A 182 | | | 4,6-DI-TERT-BUTYL-M-CRESOL | T | 6.00E 04 | 1.20E 04 | 8.33E 04 | |
| 18 C 081 | | | 1-INDANOL | T | 6.00E 04 | 1.20E 04 | 8.33E 04 | |
| 18 C 082 | | | 4-INDANOL | T | 6.00E 04 | 1.20E 04 | 8.33E 04 | |
| 18 C 083 | | | 5-INDANOL | T | 6.00E 04 | 1.20E 04 | 8.33E 04 | |
| 19 A 020* | P | W | 2-CHLOROPHENOL | T | 6.00E 04 | 1.20E 04 | 8.33E 04 | |
| 18 B 080 | | W | 1,2,3-TRIHYDROXYBENZENE | T | 6.00E 04 | 1.20E 04 | 8.33E 04 | |
| 18 A 083 | | | P-ETHYLPHENOL | T | 6.00E 04 | 1.20E 04 | 8.33E 04 | |
| 19 A 040* | P | W | 2,4-DICHLOROPHENOL | T | 6.00E 04 | 1.20E 04 | 8.33E 04 | |
| 18 C 080 | | W | INDANOLS | T | 6.00E 04 | 1.20E 04 | 8.33E 04 | |
| 18 A 102 | | | P-PHENYLPHENOL | T | 6.00E 04 | 1.20E 04 | 8.33E 04 | |
| 19 A 060* | P | W | PENTACHLOROPHENOL | T | 6.00E 04 | 1.20E 04 | 8.33E 04 | |
| 18 A 120 | | W | 2,2'-DIHYDROXYDIPHENYL | T | 6.00E 04 | 1.20E 04 | 8.33E 04 | |
| 18 A 140 | | W | XYLENOLS | T | 6.00E 04 | 1.20E 04 | 8.33E 04 | |
| 19 B 020 | | W | CHLORINATED CRESOLS | T | 6.00E 04 | 1.20E 04 | 8.33E 04 | |
| 19 B 021 | | | CHLORINATED-O-CRESOLS | T | 6.00E 04 | 1.20E 04 | 8.33E 04 | |
| 19 B 022* | P | | CHLORINATED-M-CRESOLS | T | 6.00E 04 | 1.20E 04 | 8.33E 04 | |
| 18 A 041 | | | M-CRESOL | T | 6.00E 04 | 1.20E 04 | 8.33E 04 | |
| 18 A 143 | | | 2,5-XYLENOL | T | 6.00E 04 | 1.20E 04 | 8.33E 04 | |
| 19 B 023 | | | CHLORINATED-P-CRESOLS | T | 6.00E 04 | 1.20E 04 | 8.33E 04 | |
| 20 A 020* | P | W | 2-NITROPHENOL | T | 6.00E 04 | 1.20E 04 | 8.33E 04 | |
| 18 A 146 | | | 3,4-XYLENOL | T | 6.00E 04 | 1.20E 04 | 8.33E 04 | |
| 18 A 160 | | W | ETHYL CRESOLS | T | 6.00E 04 | 1.20E 04 | 8.33E 04 | |
| 18 A 082 | | | M-ETHYLPHENOL | T | 6.00E 04 | 1.20E 04 | 8.33E 04 | |
| 20 A 060* | P | W | 4-NITROPHENOL | T | 6.00E 04 | 1.20E 04 | 8.33E 04 | |
| 18 A 163 | | | 2-ETHYL-P-CRESOL | T | 6.00E 04 | 1.20E 04 | 8.33E 04 | |
| 18 A 101 | | | O-PHENYLPHENOL | T | 6.00E 04 | 1.20E 04 | 8.33E 04 | |

# CYCLONE DUST QUENCH WATER, HEALTH IMPACT

| DMEG NO. | COMPOUND NAME | TYPE | CONC E-6 G/L | DS | WDS G/S | LCCAT |
|---|---|---|---|---|---|---|
| 20 A 080 W | 2-AMINO-4,6-DINITROPHENOL | T | 6.00E 04 | 1.20E 04 | 8.33E 04 | |
| 20 A 100 W | DINITROPHENOLS | T | 6.00E 04 | 1.20E 04 | 8.33E 04 | |
| 20 A 101* P | 2,4-DINITROPHENOL | T | 6.00E 04 | 1.20E 04 | 8.33E 04 | |
| 18 A 020* P W | PHENOL | T | 6.00E 04 | 1.20E 04 | 8.33E 04 | |
| 18 A 141 | 2,3-XYLENOL | T | 6.00E 04 | 1.20E 04 | 8.33E 04 | |
| 20 A 102 | 2,5-DINITROPHENOL | T | 6.00E 04 | 1.20E 04 | 8.33E 04 | |
| 18 A 040 W | CRESOLS | T | 6.00E 04 | 1.20E 04 | 8.33E 04 | |
| 18 C 020 W | 1-NAPHTHOL | T | 6.00E 04 | 1.20E 04 | 8.33E 04 | |
| 18 A 042 | O-CRESOL | T | 6.00E 04 | 1.20E 04 | 8.33E 04 | |
| 18 A 043 | P-CRESOL | T | 6.00E 04 | 1.20E 04 | 8.33E 04 | |
| 18 A 060 W | 2-METHOXYPHENOL | T | 6.00E 04 | 1.20E 04 | 8.33E 04 | |
| 18 A 080 W | ETHYLPHENOLS | T | 6.00E 04 | 1.20E 04 | 8.33E 04 | |
| 18 A 081 | O-ETHYLPHENOL | T | 6.00E 04 | 1.20E 04 | 8.33E 04 | |
| 20 B 041 | 3,5-DINITRO-P-CRESOL | T | 6.00E 04 | 1.20E 04 | 8.33E 04 | |
| 20 B 042 | 2,6-DINITRO-P-CRESOL | T | 6.00E 04 | 1.20E 04 | 8.33E 04 | |
| 18 A 100 W | PHENYLPHENOLS | T | 6.00E 04 | 1.20E 04 | 8.33E 04 | |
| 18 A 180 W | POLYALKYLPHENOLS (MW>135) | T | 6.00E 04 | 1.20E 04 | 8.33E 04 | |
| 18 A 181 | 2,4,6-TRIMETHYL METHYL PHENOL | T | 6.00E 04 | 1.20E 04 | 8.33E 04 | |
| 18 A 103 | M-PHENYLPHENOL | T | 6.00E 04 | 1.20E 04 | 8.33E 04 | |
| 18 A 145 | 3,5-XYLENOL | T | 6.00E 04 | 1.20E 04 | 8.33E 04 | |
| 20 A 103 | 2,6-DINITROPHENOL | T | 6.00E 04 | 1.20E 04 | 8.33E 04 | |
| 20 B 040 W | DINITRO-P-CRESOLS | T | 6.00E 04 | 1.20E 04 | 8.33E 04 | |
| 18 A 142* P | 2,4-XYLENOL | T | 6.00E 04 | 1.20E 04 | 8.33E 04 | |
| 18 A 162 | 4-ETHYL-O-CRESOL | T | 6.00E 04 | 1.20E 04 | 8.33E 04 | |
| 20 A 040 W | 3-NITROPHENOL | T | 6.00E 04 | 1.20E 04 | 8.33E 04 | |
| 20 A 120 W | 2,4,6-TRINITROPHENOL | T | 6.00E 04 | 1.20E 04 | 8.33E 04 | |
| 18 A 144 | 2,6-XYLENOL | T | 6.00E 04 | 1.20E 04 | 8.33E 04 | |
| 20 B 020* P W | 4,6-DINITRO-O-CRESOL | T | 6.00E 04 | 1.20E 04 | 8.33E 04 | |
| 18 A 161 | 6-ETHYL-M-CRESOL | T | 6.00E 04 | 1.20E 04 | 8.33E 04 | |
| 02 A 380 W | HEXACHLOROCYCLOHEXANE | T | 6.00E 04 | 3.00E 03 | 2.10E 04 | |
| 21 B 080 | 3-METHYLCHOLANTHRENE | T | 6.00E 04 | 1.10E 03 | 7.43E 03 | |
| 04 B 020* P W | 1,1'-DICHLOROMETHYL ETHER | T | 6.00E 04 | 7.93E 02 | 5.60E 03 | |
| 21 D 040 W | DIBENZO(A,I)PYRENE | T | 6.00E 04 | 9.20E 01 | 6.40E 02 | |
| 21 B 040* P | BENZ(A)ANTHRACENE | T | 6.00E 04 | 8.90E 01 | 6.21E 02 | |

## CYCLONE DUST QUENCH WATER, HEALTH IMPACT

| DMEG NO. | | COMPOUND NAME | TYPE | CONC E-6 G/L | DS | WDS G/S | LCCAT |
|---|---|---|---|---|---|---|---|
| 12 A 020* | P W | N-NITROSODIMETHYLAMINE | T | 6.00E 04 | 6.00E 01 | 4.20E 02 | |
| 10 C 100 | | 1,4-DIAMINOBENZENE | T | 6.00E 04 | 4.00E 01 | 2.80E 02 | |
| 23 C 160 | W | DIBENZO(C,G)CARBAZOLE | T | 6.00E 04 | 4.00E 01 | 2.80E 02 | |
| 02 B 140* | P W | HEXACHLOROCYCLOPENTADIENE | T | 6.00E 04 | 3.71E 01 | 2.60E 02 | |
| 10 C 040 | | AMINOTOLUENES | T | 6.00E 04 | 3.50E 01 | 2.50E 02 | |
| 10 C 043 | | 4-AMINOTOLUENE | T | 6.00E 04 | 3.50E 01 | 2.50E 02 | |
| 10 C 042 | | 3-AMINOTOLUENE | T | 6.00E 04 | 3.50E 01 | 2.50E 02 | |
| 10 C 041 | | 2-AMINOTOLUENE | T | 6.00E 04 | 3.50E 01 | 2.50E 02 | |
| 12 A 040* | P | N-NITROSODIETHYLAMINE | T | 6.00E 04 | 3.30E 01 | 2.31E 02 | |
| 23 B 100 | W | DIHYDROACRIDINE | T | 6.00E 04 | 2.40E 01 | 1.70E 02 | |
| 10 C 220 | | 2-AMINONAPHTHALENE | T | 6.00E 04 | 2.40E 01 | 1.70E 02 | |
| 21 B 108 | | ISOPROPYL BENZO(C)PHENANTHRENE | T | 6.00E 04 | 1.80E 01 | 1.22E 02 | |
| 21 B 103 | | 2-METHYL BENZO(C)PHENANTHRENE | T | 6.00E 04 | 1.80E 01 | 1.22E 02 | |
| 21 B 100 | | BENZO(C)PHENANTHRENE & ALKYL DERIVATIVES | T | 6.00E 04 | 1.80E 01 | 1.22E 02 | |
| 23 B 240 | | DIBENZ(A,H)ACRIDINE | T | 6.00E 04 | 1.80E 01 | 1.22E 02 | |
| 21 B 109 | | 6-ETHYL BENZO(C)PHENANTHRENE | T | 6.00E 04 | 1.80E 01 | 1.22E 02 | |
| 21 B 10A | | N-PROPYL BENZO(C)PHENANTHRENE | T | 6.00E 04 | 1.80E 01 | 1.22E 02 | |
| 21 B 101 | | BENZO(C)PHENANTHRENE | T | 6.00E 04 | 1.80E 01 | 1.22E 02 | |
| 21 B 104 | | 5-METHYL BENZO(C)PHENANTHRENE | T | 6.00E 04 | 1.80E 01 | 1.22E 02 | |
| 21 B 107 | | 8-METHYL BENZO(C)PHENANTHRENE | T | 6.00E 04 | 1.80E 01 | 1.22E 02 | |
| 21 B 108 | | 2-ETHYL BENZO(C)PHENANTHRENE | T | 6.00E 04 | 1.80E 01 | 1.22E 02 | |
| 21 B 106 | | 7-METHYL BENZO(C)PHENANTHRENE | T | 6.00E 04 | 1.80E 01 | 1.22E 02 | |
| 21 B 102 | | 1-METHYL BENZO(C)PHENANTHRENE | T | 6.00E 04 | 1.80E 01 | 1.22E 02 | |
| 21 B 105 | | 6-METHYL BENZO(C)PHENANTHRENE | T | 6.00E 04 | 1.60E 01 | 1.12E 02 | |
| 23 B 220 | | DIBENZ(A,J)ACRIDINE | T | 6.00E 04 | 1.23E 01 | 8.70E 01 | |
| 08 B 060 | W | B-PROPIOLACTONE | T | 6.00E 04 | 7.93E 00 | 5.60E 01 | |
| 10 C 082 | | M-ANISIDINE | T | 6.00E 04 | 7.93E 00 | 5.60E 01 | |
| 13 A 100 | W | BENZENETHIOL | T | 6.00E 04 | 7.93E 00 | 5.60E 01 | |
| 10 C 081 | | O-ANISIDINE | T | 6.00E 04 | 7.93E 00 | 5.60E 01 | |
| 10 C 080 | | ANISIDINES | T | 6.00E 04 | 7.93E 00 | 5.60E 01 | |
| 10 C 083 | | P-ANISIDINE | T | 6.00E 04 | 7.00E 00 | 4.90E 01 | |
| 10 C 200 | | 1-AMINONAPHTHALENE | T | 6.00E 04 | 5.00E 00 | 3.50E 01 | |
| 13 A 140 | | PERCHLOROMETHANETHIOL | T | 6.00E 04 | 5.00E 00 | 3.50E 01 | |
| 14 B 020 | W | DIMETHYL SULFOXIDE | | | | | |

CYCLONE DUST QUENCH WATER, HEALTH IMPACT

| OMEG NO. | COMPOUND NAME | TYPE | CONC E-6 G/L | DS | WDS G/S | LOCAT |
|---|---|---|---|---|---|---|
| 22 C 080* P W | BENZO(B)FLUORANTHENE | T | 6.00E 04 | 4.60E 00 | 3.20E 01 | |
| 17 B 040 W | 1-CHLORO-2-NITROBENZENE | T | 6.00E 04 | 4.00E 00 | 2.80E 01 | |
| 15 A 160 W | BIPHENYL | T | 6.00E 04 | 4.00E 00 | 2.80E 01 | |
| 08 C 060 W | 6-HEXANELACTAM | T | 6.00E 04 | 4.00E 00 | 2.80E 01 | |
| 10 C 140* P | BENZIDINE | T | 6.00E 04 | 4.00E 00 | 2.80E 01 | |
| 17 B 060 W | 1-CHLORO-4-NITROBENZENE | T | 6.00E 04 | 4.00E 00 | 2.80E 01 | |
| 08 A 123 | STEARIC ACID | T | 6.00E 04 | 3.71E 00 | 2.60E 01 | |
| 08 A 122 | PALMITIC ACID | T | 6.00E 04 | 3.71E 00 | 2.60E 01 | |
| 08 A 120 W | SATURATED LONG CHAIN ACIDS (MW:228-285) | T | 6.00E 04 | 3.71E 00 | 2.60E 01 | |
| 08 A 121 | MYRISTIC ACID | T | 6.00E 04 | 3.71E 00 | 2.60E 01 | |
| 21 D 060 | DIBENZO(A,L)PYRENE | T | 6.00E 04 | 3.71E 00 | 2.60E 01 | |
| 72 A 010 | IRON (AS FE+2) | D | 4.90E 03 | 3.30E 00 | 2.30E 01 | |
| 12 B 020 W | N-METHYL-N-NITROSOANILINE | T | 6.00E 04 | 3.13E 00 | 2.20E 01 | |
| 17 A 060 W | 4-NITROBIPHENYL | T | 6.00E 04 | 3.00E 00 | 2.10E 01 | |
| 10 C 120 | 4-AMINOBIPHENYL | T | 6.00E 04 | 3.00E 00 | 2.10E 01 | |
| 02 A 180 | DIBROMODICHLOROMETHANE | T | 6.00E 04 | 2.83E 00 | 2.00E 01 | |
| 17 A 081* P | 2,6-DINITROTOLUENE | T | 6.00E 04 | 2.60E 00 | 1.81E 01 | |
| 17 A 083 | 2,3-DINITROTOLUENE | T | 6.00E 04 | 2.60E 00 | 1.81E 01 | |
| 17 A 082 | 3,4-DINITROTOLUENE | T | 6.00E 04 | 2.60E 00 | 1.81E 01 | |
| 17 A 085 | 2,5-DINITROTOLUENE | T | 6.00E 04 | 2.60E 00 | 1.81E 01 | |
| 17 A 086 | 3,5-DINITROTOLUENE | T | 6.00E 04 | 2.60E 00 | 1.81E 01 | |
| 17 A 084* P | 2,4-DINITROTOLUENE | T | 6.00E 04 | 2.60E 00 | 1.81E 01 | |
| 17 A 080 | DINITROTOLUENES | T | 6.00E 04 | 2.60E 00 | 1.81E 01 | |
| 22 C 020* P | BENZO(K)FLUORANTHENE | T | 6.00E 04 | 2.50E 00 | 1.73E 01 | |
| 22 D 020* P W | INDENO(1,2,3-CD)PYRENE | T | 6.00E 04 | 2.50E 00 | 1.73E 01 | |
| 21 A 180* P W | PHENANTHRENE | T | 6.00E 04 | 2.50E 00 | 1.73E 01 | |
| 21 B 140 | METHYL CHRYSENES | T | 6.00E 04 | 2.20E 00 | 1.54E 01 | |
| 21 B 141 | 4-METHYL CHRYSENE | T | 6.00E 04 | 2.20E 00 | 1.54E 01 | |
| 21 B 142 | 5-METHYL CHRYSENE | T | 6.00E 04 | 2.20E 00 | 1.54E 01 | |
| 04 A 060 W | 1-CHLORO-1,3-EPOXYPROPANE | T | 6.00E 04 | 2.00E 00 | 1.40E 01 | |
| 04 A 040 W | 2-CHLORO-1,2-EPOXYPROPANE | T | 6.00E 04 | 2.00E 00 | 1.40E 01 | |
| 04 A 050 W | EPICHLORHYDRIN | T | 6.00E 04 | 2.00E 00 | 1.40E 01 | |
| 15 B 060 W | 4,4'-DIPHENYLBIPHENYL | T | 6.00E 04 | 2.00E 00 | 1.40E 01 | |
| 21 B 120* P | CHRYSENE | T | 6.00E 04 | 1.80E 00 | 1.30E 01 | |

## CYCLONE DUST QUENCH WATER, HEALTH IMPACT

| DMEG NO. | | COMPOUND NAME | TYPE | CONC E-6 G/L | DS | WDS G/S | LCCAT |
|---|---|---|---|---|---|---|---|
| 12 A 060* | P | N-NITROSODIPROPYLAMINE | T | 6.00E 04 | 1.70E 00 | 1.20E 01 | |
| 21 C 160 | | PICENE | T | 6.00E 04 | 1.60E 00 | 1.10E 01 | |
| 23 C 020 | | PYRROLE | T | 6.00E 04 | 1.50E 00 | 1.01E 01 | |
| 09 A 120 | W | TETRAMETHYLSUCCINONITRILE | T | 6.00E 04 | 1.32E 00 | 9.30E 00 | |
| 21 C 120 | | BENZO(E)PYRENE | T | 6.00E 04 | 1.30E 00 | 9.10E 00 | |
| 08 A 140 | | OLEIC ACID | T | 6.00E 04 | 1.20E 00 | 8.32E 00 | |
| 03 B 040 | W | 1,3-DIOXANE | T | 6.00E 04 | 1.10E 00 | 7.71E 00 | |
| 03 B 020 | W | 1,4-DIOXANE | T | 6.00E 04 | 1.10E 00 | 7.71E 00 | |
| 21 D 020 | | DIBENZO(A,H)PYRENE | T | 6.00E 04 | 1.10E 00 | 7.43E 00 | |
| 02 B 120* | P | HEXACHLOROBUTADIENE | T | 6.00E 04 | 9.80E-01 | 6.82E 00 | |
| 23 D 020 | W | BENZOTHIAZOLE | T | 6.00E 04 | 9.30E-01 | 6.50E 00 | |
| 23 D 040 | | METHYL BENZOTHIAZOLE | T | 6.00E 04 | 8.40E-01 | 5.90E 00 | |
| 08 D 280* | P W | PHTHALATE ESTERS (MW:194-279) | T | 6.00E 04 | 7.93E-01 | 5.60E 00 | |
| 08 D 281 | | DIMETHYL PHTHALATE | T | 6.00E 04 | 7.93E-01 | 5.60E 00 | |
| 08 D 300* | P | DI-2-ETHYLHEXYL PHTHALATE | T | 6.00E 04 | 7.93E-01 | 5.60E 00 | |
| 08 D 283 | | DI-N-BUTYL PHTHALATE | T | 6.00E 04 | 7.93E-01 | 5.60E 00 | |
| 17 A 020* | P | NITROBENZENE | T | 6.00E 04 | 7.93E-01 | 5.60E 00 | |
| 02 A 160* | P | BROMOFORM | T | 6.00E 04 | 7.93E-01 | 5.60E 00 | |
| 16 B 020 | W | A-CHLOROTOLUENE | T | 6.00E 04 | 7.93E-01 | 5.60E 00 | |
| 08 D 282 | | DIETHYL PHTHALATE | T | 6.00E 04 | 6.83E-01 | 4.80E 00 | |
| 08 A 103 | | CAPRIC ACID | T | 6.00E 04 | 6.83E-01 | 4.80E 00 | |
| 08 A 101 | | CAPROIC ACID | T | 6.00E 04 | 6.83E-01 | 4.80E 00 | |
| 08 A 104 | | LAURIC ACID | T | 6.00E 04 | 6.83E-01 | 4.80E 00 | |
| 08 A 100 | | SATURATED LONG CHAIN ACIDS (MW:116-201) | T | 6.00E 04 | 6.83E-01 | 4.80E 00 | |
| 08 A 102 | | CAPRYLIC ACID | T | 6.00E 04 | 6.80E-01 | 4.73E 00 | |
| 23 A 103 | | 4-CHLOROPYRIDINE | T | 6.00E 04 | 6.80E-01 | 4.73E 00 | |
| 23 A 101 | | 2-CHLOROPYRIDINE | T | 6.00E 04 | 6.80E-01 | 4.73E 00 | |
| 23 A 102 | | 3-CHLOROPYRIDINE | T | 6.00E 04 | 6.80E-01 | 4.73E 00 | |
| 23 A 100 | W | CHLOROPYRIDINES | T | 6.00E 04 | 6.61E-01 | 4.62E 00 | |
| 10 A 060 | | ETHANOLAMINE | T | 6.00E 04 | 6.61E-01 | 4.62E 00 | |
| 23 C 180 | | DIBENZO(A,G)CARBAZOLE | T | 6.00E 04 | 6.10E-01 | 4.24E 00 | |
| 22 C 040 | | BENZO(J)FLUORANTHENE | T | 6.00E 04 | 6.00E-01 | 4.20E 00 | |
| 16 B 043 | | 1,4-BIS(CHLOROMETHYL)BENZENE | T | 6.00E 04 | 6.00E-01 | 4.20E 00 | |
| 16 B 042 | | 1,3-BIS(CHLOROMETHYL)BENZENE | | | | | |

CYCLONE DUST QUENCH WATER, HEALTH IMPACT

| DMEG NO. | | COMPOUND NAME | TYPE | CONC E-6 G/L | DS | WDS G/S | LCCAT |
|---|---|---|---|---|---|---|---|
| 16 B 041 | | 1,2-BIS(CHLOROMETHYBENZENE | T | 6.00E 04 | 6.00E-01 | 4.20E 00 | |
| 16 B 040 | | BIS(CHLOROMETHYL)BENZENES | T | 6.00E 04 | 6.00E-01 | 4.20E 00 | |
| 49 A 010 | P | ARSENIC | D | 1.20E 02 | 4.80E-01 | 3.40E 00 | |
| 15 B 163 | | P-TERPHENYL | T | 6.00E 04 | 4.30E-01 | 3.00E 00 | |
| 15 B 162 | | M-TERPHENYL | T | 6.00E 04 | 4.30E-01 | 3.00E 00 | |
| 15 B 160 | | TERPHENYLS | T | 6.00E 04 | 4.30E-01 | 3.00E 00 | |
| 15 B 161 | | O-TERPHENYL | T | 6.00E 04 | 4.30E-01 | 3.00E 00 | |
| 02 A 320* | P | HEXACHLOROETHANE | T | 6.00E 04 | 4.00E-01 | 2.80E 00 | |
| 21 C 060 | | DIBENZ(A,C)ANTHRACENE | T | 6.00E 04 | 4.00E-01 | 2.80E 00 | |
| 06 A 020 | W | ETHYLENE GLYCOL | T | 6.00E 04 | 4.00E-01 | 2.80E 00 | |
| 46 A 010 | P | LEAD | D | 9.90E 01 | 4.00E-01 | 2.80E 00 | |
| 23 B 200 | | BENZ(C)ACRIDINE | T | 6.00E 04 | 3.71E-01 | 2.60E 00 | |
| 04 B 100 | | 2,2'-DICHLORODIISOPROPYL ETHER | T | 6.00E 04 | 3.71E-01 | 2.60E 00 | |
| 04 A 140* | P | 2-CHLOROETHYL VINYL ETHER | T | 6.00E 04 | 3.50E-01 | 2.44E 00 | |
| 02 B 104 | | TRANS-1,3-DICHLOROPROPENE | T | 6.00E 04 | 3.50E-01 | 2.44E 00 | |
| 23 C 040 | | INDOLE | T | 6.00E 04 | 3.50E-01 | 2.44E 00 | |
| 02 B 103 | | CIS-1,3-DICHLOROPROPENE | T | 6.00E 04 | 3.50E-01 | 2.44E 00 | |
| 02 B 100* | P | DICHLOROPROPENES | T | 6.00E 04 | 3.50E-01 | 2.44E 00 | |
| 07 B 100 | W | CAMPHOR | T | 6.00E 04 | 3.30E-01 | 2.31E 00 | |
| 23 C 140 | | DIBENZO(A,I)CARBAZOLE | T | 6.00E 04 | 3.30E-01 | 2.31E 00 | |
| 16 A 160* | P | POLYCHLORINATED BENZENES | T | 6.00E 04 | 3.30E-01 | 2.31E 00 | |
| 16 A 162 | | HEXACHLOROBENZENE | T | 6.00E 04 | 3.30E-01 | 2.31E 00 | |
| 16 A 161 | | 1,2,4-TRICHLOROBENZENE | T | 6.00E 04 | 3.30E-01 | 2.31E 00 | |
| 08 D 080 | | METHYL METHACRYLATE | T | 6.00E 04 | 2.83E-01 | 2.00E 00 | |
| 28 A 010 | | SODIUM | D | 2.20E 05 | 2.80E-01 | 1.92E 00 | |
| 23 A 020 | | PYRIDINE | T | 6.00E 04 | 2.60E-01 | 1.81E 00 | |
| 23 B 021 | | QUINOLINE | T | 6.00E 04 | 2.50E-01 | 1.73E 00 | |
| 21 C 040 | | BENZO(G)CHRYSENE | T | 6.00E 04 | 2.50E-01 | 1.73E 00 | |
| 23 B 022 | | ISOQUINOLINE | T | 6.00E 04 | 2.50E-01 | 1.73E 00 | |
| 23 B 020 | | QUINOLINES | T | 6.00E 04 | 2.50E-01 | 1.73E 00 | |
| 34 A 010 | | CALCIUM (AS CA+2) | D | 5.40E 04 | 2.30E-01 | 1.60E 00 | |
| 23 A 145 | | 3,4-DIMETHYLPYRIDINE | T | 6.00E 04 | 2.20E-01 | 1.54E 00 | |
| 23 A 143 | | 2,5-DIMETHYLPYRIDINE | T | 6.00E 04 | 2.20E-01 | 1.54E 00 | |
| 23 A 141 | | 2,3-DIMETHYLPYRIDINE | T | 6.00E 04 | 2.20E-01 | 1.54E 00 | |

CYCLONE DUST QUENCH WATER, HEALTH IMPACT

| DMEG NO. | | COMPOUND NAME | TYPE | CONC E-6 G/L | DS | WDS G/S | LCCAT |
|---|---|---|---|---|---|---|---|
| 23 A 142 | | 2,4-DIMETHYLPYRIDINE | T | 6.00E 04 | 2.20E-01 | 1.54E 00 | |
| 05 B 100 | W | 1-PHENYLETHANOL | T | 6.00E 04 | 2.20E-01 | 1.54E 00 | |
| 23 A 144 | | 2,6-DIMETHYLPYRIDINE | T | 6.00E 04 | 2.20E-01 | 1.54E 00 | |
| 23 A 140 | | DISUBSTITUTED POLYSUBSTITUTED ALKYL PYRIDINES | T | 6.00E 04 | 2.20E-01 | 1.54E 00 | |
| 23 A 146 | | 2,3,4,6-TETRAMETHYL PYRIDINE | T | 6.00E 04 | 2.12E-01 | 1.50E 00 | |
| 23 C 120 | | BENZO(A)CARBAZOLE | T | 6.00E 04 | 2.10E-01 | 1.43E 00 | |
| 10 C 020 | | ANILINE | T | 6.00E 04 | 1.80E-01 | 1.30E 00 | |
| 09 A 100 | | 1,3-DICYANO-1-HYDROXYBUTANE | T | 6.00E 04 | 1.80E-01 | 1.30E 00 | |
| 09 A 080 | | BUTYRONITRILE | T | 6.00E 04 | 1.80E-01 | 1.22E 00 | |
| 23 C 102 | | 9-METHYLCARBAZOLE | T | 6.00E 04 | 1.80E-01 | 1.22E 00 | |
| 25 A 042 | | 3-METHYLTHIOPHENE | T | 6.00E 04 | 1.80E-01 | 1.22E 00 | |
| 25 A 040 | | METHYLTHIOPHENES | T | 6.00E 04 | 1.80E-01 | 1.22E 00 | |
| 23 C 101 | | 3-METHYLCARBAZOLE | T | 6.00E 04 | 1.80E-01 | 1.22E 00 | |
| 25 A 041 | | 2-METHYLTHIOPHENE | T | 6.00E 04 | 1.80E-01 | 1.22E 00 | |
| 08 A 080 | | VALERIC ACID | T | 6.00E 04 | 1.80E-01 | 1.22E 00 | |
| 23 C 100 | | METHYLCARBAZOLES | T | 6.00E 04 | 1.70E-01 | 1.20E 00 | |
| 25 B 040 | W | BENZO(B)THIOPHENE | T | 6.00E 04 | 1.70E-01 | 1.20E 00 | |
| 23 B 260 | | DIBENZ(C,H)ACRIDINE | T | 6.00E 04 | 1.70E-01 | 1.20E 00 | |
| 23 C 080 | | CARBAZOLE | T | 6.00E 04 | 1.60E-01 | 1.10E 00 | |
| 10 A 080 | | 1,2-DIAMINOETHANE | T | 6.00E 04 | 1.60E-01 | 1.10E 00 | |
| 10 C 066 | | 3,5-XYLIDINE | T | 6.00E 04 | 1.60E-01 | 1.10E 00 | |
| 08 A 040 | | ACETIC ACID | T | 6.00E 04 | 1.60E-01 | 1.10E 00 | |
| 10 C 065 | | 3,4-XYLIDINE | T | 6.00E 04 | 1.60E-01 | 1.10E 00 | |
| 10 D 020 | W | N,N-DIMETHYLANILINE | T | 6.00E 04 | 1.60E-01 | 1.10E 00 | |
| 10 C 061 | | 2,3-XYLIDINE | T | 6.00E 04 | 1.60E-01 | 1.10E 00 | |
| 10 C 063 | | 2,5-XYLIDINE | T | 6.00E 04 | 1.60E-01 | 1.10E 00 | |
| 10 C 064 | | 2,6-XYLIDINE | T | 6.00E 04 | 1.60E-01 | 1.10E 00 | |
| 07 B 080* | P | ISOPHORONE | T | 6.00E 04 | 1.60E-01 | 1.10E 00 | |
| 10 C 062 | | 2,4-XYLIDINE | T | 6.00E 04 | 1.60E-01 | 1.10E 00 | |
| 10 C 060 | | DIMETHYLANILINES | T | 6.00E 04 | 1.52E-01 | 1.10E 00 | |
| 25 A 064 | | 3,4-DIMETHYLTHIOPHENE | T | 6.00E 04 | 1.52E-01 | 1.10E 00 | |
| 25 A 063 | | 2,5-DIMETHYLTHIOPHENE | T | 6.00E 04 | 1.52E-01 | 1.10E 00 | |
| 25 A 060 | | DIMETHYLTHIOPHENES | T | 6.00E 04 | 1.52E-01 | 1.10E 00 | |
| 25 A 062 | | 2,4-DIMETHYLTHIOPHENE | T | 6.00E 04 | 1.52E-01 | 1.10E 00 | |

# CYCLONE DUST QUENCH WATER, HEALTH IMPACT

| DMEG NO. | | | COMPOUND NAME | TYPE | CONC E-6 G/L | DS | WDS G/S | LCCAT |
|---|---|---|---|---|---|---|---|---|
| 25 A 061 | | | 2,3-DIMETHYLTHIOPHENE | T | 6.00E 04 | 1.52E-01 | 1.10E 00 | |
| 04 A 200 | | | 4-BROMOPHENYL PHENYL ETHER | T | 6.00E 04 | 1.50E-01 | 1.01E 00 | |
| 04 A 180* | P | | CHLOROPHENYL PHENYL ETHER | T | 6.00E 04 | 1.50E-01 | 1.01E 00 | |
| 38 A 010 | | | ALUMINUM | D | 1.10E 04 | 1.40E-01 | 9.62E-01 | |
| 25 A 081 | | | 2,3,5-TRIMETHYLTHIOPHENE | T | 6.00E 04 | 1.40E-01 | 9.50E-01 | |
| 25 A 080 | | | TRIMETHYL AND TETRAMETHYL THIOPHENES | T | 6.00E 04 | 1.40E-01 | 9.50E-01 | |
| 04 B 080 | | | 2,2'-DICHLORODIETHYL ETHER | T | 6.00E 04 | 1.32E-01 | 9.30E-01 | |
| 17 A 042 | | | 3-NITROTOLUENE | T | 6.00E 04 | 1.32E-01 | 9.30E-01 | |
| 01 B 220 | | W | DICYCLOPENTADIENE | T | 6.00E 04 | 1.32E-01 | 9.30E-01 | |
| 04 B 040* | P | | 1,1'-DICHLORODIETHYL ETHER | T | 6.00E 04 | 1.32E-01 | 9.30E-01 | |
| 17 A 043 | | | 4-NITROTOLUENE | T | 6.00E 04 | 1.32E-01 | 9.30E-01 | |
| 08 C 020 | | | FORMAMIDE | T | 6.00E 04 | 1.32E-01 | 9.30E-01 | |
| 17 A 040 | | | NITROTOLUENES | T | 6.00E 04 | 1.32E-01 | 9.30E-01 | |
| 17 A 041 | | | 2-NITROTOLUENE | T | 6.00E 04 | 1.32E-01 | 9.30E-01 | |
| 08 A 060 | | | MALEIC ACID | T | 6.00E 04 | 1.23E-01 | 8.70E-01 | |
| 33 A 010 | | | MAGNESIUM | D | 1.10E 04 | 1.22E-01 | 8.60E-01 | |
| 09 B 042 | | | B-NAPHTHONITRILES | T | 6.00E 04 | 1.21E-01 | 8.50E-01 | |
| 09 B 040 | | W | NAPHTHONITRILES | T | 6.00E 04 | 1.21E-01 | 8.50E-01 | |
| 09 B 041 | | | A-NAPHTHONITRILES | T | 6.00E 04 | 1.21E-01 | 8.50E-01 | |
| 09 B 020 | | W | BENZONITRILE | T | 6.00E 04 | 1.21E-01 | 8.50E-01 | |
| 27 A 010 | | | LITHIUM | S | 4.00E 01 | 1.21E-01 | 8.50E-01 | |
| 54 A 010 | P | | SELENIUM | S | 6.00E 00 | 1.20E-01 | 8.40E-01 | |
| 36 A 010 | | | BARIUM | D | 5.70E 02 | 1.14E-01 | 8.00E-01 | |
| 23 A 043 | | | 4-METHYLPYRIDINE | T | 6.00E 04 | 1.12E-01 | 7.90E-01 | |
| 23 A 042 | | | 3-METHYLPYRIDINE | T | 6.00E 04 | 1.12E-01 | 7.90E-01 | |
| 23 A 041 | | | 2-METHYLPYRIDINE | T | 6.00E 04 | 1.12E-01 | 7.90E-01 | |
| 10 A 120 | | | PROPANOLAMINES | T | 6.00E 04 | 1.10E-01 | 7.71E-01 | |
| 10 A 122 | | | 3-AMINO-1-PROPANOL | T | 6.00E 04 | 1.10E-01 | 7.71E-01 | |
| 26 A 020 | | W | TRIETHYL PHOSPHATE | T | 6.00E 04 | 1.10E-01 | 7.71E-01 | |
| 08 B 080 | | | Y-BUTYROLACTONE | T | 6.00E 04 | 1.10E-01 | 7.71E-01 | |
| 10 A 121 | | | 2-AMINO-1-PROPANOL | T | 6.00E 04 | 1.10E-01 | 7.71E-01 | |
| 10 A 123 | | | 1-AMINO-2-PROPANOL | T | 6.00E 04 | 1.10E-01 | 7.71E-01 | |
| 12 A 080 | | | N-NITROSODIISOPROPYLAMINE | T | 6.00E 04 | 1.04E-01 | 7.30E-01 | |
| 82 A 010 | P | | CADMIUM | D | < 5.00E 00< | 1.00E-01< | 7.00E-01 | |

CYCLONE DUST QUENCH WATER, HEALTH IMPACT

| DMEG NO. | | COMPOUND NAME | TYPE | CONC E-6 G/L | DS | WDS G/S | LCCAT |
|---|---|---|---|---|---|---|---|
| 08 B 041 | | 2-HYDROXYBENZOIC ACID | T | 6.00E 04 | 9.91E-02 | 6.94E-01 | |
| 14 A 020 | W | BENZENESULFONIC ACID | T | 6.00E 04 | 9.91E-02 | 6.94E-01 | |
| 10 A 160 | | CYCLOHEXYLAMINE | T | 6.00E 04 | 9.91E-02 | 6.94E-01 | |
| 07 B 120 | | ACETOPHENONE | T | 6.00E 04 | 9.80E-02 | 6.82E-01 | |
| 23 C 060 | | METHYLINDOLES | T | 6.00E 04 | 8.74E-02 | 6.12E-01 | |
| 02 A 140* | P | DIBROMOCHLOROMETHANE | T | 6.00E 04 | 8.74E-02 | 6.12E-01 | |
| 23 C 062 | | 3-METHYLINDOLE | T | 6.00E 04 | 8.74E-02 | 6.12E-01 | |
| 23 C 061 | | 2-METHYLINDOLE | T | 6.00E 04 | 8.74E-02 | 6.12E-01 | |
| 05 C 040 | W | T-PENTANOL | T | 6.00E 04 | 8.74E-02 | 6.12E-01 | |
| 22 A 010 | W | INDENE | T | 6.00E 04 | 8.74E-02 | 6.12E-01 | |
| 76 A 010 | P | NICKEL | D | < 2.00E 01< | 8.70E-02< | 6.10E-01 | |
| 21 A 020* | P | NAPHTHALENE | T | 6.00E 04 | 7.93E-02 | 5.60E-01 | |
| 23 B 062 | | 2,6-DIMETHYLQUINOLINE | T | 6.00E 04 | 7.20E-02 | 5.01E-01 | |
| 23 B 060 | | DIMETHYLQUINOLINES | T | 6.00E 04 | 7.20E-02 | 5.01E-01 | |
| 23 B 061 | | 2,3-DIMETHYLQUINOLINE | T | 6.00E 04 | 7.20E-02 | 5.01E-01 | |
| 23 B 064 | | 3,4-DIMETHYLQUINOLINE | T | 6.00E 04 | 7.20E-02 | 5.01E-01 | |
| 23 B 065 | | 6,8-DIMETHYLQUINOLINE | T | 6.00E 04 | 7.20E-02 | 5.01E-01 | |
| 23 B 067 | | 1,5-DIMETHYLISOQUINOLINE | T | 6.00E 04 | 7.20E-02 | 5.01E-01 | |
| 23 B 040 | | 2-METHYLQUINOLINE | T | 6.00E 04 | 7.20E-02 | 5.01E-01 | |
| 05 A 140 | W | BENZYL ALCOHOL | T | 6.00E 04 | 7.20E-02 | 5.01E-01 | |
| 23 B 063 | | 2,8-DIMETHYLQUINOLINE | T | 6.00E 04 | 7.20E-02 | 5.01E-01 | |
| 23 B 066 | | 1,3-DIMETHYLISOQUINOLINE | T | 6.00E 04 | 7.20E-02 | 5.01E-01 | |
| 21 A 140* | P | ANTHRACENE | T | 6.00E 04 | 7.10E-02 | 5.00E-01 | |
| 02 A 361 | | 1-BROMOBUTANE | T | 6.00E 04 | 7.00E-02 | 4.90E-01 | |
| 02 A 360 | | BROMOBUTANES | T | 6.00E 04 | 7.00E-02 | 4.90E-01 | |
| 07 A 140 | | BENZALDEHYDE | T | 6.00E 04 | 6.80E-02 | 4.73E-01 | |
| 08 D 160 | | METHYL BENZOATE | T | 6.00E 04 | 6.53E-02 | 4.60E-01 | |
| 16 A 200* | P | CHLORONAPHTHALENES | T | 6.00E 04 | 6.00E-02 | 4.20E-01 | |
| 23 A 082 | | 3-PHENYLPYRIDINE | T | 6.00E 04 | 6.00E-02 | 4.20E-01 | |
| 23 A 083 | | 4-PHENYLPYRIDINE | T | 6.00E 04 | 6.00E-02 | 4.20E-01 | |
| 16 A 201 | | 1-CHLORONAPHTHALENE | T | 6.00E 04 | 6.00E-02 | 4.20E-01 | |
| 23 A 064 | | 4-N-PROPYLPYRIDINE | T | 6.00E 04 | 6.00E-02 | 4.20E-01 | |
| 23 A 080 | | PHENYLPYRIDINES | T | 6.00E 04 | 6.00E-02 | 4.20E-01 | |
| 23 A 120 | | COLLIDINES | T | 6.00E 04 | 6.00E-02 | 4.20E-01 | |

# CYCLONE DUST QUENCH WATER, HEALTH IMPACT

| DMEG NO. | | COMPOUND NAME | TYPE | CONC E-6 G/L | DS | WDS G/S | LCCAT |
|---|---|---|---|---|---|---|---|
| 10 B 100 | | MORPHOLINE | T | 6.00E 04 | 6.00E-02 | 4.20E-01 | |
| 16 A 202 | | 2-CHLORONAPHTHALENE | T | 6.00E 04 | 6.00E-02 | 4.20E-01 | |
| 23 A 060 | | MONOSUBSTITUTED ALKYL PYRIDINES | T | 6.00E 04 | 6.00E-02 | 4.20E-01 | |
| 23 A 062 | | 3-ETHYLPYRIDINE | T | 6.00E 04 | 6.00E-02 | 4.20E-01 | |
| 23 A 063 | | 4-ETHYLPYRIDINE | T | 6.00E 04 | 6.00E-02 | 4.20E-01 | |
| 23 A 122 | | 2,4,6-COLLIDINE | T | 6.00E 04 | 6.00E-02 | 4.20E-01 | |
| 23 A 081 | | 2-PHENYLPYRIDINE | T | 6.00E 04 | 6.00E-02 | 4.20E-01 | |
| 23 A 121 | | 5-ETHYL-2-METHYLPYRIDINE | T | 6.00E 04 | 6.00E-02 | 4.20E-01 | |
| 23 A 061 | | 2-ETHYLPYRIDINE | T | 6.00E 04 | 6.00E-02 | 4.20E-01 | |
| 08 D 200 | | DIETHYL ADIPATE | T | 6.00E 04 | 5.40E-02 | 3.80E-01 | |
| 07 B 181 | | CARVONE(D OR L) | T | 6.00E 04 | 5.40E-02 | 3.80E-01 | |
| 07 B 180 | | CARVONES | T | 6.00E 04 | 5.40E-02 | 3.80E-01 | |
| 07 B 182 | | DIHYDRO-(D OR L)CARVONE | T | 6.00E 04 | 5.40E-02 | 3.80E-01 | |
| 56 A 010 | | FLUORINE (AS F-) | D | 2.00E 03 | 5.30E-02 | 3.70E-01 | |
| 12 A 100 | | N-NITROSODIPENTYLAMINE | T | 6.00E 04 | 5.00E-02 | 3.50E-01 | |
| 05 A 160 | | PHENETHYL ALCOHOL | T | 6.00E 04 | 5.00E-02 | 3.50E-01 | |
| 23 B 160 | | BENZO(H)QUINOLINE | T | 6.00E 04 | 4.30E-02 | 3.00E-01 | |
| 22 B 040* | P W | FLUORANTHENE | T | 6.00E 04 | 4.30E-02 | 3.00E-01 | |
| 23 B 140 | | BENZO(F)QUINOLINE | T | 6.00E 04 | 4.30E-02 | 3.00E-01 | |
| 23 B 120 | | PHENANTHRIDINE | T | 6.00E 04 | 4.30E-02 | 3.00E-01 | |
| 13 B 080 | | METHYL DISULFIDE | T | 6.00E 04 | 4.30E-02 | 3.00E-01 | |
| 13 B 060 | | DIPHENYL SULFIDE | T | 6.00E 04 | 4.30E-02 | 3.00E-01 | |
| 05 B 120 | | BORNEOL | T | 6.00E 04 | 4.30E-02 | 3.00E-01 | |
| 23 B 080 | | ACRIDINE | T | 6.00E 04 | 4.30E-02 | 3.00E-01 | |
| 83 A 010 | P | MERCURY | D | 4.00E-01 | 4.00E-02 | 2.80E-01 | |
| 15 A 142 | | SEC-BUTYL BENZENE | T | 6.00E 04 | 4.00E-02 | 2.80E-01 | |
| 15 A 141 | | N-BUTYL BENZENE | T | 6.00E 04 | 4.00E-02 | 2.80E-01 | |
| 15 A 143 | | TERT-BUTYL BENZENE | T | 6.00E 04 | 4.00E-02 | 2.80E-01 | |
| 15 A 140 | | BUTYL BENZENES | T | 6.00E 04 | 4.00E-02 | 2.80E-01 | |
| 15 B 203 | | 1,2,4,5-TETRAMETHYLBENZENE | T | 6.00E 04 | 3.30E-02 | 2.31E-01 | |
| 15 B 200 | | TETRAMETHYLBENZENES | T | 6.00E 04 | 3.30E-02 | 2.31E-01 | |
| 15 B 180 | | TRIMETHYLBENZENES | T | 6.00E 04 | 3.30E-02 | 2.31E-01 | |
| 15 B 182 | | 1,2,4-TRIMETHYLBENZENE | T | 6.00E 04 | 3.30E-02 | 2.31E-01 | |
| 15 B 202 | | 1,2,3,5-TETRAMETHYLBENZENE | T | 6.00E 04 | 3.30E-02 | 2.31E-01 | |

CYCLONE DUST QUENCH WATER, HEALTH IMPACT

| DMEG NO. | | COMPOUND NAME | TYPE | CONC E-6 G/L | DS | WDS G/S | LCCAT |
|---|---|---|---|---|---|---|---|
| 15 B 181 | | 1,2,3-TRIMETHYLBENZENE | T | 6.00E 04 | 3.30E-02 | 2.31E-01 | |
| 15 B 183 | | 1,3,5-TRIMETHYLBENZENE | T | 6.00E 04 | 3.30E-02 | 2.31E-01 | |
| 15 B 201 | | 1,2,3,4-TETRAMETHYLBENZENE | T | 6.00E 04 | 3.30E-02 | 2.31E-01 | |
| 15 B 142 | | 1,4-DIHYDRONAPHTHALENE | T | 6.00E 04 | 3.13E-02 | 2.20E-01 | |
| 15 B 140 | | DIHYDRONAPHTHALENES | T | 6.00E 04 | 3.13E-02 | 2.20E-01 | |
| 03 B 060 | | 2-ETHYL-4-METHYL-1,3-DIOXOLANE | T | 6.00E 04 | 3.13E-02 | 2.20E-01 | |
| 15 B 141 | | 1,2-DIHYDRONAPHTHALENE | T | 6.00E 04 | 3.13E-02 | 2.20E-01 | |
| 26 B 040 | W | TRITOTYL PHOSPHATES | T | 6.00E 04 | 3.00E-02 | 2.10E-01 | |
| 15 B 120 | | TETRAHYDRONAPHTHALENE | T | 6.00E 04 | 3.00E-02 | 2.10E-01 | |
| 08 D 320* | P | BUTYL BENZYL PHTHALATE | T | 6.00E 04 | 2.83E-02 | 2.00E-01 | |
| 08 A 160 | | BENZOIC ACID | T | 6.00E 04 | 2.83E-02 | 2.00E-01 | |
| 14 A 044 | | 9,10-ANTHRAQUINONE-1,8-DISULFONIC ACID | T | 6.00E 04 | 2.70E-02 | 1.90E-01 | |
| 14 A 043 | | 9,10-ANTHRAQUINONE-1,7-DISULFONIC ACID | T | 6.00E 04 | 2.70E-02 | 1.90E-01 | |
| 14 A 041 | | 9,10-ANTHRAQUINONE-1,5-DISULFONIC ACID | T | 6.00E 04 | 2.70E-02 | 1.90E-01 | |
| 48 A 010 | | PHOSPHORUS | S | 4.00E 02 | 2.70E-02 | 1.90E-01 | |
| 57 A 010 | | CHLORINE (AS CL-) | D | 3.40E 04 | 2.61E-02 | 1.83E-01 | |
| 06 B 020 | W | 2,3-EPOXY-1-PROPANOL | T | 6.00E 04 | 2.60E-02 | 1.81E-01 | |
| 05 A 100 | | ISOBUTYL ALCOHOL | T | 6.00E 04 | 2.60E-02 | 1.81E-01 | |
| 05 A 080 | | N-BUTANOL | T | 6.00E 04 | 2.60E-02 | 1.81E-01 | |
| 03 A 040 | W | 3-METHOXYBIPHENYL | T | 6.00E 04 | 2.50E-02 | 1.73E-01 | |
| 05 B 080 | | 2,6-DIMETHYL-4-HEPTANOL | T | 6.00E 04 | 2.50E-02 | 1.73E-01 | |
| 08 A 180 | | ADIPIC ACID | T | 6.00E 04 | 2.50E-02 | 1.73E-01 | |
| 35 A 010 | | STRONTIUM | D | 1.10E 03 | 2.40E-02 | 1.70E-01 | |
| 37 A 010 | | BORON | D | 9.90E 02 | 2.10E-02 | 1.50E-01 | |
| 05 C 060 | | A-TERPINEOL | T | 6.00E 04 | 2.10E-02 | 1.43E-01 | |
| 68 A 010 | P | CHROMIUM | D | < 5.00E 00< | 2.00E-02< | 1.40E-01 | |
| 17 B 020 | | METHOXYNITROBENZENES | T | 6.00E 04 | 1.90E-02 | 1.30E-01 | |
| 17 B 022 | | 1-METHOXY-3-NITROBENZENE | T | 6.00E 04 | 1.90E-02 | 1.30E-01 | |
| 17 B 021 | | 1-METHOXY-2-NITROBENZENE | T | 6.00E 04 | 1.90E-02 | 1.30E-01 | |
| 17 B 023 | | 1-METHOXY-4-NITROBENZENE | T | 6.00E 04 | 1.90E-02 | 1.30E-01 | |
| 21 A 081 | | 1,4-DIMETHYLNAPHTHALENE | T | 6.00E 04 | 1.80E-02 | 1.22E-01 | |
| 21 A 044 | | 2-ETHYLNAPHTHALENE | T | 6.00E 04 | 1.80E-02 | 1.22E-01 | |
| 21 A 043 | | 1-ETHYLNAPHTHALENE | T | 6.00E 04 | 1.80E-02 | 1.22E-01 | |
| 21 A 083 | | 2,6-DIMETHYLNAPHTHALENE | T | 6.00E 04 | 1.80E-02 | 1.22E-01 | |

CYCLONE DUST QUENCH WATER, HEALTH IMPACT

| DMEG NO. | | COMPOUND NAME | TYPE | CONC E-6 G/L | US | WDS G/S | LCCAT |
|---|---|---|---|---|---|---|---|
| 15 B 020 | | INDAN | T | 6.00E 04 | 1.80E-02 | 1.22E-01 | |
| 21 A 040 | | MONOALKYL NAPHTHALENES | T | 6.00E 04 | 1.80E-02 | 1.22E-01 | |
| 21 A 042 | | 2-METHYLNAPHTHALENE | T | 6.00E 04 | 1.80E-02 | 1.22E-01 | |
| 21 A 080 | | DIMETHYLNAPHTHALENES | T | 6.00E 04 | 1.80E-02 | 1.22E-01 | |
| 21 A 041 | | 1-METHYLNAPHTHALENE | T | 6.00E 04 | 1.80E-02 | 1.22E-01 | |
| 21 A 082 | | 2,3-DIMETHYLNAPHTHALENE | T | 6.00E 04 | 1.80E-02 | 1.22E-01 | |
| 21 B 180* | P | PYRENE | T | 6.00E 04 | 1.70E-02 | 1.20E-01 | |
| 15 A 120 | | ISOPROPYL BENZENE | T | 6.00E 04 | 1.60E-02 | 1.11E-01 | |
| 15 A 100 | | PROPYL BENZENE | T | 6.00E 04 | 1.60E-02 | 1.11E-01 | |
| 08 D 240 | | DI-2-ETHYLBUTYL ADIPATE | T | 6.00E 04 | 1.60E-02 | 1.10E-01 | |
| 16 A 180 | | 2-CHLOROTOLUENE | T | 6.00E 04 | 1.60E-02 | 1.10E-01 | |
| 26 B 020 | | TRIPHENYL PHOSPHATE | T | 6.00E 04 | 1.40E-02 | 9.70E-02 | |
| 43 A 010 | | SILICON | S | 2.00E 03 | 1.33E-02 | 9.33E-02 | |
| 16 A 100* | P | 1,2-DICHLOROBENZENE | T | 6.00E 04 | 1.32E-02 | 9.30E-02 | |
| 16 A 120* | P | 1,3-DICHLOROBENZENE | T | 6.00E 04 | 1.32E-02 | 9.30E-02 | |
| 74 A 010 | | COBALT | S | 9.00E 00 | 1.20E-02 | 8.40E-02 | |
| 02 A 340* | P | DICHLOROPROPANES | T | 6.00E 04 | 1.12E-02 | 7.90E-02 | |
| 01 A 201 | | N-OCTANE | T | 6.00E 04 | 1.12E-02 | 7.90E-02 | |
| 02 A 343 | | 1,3-DICHLOROPROPANE | T | 6.00E 04 | 1.12E-02 | 7.90E-02 | |
| 01 A 200 | W | OCTANES | T | 6.00E 04 | 1.12E-02 | 7.90E-02 | |
| 16 A 020* | P | CHLOROBENZENE | T | 6.00E 04 | 1.12E-02 | 7.90E-02 | |
| 05 B 062 | | 3-PENTANOL | T | 6.00E 04 | 1.10E-02 | 7.71E-02 | |
| 05 A 123 | | 2,2-DIMETHYL-1-PROPANOL | T | 6.00E 04 | 1.10E-02 | 7.71E-02 | |
| 05 A 124 | | 3-METHYL-1-BUTANOL | T | 6.00E 04 | 1.10E-02 | 7.71E-02 | |
| 05 A 121 | | N-PENTANOL | T | 6.00E 04 | 1.10E-02 | 7.71E-02 | |
| 05 B 061 | | 2-PENTANOL | T | 6.00E 04 | 1.10E-02 | 7.71E-02 | |
| 05 A 120 | | PENTANOLS (PRIMARY) | T | 6.00E 04 | 1.10E-02 | 7.71E-02 | |
| 05 B 063 | | 3-METHYL-2-BUTANOL | T | 6.00E 04 | 1.10E-02 | 7.71E-02 | |
| 05 A 122 | | 2-METHYL-1-BUTANOL | T | 6.00E 04 | 1.10E-02 | 7.71E-02 | |
| 05 B 060 | | PENTANOLS (SECONDARY) | T | 6.00E 04 | 1.10E-02 | 7.71E-02 | |
| 15 A 040* | P | TOLUENE | T | 6.00E 04 | 1.10E-02 | 7.43E-02 | |
| 16 A 083 | | 1-BROMO-4-CHLOROBENZENE | T | 6.00E 04 | 1.00E-02 | 7.10E-02 | |
| 16 A 080 | | BROMOCHLOROBENZENES | T | 6.00E 04 | 1.00E-02 | 7.10E-02 | |
| 16 A 082 | | 1-BROMO-3-CHLOROBENZENE | T | 6.00E 04 | 1.00E-02 | 7.10E-02 | |

CYCLONE DUST QUENCH WATER, HEALTH IMPACT

| DMEG NO. | | COMPOUND NAME | TYPE | CONC E-6 G/L | DS | WDS G/S | LOCAT |
|---|---|---|---|---|---|---|---|
| 16 A 081 | | 1-BROMO-2-CHLOROBENZENE | T | 6.00E 04 | 1.00E-02 | 7.10E-02 | |
| 15 A 060* | P | ETHYL BENZENE | T | 6.00E 04 | 9.20E-03 | 6.40E-02 | |
| 16 A 140* | P | 1,4-DICHLOROBENZENE | T | 6.00E 04 | 8.74E-03 | 6.12E-02 | |
| 79 A 010 | P | SILVER | S | 2.00E 00 | 8.00E-03 | 5.60E-02 | |
| 65 A 010 | | VANADIUM | D | 1.50E 01 | 6.00E-03 | 4.20E-02 | |
| 02 B 080* | P | TETRACHLOROETHENE | T | 6.00E 04 | 5.94E-03 | 4.20E-02 | |
| 71 A 010 | P | MANGANESE | D | < 1.00E 00< | 4.00E-03< | 2.80E-02 | |
| 78 A 010 | P | COPPER | D | 1.20E 01 | 2.40E-03 | 1.70E-02 | |
| 62 A 010 | | TITANIUM | D | 1.80E 02 | 2.00E-03 | 1.40E-02 | |
| 81 A 010 | P | ZINC | D | 3.50E 01 | 1.40E-03 | 9.80E-03 | |
| 44 A 010 | | GERMANIUM | S | 7.00E 00 | 8.33E-04 | 5.83E-03 | |
| 39 A 010 | | GALLIUM | S | 2.00E 01 | 2.70E-04 | 1.90E-03 | |
| 61 A 010 | | YTTRIUM (AS Y+3) | S | 2.00E 00 | 1.33E-04 | 9.33E-04 | |
| 63 A 010 | | ZIRCONIUM (AS ZR+4) | S | 5.00E 00 | 6.70E-05 | 4.70E-04 | |
| 69 A 010 | | MOLYBDENUM | S | 4.00E 00 | 5.33E-05 | 3.73E-04 | |
| 30 A 010 | | RUBIDIUM (AS RB+) | S | 2.00E 01 | 1.11E-05 | 7.80E-05 | |
| 84 B 010 | | CERIUM | S | 2.00E 00 | 3.63E-06 | 2.54E-05 | |
| 31 A 010 | | CESIUM | S | 4.00E 00 | 3.33E-06 | 2.33E-05 | |
| 04 A 160* | P | A-CHLOROBUTYL ETHYL ETHER | T | 0.00E-01 | 0.00E-01 | 0.00E-01 | 4 |
| 04 A 180* | P | CHLOROPHENYL PHENYL ETHER | T | 0.00E-01 | 0.00E-01 | 0.00E-01 | 5 |
| 58 A 010 | | BROMINE | S | 4.00E 01 | 0.00E-01 | 0.00E-01 | |
| 04 A 180* | P | CHLOROPHENYL PHENYL ETHER | T | 0.00E-01 | 0.00E-01 | 0.00E-01 | 4 |
| 21 A 020* | P | NAPHTHALENE | T | 0.00E-01 | 0.00E-01 | 0.00E-01 | 3 |
| 19 A 060* | P W | PENTACHLOROPHENOL | T | 0.00E-01 | 0.00E-01 | 0.00E-01 | 5 |
| 02 B 140* | P W | HEXACHLOROCYCLOPENTADIENE | T | 0.00E-01 | 0.00E-01 | 0.00E-01 | 1 |
| 45 A 010 | | TIN | D | 2.90E 03 | 0.00E-01 | 0.00E-01 | |
| 21 B 040* | P | BENZ(A)ANTHRACENE | T | 0.00E-01 | 0.00E-01 | 0.00E-01 | 2 |
| 04 A 140* | P | 2-CHLOROETHYL VINYL ETHER | T | 0.00E-01 | 0.00E-01 | 0.00E-01 | 5 |
| 18 A 142* | P | 2,4-XYLENOL | T | 0.00E-01 | 0.00E-01 | 0.00E-01 | 5 |
| 08 D 280* | P W | PHTHALATE ESTERS (MW:194-279) | T | 0.00E-01 | 0.00E-01 | 0.00E-01 | 5 |
| 02 B 120* | P | HEXACHLOROBUTADIENE | T | 0.00E-01 | 0.00E-01 | 0.00E-01 | 2 |
| 17 A 084* | P | 2,4-DINITROTOLUENE | T | 0.00E-01 | 0.00E-01 | 0.00E-01 | 4 |
| 53 A 010 | | SULFUR | D | 2.30E 04 | 0.00E-01 | 0.00E-01 | |
| 21 A 100* | PH | ACENAPHTHENE | T | 0.00E-01 | 0.00E-01 | 0.00E-01 | 3 |

CYCLONE DUST QUENCH WATER, HEALTH IMPACT

| DMEG NO. | COMPOUND NAME | TYPE | CONC E-6 G/L | DS | WDS G/S | LCCAT |
|---|---|---|---|---|---|---|
| 08 D 300* P | DI-2-ETHYLHEXYL PHTHALATE | T | 0.00E-01 | 0.00E-01 | 0.00E-01 | 5 |
| 17 A 081* P | 2,6-DINITROTOLUENE | T | 0.00E-01 | 0.00E-01 | 0.00E-01 | 4 |
| 21 A 120* PH | ACENAPHTHYLENE | T | 0.00E-01 | 0.00E-01 | 0.00E-01 | 3 |
| 04 B 020* P W | 1,1'-DICHLOROMETHYL ETHER | T | 0.00E-01 | 0.00E-01 | 0.00E-01 | 5 |
| 21 C 080* P | DIBENZ(A,H)ANTHRACENE | T | 0.00E-01 | 0.00E-01 | 0.00E-01 | 3 |
| 02 A 320* P | HEXACHLOROETHANE | T | 0.00E-01 | 0.00E-01 | 0.00E-01 | 2 |
| 02 B 080* P | TETRACHLOROETHENE | T | 0.00E-01 | 0.00E-01 | 0.00E-01 | 1 |
| 21 A 180* P W | PHENANTHRENE | T | 0.00E-01 | 0.00E-01 | 0.00E-01 | 2 |
| 16 A 200* P | CHLORONAPHTHALENES | T | 0.00E-01 | 0.00E-01 | 0.00E-01 | 2 |
| 02 B 140* P W | HEXACHLOROCYCLOPENTADIENE | T | 0.00E-01 | 0.00E-01 | 0.00E-01 | 2 |
| 18 A 020* P W | PHENOL | T | 0.00E-01 | 0.00E-01 | 0.00E-01 | 5 |
| 08 D 300* P | DI-2-ETHYLHEXYL PHTHALATE | T | 0.00E-01 | 0.00E-01 | 0.00E-01 | 6 |
| 17 A 081* P | 2,6-DINITROTOLUENE | T | 0.00E-01 | 0.00E-01 | 0.00E-01 | 5 |
| 08 D 280* P W | PHTHALATE ESTERS (MW:194-279) | T | 0.00E-01 | 0.00E-01 | 0.00E-01 | 6 |
| 02 B 120* P | HEXACHLOROBUTADIENE | T | 0.00E-01 | 0.00E-01 | 0.00E-01 | 1 |
| 21 B 180* P | PYRENE | T | 0.00E-01 | 0.00E-01 | 0.00E-01 | 2 |
| 21 B 180* P | PYRENE | T | 0.00E-01 | 0.00E-01 | 0.00E-01 | 3 |
| 17 A 084* P | 2,4-DINITROTOLUENE | T | 0.00E-01 | 0.00E-01 | 0.00E-01 | 5 |
| 59 A 010 | IODINE (AS I-) | S | 6.00E 00 | 0.00E-01 | 0.00E-01 | |
| 17 A 020* P | NITROBENZENE | T | 0.00E-01 | 0.00E-01 | 0.00E-01 | 4 |
| 21 A 020* P | NAPHTHALENE | T | 0.00E-01 | 0.00E-01 | 0.00E-01 | 2 |
| 22 B 040* P W | FLUORANTHENE | T | 0.00E-01 | 0.00E-01 | 0.00E-01 | 2 |
| 21 A 100* PH | ACENAPHTHENE | T | 6.00E 04 | 0.00E-01 | 0.00E-01 | |
| 04 A 160* P | A-CHLOROBUTYL ETHYL ETHER | T | 0.00E-01 | 0.00E-01 | 0.00E-01 | 5 |
| 22 C 020* P | BENZO(K)FLUORANTHENE | T | 0.00E-01 | 0.00E-01 | 0.00E-01 | 2 |
| 22 C 020* P | BENZO(K)FLUORANTHENE | T | 0.00E-01 | 0.00E-01 | 0.00E-01 | 3 |
| 21 B 120* P | CHRYSENE | T | 0.00E-01 | 0.00E-01 | 0.00E-01 | 2 |
| 21 B 120* P | CHRYSENE | T | 0.00E-01 | 0.00E-01 | 0.00E-01 | 3 |
| 22 C 080* P W | BENZO(B)FLUORANTHENE | T | 0.00E-01 | 0.00E-01 | 0.00E-01 | 2 |
| 22 C 080* P W | BENZO(B)FLUORANTHENE | T | 0.00E-01 | 0.00E-01 | 0.00E-01 | 3 |
| 22 B 040* P W | FLUORANTHENE | T | 0.00E-01 | 0.00E-01 | 0.00E-01 | 3 |
| 08 D 320* P | BUTYL BENZYL PHTHALATE | T | 0.00E-01 | 0.00E-01 | 0.00E-01 | 6 |
| 22 D 020* P W | INDENO(1,2,3-CD)PYRENE | T | 0.00E-01 | 0.00E-01 | 0.00E-01 | 3 |
| 10 C 140* P | BENZIDINE | T | 0.00E-01 | 0.00E-01 | 0.00E-01 | 6 |

## CYCLONE DUST QUENCH WATER, HEALTH IMPACT

| DMEG NO. | COMPOUND NAME | TYPE | CONC E-6 G/L | DS | WDS G/S | LCCAT |
|---|---|---|---|---|---|---|
| 02 B 080* P | TETRACHLOROETHENE | T | 0.00E-01 | 0.00E-01 | 0.00E-01 | 2 |
| 21 A 120* PH | ACENAPHTHYLENE | T | 6.00E 04 | 0.00E-01 | 0.00E-01 | |
| 02 B 100* P | DICHLOROPROPENES | T | 0.00E-01 | 0.00E-01 | 0.00E-01 | 1 |
| 17 A 020* P | NITROBENZENE | T | 0.00E-01 | 0.00E-01 | 0.00E-01 | 5 |
| 12 A 020* P W | N-NITROSODIMETHYLAMINE | T | 0.00E-01 | 0.00E-01 | 0.00E-01 | 5 |
| 12 A 020* P W | N-NITROSODIMETHYLAMINE | T | 0.00E-01 | 0.00E-01 | 0.00E-01 | 6 |
| 29 A 010 | POTASSIUM | S | > 1.00E 04> | 0.00E-01> | 0.00E-01 | |
| 12 A 040* P | N-NITROSODIETHYLAMINE | T | 0.00E-01 | 0.00E-01 | 0.00E-01 | 5 |
| 12 A 040* P | N-NITROSODIETHYLAMINE | T | 0.00E-01 | 0.00E-01 | 0.00E-01 | 6 |
| 16 A 200* P | CHLORONAPHTHALENES | T | 0.00E-01 | 0.00E-01 | 0.00E-01 | 3 |
| 12 A 060* P | N-NITROSODIPROPYLAMINE | T | 0.00E-01 | 0.00E-01 | 0.00E-01 | 5 |
| 12 A 060* P | N-NITROSODIPROPYLAMINE | T | 0.00E-01 | 0.00E-01 | 0.00E-01 | 6 |
| 21 B 040* P | BENZ(A)ANTHRACENE | T | 0.00E-01 | 0.00E-01 | 0.00E-01 | 3 |
| 10 C 140* P | BENZIDINE | T | 0.00E-01 | 0.00E-01 | 0.00E-01 | 5 |
| 22 D 020* P W | INDENO(1,2,3-CD)PYRENE | T | 0.00E-01 | 0.00E-01 | 0.00E-01 | 2 |
| 21 D 080* PH | BENZO(GHI)PERYLENE | T | 0.00E-01 | 0.00E-01 | 0.00E-01 | 3 |
| 02 A 140* P | DIBROMOCHLOROMETHANE | T | 0.00E-01 | 0.00E-01 | 0.00E-01 | 1 |
| 02 A 140* P | DIBROMOCHLOROMETHANE | T | 0.00E-01 | 0.00E-01 | 0.00E-01 | 2 |
| 04 A 140* P | 2-CHLOROETHYL VINYL ETHER | T | 0.00E-01 | 0.00E-01 | 0.00E-01 | 4 |
| 02 A 160* P | BROMOFORM | T | 0.00E-01 | 0.00E-01 | 0.00E-01 | 1 |
| 19 A 020* P W | 2-CHLOROPHENOL | T | 0.00E-01 | 0.00E-01 | 0.00E-01 | 5 |
| 19 A 020* P W | 2-CHLOROPHENOL | T | 0.00E-01 | 0.00E-01 | 0.00E-01 | 6 |
| 04 A 160* P | A-CHLOROBUTYL ETHYL ETHER | T | 6.00E 04 | 0.00E-01 | 0.00E-01 | |
| 19 A 040* P W | 2,4-DICHLOROPHENOL | T | 0.00E-01 | 0.00E-01 | 0.00E-01 | 5 |
| 19 A 040* P W | 2,4-DICHLOROPHENOL | T | 0.00E-01 | 0.00E-01 | 0.00E-01 | 6 |
| 15 A 040* P | TOLUENE | T | 0.00E-01 | 0.00E-01 | 0.00E-01 | 2 |
| 15 A 040* P | TOLUENE | T | 0.00E-01 | 0.00E-01 | 0.00E-01 | 3 |
| 19 A 060* P W | PENTACHLOROPHENOL | T | 0.00E-01 | 0.00E-01 | 0.00E-01 | 6 |
| 15 A 060* P | ETHYL BENZENE | T | 0.00E-01 | 0.00E-01 | 0.00E-01 | 2 |
| 15 A 060* P | ETHYL BENZENE | T | 0.00E-01 | 0.00E-01 | 0.00E-01 | 3 |
| 08 D 320* P | BUTYL BENZYL PHTHALATE | T | 0.00E-01 | 0.00E-01 | 0.00E-01 | 5 |
| 19 B 022* P | CHLORINATED-M-CRESOLS | T | 0.00E-01 | 0.00E-01 | 0.00E-01 | 5 |
| 19 B 022* P | CHLORINATED-M-CRESOLS | T | 0.00E-01 | 0.00E-01 | 0.00E-01 | 6 |
| 04 B 040* P | 1,1'-DICHLORODIETHYL ETHER | T | 0.00E-01 | 0.00E-01 | 0.00E-01 | 4 |

# CYCLONE DUST QUENCH WATER, HEALTH IMPACT

| DMEG NO. | COMPOUND NAME | TYPE | CONC E-6 G/L | DS | WDS G/S | LCCAT |
|---|---|---|---|---|---|---|
| 04 B 040* P | 1,1'-DICHLORODIETHYL ETHER | T | 0.00E-01 | 0.00E-01 | 0.00E-01 | 5 |
| 20 A 020* P W | 2-NITROPHENOL | T | 0.00E-01 | 0.00E-01 | 0.00E-01 | 5 |
| 20 A 020* P W | 2-NITROPHENOL | T | 0.00E-01 | 0.00E-01 | 0.00E-01 | 6 |
| 02 B 100* P | DICHLOROPROPENES | T | 0.00E-01 | 0.00E-01 | 0.00E-01 | 2 |
| 21 C 080* P | DIBENZ(A,H)ANTHRACENE | T | 0.00E-01 | 0.00E-01 | 0.00E-01 | 2 |
| 20 A 060* P W | 4-NITROPHENOL | T | 0.00E-01 | 0.00E-01 | 0.00E-01 | 5 |
| 20 A 060* P W | 4-NITROPHENOL | T | 0.00E-01 | 0.00E-01 | 0.00E-01 | 6 |
| 21 C 100* P W | BENZO(A)PYRENE | T | 0.00E-01 | 0.00E-01 | 0.00E-01 | 2 |
| 21 C 100* P W | BENZO(A)PYRENE | T | 0.00E-01 | 0.00E-01 | 0.00E-01 | 3 |
| 21 A 180* P W | PHENANTHRENE | T | 0.00E-01 | 0.00E-01 | 0.00E-01 | 3 |
| 20 A 101* P | 2,4-DINITROPHENOL | T | 0.00E-01 | 0.00E-01 | 0.00E-01 | 5 |
| 20 A 101* P | 2,4-DINITROPHENOL | T | 0.00E-01 | 0.00E-01 | 0.00E-01 | 6 |
| 18 A 020* P W | PHENOL | T | 0.00E-01 | 0.00E-01 | 0.00E-01 | 6 |
| 04 B 020* P W | 1,1'-DICHLOROMETHYL ETHER | T | 0.00E-01 | 0.00E-01 | 0.00E-01 | 4 |
| 21 D 080* PH | BENZO(GHI)PERYLENE | T | 6.00E 04 | 0.00E-01 | 0.00E-01 | |
| 21 D 080* PH | BENZO(GHI)PERYLENE | T | 0.00E-01 | 0.00E-01 | 0.00E-01 | 2 |
| 20 B 020* P W | 4,6-DINITRO-O-CRESOL | T | 0.00E-01 | 0.00E-01 | 0.00E-01 | 5 |
| 20 B 020* P W | 4,6-DINITRO-O-CRESOL | T | 0.00E-01 | 0.00E-01 | 0.00E-01 | 6 |
| 22 A 020* PH | FLUORENE | T | 6.00E 04 | 0.00E-01 | 0.00E-01 | |
| 22 A 020* PH | FLUORENE | T | 0.00E-01 | 0.00E-01 | 0.00E-01 | 2 |
| 22 A 020* PH | FLUORENE | T | 0.00E-01 | 0.00E-01 | 0.00E-01 | 3 |
| 02 A 160* P | BROMOFORM | T | 0.00E-01 | 0.00E-01 | 0.00E-01 | 2 |
| 16 A 020* P | CHLOROBENZENE | T | 0.00E-01 | 0.00E-01 | 0.00E-01 | 2 |
| 16 A 020* P | CHLOROBENZENE | T | 0.00E-01 | 0.00E-01 | 0.00E-01 | 3 |
| 02 A 320* P | HEXACHLOROETHANE | T | 0.00E-01 | 0.00E-01 | 0.00E-01 | 1 |
| 07 B 080* P | ISOPHORONE | T | 0.00E-01 | 0.00E-01 | 0.00E-01 | 5 |
| 07 B 080* P | ISOPHORONE | T | 0.00E-01 | 0.00E-01 | 0.00E-01 | 6 |
| 02 A 340* P | DICHLOROPROPANES | T | 0.00E-01 | 0.00E-01 | 0.00E-01 | 1 |
| 02 A 340* P | DICHLOROPROPANES | T | 0.00E-01 | 0.00E-01 | 0.00E-01 | 2 |
| 16 A 100* P | 1,2-DICHLOROBENZENE | T | 0.00E-01 | 0.00E-01 | 0.00E-01 | 2 |
| 16 A 100* P | 1,2-DICHLOROBENZENE | T | 0.00E-01 | 0.00E-01 | 0.00E-01 | 3 |
| 18 A 142* P | 2,4-XYLENOL | T | 0.00E-01 | 0.00E-01 | 0.00E-01 | 6 |
| 16 A 120* P | 1,3-DICHLOROBENZENE | T | 0.00E-01 | 0.00E-01 | 0.00E-01 | 2 |
| 16 A 120* P | 1,3-DICHLOROBENZENE | T | 0.00E-01 | 0.00E-01 | 0.00E-01 | 3 |

CYCLONE DUST QUENCH WATER, HEALTH IMPACT

| DMEG NO. | COMPOUND NAME | TYPE | CONC E-6 G/L | DS | WDS G/S | LCCAT |
|---|---|---|---|---|---|---|
| 21 A 100* PH | ACENAPHTHENE | T | 0.00E-01 | 0.00E-01 | 0.00E-01 | 2 |
| 16 A 140* P | 1,4-DICHLOROBENZENE | T | 0.00E-01 | 0.00E-01 | 0.00E-01 | 2 |
| 16 A 140* P | 1,4-DICHLOROBENZENE | T | 0.00E-01 | 0.00E-01 | 0.00E-01 | 3 |
| 21 A 120* PH | ACENAPHTHYLENE | T | 0.00E-01 | 0.00E-01 | 0.00E-01 | 2 |
| 16 A 160* P | POLYCHLORINATED BENZENES | T | 0.00E-01 | 0.00E-01 | 0.00E-01 | 2 |
| 16 A 160* P | POLYCHLORINATED BENZENES | T | 0.00E-01 | 0.00E-01 | 0.00E-01 | 3 |
| 21 A 140* P | ANTHRACENE | T | 0.00E-01 | 0.00E-01 | 0.00E-01 | 2 |
| 21 A 140* P | ANTHRACENE | T | 0.00E-01 | 0.00E-01 | 0.00E-01 | 3 |

CYCLONE DUST QUENCH WATER

APPROXIMATE FLOW RATE = 7 G/S (0.007 L/S)

TOTAL ORGANIC LOADING = 59.9 MG/L

ORGANIC LOADING

59500.0

FLOW RATE = 7.00

MINIMUM DISCHARGE SEVERITY = .010

STATE: LIQUID, UNITS IN MICROGRAMS/L

IMPACT: ECOLOGY

EXPERIMENTALY DETERMINED DATA

SPARK SOURCE DATA

## CYCLONE DUST QUENCH WATER, ECOLOGY IMPACT

| DMEG NO. | | COMPOUND NAME | TYPE | CONC E-6 G/L | DS | WDS G/S | LCCAT |
|---|---|---|---|---|---|---|---|
| 16 A 220 | W | POLYCHLORINATED BIPHENYLS | T | 6.00E 04 | 1.20E 07 | 8.33E 07 | |
| 02 A 380 | W | HEXACHLOROCYCLOHEXANE | T | 6.00E 04 | 3.00E 06 | 2.10E 07 | |
| 08 D 282 | | DIETHYL PHTHALATE | T | 6.00E 04 | 4.00E 04 | 2.80E 05 | |
| 08 D 283 | | DI-N-BUTYL PHTHALATE | T | 6.00E 04 | 4.00E 04 | 2.80E 05 | |
| 08 D 281 | | DIMETHYL PHTHALATE | T | 6.00E 04 | 4.00E 04 | 2.80E 05 | |
| 08 D 280* | P W | PHTHALATE ESTERS (MW:194-279) | T | 6.00E 04 | 4.00E 04 | 2.80E 05 | |
| 19 A 060* | P W | PENTACHLOROPHENOL | T | 6.00E 04 | 2.40E 03 | 1.70E 04 | |
| 48 A 010 | | PHOSPHORUS | S | 4.00E 02 | 8.00E 02 | 5.60E 03 | |
| 16 A 082 | | 1-BROMO-3-CHLOROBENZENE | T | 6.00E 04 | 6.00E 02 | 4.20E 03 | |
| 16 A 063 | | 1,4-DIBROMOBENZENE | T | 6.00E 04 | 6.00E 02 | 4.20E 03 | |
| 21 A 020* | P | NAPHTHALENE | T | 6.00E 04 | 6.00E 02 | 4.20E 03 | |
| 16 A 081 | | 1-BROMO-2-CHLOROBENZENE | T | 6.00E 04 | 6.00E 02 | 4.20E 03 | |
| 16 A 060 | | DIBROMOBENZENES | T | 6.00E 04 | 6.00E 02 | 4.20E 03 | |
| 16 A 083 | | 1-BROMO-4-CHLOROBENZENE | T | 6.00E 04 | 6.00E 02 | 4.20E 03 | |
| 16 A 062 | | 1,3-DIBROMOBENZENE | T | 6.00E 04 | 6.00E 02 | 4.20E 03 | |
| 16 B 040 | | BIS(CHLOROMETHYL)BENZENES | T | 6.00E 04 | 6.00E 02 | 4.20E 03 | |
| 16 B 041 | | 1,2-BIS(CHLOROMETHYBENZENE | T | 6.00E 04 | 6.00E 02 | 4.20E 03 | |
| 16 A 160* | P | POLYCHLORINATED BENZENES | T | 6.00E 04 | 6.00E 02 | 4.20E 03 | |
| 01 B 220 | W | DICYCLOPENTADIENE | T | 6.00E 04 | 6.00E 02 | 4.20E 03 | |
| 16 A 061 | | 1,2-DIBROMOBENZENE | T | 6.00E 04 | 6.00E 02 | 4.20E 03 | |
| 16 A 140* | P | 1,4-DICHLOROBENZENE | T | 6.00E 04 | 6.00E 02 | 4.20E 03 | |
| 16 A 162 | | HEXACHLOROBENZENE | T | 6.00E 04 | 6.00E 02 | 4.20E 03 | |
| 20 A 101* | P | 2,4-DINITROPHENOL | T | 6.00E 04 | 6.00E 02 | 4.20E 03 | |
| 16 A 120* | P | 1,3-DICHLOROBENZENE | T | 6.00E 04 | 6.00E 02 | 4.20E 03 | |
| 16 A 040 | | BROMOBENZENE | T | 6.00E 04 | 6.00E 02 | 4.20E 03 | |
| 26 B 040 | W | TRITOTYL PHOSPHATES | T | 6.00E 04 | 6.00E 02 | 4.20E 03 | |
| 16 B 020 | W | A-CHLOROTOLUENE | T | 6.00E 04 | 6.00E 02 | 4.20E 03 | |
| 20 A 103 | | 2,6-DINITROPHENOL | T | 6.00E 04 | 6.00E 02 | 4.20E 03 | |
| 20 A 100 | W | DINITROPHENOLS | T | 6.00E 04 | 6.00E 02 | 4.20E 03 | |
| 16 B 042 | | 1,3-BIS(CHLOROMETHYL)BENZENE | T | 6.00E 04 | 6.00E 02 | 4.20E 03 | |
| 16 B 043 | | 1,4-BIS(CHLOROMETHYL)BENZENE | T | 6.00E 04 | 6.00E 02 | 4.20E 03 | |
| 16 A 161 | | 1,2,4-TRICHLOROBENZENE | T | 6.00E 04 | 6.00E 02 | 4.20E 03 | |
| 10 C 220 | W | 2-AMINONAPHTHALENE | T | 6.00E 04 | 6.00E 02 | 4.20E 03 | |
| 10 C 140* | P W | BENZIDINE | T | 6.00E 04 | 6.00E 02 | 4.20E 03 | |

CYCLONE DUST QUENCH WATER, ECOLOGY IMPACT

| DMEG NO. | | COMPOUND NAME | TYPE | CONC E-6 G/L | DS | WDS G/S | LOCAT |
|---|---|---|---|---|---|---|---|
| 16 A 020* | P | CHLOROBENZENE | T | 6.00E 04 | 6.00E 02 | 4.20E 03 | |
| 20 A 102 | | 2,5-DINITROPHENOL | T | 6.00E 04 | 6.00E 02 | 4.20E 03 | |
| 10 C 200 | W | 1-AMINONAPHTHALENE | T | 6.00E 04 | 6.00E 02 | 4.20E 03 | |
| 16 A 080 | | BROMOCHLOROBENZENES | T | 6.00E 04 | 6.00E 02 | 4.20E 03 | |
| 20 A 080 | W | 2-AMINO-4,6-DINITROPHENOL | T | 6.00E 04 | 6.00E 02 | 4.20E 03 | |
| 16 A 100* | P | 1,2-DICHLOROBENZENE | T | 6.00E 04 | 6.00E 02 | 4.20E 03 | |
| 18 A 120 | W | 2,2'-DIHYDROXYDIPHENYL | T | 6.00E 04 | 1.20E 02 | 8.33E 02 | |
| 20 A 040 | | 3-NITROPHENOL | T | 6.00E 04 | 1.20E 02 | 8.33E 02 | |
| 20 B 040 | W | DINITRO-P-CRESOLS | T | 6.00E 04 | 1.20E 02 | 8.33E 02 | |
| 18 B 080 | W | 1,2,3-TRIHYDROXYBENZENE | T | 6.00E 04 | 1.20E 02 | 8.33E 02 | |
| 18 C 080 | W | INDANOLS | T | 6.00E 04 | 1.20E 02 | 8.33E 02 | |
| 19 B 023 | | CHLORINATED-P-CRESOLS | T | 6.00E 04 | 1.20E 02 | 8.33E 02 | |
| 18 A 060 | W | 2-METHOXYPHENOL | T | 6.00E 04 | 1.20E 02 | 8.33E 02 | |
| 19 A 020* | P | 2-CHLOROPHENOL | T | 6.00E 04 | 1.20E 02 | 8.33E 02 | |
| 18 A 103 | | M-PHENYLPHENOL | T | 6.00E 04 | 1.20E 02 | 8.33E 02 | |
| 20 A 020* | P | 2-NITROPHENOL | T | 6.00E 04 | 1.20E 02 | 8.33E 02 | |
| 18 B 040 | W | 1,3-DIHYDROXYBENZENE | T | 6.00E 04 | 1.20E 02 | 8.33E 02 | |
| 23 B 080 | W | ACRIDINE | T | 6.00E 04 | 1.20E 02 | 8.33E 02 | |
| 18 A 146 | | 3,4-XYLENOL | T | 6.00E 04 | 1.20E 02 | 8.33E 02 | |
| 18 A 080 | W | ETHYLPHENOLS | T | 6.00E 04 | 1.20E 02 | 8.33E 02 | |
| 18 A 040 | W | CRESOLS | T | 6.00E 04 | 1.20E 02 | 8.33E 02 | |
| 18 A 041 | | M-CRESOL | T | 6.00E 04 | 1.20E 02 | 8.33E 02 | |
| 18 C 081 | | 1-INDANOL | T | 6.00E 04 | 1.20E 02 | 8.33E 02 | |
| 18 A 100 | W | PHENYLPHENOLS | T | 6.00E 04 | 1.20E 02 | 8.33E 02 | |
| 18 A 043 | | P-CRESOL | T | 6.00E 04 | 1.20E 02 | 8.33E 02 | |
| 18 A 182 | | 4,6-DI-TERT-BUTYL-M-CRESOL | T | 6.00E 04 | 1.20E 02 | 8.33E 02 | |
| 18 A 081 | | O-ETHYLPHENOL | T | 6.00E 04 | 1.20E 02 | 8.33E 02 | |
| 18 A 082 | | M-ETHYLPHENOL | T | 6.00E 04 | 1.20E 02 | 8.33E 02 | |
| 18 A 083 | | P-ETHYLPHENOL | T | 6.00E 04 | 1.20E 02 | 8.33E 02 | |
| 18 B 060 | W | 1,4-DIHYDROXYBENZENE | T | 6.00E 04 | 1.20E 02 | 8.33E 02 | |
| 18 A 101 | | O-PHENYLPHENOL | T | 6.00E 04 | 1.20E 02 | 8.33E 02 | |
| 18 C 020 | W | 1-NAPHTHOL | T | 6.00E 04 | 1.20E 02 | 8.33E 02 | |
| 20 A 060* | P | 4-NITROPHENOL | T | 6.00E 04 | 1.20E 02 | 8.33E 02 | |
| 18 A 162 | | 4-ETHYL-O-CRESOL | T | 6.00E 04 | 1.20E 02 | 8.33E 02 | |

CYCLONE DUST QUENCH WATER, ECOLOGY IMPACT

| DMEG NO. | | COMPOUND NAME | TYPE | CONC E-6 G/L | DS | WDS G/S | LCCAT |
|---|---|---|---|---|---|---|---|
| 18 A 140 | W | XYLENOLS | T | 6.00E 04 | 1.20E 02 | 8.33E 02 | |
| 18 A 020* | P W | PHENOL | T | 6.00E 04 | 1.20E 02 | 8.33E 02 | |
| 18 C 083 | | 5-INDANOL | T | 6.00E 04 | 1.20E 02 | 8.33E 02 | |
| 18 A 102 | | P-PHENYLPHENOL | T | 6.00E 04 | 1.20E 02 | 8.33E 02 | |
| 18 A 183 | | 2,6-DIMETHYL-4-HEPTYL PHENOL | T | 6.00E 04 | 1.20E 02 | 8.33E 02 | |
| 18 A 143 | | 2,5-XYLENOL | T | 6.00E 04 | 1.20E 02 | 8.33E 02 | |
| 19 A 040* | P | 2,4-DICHLOROPHENOL | T | 6.00E 04 | 1.20E 02 | 8.33E 02 | |
| 18 A 145 | | 3,5-XYLENOL | T | 6.00E 04 | 1.20E 02 | 8.33E 02 | |
| 20 A 120 | | 2,4,6-TRINITROPHENOL | T | 6.00E 04 | 1.20E 02 | 8.33E 02 | |
| 18 A 160 | W | ETHYL CRESOLS | T | 6.00E 04 | 1.20E 02 | 8.33E 02 | |
| 18 A 161 | | 6-ETHYL-M-CRESOL | T | 6.00E 04 | 1.20E 02 | 8.33E 02 | |
| 18 B 020 | W | CATECHOL | T | 6.00E 04 | 1.20E 02 | 8.33E 02 | |
| 18 A 163 | | 2-ETHYL-P-CRESOL | T | 6.00E 04 | 1.20E 02 | 8.33E 02 | |
| 20 B 042 | | 2,6-DINITRO-P-CRESOL | T | 6.00E 04 | 1.20E 02 | 8.33E 02 | |
| 18 A 181 | | 2,4,6-TRIMETHYL METHYL PHENOL | T | 6.00E 04 | 1.20E 02 | 8.33E 02 | |
| 20 B 020* | P W | 4,6-DINITRO-O-CRESOL | T | 6.00E 04 | 1.20E 02 | 8.33E 02 | |
| 18 C 040 | W | 2-NAPHTHOL | T | 6.00E 04 | 1.20E 02 | 8.33E 02 | |
| 18 C 082 | | 4-INDANOL | T | 6.00E 04 | 1.20E 02 | 8.33E 02 | |
| 18 A 144 | | 2,6-XYLENOL | T | 6.00E 04 | 1.20E 02 | 8.33E 02 | |
| 18 A 141 | | 2,3-XYLENOL | T | 6.00E 04 | 1.20E 02 | 8.33E 02 | |
| 18 A 042 | | O-CRESOL | T | 6.00E 04 | 1.20E 02 | 8.33E 02 | |
| 19 B 020 | W | CHLORINATED CRESOLS | T | 6.00E 04 | 1.20E 02 | 8.33E 02 | |
| 19 B 022* | P | CHLORINATED-M-CRESOLS | T | 6.00E 04 | 1.20E 02 | 8.33E 02 | |
| 18 A 142* | P | 2,4-XYLENOL | T | 6.00E 04 | 1.20E 02 | 8.33E 02 | |
| 18 A 180 | W | POLYALKYLPHENOLS (MW>135) | T | 6.00E 04 | 1.20E 02 | 8.33E 02 | |
| 20 B 041 | | 3,5-DINITRO-P-CRESOL | T | 6.00E 04 | 1.20E 02 | 8.33E 02 | |
| 19 B 021 | | CHLORINATED-O-CRESOLS | T | 6.00E 04 | 6.00E 01 | 4.20E 02 | |
| 15 A 060* | P W | ETHYL BENZENE | T | 6.00E 04 | 6.00E 01 | 4.20E 02 | |
| 17 A 085 | | 2,5-DINITROTOLUENE | T | 6.00E 04 | 6.00E 01 | 4.20E 02 | |
| 17 A 083 | | 2,3-DINITROTOLUENE | T | 6.00E 04 | 6.00E 01 | 4.20E 02 | |
| 17 A 080 | W | DINITROTOLUENES | T | 6.00E 04 | 6.00E 01 | 4.20E 02 | |
| 08 D 120 | | BUTYL ACETATES | T | 6.00E 04 | 6.00E 01 | 4.20E 02 | |
| 17 A 082 | | 3,4-DINITROTOLUENE | T | 6.00E 04 | 6.00E 01 | 4.20E 02 | |
| 02 B 080* | P W | TETRACHLOROETHENE | T | 6.00E 04 | 6.00E 01 | 4.20E 02 | |

CYCLONE DUST QUENCH WATER, ECOLOGY IMPACT

| DMEG NO. | COMPOUND NAME | TYPE | CONC E-6 G/L | DS | WDS G/S | LCCAT |
|---|---|---|---|---|---|---|
| 04 A 040 W | 2-CHLORO-1,2-EPOXYPROPANE | T | 6.00E 04 | 6.00E 01 | 4.20E 02 | |
| 10 A 080 W | 1,2-DIAMINOETHANE | T | 6.00E 04 | 6.00E 01 | 4.20E 02 | |
| 17 A 084* P | 2,4-DINITROTOLUENE | T | 6.00E 04 | 6.00E 01 | 4.20E 02 | |
| 08 D 141 | N-AMYL ACETATE | T | 6.00E 04 | 6.00E 01 | 4.20E 02 | |
| 08 D 142 | SEC-AMYL ACETATE | T | 6.00E 04 | 6.00E 01 | 4.20E 02 | |
| 17 A 040 W | NITROTOLUENES | T | 6.00E 04 | 6.00E 01 | 4.20E 02 | |
| 17 A 041 | 2-NITROTOLUENE | T | 6.00E 04 | 6.00E 01 | 4.20E 02 | |
| 02 B 100* P W | DICHLOROPROPENES | T | 6.00E 04 | 6.00E 01 | 4.20E 02 | |
| 17 A 043 | 4-NITROTOLUENE | T | 6.00E 04 | 6.00E 01 | 4.20E 02 | |
| 17 A 081* P | 2,6-DINITROTOLUENE | T | 6.00E 04 | 6.00E 01 | 4.20E 02 | |
| 15 B 106 | 1,4-DI-TERT-BUTYL BENZENE | T | 6.00E 04 | 6.00E 01 | 4.20E 02 | |
| 15 B 120 W | TETRAHYDRONAPHTHALENE | T | 6.00E 04 | 6.00E 01 | 4.20E 02 | |
| 15 B 080 W | XYLENES | T | 6.00E 04 | 6.00E 01 | 4.20E 02 | |
| 15 B 081 | O-XYLENE | T | 6.00E 04 | 6.00E 01 | 4.20E 02 | |
| 15 A 040* P W | TOLUENE | T | 6.00E 04 | 6.00E 01 | 4.20E 02 | |
| 15 B 105 | M-DIISOPROPYL BENZENE | T | 6.00E 04 | 6.00E 01 | 4.20E 02 | |
| 02 A 340* P | DICHLOROPROPANES | T | 6.00E 04 | 6.00E 01 | 4.20E 02 | |
| 15 B 101 | O-DIETHYL BENZENE | T | 6.00E 04 | 6.00E 01 | 4.20E 02 | |
| 17 A 086 | 3,5-DINITROTOLUENE | T | 6.00E 04 | 6.00E 01 | 4.20E 02 | |
| 17 A 042 | 3-NITROTOLUENE | T | 6.00E 04 | 6.00E 01 | 4.20E 02 | |
| 15 A 080 W | STYRENE | T | 6.00E 04 | 6.00E 01 | 4.20E 02 | |
| 15 A 100 W | PROPYL BENZENE | T | 6.00E 04 | 6.00E 01 | 4.20E 02 | |
| 02 B 103 | CIS-1,3-DICHLOROPROPENE | T | 6.00E 04 | 6.00E 01 | 4.20E 02 | |
| 02 B 104 | TRANS-1,3-DICHLOROPROPENE | T | 6.00E 04 | 6.00E 01 | 4.20E 02 | |
| 08 D 140 | AMYL ACETATES | T | 6.00E 04 | 6.00E 01 | 4.20E 02 | |
| 15 B 103 | P-DIETHYL BENZENE | T | 6.00E 04 | 6.00E 01 | 4.20E 02 | |
| 17 A 020* P W | NITROBENZENE | T | 6.00E 04 | 6.00E 01 | 4.20E 02 | |
| 08 D 121 | N-BUTYL ACETATE | T | 6.00E 04 | 6.00E 01 | 4.20E 02 | |
| 15 A 120 W | ISOPROPYL BENZENE | T | 6.00E 04 | 6.00E 01 | 4.20E 02 | |
| 10 C 020 | ANILINE | T | 6.00E 04 | 6.00E 01 | 4.20E 02 | |
| 15 B 102 | M-DIETHYL BENZENE | T | 6.00E 04 | 6.00E 01 | 4.20E 02 | |
| 08 D 122 | SEC-BUTYL ACETATE | T | 6.00E 04 | 6.00E 01 | 4.20E 02 | |
| 15 B 104 | O-DIISOPROPYL BENZENE | T | 6.00E 04 | 6.00E 01 | 4.20E 02 | |
| 04 A 050 W | EPICHLORHYDRIN | T | 6.00E 04 | 6.00E 01 | 4.20E 02 | |

CYCLONE DUST QUENCH WATER, ECOLOGY IMPACT

| DMEG NO. | | COMPOUND NAME | TYPE | CONC E-6 G/L | DS | WDS G/S | LCCAT |
|---|---|---|---|---|---|---|---|
| 08 A 040 | W | ACETIC ACID | T | 6.00E 04 | 6.00E 01 | 4.20E 02 | |
| 08 D 123 | | ISOBUTYL ACETATE | T | 6.00E 04 | 6.00E 01 | 4.20E 02 | |
| 15 B 083 | | P-XYLENE | T | 6.00E 04 | 6.00E 01 | 4.20E 02 | |
| 04 A 060 | W | 1-CHLORO-1,3-EPOXYPROPANE | T | 6.00E 04 | 6.00E 01 | 4.20E 02 | |
| 02 A 343 | | 1,3-DICHLOROPROPANE | T | 6.00E 04 | 6.00E 01 | 4.20E 02 | |
| 08 D 143 | | ISOAMYL ACETATE | T | 6.00E 04 | 6.00E 01 | 4.20E 02 | |
| 15 B 100 | W | DIALKYL BENZENES (MW:134-191) | T | 6.00E 04 | 6.00E 01 | 4.20E 02 | |
| 15 B 082 | | M-XYLENE | T | 6.00E 04 | 6.00E 01 | 4.20E 02 | |
| 15 B 020 | | INDAN | T | 6.00E 04 | 4.30E 01 | 3.00E 02 | |
| 72 A 010 | | IRON (AS FE+2) | D | 4.90E 03 | 2.00E 01 | 1.40E 02 | |
| 38 A 010 | | ALUMINUM | D | 1.10E 04 | 1.10E 01 | 7.70E 01 | |
| 08 A 080 | | VALERIC ACID | T | 6.00E 04 | 7.72E 00 | 5.40E 01 | |
| 09 B 042 | | B-NAPHTHONITRILES | T | 6.00E 04 | 7.62E 00 | 5.33E 01 | |
| 09 B 041 | | A-NAPHTHONITRILES | T | 6.00E 04 | 7.62E 00 | 5.33E 01 | |
| 09 B 040 | W | NAPHTHONITRILES | T | 6.00E 04 | 7.62E 00 | 5.33E 01 | |
| 09 B 020 | W | BENZONITRILE | T | 6.00E 04 | 7.62E 00 | 5.33E 01 | |
| 08 A 100 | | SATURATED LONG CHAIN ACIDS (MW:116-201) | T | 6.00E 04 | 6.80E 00 | 4.73E 01 | |
| 08 A 101 | | CAPROIC ACID | T | 6.00E 04 | 6.80E 00 | 4.73E 01 | |
| 08 A 104 | | LAURIC ACID | T | 6.00E 04 | 6.80E 00 | 4.73E 01 | |
| 08 A 103 | | CAPRIC ACID | T | 6.00E 04 | 6.80E 00 | 4.73E 01 | |
| 08 A 102 | | CAPRYLIC ACID | T | 6.00E 04 | 6.80E 00 | 4.73E 01 | |
| 08 A 180 | | ADIPIC ACID | T | 6.00E 04 | 6.13E 00 | 4.30E 01 | |
| 08 B 060 | W | B-PROPIOLACTONE | T | 6.00E 04 | 6.00E 00 | 4.20E 01 | |
| 15 B 201 | | 1,2,3,4-TETRAMETHYLBENZENE | T | 6.00E 04 | 6.00E 00 | 4.20E 01 | |
| 17 B 060 | W | 1-CHLORO-4-NITROBENZENE | T | 6.00E 04 | 6.00E 00 | 4.20E 01 | |
| 23 A 081 | | 2-PHENYLPYRIDINE | T | 6.00E 04 | 6.00E 00 | 4.20E 01 | |
| 08 D 101 | | N-PROPYL ACETATE | T | 6.00E 04 | 6.00E 00 | 4.20E 01 | |
| 10 A 060 | | ETHANOLAMINE | T | 6.00E 04 | 6.00E 00 | 4.20E 01 | |
| 15 B 202 | | 1,2,3,5-TETRAMETHYLBENZENE | T | 6.00E 04 | 6.00E 00 | 4.20E 01 | |
| 15 B 200 | | TETRAMETHYLBENZENES | T | 6.00E 04 | 6.00E 00 | 4.20E 01 | |
| 01 A 200 | | OCTANES | T | 6.00E 04 | 6.00E 00 | 4.20E 01 | |
| 03 B 020 | | 1,4-DIOXANE | T | 6.00E 04 | 6.00E 00 | 4.20E 01 | |
| 23 A 080 | W | PHENYLPYRIDINES | T | 6.00E 04 | 6.00E 00 | 4.20E 01 | |
| 05 A 122 | | 2-METHYL-1-BUTANOL | T | 6.00E 04 | 6.00E 00 | 4.20E 01 | |

# CYCLONE DUST QUENCH WATER, ECOLOGY IMPACT

| DMEG NO. | | | COMPOUND NAME | TYPE | CONC E-6 G/L | DS | WDS G/S | LCCAT |
|---|---|---|---|---|---|---|---|---|
| 17 B 040 | | W | 1-CHLORO-2-NITROBENZENE | T | 6.00E 04 | 6.00E 00 | 4.20E 01 | |
| 05 A 121 | | | N-PENTANOL | T | 6.00E 04 | 6.00E 00 | 4.20E 01 | |
| 23 A 063 | | | 4-ETHYLPYRIDINE | T | 6.00E 04 | 6.00E 00 | 4.20E 01 | |
| 23 A 122 | | | 2,4,6-COLLIDINE | T | 6.00E 04 | 6.00E 00 | 4.20E 01 | |
| 23 A 064 | | | 4-N-PROPYLPYRIDINE | T | 6.00E 04 | 6.00E 00 | 4.20E 01 | |
| 23 A 060 | | W | MONOSUBSTITUTED ALKYL PYRIDINES | T | 6.00E 04 | 6.00E 00 | 4.20E 01 | |
| 04 B 080 | | W | 2,2'-DICHLORODIETHYL ETHER | T | 6.00E 04 | 6.00E 00 | 4.20E 01 | |
| 23 A 062 | | | 3-ETHYLPYRIDINE | T | 6.00E 04 | 6.00E 00 | 4.20E 01 | |
| 05 A 100 | | W | ISOBUTYL ALCOHOL | T | 6.00E 04 | 6.00E 00 | 4.20E 01 | |
| 08 D 100 | | | PROPYL ACETATES | T | 6.00E 04 | 6.00E 00 | 4.20E 01 | |
| 23 A 020 | | W | PYRIDINE | T | 6.00E 04 | 6.00E 00 | 4.20E 01 | |
| 06 A 020 | | W | ETHYLENE GLYCOL | T | 6.00E 04 | 6.00E 00 | 4.20E 01 | |
| 23 A 061 | | | 2-ETHYLPYRIDINE | T | 6.00E 04 | 6.00E 00 | 4.20E 01 | |
| 10 A 160 | | | CYCLOHEXYLAMINE | T | 6.00E 04 | 6.00E 00 | 4.20E 01 | |
| 10 B 100 | | | MORPHOLINE | T | 6.00E 04 | 6.00E 00 | 4.20E 01 | |
| 01 A 201 | | | N-OCTANE | T | 6.00E 04 | 6.00E 00 | 4.20E 01 | |
| 23 A 121 | | | 5-ETHYL-2-METHYLPYRIDINE | T | 6.00E 04 | 6.00E 00 | 4.20E 01 | |
| 05 A 124 | | | 3-METHYL-1-BUTANOL | T | 6.00E 04 | 6.00E 00 | 4.20E 01 | |
| 15 B 203 | | | 1,2,4,5-TETRAMETHYLBENZENE | T | 6.00E 04 | 6.00E 00 | 4.20E 01 | |
| 05 A 120 | | W | PENTANOLS (PRIMARY) | T | 6.00E 04 | 6.00E 00 | 4.20E 01 | |
| 05 A 140 | | W | BENZYL ALCOHOL | T | 6.00E 04 | 6.00E 00 | 4.20E 01 | |
| 05 A 123 | | | 2,2-DIMETHYL-1-PROPANOL | T | 6.00E 04 | 6.00E 00 | 4.20E 01 | |
| 23 A 083 | | | 4-PHENYLPYRIDINE | T | 6.00E 04 | 6.00E 00 | 4.20E 01 | |
| 04 B 040* | P | W | 1,1'-DICHLORODIETHYL ETHER | T | 6.00E 04 | 6.00E 00 | 4.20E 01 | |
| 23 A 082 | | | 3-PHENYLPYRIDINE | T | 6.00E 04 | 6.00E 00 | 4.20E 01 | |
| 08 D 080 | | | METHYL METHACRYLATE | T | 6.00E 04 | 6.00E 00 | 4.20E 01 | |
| 23 A 120 | | W | COLLIDINES | T | 6.00E 04 | 6.00E 00 | 4.20E 01 | |
| 07 B 100 | | W | CAMPHOR | T | 6.00E 04 | 5.40E 00 | 3.80E 01 | |
| 82 A 010 | P | | CADMIUM | D | < 5.00E 00 | < 5.00E 00 | < 3.50E 01 | |
| 07 B 120 | | | ACETOPHENONE | T | 6.00E 04 | 3.71E 00 | 2.60E 01 | |
| 34 A 010 | | | CALCIUM (AS CA+2) | D | 5.40E 04 | 3.40E 00 | 2.40E 01 | |
| 08 A 140 | | | OLEIC ACID | T | 6.00E 04 | 2.83E 00 | 2.00E 01 | |
| 49 A 010 | P | | ARSENIC | D | 1.20E 02 | 2.40E 00 | 1.70E 01 | |
| 76 A 010 | P | | NICKEL | D | < 2.00E 01 | < 2.00E 00 | < 1.40E 01 | |

CYCLONE DUST QUENCH WATER, ECOLOGY IMPACT

| DMEG NO. | | | COMPOUND NAME | TYPE | CONC E-6 G/L | DS | WDS G/S | LCCAT |
|---|---|---|---|---|---|---|---|---|
| 46 A 010 | P | | LEAD | D | 9.90E 01 | 2.00E 00 | 1.40E 01 | |
| 06 A 040 | | | PROPYLENE GLYCOL | T | 6.00E 04 | 6.00E-01 | 4.20E 00 | |
| 08 D 320* | P | | BUTYL BENZYL PHTHALATE | T | 6.00E 04 | 6.00E-01 | 4.20E 00 | |
| 08 B 080 | | | Y-BUTYROLACTONE | T | 6.00E 04 | 6.00E-01 | 4.20E 00 | |
| 05 C 040 | | W | T-PENTANOL | T | 6.00E 04 | 6.00E-01 | 4.20E 00 | |
| 05 A 080 | | | N-BUTANOL | T | 6.00E 04 | 6.00E-01 | 4.20E 00 | |
| 79 A 010 | P | | SILVER | S | 2.00E 00 | 4.00E-01 | 2.80E 00 | |
| 81 A 010 | P | | ZINC | D | 3.50E 01 | 3.50E-01 | 2.44E 00 | |
| 78 A 010 | P | | COPPER | D | 1.20E 01 | 2.40E-01 | 1.70E 00 | |
| 54 A 010 | P | | SELENIUM | S | 6.00E 00 | 2.40E-01 | 1.70E 00 | |
| 36 A 010 | | | BARIUM | D | 5.70E 02 | 2.30E-01 | 1.60E 00 | |
| 62 A 010 | | | TITANIUM | D | 1.80E 02 | 2.20E-01 | 1.53E 00 | |
| 33 A 010 | | | MAGNESIUM | D | 1.10E 04 | 1.30E-01 | 8.90E-01 | |
| 27 A 010 | | | LITHIUM | S | 4.00E 01 | 1.10E-01 | 7.40E-01 | |
| 65 A 010 | | | VANADIUM | D | 1.50E 01 | 1.00E-01 | 7.00E-01 | |
| 37 A 010 | | | BORON | D | 9.90E 02 | 4.00E-02 | 2.80E-01 | |
| 74 A 010 | | | COBALT | S | 9.00E 00 | 3.60E-02 | 2.52E-01 | |
| 68 A 010 | P | | CHROMIUM | D | < 5.00E 00< | 2.00E-02< | 1.40E-01 | |
| 71 A 010 | P | | MANGANESE | D | < 1.00E 00< | 1.00E-02< | 7.00E-02 | |
| 83 A 010 | P | | MERCURY | D | 4.00E-01 | 1.60E-03 | 1.12E-02 | |
| 69 A 010 | | | MOLYBDENUM | S | 4.00E 00 | 5.71E-04 | 4.00E-03 | |
| 45 A 010 | | | TIN | D | 2.90E 03 | 0.00E-01 | 0.00E-01 | |
| 07 B 080* | P | | ISOPHORONE | T | 0.00E-01 | 0.00E-01 | 0.00E-01 | 5 |
| 16 A 160* | P | | POLYCHLORINATED BENZENES | T | 0.00E-01 | 0.00E-01 | 0.00E-01 | 2 |
| 02 A 340* | P | | DICHLOROPROPANES | T | 0.00E-01 | 0.00E-01 | 0.00E-01 | 1 |
| 10 C 140* | P | W | BENZIDINE | T | 0.00E-01 | 0.00E-01 | 0.00E-01 | 5 |
| 57 A 010 | | | CHLORINE (AS CL-) | D | 3.40E 04 | 0.00E-01 | 0.00E-01 | |
| 12 A 020* | P | | N-NITROSODIMETHYLAMINE | T | 0.00E-01 | 0.00E-01 | 0.00E-01 | 5 |
| 53 A 010 | | | SULFUR | D | 2.30E 04 | 0.00E-01 | 0.00E-01 | |
| 12 A 040* | P | | N-NITROSODIETHYLAMINE | T | 6.00E 04 | 0.00E-01 | 0.00E-01 | |
| 12 A 060* | P | | N-NITROSODIPROPYLAMINE | T | 0.00E-01 | 0.00E-01 | 0.00E-01 | 5 |
| 59 A 010 | | | IODINE (AS I-) | S | 6.00E 00 | 0.00E-01 | 0.00E-01 | |
| 08 D 320* | P | | BUTYL BENZYL PHTHALATE | T | 0.00E-01 | 0.00E-01 | 0.00E-01 | 6 |
| 15 A 040* | P | W | TOLUENE | T | 0.00E-01 | 0.00E-01 | 0.00E-01 | 2 |

# CYCLONE DUST QUENCH WATER, ECOLOGY IMPACT

| DMEG NO. | COMPOUND NAME | TYPE | CONC E-6 G/L | DS | WDS G/S | LCCAT |
|---|---|---|---|---|---|---|
| 84 B 010 | CERIUM | S | 2.00E 00 | 0.00E-01 | 0.00E-01 | |
| 16 A 140* P | 1,4-DICHLOROBENZENE | T | 0.00E-01 | 0.00E-01 | 0.00E-01 | 2 |
| 16 A 100* P | 1,2-DICHLOROBENZENE | T | 0.00E-01 | 0.00E-01 | 0.00E-01 | 3 |
| 12 A 060* P | N-NITROSODIPROPYLAMINE | T | 0.00E-01 | 0.00E-01 | 0.00E-01 | 6 |
| 16 A 200* P | CHLORONAPHTHALENES | T | 0.00E-01 | 0.00E-01 | 0.00E-01 | 3 |
| 12 A 040* P | N-NITROSODIETHYLAMINE | T | 0.00E-01 | 0.00E-01 | 0.00E-01 | 5 |
| 15 A 060* P W | ETHYL BENZENE | T | 0.00E-01 | 0.00E-01 | 0.00E-01 | 3 |
| 08 D 300* P | DI-2-ETHYLHEXYL PHTHALATE | T | 0.00E-01 | 0.00E-01 | 0.00E-01 | 6 |
| 18 A 020* P W | PHENOL | T | 0.00E-01 | 0.00E-01 | 0.00E-01 | 5 |
| 07 B 080* P | ISOPHORONE | T | 6.00E 04 | 0.00E-01 | 0.00E-01 | |
| 02 A 340* P | DICHLOROPROPANES | T | 0.00E-01 | 0.00E-01 | 0.00E-01 | 2 |
| 10 C 140* P W | BENZIDINE | T | 0.00E-01 | 0.00E-01 | 0.00E-01 | 6 |
| 15 A 040* P W | TOLUENE | T | 0.00E-01 | 0.00E-01 | 0.00E-01 | 3 |
| 17 A 020* P W | NITROBENZENE | T | 0.00E-01 | 0.00E-01 | 0.00E-01 | 5 |
| 02 B 080* P W | TETRACHLOROETHENE | T | 0.00E-01 | 0.00E-01 | 0.00E-01 | 1 |
| 16 A 200* P | CHLORONAPHTHALENES | T | 0.00E-01 | 0.00E-01 | 0.00E-01 | 2 |
| 12 A 020* P | N-NITROSODIMETHYLAMINE | T | 0.00E-01 | 0.00E-01 | 0.00E-01 | 6 |
| 02 B 100* P W | DICHLOROPROPENES | T | 0.00E-01 | 0.00E-01 | 0.00E-01 | 1 |
| 08 D 300* P | DI-2-ETHYLHEXYL PHTHALATE | T | 0.00E-01 | 0.00E-01 | 0.00E-01 | 5 |
| 12 A 040* P | N-NITROSODIETHYLAMINE | T | 0.00E-01 | 0.00E-01 | 0.00E-01 | 6 |
| 28 A 010 | SODIUM | D | 2.20E 05 | 0.00E-01 | 0.00E-01 | |
| 02 B 120* P | HEXACHLOROBUTADIENE | T | 6.00E 04 | 0.00E-01 | 0.00E-01 | |
| 02 B 120* P | HEXACHLOROBUTADIENE | T | 0.00E-01 | 0.00E-01 | 0.00E-01 | 1 |
| 16 A 160* P | POLYCHLORINATED BENZENES | T | 0.00E-01 | 0.00E-01 | 0.00E-01 | 3 |
| 02 B 140* P | HEXACHLOROCYCLOPENTADIENE | T | 6.00E 04 | 0.00E-01 | 0.00E-01 | |
| 12 A 020* P | N-NITROSODIMETHYLAMINE | T | 6.00E 04 | 0.00E-01 | 0.00E-01 | |
| 58 A 010 | BROMINE | S | 4.00E 01 | 0.00E-01 | 0.00E-01 | |
| 18 A 142* P | 2,4-XYLENOL | T | 0.00E-01 | 0.00E-01 | 0.00E-01 | 5 |
| 18 A 142* P | 2,4-XYLENOL | T | 0.00E-01 | 0.00E-01 | 0.00E-01 | 6 |
| 02 A 320* P | HEXACHLOROETHANE | T | 6.00E 04 | 0.00E-01 | 0.00E-01 | |
| 02 B 100* P W | DICHLOROPROPENES | T | 0.00E-01 | 0.00E-01 | 0.00E-01 | 2 |
| 02 A 320* P | HEXACHLOROETHANE | T | 0.00E-01 | 0.00E-01 | 0.00E-01 | 2 |
| 04 A 140* P | 2-CHLOROETHYL VINYL ETHER | T | 0.00E-01 | 0.00E-01 | 0.00E-01 | 4 |
| 04 A 140* P | 2-CHLOROETHYL VINYL ETHER | T | 0.00E-01 | 0.00E-01 | 0.00E-01 | 5 |

CYCLONE DUST QUENCH WATER, ECOLOGY IMPACT

| DMEG NO. | COMPOUND NAME | TYPE | CONC E-6 G/L | DS | WDS G/S | LCCAT |
|---|---|---|---|---|---|---|
| 04 A 160* P | A-CHLOROBUTYL ETHYL ETHER | T | 6.00E 04 | 0.00E-01 | 0.00E-01 | |
| 04 A 160* P | A-CHLOROBUTYL ETHYL ETHER | T | 0.00E-01 | 0.00E-01 | 0.00E-01 | 4 |
| 30 A 010 | RUBIDIUM (AS RB+) | S | 2.00E 01 | 0.00E-01 | 0.00E-01 | |
| 04 A 180* P | CHLOROPHENYL PHENYL ETHER | T | 6.00E 04 | 0.00E-01 | 0.00E-01 | |
| 29 A 010 | POTASSIUM | S | > 1.00E 04> | 0.00E-01> | 0.00E-01 | |
| 02 B 080* P W | TETRACHLOROETHENE | T | 0.00E-01 | 0.00E-01 | 0.00E-01 | 2 |
| 43 A 010 | SILICON | S | 2.00E 03 | 0.00E-01 | 0.00E-01 | |
| 08 D 300* P | DI-2-ETHYLHEXYL PHTHALATE | T | 6.00E 04 | 0.00E-01 | 0.00E-01 | |
| 61 A 010 | YTTRIUM (AS Y+3) | S | 2.00E 00 | 0.00E-01 | 0.00E-01 | |
| 63 A 010 | ZIRCONIUM (AS ZR+4) | S | 5.00E 00 | 0.00E-01 | 0.00E-01 | |
| 12 A 060* P | N-NITROSODIPROPYLAMINE | T | 6.00E 04 | 0.00E-01 | 0.00E-01 | |
| 17 A 081* P | 2,6-DINITROTOLUENE | T | 0.00E-01 | 0.00E-01 | 0.00E-01 | 5 |
| 08 D 320* P | BUTYL BENZYL PHTHALATE | T | 0.00E-01 | 0.00E-01 | 0.00E-01 | 5 |
| 02 B 120* P | HEXACHLOROBUTADIENE | T | 0.00E-01 | 0.00E-01 | 0.00E-01 | 2 |
| 02 A 140* P | DIBROMOCHLOROMETHANE | T | 0.00E-01 | 0.00E-01 | 0.00E-01 | 2 |
| 02 A 160* P | BROMOFORM | T | 6.00E 04 | 0.00E-01 | 0.00E-01 | |
| 15 A 060* P W | ETHYL BENZENE | T | 0.00E-01 | 0.00E-01 | 0.00E-01 | 2 |
| 02 A 160* P | BROMOFORM | T | 0.00E-01 | 0.00E-01 | 0.00E-01 | 1 |
| 02 A 160* P | BROMOFORM | T | 0.00E-01 | 0.00E-01 | 0.00E-01 | 2 |
| 19 A 020* P | 2-CHLOROPHENOL | T | 0.00E-01 | 0.00E-01 | 0.00E-01 | 6 |
| 02 A 320* P | HEXACHLOROETHANE | T | 0.00E-01 | 0.00E-01 | 0.00E-01 | 1 |
| 19 A 040* P | 2,4-DICHLOROPHENOL | T | 0.00E-01 | 0.00E-01 | 0.00E-01 | 5 |
| 19 A 040* P | 2,4-DICHLOROPHENOL | T | 0.00E-01 | 0.00E-01 | 0.00E-01 | 6 |
| 18 A 020* P W | PHENOL | T | 0.00E-01 | 0.00E-01 | 0.00E-01 | 6 |
| 19 A 060* P W | PENTACHLOROPHENOL | T | 0.00E-01 | 0.00E-01 | 0.00E-01 | 5 |
| 19 A 060* P W | PENTACHLOROPHENOL | T | 0.00E-01 | 0.00E-01 | 0.00E-01 | 6 |
| 07 B 080* P | ISOPHORONE | T | 0.00E-01 | 0.00E-01 | 0.00E-01 | 6 |
| 56 A 010 | FLUORINE (AS F-) | D | 2.00E 03 | 0.00E-01 | 0.00E-01 | |
| 16 A 100* P | 1,2-DICHLOROBENZENE | T | 0.00E-01 | 0.00E-01 | 0.00E-01 | 2 |
| 19 B 022* P | CHLORINATED-M-CRESOLS | T | 0.00E-01 | 0.00E-01 | 0.00E-01 | 5 |
| 19 B 022* P | CHLORINATED-M-CRESOLS | T | 0.00E-01 | 0.00E-01 | 0.00E-01 | 6 |
| 16 A 120* P | 1,3-DICHLOROBENZENE | T | 0.00E-01 | 0.00E-01 | 0.00E-01 | 2 |
| 16 A 120* P | 1,3-DICHLOROBENZENE | T | 0.00E-01 | 0.00E-01 | 0.00E-01 | 3 |
| 20 A 020* P | 2-NITROPHENOL | T | 0.00E-01 | 0.00E-01 | 0.00E-01 | 5 |

CYCLONE DUST QUENCH WATER, ECOLOGY IMPACT

| DMEG NO. | COMPOUND NAME | TYPE | CONC E-6 G/L | DS | WDS G/S | LCCAT |
|---|---|---|---|---|---|---|
| 20 A 020* P | 2-NITROPHENOL | T | 0.00E-01 | 0.00E-01 | 0.00E-01 | 6 |
| 16 A 140* P | 1,4-DICHLOROBENZENE | T | 0.00E-01 | 0.00E-01 | 0.00E-01 | 3 |
| 35 A 010 | STRONTIUM | D | 1.10E 03 | 0.00E-01 | 0.00E-01 | |
| 20 A 060* P | 4-NITROPHENOL | T | 0.00E-01 | 0.00E-01 | 0.00E-01 | 5 |
| 20 A 060* P | 4-NITROPHENOL | T | 0.00E-01 | 0.00E-01 | 0.00E-01 | 6 |
| 02 B 140* P | HEXACHLOROCYCLOPENTADIENE | T | 0.00E-01 | 0.00E-01 | 0.00E-01 | 1 |
| 02 B 140* P | HEXACHLOROCYCLOPENTADIENE | T | 0.00E-01 | 0.00E-01 | 0.00E-01 | 2 |
| 16 A 200* P | CHLORONAPHTHALENES | T | 6.00E 04 | 0.00E-01 | 0.00E-01 | |
| 20 A 101* P | 2,4-DINITROPHENOL | T | 0.00E-01 | 0.00E-01 | 0.00E-01 | 5 |
| 20 A 101* P | 2,4-DINITROPHENOL | T | 0.00E-01 | 0.00E-01 | 0.00E-01 | 6 |
| 31 A 010 | CESIUM | S | 4.00E 00 | 0.00E-01 | 0.00E-01 | |
| 04 A 140* P | 2-CHLOROETHYL VINYL ETHER | T | 6.00E 04 | 0.00E-01 | 0.00E-01 | |
| 39 A 010 | GALLIUM | S | 2.00E 01 | 0.00E-01 | 0.00E-01 | |
| 44 A 010 | GERMANIUM | S | 7.00E 00 | 0.00E-01 | 0.00E-01 | |
| 20 B 020* P W | 4,6-DINITRO-O-CRESOL | T | 0.00E-01 | 0.00E-01 | 0.00E-01 | 5 |
| 20 B 020* P W | 4,6-DINITRO-O-CRESOL | T | 0.00E-01 | 0.00E-01 | 0.00E-01 | 6 |
| 04 A 160* P | A-CHLOROBUTYL ETHYL ETHER | T | 0.00E-01 | 0.00E-01 | 0.00E-01 | 5 |
| 17 A 020* P W | NITROBENZENE | T | 0.00E-01 | 0.00E-01 | 0.00E-01 | 4 |
| 08 D 280* P W | PHTHALATE ESTERS (MW:194-279) | T | 0.00E-01 | 0.00E-01 | 0.00E-01 | 5 |
| 08 D 280* P W | PHTHALATE ESTERS (MW:194-279) | T | 0.00E-01 | 0.00E-01 | 0.00E-01 | 6 |
| 21 A 020* P | NAPHTHALENE | T | 0.00E-01 | 0.00E-01 | 0.00E-01 | 2 |
| 21 A 020* P | NAPHTHALENE | T | 0.00E-01 | 0.00E-01 | 0.00E-01 | 3 |
| 21 A 100* PH | ACENAPHTHENE | T | 6.00E 04 | 0.00E-01 | 0.00E-01 | |
| 21 A 100* PH | ACENAPHTHENE | T | 0.00E-01 | 0.00E-01 | 0.00E-01 | 2 |
| 17 A 081* P | 2,6-DINITROTOLUENE | T | 0.00E-01 | 0.00E-01 | 0.00E-01 | 4 |
| 21 A 120* PH | ACENAPHTHYLENE | T | 6.00E 04 | 0.00E-01 | 0.00E-01 | |
| 21 A 120* PH | ACENAPHTHYLENE | T | 0.00E-01 | 0.00E-01 | 0.00E-01 | 2 |
| 02 A 140* P | DIBROMOCHLOROMETHANE | T | 6.00E 04 | 0.00E-01 | 0.00E-01 | |
| 02 A 140* P | DIBROMOCHLOROMETHANE | T | 0.00E-01 | 0.00E-01 | 0.00E-01 | 1 |
| 17 A 084* P | 2,4-DINITROTOLUENE | T | 0.00E-01 | 0.00E-01 | 0.00E-01 | 4 |
| 17 A 084* P | 2,4-DINITROTOLUENE | T | 0.00E-01 | 0.00E-01 | 0.00E-01 | 5 |
| 21 A 180* P | PHENANTHRENE | T | 6.00E 04 | 0.00E-01 | 0.00E-01 | |
| 21 A 180* P | PHENANTHRENE | T | 0.00E-01 | 0.00E-01 | 0.00E-01 | 2 |
| 21 A 180* P | PHENANTHRENE | T | 0.00E-01 | 0.00E-01 | 0.00E-01 | 3 |

CYCLONE DUST QUENCH WATER, ECOLOGY IMPACT

| DMEG NO. | | | COMPOUND NAME | TYPE | CONC E-6 G/L | DS | WDS G/S | LCCAT |
|---|---|---|---|---|---|---|---|---|
| 21 | B 040* | P | BENZ(A)ANTHRACENE | T | 6.00E 04 | 0.00E-01 | 0.00E-01 | |
| 21 | B 040* | P | BENZ(A)ANTHRACENE | T | 0.00E-01 | 0.00E-01 | 0.00E-01 | 2 |
| 21 | B 040* | P | BENZ(A)ANTHRACENE | T | 0.00E-01 | 0.00E-01 | 0.00E-01 | 3 |
| 21 | B 120* | P | CHRYSENE | T | 6.00E 04 | 0.00E-01 | 0.00E-01 | |
| 21 | B 120* | P | CHRYSENE | T | 0.00E-01 | 0.00E-01 | 0.00E-01 | 2 |
| 21 | B 120* | P | CHRYSENE | T | 0.00E-01 | 0.00E-01 | 0.00E-01 | 3 |
| 21 | B 180* | P | PYRENE | T | 6.00E 04 | 0.00E-01 | 0.00E-01 | |
| 21 | B 180* | P | PYRENE | T | 0.00E-01 | 0.00E-01 | 0.00E-01 | 2 |
| 21 | B 180* | P | PYRENE | T | 0.00E-01 | 0.00E-01 | 0.00E-01 | 3 |
| 21 | C 080* | P | DIBENZ(A,H)ANTHRACENE | T | 6.00E 04 | 0.00E-01 | 0.00E-01 | |
| 21 | C 080* | P | DIBENZ(A,H)ANTHRACENE | T | 0.00E-01 | 0.00E-01 | 0.00E-01 | 2 |
| 21 | C 080* | P | DIBENZ(A,H)ANTHRACENE | T | 0.00E-01 | 0.00E-01 | 0.00E-01 | 3 |
| 21 | C 100* | P | BENZO(A)PYRENE | T | 6.00E 04 | 0.00E-01 | 0.00E-01 | |
| 21 | C 100* | P | BENZO(A)PYRENE | T | 0.00E-01 | 0.00E-01 | 0.00E-01 | 2 |
| 21 | C 100* | P | BENZO(A)PYRENE | T | 0.00E-01 | 0.00E-01 | 0.00E-01 | 3 |
| 21 | D 080* | PH | BENZO(GHI)PERYLENE | T | 6.00E 04 | 0.00E-01 | 0.00E-01 | |
| 21 | D 080* | PH | BENZO(GHI)PERYLENE | T | 0.00E-01 | 0.00E-01 | 0.00E-01 | 2 |
| 21 | D 080* | PH | BENZO(GHI)PERYLENE | T | 0.00E-01 | 0.00E-01 | 0.00E-01 | 3 |
| 22 | A 020* | PH | FLUORENE | T | 6.00E 04 | 0.00E-01 | 0.00E-01 | |
| 22 | A 020* | PH | FLUORENE | T | 0.00E-01 | 0.00E-01 | 0.00E-01 | 2 |
| 22 | A 020* | PH | FLUORENE | T | 0.00E-01 | 0.00E-01 | 0.00E-01 | 3 |
| 22 | B 040* | P | FLUORANTHENE | T | 6.00E 04 | 0.00E-01 | 0.00E-01 | |
| 22 | B 040* | P | FLUORANTHENE | T | 0.00E-01 | 0.00E-01 | 0.00E-01 | 2 |
| 22 | B 040* | P | FLUORANTHENE | T | 0.00E-01 | 0.00E-01 | 0.00E-01 | 3 |
| 22 | C 020* | P | BENZO(K)FLUORANTHENE | T | 6.00E 04 | 0.00E-01 | 0.00E-01 | |
| 22 | C 020* | P | BENZO(K)FLUORANTHENE | T | 0.00E-01 | 0.00E-01 | 0.00E-01 | 2 |
| 22 | C 020* | P | BENZO(K)FLUORANTHENE | T | 0.00E-01 | 0.00E-01 | 0.00E-01 | 3 |
| 22 | C 080* | P | BENZO(B)FLUORANTHENE | T | 6.00E 04 | 0.00E-01 | 0.00E-01 | |
| 22 | C 080* | P | BENZO(B)FLUORANTHENE | T | 0.00E-01 | 0.00E-01 | 0.00E-01 | 2 |
| 22 | C 080* | P | BENZO(B)FLUORANTHENE | T | 0.00E-01 | 0.00E-01 | 0.00E-01 | 3 |
| 22 | D 020* | P | INDENO(1,2,3-CD)PYRENE | T | 6.00E 04 | 0.00E-01 | 0.00E-01 | |
| 22 | D 020* | P | INDENO(1,2,3-CD)PYRENE | T | 0.00E-01 | 0.00E-01 | 0.00E-01 | 2 |
| 22 | D 020* | P | INDENO(1,2,3-CD)PYRENE | T | 0.00E-01 | 0.00E-01 | 0.00E-01 | 3 |
| 04 | A 180* | P | CHLOROPHENYL PHENYL ETHER | T | 0.00E-01 | 0.00E-01 | 0.00E-01 | 4 |

CYCLONE DUST QUENCH WATER, ECOLOGY IMPACT

| DMEG NO. | | COMPOUND NAME | TYPE | CONC E-6 G/L | DS | WDS G/S | LCCAT |
|---|---|---|---|---|---|---|---|
| 04 A 180* | P | CHLOROPHENYL PHENYL ETHER | T | 0.00E-01 | 0.00E-01 | 0.00E-01 | 5 |
| 04 B 020* | P | 1,1'-DICHLOROMETHYL ETHER | T | 6.00E 04 | 0.00E-01 | 0.00E-01 | |
| 04 B 020* | P | 1,1'-DICHLOROMETHYL ETHER | T | 0.00E-01 | 0.00E-01 | 0.00E-01 | 4 |
| 04 B 020* | P | 1,1'-DICHLOROMETHYL ETHER | T | 0.00E-01 | 0.00E-01 | 0.00E-01 | 5 |
| 21 A 100* | PH | ACENAPHTHENE | T | 0.00E-01 | 0.00E-01 | 0.00E-01 | 3 |
| 04 B 040* | P W | 1,1'-DICHLORODIETHYL ETHER | T | 0.00E-01 | 0.00E-01 | 0.00E-01 | 4 |
| 04 B 040* | P W | 1,1'-DICHLORODIETHYL ETHER | T | 0.00E-01 | 0.00E-01 | 0.00E-01 | 5 |
| 21 A 120* | PH | ACENAPHTHYLENE | T | 0.00E-01 | 0.00E-01 | 0.00E-01 | 3 |
| 21 A 140* | P | ANTHRACENE | T | 6.00E 04 | 0.00E-01 | 0.00E-01 | |
| 21 A 140* | P | ANTHRACENE | T | 0.00E-01 | 0.00E-01 | 0.00E-01 | 2 |
| 21 A 140* | P | ANTHRACENE | T | 0.00E-01 | 0.00E-01 | 0.00E-01 | 3 |
| 16 A 020* | P | CHLOROBENZENE | T | 0.00E-01 | 0.00E-01 | 0.00E-01 | 2 |
| 16 A 020* | P | CHLOROBENZENE | T | 0.00E-01 | 0.00E-01 | 0.00E-01 | 3 |
| 19 A 020* | P | 2-CHLOROPHENOL | T | 0.00E-01 | 0.00E-01 | 0.00E-01 | 5 |

GASIFIER ASH

AVERAGE FLOW RATE = 24.2 G/S

939.7 G EXTRACTED  TOTAL ORGANIC LOADING = 640 MG/KG

TOTAL TCO = 48 MG/KG

21.23% ORGINIAL SAMPLE TO LC

LC TCO = 9.7 MG  LG GRAV = 117.4 MG  LC TOTAL = 127.1 MG

| | ORGANIC LOADING |
|---|---|
| 1 | 330.0 |
| 2 | 15.0 |
| 3 | 39.0 |
| 4 | 20.0 |
| 5 | 26.0 |
| 6 | 100.0 |
| 7 | 17.0 |

FLOW RATE = 24.20

STATE: SOLID, UNITS IN MICROGRAMS/G

IMPACT: HEALTH

EXPERIMENTALY DETERMINED DATA

SPARK SOURCE DATA

GASIFIER ASH, HEALTH IMPACT

| DMEG NO. | | | COMPOUND NAME | TYPE | CONC E-6 G/G | DS | WDS G/S | LCCAT |
|---|---|---|---|---|---|---|---|---|
| 16 A 220* | | W | POLYCHLORINATED BIPHENYLS | T | 3.90E 01 | 3.90E 04 | 9.43E 05 | 3 |
| 72 A 010 | | | IRON (AS FE+2) | D | 9.00E 04 | 3.00E 04 | 7.30E 05 | |
| 16 A 220* | | W | POLYCHLORINATED BIPHENYLS | T | 1.50E 01 | 1.50E 04 | 3.62E 05 | 2 |
| 21 C 100* | P | W | BENZO(A)PYRENE | T | 3.90E 01 | 6.50E 02 | 1.60E 04 | 3 |
| 38 A 010 | | | ALUMINUM | D | 8.80E 04 | 5.50E 02 | 1.33E 04 | |
| 36 A 010 | | | BARIUM | D | 5.50E 03 | 5.50E 02 | 1.33E 04 | |
| 43 A 010 | | | SILICON | D | 1.40E 05 | 4.70E 02 | 1.12E 04 | |
| 71 A 010 | P | | MANGANESE | D | 2.20E 02 | 4.40E 02 | 1.10E 04 | |
| 21 C 100* | P | W | BENZO(A)PYRENE | T | 1.50E 01 | 2.50E 02 | 6.04E 03 | 2 |
| 68 A 010 | P | | CHROMIUM | S | 1.00E 02 | 2.00E 02 | 4.83E 03 | |
| 76 A 010 | P | | NICKEL | S | 7.50E 01 | 1.70E 02 | 4.03E 03 | |
| 32 A 010 | P | | BERYLLIUM | S | 9.00E 00 | 1.50E 02 | 3.63E 03 | |
| 54 A 010 | P | | SELENIUM | D | 1.50E 01 | 1.50E 02 | 3.62E 03 | |
| 21 C 080* | P | | DIBENZ(A,H)ANTHRACENE | T | 3.90E 01 | 1.40E 02 | 3.40E 03 | 3 |
| 34 A 010 | | | CALCIUM (AS CA+2) | D | 4.80E 04 | 1.00E 02 | 2.42E 03 | |
| 18 B 020* | | W | CATECHOL | T | 1.00E 02 | 1.00E 02 | 2.42E 03 | 6 |
| 18 A 100* | | W | PHENYLPHENOLS | T | 1.00E 02 | 1.00E 02 | 2.42E 03 | 6 |
| 18 A 140* | | W | XYLENOLS | T | 1.00E 02 | 1.00E 02 | 2.42E 03 | 6 |
| 18 A 101* | | | O-PHENYLPHENOL | T | 1.00E 02 | 1.00E 02 | 2.42E 03 | 6 |
| 18 C 040* | | W | 2-NAPHTHOL | T | 1.00E 02 | 1.00E 02 | 2.42E 03 | 6 |
| 18 A 102* | | | P-PHENYLPHENOL | T | 1.00E 02 | 1.00E 02 | 2.42E 03 | 6 |
| 18 C 081* | | | 1-INDANOL | T | 1.00E 02 | 1.00E 02 | 2.42E 03 | 6 |
| 18 A 082* | | | M-ETHYLPHENOL | T | 1.00E 02 | 1.00E 02 | 2.42E 03 | 6 |
| 18 A 144* | | | 2,6-XYLENOL | T | 1.00E 02 | 1.00E 02 | 2.42E 03 | 6 |
| 18 A 083* | | | P-ETHYLPHENOL | T | 1.00E 02 | 1.00E 02 | 2.42E 03 | 6 |
| 18 A 145* | | | 3,5-XYLENOL | T | 1.00E 02 | 1.00E 02 | 2.42E 03 | 6 |
| 19 A 060* | P | W | PENTACHLOROPHENOL | T | 1.00E 02 | 1.00E 02 | 2.42E 03 | 6 |
| 18 A 146* | | | 3,4-XYLENOL | T | 1.00E 02 | 1.00E 02 | 2.42E 03 | 6 |
| 19 B 020* | | W | CHLORINATED CRESOLS | T | 1.00E 02 | 1.00E 02 | 2.42E 03 | 6 |
| 18 A 160* | | W | ETHYL CRESOLS | T | 1.00E 02 | 1.00E 02 | 2.42E 03 | 6 |
| 19 B 021* | | | CHLORINATED-O-CRESOLS | T | 1.00E 02 | 1.00E 02 | 2.42E 03 | 6 |
| 18 A 103* | | | M-PHENYLPHENOL | T | 1.00E 02 | 1.00E 02 | 2.42E 03 | 6 |
| 19 B 022* | P | | CHLORINATED-M-CRESOLS | T | 1.00E 02 | 1.00E 02 | 2.42E 03 | 6 |
| 18 A 162* | | | 4-ETHYL-O-CRESOL | T | 1.00E 02 | 1.00E 02 | 2.42E 03 | 6 |

GASIFIER ASH, HEALTH IMPACT

| DMEG NO. | | COMPOUND NAME | TYPE | CONC E-6 G/G | DS | WDS G/S | LCCAT |
|---|---|---|---|---|---|---|---|
| 19 B 023* | | CHLORINATED-P-CRESOLS | T | 1.00E 02 | 1.00E 02 | 2.42E 03 | 6 |
| 18 A 163* | | 2-ETHYL-P-CRESOL | T | 1.00E 02 | 1.00E 02 | 2.42E 03 | 6 |
| 20 A 020* | P W | 2-NITROPHENOL | T | 1.00E 02 | 1.00E 02 | 2.42E 03 | 6 |
| 18 A 180* | W | POLYALKYLPHENOLS (MW>135) | T | 1.00E 02 | 1.00E 02 | 2.42E 03 | 6 |
| 18 A 141* | | 2,3-XYLENOL | T | 1.00E 02 | 1.00E 02 | 2.42E 03 | 6 |
| 18 A 181* | | 2,4,6-TRIMETHYL METHYL PHENOL | T | 1.00E 02 | 1.00E 02 | 2.42E 03 | 6 |
| 20 A 060* | P W | 4-NITROPHENOL | T | 1.00E 02 | 1.00E 02 | 2.42E 03 | 6 |
| 18 A 161* | | 6-ETHYL-M-CRESOL | T | 1.00E 02 | 1.00E 02 | 2.42E 03 | 6 |
| 20 A 080* | W | 2-AMINO-4,6-DINITROPHENOL | T | 1.00E 02 | 1.00E 02 | 2.42E 03 | 6 |
| 19 A 020* | P W | 2-CHLOROPHENOL | T | 1.00E 02 | 1.00E 02 | 2.42E 03 | 6 |
| 20 A 100* | W | DINITROPHENOLS | T | 1.00E 02 | 1.00E 02 | 2.42E 03 | 6 |
| 18 A 041* | | M-CRESOL | T | 1.00E 02 | 1.00E 02 | 2.42E 03 | 6 |
| 20 A 101* | P | 2,4-DINITROPHENOL | T | 1.00E 02 | 1.00E 02 | 2.42E 03 | 6 |
| 18 B 040* | W | 1,3-DIHYDROXYBENZENE | T | 1.00E 02 | 1.00E 02 | 2.42E 03 | 6 |
| 20 A 102* | | 2,5-DINITROPHENOL | T | 1.00E 02 | 1.00E 02 | 2.42E 03 | 6 |
| 18 B 060* | W | 1,4-DIHYDROXYBENZENE | T | 1.00E 02 | 1.00E 02 | 2.42E 03 | 6 |
| 20 A 103* | | 2,6-DINITROPHENOL | T | 1.00E 02 | 1.00E 02 | 2.42E 03 | 6 |
| 18 B 080* | W | 1,2,3-TRIHYDROXYBENZENE | T | 1.00E 02 | 1.00E 02 | 2.42E 03 | 6 |
| 20 A 120* | W | 2,4,6-TRINITROPHENOL | T | 1.00E 02 | 1.00E 02 | 2.42E 03 | 6 |
| 18 C 020* | W | 1-NAPHTHOL | T | 1.00E 02 | 1.00E 02 | 2.42E 03 | 6 |
| 20 B 020* | P W | 4,6-DINITRO-O-CRESOL | T | 1.00E 02 | 1.00E 02 | 2.42E 03 | 6 |
| 18 A 081* | | O-ETHYLPHENOL | T | 1.00E 02 | 1.00E 02 | 2.42E 03 | 6 |
| 20 B 040* | W | DINITRO-P-CRESOLS | T | 1.00E 02 | 1.00E 02 | 2.42E 03 | 6 |
| 18 C 080* | W | INDANOLS | T | 1.00E 02 | 1.00E 02 | 2.42E 03 | 6 |
| 20 B 041* | | 3,5-DINITRO-P-CRESOL | T | 1.00E 02 | 1.00E 02 | 2.42E 03 | 6 |
| 18 A 043* | | P-CRESOL | T | 1.00E 02 | 1.00E 02 | 2.42E 03 | 6 |
| 20 B 042* | | 2,6-DINITRO-P-CRESOL | T | 1.00E 02 | 1.00E 02 | 2.42E 03 | 6 |
| 18 C 082* | | 4-INDANOL | T | 1.00E 02 | 1.00E 02 | 2.42E 03 | 6 |
| 18 A 182* | | 4,6-DI-TERT-BUTYL-M-CRESOL | T | 1.00E 02 | 1.00E 02 | 2.42E 03 | 6 |
| 18 A 142* | P | 2,4-XYLENOL | T | 1.00E 02 | 1.00E 02 | 2.42E 03 | 6 |
| 18 A 183* | | 2,6-DIMETHYL-4-HEPTYL PHENOL | T | 1.00E 02 | 1.00E 02 | 2.42E 03 | 6 |
| 18 C 083* | | 5-INDANOL | T | 1.00E 02 | 1.00E 02 | 2.42E 03 | 6 |
| 18 A 143* | | 2,5-XYLENOL | T | 1.00E 02 | 1.00E 02 | 2.42E 03 | 6 |
| 19 A 040* | P W | 2,4-DICHLOROPHENOL | | | | | |

GASIFIER ASH, HEALTH IMPACT

| DMEG NO. | | | COMPOUND NAME | TYPE | CONC E-6 G/G | DS | WDS G/S | LCCAT |
|---|---|---|---|---|---|---|---|---|
| 18 A 042* | | | O-CRESOL | T | 1.00E 02 | 1.00E 02 | 2.42E 03 | 6 |
| 18 A 120* | | W | 2,2'-DIHYDROXYDIPHENYL | T | 1.00E 02 | 1.00E 02 | 2.42E 03 | 6 |
| 18 A 020* | P | W | PHENOL | T | 1.00E 02 | 1.00E 02 | 2.42E 03 | 6 |
| 20 A 040* | | W | 3-NITROPHENOL | T | 1.00E 02 | 1.00E 02 | 2.42E 03 | 6 |
| 18 A 040* | | W | CRESOLS | T | 1.00E 02 | 1.00E 02 | 2.42E 03 | 6 |
| 18 A 060* | | W | 2-METHOXYPHENOL | T | 1.00E 02 | 1.00E 02 | 2.42E 03 | 6 |
| 18 A 080* | | W | ETHYLPHENOLS | T | 1.00E 02 | 1.00E 02 | 2.42E 03 | 6 |
| 83 A 010 | P | | MERCURY | D | 1.70E 00 | 8.50E 01 | 2.10E 03 | |
| 02 A 380* | | W | HEXACHLOROCYCLOHEXANE | T | 3.30E 02 | 8.30E 01 | 2.00E 03 | 1 |
| 65 A 010 | | | VANADIUM | S | 4.10E 02 | 8.20E 01 | 2.00E 03 | |
| 33 A 010 | | | MAGNESIUM | D | 1.30E 04 | 7.22E 01 | 1.74E 03 | |
| 27 A 010 | | | LITHIUM | S | 4.80E 01 | 6.90E 01 | 1.70E 03 | |
| 48 A 010 | | | PHOSPHORUS | D | 2.00E 03 | 6.70E 01 | 1.61E 03 | |
| 49 A 010 | P | | ARSENIC | D | 3.00E 01 | 6.00E 01 | 1.50E 03 | |
| 21 C 080* | P | | DIBENZ(A,H)ANTHRACENE | T | 1.50E 01 | 5.40E 01 | 1.30E 03 | 2 |
| 18 A 163* | | | 2-ETHYL-P-CRESOL | T | 2.60E 01 | 2.60E 01 | 6.30E 02 | 5 |
| 18 A 146* | | | 3,4-XYLENOL | T | 2.60E 01 | 2.60E 01 | 6.30E 02 | 5 |
| 18 A 160* | | W | ETHYL CRESOLS | T | 2.60E 01 | 2.60E 01 | 6.30E 02 | 5 |
| 19 A 040* | P | W | 2,4-DICHLOROPHENOL | T | 2.60E 01 | 2.60E 01 | 6.30E 02 | 5 |
| 18 B 020* | | W | CATECHOL | T | 2.60E 01 | 2.60E 01 | 6.30E 02 | 5 |
| 19 A 060* | P | W | PENTACHLOROPHENOL | T | 2.60E 01 | 2.60E 01 | 6.30E 02 | 5 |
| 18 B 040* | | W | 1,3-DIHYDROXYBENZENE | T | 2.60E 01 | 2.60E 01 | 6.30E 02 | 5 |
| 19 B 020* | | W | CHLORINATED CRESOLS | T | 2.60E 01 | 2.60E 01 | 6.30E 02 | 5 |
| 18 B 060* | | W | 1,4-DIHYDROXYBENZENE | T | 2.60E 01 | 2.60E 01 | 6.30E 02 | 5 |
| 18 A 101* | | | O-PHENYLPHENOL | T | 2.60E 01 | 2.60E 01 | 6.30E 02 | 5 |
| 20 A 101* | P | | 2,4-DINITROPHENOL | T | 2.60E 01 | 2.60E 01 | 6.30E 02 | 5 |
| 18 A 161* | | | 6-ETHYL-M-CRESOL | T | 2.60E 01 | 2.60E 01 | 6.30E 02 | 5 |
| 18 A 141* | | | 2,3-XYLENOL | T | 2.60E 01 | 2.60E 01 | 6.30E 02 | 5 |
| 18 A 162* | | | 4-ETHYL-O-CRESOL | T | 2.60E 01 | 2.60E 01 | 6.30E 02 | 5 |
| 18 C 040* | | W | 2-NAPHTHOL | T | 2.60E 01 | 2.60E 01 | 6.30E 02 | 5 |
| 18 A 120* | | W | 2,2'-DIHYDROXYDIPHENYL | T | 2.60E 01 | 2.60E 01 | 6.30E 02 | 5 |
| 18 C 080* | | W | INDANOLS | T | 2.60E 01 | 2.60E 01 | 6.30E 02 | 5 |
| 18 A 100* | | W | PHENYLPHENOLS | T | 2.60E 01 | 2.60E 01 | 6.30E 02 | 5 |
| 18 C 081* | | | 1-INDANOL | T | 2.60E 01 | 2.60E 01 | 6.30E 02 | 5 |

GASIFIER ASH, HEALTH IMPACT

| DMEG NO. | | | COMPOUND NAME | TYPE | CONC E-6 G/G | DS | WDS G/S | LCCAT |
|---|---|---|---|---|---|---|---|---|
| 20 B 042* | | | 2,6-DINITRO-P-CRESOL | T | 2.60E 01 | 2.60E 01 | 6.30E 02 | 5 |
| 18 A 182* | | | 4,6-DI-TERT-BUTYL-M-CRESOL | T | 2.60E 01 | 2.60E 01 | 6.30E 02 | 5 |
| 18 A 142* | P | | 2,4-XYLENOL | T | 2.60E 01 | 2.60E 01 | 6.30E 02 | 5 |
| 18 C 020* | | W | 1-NAPHTHOL | T | 2.60E 01 | 2.60E 01 | 6.30E 02 | 5 |
| 18 A 183* | | | 2,6-DIMETHYL-4-HEPTYL PHENOL | T | 2.60E 01 | 2.60E 01 | 6.30E 02 | 5 |
| 18 A 144* | | | 2,6-XYLENOL | T | 2.60E 01 | 2.60E 01 | 6.30E 02 | 5 |
| 20 A 100* | | W | DINITROPHENOLS | T | 2.60E 01 | 2.60E 01 | 6.30E 02 | 5 |
| 18 A 082* | | | M-ETHYLPHENOL | T | 2.60E 01 | 2.60E 01 | 6.30E 02 | 5 |
| 18 A 042* | | | O-CRESOL | T | 2.60E 01 | 2.60E 01 | 6.30E 02 | 5 |
| 18 A 145* | | | 3,5-XYLENOL | T | 2.60E 01 | 2.60E 01 | 6.30E 02 | 5 |
| 20 A 102* | | | 2,5-DINITROPHENOL | T | 2.60E 01 | 2.60E 01 | 6.30E 02 | 5 |
| 20 A 040* | | W | 3-NITROPHENOL | T | 2.60E 01 | 2.60E 01 | 6.30E 02 | 5 |
| 18 A 020* | P | W | PHENOL | T | 2.60E 01 | 2.60E 01 | 6.30E 02 | 5 |
| 19 B 021* | | | CHLORINATED-O-CRESOLS | T | 2.60E 01 | 2.60E 01 | 6.30E 02 | 5 |
| 18 A 040* | | W | CRESOLS | T | 2.60E 01 | 2.60E 01 | 6.30E 02 | 5 |
| 19 B 022* | P | | CHLORINATED-M-CRESOLS | T | 2.60E 01 | 2.60E 01 | 6.30E 02 | 5 |
| 18 A 041* | | | M-CRESOL | T | 2.60E 01 | 2.60E 01 | 6.30E 02 | 5 |
| 19 B 023* | | | CHLORINATED-P-CRESOLS | T | 2.60E 01 | 2.60E 01 | 6.30E 02 | 5 |
| 18 A 103* | | | M-PHENYLPHENOL | T | 2.60E 01 | 2.60E 01 | 6.30E 02 | 5 |
| 20 A 020* | P | W | 2-NITROPHENOL | T | 2.60E 01 | 2.60E 01 | 6.30E 02 | 5 |
| 18 A 180* | | W | POLYALKYLPHENOLS (MW>135) | T | 2.60E 01 | 2.60E 01 | 6.30E 02 | 5 |
| 20 B 041* | | | 3,5-DINITRO-P-CRESOL | T | 2.60E 01 | 2.60E 01 | 6.30E 02 | 5 |
| 18 A 060* | | W | 2-METHOXYPHENOL | T | 2.60E 01 | 2.60E 01 | 6.30E 02 | 5 |
| 18 A 181* | | | 2,4,6-TRIMETHYL METHYL PHENOL | T | 2.60E 01 | 2.60E 01 | 6.30E 02 | 5 |
| 18 A 080* | | W | ETHYLPHENOLS | T | 2.60E 01 | 2.60E 01 | 6.30E 02 | 5 |
| 20 A 080* | | W | 2-AMINO-4,6-DINITROPHENOL | T | 2.60E 01 | 2.60E 01 | 6.30E 02 | 5 |
| 18 A 081* | | | O-ETHYLPHENOL | T | 2.60E 01 | 2.60E 01 | 6.30E 02 | 5 |
| 19 A 020* | P | W | 2-CHLOROPHENOL | T | 2.60E 01 | 2.60E 01 | 6.30E 02 | 5 |
| 18 C 083* | | | 5-INDANOL | T | 2.60E 01 | 2.60E 01 | 6.30E 02 | 5 |
| 20 B 040* | | W | DINITRO-P-CRESOLS | T | 2.60E 01 | 2.60E 01 | 6.30E 02 | 5 |
| 18 A 083* | | | P-ETHYLPHENOL | T | 2.60E 01 | 2.60E 01 | 6.30E 02 | 5 |
| 18 A 102* | | | P-PHENYLPHENOL | T | 2.60E 01 | 2.60E 01 | 6.30E 02 | 5 |
| 18 A 140* | | W | XYLENOLS | T | 2.60E 01 | 2.60E 01 | 6.30E 02 | 5 |
| 20 A 103* | | | 2,6-DINITROPHENOL | T | 2.60E 01 | 2.60E 01 | 6.30E 02 | 5 |

GASIFIER ASH, HEALTH IMPACT

| DMEG NO. | | | COMPOUND NAME | TYPE | CONC E-6 G/G | DS | WDS G/S | LCCAT |
|---|---|---|---|---|---|---|---|---|
| 18 B 080* | | W | 1,2,3-TRIHYDROXYBENZENE | T | 2.60E 01 | 2.60E 01 | 6.30E 02 | 5 |
| 20 A 120* | | W | 2,4,6-TRINITROPHENOL | T | 2.60E 01 | 2.60E 01 | 6.30E 02 | 5 |
| 18 A 043* | | | P-CRESOL | T | 2.60E 01 | 2.60E 01 | 6.30E 02 | 5 |
| 20 B 020* | P | W | 4,6-DINITRO-O-CRESOL | T | 2.60E 01 | 2.60E 01 | 6.30E 02 | 5 |
| 20 A 060* | P | W | 4-NITROPHENOL | T | 2.60E 01 | 2.60E 01 | 6.30E 02 | 5 |
| 18 C 082* | | | 4-INDANOL | T | 2.60E 01 | 2.60E 01 | 6.30E 02 | 5 |
| 18 A 143* | | | 2,5-XYLENOL | T | 2.60E 01 | 2.60E 01 | 6.30E 02 | 5 |
| 62 A 010 | | | TITANIUM | D | 4.50E 03 | 2.50E 01 | 6.04E 02 | |
| 35 A 010 | | | STRONTIUM | D | 1.90E 03 | 2.10E 01 | 5.00E 02 | |
| 85 B 010 | | | THORIUM | S | 2.30E 01 | 1.80E 01 | 4.30E 02 | |
| 74 A 010 | | | COBALT | S | 2.30E 01 | 1.53E 01 | 3.71E 02 | |
| 63 A 010 | | | ZIRCONIUM (AS ZR+4) | S | 1.80E 02 | 1.20E 01 | 2.90E 02 | |
| 28 A 010 | | | SODIUM | D | 1.80E 04 | 1.12E 01 | 2.72E 02 | |
| 46 A 010 | P | | LEAD | S | 5.00E 00 | 1.00E 01 | 2.42E 02 | |
| 78 A 010 | P | | COPPER | S | 8.10E 01 | 8.10E 00 | 2.00E 02 | |
| 82 A 010 | P | | CADMIUM | S | 8.00E-01 | 8.00E 00 | 1.93E 02 | |
| 02 A 380* | | W | HEXACHLOROCYCLOHEXANE | T | 1.50E 01 | 3.80E 00 | 9.10E 01 | 2 |
| 21 B 080* | | | 3-METHYLCHOLANTHRENE | T | 3.90E 01 | 3.54E 00 | 8.60E 01 | 3 |
| 56 A 010 | | | FLUORINE (AS F-) | S | 1.90E 02 | 2.53E 00 | 6.13E 01 | |
| 37 A 010 | | | BORON | D | 2.10E 02 | 2.30E 00 | 5.50E 01 | |
| 61 A 010 | | | YTTRIUM (AS Y+3) | S | 5.90E 01 | 2.00E 00 | 4.80E 01 | |
| 04 B 020* | P | W | 1,1'-DICHLOROMETHYL ETHER | T | 2.60E 01 | 1.73E 00 | 4.20E 01 | 5 |
| 21 B 080* | | | 3-METHYLCHOLANTHRENE | T | 1.50E 01 | 1.40E 00 | 3.30E 01 | 2 |
| 04 B 020* | P | W | 1,1'-DICHLOROMETHYL ETHER | T | 2.00E 01 | 1.33E 00 | 3.22E 01 | 4 |
| 79 A 010 | P | | SILVER | S | 6.00E-01 | 1.20E 00 | 2.90E 01 | |
| 02 A 320* | P | | HEXACHLOROETHANE | T | 3.30E 02 | 1.10E 00 | 2.70E 01 | 1 |
| 02 B 140* | P | W | HEXACHLOROCYCLOPENTADIENE | T | 3.30E 02 | 1.00E 00 | 2.42E 01 | 1 |
| 64 A 010 | | | HAFNIUM, (AS HF+4) | S | 1.00E 00 | 6.70E-01 | 1.61E 01 | |
| 81 A 010 | P | | ZINC | S | 2.00E 01 | 4.00E-01 | 9.70E 00 | |
| 10 C 100* | | | 1,4-DIAMINOBENZENE | T | 1.00E 02 | 3.33E-01 | 8.10E 00 | 6 |
| 10 C 042* | | | 3-AMINOTOLUENE | T | 1.00E 02 | 3.03E-01 | 7.33E 00 | 6 |
| 10 C 040* | | | AMINOTOLUENES | T | 1.00E 02 | 3.03E-01 | 7.33E 00 | 6 |
| 10 C 043* | | | 4-AMINOTOLUENE | T | 1.00E 02 | 3.03E-01 | 7.33E 00 | 6 |
| 10 C 041* | | | 2-AMINOTOLUENE | T | 1.00E 02 | 3.03E-01 | 7.33E 00 | 6 |

GASIFIER ASH, HEALTH IMPACT

| DMEG NO. | | | COMPOUND NAME | TYPE | CONC E-6 G/G | DS | WDS G/S | LCCAT |
|---|---|---|---|---|---|---|---|---|
| 21 D 040* | | W | DIBENZO(A,I)PYRENE | T | 3.90E 01 | 3.00E-01 | 7.30E 00 | 3 |
| 21 B 040* | P | | BENZ(A)ANTHRACENE | T | 3.90E 01 | 3.00E-01 | 7.30E 00 | 3 |
| 12 A 040* | P | | N-NITROSODIETHYLAMINE | T | 1.00E 02 | 2.80E-01 | 6.72E 00 | 6 |
| 23 B 100* | | W | DIHYDROACRIDINE | T | 1.00E 02 | 2.04E-01 | 4.93E 00 | 6 |
| 10 C 220* | | | 2-AMINONAPHTHALENE | T | 1.00E 02 | 2.00E-01 | 4.83E 00 | 6 |
| 23 B 240* | | | DIBENZ(A,H)ACRIDINE | T | 1.00E 02 | 1.50E-01 | 3.61E 00 | 6 |
| 23 B 220* | | | DIBENZ(A,J)ACRIDINE | T | 1.00E 02 | 1.40E-01 | 3.30E 00 | 6 |
| 85 A 010 | | | URANIUM | S | 1.60E 01 | 1.33E-01 | 3.22E 00 | |
| 21 B 040* | P | | BENZ(A)ANTHRACENE | T | 1.50E 01 | 1.20E-01 | 2.80E 00 | 2 |
| 21 D 040* | | W | DIBENZO(A,I)PYRENE | T | 1.50E 01 | 1.20E-01 | 2.80E 00 | 2 |
| 08 B 060* | | W | B-PROPIOLACTONE | T | 1.00E 02 | 1.10E-01 | 2.54E 00 | 6 |
| 84 B 010 | | | CERIUM | S | 1.10E 02 | 1.00E-01 | 2.41E 00 | |
| 69 A 010 | | | MOLYBDENUM | S | 1.50E 01 | 1.00E-01 | 2.41E 00 | |
| 10 C 100* | | | 1,4-DIAMINOBENZENE | T | 2.60E 01 | 8.70E-02 | 2.10E 00 | 5 |
| 23 C 160* | | W | DIBENZO(C,G)CARBAZOLE | T | 2.60E 01 | 8.70E-02 | 2.10E 00 | 5 |
| 10 C 040* | | | AMINOTOLUENES | T | 2.60E 01 | 7.90E-02 | 1.90E 00 | 5 |
| 10 C 041* | | | 2-AMINOTOLUENE | T | 2.60E 01 | 7.90E-02 | 1.90E 00 | 5 |
| 10 C 042* | | | 3-AMINOTOLUENE | T | 2.60E 01 | 7.90E-02 | 1.90E 00 | 5 |
| 10 C 043* | | | 4-AMINOTOLUENE | T | 2.60E 01 | 7.90E-02 | 1.90E 00 | 5 |
| 02 A 180 | | | DIBROMODICHLOROMETHANE | T | 3.30E 02 | 7.90E-02 | 1.90E 00 | 1 |
| 12 A 040* | P | | N-NITROSODIETHYLAMINE | T | 2.60E 01 | 7.22E-02 | 1.74E 00 | 5 |
| 13 A 100* | | W | BENZENETHIOL | T | 1.00E 02 | 6.70E-02 | 1.61E 00 | 6 |
| 10 C 080* | | | ANISIDINES | T | 1.00E 02 | 6.70E-02 | 1.61E 00 | 6 |
| 23 C 160* | | W | DIBENZO(C,G)CARBAZOLE | T | 2.00E 01 | 6.70E-02 | 1.61E 00 | 4 |
| 10 C 081* | | | O-ANISIDINE | T | 1.00E 02 | 6.70E-02 | 1.61E 00 | 6 |
| 10 C 082* | | | M-ANISIDINE | T | 1.00E 02 | 6.70E-02 | 1.61E 00 | 6 |
| 10 C 083* | | | P-ANISIDINE | T | 1.00E 02 | 6.70E-02 | 1.61E 00 | 6 |
| 39 A 010 | | | GALLIUM | S | 9.00E 00 | 6.00E-02 | 1.50E 00 | |
| 44 A 010 | | | GERMANIUM | S | 1.00E 00 | 5.90E-02 | 1.42E 00 | |
| 10 C 200* | | | 1-AMINONAPHTHALENE | T | 1.00E 02 | 5.90E-02 | 1.42E 00 | 6 |
| 21 B 105* | | | 6-METHYL BENZO(C)PHENANTHRENE | T | 3.90E 01 | 5.82E-02 | 1.40E 00 | 3 |
| 21 B 107* | | | 8-METHYL BENZO(C)PHENANTHRENE | T | 3.90E 01 | 5.82E-02 | 1.40E 00 | 3 |
| 21 B 101* | | | BENZO(C)PHENANTHRENE | T | 3.90E 01 | 5.82E-02 | 1.40E 00 | 3 |
| 21 B 108* | | | ISOPROPYL BENZO(C)PHENANTHRENE | T | 3.90E 01 | 5.82E-02 | 1.40E 00 | 3 |

GASIFIER ASH, HEALTH IMPACT

| DMEG NO. | | COMPOUND NAME | TYPE | CONC E-6 G/G | DS | WDS G/S | LCCAT |
|---|---|---|---|---|---|---|---|
| 21 B 109* | | 6-ETHYL BENZO(C)PHENANTHRENE | T | 3.90E 01 | 5.82E-02 | 1.40E 00 | 3 |
| 21 B 108* | | 2-ETHYL BENZO(C)PHENANTHRENE | T | 3.90E 01 | 5.82E-02 | 1.40E 00 | 3 |
| 21 B 106* | | 7-METHYL BENZO(C)PHENANTHRENE | T | 3.90E 01 | 5.82E-02 | 1.40E 00 | 3 |
| 21 B 100* | | BENZO(C)PHENANTHRENE & ALKYL DERIVATIVES | T | 3.90E 01 | 5.82E-02 | 1.40E 00 | 3 |
| 21 B 10A* | | N-PROPYL BENZO(C)PHENANTHRENE | T | 3.90E 01 | 5.82E-02 | 1.40E 00 | 3 |
| 21 B 102* | | 1-METHYL BENZO(C)PHENANTHRENE | T | 3.90E 01 | 5.82E-02 | 1.40E 00 | 3 |
| 21 B 104* | | 5-METHYL BENZO(C)PHENANTHRENE | T | 3.90E 01 | 5.82E-02 | 1.40E 00 | 3 |
| 21 B 103* | | 2-METHYL BENZO(C)PHENANTHRENE | T | 3.90E 01 | 5.82E-02 | 1.40E 00 | 3 |
| 57 A 010 | | CHLORINE (AS CL-) | D | 1.50E 02 | 5.80E-02 | 1.40E 00 | |
| 23 B 100* | W | DIHYDROACRIDINE | T | 2.60E 01 | 5.30E-02 | 1.30E 00 | 5 |
| 10 C 220* | | 2-AMINONAPHTHALENE | T | 2.60E 01 | 5.20E-02 | 1.30E 00 | 5 |
| 10 C 140* | P | BENZIDINE | T | 1.00E 02 | 5.00E-02 | 1.20E 00 | 6 |
| 12 A 020* | P W | N-NITROSODIMETHYLAMINE | T | 1.00E 02 | 5.00E-02 | 1.20E 00 | 6 |
| 02 A 320* | P | HEXACHLOROETHANE | T | 1.50E 01 | 5.00E-02 | 1.20E 00 | 2 |
| 66 A 010 | | NIOBIUM (AS NB+3) | S | 3.10E 01 | 4.80E-02 | 1.20E 00 | |
| 02 B 140* | P W | HEXACHLOROCYCLOPENTADIENE | T | 1.50E 01 | 4.54E-02 | 1.10E 00 | 2 |
| 23 B 240* | | DIBENZ(A,H)ACRIDINE | T | 2.60E 01 | 3.90E-02 | 9.40E-01 | 5 |
| 23 B 220* | | DIBENZ(A,J)ACRIDINE | T | 2.60E 01 | 3.51E-02 | 8.50E-01 | 5 |
| 70 A 010 | | TUNGSTEN | S | 1.00E 00 | 3.33E-02 | 8.10E-01 | |
| 08 C 060 | W | 6-HEXANELACTAM | T | 1.00E 02 | 3.33E-02 | 8.10E-01 | 6 |
| 84 A 010 | | LANTHANUM | S | 1.10E 02 | 3.23E-02 | 7.82E-01 | |
| 08 A 123 | | STEARIC ACID | T | 1.00E 02 | 3.22E-02 | 7.80E-01 | 6 |
| 08 A 121 | | MYRISTIC ACID | T | 1.00E 02 | 3.22E-02 | 7.80E-01 | 6 |
| 08 A 120 | W | SATURATED LONG CHAIN ACIDS (MW:228-285) | T | 1.00E 02 | 3.22E-02 | 7.80E-01 | 6 |
| 08 A 122 | | PALMITIC ACID | T | 1.00E 02 | 3.22E-02 | 7.80E-01 | 6 |
| 02 B 120* | P | HEXACHLOROBUTADIENE | T | 3.30E 02 | 2.80E-02 | 6.70E-01 | 1 |
| 08 B 060* | W | B-PROPIOLACTONE | T | 2.60E 01 | 2.73E-02 | 6.62E-01 | 5 |
| 50 A 010 | P | ANTIMONY | D | < 4.00E-01< | 2.70E-02< | 6.50E-01 | |
| 12 B 020 | W | N-METHYL-N-NITROSOANILINE | T | 1.00E 02 | 2.60E-02 | 6.20E-01 | 6 |
| 10 C 120 | | 4-AMINOBIPHENYL | T | 1.00E 02 | 2.50E-02 | 6.04E-01 | 6 |
| 21 B 108* | | ISOPROPYL BENZO(C)PHENANTHRENE | T | 1.50E 01 | 2.23E-02 | 5.41E-01 | 2 |
| 21 B 107* | | 8-METHYL BENZO(C)PHENANTHRENE | T | 1.50E 01 | 2.23E-02 | 5.41E-01 | 2 |
| 21 B 105* | | 6-METHYL BENZO(C)PHENANTHRENE | T | 1.50E 01 | 2.23E-02 | 5.41E-01 | 2 |
| 21 B 108* | | 2-ETHYL BENZO(C)PHENANTHRENE | T | 1.50E 01 | 2.23E-02 | 5.41E-01 | 2 |

## GASIFIER ASH, HEALTH IMPACT

| DMEG NO. | | | COMPOUND NAME | TYPE | CONC E-6 G/G | DS | WDS G/S | LCCAT |
|---|---|---|---|---|---|---|---|---|
| 21 B 104* | | | 5-METHYL BENZO(C)PHENANTHRENE | T | 1.50E 01 | 2.23E-02 | 5.41E-01 | 2 |
| 21 B 10A* | | | N-PROPYL BENZO(C)PHENANTHRENE | T | 1.50E 01 | 2.23E-02 | 5.41E-01 | 2 |
| 21 B 100* | | | BENZO(C)PHENANTHRENE & ALKYL DERIVATIVES | T | 1.50E 01 | 2.23E-02 | 5.41E-01 | 2 |
| 21 B 109* | | | 6-ETHYL BENZO(C)PHENANTHRENE | T | 1.50E 01 | 2.23E-02 | 5.41E-01 | 2 |
| 21 B 101* | | | BENZO(C)PHENANTHRENE | T | 1.50E 01 | 2.23E-02 | 5.41E-01 | 2 |
| 21 B 103* | | | 2-METHYL BENZO(C)PHENANTHRENE | T | 1.50E 01 | 2.23E-02 | 5.41E-01 | 2 |
| 21 B 102* | | | 1-METHYL BENZO(C)PHENANTHRENE | T | 1.50E 01 | 2.23E-02 | 5.41E-01 | 2 |
| 21 B 106* | | | 7-METHYL BENZO(C)PHENANTHRENE | T | 1.50E 01 | 2.23E-02 | 5.41E-01 | 2 |
| 02 A 160* | P | | BROMOFORM | T | 3.30E 02 | 2.20E-02 | 5.32E-01 | 1 |
| 08 B 060* | | W | B-PROPIOLACTONE | T | 1.70E 01 | 1.80E-02 | 4.33E-01 | 7 |
| 10 C 082* | | | M-ANISIDINE | T | 2.60E 01 | 1.73E-02 | 4.20E-01 | 5 |
| 10 C 080* | | | ANISIDINES | T | 2.60E 01 | 1.73E-02 | 4.20E-01 | 5 |
| 10 C 081* | | | O-ANISIDINE | T | 2.60E 01 | 1.73E-02 | 4.20E-01 | 5 |
| 13 A 100* | | W | BENZENETHIOL | T | 2.60E 01 | 1.73E-02 | 4.20E-01 | 5 |
| 10 C 083* | | | P-ANISIDINE | T | 2.60E 01 | 1.52E-02 | 3.70E-01 | 5 |
| 10 C 200* | | | 1-AMINONAPHTHALENE | S | 7.00E 00 | 1.52E-02 | 3.70E-01 | |
| 84 F 010 | | | DYSPROSIUM | T | 3.90E 01 | 1.44E-02 | 3.50E-01 | 3 |
| 22 C 080* | P | W | BENZO(B)FLUORANTHENE | S | 4.70E 01 | 1.30E-02 | 3.20E-01 | |
| 30 A 010 | | | RUBIDIUM (AS RB+) | T | 3.90E 01 | 1.30E-02 | 3.14E-01 | 3 |
| 15 A 160 | | W | BIPHENYL | T | 2.60E 01 | 1.30E-02 | 3.14E-01 | 5 |
| 12 A 020* | P | W | N-NITROSODIMETHYLAMINE | T | 2.60E 01 | 1.30E-02 | 3.14E-01 | 5 |
| 10 C 140* | P | | BENZIDINE | S | 2.00E 01 | 1.30E-02 | 3.02E-01 | |
| 60 A 010 | | | SCANDIUM | T | 3.90E 01 | 1.21E-02 | 2.94E-01 | 3 |
| 21 D 060 | | | DIBENZO(A,L)PYRENE | S | 1.60E 01 | 1.10E-02 | 2.60E-01 | |
| 84 C 010 | | | PRASEODYMIUM | T | 3.30E 02 | 9.70E-03 | 2.34E-01 | 1 |
| 02 B 100* | P | | DICHLOROPROPENES | S | 1.30E 01 | 8.12E-03 | 2.00E-01 | |
| 84 E 010 | | | SAMARIUM | T | 3.90E 01 | 8.12E-03 | 2.00E-01 | 3 |
| 21 A 180* | P | W | PHENANTHRENE | T | 3.90E 01 | 8.12E-03 | 2.00E-01 | 3 |
| 22 D 020* | P | W | INDENO(1,2,3-CD)PYRENE | T | 3.90E 01 | 8.00E-03 | 1.92E-01 | 3 |
| 22 C 020* | P | | BENZO(K)FLUORANTHENE | T | 1.00E 02 | 6.70E-03 | 1.61E-01 | 6 |
| 08 D 300* | P | | DI-2-ETHYLHEXYL PHTHALATE | T | 1.00E 02 | 6.70E-03 | 1.61E-01 | 6 |
| 08 D 280* | P | W | PHTHALATE ESTERS (MW:194-279) | T | 3.90E 01 | 5.90E-03 | 1.42E-01 | 3 |
| 21 B 120* | P | | CHRYSENE | T | 2.60E 01 | 5.80E-03 | 1.40E-01 | 5 |
| 17 A 084* | P | | 2,4-DINITROTOLUENE | | | | | |

GASIFIER ASH, HEALTH IMPACT

| DMEG NO. | COMPOUND NAME | TYPE | CONC E-6 G/G | DS | WDS G/S | LCCAT |
|---|---|---|---|---|---|---|
| 17 A 081* P | 2,6-DINITROTOLUENE | T | 2.60E 01 | 5.80E-03 | 1.40E-01 | 5 |
| 22 C 080* P W | BENZO(B)FLUORANTHENE | T | 1.50E 01 | 5.60E-03 | 1.34E-01 | 2 |
| 17 A 084* P | 2,4-DINITROTOLUENE | T | 2.00E 01 | 4.44E-03 | 1.10E-01 | 4 |
| 17 A 081* P | 2,6-DINITROTOLUENE | T | 2.00E 01 | 4.44E-03 | 1.10E-01 | 4 |
| 31 A 010 | CESIUM | S | 8.00E 00 | 3.20E-03 | 7.74E-02 | |
| 21 A 180* P W | PHENANTHRENE | T | 1.50E 01 | 3.12E-03 | 7.60E-02 | 2 |
| 22 D 020* P W | INDENO(1,2,3-CD)PYRENE | T | 1.50E 01 | 3.12E-03 | 7.60E-02 | 2 |
| 22 C 020* P | BENZO(K)FLUORANTHENE | T | 1.50E 01 | 3.10E-03 | 7.40E-02 | 2 |
| 02 A 140* P | DIBROMOCHLOROMETHANE | T | 3.30E 02 | 2.40E-03 | 5.70E-02 | 1 |
| 21 B 120* P | CHRYSENE | T | 1.50E 01 | 2.30E-03 | 5.50E-02 | 2 |
| 08 D 300* P | DI-2-ETHYLHEXYL PHTHALATE | T | 2.60E 01 | 1.73E-03 | 4.20E-02 | 5 |
| 08 D 280* P W | PHTHALATE ESTERS (MW:194-279) | T | 2.60E 01 | 1.73E-03 | 4.20E-02 | 5 |
| 17 A 020* P | NITROBENZENE | T | 2.60E 01 | 1.73E-03 | 4.20E-02 | 5 |
| 12 A 060* P | N-NITROSODIPROPYLAMINE | T | 1.00E 02 | 1.40E-03 | 3.40E-02 | 6 |
| 17 A 020* P | NITROBENZENE | T | 2.00E 01 | 1.33E-03 | 3.22E-02 | 4 |
| 07 B 080* P | ISOPHORONE | T | 1.00E 02 | 1.33E-03 | 3.22E-02 | 6 |
| 02 B 120* P | HEXACHLOROBUTADIENE | T | 1.50E 01 | 1.30E-03 | 3.02E-02 | 2 |
| 16 A 160* P | POLYCHLORINATED BENZENES | T | 3.90E 01 | 1.11E-03 | 2.70E-02 | 3 |
| 02 A 160* P | BROMOFORM | T | 1.50E 01 | 1.00E-03 | 2.41E-02 | 2 |
| 04 A 140* P | 2-CHLOROETHYL VINYL ETHER | T | 2.60E 01 | 7.64E-04 | 1.90E-02 | 5 |
| 04 A 140* P | 2-CHLOROETHYL VINYL ETHER | T | 2.00E 01 | 5.90E-04 | 1.42E-02 | 4 |
| 02 B 100* P | DICHLOROPROPENES | T | 1.50E 01 | 4.41E-04 | 1.10E-02 | 2 |
| 16 A 160* P | POLYCHLORINATED BENZENES | T | 1.50E 01 | 4.30E-04 | 1.03E-02 | 2 |
| 12 A 060* P | N-NITROSODIPROPYLAMINE | T | 2.60E 01 | 3.61E-04 | 8.73E-03 | 5 |
| 07 B 080* P | ISOPHORONE | T | 2.60E 01 | 3.50E-04 | 8.40E-03 | 5 |
| 02 A 340* P | DICHLOROPROPANES | T | 3.30E 02 | 3.30E-04 | 8.00E-03 | 1 |
| 04 A 180* P | CHLOROPHENYL PHENYL ETHER | T | 2.60E 01 | 3.20E-04 | 7.80E-03 | 5 |
| 04 B 040* P | 1,1'-DICHLORODIETHYL ETHER | T | 2.60E 01 | 2.90E-04 | 7.00E-03 | 5 |
| 21 A 020* P | NAPHTHALENE | T | 3.90E 01 | 2.60E-04 | 6.30E-03 | 3 |
| 04 A 180* P | CHLOROPHENYL PHENYL ETHER | T | 2.00E 01 | 2.50E-04 | 6.00E-03 | 4 |
| 08 D 320* P | BUTYL BENZYL PHTHALATE | T | 1.00E 02 | 2.32E-04 | 5.62E-03 | 6 |
| 21 A 140* P | ANTHRACENE | T | 3.90E 01 | 2.30E-04 | 5.60E-03 | 3 |
| 04 B 040* P | 1,1'-DICHLORODIETHYL ETHER | T | 2.00E 01 | 2.22E-04 | 5.40E-03 | 4 |
| 16 A 200* P | CHLORONAPHTHALENES | T | 3.90E 01 | 1.90E-04 | 4.50E-03 | 3 |

GASIFIER ASH, HEALTH IMPACT

| DMEG NO. | COMPOUND NAME | TYPE | CONC E-6 G/G | DS | WDS G/S | LOCAT |
|---|---|---|---|---|---|---|
| 02 B 080* P | TETRACHLOROETHENE | T | 3.30E 02 | 1.70E-04 | 4.00E-03 | 1 |
| 22 B 040* P W | FLUORANTHENE | T | 3.90E 01 | 1.40E-04 | 3.40E-03 | 3 |
| 02 A 140* P | DIBROMOCHLOROMETHANE | T | 1.50E 01 | 1.10E-04 | 2.60E-03 | 2 |
| 21 A 020* P | NAPHTHALENE | T | 1.50E 01 | 1.00E-04 | 2.41E-03 | 2 |
| 21 A 140* P | ANTHRACENE | T | 1.50E 01 | 8.82E-05 | 2.13E-03 | 2 |
| 16 A 200* P | CHLORONAPHTHALENES | T | 1.50E 01 | 7.14E-05 | 1.72E-03 | 2 |
| 08 D 320* P | BUTYL BENZYL PHTHALATE | T | 2.60E 01 | 6.04E-05 | 1.50E-03 | 5 |
| 21 B 180* P | PYRENE | T | 3.90E 01 | 5.70E-05 | 1.40E-03 | 3 |
| 22 B 040* P W | FLUORANTHENE | T | 1.50E 01 | 5.40E-05 | 1.30E-03 | 2 |
| 16 A 100* P | 1,2-DICHLOROBENZENE | T | 3.90E 01 | 4.33E-05 | 1.04E-03 | 3 |
| 16 A 120* P | 1,3-DICHLOROBENZENE | T | 3.90E 01 | 4.33E-05 | 1.04E-03 | 3 |
| 16 A 020* P | CHLOROBENZENE | T | 3.90E 01 | 3.54E-05 | 8.60E-04 | 3 |
| 15 A 040* P | TOLUENE | T | 3.90E 01 | 3.54E-05 | 8.60E-04 | 3 |
| 15 A 060* P | ETHYL BENZENE | T | 3.90E 01 | 3.00E-05 | 7.30E-04 | 3 |
| 16 A 140* P | 1,4-DICHLOROBENZENE | T | 3.90E 01 | 2.80E-05 | 6.74E-04 | 3 |
| 21 B 180* P | PYRENE | T | 1.50E 01 | 2.20E-05 | 5.30E-04 | 2 |
| 16 A 100* P | 1,2-DICHLOROBENZENE | T | 1.50E 01 | 1.70E-05 | 4.03E-04 | 2 |
| 16 A 120* P | 1,3-DICHLOROBENZENE | T | 1.50E 01 | 1.70E-05 | 4.03E-04 | 2 |
| 02 A 340* P | DICHLOROPROPANES | T | 1.50E 01 | 1.50E-05 | 3.62E-04 | 2 |
| 15 A 040* P | TOLUENE | T | 1.50E 01 | 1.40E-05 | 3.30E-04 | 2 |
| 16 A 020* P | CHLOROBENZENE | T | 1.50E 01 | 1.40E-05 | 3.30E-04 | 2 |
| 15 A 060* P | ETHYL BENZENE | T | 1.50E 01 | 1.20E-05 | 2.80E-04 | 2 |
| 16 A 140* P | 1,4-DICHLOROBENZENE | T | 1.50E 01 | 1.10E-05 | 2.60E-04 | 2 |
| 02 B 080* P | TETRACHLOROETHENE | T | 1.50E 01 | 7.50E-06 | 1.81E-04 | 2 |
| 45 A 010 | TIN | S | 5.00E-01 | 0.00E-01 | 0.00E-01 | |
| 22 A 020* PH | FLUORENE | T | 3.90E 01 | 0.00E-01 | 0.00E-01 | 3 |
| 21 A 120* PH | ACENAPHTHYLENE | T | 3.90E 01 | 0.00E-01 | 0.00E-01 | 3 |
| 04 A 160* P | A-CHLOROBUTYL ETHYL ETHER | T | 2.00E 01 | 0.00E-01 | 0.00E-01 | 4 |
| 59 A 010 | IODINE (AS I-) | S | 2.00E-01 | 0.00E-01 | 0.00E-01 | |
| 29 A 010 | POTASSIUM | D | 8.60E 03 | 0.00E-01 | 0.00E-01 | |
| 04 A 160* P | A-CHLOROBUTYL ETHYL ETHER | T | 2.60E 01 | 0.00E-01 | 0.00E-01 | 5 |
| 21 D 080* PH | BENZO(GHI)PERYLENE | T | 3.90E 01 | 0.00E-01 | 0.00E-01 | 3 |
| 22 A 020* PH | FLUORENE | T | 1.50E 01 | 0.00E-01 | 0.00E-01 | 2 |
| 84 D 010 | NEODYMIUM | S | 3.00E 01 | 0.00E-01 | 0.00E-01 | |

GASIFIER ASH, HEALTH IMPACT

| DMEG NO. | | COMPOUND NAME | TYPE | CONC E-6 G/G | DS | WDS G/S | LCCAT |
|---|---|---|---|---|---|---|---|
| 53 A 010 | | SULFUR | D | 8.80E 03 | 0.00E-01 | 0.00E-01 | |
| 21 D 080* | PH | BENZO(GHI)PERYLENE | T | 1.50E 01 | 0.00E-01 | 0.00E-01 | 2 |
| 58 A 010 | | BROMINE | S | 2.00E 00 | 0.00E-01 | 0.00E-01 | |
| 21 A 100* | PH | ACENAPHTHENE | T | 1.50E 01 | 0.00E-01 | 0.00E-01 | 2 |
| 21 A 100* | PH | ACENAPHTHENE | T | 3.90E 01 | 0.00E-01 | 0.00E-01 | 3 |
| 21 A 120* | PH | ACENAPHTHYLENE | T | 1.50E 01 | 0.00E-01 | 0.00E-01 | 2 |

GASIFIER ASH

AVERAGE FLOW RATE = 24.2 G/S

939.7 G EXTRACTED  TOTAL ORGANIC LOADING = 640 MG/KG

TOTAL TCO = 48 MG/KG

21.23% ORGINIAL SAMPLE TO LC

LC TCO = 9.7 MG  LG GRAV = 117.4 MG  LC TOTAL = 127.1 MG

| LCCAT | ORGANIC LOADING |
|---|---|
| 1 | 330.0 |
| 2 | 15.0 |
| 3 | 39.0 |
| 4 | 20.0 |
| 5 | 26.0 |
| 6 | 100.0 |
| 7 | 17.0 |

FLOW RATE = 24.20

STATE: SOLID, UNITS IN MICROGRAMS/G

IMPACT: ECOLOGY

EXPERIMENTALY DETERMINED DATA

SPARK SOURCE DATA

GASIFIER ASH, ECOLOGY IMPACT

| DMEG NO. | | COMPOUND NAME | TYPE | CONC E-6 G/G | DS | WDS G/S | LCCAT |
|---|---|---|---|---|---|---|---|
| 02 A 380* | W | HEXACHLOROCYCLOHEXANE | T | 3.30E 02 | 8.24E 04 | 2.00E 06 | 1 |
| 16 A 220* | W | POLYCHLORINATED BIPHENYLS | T | 3.90E 01 | 3.90E 04 | 9.43E 05 | 3 |
| 48 A 010 | | PHOSPHORUS | D | 2.00E 03 | 2.00E 04 | 4.83E 05 | |
| 16 A 220* | W | POLYCHLORINATED BIPHENYLS | T | 1.50E 01 | 1.50E 04 | 3.62E 05 | 2 |
| 02 A 380* | W | HEXACHLOROCYCLOHEXANE | T | 1.50E 01 | 3.74E 03 | 9.10E 04 | 2 |
| 72 A 010 | | IRON (AS FE+2) | D | 9.00E 04 | 1.80E 03 | 4.40E 04 | |
| 38 A 010 | | ALUMINUM | D | 8.80E 04 | 4.40E 02 | 1.10E 04 | |
| 08 D 281* | | DIMETHYL PHTHALATE | T | 1.00E 02 | 1.30E 02 | 3.02E 03 | 6 |
| 08 D 282* | | DIETHYL PHTHALATE | T | 1.00E 02 | 1.30E 02 | 3.02E 03 | 6 |
| 08 D 280* | P W | PHTHALATE ESTERS (MW:194-279) | T | 1.00E 02 | 1.30E 02 | 3.02E 03 | 6 |
| 08 D 283* | | DI-N-BUTYL PHTHALATE | T | 1.00E 02 | 1.30E 02 | 3.02E 03 | 6 |
| 76 A 010 | P | NICKEL | S | 7.50E 01 | 3.80E 01 | 9.10E 02 | |
| 08 D 280* | P W | PHTHALATE ESTERS (MW:194-279) | T | 2.60E 01 | 3.24E 01 | 7.90E 02 | 5 |
| 08 D 283* | | DI-N-BUTYL PHTHALATE | T | 2.60E 01 | 3.24E 01 | 7.90E 02 | 5 |
| 08 D 282* | | DIETHYL PHTHALATE | T | 2.60E 01 | 3.24E 01 | 7.90E 02 | 5 |
| 08 D 281* | | DIMETHYL PHTHALATE | T | 2.60E 01 | 3.24E 01 | 7.90E 02 | 5 |
| 62 A 010 | | TITANIUM | D | 4.50E 03 | 2.81E 01 | 6.80E 02 | |
| 19 A 060* | P W | PENTACHLOROPHENOL | T | 1.00E 02 | 2.00E 01 | 4.83E 02 | 6 |
| 01 B 220 | W | DICYCLOPENTADIENE | T | 3.30E 02 | 1.70E 01 | 4.00E 02 | 1 |
| 34 A 010 | | CALCIUM (AS CA+2) | D | 4.80E 04 | 1.50E 01 | 3.62E 02 | |
| 65 A 010 | | VANADIUM | S | 4.10E 02 | 1.40E 01 | 3.30E 02 | |
| 36 A 010 | | BARIUM | D | 5.50E 03 | 1.10E 01 | 2.70E 02 | |
| 71 A 010 | P | MANGANESE | D | 2.20E 02 | 1.10E 01 | 2.70E 02 | |
| 78 A 010 | P | COPPER | S | 8.10E 01 | 8.10E 00 | 2.00E 02 | |
| 19 A 060* | P W | PENTACHLOROPHENOL | T | 2.60E 01 | 5.20E 00 | 1.30E 02 | 5 |
| 20 A 102* | | 2,5-DINITROPHENOL | T | 1.00E 02 | 5.00E 00 | 1.21E 02 | 6 |
| 20 A 100* | W | DINITROPHENOLS | T | 1.00E 02 | 5.00E 00 | 1.21E 02 | 6 |
| 10 C 140* | P W | BENZIDINE | T | 1.00E 02 | 5.00E 00 | 1.21E 02 | 6 |
| 20 A 101* | P | 2,4-DINITROPHENOL | T | 1.00E 02 | 5.00E 00 | 1.21E 02 | 6 |
| 20 A 080* | W | 2-AMINO-4,6-DINITROPHENOL | T | 1.00E 02 | 5.00E 00 | 1.21E 02 | 6 |
| 10 C 220* | W | 2-AMINONAPHTHALENE | T | 1.00E 02 | 5.00E 00 | 1.21E 02 | 6 |
| 10 C 200* | W | 1-AMINONAPHTHALENE | T | 1.00E 02 | 5.00E 00 | 1.21E 02 | 6 |
| 20 A 103* | | 2,6-DINITROPHENOL | T | 1.00E 02 | 5.00E 00 | 1.21E 02 | 6 |
| 82 A 010 | P | CADMIUM | S | 8.00E-01 | 4.00E 00 | 9.70E 01 | |

GASIFIER ASH, ECOLOGY IMPACT

| DMEG NO. | | | COMPOUND NAME | TYPE | CONC E-6 G/G | DS | WDS G/S | LCCAT |
|---|---|---|---|---|---|---|---|---|
| 49 A 010 | P | | ARSENIC | D | 3.00E 01 | 3.00E 00 | 7.30E 01 | |
| 54 A 010 | P | | SELENIUM | D | 1.50E 01 | 3.00E 00 | 7.30E 01 | |
| 68 A 010 | P | | CHROMIUM | S | 1.00E 02 | 2.00E 00 | 4.83E 01 | |
| 16 A 100* | P | | 1,2-DICHLOROBENZENE | T | 3.90E 01 | 2.00E 00 | 4.71E 01 | 3 |
| 16 A 060* | | | DIBROMOBENZENES | T | 3.90E 01 | 2.00E 00 | 4.71E 01 | 3 |
| 16 A 040* | | | BROMOBENZENE | T | 3.90E 01 | 2.00E 00 | 4.71E 01 | 3 |
| 16 B 020* | | W | A-CHLOROTOLUENE | T | 3.90E 01 | 2.00E 00 | 4.71E 01 | 3 |
| 16 A 160* | P | | POLYCHLORINATED BENZENES | T | 3.90E 01 | 2.00E 00 | 4.71E 01 | 3 |
| 16 A 162* | | | HEXACHLOROBENZENE | T | 3.90E 01 | 2.00E 00 | 4.71E 01 | 3 |
| 16 B 041* | | | 1,2-BIS(CHLOROMETHYBENZENE | T | 3.90E 01 | 2.00E 00 | 4.71E 01 | 3 |
| 16 A 140* | P | | 1,4-DICHLOROBENZENE | T | 3.90E 01 | 2.00E 00 | 4.71E 01 | 3 |
| 16 A 083* | | | 1-BROMO-4-CHLOROBENZENE | T | 3.90E 01 | 2.00E 00 | 4.71E 01 | 3 |
| 16 A 082* | | | 1-BROMO-3-CHLOROBENZENE | T | 3.90E 01 | 2.00E 00 | 4.71E 01 | 3 |
| 16 B 042* | | | 1,3-BIS(CHLOROMETHYL)BENZENE | T | 3.90E 01 | 2.00E 00 | 4.71E 01 | 3 |
| 16 A 120* | P | | 1,3-DICHLOROBENZENE | T | 3.90E 01 | 2.00E 00 | 4.71E 01 | 3 |
| 21 A 020* | P | | NAPHTHALENE | T | 3.90E 01 | 2.00E 00 | 4.71E 01 | 3 |
| 16 B 040* | | | BIS(CHLOROMETHYL)BENZENES | T | 3.90E 01 | 2.00E 00 | 4.71E 01 | 3 |
| 16 A 061* | | | 1,2-DIBROMOBENZENE | T | 3.90E 01 | 2.00E 00 | 4.71E 01 | 3 |
| 16 A 062* | | | 1,3-DIBROMOBENZENE | T | 3.90E 01 | 2.00E 00 | 4.71E 01 | 3 |
| 16 A 081* | | | 1-BROMO-2-CHLOROBENZENE | T | 3.90E 01 | 2.00E 00 | 4.71E 01 | 3 |
| 16 A 080* | | | BROMOCHLOROBENZENES | T | 3.90E 01 | 2.00E 00 | 4.71E 01 | 3 |
| 16 A 063* | | | 1,4-DIBROMOBENZENE | T | 3.90E 01 | 2.00E 00 | 4.71E 01 | 3 |
| 16 B 043* | | | 1,4-BIS(CHLOROMETHYL)BENZENE | T | 3.90E 01 | 2.00E 00 | 4.71E 01 | 3 |
| 16 A 161* | | | 1,2,4-TRICHLOROBENZENE | T | 3.90E 01 | 2.00E 00 | 4.71E 01 | 3 |
| 16 A 020* | P | | CHLOROBENZENE | T | 3.30E 02 | 1.70E 00 | 4.00E 01 | 1 |
| 02 B 104* | | | TRANS-1,3-DICHLOROPROPENE | T | 3.30E 02 | 1.70E 00 | 4.00E 01 | 1 |
| 02 A 340* | P | | DICHLOROPROPANES | T | 3.30E 02 | 1.70E 00 | 4.00E 01 | 1 |
| 02 B 080* | P | W | TETRACHLORDETHENE | T | 3.30E 02 | 1.70E 00 | 4.00E 01 | 1 |
| 02 B 103* | | | CIS-1,3-DICHLOROPROPENE | T | 3.30E 02 | 1.70E 00 | 4.00E 01 | 1 |
| 02 B 100* | P | W | DICHLOROPROPENES | T | 3.30E 02 | 1.70E 00 | 4.00E 01 | 1 |
| 02 A 343* | | | 1,3-DICHLOROPROPANE | T | 2.60E 01 | 1.30E 00 | 3.14E 01 | 5 |
| 20 A 101* | P | | 2,4-DINITROPHENOL | T | 2.60E 01 | 1.30E 00 | 3.14E 01 | 5 |
| 20 A 100* | | W | DINITROPHENOLS | T | 2.60E 01 | 1.30E 00 | 3.14E 01 | 5 |
| 20 A 103* | | | 2,6-DINITROPHENOL | | | | | |

## GASIFIER ASH, ECOLOGY IMPACT

| DMEG NO. | | | COMPOUND NAME | TYPE | CONC E-6 G/G | DS | WDS G/S | LCCAT |
|---|---|---|---|---|---|---|---|---|
| 20 A 080* | | W | 2-AMINO-4,6-DINITROPHENOL | T | 2.60E 01 | 1.30E 00 | 3.14E 01 | 5 |
| 10 C 220* | | W | 2-AMINONAPHTHALENE | T | 2.60E 01 | 1.30E 00 | 3.14E 01 | 5 |
| 20 A 102* | | | 2,5-DINITROPHENOL | T | 2.60E 01 | 1.30E 00 | 3.14E 01 | 5 |
| 10 C 140* | P | W | BENZIDINE | T | 2.60E 01 | 1.30E 00 | 3.14E 01 | 5 |
| 10 C 200* | | W | 1-AMINONAPHTHALENE | T | 2.60E 01 | 1.30E 00 | 3.14E 01 | 5 |
| 18 A 182* | | | 4,6-DI-TERT-BUTYL-M-CRESOL | T | 1.00E 02 | 1.00E 00 | 2.42E 01 | 6 |
| 20 B 042* | | | 2,6-DINITRO-P-CRESOL | T | 1.00E 02 | 1.00E 00 | 2.42E 01 | 6 |
| 18 A 145* | | | 3,5-XYLENOL | T | 1.00E 02 | 1.00E 00 | 2.42E 01 | 6 |
| 18 A 082* | | | M-ETHYLPHENOL | T | 1.00E 02 | 1.00E 00 | 2.42E 01 | 6 |
| 18 A 043* | | | P-CRESOL | T | 1.00E 02 | 1.00E 00 | 2.42E 01 | 6 |
| 18 A 101* | | | O-PHENYLPHENOL | T | 1.00E 02 | 1.00E 00 | 2.42E 01 | 6 |
| 18 A 160* | | W | ETHYL CRESOLS | T | 1.00E 02 | 1.00E 00 | 2.42E 01 | 6 |
| 18 A 120* | | W | 2,2'-DIHYDROXYDIPHENYL | T | 1.00E 02 | 1.00E 00 | 2.42E 01 | 6 |
| 18 A 080* | | W | ETHYLPHENOLS | T | 1.00E 02 | 1.00E 00 | 2.42E 01 | 6 |
| 81 A 010 | P | | ZINC | S | 2.00E 01 | 1.00E 00 | 2.42E 01 | |
| 18 A 161* | | | 6-ETHYL-M-CRESOL | T | 1.00E 02 | 1.00E 00 | 2.42E 01 | 6 |
| 18 A 140* | | W | XYLENOLS | T | 1.00E 02 | 1.00E 00 | 2.42E 01 | 6 |
| 18 A 102* | | | P-PHENYLPHENOL | T | 1.00E 02 | 1.00E 00 | 2.42E 01 | 6 |
| 18 A 060* | | W | 2-METHOXYPHENOL | T | 1.00E 02 | 1.00E 00 | 2.42E 01 | 6 |
| 20 B 020* | P | W | 4,6-DINITRO-O-CRESOL | T | 1.00E 02 | 1.00E 00 | 2.42E 01 | 6 |
| 18 A 100* | | W | PHENYLPHENOLS | T | 1.00E 02 | 1.00E 00 | 2.42E 01 | 6 |
| 18 A 143* | | | 2,5-XYLENOL | T | 1.00E 02 | 1.00E 00 | 2.42E 01 | 6 |
| 20 B 040* | | W | DINITRO-P-CRESOLS | T | 1.00E 02 | 1.00E 00 | 2.42E 01 | 6 |
| 18 A 144* | | | 2,6-XYLENOL | T | 1.00E 02 | 1.00E 00 | 2.42E 01 | 6 |
| 20 B 041* | | | 3,5-DINITRO-P-CRESOL | T | 1.00E 02 | 1.00E 00 | 2.42E 01 | 6 |
| 18 C 040* | | W | 2-NAPHTHOL | T | 1.00E 02 | 1.00E 00 | 2.42E 01 | 6 |
| 19 B 020* | | W | CHLORINATED CRESOLS | T | 1.00E 02 | 1.00E 00 | 2.42E 01 | 6 |
| 18 A 103* | | | M-PHENYLPHENOL | T | 1.00E 02 | 1.00E 00 | 2.42E 01 | 6 |
| 18 A 183* | | | 2,6-DIMETHYL-4-HEPTYL PHENOL | T | 1.00E 02 | 1.00E 00 | 2.42E 01 | 6 |
| 19 B 022* | P | | CHLORINATED-M-CRESOLS | T | 1.00E 02 | 1.00E 00 | 2.42E 01 | 6 |
| 18 B 020* | | W | CATECHOL | T | 1.00E 02 | 1.00E 00 | 2.42E 01 | 6 |
| 18 A 081* | | | O-ETHYLPHENOL | T | 1.00E 02 | 1.00E 00 | 2.42E 01 | 6 |
| 18 C 083* | | | 5-INDANOL | T | 1.00E 02 | 1.00E 00 | 2.42E 01 | 6 |
| 18 A 083* | | | P-ETHYLPHENOL | T | 1.00E 02 | 1.00E 00 | 2.42E 01 | 6 |

GASIFIER ASH, ECOLOGY IMPACT

| DMEG NO. | | | COMPOUND NAME | TYPE | CONC E-6 G/G | DS | WDS G/S | LCCAT |
|---|---|---|---|---|---|---|---|---|
| 19 A 020* | P | | 2-CHLOROPHENOL | T | 1.00E 02 | 1.00E 00 | 2.42E 01 | 6 |
| 18 A 163* | | | 2-ETHYL-P-CRESOL | T | 1.00E 02 | 1.00E 00 | 2.42E 01 | 6 |
| 19 A 040* | P | | 2,4-DICHLOROPHENOL | T | 1.00E 02 | 1.00E 00 | 2.42E 01 | 6 |
| 20 A 060* | P | | 4-NITROPHENOL | T | 1.00E 02 | 1.00E 00 | 2.42E 01 | 6 |
| 18 A 180* | | W | POLYALKYLPHENOLS (MW>135) | T | 1.00E 02 | 1.00E 00 | 2.42E 01 | 6 |
| 18 A 042* | | | O-CRESOL | T | 1.00E 02 | 1.00E 00 | 2.42E 01 | 6 |
| 18 A 181* | | | 2,4,6-TRIMETHYL METHYL PHENOL | T | 1.00E 02 | 1.00E 00 | 2.42E 01 | 6 |
| 23 B 080* | | W | ACRIDINE | T | 1.00E 02 | 1.00E 00 | 2.42E 01 | 6 |
| 18 C 080* | | W | INDANOLS | T | 1.00E 02 | 1.00E 00 | 2.42E 01 | 6 |
| 18 A 146* | | | 3,4-XYLENOL | T | 1.00E 02 | 1.00E 00 | 2.42E 01 | 6 |
| 18 C 081* | | | 1-INDANOL | T | 1.00E 02 | 1.00E 00 | 2.42E 01 | 6 |
| 18 A 041* | | | M-CRESOL | T | 1.00E 02 | 1.00E 00 | 2.42E 01 | 6 |
| 18 B 080* | | W | 1,2,3-TRIHYDROXYBENZENE | T | 1.00E 02 | 1.00E 00 | 2.42E 01 | 6 |
| 19 B 023* | | | CHLORINATED-P-CRESOLS | T | 1.00E 02 | 1.00E 00 | 2.42E 01 | 6 |
| 18 A 162* | | | 4-ETHYL-O-CRESOL | T | 1.00E 02 | 1.00E 00 | 2.42E 01 | 6 |
| 20 A 120* | | | 2,4,6-TRINITROPHENOL | T | 1.00E 02 | 1.00E 00 | 2.42E 01 | 6 |
| 18 A 040* | | W | CRESOLS | T | 1.00E 02 | 1.00E 00 | 2.42E 01 | 6 |
| 18 A 142* | P | | 2,4-XYLENOL | T | 1.00E 02 | 1.00E 00 | 2.42E 01 | 6 |
| 18 B 060* | | W | 1,4-DIHYDROXYBENZENE | T | 1.00E 02 | 1.00E 00 | 2.42E 01 | 6 |
| 20 A 040* | | | 3-NITROPHENOL | T | 1.00E 02 | 1.00E 00 | 2.42E 01 | 6 |
| 18 A 141* | | | 2,3-XYLENOL | T | 1.00E 02 | 1.00E 00 | 2.42E 01 | 6 |
| 18 C 020* | | W | 1-NAPHTHOL | T | 1.00E 02 | 1.00E 00 | 2.42E 01 | 6 |
| 18 B 040* | | W | 1,3-DIHYDROXYBENZENE | T | 1.00E 02 | 1.00E 00 | 2.42E 01 | 6 |
| 18 A 020* | P | W | PHENOL | T | 1.00E 02 | 1.00E 00 | 2.42E 01 | 6 |
| 19 B 021* | | | CHLORINATED-O-CRESOLS | T | 1.00E 02 | 1.00E 00 | 2.42E 01 | 6 |
| 18 C 082* | | | 4-INDANOL | T | 1.00E 02 | 1.00E 00 | 2.42E 01 | 6 |
| 20 A 020* | P | | 2-NITROPHENOL | T | 1.70E 01 | 8.50E-01 | 2.10E 01 | 7 |
| 26 B 040 | | W | TRITOTYL PHOSPHATES | S | 9.00E 00 | 8.20E-01 | 2.00E 01 | |
| 32 A 010 | P | | BERYLLIUM | D | 1.30E 04 | 7.64E-01 | 1.90E 01 | |
| 33 A 010 | | | MAGNESIUM | T | 1.50E 01 | 7.50E-01 | 1.81E 01 | 2 |
| 16 B 041* | | | 1,2-BIS(CHLOROMETHYBENZENE | T | 1.50E 01 | 7.50E-01 | 1.81E 01 | 2 |
| 16 B 020* | | W | A-CHLOROTOLUENE | T | 1.50E 01 | 7.50E-01 | 1.81E 01 | 2 |
| 16 A 083* | | | 1-BROMO-4-CHLOROBENZENE | T | 1.50E 01 | 7.50E-01 | 1.81E 01 | 2 |
| 16 A 160* | P | | POLYCHLORINATED BENZENES | | | | | |

GASIFIER ASH, ECOLOGY IMPACT

| DMEG NO. | | COMPOUND NAME | TYPE | CONC E-6 G/G | DS | WDS G/S | LCCAT |
|---|---|---|---|---|---|---|---|
| 16 A 040* | | BROMOBENZENE | T | 1.50E 01 | 7.50E-01 | 1.81E 01 | 2 |
| 16 A 063* | | 1,4-DIBROMOBENZENE | T | 1.50E 01 | 7.50E-01 | 1.81E 01 | 2 |
| 16 A 100* | P | 1,2-DICHLOROBENZENE | T | 1.50E 01 | 7.50E-01 | 1.81E 01 | 2 |
| 16 A 140* | P | 1,4-DICHLOROBENZENE | T | 1.50E 01 | 7.50E-01 | 1.81E 01 | 2 |
| 16 A 082* | | 1-BROMO-3-CHLOROBENZENE | T | 1.50E 01 | 7.50E-01 | 1.81E 01 | 2 |
| 16 B 040* | | BIS(CHLOROMETHYL)BENZENES | T | 1.50E 01 | 7.50E-01 | 1.81E 01 | 2 |
| 16 A 081* | | 1-BROMO-2-CHLOROBENZENE | T | 1.50E 01 | 7.50E-01 | 1.81E 01 | 2 |
| 16 A 062* | | 1,3-DIBROMOBENZENE | T | 1.50E 01 | 7.50E-01 | 1.81E 01 | 2 |
| 21 A 020* | P | NAPHTHALENE | T | 1.50E 01 | 7.50E-01 | 1.81E 01 | 2 |
| 16 A 060* | | DIBROMOBENZENES | T | 1.50E 01 | 7.50E-01 | 1.81E 01 | 2 |
| 16 A 120* | P | 1,3-DICHLOROBENZENE | T | 1.50E 01 | 7.50E-01 | 1.81E 01 | 2 |
| 16 A 020* | P | CHLOROBENZENE | T | 1.50E 01 | 7.50E-01 | 1.81E 01 | 2 |
| 16 B 043* | | 1,4-BIS(CHLOROMETHYL)BENZENE | T | 1.50E 01 | 7.50E-01 | 1.81E 01 | 2 |
| 16 A 080* | | BROMOCHLOROBENZENES | T | 1.50E 01 | 7.50E-01 | 1.81E 01 | 2 |
| 16 A 161* | | 1,2,4-TRICHLOROBENZENE | T | 1.50E 01 | 7.50E-01 | 1.81E 01 | 2 |
| 16 A 061* | | 1,2-DIBROMOBENZENE | T | 1.50E 01 | 7.50E-01 | 1.81E 01 | 2 |
| 16 B 042* | | 1,3-BIS(CHLOROMETHYL)BENZENE | T | 1.50E 01 | 7.50E-01 | 1.81E 01 | 2 |
| 16 A 162* | | HEXACHLOROBENZENE | T | 1.50E 01 | 7.50E-01 | 1.81E 01 | 2 |
| 27 A 010 | | LITHIUM | S | 4.80E 01 | 6.40E-01 | 1.54E 01 | |
| 08 D 120* | | BUTYL ACETATES | T | 1.00E 02 | 5.00E-01 | 1.21E 01 | 6 |
| 10 A 080* | W | 1,2-DIAMINOETHANE | T | 1.00E 02 | 5.00E-01 | 1.21E 01 | 6 |
| 08 D 122* | | SEC-BUTYL ACETATE | T | 1.00E 02 | 5.00E-01 | 1.21E 01 | 6 |
| 08 D 142* | | SEC-AMYL ACETATE | T | 1.00E 02 | 5.00E-01 | 1.21E 01 | 6 |
| 08 A 040* | W | ACETIC ACID | T | 1.00E 02 | 5.00E-01 | 1.21E 01 | 6 |
| 08 D 123* | | ISOBUTYL ACETATE | T | 1.00E 02 | 5.00E-01 | 1.21E 01 | 6 |
| 08 D 143* | | ISOAMYL ACETATE | T | 1.00E 02 | 5.00E-01 | 1.21E 01 | 6 |
| 10 C 020* | | ANILINE | T | 1.00E 02 | 5.00E-01 | 1.21E 01 | 6 |
| 08 D 141* | | N-AMYL ACETATE | T | 1.00E 02 | 5.00E-01 | 1.21E 01 | 6 |
| 08 D 121* | | N-BUTYL ACETATE | T | 1.00E 02 | 5.00E-01 | 1.21E 01 | 6 |
| 08 D 140* | | AMYL ACETATES | T | 1.00E 02 | 5.00E-01 | 1.21E 01 | 6 |
| 46 A 010 | P | LEAD | S | 5.00E 00 | 5.00E-01 | 1.21E 01 | |
| 74 A 010 | | COBALT | S | 2.30E 01 | 4.60E-01 | 1.11E 01 | |
| 18 A 145* | | 3,5-XYLENOL | T | 2.60E 01 | 2.60E-01 | 6.30E 00 | 5 |
| 18 A 060* | W | 2-METHOXYPHENOL | T | 2.60E 01 | 2.60E-01 | 6.30E 00 | 5 |

GASIFIER ASH, ECOLOGY IMPACT

| DMEG NO. | | COMPOUND NAME | TYPE | CONC E-6 G/G | DS | WDS G/S | LCCAT |
|---|---|---|---|---|---|---|---|
| 18 C 083* | | 5-INDANOL | T | 2.60E 01 | 2.60E-01 | 6.30E 00 | 5 |
| 18 A 103* | | M-PHENYLPHENOL | T | 2.60E 01 | 2.60E-01 | 6.30E 00 | 5 |
| 18 A 146* | | 3,4-XYLENOL | T | 2.60E 01 | 2.60E-01 | 6.30E 00 | 5 |
| 18 A 043* | | P-CRESOL | T | 2.60E 01 | 2.60E-01 | 6.30E 00 | 5 |
| 20 B 041* | | 3,5-DINITRO-P-CRESOL | T | 2.60E 01 | 2.60E-01 | 6.30E 00 | 5 |
| 18 C 040* | W | 2-NAPHTHOL | T | 2.60E 01 | 2.60E-01 | 6.30E 00 | 5 |
| 18 C 080* | W | INDANOLS | T | 2.60E 01 | 2.60E-01 | 6.30E 00 | 5 |
| 18 A 101* | | O-PHENYLPHENOL | T | 2.60E 01 | 2.60E-01 | 6.30E 00 | 5 |
| 18 A 082* | | M-ETHYLPHENOL | T | 2.60E 01 | 2.60E-01 | 6.30E 00 | 5 |
| 18 A 161* | | 6-ETHYL-M-CRESOL | T | 2.60E 01 | 2.60E-01 | 6.30E 00 | 5 |
| 20 A 120* | | 2,4,6-TRINITROPHENOL | T | 2.60E 01 | 2.60E-01 | 6.30E 00 | 5 |
| 19 B 021* | | CHLORINATED-O-CRESOLS | T | 2.60E 01 | 2.60E-01 | 6.30E 00 | 5 |
| 18 C 020* | W | 1-NAPHTHOL | T | 2.60E 01 | 2.60E-01 | 6.30E 00 | 5 |
| 18 A 042* | | O-CRESOL | T | 2.60E 01 | 2.60E-01 | 6.30E 00 | 5 |
| 18 A 081* | | O-ETHYLPHENOL | T | 2.60E 01 | 2.60E-01 | 6.30E 00 | 5 |
| 23 B 080* | W | ACRIDINE | T | 2.60E 01 | 2.60E-01 | 6.30E 00 | 5 |
| 18 A 102* | | P-PHENYLPHENOL | T | 2.60E 01 | 2.60E-01 | 6.30E 00 | 5 |
| 18 A 181* | | 2,4,6-TRIMETHYL METHYL PHENOL | T | 2.60E 01 | 2.60E-01 | 6.30E 00 | 5 |
| 18 A 080* | W | ETHYLPHENOLS | T | 2.60E 01 | 2.60E-01 | 6.30E 00 | 5 |
| 18 A 160* | W | ETHYL CRESOLS | T | 2.60E 01 | 2.60E-01 | 6.30E 00 | 5 |
| 18 C 082* | | 4-INDANOL | T | 2.60E 01 | 2.60E-01 | 6.30E 00 | 5 |
| 18 A 140* | W | XYLENOLS | T | 2.60E 01 | 2.60E-01 | 6.30E 00 | 5 |
| 19 B 023* | | CHLORINATED-P-CRESOLS | T | 2.60E 01 | 2.60E-01 | 6.30E 00 | 5 |
| 18 A 162* | | 4-ETHYL-O-CRESOL | T | 2.60E 01 | 2.60E-01 | 6.30E 00 | 5 |
| 19 B 020* | W | CHLORINATED CRESOLS | T | 2.60E 01 | 2.60E-01 | 6.30E 00 | 5 |
| 18 A 100* | W | PHENYLPHENOLS | T | 2.60E 01 | 2.60E-01 | 6.30E 00 | 5 |
| 19 A 040* | P | 2,4-DICHLOROPHENOL | T | 2.60E 01 | 2.60E-01 | 6.30E 00 | 5 |
| 18 A 143* | | 2,5-XYLENOL | T | 2.60E 01 | 2.60E-01 | 6.30E 00 | 5 |
| 20 B 040* | W | DINITRO-P-CRESOLS | T | 2.60E 01 | 2.60E-01 | 6.30E 00 | 5 |
| 18 A 144* | | 2,6-XYLENOL | T | 2.60E 01 | 2.60E-01 | 6.30E 00 | 5 |
| 18 A 180* | W | POLYALKYLPHENOLS (MW>135) | T | 2.60E 01 | 2.60E-01 | 6.30E 00 | 5 |
| 18 B 040* | W | 1,3-DIHYDROXYBENZENE | T | 2.60E 01 | 2.60E-01 | 6.30E 00 | 5 |
| 18 A 083* | | P-ETHYLPHENOL | T | 2.60E 01 | 2.60E-01 | 6.30E 00 | 5 |
| 20 B 042* | | 2,6-DINITRO-P-CRESOL | T | 2.60E 01 | 2.60E-01 | 6.30E 00 | 5 |

GASIFIER ASH, ECOLOGY IMPACT

| OMEG NO. | | | COMPOUND NAME | TYPE | CONC E-6 G/G | DS | WDS G/S | LOCAT |
|---|---|---|---|---|---|---|---|---|
| 18 A 120* | | W | 2,2'-DIHYDROXYDIPHENYL | T | 2.60E 01 | 2.60E-01 | 6.30E 00 | 5 |
| 19 B 022* | P | | CHLORINATED-M-CRESOLS | T | 2.60E 01 | 2.60E-01 | 6.30E 00 | 5 |
| 18 B 020* | | W | CATECHOL | T | 2.60E 01 | 2.60E-01 | 6.30E 00 | 5 |
| 18 A 041* | | | M-CRESOL | T | 2.60E 01 | 2.60E-01 | 6.30E 00 | 5 |
| 18 A 163* | | | 2-ETHYL-P-CRESOL | T | 2.60E 01 | 2.60E-01 | 6.30E 00 | 5 |
| 18 B 080* | | W | 1,2,3-TRIHYDROXYBENZENE | T | 2.60E 01 | 2.60E-01 | 6.30E 00 | 5 |
| 20 B 020* | P | W | 4,6-DINITRO-O-CRESOL | T | 2.60E 01 | 2.60E-01 | 6.30E 00 | 5 |
| 18 A 040* | | W | CRESOLS | T | 2.60E 01 | 2.60E-01 | 6.30E 00 | 5 |
| 19 A 020* | P | | 2-CHLOROPHENOL | T | 2.60E 01 | 2.60E-01 | 6.30E 00 | 5 |
| 20 A 060* | P | | 4-NITROPHENOL | T | 2.60E 01 | 2.60E-01 | 6.30E 00 | 5 |
| 18 A 020* | P | W | PHENOL | T | 2.60E 01 | 2.60E-01 | 6.30E 00 | 5 |
| 20 A 020* | P | | 2-NITROPHENOL | T | 2.60E 01 | 2.60E-01 | 6.30E 00 | 5 |
| 18 C 081* | | | 1-INDANOL | T | 2.60E 01 | 2.60E-01 | 6.30E 00 | 5 |
| 18 A 183* | | | 2,6-DIMETHYL-4-HEPTYL PHENOL | T | 2.60E 01 | 2.60E-01 | 6.30E 00 | 5 |
| 20 A 040* | | | 3-NITROPHENOL | T | 2.60E 01 | 2.60E-01 | 6.30E 00 | 5 |
| 18 A 182* | | | 4,6-DI-TERT-BUTYL-M-CRESOL | T | 2.60E 01 | 2.60E-01 | 6.30E 00 | 5 |
| 18 A 142* | P | | 2,4-XYLENOL | T | 2.60E 01 | 2.60E-01 | 6.30E 00 | 5 |
| 18 A 141* | | | 2,3-XYLENOL | T | 2.60E 01 | 2.60E-01 | 6.30E 00 | 5 |
| 18 B 060* | | W | 1,4-DIHYDROXYBENZENE | T | 2.60E 01 | 2.60E-01 | 6.30E 00 | 5 |
| 15 B 101* | | | O-DIETHYL BENZENE | T | 3.90E 01 | 2.00E-01 | 4.71E 00 | 3 |
| 15 B 082* | | | M-XYLENE | T | 3.90E 01 | 2.00E-01 | 4.71E 00 | 3 |
| 15 A 060* | P | W | ETHYL BENZENE | T | 3.90E 01 | 2.00E-01 | 4.71E 00 | 3 |
| 15 B 104* | | | O-DIISOPROPYL BENZENE | T | 3.90E 01 | 2.00E-01 | 4.71E 00 | 3 |
| 15 A 120* | | W | ISOPROPYL BENZENE | T | 3.90E 01 | 2.00E-01 | 4.71E 00 | 3 |
| 15 A 080* | | W | STYRENE | T | 3.90E 01 | 2.00E-01 | 4.71E 00 | 3 |
| 15 B 080* | | W | XYLENES | T | 3.90E 01 | 2.00E-01 | 4.71E 00 | 3 |
| 15 B 081* | | | O-XYLENE | T | 3.90E 01 | 2.00E-01 | 4.71E 00 | 3 |
| 15 B 103* | | | P-DIETHYL BENZENE | T | 3.90E 01 | 2.00E-01 | 4.71E 00 | 3 |
| 15 B 102* | | | M-DIETHYL BENZENE | T | 3.90E 01 | 2.00E-01 | 4.71E 00 | 3 |
| 15 B 106* | | | 1,4-DI-TERT-BUTYL BENZENE | T | 3.90E 01 | 2.00E-01 | 4.71E 00 | 3 |
| 15 B 100* | | W | DIALKYL BENZENES (MW:134-191) | T | 3.90E 01 | 2.00E-01 | 4.71E 00 | 3 |
| 15 B 120* | | W | TETRAHYDRONAPHTHALENE | T | 3.90E 01 | 2.00E-01 | 4.71E 00 | 3 |
| 15 B 083* | | | P-XYLENE | T | 3.90E 01 | 2.00E-01 | 4.71E 00 | 3 |
| 15 A 040* | P | W | TOLUENE | T | 3.90E 01 | 2.00E-01 | 4.71E 00 | 3 |

## GASIFIER ASH, ECOLOGY IMPACT

| DMEG NO. | | COMPOUND NAME | TYPE | CONC E-6 G/G | DS | WDS G/S | LCCAT |
|---|---|---|---|---|---|---|---|
| 15 B 105* | | M-DIISOPROPYL BENZENE | T | 3.90E 01 | 2.00E-01 | 4.71E 00 | 3 |
| 15 A 100* | W | PROPYL BENZENE | T | 3.90E 01 | 2.00E-01 | 4.71E 00 | 3 |
| 01 A 201 | | N-OCTANE | T | 3.30E 02 | 1.70E-01 | 4.00E 00 | 1 |
| 01 A 200 | | OCTANES | T | 3.30E 02 | 1.70E-01 | 4.00E 00 | 1 |
| 85 A 010 | | URANIUM | S | 1.60E 01 | 1.60E-01 | 3.90E 00 | |
| 15 B 020* | | INDAN | T | 3.90E 01 | 1.40E-01 | 3.40E 00 | 3 |
| 17 A 040* | W | NITROTOLUENES | T | 2.60E 01 | 1.30E-01 | 3.14E 00 | 5 |
| 17 A 085* | | 2,5-DINITROTOLUENE | T | 2.60E 01 | 1.30E-01 | 3.14E 00 | 5 |
| 08 D 140* | | AMYL ACETATES | T | 2.60E 01 | 1.30E-01 | 3.14E 00 | 5 |
| 08 D 141* | | N-AMYL ACETATE | T | 2.60E 01 | 1.30E-01 | 3.14E 00 | 5 |
| 17 A 041* | | 2-NITROTOLUENE | T | 2.60E 01 | 1.30E-01 | 3.14E 00 | 5 |
| 17 A 043* | | 4-NITROTOLUENE | T | 2.60E 01 | 1.30E-01 | 3.14E 00 | 5 |
| 08 D 143* | | ISOAMYL ACETATE | T | 2.60E 01 | 1.30E-01 | 3.14E 00 | 5 |
| 04 A 040* | W | 2-CHLORO-1,2-EPOXYPROPANE | T | 2.60E 01 | 1.30E-01 | 3.14E 00 | 5 |
| 17 A 083* | | 2,3-DINITROTOLUENE | T | 2.60E 01 | 1.30E-01 | 3.14E 00 | 5 |
| 10 A 080* | W | 1,2-DIAMINOETHANE | T | 2.60E 01 | 1.30E-01 | 3.14E 00 | 5 |
| 17 A 020* | P W | NITROBENZENE | T | 2.60E 01 | 1.30E-01 | 3.14E 00 | 5 |
| 17 A 086* | | 3,5-DINITROTOLUENE | T | 2.60E 01 | 1.30E-01 | 3.14E 00 | 5 |
| 08 D 142* | | SEC-AMYL ACETATE | T | 2.60E 01 | 1.30E-01 | 3.14E 00 | 5 |
| 04 A 050* | W | EPICHLORHYDRIN | T | 2.60E 01 | 1.30E-01 | 3.14E 00 | 5 |
| 10 C 020* | | ANILINE | T | 2.60E 01 | 1.30E-01 | 3.14E 00 | 5 |
| 17 A 042* | | 3-NITROTOLUENE | T | 2.60E 01 | 1.30E-01 | 3.14E 00 | 5 |
| 08 D 122* | | SEC-BUTYL ACETATE | T | 2.60E 01 | 1.30E-01 | 3.14E 00 | 5 |
| 17 A 081* | P | 2,6-DINITROTOLUENE | T | 2.60E 01 | 1.30E-01 | 3.14E 00 | 5 |
| 08 D 123* | | ISOBUTYL ACETATE | T | 2.60E 01 | 1.30E-01 | 3.14E 00 | 5 |
| 17 A 084* | P | 2,4-DINITROTOLUENE | T | 2.60E 01 | 1.30E-01 | 3.14E 00 | 5 |
| 08 D 121* | | N-BUTYL ACETATE | T | 2.60E 01 | 1.30E-01 | 3.14E 00 | 5 |
| 08 D 120* | | BUTYL ACETATES | T | 2.60E 01 | 1.30E-01 | 3.14E 00 | 5 |
| 08 A 040* | W | ACETIC ACID | T | 2.60E 01 | 1.30E-01 | 3.14E 00 | 5 |
| 04 A 060* | W | 1-CHLORO-1,3-EPOXYPROPANE | T | 2.60E 01 | 1.30E-01 | 3.14E 00 | 5 |
| 17 A 082* | | 3,4-DINITROTOLUENE | T | 2.60E 01 | 1.30E-01 | 3.14E 00 | 5 |
| 17 A 080* | W | DINITROTOLUENES | T | 2.60E 01 | 1.30E-01 | 3.14E 00 | 5 |
| 04 A 050* | W | EPICHLORHYDRIN | T | 2.00E 01 | 1.00E-01 | 2.41E 00 | 4 |
| 04 A 040* | W | 2-CHLORO-1,2-EPOXYPROPANE | T | 2.00E 01 | 1.00E-01 | 2.41E 00 | 4 |

GASIFIER ASH, ECOLOGY IMPACT

| DMEG NO. | | COMPOUND NAME | TYPE | CONC E-6 G/G | DS | WDS G/S | LOCAT |
|---|---|---|---|---|---|---|---|
| 17 A 080* | W | DINITROTOLUENES | T | 2.00E 01 | 1.00E-01 | 2.41E 00 | 4 |
| 17 A 042* | | 3-NITROTOLUENE | T | 2.00E 01 | 1.00E-01 | 2.41E 00 | 4 |
| 17 A 083* | | 2,3-DINITROTOLUENE | T | 2.00E 01 | 1.00E-01 | 2.41E 00 | 4 |
| 17 A 020* | P W | NITROBENZENE | T | 2.00E 01 | 1.00E-01 | 2.41E 00 | 4 |
| 17 A 084* | P | 2,4-DINITROTOLUENE | T | 2.00E 01 | 1.00E-01 | 2.41E 00 | 4 |
| 17 A 041* | | 2-NITROTOLUENE | T | 2.00E 01 | 1.00E-01 | 2.41E 00 | 4 |
| 17 A 040* | W | NITROTOLUENES | T | 2.00E 01 | 1.00E-01 | 2.41E 00 | 4 |
| 17 A 086* | | 3,5-DINITROTOLUENE | T | 2.00E 01 | 1.00E-01 | 2.41E 00 | 4 |
| 17 A 082* | | 3,4-DINITROTOLUENE | T | 2.00E 01 | 1.00E-01 | 2.41E 00 | 4 |
| 17 A 081* | P | 2,6-DINITROTOLUENE | T | 2.00E 01 | 1.00E-01 | 2.41E 00 | 4 |
| 17 A 085* | | 2,5-DINITROTOLUENE | T | 2.00E 01 | 1.00E-01 | 2.41E 00 | 4 |
| 04 A 060* | W | 1-CHLORO-1,3-EPOXYPROPANE | T | 2.00E 01 | 1.00E-01 | 2.41E 00 | 4 |
| 17 A 043* | | 4-NITROTOLUENE | T | 2.00E 01 | 1.00E-01 | 2.41E 00 | 4 |
| 08 A 040* | W | ACETIC ACID | T | 1.70E 01 | 8.50E-02 | 2.10E 00 | 7 |
| 15 B 083* | | P-XYLENE | T | 1.50E 01 | 7.50E-02 | 1.81E 00 | 2 |
| 15 B 105* | | M-DIISOPROPYL BENZENE | T | 1.50E 01 | 7.50E-02 | 1.81E 00 | 2 |
| 15 A 060* | P W | ETHYL BENZENE | T | 1.50E 01 | 7.50E-02 | 1.81E 00 | 2 |
| 15 B 103* | | P-DIETHYL BENZENE | T | 1.50E 01 | 7.50E-02 | 1.81E 00 | 2 |
| 02 B 103* | | CIS-1,3-DICHLOROPROPENE | T | 1.50E 01 | 7.50E-02 | 1.81E 00 | 2 |
| 15 B 106* | | 1,4-DI-TERT-BUTYL BENZENE | T | 1.50E 01 | 7.50E-02 | 1.81E 00 | 2 |
| 02 A 340* | P | DICHLOROPROPANES | T | 1.50E 01 | 7.50E-02 | 1.81E 00 | 2 |
| 02 B 104* | | TRANS-1,3-DICHLOROPROPENE | T | 1.50E 01 | 7.50E-02 | 1.81E 00 | 2 |
| 15 B 081* | | O-XYLENE | T | 1.50E 01 | 7.50E-02 | 1.81E 00 | 2 |
| 02 A 343* | | 1,3-DICHLORDPROPANE | T | 1.50E 01 | 7.50E-02 | 1.81E 00 | 2 |
| 15 B 120* | W | TETRAHYDRONAPHTHALENE | T | 1.50E 01 | 7.50E-02 | 1.81E 00 | 2 |
| 15 B 102* | | M-DIETHYL BENZENE | T | 1.50E 01 | 7.50E-02 | 1.81E 00 | 2 |
| 15 A 120* | W | ISOPROPYL BENZENE | T | 1.50E 01 | 7.50E-02 | 1.81E 00 | 2 |
| 15 B 080* | W | XYLENES | T | 1.50E 01 | 7.50E-02 | 1.81E 00 | 2 |
| 15 B 082* | | M-XYLENE | T | 1.50E 01 | 7.50E-02 | 1.81E 00 | 2 |
| 02 B 100* | P W | DICHLOROPROPENES | T | 1.50E 01 | 7.50E-02 | 1.81E 00 | 2 |
| 15 A 040* | P W | TOLUENE | T | 1.50E 01 | 7.50E-02 | 1.81E 00 | 2 |
| 15 B 104* | | O-DIISOPROPYL BENZENE | T | 1.50E 01 | 7.50E-02 | 1.81E 00 | 2 |
| 02 B 080* | P W | TETRACHLOROETHENE | T | 1.50E 01 | 7.50E-02 | 1.81E 00 | 2 |
| 15 B 101* | | O-DIETHYL BENZENE | T | 1.50E 01 | 7.50E-02 | 1.81E 00 | 2 |

GASIFIER ASH, ECOLOGY IMPACT

| OMEG NO. | | COMPOUND NAME | TYPE | CONC E-6 G/G | DS | WDS G/S | LCCAT |
|---|---|---|---|---|---|---|---|
| 15 A 100* | W | PROPYL BENZENE | T | 1.50E 01 | 7.50E-02 | 1.81E 00 | 2 |
| 15 B 100* | W | DIALKYL BENZENES (MW:134-191) | T | 1.50E 01 | 7.50E-02 | 1.81E 00 | 2 |
| 15 A 080* | W | STYRENE | T | 1.50E 01 | 7.50E-02 | 1.81E 00 | 2 |
| 08 A 080* | | VALERIC ACID | T | 1.00E 02 | 6.70E-02 | 1.61E 00 | 6 |
| 79 A 010 | P | SILVER | S | 6.00E-01 | 6.00E-02 | 1.50E 00 | |
| 08 A 104* | | LAURIC ACID | T | 1.00E 02 | 5.60E-02 | 1.34E 00 | 6 |
| 08 A 101* | | CAPROIC ACID | T | 1.00E 02 | 5.60E-02 | 1.34E 00 | 6 |
| 08 A 102* | | CAPRYLIC ACID | T | 1.00E 02 | 5.60E-02 | 1.34E 00 | 6 |
| 08 A 100* | | SATURATED LONG CHAIN ACIDS (MW:116-201) | T | 1.00E 02 | 5.60E-02 | 1.34E 00 | 6 |
| 08 A 103* | | CAPRIC ACID | T | 1.00E 02 | 5.60E-02 | 1.34E 00 | 6 |
| 15 B 020* | | INDAN | T | 1.50E 01 | 5.40E-02 | 1.30E 00 | 2 |
| 08 A 180* | | ADIPIC ACID | T | 1.00E 02 | 5.30E-02 | 1.30E 00 | 6 |
| 05 A 124* | | 3-METHYL-1-BUTANOL | T | 1.00E 02 | 5.00E-02 | 1.20E 00 | 6 |
| 23 A 064* | | 4-N-PROPYLPYRIDINE | T | 1.00E 02 | 5.00E-02 | 1.20E 00 | 6 |
| 08 D 080* | | METHYL METHACRYLATE | T | 1.00E 02 | 5.00E-02 | 1.20E 00 | 6 |
| 10 A 060* | | ETHANOLAMINE | T | 1.00E 02 | 5.00E-02 | 1.20E 00 | 6 |
| 23 A 080* | W | PHENYLPYRIDINES | T | 1.00E 02 | 5.00E-02 | 1.20E 00 | 6 |
| 23 A 122* | | 2,4,6-COLLIDINE | T | 1.00E 02 | 5.00E-02 | 1.20E 00 | 6 |
| 08 D 101* | | N-PROPYL ACETATE | T | 1.00E 02 | 5.00E-02 | 1.20E 00 | 6 |
| 06 A 020* | W | ETHYLENE GLYCOL | T | 1.00E 02 | 5.00E-02 | 1.20E 00 | 6 |
| 08 B 060* | W | B-PROPIOLACTONE | T | 1.00E 02 | 5.00E-02 | 1.20E 00 | 6 |
| 05 A 123* | | 2,2-DIMETHYL-1-PROPANOL | T | 1.00E 02 | 5.00E-02 | 1.20E 00 | 6 |
| 05 A 122* | | 2-METHYL-1-BUTANOL | T | 1.00E 02 | 5.00E-02 | 1.20E 00 | 6 |
| 23 A 063* | | 4-ETHYLPYRIDINE | T | 1.00E 02 | 5.00E-02 | 1.20E 00 | 6 |
| 23 A 020* | W | PYRIDINE | T | 1.00E 02 | 5.00E-02 | 1.20E 00 | 6 |
| 10 B 100* | | MORPHOLINE | T | 1.00E 02 | 5.00E-02 | 1.20E 00 | 6 |
| 23 A 082* | | 3-PHENYLPYRIDINE | T | 1.00E 02 | 5.00E-02 | 1.20E 00 | 6 |
| 10 A 160* | | CYCLOHEXYLAMINE | T | 1.00E 02 | 5.00E-02 | 1.20E 00 | 6 |
| 23 A 083* | | 4-PHENYLPYRIDINE | T | 1.00E 02 | 5.00E-02 | 1.20E 00 | 6 |
| 23 A 120* | W | COLLIDINES | T | 1.00E 02 | 5.00E-02 | 1.20E 00 | 6 |
| 23 A 121* | | 5-ETHYL-2-METHYLPYRIDINE | T | 1.00E 02 | 5.00E-02 | 1.20E 00 | 6 |
| 23 A 062* | | 3-ETHYLPYRIDINE | T | 1.00E 02 | 5.00E-02 | 1.20E 00 | 6 |
| 23 A 081* | | 2-PHENYLPYRIDINE | T | 1.00E 02 | 5.00E-02 | 1.20E 00 | 6 |
| 23 A 060* | W | MONOSUBSTITUTED ALKYL PYRIDINES | T | 1.00E 02 | 5.00E-02 | 1.20E 00 | 6 |

GASIFIER ASH, ECOLOGY IMPACT

| DMEG NO. | | COMPOUND NAME | TYPE | CONC E-6 G/G | DS | WDS G/S | LCCAT |
|---|---|---|---|---|---|---|---|
| 05 A 100* | W | ISOBUTYL ALCOHOL | T | 1.00E 02 | 5.00E-02 | 1.20E 00 | 6 |
| 08 D 100* | | PROPYL ACETATES | T | 1.00E 02 | 5.00E-02 | 1.20E 00 | 6 |
| 23 A 061* | | 2-ETHYLPYRIDINE | T | 1.00E 02 | 5.00E-02 | 1.20E 00 | 6 |
| 05 A 140* | W | BENZYL ALCOHOL | T | 1.00E 02 | 5.00E-02 | 1.20E 00 | 6 |
| 05 A 120* | W | PENTANOLS (PRIMARY) | T | 1.00E 02 | 5.00E-02 | 1.20E 00 | 6 |
| 05 A 121* | | N-PENTANOL | T | 1.00E 02 | 5.00E-02 | 1.20E 00 | 6 |
| 07 B 100* | W | CAMPHOR | T | 1.00E 02 | 4.54E-02 | 1.10E 00 | 6 |
| 37 A 010 | | BORON | D | 2.10E 02 | 4.20E-02 | 1.01E 00 | |
| 83 A 010 | P | MERCURY | D | 1.70E 00 | 3.40E-02 | 8.22E-01 | |
| 07 B 120 | | ACETOPHENONE | T | 1.00E 02 | 3.22E-02 | 7.80E-01 | 6 |
| 08 A 140 | | OLEIC ACID | T | 1.00E 02 | 2.43E-02 | 5.90E-01 | 6 |
| 15 B 201 | | 1,2,3,4-TETRAMETHYLBENZENE | T | 3.90E 01 | 2.00E-02 | 4.71E-01 | 3 |
| 15 B 203 | | 1,2,4,5-TETRAMETHYLBENZENE | T | 3.90E 01 | 2.00E-02 | 4.71E-01 | 3 |
| 15 B 200 | | TETRAMETHYLBENZENES | T | 3.90E 01 | 2.00E-02 | 4.71E-01 | 3 |
| 15 B 202 | | 1,2,3,5-TETRAMETHYLBENZENE | T | 3.90E 01 | 2.00E-02 | 4.71E-01 | 3 |
| 08 A 080* | | VALERIC ACID | T | 2.60E 01 | 1.73E-02 | 4.20E-01 | 5 |
| 09 B 020* | W | BENZONITRILE | T | 2.60E 01 | 1.62E-02 | 3.93E-01 | 5 |
| 09 B 042* | | B-NAPHTHONITRILES | T | 2.60E 01 | 1.62E-02 | 3.93E-01 | 5 |
| 09 B 041* | | A-NAPHTHONITRILES | T | 2.60E 01 | 1.62E-02 | 3.93E-01 | 5 |
| 09 B 040* | W | NAPHTHONITRILES | T | 2.60E 01 | 1.62E-02 | 3.93E-01 | 5 |
| 08 A 103* | | CAPRIC ACID | T | 2.60E 01 | 1.44E-02 | 3.50E-01 | 5 |
| 08 A 100* | | SATURATED LONG CHAIN ACIDS (MW:116-201) | T | 2.60E 01 | 1.44E-02 | 3.50E-01 | 5 |
| 08 A 102* | | CAPRYLIC ACID | T | 2.60E 01 | 1.44E-02 | 3.50E-01 | 5 |
| 08 A 101* | | CAPROIC ACID | T | 2.60E 01 | 1.44E-02 | 3.50E-01 | 5 |
| 08 A 104* | | LAURIC ACID | T | 2.60E 01 | 1.44E-02 | 3.50E-01 | 5 |
| 08 A 180* | | ADIPIC ACID | T | 2.60E 01 | 1.40E-02 | 3.31E-01 | 5 |
| 23 A 081* | | 2-PHENYLPYRIDINE | T | 2.60E 01 | 1.30E-02 | 3.14E-01 | 5 |
| 23 A 064* | | 4-N-PROPYLPYRIDINE | T | 2.60E 01 | 1.30E-02 | 3.14E-01 | 5 |
| 05 A 123* | | 2,2-DIMETHYL-1-PROPANOL | T | 2.60E 01 | 1.30E-02 | 3.14E-01 | 5 |
| 05 A 140* | W | BENZYL ALCOHOL | T | 2.60E 01 | 1.30E-02 | 3.14E-01 | 5 |
| 08 D 080* | | METHYL METHACRYLATE | T | 2.60E 01 | 1.30E-02 | 3.14E-01 | 5 |
| 10 A 160* | | CYCLOHEXYLAMINE | T | 2.60E 01 | 1.30E-02 | 3.14E-01 | 5 |
| 23 A 060* | W | MONOSUBSTITUTED ALKYL PYRIDINES | T | 2.60E 01 | 1.30E-02 | 3.14E-01 | 5 |
| 23 A 083* | | 4-PHENYLPYRIDINE | T | 2.60E 01 | 1.30E-02 | 3.14E-01 | 5 |

GASIFIER ASH, ECOLOGY IMPACT

| DMEG NO. | | COMPOUND NAME | TYPE | CONC E-6 G/G | DS | WDS G/S | LCCAT |
|---|---|---|---|---|---|---|---|
| 23 A 080* | W | PHENYLPYRIDINES | T | 2.60E 01 | 1.30E-02 | 3.14E-01 | 5 |
| 08 B 060* | W | B-PROPIOLACTONE | T | 2.60E 01 | 1.30E-02 | 3.14E-01 | 5 |
| 23 A 063* | | 4-ETHYLPYRIDINE | T | 2.60E 01 | 1.30E-02 | 3.14E-01 | 5 |
| 05 A 100* | W | ISOBUTYL ALCOHOL | T | 2.60E 01 | 1.30E-02 | 3.14E-01 | 5 |
| 17 B 060 | W | 1-CHLORO-4-NITROBENZENE | T | 2.60E 01 | 1.30E-02 | 3.14E-01 | 5 |
| 17 B 040 | W | 1-CHLORO-2-NITROBENZENE | T | 2.60E 01 | 1.30E-02 | 3.14E-01 | 5 |
| 23 A 120* | W | COLLIDINES | T | 2.60E 01 | 1.30E-02 | 3.14E-01 | 5 |
| 10 B 100* | | MORPHOLINE | T | 2.60E 01 | 1.30E-02 | 3.14E-01 | 5 |
| 06 A 020* | W | ETHYLENE GLYCOL | T | 2.60E 01 | 1.30E-02 | 3.14E-01 | 5 |
| 03 B 020 | | 1,4-DIOXANE | T | 2.60E 01 | 1.30E-02 | 3.14E-01 | 5 |
| 05 A 124* | | 3-METHYL-1-BUTANOL | T | 2.60E 01 | 1.30E-02 | 3.14E-01 | 5 |
| 23 A 082* | | 3-PHENYLPYRIDINE | T | 2.60E 01 | 1.30E-02 | 3.14E-01 | 5 |
| 08 D 100* | | PROPYL ACETATES | T | 2.60E 01 | 1.30E-02 | 3.14E-01 | 5 |
| 08 D 101* | | N-PROPYL ACETATE | T | 2.60E 01 | 1.30E-02 | 3.14E-01 | 5 |
| 05 A 120* | W | PENTANOLS (PRIMARY) | T | 2.60E 01 | 1.30E-02 | 3.14E-01 | 5 |
| 23 A 121* | | 5-ETHYL-2-METHYLPYRIDINE | T | 2.60E 01 | 1.30E-02 | 3.14E-01 | 5 |
| 10 A 060* | | ETHANOLAMINE | T | 2.60E 01 | 1.30E-02 | 3.14E-01 | 5 |
| 23 A 062* | | 3-ETHYLPYRIDINE | T | 2.60E 01 | 1.30E-02 | 3.14E-01 | 5 |
| 23 A 122* | | 2,4,6-COLLIDINE | T | 2.60E 01 | 1.30E-02 | 3.14E-01 | 5 |
| 05 A 122* | | 2-METHYL-1-BUTANOL | T | 2.60E 01 | 1.30E-02 | 3.14E-01 | 5 |
| 04 B 040* | P W | 1,1'-DICHLORODIETHYL ETHER | T | 2.60E 01 | 1.30E-02 | 3.14E-01 | 5 |
| 04 B 080 | W | 2,2'-DICHLORODIETHYL ETHER | T | 2.60E 01 | 1.30E-02 | 3.14E-01 | 5 |
| 23 A 020* | W | PYRIDINE | T | 2.60E 01 | 1.30E-02 | 3.14E-01 | 5 |
| 05 A 121* | | N-PENTANOL | T | 2.60E 01 | 1.30E-02 | 3.14E-01 | 5 |
| 23 A 061* | | 2-ETHYLPYRIDINE | T | 2.00E 01 | 1.30E-02 | 3.02E-01 | 4 |
| 09 B 042* | | B-NAPHTHONITRILES | T | 2.00E 01 | 1.30E-02 | 3.02E-01 | 4 |
| 09 B 041* | | A-NAPHTHONITRILES | T | 2.00E 01 | 1.30E-02 | 3.02E-01 | 4 |
| 09 B 040* | W | NAPHTHONITRILES | T | 2.00E 01 | 1.30E-02 | 3.02E-01 | 4 |
| 09 B 020* | W | BENZONITRILE | T | 2.60E 01 | 1.20E-02 | 2.90E-01 | 5 |
| 07 B 100* | W | CAMPHOR | T | 1.70E 01 | 1.13E-02 | 2.74E-01 | 7 |
| 08 A 080* | | VALERIC ACID | S | 1.50E 01 | 1.10E-02 | 2.60E-01 | |
| 69 A 010 | | MOLYBDENUM | D | < 4.00E-01< | 1.00E-02< | 2.41E-01 | |
| 50 A 010 | P | ANTIMONY | T | 2.00E 01 | 1.00E-02 | 2.41E-01 | 4 |
| 04 B 040* | P W | 1,1'-DICHLORODIETHYL ETHER | | | | | |

GASIFIER ASH, ECOLOGY IMPACT

| DMEG NO. | COMPOUND NAME | TYPE | CONC E-6 G/G | DS | WDS G/S | LCCAT |
|---|---|---|---|---|---|---|
| 08 D 320* P | BUTYL BENZYL PHTHALATE | T | 1.00E 02 | 5.00E-03 | 1.20E-01 | 6 |
| 08 D 320* P | BUTYL BENZYL PHTHALATE | T | 2.60E 01 | 1.30E-03 | 3.14E-02 | 5 |
| 28 A 010 | SODIUM | D | 1.80E 04 | 0.00E-01 | 0.00E-01 | |
| 12 A 040* P | N-NITROSODIETHYLAMINE | T | 1.00E 02 | 0.00E-01 | 0.00E-01 | 6 |
| 12 A 040* P | N-NITROSODIETHYLAMINE | T | 2.60E 01 | 0.00E-01 | 0.00E-01 | 5 |
| 02 B 140* P | HEXACHLOROCYCLOPENTADIENE | T | 3.30E 02 | 0.00E-01 | 0.00E-01 | 1 |
| 02 B 120* P | HEXACHLOROBUTADIENE | T | 1.50E 01 | 0.00E-01 | 0.00E-01 | 2 |
| 02 B 120* P | HEXACHLOROBUTADIENE | T | 3.30E 02 | 0.00E-01 | 0.00E-01 | 1 |
| 12 A 060* P | N-NITROSODIPROPYLAMINE | T | 2.60E 01 | 0.00E-01 | 0.00E-01 | 5 |
| 12 A 060* P | N-NITROSODIPROPYLAMINE | T | 1.00E 02 | 0.00E-01 | 0.00E-01 | 6 |
| 04 B 020* P | 1,1'-DICHLOROMETHYL ETHER | T | 2.60E 01 | 0.00E-01 | 0.00E-01 | 5 |
| 56 A 010 | FLUORINE (AS F-) | S | 1.90E 02 | 0.00E-01 | 0.00E-01 | |
| 39 A 010 | GALLIUM | S | 9.00E 00 | 0.00E-01 | 0.00E-01 | |
| 04 A 160* P | A-CHLOROBUTYL ETHYL ETHER | T | 2.60E 01 | 0.00E-01 | 0.00E-01 | 5 |
| 29 A 010 | POTASSIUM | D | 8.60E 03 | 0.00E-01 | 0.00E-01 | |
| 04 A 180* P | CHLOROPHENYL PHENYL ETHER | T | 2.60E 01 | 0.00E-01 | 0.00E-01 | 5 |
| 35 A 010 | STRONTIUM | D | 1.90E 03 | 0.00E-01 | 0.00E-01 | |
| 45 A 010 | TIN | S | 5.00E-01 | 0.00E-01 | 0.00E-01 | |
| 70 A 010 | TUNGSTEN | S | 1.00E 00 | 0.00E-01 | 0.00E-01 | |
| 12 A 020* P | N-NITROSODIMETHYLAMINE | T | 2.60E 01 | 0.00E-01 | 0.00E-01 | 5 |
| 04 A 160* P | A-CHLOROBUTYL ETHYL ETHER | T | 2.00E 01 | 0.00E-01 | 0.00E-01 | 4 |
| 04 A 140* P | 2-CHLOROETHYL VINYL ETHER | T | 2.60E 01 | 0.00E-01 | 0.00E-01 | 5 |
| 04 A 180* P | CHLOROPHENYL PHENYL ETHER | T | 2.00E 01 | 0.00E-01 | 0.00E-01 | 4 |
| 43 A 010 | SILICON | D | 1.40E 05 | 0.00E-01 | 0.00E-01 | |
| 84 B 010 | CERIUM | S | 1.10E 02 | 0.00E-01 | 0.00E-01 | |
| 44 A 010 | GERMANIUM | S | 1.00E 00 | 0.00E-01 | 0.00E-01 | |
| 02 B 140* P | HEXACHLOROCYCLOPENTADIENE | T | 1.50E 01 | 0.00E-01 | 0.00E-01 | 2 |
| 59 A 010 | IODINE (AS I-) | S | 2.00E-01 | 0.00E-01 | 0.00E-01 | |
| 84 A 010 | LANTHANUM | S | 1.10E 02 | 0.00E-01 | 0.00E-01 | |
| 84 F 010 | DYSPROSIUM | S | 7.00E 00 | 0.00E-01 | 0.00E-01 | |
| 57 A 010 | CHLORINE (AS CL-) | D | 1.50E 02 | 0.00E-01 | 0.00E-01 | |
| 16 A 200* P | CHLORONAPHTHALENES | T | 3.90E 01 | 0.00E-01 | 0.00E-01 | 3 |
| 21 A 120* PH | ACENAPHTHYLENE | T | 1.50E 01 | 0.00E-01 | 0.00E-01 | 2 |
| 04 B 020* P | 1,1'-DICHLOROMETHYL ETHER | T | 2.00E 01 | 0.00E-01 | 0.00E-01 | 4 |

GASIFIER ASH, ECOLOGY IMPACT

| DMEG NO. | COMPOUND NAME | TYPE | CONC E-6 G/G | DS | WDS G/S | LCCAT |
|---|---|---|---|---|---|---|
| 21 A 140* P | ANTHRACENE | T | 1.50E 01 | 0.00E-01 | 0.00E-01 | 2 |
| 04 A 140* P | 2-CHLOROETHYL VINYL ETHER | T | 2.00E 01 | 0.00E-01 | 0.00E-01 | 4 |
| 21 A 180* P | PHENANTHRENE | T | 1.50E 01 | 0.00E-01 | 0.00E-01 | 2 |
| 16 A 200* P | CHLORONAPHTHALENES | T | 1.50E 01 | 0.00E-01 | 0.00E-01 | 2 |
| 63 A 010 | ZIRCONIUM (AS ZR+4) | S | 1.80E 02 | 0.00E-01 | 0.00E-01 | |
| 12 A 020* P | N-NITROSODIMETHYLAMINE | T | 1.00E 02 | 0.00E-01 | 0.00E-01 | 6 |
| 21 B 120* P | CHRYSENE | T | 1.50E 01 | 0.00E-01 | 0.00E-01 | 2 |
| 21 B 120* P | CHRYSENE | T | 3.90E 01 | 0.00E-01 | 0.00E-01 | 3 |
| 21 B 180* P | PYRENE | T | 1.50E 01 | 0.00E-01 | 0.00E-01 | 2 |
| 53 A 010 | SULFUR | D | 8.80E 03 | 0.00E-01 | 0.00E-01 | |
| 21 A 180* P | PHENANTHRENE | T | 3.90E 01 | 0.00E-01 | 0.00E-01 | 3 |
| 21 B 040* P | BENZ(A)ANTHRACENE | T | 1.50E 01 | 0.00E-01 | 0.00E-01 | 2 |
| 58 A 010 | BROMINE | S | 2.00E 00 | 0.00E-01 | 0.00E-01 | |
| 21 C 100* P | BENZO(A)PYRENE | T | 3.90E 01 | 0.00E-01 | 0.00E-01 | 3 |
| 21 D 080* PH | BENZO(GHI)PERYLENE | T | 1.50E 01 | 0.00E-01 | 0.00E-01 | 2 |
| 31 A 010 | CESIUM | S | 8.00E 00 | 0.00E-01 | 0.00E-01 | |
| 21 A 140* P | ANTHRACENE | T | 3.90E 01 | 0.00E-01 | 0.00E-01 | 3 |
| 22 A 020* PH | FLUORENE | T | 3.90E 01 | 0.00E-01 | 0.00E-01 | 3 |
| 22 B 040* P | FLUORANTHENE | T | 1.50E 01 | 0.00E-01 | 0.00E-01 | 2 |
| 22 B 040* P | FLUORANTHENE | T | 3.90E 01 | 0.00E-01 | 0.00E-01 | 3 |
| 22 C 020* P | BENZO(K)FLUORANTHENE | T | 1.50E 01 | 0.00E-01 | 0.00E-01 | 2 |
| 22 C 020* P | BENZO(K)FLUORANTHENE | T | 3.90E 01 | 0.00E-01 | 0.00E-01 | 3 |
| 22 C 080* P | BENZO(B)FLUORANTHENE | T | 1.50E 01 | 0.00E-01 | 0.00E-01 | 2 |
| 64 A 010 | HAFNIUM, (AS HF+4) | S | 1.00E 00 | 0.00E-01 | 0.00E-01 | |
| 22 D 020* P | INDENO(1,2,3-CD)PYRENE | T | 1.50E 01 | 0.00E-01 | 0.00E-01 | 2 |
| 22 D 020* P | INDENO(1,2,3-CD)PYRENE | T | 3.90E 01 | 0.00E-01 | 0.00E-01 | 3 |
| 21 C 080* P | DIBENZ(A,H)ANTHRACENE | T | 3.90E 01 | 0.00E-01 | 0.00E-01 | 3 |
| 21 A 100* PH | ACENAPHTHENE | T | 1.50E 01 | 0.00E-01 | 0.00E-01 | 2 |
| 21 A 100* PH | ACENAPHTHENE | T | 3.90E 01 | 0.00E-01 | 0.00E-01 | 3 |
| 84 D 010 | NEODYMIUM | S | 3.00E 01 | 0.00E-01 | 0.00E-01 | |
| 21 A 120* PH | ACENAPHTHYLENE | T | 3.90E 01 | 0.00E-01 | 0.00E-01 | 3 |
| 66 A 010 | NIOBIUM (AS NB+3) | S | 3.10E 01 | 0.00E-01 | 0.00E-01 | |
| 84 C 010 | PRASEODYMIUM | S | 1.60E 01 | 0.00E-01 | 0.00E-01 | |
| 30 A 010 | RUBIDIUM (AS RB+) | S | 4.70E 01 | 0.00E-01 | 0.00E-01 | |

GASIFIER ASH, ECOLOGY IMPACT

| DMEG NO. | | COMPOUND NAME | TYPE | CONC E-6 G/G | DS | WDS G/S | LCCAT |
|---|---|---|---|---|---|---|---|
| 84 E 010 | | SAMARIUM | S | 1.30E 01 | 0.00E-01 | 0.00E-01 | |
| 60 A 010 | | SCANDIUM | S | 2.00E 01 | 0.00E-01 | 0.00E-01 | |
| 21 B 040* | P | BENZ(A)ANTHRACENE | T | 3.90E 01 | 0.00E-01 | 0.00E-01 | 3 |
| 85 B 010 | | THORIUM | S | 2.30E 01 | 0.00E-01 | 0.00E-01 | |
| 08 D 300* | P | DI-2-ETHYLHEXYL PHTHALATE | T | 2.60E 01 | 0.00E-01 | 0.00E-01 | 5 |
| 08 D 300* | P | DI-2-ETHYLHEXYL PHTHALATE | T | 1.00E 02 | 0.00E-01 | 0.00E-01 | 6 |
| 21 B 180* | P | PYRENE | T | 3.90E 01 | 0.00E-01 | 0.00E-01 | 3 |
| 21 C 080* | P | DIBENZ(A,H)ANTHRACENE | T | 1.50E 01 | 0.00E-01 | 0.00E-01 | 2 |
| 61 A 010 | | YTTRIUM (AS Y+3) | S | 5.90E 01 | 0.00E-01 | 0.00E-01 | |
| 21 C 100* | P | BENZO(A)PYRENE | T | 1.50E 01 | 0.00E-01 | 0.00E-01 | 2 |
| 07 B 080* | P | ISOPHORONE | T | 2.60E 01 | 0.00E-01 | 0.00E-01 | 5 |
| 07 B 080* | P | ISOPHORONE | T | 1.00E 02 | 0.00E-01 | 0.00E-01 | 6 |
| 21 D 080* | PH | BENZO(GHI)PERYLENE | T | 3.90E 01 | 0.00E-01 | 0.00E-01 | 3 |
| 22 A 020* | PH | FLUORENE | T | 1.50E 01 | 0.00E-01 | 0.00E-01 | 2 |
| 02 A 140* | P | DIBROMOCHLOROMETHANE | T | 3.30E 02 | 0.00E-01 | 0.00E-01 | 1 |
| 02 A 140* | P | DIBROMOCHLOROMETHANE | T | 1.50E 01 | 0.00E-01 | 0.00E-01 | 2 |
| 02 A 160* | P | BROMOFORM | T | 3.30E 02 | 0.00E-01 | 0.00E-01 | 1 |
| 02 A 160* | P | BROMOFORM | T | 1.50E 01 | 0.00E-01 | 0.00E-01 | 2 |
| 02 A 320* | P | HEXACHLOROETHANE | T | 3.30E 02 | 0.00E-01 | 0.00E-01 | 1 |
| 02 A 320* | P | HEXACHLOROETHANE | T | 1.50E 01 | 0.00E-01 | 0.00E-01 | 2 |
| 22 C 080* | P | BENZO(B)FLUORANTHENE | T | 3.90E 01 | 0.00E-01 | 0.00E-01 | 3 |

CYCLONE DUST

AVERAGE FLOW RATE = 3.8 G/S

207.15 G EXTRACTED TOTAL ORGANIC LOADING = 13 G/KG

TOTAL TCO = 0.66 G/KG TOTAL GRAV = 12.0 G/KG

3.4% ORIGINAL SAMPLE TO LC

LC TCO = 3.2 MG LC GRAV = 88.2 MG LC TOTAL = 91.4 MG

| LCCAT | ORGANIC LOADING |
|---|---|
| 1 | 2600.0 |
| 2 | 140.0 |
| 3 | 1300.0 |
| 4 | 1400.0 |
| 5 | 770.0 |
| 6 | 3400.0 |
| 7 | 1100.0 |

FLOW RATE = 3.80

STATE: SOLID, UNITS IN MICROGRAMS/G

IMPACT: HEALTH

EXPERIMENTALY DETERMINED DATA

SPARK SOURCE DATA

CYCLONE DUST, HEALTH IMPACT

| DMEG NO. | | | COMPOUND NAME | TYPE | CONC E-6 G/G | DS | WDS G/S | LCCAT |
|---|---|---|---|---|---|---|---|---|
| 16 A 220* | | W | POLYCHLORINATED BIPHENYLS | T | 1.30E 03 | 1.30E 06 | 4.94E 06 | 3 |
| 16 A 220* | | W | POLYCHLORINATED BIPHENYLS | T | 1.40E 02 | 1.40E 05 | 5.32E 05 | 2 |
| 21 C 100* | P | W | BENZO(A)PYRENE | T | 1.30E 03 | 2.20E 04 | 8.23E 04 | 3 |
| 21 C 080* | P | | DIBENZ(A,H)ANTHRACENE | T | 1.30E 03 | 4.64E 03 | 1.80E 04 | 3 |
| 19 A 020* | P | W | 2-CHLOROPHENOL | T | 3.40E 03 | 3.40E 03 | 1.30E 04 | 6 |
| 19 A 040* | P | W | 2,4-DICHLOROPHENOL | T | 3.40E 03 | 3.40E 03 | 1.30E 04 | 6 |
| 20 B 041* | | | 3,5-DINITRO-P-CRESOL | T | 3.40E 03 | 3.40E 03 | 1.30E 04 | 6 |
| 19 A 060* | P | W | PENTACHLOROPHENOL | T | 3.40E 03 | 3.40E 03 | 1.30E 04 | 6 |
| 18 A 042* | | | O-CRESOL | T | 3.40E 03 | 3.40E 03 | 1.30E 04 | 6 |
| 19 B 020* | | W | CHLORINATED CRESOLS | T | 3.40E 03 | 3.40E 03 | 1.30E 04 | 6 |
| 18 C 083* | | | 5-INDANOL | T | 3.40E 03 | 3.40E 03 | 1.30E 04 | 6 |
| 18 A 020* | P | W | PHENOL | T | 3.40E 03 | 3.40E 03 | 1.30E 04 | 6 |
| 18 A 060* | | W | 2-METHOXYPHENOL | T | 3.40E 03 | 3.40E 03 | 1.30E 04 | 6 |
| 18 A 040* | | W | CRESOLS | T | 3.40E 03 | 3.40E 03 | 1.30E 04 | 6 |
| 18 A 080* | | W | ETHYLPHENOLS | T | 3.40E 03 | 3.40E 03 | 1.30E 04 | 6 |
| 18 A 041* | | | M-CRESOL | T | 3.40E 03 | 3.40E 03 | 1.30E 04 | 6 |
| 18 A 081* | | | O-ETHYLPHENOL | T | 3.40E 03 | 3.40E 03 | 1.30E 04 | 6 |
| 20 A 020* | P | W | 2-NITROPHENOL | T | 3.40E 03 | 3.40E 03 | 1.30E 04 | 6 |
| 18 A 082* | | | M-ETHYLPHENOL | T | 3.40E 03 | 3.40E 03 | 1.30E 04 | 6 |
| 20 A 040* | | W | 3-NITROPHENOL | T | 3.40E 03 | 3.40E 03 | 1.30E 04 | 6 |
| 18 A 083* | | | P-ETHYLPHENOL | T | 3.40E 03 | 3.40E 03 | 1.30E 04 | 6 |
| 20 A 060* | P | W | 4-NITROPHENOL | T | 3.40E 03 | 3.40E 03 | 1.30E 04 | 6 |
| 18 A 100* | | W | PHENYLPHENOLS | T | 3.40E 03 | 3.40E 03 | 1.30E 04 | 6 |
| 20 A 080* | | W | 2-AMINO-4,6-DINITROPHENOL | T | 3.40E 03 | 3.40E 03 | 1.30E 04 | 6 |
| 18 A 101* | | | O-PHENYLPHENOL | T | 3.40E 03 | 3.40E 03 | 1.30E 04 | 6 |
| 20 A 100* | | W | DINITROPHENOLS | T | 3.40E 03 | 3.40E 03 | 1.30E 04 | 6 |
| 18 A 102* | | | P-PHENYLPHENOL | T | 3.40E 03 | 3.40E 03 | 1.30E 04 | 6 |
| 20 A 101* | P | | 2,4-DINITROPHENOL | T | 3.40E 03 | 3.40E 03 | 1.30E 04 | 6 |
| 18 A 103* | | | M-PHENYLPHENOL | T | 3.40E 03 | 3.40E 03 | 1.30E 04 | 6 |
| 20 A 102* | | | 2,5-DINITROPHENOL | T | 3.40E 03 | 3.40E 03 | 1.30E 04 | 6 |
| 18 A 120* | | W | 2,2'-DIHYDROXYDIPHENYL | T | 3.40E 03 | 3.40E 03 | 1.30E 04 | 6 |
| 20 A 103* | | | 2,6-DINITROPHENOL | T | 3.40E 03 | 3.40E 03 | 1.30E 04 | 6 |
| 18 A 140* | | W | XYLENOLS | T | 3.40E 03 | 3.40E 03 | 1.30E 04 | 6 |
| 20 A 120* | | W | 2,4,6-TRINITROPHENOL | T | 3.40E 03 | 3.40E 03 | 1.30E 04 | 6 |

CYCLONE DUST, HEALTH IMPACT

| DMEG NO. | | COMPOUND NAME | TYPE | CONC E-6 G/G | DS | WDS G/S | LCCAT |
|---|---|---|---|---|---|---|---|
| 18 A 141* | | 2,3-XYLENOL | T | 3.40E 03 | 3.40E 03 | 1.30E 04 | 6 |
| 20 B 020* | P W | 4,6-DINITRO-O-CRESOL | T | 3.40E 03 | 3.40E 03 | 1.30E 04 | 6 |
| 18 A 142* | P | 2,4-XYLENOL | T | 3.40E 03 | 3.40E 03 | 1.30E 04 | 6 |
| 20 B 040* | W | DINITRO-P-CRESOLS | T | 3.40E 03 | 3.40E 03 | 1.30E 04 | 6 |
| 18 A 143* | | 2,5-XYLENOL | T | 3.40E 03 | 3.40E 03 | 1.30E 04 | 6 |
| 18 C 082* | | 4-INDANOL | T | 3.40E 03 | 3.40E 03 | 1.30E 04 | 6 |
| 18 A 144* | | 2,6-XYLENOL | T | 3.40E 03 | 3.40E 03 | 1.30E 04 | 6 |
| 20 B 042* | | 2,6-DINITRO-P-CRESOL | T | 3.40E 03 | 3.40E 03 | 1.30E 04 | 6 |
| 18 A 145* | | 3,5-XYLENOL | T | 3.40E 03 | 3.40E 03 | 1.30E 04 | 6 |
| 18 B 020* | W | CATECHOL | T | 3.40E 03 | 3.40E 03 | 1.30E 04 | 6 |
| 18 A 146* | | 3,4-XYLENOL | T | 3.40E 03 | 3.40E 03 | 1.30E 04 | 6 |
| 18 B 040* | W | 1,3-DIHYDROXYBENZENE | T | 3.40E 03 | 3.40E 03 | 1.30E 04 | 6 |
| 18 A 160* | W | ETHYL CRESOLS | T | 3.40E 03 | 3.40E 03 | 1.30E 04 | 6 |
| 18 B 060* | W | 1,4-DIHYDROXYBENZENE | T | 3.40E 03 | 3.40E 03 | 1.30E 04 | 6 |
| 18 A 161* | | 6-ETHYL-M-CRESOL | T | 3.40E 03 | 3.40E 03 | 1.30E 04 | 6 |
| 18 A 043* | | P-CRESOL | T | 3.40E 03 | 3.40E 03 | 1.30E 04 | 6 |
| 19 B 021* | | CHLORINATED-O-CRESOLS | T | 3.40E 03 | 3.40E 03 | 1.30E 04 | 6 |
| 18 A 162* | | 4-ETHYL-O-CRESOL | T | 3.40E 03 | 3.40E 03 | 1.30E 04 | 6 |
| 18 A 163* | | 2-ETHYL-P-CRESOL | T | 3.40E 03 | 3.40E 03 | 1.30E 04 | 6 |
| 19 B 022* | P | CHLORINATED-M-CRESOLS | T | 3.40E 03 | 3.40E 03 | 1.30E 04 | 6 |
| 18 A 180* | W | POLYALKYLPHENOLS (MW>135) | T | 3.40E 03 | 3.40E 03 | 1.30E 04 | 6 |
| 19 B 023* | | CHLORINATED-P-CRESOLS | T | 3.40E 03 | 3.40E 03 | 1.30E 04 | 6 |
| 18 A 181* | | 2,4,6-TRIMETHYL METHYL PHENOL | T | 3.40E 03 | 3.40E 03 | 1.30E 04 | 6 |
| 18 C 081* | | 1-INDANOL | T | 3.40E 03 | 3.40E 03 | 1.30E 04 | 6 |
| 18 A 182* | | 4,6-DI-TERT-BUTYL-M-CRESOL | T | 3.40E 03 | 3.40E 03 | 1.30E 04 | 6 |
| 18 B 080* | W | 1,2,3-TRIHYDROXYBENZENE | T | 3.40E 03 | 3.40E 03 | 1.30E 04 | 6 |
| 18 A 183* | | 2,6-DIMETHYL-4-HEPTYL PHENOL | T | 3.40E 03 | 3.40E 03 | 1.30E 04 | 6 |
| 18 C 020* | W | 1-NAPHTHOL | T | 3.40E 03 | 3.40E 03 | 1.30E 04 | 6 |
| 18 C 040* | W | 2-NAPHTHOL | T | 3.40E 03 | 3.40E 03 | 1.30E 04 | 6 |
| 18 C 080* | W | INDANOLS | T | 3.40E 03 | 3.40E 03 | 1.30E 04 | 6 |
| 72 A 010 | | IRON (AS FE+2) | D | 9.20E 03 | 3.10E 03 | 1.20E 04 | |
| 21 C 100* | P W | BENZO(A)PYRENE | T | 1.40E 02 | 2.33E 03 | 8.90E 03 | 2 |
| 18 A 160* | W | ETHYL CRESOLS | T | 7.70E 02 | 7.70E 02 | 2.92E 03 | 5 |
| 18 A 146* | | 3,4-XYLENOL | T | 7.70E 02 | 7.70E 02 | 2.92E 03 | 5 |

CYCLONE DUST, HEALTH IMPACT

| OMEG NO. | | | COMPOUND NAME | TYPE | CONC E-6 G/G | DS | WDS G/S | LCCAT |
|---|---|---|---|---|---|---|---|---|
| 18 A 183* | | | 2,6-DIMETHYL-4-HEPTYL PHENOL | T | 7.70E 02 | 7.70E 02 | 2.92E 03 | 5 |
| 18 C 020* | | W | 1-NAPHTHOL | T | 7.70E 02 | 7.70E 02 | 2.92E 03 | 5 |
| 18 B 020* | | W | CATECHOL | T | 7.70E 02 | 7.70E 02 | 2.92E 03 | 5 |
| 18 C 040* | | W | 2-NAPHTHOL | T | 7.70E 02 | 7.70E 02 | 2.92E 03 | 5 |
| 18 B 040* | | W | 1,3-DIHYDROXYBENZENE | T | 7.70E 02 | 7.70E 02 | 2.92E 03 | 5 |
| 18 C 080* | | W | INDANOLS | T | 7.70E 02 | 7.70E 02 | 2.92E 03 | 5 |
| 18 B 060* | | W | 1,4-DIHYDROXYBENZENE | T | 7.70E 02 | 7.70E 02 | 2.92E 03 | 5 |
| 18 C 081* | | | 1-INDANOL | T | 7.70E 02 | 7.70E 02 | 2.92E 03 | 5 |
| 18 B 080* | | W | 1,2,3-TRIHYDROXYBENZENE | T | 7.70E 02 | 7.70E 02 | 2.92E 03 | 5 |
| 18 C 082* | | | 4-INDANOL | T | 7.70E 02 | 7.70E 02 | 2.92E 03 | 5 |
| 18 C 083* | | | 5-INDANOL | T | 7.70E 02 | 7.70E 02 | 2.92E 03 | 5 |
| 18 A 144* | | | 2,6-XYLENOL | T | 7.70E 02 | 7.70E 02 | 2.92E 03 | 5 |
| 18 A 020* | P | W | PHENOL | T | 7.70E 02 | 7.70E 02 | 2.92E 03 | 5 |
| 19 A 020* | P | W | 2-CHLOROPHENOL | T | 7.70E 02 | 7.70E 02 | 2.92E 03 | 5 |
| 18 A 040* | | W | CRESOLS | T | 7.70E 02 | 7.70E 02 | 2.92E 03 | 5 |
| 19 A 040* | P | W | 2,4-DICHLOROPHENOL | T | 7.70E 02 | 7.70E 02 | 2.92E 03 | 5 |
| 18 A 041* | | | M-CRESOL | T | 7.70E 02 | 7.70E 02 | 2.92E 03 | 5 |
| 19 A 060* | P | W | PENTACHLOROPHENOL | T | 7.70E 02 | 7.70E 02 | 2.92E 03 | 5 |
| 18 A 161* | | | 6-ETHYL-M-CRESOL | T | 7.70E 02 | 7.70E 02 | 2.92E 03 | 5 |
| 19 B 020* | | W | CHLORINATED CRESOLS | T | 7.70E 02 | 7.70E 02 | 2.92E 03 | 5 |
| 18 A 043* | | | P-CRESOL | T | 7.70E 02 | 7.70E 02 | 2.92E 03 | 5 |
| 19 B 021* | | | CHLORINATED-O-CRESOLS | T | 7.70E 02 | 7.70E 02 | 2.92E 03 | 5 |
| 18 A 163* | | | 2-ETHYL-P-CRESOL | T | 7.70E 02 | 7.70E 02 | 2.92E 03 | 5 |
| 19 B 022* | P | | CHLORINATED-M-CRESOLS | T | 7.70E 02 | 7.70E 02 | 2.92E 03 | 5 |
| 18 A 180* | | W | POLYALKYLPHENOLS (MW>135) | T | 7.70E 02 | 7.70E 02 | 2.92E 03 | 5 |
| 19 B 023* | | | CHLORINATED-P-CRESOLS | T | 7.70E 02 | 7.70E 02 | 2.92E 03 | 5 |
| 18 A 181* | | | 2,4,6-TRIMETHYL METHYL PHENOL | T | 7.70E 02 | 7.70E 02 | 2.92E 03 | 5 |
| 18 A 182* | | | 4,6-DI-TERT-BUTYL-M-CRESOL | T | 7.70E 02 | 7.70E 02 | 2.92E 03 | 5 |
| 18 A 082* | | | M-ETHYLPHENOL | T | 7.70E 02 | 7.70E 02 | 2.92E 03 | 5 |
| 20 A 040* | | W | 3-NITROPHENOL | T | 7.70E 02 | 7.70E 02 | 2.92E 03 | 5 |
| 18 A 083* | | | P-ETHYLPHENOL | T | 7.70E 02 | 7.70E 02 | 2.92E 03 | 5 |
| 20 A 060* | P | W | 4-NITROPHENOL | T | 7.70E 02 | 7.70E 02 | 2.92E 03 | 5 |
| 18 A 100* | | W | PHENYLPHENOLS | T | 7.70E 02 | 7.70E 02 | 2.92E 03 | 5 |
| 20 A 080* | | W | 2-AMINO-4,6-DINITROPHENOL | T | 7.70E 02 | 7.70E 02 | 2.92E 03 | 5 |

## CYCLONE DUST, HEALTH IMPACT

| DMEG NO. | | | COMPOUND NAME | TYPE | CONC E-6 G/G | DS | WDS G/S | LCCAT |
|---|---|---|---|---|---|---|---|---|
| 18 A 101* | | | O-PHENYLPHENOL | T | 7.70E 02 | 7.70E 02 | 2.92E 03 | 5 |
| 20 A 100* | | W | DINITROPHENOLS | T | 7.70E 02 | 7.70E 02 | 2.92E 03 | 5 |
| 18 A 102* | | | P-PHENYLPHENOL | T | 7.70E 02 | 7.70E 02 | 2.92E 03 | 5 |
| 20 A 101* | P | | 2,4-DINITROPHENOL | T | 7.70E 02 | 7.70E 02 | 2.92E 03 | 5 |
| 18 A 103* | | | M-PHENYLPHENOL | T | 7.70E 02 | 7.70E 02 | 2.92E 03 | 5 |
| 20 A 102* | | | 2,5-DINITROPHENOL | T | 7.70E 02 | 7.70E 02 | 2.92E 03 | 5 |
| 18 A 120* | | W | 2,2'-DIHYDROXYDIPHENYL | T | 7.70E 02 | 7.70E 02 | 2.92E 03 | 5 |
| 20 A 103* | | | 2,6-DINITROPHENOL | T | 7.70E 02 | 7.70E 02 | 2.92E 03 | 5 |
| 18 A 140* | | W | XYLENOLS | T | 7.70E 02 | 7.70E 02 | 2.92E 03 | 5 |
| 20 A 120* | | W | 2,4,6-TRINITROPHENOL | T | 7.70E 02 | 7.70E 02 | 2.92E 03 | 5 |
| 18 A 141* | | | 2,3-XYLENOL | T | 7.70E 02 | 7.70E 02 | 2.92E 03 | 5 |
| 20 B 020* | P | W | 4,6-DINITRO-O-CRESOL | T | 7.70E 02 | 7.70E 02 | 2.92E 03 | 5 |
| 18 A 142* | P | | 2,4-XYLENOL | T | 7.70E 02 | 7.70E 02 | 2.92E 03 | 5 |
| 20 B 040* | | W | DINITRO-P-CRESOLS | T | 7.70E 02 | 7.70E 02 | 2.92E 03 | 5 |
| 18 A 143* | | | 2,5-XYLENOL | T | 7.70E 02 | 7.70E 02 | 2.92E 03 | 5 |
| 20 B 041* | | | 3,5-DINITRO-P-CRESOL | T | 7.70E 02 | 7.70E 02 | 2.92E 03 | 5 |
| 18 A 081* | | | O-ETHYLPHENOL | T | 7.70E 02 | 7.70E 02 | 2.92E 03 | 5 |
| 20 B 042* | | | 2,6-DINITRO-P-CRESOL | T | 7.70E 02 | 7.70E 02 | 2.92E 03 | 5 |
| 18 A 145* | | | 3,5-XYLENOL | T | 7.70E 02 | 7.70E 02 | 2.92E 03 | 5 |
| 18 A 042* | | | O-CRESOL | T | 7.70E 02 | 7.70E 02 | 2.92E 03 | 5 |
| 18 A 080* | | W | ETHYLPHENOLS | T | 7.70E 02 | 7.70E 02 | 2.92E 03 | 5 |
| 20 A 020* | P | W | 2-NITROPHENOL | T | 7.70E 02 | 7.70E 02 | 2.92E 03 | 5 |
| 18 A 162* | | | 4-ETHYL-O-CRESOL | T | 7.70E 02 | 7.70E 02 | 2.92E 03 | 5 |
| 18 A 060* | | W | 2-METHOXYPHENOL | T | 2.60E 03 | 6.50E 02 | 2.50E 03 | 1 |
| 02 A 380* | | W | HEXACHLOROCYCLOHEXANE | T | 1.40E 02 | 5.00E 02 | 1.90E 03 | 2 |
| 21 C 080* | P | | DIBENZ(A,H)ANTHRACENE | D | 1.40E 01 | 1.40E 02 | 5.31E 02 | |
| 54 A 010 | P | | SELENIUM | D | 1.30E 03 | 1.30E 02 | 4.94E 02 | |
| 36 A 010 | | | BARIUM | D | 6.30E 01 | 1.30E 02 | 4.80E 02 | |
| 49 A 010 | P | | ARSENIC | T | 1.30E 03 | 1.20E 02 | 4.50E 02 | 3 |
| 21 B 080* | | | 3-METHYLCHOLANTHRENE | D | < 2.30E 00 | < 1.20E 02 | < 4.40E 02 | |
| 83 A 010 | P | | MERCURY | T | 1.40E 03 | 9.33E 01 | 3.54E 02 | 4 |
| 04 B 020* | P | W | 1,1'-DICHLOROMETHYL ETHER | D | 1.20E 04 | 7.50E 01 | 2.90E 02 | |
| 38 A 010 | | | ALUMINUM | D | 2.90E 04 | 6.04E 01 | 2.30E 02 | |
| 34 A 010 | | | CALCIUM (AS CA+2) | | | | | |

# CYCLONE DUST, HEALTH IMPACT

| DMEG NO. | | | COMPOUND NAME | TYPE | CONC E-6 G/G | DS | WDS G/S | LCCAT |
|---|---|---|---|---|---|---|---|---|
| 43 A 010 | | | SILICON | D | 1.80E 04 | 6.00E 01 | 2.30E 02 | |
| 04 B 020* | P | W | 1,1'-DICHLOROMETHYL ETHER | T | 7.70E 02 | 5.13E 01 | 2.00E 02 | 5 |
| 33 A 010 | | | MAGNESIUM | D | 7.80E 03 | 4.33E 01 | 1.64E 02 | |
| 71 A 010 | P | | MANGANESE | D | 1.90E 01 | 3.80E 01 | 1.44E 02 | |
| 02 A 380* | | W | HEXACHLOROCYCLOHEXANE | T | 1.40E 02 | 3.50E 01 | 1.33E 02 | 2 |
| 68 A 010 | P | | CHROMIUM | S | 1.10E 01 | 2.20E 01 | 8.40E 01 | |
| 82 A 010 | P | | CADMIUM | S | 2.00E 00 | 2.00E 01 | 7.60E 01 | |
| 48 A 010 | | | PHOSPHORUS | D | 5.90E 02 | 2.00E 01 | 7.50E 01 | |
| 46 A 010 | P | | LEAD | S | 8.00E 00 | 1.60E 01 | 6.10E 01 | |
| 35 A 010 | | | STRONTIUM | D | 1.40E 03 | 1.52E 01 | 5.80E 01 | |
| 21 B 080* | | | 3-METHYLCHOLANTHRENE | T | 1.40E 02 | 1.30E 01 | 4.83E 01 | 2 |
| 10 C 100* | | | 1,4-DIAMINOBENZENE | T | 3.40E 03 | 1.13E 01 | 4.30E 01 | 6 |
| 10 C 041* | | | 2-AMINOTOLUENE | T | 3.40E 03 | 1.03E 01 | 3.91E 01 | 6 |
| 10 C 043* | | | 4-AMINOTOLUENE | T | 3.40E 03 | 1.03E 01 | 3.91E 01 | 6 |
| 10 C 042* | | | 3-AMINOTOLUENE | T | 3.40E 03 | 1.03E 01 | 3.91E 01 | 6 |
| 10 C 040* | | | AMINOTOLUENES | T | 3.40E 03 | 1.03E 01 | 3.91E 01 | 6 |
| 21 B 040* | P | | BENZ(A)ANTHRACENE | T | 1.30E 03 | 1.00E 01 | 3.80E 01 | 3 |
| 21 D 040* | | W | DIBENZO(A,I)PYRENE | T | 1.30E 03 | 1.00E 01 | 3.80E 01 | 3 |
| 12 A 040* | P | | N-NITROSODIETHYLAMINE | T | 3.40E 03 | 9.44E 00 | 3.60E 01 | 6 |
| 76 A 010 | P | | NICKEL | S | 4.00E 00 | 8.90E 00 | 3.40E 01 | |
| 02 A 320* | P | | HEXACHLOROETHANE | T | 2.60E 03 | 8.70E 00 | 3.30E 01 | 1 |
| 27 A 010 | | | LITHIUM | S | 6.00E 00 | 8.60E 00 | 3.30E 01 | |
| 02 B 140* | P | W | HEXACHLOROCYCLOPENTADIENE | T | 2.60E 03 | 7.90E 00 | 3.00E 01 | 1 |
| 23 B 100* | | W | DIHYDROACRIDINE | T | 3.40E 03 | 6.93E 00 | 2.63E 01 | 6 |
| 28 A 010 | | | SODIUM | D | 1.10E 04 | 6.90E 00 | 2.61E 01 | |
| 10 C 220* | | | 2-AMINONAPHTHALENE | T | 3.40E 03 | 6.80E 00 | 2.60E 01 | 6 |
| 32 A 010 | P | | BERYLLIUM | S | 4.00E-01 | 6.70E 00 | 2.53E 01 | |
| 23 B 240* | | | DIBENZ(A,H)ACRIDINE | T | 3.40E 03 | 5.10E 00 | 1.92E 01 | 6 |
| 23 C 160* | | W | DIBENZO(C,G)CARBAZOLE | T | 1.40E 03 | 4.70E 00 | 1.80E 01 | 4 |
| 23 B 220* | | | DIBENZ(A,J)ACRIDINE | T | 3.40E 03 | 4.60E 00 | 1.74E 01 | 6 |
| 79 A 010 | P | | SILVER | S | 2.00E 00 | 4.00E 00 | 1.52E 01 | |
| 65 A 010 | | | VANADIUM | S | 1.90E 01 | 3.80E 00 | 1.44E 01 | |
| 56 A 010 | | | FLUORINE (AS F-) | S | 2.80E 02 | 3.73E 00 | 1.41E 01 | |
| 08 B 060* | | W | B-PROPIOLACTONE | T | 3.40E 03 | 3.60E 00 | 1.40E 01 | 6 |

## CYCLONE DUST, HEALTH IMPACT

| DMEG NO. | | | COMPOUND NAME | TYPE | CONC E-6 G/G | DS | WDS G/S | LCCAT |
|---|---|---|---|---|---|---|---|---|
| 74 A 010 | | | COBALT | S | 5.00E 00 | 3.33E 00 | 1.30E 01 | |
| 81 A 010 | P | | ZINC | S | 1.60E 02 | 3.20E 00 | 1.21E 01 | |
| 78 A 010 | P | | COPPER | S | 3.00E 01 | 3.00E 00 | 1.14E 01 | |
| 23 C 160* | | W | DIBENZO(C,G)CARBAZOLE | T | 7.70E 02 | 2.60E 00 | 9.80E 00 | 5 |
| 10 C 100* | | | 1,4-DIAMINOBENZENE | T | 7.70E 02 | 2.60E 00 | 9.80E 00 | 5 |
| 10 C 043* | | | 4-AMINOTOLUENE | T | 7.70E 02 | 2.33E 00 | 8.90E 00 | 5 |
| 10 C 041* | | | 2-AMINOTOLUENE | T | 7.70E 02 | 2.33E 00 | 8.90E 00 | 5 |
| 10 C 042* | | | 3-AMINOTOLUENE | T | 7.70E 02 | 2.33E 00 | 8.90E 00 | 5 |
| 10 C 040* | | | AMINOTOLUENES | T | 7.70E 02 | 2.33E 00 | 8.90E 00 | 5 |
| 10 C 082* | | | M-ANISIDINE | T | 3.40E 03 | 2.30E 00 | 8.61E 00 | 6 |
| 13 A 100* | | W | BENZENETHIOL | T | 3.40E 03 | 2.30E 00 | 8.61E 00 | 6 |
| 10 C 083* | | | P-ANISIDINE | T | 3.40E 03 | 2.30E 00 | 8.61E 00 | 6 |
| 10 C 081* | | | O-ANISIDINE | T | 3.40E 03 | 2.30E 00 | 8.61E 00 | 6 |
| 10 C 080* | | | ANISIDINES | T | 3.40E 03 | 2.30E 00 | 8.61E 00 | 6 |
| 62 A 010 | | | TITANIUM | D | 4.00E 02 | 2.22E 00 | 8.44E 00 | |
| 12 A 040* | P | | N-NITROSODIETHYLAMINE | T | 7.70E 02 | 2.13E 00 | 8.12E 00 | 5 |
| 10 C 200* | | | 1-AMINONAPHTHALENE | T | 3.40E 03 | 2.00E 00 | 7.60E 00 | 6 |
| 21 B 103* | | | 2-METHYL BENZO(C)PHENANTHRENE | T | 1.30E 03 | 1.94E 00 | 7.40E 00 | 3 |
| 21 B 102* | | | 1-METHYL BENZO(C)PHENANTHRENE | T | 1.30E 03 | 1.94E 00 | 7.40E 00 | 3 |
| 21 B 106* | | | 7-METHYL BENZO(C)PHENANTHRENE | T | 1.30E 03 | 1.94E 00 | 7.40E 00 | 3 |
| 21 B 10A* | | | N-PROPYL BENZO(C)PHENANTHRENE | T | 1.30E 03 | 1.94E 00 | 7.40E 00 | 3 |
| 21 B 104* | | | 5-METHYL BENZO(C)PHENANTHRENE | T | 1.30E 03 | 1.94E 00 | 7.40E 00 | 3 |
| 21 B 107* | | | 8-METHYL BENZO(C)PHENANTHRENE | T | 1.30E 03 | 1.94E 00 | 7.40E 00 | 3 |
| 21 B 10B* | | | ISOPROPYL BENZO(C)PHENANTHRENE | T | 1.30E 03 | 1.94E 00 | 7.40E 00 | 3 |
| 21 B 105* | | | 6-METHYL BENZO(C)PHENANTHRENE | T | 1.30E 03 | 1.94E 00 | 7.40E 00 | 3 |
| 21 B 101* | | | BENZO(C)PHENANTHRENE | T | 1.30E 03 | 1.94E 00 | 7.40E 00 | 3 |
| 21 B 100* | | | BENZO(C)PHENANTHRENE & ALKYL DERIVATIVES | T | 1.30E 03 | 1.94E 00 | 7.40E 00 | 3 |
| 21 B 109* | | | 6-ETHYL BENZO(C)PHENANTHRENE | T | 1.30E 03 | 1.94E 00 | 7.40E 00 | 3 |
| 21 B 108* | | | 2-ETHYL BENZO(C)PHENANTHRENE | T | 1.30E 03 | 1.94E 00 | 7.40E 00 | 3 |
| 63 A 010 | | | ZIRCONIUM (AS ZR+4) | S | 2.90E 01 | 1.93E 00 | 7.34E 00 | |
| 12 A 020* | P | W | N-NITROSODIMETHYLAMINE | T | 3.40E 03 | 1.70E 00 | 6.50E 00 | 6 |
| 10 C 140* | P | | BENZIDINE | T | 3.40E 03 | 1.70E 00 | 6.50E 00 | 6 |
| 23 B 100* | | W | DIHYDROACRIDINE | T | 7.70E 02 | 1.60E 00 | 6.00E 00 | 5 |
| 10 C 220* | | | 2-AMINONAPHTHALENE | T | 7.70E 02 | 1.54E 00 | 5.90E 00 | 5 |

# CYCLONE DUST, HEALTH IMPACT

| OMEG NO. | | | COMPOUND NAME | TYPE | CONC E-6 G/G | DS | WDS G/S | LCCAT |
|---|---|---|---|---|---|---|---|---|
| 85 B 010 | | | THORIUM | S | 2.00E 00 | 1.53E 00 | 5.84E 00 | |
| 37 A 010 | | | BORON | D | 1.10E 02 | 1.20E 00 | 4.50E 00 | |
| 08 B 060* | | W | B-PROPIOLACTONE | T | 1.10E 03 | 1.20E 00 | 4.40E 00 | 7 |
| 23 B 240* | | | DIBENZ(A,H)ACRIDINE | T | 7.70E 02 | 1.14E 00 | 4.40E 00 | 5 |
| 08 C 060* | | W | 6-HEXANELACTAM | T | 3.40E 03 | 1.13E 00 | 4.30E 00 | 6 |
| 08 A 123* | | | STEARIC ACID | T | 3.40E 03 | 1.10E 00 | 4.20E 00 | 6 |
| 08 A 120* | | W | SATURATED LONG CHAIN ACIDS (MW:228-285) | T | 3.40E 03 | 1.10E 00 | 4.20E 00 | 6 |
| 08 A 122* | | | PALMITIC ACID | T | 3.40E 03 | 1.10E 00 | 4.20E 00 | 6 |
| 08 A 121* | | | MYRISTIC ACID | T | 3.40E 03 | 1.10E 00 | 4.20E 00 | 6 |
| 21 B 040* | P | | BENZ(A)ANTHRACENE | T | 1.40E 02 | 1.10E 00 | 4.10E 00 | 2 |
| 21 D 040* | | W | DIBENZO(A,I)PYRENE | T | 1.40E 02 | 1.10E 00 | 4.10E 00 | 2 |
| 23 B 220* | | | DIBENZ(A,J)ACRIDINE | T | 7.70E 02 | 1.04E 00 | 4.00E 00 | 5 |
| 12 B 020* | | W | N-METHYL-N-NITROSOANILINE | T | 3.40E 03 | 8.71E-01 | 3.31E 00 | 6 |
| 10 C 120* | | | 4-AMINOBIPHENYL | T | 3.40E 03 | 8.50E-01 | 3.23E 00 | 6 |
| 08 B 060* | | W | B-PROPIOLACTONE | T | 7.70E 02 | 8.10E-01 | 3.10E 00 | 5 |
| 02 A 180* | | | DIBROMODICHLOROMETHANE | T | 2.60E 03 | 6.20E-01 | 2.40E 00 | 1 |
| 10 C 080* | | | ANISIDINES | T | 7.70E 02 | 5.13E-01 | 2.00E 00 | 5 |
| 10 C 083* | | | P-ANISIDINE | T | 7.70E 02 | 5.13E-01 | 2.00E 00 | 5 |
| 13 A 100* | | W | BENZENETHIOL | T | 7.70E 02 | 5.13E-01 | 2.00E 00 | 5 |
| 10 C 082* | | | M-ANISIDINE | T | 7.70E 02 | 5.13E-01 | 2.00E 00 | 5 |
| 10 C 081* | | | O-ANISIDINE | T | 7.70E 02 | 5.13E-01 | 2.00E 00 | 5 |
| 22 C 080* | P | W | BENZO(B)FLUORANTHENE | T | 1.30E 03 | 4.81E-01 | 1.82E 00 | 3 |
| 17 B 060* | | W | 1-CHLORO-4-NITROBENZENE | T | 1.40E 03 | 4.70E-01 | 1.80E 00 | 4 |
| 17 B 040* | | W | 1-CHLORO-2-NITROBENZENE | T | 1.40E 03 | 4.70E-01 | 1.80E 00 | 4 |
| 02 A 320* | P | | HEXACHLOROETHANE | T | 1.40E 02 | 4.70E-01 | 1.80E 00 | 2 |
| 14 B 020 | | W | DIMETHYL SULFOXIDE | T | 1.10E 03 | 4.60E-01 | 1.74E 00 | 7 |
| 10 C 200* | | | 1-AMINONAPHTHALENE | T | 7.70E 02 | 4.52E-01 | 1.72E 00 | 5 |
| 15 A 160* | | W | BIPHENYL | T | 1.30E 03 | 4.33E-01 | 1.64E 00 | 3 |
| 61 A 010 | | | YTTRIUM (AS Y+3) | S | 1.30E 01 | 4.33E-01 | 1.64E 00 | |
| 02 B 140* | P | W | HEXACHLOROCYCLOPENTADIENE | T | 1.40E 02 | 4.24E-01 | 1.61E 00 | 2 |
| 21 D 060* | | | DIBENZO(A,L)PYRENE | T | 1.30E 03 | 4.10E-01 | 1.54E 00 | 3 |
| 10 C 140* | P | | BENZIDINE | T | 7.70E 02 | 3.90E-01 | 1.50E 00 | 5 |
| 12 A 020* | P | W | N-NITROSODIMETHYLAMINE | T | 7.70E 02 | 3.90E-01 | 1.50E 00 | 5 |
| 08 A 123* | | | STEARIC ACID | T | 1.10E 03 | 3.54E-01 | 1.34E 00 | 7 |

## CYCLONE DUST, HEALTH IMPACT

| DMEG NO. | | | COMPOUND NAME | TYPE | CONC E-6 G/G | DS | WDS G/S | LCCAT |
|---|---|---|---|---|---|---|---|---|
| 08 A 121* | | | MYRISTIC ACID | T | 1.10E 03 | 3.54E-01 | 1.34E 00 | 7 |
| 08 A 120* | | W | SATURATED LONG CHAIN ACIDS (MW:228-285) | T | 1.10E 03 | 3.54E-01 | 1.34E 00 | 7 |
| 08 A 122* | | | PALMITIC ACID | T | 1.10E 03 | 3.54E-01 | 1.34E 00 | 7 |
| 44 A 010 | | | GERMANIUM | S | 6.00E 00 | 3.52E-01 | 1.34E 00 | |
| 17 A 060* | | W | 4-NITROBIPHENYL | T | 1.40E 03 | 3.50E-01 | 1.33E 00 | 4 |
| 08 A 140* | | | OLEIC ACID | T | 3.40E 03 | 3.40E-01 | 1.30E 00 | 6 |
| 17 A 085* | | | 2,5-DINITROTOLUENE | T | 1.40E 03 | 3.11E-01 | 1.20E 00 | 4 |
| 17 A 083* | | | 2,3-DINITROTOLUENE | T | 1.40E 03 | 3.11E-01 | 1.20E 00 | 4 |
| 17 A 084* | P | | 2,4-DINITROTOLUENE | T | 1.40E 03 | 3.11E-01 | 1.20E 00 | 4 |
| 17 A 086* | | | 3,5-DINITROTOLUENE | T | 1.40E 03 | 3.11E-01 | 1.20E 00 | 4 |
| 17 A 082* | | | 3,4-DINITROTOLUENE | T | 1.40E 03 | 3.11E-01 | 1.20E 00 | 4 |
| 17 A 081* | P | | 2,6-DINITROTOLUENE | T | 1.40E 03 | 3.11E-01 | 1.20E 00 | 4 |
| 17 A 080* | | | DINITROTOLUENES | T | 1.40E 03 | 3.11E-01 | 1.20E 00 | 4 |
| 41 A 010 | P | | THALLIUM | S | 9.00E-01 | 3.00E-01 | 1.13E 00 | |
| 22 D 020* | P | W | INDENO(1,2,3-CD)PYRENE | T | 1.30E 03 | 2.70E-01 | 1.02E 00 | 3 |
| 21 A 180* | P | W | PHENANTHRENE | T | 1.30E 03 | 2.70E-01 | 1.02E 00 | 3 |
| 22 C 020* | P | | BENZO(K)FLUORANTHENE | T | 1.30E 03 | 2.70E-01 | 1.00E 00 | 3 |
| 23 D 020* | | W | BENZOTHIAZOLE | T | 3.40E 03 | 2.61E-01 | 9.93E-01 | 6 |
| 17 B 040* | | W | 1-CHLORO-2-NITROBENZENE | T | 7.70E 02 | 2.60E-01 | 9.80E-01 | 5 |
| 08 C 060* | | W | 6-HEXANELACTAM | T | 7.70E 02 | 2.60E-01 | 9.80E-01 | 5 |
| 17 B 060* | | W | 1-CHLORO-4-NITROBENZENE | T | 7.70E 02 | 2.60E-01 | 9.80E-01 | 5 |
| 08 A 123* | | | STEARIC ACID | T | 7.70E 02 | 2.50E-01 | 9.43E-01 | 5 |
| 08 A 120* | | W | SATURATED LONG CHAIN ACIDS (MW:228-285) | T | 7.70E 02 | 2.50E-01 | 9.43E-01 | 5 |
| 08 A 121* | | | MYRISTIC ACID | T | 7.70E 02 | 2.50E-01 | 9.43E-01 | 5 |
| 08 A 122* | | | PALMITIC ACID | T | 7.70E 02 | 2.50E-01 | 9.43E-01 | 5 |
| 23 D 040* | | | METHYL BENZOTHIAZOLE | T | 3.40E 03 | 2.42E-01 | 9.22E-01 | 6 |
| 21 B 142* | | | 5-METHYL CHRYSENE | T | 1.30E 03 | 2.40E-01 | 9.14E-01 | 3 |
| 21 B 141* | | | 4-METHYL CHRYSENE | T | 1.30E 03 | 2.40E-01 | 9.14E-01 | 3 |
| 21 B 140* | | | METHYL CHRYSENES | T | 1.30E 03 | 2.40E-01 | 9.14E-01 | 3 |
| 04 A 050* | | W | EPICHLORHYDRIN | T | 1.40E 03 | 2.33E-01 | 8.90E-01 | 4 |
| 04 A 060* | | W | 1-CHLORO-1,3-EPOXYPROPANE | T | 1.40E 03 | 2.33E-01 | 8.90E-01 | 4 |
| 04 A 040* | | W | 2-CHLORO-1,2-EPOXYPROPANE | T | 1.40E 03 | 2.33E-01 | 8.90E-01 | 4 |
| 08 D 283* | | | DI-N-BUTYL PHTHALATE | T | 3.40E 03 | 2.30E-01 | 8.61E-01 | 6 |
| 08 D 281* | | | DIMETHYL PHTHALATE | T | 3.40E 03 | 2.30E-01 | 8.61E-01 | 6 |

CYCLONE DUST, HEALTH IMPACT

| DMEG NO. | | COMPOUND NAME | TYPE | CONC E-6 G/G | DS | WDS G/S | LCCAT |
|---|---|---|---|---|---|---|---|
| 08 D 300* | P | DI-2-ETHYLHEXYL PHTHALATE | T | 3.40E 03 | 2.30E-01 | 8.61E-01 | 6 |
| 08 D 282* | | DIETHYL PHTHALATE | T | 3.40E 03 | 2.30E-01 | 8.61E-01 | 6 |
| 08 D 280* | P W | PHTHALATE ESTERS (MW:194-279) | T | 3.40E 03 | 2.30E-01 | 8.61E-01 | 6 |
| 39 A 010 | | GALLIUM | S | 3.30E 01 | 2.20E-01 | 8.40E-01 | |
| 02 B 120* | P | HEXACHLOROBUTADIENE | T | 2.60E 03 | 2.20E-01 | 8.23E-01 | 1 |
| 15 B 060* | W | 4,4'-DIPHENYLBIPHENYL | T | 1.30E 03 | 2.20E-01 | 8.23E-01 | 3 |
| 21 B 108* | | 2-ETHYL BENZO(C)PHENANTHRENE | T | 1.40E 02 | 2.10E-01 | 7.94E-01 | 2 |
| 21 B 103* | | 2-METHYL BENZO(C)PHENANTHRENE | T | 1.40E 02 | 2.10E-01 | 7.94E-01 | 2 |
| 21 B 107* | | 8-METHYL BENZO(C)PHENANTHRENE | T | 1.40E 02 | 2.10E-01 | 7.94E-01 | 2 |
| 21 B 104* | | 5-METHYL BENZO(C)PHENANTHRENE | T | 1.40E 02 | 2.10E-01 | 7.94E-01 | 2 |
| 21 B 106* | | 7-METHYL BENZO(C)PHENANTHRENE | T | 1.40E 02 | 2.10E-01 | 7.94E-01 | 2 |
| 21 B 100* | | BENZO(C)PHENANTHRENE & ALKYL DERIVATIVES | T | 1.40E 02 | 2.10E-01 | 7.94E-01 | 2 |
| 21 B 109* | | 6-ETHYL BENZO(C)PHENANTHRENE | T | 1.40E 02 | 2.10E-01 | 7.94E-01 | 2 |
| 21 B 101* | | BENZO(C)PHENANTHRENE | T | 1.40E 02 | 2.10E-01 | 7.94E-01 | 2 |
| 21 B 108* | | ISOPROPYL BENZO(C)PHENANTHRENE | T | 1.40E 02 | 2.10E-01 | 7.94E-01 | 2 |
| 21 B 10A* | | N-PROPYL BENZO(C)PHENANTHRENE | T | 1.40E 02 | 2.10E-01 | 7.94E-01 | 2 |
| 21 B 105* | | 6-METHYL BENZO(C)PHENANTHRENE | T | 1.40E 02 | 2.10E-01 | 7.94E-01 | 2 |
| 21 B 102* | | 1-METHYL BENZO(C)PHENANTHRENE | T | 1.40E 02 | 2.10E-01 | 7.94E-01 | 2 |
| 08 A 102* | | CAPRYLIC ACID | T | 3.40E 03 | 2.00E-01 | 7.60E-01 | 6 |
| 08 A 103* | | CAPRIC ACID | T | 3.40E 03 | 2.00E-01 | 7.60E-01 | 6 |
| 08 A 101* | | CAPROIC ACID | T | 3.40E 03 | 2.00E-01 | 7.60E-01 | 6 |
| 08 A 100* | | SATURATED LONG CHAIN ACIDS (MW:116-201) | T | 3.40E 03 | 2.00E-01 | 7.60E-01 | 6 |
| 08 A 104* | | LAURIC ACID | T | 3.40E 03 | 2.00E-01 | 7.60E-01 | 6 |
| 12 B 020* | W | N-METHYL-N-NITROSOANILINE | T | 7.70E 02 | 2.00E-01 | 7.50E-01 | 5 |
| 21 B 120* | P | CHRYSENE | T | 1.30E 03 | 2.00E-01 | 7.50E-01 | 3 |
| 17 A 060* | W | 4-NITROBIPHENYL | T | 7.70E 02 | 1.92E-01 | 7.31E-01 | 5 |
| 10 C 120* | | 4-AMINOBIPHENYL | T | 7.70E 02 | 1.92E-01 | 7.31E-01 | 5 |
| 10 A 060* | | ETHANOLAMINE | T | 3.40E 03 | 1.90E-01 | 7.20E-01 | 6 |
| 23 A 100* | W | CHLOROPYRIDINES | T | 3.40E 03 | 1.90E-01 | 7.20E-01 | 6 |
| 23 A 102* | | 3-CHLOROPYRIDINE | T | 3.40E 03 | 1.90E-01 | 7.20E-01 | 6 |
| 23 A 103* | | 4-CHLOROPYRIDINE | T | 3.40E 03 | 1.90E-01 | 7.20E-01 | 6 |
| 23 A 101* | | 2-CHLOROPYRIDINE | T | 3.40E 03 | 1.90E-01 | 7.20E-01 | 6 |
| 02 A 160* | P | BROMOFORM | T | 2.60E 03 | 1.73E-01 | 6.60E-01 | 1 |
| 21 C 160* | | PICENE | T | 1.30E 03 | 1.73E-01 | 6.60E-01 | 3 |

CYCLONE DUST, HEALTH IMPACT

| DMEG NO. | | COMPOUND NAME | TYPE | CONC E-6 G/G | DS | WDS G/S | LCCAT |
|---|---|---|---|---|---|---|---|
| 23 C 020* | | PYRROLE | T | 1.40E 03 | 1.72E-01 | 6.60E-01 | 4 |
| 17 A 080* | | DINITROTOLUENES | T | 7.70E 02 | 1.71E-01 | 6.50E-01 | 5 |
| 17 A 084* | P | 2,4-DINITROTOLUENE | T | 7.70E 02 | 1.71E-01 | 6.50E-01 | 5 |
| 17 A 085* | | 2,5-DINITROTOLUENE | T | 7.70E 02 | 1.71E-01 | 6.50E-01 | 5 |
| 17 A 083* | | 2,3-DINITROTOLUENE | T | 7.70E 02 | 1.71E-01 | 6.50E-01 | 5 |
| 17 A 081* | P | 2,6-DINITROTOLUENE | T | 7.70E 02 | 1.71E-01 | 6.50E-01 | 5 |
| 17 A 086* | | 3,5-DINITROTOLUENE | T | 7.70E 02 | 1.71E-01 | 6.50E-01 | 5 |
| 17 A 082* | | 3,4-DINITROTOLUENE | T | 1.40E 03 | 1.60E-01 | 5.91E-01 | 4 |
| 09 A 120* | W | TETRAMETHYLSUCCINONITRILE | T | 1.30E 03 | 1.42E-01 | 5.42E-01 | 3 |
| 21 C 120* | | BENZO(E)PYRENE | T | 7.70E 02 | 1.30E-01 | 4.90E-01 | 5 |
| 04 A 050* | W | EPICHLORHYDRIN | T | 7.70E 02 | 1.30E-01 | 4.90E-01 | 5 |
| 04 A 040* | W | 2-CHLORO-1,2-EPOXYPROPANE | T | 7.70E 02 | 1.30E-01 | 4.90E-01 | 5 |
| 04 A 060* | W | 1-CHLORO-1,3-EPOXYPROPANE | T | 1.40E 03 | 1.30E-01 | 4.83E-01 | 4 |
| 03 B 020* | W | 1,4-DIOXANE | T | 1.40E 03 | 1.30E-01 | 4.83E-01 | 4 |
| 03 B 040* | W | 1,3-DIOXANE | T | 1.30E 03 | 1.20E-01 | 4.50E-01 | 3 |
| 21 D 020* | | DIBENZO(A,H)PYRENE | T | 3.40E 03 | 1.13E-01 | 4.30E-01 | 6 |
| 06 A 020* | W | ETHYLENE GLYCOL | T | 1.10E 03 | 1.10E-01 | 4.20E-01 | 7 |
| 08 A 140* | | OLEIC ACID | T | 3.40E 03 | 1.10E-01 | 4.03E-01 | 6 |
| 23 B 200* | | BENZ(C)ACRIDINE | T | 7.70E 02 | 9.50E-02 | 3.61E-01 | 5 |
| 23 C 020* | | PYRROLE | T | 3.40E 03 | 9.44E-02 | 3.60E-01 | 6 |
| 07 B 100* | W | CAMPHOR | T | 1.40E 03 | 9.33E-02 | 3.54E-01 | 4 |
| 17 A 020* | P | NITROBENZENE | T | 1.30E 03 | 8.70E-02 | 3.30E-01 | 3 |
| 16 B 020 | W | A-CHLOROTOLUENE | T | 7.70E 02 | 8.60E-02 | 3.30E-01 | 5 |
| 09 A 120* | W | TETRAMETHYLSUCCINONITRILE | T | 3.40E 03 | 8.10E-02 | 3.10E-01 | 6 |
| 08 D 080* | | METHYL METHACRYLATE | T | 1.40E 03 | 7.80E-02 | 3.00E-01 | 4 |
| 23 A 101* | | 2-CHLOROPYRIDINE | T | 1.40E 03 | 7.80E-02 | 3.00E-01 | 4 |
| 23 A 100* | W | CHLOROPYRIDINES | T | 1.40E 03 | 7.80E-02 | 3.00E-01 | 4 |
| 23 C 180* | | DIBENZO(A,G)CARBAZOLE | T | 1.40E 03 | 7.80E-02 | 3.00E-01 | 4 |
| 23 A 103* | | 4-CHLOROPYRIDINE | T | 1.40E 03 | 7.80E-02 | 3.00E-01 | 4 |
| 23 A 102* | | 3-CHLOROPYRIDINE | T | 7.70E 02 | 7.70E-02 | 2.92E-01 | 5 |
| 08 A 140* | | OLEIC ACID | T | 2.60E 03 | 7.64E-02 | 2.90E-01 | 1 |
| 02 B 103 | | CIS-1,3-DICHLOROPROPENE | T | 2.60E 03 | 7.64E-02 | 2.90E-01 | 1 |
| 02 B 104 | | TRANS-1,3-DICHLOROPROPENE | T | 2.60E 03 | 7.64E-02 | 2.90E-01 | 1 |
| 02 B 100* | P | DICHLOROPROPENES | | | | | |

CYCLONE DUST, HEALTH IMPACT

| DMEG NO. | | COMPOUND NAME | TYPE | CONC E-6 G/G | DS | WDS G/S | LCCAT |
|---|---|---|---|---|---|---|---|
| 23 A 020* | | PYRIDINE | T | 3.40E 03 | 7.60E-02 | 2.90E-01 | 6 |
| 23 B 022* | | ISOQUINOLINE | T | 3.40E 03 | 7.23E-02 | 2.74E-01 | 6 |
| 23 B 020* | | QUINOLINES | T | 3.40E 03 | 7.23E-02 | 2.74E-01 | 6 |
| 23 B 021* | | QUINOLINE | T | 3.40E 03 | 7.23E-02 | 2.74E-01 | 6 |
| 03 B 040* | W | 1,3-DIOXANE | T | 7.70E 02 | 7.00E-02 | 2.70E-01 | 5 |
| 03 B 020* | W | 1,4-DIOXANE | T | 7.70E 02 | 7.00E-02 | 2.70E-01 | 5 |
| 55 A 010 | | TELLURIUM | S | 2.00E-01 | 6.70E-02 | 2.53E-01 | |
| 22 C 040 | | BENZO(J)FLUORANTHENE | T | 1.30E 03 | 6.50E-02 | 2.50E-01 | 3 |
| 08 A 100* | | SATURATED LONG CHAIN ACIDS (MW:116-201) | T | 1.10E 03 | 6.50E-02 | 2.50E-01 | 7 |
| 08 A 103* | | CAPRIC ACID | T | 1.10E 03 | 6.50E-02 | 2.50E-01 | 7 |
| 08 A 102* | | CAPRYLIC ACID | T | 1.10E 03 | 6.50E-02 | 2.50E-01 | 7 |
| 08 A 104* | | LAURIC ACID | T | 1.10E 03 | 6.50E-02 | 2.50E-01 | 7 |
| 08 A 101* | | CAPROIC ACID | T | 1.10E 03 | 6.50E-02 | 2.50E-01 | 7 |
| 23 A 142* | | 2,4-DIMETHYLPYRIDINE | T | 3.40E 03 | 6.30E-02 | 2.40E-01 | 6 |
| 23 A 146* | | 2,3,4,6-TETRAMETHYL PYRIDINE | T | 3.40E 03 | 6.30E-02 | 2.40E-01 | 6 |
| 23 A 145* | | 3,4-DIMETHYLPYRIDINE | T | 3.40E 03 | 6.30E-02 | 2.40E-01 | 6 |
| 23 A 140* | | DISUBSTITUTED POLYSUBSTITUTED ALKYL PYRIDINES | T | 3.40E 03 | 6.30E-02 | 2.40E-01 | 6 |
| 05 B 100* | W | 1-PHENYLETHANOL | T | 3.40E 03 | 6.30E-02 | 2.40E-01 | 6 |
| 23 A 144* | | 2,6-DIMETHYLPYRIDINE | T | 3.40E 03 | 6.30E-02 | 2.40E-01 | 6 |
| 23 A 141* | | 2,3-DIMETHYLPYRIDINE | T | 3.40E 03 | 6.30E-02 | 2.40E-01 | 6 |
| 23 A 143* | | 2,5-DIMETHYLPYRIDINE | T | 3.40E 03 | 6.30E-02 | 2.40E-01 | 6 |
| 16 B 043 | | 1,4-BIS(CHLOROMETHYL)BENZENE | T | 1.30E 03 | 6.20E-02 | 2.40E-01 | 3 |
| 16 B 040 | | BIS(CHLOROMETHYL)BENZENES | T | 1.30E 03 | 6.20E-02 | 2.40E-01 | 3 |
| 16 B 042 | | 1,3-BIS(CHLOROMETHYL)BENZENE | T | 1.30E 03 | 6.20E-02 | 2.40E-01 | 3 |
| 16 B 041 | | 1,2-BIS(CHLOROMETHYBENZENE | T | 1.30E 03 | 6.20E-02 | 2.40E-01 | 3 |
| 10 C 020* | | ANILINE | T | 3.40E 03 | 6.00E-02 | 2.30E-01 | 6 |
| 23 D 020* | W | BENZOTHIAZOLE | T | 7.70E 02 | 5.92E-02 | 2.30E-01 | 5 |
| 23 D 040* | | METHYL BENZOTHIAZOLE | T | 7.70E 02 | 5.50E-02 | 2.10E-01 | 5 |
| 22 C 080* P | W | BENZO(B)FLUORANTHENE | T | 1.40E 02 | 5.20E-02 | 2.00E-01 | 2 |
| 08 D 283* | | DI-N-BUTYL PHTHALATE | T | 7.70E 02 | 5.13E-02 | 2.00E-01 | 5 |
| 08 D 280* P | W | PHTHALATE ESTERS (MW:194-279) | T | 7.70E 02 | 5.13E-02 | 2.00E-01 | 5 |
| 08 D 300* P | | DI-2-ETHYLHEXYL PHTHALATE | T | 7.70E 02 | 5.13E-02 | 2.00E-01 | 5 |
| 08 D 282* | | DIETHYL PHTHALATE | T | 7.70E 02 | 5.13E-02 | 2.00E-01 | 5 |
| 17 A 020* P | | NITROBENZENE | T | 7.70E 02 | 5.13E-02 | 2.00E-01 | 5 |

## CYCLONE DUST, HEALTH IMPACT

| DMEG NO. | | COMPOUND NAME | TYPE | CONC E-6 G/G | DS | WDS G/S | LCCAT |
|---|---|---|---|---|---|---|---|
| 08 D 281* | | DIMETHYL PHTHALATE | T | 7.70E 02 | 5.13E-02 | 2.00E-01 | 5 |
| 08 A 080* | | VALERIC ACID | T | 3.40E 03 | 5.00E-02 | 1.90E-01 | 6 |
| 23 B 260* | | DIBENZ(C,H)ACRIDINE | T | 3.40E 03 | 4.92E-02 | 1.90E-01 | 6 |
| 15 B 162 | | M-TERPHENYL | T | 1.30E 03 | 4.81E-02 | 1.82E-01 | 3 |
| 15 B 160 | | TERPHENYLS | T | 1.30E 03 | 4.81E-02 | 1.82E-01 | 3 |
| 15 B 161 | | O-TERPHENYL | T | 1.30E 03 | 4.81E-02 | 1.82E-01 | 3 |
| 15 B 163 | | P-TERPHENYL | T | 1.30E 03 | 4.81E-02 | 1.82E-01 | 3 |
| 12 A 060* | P | N-NITROSODIPROPYLAMINE | T | 3.40E 03 | 4.72E-02 | 1.80E-01 | 6 |
| 15 A 160* | W | BIPHENYL | T | 1.40E 02 | 4.70E-02 | 1.80E-01 | 2 |
| 10 C 062* | | 2,4-XYLIDINE | T | 3.40E 03 | 4.53E-02 | 1.72E-01 | 6 |
| 07 B 080* | P | ISOPHORONE | T | 3.40E 03 | 4.53E-02 | 1.72E-01 | 6 |
| 10 A 080* | | 1,2-DIAMINOETHANE | T | 3.40E 03 | 4.53E-02 | 1.72E-01 | 6 |
| 10 C 066* | | 3,5-XYLIDINE | T | 3.40E 03 | 4.53E-02 | 1.72E-01 | 6 |
| 10 C 060* | | DIMETHYLANILINES | T | 3.40E 03 | 4.53E-02 | 1.72E-01 | 6 |
| 10 C 064* | | 2,6-XYLIDINE | T | 3.40E 03 | 4.53E-02 | 1.72E-01 | 6 |
| 10 C 063* | | 2,5-XYLIDINE | T | 3.40E 03 | 4.53E-02 | 1.72E-01 | 6 |
| 10 D 020* | W | N,N-DIMETHYLANILINE | T | 3.40E 03 | 4.53E-02 | 1.72E-01 | 6 |
| 10 C 065* | | 3,4-XYLIDINE | T | 3.40E 03 | 4.53E-02 | 1.72E-01 | 6 |
| 10 C 061* | | 2,3-XYLIDINE | T | 3.40E 03 | 4.53E-02 | 1.72E-01 | 6 |
| 08 A 100* | | SATURATED LONG CHAIN ACIDS (MW:116-201) | T | 7.70E 02 | 4.52E-02 | 1.72E-01 | 5 |
| 08 A 102* | | CAPRYLIC ACID | T | 7.70E 02 | 4.52E-02 | 1.72E-01 | 5 |
| 08 A 103* | | CAPRIC ACID | T | 7.70E 02 | 4.52E-02 | 1.72E-01 | 5 |
| 08 A 101* | | CAPROIC ACID | T | 7.70E 02 | 4.52E-02 | 1.72E-01 | 5 |
| 08 A 104* | | LAURIC ACID | T | 7.70E 02 | 4.52E-02 | 1.72E-01 | 5 |
| 08 A 040* | | ACETIC ACID | T | 3.40E 03 | 4.50E-02 | 1.70E-01 | 6 |
| 04 B 100* | | 2,2'-DICHLORODIISOPROPYL ETHER | T | 1.40E 03 | 4.40E-02 | 1.70E-01 | 4 |
| 21 D 060* | | DIBENZO(A,L)PYRENE | T | 1.40E 02 | 4.40E-02 | 1.70E-01 | 2 |
| 21 C 060 | | DIBENZ(A,C)ANTHRACENE | T | 1.30E 03 | 4.33E-02 | 1.64E-01 | 3 |
| 23 A 102* | | 3-CHLOROPYRIDINE | T | 7.70E 02 | 4.30E-02 | 1.62E-01 | 5 |
| 10 A 060* | | ETHANOLAMINE | T | 7.70E 02 | 4.30E-02 | 1.62E-01 | 5 |
| 23 A 101* | | 2-CHLOROPYRIDINE | T | 7.70E 02 | 4.30E-02 | 1.62E-01 | 5 |
| 23 A 100* | W | CHLOROPYRIDINES | T | 7.70E 02 | 4.30E-02 | 1.62E-01 | 5 |
| 23 A 103* | | 4-CHLOROPYRIDINE | T | 7.70E 02 | 4.30E-02 | 1.62E-01 | 5 |
| 23 C 180* | | DIBENZO(A,G)CARBAZOLE | T | 7.70E 02 | 4.30E-02 | 1.62E-01 | 5 |

CYCLONE DUST, HEALTH IMPACT

| DMEG NO. | | COMPOUND NAME | TYPE | CONC E-6 G/G | DS | WDS G/S | LCCAT |
|---|---|---|---|---|---|---|---|
| 23 C 040* | | INDOLE | T | 1.40E 03 | 4.24E-02 | 1.61E-01 | 4 |
| 04 A 140* | P | 2-CHLOROETHYL VINYL ETHER | T | 1.40E 03 | 4.11E-02 | 1.60E-01 | 4 |
| 23 C 140* | | DIBENZO(A,I)CARBAZOLE | T | 1.40E 03 | 3.90E-02 | 1.50E-01 | 4 |
| 08 C 020 | | FORMAMIDE | T | 3.40E 03 | 3.80E-02 | 1.43E-01 | 6 |
| 16 A 160* | P | POLYCHLORINATED BENZENES | T | 1.30E 03 | 3.71E-02 | 1.41E-01 | 3 |
| 16 A 162 | | HEXACHLOROBENZENE | T | 1.30E 03 | 3.61E-02 | 1.40E-01 | 3 |
| 16 A 161 | | 1,2,4-TRICHLOROBENZENE | T | 1.30E 03 | 3.61E-02 | 1.40E-01 | 3 |
| 08 A 060* | | MALEIC ACID | T | 3.40E 03 | 3.54E-02 | 1.34E-01 | 6 |
| 02 A 180* | | DIBROMODICHLOROMETHANE | T | 1.40E 02 | 3.33E-02 | 1.30E-01 | 2 |
| 23 A 020* | | PYRIDINE | T | 1.40E 03 | 3.11E-02 | 1.20E-01 | 4 |
| 10 A 120 | | PROPANOLAMINES | T | 3.40E 03 | 3.10E-02 | 1.20E-01 | 6 |
| 12 A 080 | | N-NITROSODIISOPROPYLAMINE | T | 3.40E 03 | 3.10E-02 | 1.20E-01 | 6 |
| 08 B 080 | | Y-BUTYROLACTONE | T | 3.40E 03 | 3.10E-02 | 1.20E-01 | 6 |
| 10 A 121 | | 2-AMINO-1-PROPANOL | T | 3.40E 03 | 3.10E-02 | 1.20E-01 | 6 |
| 23 A 041* | | 2-METHYLPYRIDINE | T | 3.40E 03 | 3.10E-02 | 1.20E-01 | 6 |
| 10 A 122 | | 3-AMINO-1-PROPANOL | T | 3.40E 03 | 3.10E-02 | 1.20E-01 | 6 |
| 10 A 123 | | 1-AMINO-2-PROPANOL | T | 3.40E 03 | 3.10E-02 | 1.20E-01 | 6 |
| 23 A 043* | | 4-METHYLPYRIDINE | T | 3.40E 03 | 3.10E-02 | 1.20E-01 | 6 |
| 23 A 042* | | 3-METHYLPYRIDINE | T | 3.40E 03 | 3.10E-02 | 1.20E-01 | 6 |
| 21 A 180* | P W | PHENANTHRENE | T | 1.40E 02 | 2.91E-02 | 1.10E-01 | 2 |
| 22 D 020* | P W | INDENO(1,2,3-CD)PYRENE | T | 1.40E 02 | 2.91E-02 | 1.10E-01 | 2 |
| 01 B 220 | W | DICYCLOPENTADIENE | T | 2.60E 03 | 2.90E-02 | 1.10E-01 | 1 |
| 22 C 020* | P | BENZO(K)FLUORANTHENE | T | 1.40E 02 | 2.90E-02 | 1.10E-01 | 2 |
| 10 A 160 | | CYCLOHEXYLAMINE | T | 3.40E 03 | 2.83E-02 | 1.10E-01 | 6 |
| 07 B 120 | | ACETOPHENONE | T | 3.40E 03 | 2.83E-02 | 1.10E-01 | 6 |
| 08 B 041 | | 2-HYDROXYBENZOIC ACID | T | 3.40E 03 | 2.83E-02 | 1.10E-01 | 6 |
| 21 C 040 | | BENZO(G)CHRYSENE | T | 1.30E 03 | 2.70E-02 | 1.02E-01 | 3 |
| 50 A 010 | P | ANTIMONY | D | < 4.00E-01 | < 2.70E-02 | < 1.01E-01 | |
| 23 A 141* | | 2,3-DIMETHYLPYRIDINE | T | 1.40E 03 | 2.60E-02 | 9.90E-02 | 4 |
| 23 A 146* | | 2,3,4,6-TETRAMETHYL PYRIDINE | T | 1.40E 03 | 2.60E-02 | 9.90E-02 | 4 |
| 23 A 143* | | 2,5-DIMETHYLPYRIDINE | T | 1.40E 03 | 2.60E-02 | 9.90E-02 | 4 |
| 23 A 142* | | 2,4-DIMETHYLPYRIDINE | T | 1.40E 03 | 2.60E-02 | 9.90E-02 | 4 |
| 21 B 140* | | METHYL CHRYSENES | T | 1.40E 02 | 2.60E-02 | 9.90E-02 | 2 |
| 21 B 142* | | 5-METHYL CHRYSENE | T | 1.40E 02 | 2.60E-02 | 9.90E-02 | 2 |

CYCLONE DUST, HEALTH IMPACT

| DMEG NO. | | COMPOUND NAME | TYPE | CONC E-6 G/G | DS | WDS G/S | LCCAT |
|---|---|---|---|---|---|---|---|
| 23 A 144* | | 2,6-DIMETHYLPYRIDINE | T | 1.40E 03 | 2.60E-02 | 9.90E-02 | 4 |
| 23 A 145* | | 3,4-DIMETHYLPYRIDINE | T | 1.40E 03 | 2.60E-02 | 9.90E-02 | 4 |
| 21 B 141* | | 4-METHYL CHRYSENE | T | 1.40E 02 | 2.60E-02 | 9.90E-02 | 2 |
| 23 A 140* | | DISUBSTITUTED POLYSUBSTITUTED ALKYL PYRIDINES | T | 1.40E 03 | 2.60E-02 | 9.90E-02 | 4 |
| 06 A 020* | W | ETHYLENE GLYCOL | T | 7.70E 02 | 2.60E-02 | 9.80E-02 | 5 |
| 51 A 010 | | BISMUTH | S | 3.00E-01 | 2.50E-02 | 9.50E-02 | |
| 23 C 120* | | BENZO(A)CARBAZOLE | T | 1.40E 03 | 2.50E-02 | 9.33E-02 | 4 |
| 05 C 040 | W | T-PENTANOL | T | 3.40E 03 | 2.42E-02 | 9.22E-02 | 6 |
| 04 B 100* | | 2,2'-DICHLORODIISOPROPYL ETHER | T | 7.70E 02 | 2.40E-02 | 9.14E-02 | 5 |
| 23 B 200* | | BENZ(C)ACRIDINE | T | 7.70E 02 | 2.40E-02 | 9.14E-02 | 5 |
| 15 B 060* | W | 4,4'-DIPHENYLBIPHENYL | T | 1.40E 02 | 2.33E-02 | 8.90E-02 | 2 |
| 23 C 040* | | INDOLE | T | 7.70E 02 | 2.33E-02 | 8.90E-02 | 5 |
| 70 A 010 | | TUNGSTEN | S | < 7.00E-01 | < 2.33E-02 | < 8.90E-02 | |
| 04 A 140* | P | 2-CHLOROETHYL VINYL ETHER | T | 7.70E 02 | 2.30E-02 | 8.60E-02 | 5 |
| 57 A 010 | | CHLORINE (AS CL-) | D | 5.70E 01 | 2.20E-02 | 8.33E-02 | |
| 23 C 140* | | DIBENZO(A,I)CARBAZOLE | T | 7.70E 02 | 2.13E-02 | 8.12E-02 | 5 |
| 07 B 100* | W | CAMPHOR | T | 7.70E 02 | 2.13E-02 | 8.12E-02 | 5 |
| 21 B 120* | P | CHRYSENE | T | 1.40E 02 | 2.12E-02 | 8.10E-02 | 2 |
| 09 A 100* | | 1,3-DICYANO-1-HYDROXYBUTANE | T | 1.40E 03 | 2.12E-02 | 8.10E-02 | 4 |
| 09 A 080* | | BUTYRONITRILE | T | 1.40E 03 | 2.12E-02 | 8.10E-02 | 4 |
| 23 C 102* | | 9-METHYLCARBAZOLE | T | 1.40E 03 | 2.10E-02 | 7.82E-02 | 4 |
| 23 C 101* | | 3-METHYLCARBAZOLE | T | 1.40E 03 | 2.10E-02 | 7.82E-02 | 4 |
| 23 C 100* | | METHYLCARBAZOLES | T | 1.40E 03 | 2.10E-02 | 7.82E-02 | 4 |
| 23 C 080* | | CARBAZOLE | T | 1.40E 03 | 2.10E-02 | 7.82E-02 | 4 |
| 23 B 061 | | 2,3-DIMETHYLQUINOLINE | T | 3.40E 03 | 2.00E-02 | 7.60E-02 | 6 |
| 23 B 065 | | 6,8-DIMETHYLQUINOLINE | T | 3.40E 03 | 2.00E-02 | 7.60E-02 | 6 |
| 23 B 040 | | 2-METHYLQUINOLINE | T | 3.40E 03 | 2.00E-02 | 7.60E-02 | 6 |
| 23 B 067 | | 1,5-DIMETHYLISOQUINOLINE | T | 3.40E 03 | 2.00E-02 | 7.60E-02 | 6 |
| 23 B 060 | | DIMETHYLQUINOLINES | T | 3.40E 03 | 2.00E-02 | 7.60E-02 | 6 |
| 23 B 064 | | 3,4-DIMETHYLQUINOLINE | T | 3.40E 03 | 2.00E-02 | 7.60E-02 | 6 |
| 23 B 063 | | 2,8-DIMETHYLQUINOLINE | T | 3.40E 03 | 2.00E-02 | 7.60E-02 | 6 |
| 23 B 062 | | 2,6-DIMETHYLQUINOLINE | T | 3.40E 03 | 2.00E-02 | 7.60E-02 | 6 |
| 23 B 066 | | 1,3-DIMETHYLISOQUINOLINE | T | 3.40E 03 | 2.00E-02 | 7.60E-02 | 6 |
| 25 A 040* | | METHYLTHIOPHENES | T | 1.40E 03 | 2.00E-02 | 7.60E-02 | 4 |

# CYCLONE DUST, HEALTH IMPACT

| DMEG NO. | | COMPOUND NAME | TYPE | CONC E-6 G/G | DS | WDS G/S | LCCAT |
|---|---|---|---|---|---|---|---|
| 05 A 140 | W | BENZYL ALCOHOL | T | 3.40E 03 | 2.00E-02 | 7.60E-02 | 6 |
| 25 B 040* | W | BENZO(B)THIOPHENE | T | 1.40E 03 | 2.00E-02 | 7.60E-02 | 4 |
| 25 A 042* | | 3-METHYLTHIOPHENE | T | 1.40E 03 | 2.00E-02 | 7.60E-02 | 4 |
| 25 A 041* | | 2-METHYLTHIOPHENE | T | 1.40E 03 | 2.00E-02 | 7.60E-02 | 4 |
| 08 D 160 | | METHYL BENZOATE | T | 3.40E 03 | 1.90E-02 | 7.20E-02 | 6 |
| 21 C 160* | | PICENE | T | 1.40E 02 | 1.90E-02 | 7.10E-02 | 2 |
| 02 A 140* | P | DIBROMOCHLOROMETHANE | T | 2.60E 03 | 1.90E-02 | 7.10E-02 | 1 |
| 08 D 080* | | METHYL METHACRYLATE | T | 7.70E 02 | 1.83E-02 | 7.00E-02 | 5 |
| 25 A 061 | | 2,3-DIMETHYLTHIOPHENE | T | 1.40E 03 | 1.81E-02 | 6.90E-02 | 4 |
| 25 A 064 | | 3,4-DIMETHYLTHIOPHENE | T | 1.40E 03 | 1.81E-02 | 6.90E-02 | 4 |
| 25 A 060 | | DIMETHYLTHIOPHENES | T | 1.40E 03 | 1.81E-02 | 6.90E-02 | 4 |
| 25 A 062 | | 2,4-DIMETHYLTHIOPHENE | T | 1.40E 03 | 1.81E-02 | 6.90E-02 | 4 |
| 25 A 063 | | 2,5-DIMETHYLTHIOPHENE | T | 1.40E 03 | 1.81E-02 | 6.90E-02 | 4 |
| 04 A 200 | | 4-BROMOPHENYL PHENYL ETHER | T | 1.40E 03 | 1.72E-02 | 6.60E-02 | 4 |
| 04 A 180* | P | CHLOROPHENYL PHENYL ETHER | T | 1.40E 03 | 1.72E-02 | 6.60E-02 | 4 |
| 23 A 020* | | PYRIDINE | T | 7.70E 02 | 1.71E-02 | 6.50E-02 | 5 |
| 23 B 021* | | QUINOLINE | T | 7.70E 02 | 1.63E-02 | 6.22E-02 | 5 |
| 23 B 022* | | ISOQUINOLINE | T | 7.70E 02 | 1.63E-02 | 6.22E-02 | 5 |
| 23 B 020* | | QUINOLINES | T | 7.70E 02 | 1.63E-02 | 6.22E-02 | 5 |
| 23 A 081 | | 2-PHENYLPYRIDINE | T | 3.40E 03 | 1.61E-02 | 6.20E-02 | 6 |
| 23 A 080 | | PHENYLPYRIDINES | T | 3.40E 03 | 1.61E-02 | 6.20E-02 | 6 |
| 10 B 100 | | MORPHOLINE | T | 3.40E 03 | 1.61E-02 | 6.20E-02 | 6 |
| 23 A 120 | | COLLIDINES | T | 3.40E 03 | 1.61E-02 | 6.20E-02 | 6 |
| 23 A 122 | | 2,4,6-COLLIDINE | T | 3.40E 03 | 1.61E-02 | 6.20E-02 | 6 |
| 23 A 121 | | 5-ETHYL-2-METHYLPYRIDINE | T | 3.40E 03 | 1.61E-02 | 6.20E-02 | 6 |
| 23 A 083 | | 4-PHENYLPYRIDINE | T | 3.40E 03 | 1.61E-02 | 6.20E-02 | 6 |
| 23 A 064 | | 4-N-PROPYLPYRIDINE | T | 3.40E 03 | 1.61E-02 | 6.20E-02 | 6 |
| 23 A 060 | | MONOSUBSTITUTED ALKYL PYRIDINES | T | 3.40E 03 | 1.61E-02 | 6.20E-02 | 6 |
| 23 A 062 | | 3-ETHYLPYRIDINE | T | 3.40E 03 | 1.61E-02 | 6.20E-02 | 6 |
| 23 A 061 | | 2-ETHYLPYRIDINE | T | 3.40E 03 | 1.61E-02 | 6.20E-02 | 6 |
| 23 A 063 | | 4-ETHYLPYRIDINE | T | 3.40E 03 | 1.61E-02 | 6.20E-02 | 6 |
| 23 A 082 | | 3-PHENYLPYRIDINE | T | 3.40E 03 | 1.61E-02 | 6.20E-02 | 6 |
| 08 A 080* | | VALERIC ACID | T | 1.10E 03 | 1.61E-02 | 6.14E-02 | 7 |
| 25 A 081 | | 2,3,5-TRIMETHYLTHIOPHENE | T | 1.40E 03 | 1.60E-02 | 6.11E-02 | 4 |

# CYCLONE DUST, HEALTH IMPACT

| DMEG NO. | | COMPOUND NAME | TYPE | CONC E-6 G/G | DS | WDS G/S | LCCAT |
|---|---|---|---|---|---|---|---|
| 25 A 080 | | TRIMETHYL AND TETRAMETHYL THIOPHENES | T | 1.40E 03 | 1.60E-02 | 6.11E-02 | 4 |
| 04 B 080 | | 2,2'-DICHLORODIETHYL ETHER | T | 1.40E 03 | 1.60E-02 | 5.91E-02 | 4 |
| 17 A 043 | | 4-NITROTOLUENE | T | 1.40E 03 | 1.60E-02 | 5.91E-02 | 4 |
| 17 A 041 | | 2-NITROTOLUENE | T | 1.40E 03 | 1.60E-02 | 5.91E-02 | 4 |
| 17 A 042 | | 3-NITROTOLUENE | T | 1.40E 03 | 1.60E-02 | 5.91E-02 | 4 |
| 17 A 040 | | NITROTOLUENES | T | 1.40E 03 | 1.60E-02 | 5.91E-02 | 4 |
| 04 B 040* | P | 1,1'-DICHLORODIETHYL ETHER | T | 3.40E 03 | 1.54E-02 | 5.90E-02 | 6 |
| 07 B 180 | | CARVONES | T | 3.40E 03 | 1.54E-02 | 5.90E-02 | 6 |
| 07 B 182 | | DIHYDRO-(D OR L)CARVONE | T | 3.40E 03 | 1.54E-02 | 5.90E-02 | 6 |
| 07 B 181 | | CARVONE(D OR L) | T | 3.40E 03 | 1.54E-02 | 5.90E-02 | 6 |
| 08 D 200 | | DIETHYL ADIPATE | T | 1.40E 02 | 1.53E-02 | 5.84E-02 | 2 |
| 21 C 120* | | BENZO(E)PYRENE | T | 2.60E 03 | 1.52E-02 | 5.81E-02 | 1 |
| 02 A 361 | | 1-BROMOBUTANE | T | 2.60E 03 | 1.52E-02 | 5.81E-02 | 1 |
| 02 A 360 | | BROMOBUTANES | T | 1.10E 03 | 1.44E-02 | 5.50E-02 | 7 |
| 08 A 040* | | ACETIC ACID | T | 1.40E 03 | 1.42E-02 | 5.42E-02 | 4 |
| 09 B 041 | | A-NAPHTHONITRILES | T | 1.40E 03 | 1.42E-02 | 5.42E-02 | 4 |
| 09 B 020 | W | BENZONITRILE | T | 1.40E 03 | 1.42E-02 | 5.42E-02 | 4 |
| 09 B 040 | W | NAPHTHONITRILES | T | 1.40E 03 | 1.42E-02 | 5.42E-02 | 4 |
| 09 B 042 | | B-NAPHTHONITRILES | T | 7.70E 02 | 1.42E-02 | 5.41E-02 | 5 |
| 05 B 100* | W | 1-PHENYLETHANOL | T | 7.70E 02 | 1.42E-02 | 5.41E-02 | 5 |
| 23 A 143* | | 2,5-DIMETHYLPYRIDINE | T | 7.70E 02 | 1.42E-02 | 5.41E-02 | 5 |
| 23 A 140* | | DISUBSTITUTED POLYSUBSTITUTED ALKYL PYRIDINES | T | 7.70E 02 | 1.42E-02 | 5.41E-02 | 5 |
| 23 A 144* | | 2,6-DIMETHYLPYRIDINE | T | 7.70E 02 | 1.42E-02 | 5.41E-02 | 5 |
| 23 A 142* | | 2,4-DIMETHYLPYRIDINE | T | 7.70E 02 | 1.42E-02 | 5.41E-02 | 5 |
| 23 A 145* | | 3,4-DIMETHYLPYRIDINE | T | 7.70E 02 | 1.42E-02 | 5.41E-02 | 5 |
| 23 A 141* | | 2,3-DIMETHYLPYRIDINE | T | 7.70E 02 | 1.42E-02 | 5.41E-02 | 5 |
| 23 A 146* | | 2,3,4,6-TETRAMETHYL PYRIDINE | T | 3.40E 03 | 1.41E-02 | 5.40E-02 | 6 |
| 05 A 160 | | PHENETHYL ALCOHOL | T | 3.40E 03 | 1.41E-02 | 5.40E-02 | 6 |
| 12 A 100 | | N-NITROSODIPENTYLAMINE | S | 1.50E 01 | 1.40E-02 | 5.20E-02 | |
| 84 B 010 | | CERIUM | T | 7.70E 02 | 1.40E-02 | 5.13E-02 | 5 |
| 10 C 020* | | ANILINE | T | 7.70E 02 | 1.40E-02 | 5.13E-02 | 5 |
| 23 C 120* | | BENZO(A)CARBAZOLE | S | 2.00E 00 | 1.33E-02 | 5.10E-02 | |
| 69 A 010 | | MOLYBDENUM | T | 1.40E 02 | 1.30E-02 | 4.83E-02 | 2 |
| 21 D 020* | | DIBENZO(A,H)PYRENE | | | | | |

CYCLONE DUST, HEALTH IMPACT

| DMEG NO. | | COMPOUND NAME | TYPE | CONC E-6 G/G | DS | WDS G/S | LCCAT |
|---|---|---|---|---|---|---|---|
| 23 A 042* | | 3-METHYLPYRIDINE | T | 1.40E 03 | 1.30E-02 | 4.83E-02 | 4 |
| 23 A 043* | | 4-METHYLPYRIDINE | T | 1.40E 03 | 1.30E-02 | 4.83E-02 | 4 |
| 23 A 041* | | 2-METHYLPYRIDINE | T | 1.40E 03 | 1.30E-02 | 4.83E-02 | 4 |
| 23 B 160 | | BENZO(H)QUINOLINE | T | 3.40E 03 | 1.30E-02 | 4.80E-02 | 6 |
| 23 B 140 | | BENZO(F)QUINOLINE | T | 3.40E 03 | 1.30E-02 | 4.80E-02 | 6 |
| 23 B 120 | | PHENANTHRIDINE | T | 3.40E 03 | 1.30E-02 | 4.80E-02 | 6 |
| 05 B 120 | | BORNEOL | T | 3.40E 03 | 1.30E-02 | 4.80E-02 | 6 |
| 13 B 080 | | METHYL DISULFIDE | T | 3.40E 03 | 1.30E-02 | 4.80E-02 | 6 |
| 23 B 080 | | ACRIDINE | T | 3.40E 03 | 1.30E-02 | 4.80E-02 | 6 |
| 13 B 060 | | DIPHENYL SULFIDE | T | 3.40E 03 | 1.20E-02 | 4.50E-02 | 6 |
| 09 A 100* | | 1,3-DICYANO-1-HYDROXYBUTANE | T | 7.70E 02 | 1.20E-02 | 4.43E-02 | 5 |
| 02 B 120* | P | HEXACHLOROBUTADIENE | T | 1.40E 02 | 1.20E-02 | 4.43E-02 | 2 |
| 09 A 080* | | BUTYRONITRILE | T | 7.70E 02 | 1.20E-02 | 4.43E-02 | 5 |
| 08 A 060* | | MALEIC ACID | T | 1.10E 03 | 1.14E-02 | 4.40E-02 | 7 |
| 23 C 100* | | METHYLCARBAZOLES | T | 7.70E 02 | 1.13E-02 | 4.30E-02 | 5 |
| 23 C 080* | | CARBAZOLE | T | 7.70E 02 | 1.13E-02 | 4.30E-02 | 5 |
| 23 C 101* | | 3-METHYLCARBAZOLE | T | 7.70E 02 | 1.13E-02 | 4.30E-02 | 5 |
| 23 C 102* | | 9-METHYLCARBAZOLE | T | 7.70E 02 | 1.13E-02 | 4.30E-02 | 5 |
| 08 A 080* | | VALERIC ACID | T | 7.70E 02 | 1.13E-02 | 4.30E-02 | 5 |
| 23 B 260* | | DIBENZ(C,H)ACRIDINE | T | 7.70E 02 | 1.11E-02 | 4.24E-02 | 5 |
| 25 A 042* | | 3-METHYLTHIOPHENE | T | 7.70E 02 | 1.10E-02 | 4.20E-02 | 5 |
| 25 B 040* | W | BENZO(B)THIOPHENE | T | 7.70E 02 | 1.10E-02 | 4.20E-02 | 5 |
| 25 A 040* | | METHYLTHIOPHENES | T | 7.70E 02 | 1.10E-02 | 4.20E-02 | 5 |
| 25 A 041* | | 2-METHYLTHIOPHENE | T | 7.70E 02 | 1.10E-02 | 4.20E-02 | 5 |
| 12 A 060* | P | N-NITROSODIPROPYLAMINE | T | 7.70E 02 | 1.10E-02 | 4.10E-02 | 5 |
| 10 C 060* | | DIMETHYLANILINES | T | 7.70E 02 | 1.02E-02 | 3.90E-02 | 5 |
| 10 C 063* | | 2,5-XYLIDINE | T | 7.70E 02 | 1.02E-02 | 3.90E-02 | 5 |
| 10 C 061* | | 2,3-XYLIDINE | T | 7.70E 02 | 1.02E-02 | 3.90E-02 | 5 |
| 10 C 065* | | 3,4-XYLIDINE | T | 7.70E 02 | 1.02E-02 | 3.90E-02 | 5 |
| 10 D 020* | W | N,N-DIMETHYLANILINE | T | 7.70E 02 | 1.02E-02 | 3.90E-02 | 5 |
| 10 C 066* | | 3,5-XYLIDINE | T | 7.70E 02 | 1.02E-02 | 3.90E-02 | 5 |
| 10 C 064* | | 2,6-XYLIDINE | T | 7.70E 02 | 1.02E-02 | 3.90E-02 | 5 |
| 10 A 080* | | 1,2-DIAMINOETHANE | T | 7.70E 02 | 1.02E-02 | 3.90E-02 | 5 |
| 10 C 062* | | 2,4-XYLIDINE | T | 7.70E 02 | 1.02E-02 | 3.90E-02 | 5 |

## CYCLONE DUST, HEALTH IMPACT

| DMEG NO. | COMPOUND NAME | TYPE | CONC E-6 G/G | US | WDS G/S | LCCAT |
|---|---|---|---|---|---|---|
| 07 B 080* P | ISOPHORONE | T | 7.70E 02 | 1.02E-02 | 3.90E-02 | 5 |
| 08 A 040* | ACETIC ACID | T | 7.70E 02 | 1.01E-02 | 3.90E-02 | 5 |
| 04 A 180* P | CHLOROPHENYL PHENYL ETHER | T | 7.70E 02 | 9.50E-03 | 3.61E-02 | 5 |
| 02 A 160* P | BROMOFORM | T | 1.40E 02 | 9.33E-03 | 3.54E-02 | 2 |
| 21 A 020* P | NAPHTHALENE | T | 1.30E 03 | 8.70E-03 | 3.30E-02 | 3 |
| 04 B 040* P | 1,1'-DICHLORODIETHYL ETHER | T | 7.70E 02 | 8.60E-03 | 3.30E-02 | 5 |
| 08 D 320* P | BUTYL BENZYL PHTHALATE | T | 3.40E 03 | 7.90E-03 | 3.00E-02 | 6 |
| 66 A 010 | NIOBIUM (AS NB+3) | S | 5.00E 00 | 7.70E-03 | 2.92E-02 | |
| 21 A 140* P | ANTHRACENE | T | 1.30E 03 | 7.64E-03 | 2.90E-02 | 3 |
| 85 A 010 | URANIUM | S | 9.00E-01 | 7.50E-03 | 2.84E-02 | |
| 16 A 200* P | CHLORONAPHTHALENES | T | 1.30E 03 | 6.20E-03 | 2.40E-02 | 3 |
| 22 B 040* P W | FLUORANTHENE | T | 1.30E 03 | 4.64E-03 | 1.80E-02 | 3 |
| 02 B 100* P | DICHLOROPROPENES | T | 1.40E 02 | 4.11E-03 | 1.60E-02 | 2 |
| 16 A 160* P | POLYCHLORINATED BENZENES | T | 1.40E 02 | 4.00E-03 | 1.51E-02 | 2 |
| 60 A 010 | SCANDIUM | S | 5.00E 00 | 3.12E-03 | 1.20E-02 | |
| 02 A 340* P | DICHLOROPROPANES | T | 2.60E 03 | 2.60E-03 | 9.90E-03 | 1 |
| 84 A 010 | LANTHANUM | S | 8.00E 00 | 2.40E-03 | 8.94E-03 | |
| 21 B 180* P | PYRENE | T | 1.30E 03 | 1.90E-03 | 7.20E-03 | 3 |
| 08 D 320* P | BUTYL BENZYL PHTHALATE | T | 7.70E 02 | 1.80E-03 | 6.80E-03 | 5 |
| 16 A 120* P | 1,3-DICHLOROBENZENE | T | 1.30E 03 | 1.44E-03 | 5.50E-03 | 3 |
| 16 A 100* P | 1,2-DICHLOROBENZENE | T | 1.30E 03 | 1.44E-03 | 5.50E-03 | 3 |
| 84 C 010 | PRASEODYMIUM | S | 2.00E 00 | 1.33E-03 | 5.10E-03 | |
| 84 F 010 | DYSPROSIUM | S | 6.00E-01 | 1.30E-03 | 5.00E-03 | |
| 02 B 080* P | TETRACHLOROETHENE | T | 2.60E 03 | 1.30E-03 | 4.93E-03 | 1 |
| 84 E 010 | SAMARIUM | S | 2.00E 00 | 1.30E-03 | 4.74E-03 | |
| 15 A 040* P | TOLUENE | T | 1.30E 03 | 1.20E-03 | 4.50E-03 | 3 |
| 16 A 020* P | CHLOROBENZENE | T | 1.30E 03 | 1.20E-03 | 4.50E-03 | 3 |
| 02 A 140* P | DIBROMOCHLOROMETHANE | T | 1.40E 02 | 1.00E-03 | 3.80E-03 | 2 |
| 15 A 060* P | ETHYL BENZENE | T | 1.30E 03 | 1.00E-03 | 3.80E-03 | 3 |
| 21 A 020* P | NAPHTHALENE | T | 1.40E 02 | 9.33E-04 | 3.54E-03 | 2 |
| 16 A 140* P | 1,4-DICHLOROBENZENE | T | 1.30E 03 | 9.30E-04 | 3.52E-03 | 3 |
| 30 A 010 | RUBIDIUM (AS RB+) | S | 3.00E 00 | 8.33E-04 | 3.20E-03 | |
| 21 A 140* P | ANTHRACENE | T | 1.40E 02 | 8.23E-04 | 3.12E-03 | 2 |
| 16 A 200* P | CHLORONAPHTHALENES | T | 1.40E 02 | 6.70E-04 | 2.53E-03 | 2 |

# CYCLONE DUST, HEALTH IMPACT

| DMEG NO. | COMPOUND NAME | TYPE | CONC E-6 G/G | DS | WDS G/S | LCCAT |
|---|---|---|---|---|---|---|
| 22 B 040* P W | FLUORANTHENE | T | 1.40E 02 | 5.00E-04 | 1.90E-03 | 2 |
| 31 A 010 | CESIUM | S | 7.00E-01 | 2.80E-04 | 1.10E-03 | |
| 21 B 180* P | PYRENE | T | 1.40E 02 | 2.02E-04 | 7.71E-04 | 2 |
| 16 A 120* P | 1,3-DICHLOROBENZENE | T | 1.40E 02 | 1.60E-04 | 5.91E-04 | 2 |
| 16 A 100* P | 1,2-DICHLOROBENZENE | T | 1.40E 02 | 1.60E-04 | 5.91E-04 | 2 |
| 02 A 340* P | DICHLOROPROPANES | T | 1.40E 02 | 1.40E-04 | 5.31E-04 | 2 |
| 15 A 040* P | TOLUENE | T | 1.40E 02 | 1.30E-04 | 4.83E-04 | 2 |
| 16 A 020* P | CHLOROBENZENE | T | 1.40E 02 | 1.30E-04 | 4.83E-04 | 2 |
| 15 A 060* P | ETHYL BENZENE | T | 1.40E 02 | 1.10E-04 | 4.10E-04 | 2 |
| 16 A 140* P | 1,4-DICHLOROBENZENE | T | 1.40E 02 | 1.00E-04 | 3.80E-04 | 2 |
| 02 B 080* P | TETRACHLOROETHENE | T | 1.40E 02 | 7.00E-05 | 2.70E-04 | 2 |
| 45 A 010 | TIN | S | 2.00E 00 | 0.00E-01 | 0.00E-01 | |
| 04 A 160* P | A-CHLOROBUTYL ETHYL ETHER | T | 1.40E 03 | 0.00E-01 | 0.00E-01 | 4 |
| 21 A 120* PH | ACENAPHTHYLENE | T | 1.40E 02 | 0.00E-01 | 0.00E-01 | 2 |
| 21 A 120* PH | ACENAPHTHYLENE | T | 1.30E 03 | 0.00E-01 | 0.00E-01 | 3 |
| 21 D 080* PH | BENZO(GHI)PERYLENE | T | 1.30E 03 | 0.00E-01 | 0.00E-01 | 3 |
| 22 A 020* PH | FLUORENE | T | 1.40E 02 | 0.00E-01 | 0.00E-01 | 2 |
| 21 A 100* PH | ACENAPHTHENE | T | 1.40E 02 | 0.00E-01 | 0.00E-01 | 2 |
| 21 A 100* PH | ACENAPHTHENE | T | 1.30E 03 | 0.00E-01 | 0.00E-01 | 3 |
| 29 A 010 | POTASSIUM | D | 1.30E 03 | 0.00E-01 | 0.00E-01 | |
| 53 A 010 | SULFUR | D | 1.10E 04 | 0.00E-01 | 0.00E-01 | |
| 84 D 010 | NEODYMIUM | S | 3.00E 00 | 0.00E-01 | 0.00E-01 | |
| 22 A 020* PH | FLUORENE | T | 1.30E 03 | 0.00E-01 | 0.00E-01 | 3 |
| 21 D 080* PH | BENZO(GHI)PERYLENE | T | 1.40E 02 | 0.00E-01 | 0.00E-01 | 2 |
| 58 A 010 | BROMINE | S | 9.00E 00 | 0.00E-01 | 0.00E-01 | |
| 59 A 010 | IODINE (AS I-) | S | 4.00E-01 | 0.00E-01 | 0.00E-01 | |
| 04 A 160* P | A-CHLOROBUTYL ETHYL ETHER | T | 7.70E 02 | 0.00E-01 | 0.00E-01 | 5 |

CYCLONE DUST

AVERAGE FLOW RATE = 3.8 G/S

207.15 G EXTRACTED  TOTAL ORGANIC LOADING = 13 G/KG

TOTAL TCO = 0.66 G/KG  TOTAL GRAV = 12.0 G/KG

3.4% ORIGINAL SAMPLE TO LC

LC TCO = 3.2 MG  LC GRAV = 88.2 MG  LC TOTAL = 91.4 MG

| LCCAT | ORGANIC LOADING |
|---|---|
| 1 | 2600.0 |
| 2 | 140.0 |
| 3 | 1300.0 |
| 4 | 1400.0 |
| 5 | 770.0 |
| 6 | 3400.0 |
| 7 | 1100.0 |

FLOW RATE = 3.80

STATE: SOLID, UNITS IN MICROGRAMS/G

IMPACT: ECOLOGY

EXPERIMENTALY DETERMINED DATA

SPARK SOURCE DATA

# CYCLONE DUST, ECOLOGY IMPACT

| DMEG NO. | | COMPOUND NAME | TYPE | CONC E-6 G/G | DS | WDS G/S | LCCAT |
|---|---|---|---|---|---|---|---|
| 16 A 220* | W | POLYCHLORINATED BIPHENYLS | T | 1.30E 03 | 1.30E 06 | 4.94E 06 | 3 |
| 02 A 380* | W | HEXACHLOROCYCLOHEXANE | T | 2.60E 03 | 6.50E 05 | 2.50E 06 | 1 |
| 16 A 220* | W | POLYCHLORINATED BIPHENYLS | T | 1.40E 02 | 1.40E 05 | 5.32E 05 | 2 |
| 02 A 380* | W | HEXACHLOROCYCLOHEXANE | T | 1.40E 02 | 3.50E 04 | 1.32E 05 | 2 |
| 48 A 010 | | PHOSPHORUS | D | 5.90E 02 | 5.90E 03 | 2.24E 04 | |
| 08 D 281* | | DIMETHYL PHTHALATE | T | 3.40E 03 | 4.24E 03 | 1.61E 04 | 6 |
| 08 D 283* | | DI-N-BUTYL PHTHALATE | T | 3.40E 03 | 4.24E 03 | 1.61E 04 | 6 |
| 08 D 282* | | DIETHYL PHTHALATE | T | 3.40E 03 | 4.24E 03 | 1.61E 04 | 6 |
| 08 D 280* | P W | PHTHALATE ESTERS (MW:194-279) | T | 3.40E 03 | 4.24E 03 | 1.61E 04 | 6 |
| 08 D 283* | | DI-N-BUTYL PHTHALATE | T | 7.70E 02 | 9.62E 02 | 3.70E 03 | 5 |
| 08 D 282* | | DIETHYL PHTHALATE | T | 7.70E 02 | 9.62E 02 | 3.70E 03 | 5 |
| 08 D 281* | | DIMETHYL PHTHALATE | T | 7.70E 02 | 9.62E 02 | 3.70E 03 | 5 |
| 08 D 280* | P W | PHTHALATE ESTERS (MW:194-279) | T | 7.70E 02 | 9.62E 02 | 3.70E 03 | 5 |
| 19 A 060* | P W | PENTACHLOROPHENOL | T | 3.40E 03 | 6.80E 02 | 2.60E 03 | 6 |
| 72 A 010 | | IRON (AS FE+2) | D | 9.20E 03 | 1.84E 02 | 7.00E 02 | |
| 20 A 102* | | 2,5-DINITROPHENOL | T | 3.40E 03 | 1.70E 02 | 6.50E 02 | 6 |
| 20 A 101* | P | 2,4-DINITROPHENOL | T | 3.40E 03 | 1.70E 02 | 6.50E 02 | 6 |
| 20 A 100* | W | DINITROPHENOLS | T | 3.40E 03 | 1.70E 02 | 6.50E 02 | 6 |
| 20 A 080* | W | 2-AMINO-4,6-DINITROPHENOL | T | 3.40E 03 | 1.70E 02 | 6.50E 02 | 6 |
| 20 A 103* | | 2,6-DINITROPHENOL | T | 3.40E 03 | 1.70E 02 | 6.50E 02 | 6 |
| 10 C 220* | W | 2-AMINONAPHTHALENE | T | 3.40E 03 | 1.70E 02 | 6.50E 02 | 6 |
| 10 C 200* | W | 1-AMINONAPHTHALENE | T | 3.40E 03 | 1.70E 02 | 6.50E 02 | 6 |
| 10 C 140* | P W | BENZIDINE | T | 3.40E 03 | 1.70E 02 | 6.50E 02 | 6 |
| 19 A 060* | P W | PENTACHLOROPHENOL | T | 7.70E 02 | 1.54E 02 | 5.90E 02 | 5 |
| 01 B 220 | W | DICYCLOPENTADIENE | T | 2.60E 03 | 1.30E 02 | 4.94E 02 | 1 |
| 16 A 063* | | 1,4-DIBROMOBENZENE | T | 1.30E 03 | 6.50E 01 | 2.50E 02 | 3 |
| 16 A 162* | | HEXACHLOROBENZENE | T | 1.30E 03 | 6.50E 01 | 2.50E 02 | 3 |
| 16 A 061* | | 1,2-DIBROMOBENZENE | T | 1.30E 03 | 6.50E 01 | 2.50E 02 | 3 |
| 16 A 060* | | DIBROMOBENZENES | T | 1.30E 03 | 6.50E 01 | 2.50E 02 | 3 |
| 16 A 160* | P | POLYCHLORINATED BENZENES | T | 1.30E 03 | 6.50E 01 | 2.50E 02 | 3 |
| 16 B 020* | W | A-CHLOROTOLUENE | T | 1.30E 03 | 6.50E 01 | 2.50E 02 | 3 |
| 16 A 161* | | 1,2,4-TRICHLOROBENZENE | T | 1.30E 03 | 6.50E 01 | 2.50E 02 | 3 |
| 16 B 043* | | 1,4-BIS(CHLOROMETHYL)BENZENE | T | 1.30E 03 | 6.50E 01 | 2.50E 02 | 3 |
| 16 A 080* | | BROMOCHLOROBENZENES | T | 1.30E 03 | 6.50E 01 | 2.50E 02 | 3 |

CYCLONE DUST, ECOLOGY IMPACT

| DMEG NO. | | | COMPOUND NAME | TYPE | CONC E-6 G/G | DS | WDS G/S | LCCAT |
|---|---|---|---|---|---|---|---|---|
| 21 A 020* | P | | NAPHTHALENE | T | 1.30E 03 | 6.50E 01 | 2.50E 02 | 3 |
| 16 A 081* | | | 1-BROMO-2-CHLOROBENZENE | T | 1.30E 03 | 6.50E 01 | 2.50E 02 | 3 |
| 16 A 140* | P | | 1,4-DICHLOROBENZENE | T | 1.30E 03 | 6.50E 01 | 2.50E 02 | 3 |
| 16 A 040* | | | BROMOBENZENE | T | 1.30E 03 | 6.50E 01 | 2.50E 02 | 3 |
| 16 A 083* | | | 1-BROMO-4-CHLOROBENZENE | T | 1.30E 03 | 6.50E 01 | 2.50E 02 | 3 |
| 16 A 120* | P | | 1,3-DICHLOROBENZENE | T | 1.30E 03 | 6.50E 01 | 2.50E 02 | 3 |
| 16 A 100* | P | | 1,2-DICHLOROBENZENE | T | 1.30E 03 | 6.50E 01 | 2.50E 02 | 3 |
| 16 B 040* | | | BIS(CHLOROMETHYL)BENZENES | T | 1.30E 03 | 6.50E 01 | 2.50E 02 | 3 |
| 16 B 042* | | | 1,3-BIS(CHLOROMETHYL)BENZENE | T | 1.30E 03 | 6.50E 01 | 2.50E 02 | 3 |
| 16 A 062* | | | 1,3-DIBROMOBENZENE | T | 1.30E 03 | 6.50E 01 | 2.50E 02 | 3 |
| 16 B 041* | | | 1,2-BIS(CHLOROMETHYBENZENE | T | 1.30E 03 | 6.50E 01 | 2.50E 02 | 3 |
| 16 A 082* | | | 1-BROMO-3-CHLOROBENZENE | T | 1.30E 03 | 6.50E 01 | 2.50E 02 | 3 |
| 16 A 020* | P | | CHLOROBENZENE | T | 1.30E 03 | 6.50E 01 | 2.50E 02 | 3 |
| 38 A 010 | | | ALUMINUM | D | 1.20E 04 | 6.00E 01 | 2.30E 02 | |
| 26 B 040 | | W | TRITOTYL PHOSPHATES | T | 1.10E 03 | 5.50E 01 | 2.10E 02 | 7 |
| 10 C 140* | P | W | BENZIDINE | T | 7.70E 02 | 3.90E 01 | 1.50E 02 | 5 |
| 20 A 103* | | | 2,6-DINITROPHENOL | T | 7.70E 02 | 3.90E 01 | 1.50E 02 | 5 |
| 20 A 101* | P | | 2,4-DINITROPHENOL | T | 7.70E 02 | 3.90E 01 | 1.50E 02 | 5 |
| 10 C 220* | | W | 2-AMINONAPHTHALENE | T | 7.70E 02 | 3.90E 01 | 1.50E 02 | 5 |
| 20 A 100* | | W | DINITROPHENOLS | T | 7.70E 02 | 3.90E 01 | 1.50E 02 | 5 |
| 10 C 200* | | W | 1-AMINONAPHTHALENE | T | 7.70E 02 | 3.90E 01 | 1.50E 02 | 5 |
| 20 A 102* | | | 2,5-DINITROPHENOL | T | 7.70E 02 | 3.90E 01 | 1.50E 02 | 5 |
| 20 A 080* | | W | 2-AMINO-4,6-DINITROPHENOL | T | 3.40E 03 | 3.40E 01 | 1.30E 02 | 6 |
| 18 B 040* | | W | 1,3-DIHYDROXYBENZENE | T | 3.40E 03 | 3.40E 01 | 1.30E 02 | 6 |
| 18 A 101* | | | O-PHENYLPHENOL | T | 3.40E 03 | 3.40E 01 | 1.30E 02 | 6 |
| 18 A 020* | P | W | PHENOL | T | 3.40E 03 | 3.40E 01 | 1.30E 02 | 6 |
| 18 A 140* | | W | XYLENOLS | T | 3.40E 03 | 3.40E 01 | 1.30E 02 | 6 |
| 18 B 020* | | W | CATECHOL | T | 3.40E 03 | 3.40E 01 | 1.30E 02 | 6 |
| 18 A 180* | | W | POLYALKYLPHENOLS (MW>135) | T | 3.40E 03 | 3.40E 01 | 1.30E 02 | 6 |
| 18 A 080* | | W | ETHYLPHENOLS | T | 3.40E 03 | 3.40E 01 | 1.30E 02 | 6 |
| 18 A 181* | | | 2,4,6-TRIMETHYL METHYL PHENOL | T | 3.40E 03 | 3.40E 01 | 1.30E 02 | 6 |
| 18 A 081* | | | O-ETHYLPHENOL | T | 3.40E 03 | 3.40E 01 | 1.30E 02 | 6 |
| 18 A 102* | | | P-PHENYLPHENOL | T | 3.40E 03 | 3.40E 01 | 1.30E 02 | 6 |
| 23 B 080* | | W | ACRIDINE | T | 3.40E 03 | 3.40E 01 | 1.30E 02 | 6 |

CYCLONE DUST, ECOLOGY IMPACT

| DMEG NO. | | COMPOUND NAME | TYPE | CONC E-6 G/G | DS | WDS G/S | LCCAT |
|---|---|---|---|---|---|---|---|
| 18 A 163* | | 2-ETHYL-P-CRESOL | T | 3.40E 03 | 3.40E 01 | 1.30E 02 | 6 |
| 18 A 183* | | 2,6-DIMETHYL-4-HEPTYL PHENOL | T | 3.40E 03 | 3.40E 01 | 1.30E 02 | 6 |
| 18 A 120* | W | 2,2'-DIHYDROXYDIPHENYL | T | 3.40E 03 | 3.40E 01 | 1.30E 02 | 6 |
| 20 A 020* | P | 2-NITROPHENOL | T | 3.40E 03 | 3.40E 01 | 1.30E 02 | 6 |
| 18 C 083* | | 5-INDANOL | T | 3.40E 03 | 3.40E 01 | 1.30E 02 | 6 |
| 20 A 040* | | 3-NITROPHENOL | T | 3.40E 03 | 3.40E 01 | 1.30E 02 | 6 |
| 18 B 060* | W | 1,4-DIHYDROXYBENZENE | T | 3.40E 03 | 3.40E 01 | 1.30E 02 | 6 |
| 20 B 041* | | 3,5-DINITRO-P-CRESOL | T | 3.40E 03 | 3.40E 01 | 1.30E 02 | 6 |
| 18 B 080* | W | 1,2,3-TRIHYDROXYBENZENE | T | 3.40E 03 | 3.40E 01 | 1.30E 02 | 6 |
| 18 A 083* | | P-ETHYLPHENOL | T | 3.40E 03 | 3.40E 01 | 1.30E 02 | 6 |
| 18 C 020* | W | 1-NAPHTHOL | T | 3.40E 03 | 3.40E 01 | 1.30E 02 | 6 |
| 18 A 100* | W | PHENYLPHENOLS | T | 3.40E 03 | 3.40E 01 | 1.30E 02 | 6 |
| 18 C 040* | W | 2-NAPHTHOL | T | 3.40E 03 | 3.40E 01 | 1.30E 02 | 6 |
| 19 B 021* | | CHLORINATED-O-CRESOLS | T | 3.40E 03 | 3.40E 01 | 1.30E 02 | 6 |
| 18 A 182* | | 4,6-DI-TERT-BUTYL-M-CRESOL | T | 3.40E 03 | 3.40E 01 | 1.30E 02 | 6 |
| 18 A 042* | | O-CRESOL | T | 3.40E 03 | 3.40E 01 | 1.30E 02 | 6 |
| 19 B 023* | | CHLORINATED-P-CRESOLS | T | 3.40E 03 | 3.40E 01 | 1.30E 02 | 6 |
| 18 A 043* | | P-CRESOL | T | 3.40E 03 | 3.40E 01 | 1.30E 02 | 6 |
| 18 A 103* | | M-PHENYLPHENOL | T | 3.40E 03 | 3.40E 01 | 1.30E 02 | 6 |
| 18 C 082* | | 4-INDANOL | T | 3.40E 03 | 3.40E 01 | 1.30E 02 | 6 |
| 18 A 146* | | 3,4-XYLENOL | T | 3.40E 03 | 3.40E 01 | 1.30E 02 | 6 |
| 20 A 120* | | 2,4,6-TRINITROPHENOL | T | 3.40E 03 | 3.40E 01 | 1.30E 02 | 6 |
| 19 A 020* | P | 2-CHLOROPHENOL | T | 3.40E 03 | 3.40E 01 | 1.30E 02 | 6 |
| 20 A 060* | P | 4-NITROPHENOL | T | 3.40E 03 | 3.40E 01 | 1.30E 02 | 6 |
| 19 A 040* | P | 2,4-DICHLOROPHENOL | T | 3.40E 03 | 3.40E 01 | 1.30E 02 | 6 |
| 18 A 082* | | M-ETHYLPHENOL | T | 3.40E 03 | 3.40E 01 | 1.30E 02 | 6 |
| 20 B 042* | | 2,6-DINITRO-P-CRESOL | T | 3.40E 03 | 3.40E 01 | 1.30E 02 | 6 |
| 18 A 142* | P | 2,4-XYLENOL | T | 3.40E 03 | 3.40E 01 | 1.30E 02 | 6 |
| 19 B 020* | W | CHLORINATED CRESOLS | T | 3.40E 03 | 3.40E 01 | 1.30E 02 | 6 |
| 18 A 143* | | 2,5-XYLENOL | T | 3.40E 03 | 3.40E 01 | 1.30E 02 | 6 |
| 18 A 041* | | M-CRESOL | T | 3.40E 03 | 3.40E 01 | 1.30E 02 | 6 |
| 18 A 144* | | 2,6-XYLENOL | T | 3.40E 03 | 3.40E 01 | 1.30E 02 | 6 |
| 19 B 022* | P | CHLORINATED-M-CRESOLS | T | 3.40E 03 | 3.40E 01 | 1.30E 02 | 6 |
| 18 A 145* | | 3,5-XYLENOL | T | 3.40E 03 | 3.40E 01 | 1.30E 02 | 6 |

## CYCLONE DUST, ECOLOGY IMPACT

| DMEG NO. | | COMPOUND NAME | TYPE | CONC E-6 G/G | DS | WDS G/S | LCCAT |
|---|---|---|---|---|---|---|---|
| 18 C 081* | | 1-INDANOL | T | 3.40E 03 | 3.40E 01 | 1.30E 02 | 6 |
| 18 A 060* | W | 2-METHOXYPHENOL | T | 3.40E 03 | 3.40E 01 | 1.30E 02 | 6 |
| 18 A 040* | W | CRESOLS | T | 3.40E 03 | 3.40E 01 | 1.30E 02 | 6 |
| 18 A 160* | W | ETHYL CRESOLS | T | 3.40E 03 | 3.40E 01 | 1.30E 02 | 6 |
| 20 B 040* | W | DINITRO-P-CRESOLS | T | 3.40E 03 | 3.40E 01 | 1.30E 02 | 6 |
| 18 A 161* | | 6-ETHYL-M-CRESOL | T | 3.40E 03 | 3.40E 01 | 1.30E 02 | 6 |
| 20 B 020* | P W | 4,6-DINITRO-O-CRESOL | T | 3.40E 03 | 3.40E 01 | 1.30E 02 | 6 |
| 18 A 141* | | 2,3-XYLENOL | T | 3.40E 03 | 3.40E 01 | 1.30E 02 | 6 |
| 18 C 080* | W | INDANOLS | T | 3.40E 03 | 3.40E 01 | 1.30E 02 | 6 |
| 18 A 162* | | 4-ETHYL-O-CRESOL | T | 3.40E 03 | 1.70E 01 | 6.50E 01 | 6 |
| 08 A 040* | W | ACETIC ACID | T | 3.40E 03 | 1.70E 01 | 6.50E 01 | 6 |
| 08 D 143* | | ISOAMYL ACETATE | T | 3.40E 03 | 1.70E 01 | 6.50E 01 | 6 |
| 08 D 140* | | AMYL ACETATES | T | 3.40E 03 | 1.70E 01 | 6.50E 01 | 6 |
| 10 C 020* | | ANILINE | T | 3.40E 03 | 1.70E 01 | 6.50E 01 | 6 |
| 08 D 121* | | N-BUTYL ACETATE | T | 3.40E 03 | 1.70E 01 | 6.50E 01 | 6 |
| 08 D 142* | | SEC-AMYL ACETATE | T | 3.40E 03 | 1.70E 01 | 6.50E 01 | 6 |
| 08 D 120* | | BUTYL ACETATES | T | 3.40E 03 | 1.70E 01 | 6.50E 01 | 6 |
| 08 D 122* | | SEC-BUTYL ACETATE | T | 3.40E 03 | 1.70E 01 | 6.50E 01 | 6 |
| 10 A 080* | W | 1,2-DIAMINOETHANE | T | 3.40E 03 | 1.70E 01 | 6.50E 01 | 6 |
| 08 D 123* | | ISOBUTYL ACETATE | T | 3.40E 03 | 1.70E 01 | 6.50E 01 | 6 |
| 08 D 141* | | N-AMYL ACETATE | T | 2.60E 03 | 1.30E 01 | 4.93E 01 | 1 |
| 02 B 080* | P W | TETRACHLOROETHENE | T | 2.60E 03 | 1.30E 01 | 4.93E 01 | 1 |
| 02 A 340* | P | DICHLOROPROPANES | T | 2.60E 03 | 1.30E 01 | 4.93E 01 | 1 |
| 02 A 343* | | 1,3-DICHLOROPROPANE | T | 2.60E 03 | 1.30E 01 | 4.93E 01 | 1 |
| 02 B 104* | | TRANS-1,3-DICHLOROPROPENE | T | 2.60E 03 | 1.30E 01 | 4.93E 01 | 1 |
| 02 B 100* | P W | DICHLOROPROPENES | T | 2.60E 03 | 1.30E 01 | 4.93E 01 | 1 |
| 02 B 103* | | CIS-1,3-DICHLOROPROPENE | S | 2.00E 00 | 1.00E 01 | 3.80E 01 | |
| 82 A 010 | P | CADMIUM | D | 2.90E 04 | 9.10E 00 | 3.44E 01 | |
| 34 A 010 | | CALCIUM (AS CA+2) | S | 1.60E 02 | 8.00E 00 | 3.03E 01 | |
| 81 A 010 | P | ZINC | T | 7.70E 02 | 7.70E 00 | 2.92E 01 | 5 |
| 19 B 020* | W | CHLORINATED CRESOLS | T | 7.70E 02 | 7.70E 00 | 2.92E 01 | 5 |
| 20 B 042* | | 2,6-DINITRO-P-CRESOL | T | 7.70E 02 | 7.70E 00 | 2.92E 01 | 5 |
| 18 B 020* | W | CATECHOL | T | 7.70E 02 | 7.70E 00 | 2.92E 01 | 5 |
| 18 B 040* | W | 1,3-DIHYDROXYBENZENE | | | | | |

CYCLONE DUST, ECOLOGY IMPACT

| DMEG NO. | | COMPOUND NAME | TYPE | CONC E-6 G/G | DS | WDS G/S | LCCAT |
|---|---|---|---|---|---|---|---|
| 18 C 082* | | 4-INDANOL | T | 7.70E 02 | 7.70E 00 | 2.92E 01 | 5 |
| 19 B 021* | | CHLORINATED-O-CRESOLS | T | 7.70E 02 | 7.70E 00 | 2.92E 01 | 5 |
| 18 A 120* | W | 2,2'-DIHYDROXYDIPHENYL | T | 7.70E 02 | 7.70E 00 | 2.92E 01 | 5 |
| 18 B 060* | W | 1,4-DIHYDROXYBENZENE | T | 7.70E 02 | 7.70E 00 | 2.92E 01 | 5 |
| 18 A 140* | W | XYLENOLS | T | 7.70E 02 | 7.70E 00 | 2.92E 01 | 5 |
| 18 B 080* | W | 1,2,3-TRIHYDROXYBENZENE | T | 7.70E 02 | 7.70E 00 | 2.92E 01 | 5 |
| 18 A 183* | | 2,6-DIMETHYL-4-HEPTYL PHENOL | T | 7.70E 02 | 7.70E 00 | 2.92E 01 | 5 |
| 18 C 020* | W | 1-NAPHTHOL | T | 7.70E 02 | 7.70E 00 | 2.92E 01 | 5 |
| 18 A 180* | W | POLYALKYLPHENOLS (MW>135) | T | 7.70E 02 | 7.70E 00 | 2.92E 01 | 5 |
| 18 A 040* | W | CRESOLS | T | 7.70E 02 | 7.70E 00 | 2.92E 01 | 5 |
| 18 A 181* | | 2,4,6-TRIMETHYL METHYL PHENOL | T | 7.70E 02 | 7.70E 00 | 2.92E 01 | 5 |
| 19 B 022* P | | CHLORINATED-M-CRESOLS | T | 7.70E 02 | 7.70E 00 | 2.92E 01 | 5 |
| 18 A 182* | | 4,6-DI-TERT-BUTYL-M-CRESOL | T | 7.70E 02 | 7.70E 00 | 2.92E 01 | 5 |
| 19 B 023* | | CHLORINATED-P-CRESOLS | T | 7.70E 02 | 7.70E 00 | 2.92E 01 | 5 |
| 18 C 081* | | 1-INDANOL | T | 7.70E 02 | 7.70E 00 | 2.92E 01 | 5 |
| 18 A 103* | | M-PHENYLPHENOL | T | 7.70E 02 | 7.70E 00 | 2.92E 01 | 5 |
| 23 B 080* | W | ACRIDINE | T | 7.70E 02 | 7.70E 00 | 2.92E 01 | 5 |
| 18 A 083* | | P-ETHYLPHENOL | T | 7.70E 02 | 7.70E 00 | 2.92E 01 | 5 |
| 18 A 160* | W | ETHYL CRESOLS | T | 7.70E 02 | 7.70E 00 | 2.92E 01 | 5 |
| 18 A 161* | | 6-ETHYL-M-CRESOL | T | 7.70E 02 | 7.70E 00 | 2.92E 01 | 5 |
| 19 A 020* P | | 2-CHLOROPHENOL | T | 7.70E 02 | 7.70E 00 | 2.92E 01 | 5 |
| 19 A 040* P | | 2,4-DICHLOROPHENOL | T | 7.70E 02 | 7.70E 00 | 2.92E 01 | 5 |
| 18 A 162* | | 4-ETHYL-O-CRESOL | T | 7.70E 02 | 7.70E 00 | 2.92E 01 | 5 |
| 18 A 163* | | 2-ETHYL-P-CRESOL | T | 7.70E 02 | 7.70E 00 | 2.92E 01 | 5 |
| 20 B 041* | | 3,5-DINITRO-P-CRESOL | T | 7.70E 02 | 7.70E 00 | 2.92E 01 | 5 |
| 18 A 020* P | W | PHENOL | T | 7.70E 02 | 7.70E 00 | 2.92E 01 | 5 |
| 18 A 142* P | | 2,4-XYLENOL | T | 7.70E 02 | 7.70E 00 | 2.92E 01 | 5 |
| 18 A 100* | W | PHENYLPHENOLS | T | 7.70E 02 | 7.70E 00 | 2.92E 01 | 5 |
| 18 A 143* | | 2,5-XYLENOL | T | 7.70E 02 | 7.70E 00 | 2.92E 01 | 5 |
| 18 A 101* | | O-PHENYLPHENOL | T | 7.70E 02 | 7.70E 00 | 2.92E 01 | 5 |
| 18 A 144* | | 2,6-XYLENOL | T | 7.70E 02 | 7.70E 00 | 2.92E 01 | 5 |
| 18 A 102* | | P-PHENYLPHENOL | T | 7.70E 02 | 7.70E 00 | 2.92E 01 | 5 |
| 18 A 042* | | O-CRESOL | T | 7.70E 02 | 7.70E 00 | 2.92E 01 | 5 |
| 18 A 146* | | 3,4-XYLENOL | T | 7.70E 02 | 7.70E 00 | 2.92E 01 | 5 |

CYCLONE DUST, ECOLOGY IMPACT

| DMEG NO. | | | COMPOUND NAME | TYPE | CONC E-6 G/G | DS | WDS G/S | LCCAT |
|---|---|---|---|---|---|---|---|---|
| 18 C 083* | | | 5-INDANOL | T | 7.70E 02 | 7.70E 00 | 2.92E 01 | 5 |
| 18 A 060* | | W | 2-METHOXYPHENOL | T | 7.70E 02 | 7.70E 00 | 2.92E 01 | 5 |
| 20 A 020* | P | | 2-NITROPHENOL | T | 7.70E 02 | 7.70E 00 | 2.92E 01 | 5 |
| 20 B 020* | P | W | 4,6-DINITRO-O-CRESOL | T | 7.70E 02 | 7.70E 00 | 2.92E 01 | 5 |
| 20 A 040* | | | 3-NITROPHENOL | T | 7.70E 02 | 7.70E 00 | 2.92E 01 | 5 |
| 18 A 141* | | | 2,3-XYLENOL | T | 7.70E 02 | 7.70E 00 | 2.92E 01 | 5 |
| 20 A 060* | P | | 4-NITROPHENOL | T | 7.70E 02 | 7.70E 00 | 2.92E 01 | 5 |
| 20 B 040* | | W | DINITRO-P-CRESOLS | T | 7.70E 02 | 7.70E 00 | 2.92E 01 | 5 |
| 18 A 043* | | | P-CRESOL | T | 7.70E 02 | 7.70E 00 | 2.92E 01 | 5 |
| 18 C 040* | | W | 2-NAPHTHOL | T | 7.70E 02 | 7.70E 00 | 2.92E 01 | 5 |
| 18 A 080* | | W | ETHYLPHENOLS | T | 7.70E 02 | 7.70E 00 | 2.92E 01 | 5 |
| 18 C 080* | | W | INDANOLS | T | 7.70E 02 | 7.70E 00 | 2.92E 01 | 5 |
| 18 A 041* | | | M-CRESOL | T | 7.70E 02 | 7.70E 00 | 2.92E 01 | 5 |
| 18 A 145* | | | 3,5-XYLENOL | T | 7.70E 02 | 7.70E 00 | 2.92E 01 | 5 |
| 18 A 082* | | | M-ETHYLPHENOL | T | 7.70E 02 | 7.70E 00 | 2.92E 01 | 5 |
| 20 A 120* | | | 2,4,6-TRINITROPHENOL | T | 7.70E 02 | 7.70E 00 | 2.92E 01 | 5 |
| 18 A 081* | | | O-ETHYLPHENOL | T | 1.40E 02 | 7.00E 00 | 2.70E 01 | 2 |
| 16 A 040* | | | BROMOBENZENE | T | 1.40E 02 | 7.00E 00 | 2.70E 01 | 2 |
| 16 A 161* | | | 1,2,4-TRICHLOROBENZENE | T | 1.40E 02 | 7.00E 00 | 2.70E 01 | 2 |
| 16 A 081* | | | 1-BROMO-2-CHLOROBENZENE | T | 1.40E 02 | 7.00E 00 | 2.70E 01 | 2 |
| 16 A 160* | P | | POLYCHLORINATED BENZENES | T | 1.40E 02 | 7.00E 00 | 2.70E 01 | 2 |
| 16 A 120* | P | | 1,3-DICHLOROBENZENE | T | 1.40E 02 | 7.00E 00 | 2.70E 01 | 2 |
| 16 A 020* | P | | CHLOROBENZENE | T | 1.40E 03 | 7.00E 00 | 2.70E 01 | 4 |
| 17 A 082* | | | 3,4-DINITROTOLUENE | T | 1.40E 03 | 7.00E 00 | 2.70E 01 | 4 |
| 17 A 081* | P | | 2,6-DINITROTOLUENE | T | 1.40E 02 | 7.00E 00 | 2.70E 01 | 2 |
| 16 B 042* | | | 1,3-BIS(CHLOROMETHYL)BENZENE | T | 1.40E 02 | 7.00E 00 | 2.70E 01 | 2 |
| 21 A 020* | P | | NAPHTHALENE | T | 1.40E 02 | 7.00E 00 | 2.70E 01 | 2 |
| 16 B 043* | | | 1,4-BIS(CHLOROMETHYL)BENZENE | T | 1.40E 02 | 7.00E 00 | 2.70E 01 | 2 |
| 16 A 162* | | | HEXACHLOROBENZENE | T | 1.40E 03 | 7.00E 00 | 2.70E 01 | 4 |
| 17 A 083* | | | 2,3-DINITROTOLUENE | T | 1.40E 03 | 7.00E 00 | 2.70E 01 | 4 |
| 17 A 084* | P | | 2,4-DINITROTOLUENE | T | 1.40E 02 | 7.00E 00 | 2.70E 01 | 2 |
| 16 A 140* | P | | 1,4-DICHLOROBENZENE | T | 1.40E 03 | 7.00E 00 | 2.70E 01 | 4 |
| 17 A 086* | | | 3,5-DINITROTOLUENE | T | 1.40E 03 | 7.00E 00 | 2.70E 01 | 4 |
| 17 A 085* | | | 2,5-DINITROTOLUENE | | | | | |

CYCLONE DUST, ECOLOGY IMPACT

| DMEG NO. | | COMPOUND NAME | TYPE | CONC E-6 G/G | DS | WDS G/S | LCCAT |
|---|---|---|---|---|---|---|---|
| 16 A 083* | | 1-BROMO-4-CHLOROBENZENE | T | 1.40E 02 | 7.00E 00 | 2.70E 01 | 2 |
| 16 A 060* | | DIBROMOBENZENES | T | 1.40E 02 | 7.00E 00 | 2.70E 01 | 2 |
| 17 A 042* | | 3-NITROTOLUENE | T | 1.40E 03 | 7.00E 00 | 2.70E 01 | 4 |
| 16 B 040* | | BIS(CHLOROMETHYL)BENZENES | T | 1.40E 02 | 7.00E 00 | 2.70E 01 | 2 |
| 16 A 061* | | 1,2-DIBROMOBENZENE | T | 1.40E 02 | 7.00E 00 | 2.70E 01 | 2 |
| 16 B 041* | | 1,2-BIS(CHLOROMETHYBENZENE | T | 1.40E 02 | 7.00E 00 | 2.70E 01 | 2 |
| 17 A 080* | W | DINITROTOLUENES | T | 1.40E 03 | 7.00E 00 | 2.70E 01 | 4 |
| 16 A 082* | | 1-BROMO-3-CHLOROBENZENE | T | 1.40E 02 | 7.00E 00 | 2.70E 01 | 2 |
| 16 A 062* | | 1,3-DIBROMOBENZENE | T | 1.40E 02 | 7.00E 00 | 2.70E 01 | 2 |
| 16 B 020* | W | A-CHLOROTOLUENE | T | 1.40E 02 | 7.00E 00 | 2.70E 01 | 2 |
| 16 A 063* | | 1,4-DIBROMOBENZENE | T | 1.40E 02 | 7.00E 00 | 2.70E 01 | 2 |
| 17 A 020* | P W | NITROBENZENE | T | 1.40E 03 | 7.00E 00 | 2.70E 01 | 4 |
| 17 A 040* | W | NITROTOLUENES | T | 1.40E 03 | 7.00E 00 | 2.70E 01 | 4 |
| 17 A 043* | | 4-NITROTOLUENE | T | 1.40E 03 | 7.00E 00 | 2.70E 01 | 4 |
| 04 A 050* | W | EPICHLORHYDRIN | T | 1.40E 03 | 7.00E 00 | 2.70E 01 | 4 |
| 04 A 060* | W | 1-CHLORO-1,3-EPOXYPROPANE | T | 1.40E 03 | 7.00E 00 | 2.70E 01 | 4 |
| 16 A 100* | P | 1,2-DICHLOROBENZENE | T | 1.40E 02 | 7.00E 00 | 2.70E 01 | 2 |
| 17 A 041* | | 2-NITROTOLUENE | T | 1.40E 03 | 7.00E 00 | 2.70E 01 | 4 |
| 04 A 040* | W | 2-CHLORO-1,2-EPOXYPROPANE | T | 1.40E 03 | 7.00E 00 | 2.70E 01 | 4 |
| 16 A 080* | | BROMOCHLOROBENZENES | T | 1.40E 02 | 7.00E 00 | 2.70E 01 | 2 |
| 15 B 120* | W | TETRAHYDRONAPHTHALENE | T | 1.30E 03 | 6.50E 00 | 2.50E 01 | 3 |
| 15 A 120* | W | ISOPROPYL BENZENE | T | 1.30E 03 | 6.50E 00 | 2.50E 01 | 3 |
| 15 B 101* | | O-DIETHYL BENZENE | T | 1.30E 03 | 6.50E 00 | 2.50E 01 | 3 |
| 15 B 106* | | 1,4-DI-TERT-BUTYL BENZENE | T | 1.30E 03 | 6.50E 00 | 2.50E 01 | 3 |
| 15 B 102* | | M-DIETHYL BENZENE | T | 1.30E 03 | 6.50E 00 | 2.50E 01 | 3 |
| 15 A 060* | P W | ETHYL BENZENE | T | 1.30E 03 | 6.50E 00 | 2.50E 01 | 3 |
| 15 B 081* | | O-XYLENE | T | 1.30E 03 | 6.50E 00 | 2.50E 01 | 3 |
| 15 B 083* | | P-XYLENE | T | 1.30E 03 | 6.50E 00 | 2.50E 01 | 3 |
| 15 B 082* | | M-XYLENE | T | 1.30E 03 | 6.50E 00 | 2.50E 01 | 3 |
| 15 A 100* | W | PROPYL BENZENE | T | 1.30E 03 | 6.50E 00 | 2.50E 01 | 3 |
| 15 A 040* | P W | TOLUENE | T | 1.30E 03 | 6.50E 00 | 2.50E 01 | 3 |
| 15 B 105* | | M-DIISOPROPYL BENZENE | T | 1.30E 03 | 6.50E 00 | 2.50E 01 | 3 |
| 15 B 104* | | O-DIISOPROPYL BENZENE | T | 1.30E 03 | 6.50E 00 | 2.50E 01 | 3 |
| 15 B 100* | W | DIALKYL BENZENES (MW:134-191) | T | 1.30E 03 | 6.50E 00 | 2.50E 01 | 3 |

## CYCLONE DUST, ECOLOGY IMPACT

| DMEG NO. | | COMPOUND NAME | TYPE | CONC E-6 G/G | DS | WDS G/S | LCCAT |
|---|---|---|---|---|---|---|---|
| 15 A 080* | W | STYRENE | T | 1.30E 03 | 6.50E 00 | 2.50E 01 | 3 |
| 15 B 103* | | P-DIETHYL BENZENE | T | 1.30E 03 | 6.50E 00 | 2.50E 01 | 3 |
| 15 B 080* | W | XYLENES | T | 1.30E 03 | 6.50E 00 | 2.50E 01 | 3 |
| 49 A 010 | P | ARSENIC | D | 6.30E 01 | 6.30E 00 | 2.40E 01 | |
| 08 A 040* | W | ACETIC ACID | T | 1.10E 03 | 5.50E 00 | 2.10E 01 | 7 |
| 15 B 020* | | INDAN | T | 1.30E 03 | 4.64E 00 | 1.80E 01 | 3 |
| 08 D 143* | | ISOAMYL ACETATE | T | 7.70E 02 | 3.84E 00 | 1.50E 01 | 5 |
| 17 A 081* | P | 2,6-DINITROTOLUENE | T | 7.70E 02 | 3.84E 00 | 1.50E 01 | 5 |
| 04 A 060* | W | 1-CHLORO-1,3-EPOXYPROPANE | T | 7.70E 02 | 3.84E 00 | 1.50E 01 | 5 |
| 08 D 121* | | N-BUTYL ACETATE | T | 7.70E 02 | 3.84E 00 | 1.50E 01 | 5 |
| 08 A 040* | W | ACETIC ACID | T | 7.70E 02 | 3.84E 00 | 1.50E 01 | 5 |
| 08 D 140* | | AMYL ACETATES | T | 7.70E 02 | 3.84E 00 | 1.50E 01 | 5 |
| 17 A 084* | P | 2,4-DINITROTOLUENE | T | 7.70E 02 | 3.84E 00 | 1.50E 01 | 5 |
| 08 D 123* | | ISOBUTYL ACETATE | T | 7.70E 02 | 3.84E 00 | 1.50E 01 | 5 |
| 17 A 020* | P W | NITROBENZENE | T | 7.70E 02 | 3.84E 00 | 1.50E 01 | 5 |
| 08 D 120* | | BUTYL ACETATES | T | 7.70E 02 | 3.84E 00 | 1.50E 01 | 5 |
| 17 A 082* | | 3,4-DINITROTOLUENE | T | 7.70E 02 | 3.84E 00 | 1.50E 01 | 5 |
| 17 A 085* | | 2,5-DINITROTOLUENE | T | 7.70E 02 | 3.84E 00 | 1.50E 01 | 5 |
| 10 A 080* | W | 1,2-DIAMINOETHANE | T | 7.70E 02 | 3.84E 00 | 1.50E 01 | 5 |
| 17 A 083* | | 2,3-DINITROTOLUENE | T | 7.70E 02 | 3.84E 00 | 1.50E 01 | 5 |
| 08 D 122* | | SEC-BUTYL ACETATE | T | 7.70E 02 | 3.84E 00 | 1.50E 01 | 5 |
| 04 A 040* | W | 2-CHLORO-1,2-EPOXYPROPANE | T | 7.70E 02 | 3.84E 00 | 1.50E 01 | 5 |
| 17 A 043* | | 4-NITROTOLUENE | T | 7.70E 02 | 3.84E 00 | 1.50E 01 | 5 |
| 17 A 080* | W | DINITROTOLUENES | T | 7.70E 02 | 3.84E 00 | 1.50E 01 | 5 |
| 17 A 086* | | 3,5-DINITROTOLUENE | T | 7.70E 02 | 3.84E 00 | 1.50E 01 | 5 |
| 17 A 040* | W | NITROTOLUENES | T | 7.70E 02 | 3.84E 00 | 1.50E 01 | 5 |
| 08 D 141* | | N-AMYL ACETATE | T | 7.70E 02 | 3.84E 00 | 1.50E 01 | 5 |
| 10 C 020* | | ANILINE | T | 7.70E 02 | 3.84E 00 | 1.50E 01 | 5 |
| 08 D 142* | | SEC-AMYL ACETATE | T | 7.70E 02 | 3.84E 00 | 1.50E 01 | 5 |
| 17 A 041* | | 2-NITROTOLUENE | T | 7.70E 02 | 3.84E 00 | 1.50E 01 | 5 |
| 04 A 050* | W | EPICHLORHYDRIN | T | 7.70E 02 | 3.84E 00 | 1.50E 01 | 5 |
| 17 A 042* | | 3-NITROTOLUENE | T | 7.70E 02 | 3.84E 00 | 1.50E 01 | 5 |
| 78 A 010 | P | COPPER | 8 | 3.00E 01 | 3.00E 00 | 1.14E 01 | |
| 54 A 010 | P | SELENIUM | D | 1.40E 01 | 2.80E 00 | 1.10E 01 | |

# CYCLONE DUST, ECOLOGY IMPACT

| DMEG NO. | | COMPOUND NAME | TYPE | CONC E-6 G/G | DS | WDS G/S | LCCAT |
|---|---|---|---|---|---|---|---|
| 36 A 010 | | BARIUM | D | 1.30E 03 | 2.60E 00 | 9.90E 00 | |
| 62 A 010 | | TITANIUM | D | 4.00E 02 | 2.50E 00 | 9.50E 00 | |
| 08 A 080* | | VALERIC ACID | T | 3.40E 03 | 2.30E 00 | 8.61E 00 | 6 |
| 76 A 010 | P | NICKEL | S | 4.00E 00 | 2.00E 00 | 7.60E 00 | |
| 08 A 101* | | CAPROIC ACID | T | 3.40E 03 | 1.90E 00 | 7.20E 00 | 6 |
| 08 A 104* | | LAURIC ACID | T | 3.40E 03 | 1.90E 00 | 7.20E 00 | 6 |
| 08 A 102* | | CAPRYLIC ACID | T | 3.40E 03 | 1.90E 00 | 7.20E 00 | 6 |
| 08 A 103* | | CAPRIC ACID | T | 3.40E 03 | 1.90E 00 | 7.20E 00 | 6 |
| 08 A 100* | | SATURATED LONG CHAIN ACIDS (MW:116-201) | T | 3.40E 03 | 1.90E 00 | 7.20E 00 | 6 |
| 08 A 180* | | ADIPIC ACID | T | 3.40E 03 | 1.80E 00 | 6.80E 00 | 6 |
| 08 D 101* | | N-PROPYL ACETATE | T | 3.40E 03 | 1.70E 00 | 6.50E 00 | 6 |
| 10 A 160* | | CYCLOHEXYLAMINE | T | 3.40E 03 | 1.70E 00 | 6.50E 00 | 6 |
| 08 D 100* | | PROPYL ACETATES | T | 3.40E 03 | 1.70E 00 | 6.50E 00 | 6 |
| 23 A 020* | W | PYRIDINE | T | 3.40E 03 | 1.70E 00 | 6.50E 00 | 6 |
| 05 A 124* | | 3-METHYL-1-BUTANOL | T | 3.40E 03 | 1.70E 00 | 6.50E 00 | 6 |
| 23 A 121* | | 5-ETHYL-2-METHYLPYRIDINE | T | 3.40E 03 | 1.70E 00 | 6.50E 00 | 6 |
| 05 A 121* | | N-PENTANOL | T | 3.40E 03 | 1.70E 00 | 6.50E 00 | 6 |
| 23 A 063* | | 4-ETHYLPYRIDINE | T | 3.40E 03 | 1.70E 00 | 6.50E 00 | 6 |
| 23 A 060* | W | MONOSUBSTITUTED ALKYL PYRIDINES | T | 3.40E 03 | 1.70E 00 | 6.50E 00 | 6 |
| 23 A 122* | | 2,4,6-COLLIDINE | T | 3.40E 03 | 1.70E 00 | 6.50E 00 | 6 |
| 08 B 060* | W | B-PROPIOLACTONE | T | 3.40E 03 | 1.70E 00 | 6.50E 00 | 6 |
| 23 A 081* | | 2-PHENYLPYRIDINE | T | 3.40E 03 | 1.70E 00 | 6.50E 00 | 6 |
| 23 A 120* | W | COLLIDINES | T | 3.40E 03 | 1.70E 00 | 6.50E 00 | 6 |
| 23 A 064* | | 4-N-PROPYLPYRIDINE | T | 3.40E 03 | 1.70E 00 | 6.50E 00 | 6 |
| 23 A 061* | | 2-ETHYLPYRIDINE | T | 3.40E 03 | 1.70E 00 | 6.50E 00 | 6 |
| 05 A 100* | W | ISOBUTYL ALCOHOL | T | 3.40E 03 | 1.70E 00 | 6.50E 00 | 6 |
| 05 A 122* | | 2-METHYL-1-BUTANOL | T | 3.40E 03 | 1.70E 00 | 6.50E 00 | 6 |
| 23 A 080* | W | PHENYLPYRIDINES | T | 3.40E 03 | 1.70E 00 | 6.50E 00 | 6 |
| 05 A 123* | | 2,2-DIMETHYL-1-PROPANOL | T | 3.40E 03 | 1.70E 00 | 6.50E 00 | 6 |
| 10 A 060* | | ETHANOLAMINE | T | 3.40E 03 | 1.70E 00 | 6.50E 00 | 6 |
| 05 A 120* | W | PENTANOLS (PRIMARY) | T | 3.40E 03 | 1.70E 00 | 6.50E 00 | 6 |
| 10 B 100* | | MORPHOLINE | T | 3.40E 03 | 1.70E 00 | 6.50E 00 | 6 |
| 05 A 140* | W | BENZYL ALCOHOL | T | 3.40E 03 | 1.70E 00 | 6.50E 00 | 6 |
| 23 A 083* | | 4-PHENYLPYRIDINE | T | 3.40E 03 | 1.70E 00 | 6.50E 00 | 6 |

CYCLONE DUST, ECOLOGY IMPACT

| DMEG NO. | | COMPOUND NAME | TYPE | CONC E-6 G/G | DS | WDS G/S | LCCAT |
|---|---|---|---|---|---|---|---|
| 23 A 062* | | 3-ETHYLPYRIDINE | T | 3.40E 03 | 1.70E 00 | 6.50E 00 | 6 |
| 08 D 080* | | METHYL METHACRYLATE | T | 3.40E 03 | 1.70E 00 | 6.50E 00 | 6 |
| 06 A 020* | W | ETHYLENE GLYCOL | T | 3.40E 03 | 1.70E 00 | 6.50E 00 | 6 |
| 23 A 082* | | 3-PHENYLPYRIDINE | T | 3.40E 03 | 1.54E 00 | 5.90E 00 | 6 |
| 07 B 100* | W | CAMPHOR | T | 2.60E 03 | 1.30E 00 | 4.93E 00 | 1 |
| 01 A 201 | | N-OCTANE | T | 2.60E 03 | 1.30E 00 | 4.93E 00 | 1 |
| 01 A 200 | | OCTANES | T | 3.40E 03 | 1.10E 00 | 4.20E 00 | 6 |
| 07 B 120* | | ACETOPHENONE | D | 1.90E 01 | 9.50E-01 | 3.61E 00 | |
| 71 A 010 | P | MANGANESE | T | 1.40E 03 | 8.80E-01 | 3.32E 00 | 4 |
| 09 B 041* | | A-NAPHTHONITRILES | T | 1.40E 03 | 8.80E-01 | 3.32E 00 | 4 |
| 09 B 042* | | B-NAPHTHONITRILES | T | 1.40E 03 | 8.80E-01 | 3.32E 00 | 4 |
| 09 B 020* | W | BENZONITRILE | T | 1.40E 03 | 8.80E-01 | 3.32E 00 | 4 |
| 09 B 040* | W | NAPHTHONITRILES | T | 3.40E 03 | 8.30E-01 | 3.20E 00 | 6 |
| 08 A 140* | | OLEIC ACID | S | 8.00E 00 | 8.00E-01 | 3.04E 00 | |
| 46 A 010 | P | LEAD | T | 1.10E 03 | 7.33E-01 | 2.80E 00 | 7 |
| 08 A 080* | | VALERIC ACID | T | 1.40E 02 | 7.00E-01 | 2.70E 00 | 2 |
| 02 A 343* | | 1,3-DICHLOROPROPANE | T | 1.40E 02 | 7.00E-01 | 2.70E 00 | 2 |
| 15 B 120* | W | TETRAHYDRONAPHTHALENE | T | 1.40E 02 | 7.00E-01 | 2.70E 00 | 2 |
| 15 A 080* | W | STYRENE | T | 1.40E 03 | 7.00E-01 | 2.70E 00 | 4 |
| 23 A 061* | | 2-ETHYLPYRIDINE | T | 1.40E 02 | 7.00E-01 | 2.70E 00 | 2 |
| 15 A 040* | P W | TOLUENE | T | 1.40E 02 | 7.00E-01 | 2.70E 00 | 2 |
| 02 B 100* | P W | DICHLOROPROPENES | T | 1.40E 03 | 7.00E-01 | 2.70E 00 | 4 |
| 23 A 120* | W | COLLIDINES | T | 1.40E 02 | 7.00E-01 | 2.70E 00 | 2 |
| 15 B 106* | | 1,4-DI-TERT-BUTYL BENZENE | T | 1.40E 03 | 7.00E-01 | 2.70E 00 | 4 |
| 23 A 121* | | 5-ETHYL-2-METHYLPYRIDINE | T | 1.40E 03 | 7.00E-01 | 2.70E 00 | 4 |
| 23 A 122* | | 2,4,6-COLLIDINE | T | 1.40E 03 | 7.00E-01 | 2.70E 00 | 4 |
| 23 A 080* | W | PHENYLPYRIDINES | T | 1.40E 03 | 7.00E-01 | 2.70E 00 | 4 |
| 04 B 040* | P W | 1,1'-DICHLORODIETHYL ETHER | T | 1.40E 02 | 7.00E-01 | 2.70E 00 | 2 |
| 15 A 120* | W | ISOPROPYL BENZENE | T | 1.40E 03 | 7.00E-01 | 2.70E 00 | 4 |
| 04 B 080* | W | 2,2'-DICHLORODIETHYL ETHER | T | 1.40E 03 | 7.00E-01 | 2.70E 00 | 4 |
| 23 A 081* | | 2-PHENYLPYRIDINE | T | 1.40E 03 | 7.00E-01 | 2.70E 00 | 4 |
| 23 A 020* | W | PYRIDINE | T | 1.40E 03 | 7.00E-01 | 2.70E 00 | 4 |
| 23 A 062* | | 3-ETHYLPYRIDINE | T | 1.40E 02 | 7.00E-01 | 2.70E 00 | 2 |
| 02 B 080* | P W | TETRACHLOROETHENE | | | | | |

CYCLONE DUST, ECOLOGY IMPACT

| OMEG NO. | | | COMPOUND NAME | TYPE | CONC E-6 G/G | DS | WDS G/S | LOCAT |
|---|---|---|---|---|---|---|---|---|
| 02 B 103* | | | CIS-1,3-DICHLOROPROPENE | T | 1.40E 02 | 7.00E-01 | 2.70E 00 | 2 |
| 15 B 081* | | | O-XYLENE | T | 1.40E 02 | 7.00E-01 | 2.70E 00 | 2 |
| 17 B 060* | | W | 1-CHLORO-4-NITROBENZENE | T | 1.40E 03 | 7.00E-01 | 2.70E 00 | 4 |
| 15 B 080* | | W | XYLENES | T | 1.40E 02 | 7.00E-01 | 2.70E 00 | 2 |
| 15 B 082* | | | M-XYLENE | T | 1.40E 02 | 7.00E-01 | 2.70E 00 | 2 |
| 15 A 060* | P | W | ETHYL BENZENE | T | 1.40E 02 | 7.00E-01 | 2.70E 00 | 2 |
| 23 A 064* | | | 4-N-PROPYLPYRIDINE | T | 1.40E 03 | 7.00E-01 | 2.70E 00 | 4 |
| 15 B 100* | | W | DIALKYL BENZENES (MW:134-191) | T | 1.40E 02 | 7.00E-01 | 2.70E 00 | 2 |
| 15 A 100* | | W | PROPYL BENZENE | T | 1.40E 02 | 7.00E-01 | 2.70E 00 | 2 |
| 15 B 083* | | | P-XYLENE | T | 1.40E 02 | 7.00E-01 | 2.70E 00 | 2 |
| 15 B 101* | | | O-DIETHYL BENZENE | T | 1.40E 02 | 7.00E-01 | 2.70E 00 | 2 |
| 03 B 020* | | | 1,4-DIOXANE | T | 1.40E 03 | 7.00E-01 | 2.70E 00 | 4 |
| 15 B 105* | | | M-DIISOPROPYL BENZENE | T | 1.40E 02 | 7.00E-01 | 2.70E 00 | 2 |
| 15 B 103* | | | P-DIETHYL BENZENE | T | 1.40E 02 | 7.00E-01 | 2.70E 00 | 2 |
| 23 A 082* | | | 3-PHENYLPYRIDINE | T | 1.40E 03 | 7.00E-01 | 2.70E 00 | 4 |
| 15 B 102* | | | M-DIETHYL BENZENE | T | 1.40E 02 | 7.00E-01 | 2.70E 00 | 2 |
| 23 A 083* | | | 4-PHENYLPYRIDINE | T | 1.40E 03 | 7.00E-01 | 2.70E 00 | 4 |
| 15 B 104* | | | O-DIISOPROPYL BENZENE | T | 1.40E 02 | 7.00E-01 | 2.70E 00 | 2 |
| 02 B 104* | | | TRANS-1,3-DICHLOROPROPENE | T | 1.40E 02 | 7.00E-01 | 2.70E 00 | 2 |
| 23 A 063* | | | 4-ETHYLPYRIDINE | T | 1.40E 03 | 7.00E-01 | 2.70E 00 | 4 |
| 23 A 060* | | W | MONOSUBSTITUTED ALKYL PYRIDINES | T | 1.40E 03 | 7.00E-01 | 2.70E 00 | 4 |
| 02 A 340* | P | | DICHLOROPROPANES | T | 1.40E 02 | 7.00E-01 | 2.70E 00 | 2 |
| 17 B 040* | | W | 1-CHLORO-2-NITROBENZENE | T | 1.40E 03 | 7.00E-01 | 2.70E 00 | 4 |
| 15 B 201* | | | 1,2,3,4-TETRAMETHYLBENZENE | T | 1.30E 03 | 6.50E-01 | 2.50E 00 | 3 |
| 15 B 200* | | | TETRAMETHYLBENZENES | T | 1.30E 03 | 6.50E-01 | 2.50E 00 | 3 |
| 15 B 203* | | | 1,2,4,5-TETRAMETHYLBENZENE | T | 1.30E 03 | 6.50E-01 | 2.50E 00 | 3 |
| 15 B 202* | | | 1,2,3,5-TETRAMETHYLBENZENE | T | 1.30E 03 | 6.50E-01 | 2.50E 00 | 3 |
| 65 A 010 | | | VANADIUM | S | 1.90E 01 | 6.33E-01 | 2.40E 00 | |
| 08 A 103* | | | CAPRIC ACID | T | 1.10E 03 | 6.11E-01 | 2.32E 00 | 7 |
| 08 A 102* | | | CAPRYLIC ACID | T | 1.10E 03 | 6.11E-01 | 2.32E 00 | 7 |
| 08 A 100* | | | SATURATED LONG CHAIN ACIDS (MW:116-201) | T | 1.10E 03 | 6.11E-01 | 2.32E 00 | 7 |
| 08 A 101* | | | CAPROIC ACID | T | 1.10E 03 | 6.11E-01 | 2.32E 00 | 7 |
| 08 A 104* | | | LAURIC ACID | T | 1.10E 03 | 6.11E-01 | 2.32E 00 | 7 |
| 08 A 180* | | | ADIPIC ACID | T | 1.10E 03 | 5.80E-01 | 2.20E 00 | 7 |

# CYCLONE DUST, ECOLOGY IMPACT

| DMEG NO. | | COMPOUND NAME | TYPE | CONC E-6 G/G | DS | WDS G/S | LCCAT |
|---|---|---|---|---|---|---|---|
| 08 B 060* | W | B-PROPIOLACTONE | T | 1.10E 03 | 5.50E-01 | 2.10E 00 | 7 |
| 08 A 080* | | VALERIC ACID | T | 7.70E 02 | 5.13E-01 | 2.00E 00 | 5 |
| 15 B 020* | | INDAN | T | 1.40E 02 | 5.00E-01 | 1.90E 00 | 2 |
| 09 B 042* | | B-NAPHTHONITRILES | T | 7.70E 02 | 4.81E-01 | 1.82E 00 | 5 |
| 09 B 040* | W | NAPHTHONITRILES | T | 7.70E 02 | 4.81E-01 | 1.82E 00 | 5 |
| 09 B 020* | W | BENZONITRILE | T | 7.70E 02 | 4.81E-01 | 1.82E 00 | 5 |
| 09 B 041* | | A-NAPHTHONITRILES | T | 7.70E 02 | 4.81E-01 | 1.82E 00 | 5 |
| 33 A 010 | | MAGNESIUM | D | 7.80E 03 | 4.60E-01 | 1.74E 00 | |
| 08 A 104* | | LAURIC ACID | T | 7.70E 02 | 4.30E-01 | 1.62E 00 | 5 |
| 08 A 100* | | SATURATED LONG CHAIN ACIDS (MW:116-201) | T | 7.70E 02 | 4.30E-01 | 1.62E 00 | 5 |
| 08 A 103* | | CAPRIC ACID | T | 7.70E 02 | 4.30E-01 | 1.62E 00 | 5 |
| 08 A 102* | | CAPRYLIC ACID | T | 7.70E 02 | 4.30E-01 | 1.62E 00 | 5 |
| 08 A 101* | | CAPROIC ACID | T | 7.70E 02 | 4.30E-01 | 1.62E 00 | 5 |
| 08 A 180* | | ADIPIC ACID | T | 7.70E 02 | 4.10E-01 | 1.53E 00 | 5 |
| 23 A 020* | W | PYRIDINE | T | 7.70E 02 | 3.90E-01 | 1.50E 00 | 5 |
| 08 D 080* | | METHYL METHACRYLATE | T | 7.70E 02 | 3.90E-01 | 1.50E 00 | 5 |
| 10 A 160* | | CYCLOHEXYLAMINE | T | 7.70E 02 | 3.90E-01 | 1.50E 00 | 5 |
| 23 A 083* | | 4-PHENYLPYRIDINE | T | 7.70E 02 | 3.90E-01 | 1.50E 00 | 5 |
| 08 B 060* | W | B-PROPIOLACTONE | T | 7.70E 02 | 3.90E-01 | 1.50E 00 | 5 |
| 05 A 100* | W | ISUBUTYL ALCOHOL | T | 7.70E 02 | 3.90E-01 | 1.50E 00 | 5 |
| 05 A 120* | W | PENTANOLS (PRIMARY) | T | 7.70E 02 | 3.90E-01 | 1.50E 00 | 5 |
| 17 B 060* | W | 1-CHLORO-4-NITROBENZENE | T | 7.70E 02 | 3.90E-01 | 1.50E 00 | 5 |
| 23 A 121* | | 5-ETHYL-2-METHYLPYRIDINE | T | 7.70E 02 | 3.90E-01 | 1.50E 00 | 5 |
| 23 A 064* | | 4-N-PROPYLPYRIDINE | T | 7.70E 02 | 3.90E-01 | 1.50E 00 | 5 |
| 10 A 060* | | ETHANOLAMINE | T | 7.70E 02 | 3.90E-01 | 1.50E 00 | 5 |
| 23 A 080* | W | PHENYLPYRIDINES | T | 7.70E 02 | 3.90E-01 | 1.50E 00 | 5 |
| 08 D 100* | | PROPYL ACETATES | T | 7.70E 02 | 3.90E-01 | 1.50E 00 | 5 |
| 03 B 020* | | 1,4-DIOXANE | T | 7.70E 02 | 3.90E-01 | 1.50E 00 | 5 |
| 23 A 081* | | 2-PHENYLPYRIDINE | T | 7.70E 02 | 3.90E-01 | 1.50E 00 | 5 |
| 23 A 061* | | 2-ETHYLPYRIDINE | T | 7.70E 02 | 3.90E-01 | 1.50E 00 | 5 |
| 05 A 122* | | 2-METHYL-1-BUTANOL | T | 7.70E 02 | 3.90E-01 | 1.50E 00 | 5 |
| 23 A 082* | | 3-PHENYLPYRIDINE | T | 7.70E 02 | 3.90E-01 | 1.50E 00 | 5 |
| 05 A 140* | W | BENZYL ALCOHOL | T | 7.70E 02 | 3.90E-01 | 1.50E 00 | 5 |
| 23 A 062* | | 3-ETHYLPYRIDINE | T | 7.70E 02 | 3.90E-01 | 1.50E 00 | 5 |

CYCLONE DUST, ECOLOGY IMPACT

| DMEG NO. | | | COMPOUND NAME | TYPE | CONC E-6 G/G | DS | WDS G/S | LOCAT |
|---|---|---|---|---|---|---|---|---|
| 06 A 020* | | W | ETHYLENE GLYCOL | T | 7.70E 02 | 3.90E-01 | 1.50E 00 | 5 |
| 23 A 120* | | W | COLLIDINES | T | 7.70E 02 | 3.90E-01 | 1.50E 00 | 5 |
| 23 A 060* | | W | MONOSUBSTITUTED ALKYL PYRIDINES | T | 7.70E 02 | 3.90E-01 | 1.50E 00 | 5 |
| 23 A 063* | | | 4-ETHYLPYRIDINE | T | 7.70E 02 | 3.90E-01 | 1.50E 00 | 5 |
| 05 A 121* | | | N-PENTANOL | T | 7.70E 02 | 3.90E-01 | 1.50E 00 | 5 |
| 10 B 100* | | | MORPHOLINE | T | 7.70E 02 | 3.90E-01 | 1.50E 00 | 5 |
| 08 D 101* | | | N-PROPYL ACETATE | T | 7.70E 02 | 3.90E-01 | 1.50E 00 | 5 |
| 05 A 123* | | | 2,2-DIMETHYL-1-PROPANOL | T | 7.70E 02 | 3.90E-01 | 1.50E 00 | 5 |
| 04 B 040* | P | W | 1,1'-DICHLORODIETHYL ETHER | T | 7.70E 02 | 3.90E-01 | 1.50E 00 | 5 |
| 05 A 124* | | | 3-METHYL-1-BUTANOL | T | 7.70E 02 | 3.90E-01 | 1.50E 00 | 5 |
| 04 B 080* | | W | 2,2'-DICHLORODIETHYL ETHER | T | 7.70E 02 | 3.90E-01 | 1.50E 00 | 5 |
| 17 B 040* | | W | 1-CHLORO-2-NITROBENZENE | T | 7.70E 02 | 3.90E-01 | 1.50E 00 | 5 |
| 23 A 122* | | | 2,4,6-COLLIDINE | T | 7.70E 02 | 3.90E-01 | 1.50E 00 | 5 |
| 07 B 100* | | W | CAMPHOR | T | 7.70E 02 | 3.50E-01 | 1.33E 00 | 5 |
| 08 A 140* | | | OLEIC ACID | T | 1.10E 03 | 2.70E-01 | 1.01E 00 | 7 |
| 07 B 120* | | | ACETOPHENONE | T | 7.70E 02 | 2.50E-01 | 9.43E-01 | 5 |
| 68 A 010 | P | | CHROMIUM | S | 1.10E 01 | 2.20E-01 | 8.40E-01 | |
| 79 A 010 | P | | SILVER | S | 2.00E 00 | 2.00E-01 | 7.60E-01 | |
| 08 A 140* | | | OLEIC ACID | T | 7.70E 02 | 1.90E-01 | 7.13E-01 | 5 |
| 05 A 080* | | | N-BUTANOL | T | 3.40E 03 | 1.70E-01 | 6.50E-01 | 6 |
| 08 D 320* | P | | BUTYL BENZYL PHTHALATE | T | 3.40E 03 | 1.70E-01 | 6.50E-01 | 6 |
| 05 C 040* | | W | T-PENTANOL | T | 3.40E 03 | 1.70E-01 | 6.50E-01 | 6 |
| 06 A 040* | | | PROPYLENE GLYCOL | T | 3.40E 03 | 1.70E-01 | 6.50E-01 | 6 |
| 08 B 080* | | | Y-BUTYROLACTONE | T | 3.40E 03 | 1.70E-01 | 6.50E-01 | 6 |
| 74 A 010 | | | COBALT | S | 5.00E 00 | 1.00E-01 | 3.80E-01 | |
| 27 A 010 | | | LITHIUM | S | 6.00E 00 | 8.00E-02 | 3.03E-01 | |
| 15 B 203* | | | 1,2,4,5-TETRAMETHYLBENZENE | T | 1.40E 02 | 7.00E-02 | 2.70E-01 | 2 |
| 15 B 200* | | | TETRAMETHYLBENZENES | T | 1.40E 02 | 7.00E-02 | 2.70E-01 | 2 |
| 15 B 201* | | | 1,2,3,4-TETRAMETHYLBENZENE | T | 1.40E 02 | 7.00E-02 | 2.70E-01 | 2 |
| 15 B 202* | | | 1,2,3,5-TETRAMETHYLBENZENE | T | 1.40E 02 | 7.00E-02 | 2.70E-01 | 2 |
| 08 B 080* | | | Y-BUTYROLACTONE | T | 1.10E 03 | 5.50E-02 | 2.10E-01 | 7 |
| 83 A 010 | P | | MERCURY | D | < 2.30E 00 | < 4.60E-02 | < 1.74E-01 | |
| 05 C 040* | | W | T-PENTANOL | T | 7.70E 02 | 3.90E-02 | 1.50E-01 | 5 |
| 08 D 320* | P | | BUTYL BENZYL PHTHALATE | T | 7.70E 02 | 3.90E-02 | 1.50E-01 | 5 |

CYCLONE DUST, ECOLOGY IMPACT

| DMEG NO. | | COMPOUND NAME | TYPE | CONC E-6 G/G | DS | WDS G/S | LOCAT |
|---|---|---|---|---|---|---|---|
| 06 A 040* | | PROPYLENE GLYCOL | T | 7.70E 02 | 3.90E-02 | 1.50E-01 | 5 |
| 08 B 080* | | Y-BUTYROLACTONE | T | 7.70E 02 | 3.90E-02 | 1.50E-01 | 5 |
| 05 A 080* | | N-BUTANOL | T | 7.70E 02 | 3.90E-02 | 1.50E-01 | 5 |
| 32 A 010 | P | BERYLLIUM | S | 4.00E-01 | 3.63E-02 | 1.40E-01 | |
| 37 A 010 | | BORON | D | 1.10E 02 | 2.20E-02 | 8.40E-02 | |
| 50 A 010 | P | ANTIMONY | D | < 4.00E-01< | 1.00E-02< | 3.80E-02 | |
| 85 A 010 | | URANIUM | S | 9.00E-01 | 9.00E-03 | 3.42E-02 | |
| 69 A 010 | | MOLYBDENUM | S | 2.00E 00 | 1.42E-03 | 5.42E-03 | |
| 12 A 060* | P | N-NITROSODIPROPYLAMINE | T | 3.40E 03 | 0.00E-01 | 0.00E-01 | 6 |
| 02 B 140* | P | HEXACHLOROCYCLOPENTADIENE | T | 2.60E 03 | 0.00E-01 | 0.00E-01 | 1 |
| 02 B 140* | P | HEXACHLOROCYCLOPENTADIENE | T | 1.40E 02 | 0.00E-01 | 0.00E-01 | 2 |
| 04 A 160* | P | A-CHLOROBUTYL ETHYL ETHER | T | 7.70E 02 | 0.00E-01 | 0.00E-01 | 5 |
| 43 A 010 | | SILICON | D | 1.80E 04 | 0.00E-01 | 0.00E-01 | |
| 02 B 120* | P | HEXACHLOROBUTADIENE | T | 2.60E 03 | 0.00E-01 | 0.00E-01 | 1 |
| 51 A 010 | | BISMUTH | S | 3.00E-01 | 0.00E-01 | 0.00E-01 | |
| 04 A 140* | P | 2-CHLOROETHYL VINYL ETHER | T | 1.40E 03 | 0.00E-01 | 0.00E-01 | 4 |
| 12 A 040* | P | N-NITROSODIETHYLAMINE | T | 3.40E 03 | 0.00E-01 | 0.00E-01 | 6 |
| 04 A 140* | P | 2-CHLOROETHYL VINYL ETHER | T | 7.70E 02 | 0.00E-01 | 0.00E-01 | 5 |
| 04 A 160* | P | A-CHLOROBUTYL ETHYL ETHER | T | 1.40E 03 | 0.00E-01 | 0.00E-01 | 4 |
| 02 A 140* | P | DIBROMOCHLOROMETHANE | T | 2.60E 03 | 0.00E-01 | 0.00E-01 | 1 |
| 02 B 120* | P | HEXACHLOROBUTADIENE | T | 1.40E 02 | 0.00E-01 | 0.00E-01 | 2 |
| 02 A 160* | P | BROMOFORM | T | 2.60E 03 | 0.00E-01 | 0.00E-01 | 1 |
| 84 F 010 | | DYSPROSIUM | S | 6.00E-01 | 0.00E-01 | 0.00E-01 | |
| 56 A 010 | | FLUORINE (AS F-) | S | 2.80E 02 | 0.00E-01 | 0.00E-01 | |
| 39 A 010 | | GALLIUM | S | 3.30E 01 | 0.00E-01 | 0.00E-01 | |
| 28 A 010 | | SODIUM | D | 1.10E 04 | 0.00E-01 | 0.00E-01 | |
| 35 A 010 | | STRONTIUM | D | 1.40E 03 | 0.00E-01 | 0.00E-01 | |
| 53 A 010 | | SULFUR | D | 1.10E 04 | 0.00E-01 | 0.00E-01 | |
| 02 A 140* | P | DIBROMOCHLOROMETHANE | T | 1.40E 02 | 0.00E-01 | 0.00E-01 | 2 |
| 12 A 040* | P | N-NITROSODIETHYLAMINE | T | 7.70E 02 | 0.00E-01 | 0.00E-01 | 5 |
| 21 A 140* | P | ANTHRACENE | T | 1.30E 03 | 0.00E-01 | 0.00E-01 | 3 |
| 12 A 060* | P | N-NITROSODIPROPYLAMINE | T | 7.70E 02 | 0.00E-01 | 0.00E-01 | 5 |
| 21 A 180* | P | PHENANTHRENE | T | 1.30E 03 | 0.00E-01 | 0.00E-01 | 3 |
| 57 A 010 | | CHLORINE (AS CL-) | D | 5.70E 01 | 0.00E-01 | 0.00E-01 | |

CYCLONE DUST, ECOLOGY IMPACT

| DMEG NO. | COMPOUND NAME | TYPE | CONC E-6 G/G | DS | WDS G/S | LCCAT |
|---|---|---|---|---|---|---|
| 21 B 040* P | BENZ(A)ANTHRACENE | T | 1.30E 03 | 0.00E-01 | 0.00E-01 | 3 |
| 21 B 120* P | CHRYSENE | T | 1.40E 02 | 0.00E-01 | 0.00E-01 | 2 |
| 21 B 120* P | CHRYSENE | T | 1.30E 03 | 0.00E-01 | 0.00E-01 | 3 |
| 21 B 180* P | PYRENE | T | 1.40E 02 | 0.00E-01 | 0.00E-01 | 2 |
| 21 B 180* P | PYRENE | T | 1.30E 03 | 0.00E-01 | 0.00E-01 | 3 |
| 29 A 010 | POTASSIUM | D | 1.30E 03 | 0.00E-01 | 0.00E-01 | |
| 21 C 080* P | DIBENZ(A,H)ANTHRACENE | T | 1.30E 03 | 0.00E-01 | 0.00E-01 | 3 |
| 21 C 100* P | BENZO(A)PYRENE | T | 1.40E 02 | 0.00E-01 | 0.00E-01 | 2 |
| 21 C 100* P | BENZO(A)PYRENE | T | 1.30E 03 | 0.00E-01 | 0.00E-01 | 3 |
| 21 D 080* PH | BENZO(GHI)PERYLENE | T | 1.40E 02 | 0.00E-01 | 0.00E-01 | 2 |
| 21 D 080* PH | BENZO(GHI)PERYLENE | T | 1.30E 03 | 0.00E-01 | 0.00E-01 | 3 |
| 12 A 020* P | N-NITROSODIMETHYLAMINE | T | 3.40E 03 | 0.00E-01 | 0.00E-01 | 6 |
| 12 A 020* P | N-NITROSODIMETHYLAMINE | T | 7.70E 02 | 0.00E-01 | 0.00E-01 | 5 |
| 22 B 040* P | FLUORANTHENE | T | 1.40E 02 | 0.00E-01 | 0.00E-01 | 2 |
| 58 A 010 | BROMINE | S | 9.00E 00 | 0.00E-01 | 0.00E-01 | |
| 22 C 020* P | BENZO(K)FLUORANTHENE | T | 1.40E 02 | 0.00E-01 | 0.00E-01 | 2 |
| 84 B 010 | CERIUM | S | 1.50E 01 | 0.00E-01 | 0.00E-01 | |
| 31 A 010 | CESIUM | S | 7.00E-01 | 0.00E-01 | 0.00E-01 | |
| 22 C 080* P | BENZO(B)FLUORANTHENE | T | 1.30E 03 | 0.00E-01 | 0.00E-01 | 3 |
| 22 D 020* P | INDENO(1,2,3-CD)PYRENE | T | 1.40E 02 | 0.00E-01 | 0.00E-01 | 2 |
| 22 D 020* P | INDENO(1,2,3-CD)PYRENE | T | 1.30E 03 | 0.00E-01 | 0.00E-01 | 3 |
| 04 A 180* P | CHLOROPHENYL PHENYL ETHER | T | 1.40E 03 | 0.00E-01 | 0.00E-01 | 4 |
| 04 A 180* P | CHLOROPHENYL PHENYL ETHER | T | 7.70E 02 | 0.00E-01 | 0.00E-01 | 5 |
| 04 B 020* P | 1,1'-DICHLOROMETHYL ETHER | T | 1.40E 03 | 0.00E-01 | 0.00E-01 | 4 |
| 04 B 020* P | 1,1'-DICHLOROMETHYL ETHER | T | 7.70E 02 | 0.00E-01 | 0.00E-01 | 5 |
| 44 A 010 | GERMANIUM | S | 6.00E 00 | 0.00E-01 | 0.00E-01 | |
| 59 A 010 | IODINE (AS I-) | S | 4.00E-01 | 0.00E-01 | 0.00E-01 | |
| 84 A 010 | LANTHANUM | S | 8.00E 00 | 0.00E-01 | 0.00E-01 | |
| 16 A 200* P | CHLORONAPHTHALENES | T | 1.40E 02 | 0.00E-01 | 0.00E-01 | 2 |
| 16 A 200* P | CHLORONAPHTHALENES | T | 1.30E 03 | 0.00E-01 | 0.00E-01 | 3 |
| 21 A 180* P | PHENANTHRENE | T | 1.40E 02 | 0.00E-01 | 0.00E-01 | 2 |
| 84 D 010 | NEODYMIUM | S | 3.00E 00 | 0.00E-01 | 0.00E-01 | |
| 21 B 040* P | BENZ(A)ANTHRACENE | T | 1.40E 02 | 0.00E-01 | 0.00E-01 | 2 |
| 66 A 010 | NIOBIUM (AS NB+3) | S | 5.00E 00 | 0.00E-01 | 0.00E-01 | |

## CYCLONE DUST, ECOLOGY IMPACT

| DMEG NO. | | COMPOUND NAME | TYPE | CONC E-6 G/G | DS | WDS G/S | LCCAT |
|---|---|---|---|---|---|---|---|
| 84 C 010 | | PRASEODYMIUM | S | 2.00E 00 | 0.00E-01 | 0.00E-01 | |
| 30 A 010 | | RUBIDIUM (AS RB+) | S | 3.00E 00 | 0.00E-01 | 0.00E-01 | |
| 84 E 010 | | SAMARIUM | S | 2.00E 00 | 0.00E-01 | 0.00E-01 | |
| 60 A 010 | | SCANDIUM | S | 5.00E 00 | 0.00E-01 | 0.00E-01 | |
| 21 C 080* | P | DIBENZ(A,H)ANTHRACENE | T | 1.40E 02 | 0.00E-01 | 0.00E-01 | 2 |
| 55 A 010 | | TELLURIUM | S | 2.00E-01 | 0.00E-01 | 0.00E-01 | |
| 41 A 010 | P | THALLIUM | S | 9.00E-01 | 0.00E-01 | 0.00E-01 | |
| 85 B 010 | | THORIUM | S | 2.00E 00 | 0.00E-01 | 0.00E-01 | |
| 45 A 010 | | TIN | S | 2.00E 00 | 0.00E-01 | 0.00E-01 | |
| 70 A 010 | | TUNGSTEN | S | < 7.00E-01 | < 0.00E-01 | < 0.00E-01 | |
| 22 A 020* | PH | FLUORENE | T | 1.40E 02 | 0.00E-01 | 0.00E-01 | 2 |
| 22 A 020* | PH | FLUORENE | T | 1.30E 03 | 0.00E-01 | 0.00E-01 | 3 |
| 61 A 010 | | YTTRIUM (AS Y+3) | S | 1.30E 01 | 0.00E-01 | 0.00E-01 | |
| 22 B 040* | P | FLUORANTHENE | T | 1.30E 03 | 0.00E-01 | 0.00E-01 | 3 |
| 63 A 010 | | ZIRCONIUM (AS ZR+4) | S | 2.90E 01 | 0.00E-01 | 0.00E-01 | |
| 22 C 020* | P | BENZO(K)FLUORANTHENE | T | 1.30E 03 | 0.00E-01 | 0.00E-01 | 3 |
| 22 C 080* | P | BENZO(B)FLUORANTHENE | T | 1.40E 02 | 0.00E-01 | 0.00E-01 | 2 |
| 07 B 080* | P | ISOPHORONE | T | 7.70E 02 | 0.00E-01 | 0.00E-01 | 5 |
| 07 B 080* | P | ISOPHORONE | T | 3.40E 03 | 0.00E-01 | 0.00E-01 | 6 |
| 08 D 300* | P | DI-2-ETHYLHEXYL PHTHALATE | T | 7.70E 02 | 0.00E-01 | 0.00E-01 | 5 |
| 08 D 300* | P | DI-2-ETHYLHEXYL PHTHALATE | T | 3.40E 03 | 0.00E-01 | 0.00E-01 | 6 |
| 02 A 160* | P | BROMOFORM | T | 1.40E 02 | 0.00E-01 | 0.00E-01 | 2 |
| 02 A 320* | P | HEXACHLOROETHANE | T | 2.60E 03 | 0.00E-01 | 0.00E-01 | 1 |
| 02 A 320* | P | HEXACHLOROETHANE | T | 1.40E 02 | 0.00E-01 | 0.00E-01 | 2 |
| 21 A 100* | PH | ACENAPHTHENE | T | 1.40E 02 | 0.00E-01 | 0.00E-01 | 2 |
| 21 A 100* | PH | ACENAPHTHENE | T | 1.30E 03 | 0.00E-01 | 0.00E-01 | 3 |
| 21 A 120* | PH | ACENAPHTHYLENE | T | 1.40E 02 | 0.00E-01 | 0.00E-01 | 2 |
| 21 A 120* | PH | ACENAPHTHYLENE | T | 1.30E 03 | 0.00E-01 | 0.00E-01 | 3 |
| 21 A 140* | P | ANTHRACENE | T | 1.40E 02 | 0.00E-01 | 0.00E-01 | 2 |

APPENDIX F

# LEVEL 1 EPA HEALTH EFFECTS TESTS ON COAL GASIFICATION SAMPLES

Final Report

to

RADIAN CORPORATION

P.O. Box 9948

Austin, TX 78766

ADL Reference C-82986

Subcontract under EPA Prime Contract 68-01-4136

(Task 15, Subtask 03)

*May 31, 1979*

TABLE OF CONTENTS


| | | Page |
|---|---|---|
| I. | INTRODUCTION | 1 |
| II. | SUMMARY OF RESULTS | 2 |
| III. | SPECIAL HANDLING OF SAMPLES | 3 |
| IV. | SALMONELLA MUTAGENESIS ASSAY (AMES) OF SAMPLES T.E. 2276, GASIFIER ASH; T.E. 2277, CYCLONE DUST; FS-26, CYCLONE QUENCH WATER; FS-1-714-2, ASH SLUICE WATER; 358-714, SASS TEST BURNER COMPOSITE; AND 647-714, SASS PRODUCT GAS COMPOSITE | 6 |
| | Summary | 6 |
| | Methods and Materials | 6 |
| | Results | 8 |
| V. | *IN VITRO* CYTOTOXICITY ASSAYS | 12 |
| | A. WI-38 ASSAY OF SAMPLES FS-26, CYCLONE QUENCH WATER; FS-1-714-2, ASH SLUICE WATER; 647-714, SASS TEST BURNER COMPOSITE; AND 358-714, SASS PRODUCT GAS COMPOSITE | 12 |
| | Summary | 12 |
| | Materials and Methods | 12 |
| | Results | 14 |
| | B. RABBIT ALVEOLAR MACROPHAGE (RAM) ASSAY OF SAMPLES T.E. 2276, GASIFIER ASH; AND T.E. 2277, CYCLONE DUST | 19 |
| | Summary | 19 |
| | Materials and Methods | 19 |
| | Results | 20 |
| VI. | ACUTE *IN VIVO* TOXICOLOGICAL TEST OF SAMPLES T.E. 2276, T.E. 2277, FS-1-714-2, FS-26 AND 358-714 IN RODENTS - QUANTAL RESPONSE | 23 |
| | Summary | 23 |
| | Materials and Methods | 23 |
| | Results | 25 |

# I. INTRODUCTION

Arthur D. Little, Inc., Cambridge, MA 02140, conducted Level 1 EPA Health Effects Tests on Coal Gasification Samples for the Radian Corporation. This study was begun on March 6, 1979, and completed on May 31, 1979. Samples are identified and described in Section III.

The test matrix conducted is given below:

## Test Matrix

| | | Bioassay | | | |
|---|---|---|---|---|---|
| Sample No. | Description | Ames | WI-38 | RAM | Rodent |
| T.E. 2276 | Gasifier Ash | x | | x | x |
| T.E. 2277 | Cyclone Dust | x | | x | x |
| FS-26 | Cyclone Quench Water | x | x | | x |
| FS-1-714-2 | Composite of Ash Sluice Water #'s 44, 54, 69 | x | x | | x |
| 647-714 | SASS Test Burner Composite | x | x | | |
| 358-714 | SASS Product Gas Composite | x | x | | x |

## II. SUMMARY OF RESULTS

In the Ames assay, no sample appeared to be mutagenic for any tester strain with or without metabolic activation. Sample 358-714 (SASS Product Gas Composite) was extremely toxic to the tester strains and could only be tested at concentrations less than 10 μl/plate.

In the WI-38 assay, samples FS-1-714-2 (Composite of Ash Sluice Water) and 358-714 (SASS Product Gas Composite) were moderately toxic. Samples FS-26 (Cyclone Quench Water) and 647-714 (SASS Test Burner Composite) were not cytotoxic at the highest concentrations tested (600 and 80 μl/ml).

In the RAM assay, samples T.E. 2276 (Gasifier Ash) and T.E. 2277 (Cyclone Dust) gave no detectable toxicity at 1,000 μg/ml.

In the Rodent Acute Toxicity (Quantal) Test, samples T.E. 2276 (Gasifier Ash), T.E. 2277 (Cyclone Dust), FS-26 (Cyclone Quench Water), FS-1-714-2 (Composite of Ash Sluice Water), and 358-714 (SASS Product Gas Composite) caused no deaths. The data indicate that the single-dose oral $LD_{50}$ value for each of these materials is greater than 10.0 gm/kg or 10.0 ml/kg.

## III. SPECIAL HANDLING OF SAMPLES

The following six samples were received at Arthur D. Little, Inc., on March 6, 1979, from D. Scott Lewis, Analytical Chemistry Division, Radian Corporation:

| Sample No. | Description As Received |
|---|---|
| T.E. 2276 | Gasifier Ash |
| T.E. 2277 | Cyclone Dust |
| FS-26 | Cyclone Quench Water |
| FS-1-714-2 | Composite of Ash Sluice Water #'s 44, 54, 69 |
| 647-714* | SASS Test Burner Composite |
| 358-714* | SASS Product Gas Composite |

* Solvent exchanged with dimethylsulfoxide (DMSO) before assay. See text below.

Composition and stability of these materials was unknown. Residual samples remaining from the conduct of these bioassays have been returned to the Radian Corporation.

The solvents used in the bioassays are shown below:

| Sample No. | Solvent Used | | |
|---|---|---|---|
| | Ames | In Vitro Cytotoxicity | Rodent |
| T.E. 2276 | Dimethylsulfoxide (suspension) | Tissue Culture Medium | Saline |
| T.E. 2277 | Dimethylsulfoxide (suspension) | Tissue Culture Medium | Saline |
| FS-26 | Sterile water | Tissue Culture Medium | None |
| FS-1-714-2 | Sterile water | Tissue Culture Medium | None |
| 647-714 | Dimethylsulfoxide | Tissue Culture Medium | Not done |
| 358-714 | Dimethylsulfoxide | Tissue Culture Medium | None |

## Sterility

All samples were tested for sterility upon receipt. Liquid samples FS-26 and FS-1-714-2 were tested by inoculation into Trypticase Soy Broth (TSB), Thioglycollate Broth (THIO), and by streaking on nutrient agar plates. Broth tubes were incubated at 37°C and at room temperature for a period of one week. Nutrient agar plates were incubated at 37°C for one week. Solid samples T.E. 2276 and T.E. 2277 were inoculated onto nutrient agar plates and incubated at 37°C for one week. FS-26 proved to be grossly contaminated in TSB and THIO at room temperature; all other sterility checks were negative. FS-1-714-2 was grossly contaminated in all tubes at both 37°C and room temperature and the nutrient agar plates were free of contamination. Solid sample T.E. 2276 showed mold contamination and T.E. 2277 showed no contamination. Even though both liquid samples and sample T.E. 2276 showed contamination (in the sterility tests described above), we chose not to filter-sterilize these materials to avoid loss of sample on the filters. Instead, we spot-tested the samples directly in the Ames assay medium, the liquids at 250 µl/plate, and the solid at 2,000 µg/plate, all in duplicate. In this less rigorous test, no microbial contaminants grew; therefore, the materials were tested as received. Samples 647-714 and 358-714 were solvent-exchanged into DMSO upon receipt and were therefore not tested for sterility.

## Solvent Exchange Procedure

Samples 647-714 (SASS Test Burner Composite) and 358-714 (SASS Product Gas Composite) were methylene chloride extracts in 1:1 methylene chloride and ethyl ether. These two samples required solvent exchange, outlined below, before bioassay.

## Protocol for Solvent Exchange of Extracts in Methylene Chloride and Ethyl Ether into Dimethylsulfoxide (DMSO)

Sample 647-714 - SASS Test Burner Composite (333 ml)
Sample 358-714 - SASS Product Gas Composite (412 ml)

↓

Sample 647-714 was transferred to a flask containing 333 ml DMSO.
Sample 358-714 was transferred to a flask containing 412 ml DMSO.

↓

Samples were mixed for one minute.

↓

Methylene chloride and ethyl ether were removed under a stream of nitrogen gas at 30°C for 6 hours.

| | |
|---|---|
| ↓ | ↓ |
| SASS Test Burner Composite | SASS Product Gas Composite |
| DMSO volume, 118.0 ml | DMSO volume, 124.0 ml |
| ↓ | ↓ |
| 48.5 ml DMSO added | 13.3 ml DMSO added |
| ↓ | ↓ |
| Final volume, 166.5 ml | Final volume, 137.3 ml |
| 2X original concentration | 3X original concentration |

Resulting solvent-exchanged samples were concentrated 2X or 3X with respect to original volumes received. Doses and $EC_{50}$ in bioassays are expressed in terms of original sample volumes.

## IV. SALMONELLA MUTAGENESIS ASSAY (AMES) OF SAMPLES T.E. 2276, GASIFIER ASH; T.E. 2277, CYCLONE DUST; FS-26, CYCLONE QUENCH WATER; FS-1-714-2, ASH SLUICE WATER; 358-714, SASS TEST BURNER COMPOSITE; AND 647-714, SASS PRODUCT GAS COMPOSITE

### SUMMARY

All samples were assayed in duplicate in the plate incorporation assay of Ames against *Salmonella typhimurium* strains TA-98, TA-100, TA-1535, TA-1537 and TA-1538 with and without metabolic activation. Solid samples were tested at four log doses, the highest dose being either 10 or 1 mg/plate depending upon the compatibility of the sample with the test system. Liquid samples were tested at 250, 200, 150 and 100 µl/plate except for sample 358-714 which was extremely toxic and could only be tested at 10, 2, 0.4 and 0.08 µl/plate.

No sample appeared to be mutagenic in the presence or absence of metabolic activation.

### MATERIALS AND METHODS

The above samples were tested in the plate incorporation mutagenesis assay of Ames. The *Salmonella typhimurium* strains TA-98, TA-100, TA-1535, TA-1537 and TA-1538 used in this study were obtained from Dr. Bruce N. Ames. The protocol for the assay is described in the IERL-RTP Procedures Manual, Level 1, EPA 600/6-77-04, April, 1977. The assay was conducted with and without metabolic activation (S-9) in a culture medium which contains insufficient histidine to allow the tester strains to proliferate sufficiently to give colonies. After incubation at 37°C for 48 hours, the mutant colonies (formed by $his^+$ revertants) are counted. Results are reported as total number of revertants per plate and the standard error of the mean is calculated.

Briefly, in this assay 0.5 ml of the test organism, 1.0 ml of the histidine/biotin supplement and 0.1 ml of the appropriate solid sample dilution (or 1.5 ml of the appropriate liquid dilution) were added to 10.0 ml of 0.6% molten top agar (or 9.0 ml of 0.6% molten top agar for liquid samples). Two ml of this molten top agar mixture was then pipetted onto each of duplicate Minimal Glucose Agar plates with and without 0.5 ml/plate of the S-9 mixture (Aroclor-induced rat S-9 prepared at Arthur D. Little, Inc., on July 18, 1978).

Solid sample T.E. 2276, Gasifier Ash, was tested at four log doses, the highest dose being 10 mg/plate. Solid sample T.E. 2277, Cyclone Dust, was tested at four log doses, the highest dose being 1.0 mg/plate. A higher dose of T.E. 2276 could not be dispensed because of its viscosity. Both solids were tested as suspensions. Liquid samples FS-26, Cyclone Quench Water; FS-1-714-2, Composite of Ash Sluice Water; 647-714, SASS Test Burner Composite, and 358-714, SASS Product Gas Composite, were tested at 250 µl/plate, 200 µl/plate, 150 µl/plate and 100 µl/plate. Liquid sample 358-714 was highly toxic at all of these doses and at 50 µl/plate; this sample was therefore assayed at 10 µl/plate, 2.0 µl/plate, 0.4 µl/plate and 0.08 µl/plate.

Controls which were included in every experiment consisted of negative (solvent) controls for the spontaneous reversion rate for each tester strain, and the positive controls listed below, compounds which do and do not require metabolic activation. Positive controls were made up fresh the day of the assay.

| Tester Strain | Positive Control Chemicals<br>Non-Activation (-S-9) |
|---|---|
| TA-98 | Daunomycin, 10 μg/plate |
| TA-100 | Methylmethane sulfonate, 50 μg/plate |
| TA-1535 | N-methyl-N'-nitro-N-nitrosoguanidine, 50 μg/plate |
| TA-1537 | 9-Aminoacridine, 50 μg/plate |
| TA-1538 | 2-Nitrofluorene, 10 μg/plate |
| | Activation (+S-9) |
| All Strains | 2-Anthramine, 10 μg/plate |

## RESULTS

Results are presented in the following tables.

No mutagenic activity was evident in any sample.

Sample T.E. 2276 was moderately toxic at the top dose of 10 mg/plate.

Sample 358-714 was highly toxic at all four doses in the initial assay (250, 200, 150, and 100 μl/plate). It was also toxic at 50 μl/plate. At 10 μl/plate it was toxic to TA-98 and TA-1538 without metabolic activation and to TA-100 both with and without metabolic activation.

Senior Technician Evaluating Material — Elizabeth M. Mochen, B.S.

Case Leader, Senior Staff — Mildred G. Broome, Ph.D.

Section Leader, Bio/Medical Sciences Section — Andrew Sivak, Ph.D.

## AMES ASSAY

## CYCLONE QUENCH WATER #FS-26 AND

## COMPOSITE OF ASH SLUICE WATER #1-714-2

| | Revertants Per Plate* | | | | | | | | | |
|---|---|---|---|---|---|---|---|---|---|---|
| | TA-98 | | TA-1538 | | TA-100 | | TA-1535 | | TA-1537 | |
| | -S9 | +S9 | -S9 | +S9 | -S9 | +S9 | -S9 | +S9 | -S9 | +S9 |
| Control | 20 ± 4 | 24 ± 5 | 15 ± 3 | 16 ± 1 | 104 ± 2 | 112 ± 1 | 10 ± 2 | 11 ± 1 | 6 ± 1 | 7 ± 1 |
| 2-Anthramine** (10 μg/plate) | 21 ± 1 | >500 | 14 ± 1 | >500 | 118 ± 1 | >500 | 7 ± 0 | 49 ± 3 | 9 ± 1 | 82 ± 4 |
| Daunomycin*** (10 μg/plate) | >500 | >500 | | | | | | | | |
| 2-Nitrofluorene** (10 μg/plate) | | | >500 | 262 ± 17 | | | | | | |
| Methylmethane sulfonate** (50 μg/plate) | | | | | 179 ± 9 | 234 ± 11 | | | | |
| N-methyl-N'-nitro-N-nitrosoguanidine** (50 μg/plate) | | | | | | | TNTC†† | TNTC | | |
| 9-Aminoacridine† (50 μg/plate) | | | | | | | | | 9 ± 1 | 9 ± 2 |
| Cyclone Quench Water #FS-26*** | | | | | | | | | | |
| (100 μl/plate) | 22 ± 1 | 25 ± 4 | 11 ± 5 | 15 ± 1 | 104 ± 5 | 97 ± 7 | 10 ± 2 | 9 ± 1 | 8 ± 1 | 7 ± 2 |
| (150 μl/plate) | 32 ± 0 | 28 ± 1 | 9 ± 1 | 16 ± 2 | 110 ± 5 | 118 ± 14 | 8 ± 0 | 8 ± 1 | 9 ± 1 | 5 ± 1 |
| (200 μl/plate) | 22 ± 2 | 27 ± 3 | 8 ± 0 | 12 ± 3 | 114 ± 9 | 105 ± 1 | 14 ± 1 | 7 ± 1 | 8 ± 1 | 8 ± 3 |
| (250 μl/plate) | 21 ± 1 | 23 ± 1 | 8 ± 1 | 14 ± 1 | 104 ± 8 | 104 ± 3 | 9 ± 1 | 11 ± 3 | 5 ± 1 | 10 ± 1 |
| Composite of Ash Sluice Water #1-714-2*** | | | | | | | | | | |
| (100 μl/plate) | 18 ± 2 | 20 ± 5 | 10 ± 1 | 15 ± 1 | 100 ± 2 | 110 ± 8 | 9 ± 2 | 9 ± 2 | 5 ± 2 | 9 ± 1 |
| (150 μl/plate) | 17 ± 1 | 26 ± 1 | 10 ± 4 | 14 ± 2 | 91 ± 1 | 116 ± 3 | 11 ± 1 | 6 ± 0 | 7 ± 2 | 6 ± 2 |
| (200 μl/plate) | 25 ± 2 | 29 ± 8 | 9 ± 3 | 16 ± 4 | 113 ± 1 | 110 ± 7 | 10 ± 2 | 7 ± 1 | 6 ± 0 | 11 ± 2 |
| (250 μl/plate) | 26 ± 2 | 23 ± 1 | 10 ± 1 | 17 ± 1 | 93 ± 0 | 105 ± 10 | 8 ± 0 | 12 ± 1 | 9 ± 2 | 6 ± 1 |

* Mean of 2 replicate plates ± standard error of the mean.

** Dissolved and/or suspended in dimethylsulfoxide (DMSO).

*** Dissolved in sterile water.

† Dissolved in 95% ethanol.

†† Too numerous to count.

## AMES ASSAY

## GASIFIER ASH #T.E. 2276 AND CYCLONE DUST #T.E. 2277

| | Revertants Per Plate* | | | | | | | | | |
|---|---|---|---|---|---|---|---|---|---|---|
| | TA-98 | | TA-1538 | | TA-100 | | TA-1535 | | TA-1537 | |
| | -S9 | +S9 | -S9 | +S9 | -S9 | +S9 | -S9 | +S9 | -S9 | +S9 |
| Control | 23 ± 1 | 26 ± 1 | 17 ± 1 | 19 ± 1 | 96 ± 2 | 112 ± 2 | 14 ± 4 | 12 ± 4 | 6 ± 1 | 8 ± 1 |
| 2-Anthramine** (10 μg/plate) | 34 ± 2 | >500 | 13 ± 3 | >500 | 127 ± 4 | >500 | 10 ± 2 | 68 ± 2 | 6 ± 1 | 102 ± 1 |
| Daunomycin*** (10 μg/plate) | TNTC†† | TNTC | | | | | | | | |
| 2-Nitrofluorene** (10 μg/plate) | | | >500 | >500 | | | | | | |
| Methylmethane sulfonate** (50 μg/plate) | | | | | 187 ± 9 | 213 ± 0 | | | | |
| N-methyl-N'-nitro-N-nitrosoguanidine** (50 μg/plate) | | | | | | | >500 | TNTC | | |
| 9-Aminoacridine† (50 μg/plate) | | | | | | | | | 262 ± 22 | 141 ± 10 |
| Gasifier Ash #T.E. 2276** | | | | | | | | | | |
| (0.01 mg/plate) | 15 ± 3 | 22 ± 12 | 14 ± 2 | 10 ± 0 | 86 ± 2 | 78 ± 14 | 12 ± 1 | 7 ± 2 | 6 ± 1 | 6 ± 2 |
| (0.1 mg/plate) | 20 ± 2 | 20 ± 4 | 10 ± 1 | 14 ± 2 | 85 ± 2 | 86 ± 8 | 13 ± 4 | 12 ± 1 | 7 ± 1 | 4 ± 0 |
| (1.0 mg/plate) | 18 ± 1 | 20 ± 10 | 12 ± 2 | 12 ± 1 | 85 ± 7 | 104 ± 4 | 10 ± 1 | 8 ± 2 | 5 ± 0 | 6 ± 2 |
| (10.0 mg/plate) | 17 ± 3 | 23 ± 3 | 4 ± 1 | 12 ± 1 | 86 ± 3 | 90 ± 2 | 7 ± 3 | 7 ± 1 | 6 ± 2 | 4 ± 0 |
| Cyclone Dust #T.E. 2277** | | | | | | | | | | |
| (0.001 mg/plate | 20 ± 0 | 22 ± 4 | 12 ± 1 | 13 ± 0 | 78 ± 4 | 85 ± 7 | 10 ± 2 | 8 ± 4 | 6 ± 2 | 7 ± 1 |
| (0.01 mg/plate) | 18 ± 1 | 19 ± 5 | 11 ± 3 | 16 ± 1 | 88 ± 1 | 94 ± 1 | 12 ± 6 | 8 ± 3 | 4 ± 1 | 6 ± 4 |
| (0.1 mg/plate) | 18 ± 1 | 30 ± 1 | 8 ± 0 | 12 ± 4 | 100 ± 4 | 86 ± 1 | 16 ± 1 | 14 ± 2 | 4 ± 2 | 7 ± 3 |
| (1.0 mg/plate) | 16 ± 1 | 21 ± 1 | 10 ± 2 | 14 ± 2 | 98 ± 11 | 104 ± 8 | 14 ± 2 | 7 ± 2 | 4 ± 1 | 6 ± 1 |

* Mean of 2 replicate plates ± standard error of the mean.

** Dissolved and/or suspended in dimethylsulfoxide (DMSO)

*** Dissolved in sterile water ($H_2O$).

† Dissolved in 95% ethanol.

†† Too numerous to count.

## AMES ASSAY

## SASS TEST BURNER COMPOSITE #647-714 AND

## SASS PRODUCT GAS COMPOSITE #358-714

| | Revertants Per Plate* | | | | | | | | | |
|---|---|---|---|---|---|---|---|---|---|---|
| | TA-98 | | TA-1538 | | TA-100 | | TA-1535 | | TA-1537 | |
| | -S9 | +S9 | -S9 | +S9 | -S9 | +S9 | -S9 | +S9 | -S9 | +S9 |
| Control | 15 ± 3 | 30 ± 1 | 9 ± 2 | 16 ± 1 | 90 ± 5 | 108 ± 0 | 10 ± 1 | 15 ± 0 | 7 ± 4 | 5 ± 0 |
| 2-Anthramine** (10 μg/plate) | 29 ± 2 | 265 ± 17 | 8 ± 2 | 307 ± 92 | 99 ± 7 | 361 ± 39 | 12 ± 1 | 39 ± 2 | 2 ± 0 | 19 ± 3 |
| Daunomycin*** (10 μg/plate) | TNTC†† | TNTC | | | | | | | | |
| 2-Nitrofluorene** (10 μg/plate) | | | 422 ± 35 | 244 ± 12 | | | | | | |
| Methylmethane sulfonate** (10 μg/plate) | | | | | 195 ± 2 | 257 ± 19 | | | | |
| N-methyl-N'-nitro-N-nitrosoguanidine** (50 μg/plate) | | | | | | | TNTC | TNTC | | |
| 9-Aminoacridine† (50 μg/plate) | | | | | | | | | 10 ± 5 | 8 ± 1 |
| SASS Test Burner Comp. #647-714** | | | | | | | | | | |
| (100 μl/plate) | 12 ± 3 | 18 ± 1 | 10 ± 1 | 16 ± 0 | 96 ± 2 | 92 ± 4 | 9 ± 2 | 14 ± 4 | 3 ± 0 | 7 ± 1 |
| (150 μl/plate) | 15 ± 2 | 33 ± 1 | 5 ± 1 | 18 ± 3 | 100 ± 9 | 115 ± 5 | 8 ± 1 | 17 ± 8 | 4 ± 1 | 8 ± 1 |
| (200 μl/plate) | 18 ± 0 | 25 ± 4 | 8 ± 1 | 17 ± 1 | 104 ± 3 | 115 ± 5 | 6 ± 1 | 19 ± 1 | 5 ± 1 | 6 ± 1 |
| (250 μl/plate) | 14 ± 3 | 33 ± 3 | 10 ± 2 | 21 ± 1 | 78 ± 13 | 121 ± 7 | 8 ± 2 | 13 ± 1 | 6 ± 2 | 6 ± 1 |
| SASS Product Gas Comp. #358-714** | | | | | | | | | | |
| (0.08 μl/plate) | 11 ± 2 | 33 ± 4 | 6 ± 2 | 13 ± 1 | 62 ± 2 | 98 ± 6 | 14 ± 1 | 15 ± 2 | 1 ± 1 | 9 ± 3 |
| (0.4 μl/plate) | 11 ± 2 | 30 ± 2 | 5 ± 1 | 16 ± 2 | 74 ± 4 | 98 ± 3 | 8 ± 1 | 15 ± 2 | 6 ± 0 | 4 ± 1 |
| (2.0 μl/plate) | 23 ± 5 | 33 ± 2 | 9 ± 3 | 19 ± 3 | 68 ± 11 | 103 ± 13 | 9 ± 1 | 13 ± 1 | 5 ± 1 | 4 ± 1 |
| (10 μl/plate) | toxic | 23 ± 7 | toxic | 8 ± 1 | toxic | toxic | 6 ± 1 | 11 ± 1 | 5 ± 1 | 9 ± 1 |

* Mean of 2 replicate plates ± standard error of the mean.

** Dissolved and/or suspended in dimethylsulfoxide (DMSO).

*** Dissolved in sterile water.

† Dissolved in 95% ethanol.

†† Too numerous to count.

## V. IN VITRO CYTOTOXICITY ASSAYS

### A. WI-38 ASSAY OF SAMPLES FS-26, CYCLONE QUENCH WATER; FS-1-714-2, ASH SLUICE WATER; 647-714, SASS TEST BURNER COMPOSITE; AND 358-714, SASS PRODUCT GAS COMPOSITE

#### SUMMARY

Samples were assayed in triplicate in the WI-38 assay and determinations of total cell counts, cell viability (trypan blue exclusion), protein and ATP levels were made at 20 hours. Samples FS-26 and 647-714 caused no detectable toxicity at the highest concentrations tested (600 and 80 µl/ml). Samples FS-1-714-2 and 358-714 caused moderate toxicity.

| | $EC_{50}$ Values in µl/ml | | | | | |
|---|---|---|---|---|---|---|
| Sample | Cell Number | Viability | Viability Index | Protein | ATP | Toxicity Classification |
| FS-26 | >600 | >600 | >600 | >600 | >600 | None |
| FS-1-714-2 | 145 | 320 | 88 | 54 | 35 | Moderate |
| 647-714 | >80 | >80 | >80 | >80 | >80 | None |
| 358-714 | >120 | >120 | >120 | 10 | 14 | Moderate |

#### MATERIALS AND METHODS

WI-38 (human lung fibroblast) cells were originally received from the American Type Culture Collection and subsequently stored frozen in our liquid nitrogen bank. Cells were subcultured twice weekly in 75 $cm^2$ Falcon flasks (Co-Star) with Basal Medium, Eagle's modification (BME, Gibco #420-1100) plus 10% fetal calf serum (Kansas City Biologicals), 2 µmoles/ml L-glutamine, 2.5 µg/ml Fungizone, 100 units/ml Penicillin, 100 µg/ml Streptomycin, and 1.25 mg/ml $NaHCO_3$ (complete BME). After washing with Hank's Balanced Salt Solution, cells were removed by the

action of 0.25% trypsin and split in a 1:2 ratio and incubated in complete BME at 37°C in a humidified 5% $CO_2$ atmosphere with loose caps.

For assay, the cells (between passages 20 and 30) were plated at $2.0 \times 10^5$ cells/well in complete BME (4-well cluster dishes, Falcon Plastics) and allowed to adhere for 24 hours. The medium was then aspirated and the chemicals, diluted to appropriate concentrations in culture medium, were added to triplicate wells and the dishes incubated for 20 hours. Concentrated BME (2.5X) was used to dilute the 600 µl/ml samples of FS-26 and FS-1-714-2. Samples 647-714 and 358-714 had been solvent-exchanged into DMSO and concentrated to 2X and 3X original concentration. Due to solvent toxicity the highest concentrations of these samples that it was possible to test were 80 and 120 µl/ml, respectively (i.e., 40 µl/ml effective DMSO concentration). Changes in medium pH were noted at the beginning and end of this 20-hour period. Cells were removed by trypsinization, diluted with fresh medium, and aliquoted as follows for assay: 3.0 ml for protein assay, 1.0 ml for ATP assay, and 0.5 ml for viability and total cell counts.

The protein assay aliquots were washed twice in cold phosphate-buffered saline and the cell pellets stored at -85°C. The ATP assay aliquot was also stored at -85°C. Viability (trypan blue exclusion) and total cell count aliquots were kept on ice and determinations were made immediately; protein (Lowry method) and ATP (DuPont Luminescence Biometer) assays were performed within two weeks.

## RESULTS

Results are presented in the following tables.

Cells treated with sample 358-714 (SASS Product Gas Composite) at the two highest concentrations tested (120 and 60 µl/ml) contained numerous particles and it was difficult to distinguish viable from non-viable cells.

Senior Technician Evaluating Material — Carolyn M. Creswell, M.A.

Case Leader, Senior Staff — Mildred G. Broome, Ph.D.

Section Leader, Bio/Medical Sciences Section — Andrew Sivak, Ph.D.

# WI-38 CYTOTOXICITY ASSAY

| | | | | | |
|---|---|---|---|---|---|
| Sample No.: | 358-714 | Cell Viability: | 94.6% | $EC_{50}$ Values | |
| Description of Sample: | Product Gas Composite | Passage No.: | 30 | | |
| Date Received: | March 6, 1979 | Seeding Population: | $1.8 \times 10^5$/well | Viability: | >120 µl/ml |
| Date Tested: | April 10, 1979 | pH Alterations: | | Viability Index: | >120 µl/ml |
| Vehicle: | Dimethylsulfoxide | Lowest dose for pH change: | 1.8 µl/ml | Protein: | 10 µl/ml |
| | | pH: | 8.1 | ATP: | 14 µl/ml |
| | | pH at highest dose: | 7.3→8.2 | Toxicity Classification: | Moderate toxicity. |
| | | | | Comments: | Due to solvent toxicity, unable to test at higher concentrations. |

## Test Results*

| Sample | Dose µl/ml | Total Cells | % Viable | Viability % T/C | Viability Index | Protein µg/ml | Protein % T/C | ATP fg/$10^6$ cells | ATP % T/C |
|---|---|---|---|---|---|---|---|---|---|
| Veh. Cont.** | 40 | $2.40 \times 10^4$ | 82.2 | - | - | 42.56 | - | $3.42 \times 10^9$ | - |
| 1 | 120 | $4.13 \times 10^4$ | 94.0 | 114.4 | 1.62 | 16.17 | 38.0 | $5.21 \times 10^8$ | 15.3 |
| Veh. Cont. | 20 | $4.80 \times 10^4$ | 92.3 | - | - | 70.91 | - | $2.45 \times 10^9$ | - |
| 2 | 60 | $5.62 \times 10^4$ | 95.6 | 103.6 | 1.12 | 23.77 | 33.5 | $3.13 \times 10^8$ | 12.8 |
| Veh. Cont. | 6 | $4.47 \times 10^4$ | 89.7 | - | - | 82.06 | - | $2.27 \times 10^9$ | - |
| 3 | 18 | $4.18 \times 10^4$ | 65.2 | 72.7 | 0.61 | 21.03 | 25.6 | $2.47 \times 10^8$ | 10.9 |
| Veh. Cont. | 2 | $5.44 \times 10^4$ | 95.4 | - | - | 90.84 | - | $1.73 \times 10^9$ | - |
| 4 | 6 | $4.71 \times 10^4$ | 87.7 | 91.9 | 0.76 | 72.15 | 79.4 | $2.83 \times 10^9$ | 164.3 |
| Veh. Cont. | 0.6 | $5.27 \times 10^4$ | 87.3 | - | - | 75.50 | - | $2.18 \times 10^9$ | - |
| 5 | 1.8 | $5.98 \times 10^4$ | 90.8 | 104.0 | 1.03 | 78.18 | 103.6 | $2.82 \times 10^9$ | 129.4 |

* Mean values for vehicle control and triplicate test samples.
** Same concentration of vehicle as in corresponding test.

This sample was concentrated 3X in solvent exchange procedure (See Section III). Data are presented in terms of original sample volumes.

## WI-38 CYTOTOXICITY ASSAY

| | | | | | |
|---|---|---|---|---|---|
| Sample No.: | 647-714 | Cell Viability: | 94.6% | $EC_{50}$ Values | |
| Description of Sample: | SASS Test Burner Composite | Passage No.: | 30 | | |
| | | Seeding Population: | $1.8 \times 10^5$/well | Viability: | >80 µl/ml |
| Date Received: | March 6, 1979 | pH Alterations: | | Viability Index: | >80 µl/ml |
| Date Tested: | April 10, 1979 | Lowest dose for pH change: | 1.2 µl/ml | Protein: | >80 µl/ml |
| Vehicle: | Dimethylsulfoxide | pH: | 6.9→8.0 | ATP: | >80 µl/ml |
| | | pH at highest dose: | 7.2 | Toxicity Classification: | No detectable toxicity. |
| | | | | Comments: | Due to solvent toxicity, unable to test at higher concentrations. |

### Test Results*

| Sample | Dose µl/ml | Total Cells | % Viable | Viability % T/C | Viability Index | Protein µg/ml | Protein % T/C | ATP fg/$10^6$ cells | ATP % T/C |
|---|---|---|---|---|---|---|---|---|---|
| Veh. Cont.** | 40 | $2.70 \times 10^4$ | 74.2 | - | - | 42.56 | - | $9.17 \times 10^9$ | - |
| 1 | 80 | $3.38 \times 10^4$ | 88.4 | 119.1 | 1.11 | 48.75 | 114.5 | $8.88 \times 10^9$ | 96.8 |
| Veh. Cont. | 20 | $3.47 \times 10^4$ | 93.3 | - | - | 70.91 | - | $1.95 \times 10^{10}$ | - |
| 2 | 40 | $4.71 \times 10^4$ | 93.4 | 100.1 | 1.28 | 70.10 | 98.9 | $2.02 \times 10^{10}$ | 103.8 |
| Veh. Cont. | 6 | $4.67 \times 10^4$ | 92.7 | - | - | 82.06 | - | $1.05 \times 10^{10}$ | - |
| 3 | 12 | $5.11 \times 10^4$ | 88.5 | 95.5 | 0.97 | 97.91 | 119.3 | $1.53 \times 10^{10}$ | 146.3 |
| Veh. Cont. | 2 | $3.94 \times 10^4$ | 88.2 | - | - | 90.84 | - | $1.03 \times 10^{10}$ | - |
| 4 | 4 | $5.60 \times 10^4$ | 94.5 | 107.1 | 1.34 | 102.67 | 113.0 | $1.02 \times 10^{10}$ | 98.9 |
| Veh. Cont. | 0.6 | $5.97 \times 10^4$ | 89.2 | - | - | 75.50 | - | $7.74 \times 10^9$ | - |
| 5 | 1.2 | $5.69 \times 10^4$ | 89.4 | 100.2 | 0.853 | 70.82 | 93.8 | $1.39 \times 10^{10}$ | 179.3 |

* Mean values for vehicle control and triplicate test samples.
** Same concentration of vehicle as in corresponding test.

This sample was concentrated 2X in solvent exchange procedure (see Section III). Data are presented in terms of original sample volumes.

# WI-38 CYTOTOXICITY ASSAY

| | | | | | |
|---|---|---|---|---|---|
| Sample No.: | FS-26 | Cell Viability: | 92% | $EC_{50}$ Values | |
| Description of Sample: | Cyclone Quench Water | Passage No.: | 20 | | |
| Date Received: | March 6, 1979 | Seeding Population: | $2.0 \times 10^5$/well | Viability: | >600 µl/ml |
| Date Tested: | March 27, 1979 | pH Alterations: | | Viability Index: | >600 µl/ml |
| Vehicle: | Medium (BME) | Lowest dose for pH change: | 60 µl/ml | Protein: | >600 µl/ml |
| | | pH: | 7.5 | ATP: | >600 µl/ml |
| | | pH at highest dose: | 7.6 | Toxicity Classification: | No detectable toxicity |

## Test Results*

| Sample | Dose µl/ml | Total Cells | % Viable | Viability % T/C | Viability Index | Protein µg/ml | Protein % T/C | ATP fg/$10^6$ Cells | ATP % T/C |
|---|---|---|---|---|---|---|---|---|---|
| Veh. Cont. | 0 | $4.91 \times 10^5$ | 72.6 | - | - | 67.0 | - | $3.94 \times 10^9$ | - |
| 1 | 600 | $4.03 \times 10^5$ | 75.5 | 104.0 | 0.64 | 67.5 | 100.6 | $4.17 \times 10^9$ | 105.8 |
| 2 | 200 | $5.13 \times 10^5$ | 81.8 | 112.7 | 0.88 | 74.2 | 110.7 | $3.12 \times 10^9$ | 79.3 |
| 3 | 60 | $4.08 \times 10^5$ | 71.5 | 98.5 | 0.61 | 57.0 | 85.1 | $3.53 \times 10^9$ | 89.5 |
| 4 | 20 | $5.04 \times 10^5$ | 83.4 | 114.9 | 0.89 | 55.0 | 82.0 | $2.54 \times 10^9$ | 64.4 |
| 5 | 6 | $4.77 \times 10^5$ | 86.5 | 119.1 | 0.87 | 46.5 | 69.5 | $3.23 \times 10^9$ | 81.9 |

* Mean values for vehicle control and triplicate test samples.

# HI-38 CYTOTOXICITY ASSAY

| | | | | | |
|---|---|---|---|---|---|
| Sample No.: | FS 1-714-2 | Cell Viability: | 92% | $EC_{50}$ Values | |
| Description of Sample: | Ash Sluice Water | Passage No. | 20 | | |
| Date Received: | March 6, 1979 | Seeding Population: | $2.0 \times 10^5$/well | Viability: | 320 µl/ml |
| Date Tested: | March 27, 1979 | pH Alterations: | | Viability Index: | 88 µl/ml |
| Vehicle: | Medium (BME) | Lowest dose for pH change: | 60 µl/ml | Protein: | 66 µl/ml |
| | | pH: | 7.5 | ATP: | 35 µl/ml |
| | | pH at highest dose: | 7.6 | Toxicity Classification: | Moderate |

## Test Results*

| Sample | Dose µl/ml | Total Cells | % Viable | Viability % T/C | Viability Index | Protein µg/ml | Protein % T/C | ATP fg/$10^6$ Cells | ATP % T/C |
|---|---|---|---|---|---|---|---|---|---|
| Veh. Cont. | 0 | $4.54 \times 10^5$ | 87.4 | - | - | 67.0 | - | $10.04 \times 10^9$ | - |
| 1 | 600 | $1.37 \times 10^5$ | 11.6 | 13.3 | 0.03 | 15.9 | 23.7 | $5.92 \times 10^9$ | 59.0 |
| 2 | 200 | $1.81 \times 10^5$ | 69.8 | 79.8 | 0.27 | 25.5 | 38.1 | $5.40 \times 10^9$ | 53.8 |
| 3 | 60 | $3.59 \times 10^5$ | 80.7 | 92.3 | 0.60 | 32.6 | 48.6 | $3.74 \times 10^9$ | 33.2 |
| 4 | 20 | $3.61 \times 10^5$ | 87.8 | 100.4 | 0.66 | 34.2 | 51.1 | $6.90 \times 10^9$ | 68.7 |
| 5 | 6 | $4.23 \times 10^5$ | 87.4 | 100.0 | 0.78 | 39.4 | 58.8 | $6.42 \times 10^9$ | 63.9 |

* Mean values for vehicle control and triplicate test samples.

## B. RABBIT ALVEOLAR MACROPHAGE (RAM) ASSAY OF SAMPLES T.E. 2276, GASIFIER ASH; AND T.E. 2277, CYCLONE DUST

### SUMMARY

Samples T.E. 2276 and T.E. 2277 were assayed in triplicate in the RAM assay at 1,000, 300, 100, 30 and 10 μg/ml. There was no detectable toxicity manifested in total cell counts, cell viability (trypan blue exclusion), protein and ATP levels determined at 20 hours. For sample T.E. 2277, the ATP assay showed an apparent inverse dose-response relationship which might be attributable to the particulate sample material.

### MATERIALS AND METHODS

Two Specific Pathogen Free (SPF) New Zealand albino rabbits weighing 1.5 to 2.0 kilograms were purchased from Charles River Breeding Laboratories and housed in individual cages overnight at Arthur D. Little, Inc. Alveolar macrophages were collected according to procedures outlined in the IERL-RTP Procedures Manual: Level 1 Environmental Assessment Biological Tests for Pilot Studies, EPA-600/7-77-043 (April, 1977). A total of $1.7 \times 10^8$ viable macrophages were recovered (98.4% of total cells recovered). Twenty-five $cm^2$ Falcon flasks were seeded with $2.0 \times 10^6$ macrophages in 2.0 ml of Medium 199 containing 10% heat-inactivated fetal calf serum, 100 units/ml Penicillin, 100 μg/ml Streptomycin, 100 μg/ml Kanamycin, and 1.2 mg/ml $NaHCO_3$ (Complete Medium 199). The samples were ground to fine particles, suspended in Complete Medium 199 in appropriate concentrations and 2.0 ml aliquots were added to the flasks. The cultures were then incubated, with rocking, for 20 hours at 37°C in a humidified 5% $CO_2$ atmosphere.

At the end of the incubation period the medium was aspirated and retained; the cells were trypsinized and added to the aspirated medium. The following aliquots of cell suspensions were made: 4.0 ml for protein assay, 1.0 ml for ATP assay, and 0.5 ml for viability and total cell count.

The protein, ATP and viable and total cell counts were done in the same manner as described for the WI-38 assays.

RESULTS

Results are presented in the following tables.

Senior Technician Evaluating Material — Carolyn M. Creswell, M.A.

Case Leader, Senior Staff — Mildred G. Broome, Ph.D.

Section Leader, Bio/Medical Sciences Section — Andrew Sivak, Ph.D.

## RABBIT ALVEOLAR MACROPHAGE CYTOTOXICITY ASSAY

| | | | | | |
|---|---|---|---|---|---|
| Sample No.: | T.E. 2276 | No. Rabbits Used: | 2 | $EC_{50}$ Values | |
| Description of Sample: | Gasifier Ash | Cell Viability: | 98.4% | | |
| Date Received: | March 6, 1979 | Differential Count: | | Viability: | >1,000 µg/ml |
| Date Tested: | April 19, 1979 | Macrophages: | 100% | Viability Index: | >1,000 µg/ml |
| Vehicle: | Medium 199 | Other: | 0% | Protein: | >1,000 µg/ml |
| pH Alterations: | | Seeding Population: | $1x10^6$ cells/flask | ATP: | >1,000 µg/ml |
| Lowest dose for pH change: | 1,000 µg/ml | | | Toxicity Classification: | No detectable toxicity |
| pH: | 7.6 | | | | |
| pH at highest dose: | 7.6 | | | | |

### Test Results*

| Sample | Dose µg/ml | Total Cells | Viability % | Viability % T/C | Viability Index | Protein µg/ml | Protein % T/C | ATP fg/$10^6$ cells | ATP % T/C |
|---|---|---|---|---|---|---|---|---|---|
| Veh. Cont. | 0 | $3.09x10^6$ | 99.5 | - | - | 264.84 | - | $1.19x10^9$ | - |
| 1 | 1,000 | $2.80x10^6$ | 90.8 | 91.3 | 0.82 | 243.04 | 91.8 | $8.56x10^8$ | 71.6 |
| 2 | 300 | $2.16x10^6$ | 97.5 | 98.0 | 0.68 | 248.54 | 93.8 | $1.37x10^9$ | 114.9 |
| 3 | 100 | $2.53x10^6$ | 97.1 | 97.6 | 0.80 | 232.35 | 87.7 | $9.93x10^8$ | 83.2 |
| 4 | 30 | $2.79x10^6$ | 98.5 | 99.0 | 0.89 | 249.93 | 94.4 | $8.08x10^8$ | 67.7 |
| 5 | 10 | $2.44x10^6$ | 98.3 | 98.8 | 0.78 | 259.24 | 97.9 | $1.10x10^9$ | 92.2 |

* Mean values for vehicle control and triplicate test samples.

## RABBIT ALVEOLAR MACROPHAGE CYTOTOXICITY ASSAY

| | | | | | |
|---|---|---|---|---|---|
| Sample No.: | T.E. 2277 | No. Rabbits Used: | 2 | $EC_{50}$ Values | |
| Description of Sample: | Cyclone Particulate | Cell Viability: | 98.4% | | |
| Date Received: | March 6, 1979 | Differential Count: | | Viability: | >1,000 µg/ml |
| Date Tested: | April 19, 1979 | Macrophages: | 100% | Viability Index: | >1,000 µg/ml |
| Vehicle: | Medium 199 | Other: | 0% | Protein: | >1,000 µg/ml |
| pH Alterations: | | Seeding Population: | $1x10^6$ cells/flask | ATP: | >1,000 µg/ml |
| Lowest dose for pH change: | 1,000 µl/ml | | | Toxicity Classification: | No detectable toxicity |
| pH: | 7.2 | | | | |
| pH at highest dose: | 7.2 | | | | |

### Test Results*

| Sample | Dose µg/ml | Total Cells | Viability % | Viability % T/C | Viability Index | Protein µg/ml | Protein % T/C | ATP fg/$10^6$ cells | ATP % T/C |
|---|---|---|---|---|---|---|---|---|---|
| Veh. Cont. | 0 | $2.84x10^6$ | 99.6 | - | - | 264.84 | - | $9.14x10^8$ | - |
| 1 | 1,000 | $2.73x10^6$ | 95.0 | 95.4 | 0.92 | 296.79 | 112.1 | $8.36x10^8$ | 91.5 |
| 2 | 300 | $3.23x10^6$ | 98.8 | 99.2 | 1.13 | 282.37 | 106.6 | $6.39x10^8$ | 69.9 |
| 3 | 100 | $2.87x10^6$ | 97.9 | 98.3 | 0.99 | 285.70 | 107.9 | $5.90x10^8$ | 64.6 |
| 4 | 30 | $3.38x10^6$ | 98.3 | 98.7 | 1.17 | 276.27 | 104.3 | $4.60x10^8$ | 50.4 |
| 5 | 10 | $3.21x10^6$ | 99.0 | 99.4 | 1.12 | 253.53 | 95.7 | $5.18x10^8$ | 56.6 |

* Mean values for vehicle control and triplicate test samples.

## VI. ACUTE IN VIVO TOXICOLOGICAL TEST OF SAMPLES T.E. 2276, T.E. 2277, FS-1-714-2, FS-26 AND 358-714 IN RODENTS - QUANTAL RESPONSE

### SUMMARY

Samples No. T.E. 2276, T.E. 2277, FS-1-714-2, FS-26 and 358-714 were administered as a single dose by the oral route to evaluate their acute toxicity in fasted rats. All animals which received the dry test substances, T.E. 2276 and T.E. 2277 passed black, well-formed feces on Day 2, apparently the unchanged test substance. None of the numerous other signs of toxicity or pharmacological effects monitored showed meaningful deviations from control values. No mortality was recorded and resulting data suggest that the single-dose oral $LD_{50}$ value for each of the test materials is greater than 10.0 gm/kg or 10.0 ml/kg. All animals autopsied after the two-week observation period appeared normal and no gross lesions were detected.

### MATERIALS AND METHODS

The materials received from Mildred G. Broome, Project Director, Arthur D. Little, Inc., that were tested are listed below.

| Sample No. | Description As Received |
|---|---|
| T.E. 2276 | Gasifier Ash |
| T.E. 2277 | Cyclone Dust |
| FS-1-714-2 | Sluice Water |
| FS-26 | Cyclone Quench Water |
| 358-714 | SASS Product Gas Composite |

We understand that all of the solids (particulate) to be tested in this quantal response system are coal derived. The liquid samples were administered as received resulting in 2.0-2.6 ml being orally intubated/200 gm/rat. The dry materials were suspended in 0.9% physiological saline (concentration: 2 gm solid/1 ml of saline). The control animals were orally intubated with 0.9% physiological saline or 50% DMSO at the maximum volume employed with the test substances (∿5.0 ml).

A group of young, adult albino Sprague-Dawley (CD) rats weighing approximately 250 gms were purchased from the Charles River Breeding Laboratories, Wilmington, Massachusetts, and conditioned in the Arthur D. Little, Inc., laboratories for a minimum of 5 days. From this group, five males and five females of comparable body weights per sex were selected for testing each compound and fasted overnight.

Prior to administering a single dose of 10 ml/kg or 10 gm/kg each animal was weighed and given a complete physical examination, as described in the IERL-RTP Procedures Manual, Level 1, EPA 600/6-77-043, April, 1977. This examination procedure also was followed immediately after administration of the test substance, and at 1, 4 and 24 hours during the first day and daily during the 14-day observation period.

Observations, in addition to mortality, were recorded and all toxic signs or pharmacological effects monitored including changes in behavior and movements, reactivity to various stimuli, cerebral and spinal reflexes, muscle tone, pupil size, secretions, nostril discharge, character and rate of breathing, palpation of cardiac region, GI events, abdominal shape, feces consistency and color, vulva, mammary glands, penis and perineal region, skin and fur changes, conjunctiva, mouth, eyeball, rectal temperature and general condition, were measured. Their frequency and severity were scored on a scale of 0 through 3 (0-normal, 1-slight, 2-moderate, 3-marked change from normal). All animals were killed on Day 15, a complete necropsy was conducted, and the weights of the liver

and kidneys were recorded. No tissues were taken for histopathological examinations per the EPA protocol.

## RESULTS

Only two of the signs of toxicity or pharmacological effects monitored showed deviations from control values:

1. All rats which received the dry test substances; T.E. 2276 and T.E. 2277 passed black, well formed feces on Day 2, apparently largely derived from the test substances.

2. It should be noted that although the mean respiratory rates, mean cardiac rates and mean body temperatures showed variations, these values for the parameters monitored are within ranges expected for untreated rats, and therefore it is doubtful if these transitory changes are indicative of meaningful toxic effects.

Mean body weight gains and the weights of the liver and kidneys (Table IV), as well as the other parameters monitored, did not appear to be significantly affected by dosage of the test materials.

No mortality was recorded following oral intubation with any of the materials being evaluated under these test conditions which suggests, as shown in Tables V-IX, that the single-dose $LD_{50}$ value for each of the test materials administered by the oral route is greater than 10.0 gm/kg.

All animals autopsied after the two-week observation period appeared normal and no gross lesions were detected.

Subcase Leader,
Toxicology Unit

Peter C. Rachwall

Case Leader

Mildred G. Broome, Ph.D.

Section Manager
Bio/Medical Sciences Section

Andrew Sivak, Ph.D.

## TABLE I

## MEAN RESPIRATORY RATE/MINUTE

| Material Tested | | Day 1 | | | | DAY | | | | | | | | | | | | | |
|---|---|---|---|---|---|---|---|---|---|---|---|---|---|---|---|---|---|---|---|
| | | 0 | 1/2 hr | 1 hr | 4 hr | 2 | 3 | 4 | 5 | 6 | 7 | 8 | 9 | 10 | 11 | 12 | 13 | 14 | 15 |
| Control | $\bar{X}$ | 165.6 | 121.2 | 164.8 | 182.4 | 208.4 | 214.4 | 194.8 | 201.6 | 166.4 | 173.4 | 180.8 | 189.2 | 194.0 | 178.4 | 180.4 | 171.6 | 176.8 | 203.2 |
| (saline) | S.D. | 47.5 | 40.2 | 57.1 | 29.4 | 54.0 | 54.5 | 25.9 | 42.8 | 32.7 | 34.1 | 32.5 | 52.0 | 41.2 | 19.0 | 26.5 | 39.2 | 21.5 | 35.7 |
| T.E. 2276 | $\bar{X}$ | 139.0 | 136.8 | 114.0 | 141.2 | 193.4 | 180.8 | 166.0 | 180.8 | 166.0 | 193.6 | 182.4 | 158.4 | 171.6 | 173.2 | 166.8 | 171.2 | 174.8 | 184.0 |
| | S.D. | 33.4 | 23.8 | 31.0 | 16.3 | 32.3 | 34.8 | 38.2 | 45.9 | 29.4 | 42.9 | 20.5 | 21.8 | 15.4 | 25.3 | 35.0 | 31.8 | 42.3 | 17.9 |
| T.E. 2277 | $\bar{X}$ | 138.4 | 136.0 | 133.6 | 126.4 | 150.8 | 168.4 | 186.0 | 145.2 | 152.4 | 139.0 | 153.6 | 152.4 | 169.2 | 180.4 | 176.2 | 182.0 | 188.4 | 191.2 |
| | S.D. | 34.5 | 32.5 | 32.2 | 19.7 | 37.3 | 38.3 | 53.1 | 30.6 | 25.9 | 27.8 | 30.8 | 39.2 | 19.9 | 23.4 | 27.6 | 27.6 | 25.5 | 29.9 |
| FS-1-714-2 | $\bar{X}$ | 136.4 | 146.8 | 154.4 | 142.4 | 141.6 | 141.2 | 149.6 | 150.0 | 175.6 | 152.8 | 154.0 | 150.4 | 176.8 | 169.6 | 167.2 | 168.0 | 151.6 | 185.6 |
| | S.D. | 21.0 | 26.4 | 31.6 | 26.5 | 23.0 | 16.6 | 32.6 | 23.6 | 25.7 | 28.0 | 36.0 | 15.6 | 30.4 | 32.4 | 25.6 | 35.4 | 35.4 | 28.0 |
| FS-26 | $\bar{X}$ | 143.6 | 142.8 | 147.2 | 145.2 | 170.6 | 141.2 | 135.2 | 178.8 | 164.4 | 168.4 | 174.8 | 177.6 | 182.0 | 168.8 | 158.0 | 178.4 | 169.2 | 157.6 |
| | S.D. | 37.6 | 30.5 | 28.7 | 18.0 | 41.9 | 31.0 | 31.5 | 31.3 | 21.7 | 10.1 | 20.0 | 16.4 | 29.8 | 24.9 | 21.1 | 29.6 | 14.7 | 22.6 |
| Control | $\bar{X}$ | 153.2 | 128.0 | 114.8 | 120.4 | 161.2 | 160.2 | 147.6 | 168.8 | 192.8 | 179.6 | 174.0 | 196.8 | 169.6 | 188.8 | 177.6 | 184.0 | 173.6 | 173.2 |
| (DMSO) | S.D. | 39.9 | 38.2 | 29.5 | 24.8 | 30.5 | 37.2 | 20.0 | 27.0 | 26.6 | 34.9 | 20.6 | 28.0 | 27.7 | 18.8 | 33.0 | 35.4 | 25.9 | 23.0 |
| 358-714 | $\bar{X}$ | 163.2 | 144.0 | 118.8 | 116.4 | 150.8 | 167.2 | 155.8 | 164.0 | 164.8 | 184.4 | 188.4 | 174.0 | 187.2 | 168.4 | 174.4 | 169.6 | 163.6 | 176.4 |
| | S.D. | 44.6 | 36.2 | 28.1 | 37.8 | 34.2 | 27.8 | 33.9 | 25.1 | 26.0 | 32.0 | 44.8 | 27.2 | 31.6 | 21.2 | 31.6 | 33.4 | 24.2 | 20.7 |

## TABLE II
## MEAN CARDIAC RATE/MINUTE

| Material Tested | | Day 1 | | | | DAY | | | | | | | | | | | | | |
|---|---|---|---|---|---|---|---|---|---|---|---|---|---|---|---|---|---|---|---|
| | | 0 | 1/2 hr | 1 hr | 4 hr | 2 | 3 | 4 | 5 | 6 | 7 | 8 | 9 | 10 | 11 | 12 | 13 | 14 | 15 |
| Control | $\bar{X}$ | 330.0 | 281.6 | 289.2 | 346.8 | 315.6 | 298.0 | 305.6 | 319.2 | 298.0 | 302.8 | 310.0 | 322.0 | 343.6 | 307.2 | 298.4 | 335.2 | 321.2 | 316.4 |
| (saline) | S.D. | 42.8 | 52.7 | 59.5 | 26.7 | 48.2 | 41.3 | 21.7 | 18.9 | 19.2 | 37.2 | 33.8 | 34.8 | 23.3 | 17.5 | 50.8 | 18.7 | 25.2 | 28.0 |
| T.E. 2276 | $\bar{X}$ | 300.0 | 312.4 | 302.8 | 306.8 | 315.2 | 318.4 | 295.2 | 291.6 | 289.6 | 297.0 | 286.8 | 292.4 | 310.0 | 281.6 | 309.2 | 309.2 | 326.0 | 301.2 |
| | S.D. | 17.7 | 39.4 | 37.1 | 36.4 | 33.6 | 41.8 | 20.7 | 49.2 | 42.9 | 20.2 | 26.5 | 31.9 | 13.2 | 21.8 | 18.4 | 27.5 | 13.2 | 29.8 |
| T.E. 2277 | $\bar{X}$ | 326.8 | 313.6 | 304.4 | 309.2 | 311.6 | 282.0 | 310.8 | 311.6 | 294.0 | 299.2 | 311.6 | 314.4 | 292.4 | 288.0 | 297.6 | 319.2 | 298.0 | 298.0 |
| | S.D. | 43.5 | 36.9 | 20.0 | 20.8 | 20.7 | 26.4 | 47.4 | 23.9 | 10.4 | 26.6 | 23.0 | 18.5 | 27.5 | 10.2 | 15.3 | 16.8 | 19.6 | 33.7 |
| FS-1-714-2 | $\bar{X}$ | 282.0 | 319.6 | 289.6 | 305.2 | 294.4 | 293.8 | 292.8 | 316.8 | 303.2 | 319.6 | 294.8 | 289.2 | 301.2 | 304.8 | 304.0 | 284.8 | 298.8 | 293.6 |
| | S.D. | 25.0 | 28.9 | 30.6 | 27.7 | 29.6 | 36.7 | 28.6 | 23.8 | 26.7 | 12.0 | 30.9 | 19.0 | 25.7 | 13.8 | 24.9 | 18.2 | 22.5 | 23.4 |
| FS-26 | $\bar{X}$ | 262.4 | 308.4 | 269.2 | 288.0 | 298.8 | 287.6 | 288.8 | 291.2 | 289.6 | 297.6 | 303.6 | 285.6 | 305.6 | 292.8 | 290.4 | 294.4 | 260.4 | 290.4 |
| | S.D. | 34.1 | 21.2 | 53.6 | 20.7 | 27.0 | 45.5 | 47.4 | 44.6 | 26.2 | 34.2 | 17.1 | 26.6 | 22.3 | 30.1 | 25.5 | 15.3 | 15.4 | 11.8 |
| Control | $\bar{X}$ | 292.8 | 281.2 | 292.8 | 302.8 | 288.0 | 308.0 | 296.4 | 302.4 | 314.4 | 328.4 | 297.2 | 300.4 | 310.0 | 304.8 | 296.0 | 303.6 | 311.2 | 289.2 |
| (DMSO) | S.D. | 21.7 | 51.7 | 42.0 | 42.6 | 48.3 | 29.7 | 15.5 | 17.5 | 21.4 | 37.8 | 19.9 | 27.4 | 18.1 | 21.8 | 31.2 | 16.3 | 27.8 | 20.8 |
| 353-714 | $\bar{X}$ | 302.0 | 303.2 | 285.2 | 291.6 | 304.0 | 292.4 | 296.8 | 282.2 | 298.0 | 314.8 | 286.4 | 312.0 | 307.2 | 280.1 | 305.6 | 298.4 | 282.4 | 295.2 |
| | S.D. | 30.4 | 27.3 | 46.8 | 39.8 | 28.0 | 13.0 | 25.0 | 22.1 | 32.4 | 26.9 | 17.7 | 28.0 | 36.8 | 48.6 | 40.5 | 27.8 | 34.0 | 17.9 |

## TABLE III
## MEAN BODY TEMPERATURE
(Rectal C°)

| Material Tested | | Day 0 | 1/2 hr | 1 hr | 4 hr | DAY 2 | 3 | 4 | 5 | 6 | 7 | 8 | 9 | 10 | 11 | 12 | 13 | 14 | 15 |
|---|---|---|---|---|---|---|---|---|---|---|---|---|---|---|---|---|---|---|---|
| Control | $\bar{X}$ | 35.1 | 35.6 | 36.0 | 35.3 | 34.9 | 36.0 | 35.5 | 36.7 | 35.4 | 35.8 | 35.4 | 36.2 | 36.2 | 36.0 | 36.0 | 36.0 | 36.5 | 36.2 |
| (saline) | S.D. | 0.58 | 0.79 | 0.57 | 0.81 | 0.74 | 0.94 | 1.40 | 0.56 | 0.96 | 1.04 | 0.78 | 0.27 | 0.64 | 0.98 | 0.96 | 0.35 | 0.85 | 1.27 |
| T.E. 2276 | $\bar{X}$ | 35.0 | 35.5 | 35.5 | 35.2 | 35.5 | 36.5 | 35.6 | 36.4 | 35.1 | 36.2 | 35.9 | 34.8 | 36.7 | 35.8 | 36.6 | 36.7 | 36.4 | 35.8 |
| | S.D. | 0.92 | 1.34 | 0.91 | 1.11 | 1.16 | 0.85 | 1.64 | 0.57 | 1.35 | 0.73 | 1.28 | 1.61 | 1.20 | 1.01 | 1.21 | 0.97 | 1.30 | 1.21 |
| T.E. 2277 | $\bar{X}$ | 35.1 | 35.7 | 35.7 | 35.0 | 35.9 | 35.8 | 35.9 | 36.4 | 35.3 | 35.9 | 36.2 | 35.4 | 36.5 | 36.0 | 35.7 | 36.6 | 35.8 | 35.7 |
| | S.D. | 0.97 | 0.76 | 0.74 | 0.84 | 0.83 | 1.52 | 0.84 | 0.74 | 1.07 | 0.85 | 1.09 | 1.62 | 0.89 | 1.19 | 1.42 | 1.15 | 1.52 | 1.31 |
| FS-1-714-2 | $\bar{X}$ | 36.3 | 36.6 | 36.5 | 37.0 | 36.1 | 35.8 | 35.6 | 35.7 | 36.0 | 35.8 | 36.2 | 36.3 | 36.3 | 36.6 | 35.9 | 36.6 | 36.7 | 36.2 |
| | S.D. | 1.28 | 1.02 | 0.92 | 0.42 | 0.54 | 1.00 | 0.53 | 0.79 | 1.04 | 1.17 | 0.58 | 0.61 | 0.94 | 0.62 | 1.05 | 0.80 | 0.36 | 0.98 |
| FS-26 | $\bar{X}$ | 35.9 | 36.5 | 36.8 | 36.5 | 36.2 | 35.4 | 35.5 | 35.4 | 36.2 | 36.0 | 35.8 | 36.1 | 36.2 | 36.1 | 36.2 | 36.3 | 36.6 | 36.4 |
| | S.D. | 1.33 | 0.69 | 0.93 | 0.87 | 0.73 | 0.79 | 0.59 | 0.77 | 0.59 | 0.74 | 0.62 | 0.63 | 1.14 | 1.01 | 0.97 | 0.37 | 0.31 | 0.54 |
| Control | $\bar{X}$ | 35.8 | 35.0 | 35.0 | 34.4 | 36.3 | 35.7 | 36.0 | 36.1 | 36.1 | 36.3 | 36.1 | 35.8 | 36.5 | 35.8 | 36.4 | 36.6 | 36.6 | 36.5 |
| (DMSO) | S.D. | 1.02 | 1.26 | 1.08 | 1.66 | 0.64 | 0.74 | 0.69 | 0.63 | 0.74 | 0.63 | 0.80 | 0.97 | 0.76 | 0.57 | 0.31 | 0.53 | 0.34 | 0.68 |
| 358-714 | $\bar{X}$ | 35.9 | 36.5 | 36.2 | 36.4 | 35.7 | 35.7 | 35.8 | 35.6 | 36.2 | 35.9 | 36.2 | 36.0 | 36.1 | 36.4 | 36.3 | 36.6 | 36.5 | 36.5 |
| | S.D. | 1.35 | 0.59 | 0.65 | 0.71 | 0.90 | 0.50 | 0.66 | 0.73 | 0.46 | 1.27 | 0.73 | 0.73 | 0.73 | 0.94 | 0.84 | 0.67 | 0.38 | 0.39 |

## TABLE IV

## MEAN BODY WEIGHT AND LIVER AND KIDNEY WEIGHT DATA

| Material Tested | | Body Weight (gms) | | | Organ Weights (% of Body Weight) | | | |
|---|---|---|---|---|---|---|---|---|
| | | | | | Liver | | Kidneys | |
| | | Day 1 | Day 8 | Day 15 | (gms) | (%) | (gms) | (%) |
| Control | $\bar{X}$ | 291.0 | 324.5 | 342.0 | 15.63 | 4.56 | 3.20 | 0.93 |
| (saline) | S.D. | 46.5 | 61.7 | 74.5 | 4.04 | 0.48 | 0.84 | 0.10 |
| Wt. Gain | % | | 11.5 | 17.5 | | | | |
| T.E. 2276 | $\bar{X}$ | 290.0 | 328.0 | 350.0 | 16.08 | 4.58 | 3.27 | 0.93 |
| | S.D. | 44.6 | 56.5 | 71.1 | 3.92 | 0.50 | 0.73 | 0.07 |
| Wt. Gain | % | | 13.1 | 20.7 | | | | |
| T.E. 2277 | $\bar{X}$ | 291.0 | 328.0 | 350.0 | 15.46 | 4.38 | 3.08 | 0.87 |
| | S.D. | 54.7 | 75.4 | 85.3 | 4.50 | 0.41 | 0.88 | 0.08 |
| Wt. Gain | % | | 12.7 | 20.3 | | | | |
| FS-1-714-2 | $\bar{X}$ | 216.5 | 265.5 | 287.5 | 13.53 | 4.69 | 2.72 | 0.94 |
| | S.D. | 11.1 | 12.6 | 21.1 | 1.87 | 0.38 | 0.37 | 0.08 |
| Wt. Gain | % | | 22.6 | 32.8 | | | | |
| FS-26 | $\bar{X}$ | 215.5 | 260.5 | 281.0 | 12.76 | 4.51 | 2.61 | 0.92 |
| | S.D. | 12.8 | 18.3 | 27.3 | 3.23 | 0.88 | 0.48 | 0.09 |
| Wt. Gain | % | | 20.9 | 30.4 | | | | |
| Control | $\bar{X}$ | 229.0 | 273.0 | 304.5 | 15.70 | 5.13 | 2.89 | 0.94 |
| (DMSO) | S.D. | 19.8 | 12.5 | 22.5 | 2.53 | 0.51 | 0.46 | 0.10 |
| Wt. Gain | % | | 19.2 | 33.0 | | | | |
| 358-714 | $\bar{X}$ | 221.5 | 266.0 | 290.5 | 15.04 | 5.17 | 2.77 | 0.95 |
| | S.D. | 10.0 | 9.7 | 21.7 | 1.97 | 0.42 | 0.38 | 0.08 |
| Wt. Gain | % | | 20.1 | 31.2 | | | | |



Ar

## TABLE V

## SUMMARY OF SINGLE-DOSE ORAL TOXICITY OF T.E. 2276 IN RATS

| | |
|---|---|
| Species: | Rat |
| Strain: | Sprague-Dawley (CD) |
| Body Weight Range (gm): | |
| Day 1 | 240 - 355 |
| Day 8 | 255 - 405 |
| Day 15 | 255 - 440 |

Formulation: Suspended in normal saline with agitation at room temperature.

Concentration (gm/ml): Suspension of 0.6 gm/ml.

Approximate Volume Administered (ml): 3 7 - 10.4/200-gram rat

---

Dosage (gm/kg), Mortality, and Percent Mean Body Weight Gain of Survivors Post-Treatment

| Dosage (gm/kg) | Mortality | | % Mean Body Weight Gain | |
|---|---|---|---|---|
| | Day 8 | Day 15 | Day 8 | Day 15 |
| Control | 0/10 | 0/10 | 11.5 | 17.5 |
| 10.0 | 0/10 | 0/10 | 13.1 | 20.7 |

---

$LD_{50}$ (Day 15)

>10 gm/kg



Ar

## TABLE VI

## SUMMARY OF SINGLE-DOSE ORAL TOXICITY OF T.E. 2277 IN RATS

| | |
|---|---|
| Species: | Rat |
| Strain: | Sprague-Dawley (CD) |
| Body Weight Range (gm): | |
| Day 1 | 235 - 360 |
| Day 8 | 240 - 410 |
| Day 15 | 255 - 450 |

Formulation: Suspended in normal saline with agitation at room temperature.

Concentration (gm/ml): Suspension of 0.6 gm/ml.

Approximate Volume Administered (ml): 3.7 - 10.4/200-gram rat

---

Dosage (gm/kg), Mortality, and Percent Mean Body Weight Gain of Survivors Post-Treatment

| Dosage (gm/kg) | Mortality | | % Mean Body Weight Gain | |
|---|---|---|---|---|
| | Day 8 | Day 15 | Day 8 | Day 16 |
| Control | 0/10 | 0/10 | 11.5 | 17.5 |
| 10.0 | 0/10 | 0/10 | 12.7 | 20.3 |

---

| $LD_{50}$ (Day 15) |
|---|
| > 10 mg/kg |

## TABLE VII

## SUMMARY OF SINGLE-DOSE ORAL TOXICITY OF FS-1-714-2 IN RATS

| | |
|---|---|
| Species: | Rat |
| Strain: | Sprague-Dawley (CD) |
| Body Weight Range (gm): | |
| Day 1 | 205 - 355 |
| Day 8 | 250 - 395 |
| Day 15 | 255 - 425 |
| Formulation: | As received |
| Concentration (gm/ml): | 100% |
| Approximate Volume Administered (ml): | 2.1 - 3.6/200-gram rat |

Dosage (ml/kg), Mortality, and Percent Mean Body Weight Gain of Survivors Post-Treatment

| Dosage (ml/kg | Mortality | | % Mean Body Weight Gain | |
|---|---|---|---|---|
| | Day 8 | Day 15 | Day 8 | Day 15 |
| Control | 0/10 | 0/10 | 11.5 | 17.5 |
| 10.0 | 0/10 | 0/10 | 22.6 | 32.8 |

| $LD_{50}$ (Day 15) |
|---|
| > 10 ml/kg |

## TABLE VIII

## SUMMARY OF SINGLE-DOSE ORAL TOXICITY OF FS-26 IN RATS

| | |
|---|---|
| Species: | Rat |
| Strain: | Sprague-Dawley (CD) |
| Body Weight Range (gm): | |
| Day 1 | 200 - 355 |
| Day 8 | 225 - 395 |
| Day 15 | 230 - 425 |
| Formulation: | As recieved |
| Concentration (gm/ml): | 100% |
| Approximate Volume Administered (ml): | 2.0 - 3.6/200-gram rat |

### Dosage (ml/kg), Mortality, and Percent Mean Body Weight Gain of Survivors Post-Treatment

| Dosage (ml/kg) | Mortality | | % Mean Body Weight Gain | |
|---|---|---|---|---|
| | Day 8 | Day 15 | Day 8 | Day 15 |
| Control | 0/10 | 0/10 | 11.5 | 17.5 |
| 10.0 | 0/10 | 0/10 | 20.9 | 30.4 |

| $LD_{50}$ (Day 15) |
|---|
| > 10 ml/kg |

## TABLE IX

## SUMMARY OF SINGLE-DOSE ORAL TOXICITY OF 358-714 IN RATS

| | |
|---|---|
| Species: | Rat |
| Strain: | Sprague-Dawley (CD) |
| Body Weight Range (gm): | |
| Day 1 | 205 - 275 |
| Day 8 | 245 - 295 |
| Day 15 | 250 - 340 |

Formulation: Received in methylene chloride solvent exchanged into DMSO

Concentration: Diluted with distilled $H_2O$, 2:1

Approximate Volume Administered (ml): 2.1 - 2.8/200-gram rat

---

Dosage (ml/kg), Mortality, and Percent Mean Body Weight Gain of Survivors Post-Treatment

| Dosage (ml/kg) | Mortality | | % Mean Body Weight Gain | |
|---|---|---|---|---|
| | Day 8 | Day 15 | Day 8 | Day 15 |
| Control DMSO | 0/10 | 0/10 | 19.2 | 33.0 |
| 10.0 | 0/10 | 0/10 | 20.1 | 31.2 |

---

| $LD_{50}$ (Day 15) |
|---|
| > 10 ml/kg |

## TECHNICAL REPORT DATA
*(Please read Instructions on the reverse before completing)*

| | | |
|---|---|---|
| 1. REPORT NO. EPA-600/7-80-097 | 2. | 3. RECIPIENT'S ACCESSION NO. |
| 4. TITLE AND SUBTITLE Environmental Assessment: Source Test and Evaluation Report--Wellman-Galusha (Ft. Snelling) Low-Btu Gasification | | 5. REPORT DATE May 1980 |
| | | 6. PERFORMING ORGANIZATION CODE |
| 7. AUTHOR(S) M. P. Kilpatrick, R. A. Magee, T. E. Emmel, and G. C. Page | | 8. PERFORMING ORGANIZATION REPORT NO. 80-218-143-116 |
| 9. PERFORMING ORGANIZATION NAME AND ADDRESS Radian Corporation P.O. Box 9948 Austin, Texas 78766 | | 10. PROGRAM ELEMENT NO. INE825 |
| | | 11. CONTRACT/GRANT NO. 68-02-2147, Exhibit A |
| 12. SPONSORING AGENCY NAME AND ADDRESS EPA, Office of Research and Development Industrial Environmental Research Laboratory Research Triangle Park, NC 27711 | | 13. TYPE OF REPORT AND PERIOD COVERED Final; 9/78-12/79 |
| | | 14. SPONSORING AGENCY CODE EPA/600/13 |

15. SUPPLEMENTARY NOTES IERL-RTP project officer is William J. Rhodes, Mail Drop 61, 919/541-2851.

16. ABSTRACT The report gives results of a source test and evaluation of a Wellman-Galusha gasifier at the U.S. Bureau of Mines' Twin Cities Metallurgy Research Center at Ft. Snelling. The gasifier is operated as part of the Bureau's investigation of the use of low-Btu gas as a fuel for iron ore pelletizing. Program objectives were to provide survey data from which a preliminary assessment of potential environmental impact could be made, and to identify potential problems which would require further characterization or pollution control technology implementation. Difficulties with the test burner operation resulted in the product gas being vented to the startup flare, bypassing the cyclone during a majority of the lignite test (North Dakota, Indian Head), December 9-15, 1978. Therefore, data for the test burner is somewhat limited and the product gas characterization does not reflect the particulate removal capability of the process cyclone. Within these constraints, the test objectives were met. The Source Analysis Model/IA was used to provide rapid screening for identifying and prioritizing potentially harmful waste streams. Identified as major contributors to the overall health discharge severity were benzopyrene and CO in the product gas; and As and Cr in the test burner flue gas. Several gasifier-related water components exceeded Federal drinking water standards.

17. KEY WORDS AND DOCUMENT ANALYSIS

| a. DESCRIPTORS | b. IDENTIFIERS/OPEN ENDED TERMS | c. COSATI Field/Group |
|---|---|---|
| Pollution Toxicity | Pollution Control | 13B 06T |
| Assessments | Stationary Sources | 14B |
| Coal Gasification | Environmental Assessment | 13H |
| Iron Ores | | 08G |
| Pelleting | Wellman-Galusha Process | 07A |
| Lignite | | 21D |
| Dust | Particulate | 11G |

| | | |
|---|---|---|
| 18. DISTRIBUTION STATEMENT Release to Public | 19. SECURITY CLASS (This Report) Unclassified | 21. NO. OF PAGES 606 |
| | 20. SECURITY CLASS (This page) Unclassified | 22. PRICE |

EPA Form 2220-1 (9-73)