United States
Environmental Protection
Agency

EPA-600/7-86-005a

February 1986

EPA

Research and Development

ENVIRONMENTAL ASSESSMENT OF
NH_3 INJECTION FOR AN
INDUSTRIAL PACKAGE BOILER
Volume I. Technical Results

Prepared for

Office of Air Quality Planning and Standards

Prepared by

Air and Energy Engineering Research
Laboratory
Research Triangle Park NC 27711

RESEARCH REPORTING SERIES

Research reports of the Office of Research and Development, U.S. Environmental Protection Agency, have been grouped into nine series. These nine broad categories were established to facilitate further development and application of environmental technology. Elimination of traditional grouping was consciously planned to foster technology transfer and a maximum interface in related fields. The nine series are:

1. Environmental Health Effects Research
2. Environmental Protection Technology
3. Ecological Research
4. Environmental Monitoring
5. Socioeconomic Environmental Studies
6. Scientific and Technical Assessment Reports (STAR)
7. Interagency Energy-Environment Research and Development
8. "Special" Reports
9. Miscellaneous Reports

This report has been assigned to the INTERAGENCY ENERGY-ENVIRONMENT RESEARCH AND DEVELOPMENT series. Reports in this series result from the effort funded under the 17-agency Federal Energy/Environment Research and Development Program. These studies relate to EPA's mission to protect the public health and welfare from adverse effects of pollutants associated with energy systems. The goal of the Program is to assure the rapid development of domestic energy supplies in an environmentally-compatible manner by providing the necessary environmental data and control technology. Investigations include analyses of the transport of energy-related pollutants and their health and ecological effects; assessments of, and development of, control technologies for energy systems; and integrated assessments of a wide range of energy-related environmental issues.

EPA REVIEW NOTICE

This report has been reviewed by the participating Federal Agencies, and approved for publication. Approval does not signify that the contents necessarily reflect the views and policies of the Government, nor does mention of trade names or commercial products constitute endorsement or recommendation for use.

This document is available to the public through the National Technical Information Service, Springfield, Virginia 22161.

EPA-600/7-86-005a
February 1986

ENVIRONMENTAL ASSESSMENT OF NH_3 INJECTION FOR AN INDUSTRIAL PACKAGE BOILER

Volume I
Technical Results

by
C. Castaldini, R. DeRosier, and L. R. Waterland
Acurex Corporation
Energy & Environmental Division
555 Clyde Avenue
P.O. Box 7555
Mountain View, California 94039

EPA Contract No. 68-02-3188

EPA Project Officer: R. E. Hall
Air and Energy Engineering Research Laboratory
Research Triangle Park, North Carolina 27711

for

U.S. ENVIRONMENTAL PROTECTION AGENCY
Office of Research and Development
Washington, DC 20460

ACKNOWLEDGMENTS

The authors wish to extend their gratitude to Gordon Turl of Getty-Mohawk Region in Bakersfield, California who agreed to volunteer the boiler for the test program and provided valuable technical information. The support of E. R. Rudio of Getty-Mohawk in operating the ammonia injection system is also appreciated. Special recognition is also extended to the Acurex field test team under the supervision of B. C. DaRos, assisted by J. S. Steiner, R. Pape, R. Best, J. Holm, and M. Chips.

TABLE OF CONTENTS

Section		Page
1	EXECUTIVE SUMMARY	1-1
2	INTRODUCTION	2-1
3	PROCESS DESCRIPTION AND PERFORMANCE	3-1
	3.1 PROCESS PERFORMANCE	3-1
	3.2 TEST CONDITIONS	3-2
4	EMISSION RESULTS	4-1
	4.1 SAMPLING AND ANALYSIS PROTOCOL	4-1
	4.2 CRITERIA POLLUTANTS AND OTHER VAPOR SPECIES EMISSIONS	4-4
	4.3 TRACE ELEMENT ANALYSES	4-7
	4.4 ORGANIC SPECIES EMISSIONS	4-9
	4.4.1 C_1 to C_6 Hydrocarbons, TCO, and GRAV Analysis	4-14
	4.4.2 Infrared Spectra of Total Sample Extracts	4-16
	4.4.3 GC/MS Analysis of Total Sample Extract	4-16
	4.4.4 Column Chromatography	4-16
	4.5 RADIOMETRIC EMISSIONS	4-20
5	ENVIRONMENTAL ASSESSMENT	5-1
	5.1 EMISSIONS ASSESSMENT	5-1
	5.2 BIOASSAY RESULTS	5-2
	APPENDIX A -- SAMPLING AND ANALYSIS METHODS	A-1
	APPENDIX B -- TRACE ELEMENT CONCENTRATIONS AND MASS BALANCES	B-1
	APPENDIX C -- FLOWRATE AND COLLECTION DATA	C-1

LIST OF FIGURES

Figure		Page
1-1	Typical Package Boiler Thermal $DeNO_x$ Injector Design. . .	1-3
1-2	Thermal $DeNO_x$ Performance on the Packaged Industrial Boiler.	1-8
3-1	Thermal $DeNO_x$ Performance on Packaged Industrial Boiler.	3-3
A-1	Schematic for Continuous, Extractive Sampling System. . .	A-2
A-2	Schematic of Particulate Sampling Train	A-5
A-3	Schematic of Ammonia Sampling Train	A-6
A-4	Controlled Condensation System.	A-7
A-5	Source Assessment Sampling Train Schematic.	A-9
A-6	Flue Gas Analysis Protocol for SASS Samples	A-11
A-7	Exhaust Gas Analysis Protocol	A-12
A-8	Organic Analysis Methodology.	A-13
A-9	C_1-C_6 Hydrocarbon Sampling System	A-14
A-10	Schematic of Sampling Cylinder Construction	A-17

LIST OF TABLES

Table		Page
1-1	Boiler Operating Conditions	1-4
1-2	Boiler Operating Conditions	1-6
1-3	Criteria and Other Gas Species Emissions	1-10
1-4	Organic Extract Summary -- Test 1 (Baseline) (XAD) Extract	1-12
1-5	Summary of Flue Gas Emissions, μg/dscm	1-14
1-6	Bioassay Results	1-15
2-1	Completed Tests During the Current Program	2-5
3-1	Boiler Operating Conditions	3-4
3-2	Fuel Compositions	3-6
3-3	Boiler Thermal Efficiency	3-7
4-1	Criteria and Other Gas Species Emissions	4-5
4-2	Particulate Emissions -- EPA Method 5/17	4-8
4-3	Ammonia Recovery From EPA Method 5/17 Train	4-9
4-4	Trace Element Flowrates -- Test 1 Baseline	4-10
4-5	Trace Element Flowrates -- Test 2 NH_3 Injection	4-12
4-6	Summary of Total Organic Emissions in the Flue Gas	4-15
4-7	Summary of IR Spectra of Total Sample Extracts	4-17
4-8	Compounds Sought in the GC/MS and Their Detection Limits	4-18
4-9	Results of GC/MS Analyses	4-19
4-10	Organic Extract Summary -- Test 1 XAD Extract	4-19
4-11	Radiometric Activity of SASS Particulate	4-20
5-1	Flue Gas Species in Concentrations Exceeding 0.1 of an Occupational Exposure Limit	5-3
5-2	Bioassay Results	5-3

LIST OF TABLES (Concluded)

Table		Page
A-1	Continuous Monitoring Equipment in the Mobile Laboratory.	A-4
A-2	Gas Chromatograph Specifications.	A-16

SECTION 1

EXECUTIVE SUMMARY

This report describes emission results obtained from field testing of a oil- and gas-fired industrial boiler equipped with the Exxon's Thermal $DeNO_x$ Process for NO_x reduction. This work was performed for the Air and Energy Engineering Research Laboratory (AEERL) of the Environmental Protection Agency (EPA) under the Combustion Modification Environmental Assessment (CMEA) program, EPA contract number 68-02-3188. The objective of the tests was to evaluate criteria and noncriteria pollutant emission in the flue gas during a baseline (uncontrolled) condition and a low-NO_x (with NH_3 injection) condition.

1.1 SOURCE DESCRIPTION

The boiler tested in the program was a packaged two-drum Zurn keystone steam generator equipped with an economizer and having a maximum design capacity of 7.57 kg/s (60,000 lb/hr) superheated steam at 2.51 MPa (350 psig). This unit, installed in 1979 at a southern California oil refinery, was equipped with the manufacturer's sidefire air injection and the Thermal $DeNO_x$ Process developed by the Exxon Research and Engineering (ER&E).

The Thermal $DeNO_x$ Process involves the injection of NH_3 into the convective passes of boilers for the selective noncatalytic reduction of NO in the presence of O_2. NO reduction takes place over a temperature range of 870° to 1,200°C (1,600° to 2,200°F). Hydrogen can be added along with the NH_3

to lower the range of reaction temperature to as low as 700°C (1,330°F). Multiple NH_3 injection grids can also be used to allow sustained NO_x reduction performance with boiler load swings.

The boiler tested in this program utilized only one injection grid. Details of the injection grid were not available because they were considered ER&E proprietary. However, a typical two-drum boiler installation of a single grid NH_3/H_2 injection system is shown in figure 1-1. Saturated steam was utilized to carry the NH_3 to the boiler passes. H_2 injection capability was also available.

Primary environmental concerns with this NO_x control technology on full-scale combustion sources focus on the breakthrough of NH_3, and when sulfur-bearing fuels are burned, NH_3 byproducts of ammonium sulfate, $(NH_3)_2 SO_4$ and ammonium bisulfate, NH_4HSO_4.

1.2 BOILER OPERATION AND FUELS

The test program for this unit called for emissions evaluation during a baseline test (without NH_3 injection) and a test with NH_3 injection for significant NO_x reduction. Table 1-1 summarizes the boiler and NH_3 injection system operations during these two test conditions. During both tests the boiler manufacturer's sidefire air injection was operational. Boiler operation was maintained relatively constant to allow a direct comparison between tests and to isolate the effect of NH_3 injection on emissions.

Boiler steam flowrate was approximately 4.0 kg/s (32,000 lb/hr) for both tests corresponding to a total heat input of about 13 MW (45 million Btu/hr). The boiler was fired with refinery gas and residual oil. The refinery gas contributed about 44 percent of the total heat input. Typically, refinery gas contributes up to 2/3 of the total heat input for this

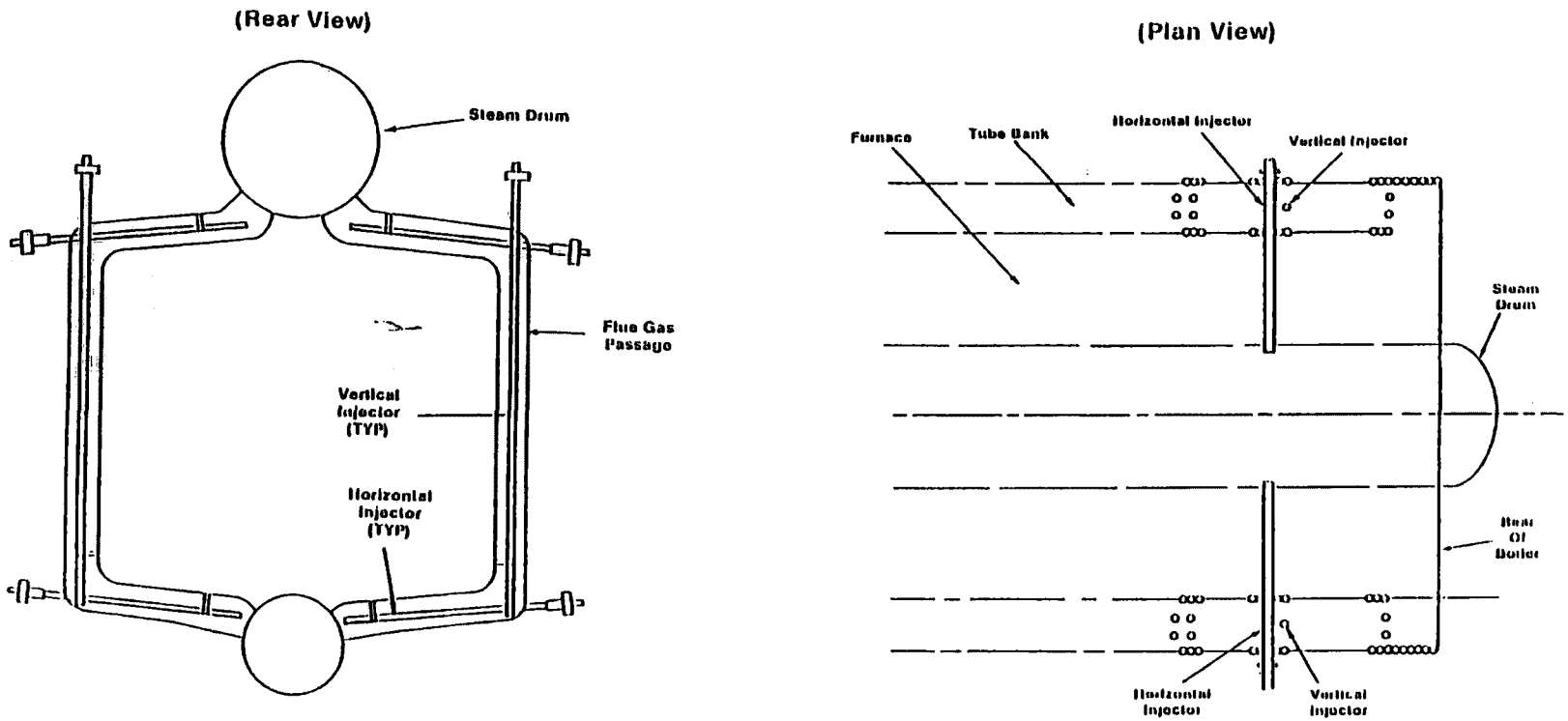

Figure 1-1. Typical Package Boiler Thermal $DeNO_x$ Injector Design (Reference 1-1)

Table 1-1. Boiler Operating Conditions

Parameter	Units	Test 1[a] (Baseline)	Test 2 (NH_3 Injection)
Steam:			
Steam flowrate	kg/s (10^3 lb/hr)	4.04 (32.0)	4.00 (31.7)
Drum pressure	MPa (psig)	1.96 (270)	1.96 (270)
Superheater outlet pressure	MPa (psig)	1.83 (250)	1.83 (250)
Superheater temperature	K (°F)	530 (495)	530 (495)
Fuels:			
Fuel oil flowrate	l/s (gph)	0.184 (175)	0.184 (175)
Refinery fuel gas flowrate	Sm^3/s (10^3 scfh)	0.166 (21.3)	0.167 (21.2)
Fuel oil heat rate	MW (10^6 Btu/hr)	7.39 (25.2)	7.51 (25.6)
Refinery fuel gas heat rate	MW (10^6 Btu/hr)	5.86 (20.0)	3.86 (20.0)
Total heat rate	MW (10^6 Btu/hr)	13.2 (45.2)	13.4 (45.6)
Oil/gas heat input	Percent	56/44	56/44
Burner Settings:			
Fuel oil pressure	MPa (psig)	0.41 (45)	0.38 (41)
Fuel oil temperature	K (°F)	366 (198)	367 (200)
Atomizing steam pressure	MPa (psig)	0.56 (66)	0.53 (62)
Refinery fuel gas pressure	kPa (psig)	120 (2.5)	120 (2.5)
Swirl setting	--	4	4
Furnace Draft:			
Window pressure	kPa (in. H_2O)	0.85 (3.4)	0.87 (3.5)
Furnace pressure	kPa (in. H_2O)	0.35 (1.4)	0.40 (1.6)
Boiler outlet pressure	Pa (in. H_2O)	80 (0.32)	92 (0.37)
NH_3 Injection System:			
NH_3 flowrate	g/s (lb/hr)	--	1.53 (12.1)
NH_3 header pressure	MPa (psig)	--	>1.72 (>250)
Steam carrier	kg/s (lb/hr)	0.105 (832)	0.105 (832)
Steam carrier pressure	MPa (psig)	0.410 (59.5)	0.410 (59.5)

[a]Baseline test was performed over a 2-day period. Operating data represent average values for these 2 days.

boiler. NH_3 injection rate during test 2 was 1.53 g/s (12.1 lb/hr) corresponding to a NH_3/NO molar ratio of about 2.5.

Residual oil and refinery gas analysis results are summarized in table 1-2. Specific gravity of refinery gas varied from about 0.44 to 0.50 due to variations in the level of hydrogen doping resulting from refinery process conditions.

1.3 TEST PROGRAM

The program for emission measurements at the two test conditions conformed to a modified EPA level 1 protocol (reference 1-2). In addition, measurements for NH_3 flue gas emissions were performed to calculate the amount of unreacted NH_3 being emitted under boiler and control system operations investigated. Flue gas measurements were made at the stack downstream of the boiler economizer where the gas temperature was approximately 188°C (370°F). Flue gas measurement included:

- Continuous monitors for NO_x, CO, CO_2, and O_2
- Source assessment sampling system (SASS) train sampling for organic and inorganic pollutant species
- EPA Method 5 with water impingers and an EPA Method 17 backup for solid and condensible particulate mass emissions
- Controlled condensation system (CCS) for SO_2 and SO_3
- Grab sample for onsite analysis of gaseous C_1 to C_6 hydrocarbon by gas chromatography
- EPA Method 17 with HCl impinger solutions for ammonia sampling

In addition to this detailed test program, short-term tests varying NH_3 NO molar ratio, hydrogen injection, and oil/gas fuel ratio were performed. The objective of these short-term tests was to map the performance of the Thermal $DeNO_x$ Process over a wide range of system and boiler operating

Table 1-2. Boiler Operating Conditions

Fuel Component/Properties	Test 1[a] (Baseline)	Test 2 (NH_3 Injection)
Residual Oil (Weight Percent)		
Carbon, C	86.53	86.01
Hydrogen, H	11.50	12.18
Nitrogen, N	0.65	0.63
Sulfur, S	0.47	0.47
Oxygen, O	0.71	0.65
Specific gravity	0.94	0.94
Higher heating value MJ/kg	43.87	44.49
(Btu/lb)	(18,900)	(19,170)
Refinery Fuel Gas (Mole Percent)		
Hydrogen, H	53.09	53.62
Methane, CH_4	28.31	29.70
Ethane, C_2H_6	5.94	5.90
Propane, C_3H_8	5.33	5.63
Butane, C_4H_{10}	4.39	3.58
Pentane, C_5H_{12}	1.57	0.81
C_6+	0.93	0.29
N_2	0.23	0.24
CO_2	0.20	0.22
H_2S	0.002	0.003
Specific gravity	0.496	0.455
Higher heating value MJ/m^3	35.32	32.90
(Btu/ft^3)	(948)	(883)
Combined Fuel (Weight Percent)		
Carbon, C	81.90	81.50
Hydrogen, H	16.69	17.03
Nitrogen, N	0.36	0.37
Sulfur, S	0.26	0.28
Oxygen, O	0.40	0.38
Higher heating value MJ/kg	50.06	50.70
(Btu/lb)	(21,570)	(21,845)

[a]Baseline test was performed ober a 2-day period. Fuel data represent average values of fuel analyses for each of the 2 days.

parameters. For these tests, only continuous monitoring of NO_x and O_2 was performed. Results of these short-term tests are illustrated in figure 1-2.

Baseline NO_x emissions averaged 235 ppm at 3 percent O_2 for two oil/gas fuel mixtures investigated. The figure shows that NO_x reduction with NH_3/NO ratio depends on the fuel mixture. The system was less effective at the oil/gas ratio of 56/44 percent heat input basis than at the lower oil/gas ratio of 37/63 percent (closer to the typical operation of the unit and the design basis for the NH_3 injection grid installed). The addition of hydrogen did not improve system performance at the lower oil/gas ratio, but resulted in significant, further NO_x reduction to levels below 100 ppm at the higher oil/gas ratio.

This can be explained by the fact that firing the higher oil/gas ratio led to lower boiler convective section gas temperatures at the grid location, thereby decreasing the effectiveness of NH_3 alone. Hydrogen injection to shift the temperature window for the reduction reaction was effective at this higher oil/gas ratio. For both fuel mixtures, the NO_x reduction performance appears to peak at a NH_3/NO ratio of about 2.5 with little or no additional reduction gained with further increase in NH_3 injection rate.

Figure 1-2 also indicates the two test conditions where detailed emissions measurements were performed. These test conditions, indicated by an "X," correspond to the baseline and the low-NO_x test. The NH_3/NO ratio during the low-NO_x test was about 2.5 with the boiler oil/gas ratio of 56/44 percent.

It is evident that the low-NO_x, Thermal $DeNO_x$ Process operation selected for in-depth emission evaluation did not correspond to optimum NO_x reduction performance for which the NH_3 injection system was designed and is capable of delivering. However, the test is representative of maximum

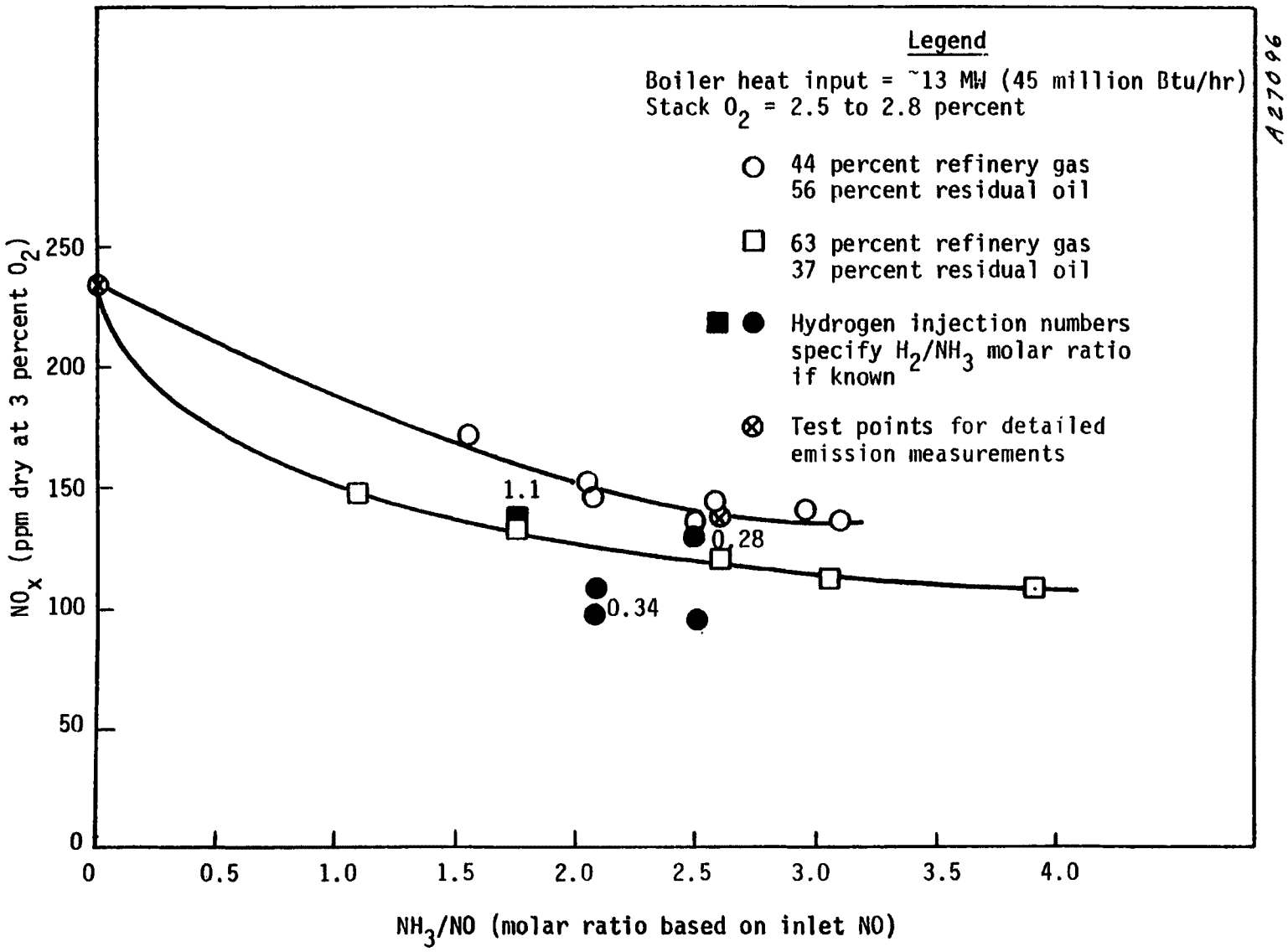

Figure 1-2. Thermal $DeNO_x$ Performance on the Packaged Industrial Boiler

performance for the boiler and NH_3 injection operating condition indicated here. The following section summarizes the results of these detailed tests.

1.4 TEST RESULTS

Table 1-3 summarizes criteria and other gas species emissions measured during the two in-depth tests. The NH_3 injection rate of 1.53 g/s (12.1 lb/hr), corresponding to a NH_3/NO molar ratio of 2.52, resulted in a 41 percent NO_x reduction. CO emissions showed no significant change; however, indications of higher gaseous hydrocarbons especially in the C_4 to C_6 range were recorded. Speculations can only be made as to whether these emission increases were due to burner conditions (i.e., coking of the oil-burner tip required nozzle cleaning at each operating shift), change in fuel properties, or quenching of boiler convective flue gas with NH_3 carrier steam. Conclusions with regard to SO_2 and SO_3 cannot be made because of loss of sample during the baseline test. Test 2, SO_2 and SO_3 results account for about 60 percent of the sulfur in the fuel with the remainder possibly undetected because of ammonium sulfate formation.

Baseline NH_3 emissions ranged between 3 to 25 ppm averaging 11 ppm (0.23 lb/hr). During NH_3 injection, unreacted NH_3 emissions from two consecutive measurements ranged between 200 and 600 ppm averaging 430 ppm (8.4 lb/hr). A third measurement resulted in NH_3 concentrations of 840 ppm (16.0 lb/hr). This measurement was considered erroneous because it resulted in more NH_3 emitted than actually injected through the grid. Analyses of the EPA Method 5 and 17 impinger solutions also indicated a high concentration of NH_3 corresponding to a stack concentration of about 6 ppm (0.12 lb/hr) for baseline and 360 ppm (7 lb/hr) for the NH_3 injection test. These results lend credence to results obtained with the ammonia emission sampling system.

Table 1-3. Criteria and Other Gas Species Emissions

Pollutant	Test 1 (Baseline)	Test 2 (NH_3 Injection)
As Measured By:		
Continuous gas analyses		
O_2, percent	2.6	2.5
CO_2, percent	11.7	11.6
NO_x, ppm	239	141
CO, ppm	31	24
Wet chemical methods		
SO_2, ppm	NA	82
SO_3, ppm	NA	13
NH_3, ppm	11[a]	440[b]
Offsite gas chromatography		
N_2O	53	17
Onsite gas chromatography		
C_1, ppm	ND	0.8
C_2, ppm	ND	0.6
C_3, ppm	2.6	ND
C_4, ppm	ND	6.2
C_5, ppm	ND	5.1
C_6, ppm	ND	5.0

Corrected Emissions	ppm[c]	ng/J[d]	lb/10^6 Btu[d]	ppm	ng/J	lb/10^6 Btu
NO_x[e]	234	115	0.268	137	67	0.16
CO	30	9.0	0.02	23	6.9	0.02
SO_2	NA	NA	NA	80	55	0.13
SO_3[f]	NA	NA	NA	13	13	0.03
NH_3[g]	11	2.0	0.005	430	78	0.18
N_2O	52	25	0.056	17	8.0	0.019
C_1	--	--	--	0.8	0.15	0.0003
C_2	--	--	--	0.6	0.21	0.0005
C_3	2.5	1.3	0.003	--	--	--
C_4	--	--	--	6.0	3.2	0.007
C_5	--	--	--	5.0	4.3	0.010
C_6	--	--	--	4.9	5.0	0.012
Total C_1 to C_6	2.5	1.3	0.003	17.0	13.0	0.030
Particulate Mass Emissions:						
Method 5/17 solid	--	4.6	0.01	--	1.8	0.004
Method 5/17 condensible inorganic	--	10.0	0.023	--	180	0.42
Method 5/17 condensible organic	--	2.9	0.007	--	0.2	0.0004
Method 5/17 total	--	17.7	0.042	--	182	0.43
SASS solid	--	2.2	0.005	--	2.6	0.006

[a] NH_3 emissions ranged from 3 to 25 ppm from three separate flue gas measurements
[b] NH_3 emissions ranged from 280 to 600 ppm from two separate flue gas measurements
[c] Dry ppm at 3 percent O_2
[d] On heat input basis
[e] As NO_2
[f] As H_2SO_4
[g] Arithmetic average
NA -- Sample lost in transit
ND -- Not detected

Nitrous oxide (N_2O) averaged about 50 ppm during baseline and dropped to 17 ppm during the second test. This 68 percent reduction in ppm N_2O compares with the 41 percent reduction in ppm NO_x.

Total particulate matter during the NH_3 injection test increased by more than one order of magnitude. The largest contribution to this increase was from the inorganic condensate matter collected in the impinger section. This can be in part explained by ammonia sulfate and bisulfate formed either in the stack or through the particulate sampling system.

SASS samples were analyzed for organic content and inorganic trace elements. Total chromatographable organics, hydrocarbons in the boiling range of 100° to 300°C (210 to 570°F), measured 0.023 ng/J (90 µg/dscm) for the baseline and 0.01 ng/J (40 µg/dscm) for the NH_3 injection test. Organics measured by gravimetry (GRAV) analysis for hydrocarbons having boiling points greater than 300°C (>570°F) were 0.29 ng/J (1,300 µg/dscm) for the baseline and 0.059 ng/J (240 µg/dscm) for the NH_3 injection test. Infrared spectra of the gravimetric residue suggests the pressure of aliphatic hydrocarbons and alcohols for both tests.

The XAD-2 extract of the baseline test, which contained the highest organic content, was also subjected to liquid chromatography separation. Table 1-4 summarizes these results. There were no discernable peaks from fractions 2 through 4. These spectra indicate that, of the 1.2 mg/dscm of organic matter in the total sample, about 70 percent is aliphatic hydrocarbons, 20 percent is alcohols, and 10 percent is carboxylic acids.

Gas chromatography/mass spectrometry analysis of sample extracts was performed to determine the presence and concentration of 58 semivolatile organic priority pollutants. Of these, the only ones detected were

Table 1-4. Organic Extract Summary -- Test 1 (Baseline) XAD Extract

Total GRAV Organics[a]	LC1	LC2	LC3	LC4	LC5	LC6	LC7	Total
mg	3.9	<0.6	1.2	1.9	1.6	2.5	1.6	12.7
mg/dscm	0.16	<0.02	0.05	0.08	0.06	0.10	0.06	0.51
Category[b]	Assigned Intensity -- (mg/dscm)							
Aliphatic hydrocarbons	100 -- (0.16)				100 -- (0.16)	100 -- (0.16)	100 -- (0.16)	0.27
Alcohols						100 -- (0.16)	100 -- (0.16)	0.07
Carboxylic acids							100 -- (0.16)	0.02

[a]Total GRAV sample of 31 mg; 20 mg taken for LC with 8.1 mg recovered. Total mg corrected in LC fractions corrected back to total sample.
[b]Summary of organic emissions based on IR results

naphthalene, phenanthrene, and phenol in amounts corresponding to flue gas concentrations generally <1 μg/dscm.

Results of spark source mass spectrometry (SSMS) and atomic absorption spectrometry (AAS) indicated that inorganic trace elements were not affected by NH_3 injection. Major elements having flue-gas concentrations exceeding 50 mg/dscm for both tests included: sulfur, copper, nickel, silicon, titanium, vanadium, zinc, potassium, cobalt, fluorine, and iron. These emissions are most likely the result of:

- Inorganic elements in the fuel oil
- Erosion of metal surfaces in the hot combustion gases in the boiler passes including the NH_3 injection grid
- Erosion of sampling equipment metal parts

1.5 ENVIRONMENTAL ASSESSMENT

Emission Concentrations (flue gas stream species) from both tests were:

- Compared to occupational exposure guidelines as a rough index of the need for further monitoring
- The flue gas samples collected were subjected to bioassays

Table 1-5 lists those pollutants emitted in the flue gas at levels greater than 10 percent of their respective guidelines. NO_x emissions are reduced at the expense of increased NH_3 emissions. Emissions of several metals were above their respective guideline limits, however, these emissions were not impacted by the NO_x control technology.

Bioassay tests for health effects were performed on the organic (XAD-2) extracts collected by SASS. These tests included (reference 1-4):

- Ames assay, based on the property of Salmonella typhimurium mutants to revert due to exposure to various classes of mutagens

Table 1-5. Summary of Flue Gas Emissions, μg/dscm

Species	Test 1 (baseline)	Test 2 (NH_3 injection)	Occupational Exposure Guideline[a]
Criteria Pollutants and Total Organic Emissions			
CO	36×10^3	28×10^3	55×10^3
NO_x (as NO_2)	457×10^3	270×10^3	6×10^3
SO_2	NA	218×10^3	5×10^3
NH_3	7.8×10^3	307×10^3	18×10^3
Solid particulate	17×10^3	6.7×10^3	1.4×10^4
Condensable organic particulate	11×10^3	740	--
Condensable inorganic particulate	37×10^3	670×10^3	--
Total volatile organics (C_1 to C_6)	4.8×10^3	48×10^3	--
Total chromatographable organics (C_7 to C_{16})	90	40	--
Total GRAV organics (C_{16+})	1.3×10^3	240	--
Trace Elements			
Silver, Ag	2.13×10^3	75	10
Platinum, Pt	15.7	35.7	2
Cobalt, Co	>50.9	>61.9	50
Nickel, Ni	>82.3	>63.1	100
Copper, Cu	>122	>69.3	200
Calcium, Ca	551	ND	1.4×10^3
Beryllium, Be	>0.619	ND	2
Chromium, Cp	10.3	7.73	50
Phosphorus, P	16.2	13.6	100
Tungsten, W	103	ND	1×10^3
Vanadium, V	51.4	>60.0	500
Potassium, K	72.8	498	2×10^3

[a]Threshold limit value, reference 1-3
ND = Not detected
NA = Not available

- Cytotoxicity assay (CHO) with mammalian cells in culture to measure cellular metabolic impairment and death from exposure to soluble toxicants

Table 1-6 summarizes these results which indicate that the XAD-2 organic extracts were of moderate or less mutagenicity and toxicity.

Table 1-6. Bioassay Results

Sample	Ames Mutagenicity	CHO Cytotoxicity
Baseline XAD extract	M[a]	U[b]
NH_3 injection XAD extract	U[b]	U[b]

[a]Moderate mutagenicity
[b]Insufficient sample to evaluate, test results indicate moderate mutagenicity (toxicity) or less

REFERENCES FOR SECTION 1

1-1. Hurst, B. E. and C. E. Schlecksen, Jr., "Applicability of Thermal $DeNO_x$ to Large Industrial Boilers," Proceedings of the Joint Symposium on Stationary Combustion NO_x Control, Volume V, Environmental Protection Agency, EPA-600/9-81-028e, NTIS PB 81-236150, July 1981.

1-2. Lentzen, D. E., et al., "IERL-RTP Procedures Manual: Level 1 Environmental Assessment (Second Edition)," Environmental Protection Agency, EPA-600/7-78-201, NTIS PB 293795, October 1978.

1-3. American Conference of Governmental Industrial Hygienists, Threshold Limit Values for Chemical Substances and Physical Agents in the Work Environment With Intended Changes for 1982, Cincinnati, Ohio, 1982.

1-4. Brusick, D. J., et al., "IERL-RTP Procedure Manual: Level 1 Environmental Assessment, Biological Tests," EPA-600/18-81-024, NTIS PB 228966, October 1981.

SECTION 2

INTRODUCTION

This report describes and presents results for a set of environmental assessment tests performed for the Air and Energy Engineering Research Laboratory (AEERL) of EPA under the Combustion Modification Environmental Assessment (CMEA) program, EPA Contract No. 68-02-3188. The CMEA started in 1976 as part of EPA's Conventional Combustion Environmental Assessment (CCEA) program with a 3-year study (NO_x EA), EPA Contract No. 68-02-2160, having the following objectives:

- Identify potential multimedia environmental effects of stationary combustion sources and combustion modification technology
- Develop and document control application guidelines to minimize these effects
- Identify stationary source and combustion modification R&D priorities
- Disseminate program results to intended users

During the first year of the NO_x EA, data and methodologies for the environmental assessment were compiled. Furthermore, priorities for the schedule and level of effort for developing emission data for the various source/fuel/control combinations were identified. This effort revealed major data gaps, particularly for noncriteria pollutants (organic emissions and trace elements) for virtually all combinations of stationary combustion

sources and combustion modification techniques. Consequently, a series of seven environmental field test programs was undertaken to fill these data gaps. The results of these tests are documented in seven individual reports (references 2-1 through 2-7) and in the final NO_x EA report summarizing the entire 3-year effort (reference 2-8).

The current CMEA program has, as major objectives, the continuation of multimedia environmental field tests initiated in the original NO_x EA program. These new tests, using standardized sampling and analytical procedures (reference 2-9) are aimed at filling remaining data gaps and addressing the following priority needs:

- Advanced NO_x controls
  - -- Evaluation of controls with regard to projected New Source Performance Standards (NSPS)
  - -- Evaluation of controls designated Best Available Control Technology (BACT)
- Alternate fuels
- Secondary sources
- EPA program data needs
  - -- Residential oil combustion
  - -- Wood firing in residential, commercial, and industrial sources
  - -- High interest emissions determination
- Nonsteady-state operations

Stringent NO_x regulations in California have led to the application of advanced controls which are capable of significant reductions in NO_x emission from stationary combustion sources. Among these controls, noncatalytic ammonia (NH_3) injection, developed by Exxon Research and Engineering Company (ER&E) as the Thermal $DeNO_x$ Process, has been installed on a number of process

heaters and industrial boilers in Southern California where NO_x abatement requires the application of the best available control technology (BACT) (reference 2-9).

The Thermal $DeNO_x$ Process involves the injection of NH_3 into hot flue gas in a prescribed temperature range from about 870°C (1,600°F) to about 1,200°C (2,200°F). The chemical reaction of NH_3 with NO_x in the presence of O_2 can be summarized by the following two equations (reference 2-9):

$$NO_x + NH_3 + O_2 + (H_2) \rightarrow N_2 + H_2O \quad (1)$$

$$NH_3 + O_2 \rightarrow NO_x + H_2O \quad (2)$$

At temperatures above approximately 1,200°C (2,200°F), NH_3 oxidizes to form NO_x as shown by equation 2. At temperatures below approximately 870°C (1,600°F) the rates of both reactions are low, causing the NH_3 to leave unreacted. At the lower range of flue gas temperature, however, the decomposition of NO_x by NH_3 can be accomplished by the simultaneous injection of H_2. The addition of H_2 together with NH_3 tends to extend the effective temperature range of NO_x decomposition to about 700°C (1,300°F).

In industrial and utility boilers, NH_3 injection takes place in the convective tube banks where single or multiple injection grids are located. Although NO_x reduction efficiencies of over 90 percent have been achieved in the laboratory, full-scale applications have resulted in a maximum of 60 to 70 percent efficiency. Temperature and gas velocity gradients, low residence time at temperature, and degree of mixing are the primary factors which tend to reduce process performance in full-scale applications.

Potential environmental impacts resulting from application of this process are primarily associated with emissions of unreacted NH_3 and formation of ammonium sulfate which adds to the total particulate emission from the

source. Other concerns such as cyanide (HCN) and nitrous oxide (N_2O) formation have been addressed by ER&E in the laboratory; however, limited data exists on full-scale combustion sources. In response to these concerns, a medium-size industrial watertube boiler designed with NH_3 injection was selected for testing under the CMEA program. The objective of the tests was to quantify multimedia emission from the boiler operating with and without NH_3 injection, thus providing a measure of the environmental benefit of NO_x reduction and potential risks associated with the process. The data presented in this report quantify flue gas emission and identify pollutants of potential concern using results from standardized sampling and analytical procedures (reference 2-10).

Table 2-1 lists all the tests performed in the CMEA effort, outlining the source tested, fuel used, combustion modifications implemented and the level of sampling and analysis performed in each case. Results of these test programs are discussed in separate reports.

Table 2-1. Completed Tests During the Current Program

Source	Description	Test Points Unit Operation	Sampling Protocol	Test Collaborator
Spark-ignited, natural-gas-fired reciprocating internal combustion engine	Large bore, 6-cylinder, opposed piston, 186-kW (250 Bhp)/cyl, 900-rpm Model 38TDS8-1/8	-- Baseline (pre-NSPS) -- Increased air-fuel ratio aimed at meeting proposed NSPS of 700 ppm corrected to 15 percent O_2 and standard atmospheric conditions	Engine exhaust: -- SASS -- Method 5 -- Gas sample (C_1-C_6 HC) -- Continuous NO, NO_x, CO, CO_2, O_2, CH_4, TUHC Fuel Lube oil	Fairbanks Morse Division of Colt Industries
Compression ignition, diesel-fired, reciprocating internal combustion engine	Large bore, 6-cylinder opposed piston, 261-kW (350 Bhp)/cyl, 900-rpm Model 38TDD8-1/8	-- Baseline (pre-NSPS) -- Fuel injection retard aimed at meeting proposed NSPS of 600 ppm corrected to 15 percent O_2 and standard atmospheric conditions	Engine exhaust: -- SASS -- Method 8 -- Method 5 -- Gas sample (C_1-C_6 HC) -- Continuous NO, NO_x, CO, CO_2, O_2, CH_4, TUHC Fuel Lube oil	Fairbanks Morse Division of Colt Industries
Low-NO_x, residential, condensing-heating system furnished by Karlsons Blueburner Systems Ltd. of Canada	Residential hot water heater equipped with M.A.N. low-NO_x burner, 0.55 ml/s (0.5 gal/hr) firing capacity, condensing flue gas	Low-NO_x burner design by M.A.N.	Furnace exhaust: -- SASS -- Method 8 -- Method 5 -- Gas sample (C_1-C_6 HC) -- Continuous NO, NO_x, CO, CO_2, O_2, CH_4, TUHC Fuel Waste water	New test
Rocketdyne/EPA low-NO_x residential forced warm air furnace	Residential warm air furnace with modified high-pressure burner and firebox, 0.83 ml/s (0.75 gal/hr) firing capacity	Low-NO_x burner design and integrated furnace system	Furnace exhaust: -- SASS -- Method 8 -- Controlled condensation -- Method 5 -- Gas sample (C_1-C_6 HC) -- Continuous NO, NO_x, CO, CO_2, O_2, CH_4, TUHC Fuel	New test

Table 2-1. Continued

Source	Description	Test Points Unit Operation	Sampling Protocol	Test Collaborator
Pulverized coal-fired utility boiler, Conesville station	400-MW tangentially fired; new NSPS design aimed at meeting 301 ng/J NO_x limit	ESP inlet and outlet, one test	ESP inlet and outlet -- SASS -- Method 5 -- Controlled condensation -- Gas sample (C_1-C_6 HC) -- Continuous NO, NO_x, CO, CO_2, O_2 Coal Bottom ash ESP ash	Exxon Research and Engineering (ER&E) conducting corrosion tests
Nova Scotia Technical College industrial boiler	1.14 kg/s steam (9,000 lb/hr) firetube fired with a mixture of coal-oil-water (COW)	-- Baseline (COW) -- Controlled SO_2 emissions with limestone injection	Boiler outlet -- SASS -- Method 5 -- Method 8 -- Controlled Condensation -- Gas sample (C_1-C_6 HC) -- Continuous O_2, CO_2, CO, NO_x Fuel	Envirocon performed particulate and sulfur emission tests
Adelphi University industrial boiler	1.89 kg/s steam (15,000 lb/hr) hot water firetube fired with a mixture of coal-oil-water (COW)	-- Baseline (COW) -- Controlled SO_2 emissions with Na_2CO_3 injection	Boiler outlet -- SASS -- Method 5 -- Method 8 -- Controlled Condensation -- Gas Sample (C_1-C_6 HC) -- Continuous O_2, CO_2, NO_x, CO Fuel	Adelphi University
Pittsburgh Energy Technology Center (PETC) industrial boiler	3.03 kg/s steam (24,000 lb/hr) watertube fired with a mixture of coal-oil (COM)	-- Baseline test only with COM	Boiler outlet -- SASS -- Method 5 -- Controlled Condensation -- Continuous O_2, CO_2, NO_x, TUHC, CO -- N_2O grab sample Fuel	PETC and General Electric (GE)

Table 2-1. Continued

Source	Description	Test Points Unit Operation	Sampling Protocol	Test Collaborator
TOSCO Refinery vertical crude oil heater	2.54 Ml/day (16,000 bbl/day) natural draft process heater burning oil/refinery gas	-- Baseline -- Staged combustion using air injection lances	Heater outlet -- SASS -- Method 5 -- Controlled condensation -- Gas sample (C_1-C_6 HC) -- Continuous O_2, NO_x, CO, CO_2, HC -- N_2O grab sample Fuel oil Refinery gas	KVB coordinating the staged combustion operation and continuous emission monitoring
Mohawk-Getty Oil industrial boiler	8.21 kg/s steam (65,000 lb/hr) watertube burning mixture of refining gas and residual oil	-- Baseline -- Ammonia injection using the noncatalytic Thermal $DeNO_x$ Process	Economizer outlet -- SASS -- Method 5, 17 -- Controlled condensation -- Gas Sample (C_1-C_6 HC) -- Ammonia emissions -- N_2O grab sample -- Continuous O_2, NO_x, CO, CO_2 Fuels (refinery gas and residual oil)	New test
Industrial boiler	2.52 kg/s steam (20,000 lb/hr) watertube burning wood waste	-- Baseline (dry wood) -- Wet (green) wood	Boiler outlet -- SASS -- Method 5 -- Controlled condensation -- Gas sample (C_1-C_6 HC) -- Continuous O_2, NO_x, CO Fuel Flyash	North Carolina Department of Natural Resources, EPA IERL-RTP
Industrial boiler	3.16 kg/s steam (29,000 lb/hr) firetube with refractory firebox burning wood waste	-- Baseline (dry wood)	Outlet of cyclone particulate collector -- SASS -- Method 5 -- Controlled condensation -- Gas sample (C_1-C_6 HC) -- Continuous O_2, NO_x, CO Fuel Bottom ash	North Carolina Department of Natural Resources, EPA IERL-RTP

Table 2-1. Concluded

Source	Description	Test Points Unit Operation	Sampling Protocol	Test Collaborator
Enhanced oil recovery steam generator	15 MW (50 million Btu/hr) steam generator burning crude oil equipped with MHI low-NO_x burner	-- Performance mapping -- Low NO_x operation	Steamer outlet -- SASS -- Method 5 -- Method 8 -- Gas sample (C_1 - C_6 HC) -- Continuous O_2, NO_x, CO, CO_2 -- N_2O grab sample Fuel	Getty Oil Company, CE-Natco
Pittsburgh Energy Technology Center (PETC) industrial boiler	3.03 kg/s steam (24,000 lb/hr) watertube fired with a mixture of coal-water (CWM)	-- Baseline test only with CWM	Boiler outlet -- SASS -- Method 5 -- Method 8 -- Gas sample (C_1 - C_6 HC) -- Continuous O_2, NO_x, CO, CO_2, TUHC -- N_2O grab sample Fuel Bottom ash Collector hopper ash	PETC and General Electric

REFERENCES FOR SECTION 2

2-1. Larkin, R. and E. B. Higginbotham, "Combustion Modification Controls for Stationary Gas Turbines: Volume II. Utility Unit Field Test," EPA-600/7-81-122b, July 1981.

2-2. Higginbotham, E. B., "Combustion Modification Controls for Residential and Commercial Heating Systems: Volume II. Oil-fired Residential Furnace Field Test," EPA-600/7-81-123b, July 1981.

2-3. Higginbotham, E. B. and P. M. Goldberg, "Combustion Modification NO_x Controls for Utility Boilers: Volume I. Tangential Coal-fired Unit Field Test," EPA-600/7-81-124a, July 1981.

2-4. Sawyer, J. W. and E. B. Higginbotham, "Combustion Modification NO_x Controls for Utility Boilers: Volume II. Pulverized-coal Wall-fired Unit Field Test," EPA-600/7-81-124b, July 1981.

2-5. Sawyer, J. W. and E. B. Higginbotham, "Combustion Modification NO_x Controls for Utility Boilers: Volume III. Residual-oil Wall-fired Unit Field Test," EPA-600/7-81-124c, July 1981.

2-6. Goldberg, P. M. and E. B. Higginbotham, "Industrial Boiler Combustion Modification NO_x Controls: Volume II. Stoker Coal-fired Boiler Field Test -- Site A," EPA-600/7-81-126b, July 1981.

2-7. Lips, H. I. and E. B. Higginbotham, "Industrial Boiler Combustion Modification NO_x Controls: Volume III. Stoker Coal-fired Boiler Field Test -- Site B," EPA-600/7-81/126c, July 1981.

2-8. Waterland, L. R., et al., "Environmental Assessment of Stationary Source NO_x Control Technologies -- Final Report," EPA-600/7-82-034, May 1982.

2-9. Hurst, B. E. and C. E. Schlecksen, Jr., "Applicability of Thermal $DeNO_x$ to Large Industrial Boilers," Proceedings of the Joint Symposium on Stationary Combustion NO_x Control -- Volume V, EPA-600/9-81-028e, July 1981.

2-10. Lentzen, D. E., et al., "IERL-RTP Procedures Manual: Level 1 Environmental Assessment (Second Edition)," EPA-600/7-78-201, October 1978.

SECTION 3

PROCESS DESCRIPTION AND PERFORMANCE

The boiler tested in the program was a packaged two-drum Zurn Keystone steam generator equipped with an economizer and having a maximum design capacity of 7.57 kg/s (60,000 lb/hr) superheated steam at 2.51 MPa (350 psi) and 260°C (500°F). The boiler is designed to burn residual low-sulfur fuel oil and refinery process gas. A typical mix of these fuels is 30 percent oil and 70 percent gas on a heat input basis. This unit was installed in 1979 at a southern California oil refinery and equipped with the manufacturer's sidefire air injection and the ER&E Thermal $DeNO_x$ Process.

The NH_3 injection grid was designed for injection of NH_3 and H_2 with steam as the carrier. A one-grid injection system was utilized. Details of the grid are considered proprietary by ER&E and thus were not available for this study. However, the design is based on pre-1981 technology. Recent improvements in the process available following this test program permit the attainment of higher NO_x reduction efficiencies and better boiler load following capabilities (reference 3-1).

3.1 PROCESS PERFORMANCE

As indicated in section 2, the NO_x reduction performance of the Thermal $DeNO_x$ Process depends on the reaction temperature, the NH_3/NO ratio, and the addition of H_2, among other factors. This performance was mapped during the test program by conducting several short-term tests varying NH_3/NO molar

ratio, hydrogen injection and the oil/gas heat input ratio. For these tests, only continuous monitoring of NO_x and O_2 was performed. Results are illustrated in figure 3-1.

Baseline NO_x emissions averaged 235 ppm at 3 percent O_2. The figure shows that NO_x reduction with NH_3/NO ratio depends on the fuel mixture. The system was less effective at the oil/gas ratio of 56/44 percent heat input basis than at the lower oil/gas ratio of 37/63 percent (more nearly the typical operation of the unit and the design basis for the NH_3 injection grid installed). The addition of hydrogen did not improve system performance at the lower oil/gas ratio, but resulted in significant, further NO_x reduction to levels below 100 ppm at the higher oil/gas ratio. This can be explained by the fact that firing the higher oil/gas ratio led to lower boiler convective section gas temperatures at the grid location, thereby decreasing the effectiveness of the ammonia alone. Hydrogen injection to shift the temperature window for the reduction reaction was effective at this higher oil/gas ratio. For both fuel mixtures investigated, the NO_x reduction performance appears to peak at a NH_3/NO ratio of about 2.5 with little or no additional reduction gained with further increase in NH_3 injection rate.

3.2 TEST CONDITIONS

Two test conditions were selected for detailed testing and emission evaluation. Table 3-1 summarizes the boiler and NH_3 injection system operations during two tests conditions investigated in this study. Flue gas emissions were evaluated for the baseline condition, no NH_3 injection but with sidefire air injection, and for a low-NO_x condition with NH_3 injected at a rate leading to significant NO_x reduction from the baseline level. Boiler operation, including fuel mixture, was maintained relatively constant between

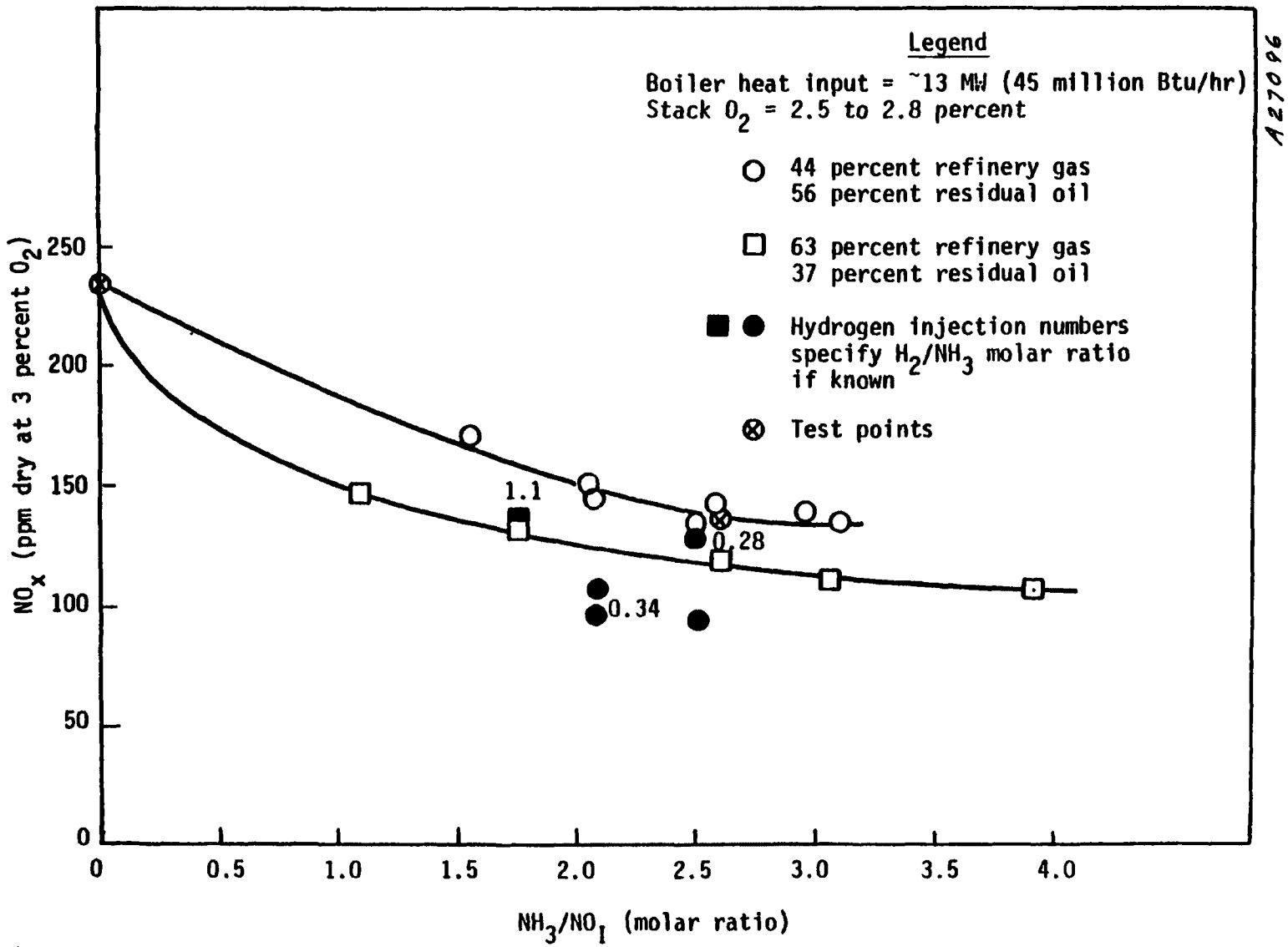

Figure 3-1. Thermal $DeNO_x$ Performance on Packaged Industrial Boiler

Table 3-1. Boiler Operating Conditions

Parameter	Units	Test 1[a] (Baseline)	Test 2 (NH_3 Injection)
Steam:			
Steam flowrate	kg/s (10^3 lb/hr)	4.04 (32.0)	4.00 (31.7)
Drum pressure	MPa (psig)	1.96 (270)	1.96 (270)
Superheater outlet pressure	MPa (psig)	1.83 (250)	1.83 (250)
Superheater temperature	K (°F)	530 (495)	530 (495)
Fuels:			
Fuel oil flowrate	l/s (gph)	0.184 (175)	0.184 (175)
Refinery fuel gas flowrate	Sm^3/s (10^3 scfh)	0.166 (21.3)	0.167 (21.2)
Fuel oil heat rate	MW (10^6 Btu/hr)	7.39 (25.2)	7.51 (25.6)
Refinery fuel gas heat rate	MW (10^6 Btu/hr)	5.86 (20.0)	3.86 (20.0)
Total heat rate	MW (10^6 Btu/hr)	13.2 (45.2)	13.4 (45.6)
Oil/gas heat input	Percent	56/44	56/44
Burner Settings:			
Fuel oil pressure	MPa (psig)	0.41 (45)	0.38 (41)
Fuel oil temperature	K (°F)	366 (198)	367 (200)
Atomizing steam pressure	MPa (psig)	0.56 (66)	0.53 (62)
Refinery fuel gas pressure	kPa (psig)	120 (2.5)	120 (2.5)
Swirl setting	--	4	4
Furnace Draft:			
Window pressure	kPa (in. H_2O)	0.85 (3.4)	0.87 (3.5)
Furnace pressure	kPa (in. H_2O)	0.35 (1.4)	0.40 (1.6)
Boiler outlet pressure	Pa (in. H_2O)	80 (0.32)	92 (0.37)
NH_3 Injection System:			
NH_3 flowrate	g/s (lb/hr)	--	1.53 (12.1)
NH_3 header pressure	MPa (psig)	--	>1.72 (>250)
Steam carrier	kg/s (lb/hr)	0.105 (832)	0.105 (832)
Steam carrier pressure	MPa (psig)	0.410 (59.5)	0.410 (59.5)

[a]Baseline test was performed over a 2-day period. Operating data represent average values for these 2 days.

between both tests to allow a direct comparison between tests and to single out the effects of NH_3 injection on emissions.

These two test conditions are also denoted in figure 3-1 by an "X". The higher oil/gas ratio was selected for these tests to increase levels of potential pollutants (particulate, sulfur, etc.) thus improving the detectability levels of the sampling and analytical techniques described earlier. It is evident, then, that the low-NO_x operation selected for in-depth emission evaluation did not correspond to optimum NO_x reduction performance for which the NH_3 injection system was designed and is capable of achieving. However, the test is representative of maximum performance for the boiler and NH_3 injection operating conditions indicated here.

Table 3-2 summarizes analysis results for both residual oil and refinery fuel gas. Specific gravity of refinery gas varied from about 0.44 to 0.50 due to variations in the level of hydrogen doping resulting from refinery process conditions. Boiler thermal efficiency, measured by the heat loss method, averaged about 85 percent for both tests. As shown in table 3-3, the largest loss is attributed to the latent heat of water from combustion of hydrogen contributed primarily by the refining gas.

Table 3-2. Fuel Compositions

Fuel Component/Properties	Test 1[a] (Baseline)	Test 2 (NH_3 Injection)
Residual Oil (Weight Percent)		
Carbon, C	86.53	86.01
Hydrogen, H	11.50	12.18
Nitrogen, N	0.65	0.63
Sulfur, S	0.47	0.47
Oxygen, O	0.71	0.65
Specific gravity	0.94	0.94
Higher heating value MJ/kg	43.87	44.49
(Btu/lb)	(18,900)	(19,170)
Refinery Fuel Gas (Mole Percent)		
Hydrogen, H	53.09	53.62
Methane, CH_4	28.31	29.70
Ethane, C_2H_6	5.94	5.90
Propane, C_3H_8	5.33	5.63
Butane, C_4H_{10}	4.39	3.58
Pentane, C_5H_{12}	1.57	0.81
C_6+	0.93	0.29
N_2	0.23	0.24
CO_2	0.20	0.22
H_2S	0.002	0.003
Specific gravity	0.496	0.455
Higher heating value MJ/m^3	35.32	32.90
(Btu/ft^3)	(948)	(883)
Combined Fuel (Weight Percent)		
Carbon, C	81.90	81.50
Hydrogen, H	16.69	17.03
Nitrogen, N	0.36	0.37
Sulfur, S	0.26	0.28
Oxygen, O	0.40	0.38
Higher heating value MJ/kg	50.06	50.70
(Btu/lb)	(21,570)	(21,845)

[a]Baseline test was performed ober a 2-day period. Fuel data represent average values of fuel analyses for each of the 2 days.

Table 3-3. Boiler Thermal Efficiency

Heat Loss Efficiency	Test 1 (Baseline)	Test 2 (NH_3 Injection)
Heat loss due to dry gas	5.5	5.6
Heat loss due to moisture in the fuel	--	--
Heat loss due to water from H_2 combustion	8.1	8.2
Heat loss due to combustible in flyash	--	--
Heat loss due to radiation	0.7	0.7
Unmeasured losses	0.5	0.5
Total loss	14.8	15.0
Efficiency (percent)	85.2	85.0

REFERENCES FOR SECTION 3

3-1. "Improved Exxon Thermal $DeNO_x$ Process," Technical Brochure, Exxon Research and Engineering Company, Florham Park, New Jersey, April 1982.

SECTION 4

EMISSION RESULTS

The objective of this test program was to measure the change in organic and inorganic solid and gas emissions as a result of NH_3 injection to reduce NO_x. Therefore, stack gas sampling was performed during two test condtions: baseline with no NH_3 injection and a low-NO_x test with NH_3 injection. Boiler operation and fuel mix was kept constant throughout the two test conditions investigated.

4.1 SAMPLING AND ANALYSIS PROTOCOL

The sampling and analysis procedures used in this test program conformed to a modified EPA level 1 protocol (reference 4-1). In addition, measurements for NH_3 flue gas emissions were performed to calculate the amount of unreacted NH_3 being emitted under boiler and control system operations investigated. All emission measurements were made in the stack flue gas downstream of the boiler economizer where the gas temperature was approximately 188°C (370°F). Flue gas measurements included:

- Continuous monitors for NO_x, CO, CO_2, and O_2
- Source assessment sampling system (SASS) train sampling
- EPA Method 5 with water impringers and an EPA Method 17 backup for solid and condensible particulate mass emissions
- Controlled condensation system (CCS) for SO_2 and SO_3

- Grab sample for onsite analysis of gaseous C_1 and C_6 hydrocarbon by gas chromatography with flame ionization detection
- EPA Method 17 with HCl impinger solutions for ammonia sampling
- Grab sample for offsite analysis of N_2O by gas chromatography with electron capture detection

The SASS train collects several kinds of samples for subsequent laboratory analysis. For these tests, flue gas particulate was collected on a heated 232°C (450°F) filter; flue gas semivolatile organics (nominally C_7+) were adsorbed onto a porous polymer resin (XAD-2) packed into an organic sorbent module, volatile inorganic species are trapped in impingers, and nonvolatile inorganic species collect with the particulate on the filter and in the XAD-2 sorbent. Description and additional information on the SASS and other sampling systems are presented in appendix A.

The analysis protocol for SASS train samples included:

- Analyzing the filter catch, ashed XAD-2 resin, and the first impinger solution for 73 elements using spark source mass spectrometry (SSMS) and for mercury using a cold vapor atomic absorption spectrometry (AAS) technique
- Analyzing the second and third impinger solutions for arsenic and antimony using furnace AAS techniques, and for mercury using cold vapor AAS
- Extracting the XAD-2 sorbent resin in a Soxhlet apparatus using methylene chloride, concentrating the extract to 10 ml, then determining the organic content of the extract in two boiling point ranges: boiling point between 100°C (212°F) and 300°C (570°F) by total chromatographable organics (TCO) analysis and boiling point greater than 300°C (570°F) by gravimetry

- Further concentrating the extract to 1 ml and analyzing for the 58 semivolatile organic priority pollutants by gas chromatography/mass spectrometry (GC/MS)

The XAD-2 sorbent resin extract was also subjected to liquid chromatography separation into seven polarity fractions on silica gel to give compound category composition information. In addition, infrared spectra were obtained for the gravimetric residues of the extract samples (whole samples and liquid chromatography fractions), and mutagenicity and toxicity were evaluated using the level 1 Ames mutagenicity and CHO cytotoxicity tests.

Particulate mass emissions were evaluated with the EPA Method 5 extractive system utilizing a EPA Method 17 in-stack filter. This configuration was selected over the conventional EPA Method 5, which relies entirely on an out-of-stack heated filter, to ensure that collected solid particulate would not be affected by possible contribution of ammonium sulfate and bisulfate particle deposition in the sampling probe. Particulate emissions were measured on the in-stack filter and by the front half EPA Method 5 catch (probe rinse and filter for solid particulate) and by the back half EPA Method 5 catch (impinger section for condensible particulate). Both the organic and inorganic fractions of the condensible particulate were measured using ethyl ether and chloroform extraction of impinger solutions.

Breakthrough ammonia levels were measured by passing filtered flue gas through a solution of 0.1N hydrochloric acid to form ammonium chloride. Ammonia levels were measured by specific ion electrodes. The sampling system is similar to EPA Method 17 with the exception of the impinger solutions which contain HCl instead of distilled water.

4.2 CRITERIA POLLUTANTS AND OTHER VAPOR SPECIES EMISSIONS

Table 4-1 summarizes gaseous and particulate emissions measured during the baseline and ammonia injection tests. Baseline NO_x emissions averaged 234 ppm at 3 percent O_2. The NH_3 injection rate of 1.53 g/s (12.1 lb/hr), corresponding to a NH_3/NO molar ratio of 2.52, resulted in a 41 percent NO_x reduction. CO emissions showed no significant change. The effect on sulfur oxide species cannot be ascertained because emissions were not available for the baseline test. The average combined sulfur concentration in the two fuels was 0.28 percent by weight corresponding to an emission rate of 110 ng/J (0.26 lb/million Btu) as SO_2. Gaseous sulfur oxides (SO_2 + SO_3) emissions measured during the NH_3 injection test were 73 ng/J (0.17 lb/million Btu) as SO_2 accounting for 67 percent of the total sulfur input. The remaining 33 percent was not detected possibly because of ammonium sulfate formation.

Three NH_3 samples were taken for each test. Baseline levels ranged from 3 to 25 ppm with an arithmetic average of 11 ppm (2.1 ng/J). Selective ion electrode analysis of EPA Method 5 and 17 impinger solutions also indicated that NH_3 was present in the flue gas at a concentration of about 6 ppm (1.2 ng/J). These baseline NH_3 emissions were suprising in that no NH_3 was injected in the flue gas during this test. However, since some carrier steam was flowing during the baseline test, it is possible some residual NH_3 was injected in the flue gas stream, causing a minor breakthrough as well as a possible reduction in NO_x. This explanation is highly speculative at this time, however.

During the NH_3 injection test, unreacted NH_3 emission measurements ranged from 280 to 600 ppm (52 to 110 ng/J) with an arithmetic average of about 430 ppm (81 ng/J). The corresponding selective ion electrode analysis of EPA Method 5 and 17 impinger solutions indicated a stack NH_3 concentration

Table 4-1. Criteria and Other Gas Species Emissions

Pollutant	Test 1 (Baseline)			Test 2 (NH_3 Injection)		
As Measured By:						
Continuous gas analyses						
O_2, percent	2.3 to 3.3 (2.6)[a]			2.4 to 2.7 (2.5)		
CO_2, percent	10.9 to 11.9 (11.7)			11.4 to 1.8 (11.6)		
NO_x, ppm	232 to 248 (239)			134 to 152 (141)		
CO, ppm	18 to 57 (31)			19 to 40 (24)		
Wet chemical methods						
SO_2, ppm	NA			82		
SO_3, ppm	NA			13		
NH_3, ppm	3 to 25 (11)[b]			280 to 600 (440)[c]		
Offsite gas chromatography						
N_2O	53			17		
Corrected Emissions	ppm[d]	ng/J[e]	lb/million Btu[e]	ppm	ng/J	lb/million Btu
NO_x[f]	234	115	0.268	137	67	0.16
CO	30	9.0	0.02	23	6.9	0.02
SO_2	NA	NA	NA	80	55	0.13
SO_3[g]	NA	NA	NA	13	13	0.03
NH_3[h]	11	2.0	0.005	430	81	0.19
N_2O	52	25	0.056	17	8.0	0.019
Particulate Mass Emissions						
Method 5/17 solid	--	4.6	0.010	--	1.8	0.004
Method 5/17 condensible inorganic	--	10.0	0.023	--	180	0.42
Method 5/17 condensible	--	2.9	0.007	--	0.2	0.004
Method 5/17 total	--	17.7	0.042	--	18c	0.43
SASS solid	--	2.2	0.005	--	2.6	0.006

[a]Numbers in parentheses are arithmetic averages of individual measurements
[b]Range of NH_3 emissions from three separate flue gas measurements
[c]Range of NH_3 emissions from two separate flue gas measurements
[d]Dry ppm at 3 percent O_2
[e]On heat input basis
[f]As NO_2
[g]As H_2SO_4
[h]Arithmetic average
NA -- Sample lost in transit

of 360 ppm (66 ng/J). This result tends to support the high NH_3 levels measured with the NH_3 sampling system (280 to 600 ppm) keeping in mind that the HCl solution of the NH_3 sample is more effective in trapping NH_3 than the distilled water of the EPA Method 5 and 17.

An additional NH_3 emission measurement made during the low-NO_x test indicated a NH_3 concentration of 840 ppm (154 ng/J). However, this result was disregarded as unjustifiable and was not considered in the estimation of the average NH_3 emission rate. An explanation of the reasoning used in making this determination follows.

Since in the Thermal $DeNO_x$ Process one mole of NH_3 is required to decompose one mole of NO to N_2 and H_2O, a reduction of 30 ng/J (3.2 lb/hr) of the NO, as measured in test 2, would require 17 ng/J (1.8 lb/hr) of NH_3. This would leave about 95 ng/J (10 lb/hr) of NH_3 unreacted, which should be the upper limit of NH_3 breakthrough. This assumption is based on a gas temperature at the injection grid sufficiently low that the rate of NH_3 oxidation would be insignificant. A low gas temperature at the injection grid was evident from the interpretation of the hydrogen injection test results shown in figure 3-1. The maximum emission rate of 95 ng/J excludes the possibility of an emission rate of 154 ng/J measured during one of three measurements made.

Total particulate matter measured by the EPA Method 5 and 17 increased by more than one order of magnitude during the NH_3 injection test. The largest contribution to this increase was from the inorganic condensate matter collected in the impinger section. Although this large increase of inorganic condensate is not entirely accountable from a mass conservation viewpoint, ammonium sulfate and bisulfate formed either in the stack or through the particulate sampling system contributed to this increase.

Table 4-2 gives a more detailed summary of particulate emissions. As indicated, only the probe catch and the inorganic phase of the condensate showed an increase during the NH_3 injection test. All other particulate catches showed a decrease in emissions. However, the increase in the inorganic condensate portion of the impingers catch was so significant that the overall particulate emission increased by about 900 percent. Apart from the nozzle and in-stack filter, which are at stack temperature (about 190°C), the entire sampling system is maintained at or below 120°C (250°F). At these temperatures, ammonium bisulfate is a liquid which can be trapped in the sampling system as inorganic matter.

Solid particulate matter sampled with the SASS measured 2.1 ng/J (0.005 lb/million Btu) for the baseline test and 2.3 ng/J (0.005 lb/million Btu) for the NH_3 injection test. These emissions are comparable to the sum of probe and out-of-stack filter results of the Method 5/17 sampling system.

The increase in particulate captured by the Method 5/17 train during NH_3 injection is compatible with the results of analysis of those samples for NH_3. Table 4-3 shows that most of the NH_3 capture occurs in the inorganic condensate. In the NH_3 injection test, the total quantity of NH_3 recovered from the inorganic condensate increased by two orders of magnitude. Taken as a whole, the Method 5/17 analyses indicate that the NH_3 is in the vapor phase of stack temperature and that the increase in condensible particulate agrees qualitatively with the increase of vapor phase NH_3 captured.

4.3 TRACE ELEMENT ANALYSES

The oil and the SASS train samples from exhaust gas were analyzed for 65 trace elements using spark source mass spectrometry (SSMS) and atomic absorption spectroscopy (AAS). From these analyses, trace element flowrates normalized to the heat input (ng/J) were calculated for both tests.

Table 4-2. Particulate Emissions -- EPA Method 5/17[a]

Test	Solid Particulate				Inorganic Condensate		Organic Condensate		Total Particulate
	Nozzle Catch	In-stack Filter	Probe Catch	Out-stack Filter	Impinger Rinse	Aqueous Phase	Organic Phase	Aqueous Wash Organic Phase	
Baseline	0.557 (3.14)[b]	1.52 (8.58)	0.191 (1.08)	2.44 (13.8)	0.835 (4.72)	9.21 (52.0)	2.09 11.8)	0.871 (4.92)	17.71 (100)
NH_3 injection	0.145 (0.08)	0.687 (0.36)	0.912 (0.50)	0.053 (0.03)	0.425 (0.23)	179.6 (98.7)	0.073 (0.039)	0.089 (0.049)	182 (100)
Percent change from baseline	-74	-56	377	-98	-49	1,900	-97	-90	+930

[a]Units are ng/J
[b]Numbers in parentheses represent percent of total emissions

Table 4-3. Ammonia Recovery From EPA Method 5/17 Train (μg/dscm as NH_3)

Test	Solid Particulate	Inorganic Condensate	Organic Condensate
Baseline	38	1,580	968
NH_3 injection	367	165,950	71

Tables 4-4 and 4-5 show the results of these calculations. A mass balance, based on the oil input and flue gas emissions as the only output, is also presented. However, the oil and flue gas flowrates are presented in slightly different units. Trace element analytical results from the oil are presented based on the heating value of the oil, while the trace element analytical results from the SASS train are based upon the total heat input (oil and gas) to the unit. The mass balance numbers are based upon the flowrates (μg/s) as listed in appendix B.

Some elemental concentrations are listed as either less than or greater than a given concentration. The less than signs result from reporting the element as less than the detection limit for some or all components in the SASS train. Elements not detected in the fuel oil are listed as ND. The greater than signs result from a concentration in the sample greater than the upper quantification limit of the test method.

For the baseline test, Ca, Br, Cl, Cu, F, Si, Ag, S, and W were detected at concentrations exceeding 100 mg/dscm. For the ammonia injection test, only K and S exceeded concentrations of 100 mg/dscm.

4.4 ORGANIC SPECIES EMISSIONS

Organic analyses were performed on flue gas samples according to the EPA level 1 protocol (reference 4-1) as outlined in appendix A. Volatile

Table 4-4. Trace Element Flowrates -- Test 1 Baseline

Element	Concentration (pg/J)		
	Fuel Oil	Output Flue Gas	Mass Balance Out/In
Aluminum	569	7.80	0.0243
Antimony	--	0.0311	--
Arsenic	--	<1.64	--
Barium	ND	4.01	>3.13
Beryllium	ND	<0.152	--
Bismuth	ND	<0.152	--
Boron	6.82	0.223	0.0581
Bromine	15.9	38.4	4.28
Cadmium	ND	<0.00466	>0.00364
Calcium	1,320	135	0.182
Cerium	ND	3.6	>2.81
Cesium	ND	<0.00311	0.00243
Chlorine	227	109	0.850
Chromium	20.5	2.52	0.219
Cobalt	ND	>12.5	>9.77
Copper	5,230	>30.1	>0.0102
Dysprosium	ND	<0.152	--
Erbium	ND	<0.152	--
Europium	ND	<0.152	--
Fluorine	68.2	105	2.74
Gadolinium	ND	<0.152	--
Gallium	9.1	1.91	0.373
Germanium	ND	0.014	>0.0109
Hafnium	ND	<0.152	--
Holmium	ND	<0.152	--
Iodine	ND	<0.00621	>0.00485
Iron	933	21.2	0.0404
Lanthanum	ND	<0.152	--
Lead	13.6	<0.971	<0.134
Lithium	45.5	0.518	0.0202

[a]Dashes indicate trace element concentration was below the detection limit or had concentrations in the blank greater than the sample. See appendix B for detectability levels applicable to each stream.

Table 4-4. Concluded

Element	Concentration (pg/J)		
	Fuel Oil	Output Flue Gas	Mass Balance Out/In
Lutetium	ND	<0.152	--
Magnesium	751	1.28	0.00302
Manganese	45.5	2.13	0.0832
Mercury	0.455	<0.0491	<0.572
Molybdenum	ND	6.15	>4.80
Neodymium	ND	<0.152	--
Nickel	1,230	>20.2	>0.0293
Niobium	ND	<0.176	--
Phosphorus	751	3.99	0.00944
Potassium	2,120	17.9	0.0150
Praseodymium	ND	<0.152	--
Rubidium	ND	<0.540	--
Samarium	ND	<0.152	--
Scandium	ND	<0.176	--
Selenium	ND	<0.177	>0.0885
Silicon	1,480	>148	>0.178
Silver	ND	523	>408
Sodium	ND	--	--
Strontium	2.27	2.98	2.32
Sulfur	5,460	>252	>0.0821
Tantalum	ND	<0.154	--
Tellurium	ND	<0.0249	>0.0194
Terbium	ND	<0.152	--
Thallium	ND	<0.152	--
Thorium	ND	<0.152	--
Thulium	ND	<0.00155	>0.00121
Tin	ND	<0.128	--
Titanium	ND	13.2	0.115
Tungsten	205	25.4	>2.83
Uranium	ND	<0.152	--
Vanadium	523	>12.6	>0.0429
Ytterbium	ND	<0.014	>0.0109
Yttrium	ND	<0.0243	>0.0189
Zinc	114	18	0.280
Zirconium	11.4	0.688	0.107

[a]Dashes indicate trace element concentration was below the detection limit or had concentrations in the blank greater than the sample. See appendix B for detectability levels applicable to each stream.

Table 4-5. Trace Element Flowrates -- Test 2 NH_3 Injection

Element	Concentration (pg/J)		
	Fuel Oil	Output Flue Gas	Mass Balance Out/In
Aluminum	561	--	--
Antimony	--	0.0471	--
Arsenic	--	0.624	--
Barium	ND	7.6	>5.8
Beryllium	ND	--	--
Bismuth	ND	0.00157	>0.0012
Boron	ND	--	--
Bromine	22.4	0.282	0.0215
Cadmium	ND	0.00784	>0.00598
Calcium	583	--	--
Cerium	ND	0.314	>0.239
Cesium	ND	--	--
Chlorine	135	--	--
Chromium	44.8	1.96	0.0746
Cobalt	ND	>15.7	>12.0
Copper	2,240	>17.6	>0.0134
Dysprosium	ND	0.0314	>0.0239
Erbium	ND	0.0157	>0.0120
Europium	ND	0.0157	>0.0120
Fluorine	15.7	11.7	1.28
Gadolinium	ND	--	--
Gallium	6.73	1.54	0.391
Germanium	ND	0.0110	>0.00837
Hafnium	ND	--	--
Holmium	ND	--	--
Iodine	ND	0.00314	>0.00239
Iron	1,030	--	--
Lanthanum	ND	--	--
Lead	13.5	1.43	0.181
Lithium	6.73	0.110	0.0279

[a]Dashes indicate trace element concentration was below the detection limit or had concentrations in the blank greater than the sample. See appendix B for detectability levels applicable to each stream.

Table 4-5. Concluded

Element	Concentration (pg/J)		
	Fuel Oil	Output Flue Gas	Mass Balance Out/In
Lutetium	ND	0.00157	>0.00120
Magnesium	336	--	--
Manganese	89.7	0.473	0.00901
Mercury	0.224	<0.294	<2.24
Molybdenum	ND	0.0157	>0.0120
Neodymium	ND	0.0471	>0.0359
Nickel	6,050	>16	>0.00451
Niobium	ND	--	--
Phosphorus	135	3.45	0.0438
Potassium	2,240	114	0.0866
Praseodymium	ND	--	--
Rubidium	ND	0.0157	>0.0120
Samarium	ND	--	--
Scandium	ND	0.0314	>0.0239
Selenium	ND	0.0991	>0.0756
Silicon	14,600	>14.4	>0.00169
Silver	ND	19.0	>14.5
Sodium	20.2	--	--
Strontium	2.24	--	--
Sulfur	>10,500	>321	--
Tantalum	ND	--	--
Tellurium	ND	0.00157	>0.00120
Terbium	ND	--	--
Thallium	ND	--	--
Thorium	ND	--	--
Thulium	ND	0.157	>0.0012
Tin	ND	0.0628	>0.0478
Titanium	202	17.6	0.149
Tungsten	ND	--	--
Uranium	ND	0.0471	>0.00359
Vanadium	314	>15.2	>0.0829
Ytterbium	ND	0.0298	>0.0227
Yttrium	ND	--	--
Zinc	44.8	4.28	0.163
Zirconium	ND	--	--

[a]Dashes indicate trace element concentration was below the detection limit or had concentrations in the blank greater than the sample. See appendix B for detectability levels applicable to each stream.

organic gas phase species having boiling points in the nominal C_1 to C_6 range of -160° to 100°C (-260 to 210°F) were measured by multiple analyses of flue gas samples using onsite gas chromatography. SASS samples were extracted with methylene chloride in a Soxhlet apparatus. Volatile organic matter with boiling points in the nominal C_7 to C_{16} range of 100° to 300°C (210° to 570°F) were determined in the laboratory by total chromatographable organic (TCO) analysis of the organic module sorbent (XAD-2) and condensate sample extracts. Nonvolatile organic species with boiling points in the nominal $>C_{16}$ range of >300°C (>570°F) were measured by gravimetric (GRAV) analysis of SASS sample extracts including filter and probe catches.

Infrared spectrometry (IR) was also performed on GRAV residues to identify organic functional groups. If total organic content in the sample exceeded 15 mg, as determined by TCO and GRAV procedures, further analyses by liquid chromatography (LC), with TCO, GRAV, and IR analyses of the fractions eluted from the column were performed. Analyses of whole extract samples on LC fractions by low resolution mass spectrometry (LRMS) were performed in TCO and GRAV results indicated a stream organic emission concentration of greater than 0.5 mg/dscm. In addition, gas chromatography/mass spectrometry (GC/MS) analysis of total sample extracts was performed to identify specific polynuclear aromatic and other organic compounds. A discussion of the analytical results follows.

4.1.1 C_1 to C_6 Hydrocarbons, TCO, and GRAV Analysis

Table 4-6 summarizes total organic emission results for the onsite GC, TCO and GRAV analyses. The ranges in emission for volatile hydrocarbons shown reflect the multiple onsite GC analyses performed during each test. The second test showed a tenfold increase in C_1 to C_6 emissions from an average

Table 4-6. Summary of Total Organic Emissions in the Flue Gas

Organic Emission	Test 1 Baseline		Test 2 NH_3 Injection	
	(mg/dscm)	(ng/J)	(mg/dscm)	(ng/J)
Volatile Organic Gases Analyzed by Onsite GC:				
C_1	ND	ND	ND to 3.0 (0.55)	ND to 0.73 (0.13)
C_2	ND to 0.7 (0.26)	ND to 0.13 (0.05)	0.27 to 1.9 (0.81)	0.07 to 0.46 (0.20)
C_3	1.4 to 11 (4.8)	0.34 to 2.6 (1.2)	4.2 to 7.3 (5.8)	1.0 to 1.8 (1.4)
C_4	ND	ND	ND to 81 (16)	ND to 20 (4.0)
C_5	ND	ND	ND to 82 (17)	ND to 20 (4.1)
C_6	ND	ND	1.9 to 66 (18)	0.46 to 16 (4.4)
Total C_1 to C_6	1.4 to 12 (5.1)	0.34 to 2.7 (1.3)	6.4 to 240 (58)	1.5 to 59 (14)
Volatile Organic Material Analyzed by TCO Procedure:				
XAD-2 cartridge and organic module condensate	0.09	0.023	0.04	0.01
Total C_7 to C_{16}	0.09	0.023	0.04	0.01
Nonvolatile Organic Material Analyzed by GRAV Procedure:				
Filter	0.2	0.006	0.08	0.02
XAD-2 cartridge and organic module condensate	1.1	0.28	0.16	0.039
Total $>C_{16}$	1.3	0.29	0.24	0.059
Total organics	2.8 to 13 (6.5)	0.65 to 3.0 (1.6)	6.7 to 240 (58)	1.6 to 59 (14)

ND -- not detected

5.1 to 58 mg/dscm. The increase was composed primarily of C_4 to C_6 compounds. No C_4 to C_6 compounds were detected during the baseline test.

Volatile organic emissions as analyzed by the TCO procedure dropped to half the baseline concentrations during the second test. TCO emissions are much lower than the volatile emissions measured by onsite GC by approximately two orders of magnitude.

Nonvolatile organic emissions as analyzed by gravimetric analysis also decreased from the baseline test to the second test. Total nominal C_{16}^+ emissions were 1.3 mg/dscm for the baseline and 0.24 mg/dscm for the second test.

4.4.2 Infrared Spectra of Total Sample Extracts

IR spectroscopy was used to identify organic functional groups present in the SASS samples. The results of the IR analysis of the total extract samples are summarized in table 4-7. Only the presence of aliphatic hydrocarbons were suggested by the IR spectra in the filter and XAD extracts from both tests.

4.4.3 GC/MS Analysis of Total Sample Extract

Capillary column GC/MS analyses of the extracts of flue gas samples collected by SASS were performed to detect and quantify specific POM and other organic compounds. The compounds sought in the analyses and their respective detection limits are listed in table 4-8. The results of the GC/MS analysis are summarized in table 4-9. The only compounds detected were naphthalene in the baseline and naphthalene, phenanthrene and phenol in the second test. Overall, POM emissions were higher during the second test.

4.4.4 Column Chromatography

Only the GRAV portion of the XAD-2 extract from the baseline test had a high enough organic concentration to warrant LC fractionation. The results of

Table 4-7. Summary of IR Spectra of Total Sample Extracts

Test Number	Sample	Wave Number (cm^{-1})	Assignment
1 (baseline)	Filter	2,980 1,190 2,850	CH alkane C-O C-H alkane
	XAD	2,990 2,830	CH alkane CH alkane
2 (NH_3 injection)	Filter	2,850	CH alkane
	XAD	2,900 2,820	CH alkane CH alkane

this analysis are presented in table 4-10. With the exception of fraction 2, the fractionation indicates a relatively even distribution of organics through all 7 fractions. No comparison with the NH_3 injection test is possible for these results since no other organic analysis yielded enough material to subject to LC fractionation.

IR spectra were obtained on the GRAV residue of the four fractions of the LC fractionation of the XAD-2 extracts from the baseline test. Table 4-10 also summarizes those results. There were no discernable peaks from fractions 2 through 4. These spectra indicate primarily the presence of alphatic hydrocarbons (80 percent of recovered organics), alcohols (20 percent) and carboxylic acids 10 percent. Such interpretation agree with the expected results of LC fractionation which predict aliphatics in fraction 1 and oxygenates in fractions 5 to 7. The IR of the total sample extract for this GRAV residue indicates only aliphatic hydrocarbons.

Table 4-8. Compounds Sought in the GC/MS and Their Detection Limits (ng/μl Injected)

Acid Compounds			
2,4,6-trichlorophenol	5	2-nitrophenol	5
p-chloro-m-cresol	5	4-nitrophenol	20
2-chlorophenol	5	2,4-dinitrophenol	20
2,4-dichlorophenol	5	4,6-dinitro-o-cresol	20
2,4-dimethylphenol	5	pentachlorophenol	5
		phenol	1
Base Neutral Compounds			
1,2,4-trichlorobenzene	1	benzo(c)phenanthrene	40
1,2-dichlorobenzene	1	bis(2-chloroethoxy)methane	1
1,2-diphenylhydrazine (as azobenzene)	1	bis(2-chloroethyl)ether	1
		bis(2-chloroisopropyl)ether	1
1,3-dichlorobenzene	1	bis(2-ethylhexyl)phthalate	1
1,4-dichlorobenzene	1	butyl benzyl phthalate	1
2,4-dinitrotoluene	1	chrysene	1
2,6-dinitrotoluene	1	di-n-butyl phthalate	1
2-chloronaphthalene	1	di-n-octyl phthalate	1
3,3'-dichlorobenzidine	5	dibenzo(a,h)anthracene	5
3-methyl cholanthrene	40	dibenzo(c,g)carbazole	40
4-bromophenyl phenyl ether	1	diethyl phthalate	1
4-chlorophenyl phenyl ether	1	dimethyl phthalate	1
7,12-dimethyl benz(a)anthracene	40	fluoranthene	1
N-nitrosodi-n-propylamine	5	fluorene	1
N-nitrosodimethylamine	NA	hexachlorobenzene	1
N-nitrosodiphenylamine	1	hexachlorobutadiene	1
acenaphthene	1	hexachlorocyclopentadiene	1
acenaphthylene	1	hexachloroethane	1
anthracene	1	indeno(1,2,3-cd) pyrene	5
benzo(ghi)perylene	5	isophorone	1
benzidine	20	naphthalene	1
benzo(b)fluoranthene	1	nitrobenzene	1
benzo(k)fluoranthene	1	perylene	40
benzo(a)anthracene	1	phenanthrene	1
benzo(a)pyrene	1	pyrene	1

Table 4-9. Results of GC/MS Analyses

	Baseline		NH_3 Injection	
	(μg/dscm)	(pg/J)	(μg/dscm)	(pg/J)
Naphthalene	0.2	0.05	0.43	0.11
Phenanthrene	<0.04	<0.01	0.1	0.03
Phenol	<0.04	<0.01	1.2	0.30

Table 4-10. Organic Extract Summary -- Test 1 (Baseline) XAD Extract

Total GRAV Organics[a]	LC1	LC2	LC3	LC4	LC5	LC6	LC7	Total
mg	3.9	<0.6	1.2	1.9	1.6	2.5	1.6	12.7
mg/dscm	0.16	<0.02	0.05	0.08	0.06	0.10	0.06	0.51
Category[b]	Assigned Intensity -- (mg/dscm)							
Aliphatic hydrocarbon	100--(0.16)				100--(0.06)	100--(0.05)	100--(0.02)	0.29
Alcohols							100--(0.02)	0.02
Carboxylic acids						100--(0.05)	100--(0.02)	0.07

[a]Total GRAV sample of 31 mg; 20 mg taken for LC with 8.1 mg recovered. Total mg collected in LC fractions corrected back to total sample.
[b]Summary of organic emissions based on IR results

4.5 RADIOMETRIC EMISSIONS

Radiometric activities of the particulate catch from the SASS train are presented in table 4-11. With the exception of alpha emissions from the NH_3 injection filter, all activities were very close to those from the filter blank.

Table 4-11. Radiometric Activity of SASS Particulate

Sample	Activity (pCi/filter)[a]		
	Alpha	Beta	Gamma
Filter blank	24 ± 19	130.8 ± 5.8	<142
Baseline filter	23 ± 18	133.6 ± 7.9	<145
NH_3 injection filter	165 ± 39	108.2 ± 47.8	<145

[a]The ± values are the two sigma Poisson standard deviation of the counting error

REFERENCES FOR SECTION 4

4-1. Lentzen, D. E., D. E. Wagoner, E. D. Estes, and W. F. Gutknecht, "IERL-RTP Procedures Manual: Level 1 Environmental Assessment (Second Edition)," Environmental Protection Agency, EPA-600/7-78-201, October 1978.

SECTION 5

ENVIRONMENTAL ASSESSMENT

This section discusses the environmental considerations on the industrial boiler tested and discusses the results of bioassay testing of the flue gas sample collected. Flue gas stream species were compared to occupational exposure guidelines as a rough index to rank species discharged for possible further monitoring consideration. Bioassay analyses were conducted as a more direct measure of the potential health effects of effluent streams.

5.1 EMISSIONS ASSESSMENT

To obtain a measure of the potential significance of the discharge streams analyzed in this test program, discharge stream concentrations were compared to indices which reflect potential for adverse health effects. For the flue gas discharge, the indices used for comparison were occupational exposure guidelines, specifically the time-weighted-average threshold limit values (TLV's) defined by the American Conference of Governmental Industrial Hygienists (ACIGH) (reference 5-1) were used.

Table 5-1 lists those pollutant species emitted in the flue gas at levels greater than 10 percent of an occupational exposure guideline. Emissions of silver in the baseline test were almost two orders of magnitude higher. Platinum and cobalt were also higher.

Table 5-1. Flue Gas Species in Concentrations Exceeding 0.1 of an Occupational Exposure Limit

Species	Concentration (μg/dscm)		Occupational Exposure Guideline[a]
	Baseline	NH_3 Injection	
Silver, Ag	2,130	75	10
NO	457,000	270,000	6,000
SO_2	NA	218,000	5,000
Platinum, Pt	15.7	35.7	2
Cobalt, Co	>50.9	>61.9	50
Nickel, Ni	>82.3	>63.1	100
CO	36,000	28,000	55,000
Copper, Cu	>122	>69.3	200
Ammonia, NH_3	7,800	309,000	18,000
Calcium, Ca	551	ND	1,400
Beryllium, Be	<0.619	ND	2
Chromium, Cr	10.3	7.73	50
Phosphorus, P	16.2	13.6	100
Tungsten, W	103	ND	1,000
Vanadium, V	>51.4	>60.0	500
Potassium, K	72.8	498	2,000

[a]Threshold limit value, reference 5-1
ND -- Not detected
NA -- Not available

5.2 BIOASSAY RESULTS

Bioassay tests were performed on the organic sorbent (XAD-2) extracts collected by SASS. Bioassay results reported here are for health effects (reference 5-2). A detailed description of the biological analyses performed is presented in volume II (Data Supplement) of this report. The health effects tests were:

- Ames assay, based on the property of Salmonella typhimurium mutants to revert due to exposure to various classes of mutagens
- Cytotoxicity assay (CHO) with mammalian cells in culture to measure cellular metabolic impairment and death resulting from exposure to soluble toxicants

Table 5-2 summarizes the results from the Ames and CHO assays. The results suggest that the XAD-2 extracts were of moderate or less mutagenicity and toxicity.

Table 5-2. Bioassay Results

Sample	Ames Mutagenicity	CHO Cytotoxicity
Baseline XAD extract	M[a]	U[b]
NH_3 injection XAD extract	U[b]	U[b]

[a]Moderate mutagenicity
[b]Insufficient sample to evaluate, test results indicate moderate mutagenicity (toxicity) or less

REFERENCES FOR SECTION 5

5-1. "Threshold Limit Values for Chemical Substances and Physical Agents in the Work Environment with Intended Changes for 1982," American Conference of Governmental Industrial Hygienists. Cincinnati, OH, 1982.

5-2. Brusick, D. J., et al., "IERL-RTP Procedures Manual: Level 1 Environmental Assessment, Biological Tests," EPA-600/18-81-024, NTIS PB22B966, October 1981.

APPENDIX A

SAMPLING AND ANALYSIS METHODS

Emission test equipment was provided by Acurex Corporation. Onsite equipment included a continuous monitoring system for emission measurements of gaseous criteria pollutants sulfur analysis train (controlled condensation equipment), the SASS train for particulate sizing and organic species collection, EPA Method 17 sampling train for total particulate emissions, a modified EPA Method 5 train for ammonia analysis, and GC/FID for gaseous (C_1 to C_6) hydrocarbon analyses. All flue gas emission sampling was performed at the stack.

The following sections briefly describe the equipment and sampling procedures used during the evaluation of the industrial package boiler.

A.1 CONTINUOUS MONITORING SYSTEM

Rack-mounted monitors and recorders located in a mobile emission laboratory were used for continuous measurement of NO_x, CO, CO_2, and O_2. Figure A-1 illustrates the continuous flue gas extractive sampling system and monitors arrangement. Flue gas was drawn through an in-stack filter and a heated stainless steel probe. From the probe the gas was passed through an impinger containing an HCl solution. This was done to remove traces of NH_3 thus preventing erroneous NO_x reading. From the impinger the sample passed through a gas conditioning and refrigeration system designed to remove water. An unheated line was then used to bring the conditioned gas to the monitors.

1. In situ filter 0.6μ, 99.9999 percent efficient
2. Duct
3. 316 stainless steel probe
4. Four pass conditioner-dryer, 316 stainless steel internals
5. 3/8-inch unheated Teflon
6. Teflon-lined sample pump
7. 3/8-inch unheated Teflon
8. Rotameter
9. 1/4-inch Teflon tubing
10. Calibration gas manifold
11. Calibration gas selector valve
12. Calibration gas cylinders
13. Backpressure regulator
14. Auxiliary analysis port

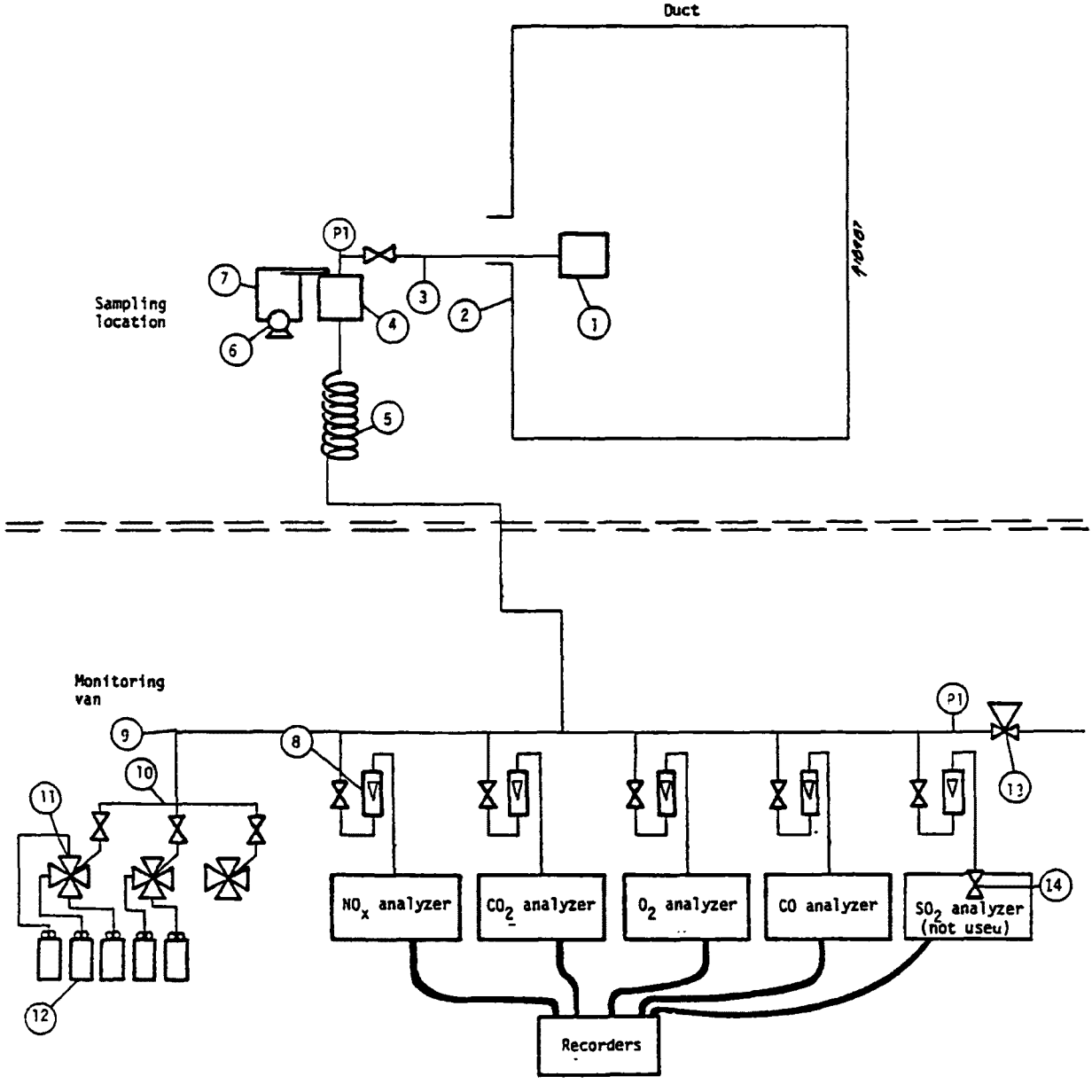

Figure A-1. Schematic for Continuous, Extractive Sampling System

Calibration gases were used to monitor and correct the drift in the instruments. The calibration gases follow the same path as the flue gas being monitored in that both are conditioned at the stack prior to analysis. Table A-1 lists the instrumentation constituting the continuous monitoring and flue gas extractive sampling system used in this test program. A molybdenum NO to NO_x converter was used instead of the stainless steel converter to prevent any residual NH_3 from converting to NO.

A.2 PARTICULATE TESTS

Particulate mass emission tests were performed using a modified EPA Method 17 train. The modification consisted of the addition of a 142-nm filter in a heated oven in line between the probe and impinger train. A schematic of the sampling train used is presented in figure A-2.

A.3 AMMONIA EMISSION

Ammonia emissions were measured using the ammonia sampling train illustrated in figure A-3. The train consists of a modified EPA Method 17 train with the addition of a heated filter after the probe and the use of 0.1 N HCl in the first two impingers instead of water. The filters, probe wash, sample line wash, and impinger solutions were analyzed for ammonia using a method based upon a specific ion electrode.

A.4 SULFUR EMISSIONS

Sulfur emissions (SO_2 and SO_3) were measured using the controlled condensation system illustrated in figure A-4. This sampling system, designed primarily to measure vapor phase concentration of SO_3 as H_2SO_4, consists of a heated quartz probe, a Goksoyr/Ross condenser (condensation coil), impingers, a pump, and a dry gas test meter. Using the Goksoyr/Ross condenser, the gas is cooled to the dew point where SO_3 condenses as H_2SO_4. SO_2 interference is prevented by maintaining the temperature of the gas above the water dew point.

Table A-1. Continuous Monitoring Equipment in the Mobile Laboratory

Instrument	Principle of Operation	Manufacturer	Instrument Model	Range
NO NO_x	Chemiluminescence	Thermo Electron	10 AR	0-100 ppm 0-500 ppm 0-1,000 ppm 0-5,000 ppm
CO	Nondispersive infrared (NDIR)	ANARAD	500R	0-1,000 ppm
CO_2	Nondispersive infrared (NDIR)	ANARAD	AR500	0-20 percent
O_2	Fuel cell	Teledyne		0-5 percent 0-25 percent
Sample gas conditioner	Refrigerant dry-condenser	Hankinson	E-4G-SS	10 scfm
Strip chart recorder	Dual pen analog	Linear	400	1-10 mV 1-100 mV 0-1 V 0-10 V

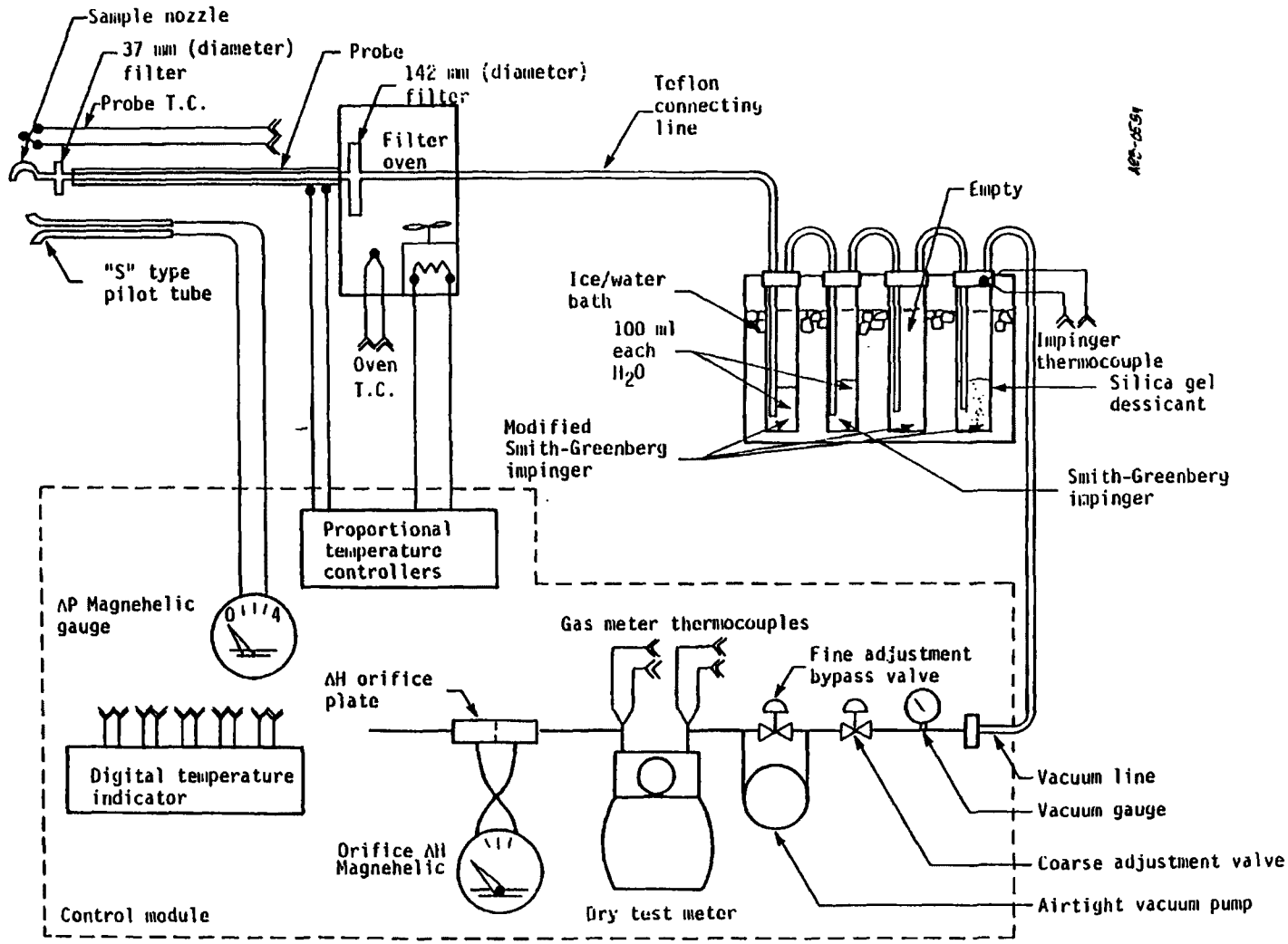

Figure A-2. Schematic of Particulate Sampling Train

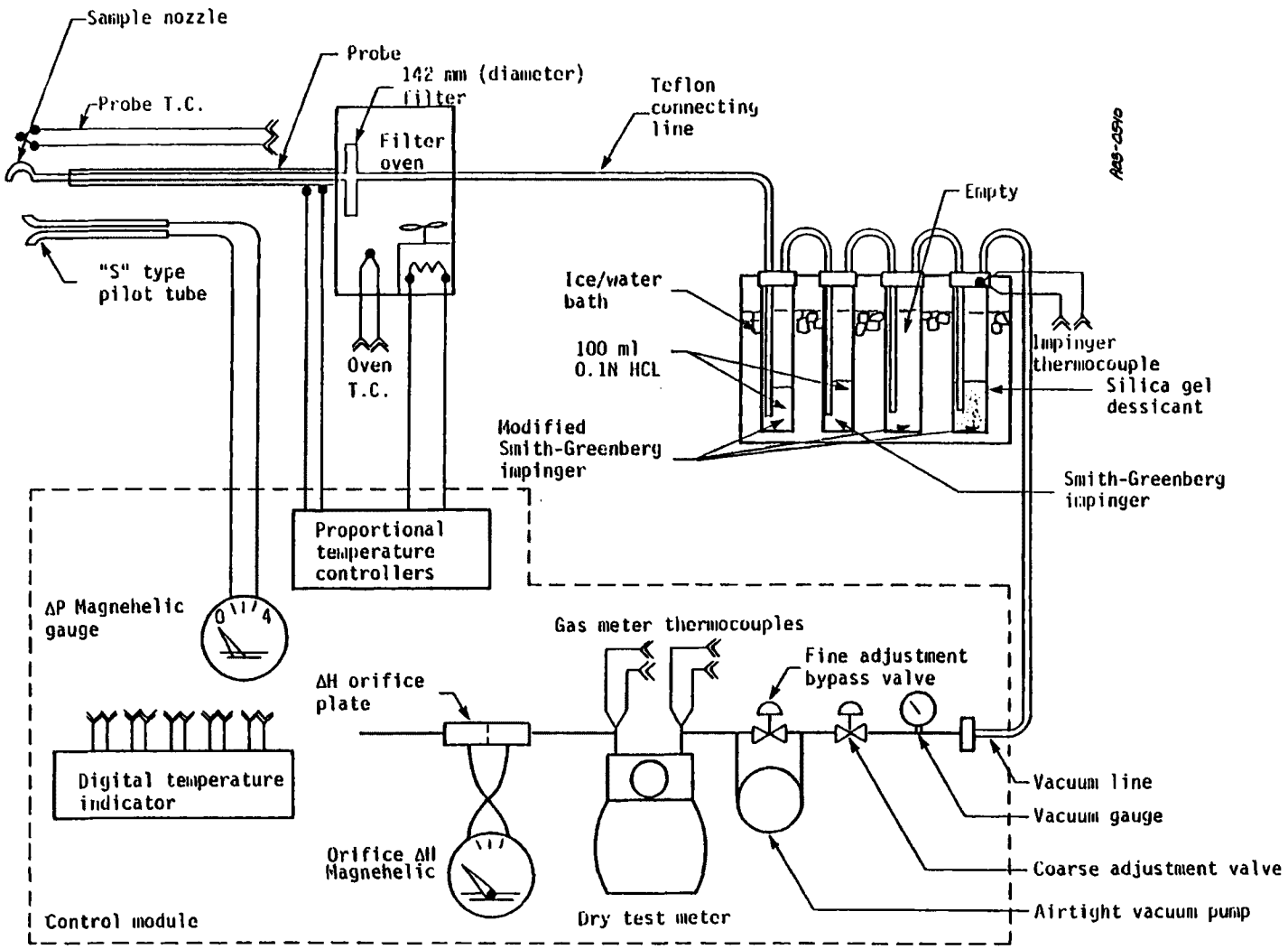

Figure A-3. Schematic of Ammonia Sampling Train

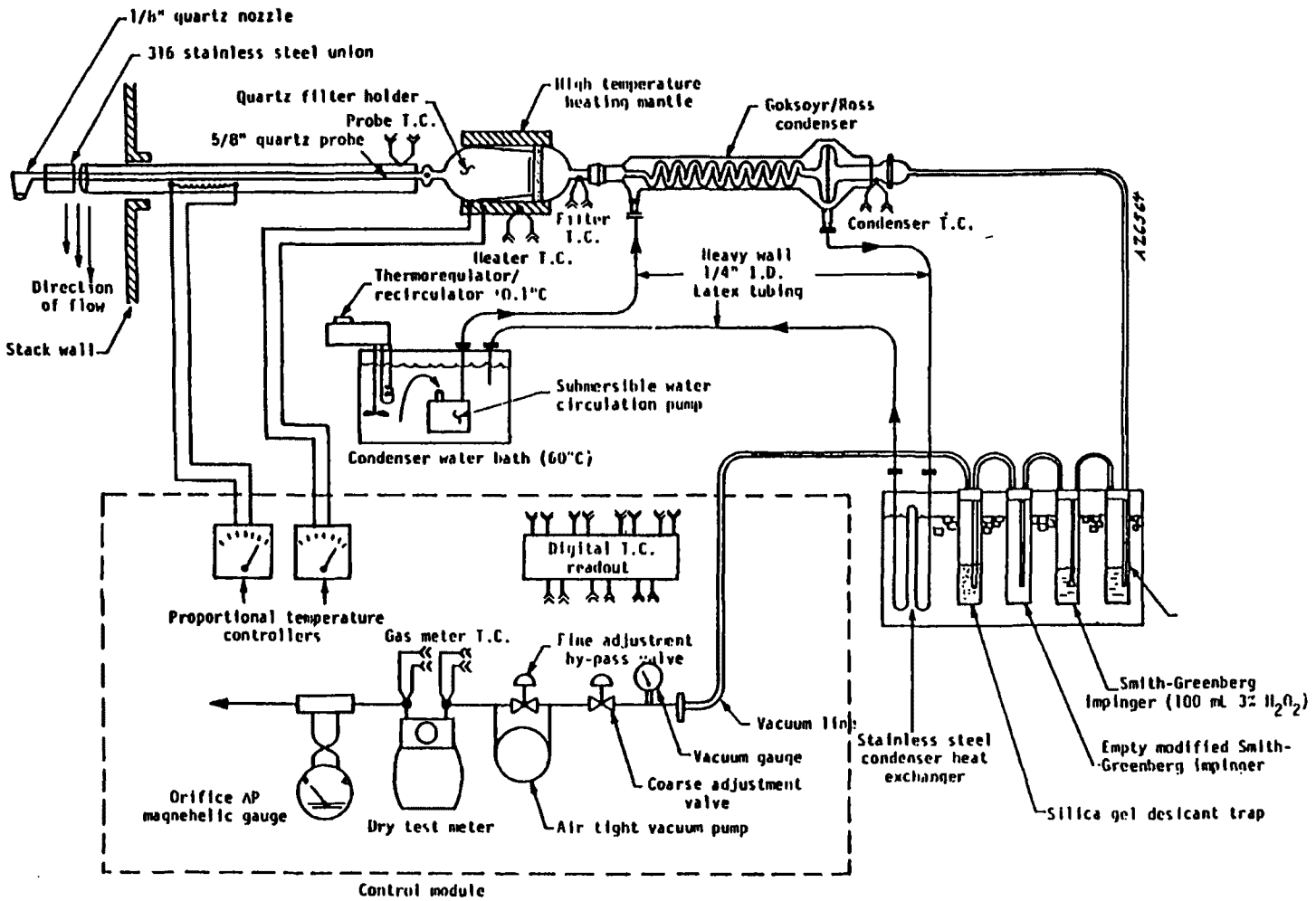

Figure A-4. Controlled Condensation System

Sulfur dioxide is collected in a 3 percent hydrogen peroxide solution. Both SO_2 and SO_3 (as H_2SO_4) were measured by titration with a 0.02 N NaOH using bromphenol blue and barium/thorin as the indicators. A more detailed discussion of the controlled condensation sampling system is given in reference A-1.

A.5 N_2O EMISSIONS

The stack gas grab samples were extracted into stainless steel cylinders for laboratory analysis for N_2O. For analysis each sample cylinder was externally heated to 120°C (250°F), then a 1-ml sample was withdrawn with a gas-tight syringe for injection into a gas chromatograph. The analytical equipment consisted of a Varian 3700 gas chromatograph equipped with a ^{63}Ni electron capture detector and a 3.65-m (12-ft) stainless steel column packed with Poropak Super Q, 80/100 mesh. The injector temperature was kept at 80°C, the detector at 350°C, and the column temperature at 33°C. Elution time for N_2O was approximately 5 min, with a flowrate of 20 ml/min of nitrogen.

A.6 TRACE ELEMENTS AND ORGANIC EMISSIONS

Emissions of inorganic trace elements and organic compounds were sampled with the source assessment sampling system (SASS). Designed for level 1 environmental assessment (reference A-2). the SASS collects large quantities of gas and solid samples required for subsequent analyses of inorganic and organic emissions as well as particle size measurement.

The SASS, illustrated in figure A-5, is generally similar to the system utilized for total particulate mass emission tests (HVSS) with the exception of:

- Particulate cyclones heated in the oven with the filter to 230°C (450°F)

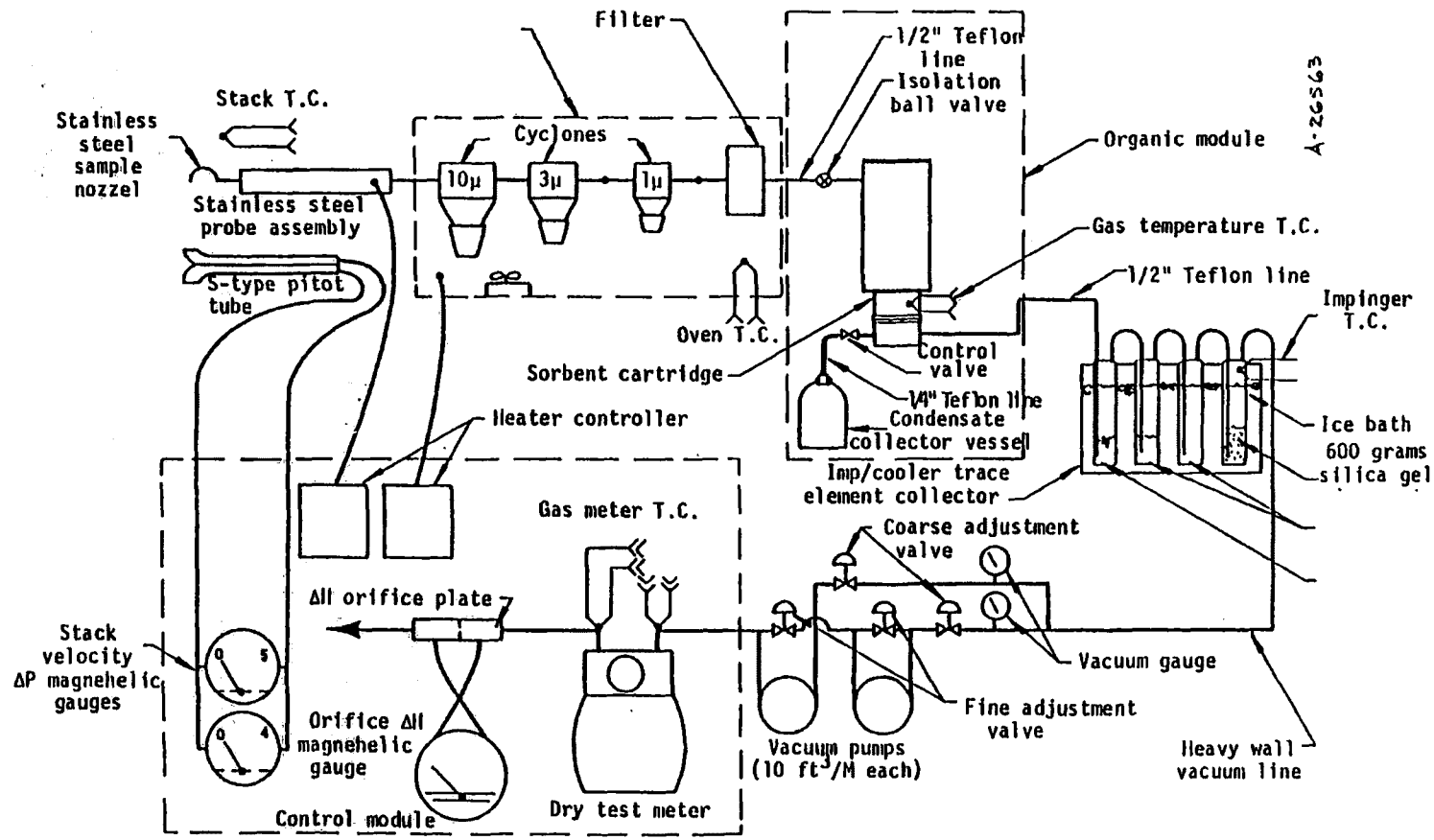

Figure A-5. Source Assessment Sampling Train Schematic

- The addition of a gas cooler and organic sampling module
- The addition of necessary vacuum pumps

Schematics outlining the sampling and analytical procedures using the SASS equipment are presented in figures A-6 and A-7. The following briefly describe analytical procedures used in measuring stack outlet trace elements and organic emissions.

Inorganic analyses of solid and liquid samples from the SASS train were performed with spark source mass spectroscopy (SSMS) for most of the trace elements. Atomic Absorption Spectrometry (AAS) was used for analyses of volatile mercury (Hg), antimony (Sb), and arsenic (As).

Quantitative information on total organic emissions was obtained by gas chromatography for TCO and by GRAV of particulate, XAD-2, and condensate trap organic extracts. IR and GC/MS were used for identification of organic functional groups and POM and other organic species in extract samples. LC into seven polarity fractions, followed by IR, and LRMS of fractions containing >0.5 mg/dscm were performed to better quantify specific organic species. Figure A-8 illustrates the organic analysis methodology followed during the current program.

A.7 C_1 TO C_6 HYDROCARBON SAMPLING AND ANALYSIS

Samples of flue gas for C_1 to C_6 hydrocarbon analysis were collected using a grab sampling procedure. Flue gas was extracted from upstream of the induced draft fan at the same location used for the controlled condensation sampling system.

Samples for gaseous hydrocarbon analysis were collected using the apparatus illustrated in figure A-9. The equipment consisted of a heated, 0.64-cm (1/4-in.) OD pyrex-lined, stainless-steel probe fitted with a 7M sintered stainless steel filter at the probe inlet. The outlet of the probe

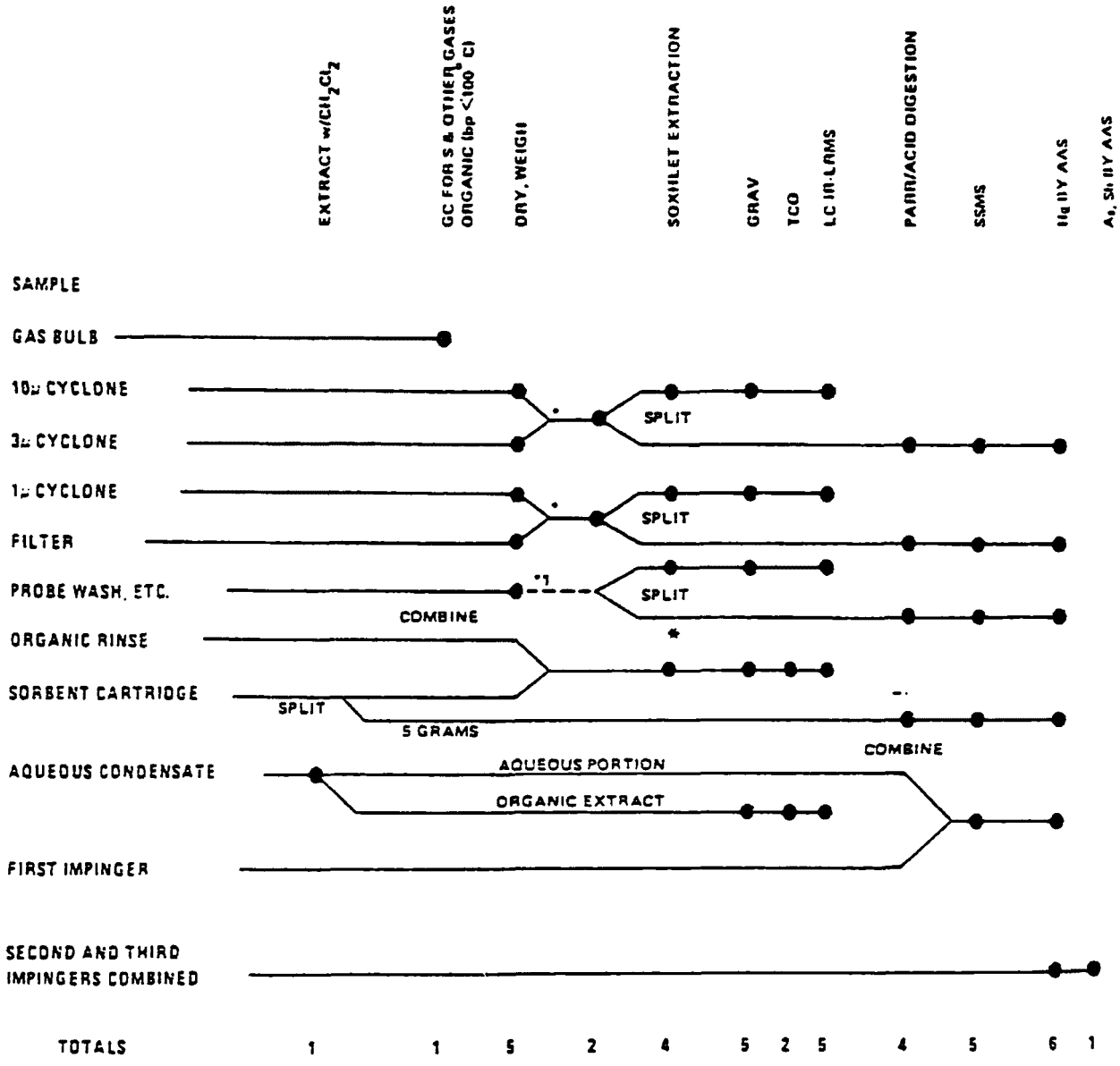

* If required sample should be set aside for biological analysis at this point.

[1] This step is required to define the total mass of particulate catch. If the sample exceeds 10% of the total cyclone and filter sample weight proceed to analysis. If the sample is less than 10% of the catch, hold in reserve.

Figure A-6. Flue Gas Analysis Protocol for SASS Samples

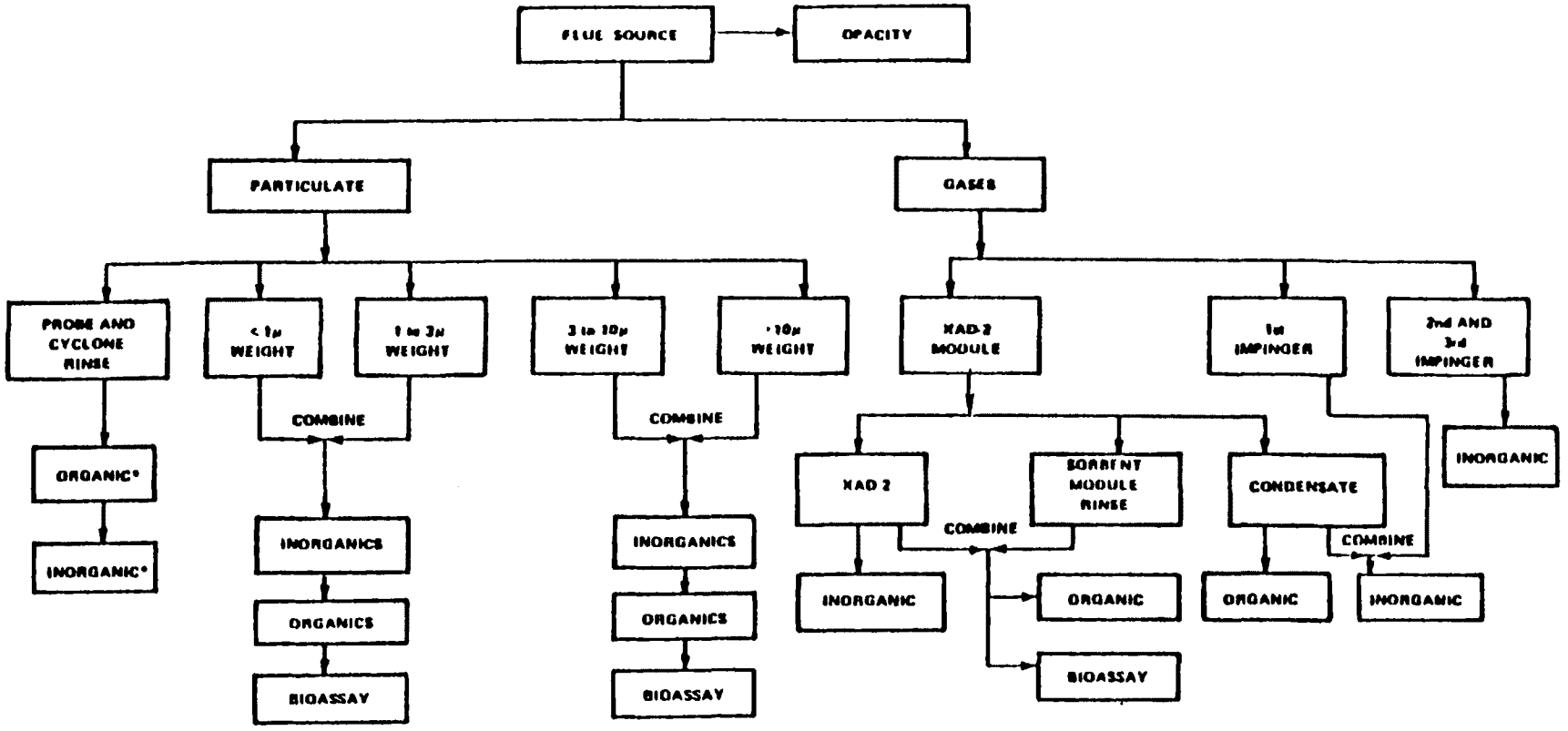

Figure A-7. Exhaust Gas Analysis Protocol

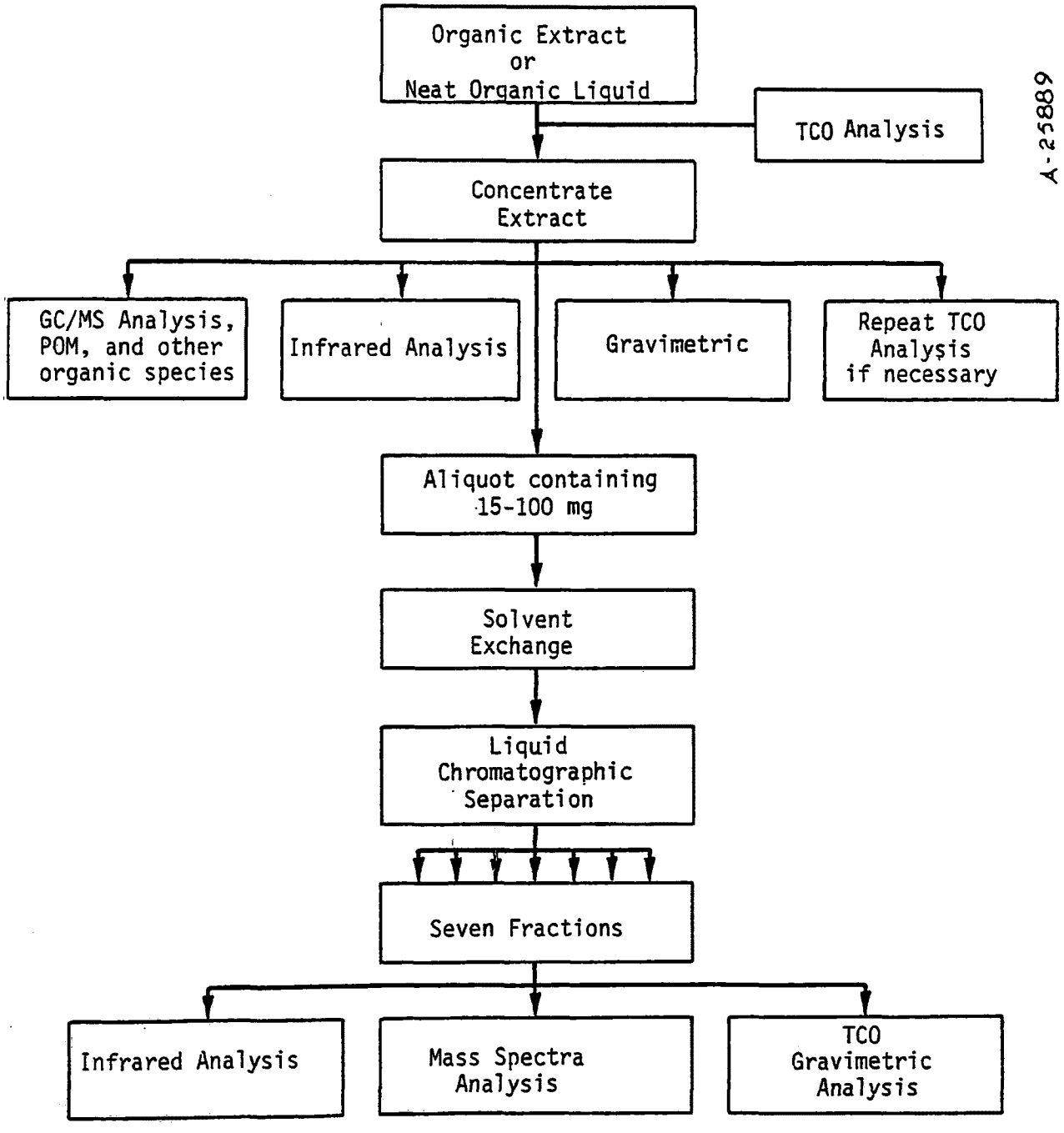

Figure A-8. Organic Analysis Methodology

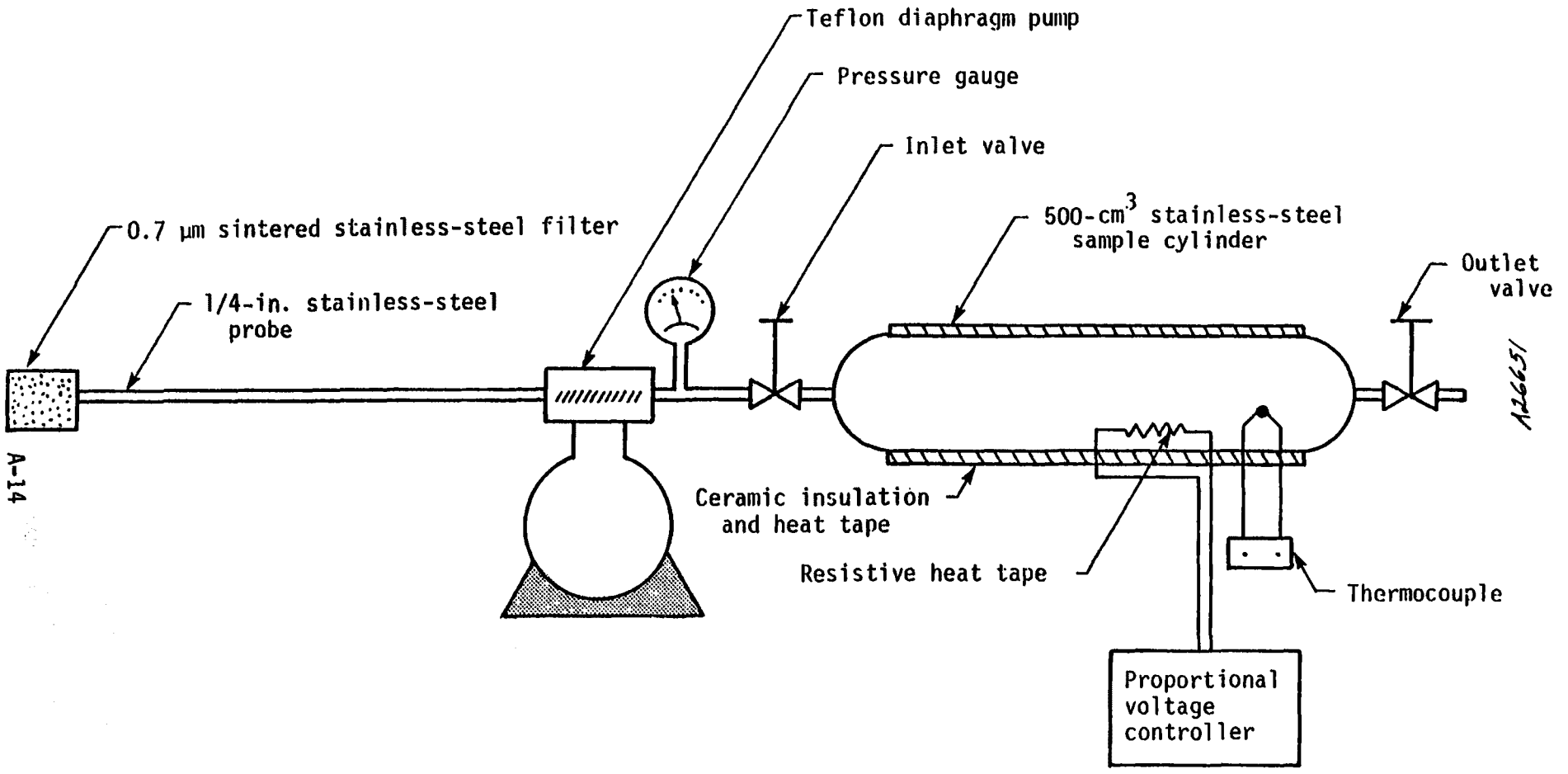

Figure A-9. C_1-C_6 Hydrocarbon Sampling System

was directly attached to a diaphragm vacuum pump which was in turn attached to a 500-ml stainless steel heated sampling cylinder. The sampling bulb was insulated with heat tape powered by a varying voltage controller. The heating jacket kept the sample gas above the dew point to minimize sample loss due to water condensation. A detailed schematic of the sampling bulb is shown in figure A-10.

Prior to sampling, the gas bulb was purged with stack gas for 3-min and then sealed. The trapped flue gas was then analyzed onsite with a Varian Model 3700 gas chromatograph (GC) equipped with flame ionization detector. Table A-2 lists the design specifications of the Varian GC. A 1.85-m (6-ft) long, 0.32-cm (1/8-in.) diameter stainless-steel column packed with Porapak Q 60/80 mesh was used to separate the hydrocarbons into their respective components (C_1 to C_6). The GC was calibrated with repeated injections of a Scott Specialty standard gas containing C_1 to C_6 hydrocarbons (each having a concentration of 15 ppm). The chromatographic responses for the standards and the samples were recorded on a Hewlett Packard Model 3390A reporting integrator.

Table A-2. Gas Chromatograph Specifications

Varian Model 3700 Gas Chromatograph	
Sensitivity	1×10^{-12} A/mV at attenuation 1 and range 10^{-12} A/mV
Zero range	-10^{-11} to 10^{-9} A (reversible with internal switch)
Noise (input capped)	5×10^{-15} A; 0.5 μV peak to peak
Time constant	220 ms on all ranges (approximate 1s response to 99 percent of peak)
Gas required	Carrier gas (helium), combustion air, fuel gas (hydrogen)

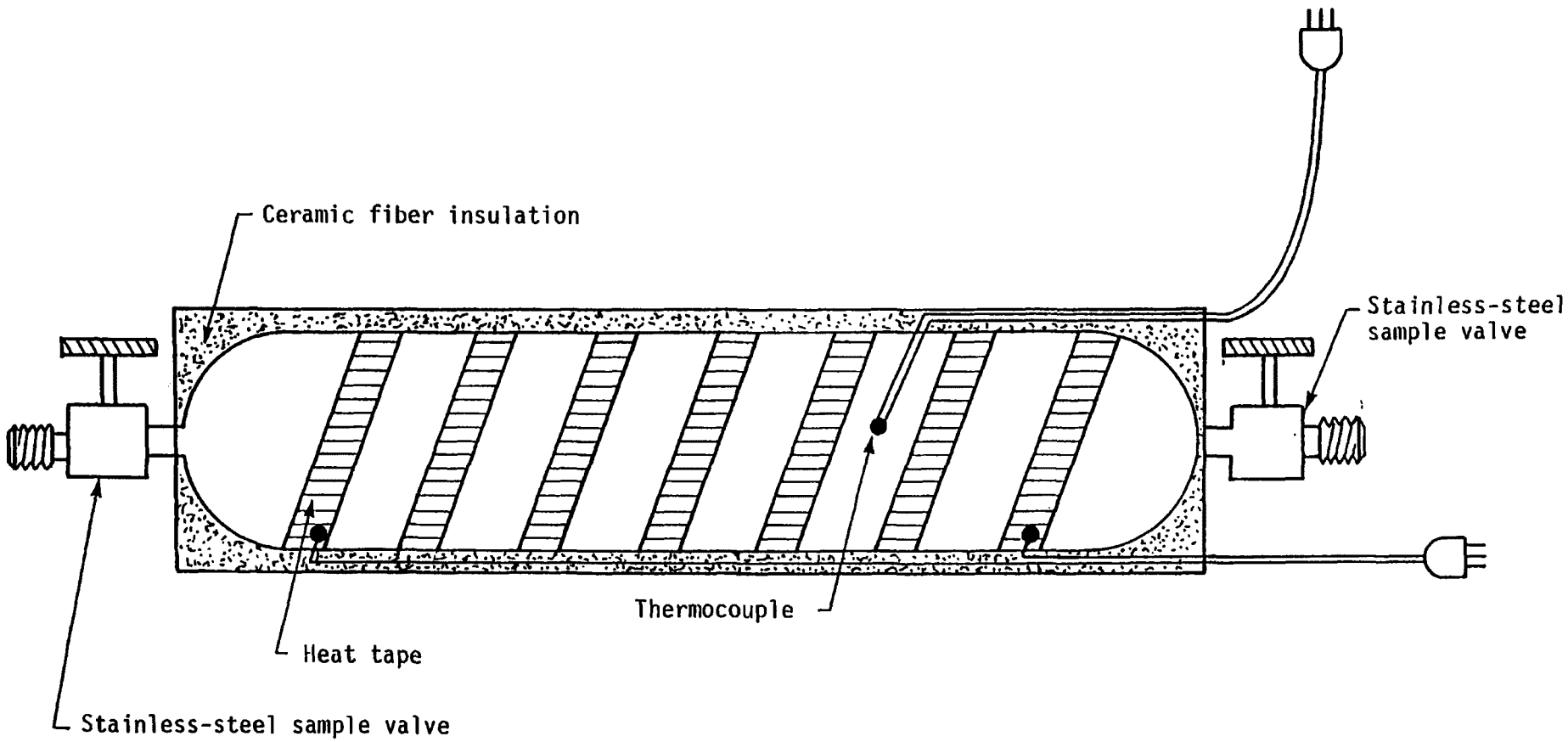

Figure A-10. Schematic of Sampling Cylinder Construction

REFERENCES FOR APPENDIX A

A-1. Maddalone, R., and N. Gainer. "Process Measurement Procedures: H_2SO_4 Emissions," EPA-600/7-79/156, July 1979.

A-2. Lentzen, D. E., et al., "IERL-RTP Procedures Manual: Level 1 Environmental Assessment (Second Edition)," EPA-600/7-78-201, October 1978.

APPENDIX B

TRACE ELEMENT CONCENTRATIONS AND MASS BALANCES

Symbols appearing in the tables:

dscm	Dry standard cubic meter at 1 atm and 20°C
mcg	Microgram
ppm	Parts per million by weight
ng/J	Nanogram per joule heat input
<	Less than
>	Greater than
N	Element not analyzed
U	Unable to determine

Trace elements having concentrations less than the detectable limit or having a blank value greater than the sample value were given an arbitrary concentration of zero. Values in the form A < x < B were determined by letting elements reported as less than concentration be represented by a concentration of zero for the low value and the reported concentration as the high value.

Detectability limits for the various samples were the following:

- Particulate <0.001 μg/cm^2
- Filter XAD-2 <0.2 μg/g
- Impingers <0.002 μg/ml
- Fuel oil <0.1 μg/g

At standard conditions of 20°C (68°F) and 1 atm, one gram mole of an ideal gas occupies 24.04 liters.

MCHAWK
BASELINE

PPM

ELEMENT	FUEL OIL PPM	FILTER	XAD-2	1ST IMPINGER & DMC	2ND & 3RD IMPINGERS
ALUMINUM	.250E+02	0.0 E+00	.610E+01	.0 E+00	N.0 E+00
ANTIMONY	.0 E+00	.162E+02	.0 E+00	.0 E+00	<.500E-02
ARSENIC	.0 E+00	.727E+03	.0 E+00	.0 E+00	<.200E-01
BARIUM	<.100E+00	.0 E+00	.200E+01	.600E-01	N.0 E+00
BERYLLIUM	<.100E+00	.0 E+00	<.100E+00	<.100E-02	N.0 E+00
BISMUTH	<.100E+00	.0 E+00	<.100E+00	<.100E-02	N.0 E+00
BORON	.300E+00	.405E+02	.0 E+00	.600E-02	N.0 E+00
BROMINE	.700E+00	.243E+02	.300E+02	.0 E+00	N.0 E+00
CADMIUM	<.100E+00	.243E+01	<.100E+00	<.100E-02	N.0 E+00
CALCIUM	.580E+02	0.0 E+00	.110E+02	.500E+01	N.0 E+00
CERIUM	<.100E+00	.0 E+00	.280E+01	<.100E-02	N.0 E+00
CESIUM	<.100E+00	.162E+01	<.100E+00	<.100E-02	N.0 E+00
CHLORINE	.100E+02	.0 E+00	.130E+02	.380E+01	N.0 E+00
CHROMIUM	.900E+00	.405E+03	.0 E+00	.720E-01	N.0 E+00
COBALT	<.100E+00	>.648E+04	<.100E+00	.400E-02	N.0 E+00
COPPER	.230E+03	>.809E+04	.400E+01	.390E+00	N.0 E+00
DYSPROSIUM	<.100E+00	.0 E+00	<.100E+00	<.100E-02	N.0 E+00
ERBIUM	<.100E+00	.0 E+00	<.100E+00	<.100E-02	N.0 E+00
EUROPIUM	<.100E+00	.0 E+00	<.100E+00	<.100E-02	N.0 E+00
FLUORINE	.300E+01	.0 E+00	.700E+01	.397E+01	N.0 E+00
GADOLINIUM	<.100E+00	.0 E+00	<.100E+00	<.100E-02	N.0 E+00
GALLIUM	.400E+00	.615E+03	.400E+00	.900E-02	N.0 E+00
GERMANIUM	<.100E+00	.729E+01	<.100E+00	<.100E-02	N.0 E+00
GOLD	<.100E+00	.0 E+00	<.100E+00	<.100E-02	N.0 E+00
HAFNIUM	<.100E+00	.0 E+00	<.100E+00	<.100E-02	N.0 E+00
HOLMIUM	<.100E+00	.0 E+00	<.100E+00	<.100E-02	N.0 E+00
IODINE	<.100E+00	.324E+01	<.100E+00	<.100E-02	N.0 E+00
IRIDIUM	<.100E+00	.0 E+00	<.100E+00	<.100E-02	N.0 E+00
IRON	.410E+02	0.0 E+00	.500E+01	0.610E+00	N.0 E+00
LANTHANUM	<.100E+00	.0 E+00	<.100E+00	<.100E-02	N.0 E+00
LEAD	.600E+00	.0 E+00	<.100E+00	.400E-01	N.0 E+00
LITHIUM	.200E+01	.324E+02	.300E+00	.300E-02	N.0 E+00
LUTETIUM	<.100E+00	.0 E+00	<.100E+00	<.100E-02	N.0 E+00
MAGNESIUM	.330E+02	0.0 E+00	.100E+01	.0 E+00	N.0 E+00
MANGANESE	.200E+01	.324E+02	.160E+01	.100E-02	N.0 E+00
MERCURY	.200E-01	<.162E+01	<.150E+00	.100E-02	.100E-02
MOLYBDENUM	<.100E+00	.0 E+00	.310E+01	.900E-01	N.0 E+00
NEODYMIUM	<.100E+00	.0 E+00	<.100E+00	<.100E-02	N.0 E+00
NICKEL	.540E+02	>.803E+04	.200E+01	.940E-01	N.0 E+00
NIOBIUM	<.100E+00	.0 E+00	<.100E+00	<.200E-02	N.0 E+00
OSMIUM	<.100E+00	.0 E+00	<.100E+00	<.100E-02	N.0 E+00
PALLADIUM	<.100E+00	.0 E+00	<.100E+00	<.100E-02	N.0 E+00
PHOSPHORUS	.330E+02	.810E+02	.300E+01	.0 E+00	N.0 E+00
PLATINUM	.800E+00	.0 E+00	.300E+01	<.100E-02	N.0 E+00
POTASSIUM	.930E+02	0.0 E+00	.140E+02	.0 E+00	N.0 E+00

PPM

MOHAWK
BASELINE

ELEMENT	FUEL OIL (PPM)	FILTER	XAD-2	1ST IMPINGER & GMC	2ND & 3RD IMPINGERS
PRASEODYMIUM	<.100E+00	.0 E+00	<.100E+00	<.100E-02	N.0 E+00
RHENIUM	<.100E+00	.0 E+00	<.100E+00	<.100E-02	N.0 E+00
RHODIUM	<.100E+00	.0 E+00	<.100E+00	<.100E-02	N.0 E+00
RUBIDIUM	<.100E+00	.0 E+00	<.100E+00	<.170E-01	N.0 E+00
RUTHENIUM	<.100E+00	.0 E+00	<.100E+00	<.100E-02	N.0 E+00
SAMARIUM	<.100E+00	.0 E+00	<.100E+00	<.100E-02	N.0 E+00
SCANDIUM	<.100E+00	.0 E+00	<.100E+00	<.200E-02	N.0 E+00
SELENIUM	<.100E+00	.591E+02	<.100E+00	.0 E+00	N.0 E+00
SILICON	.650E+02	>.745E+04	.103E+03	.100E+00	N.0 E+00
SILVER	<.100E+00	.154E+02	.377E+03	.170E+01	N.0 E+00
SODIUM	<.200E+00	U.0 E+00	.0 E+00	U.0 E+00	N.0 E+00
STRONTIUM	.100E+00	.0 E+00	.210E+01	.120E-01	N.0 E+00
SULFUR	.240E+03	>.227E+04	.600E+01	>.990E+01	N.0 E+00
TANTALUM	<.100E+00	<.810E+00	<.100E+00	<.100E-02	N.0 E+00
TELLURIUM	<.100E+00	.130E+02	<.100E+00	<.100E-02	N.0 E+00
TERBIUM	<.100E+00	.0 E+00	<.100E+00	<.100E-02	N.0 E+00
THALLIUM	<.100E+00	.0 E+00	<.100E+00	<.100E-02	N.0 E+00
THORIUM	<.700E+00	.0 E+00	<.100E+00	<.100E-02	N.0 E+00
THULIUM	<.100E+00	.810E+00	<.100E+00	<.100E-02	N.0 E+00
TIN	<.100E+00	.0 E+00	<.100E+00	.0 E+00	N.0 E+00
TITANIUM	.900E+01	U.0 E+00	.900E+01	.700E-01	N.0 E+00
TUNGSTEN	<.700E+00	<.891E+01	.198E+02	<.100E-02	N.0 E+00
URANIUM	<.500E+00	.0 E+00	<.100E+00	<.100E-02	N.0 E+00
VANADIUM	.230E+02	>.624E+04	.500E+00	.100E-02	N.0 E+00
YTTERBIUM	<.100E+00	.729E+01	<.100E+00	<.100E-02	N.0 E+00
YTTRIUM	<.100E+00	.0 E+00	<.100E+00	.100E-02	N.0 E+00
ZINC	.500E+01	.0 E+00	.0 E+00	.740E+00	N.0 E+00
ZIRCONIUM	.500E+00	.0 E+00	.500E+00	.200E-02	N.0 E+00

MCHAWK
BASELINE

MASS/HEAT INPUT NG/J

ELEMENT	FILTER	XAD-2	1ST IMPINGER & CMC	2ND & 3RD IMPINGERS	STACK GAS
ALUMINUM	U .0 E+00	.780E-02	.0 E+00	N .0 E+00	.780E-02
ANTIMONY	.311E-04	.0 E+00	.0 E+00	< .124E-03	.311E-04<X<.155E-03
ARSENIC	.140E-02	.0 E+00	.0 E+00	< .498E-03	.140E-02<X<.189E-02
BARIUM	.0 E+00	.256E-02	.146E-02	N .0 E+00	.401E-02
BERYLLIUM	.0 E+00	< .128E-03	< .243E-04	N .0 E+00	< .152E-03
BISMUTH	.0 E+00	< .128E-03	< .243E-04	N .0 E+00	< .152E-03
BORON	.777E-04	.0 E+00	.146E-03	N .0 E+00	.223E-03
BROMINE	.466E-04	.384E-01	.0 E+00	N .0 E+00	.384E-01
CADMIUM	.466E-05	< .128E-03	< .243E-04	N .0 E+00	.466E-05<X<.157E-03
CALCIUM	U .0 E+00	.141E-01	.121E+00	N .0 E+00	.135E+00
CERIUM	.0 E+00	.358E-02	< .243E-04	N .0 E+00	.360E-02
CESIUM	.311E-05	< .128E-03	< .243E-04	N .0 E+00	.311E-05<X<.155E-03
CHLORINE	.0 E+00	.166E-01	.922E-01	N .0 E+00	.109E+00
CHROMIUM	.777E-03	.0 E+00	.175E-02	N .0 E+00	.252E-02
COBALT	> .124E-01	< .128E-03	.971E-04	N .0 E+00	> .125E-01
COPPER	> .155E-01	.511E-02	.946E-02	N .0 E+00	> .301E-01
DYSPROSIUM	.0 E+00	< .128E-03	< .243E-04	N .0 E+00	< .152E-03
ERBIUM	.0 E+00	< .128E-03	< .243E-04	N .0 E+00	< .152E-03
EUROPIUM	.0 E+00	< .128E-03	< .243E-04	N .0 E+00	< .152E-03
FLUORINE	.0 E+00	.895E-02	.963E-01	N .0 E+00	.105E+00
GADOLINIUM	.0 E+00	< .128E-03	< .243E-04	N .0 E+00	< .152E-03
GALLIUM	.118E-02	.511E-03	.218E-03	N .0 E+00	.191E-02
GERMANIUM	.140E-04	< .128E-03	< .243E-04	N .0 E+00	.140E-04<X<.166E-03
GOLD	.0 E+00	< .128E-03	< .243E-04	N .0 E+00	< .152E-03
HAFNIUM	.0 E+00	< .128E-03	< .243E-04	N .0 E+00	< .152E-03
HOLMIUM	.0 E+00	< .128E-03	< .243E-04	N .0 E+00	< .152E-03
IODINE	.621E-05	< .128E-03	< .243E-04	N .0 E+00	.621E-05<X<.158E-03
IRIDIUM	.0 E+00	< .128E-03	< .243E-04	N .0 E+00	< .152E-03
IRON	U .0 E+00	.639E-02	0 .148E-01	N .0 E+00	.212E-01
LANTHANUM	.0 E+00	< .128E-03	< .243E-04	N .0 E+00	< .152E-03
LEAD	.0 E+00	< .128E-03	.971E-03	N .0 E+00	.971E-03<X<.110E-02
LITHIUM	.621E-04	.384E-03	.728E-04	N .0 E+00	.518E-03
LUTETIUM	.0 E+00	< .128E-03	< .243E-04	N .0 E+00	< .152E-03
MAGNESIUM	U .0 E+00	.128E-02	.0 E+00	N .0 E+00	.128E-02
MANGANESE	.621E-04	.205E-02	.243E-04	N .0 E+00	.213E-02
MERCURY	< .311E-05	< .192E-03	.243E-04	.249E-04	.491E-04<X<.244E-03
MOLYBDENUM	.0 E+00	.396E-02	.218E-02	N .0 E+00	.615E-02
NEODYMIUM	.0 E+00	< .128E-03	< .243E-04	N .0 E+00	< .152E-03
NICKEL	> .154E-01	.256E-02	.228E-02	N .0 E+00	> .202E-01
NIOBIUM	.0 E+00	< .128E-03	< .485E-04	N .0 E+00	< .176E-03
OSMIUM	.0 E+00	< .128E-03	< .243E-04	N .0 E+00	< .152E-03
PALLADIUM	.0 E+00	< .128E-03	< .243E-04	N .0 E+00	< .152E-03
PHOSPHORUS	.155E-03	.384E-02	.0 E+00	N .0 E+00	.399E-02
PLATINUM	.0 E+00	.384E-02	< .243E-04	N .0 E+00	.386E-02
POTASSIUM	U .0 E+00	.179E-01	.0 E+00	N .0 E+00	.179E-01

MOHAWK
BASELINE

MASS/HEAT INPUT

NG/J

ELEMENT	FILTER	XAD-2	1ST IMPINGER & OMC	2ND & 3RD IMPINGERS	STACK GAS
PRASEODYMIUM	.0 E+00	< .128E-03	< .243E-04	N .0 E+00	< .152E-03
RHENIUM	.0 E+00	< .128E-03	< .243E-04	N .0 E+00	< .152E-03
RHODIUM	.0 E+00	< .128E-03	< .243E-04	N .0 E+00	< .152E-03
RUBIDIUM	.0 E+00	< .128E-03	< .413E-03	N .0 E+00	< .540E-03
RUTHENIUM	.0 E+00	< .128E-03	< .243E-04	N .0 E+00	< .152E-03
SAMARIUM	.0 E+00	< .128E-03	< .243E-04	N .0 E+00	< .152E-03
SCANDIUM	.0 E+00	< .128E-03	< .485E-04	N .0 E+00	< .176E-03
SELENIUM	.113E-03	< .128E-03	.0 E+00	N .0 E+00	.113E-03<X<.241E-03
SILICON	> .143E-01	.132E+00	.243E-02	N .0 E+00	> .148E+00
SILVER	.255E-04	.482E+00	.413E-01	N .0 E+00	.523E+00
SODIUM	U .0 E+00	.0 E+00	U .0 E+00	N .0 E+00	.0 E+00
STRONTIUM	.0 E+00	.268E-02	.291E-03	N .0 E+00	.258E-02
SULFUR	> .435E-02	.767E-02	> .240E+00	N .0 E+00	> .252E+00
TANTALUM	< .155E-05	< .128E-03	< .243E-04	N .0 E+00	< .154E-03
TELLURIUM	.249E-04	< .128E-03	< .243E-04	N .0 E+00	.249E-04<X<.177E-03
TERBIUM	.0 E+00	< .128E-03	< .243E-04	N .0 E+00	< .152E-03
THALLIUM	.0 E+00	< .128E-03	< .243E-04	N .0 E+00	< .152E-03
THORIUM	.0 E+00	< .128E-03	< .243E-04	N .0 E+00	< .152E-03
THULIUM	.155E-05	< .128E-03	< .243E-04	N .0 E+00	.155E-05<X<.154E-03
TIN	.0 E+00	< .128E-03	.0 E+00	N .0 E+00	< .128E-03
TITANIUM	U .0 E+00	.115E-01	.170E-02	N .0 E+00	.132E-01
TUNGSTEN	< .171E-04	.253E-01	< .243E-04	N .0 E+00	.254E-01
URANIUM	.0 E+00	< .128E-03	< .243E-04	N .0 E+00	< .152E-03
VANADIUM	> .120E-01	.639E-03	.243E-04	N .0 E+00	> .126E-01
YTTERBIUM	.140E-04	< .128E-03	< .243E-04	N .0 E+00	.140E-04<X<.166E-03
YTTRIUM	.0 E+00	< .128E-03	.243E-04	N .0 E+00	.243E-04<X<.152E-03
ZINC	.0 E+00	.0 E+00	.180E-01	N .0 E+00	.180E-01
ZIRCONIUM	.0 E+00	.639E-03	.485E-04	N .0 E+00	.688E-03

MASS HEAT INPUT

MOHAWK BASELINE

NG/J

ELEMENT	FUEL OIL	STACK GAS
ALUMINUM	.569E+00	.780E-02
ANTIMONY	.0 E+00	.311E-04<X<.155E-03
ARSENIC	.0 E+00	.140E-02<X<.189E-02
BARIUM	< .227E-02	.461E-02
BERYLLIUM	< .227E-02	< .152E-03
BISMUTH	< .227E-02	< .152E-03
BORON	.682E-02	.223E-03
BROMINE	.159E-01	.384E-01
CADMIUM	< .227E-02	.466E-05<X<.157E-03
CALCIUM	.132E+01	.135E+00
CERIUM	< .227E-02	.360E-02
CESIUM	< .227E-02	.311E-05<X<.155E-03
CHLORINE	.227E+00	.109E+00
CHROMIUM	.205E-01	.252E-02
COBALT	< .227E-02	> .125E-01
COPPER	.523E+01	> .301E-01
DYSPROSIUM	< .227E-02	< .152E-03
ERBIUM	< .227E-02	< .152E-03
EUROPIUM	< .227E-02	< .152E-03
FLUORINE	.682E-01	.105E+00
GADOLINIUM	< .227E-02	< .152E-03
GALLIUM	.910E-02	.191E-02
GERMANIUM	< .227E-02	.140E-04<X<.166E-03
GOLD	< .227E-02	< .152E-03
HAFNIUM	< .227E-02	< .152E-03
HOLMIUM	< .227E-02	< .152E-03
IODINE	< .227E-02	.621E-05<X<.158E-03
IRIDIUM	< .227E-02	< .152E-03
IRON	.933E+00	.212E-01
LANTHANUM	< .227E-02	< .152E-03
LEAD	.136E-01	.971E-03<X<.110E-02
LITHIUM	.455E-01	.518E-03
LUTETIUM	< .227E-02	< .152E-03
MAGNESIUM	.751E+00	.128E-02
MANGANESE	.455E-01	.213E-02
MERCURY	.455E-03	.491E-04<X<.244E-03
MOLYBDENUM	< .227E-02	.615E-02
NEODYMIUM	< .227E-02	< .152E-03
NICKEL	.123E+01	> .202E-01
NIOBIUM	< .227E-02	< .176E-03
OSMIUM	< .227E-02	< .152E-03
PALLADIUM	< .227E-02	< .152E-03
PHOSPHORUS	.751E+00	.399E-02
PLATINUM	.182E-01	.386E-02
POTASSIUM	.212E+01	.179E-01

MOHAWK
MASS HEAT INPUT BASELINE
NG/J

ELEMENT	FUEL OIL	STACK GAS
PRASEODYMIUM	< .227E-02	< .152E-03
RHENIUM	< .227E-02	< .152E-03
RHODIUM	< .227E-02	< .152E-03
RUBIDIUM	< .227E-02	< .540E-03
RUTHENIUM	< .227E-02	< .152E-03
SAMARIUM	< .227E-02	< .152E-03
SCANDIUM	< .227E-02	< .176E-03
SELENIUM	< .227E-02	.113E-03<X<.241E-03
SILICON	.148E+01	> .148E+00
SILVER	< .227E-02	.523E+00
SODIUM	< .455E-02	.0 E+00
STRONTIUM	.227E-02	.298E-02
SULFUR	.546E+01	> .252E+00
TANTALUM	< .227E-02	< .154E-03
TELLURIUM	< .227E-02	.249E-04<X<.177E-03
TERBIUM	< .227E-02	< .152E-03
THALLIUM	< .227E-02	< .152E-03
THORIUM	< .159E-01	< .152E-03
THULIUM	< .227E-02	.155E-05<X<.154E-03
TIN	< .227E-02	< .128E-03
TITANIUM	.205E+00	.132E-01
TUNGSTEN	< .159E-01	.254E-01
URANIUM	< .114E-01	< .152E-03
VANADIUM	.523E+00	> .126E-01
YTTERBIUM	< .227E-02	.140E-04<X<.166E-03
YTTRIUM	< .227E-02	.243E-04<X<.152E-03
ZINC	.114E+00	.180E-01
ZIRCONIUM	.114E-01	.688E-03

MOHAWK
BASELINE

CONCENTRATION MCG/DSCM

ELEMENT	FILTER	XAD-2	1ST IMPINGER & DMC	2ND & 3RD IMPINGERS	STACK GAS
ALUMINUM	U .0 E+00	.317E+02	.0 E+00	N .0 E+00	.317E+02
ANTIMONY	.126E+00	.0 E+00	.0 E+00	< .506E+00	.126E+00<X<.633E+00
ARSENIC	.568E+01	.0 E+00	.0 E+00	< .202E+01	.568E+01<X<.770E+01
BARIUM	.0 E+00	.104E+02	.593E+01	N .0 E+00	.163E+02
BERYLLIUM	.0 E+00	< .520E+00	< .988E-01	N .0 E+00	< .619E+00
BISMUTH	.0 E+00	< .520E+00	< .988E-01	N .0 E+00	< .619E+00
BORON	.316E+00	.0 E+00	.593E+00	N .0 E+00	.909E+00
BROMINE	.190E+00	.156E+03	.0 E+00	N .0 E+00	.156E+03
CADMIUM	.190E-01	< .520E+00	< .988E-01	N .0 E+00	.190E-01<X<.638E+00
CALCIUM	U .0 E+00	.572E+02	.494E+03	N .0 E+00	.551E+03
CERIUM	.0 E+00	.146E+02	< .988E-01	N .0 E+00	.147E+02
CESIUM	.126E-01	< .520E+00	< .988E-01	N .0 E+00	.126E-01<X<.632E+00 ?
CHLORINE	.0 E+00	.676E+02	.375E+03	N .0 E+00	.443E+03
CHROMIUM	.316E+01	.0 E+00	.711E+01	N .0 E+00	.103E+02
COBALT	> .506E+02	< .520E+00	.395E+00	N .0 E+00	> .509E+02
COPPER	> .632E+02	.208E+02	.385E+02	N .0 E+00	> .122E+03
DYSPROSIUM	.0 E+00	< .520E+00	< .988E-01	N .0 E+00	< .619E+00
ERBIUM	.0 E+00	< .520E+00	< .988E-01	N .0 E+00	< .619E+00
EUROPIUM	.0 E+00	< .520E+00	< .988E-01	N .0 E+00	< .619E+00
FLUORINE	.0 E+00	.364E+02	.392E+03	N .0 E+00	.428E+03
GADOLINIUM	.0 E+00	< .520E+00	< .988E-01	N .0 E+00	< .619E+00
GALLIUM	.480E+01	.208E+01	.889E+00	N .0 E+00	.777E+01
GERMANIUM	.569E-01	< .520E+00	< .988E-01	N .0 E+00	.569E-01<X<.676E+00 ?
GOLD	.0 E+00	< .520E+00	< .988E-01	N .0 E+00	< .619E+00
HAFNIUM	.0 E+00	< .520E+00	< .988E-01	N .0 E+00	< .619E+00
HOLMIUM	.0 E+00	< .520E+00	< .988E-01	N .0 E+00	< .619E+00
IODINE	.253E-01	< .520E+00	< .988E-01	N .0 E+00	.253E-01<X<.644E+00
IRIDIUM	.0 E+00	< .520E+00	< .988E-01	N .0 E+00	< .619E+00
IRON	U .0 E+00	.260E+02	0 .602E+02	N .0 E+00	.862E+02
LANTHANUM	.0 E+00	< .520E+00	< .988E-01	N .0 E+00	< .619E+00
LEAD	.0 E+00	< .520E+00	.395E+01	N .0 E+00	.395E+01<X<.447E+01 ?
LITHIUM	.253E+00	.156E+01	.296E+00	N .0 E+00	.211E+01
LUTETIUM	.0 E+00	< .520E+00	< .988E-01	N .0 E+00	< .619E+00
MAGNESIUM	U .0 E+00	.520E+01	.0 E+00	N .0 E+00	.520E+01
MANGANESE	.253E+00	.832E+01	.988E-01	N .0 E+00	.867E+01
MERCURY	< .126E-01	< .780E+00	.988E-01	.101E+00	.200E+00<X<.993E+00
MOLYBDENUM	.0 E+00	.161E+02	.889E+01	N .0 E+00	.250E+02
NEODYMIUM	.0 E+00	< .520E+00	< .988E-01	N .0 E+00	< .619E+00
NICKEL	> .627E+02	.104E+02	.928E+01	N .0 E+00	> .823E+02
NIOBIUM	.0 E+00	< .520E+00	< .198E+00	N .0 E+00	< .718E+00
OSMIUM	.0 E+00	< .520E+00	< .988E-01	N .0 E+00	< .619E+00
PALLADIUM	.0 E+00	< .520E+00	< .988E-01	N .0 E+00	< .619E+00
PHOSPHORUS	.632E+00	.156E+02	.0 E+00	N .0 E+00	.162E+02
PLATINUM	.0 E+00	.156E+02	< .988E-01	N .0 E+00	.157E+02
POTASSIUM	U .0 E+00	.728E+02	.0 E+00	N .0 E+00	.728E+02

MOHAWK
BASELINE
CONCENTRATION MCG/DSCM

ELEMENT	FILTER	XAD-2	1ST IMPINGER & GMC	2ND & 3RD IMPINGERS	STACK GAS
PRASEODYMIUM	.0 E+00	< .520E+00	< .988E-01	N .0 E+00	< .619E+00
RHENIUM	.0 E+00	< .520E+00	< .988E-01	N .0 E+00	< .619E+00
RHODIUM	.0 E+00	< .520E+00	< .988E-01	N .0 E+00	< .619E+00
RUBIDIUM	.0 E+00	< .520E+00	< .168E+01	N .0 E+00	< .220E+01
RUTHENIUM	.0 E+00	< .520E+00	< .988E-01	N .0 E+00	< .619E+00
SAMARIUM	.0 E+00	< .520E+00	< .988E-01	N .0 E+00	< .619E+00
SCANDIUM	.0 E+00	< .520E+00	< .198E+00	N .0 E+00	< .718E+00
SELENIUM	.462E+00	< .520E+00	.0 E+00	N .0 E+00	.462E+00<X<.582E+00
SILICON	> .582E+02	.536E+03	.988E+01	N .0 E+00	> .604E+03
SILVER	.120E+00	.196E+04	.168E+03	N .0 E+00	.213E+04
SODIUM	U .0 E+00	.0 E+00	U .0 E+00	N .0 E+00	.0 E+00
STRONTIUM	.0 E+00	.109E+02	.119E+01	N .0 E+00	.121E+02
SULFUR	> .177E+02	.312E+02	> .978E+03	N .0 E+00	> .103E+04
TANTALUM	< .632E-02	< .520E+00	< .988E-01	N .0 E+00	< .625E+00
TELLURIUM	.101E+00	< .520E+00	< .988E-01	N .0 E+00	.101E+00<X<.720E+00
TERBIUM	.0 E+00	< .520E+00	< .988E-01	N .0 E+00	< .619E+00
THALLIUM	.0 E+00	< .520E+00	< .988E-01	N .0 E+00	< .619E+00
THORIUM	.0 E+00	< .520E+00	< .988E-01	N .0 E+00	< .619E+00
THULIUM	.632E-02	< .520E+00	< .988E-01	N .0 E+00	.632E-02<X<.625E+00
TIN	.0 E+00	< .520E+00	.0 E+00	N .0 E+00	< .520E+00
TITANIUM	U .0 E+00	.468E+02	.691E+01	N .0 E+00	.537E+02
TUNGSTEN	< .695E-01	.103E+03	< .988E-01	N .0 E+00	.103E+03
URANIUM	.0 E+00	< .520E+00	< .988E-01	N .0 E+00	< .619E+00
VANADIUM	> .487E+02	.260E+01	.988E-01	N .0 E+00	> .514E+02
YTTERBIUM	.569E-01	< .520E+00	< .988E-01	N .0 E+00	.569E-01<X<.676E+00
YTTRIUM	.0 E+00	< .520E+00	.988E-01	N .0 E+00	.988E-01<X<.619E+00
ZINC	.0 E+00	.0 E+00	.731E+02	N .0 E+00	.731E+02
ZIRCONIUM	.0 E+00	.260E+01	.198E+00	N .0 E+00	.280E+01

MOHAWK
BASELINE
MG/M3/SEC

MASS/TIME ELEMENT	FILTER	XAD-2	1ST IMPINGER & CMC	2ND & 3RD IMPINGERS	STACK GAS
ALUMINUM	U .0 E+00	.106E+03	.0 E+00	N .0 E+00	.106E+03
ANTIMONY	.421E+00	.0 E+00	.0 E+00	< .168E+01	.421E+00<X<.211E+01
ARSENIC	.189E+02	.0 E+00	.0 E+00	< .674E+01	.189E+02<X<.256E+02
BARIUM	.0 E+00	.346E+02	.197E+02	N .0 E+00	.543E+02
BERYLLIUM	.0 E+00	< .173E+01	< .329E+00	N .0 E+00	< .206E+01
BISMUTH	.0 E+00	< .173E+01	< .329E+00	N .0 E+00	< .206E+01
BORON	.105E+01	.0 E+00	.197E+01	N .0 E+00	.302E+01
BROMINE	.631E+00	.519E+03	.0 E+00	N .0 E+00	.520E+03
CADMIUM	.631E-01	< .173E+01	< .329E+00	N .0 E+00	.631E-01<X<.212E+01
CALCIUM	U .0 E+00	.150E+03	.164E+04	N .0 E+00	.183E+04
CERIUM	.0 E+00	.485E+02	< .329E+00	N .0 E+00	.488E+02
CESIUM	.421E-01	< .173E+01	< .329E+00	N .0 E+00	.421E-01<X<.210E+01
CHLORINE	.0 E+00	.225E+03	.125E+04	N .0 E+00	.147E+04
CHROMIUM	.105E+02	.0 E+00	.237E+02	N .0 E+00	.342E+02
COBALT	> .168E+03	< .173E+01	.131E+01	N .0 E+00	> .170E+03
COPPER	> .210E+03	.692E+02	.128E+03	N .0 E+00	> .406E+03
DYSPROSIUM	.0 E+00	< .173E+01	< .329E+00	N .0 E+00	< .206E+01
ERBIUM	.0 E+00	< .173E+01	< .329E+00	N .0 E+00	< .206E+01
EUROPIUM	.0 E+00	< .173E+01	< .329E+00	N .0 E+00	< .206E+01
FLUORINE	.0 E+00	.121E+03	.130E+04	N .0 E+00	.143E+04
GADOLINIUM	.0 E+00	< .173E+01	< .329E+00	N .0 E+00	< .206E+01
GALLIUM	.160E+02	.692E+01	.296E+01	N .0 E+00	.259E+02
GERMANIUM	.189E+00	< .173E+01	< .329E+00	N .0 E+00	.189E+00<X<.225E+01
GOLD	.0 E+00	< .173E+01	< .329E+00	N .0 E+00	< .206E+01
HAFNIUM	.0 E+00	< .173E+01	< .329E+00	N .0 E+00	< .206E+01
HOLMIUM	.0 E+00	< .173E+01	< .329E+00	N .0 E+00	< .206E+01
IODINE	.842E-01	< .173E+01	< .329E+00	N .0 E+00	.842E-01<X<.214E+01
IRIDIUM	.0 E+00	< .173E+01	< .329E+00	N .0 E+00	< .206E+01
IRON	U .0 E+00	.866E+02	0 .200E+03	N .0 E+00	.287E+03
LANTHANUM	.0 E+00	< .173E+01	< .329E+00	N .0 E+00	< .206E+01
LEAD	.0 E+00	< .173E+01	.131E+02	N .0 E+00	.131E+02<X<.149E+02
LITHIUM	.842E+00	.519E+01	.986E+00	N .0 E+00	.702E+01
LUTETIUM	.0 E+00	< .173E+01	< .329E+00	N .0 E+00	< .206E+01
MAGNESIUM	U .0 E+00	.173E+02	.0 E+00	N .0 E+00	.173E+02
MANGANESE	.842E+00	.277E+02	.329E+00	N .0 E+00	.289E+02
MERCURY	< .421E-01	< .260E+01	.329E+00	.337E+00	.666E+00<X<.330E+01
MOLYBDENUM	.0 E+00	.537E+02	.296E+02	N .0 E+00	.832E+02
NEODYMIUM	.0 E+00	< .173E+01	< .329E+00	N .0 E+00	< .206E+01
NICKEL	> .209E+03	.346E+02	.309E+02	N .0 E+00	> .274E+03
NIOBIUM	.0 E+00	< .173E+01	< .657E+00	N .0 E+00	< .239E+01
OSMIUM	.0 E+00	< .173E+01	< .329E+00	N .0 E+00	< .206E+01
PALLADIUM	.0 E+00	< .173E+01	< .329E+00	N .0 E+00	< .206E+01
PHOSPHORUS	.210E+01	.519E+02	.0 E+00	N .0 E+00	.540E+02
PLATINUM	.0 E+00	.519E+02	< .329E+00	N .0 E+00	.523E+02
POTASSIUM	U .0 E+00	.242E+03	.0 E+00	N .0 E+00	.242E+03

MOHAWK
MASS/TIME BASELINE
MCG/SEC

ELEMENT	FILTER	XAD-2	1ST IMPINGER & CMC	2ND & 3RD IMPINGERS	STACK GAS
PRASEODYMIUM	.0 E+00	< .173E+01	< .329E+00	N .0 E+00	< .206E+01
RHENIUM	.0 E+00	< .173E+01	< .329E+00	N .0 E+00	< .206E+01
RHODIUM	.0 E+00	< .173E+01	< .329E+00	N .0 E+00	< .206E+01
RUBIDIUM	.0 E+00	< .173E+01	< .559E+01	N .0 E+00	< .732E+01
RUTHENIUM	.0 E+00	< .173E+01	< .329E+00	N .0 E+00	< .206E+01
SAMARIUM	.0 E+00	< .173E+01	< .329E+00	N .0 E+00	< .206E+01
SCANDIUM	.0 E+00	< .173E+01	< .657E+00	N .0 E+00	< .239E+01
SELENIUM	.154E+01	< .173E+01	.0 E+00	N .0 E+00	.154E+01<X<.327E+01
SILICON	> .194E+03	.178E+04	.329E+02	N .0 E+00	> .201E+04
SILVER	.400E+00	.653E+04	.559E+03	N .0 E+00	.709E+04
SODIUM	U .0 E+00	.0 E+00	U .0 E+00	N .0 E+00	.0 E+00
STRONTIUM	.0 E+00	.364E+02	.394E+01	N .0 E+00	.403E+02
SULFUR	> .589E+02	.104E+03	> .325E+04	N .0 E+00	> .342E+04
TANTALUM	< .210E-01	< .173E+01	< .329E+00	N .0 E+00	< .208E+01
TELLURIUM	.337E+00	< .173E+01	< .329E+00	N .0 E+00	.337E+00<X<.240E+01
TERBIUM	.0 E+00	< .173E+01	< .329E+00	N .0 E+00	< .206E+01
THALLIUM	.0 E+00	< .173E+01	< .329E+00	N .0 E+00	< .206E+01
THORIUM	.0 E+00	< .173E+01	< .329E+00	N .0 E+00	< .206E+01
THULIUM	.210E-01	< .173E+01	< .329E+00	N .0 E+00	.210E-01<X<.208E+01
TIN	.0 E+00	< .173E+01	.0 E+00	N .0 E+00	< .173E+01
TITANIUM	U .0 E+00	.156E+03	.230E+02	N .0 E+00	.179E+03
TUNGSTEN	< .231E+00	.343E+03	< .329E+00	N .0 E+00	.343E+03
URANIUM	.0 E+00	< .173E+01	< .329E+00	N .0 E+00	< .206E+01
VANADIUM	> .162E+03	.866E+01	.329E+00	N .0 E+00	> .171E+03
YTTERBIUM	.189E+00	< .173E+01	< .329E+00	N .0 E+00	.189E+00<X<.225E+01
YTTRIUM	.0 E+00	< .173E+01	.329E+00	N .0 E+00	.329E+00<X<.206E+01
ZINC	.0 E+00	.0 E+00	.243E+03	N .0 E+00	.243E+03
ZIRCONIUM	.0 E+00	.866E+01	.657E+00	N .0 E+00	.931E+01

MOHAWK
BASELINE

MASS/TIME MCG/SEC ELEMENT	FUEL OIL	STACK GAS
ALUMINUM	.434E+04	.106E+03
ANTIMONY	.0 E+00	.421E+00<X<.211E+01
ARSENIC	.0 E+00	.189E+02<X<.256E+02
BARIUM	< .173E+02	.543E+02
BERYLLIUM	< .173E+02	< .206E+01
BISMUTH	< .173E+02	< .206E+01
BORON	.520E+02	.302E+01
BROMINE	.121E+03	.520E+03
CADMIUM	< .173E+02	.631E-01<X<.212E+01
CALCIUM	.101E+05	.183E+04
CERIUM	< .173E+02	.488E+02
CESIUM	< .173E+02	.421E-01<X<.210E+01
CHLORINE	.173E+04	.147E+04
CHROMIUM	.156E+03	.342E+02
COBALT	< .173E+02	> .170E+03
COPPER	.399E+05	> .408E+03
DYSPROSIUM	< .173E+02	< .206E+01
ERBIUM	< .173E+02	< .206E+01
EUROPIUM	< .173E+02	< .206E+01
FLUORINE	.520E+03	.143E+04
GADOLINIUM	< .173E+02	< .206E+01
GALLIUM	.694E+02	.259E+02
GERMANIUM	< .173E+02	.189E+00<X<.225E+01
GOLD	< .173E+02	< .206E+01
HAFNIUM	< .173E+02	< .206E+01
HOLMIUM	< .173E+02	< .206E+01
IODINE	< .173E+02	.842E-01<X<.214E+01
IRIDIUM	< .173E+02	< .206E+01
IRON	.711E+04	.287E+03
LANTHANUM	< .173E+02	< .206E+01
LEAD	.104E+03	.131E+02<X<.149E+02
LITHIUM	.347E+03	.702E+01
LUTETIUM	< .173E+02	< .206E+01
MAGNESIUM	.572E+04	.173E+02
MANGANESE	.347E+03	.289E+02
MERCURY	.347E+01	.666E+00<X<.330E+01
MOLYBDENUM	< .173E+02	.832E+02
NEODYMIUM	< .173E+02	< .206E+01
NICKEL	.937E+04	> .274E+03
NIOBIUM	< .173E+02	< .239E+01
OSMIUM	< .173E+02	< .206E+01
PALLADIUM	< .173E+02	< .206E+01
PHOSPHORUS	.572E+04	.540E+02
PLATINUM	.139E+03	.523E+02
POTASSIUM	.161E+05	.242E+03

MOHAWK
BASELINE
MASS/TIME MCG/SEC

ELEMENT	FUEL OIL	STACK GAS
PRASEODYMIUM	< .173E+02	< .206E+01
RHENIUM	< .173E+02	< .206E+01
RHODIUM	< .173E+02	< .206E+01
RUBIDIUM	< .173E+02	< .732E+01
RUTHENIUM	< .173E+02	< .206E+01
SAMARIUM	< .173E+02	< .206E+01
SCANDIUM	< .173E+02	< .239E+01
SELENIUM	< .173E+02	.154E+01<X<.327E+01
SILICON	.113E+05	> .201E+04
SILVER	< .173E+02	.709E+04
SODIUM	< .347E+02	.0 E+00
STRONTIUM	.173E+02	.403E+02
SULFUR	.416E+05	> .342E+04
TANTALUM	< .173E+02	< .208E+01
TELLURIUM	< .173E+02	.337E+00<X<.240E+01
TERBIUM	< .173E+02	< .206E+01
THALLIUM	< .173E+02	< .206E+01
THORIUM	< .121E+03	< .206E+01
THULIUM	< .173E+02	.210E-01<X<.208E+01
TIN	< .173E+02	< .173E+01
TITANIUM	.156E+04	.179E+03
TUNGSTEN	< .121E+03	.343E+03
URANIUM	< .867E+02	< .206E+01
VANADIUM	.399E+04	> .171E+03
YTTERBIUM	< .173E+02	.189E+00<X<.225E+01
YTTRIUM	< .173E+02	.329E+00<X<.206E+01
ZINC	.867E+03	.243E+03
ZIRCONIUM	.867E+02	.931E+01

MOHAWK
BASELINE

HEATER MASS BALANCE

IN = FUEL OIL OUT = STACK GAS REFINERY GAS NOT SAMPLED

ELEMENT	TOTAL IN	TOTAL OUT	MASS BALANCE(OUT/IN)
ALUMINUM	.434E+04	.106E+03	.243E-01
ANTIMONY		.421E+00<X<.211E+01	*
ARSENIC		.189E+02<X<.256E+02	*
BARIUM	X<.173E+02	.543E+02	.313E+01 <X
BERYLLIUM	X<.173E+02	X<.206E+01	*
BISMUTH	X<.173E+02	X<.206E+01	*
BORON	.520E+02	.302E+01	.581E-01
BROMINE	.121E+03	.520E+03	.428E+01
CADMIUM	X<.173E+02	.631E-01<X<.212E+01	.364E-02 <X
CALCIUM	.101E+05	.183E+04	.182E+00
CERIUM	X<.173E+02	.488E+02	.281E+01 <X
CESIUM	X<.173E+02	.421E-01<X<.210E+01	.243E-02 <X
CHLORINE	.173E+04	.147E+04	.850E+00
CHROMIUM	.156E+03	.342E+02	.219E+00
COBALT	X<.173E+02	.170E+03 <X	.977E+01 <X
COPPER	.399E+05	.408E+03 <X	.102E-01 <X
DYSPROSIUM	X<.173E+02	X<.206E+01	*
ERBIUM	X<.173E+02	X<.206E+01	*
EUROPIUM	X<.173E+02	X<.206E+01	*
FLUORINE	.520E+03	.143E+04	.274E+01
GADOLINIUM	X<.173E+02	X<.206E+01	*
GALLIUM	.694E+02	.259E+02	.373E+00
GERMANIUM	X<.173E+02	.189E+00<X<.225E+01	.109E-01 <X
GOLD	X<.173E+02	X<.206E+01	*
HAFNIUM	X<.173E+02	X<.206E+01	*
HOLMIUM	X<.173E+02	X<.206E+01	*
IODINE	X<.173E+02	.842E-01<X<.214E+01	.485E-02 <X
IRIDIUM	X<.173E+02	X<.206E+01	*
IRON	.711E+04	.287E+03	.404E-01
LANTHANUM	X<.173E+02	X<.206E+01	*
LEAD	.104E+03	.131E+02<X<.149E+02	.126E+00<X<.143E+00
LITHIUM	.347E+03	.702E+01	.202E-01
LUTETIUM	X<.173E+02	X<.206E+01	*
MAGNESIUM	.572E+04	.173E+02	.302E-02
MANGANESE	.347E+03	.289E+02	.832E-01
MERCURY	.347E+01	.666E+00<X<.330E+01	.192E+00<X<.952E+00
MOLYBDENUM	X<.173E+02	.832E+02	.480E+01 <X
NEODYMIUM	X<.173E+02	X<.206E+01	*
NICKEL	.937E+04	.274E+03 <X	.293E-01 <X
NIOBIUM	X<.173E+02	X<.239E+01	*
OSMIUM	X<.173E+02	X<.206E+01	*
PALLADIUM	X<.173E+02	X<.206E+01	*
PHOSPHORUS	.572E+04	.540E+02	.944E-02
PLATINUM	.139E+03	.523E+02	.377E+00
POTASSIUM	.161E+05	.242E+03	.150E-01

MOHAWK
BASELINE

HEATER MASS BALANCE

IN = FUEL OIL OUT = STACK GAS REFINERY GAS NOT SAMPLED

ELEMENT	TOTAL IN	TOTAL OUT	MASS BALANCE(OUT/IN)
PRASEODYMIUM	X<.173E+02	X<.206E+01	*
RHENIUM	X<.173E+02	X<.206E+01	*
RHODIUM	X<.173E+02	X<.206E+01	*
RUBIDIUM	X<.173E+02	X<.732E+01	*
RUTHENIUM	X<.173E+02	X<.206E+01	*
SAMARIUM	X<.173E+02	X<.206E+01	*
SCANDIUM	X<.173E+02	X<.239E+01	*
SELENIUM	X<.173E+02	.154E+01<X<.327E+01	.885E-01 <X
SILICON	.113E+05	.201E+04 <X	.178E+00 <X
SILVER	X<.173E+02	.709E+04	.408E+03 <X
SODIUM	X<.347E+02		.0 E+00
STRONTIUM	.173E+02	.403E+02	.232E+01
SULFUR	.416E+05	.342E+04 <X	.821E-01 <X
TANTALUM	X<.173E+02	X<.208E+01	*
TELLURIUM	X<.173E+02	.337E+00<X<.240E+01	.194E-01 <X
TERBIUM	X<.173E+02	X<.206E+01	*
THALLIUM	X<.173E+02	X<.206E+01	*
THORIUM	X<.121E+03	X<.206E+01	*
THULIUM	X<.173E+02	.210E-01<X<.208E+01	.121E-02 <X
TIN	X<.173E+02	X<.173E+01	*
TITANIUM	.156E+04	.179E+03	.115E+00
TUNGSTEN	X<.121E+03	.343E+03	.283E+01 <X
URANIUM	X<.867E+02	X<.206E+01	*
VANADIUM	.399E+04	.171E+03 <X	.429E-01 <X
YTTERBIUM	X<.173E+02	.189E+00<X<.225E+01	.109E-01 <X
YTTRIUM	X<.173E+02	.329E+00<X<.206E+01	.189E-01 <X
ZINC	.867E+03	.243E+03	.280E+00
ZIRCONIUM	.867E+02	.931E+01	.107E+00

MOHAWK
NH3 INJECTION

PPM

ELEMENT	FUEL OIL PPM	FILTER	XAD-2	1ST IMPINGER & CMC	2ND & 3RD IMPINGERS
ALUMINUM	.250E+02	U.0 E+00	.0 E+00	.0 E+00	N.0 E+00
ANTIMONY	.0 E+00	.274E+02	.0 E+00	.0 E+00	<.500E-02
ARSENIC	.0 E+00	.363E+03	.0 E+00	.0 E+00	<.200E-01
BARIUM	<.100E+00	.274E+04	.200E+01	.100E-01	N.0 E+00
BERYLLIUM	<.100E+00	.0 E+00	.0 E+00	.0 E+00	N.0 E+00
BISMUTH	<.100E+00	.913E+00	.0 E+00	.0 E+00	N.0 E+00
BORON	<.100E+00	.0 E+00	.0 E+00	.0 E+00	N.0 E+00
BROMINE	.100E+01	.164E+03	.0 E+00	.0 E+00	N.0 E+00
CADMIUM	<.100E+00	.456E+01	.0 E+00	.0 E+00	N.0 E+00
CALCIUM	.260E+02	U.0 E+00	.0 E+00	.0 E+00	N.0 E+00
CERIUM	<.100E+00	.183E+03	.0 E+00	.0 E+00	N.0 E+00
CESIUM	<.100E+00	.0 E+00	.0 E+00	.0 E+00	N.0 E+00
CHLORINE	.600E+01	.0 E+00	.0 E+00	.0 E+00	N.0 E+00
CHROMIUM	.200E+01	.365E+03	.0 E+00	.420E-01	N.0 E+00
COBALT	<.100E+00	>.913E+04	.0 E+00	.0 E+00	N.0 E+00
COPPER	.100E+03	>.912E+04	.0 E+00	.600E-01	N.0 E+00
DYSPROSIUM	<.100E+00	.183E+02	.0 E+00	.0 E+00	N.0 E+00
ERBIUM	<.100E+00	.913E+01	.0 E+00	.0 E+00	N.0 E+00
EUROPIUM	<.100E+00	.913E+01	.0 E+00	.0 E+00	N.0 E+00
FLUORINE	.700E+00	.0 E+00	.0 E+00	.370E+00	N.0 E+00
GADOLINIUM	<.100E+00	.0 E+00	.0 E+00	.0 E+00	N.0 E+00
GALLIUM	.300E+00	.876E+03	0.0 E+00	.100E-02	N.0 E+00
GERMANIUM	<.100E+00	.639E+01	.0 E+00	.0 E+00	N.0 E+00
GOLD	<.100E+00	.0 E+00	.0 E+00	.0 E+00	N.0 E+00
HAFNIUM	<.100E+00	.0 E+00	.0 E+00	.0 E+00	N.0 E+00
HOLMIUM	<.100E+00	.0 E+00	.0 E+00	.0 E+00	N.0 E+00
IODINE	<.100E+00	.183E+01	.0 E+00	.0 E+00	N.0 E+00
IRIDIUM	<.100E+00	.0 E+00	.0 E+00	.0 E+00	N.0 E+00
IRON	.460E+02	U.0 E+00	.0 E+00	.0 E+00	N.0 E+00
LANTHANUM	<.100E+00	.0 E+00	.0 E+00	.0 E+00	N.0 E+00
LEAD	.600E+00	.831E+03	.0 E+00	.0 E+00	N.0 E+00
LITHIUM	.300E+00	.639E+02	.0 E+00	.0 E+00	N.0 E+00
LUTETIUM	<.100E+00	.913E+00	.0 E+00	.0 E+00	N.0 E+00
MAGNESIUM	.150E+02	U.0 E+00	.0 E+00	.0 E+00	N.0 E+00
MANGANESE	.400E+01	.128E+03	.0 E+00	.800E-02	N.0 E+00
MERCURY	.100E-01	<.146E+02	<.160E+00	<.120E-02	<.100E-02
MOLYBDENUM	<.100E+00	.913E+01	.0 E+00	.0 E+00	N.0 E+00
NEODYMIUM	<.100E+00	.274E+02	.0 E+00	.0 E+00	N.0 E+00
NICKEL	.270E+03	>.905E+04	.0 E+00	.140E-01	N.0 E+00
NIOBIUM	<.100E+00	.0 E+00	.0 E+00	.0 E+00	N.0 E+00
OSMIUM	<.100E+00	.0 E+00	.0 E+00	.0 E+00	N.0 E+00
PALLADIUM	<.100E+00	.0 E+00	.0 E+00	.0 E+00	N.0 E+00
PRASEODYMIUM	<.100E+00	.0 E+00	.0 E+00	.0 E+00	N.0 E+00
PHOSPHORUS	.600E+01	.201E+04	.0 E+00	.0 E+00	N.0 E+00
PLATINUM	.200E+02	.0 E+00	.700E+01	.0 E+00	N.0 E+00

MOHAWK
NH3 INJECTION

PPM ELEMENT	FUEL OIL PPM	FILTER	XAD-2	1ST IMPINGER & UMC	2ND & 3RD IMPINGERS
POTASSIUM	.100E+03	U.0 E+00	.880E+02	.0 E+00	N.0 E+00
RHENIUM	<.100E+00	.0 E+00	.0 E+00	.0 E+00	N.0 E+00
RHODIUM	.0 E+00	.0 E+00	.0 E+00	.0 E+00	N.0 E+00
RUBIDIUM	<.100E+00	.913E+01	.0 E+00	.0 E+00	N.0 E+00
RUTHENIUM	<.100E+00	.0 E+00	.0 E+00	.0 E+00	N.0 E+00
SAMARIUM	<.100E+00	.0 E+00	.0 E+00	.0 E+00	N.0 E+00
SCANDIUM	<.100E+00	.183E+02	.0 E+00	.0 E+00	N.0 E+00
SELENIUM	<.100E+00	.393E+02	.0 E+00	.100E-02	N.0 E+00
SILICON	.650E+03	>.840E+04	.0 E+00	.0 E+00	N.0 E+00
SILVER	<.100E+00	.0 E+00	.0 E+00	.600E+00	N.0 E+00
SODIUM	.900E+00	U.0 E+00	.0 E+00	U.0 E+00	N.0 E+00
STRONTIUM	.100E+00	.0 E+00	.0 E+00	.0 E+00	N.0 E+00
SULFUR	>.470E+03	>.438E+04	.0 E+00	>.990E+01	N.0 E+00
TANTALUM	<.100E+00	.0 E+00	.0 E+00	.0 E+00	N.0 E+00
TELLURIUM	<.100E+00	.913E+00	.0 E+00	.0 E+00	N.0 E+00
TERBIUM	<.100E+00	.0 E+00	.0 E+00	.0 E+00	N.0 E+00
THALLIUM	<.100E+00	.0 E+00	.0 E+00	.0 E+00	N.0 E+00
THORIUM	<.700E+00	.0 E+00	.0 E+00	.0 E+00	N.0 E+00
THULIUM	<.100E+00	.913E+00	.0 E+00	.0 E+00	N.0 E+00
TIN	<.100E+00	.365E+02	.0 E+00	.0 E+00	N.0 E+00
TITANIUM	.900E+01	U.0 E+00	.700E+01	.270E+00	N.0 E+00
TUNGSTEN	<.100E+00	.0 E+00	.0 E+00	.0 E+00	N.0 E+00
URANIUM	<.100E+01	.274E+02	.0 E+00	.0 E+00	N.0 E+00
VANADIUM	.140E+02	>.886E+04	.0 E+00	.0 E+00	N.0 E+00
YTTERBIUM	<.100E+00	.173E+02	.0 E+00	.0 E+00	N.0 E+00
YTTRIUM	<.100E+00	.0 E+00	.0 E+00	.0 E+00	N.0 E+00
ZINC	.200E+01	.175E+04	.0 E+00	.400E-01	N.0 E+00
ZIRCONIUM	<.100E+00	.0 E+00	.0 E+00	.0 E+00	N.0 E+00

MOHAWK
NH3 INJECTION

MASS/HEAT INPUT

NG/J

ELEMENT	FILTER	XAD-2	1ST IMPINGER & OMC	2ND & 3RD IMPINGERS	STACK GAS
ALUMINUM	U .0 E+00	.0 E+00	.0 E+00	N .0 E+00	.0 E+00
ANTIMONY	.471E-04	.0 E+00	.0 E+00	< .121E-03	.471E-04<X<.168E
ARSENIC	.624E-03	.0 E+00	.0 E+00	< .483E-03	.624E-03<X<.111E
BARIUM	.471E-02	.258E-02	.317E-03	N .0 E+00	.760E-02
BERYLLIUM	.0 E+00	.0 E+00	.0 E+00	N .0 E+00	.0 E+00
BISMUTH	.157E-05	.0 E+00	.0 E+00	N .0 E+00	.157E-05
BORON	.0 E+00	.0 E+00	.0 E+00	N .0 E+00	.0 E+00
BROMINE	.282E-03	.0 E+00	.0 E+00	N .0 E+00	.282E-03
CADMIUM	.784E-05	.0 E+00	.0 E+00	N .0 E+00	.784E-05
CALCIUM	U .0 E+00	.0 E+00	.0 E+00	N .0 E+00	.0 E+00
CERIUM	.314E-03	.0 E+00	.0 E+00	N .0 E+00	.314E-03
CESIUM	.0 E+00	.0 E+00	.0 E+00	N .0 E+00	.0 E+00
CHLORINE	.0 E+00	.0 E+00	.0 E+00	N .0 E+00	.0 E+00
CHROMIUM	.628E-03	.0 E+00	.133E-02	N .0 E+00	.196E-02
COBALT	> .157E-01	.0 E+00	.0 E+00	N .0 E+00	> .157E-01
COPPER	> .157E-01	.0 E+00	.190E-02	N .0 E+00	> .176E-01
DYSPROSIUM	.314E-04	.0 E+00	.0 E+00	N .0 E+00	.314E-04
ERBIUM	.157E-04	.0 E+00	.0 E+00	N .0 E+00	.157E-04
EUROPIUM	.157E-04	.0 E+00	.0 E+00	N .0 E+00	.157E-04
FLUORINE	.0 E+00	.0 E+00	.117E-01	N .0 E+00	.117E-01
GADOLINIUM	.0 E+00	.0 E+00	.0 E+00	N .0 E+00	.0 E+00
GALLIUM	.151E-02	0 .0 E+00	.317E-04	N .0 E+00	.154E-02
GERMANIUM	.110E-04	.0 E+00	.0 E+00	N .0 E+00	.110E-04
GOLD	.0 E+00	.0 E+00	.0 E+00	N .0 E+00	.0 E+00
HAFNIUM	.0 E+00	.0 E+00	.0 E+00	N .0 E+00	.0 E+00
HOLMIUM	.0 E+00	.0 E+00	.0 E+00	N .0 E+00	.0 E+00
IODINE	.314E-05	.0 E+00	.0 E+00	N .0 E+00	.314E-05
IRIDIUM	.0 E+00	.0 E+00	.0 E+00	N .0 E+00	.0 E+00
IRON	U .0 E+00	.0 E+00	.0 E+00	N .0 E+00	.0 E+00
LANTHANUM	.0 E+00	.0 E+00	.0 E+00	N .0 E+00	.0 E+00
LEAD	.143E-02	.0 E+00	.0 E+00	N .0 E+00	.143E-02
LITHIUM	.110E-03	.0 E+00	.0 E+00	N .0 E+00	.110E-03
LUTETIUM	.157E-05	.0 E+00	.0 E+00	N .0 E+00	.157E-05
MAGNESIUM	U .0 E+00	.0 E+00	.0 E+00	N .0 E+00	.0 E+00
MANGANESE	.220E-03	.0 E+00	.253E-03	N .0 E+00	.473E-03
MERCURY	< .251E-04	< .207E-03	< .380E-04	< .241E-04	< .294E-03
MOLYBDENUM	.157E-04	.0 E+00	.0 E+00	N .0 E+00	.157E-04
NEODYMIUM	.471E-04	.0 E+00	.0 E+00	N .0 E+00	.471E-04
NICKEL	> .155E-01	.0 E+00	.443E-03	N .0 E+00	> .160E-01
NIOBIUM	.0 E+00	.0 E+00	.0 E+00	N .0 E+00	.0 E+00
OSMIUM	.0 E+00	.0 E+00	.0 E+00	N .0 E+00	.0 E+00
PALLADIUM	.0 E+00	.0 E+00	.0 E+00	N .0 E+00	.0 E+00
PASEODYMIUM	.0 E+00	.0 E+00	.0 E+00	N .0 E+00	.0 E+00
PHOSPHORUS	.345E-02	.0 E+00	.0 E+00	N .0 E+00	.345E-02
PLATINUM	.0 E+00	.904E-02	.0 E+00	N .0 E+00	.904E-02

MOHAWK
NH3 INJECTION

MASS/HEAT INPUT NG/J

ELEMENT	FILTER	XAD-2	1ST IMPINGER & OMC	2ND & 3RD IMPINGERS	STACK GAS
POTASSIUM	U .0 E+00	.114E+00	.0 E+00	N .0 E+00	.114E+00
RHENIUM	.0 E+00	.0 E+00	.0 E+00	N .0 E+00	.0 E+00
RHODIUM	.0 E+00	.0 E+00	.0 E+00	N .0 E+00	.0 E+00
RUBIDIUM	.157E-04	.0 E+00	.0 E+00	N .0 E+00	.157E-04
RUTHENIUM	.0 E+00	.0 E+00	.0 E+00	N .0 E+00	.0 E+00
SAMARIUM	.0 E+00	.0 E+00	.0 E+00	N .0 E+00	.0 E+00
SCANDIUM	.314E-04	.0 E+00	.0 E+00	N .0 E+00	.314E-04
SELENIUM	.675E-04	.0 E+00	.317E-04	N .0 E+00	.951E-04
SILICON	> .144E-01	.0 E+00	.0 E+00	N .0 E+00	> .144E-01
SILVER	.0 E+00	.0 E+00	.190E-01	N .0 E+00	.190E-01
SODIUM	U .0 E+00	.0 E+00	U .0 E+00	N .0 E+00	.0 E+00
STRONTIUM	.0 E+00	.0 E+00	.0 E+00	N .0 E+00	.0 E+00
SULFUR	> .753E-02	.0 E+00	> .314E+00	N .0 E+00	> .321E+00
TANTALUM	.0 E+00	.0 E+00	.0 E+00	N .0 E+00	.0 E+00
TELLURIUM	.157E-05	.0 E+00	.0 E+00	N .0 E+00	.157E-05
TERBIUM	.0 E+00	.0 E+00	.0 E+00	N .0 E+00	.0 E+00
THALLIUM	.0 E+00	.0 E+00	.0 E+00	N .0 E+00	.0 E+00
THORIUM	.0 E+00	.0 E+00	.0 E+00	N .0 E+00	.0 E+00
THULIUM	.157E-05	.0 E+00	.0 E+00	N .0 E+00	.157E-05
TIN	.628E-04	.0 E+00	.0 E+00	N .0 E+00	.628E-04
TITANIUM	U .0 E+00	.904E-02	.855E-02	N .0 E+00	.176E-01
TUNGSTEN	.0 E+00	.0 E+00	.0 E+00	N .0 E+00	.0 E+00
URANIUM	.471E-04	.0 E+00	.0 E+00	N .0 E+00	.471E-04
VANADIUM	> .152E-01	.0 E+00	.0 E+00	N .0 E+00	> .152E-01
YTTERBIUM	.298E-04	.0 E+00	.0 E+00	N .0 E+00	.298E-04
YTTRIUM	.0 E+00	.0 E+00	.0 E+00	N .0 E+00	.0 E+00
ZINC	.301E-02	.0 E+00	.127E-02	N .0 E+00	.428E-02
ZIRCONIUM	.0 E+00	.0 E+00	.0 E+00	N .0 E+00	.0 E+00

MOHAWK

MASS/HEAT INPUT — NH3 INJECTION

NG/J

ELEMENT	FUEL OIL	STACK GAS
ALUMINUM	.561E+00	.0 E+00
ANTIMONY	.0 E+00	.471E-04<X<.168E-03
ARSENIC	.0 E+00	.624E-03<X<.111E-02
BARIUM	< .224E-02	.760E-02
BERYLLIUM	< .224E-02	.0 E+00
BISMUTH	< .224E-02	.157E-05
BORON	< .224E-02	.0 E+00
BROMINE	.224E-01	.282E-03
CADMIUM	< .224E-02	.784E-05
CALCIUM	.583E+00	.0 E+00
CERIUM	< .224E-02	.314E-03
CESIUM	< .224E-02	.0 E+00
CHLORINE	.135E+00	.0 E+00
CHROMIUM	.448E-01	.196E-02
COBALT	< .224E-02	> .157E-01
COPPER	.224E+01	> .176E-01
DYSPROSIUM	< .224E-02	.314E-04
ERBIUM	< .224E-02	.157E-04
EUROPIUM	< .224E-02	.157E-04
FLUORINE	.157E-01	.117E-01
GADOLINIUM	< .224E-02	.0 E+00
GALLIUM	.673E-02	.154E-02
GERMANIUM	< .224E-02	.110E-04
GOLD	< .224E-02	.0 E+00
HAFNIUM	< .224E-02	.0 E+00
HOLMIUM	< .224E-02	.0 E+00
IODINE	< .224E-02	.314E-05
IRIDIUM	< .224E-02	.0 E+00
IRON	.103E+01	.0 E+00
LANTHANUM	< .224E-02	.0 E+00
LEAD	.135E-01	.143E-02
LITHIUM	.673E-02	.110E-03
LUTETIUM	< .224E-02	.157E-05
MAGNESIUM	.336E+00	.0 E+00
MANGANESE	.897E-01	.473E-03
MERCURY	.224E-03	< .294E-03
MOLYBDENUM	< .224E-02	.157E-04
NEODYMIUM	< .224E-02	.471E-04
NICKEL	.605E+01	> .160E-01
NIOBIUM	< .224E-02	.0 E+00
OSMIUM	< .224E-02	.0 E+00
PALLADIUM	< .224E-02	.0 E+00
PASEODYMIUM	< .224E-02	.0 E+00
PHOSPHORUS	.135E+00	.345E-02
PLATINUM	.448E+00	.904E-02

MCHAWK

MASS/HEAT INPUT — NH3 INJECTION

NG/J

ELEMENT	FUEL OIL	STACK GAS
POTASSIUM	.224E+01	.114E+00
RHENIUM	< .224E-02	.0 E+00
RHODIUM	.0 E+00	.0 E+00
RUBIDIUM	< .224E-02	.157E-04
RUTHENIUM	< .224E-02	.0 E+00
SAMARIUM	< .224E-02	.0 E+00
SCANDIUM	< .224E-02	.314E-04
SELENIUM	< .224E-02	.591E-04
SILICON	.146E+02	> .144E-01
SILVER	< .224E-02	.190E-01
SODIUM	.202E-01	.0 E+00
STRONTIUM	.224E-02	.0 E+00
SULFUR	> .105E+02	> .321E+00
TANTALUM	< .224E-02	.0 E+00
TELLURIUM	< .224E-02	.157E-05
TERBIUM	< .224E-02	.0 E+00
THALLIUM	< .224E-02	.0 E+00
THORIUM	< .157E-01	.0 E+00
THULIUM	< .224E-02	.157E-05
TIN	< .224E-02	.628E-04
TITANIUM	.202E+00	.176E-01
TUNGSTEN	< .224E-02	.0 E+00
URANIUM	< .224E-01	.471E-04
VANADIUM	.314E+00	> .152E-01
YTTERBIUM	< .224E-02	.298E-04
YTTRIUM	< .224E-02	.0 E+00
ZINC	.448E-01	.428E-02
ZIRCONIUM	< .224E-02	.0 E+00

MOHAWK
NH3 INJECTION

CONCENTRATION
MCG/DSCM

ELEMENT	FILTER	XAD-2	1ST IMPINGER & OMC	2ND & 3RD IMPINGERS	STACK GAS
ALUMINUM	U .0 E+00	.0 E+00	.0 E+00	N .0 E+00	.0 E+00
ANTIMONY	.186E+00	.0 E+00	.0 E+00	< .476E+00	.186E+00<X<.662E+00
ARSENIC	.246E+01	.0 E+00	.0 E+00	< .190E+01	.246E+01<X<.437E+01
BARIUM	.186E+02	.102E+02	.125E+01	N .0 E+00	.300E+02
BERYLLIUM	.0 E+00	.0 E+00	.0 E+00	N .0 E+00	.0 E+00
BISMUTH	.619E-02	.0 E+00	.0 E+00	N .0 E+00	.619E-02
BORON	.0 E+00	.0 E+00	.0 E+00	N .0 E+00	.0 E+00
BROMINE	.111E+01	.0 E+00	.0 E+00	N .0 E+00	.111E+01
CADMIUM	.310E-01	.0 E+00	.0 E+00	N .0 E+00	.310E-01
CALCIUM	U .0 E+00	.0 E+00	.0 E+00	N .0 E+00	.0 E+00
CERIUM	.124E+01	.0 E+00	.0 E+00	N .0 E+00	.124E+01
CESIUM	.0 E+00	.0 E+00	.0 E+00	N .0 E+00	.0 E+00
CHLORINE	.0 E+00	.0 E+00	.0 E+00	N .0 E+00	.0 E+00
CHROMIUM	.248E+01	.0 E+00	.525E+01	N .0 E+00	.773E+01
COBALT	> .619E+02	.0 E+00	.0 E+00	N .0 E+00	> .619E+02
COPPER	> .618E+02	.0 E+00	.750E+01	N .0 E+00	> .693E+02
DYSPROSIUM	.124E+00	.0 E+00	.0 E+00	N .0 E+00	.124E+00
ERBIUM	.619E-01	.0 E+00	.0 E+00	N .0 E+00	.619E-01
EUROPIUM	.619E-01	.0 E+00	.0 E+00	N .0 E+00	.619E-01
FLUORINE	.0 E+00	.0 E+00	.462E+02	N .0 E+00	.462E+02
GADOLINIUM	.0 E+00	.0 E+00	.0 E+00	N .0 E+00	.0 E+00
GALLIUM	.594E+01	0 .0 E+00	.125E+00	N .0 E+00	.607E+01
GERMANIUM	.433E-01	.0 E+00	.0 E+00	N .0 E+00	.433E-01
GOLD	.0 E+00	.0 E+00	.0 E+00	N .0 E+00	.0 E+00
HAFNIUM	.0 E+00	.0 E+00	.0 E+00	N .0 E+00	.0 E+00
HOLMIUM	.0 E+00	.0 E+00	.0 E+00	N .0 E+00	.0 E+00
IODINE	.124E-01	.0 E+00	.0 E+00	N .0 E+00	.124E-01
IRIDIUM	.0 E+00	.0 E+00	.0 E+00	N .0 E+00	.0 E+00
IRON	U .0 E+00	.0 E+00	.0 E+00	N .0 E+00	.0 E+00
LANTHANUM	.0 E+00	.0 E+00	.0 E+00	N .0 E+00	.0 E+00
LEAD	.563E+01	.0 E+00	.0 E+00	N .0 E+00	.563E+01
LITHIUM	.433E+00	.0 E+00	.0 E+00	N .0 E+00	.433E+00
LUTETIUM	.619E-02	.0 E+00	.0 E+00	N .0 E+00	.619E-02
MAGNESIUM	U .0 E+00	.0 E+00	.0 E+00	N .0 E+00	.0 E+00
MANGANESE	.867E+00	.0 E+00	.100E+01	N .0 E+00	.187E+01
MERCURY	< .990E-01	< .815E+00	< .150E+00	< .952E-01	< .116E+01
MOLYBDENUM	.619E-01	.0 E+00	.0 E+00	N .0 E+00	.619E-01
NEODYMIUM	.186E+00	.0 E+00	.0 E+00	N .0 E+00	.186E+00
NICKEL	> .613E+02	.0 E+00	.175E+01	N .0 E+00	> .631E+02
NIOBIUM	.0 E+00	.0 E+00	.0 E+00	N .0 E+00	.0 E+00
OSMIUM	.0 E+00	.0 E+00	.0 E+00	N .0 E+00	.0 E+00
PALLADIUM	.0 E+00	.0 E+00	.0 E+00	N .0 E+00	.0 E+00
PASEODYMIUM	.0 E+00	.0 E+00	.0 E+00	N .0 E+00	.0 E+00
PHOSPHORUS	.136E+02	.0 E+00	.0 E+00	N .0 E+00	.136E+02
PLATINUM	.0 E+00	.357E+02	.0 E+00	N .0 E+00	.357E+02

MOHAWK
NH3 INJECTION
CONCENTRATION MCG/DSCM

ELEMENT	FILTER	XAC-2	1ST IMPINGER & UMC	2ND & 3RD IMPINGERS	STACK GAS
BARIUM	U .0 E+00	.448E+03	.0 E+00	N .0 E+00	.448E+03 ✓
BERYLLIUM	.0 E+00	.0 E+00	.0 E+00	N .0 E+00	.0 E+00 ✓
BISMUTH	.0 E+00	.0 E+00	.0 E+00	N .0 E+00	.0 E+00
CADMIUM	.619E-01	.0 E+00	.0 E+00	N .0 E+00	.619E-01 ✓
ACTINIUM	.0 E+00	.0 E+00	.0 E+00	N .0 E+00	.0 E+00
SAMARIUM	.0 E+00	.0 E+00	.0 E+00	N .0 E+00	.0 E+00 ✓
SCANDIUM	.124E+00	.0 E+00	.0 E+00	N .0 E+00	.124E+00 ✓
SELENIUM	.266E+00	.0 E+00	.125E+00	N .0 E+00	.391E+00 ✓
SILICON	> .570E+02	.0 E+00	.0 E+00	N .0 E+00	> .570E+02 ✓
SILVER	.0 E+00	.0 E+00	.750E+02	N .0 E+00	.750E+02 ✓
SODIUM	U .0 E+00	.0 E+00	U .0 E+00	N .0 E+00	.0 E+00
STRONTIUM	.0 E+00	.0 E+00	.0 E+00	N .0 E+00	.0 E+00 ✓
SULFUR	> .297E+02	.0 E+00	> .124E+04	N .0 E+00	> .127E+04 ✓
TANTALUM	.0 E+00	.0 E+00	.0 E+00	N .0 E+00	.0 E+00 ✓
TELLURIUM	.619E-02	.0 E+00	.0 E+00	N .0 E+00	.619E-02 ✓
TERBIUM	.0 E+00	.0 E+00	.0 E+00	N .0 E+00	.0 E+00
THALLIUM	.0 E+00	.0 E+00	.0 E+00	N .0 E+00	.0 E+00 ✓
THORIUM	.0 E+00	.0 E+00	.0 E+00	N .0 E+00	.0 E+00 ✓
THULIUM	.619E-02	.0 E+00	.0 E+00	N .0 E+00	.619E-02 +
TIN	.248E+00	.0 E+00	.0 E+00	N .0 E+00	.248E+00 ✓
TITANIUM	U .0 E+00	.357E+02	.337E+02	N .0 E+00	.694E+02 ✓
TUNGSTEN	.0 E+00	.0 E+00	.0 E+00	N .0 E+00	.0 E+00 ✓
URANIUM	.186E+00	.0 E+00	.0 E+00	N .0 E+00	.186E+00 ✓
VANADIUM	> .600E+02	.0 E+00	.0 E+00	N .0 E+00	> .600E+02 ✓
YTTERBIUM	.118E+00	.0 E+00	.0 E+00	N .0 E+00	.118E+00 +
YTTRIUM	.0 E+00	.0 E+00	.0 E+00	N .0 E+00	.0 E+00 ✓
ZINC	.119E+02	.0 E+00	.500E+01	N .0 E+00	.169E+02 ✓
ZIRCONIUM	.0 E+00	.0 E+00	.0 E+00	N .0 E+00	.0 E+00 ✓

MOHAWK
NH3 INJECTION

MASS/TIME MCG/SEC

ELEMENT	FILTER	XAD-2	1ST IMPINGER & OMC	2ND & 3RD IMPINGERS	STACK GAS
ALUMINUM	U .0 E+00	.0 E+00	.0 E+00	N .0 E+00	.0 E+00
ANTIMONY	.622E+00	.0 E+00	.0 E+00	< .159E+01	.622E+00<X<.222E+01
ARSENIC	.825E+01	.0 E+00	.0 E+00	< .638E+01	.825E+01<X<.146E+02
BARIUM	.622E+02	.341E+02	.419E+01	N .0 E+00	.101E+03
BERYLLIUM	.0 E+00	.0 E+00	.0 E+00	N .0 E+00	.0 E+00
BISMUTH	.207E-01	.0 E+00	.0 E+00	N .0 E+00	.207E-01
BORON	.0 E+00	.0 E+00	.0 E+00	N .0 E+00	.0 E+00
BROMINE	.373E+01	.0 E+00	.0 E+00	N .0 E+00	.373E+01
CADMIUM	.104E+00	.0 E+00	.0 E+00	N .0 E+00	.104E+00
CALCIUM	U .0 E+00	.0 E+00	.0 E+00	N .0 E+00	.0 E+00
CERIUM	.415E+01	.0 E+00	.0 E+00	N .0 E+00	.415E+01
CESIUM	.0 E+00	.0 E+00	.0 E+00	N .0 E+00	.0 E+00
CHLORINE	.0 E+00	.0 E+00	.0 E+00	N .0 E+00	.0 E+00
CHROMIUM	.830E+01	.0 E+00	.176E+02	N .0 E+00	.259E+02
COBALT	> .207E+03	.0 E+00	.0 E+00	N .0 E+00	> .207E+03
COPPER	> .207E+03	.0 E+00	.251E+02	N .0 E+00	> .232E+03
DYSPROSIUM	.415E+00	.0 E+00	.0 E+00	N .0 E+00	.415E+00
ERBIUM	.207E+00	.0 E+00	.0 E+00	N .0 E+00	.207E+00
EUROPIUM	.207E+00	.0 E+00	.0 E+00	N .0 E+00	.207E+00
FLUORINE	.0 E+00	.0 E+00	.155E+03	N .0 E+00	.155E+03
GADOLINIUM	.0 E+00	.0 E+00	.0 E+00	N .0 E+00	.0 E+00
GALLIUM	.199E+02	O .0 E+00	.419E+00	N .0 E+00	.203E+02
GERMANIUM	.145E+00	.0 E+00	.0 E+00	N .0 E+00	.145E+00
GOLD	.0 E+00	.0 E+00	.0 E+00	N .0 E+00	.0 E+00
HAFNIUM	.0 E+00	.0 E+00	.0 E+00	N .0 E+00	.0 E+00
HOLMIUM	.0 E+00	.0 E+00	.0 E+00	N .0 E+00	.0 E+00
IODINE	.415E-01	.0 E+00	.0 E+00	N .0 E+00	.415E-01
IRIDIUM	.0 E+00	.0 E+00	.0 E+00	N .0 E+00	.0 E+00
IRON	U .0 E+00	.0 E+00	.0 E+00	N .0 E+00	.0 E+00
LANTHANUM	.0 E+00	.0 E+00	.0 E+00	N .0 E+00	.0 E+00
LEAD	.189E+02	.0 E+00	.0 E+00	N .0 E+00	.189E+02
LITHIUM	.145E+01	.0 E+00	.0 E+00	N .0 E+00	.145E+01
LUTETIUM	.207E-01	.0 E+00	.0 E+00	N .0 E+00	.207E-01
MAGNESIUM	U .0 E+00	.0 E+00	.0 E+00	N .0 E+00	.0 E+00
MANGANESE	.290E+01	.0 E+00	.335E+01	N .0 E+00	.625E+01
MERCURY	< .332E+00	< .273E+01	< .502E+00	< .319E+00	< .388E+01
MOLYBDENUM	.207E+00	.0 E+00	.0 E+00	N .0 E+00	.207E+00
NEODYMIUM	.622E+00	.0 E+00	.0 E+00	N .0 E+00	.622E+00
NICKEL	> .206E+03	.0 E+00	.586E+01	N .0 E+00	> .211E+03
NIOBIUM	.0 E+00	.0 E+00	.0 E+00	N .0 E+00	.0 E+00
OSMIUM	.0 E+00	.0 E+00	.0 E+00	N .0 E+00	.0 E+00
PALLADIUM	.0 E+00	.0 E+00	.0 E+00	N .0 E+00	.0 E+00
PASEODYMIUM	.0 E+00	.0 E+00	.0 E+00	N .0 E+00	.0 E+00
PHOSPHORUS	.456E+02	.0 E+00	.0 E+00	N .0 E+00	.456E+02
PLATINUM	.0 E+00	.119E+03	.0 E+00	N .0 E+00	.119E+03

MCHAWK
NH3 INJECTION

MASS/TIME MCG/SEC ELEMENT	FILTER	XAD-2	1ST IMPINGER & OMC	2ND & 3RD IMPINGERS	STACK GAS
POTASSIUM	U .0 E+00	.150E+04	.0 E+00	N .0 E+00	.150E+04
RHENIUM	.0 E+00	.0 E+00	.0 E+00	N .0 E+00	.0 E+00
RHODIUM	.0 E+00	.0 E+00	.0 E+00	N .0 E+00	.0 E+00
RUBIDIUM	.207E+00	.0 E+00	.0 E+00	N .0 E+00	.207E+00
RUTHENIUM	.0 E+00	.0 E+00	.0 E+00	N .0 E+00	.0 E+00
SAMARIUM	.0 E+00	.0 E+00	.0 E+00	N .0 E+00	.0 E+00
SCANDIUM	.415E+00	.0 E+00	.0 E+00	N .0 E+00	.415E+00
SELENIUM	.892E+00	.0 E+00	.419E+00	N .0 E+00	.131E+01
SILICON	> .191E+03	.0 E+00	.0 E+00	N .0 E+00	> .191E+03
SILVER	.0 E+00	.0 E+00	.251E+03	N .0 E+00	.251E+03
SODIUM	U .0 E+00	.0 E+00	U .0 E+00	N .0 E+00	.0 E+00
STRONTIUM	.0 E+00	.0 E+00	.0 E+00	N .0 E+00	.0 E+00
SULFUR	> .995E+02	.0 E+00	> .415E+04	N .0 E+00	> .424E+04
TANTALUM	.0 E+00	.0 E+00	.0 E+00	N .0 E+00	.0 E+00
TELLURIUM	.207E-01	.0 E+00	.0 E+00	N .0 E+00	.207E-01
TERBIUM	.0 E+00	.0 E+00	.0 E+00	N .0 E+00	.0 E+00
THALLIUM	.0 E+00	.0 E+00	.0 E+00	N .0 E+00	.0 E+00
THORIUM	.0 E+00	.0 E+00	.0 E+00	N .0 E+00	.0 E+00
THULIUM	.207E-01	.0 E+00	.0 E+00	N .0 E+00	.207E-01
TIN	.830E+00	.0 E+00	.0 E+00	N .0 E+00	.830E+00
TITANIUM	U .0 E+00	.119E+03	.113E+03	N .0 E+00	.232E+03
TUNGSTEN	.0 E+00	.0 E+00	.0 E+00	N .0 E+00	.0 E+00
URANIUM	.622E+00	.0 E+00	.0 E+00	N .0 E+00	.622E+00
VANADIUM	> .201E+03	.0 E+00	.0 E+00	N .0 E+00	> .201E+03
YTTERBIUM	.394E+00	.0 E+00	.0 E+00	N .0 E+00	.394E+00
YTTRIUM	.0 E+00	.0 E+00	.0 E+00	N .0 E+00	.0 E+00
ZINC	.398E+02	.0 E+00	.167E+02	N .0 E+00	.566E+02
ZIRCONIUM	.0 E+00	.0 E+00	.0 E+00	N .0 E+00	.0 E+00

MOHAWK
NH3 INJECTION

MASS/TIME MCG/SEC

ELEMENT	FUEL OIL	STACK GAS
ALUMINUM	.434E+04	.0 E+00
ANTIMONY	.0 E+00	.622E+00<X<.222E+01
ARSENIC	.0 E+00	.825E+01<X<.146E+02
BARIUM	< .173E+02	.101E+03
BERYLLIUM	< .173E+02	.0 E+00
BISMUTH	< .173E+02	.207E-01
BORON	< .173E+02	.0 E+00
BROMINE	.173E+03	.373E+01
CADMIUM	< .173E+02	.104E+00
CALCIUM	.451E+04	.0 E+00
CERIUM	< .173E+02	.415E+01
CESIUM	< .173E+02	.0 E+00
CHLORINE	.104E+04	.0 E+00
CHROMIUM	.347E+03	.259E+02
COBALT	< .173E+02	> .207E+03
COPPER	.173E+05	> .232E+03
DYSPROSIUM	< .173E+02	.415E+00
ERBIUM	< .173E+02	.207E+00
EUROPIUM	< .173E+02	.207E+00
FLUORINE	.121E+03	.155E+03
GADOLINIUM	< .173E+02	.0 E+00
GALLIUM	.520E+02	.203E+02
GERMANIUM	< .173E+02	.145E+00
GOLD	< .173E+02	.0 E+00
HAFNIUM	< .173E+02	.0 E+00
HOLMIUM	< .173E+02	.0 E+00
IODINE	< .173E+02	.415E-01
IRIDIUM	< .173E+02	.0 E+00
IRON	.798E+04	.0 E+00
LANTHANUM	< .173E+02	.0 E+00
LEAD	.104E+03	.189E+02
LITHIUM	.520E+02	.145E+01
LUTETIUM	< .173E+02	.207E-01
MAGNESIUM	.260E+04	.0 E+00
MANGANESE	.694E+03	.625E+01
MERCURY	.173E+01	< .388E+01
MOLYBDENUM	< .173E+02	.207E+00
NEODYMIUM	< .173E+02	.622E+00
NICKEL	.468E+05	> .211E+03
NIOBIUM	< .173E+02	.0 E+00
OSMIUM	< .173E+02	.0 E+00
PALLADIUM	< .173E+02	.0 E+00
PASEODYMIUM	< .173E+02	.0 E+00
PHOSPHORUS	.104E+04	.456E+02
PLATINUM	.347E+04	.119E+03

MOHAWK
NH3 INJECTION

MASS/TIME	MCG/SEC	
ELEMENT	FUEL OIL	STACK GAS
POTASSIUM	.173E+05	.150E+04
RHENIUM	< .173E+02	.0 E+00
RHODIUM	.0 E+00	.0 E+00
RUBIDIUM	< .173E+02	.207E+00
RUTHENIUM	< .173E+02	.0 E+00
SAMARIUM	< .173E+02	.0 E+00
SCANDIUM	< .173E+02	.415E+00
SELENIUM	< .173E+02	.131E+01
SILICON	.113E+06	> .191E+03
SILVER	< .173E+02	.251E+03
SODIUM	.156E+03	.0 E+00
STRONTIUM	.173E+02	.0 E+00
SULFUR	> .815E+05	> .424E+04
TANTALUM	< .173E+02	.0 E+00
TELLURIUM	< .173E+02	.207E-01
TERBIUM	< .173E+02	.0 E+00
THALLIUM	< .173E+02	.0 E+00
THORIUM	< .121E+03	.0 E+00
THULIUM	< .173E+02	.207E-01
TIN	< .173E+02	.830E+00
TITANIUM	.156E+04	.232E+03
TUNGSTEN	< .173E+02	.0 E+00
URANIUM	< .173E+03	.622E+00
VANADIUM	.243E+04	> .201E+03
YTTERBIUM	< .173E+02	.394E+00
YTTRIUM	< .173E+02	.0 E+00
ZINC	.347E+03	.566E+02
ZIRCONIUM	< .173E+02	.0 E+00

MOHAWK
NH3 INJECTION

HEATER MASS BALANCE
IN = FUEL OIL OUT = STACK GAS REFINERY GAS NOT SAMPLED

ELEMENT	TOTAL IN	TOTAL OUT	MASS BALANCE(OUT/IN)
ALUMINUM	.434E+04		.0 E+00
ANTIMONY		.622E+00<X<.222E+01	*
ARSENIC		.825E+01<X<.146E+02	*
BARIUM	X<.173E+02	.101E+03	.580E+01 <X
BERYLLIUM	X<.173E+02		.0 E+00
BISMUTH	X<.173E+02	.207E-01	.120E-02 <X
BORON	X<.173E+02		.0 E+00
BROMINE	.173E+03	.373E+01	.215E-01
CADMIUM	X<.173E+02	.104E+00	.598E-02 <X
CALCIUM	.451E+04		.0 E+00
CERIUM	X<.173E+02	.415E+01	.239E+00 <X
CESIUM	X<.173E+02		.0 E+00
CHLORINE	.104E+04		.0 E+00
CHROMIUM	.347E+03	.259E+02	.746E-01
COBALT	X<.173E+02	.207E+03 <X	.120E+02 <X
COPPER	.173E+05	.232E+03 <X	.134E-01 <X
DYSPROSIUM	X<.173E+02	.415E+00	.239E-01 <X
ERBIUM	X<.173E+02	.207E+00	.120E-01 <X
EUROPIUM	X<.173E+02	.207E+00	.120E-01 <X
FLUORINE	.121E+03	.155E+03	.128E+01
GADOLINIUM	X<.173E+02		.0 E+00
GALLIUM	.520E+02	.203E+02	.391E+00
GERMANIUM	X<.173E+02	.145E+00	.837E-02 <X
GOLD	X<.173E+02		.0 E+00
HAFNIUM	X<.173E+02		.0 E+00
HOLMIUM	X<.173E+02		.0 E+00
IODINE	X<.173E+02	.415E-01	.239E-02 <X
IRIDIUM	X<.173E+02		.0 E+00
IRON	.798E+04		.0 E+00
LANTHANUM	X<.173E+02		.0 E+00
LEAD	.104E+03	.189E+02	.181E+00
LITHIUM	.520E+02	.145E+01	.279E-01
LUTETIUM	X<.173E+02	.207E-01	.120E-02 <X
MAGNESIUM	.260E+04		.0 E+00
MANGANESE	.694E+03	.625E+01	.901E-02
MERCURY	.173E+01	X<.388E+01	.0 E+00<X<.224E+01
MOLYBDENUM	X<.173E+02	.207E+00	.120E-01 <X
NEODYMIUM	X<.173E+02	.622E+00	.359E-01 <X
NICKEL	.468E+05	.211E+03 <X	.451E-02 <X
NIOBIUM	X<.173E+02		.0 E+00
OSMIUM	X<.173E+02		.0 E+00
PALLADIUM	X<.173E+02		.0 E+00
PASEODYMIUM	X<.173E+02		.0 E+00
PHOSPHORUS	.104E+04	.456E+02	.438E-01
PLATINUM	.347E+04	.119E+03	.344E-01

MOHAWK
NH3 INJECTION

HEATER MASS BALANCE

IN = FUEL OIL OUT = STACK GAS REFINERY GAS NOT SAMPLED

ELEMENT	TOTAL IN	TOTAL OUT	MASS BALANCE(OUT/IN)
POTASSIUM	.173E+05	.150E+04	.866E-01
RHENIUM	X<.173E+02		.0 E+00
RHODIUM			*
RUBIDIUM	X<.173E+02	.207E+00	.120E-01 <X
RUTHENIUM	X<.173E+02		.0 E+00
SAMARIUM	X<.173E+02		.0 E+00
SCANDIUM	X<.173E+02	.415E+00	.239E-01 <X
SELENIUM	X<.173E+02	.131E+01	.756E-01 <X
SILICON	.113E+06	.191E+03 <X	.169E-02 <X
SILVER	X<.173E+02	.251E+03	.145E+02 <X
SODIUM	.156E+03		.0 E+00
STRONTIUM	.173E+02		.0 E+00
SULFUR	.815E+05 <X	.424E+04 <X	*
TANTALUM	X<.173E+02		.0 E+00
TELLURIUM	X<.173E+02	.207E-01	.120E-02 <X
TERBIUM	X<.173E+02		.0 E+00
THALLIUM	X<.173E+02		.0 E+00
THORIUM	X<.121E+03		.0 E+00
THULIUM	X<.173E+02	.207E-01	.120E-02 <X
TIN	X<.173E+02	.830E+00	.478E-01 <X
TITANIUM	.156E+04	.232E+03	.149E+00
TUNGSTEN	X<.173E+02		.0 E+00
URANIUM	X<.173E+03	.622E+00	.359E-02 <X
VANADIUM	.243E+04	.201E+03 <X	.829E-01 <X
YTTERBIUM	X<.173E+02	.394E+00	.227E-01 <X
YTTRIUM	X<.173E+02		.0 E+00
ZINC	.347E+03	.566E+02	.163E+00
ZIRCONIUM	X<.173E+02		.0 E+00

APPENDIX C

FLOWRATE AND COLLECTION DATA

	Units	Baseline	NH_3 Injection
Fuel oil flowrate	g/sec (lb/hr)	173.5 (1,375)	173.4 (1,375)
Fuel gas flowrate	M^3/sec (10^3 scfh)	0.166 (21.1)	0.167 (21.2)
Heat input			
Fuel oil	MW (million Btu/hr)	7.39 (25.2)	7.51 (25.6)
Refinery gas	MW (million Btu/hr)	5.86 (20.0)	5.86 (20.0)
Total	MW (million Btu/hr)	13.2 (45.2)	13.4 (45.6)
Flue gas flowrate	dscm/sec (dscfm)	3.328 (7,051)	3.350 (7,098)
Gas collected			
SASS	dscm (dscf)	24,992 (882.58)	25,523 (901.34)
Method 5/17	dscm (dscf)	1.9900 (70.277)	1.8382 (64.915)
O_2, percent dry		2.6	2.5
Moisture, percent		15.8	17.7

At standard conditions of 20°C (68°F) and 1 atm, one gram-mole of an ideal gas occupies 24.04 liters

TECHNICAL REPORT DATA
(Please read Instructions on the reverse before completing)

1. REPORT NO. EPA-600/7-86-005a	2.	3. RECIPIENT'S ACCESSION NO.
4. TITLE AND SUBTITLE Environmental Assessment of NH_3 Injection for an Industrial Package Boiler; Volume I. Technical Results		5. REPORT DATE February 1986
		6. PERFORMING ORGANIZATION CODE
7. AUTHOR(S) C. Castaldini, R. DeRosier, and L. R. Waterland		8. PERFORMING ORGANIZATION REPORT NO. TR-83-139/EE
9. PERFORMING ORGANIZATION NAME AND ADDRESS Acurex Corporation Energy and Environmental Division P.O. Box 7555 Mountain View, California 94039		10. PROGRAM ELEMENT NO.
		11. CONTRACT/GRANT NO. 68-02-3188
12. SPONSORING AGENCY NAME AND ADDRESS EPA, Office of Research and Development Air and Energy Engineering Research Laboratory Research Triangle Park, NC 27711		13. TYPE OF REPORT AND PERIOD COVERED Task Final; 1/83 -1/84
		14. SPONSORING AGENCY CODE EPA/600/13

15. SUPPLEMENTARY NOTES AEERL project officer is Joseph A. McSorley, Mail Drop 65, 919/541-2920. Volume II is a Data Supplement.

16. ABSTRACT The report discusses emission results from comprehensive flue gas sampling of a gas- and oil-fired industrial boiler equipped with Exxon's Thermal DeNOx Ammonia Injection Process for NOx reduction. Comprehensive emission measurements included continuous monitoring of flue gas emissions; source assessment sampling system (SASS) tests; EPA Method 5/17 for solid and condensible particulate emissions and ammonia emissions; controlled condensation system for SO2 and SO3; and N2O emission sampling. Ammonia injection at a NH3/NO molar ratio of 2.52 gave a NOx reduction of 41% from an uncontrolled level of 234 ppm to a controlled level of 137 ppm. NH3 emissions increased from 11 ppm for the baseline to an average of 430 ppm for ammonia injection. Nitrous oxide, N2O, was reduced 68% from a 50 ppm baseline level to a 17 ppm controlled level. Total particulate emissions increased by an order of magnitude from a baseline of 17.7 ng/J to a controlled level of 182 ng/J. This increase is in part attributed to formation of ammonia sulfate and bisulfate from residual ammonia and SOx. Total organic emissions were at a moderate level and showed a relative concentration in the nonvolatile category. Organic emissions of CO and trace inorganic elements were not significantly affected by ammonia injection.

17. KEY WORDS AND DOCUMENT ANALYSIS

a. DESCRIPTORS		b. IDENTIFIERS/OPEN ENDED TERMS	c. COSATI Field/Group	
Pollution	Residual Oils	Pollution Control	13B	
Nitrogen Oxides	Sampling	Stationary Sources	07B	14B
Ammonia		Package Boilers		
Flue Gases		Industrial Boilers	21B	
Boilers		Thermal DeNOx	13A	
Natural Gas			21D	

18. DISTRIBUTION STATEMENT Release to Public	19. SECURITY CLASS (This Report) Unclassified	21. NO. OF PAGES 112
	20. SECURITY CLASS (This page) Unclassified	22. PRICE

EPA Form 2220-1 (9-73)