APTD-1121

SUNDSTRAND REPORT NO.
AER 640
FEBRUARY 25, 1972

HYBRID PROPULSION SYSTEM TRANSMISSION EVALUATION PHASE I FINAL REPORT

FOR:
ENVIRONMENTAL PROTECTION AGENCY
OFFICE OF AIR PROGRAMS
ADVANCED AUTOMOTIVE
POWER SYSTEMS DIVISION

CONTRACT: 68-04-0034

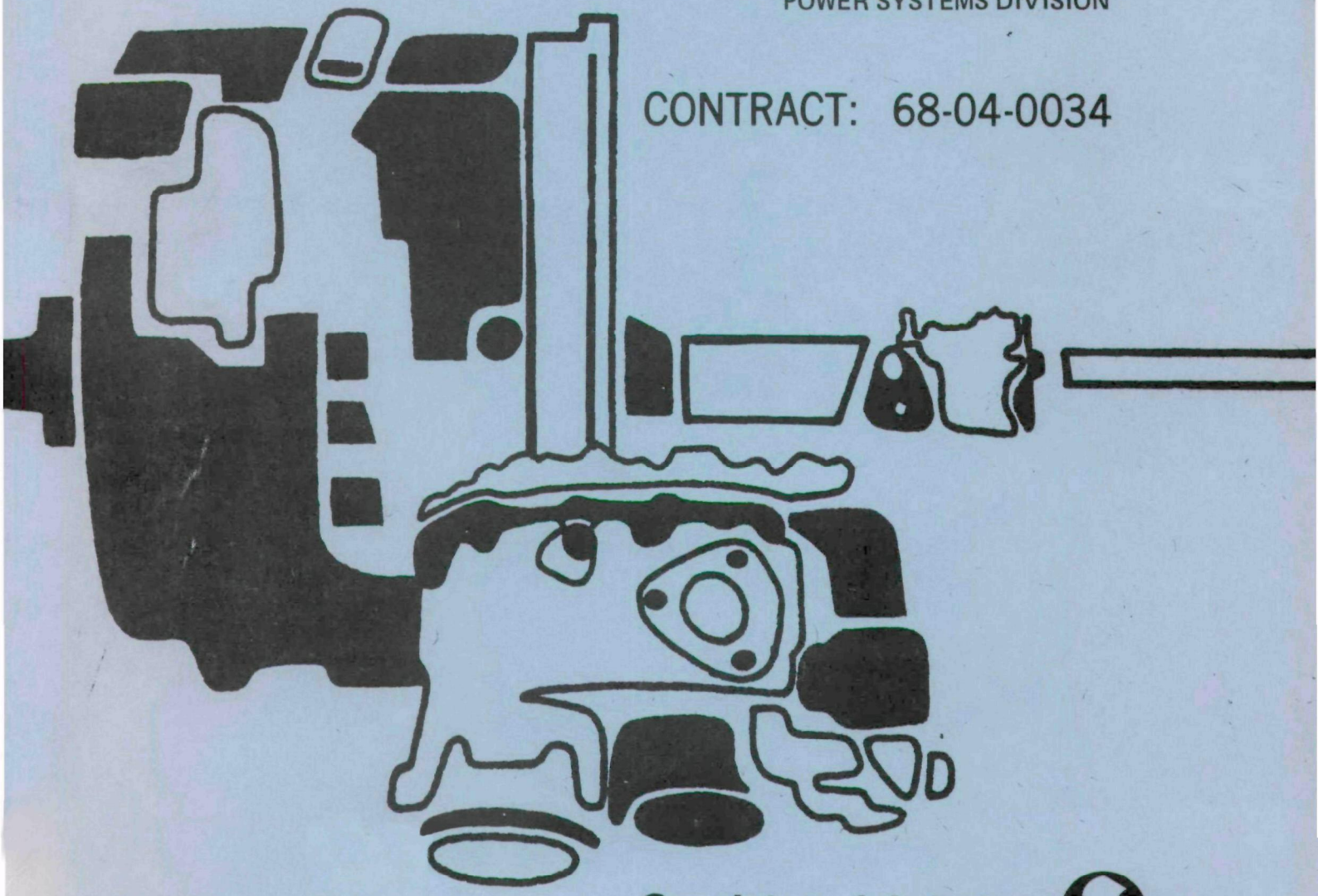

Sundstrand Aviation
division of Sundstrand Corporation
ROCKFORD, ILLINOIS 61101

February 25, 1972 Sundstrand Report No. AER 640

HYBRID PROPULSION SYSTEM

TRANSMISSION EVALUATION

PHASE I

FINAL REPORT

for

Environmental Protection Agency
Office of Air Programs
Advanced Automotive Power Systems Division

Contract: 68-04-0034

Project Officer, J. C. Wood
(NASA Lewis Research Center)

by

M. A. Cordner

D. H. Grimm

Sundstrand Aviation
ROCKFORD, ILLINOIS 61101
division of Sundstrand Corporation

TABLE OF CONTENTS

Section No.	Section Title	Page No.
	Acknowledgments	ix
	Abstract	xi
	Results and Conclusions	xii
	Recommendations	xv
I.	INTRODUCTION	1
II.	FEASIBILITY ANALYSIS	5
	A. Link Functions and Schematic Genesis	5
	B. Speed Relationships	10
	C. Transmission Schematic Representation	11
	D. Schematics Considered and Rejected	14
	E. Selection of Final Transmission Schematic	14
III.	TRANSMISSION DESCRIPTION	21
	A. Mechanical Operation	21
	B. Hardware Description	34
	C. Control Operation	40
	D. User Operation	46
	E. Parameter Optimization	47
	F. Installation Considerations	49
	G. Description - Alternate Transmission Configuration (8C)	51
	H. Flywheel Trade-offs & Conclusions	53
	I. Maintainability	57
	J. Noise	58
	K. Design Analysis	59
IV.	PERFORMANCE	61
	A. Ground Rules	62
	B. Transmission Efficiency	64
	C. Grade & Acceleration Performance	72
	D. Constant Speed Fuel Consumption	76
	E. Federal Driving Cycle Fuel Consumption	79
	F. Tractive Effort Limits	85
	G. Regenerative Braking	86

Section No.	Section Title	Page No.
V.	CONTROL SYSTEM ANALYSIS	93
	A. Control System Approach	94
	B. Block Diagram of the System	98
	C. Stability Analysis	101
	D. Safety Analysis	102
	E. Pathological Analysis	107
VI.	ESTIMATED TOTAL MANUFACTURING COST	111
	A. Definition of the Cost Analysis	111
	B. Costing Procedure	111
	C. Results of Cost Analysis	112
	D. Transmission Cost Per Weight Analysis	112
VII.	REFERENCES	115
	APPENDICIES	
A.	Description of Transmission Performance Computer Program (T8H)	117
B.	"Vehicle Design Goals - Six Passenger Automobile" (Revision B - February 11, 1971)	127
C.	Automobile Accessory Loads	139
D.	Flywheel Horsepower Loss	141
E.	Federal Driving Cycle	143
F.	Tractive Effort vs. Vehicle Speed	147
G.	Computer Readouts Program T8H	151
H.	Engine Fuel Economy Map	163
I.	HP Flow within the Transmission	167
J.	Attachment 1, Scope of Work, Contract No. 68-04-0034	181
K.	Drawings	187
L.	Major Component Cost Breakdown	189

Section No.	Section Title	Page No.
M.	Analog Computer Simulation	191
N.	Weight Summary	205
O.	Transmission Schematics Considered	207
P.	Sundstrand Dynamic Simulation and Performance Analysis Programs (ESTMN and ESTPF)	217
Q.	Lockheed Computer Program Results	251
R.	Vehicle Performance with an Automatic Torque Converter Transmission	257
S.	Distance and Velocity as a Function of Time	277
T.	Constant Speed Fuel Consumption Calculations	281
U.	Flywheel Data Supplied by Lockheed	289
V.	Stress and Sizing Data	295
W.	Typical Results Sundstrand Performance Analysis Program	301

LIST OF FIGURES

Figure No.	Figure Title	Page
	SECTION I	
	SECTION II	
II-1	System Block Diagram	5
II-2	Transmission Combinations	7
II-3	Flywheel Speed vs. Vehicle Speed	9
II-4	Transmission Schematic Version "8"	15
II-5	Transmission Schematic Version "15"	17
II-6	Transmission Schematic Version "8A"	17
II-7	Transmission Schematic Version "8C"	19
II-8	Engine Speed vs. Vehicle Speed	19
	SECTION III	
III-1	Simplified Schematic Baseline (8A) Transmission	22
III-2	Gear Train Schematic	23
III-3	Flywheel & Output Shaft Speeds as a Function of Vehicle Speed	26
III-4	Five Element Planetary Speed Nomograph	27
III-5	Engine Speed as a Function of Vehicle Speed	29
III-6	Hydraulic Unit Speed as a Function of Vehicle Speed	30
III-7	Displacement of Variable Hydraulic Unit as a Function of Vehicle Speed	31
III-8	Torque Reactions	32
III-9	Axial Piston, Slipper Type Hydraulic Unit	36
III-10	Simplified Schematic Alternate (8C) Transmission	54
III-11	Gear Train Schematic Alternate Transmission Configuration (8C)	55
	SECTION IV	
IV-1	Overall Transmission Efficiency vs. Vehicle Speed (Baseline (8A) Transmission)	66
IV-2	Overall Transmission Efficiency vs. Vehicle Speed Alternate (8C) Transmission	67
IV-3	"No Flywheel" Transmission Efficiency vs. Vehicle Speed	68
IV-4	Overall Transmission Efficiency vs. Vehicle Speed Typical 3 Speed Automatic Transmission	70
IV-5	Horsepower vs. Speed	74
IV-6	Tractive Effort vs. Speed	75
IV-7	Constant Vehicle Speed Fuel Consumption vs. Vehicle Speed	78

Section No.	Section Title	Page No.
M.	Analog Computer Simulation	191
N.	Weight Summary	205
O.	Transmission Schematics Considered	207
P.	Sundstrand Dynamic Simulation and Performance Analysis Programs (ESTMN and ESTPF)	217
Q.	Lockheed Computer Program Results	251
R.	Vehicle Performance with an Automatic Torque Converter Transmission	257
S.	Distance and Velocity as a Function of Time	277
T.	Constant Speed Fuel Consumption Calculations	281
U.	Flywheel Data Supplied by Lockheed	289
V.	Stress and Sizing Data	295
W.	Typical Results Sundstrand Performance Analysis Program	301

LIST OF FIGURES

Figure No.	Figure Title	Page
	SECTION I	
	SECTION II	
II-1	System Block Diagram	5
II-2	Transmission Combinations	7
II-3	Flywheel Speed vs. Vehicle Speed	9
II-4	Transmission Schematic Version "8"	15
II-5	Transmission Schematic Version "15"	17
II-6	Transmission Schematic Version "8A"	17
II-7	Transmission Schematic Version "8C"	19
II-8	Engine Speed vs. Vehicle Speed	19
	SECTION III	
III-1	Simplified Schematic Baseline (8A) Transmission	22
III-2	Gear Train Schematic	23
III-3	Flywheel & Output Shaft Speeds as a Function of Vehicle Speed	26
III-4	Five Element Planetary Speed Nomograph	27
III-5	Engine Speed as a Function of Vehicle Speed	29
III-6	Hydraulic Unit Speed as a Function of Vehicle Speed	30
III-7	Displacement of Variable Hydraulic Unit as a Function of Vehicle Speed	31
III-8	Torque Reactions	32
III-9	Axial Piston, Slipper Type Hydraulic Unit	36
III-10	Simplified Schematic Alternate (8C) Transmission	54
III-11	Gear Train Schematic Alternate Transmission Configuration (8C)	55
	SECTION IV	
IV-1	Overall Transmission Efficiency vs. Vehicle Speed (Baseline (8A) Transmission)	66
IV-2	Overall Transmission Efficiency vs. Vehicle Speed Alternate (8C) Transmission	67
IV-3	"No Flywheel" Transmission Efficiency vs. Vehicle Speed	68
IV-4	Overall Transmission Efficiency vs. Vehicle Speed Typical 3 Speed Automatic Transmission	70
IV-5	Horsepower vs. Speed	74
IV-6	Tractive Effort vs. Speed	75
IV-7	Constant Vehicle Speed Fuel Consumption vs. Vehicle Speed	78

Figure No.	Figure Title	Page

SECTION IV (Continued)

IV-8	Tractive Effort vs. Coefficient of Traction	87
IV-9	Performance Limits - Tractive Effort vs. Vehicle Speed	88
IV-10	Limiting Transmission Braking HP and Limiting Wheel Braking HP vs. Vehicle Speed	90
IV-11	Overall Transmission Efficiency	91

SECTION V

V-1	Energy Storage Transmission - Block Diagram	99

SECTION VI

SECTION VII

APPENDIX

APP-C1	Typical "Full Size" car Accessory Horsepower versus Engine Speed	140
APP-D1	Flywheel Horsepower Loss vs. Flywheel Speed	142
APP-E1	Plot of Federal Driving Cycle	146
APP-F1	Tractive Effort vs. Velocity Requirements for Heat Engine/Flywheel Hybrid Passenger Car Drive System	149
APP-F2	Tractive Effort Available for Acceleration	150
APP-H1	Typical Medium Size Engine Fuel Economy Map	164
APP-H2	Engine Speed versus Engine Power for Minimum SFC	165
APP-I0	System Torques, Speeds, and Power Flow at 20 MPH and 70 MPH Cruise Conditions	168
APP-I1	Speed Nomograph - Start-up	169
APP-I2	Speed Nomograph - 1st Mode Acceleration	170
APP-I3	Speed Nomograph - 1st Mode Cruise	171
APP-I4	Speed Nomograph - 1st Mode Deceleration	172
APP-I5	Speed Nomograph - 2nd Mode Before Straight Through Acceleration	173
APP-I6	Speed Nomograph - 2nd Mode Before Straight Through Cruise	174
APP-I7	Speed Nomograph - 2nd Mode Before Straight Through Deceleration	175
APP-I8	Speed Nomograph - 2nd Mode After Straight Through Acceleration	176

Figure No.	Figure Title	Page

APPENDIX (Continued)

APP-I9	Speed Nomograph - 2nd Mode After Straight Through Cruise	177
APP-I10	Speed Nomograph - 2nd Mode After Straight Through Deceleration	178
APP-I11	Speed Nomograph - Reverse	179
APP-M1	Pictorial Diagram, Transmission System	192
APP-M2	Transmission System Schematic	193
APP-M3	Engine Torque vs. Speed	200
APP-M4	Analog Computer Wiring Diagram	201
APP-M5	Analog Computer Wiring Diagram	202
APP-M6	Representative Analog Trace - Vehicle Acceleration	203
APP-M7	Representative Analog Trace - Vehicle Deceleration	204
APP-O1	Transmission Schematics	210
APP-O2	Transmission Schematics	211
APP-O3	Transmission Schematics	212
APP-P1	System Schematic (Version 8C)	220
APP-P2	Summer Speed Nomogram	221
APP-P3	System Torque Relations	222
APP-P4	Continuous Dynamic Simulation Program Structure	224
APP-P5	Discrete Simulation Program Structure	225
APP-P6	Federal Driving Cycle	226
APP-P7	Example of Dynamic Simulation Output	227
APP-R1	"Typical" 3 Speed Automatic Transmission - Vehicle Speed vs. Transmission Efficiency	261
APP-R2	3 Speed Automatic Transmission (per EPA) - MPH vs. Engine Speed	262
APP-R3	"Typical" 3 Speed Automatic Transmission - Tractive Effort vs. Vehicle Speed	263
APP-R4	Transmission Efficiency vs. Vehicle Speed "Typical" 3 Speed Automatic Transmission	264
APP-S1	Distance & Velocity vs. Time (6000 psi)	278
APP-S2	Distance & Velocity vs. Time (4500 psi)	279
APP-S3	Distance & Velocity vs. Time, "Typical" 3 Speed Automatic Transmission	280

LIST OF TABLES

Table No.	Table Title	Page
	SECTION I	
	SECTION II	
	SECTION III	
III-1	Hydromechanical/Flywheel Transmission Parameter Summary	24
III-2	Summary, Flywheel Data	56
	SECTION IV	
IV-1	Grade and Acceleration Performance Comparison	71
IV-2	Constant Speed Fuel Consumption (MPG)	77
IV-3	Constant Speed Fuel Economy, BTU/Mile	79
IV-4	Concept Evaluation - Federal Driving Cycle (MPG)	82
IV-5	Transmission Evaluation - Federal Driving Cycle (MPG)	83
	SECTION V	
	SECTION VI	
VI-1	Results of Cost Analysis	113
	SECTION VII	
	APPENDIX	
APP-E1	DHEW Urban Dynamometer Driving Cycle	144-5
APP-M1	Equations	194, 5, 6
APP-M2	Parameter Nomenclature	197-8
APP-M3	Torque Required to Maintain Constant Road Speed	199
APP-O1	Engine Speed Variation	216
APP-T1	Constant Speed Fuel Consumption (Version 8A)	283
APP-T2	Constant Speed Fuel Consumption (Version 8C)	284
APP-T3	Constant Speed Fuel Consumption 3 Speed Automatic Transmission	285
APP-T4	Constant Speed Fuel Consumption in BTU/Mile (Baseline 8A)	286
		287

Table No.	Table Title	Page

APPENDIX (Continued)

APP-T5	Constant Speed Fuel Consumption in BTU/Mile (Alternate 8C)	287
APP-T6	Constant Speed Fuel Consumption in BTU/Mile (Conventional Automatic)	288
APP-V1	Gear Binding Stresses	297
APP-V2	Shaft Shear Stresses	298
APP-V3	Clutch Sizing	300

ACKNOWLEDGMENTS

ABSTRACT

RESULTS AND CONCLUSIONS

RECOMMENDATIONS

ACKNOWLEDGMENT

The EPA Project Officer was James C. Wood of the NASA Lewis Research Center. Mr. Wood worked for EPA under a special technical assistance agreement between NASA and EPA. The contribution of Dr. Karl Hellman of EPA is also acknowledged.

ABSTRACT

This study was carried out under contract to the Environmental Protection Agency, Office of Air Programs for the purpose of assessing the practicality of a transmission for use in a heat engine/flywheel propulsion system to reduce emissions. The system was to be suitable for incorporation into a full size "family car" automobile.

The study consisted of the following major tasks:

1) Feasibility analysis
2) Selection and definition of an optimum transmission
3) Control system analysis
4) Performance analysis
5) Cost analysis

The different possible link types (mechanical, hydrostatic, and hydromechanical) between the engine, flywheel, and vehicle wheels were analyzed. Many transmission schematics were investigated, and several combinations were selected for further evaluation resulting in the final recommended configuration.

Having defined the configuration, controls were selected and analyzed using a digital dynamic simulation computer program and an analog computer simulation. System performance, stability and driveability were determined.

System acceleration, gradeability and fuel consumption were evaluated over specified vehicle conditions including the Federal

Driving Cycle utilizing the digital system performance computer program. Unavailability of emission data for the specified spark ignition heat engine required performance optimization to be based on fuel consumption rather than emissions (per direction from EPA). Fuel consumption comparisons were made with a conventional three speed automatic transmission.

Cost estimates were made for the selected configuration using comparative data, vendor quotations and in-house estimates. Comparisons with a conventional three speed automatic transmission were made.

The study resulted in the selection of a hydromechanical transmission configuration with interdependent links between the flywheel, engine, and wheels. The flywheel/transmission was configured for a transaxle installation, which was considered optimum.

RESULTS & CONCLUSIONS

1. A hydromechanical transmission is a practical means to link a flywheel, heat engine, and automobile wheels.

2. The selected transmission provides an infinitely variable ratio between the flywheel and the vehicle wheels, and a non-linear ratio (fixed by vehicle speed) between the heat engine and flywheel. Although the engine speed is not independent of the flywheel speed, it does operate near its minimum fuel consumption line. The trans-axle installation for the transmission was chosen based on considerations of weight distribution and available volume.

3. The computer simulated performance of the full size automobile utilizing the selected propulsion system met or exceeded all start-up, acceleration, and grade performance requirements of the "Vehicle Design Goals - Six Passenger Automobile Rev. B", specified by EPA.

4. Utilizing the specified spark ignition heat engine, the propulsion system with the selected transmission has a greater computed fuel consumption over the Federal Driving Cycle than that of a typical three speed automatic transmission. Cruise fuel consumption is greater than for the three speed automatic below 50 MPH and less above this speed.

5. Based on computer simulation, the selected transmission control system is feasible and stable. It provides "driver feel" comparable to a conventional automatic transmission.

6. The total manufacturing cost of the selected transmission, excluding the flywheel and its ancillaries, is $173, or approximately twice that of a "typical" three speed automatic transmission for comparable production rates. With the inclusion of the flywheel costs, total unit cost becomes $260, or approximately 2.9 times that of a typical three speed automatic.

7. The selected transmission, excluding the flywheel and its ancillaries, weighs 223 lb, or approximately 1.5 times that for a typical three speed automatic transmission. With the inclusion of the flywheel weight, the total transmission-flywheel system weight becomes 410 lb, or approximately 2.7 times that for conventional automatic transmission.

8. The theoretical fuel economy benefits that can be gained from the flywheel energy storage concept over a "light duty" cycle such as the Federal Driving Cycle are minimal because of the small amount of energy available for storage and re-use. In fact, when the "cost" of storage in terms of power loss is included, there is no benefit. The more "severe" the acceleration/braking duty cycle relative to maximum vehicle capability, and the heavier the vehicle, the greater are the benefits derived from the flywheel energy storage concept.

9. Fuel consumption over the Federal Driving Cycle for a full-size automobile would be best minimized with a non-energy storage concept utilizing a hydromechanical infinitely variable ratio transmission that allows the engine to operate continuously at its minimum fuel consumption condition.

RECOMMENDATIONS

1. Based on the results of this study, initiation of a hardware development program for an automobile hydromechanical/flywheel transmission is not recommended.

2. Application of the flywheel-energy storage principle to heavy, low power to weight ratio, short-haul vehicles such as city buses and delivery trucks should be investigated.

3. The hydromechanical transmission (without flywheel) should be investigated as a transmission candidate for automobiles. The infinitely variable ratio capability of this type of transmission allows the engine to be independently operated at its minimum specific fuel consumption condition. This feature is particularly well suited for application with limited speed range Brayton or Rankine cycles engines.

I. INTRODUCTION

I. INTRODUCTION

Previous studies carried out by Lockheed have indicated that a hybrid propulsion system, utilizing a heat engine and a flywheel transmission, has the potential to reduce emissions for a family car.

Lockheed recommended the "total kinetic energy" concept for this system, and Sundstrand was asked to study the transmission using this concept.

In the "total kinetic energy" concept, the total kinetic energy of the flywheel plus the vehicle is constant. At zero vehicle speed, all the energy of the system is in the flywheel, and at maximum vehicle speed, the system energy is in the vehicle. To accelerate, then, energy is taken out of the flywheel, and put into the vehicle, and to decelerate, energy is taken out of the vehicle and put into the flywheel. No energy is taken from the flywheel during constant speed operation. The engine makes up for all the vehicle drag losses (rolling resistance and air resistance) and makes up the energy lost in the transmission and drive line.

This system allows the following advantages in engine operation:

1) The total energy output from the engine is theoretically reduced by the amount of energy that is normally dissipated in the vehicle brakes. This means less fuel is consumed and lower total emissions are generated.

2) The engine is not required to accelerate rapidly, eliminating or downsizing the carburetor accelerator pump. This should contribute substantially to further reduction in fuel consumption and total emission output. (The normally over-rich fuel-air ratio required for rapid engine acceleration produces high exhaust emissions.)

3) If independent engine speed control is used, the engine can operate over any given minimum emission or specific fuel consumption curve.

Several transmission configurations and types have previously been investigated, but not to the depth required to determine their true practicality. Therefore, a transmission evaluation program was instigated by the Environmental Protection Agency, Office of Air Programs, Division of Advanced Automotive Power Systems, (Contract 68-04-0034), to determine quantitatively the feasibility of such a transmission from a technical and economic standpoint (Phase I). If the study resulted in a positive recommendation; design, fabrication, and dynamometer testing of a prototype unit would be accomplished as Phase II.

The prime objective of the Phase I effort was to determine the practicality through a detailed analytical study. Study effort included evaluation of the optimum type of transmission, (mechanical, hydrostatic, or hydromechanical); analysis of the controls in terms of stability, safety, and operator induced instabilities; determination of transmission performance

with emphasis on efficiency; and cost analysis including comparison with conventional automotive automatic transmissions.

In addition, flywheel speed range, heat engine operational modes, and regenerative braking were evaluated. From these many considerations, recommendations were made as to the configuration of the optimum flywheel hydromechanical transmission and the advisability of proceeding with Phase II.

Sundstrand's Aviation Division provided the program management, design, and analysis effort. Detailed cost estimates of the transmission were aided by personnel from Sundstrand's Hyro-Transmission Division and Corporate staff.

Assistance was also provided by Lockheed Missiles and Space Company, Ground Vehicle Systems in the form of flywheel design data and computer calculations of vehicle fuel consumption over the Federal Driving Cycle for various transmission configurations.

II. FEASIBILITY ANALYSIS

II. FEASIBILITY ANALYSIS

The following discussion considers the various transmission arrangements which were studied in selecting the basic transmission schematic for detailed evaluation.

A. Link Functions and Schematic Genesis

In Attachment 1, Scope of Work, of the EPA Contract Specification (see Appendix J), the power paths between the engine, flywheel and load are represented as 3 "links". (See Figure II-1.)

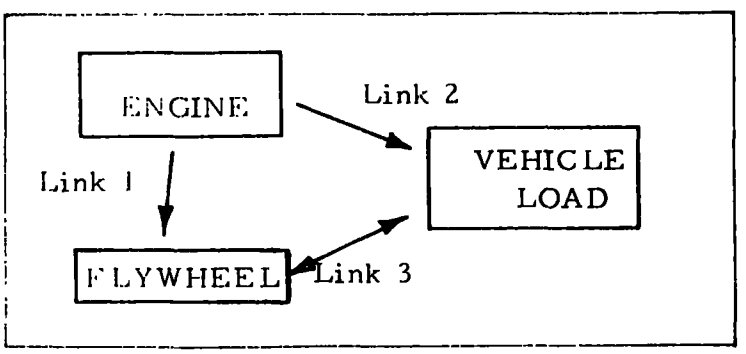

Figure II-1 System Block Diagram

These links indicate torque and power paths, and the arrows indicate the direction of the flow. They are identified as follows:

(a) Link 1 couples the heat engine to the flywheel for the purpose of initial "charging" of the flywheel, and to make up the energy losses within the flywheel and its housing.

(b) Link 2 couples the heat engine to the vehicle load to make up the vehicle drag and resistance losses.

(c) Link 3 couples the flywheel to the vehicle load for acceleration, and takes reverse power flow for regenerative braking.

Each of these three links can be either mechanical, hydrostatic, or power splitting (hydromechanical). There are then, 27 different combinations between the 3 links and the 3 types of links. These combinations are shown on Figure II-2.

Evaluation of these 27 combinations shows that those with a "mechanical" (straight gear ratio) link 3 do not meet the basic system requirements that link 3 be continuously variable over a fixed speed range. This eliminates nine combinations (namely, No.'s 1, 7, 9, 10, 15, 17, 20, 23, 25).

Of the remaining combinations, eight have three variable ratio links, which would appear redundant, as all of the system requirements can be met with only two variable links. Although mechanical design considerations may make a transmission of this type attractive, at this point in the link study, these eight combinations were eliminated, leaving ten combinations (namely, No.'s 2, 3, 4, 5, 6, 8, 11, 18, 21, and 22).

In evaluation of these remaining 10, and in trying to translate them into realistic transmission schematics, it appeared that No.'s 2, 3, 5, 8, 18, and 21 could be eliminated due to complexity or inconsistency in the control system that would be required to obtain each particular combination.

COMBINATION NO.	LINK 1	LINK 2	LINK 3
1	M	M	M
2	M	M	H
3	M	M	S
4	M	H	H
5	M	H	S
6	M	S	S
7	M	S	M
8	M	S	H
9	M	H	M
10	H	M	M
11	H	M	H
12	H	H	H
13	H	H	S
14	H	S	S
15	H	S	M
16	H	S	H
17	H	H	M
18	H	M	S
19	S	S	S
20	S	M	M
21	S	M	H
22	S	M	S
23	S	S	M
24	S	H	H
25	S	H	M
26	S	H	S
27	S	S	H

M = MECHANICAL

H = HYDROSTATIC

S = SPLIT (HYDROMECHANICAL)

Figure II-2 Transmission Combinations

The remaining four combinations (namely, No's. 4, 6, 11, and 22) were translated into various schematic forms, and were compared with and considered along side other schematics that were derived through one of the following processes.

(1) Using existing and known hydromechanical schematics as starting points

(2) Trial and error coverage of possible combinations of hydraulic units and differential summers

(3) Logical progression - that is refinement of a schematic, changing it to overcome some undesirable feature, or to make it functionally workable

(4) Combination, that is combining features or portions of two or more schematics to create a new one

Each schematic under consideration was evaluated through the following steps until one of the steps showed it to be either unworkable or inferior to some other schematic or else worthy of final consideration.

(1) Determination of the speed relationships between engine, flywheel, vehicle and hydraulic units

(2) Torque reactions must be "allowable" at all operating modes. For example, no torque can be reacted against the flywheel in the cruising condition, and flywheel torque cannot react against the engine in the acceleration mode, and any system requiring dissipation of energy to provide a torque

reaction is undesirable.

(3) Power flows within the system must be determined under all modes of operation, and checks made that (a) power loops have to close, or balance, (b) power flows must be in the right direction (for example, power must come out of the flywheel during acceleration), (c) recirculating power through the hydraulic units must be kept within reasonable limits.

(4) Schematic must be capable of translation into "reasonable" looking hardware as far as differential gear sets, shafting arrangement, and general ability to be packaged within the limitations of the vehicle installation are concerned.

(5) "Special" performance conditions have to be attainable without undue complication, such as reverse speed operation, and charging a "dead" flywheel at stationary vehicle speed.

(6) Transmission must be capable of being controlled within the general framework of a reasonable and established control system philosophy.

(7) Full load and part load efficiencies must be calculated over the entire speed range, and plotted and evaluated.

Most of these schematics that were considered in this manner were rejected without the need of an extensive analysis.

B. Speed Relationships

The control parameter that determines the "state of charge" of the flywheel is the requirement that the total kinetic energy of the flywheel plus the vehicle remain constant. (See contract "Scope of Work", Appendix J.) At zero vehicle speed, then, all the energy of the system is in the flywheel and at maximum vehicle speed, the system energy is almost all in the vehicle, (the flywheel does not go all the way to zero at maximum vehicle speed).

At any given vehicle speed, there is only one flywheel speed that will give the required value of total system kinetic energy, and so it can be seen that the speed relationship between the vehicle and the flywheel is fixed. (See Figure II-3.)

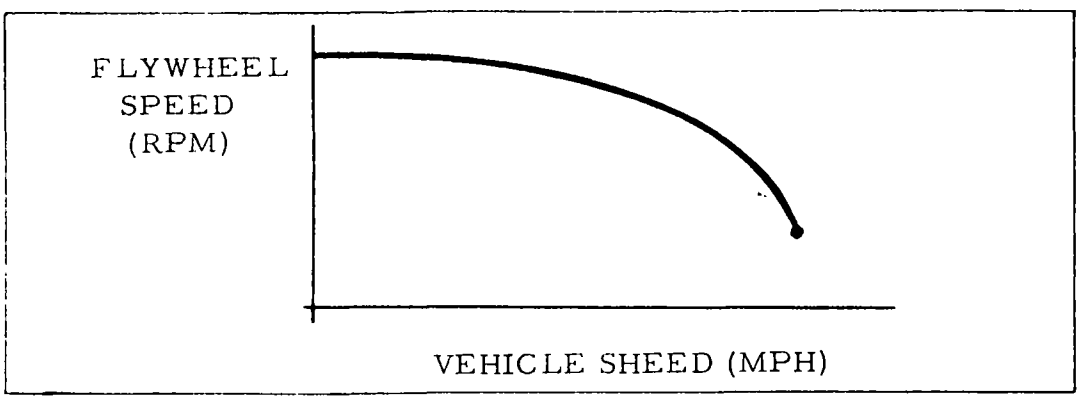

Figure II - 3 Flywheel Speed vs. Vehicle Speed

The other speed of major consideration is the engine speed, and its speed relationship with the rest of the system, which can be of three types.

(1) Independent Relationship: The engine speed can be varied independently of the vehicle and flywheel speeds, and so this system requires that all three speeds are independent from each other. This reflects the most

desirable relationship, as for any given load condition, it allows the engine to be run at any desired speed required to optimize fuel consumption, emission level, or any other parameter. It will, however, probably reflect a more complicated design.

(2) Interdependent Relationship: The engine speed will vary with the flywheel and vehicle speed according to some function established by the planetary gear differential(s). In this system, the flywheel speed must be controlled by controlling engine speed as a function of vehicle speed in order to maintain constant kinetic energy in the vehicle system. Although engine speed is not independent, the manner in which it varies with vehicle speed can be controlled to some extent by changing the gear differential ratios, or the manner in which the basic elements are connected to it. In this manner, it is possible to approximate the required engine speed-vehicle speed relationship with a relatively simple system.

(3) Dependent Relationship: The engine speed varies in a direct relationship with the flywheel speed or vehicle speed through a direct gear mesh. This system can be very simple, but gives no freedom of engine speed operation at all.

Engine Operational Mode:

One of the contractual requirements was to examine four given combinations of engine speed and load conditions. (See contract "Scope of Work", Appendix J.) These conditions are:

(1) Variable speed, variable load

(2) Variable speed, constant load

(3) Constant speed, variable load

(4) Constant speed, constant load

Obviously, the load requirement on the engine varies over the range of vehicle operating conditions, so a constant load engine operation mode would require a transmission that dissipates energy at all times except the maximum load point. Thus, conditions 2 and 4 above can be eliminated. The requirements of this study are to optimize fuel consumption for the given engine, and a study of the specific fuel consumption map for this engine (see Appendix H) reveals that minimum fuel consumption cannot be achieved very well at any constant speed. This eliminates condition 3 above, leaving condition 1, which was the engine operational mode used in this study.

C. Transmission Schematic Representation

In order to facilitate the analysis and evaluation of different transmission schematics, Sundstrand uses a method of representation described below. This explanation will enable an understanding of the schematic diagrams which follow this section.

Example - Typical Hydromechanical Circuit

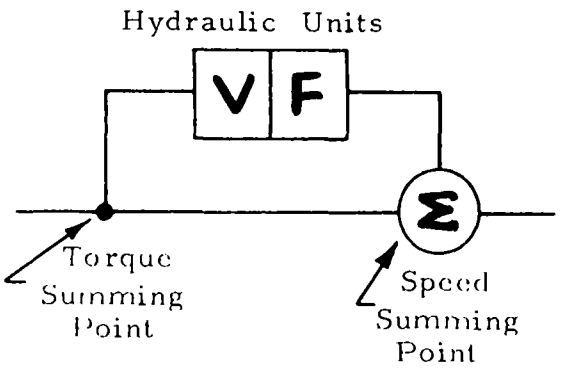

Hydraulic Unit: This consists of a variable displacement hydraulic pump/motor ("V" unit) and a fixed displacement hydraulic pump/motor ("F" unit). The two units are hydraulically ported to each other so that when one is a pump the other is a motor, and vice versa. Sundstrand units are of the axial piston rotating cylinder block type, with a stationary swash plate. This swash plate is at a fixed angle for the "F" unit, and can be varied to any desired angle (within limits) for the "V" unit.

For optimum utilization of the hydraulic unit (over the operating range of the transmission), it is most desirable to run the "V" unit at its constant rated speed, and run the "F" unit through its full operating speed range (plus to minus rated speed).

Torque Summing Point: This represents a gear mesh point as shown below:

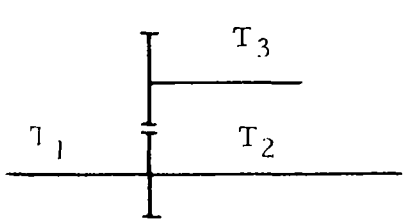

The sum of all the torques for a torque summing point must be zero; i.e., $T_1 + T_2 + T_3 = 0$.

Speed Summing Point: This represents a geared differential, such as a planetary gear set. A three element summer would typically consist of a planet set with a sun gear, a ring gear, and a planet carrier as the three elements. A five element summer could consist of a compound planetary gear set with two sun gears, two ring gears, and a planet carrier.

In a speed summer, the speed of any two elements will determine the speeds of the remaining elements, and the torque must be known or specified in all of the elements except two.

D. Schematics Considered & Rejected

Many different transmission schematics were evolved by the processes outlined in Section II(A) above. Those that were able to satisfy the basic speed requirements of the engine, flywheel, vehicle, and hydraulic units are shown in Appendix O, along with the prime reason for rejection (where appropriate).

E. Selection of Final Transmission Schematic

Two "finalist" schematics were chosen from those considered - versions 8 and 15 (see Appendix O).

Version 8 is of the interdependent engine speed type, and contains one hydraulic unit set (see Figure II-4).

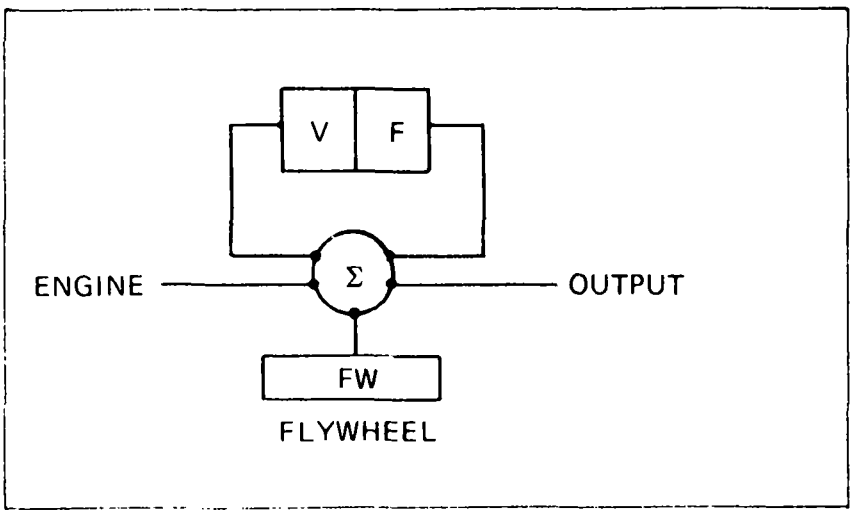

Figure II - 4 Transmission Schematic

Version "8"

Version 15 is of the independent engine speed type, and contains two hydraulic unit sets (see Figure II-5).

A detailed analysis on both these systems was carried through until comparative figures were available for fuel consumption over the Federal Driving Cycle. These results showed very little difference in performance, indicating the advantages gained in version 15 by running the engine at its most economical fuel consumption speed were absorbed by the losses incurred from the second hydraulic unit set. Version 15 was then dropped because the cost and complexity of the second hydraulic unit gave no distinct advantage.

Efforts were then concentrated on developing basic version 8 to its most efficient form. As a result, a version was developed with 2 modes of operation. This configuration (designated version 8A, see Figure II-6) utilizes two clutches, which "shift" synchronously at 30 MPH, allowing the hydraulic units to be used over their entire speed range twice, instead of once as in the single mode version. This reduces the size of the hydraulic units by almost 50 percent and changes the shape of the efficiency curve - giving it two "humps", and raising it considerably above the single mode version (version 8).

Version 8A then became (and remained) our recommended, or baseline version for this study, although a further refinement of version 8A was developed that gave better fuel economy at the expense of another clutch. This was designated 8C, and was considered worthy of inclusion in this

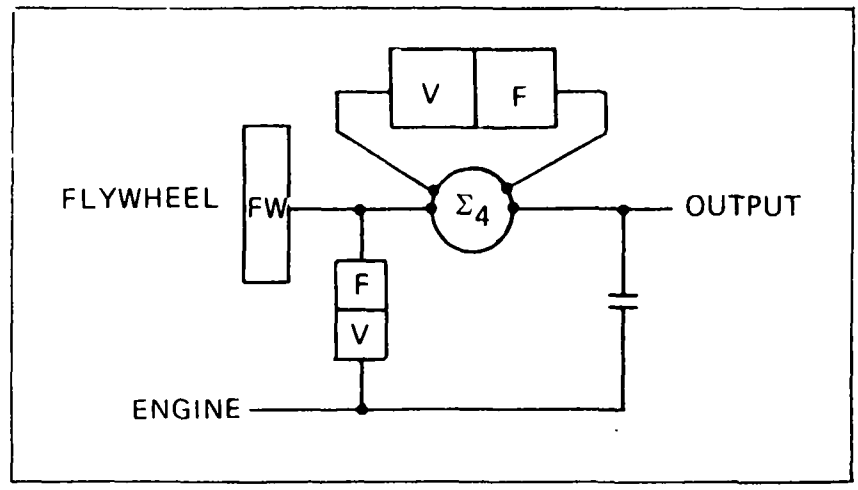

Figure II-5 Transmission Schematic

Version "15"

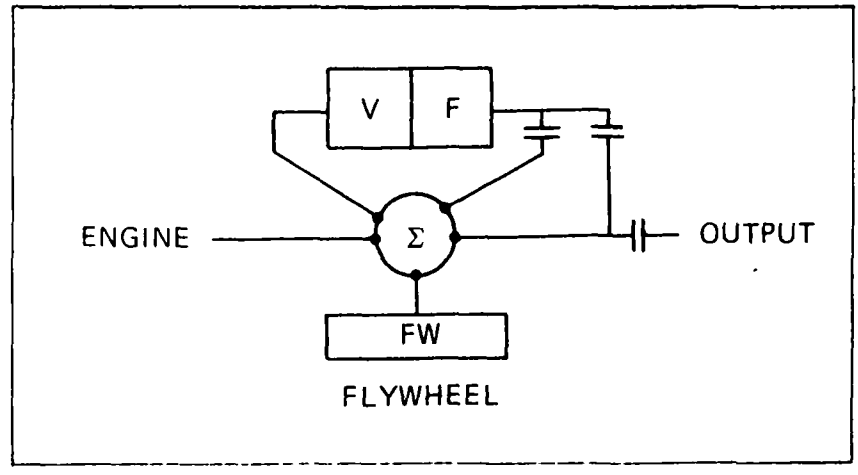

Figure II-6 Transmission Schematic

Version "8A"

report as an alternate (see Figure II-7).

Version 8C evolved after an evaluation of the fuel economy penalty being paid by not running the engine with version 8A continuously at its minimum fuel consumption condition. For the Federal Driving Cycle, this penalty amounts to approximately 3.5 MPG.

It was found that the required engine speed versus vehicle speed characteristics for minimum specific fuel consumption could be very closely approximated by putting a clutch on the input, such that at light accelerator pedal loads below 50 MPH, the engine input comes into the variable unit (V-unit) hydraulic unit, and at heavy accelerator pedal loads below 50 MPH, or at any load above 50 MPH, the engine input comes directly into the differential gear set.

This arrangement allows the engine to run at a slower, and more economical speed at the slower lighter load conditions, but allows higher engine speed operation (when the engine would otherwise be power limited) at the higher load or higher road speed conditions. Engine speed versus road speed for transmission versions 8A and 8C, as well as engine speed versus road speed for minimum fuel consumption is shown on Figure II-8.

These two transmission versions, the baseline (version 8A) and the alternate (version 8C) are carried through this report. A complete description of operation of the two transmissions is given in Section III.

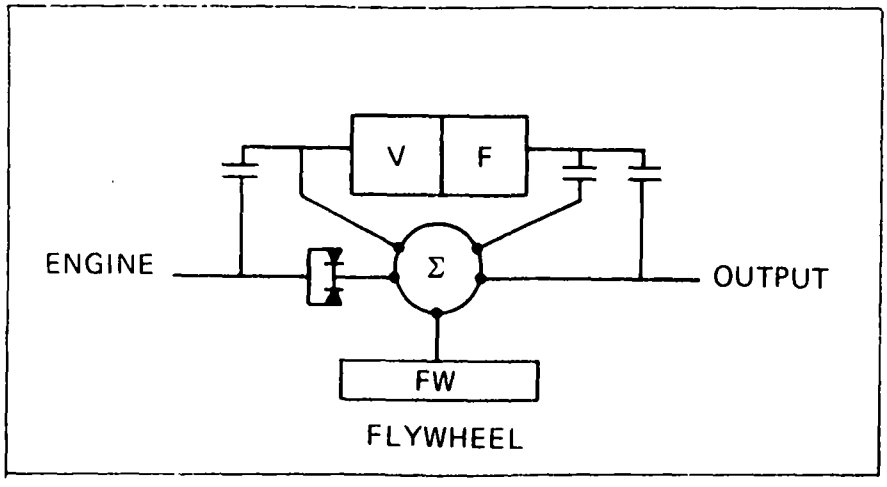

Figure II-7 Transmission Schematic

Version "8C"

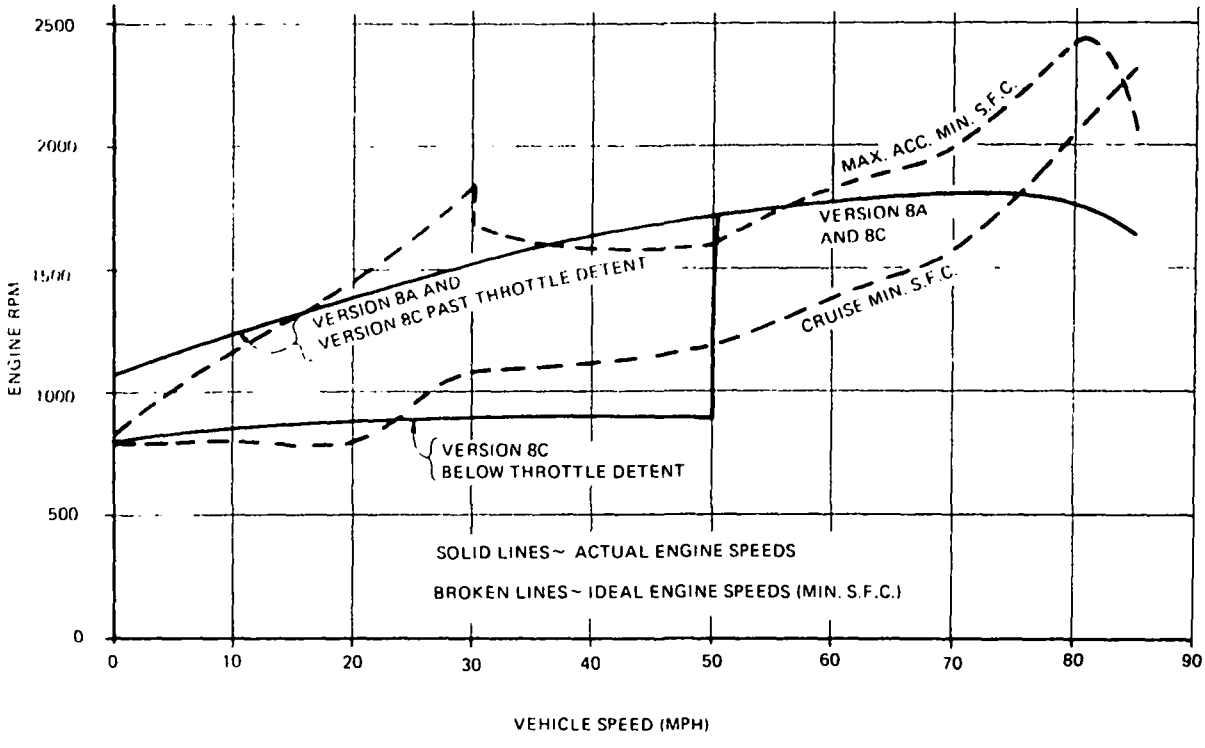

Figure II - 8 Engine Speed vs. Vehicle Speed

III. TRANSMISSION DESCRIPTION

III. TRANSMISSION DESCRIPTION

The following is a description of the selected Baseline (8A) transmission. The transmission is shown in simplified schematic form on Figure III-1.

The transmission is basically made up of a five element differential, hydraulic units, clutches, controls, and associated gearing. By controlling the displacement of the variable hydraulic unit, it is possible to control the reaction torques in the five element differential. By controlling these torques, it is possible to control the direction of power flow; and hence, extract energy from the flywheel and supply this energy to the output or take energy from the output and supply it to the flywheel as required.

Figure III-2 shows schematically the arrangement of the gear train. Standard automotive design practices were used in the design of the transmission with emphasis being placed on low cost, life, and reliability. Table III-1 summarizes the baseline (8A) transmission parameters.

A. Mechanical Operation

The following is a discussion of the mechanical operation of the transmission with regard to direction of power flow, component speed and torque relationships, and variable unit displacement.

The transmission has two distinct modes of operation. The shift between mode 1 and mode 2 occurs at 30 MPH regardless of output power level. During mode 1, the output from the fixed displacement hydraulic unit is geared directly to the output. In mode 2 operation, the fixed displacement hydraulic unit is geared into the planetary.

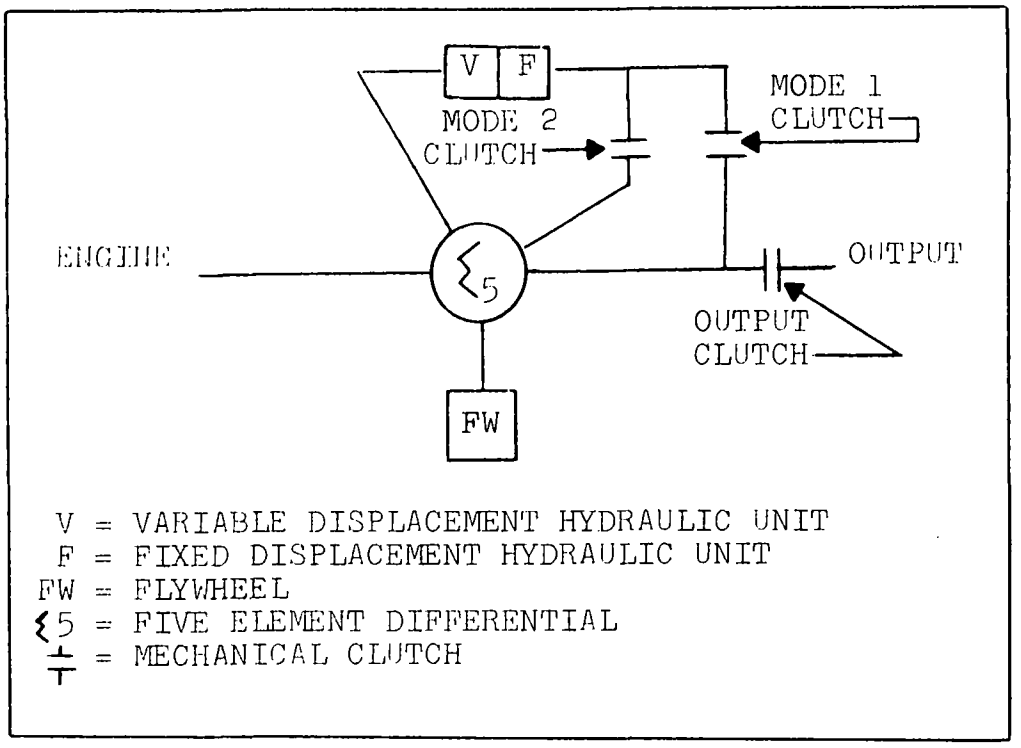

Figure III - 1 Simplified Schematic

Baseline "8A" Transmission

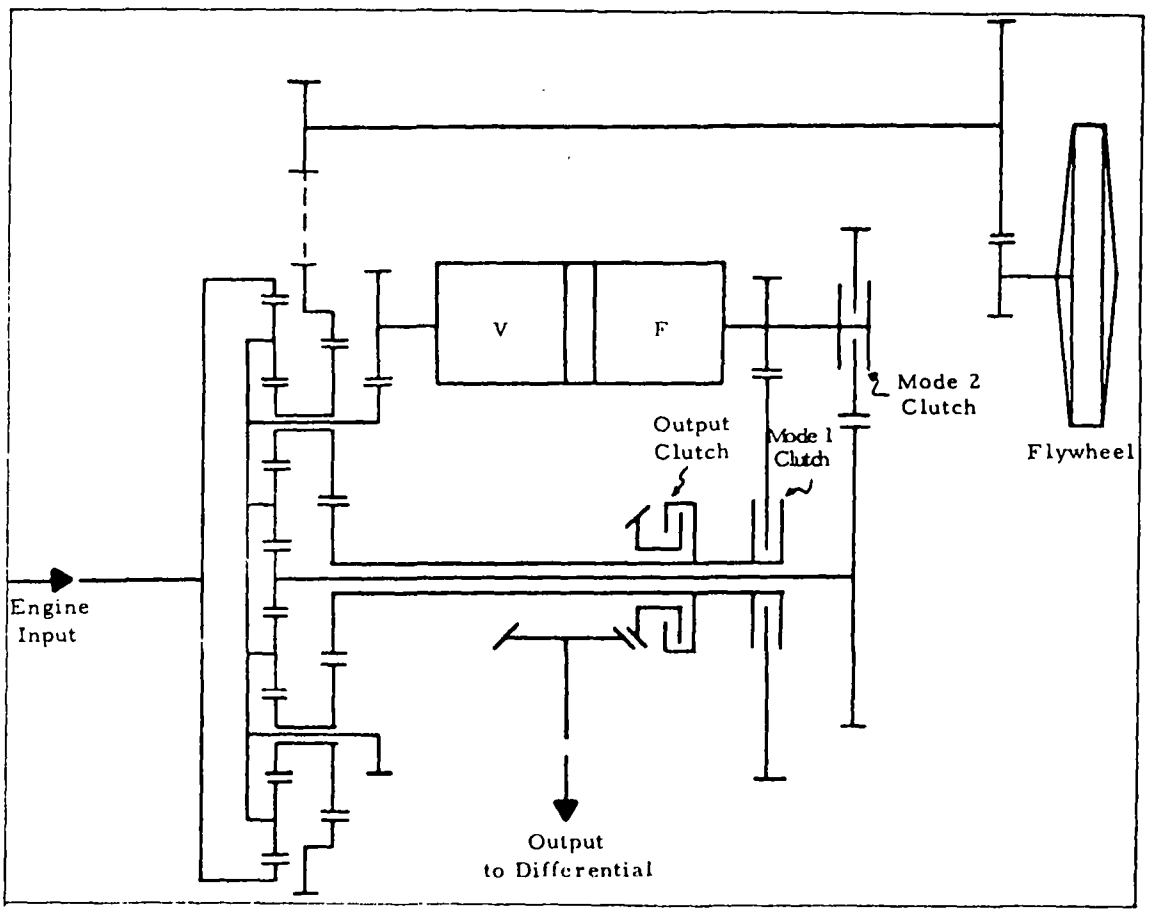

Figure III - 2 Gear Train Schematic

TABLE III-1

HYDROMECHANICAL/FLYWHEEL TRANSMISSION

BASELINE (8A)

PARAMETER SUMMARY

Engine Input Speed	800-1817 RPM
Output Speed	3040 RPM @ 85 MPH (input to rear differential)
Hydraulic Unit Size	3.5 in^3/rev
Clutch Type	Multi-plate, Flat Disk, Axial Piston Hydraulic
Lubricating Fluid	Type A Automatic Transmission Fluid
Flow to Cooler	3.86 Gal/Min
Cooler Heat Rejection Required	679 BTU/min
Cooler Size Required	Typical of existing automatic transmission coolers
Max. Input Torque	254 ft-lb (from engine)
Max. Output Torque	842 ft-lb (@ input to rear axle differential)
Transmission Weight	
Dry	223 lb
Wet	243 lb
Flywheel Assembly Weight	186.9 lb
Flywheel Pad Speed Range	24,000-4,138 RPM
Direction of Rotation (Looking at Pad)	
Engine Input	Clockwise
Cross Section Drawing	2742A-L1 (Ref. Appendix K)
Outline Drawing	2742A-E1 (Ref. Appendix K)
Control Circuit Drawing	2742A-L3 (Ref. Appendix K)

1. Speed

The key to understanding the operation of this transmission is to understand the relationship of the various legs of the planetary.

The output speed is a linear function of vehicle speed (Figure III-3). The basic ground rule for this study was that constant system energy is to be maintained at any (forward) vehicle speed. Therefore, flywheel speed is also a function of vehicle speed. In reverse vehicle speed, it was decided to hold the flywheel speed constant to eliminate any flywheel effects.

This system is an interdependent system. In an interdependent system, the various element speeds are not related directly in a linear manner to any other element, but rather they are determined by the interaction of several other elements.

In this case, the two elements that determine the speed of all the other elements of the transmission are the output planetary link and the flywheel planetary link.

The speeds of the various links of a compound summer (in this case a five element planetary) can be represented on a nomograph (see Figure III-4). A straight line passing through any two link speeds defines the speeds of all of the other links.

Thus, when vehicle speed is known, output speed and flywheel speed are known. From the nomograph, all the other speeds of the system

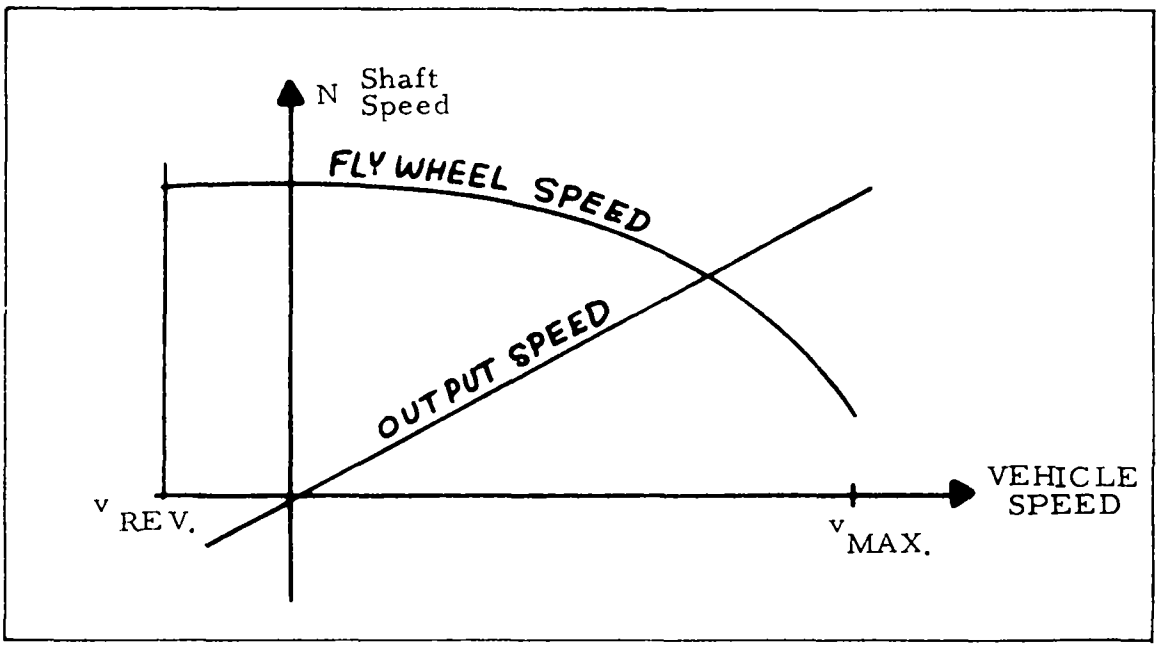

Figure III - 3 Flywheel and Output Shaft Speeds

As a Function of Vehicle Speed

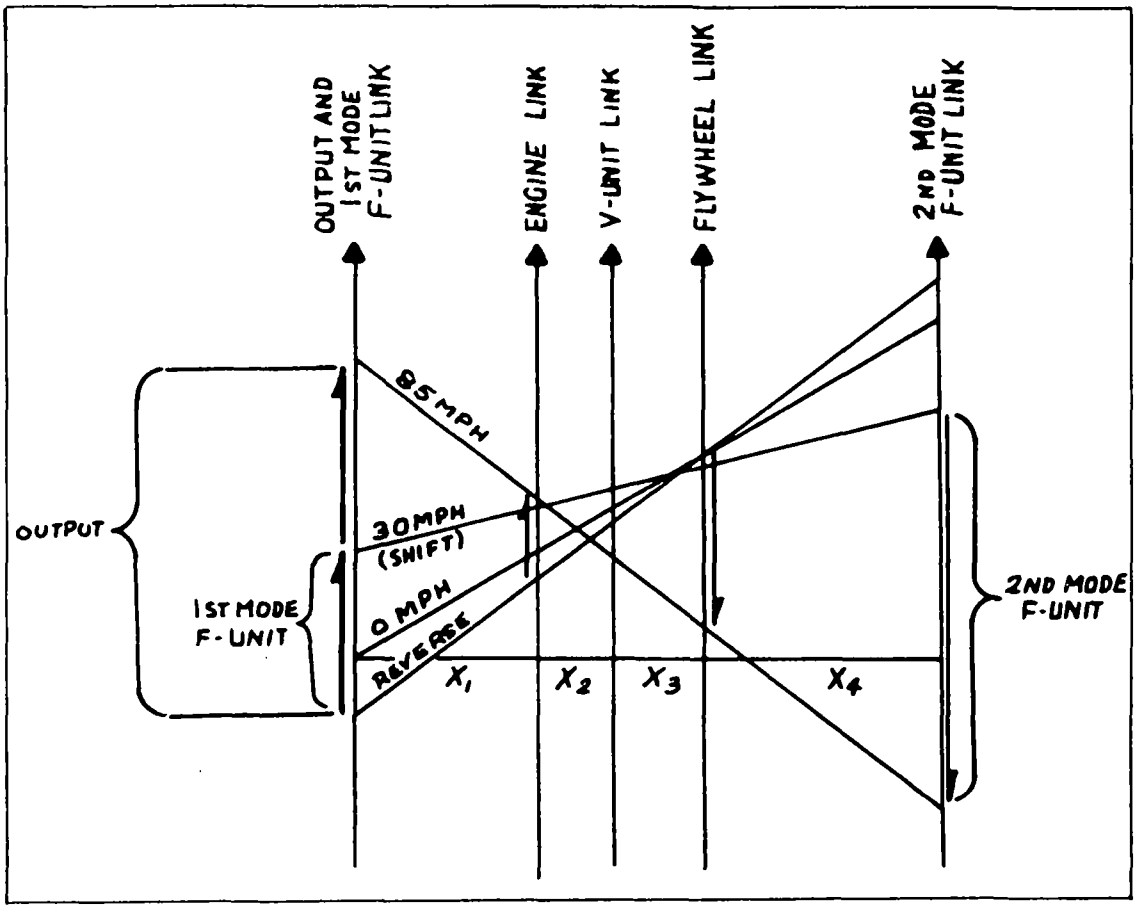

Figure III - 4 Five Element Planetary Nomograph

can be calculated. Therefore, the only variable that is completely independent as far as transmission component speeds are concerned, is vehicle speed. For any given vehicle speed, there is one and only one set of planetary link speeds.

Since the other elements of the transmission such as the input, V-unit, F-unit, etc., are related directly to their respective planetary links by a gear mesh or a direct coupling, all the speeds of the system, including engine speed, are defined by simply defining vehicle speed. See Figure III-5 and Figure III-6 for a graphical representation of how the engine and the hydraulic unit speeds vary with respect to vehicle speed.

2. Displacement

The displacement of the variable hydraulic unit, as a function of vehicle speed, is shown on Figure III-7.

The displacement of the variable displacement hydraulic unit can be calculated from the flow continuity equation. This equation is shown below in its simplified form (neglecting volumetric efficiencies):

Where:

$$Q = D_F N_F = D_V N_V$$

Q = Flow (in^3/min)

D = Displacement (in^3/rev)

F = Fixed Unit

V = Variable Unit

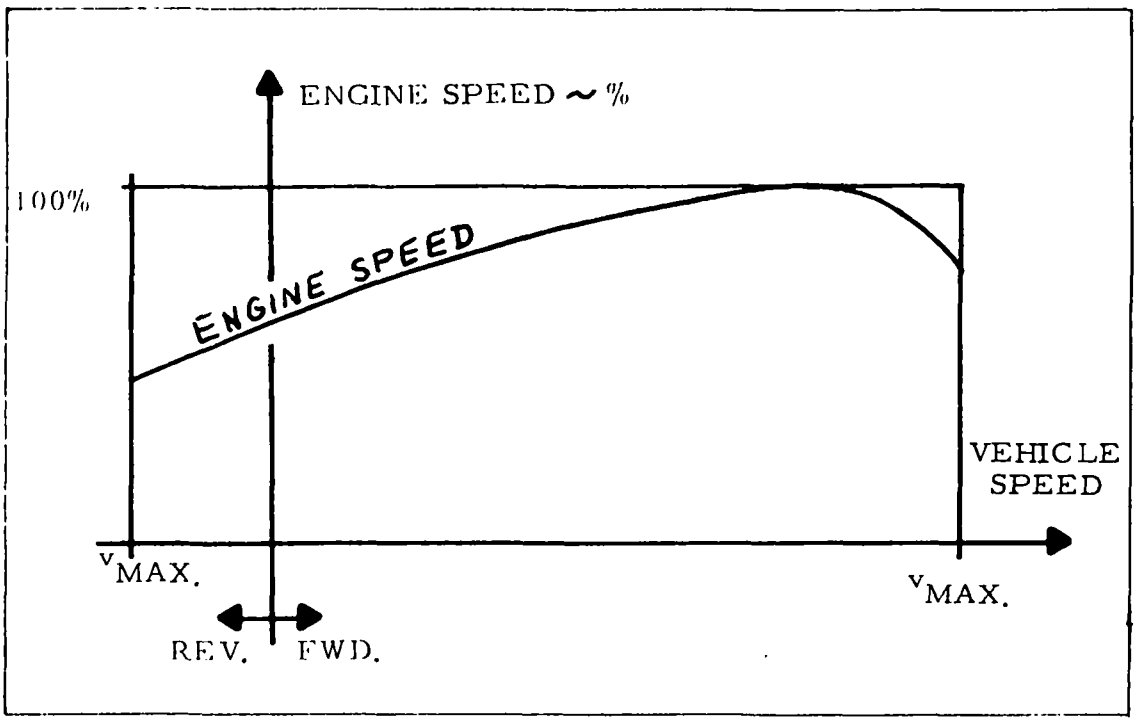

Figure III - 5 Engine Speed as a Function of Vehicle Speed

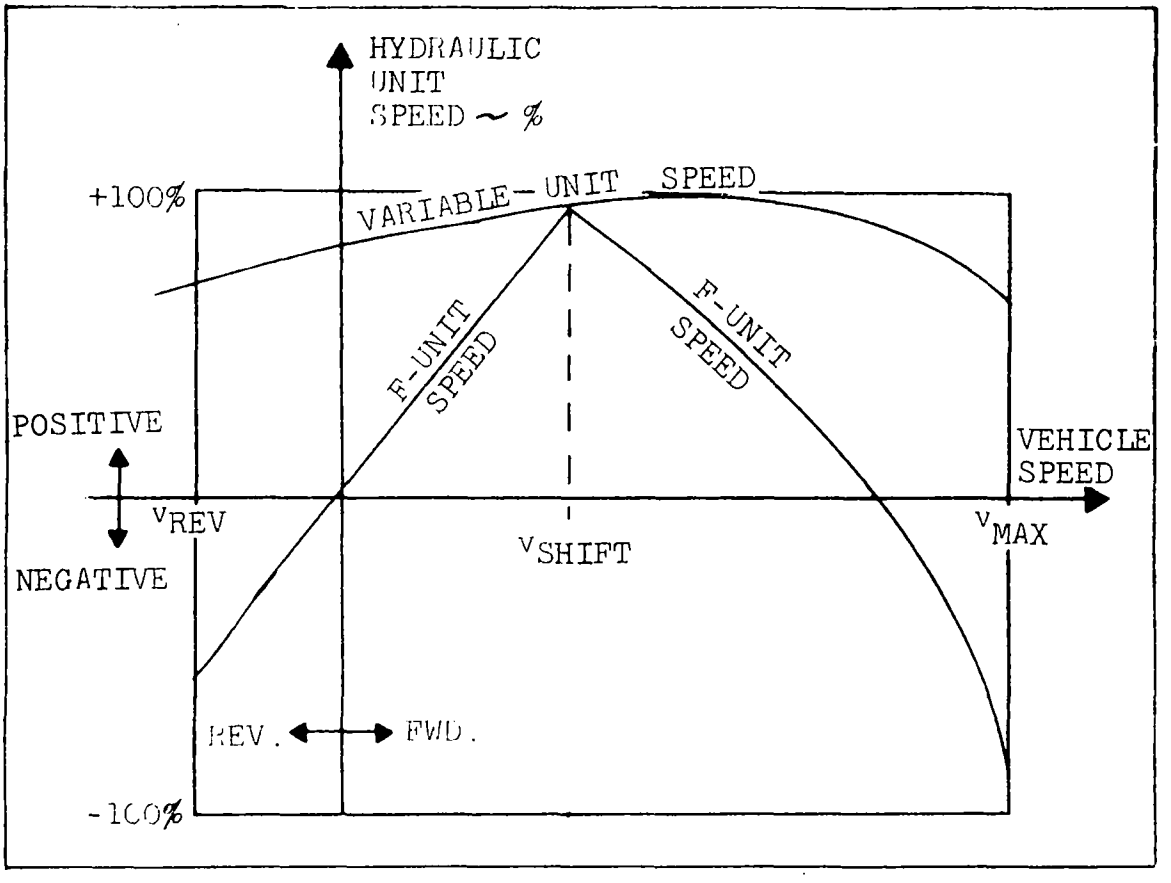

Figure III - 6 Hydraulic Unit Speed as a Function of Vehicle Speed

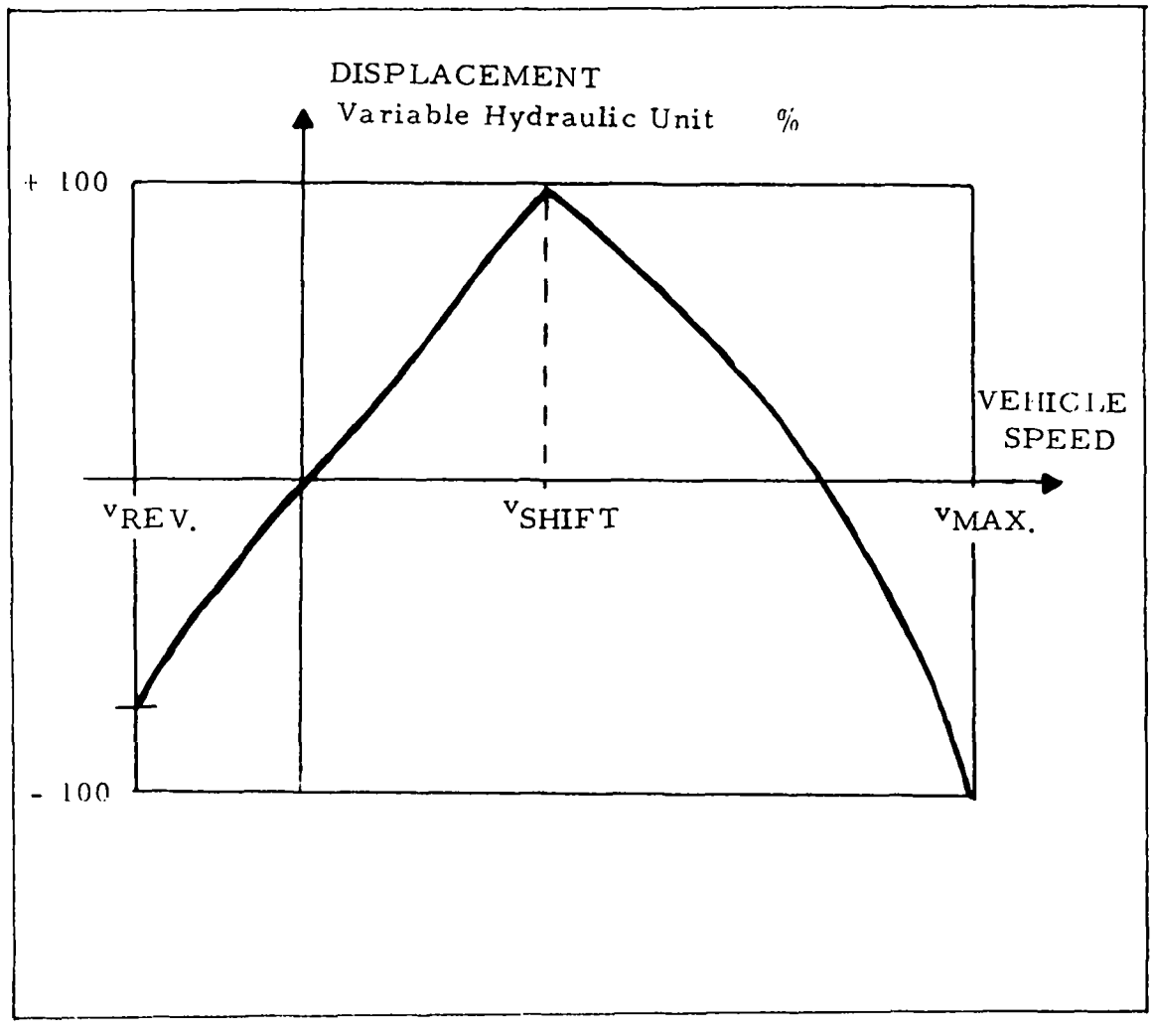

Figure III - 7 Displacement of Variable Hydraulic Unit as a Function of Vehicle Speed

N = Unit Speed (RPM)

Thus:

$$D_V = \frac{N_F}{N_V} \times D_F$$

Since the speeds of the units are defined by vehicle speed and the displacement of the fixed unit is constant, the variable unit displacement is also a function of output speed.

3. Torque

The reaction torques in a compound summer may be represented as vectors acting on a beam at positions that correspond to the link locations on the speed nomograph. (Figure III-4.) Unknown torques may be found by applying the equations of statics to the torque vector-beam analogy of the planetary. A typical case (first mode-acceleration) is shown on Figure III-8.

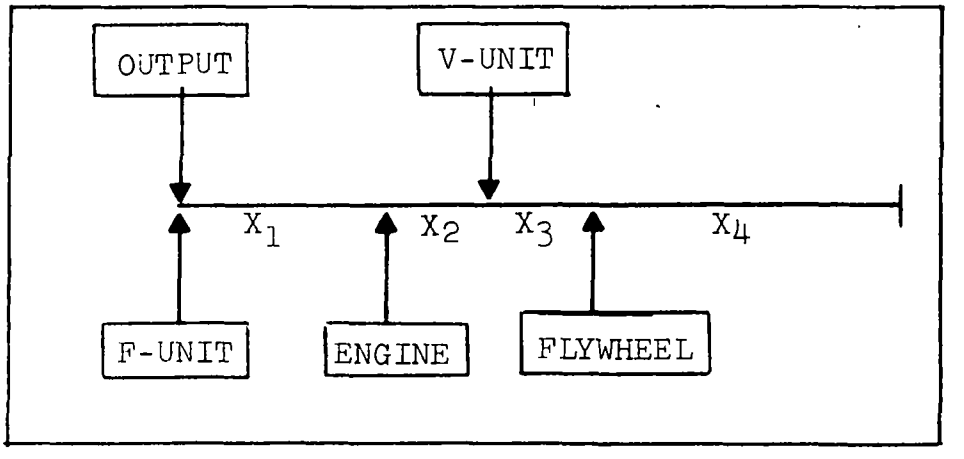

Figure III - 8 Torque Reactions

Although, there is more involved when efficiency is taken into account, the V-unit and F-unit torques are related by the equations:

$$HP_{HYD} = T_V N_V = T_F N_F$$

Sundstrand Aviation
division of Sundstrand Corporation

$$T_V = T_F \times \frac{N_F}{N_V}$$

Where:

HP_{HYD} = Hydraulic horsepower

T = Torque

N = Speed

V = Variable unit

F = Fixed unit

4. Pressure

When the torque balance is solved for any given set of external load and speed conditions, the working pressure can be calculated directly from the F-unit torque reaction. The basic formula relating F-unit torque and the working pressure is:

$$P = \frac{2\pi \times T_F}{D_F}$$

Where:

P = Working pressure (PSI)

T_F = Fixed unit torque (in-lb)

D_F = Fixed unit displacement (in^3/rev)

5. Horsepower

Horsepower is the product of torque times speed. The basic methods of solving for torque and speed in the transmission were defined previously. The magnitude of the horsepower in any link is the torque in that link times the speed of that link divided by the appropriate

dimensional constant.

The direction of horsepower flow on the other hand must be determined from the direction of link rotation and the direction of applied torque. Sign conventions were established for the planetary speed nomograph (Figure III-4) such that any speed above the nomograph absissia is positive, and any speed below is negative. In the planetary torque balance beam (Figure III-8), any vector pointing up is positive and that any vector pointing down is negative.

The sign product of the torque vector and the speed vector indicate the direction of horsepower flow. A positive sign indicates that the horsepower flow is into the summer and a negative sign indicates that the horsepower flow is out of the summer.

The direction of horsepower flow in the various elements of the transmission is summarized in Appendix I.

B. Hardware Description

The following is a brief description of the various components which make up the Baseline (8A) hydromechanical transmission. The flywheel itself is discussed in another subsection. Reference should be made to the cross section drawing 2724A-L1 shown in Appendix K for indication of component arrangement and relative size.

1. Hydraulic Units

The hydraulic units are of the axial piston hydrostatically balanced

Sundstrand Aviation
division of Sundstrand Corporation

configuration, typical of Sundstrand's standard line of hydraulic units for the aircraft, agricultural, and construction equipment market.

Figure III-9 shows a schematic cross section of a typical hydraulic unit of this configuration. While a variety of hydraulic pump/motor units could have conceivably been evaluated for this application, Sundstrand based hydraulic unit selection on our extensive experience in designing hydrostatic transmission for a variety of applications over the last 30 years.

The hydraulic units are identical in construction to hydraulic units presently being manufactured by Sundstrand for hydrostatic transmission applications where they have proven their reliability, low cost, and good efficiency.

Both hydraulic units have a displacement of 3.5 in^3/rev. One unit is variable displacement, the other is fixed displacement. The units are designed for 3000 psi nominal, 7500 psi overloads, and 9000 psi proof pressure.

The units are mounted back to back with a common port plate manifold. Mounting the units in this manner applies equal and opposite forces on the port plate permitting the use of light weight compact construction and elimination of the potential life integrity problems associated with high pressure hydraulic tubing and hoses.

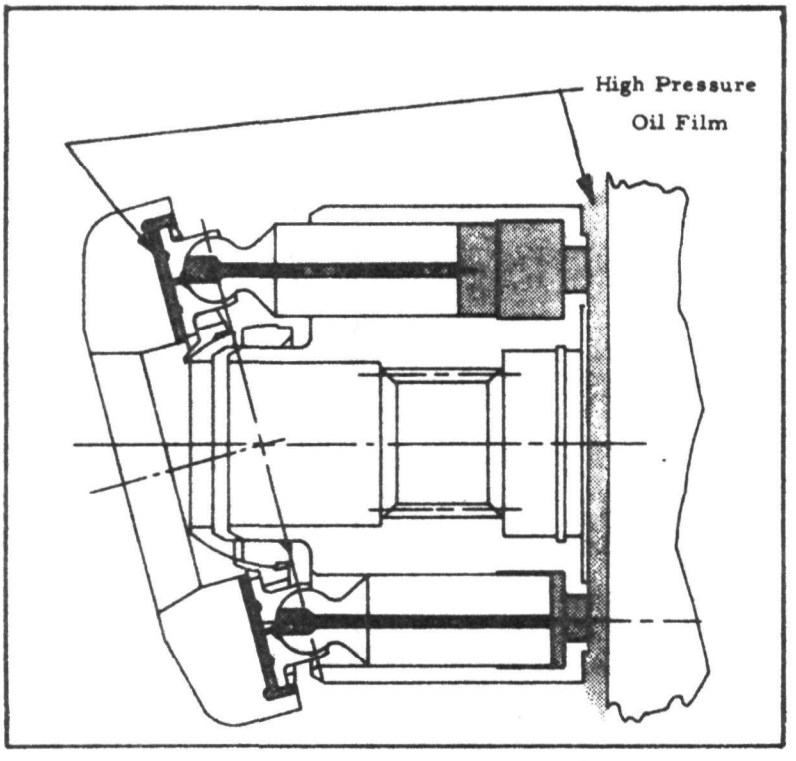

Figure III - 9 Axial Piston, Slipper Type Hydraulic Unit

2. Clutches

The clutches perform the power shift function during the change from mode 1 to mode 2 operation. These clutches are of the conventional multiplate disc type common to automotive applications. These clutches are simple to control, inexpensive, and have high torque and energy dissipative capability. At the shift, the shaft speeds are essentially synchronized thereby allowing the use of light duty clutches. The clutches are thus sized on torque capability and not energy dissipation.

Clutch design follows standard automotive practice. Steel separator plates are used and organic linings. The drums are ductile cast iron. The piston and the back-up ring are aluminum.

A centrifugal operated pressure sensitive check valve is incorporated within the clutch to preclude centrifugal pressure from actuating the clutch.

3. Seals

Standard lip seals are used on the transmission input and output shafts as well as to seal between the main transmission gearbox and the rear axle differential. EP differential oil is used in the differential housing and must be isolated from the Type A automatic transmission fluid used in the rest of the transmission.

Rotating seals between concentric shafts are of the cast iron piston ring type common with standard automotive practice.

All of the seals within the transmission are typical of those found in a standard automotive type automatic transmission.

4. Gears

Helical gears have been assumed throughout the transmission, as in all automotive transmissions, to minimize noise. The gears are all designed to permit use of economical mass production techniques.

5. Charge Pump

The charge pump is of the gerotor type common to automotive applications. It has been sized to provide for main hydraulic unit charging, control operation, clutch application and cooling, gear and bearing lubrication, and flow to the transmission cooler.

6. Bearings

Extensive use has been made of radial and thrust load needle bearings. Bearings of this type are widely used in automotive applications as they are inexpensive, reliable, and have minimum lubrication requirements.

Tapered roller bearings are used in the hydraulic units and in the output differential as needle bearings are not suitable at these locations.

7. Housings

The center transmission housing which contains the rear axle differential and the hydraulic units is made of cast iron. Cast iron was selected for reasons of strength and hydraulic noise attenuation. Further study and development in this area might permit the use of aluminum housing with subsequent cost and weight savings.

The front and rear housings are die cast aluminum. The front housing contains the planetary gear set, hydraulic control system, and charge pump. The rear housing just serves as a cover.

8. Controls

The spool control valves are typical of those found in present automatic transmissions. The valve bodies are aluminum, the spools are hardened steel and where applicable, steel sleeves are used.

The control linkages from the driver could be of similar type and construction to those presently used in automotive applications.

Speed sensing governors are of the rotating flyweight type and act directly on a valve stem.

9. Transmission Cooler

The transmission cooler is not an integral part of the transmission and is listed here only as a reminder that it is required to dissipate the heat generated in the transmission. Flow to the cooler is 3.86 gal/min and under the worst conditions 674 BTU/min must be rejected.

C. Control Operation

The following is a discussion of the operation of the Baseline (8A) transmission controls. Reference should be made to the control schematic drawing 2724A-L3 shown in Appendix K.

1. Initial Condition

Assume as an initial condition that the engine is off, that all clutches are drained, and that all shafts are stopped. Prior to engine start, the transmission shift control lever is normally in either neutral or park. With the control in the neutral position, the start valve will be all the way to the left and the shift valve all the way to the right. The park valve and the forward-neutral-reverse (FNR) valve will be in the neutral position. With the FNR valve in the neutral position, the control system will tend to minimize the working pressure in the hydraulic units. This condition of displacement control means that the displacement of variable unit will be controlled in such a way that working pressure (and therefore hydraulic unit torque since torque is proportional to working pressure) will be minimized. The engine governor line is drained through the start valve which rests on the idle stop at this point in the sequence.

2. Selector Lever in Park

There is a safety switch which will prevent the engine from starting in any position but park. When the selector lever is in the park position, both hydraulic unit control pressure lines are connected

through the park valve, again minimizing the working pressure. The clutch cooling orifices are connected to the charge pressure line through the park valve. It is necessary to flood the output and mode 1 clutch during flywheel spin-up to prevent them from overheating. Clutch apply pressure is regulated by the clutch pressure regulating valve by virtue of the fact that its right hand bias area is also open to charge pressure. The clutch apply pressure has to be regulated so that the clutches do not apply to hard and fast. If they would, they would stall the engine. They must be applied at a rate consistent with engine power capabilities.

The parking pawl is engaged to lockup the output shaft. The FNR valve is in the "reverse" position when the shift selector is in the park position.

3. Engine Start (with an "uncharged" flywheel)

The engine is started with the ignition switch, and the transmission in "park" (the vehicle will not creep). The engine governor governs the engine at idle speed. The flywheel speed at this time is still near zero, but the variable displacement hydraulic unit comes up to speed in proportion to engine speed. Charge pressure comes up to its regulated value as the variable unit comes up to speed since the charge pump is driven by the same shaft as the V-unit. Charge pressure tends to bias the clutch pressure regulating valve to produce a lower supply pressure to the shift valve and the start valve. Cooling flow is ported to the clutches to prevent overheating. The

start valve shuttles after a certain period of time (4 sec) provided by valve orifice and accumulator action. When the start valve shuttles, the engine comes under control of the energy governor to prevent engine overspeed at start-up. At this time, the output clutch (through the FNR valve) and the mode 1 clutch (through the shift valve) are energized. Applying the output and mode 1 clutches causes a torque unbalance within the transmission planetary, which in turn causes the flywheel to accelerate to its maximum speed of 24,000 RPM. This is the flywheel speed which corresponds to zero vehicle speed. The power train is now ready to drive the vehicle. The clutches are more than adequately sized for this start-up condition.

4. Selector Lever to Forward

To make the vehicle go forward, the selector level is moved to the forward (F) position. Control pressure is ported to that side of the control piston which tends to change displacement of the variable unit in the direction that will tend to accelerate or decelerate the vehicle depending on driven input.

The park valve moves to far right position. This in turn causes several other events to take place. The output and mode 1 clutch pressure valves are de-biased and full charge pressure is applied to these clutches to carry the working torques. Clutch cooling flow is cut off since the clutches no longer slip once the flywheel is spun-up initially. There is no need to cool the clutches during normal operation. The parking pawl is released.

Sundstrand Aviation
division of Sundstrand Corporation

5. Accelerating the Vehicle

Stepping on the accelerator pedal cuases control pressure to increase on that side of the control piston which tends to move the variable unit wobbler into stroke increasing variable unit displacement. This causes a torque unbalance in the system, and the vehicle accelerates until the road load torque balances the transmission output torque. At that time, steady state operation is achieved and will continue until a new driver input (change of accelerator pedal position or brake pedal application) is received by the control system.

6. Steady State Operation

At steady state operating conditions, the engine supplies the power required to drive the vehicle and make up transmission and flywheel losses. (A small amount of power is transmitted by the planetary to the flywheel to maintain its energy level.) Flywheel speed is governed to the speed which satisfies the requirement that total system energy (vehicle energy + flywheel energy) must be maintained constant. This is accomplished by linking an output and a flywheel driven governor. Their forces sum against a spring whose force in steady state represents the flywheel energy desired for any vehicle speed. This gives the exact require relationship, and is not just an approximation since vehicle kinetic energy and vehicle governor force are proportional to vehicle speed squared, and flywheel kinetic energy and flywheel governor force are proportional to flywheel speed squared. Control system droop may cause slight exceptions to this

relationship, but this will be a function of the type of throttle control used and judgments about cost and energy control accuracy needed.

7. Mode Shift

At 30 MPH, the elements of the mode 2 clutch become synchronous that is, they rotate at the same speed in the same direction. At this time, the V-unit is at full stroke. The shift governor snaps, ports to the shift valve, and shuttles it to the left. The mode 1 clutch is drained, and the mode 2 clutch is pressurized. Control pressure is swapped so that now a signal to accelerate the vehicle will tend to destroke the V-unit through zero and in the limit to the maximum stroke in the opposite direction. Working pressure in the hydraulic units changes sides as well.

8. Dynamic Braking

The spring load on the hydraulic unit control valve tends to slow the vehicle down when the driver takes his foot off the accelerator. Pressure is ported to the side of the control piston which tends to stroke the V-unit in the direction which tends to decelerate the vehicle. If a harder deceleration is desired, linkage from the brake pedal actually applies a force to the hydraulic unit control valve and tends to upset the system torque balance in a way which is just a negative reflection of the acceleration mode of operation. If a still harder deceleration is desired, the vehicle friction brakes will be applied.

9. At Stop

The driver holds his foot on the brake as in a conventional vehicle. If the driver wishes to put the vehicle in neutral or park, all he has to do is simply move the selector lever accordingly. A pressure minimizing situation is set up. The output clutch is drained through the FNR valve to insure that the vehicle won't creep.

All the driver needs to do to shut the system off is simple turn off the ignition. At shutdown, the following sequence of events takes place. Charge pressure drops as the charge pump slows down. The start valve shuttles back to the left. The mode 1 clutch drains through the start valve, and the output clutch drains through the FNR valve. The engine control line drains. As the flywheel chamber comes up to atmospheric pressure, the flywheel and hence the entire system slows down.

10. Reverse

Assuming that the flywheel is initially charged, all the driver need do to back up is put the selector lever is reverse. When he depresses the accelerator, control pressure causes the control piston to go into reverse stroke, creating an unbalance in system torque which causes the transmission output to rotate in the reverse direction.

D. User Operation (From Driver's Point of View)

As far as the driver is concerned, there will be little difference from a conventional automobile system. To illustrate this point, a typical series of operational procedures are outlined below.

1. Start Up

To start the vehicle, it must be put in "park". The engine is started in a conventional manner. However, instead of putting the shift selector in drive or reverse and starting out, the shift selector will be locked in park for a certain period of time (about 45 seconds if the flywheel speed is initially zero) while the control system spins-up the flywheel. Once the flywheel is up to speed, an indicator will tell the driver that the flywheel is up to full energy charge and that the vehicle is ready to go. At this point, the shift to drive or reverse can be made just as in a conventional vehicle, and the vehicle is ready to be driven.

2. Driving

There is very little difference in vehicle operation and driver feel once the vehicle is in operation. The flywheel will supply most of the acceleration and braking, with the engine making up the losses and the service brakes supplying only emergency braking requirements. The amount of acceleration and braking done by the flywheel need not concern the driver. The control system has the task of deciding how much of the system energy is to be supplied or absorbed by the engine,

flywheel, and service brakes. All the driver will need to do is to step on the accelerator and apply the brakes as he would normally.

The accelerator pedal position sets an engine power level just as it does in an automobile with a standard automatic transmission. Thus, the system will have the same feel as a standard automobile; i.e., the vehicle speed will be affected by grade and wind direction.

As in a standard automobile system, the brake pedal position controls deceleration rate and can have the same feel as standard friction brakes.

E. Parameter Optimization

The following is a brief description of some of the main areas in which optimization studies were made:

1. Flywheel Speed Range

Flywheel speed range was found to have little effect on either system performance or transmission mechanical design. Flywheel speed range was finally optimized by planetary gear set structural considerations resulting in a flywheel speed range of 5.8:1. Since energy storage capability is a function of the speed squared, extending the speed range from the specified 3:1 to 5.8:1 reduced the flywheel size approximately 10%.

2. Engine Speed

Transmission gear ratios and speed ranges were optimized as far as

they could be, to permit the engine to run as close as possible to its minimum specific fuel consumption profile across the entire operating range. Care was taken to prevent the engine from becoming power limited where operating at low speeds.

3. Planetary Gear Ratios and Counter Shaft Gear Ratios

These ratios were chosen, or optimized, such that additional gear meshes were not required on the engine input or transmission output shafts.

4. Hydraulic Losses

Hydraulic unit losses were minimized by the following means:

(a) Minimizing the speed range over which the variable displacement unit had to operate

(b) Reduction of hydraulic unit size by running the fixed displacement unit over its full positive to negative speed range twice.

(c) Optimizing the hydraulic unit parameters of displacement, speed and working pressure to give the least losses over the operating range. For example, there are many combinations of these parameters that will yield the same power carrying capacity such as:

(1) Large unit running slow at high pressure

(2) Large unit running fast at low pressure

(3) Small unit running fast at high pressure

5. Control Parameters

Control system was optimized on Sundstrand ESTMN computer program to minimize engine throttle "hunting" or extreme travel in order to achieve the required operation at minimum fuel consumption. There is much additional work that could be done in this area in a more detailed study. Analog computer simulation was carried out to evaluate stability and to investigate control simplification to reduce cost.

F. Installation Considerations

The following is a discussion of the rationale used by Sundstrand in evaluating the various potential installation approaches. The basic trade offs were whether to install the transmission/flywheel assembly in the conventional transmission location or to generate a transaxle configuration.

The first attempt at laying out an energy storing transmission was based upon the assumption that the transmission was to be located in the conventional location, that is, behind the engine and below the familiar hump in the floor between the driver and front seat passenger.

It soon became apparent that this was not an optimum location for the transmission. When the volume required for the transmission and flywheel together was compared with the space available in a typical automobile, it became apparent it would be very difficult to locate the transmission "under foot" without enlarging the floor hump and encroaching on passenger compartment space. The best location for the flywheel in this case appeared to be where the present torque converter or clutch is mounted. This would involve a pierced flywheel, with the engine input to the transmission going through its center.

Midway in the study, careful consideration was given to alternate transmission and flywheel locations. The best place to locate the transmission seemed to be at the rear axle, similar to the configuration of the older Pontiac Tempests. Hence, the design decision was made to go with a transaxle configuration. Arguments for the present transaxle configuration that influenced the decision are outlined below.

Floor Hump

With a transaxle type transmission, the passenger compartment floor hump is eliminated rather than made larger. The floor can be almost flat.

Weight Distribution

The weight distribution in full size American family cars is not ideal. Most of the weight is on the front wheels, and this makes for a vehicle with less than optimum handling characteristics. With the transaxle

Sundstrand Aviation
division of Sundstrand Corporation

configuration more of the total vehicle weight is carried by the rear wheels and handling characteristics should be improved.

Regenerative Braking

The fact that there is more weight on rear wheels also means that in a regenerative braking situation, where power is being developed at the rear wheels and transmitted back to the flywheel, more power can be developed before the rear wheels loose traction. The greater the normal load on the tires, the greater the frictional force they can generate safely. The vehicle, as a system, is capable of accepting more regenerative power if the weight distribution is such that a greater percentage of the total vehicle weight is on the back tires.

Independent Rear Suspension

Independent rear suspension is generally considered to be more expensive than conventional suspension. This was considered to be more than offset by the above advantages. Also, the percentage of vehicle unsprung weight is lower which tends to give better ride and handling characteristics.

G. Description - Alternate Transmission Configuration (8C)

The alternate transmission configuration (8C) evolved from an attempt to improve the fuel consumption of Baseline configuration (8A) over the Federal Driving Cycle. It became apparent late in the study that fuel economy over the Federal Driving Cycle was quite sensitive to the ability of the engine to run at or near its minimum specific fuel consumption condition for any required power level. The first thought was to give the

engine the required freedom of speed range with an additional hydro-mechanical or hydrostatic path. A preliminary investigation indicated that the parasitic losses of this extra path would null any gains realized from operating the engine over its optimum specific fuel consumption range.

So the next logical alternative to meeting the exact minimum fuel consumption curve was to come as close as possible short of introducing another variable speed device. The result of this study was to provide an alternate input which allowed the engine power to flow into the transmission via the variable hydraulic unit element of the compound planetary. For low power levels and low speeds, which comprises most of the Federal Driving Cycle, the engine operates on a more favorable part on the specific fuel consumption map.

Configuration 8C consists of configuration 8A plus:

1) An extra set of transfer gears at the input
2) A friction clutch
3) An over-running clutch
4) A larger input housing

Reference should be made to drawing 2724A-L2 (Appendix K) for a comparison of the mechanical arrangement relative to the Baseline (8A) configuration.

Figure III-10 shows a simplified schematic of the Alternate (8C) transmission configuration. This transmission configuration's gear train is shown schematically on Figure III-11.

The transmission parameters for the (8C) configuration are identical to those called out in Table III-1 for the (8A) configuration except for the weight. The weight of transmission (8C) has been estimated to be 238 lb. (dry), 258 lb. (wet).

It is estimated that the additional complexity of the (8C) configuration would increase the total manufacturing cost by $18.40 in production quantities of 1,000,000 per year, and $27.56 in quantities of 100,000 per year.

II. Flywheel Trade-Offs and Conclusions

The responsibility of supplying design and performance information on the flywheel was that of Lockheed Missile and Space Corporation - Ground Vehicle Division, who were under separate contract with EPA for this work.

The following results (Table III-2) were supplied by Lockheed in response to the flywheel installation requirements supplied by Sundstrand. It should be noted that two sets of data are given. The first set, (A), is for the flywheel shown in outline on the Baseline (8A) transmission layout (Drawing No. 2724A-L1, Appendix K). The second set, (B), is for a flywheel that is lighter and cheaper, but this data came after the layout

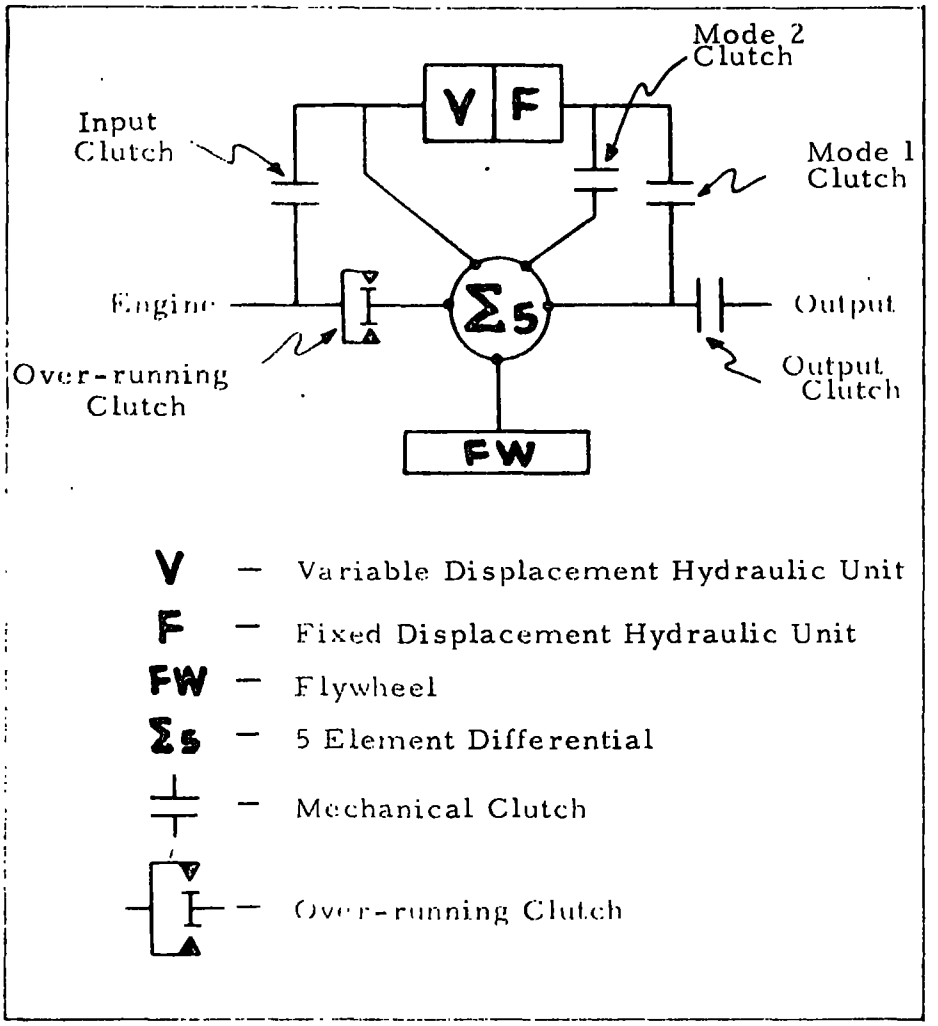

Figure III-10 Simplified Schematic Alternate (8C) Transmission

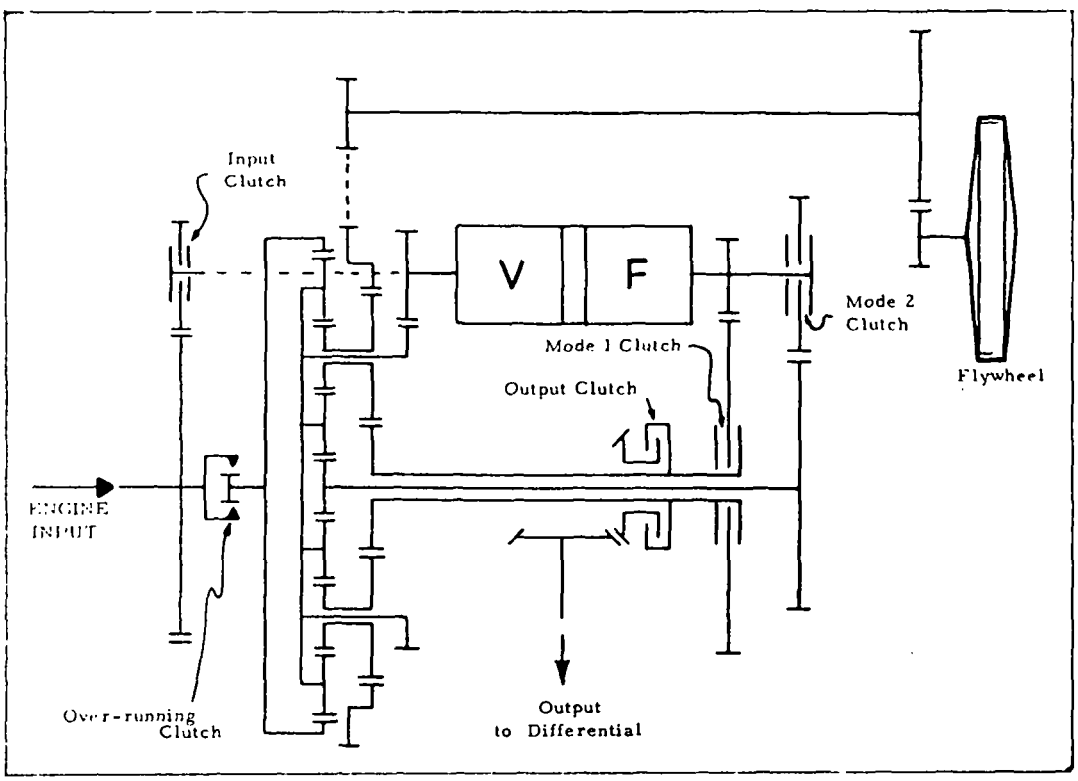

Figure III - 11 Gear Train Schematic - Alternate Transmission Configuration (8C)

TABLE III-2

SUMMARY, FLYWHEEL DATA

NOTE: Weight and cost data includes the flywheel, its containment, bearings, seals, housing, and vacuum pump.

	Flywheel (A)	Flywheel (B)
Flywheel Diameter, in.	10.0	13.06
Estimated Total Weight, lb.	268.53	186.86
Estimated Unit Cost, $		
1,000,000 Per Year	$107.22	$87.12
100,000 Per Year	$114.10	$94.00
Estimated Power Loss, HP		
At 24,000 RPM	1.606	2.421
18,000 RPM	0.830	1.196
12,000 RPM	0.387	0.505
8,000 RPM	0.229	0.267

Further breakdown of this data is given in Appendix U.

drawing had been completed. Flywheel (B) could be used with the transmission as it is presently shown, and its weight and cost are used where comparisons are made.

The flywheel losses that were used in all the performance calculations are shown in Appendix D, and were agreed on between Lockheed and Sundstrand before the finalized losses shown in Table III-2 were available. These lower finalized losses, however, do not greatly effect the vehicle performance. For example, for the first 500 seconds of the Federal Driving Cycle, flywheel (B) losses give .32 MPG better fuel economy than the flywheel losses of Appendix D.

I. Maintainability

It is expected that the transmission should provide no greater maintainability problems then present automotive automatic transmissions.

The only normal maintenance required will be to check the transmission oil level as is now done. Repair or overhaul of the transmission should not require any additional complication. The only "new to the business" component would be the hydraulic units. It would be expected that this assembly would be provided to the garage or overhaul shop as a reworked assembly similar to present torque converter assemblies.

In defining the design, maintainability was considered. In this consideration, such questions as those listed below were used as a check list:

1) Has self-adjustment/calibration been considered?

2) Has maintenance task complexity been reduced?

3) Can a malfunction be easily and quickly recognized?

4) Can maintenance be accomplished with only standard tools, techniques or processes?

5) Can items be installed in only the correct position?

6) Has safety of maintenance personnel and equipment been considered?

7) Are standard parts used wherever possible?

8) Is the unit designed so it does not require special handling?

9) Is the unit designed for easy disassembly and repair?

10) Can subassemblies or modules be tested separately?

11) Are operator indicators available?

J. Noise

The potential noise sources in a hydromechanical transmission are the gears and the hydraulic units. The gears in the recommended configuration will be designed to minimize noise. Tooth profiles and speeds will be similar to present automotive transmissions and should not cause any particularly different problems. The mesh to the flywheel would be given special consideration because of the high speed (24,000 RPM maximum).

The hydraulic units probably represent the major noise source. This source is primarily related to the generation of high pressure from low pressure and vice versa. This process is accomplished within the

hydraulic unit itself - pistons, cylinder block, and port plate. Considerable experience has been gained in the last few years in minimizing porting noise. This is usually accomplished by modifying the ports between the cylinder block and port plate to prevent large, abrupt pressure transients. Another means of minimizing the noise is to limit the maximum working pressure within the unit. In the recommended configuration, the working pressure is limited to 4500 psi, which would only occur with "floored accelerator".

In addition to minimizing the noise generation, efforts would also be aimed at minimizing noise conduction to the outside of the transmission. This would be accomplished by proper placement or isolation from the housing of components seeing high pressure, and the use of a cast iron housing. The cast iron housing, while providing a better support structure from a strength standpoint, also will provide attenuation for noise generated within the unit.

Because noise tends to be in the category of "black art", it is impossible to know what the noise problem will be prior to actual testing of the hardware. However, every design technique to minimize noise would be utilized, and it would be anticipated that the noise requirements of "Vehicle Design Goals - Six Passenger Automobile" will be met.

K. Design Analysis

By far, the majority of components in an automotive transmission are sized by considerations other than material stress such as economy of

manufacture, or requirements of fitting over or around some other component. When weight is not a major consideration, components are often oversized to "keep out of trouble", and no heed is taken or calculations made of the exact margin of safety.

Obvious exceptions to this are gears, highly torqued small diameter or thin walled shafting, bearings that see predictable loads, and clutches (or other forms of friction elements). Appendix V gives the results of sizing this class of component. Bearings were not included. Here, experience and judgment were used as it appeared in all cases there would be no problem in going to a larger size if a detailed analysis of a given duty cycle showed this to be necessary. The hydraulic units are sized by propriatory Sundstrand methods to meet their rated speeds and pressures.

In a study of this type where basic concept and feasibility are of prime importance, it is not appropriate to go into extensive sizing detail analysis. This is especially true when the design is being made by personnel with many years of transmission experience. There are no areas in the transmission that are so critical that any increase in component size, that may be required after a detailed design study, would precipitate any significant cost or weight penalty.

IV. PERFORMANCE

IV. PERFORMANCE

Performance of the selected transmission configuration was calculated using Sundstrand computer programs. Both vehicle performance and transmission efficiency were calculated. It should be noted that the computer programs make use of actual component performance data based upon Sundstrand's extensive experience with a wide variety of hydromechanical transmission types. For example, hydraulic unit efficiencies at various strokes, speeds, and pressures are based on actual experience with similar hydraulic units of like design.

Performance of "typical" torque converter automotive transmission, as well as a non-flywheel hydromechanical transmission was calculated for comparison purposes with the selected flywheel transmission configuration.

Transmission efficiency data was supplied to Lockheed so they could calculate the system fuel consumption with their computer program. The results of their program were in general agreement with those obtained by Sundstrand.

In order to establish a reference point on fuel consumption, calculations were run assuming 100% transmission efficiency for both the flywheel and non-energy storing concepts. Thus, it was possible to determine the minimum fuel consumption achievable regardless of the transmission losses, and make a comparative evaluation between the two concepts.

A. Ground Rules and Assumptions

In establishing the criteria for vehicle performance, Exhibit B-2 entitled "Vehicle Design Goals - Six Passenger Automobile" (Revision B - February 11, 1971) was used. This document is reproduced in Appendix B for reference.

The following ground rules and assumptions based on this document, further data supplied by EPA (referenced below), and Sundstrand judgment were used in the performance calculations of this report.

1. Test vehicle weight = 4300 lb. = W_t
   (Sundstrand-Lockheed mutual agreement)
2. Gross vehicle weight = 5000 lb. = W_g
   (Sundstrand-Lockheed mutual agreement)
3. Vehicle road drag and air resistance losses per Exhibit B-2, paragraph 11 and 12 (see Appendix B).
4. Rear axle ratio of 2.75:1 and a rolling radius of the rear driving wheels for the vehicle of 1.10 feet (assumed by Sundstrand).
5. Total rotating inertia of the tires, wheels, and brakes for all four wheels is 11.2 slug feet squared (assumed by Sundstrand).
6. A 50-50 weight distribution between front and rear axles (assumed by Sundstrand).
7. Ambient air temperature was assumed by mutual agreement with EPA to be 85°F throughout the study.

Although differences in air temperature do make a difference in air drag forces, their inclusion is somewhat meaningless without corresponding data on variation in engine performance with temperature, which was unavailable.

8. Engine accessory losses were calculated from engine speed-torque curves supplied by EPA rather than the constant HP accessory loss figures referenced in the vehicle design goals. The curves used included losses for engine fan, generator, power steering, and air conditioner (see Appendix C).

9. Engine speed-power-specific fuel consumption data supplied by EPA (see Appendix H).

10. Density of fuel used in engine fuel consumption data of 9 above, is 5.75 pounds per gallon (assumed by Sundstrand).

11. Total flywheel losses, included air drag, seal, and bearing losses, and vacuum pump losses were supplied by Lockheed (see Appendix D).

12. Torque converter, and transmission ratio, and spin loss data for a "typical" 3 speed automatic transmission data supplied by EPA (torque converter data given in Appendix R). Shift points for the transmission were assumed by Sundstrand.

13. In calculating driving cycle fuel consumption, the Federal Driving Cycle (FDC) was used. The velocity/time requirements of this driving cycle are shown in Appendix E.

14. In initially establishing the transmission and vehicle performance requirements, the tractive effort versus vehicle speed requirements shown in Appendix F were used. The tractive effort versus speed performance envelope was supplied by EPA.

B. Transmission Efficiency

Efficiency curves for the various transmissions investigated were generated by Sundstrand's computer programs T8H and T8HD2. The selected transmission configuration operates across two distinct modes depending upon the output speed. Program T8H covers the lower output speed range. Program T8HD2 covers the higher speed range. Because of the similarity between the two programs, only program T8H is described in this report. (See Appendix A.)

These two efficiency programs accept as inputs the basic transmission parameters and instantaneous values of vehicle speed and tractive effort. That part of the tractive effort required to drive the vehicle against the road load is input separately from the part of the tractive effort which accelerates the vehicle.

Thus, the program can distinguish between the power that is required from the engine to carry the road load and make up the system losses and the power required from the flywheel to aid in acceleration and deceleration of the vehicle.

Results of computer program T8H for three transmission configurations are shown in Appendix G. The three transmission configurations include 8A (Baseline), 8C (Alternate), and 8A without flywheel (to represent a straight hydromechanical transmission). However, it should be noted this last configuration is not optimized, but simply the 8A transmission as configured less the flywheel.

Figures IV-1, IV-2, and IV-3 show transmission efficiency versus vehicle speed for maximum and part load conditions for each transmission configuration. These three curves are based upon the results of Sundstrand computer programs T8H and T8HD2, and represent transmission efficiencies only with no flywheel losses included.

The transmission efficiency is defined by the following equation:

$$\text{Transmission Efficiency} = \frac{HP_{out}}{HP_{in}} = \frac{HP_{eng} + HP_{FW} - HP_{TL}}{HP_{eng} + HP_{FW}}$$

Where:

$$HP_{TL} = HP_{HYD} + HP_{ACC} + HP_{CL} + HP_{SL} + HP_{GL} = \text{Total HP Loss}$$

HP_{HYD} = Hydraulic Unit HP Loss

HP_{ACC} = Charge Pump HP Loss

HP_{CL} = Clutch HP Loss

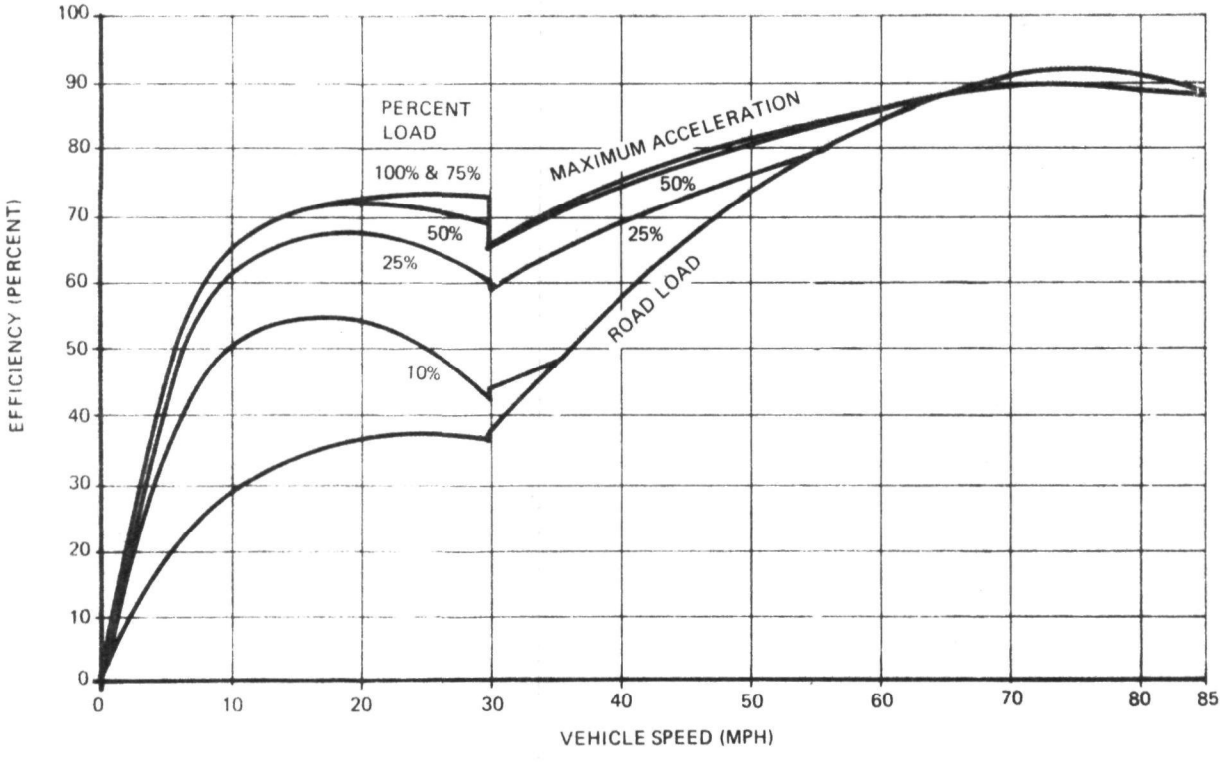

Figure IV - 1 Overall Transmission Efficiency vs. Vehicle Speed

Baseline (8A) Transmission

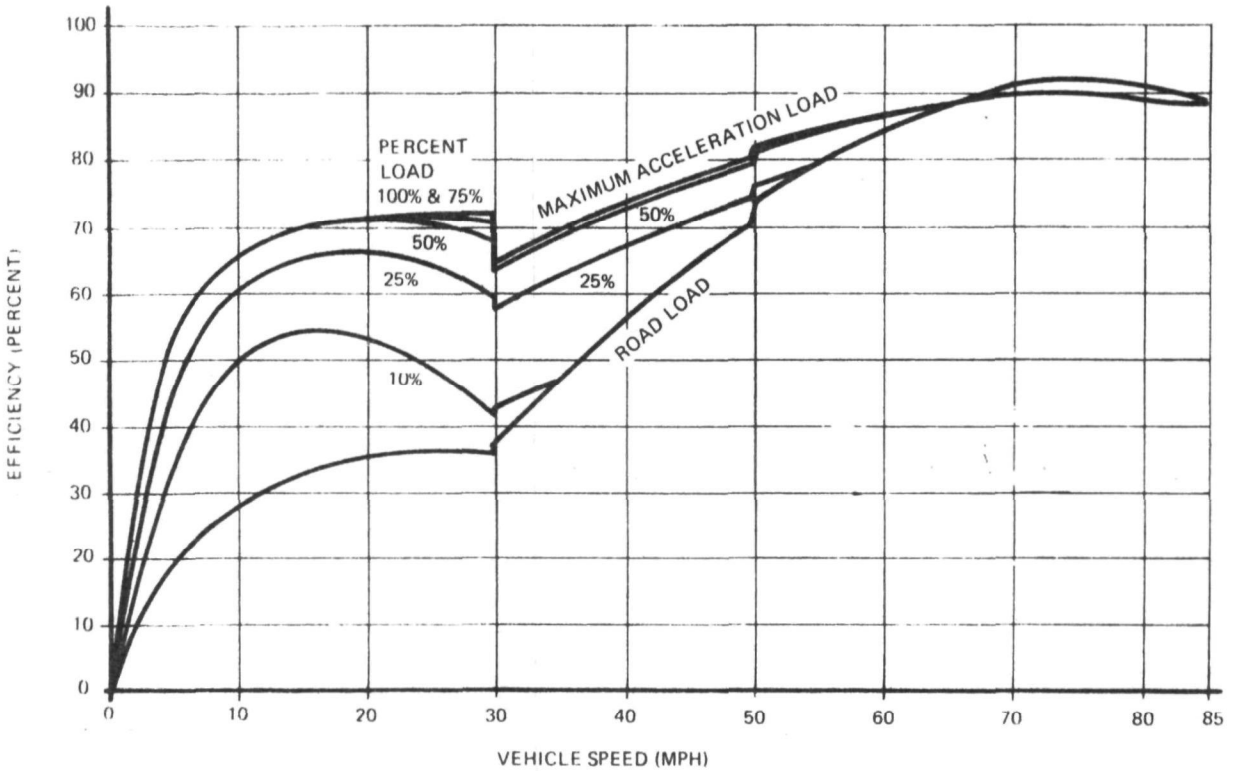

Figure IV - 2 Overall Transmission Efficiency vs. Vehicle Speed

Alternate (8C) Transmission

Sundstrand Aviation
division of Sundstrand Corporation

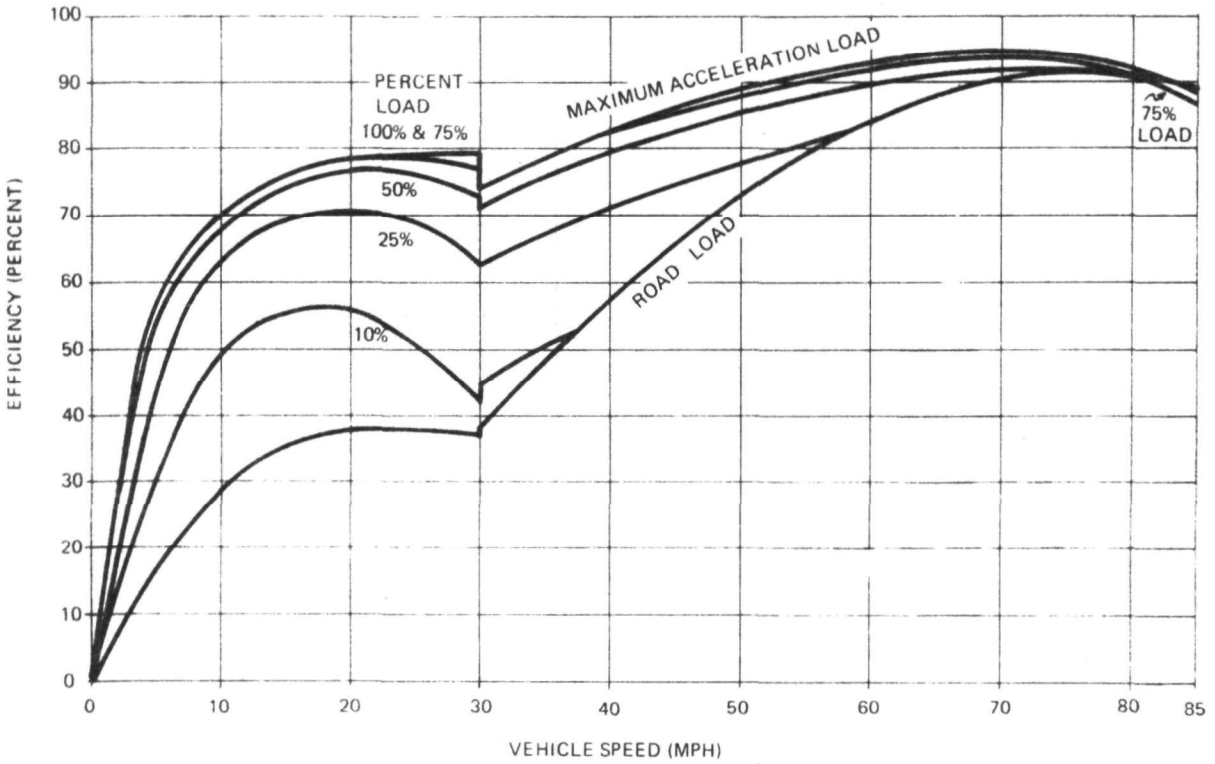

Figure IV - 3 "No Flywheel" Transmission Efficiency vs. Vehicle Speed

Baseline (8A) Transmission (No Flywheel)

HP_{SL} = Summer HP Loss

HP_{GL} = Gear & Bearing HP Loss

HP_{OUT} = Transmission Output HP

HP_{ENG} = Engine HP

HP_{FW} = Flywheel HP (including bearings, seals, windage, and vacuum pump)

For the non-flywheel transmission, the following equation applies:

$$\text{Transmission Efficiency} = \frac{HP_{OUT}}{HP_{IN}} = \frac{HP_{ENG} - HP_{TL}}{HP_{ENG}}$$

For comparative purposes, efficiency curves were prepared for a "typical" 3 speed automatic transmission (Figure IV-4). An existing Sundstrand program was used to calculate this data. Further data from this program is given in Appendix R.

In studying the part load efficiencies, it is noted that for the hydromechanical transmission, efficiency falls off with decreasing load, especially below 25% load. This is because of the increasing relative effect of those losses which are speed dependent and not load dependent.

By contrast, the part load efficiencies for a torque converter transmission increase with decreasing load during the converter range. This is because the losses in a torque converter are proportional to the speed slip, and as slip is proportional to load, it follows that at low loads there is low slip and therefore low losses.

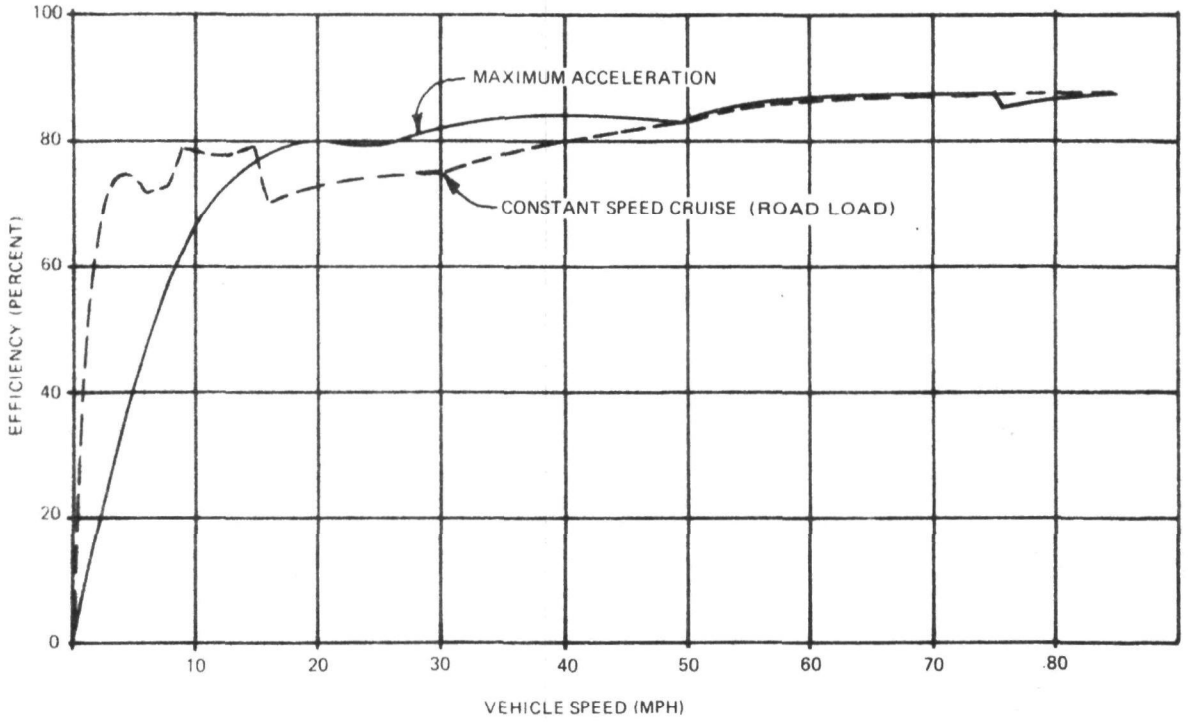

Figure IV - 4 Transmission Efficiency vs. Vehicle Speed

"Typical" 3 Speed Automatic Transmission

TABLE IV-1

GRADE AND ACCELERATION PERFORMANCE COMPARISON

D.O.T. REQUIREMENT		Actual Performance			Reqd. Engine HP	
		Flywheel Trans.		3 Spd.		
Condition (See Appendix B for detailed Specification)	Required Performance	at 4500 psi ①	at 6000 psi ②	Automatic	F/W Trans. at 4500 psi	3 Spd. Automatic
Accel. from standing start						
- Distance in 10 sec.	440 ft (min.)	440③	615	482	60 HP	175 HP
- Time to 60 MPH	13.5 sec. (max.)	12.5	7.7	10.9	59 HP	
Accel. in merging traffic						
- Time 25→70 MPH	15 sec. (max.)	11.3	9.9	11.8	68 HP	175 HP
Accel. - DOT high speed pass.						
- Time to complete	15 sec. (max.)	10.1	8.6	12.0	89 HP	175 HP
- Distance to complete	1400 ft (max.)	1020	904	1175		
Grade Velocity						
- Speed sustained from rest on 30% grade	15 MPH (min.)	16.7④		31	100 HP	82 HP⑧
- Speed sustained, 5% grade	70 MPH (min.)	70⑤		94	100 HP⑦	106 HP⑧
- Speed sustained, 0% grade	85 MPH (min.)	85⑥		114	82 HP	97 HP⑧
(Vehicle Weight 5000 lb)						

Total Vehicle Weight - 4300 lb. except as noted.
Air Conditioning Off.
For Assumed Conditions, see Section IV(A).

REFERENCED NOTES

① Maximum required working pressure of the hydraulic fluid.
② Maximum permissible working pressure of the hydraulic fluid.
③ Working pressure must go to 6000 psi for the first 12 MPH to meet this performance.
④ Engine power limited. Working pressure only 3550 psi at 100 HP.
⑤ Engine power limited. Working pressure only 978 psi at 100 HP.
⑥ Speed is limited by the displacement capability of the variable displacement hydraulic unit. Working pressure only 650 psi.
⑦ This requirement determines the maximum required engine HP.
⑧ Power to meet required (not actual) performance. (Actual performance requires max. HP.)

C. Grade and Acceleration Performance

Vehicle performance was calculated for the requirements of Exhibit B-2, "Vehicle Design Goals - Six Passenger Automobile", with the Baseline (8A) flywheel transmission. (The Alternate (8C) transmission would have essentially the same grade and acceleration performance.)

Performance is shown in Table IV-1 for the transmission with the hydraulic working fluid pressure limited to 4500 psi and 6000 psi. The 4500 psi pressure limit is desirable for maximum transmission life and reliability, and will meet the performance requirements with the exception of the acceleration from standing start to 440 feet in 10 seconds.

At 4500 psi, 420 feet will be covered in 10 seconds. To meet the required 440 feet, the transmission would be pressure limited to 6000 psi for the first 12 MPH, or 1-1/2 seconds.

The transmission is capable of handling 6000 psi, which would provide improved acceleration and deceleration performance, but extended 6000 psi operation would reduce the transmission life. The performance of the flywheel transmission was calculated from Sundstrand program ESTMN (see Appendix P).

Vehicle performance was calculated with the "typical 3 speed automatic transmission for comparison purposes, and is also shown in Table IV-1.

The time versus speed and distance data from which performance for the flywheel and typical 3 speed automatic transmissions was calculated as given in Appendix S.

Table IV-1 highlights the reduced engine power requirements of the flywheel transmission during acceleration. From this, it can be seen that fuel consumption (and presumably engine emissions) would be considerably less for the flywheel transmission under conditions of "hard" acceleration.

As the acceleration requirements lessen, the differences in the required engine power between the flywheel transmission and the 3 speed automatic transmission reduces as the flywheel and transmission losses become a greater part of the total required power. A natural conclusion from this observation is that the "heavier" the acceleration duty, the more favorable the flywheel transmission will appear.

Table IV-1 also shows that the required engine horsepower at the grade cruising conditions is very similar for the flywheel and 3 speed automatic transmissions. This would be expected as the flywheel horsepower is zero at constant speed.

Figure IV-5 shows horsepower versus vehicle speed. Plotted on this curve are road load HP, engine HP during acceleration, and horsepower available to the axle during acceleration. The horsepower to the axle is a sum of the engine horsepower and the flywheel horsepower less the losses in the transmission/flywheel assembly.

Figure IV-6 shows the available HP out of the transmission during acceleration in terms of tractive effort vs. vehicle speed. Also shown on this curve is the tractive effort requirements for 5% and 30% grades.

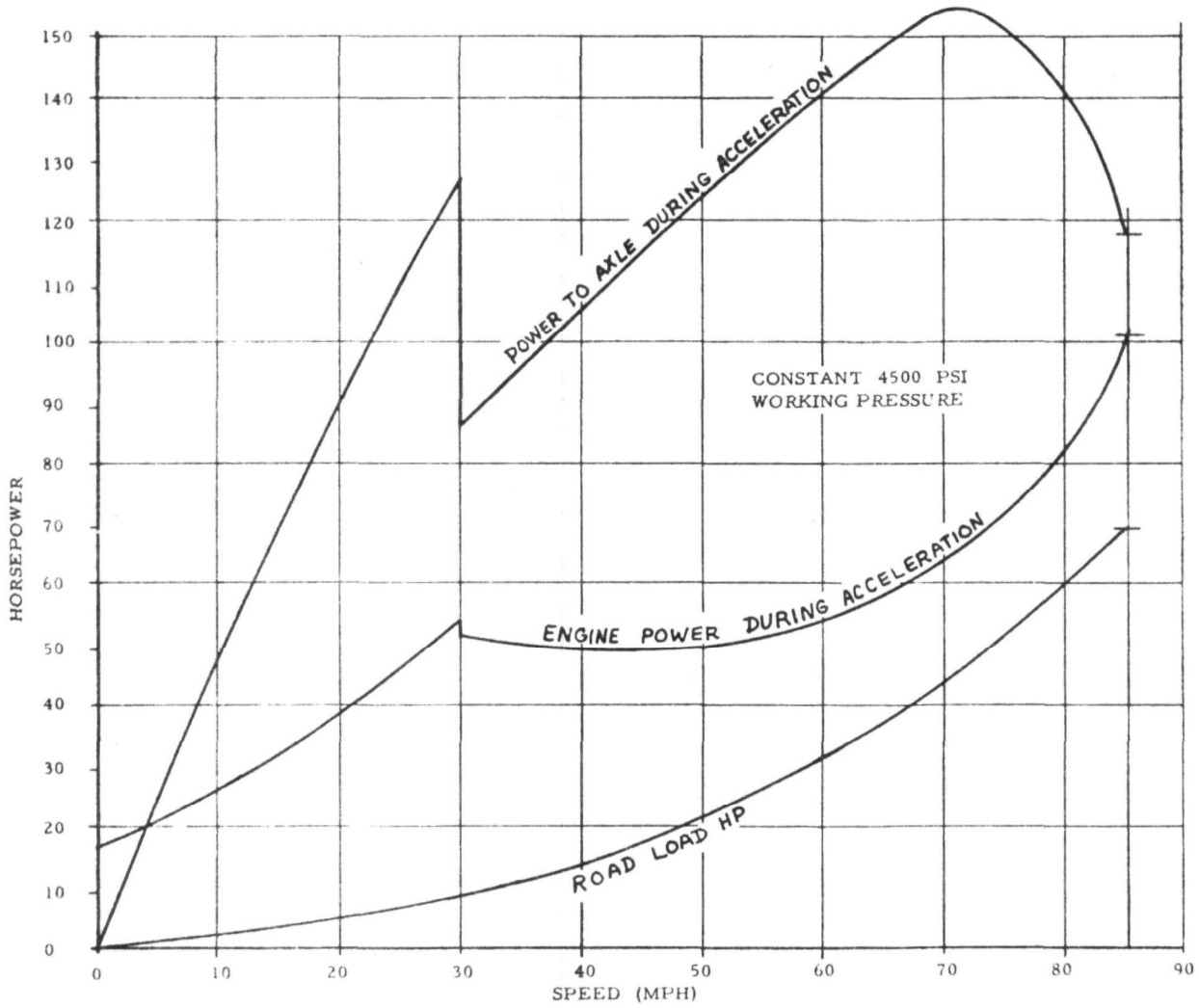

Figure IV - 5 Horsepower vs. Speed

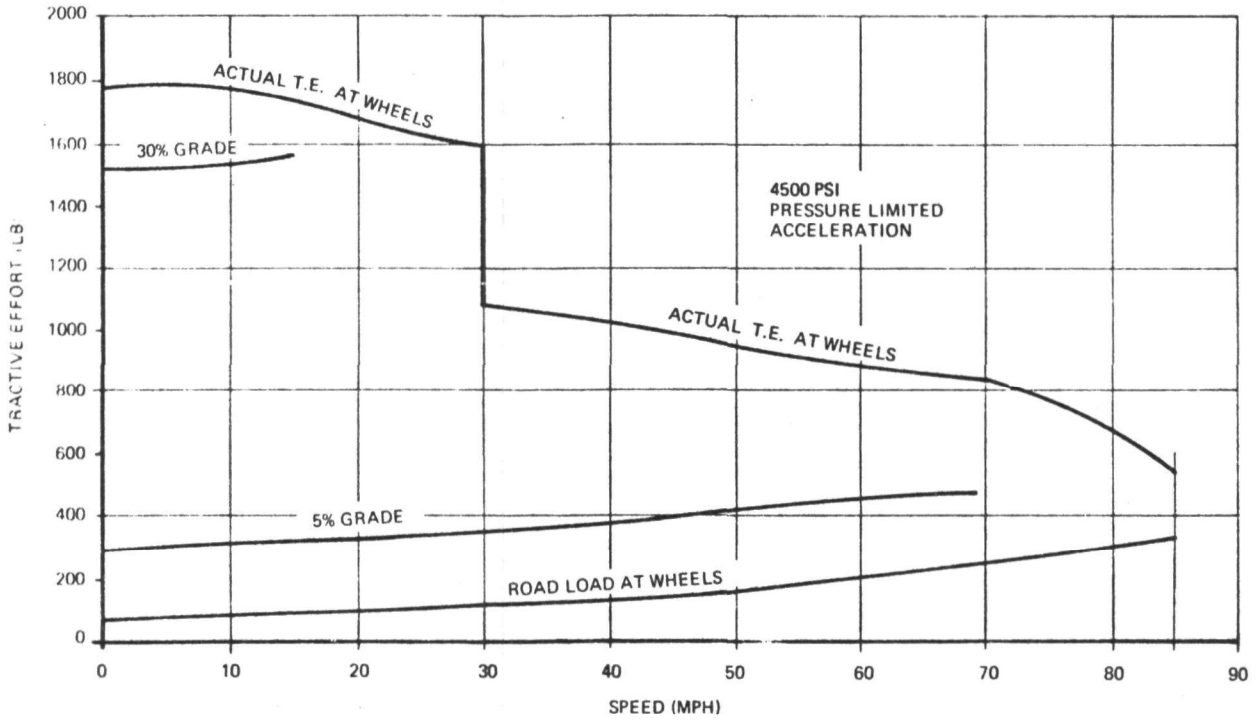

Figure IV - 6 Tractive Effort vs. Speed

D. Constant Speed Fuel Consumption

Constant speed fuel consumption, (in miles per gallon and BTU per mile), was calculated for the Baseline (8A) and alternate (8C) transmission configurations.

For comparison purposes, the steady state fuel consumption for the "typical" 3 speed automatic transmission was also calculated. Constant speed performance for this transmission in the given vehicle was calculated from an existing Sundstrand computer program, and the engine power and speed results were used to calculate fuel economy.

It should be noted that the various fuel consumptions calculated in this report are all based on the specific fuel consumption data for the given engine. A different engine could have a significant difference on vehicle fuel consumption.

Table IV-2 shows the fuel consumption in miles per gallon versus vehicle speed for the baseline (8A) and alternate (8C) flywheel transmissions, and also for the "typical" 3 speed automatic transmission. Transmission (8C) has a lower fuel consumption than transmission (8A) up to approximately 50 MPH. This is provided by configuring the transmission to permit the engine to more closely follow its minimum specific fuel consumption curve. It can also be seen that the "typical" 3 speed automatic transmission has a better fuel economy below 50-60 MPH. Above this figure, the two hydromechanical flywheel transmissions exhibit superior fuel economy. Figure IV-7 shows constant vehicle speed fuel consumption versus vehicle speed.

Sundstrand Aviation
division of Sundstrand Corporation

TABLE IV-2

CONSTANT SPEED FUEL CONSUMPTION - MPG

Constant Speed, MPH	Baseline (8A)		Alternate (8C)		3 Speed Automatic	
	No A/C	With A/C	No A/C	With A/C	No A/C	With A/C
20	9.82	9.05	12.62	11.33	15.58	14.81
30	11.41	10.30	12.47	11.03	17.86	16.20
40	14.42	13.07	15.59	13.95	17.92	16.60
50	16.04	14.80	16.80	15.88	16.92	15.48
60	16.59	15.09	16.59	15.09	14.30	13.21
70	16.25	15.11	16.25	15.11	11.91	11.18
80	13.32	12.32	13.32	12.32	10.34	9.72

NOTE: Vehicle Weight - 4300 lb.
For assumed conditions, see Section IV(A)
A/C = Air Conditioning

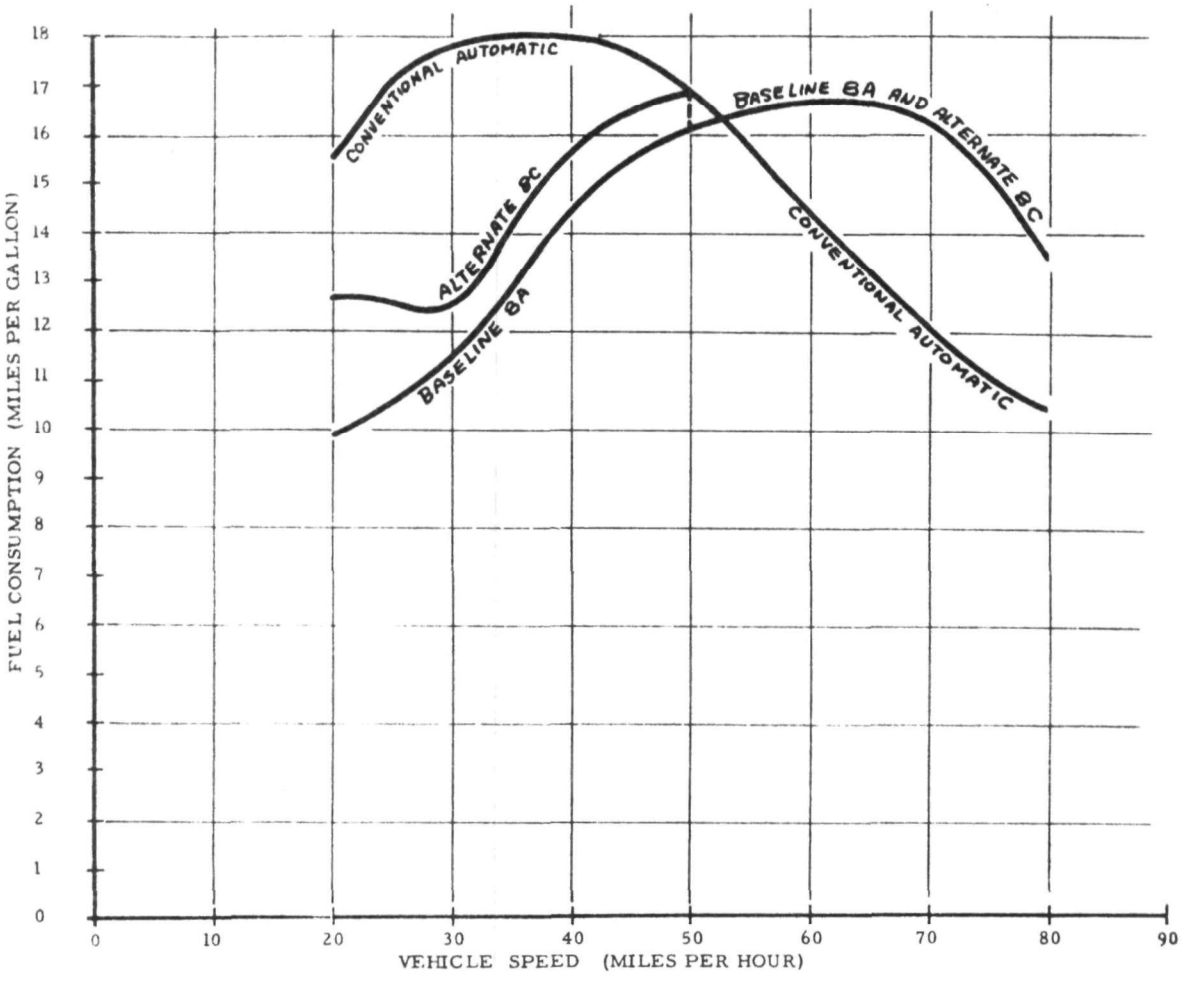

Figure IV-7 Constant Vehicle Speed Fuel Consumption vs. Vehicle Speed

(Air Conditioner Not On)

Table IV-3 shows the fuel economy in BTU per mile for the three transmissions, both with and without air conditioning.

Appendix T shows how the fuel economy figures (miles per gallon and BTU per mile) were calculated.

E. Federal Driving Cycle Fuel Consumption

Fuel consumption in miles per gallon over the Federal Driving Cycle was calculated using Sundstrand computer programs ESTMN and ESTPF for the Baseline (8A) and Alternate (8C) transmission configurations.

For comparison purposes, the Federal Driving Cycle fuel consumption was also calculated for the "typical" 3 speed automatic transmission, and a "straight" hydromechanical transmission (with no flywheel). The fuel economy for the "typical" 3 speed automatic was computed by Lockheed (see Appendix Q) using transmission efficiency and engine speed versus vehicle speed data (full and part load) from an existing Sundstrand computer program. The fuel economy for the "straight" hydromechanical transmission was computed by Lockheed using the transmission efficiency versus vehicle speed data (full and part load) from Sundstrand's T8H computer program.

This "straight" hydromechanical transmission was obtained by removing the flywheel from the Baseline (8A) transmission, thus giving the degree of freedom necessary to always operate the engine at its minimum

TABLE IV-3

CONSTANT SPEED FUEL ECONOMY, BTU/MILE

Constant Speed, MPH	Baseline (8A)		Alternate (8C)		3 Speed Automatic	
	No A/C	With A/C	No A/C	With A/C	No A/C	With A/C
20	2329	2787	2189	2558	1069	1412
30	2333	2680	2257	2503	1171	1434
40	1845	2112	1788	1979	1285	1521
50	1705	1939	1659	1807	1466	1710
60	1765	1960	1765	1960	1862	1862
70	1916	2072	1916	2072	2261	2520
80	2243	2399	2243	2399	2679	2927

NOTE: Vehicle Weight - 4300 lb.
For assumed conditions, see Section IV(A).
A/C = Air Conditioning.

specific fuel consumption conditions. No attempt was made to "optimize" this transmission with regard to arrangement, gear ratios, or hydraulic unit size. Thus, it does not represent the best performance capable by this type of transmission.

In computing the fuel consumption for both the "typical" 3 speed automatic and the "straight" hydromechanical transmissions, the Lockheed program makes the simplifying assumption that under conditions of deceleration the engine is consuming fuel through the carburetor idle circuit at a rate that is purely a function of engine speed, and is independent of actual power required. This required power is the difference between the actual engine accessory power required and the power being supplied to the engine by the wheels.

It should be noted that the fuel consumptions calculated in this report are all based on the specific fuel consumption data for the given engine. A different engine could have a significant effect on vehicle fuel consumption.

Concept Evaluation

In order to evaluate and compare the basic concepts of flywheel energy-storage and nonenergy-storage systems over the Federal Driving Cycle, fuel consumption figures for "ideal" versions of the two concepts were calculated. These calculations assumed a 100% efficient transmission and the ability to operate the given engine at its minimum specific fuel consumption conditions.

The results obtained were computed by Lockheed and are shown in Table IV-4. These results are independent of the transmission type or schematic. They represent the ultimate fuel economy that could be obtained using these two system concepts with the given engine over the Federal Driving Cycle.

TABLE IV-4

CONCEPT EVALUATION - FEDERAL DRIVING CYCLE MPG

Ideal Energy Storage System	
Without Flywheel Losses	16.10 MPG
With Flywheel Losses	14.18 MPG
Ideal Non-Energy Storage System	13.91 MPG

NOTE: (100% efficient transmissions, infinitely variable engine speed - vehicle speed ratio. Vehicle weight 4300 lb. The engine accessory losses exclude the air conditioner, and are defined along with all the other assumptions in Section IV(C).

In evaluating these results, it must be remembered that the energy-storage system stores energy during vehicle deceleration that would otherwise be dissipated in the vehicle brakes or in engine friction horsepower. The very small difference in fuel consumption figures in Table IV-4 is an indication that for this type of vehicle, over the Federal Driving Cycle, the amount of energy that is available for storage and re-use is small. Thus, the maximum available benefits in terms of fuel economy from regeneration are very small.

Transmission Evaluation

Table IV-5 summarizes the Federal Driving Cycle fuel consumption for the Baseline (8A) and Alternate (8C) transmissions and for the hydro-mechanical and tyical 3 speed automatic transmissions. Also shown are fuel consumption figures for "ideal" (100% efficient) versions of each transmission. The engine speed-vehicle speed characteristics for each transmission were not disturbed in these "ideal" cases, so the

TABLE IV-5

TRANSMISSION EVALUATION -

FEDERAL DRIVING CYCLE MPG

	Flywheel Energy - Storing Transmission		Non Energy-Storing Transmission	
	Baseline (8A)	Alternate (8C)	Hydro-Mech.	3 Speed Auto.
"Real" (Actual transmission losses)	7.96	9.26	10.58	11.14
"Ideal" (Zero transmission losses, Flywheel losses are included)	9.78	12.66	13.91	11.99

NOTE: Vehicle weight - 4300 lb. The engine accessory losses exclude the air conditioner, and are defined along with all the other basic assumptions in Section IV(C).

results are dependent on each basic transmission schematic, and not just the basic system concept. The "ideal" figures then represent the most favorable results that could be obtained for that type of system if there were no losses in the transmission.

It is interesting to note that there is little difference between the fuel consumption for the "real" and "ideal" conditions for the 3 speed automatic transmission. This difference is less than that expected from looking at just transmission efficiencies. Because the engine power requirements are different for the two conditions, the engine fuel consumption is different. At the lower power level (ideal transmission) the specific fuel consumption is greater than at the higher power level (real transmission).

In evaluating these results, the following conclusions were made:

1. The Alternate (8C) transmission has a better fuel economy than the Baseline (8A). (This is also true for constant speed operation - See Section IV(D).)

   For this reason, the Alternate (8C) transmission was included in this report. This improvement in fuel economy comes, however, at a price and weight penalty (see Section III(G)) which must be considered in comparing the two versions.

2. Both of the nonenergy-storing transmissions give better actual fuel consumption than the two flywheel transmissions. This indicates that the "cost" of storing this available energy (in terms of transmission and flywheel losses) is comparable or greater in magnitude than the amount of storable energy itself.

3. Considerable improvement in the fuel consumption for the hydromechanical transmission would be expected with proper optimization in the absence of the flywheel.

Results with an Engine Driven Air Conditioner

The fuel consumption for the flywheel transmissions over the Federal Driving Cycle was also calculated with inclusion of an air conditioner in the engine accessory losses. The results given below include all the transmission and flywheel losses and are comparable with the values for the "real" transmissions given above.

Baseline (8A) ..... 7.28 MPG

Alternate (8C) ..... 8.33 MPG

F. Tractive Effort Limits

In addition to engine and flywheel size, two other parameters limit the acceleration and deceleration performance of the vehicle. These parameters are the road adhesion of the tires and the torque/speed output

capability of the transmission.

Figure IV-8 shows the tractive effort capability of the vehicle at various values of tractive coefficient. Typical automotive tires on dry pavement have a tractive coefficient of 0.8. The reason for different curves for acceleration and deceleration is due to the shift in vehicle weight distribution between front and rear wheels during these two modes of operation.

Figure IV-9 gives the performance limits of the Baseline (8A) transmission configuration as a function of tractive effort versus vehicle speed. Both acceleration and deceleration limits are shown. The discontinuity in the curves occurs at the transmission shift point. The curves are based on allowing the hydraulic system pressure to go to 6000 psi. At 6000 psi system pressure, the transmission will greatly exceed the performance requirements of the vehicle. For life, noise, and reliability reasons, it is recommended that the system pressure be limited to 4500 psi.

G. Regenerative Braking

Deceleration of a standard automobile is normally accomplished by dissipating the kinetic energy of the vehicle. This energy is dissipated as either friction horsepower in the engine or in the form of heat in the friction brakes.

The apparent advantage of a hybrid propulsion system is that it is capable of storing this kinetic energy in a flywheel during deceleration and returning it to the wheels upon demand.

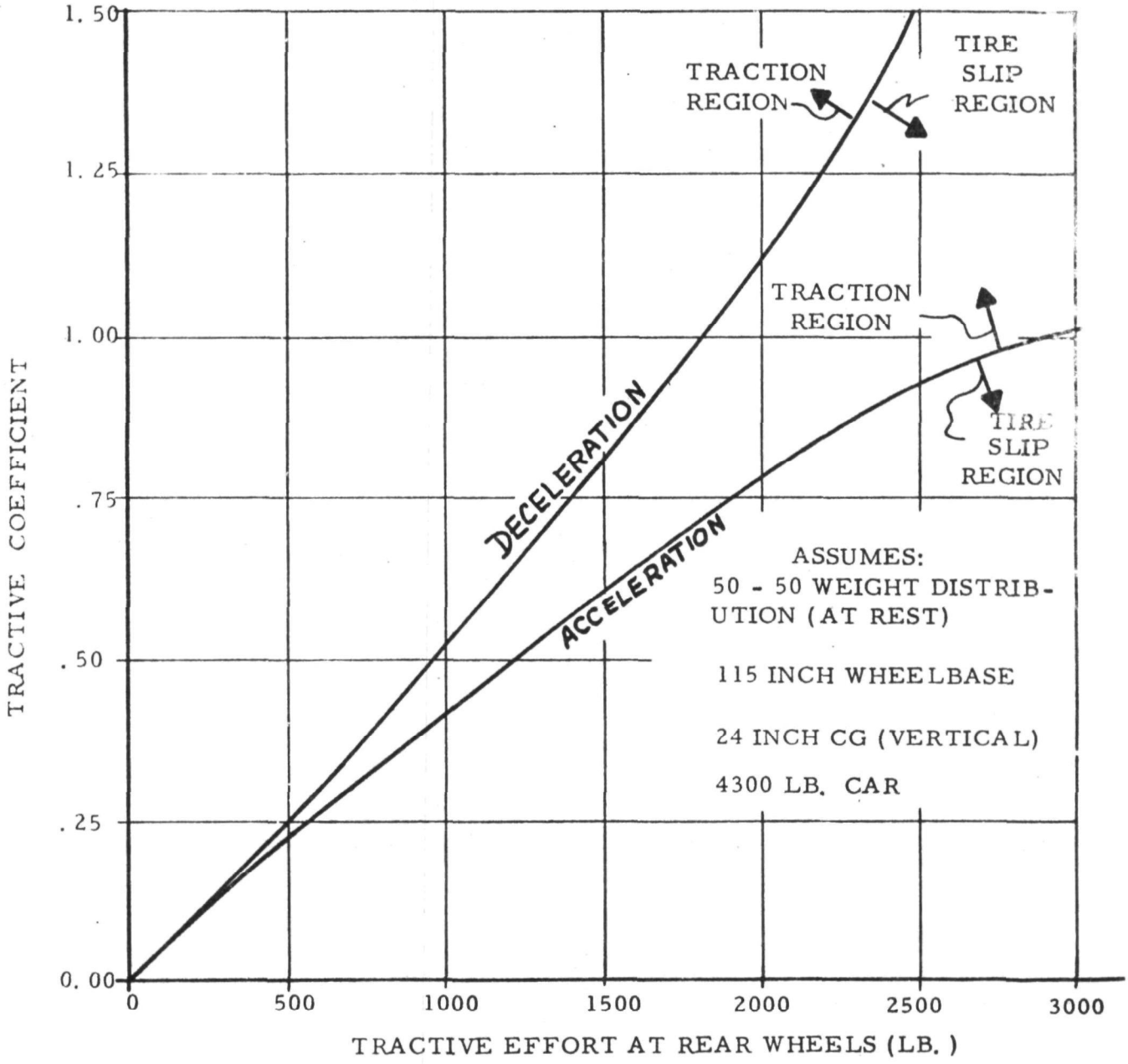

Figure IV-8 Tractive Effort vs. Coefficient of Traction

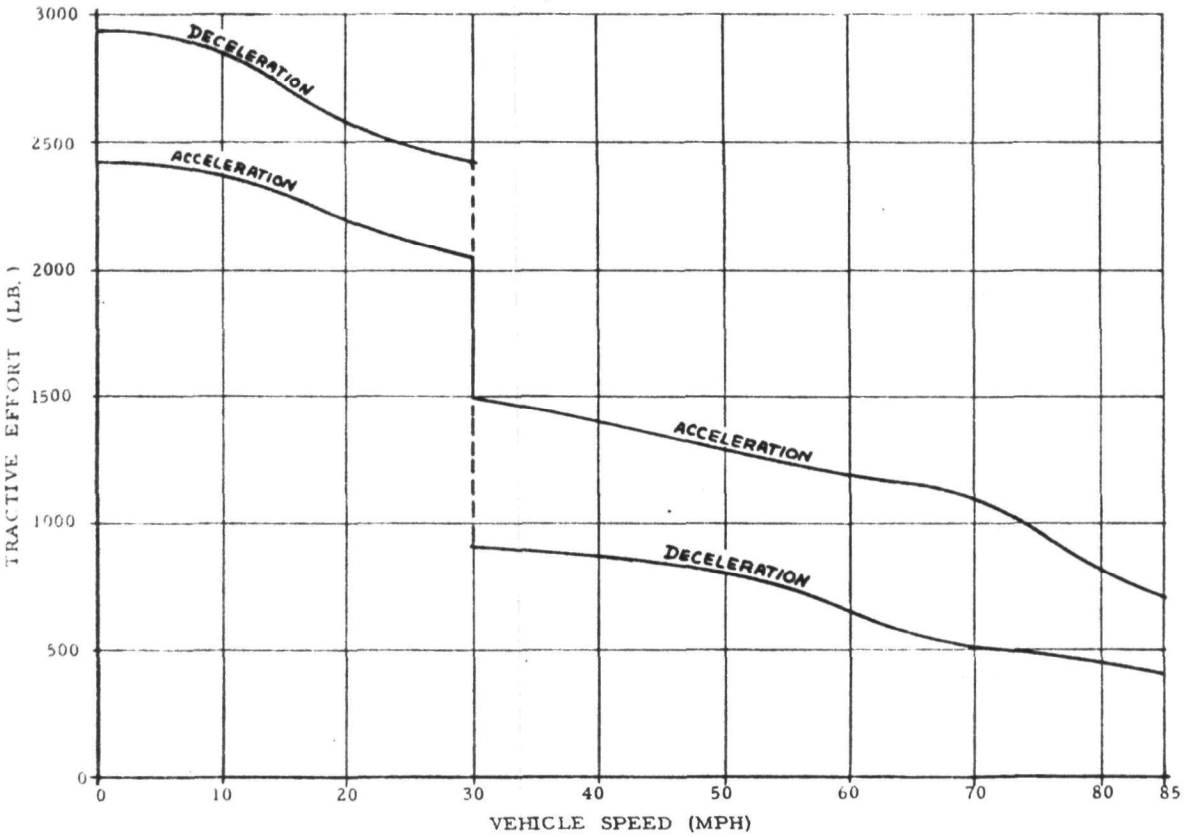

Figure IV - 9 Performance Limits - Tractive Effort vs. Vehicle Speed

Pressure Limited @ 6000 PSI

In the ideal case, this system is nondissipative, the deceleration energy is conserved, and all of the energy returned to the wheels for acceleration. In the real world, there are losses and the feasibility of a hybrid/flywheel transmission depends upon minimizing these losses without making the transmission cost prohibitive.

Figure IV-10 shows the braking horsepower the wheels are capable of transmitting, (assuming a 0.8 tractive coefficient), and the braking horsepower the transmission can transmit to the flywheel. Below 30 MPH, the transmission is capable of absorbing all of the power that the wheels can transmit. Above 30 MPH, assistance from the vehicle's friction brakes is required to decelerate the vehicle up to the traction limits of the wheels.

Figure IV-11 shows the overall transmission efficiency of the baseline (8A) configuration during both acceleration and deceleration. These curves are based on maximum power being transmitted and the system hydraulic pressure limited to 6000 psi.

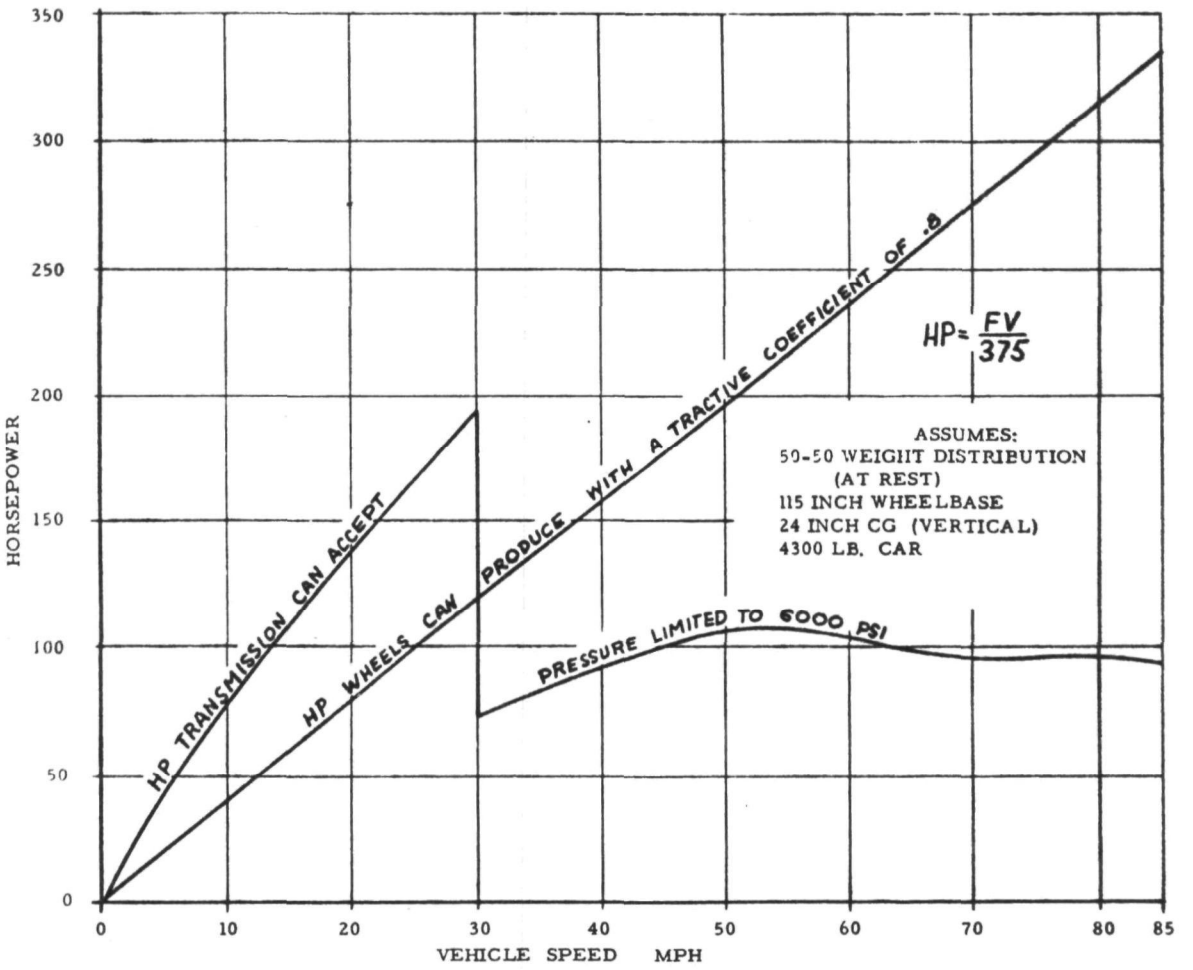

Figure IV-10 Limiting Transmission Braking Horsepower and Limiting Wheel Braking Horsepower vs. Vehicle Speed

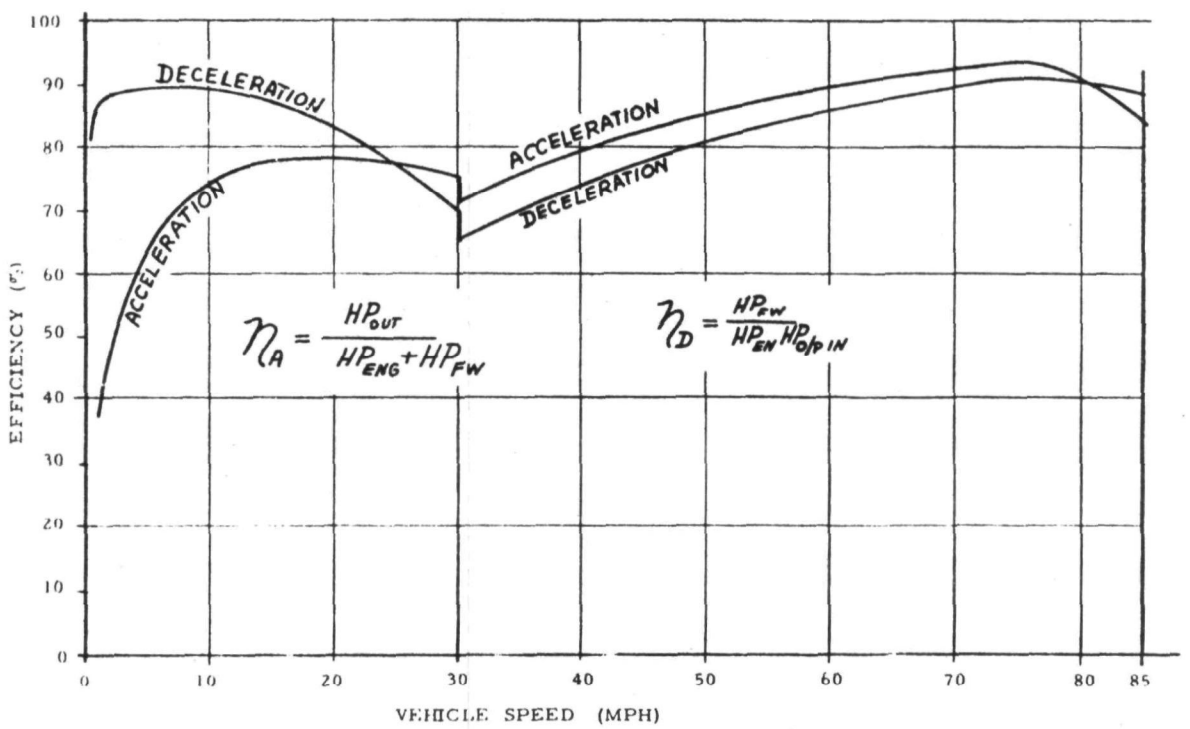

Figure IV-11 Overall Transmission Efficiency

(8A Configuration - Pressure Limited @ 6000 PSI)

V. CONTROL SYSTEM ANALYSIS

V. Control System Analysis

A detailed control analysis was carried out during this study. The control system selection is very sensitive to the actual transmission schematic and the mechanical relationship between transmission components. During the evaluation of various transmission schematics the general impact of control complexity was assessed and used as a criteria for schematic rejection.

Actual control system analysis had to wait until the final transmission schematic was selected. Once the baseline (8A) transmission was selected, the control system was designed and analyzed in depth. Due to the magnitude of the task, only the controls for the baseline (8A) transmission were designed and analyzed.

The baseline (8A) transmission controls are shown in layout/schematic form a drawing 2724A-L3 in Appendix K. Reference should be made to this drawing for assistance in understanding the function and relationship between components.

This section of the report deals with the general philosophy regarding control system approach, control system block diagram, safety analysis, stability analysis and pathological analysis. Operation of the controls was previously covered in Section III, "Transmission Description", of this report.

A. Control System Approach

General

The type of transmission and the method of control are inter-related. There are three basic speed variables in the transmission system: vehicle speed, flywheel speed, and engine speed. Maintaining constant system energy dictates that flywheel speed be a function of vehicle speed. The relationship between engine and vehicle, flywheel and vehicle, and engine and flywheel can be dependent, independent, or interdependent. The transmission presented in this report is an interdependent system in all three links. This means the speed of any element of the transmission is a function of the speed of the other elements.

The control system needs to consider engine characteristics such as fuel consumption, emissions, and noise, operation characteristics, and vehicle requirements of acceleration, cruise, and dynamic braking. It needs to be of a design that can be manufactured for a competitive price, easily adjusted and maintained, reliable, and safe.

Types of Control

Transmission control can be accomplished by the use of a speed control, torque control or combination of both. With the speed control, the speed is called for directly by the input signal. A typical example of this would be a hydrostatic powered garden tractor. The driver moves a lever to go forward or reverse. The farther he moves the lever, the faster the vehicle goes. The position of the lever dictates the vehicle speed and the

vehicle continues to move at that speed within the limits of available HP until a new lever position is selected.

With torque control, the control input signal calls for a torque or horsepower from the power train. The output speed will then adjust to a value where the load torque and power equals that developed by the power train.

An example of a torque control is a present conventional automotive automatic transmission. The driver signal from the accelerator pedal sets a certain engine torque. The transmission (converter plus gear meshes) will adjust its ratio and corresponding vehicle speed until the wheel torque and horsepower matches that being transmitted from the engine to the wheels.

The transmission for the heat engine/flywheel system as presented in this report contains a hybrid system utilizing both torque and speed control.

From a user's standpoint, torque control is much more natural in that its reaction, feel, and operation is like current automobiles. Also with torque control, large changes in the input signal do not impose excessive torque transients on the system.

For example, with a speed control system, a step change of the input signal - calling for a step change of the controlled speed will theoretically call for an infinite torque to be applied. The hybrid/flywheel transmission requires speed control for the flywheel in order to maintain constant kinetic energy in the system. This is acceptable since only a speed relationship

is being maintained, the inertias involved are large, and no rapid change of speed is required. Control of vehicle speed is accomplished by what is essentially a torque control.

The function of the engine is to supply power to the accessories, to supply road load power, and to make up system losses in order to maintain a constant system energy. Fuel consumption and emission generation are a function of horsepower required. The engine control is essentially a torque (or power) control which regulates the engine power and therefore the fuel consumption and emission generation.

It should be noted that the vehicle, flywheel, and engine controls cannot operate independently. The driver, through the accelerator pedal will call for a power level that will be reflected to the wheels as a tractive effort. This tractive effort will accelerate or decelerate the vehicle until the road load (rolling resistance plus wind resistance) equals that being generated. This torque balance point represents a given vehicle speed. At the same time, the flywheel speed will be adjusted as a function of vehicle speed always striving to maintain constant kinetic energy in the system.

Driver Controls

The only driver controls required for the operation of the flywheel/transmisstion system are:

(1) Selector lever with positions for forward, reverse, neutral, and park

(2) Accelerator pedal

(3) Brake pedal

The selector lever will provide for the direction of the vehicle as well as a neutral and park position. The accelerator pedal will control the vehicle speed and acceleration, and mild levels of regenerative braking. The brake pedal will control moderate to heavy levels of regenerative braking. Operation of the heat engine, flywheel, and transmission will be integrated from those inputs.

Control System Design

For the transmission described in this report, a control system was designed based upon Sundstrand's experience in hydromechanical and hydrostatic transmissions used in trucks, off-the-road vehicles, and constant speed drives used in aircraft.

The transmission and its control system was simulated as a dynamic model in two separate computer studies. One model could be described as a digital hybrid program, although it was run on a digital computer, it was a continuous simulation. (Reference Appendix P.) This model actually simulated the control system which "drove" the vehicle/power train system over any course and was used basically to evaluate the system performance over the Federal Driving Cycle. As well as vehicle performance evaluation, this also gave insight into control system response and stability, and effect on vehicle performance.

The second dynamic model was an analog computer simulation which was written to further verify that the stability of the system would not be a problem and that the response rates would be reasonable. A manually operated "foot pedal" was used in conjunction with the simulation to obtain some "man in the loop" data to determine the probability of operator induced instability. This approach has been used previously with success in simulating the unpredictability of system input.

In effect, the engineer "drove the computer" through the same controls he would have in the automobile. The computer simulated the complete propulsion system and load conditions. The control system components were optimized to the extent that time would allow to produce the best performance with the minimum complexity. (Reference Appendix M.)

The control system as presented in this report was designed in accordance with the results of these studies. A comparison of hydraulic, electric, and mechanical components for each element of the control system was made and selection was made on the basis of cost, reliability, and safety.

B. Block Diagram of the System

Figure V-1 is a simplified block diagram showing the main components of the vehicle/power train system. Inside each rectangle is the name of the component or group of components which perform the functions described herein. A heavy line indicates that there is power transmitted between the two components connected by that line. The direction of the arrow indicates which direction the power may flow in that link. The light lines

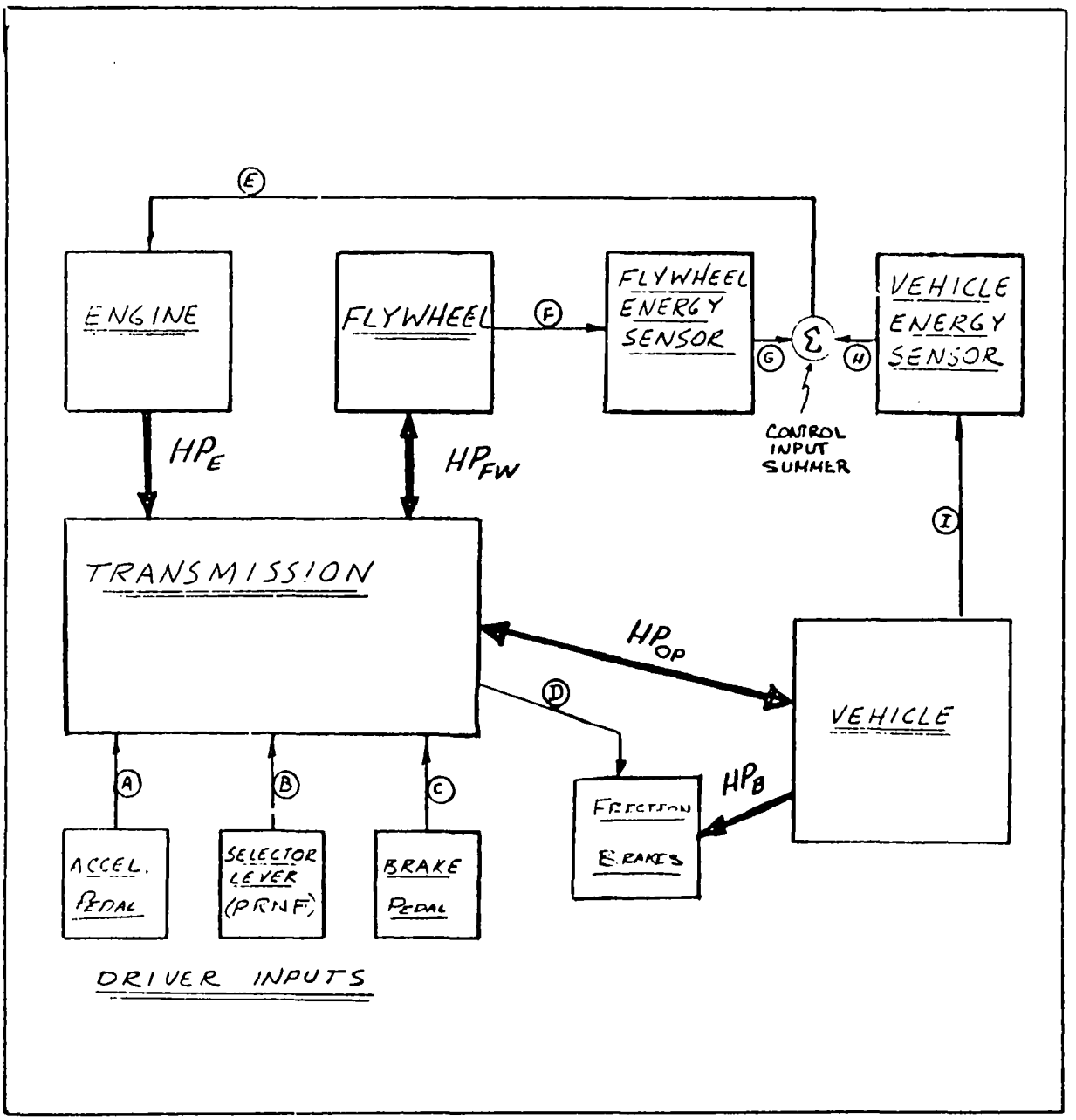

Figure V-1 Energy Storage Transmission Block Diagram

indicate that control signals are transmitted between the components connected by the lines, and the arrows indicate the direction of signal travel. The components that make up the block diagram are described below according to the function they perform.

The engine supplies power to carry the road load and make up system losses to maintain constant system energy. A signal in control link E causes the engine to input power to the transmission through the engine power link.

The flywheel supplies power for acceleration and accepts power from the transmission through the flywheel power link. Control link F informs the control system just exactly how much energy is in the flywheel at any instant in time.

The vehicle, of course, is the mass which must be accelerated and whose speed is regulated. Control link I communicates to the control system the amount of energy in the vehicle at any instant.

The flywheel energy sensor, control links G and H, the vehicle energy sensor, and the control input summer accept the energy level inputs from the flywheel and the vehicle and decide whether or not the constant energy criterion is being met. If not, a signal is sent in control loop E which changes the power level of the engine. The driver inputs to the transmission are through control links A, B, and C.

Friction brakes, although they would not normally be used, are still required for a panic stop. If the regenerative horsepower into the transmission reaches the level where any increase in horsepower would cause transmission damage, signal link D will start to apply the friction brakes. The brake horsepower link would then transmit vehicle power to the friction brakes.

The transmission itself receives the operator inputs from the accelerator pedal, selector lever, and brake pedal, as well as the torque reactions from the engine, flywheel, and output. It strives to achieve an equilibrium between what the driver is asking the vehicle to do and what it is actually doing. Once it has achieved this balance, the system will operate at steady state conditions until the next driver signal is given or until road conditions change.

C. Stability Analysis Energy Storage Transmission

The analog analysis shows the transmission and control work as designed and are basically stable in the maneuvers analyzed. These were (1) full throttle acceleration and (2) braking. Part throttle maneuvers were not analyzed since it was felt they would reveal very little about stability not shown by full throttle simulation. Input to the throttle was applied in an infinite step rather than manually as with a foot pedal for the same reason and to keep solutions consistent.

The only instability which showed up was during addition of drag torque to the flywheel. This was solved by modifying the engine controls by

putting the engine throttle under direct control of the energy governors. This eliminated an intermediate integration of the signal. In the real world, this would probably mean elimination of the engine governor. This is probably feasible but will require further study. This approach would probably result in a droop in flywheel speed and slight deviation from constant energy criteria. This is probably acceptable as it is not really necessary to maintain a tight tolerance on constant total kinetic energy.

The traces displayed in Appendix M are of the stable (no engine governor) configuration, and show both vehicle acceleration and deceleration.

D. Safety Analysis

A safety study was carried out to establish the consequences associated with control system component failure. The results of this study are outlined in the following paragraphs. Reference should be made to the control circuit schematic (drawing 2724A-L3) located in Appendix K for definition of the various control elements discussed.

Governor Failure

The vehicle governor and the flywheel governor together make up the constant energy portion of the control system. If the vehicle governor sticks, the result would be a tendency for the vehicle to accelerate and the flywheel speed to adjust to some speed other than the correct speed to maintain constant total kinetic energy. Failure of the vehicle governor would not, however, cause an overspeed of the flywheel.

Sundstrand Aviation
division of Sundstrand Corporation

If the flywheel governor seizes, however, the flywheel and the vehicle are both likely to accelerate. Since there is no feedback to lower the engine power level when maximum flywheel speed is reached, the flywheel is likely to overspeed.

While seizure of the vehicle governor is not catastrophic, flywheel governor seizure could be. Prior to any further development of this type transmission, the flywheel governor would be redesigned so that the engine control port would be drained in the event of a failure of the flywheel drive train. This fail safe configuration is easy to produce and is common practice on aircraft hydrostatic transmission governor systems.

If the shift governor seizes in mode 1, the only effect will be that the vehicle speed would be limited to the maximum speed in mode 1 - 30 mph. If the shift governor should seize in mode 2, the mode 2 clutch would drain, the mode 1 clutch would engage, and the variable displacement hydraulic unit displacement control would reverse. This would tend to slow the vehicle and probably overheat and fail the mode 1 clutch. It could also stall the engine and overpressure the hydraulic units.

There would be no immediate risk to operator other than the vehicle suddenly slowing when he did not expect it. It would be advisable to redesign the shift circuit to prevent hardware damage in the event of shift governor seizure prior to any further development on this transmission.

Charge Valve and Pump

If the charge relief valve should stick open, or the charge relief valve spring should fail, or the charge pump itself should fail, a loss of supply pressure would result. The start valve would shuttle and the output and mode clutches would drain resulting in a loss of propulsion. The engine would slow down toward idle speed due to loss of signal from the governors. Any failure of this type would not cause any threat to operator safety.

Clutch Pressure Regulator Valve

The clutch pressure valve serves only to prevent the clutches from being applied so hard during flywheel windup that they tend to swamp the engine. The engine can only generate a certain amount of power. Therefore, the clutches used in conjunction with flywheel spin up must be applied with less than maximum pressure. If the clutch valve sticks open, the only result will be that the engine will stall during flywheel spin-up.

Park Valve

If the park valve is stuck in park, the working pressure will always tend to be minimized and propulsion will be impossible. If the park valve is stuck in the forward, neutral, or reverse position, it will be impossible to start the engine.

Forward, Neutral, and Reverse Valve

If the forward, neutral, and reverse valve should stick, it would be impossible to start the engine. If the engine was running at the time the

Sundstrand Aviation
division of Sundstrand Corporation

forward, neutral, and reverse valve stuck, the transmission would function normally until a shift from one direction of vehicle operation to the other was attempted. There it would be discovered that the shift selector couldn't be moved.

Shift Valve

If the shift valve sticks to the right, the only effect will be that the vehicle speed would be limited to the speed range of the transmission in mode 1, which is 30 mph. If the shift valve should stick to the left, the vehicle would not decelerate below 30 mph unless the operator steps on the brake pedal hard enough so that the vehicle friction brakes override the transmission output.

Hydraulic Unit Control Reversing Valve

The function of the control reversing valve is to reverse control pressure to the variable unit displacement control piston to allow the variable displacement unit to be stroked in the opposite direction. Stroke must be increased to 30 mph and then decreased through zero stroke to full stroke in the opposite direction from 30 - 85 mph. If the control reversing valve sticks to the right in mode 1, there will be no effect. It will be impossible to go faster than 30 mph because the variable unit stroke will just try to increase and it reaches its stop at 30 mph. If the control reversing valve sticks to the left in mode 2, there will be no effect. When the downshift to mode 1 is made, the vehicle won't decelerate below 30 mph unless the brakes are applied with enough force to overcome

transmission output. Internal transmission damage could be avoided if the shift selector lever is moved to neutral during this emergency stop procedure, but the vehicle can be stopped safely regardless of whether or not the transmission is in neutral.

Start Valve

If the start valve should stick to the left, it would be impossible to accelerate the flywheel during start-up. If the start valve should stick to the right, nothing out of the ordinary would happen while running or shutting down. But the next time an attempt was made to start the system, it is likely that the engine would not sustain because the output and mode 1 clutches would apply as soon as charge pressure came up.

Conclusion

The control area which requires the most attention from a safety point of view is the flywheel governor. A seizure could cause an overspeed. A fail-safe governor would be implemented, and an overspeed shutdown device made part of the flywheel assembly. This would be analyzed in depth prior to any further transmission development.

Of secondary importance are the shift governor, shift valve, and hydraulic unit control reversing valve. They can fail in such a way that the system would not want to decelerate below 30 mph. However, the transmission can be overridden with the brake pedal.

Failure of the constant energy control system was also judged to be of secondary importance because the tendency to accelerate can be overridden by the brake, or prevented by switching off the ignition.

E. "Pathological" Analysis

This analysis was carried out to establish the consequences of operator error in terms of safety and the likelihood of hardware damage.

Shifting Before The Flywheel Is Up To Speed During Start-Up

It is necessary to bring the flywheel up to its normal operating speed before normal vehicle operation is initiated. If the driver should become impatient during start-up and force the selector lever from the park position to one of the other positions, the vehicle could lurch and internal transmission damage could result.

This is a remote possibility because once the system starts to accelerate the flywheel, a large torque reaction is set up at the parking pawl which would make it extremely difficult to move the selector lever.

If the selector lever were to be forced from the park position to the neutral position during the start-up sequence, the flywheel would continue to accelerate. However, the output clutch would be drained placing full responsibility for carrying the reflected engine/flywheel torque on the mode 1 clutch. (Normally, this reaction is shared by both the output and mode 1 clutch.) Consequently, the mode 1 clutch might be damaged by overheating.

If the selector lever were forced from park position to forward position during the start-up sequence, the vehicle will lurch forward, presenting a hazard. If the driver applies the brakes, it is likely that the output clutch would be damaged by overheating.

If the selector lever were forced from park position to reverse position during the start-up, the vehicle will lurch backward. Whether or not the vehicle's friction brakes are applied, the mode 1 clutch is likely to fail, the fixed hydraulic unit is likely to overspeed, and the engine will probably stall. The constant energy control will, however, keep the flywheel from overspeeding.

Because of this a positive lock on the park lever preventing premature shift from the park position would be implemented ensuring transmission protection.

Shifting Into A Mode Not Compatible With Vehicle Operating Conditions At The Instant Of Shift

Shifting the transmission into a mode that is not consistent with vehicle conditions at the time of the shift, such as putting it in park or reverse while it is moving forward, is very likely to cause internal transmission damage and consequently loss of propulsion. It would not, however, pose any direct threat to operator safety.

If the vehicle is moving in reverse and the driver suddenly shifts the selector lever to the forward position, the vehicle will come to a sudden

stop and try to accelerate in the forward direction. Engine speed and variable hydraulic unit speed will suddenly increase and the clutches might slip somewhat, but no serious damage is likely to result.

If the vehicle is moving forward and the driver suddenly shifts the selector lever to reverse, the vehicle will decelerate suddenly to a stop and try to accelerate in reverse. The engine and the variable hydraulic unit will suddenly slow down and the flywheel will tend to speed up. The flywheel cannot overspeed, however, because the constant energy control would prevent it.

If the shift selector is in the forward range and the vehicle is moving forward, and the shift lever is moved to the neutral position, the output clutch will be disconnected and the controls will minimize working pressure. No damage will occur.

If the vehicle is moving in either forward or reverse and the shift selector is moved to the park position, the parking pawl will fail. The vehicle will tend to decelerate as if the brake pedal had been depressed. The engine and variable unit will slow down and the flywheel will speed up. The clutches may slip, but the only part of the transmission that is likely to be damaged is the parking pawl itself.

Conclusion

This transmission is not foolproof - but neither are conventional automotive transmissions. The result of irrational maneuvers in either case

appears to be transmission damage, not danger to the driver, passengers or the public.

VI. ESTIMATED TOTAL MANUFACTURING COST

VI. ESTIMATED TOTAL MANUFACTURING COSTS

A. Definition of the Cost Analysis

The EPA Contract Specification requires an original equipment manufacturer (OEM) cost estimate for the transmission in quantities of 100,000 and 1,000,000 per annum and a cost comparison made with a "conventional" (unspecified) multi-speed automatic transmission with torque converter. (See Appendix J.)

The figures shown in the following cost analysis are for the "total manufacturing cost" which can be broadly defined as the cost of labor and materials, along with the operation and maintenance of existing plant and tooling.

The price includes - cost of materials and purchased subcomponents, direct and indirect labor (such as administration, supervision, production control, quality control, plant maintenance, production engineering, etc.), and supplies and utilities for plant operation. Tooling and plant amortization, and taxes for existing plant and equipment are also included. This price does not include engineering and development, advertising, sales, distribution or interest.

B. Costing Procedure

Although Sundstrand is not a supplier of transmissions to the automobile industry, it does produce large quantities of transmissions for the trucking, farm equipment. construction and garden equipment industry. In addition, it has personnel with cost estimating experience in the auto-

automotive automatic transmission industry. Utilizing both actual production hardware experience and the personnel experience, cost estimates were made for the various transmission components.

This experience, coupled with the best cost data available, is the basis for the estimate of production rates of 1,000,000 per annum. Additionally, a "judgment factor" was applied to arrive at figures for 100,000 per annum production rates. This "judgment factor" accounted for the degree of complexity, type of processing, and the degree of process simplification possible with higher volume production for each type of component within the transmission.

In the area of the hydraulic units, Sundstrand produces approximately 30,000 units per annum of a similar size and type as used in this study, and again "judgment factors" were applied to this cost data to arrive at figures for the production rates required in this study.

All of the above cost estimating assumed the use of highly automated machine tools and material handling equipment used in very high volume production.

C. Results of Cost Analysis

The cost for a typical three speed automatic transmission with torque converter was estimated on a major subassembly basis, and is included for reference along with the hydromechanical transmission costs in Table VI-1.

For a major component cost breakdown for the flywheel transmission, see Appendix K.

TABLE VI-1 Results of Cost Analysis

The flywheel transmission costs do not include the flywheel and its accessories or the rear axle differential.

	Yearly Production Rate	
	100,000	1,000,000
Flywheel Transmission (Baseline, Version 8A)	$264	$173
"Typical" 3 Speed Automatic with Torque Converter	----	$ 89

Cost ratio for flywheel transmission to "typical" 3 speed automatic, for 1,000,000 annual production rate = 1.95.

D. Transmission Cost-Per-Weight Parameter

Knowing transmission weight, the cost per pound can be calculated and compared for each type of transmission. A weight of 150 lbs. was assumed for a "typical" 3 speed converter. Costs for the 1,000,000 per annum production rates were used. Flywheel weight and cost are not included.

Flywheel Transmission (Baseline, or Version 8A)	$\frac{173}{223}$	=	77¢ Per Pound
"Typical" 3 Speed Automatic	$\frac{89}{150}$	=	60¢ Per Pound

The higher cost per pound of the flywheel transmission would be expected, and can mainly be attributed to the hydraulic unit, which is more complex and critical in manufacturing requirements than other transmission components.

VII. REFERENCES

VII. REFERENCES

1) Federal Register Volume 35 - Number 219, 11/10/70, Part II

2) "Flywheel Feasibility Study and Demonstration" Final Report by Lockheed Missiles and Space Company, Contract No. EHS 70-104, Report No. LMSC D007915

3) "Design Practice - Passenger Car Automatic Transmissions" Part 1 & 2 issued by SAE.

APPENDICIES

A. Description of Transmission Performance Computer Program (T8H)

APPENDIX A

DESCRIPTION OF TRANSMISSION PERFORMANCE COMPUTER PROGRAM (T8H)

PROGRAM TITLE:

T8H (Transmission Performance)

LANGUAGE:

Fortran IV

PURPOSE:

To determine speeds, torques, horsepowers, hydraulic unit working pressure, power losses, and overall efficiency for a compound planetary hydromechanical vehicle transmission in conjunction with an energy storing flywheel and a conventional engine, for a given vehicle speed and tractive effort (steady state or acceleration).

REQUIRED INPUTS:

Gear ratios

Planetary definition

Flywheel speed constant

Axle ratio

Tire size

Hydraulic unit displacement

Number of gear meshes

Single gear mesh efficiency

Charge pump pressure range

Maximum clutch spin loss horsepower

Vehicle speed

Tractive effort (road load)

Tractive effort (acceleration)

OPERATION:

The program accepts as input the parameters which define the transmission, vehicle speed, and tractive effort. For each condition of speed-tractive effort, the program cycles through the equations which calculate the required output. The following paragraphs explain each section of the program in detail.

PROGRAM EXPLANATION:

The first section of the program defines those integer variables that are to be used as floating point variables.

Data to be used in calculating hydraulic unit horsepower loss is contained in the next section. It is basically coefficients for curve fits to empirical horsepower loss data.

Transmission and vehicle parameters to be input to the program are read in by the third section, and are printed out for the record by the fourth section.

Vehicle speed and the instantaneous values of tractive effort are read by the next section. By inputting the "steady state" road load tractive effort

separately, the program is able to distinguish between the power required from the engine and the power required from the flywheel.

Section six calculates transmission shaft speeds in RPM. Knowing the vehicle speed, tire size, and the gear ratios, the transmission output speed is calculated. Knowing the vehicle speed, and the function which defines the flywheel speed so as to maintain constant system energy, the flywheel speed is calculated. All the other speeds in the system are a function of flywheel and output speeds and are calculated accordingly for an interdependent engine speed type transmission.

Torques and horsepowers in the various transmission elements are determined in section seven. (Horsepower loss in the hydraulic units is also calculated in section seven, and is discussed further in the next paragraph.) Torques and horsepowers are found by a trial and error procedure. A working pressure (which controls system torques) is assumed. Hydraulic unit losses are calculated. Then the equations of dynamic equilibrium are solved to find the unknown torques in the system. The working pressure is then calculated. If the calculated working pressure differs by more than 1 psi from the assumed working pressure, the assumed working pressure is modified, and the whole process is repeated until it iterates to a solution.

Section seven A calculates hydraulic unit losses. These losses are a function of: (1) Unit Size, (2) Speed, (3) Pressure, (4) Displacement.

The inter-relationships of all of these variables are quite complicated. Since the hydraulic unit losses affect the solution of the equilibrium equation mentioned in the preceding paragraph, section seven A must be part of the iteration process. Hydraulic unit losses are estimated by relating the variables involved with equations derived by curve fitting empirical data.

Gear losses and summer (planetary) losses are calculated in section eight.

In section nine, charge pump losses, clutch losses, total horsepower loss, required engine horsepower, and overall horsepower efficiency are calculated.

Section ten writes the calculated output and returns the program to section five to read the next input conditions.

DEFINITION OF INPUT VARIABLES

A, B, C, D	Planetary nomograph dimensions
DIAW	Tire diameter (in.)
DISP	Hydraulic unit displacement (cu. in. /rev.)
EG	Gear mesh efficiency (fraction)
FWSPD	Flywheel speed constant
HPCLX	Maximum clutch horsepower loss (HP)
KC	Indicates which planetary element is the carrier

Sundstrand Aviation
division of Sundstrand Corporation

KI K10 KG K7 K8	Number of gear meshes
NRAT	Rated hydraulic unit speed (RPM)
PCN	Minimum charge pump pressure (PSI)
PCX	Maximum charge pump pressure (PSI)
RA	Rear axle ratio
R1 R2 R3 R4 R5	Gear ratios
TEA	Acceleration tractive effort (lb)
TESS	Steady state road load tractive effort (lb)
V	Vehicle speed (MPH)
ZKC	Indicates which planetary element is the carrier

DEFINITION OF OUTPUT VARIABLES

V	Vehicle speed (MPH)
TESS	Steady state road load tractive effort (lb)
TEA	Acceleration tractive effort (lb)
TE	Engine torque (ft.-lb.)
NE	Engine speed (RPM)
HPE	Engine power (HP)
TFW	Flywheel torque (ft.-lb.)
NFW	Flywheel speed (RPM)

HPFW	Flywheel power (HP)
TV	V-unit torque (ft-lb)
NV	V-unit speed (RPM)
HPV	V-unit power (HP)
TF	F-unit torque (ft-lb)
NF	F-unit speed (RPM)
HPF	F-unit power (HP)
TØ	Output torque (ft-lb)
NØ	Output speed (RPM)
HPØ	Output power (HP)
PREST	Working pressure (PSI)
PLF	F-unit power loss (HP)
PLV	V-unit power loss (HP)
PLT	Total hydraulic unit loss (HP)
HPSL	Summer (planetary) power loss (HP)
HPGL	Gear power loss (HP)
HPAL	Accessory (charge pump) loss (HP)
HPCL	Clutch power loss (HP)
HPTL	Total power loss (HP)
EOAT	Overall horsepower efficiency (fraction)

```
// JOB
// FOR
*LIST SOURCE PROGRAM
*IOCS(CARD,1403PRINTER)
*ONE WORD INTEGERS
*ARITHMETIC TRACE
*TRANSFER TRACE
C
C 1. DEFINE INTERGER VARIABLES TO BE USED AS FLOATING POINT VARIABLES
C
      REAL MU,N1,N2,N3,N4,N5,N6,N7,N8,N9,N10
      REAL NNC,K1,K10,K7,K8,K6,NRAT
C
C 2. HYDRAULIC UNIT HORSEPOWER LOSS DATA
C
      DIMENSION C1(6),C2(6),C3(6),C4(6),C5(6),CH(6),PCDL(6)
      DATA C1/.03044862,.06138539,.0604418,.06895829,.03291727,.05511537
     1   /,C2/3.304840,3.022136,2.877399,2.664500,4.773852,3.002219
     2   /,C3/-7.903354,-8.36357,-6.749845,-2.994856,-18.36134,-9.990973
     3   /,C4/11.86243,15.36874,12.65337,7.052987,37.09789,24.94286
     4   /,C5/-4.760933,-7.05246,-5.131401,-2.809606,-17.87805,-12.10175
     5   /
      DATA PCDL /0.,.2805,.4924,.7796,1.,1.1123/
      DATA CH/5.17,5.24,5.33,6.34,7.26,6.65/
C
C 3. READ TRANSMISSION PARAMETERS
C
  400 FORMAT(8F10.0)
   40 READ(2,400)A,B,C,D,RA,R1
      IF(B)900,900,41
   41 READ(2,400)R2,R3,R4,R5,DIAW,DISP,FWSPD
      READ(2,400)K1,K10,K7,K8,K6
      READ(2,400)EG,ZKC,PCN,PCX,HPCLX
      KC=ZKC
      NRAT=7400./(DISP**.3333333)
C
C 4. WRITE TRANSMISSION PARAMETERS
C
      WRITE(3,500)
  500 FORMAT(//////1H1,T45,'FLYWHEEL TRANSMISSION ANALYSIS')
      WRITE(3,501)
  501 FORMAT(/T53,'VERSION 8H',//)
      WRITE(3,502)A,D,R2,R5
  502 FORMAT(T20,'A =',F10.6,T40,'D =',F10.6,T60,'R2=',F10.6,T80,'R5='
     C  ,F10.6)
      WRITE(3,503)B,RA,R3,DIAW
  503 FORMAT(T20,'B =',F10.6,T40,'RA=',F10.6,T60,'R3=',F10.6,T80,'DIAW='
     C,F8.3)
      WRITE(3,504)C,R1,R4,DISP
  504 FORMAT(T20,'C =',F10.6,T40,'R1=',F10.6,T60,'R4=',F10.6,T80,'DISP='
     C,F6.3,//)
      WRITE(3,350)K1,K10,K7,K8
  350 FORMAT(T20,'KE=',F3.0,T40,'KFW=',F3.0,T60,'KV=',F3.0,T80,'KF=',F3.
     C0)
      WRITE(3,351)K6,      EG,KC
  351 FORMAT(T20,'KO=',F3.0,T40,              T60,'EG=',F5.3,T80,'KC=',I3
     C)
      WRITE(3,352)FWSPD,PCN,PCX,HPCLX
  352 FORMAT(T20,'FWSPD=',F8.5,T40,'PCN=',F4.0,T60,'PCX=',F4.0,T80,'HPCL
     CX=',F6.2,//)
      WRITE(3,520)
  520 FORMAT(T15,'V',T24,'ETF',T35,'TE',T45,'TFW',T55,'TV',T65,'TF',T75,
     C'TO',T84,'PRESS',T96,'PLF  ',T104,'HPSL',T114,'HPCL ')
      WRITE(3,521)
  521 FORMAT(T14,'TESS',T24,'EFF',T35,'NE',T45,'NFW',T55,'NV',T65,'NF',T
     C75,'NO',T84,'PRESA',T96,'PLV  ',T104,'HPGL',T114,'HPTL')
      WRITE(3,522)
  522 FORMAT(T14,'TTEA',T24,'EFV',T35,'HPE',T45,'HPFW',T55,'HPV',T65,'HP
     CF',T75,'HPO',T84,'PREST',T96,'PLT  ',T104,'HPAL',T114,'EOAT',/)
```

```
C
C (5.) READ VEHICLE SPEED AND TRACTIVE EFFORT
C
  101 READ(2,400)V,TESS,TEA
      IF(TESS)900,40,52
C
C (6.) SHAFT SPEEDS
C
   52 N6=(336.135*RA*V)/DIAW
      N10=(100)*((57600.)-(FWSPD    )*(V**2.))**.5
      XSA=(N10/R3)-(R2*N6)
      XSB=(R2*N6)
      XSC=(-A)/(D-A)
      XSD=(B-A)/(D-A)
      XSE=(C-A)/(D-A)
      N8=(R5)*((XSC)*(XSA)+(XSB))
      N1=(R1)*((XSD)*(XSA)+(XSB))
      N7=(R4)*((XSE)*(XSA)+(XSB))
      N4=(-1./R5)*N8
      N2=(-1./R1)*N1
      N3=(-1./R4)*N7
      N5=(-R2)*N6
      N9=(-1./R3)*N10
      IF(V)80,80,81
   80 N10=24000.
      N9=(-1./R3)*N10
   81 MU=N8/N7
C
C (7.) TORQUES AND HORSEPOWERS
C
      ZA=ABS(N8/N7)*(R4/R5)
      XA=A
      XB=B-A
      XC=C-B
      XD=D-C
      T6SS=(TESS*DIAW)/(RA*2.*12.)
      T6A=(TEA*DIAW)/(RA*2.*12.)
      POWFW=TEA*V/375.
      T10=POWFW*5252./N10
      T6=T6SS+T6A
      T9=R3*T10
      T5=T6/R2
C
C (7A.) CALCULATE HYDRAULIC UNIT HORSEPOWER LOSSES
```

(NOTE: The calculation of hydraulic unit losses involves the use of proprietary Sundstrand techniques, and is therefore omitted.)

```
      TD7=5252.*PLV/ABS(N7)
      TD8=5252.*PLF/ABS(N8)
      TD3=R4*TD7
      TD4=R5*TD8
      IF(MU)220,220,225
```


Sundstrand Aviation
division of Sundstrand Corporation

```
220 T4=(TD4*(XA+XB)-T5*XB+TD3*XC-T9*(XC+XD))/(ZA*XC-XA-XB)
    T3=ZA*T4
    T2=T5-T4-TD4-T3+TD3-T9
    Q=ABS(N8)*DISP/(231.*HAFAC)
    T4R=T4+TD4
    T3R=T3-TD3
    GO TO 230
225 T4=(TD4*(XA+XB)+(T5*XB)-TD3*XC+T9*(XC+XD))/(ZA*XC+XA+XB)
    T3=ZA*T4
    T2=T5-T4+TD4+T3+TD3-T9
    Q=ABS(N8)*DISP*HAFAC/231.
    T4R=T4-TD4
    T3R=T3+TD3
230 T8=T4 /R5
    HPHYD=T8*ABS(N8)/5252.
    DELP=1714.*HPHYD/Q
    IF(ABS(DELP-DELTP)- 1.)260,260,250
250 DELTP=DELP
    GO TO 255
260 T8=T4R/R5
    HP8=ABS(N8)*T8/5252.
    T7=T3R/R4
    HP7=ABS(N7)*T7/5252.
    PRESS=0.
    PRESA=0.
    PREST=DELP
    T1=T2/R1
    HP1=T1*N1/5252.
    HP10=T10*N10/5252.
    HP6=T6*N6/5252.
    TT2=R1*T1
    TT3=R4*T7
    TT4=R5*T8
    TT5=T6/R2
    TT9=R3*T10
C
C   8. CALCULATE SUMMER AND GEAR LOSSES
C
    GO TO (301,302,303,304,305),KC
301 NNC=N2
    GO TO 306
302 NNC=N3
    GO TO 306
303 NNC=N4
    GO TO 306
304 NNC=N5
    GO TO 306
305 NNC=N9
306 HPP2=ABS(TT2*(NNC-N2))
    HPP3=ABS(TT3*(NNC-N3))
    HPP4=ABS(TT4*(NNC-N4))
    HPP5=ABS(TT5*(NNC-N5))
    HPP9=ABS(TT9*(NNC-N5))
    HPSL=(HPP2+HPP3+HPP4+HPP5+HPP9)*(1.-EG)/5252.
    HPGL=(ABS(HP1)*K1 +ABS(HP10)*K10+ABS(HP7)*K7+ABS(HP8)*K8+ABS(HP6)*
   CK6)*(1.-EG)
```

```
C
C 9. CALCULATE CHARGE PUMP AND CLUTCH LOSSES AND OVERALL EFFICIENCY
C
      HPEL=0.
      HPFWL=0.
      PLT=PLF+PLV
      PGPM=(1.2*DISP+7.)*6000./7500.
      PC=((PCX-PCN)/6000.)*DELTP+PCN
      HPAL=PC*PGPM/(1714.*.95)
      HPCL=HPCLX*(ABS(V-30.)**2.)/3025.
      HP1=HP1+HPSL+HPGL+HPAL+HPCL
      T1=5252.*HP1/N1
      HPTL=HPSL+HPGL+HPAL+HPEL+HPFWL+PLF+PLV+HPCL
      EOAT=(HP1+HP10-HPTL)/(HP1+HP10)
C
C 10. WRITE CALCULATED OUTPUT
C
      WRITE(3,530)V,ETF,T1,T10,T7,T8,T6,PRESS,PLF   ,HPSL,HPCL
      WRITE(3,530)TESS,EFF,N1,N10,N7,N8,N6,PRESA,PLV   ,HPGL,HPTL
      WRITE(3,540)TEA,EFV,HP1,HP10,HP7,HP8,HP6,PREST,PLT,HPAL,EOAT
      WRITE(3,531)
  530 FORMAT(T11,F8.1,4X,F6.3,3X,5(F7.1,3X),F8.1,3X,F7.2,2X,F6.2,5X,F6.2
     C)
  540 FORMAT(T11,F8.1,4X,F6.3,3X,5(F7.1,3X),F8.1,3X,F7.2,2X,F6.2,4X,F7.4
     C)
  531 FORMAT(/)
      GOTO 101
  900 CALL EXIT
      END
```

Example of printed output from this program is shown in Appendix G.

B. "Vehicle Design Goals - Six Passenger Automobile"
(Revision B - February 11, 1971)

APPENDIX B

Exhibit B-2

AIR POLLUTION CONTROL OFFICE

ADVANCED AUTOMOTIVE POWER SYSTEMS PROGRAM

"Vehicle Design Goals - Six Passenger Automobile"

(Revision B - February 11, 1971 - 11 Pages)

The design goals presented below are intended to provide:

A common objective for prospective contractors.

Criteria for evaluating proposals and selecting a contractor.

Criteria for evaluating competitive power systems for entering first generation system hardware.

The derived criteria are based on typical characteristics of the class of passenger automobiles with the largest market volume produced in the U.S. during the model years 1969 and 1970. It is noted that emissions, volume and most weight characteristics presented are maximum values while the performance characteristics are intended as minimum values. Contractors and prospective contractors who take exceptions must justify these exceptions and relate these exceptions to the technical goals presented herein.

1. Vehicle weight without propulsion system - W_o.

   W_o is the weight of the vehicle without the propulsion system and includes, but is not limited to: body, frame, glass and trim, suspension, service brakes, seats, upholstery, sound absorbing materials, insulation, wheels (rims and tires), accessory ducting, dashboard instruments and accessory wiring, passenger compartment heating and cooling devices and all other components not included in the propulsion system. It also includes the air conditioner compressor, the power steering pump, and the power brakes actuating device.

   W_o is fixed at 2700 lbs.

2. Propulsion system weight - W_p

   W_p includes the energy storage unit (including fuel and containment), power converter (including both functional components and controls) and power transmitting components to the driven wheels. It also includes the exhaust system, pumps, motors, fans and fluids necessary for operation of the propulsion system, and any propulsion system heating or cooling devices.

The maximum allowable propulsion system weight, W_{pm}, is 1600 lbs. However, light weight propulsion systems are highly desired. (Equivalent 1970 propulsion system weight with a spark ignition engine is 1300 lbs.)

3. Vehicle curb weight - W_c

$W_c = W_o + W_p$

The maximum allowable vehicle curb weight, W_{cm}, is 4300 lbs. (2700 + 1600 max. = 4300)

4. Vehicle test weight - W_t

$W_t = W_c + 300$ lbs. W_t is the vehicle weight at which all accelerative maneuvers, fuel economy and emissions are to be calculated. (Items 8c, 8d, 8e)

The maximum allowable test weight, W_{tm}, is 4600 lbs. (2700 + 1600 max. + 300 = 4600)

5. Gross vehicle weight - W_g

$W_g = W_c + 1000$ lbs. W_g is the gross vehicle weight at which sustained cruise grade velocity capability is to be calculated. (Item 8f) The 1000 lbs load simulates a full load of passengers and baggage.

The maximum allowable gross vehicle weight, W_{gm}, is 5300 lbs. (2700 + 1600 max. + 1000 = 5300)

6. Propulsion system volume - V_p

V_p includes all items identified under item 2. V_p shall be packagable in such a way that the volume encroachment on either the passenger or luggage compartment is not significantly different than today's (1970) standard full size family car. Necessary external appearance (styling) changes will be minor in nature. V_p shall also be packagable in such a way that the handling characteristics of the vehicle do not depart significantly from a 1970 full size family car.

The maximum allowable volume assignable to the propulsion system, V_{pm}, is 35 ft^3.

Sundstrand Aviation
division of Sundstrand Corporation

7. Emission Goals

The vehicle when tested for emissions in accordance with the procedure outlined in the November 10, 1970 Federal Register shall have a weight of W_t. The emission goals for the vehicle are:

Hydrocarbons*	-	0.14 grams/mile maximum
Carbon monoxide	-	4.7 grams/mile maximum
Oxides of nitrogen**	-	0.4 grams/mile maximum
Particulates	-	0.03 grams/mile maximum

*Total hydrocarbons (using 1972 measurement procedures) plus total oxygenates. Total oxygenates including aledhydes will not be more than 10 percent by weight of the hydrocarbons or 0.014 grams/mile, whichever is greater.

**measured or computed as NO_2.

8. Start up, Acceleration, and Grade Velocity Performance.

a. Start up:

The vehicle must be capable of being tested in accordance with the procedure outlined in the November 10, 1970 Federal Register without special startup/warmup procedures.

The maximum time from key on to reach 65 percent full power is 45 sec. Ambient conditions are 14.7 psia pressure, 60° F temperature.

Powerplant starting techniques in low ambient temperatures shall be equivalent to or better than the typical automobile spark-ignition engine. Conventional spark-ignition engines are deemed satisfactory if after a 24 hour soak at -20° F the engine achieves a self-sustaining idle condition without further driver input within 25 seconds. No starting aids external to the normal vehicle system shall be needed for -20° F starts or higher temperatures.

b. Idle operation conditions:

The fuel consumption rate at idle operating condition will not exceed 14 percent of the fuel consumption rate at the design power condition. Recharging of energy storage systems is exempted from this requirement. Air conditioning is off, the power steering pump and power brake actuating device, if directly engine driven, are being driven but are unloaded.

The torque at transmission output during idle operation (idle creep torque) shall not exceed 40 foot-pounds, assuming conventional rear axle ratios and tire sizes. This idle creep torque should result in level road operation in high gear which does not exceed 18 mph.

c. Acceleration from a standing start:

The minimum distance to be covered in 10.0 sec. is 440 ft. The maximum time to reach a velocity of 60 mph is 13.5 sec. Ambient conditions are 14.7 psia, 85° F. Vehicle weight is W_t. Acceleration is on a level grade and initiated with the engine at the normal idle condition.

d. Acceleration in merging traffic:

The maximum time to accelerate from a constant velocity of 25 mph to a velocity of 70 mph is 15.0 sec. Time starts when the throttle is depressed. Ambient conditions are 14.7 psia, 85° F. Vehicle weight is W_t, and acceleration is on level grade.

e. Acceleration, DOT High Speed Pass Maneuver:

The maximum time and maximum distance to go from an initial velocity of 50 mph with the front of the automobile (18 foot length assumed) 100 feet behind the back of a 55 foot truck traveling at a constant 50 mph to a position where the back of the automobile is 100 feet in front of the front of the 55 foot truck is, 15 sec. and 1400 ft. The entire maneuver takes place in a traffic lane adjacent to the lane in which the truck is operated. Vehicle will be accelerated until the maneuver is completed or until a maximum speed of 80 mph is attained, whichever occurs first. Vehicle acceleration ceases when a speed of 80 mph is attained, the maneuver then being completed at a constant 80 mph. (This does not imply a design requirement limiting the maximum vehicle speed to 80 mph.) Time starts when the throttle is depressed. Ambient conditions are 14.7 psia, 85° F. Vehicle weight is W_t, and acceleration is on level grade.

f. Grade velocity:

The vehicle must be capable of starting from rest on a 30 percent grade and accelerating to 15 mph and sustaining it. This is the steepest grade on which the vehicle is required to operate in either the forward or reverse direction.

The minimum cruise velocity that can be continuously maintained on a 5 percent grade with an accessory load of 4 hp shall be not less than 60 mph.

The vehicle must be capable of achieving a velocity of 65 mph up a 5 percent grade and maintaining this velocity for a period of 180 seconds when preceded and followed by continuous operation at 60 mph on the same grade (as above).

The vehicle must be capable of achieving a velocity of 70 mph up a 5 percent grade and maintaining this velocity for a period of 100 seconds when preceded and followed by continuous operation at 60 mph on the same grade (as above).

The minimum cruise velocity that can be continuously maintained on a level road (zero grade) with an accessory load of 4 hp shall be not less than 85 mph with a vehicle weight of W_t.

Ambient conditions for all grade specifications are 14.7 psia 85° F. Vehicle weight is W_g for all grade specifications except the zero grade specification.

The vehicle must be capable of providing performance (Paragraphs 8c, 8d, 8e 8f) with 5 percent of the stated 85° F values, when operated at ambient temperatures from -20° F to 105° F.

9. Minimum vehicle range:

Minimum vehicle range without supplementing the energy storage will be 200 miles. The minimum range shall be calculated for, and applied to each of the two following modes: 1) A city-suburban mode, and 2) a cruise mode.

Mode 1: Is the driving cycle which appears in the November 10, 1970 Federal Register. For vehicles whose performance does not depend on the state of energy storage, the range may be calculated for one cycle and ratioed to 200 miles. For vehicles whose performance does depend on the state of energy storage the Federal driving cycle must be repeated until 200 miles have been completed.

Mode 2: Is a constant 70 mph cruise on a level road for 200 miles.

The vehicle weight for both modes shall be, initially, W_t. The ambient conditions shall be a pressure of 14.7 psia, and temperatures of 60° F, 85° F and 105° F. The vehicle minimum range shall not decrease by more than 5 percent at an ambient temperature of -20° F.

For hybrid vehicles, the energy level in the power augmenting device at the completion of operation will be equivalent to the energy level at the beginning of operation.

10. System thermal efficiency:

System thermal efficiency will be calculated by two methods:

A. A "fuel economy" figure based on 1) miles per gallon (fuel type being specified) and 2) the number of Btu per mile required to drive the vehicle over the 1972 Federal driving cycle which appears in the November 10, 1970 Federal Register. Fuel economy is based on the fuel or other forms of energy delivered at the vehicle. Vehicle weight is W_t.

B. A "fuel economy" figure based on 1) miles per gallon (fuel type being specified) and 2) the number of Btu per mile required to drive the vehicle at constant speed, in still air, on level road, at speeds of 20, 30, 40, 50, 60, 70, and 80 mph. Fuel economy is based on the fuel or other forms of energy delivered at the vehicle. Vehicle weight is W_t.

In both cases, the system thermal efficiency shall be calculated with sufficient electrical, power steering and power brake loads in service to permit safe operation of the automobile. Calculations shall be made with and without air conditioning operating. The ambient conditions are 14.7 psia and temperatures of 60° F, 85° F and 105° F. Calculations shall be made with heater operating at ambient conditions of 14.7 psia and 30° F (18,000 Btu/hr).

11. Air Drag Calculation:

The product of the drag coefficient, C_d, and the frontal area, A_f, is to be used in air drag calculations. The product C_dA_f has a value of 12 ft^2. The air density used in computations shall correspond to the applicable ambient air temperature.

12. Rolling Resistance:

Rolling resistance, R, is expressed in the equation $R = W/65\ [1 + (1.4 \times 10^{-3}V) + (1.2\ 10^{-5}V^2)]$ lbs. V is the vehicle velocity in ft/sec. W is the vehicle weight in lbs.

13. Accessory power requirements:

The accessories are defined as subsystems for driver assistance and passenger convenience, not essential to sustaining the engine operation and include: the air conditioning compressor, the power steering pump, the alternator (except where required to sustain operation), and the power brakes actuating device. The accessories also include a device for heating the passenger compartment if the heating demand is not supplied by waste heat.

Auxiliaries are defined as those subsystems necessary for the sustained operation of the engine, and include condensor fan(s), combustor fan(s), fuel pumps, lube pumps, cooling fluid pumps, working fluid pumps and the alternator when necessary for driving electric motor driven fans or pumps.

The maximum intermittent accessory load, P_{aim}, is 10 hp (plus the heating load, if applicable). The maximum continuous accessory load, P_{acm}, is 7.5 hp (plus the heating load if applicable). The average accessory load, P_{aa}, is 4 hp.

If accessories are driven at variable speeds, the above values apply. If the accessories are driven at constant speed, P_{aim} and P_{acm} will be reduced by 3 hp.

14. Passenger comfort requirements:

Heating and air conditioning of the passenger compartment shall be at a rate equivalent to that provided in the present (1970) standard full size family car.

Present practice for maximum passenger compartment heating rate is approximately 30,000 Btu/hr. For an air conditioning system at 110° F ambient, 80° F and 40% relative humidity air to the evaporator, the rate is approximately 13,000 Btu/hr.

15. Propulsion system operating temperature range:

The propulsion system shall be operable within an expected ambient temperature range of -40° to 125° F.

16. Operational life:

The mean operational life of the propulsion system should be approximately equal to that of the present spark-ignition engine. The mean operational life should be based on a mean vehicle life of 105,000 miles or ten years, whichever comes first.

The design lifetime of the propulsion system in normal operation will be 3500 hours. Normal maintenance may include replacement of accessable minor parts of the propulsion system via a usual maintenance procedure, but the major parts of the system shall be designed for a 3500 hour minimum operation life.

The operational life of an engine shall be determined by structural or functional failure causing repair and replacement costs exceeding the cost of a new or rebuilt engine. (Functional failure is defined as power degradation exceeding 25 percent or top vehicle speed degradation exceeding 9 percent).

17. Noise standards: (Air conditioner not operating)

a. Maximum noise test:

The maximum noise generated by the vehicle shall not exceed 77 dbA when measured in accordance with SAE J986a. Note that the noise level is 77 dbA whereas in the SAE J986a the level is 86 dbA.

b. Low speed noise test:

The maximum noise generated by the vehicle shall not exceed 63 dbA when measured in accordance with SAE J986a except that a constant vehicle velocity of 30 mph is used on the pass-by, the vehicle being in high gear or the highest gear in which it can be operated at that speed.

c. Idle noise test:

The maximum noise generated by the vehicle shall not exceed 62 dbA when measured in accordance with SAE J986a except that the engine is idling (clutch disengaged or in neutral gear) and the vehicle passes by at a speed of less than 10 mph. the microphone will be placed at 10 feet from the centerline of the vehicle pass line.

18. Safety standards:

The vehicle shall comply with all current Department of Transportation Federal Motor Vehicle Safety Standards. Reference DOT/HS 820 083.

19. Reliability and maintainability:

The reliability and maintainability of the vehicle shall equal or exceed that of the spark-ignition automobile. The mean-time-between failure should be maximized to reduce the number of unscheduled service trips. All failure modes should not represent a serious safety hazard during vehicle operation and servicing. Failure propagation should be minimized. The power plant should be designed for ease of maintenance and repairs to minimize costs, maintenance personnel education, and downtime. Parts requiring frequent servicing shall be easily accessable.

20. Cost of ownership:

The net cost of ownership of the vehicle shall be minimized for ten years and 105,000 miles of operation. The net cost of ownership includes initial purchase price (less scrap value), other fixed costs, operating and maintenance costs. A target goal should be to not exceed 110 percent of the average net cost of ownership of the present standard size automobile with spark-ignition engine as determined by the U.S. Department of Commerce 1969-70 statistics on such ownership.

C. Automobile Accessory Loads

APPENDIX C

AUTOMOBILE ACCESSORY LOADS

Figure APP-C1 shows the accessory horsepower loads as a function of engine speed. This curve was developed from accessory torque versus engine speed data supplied to Sundstrand by EPA.

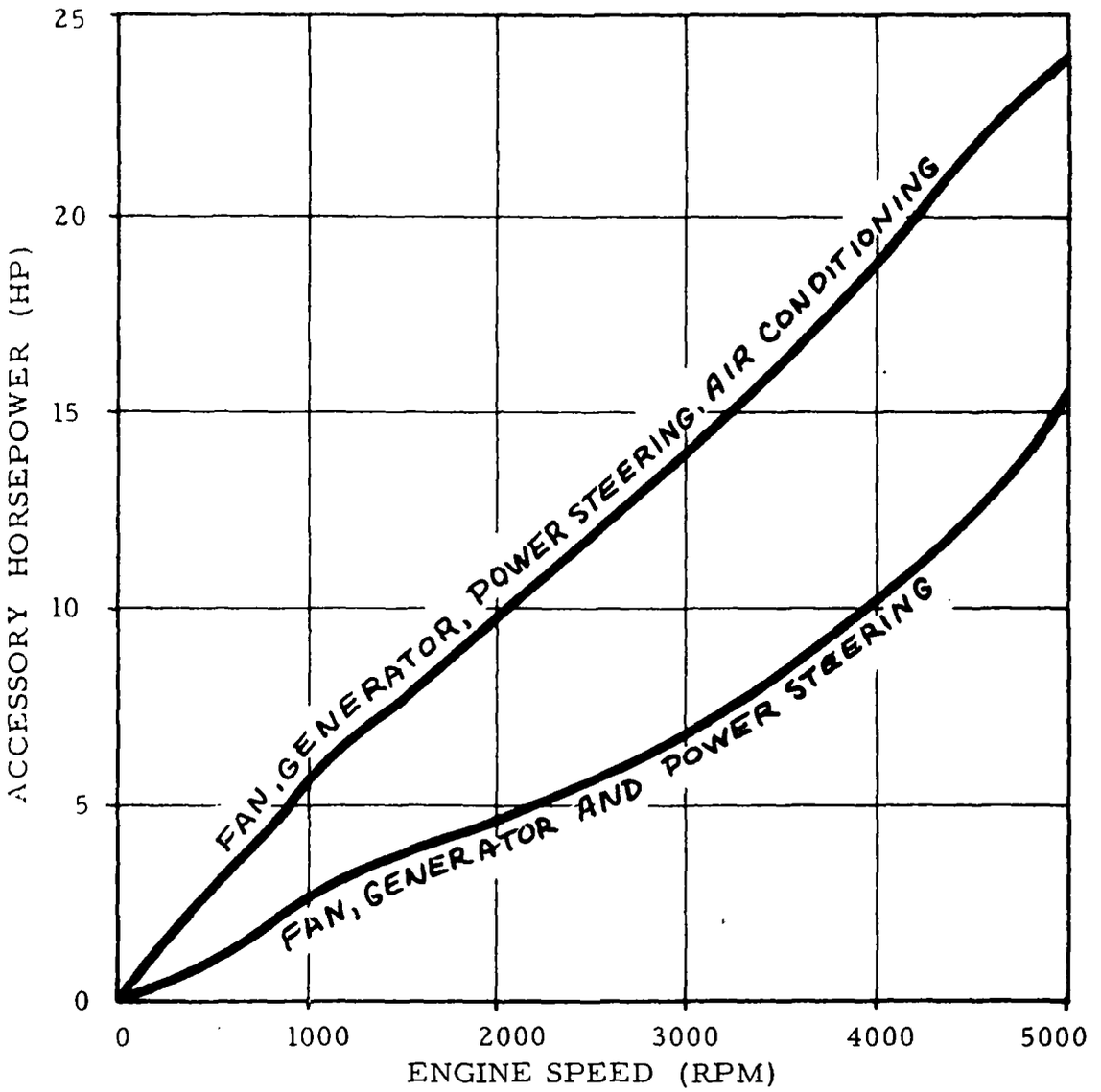

Figure APP-C1 Typical "Full Size Car" Accessory Horsepower vs. Engine Speed

D. Flywheel Horsepower Loss

APPENDIX D

FLYWHEEL HORSEPOWER LOSS

Figure APP-D1 shows the flywheel horsepower loss as a function of flywheel speed. The values shown were jointly agreed upon by Sundstrand and Lockheed. The horsepower loss numbers include bearing losses, seal losses, gearing losses, windage losses, and vacuum pump power required.

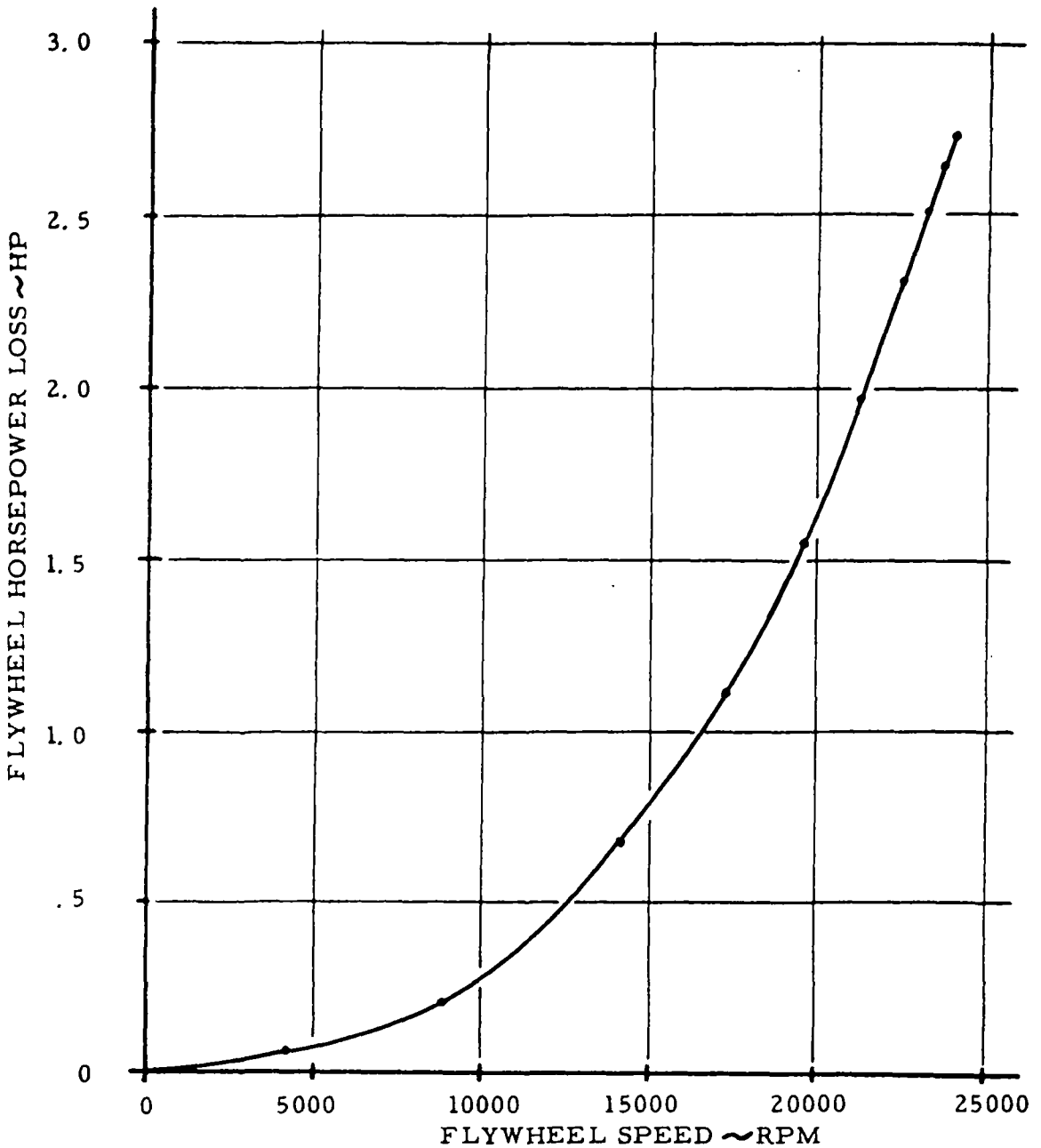

Figure APP-D1 Flywheel Horsepower Loss vs. Flywheel Speed

E. Federal Driving Cycle

APPENDIX E

FEDERAL DRIVING CYCLE

Table APP-E1 is a copy of the Federal Driving Cycle (Reference 1) used in the computation of vehicle fuel consumption. Figure APP-E1 is a plot of the Federal Driving Cycle showing vehicle speed versus time.

APPENDIX A

DHEW URBAN DYNAMOMETER DRIVING SCHEDULE

(Speed versus Time Sequence)

Time (sec.)	Speed (m.p.h.)	Time (sec.)	Speed (m.p.h.)	Time (sec.)	Speed (m.p.h.)
0	0.0	84	28.6	168	16.5
1	0.0	85	29.3	169	19.8
2	0.0	86	29.8	170	22.2
3	0.0	87	30.1	171	24.3
4	0.0	88	30.4	172	25.8
5	0.0	89	30.7	173	26.4
6	0.0	90	30.7	174	25.7
7	0.0	91	30.5	175	25.1
8	0.0	92	30.4	176	24.7
9	0.0	93	30.3	177	25.0
10	0.0	94	30.4	178	25.2
11	0.0	95	30.8	179	25.4
12	0.0	96	30.4	180	25.8
13	0.0	97	29.9	181	27.2
14	0.0	98	29.5	182	26.5
15	0.0	99	29.8	183	24.0
16	0.0	100	30.3	184	22.7
17	0.0	101	30.7	185	19.4
18	0.0	102	30.9	186	17.7
19	0.0	103	31.0	187	17.2
20	0.0	104	30.9	188	18.1
21	3.0	105	30.4	189	18.6
22	5.9	106	29.8	190	20.0
23	8.6	107	29.9	191	22.2
24	11.5	108	30.2	192	24.5
25	14.3	109	30.7	193	27.3
26	16.9	110	31.2	194	30.5
27	17.3	111	31.8	195	33.5
28	18.1	112	32.2	196	36.2
29	20.7	113	32.4	197	37.3
30	21.7	114	32.2	198	39.3
31	22.4	115	31.7	199	40.5
32	22.5	116	28.6	200	42.1
33	22.1	117	25.3	201	43.5
34	21.5	118	22.0	202	45.1
35	20.9	119	18.7	203	46.0
36	20.4	120	15.4	204	46.8
37	19.8	121	12.1	205	47.5
38	17.0	122	8.8	206	47.5
39	14.9	123	5.5	207	47.3
40	14.9	124	2.2	208	47.2
41	15.2	125	0.0	209	47.0
42	15.5	126	0.0	210	47.0
43	16.0	127	0.0	211	47.0
44	17.1	128	0.0	212	47.0
45	19.1	129	0.0	213	47.0
46	21.1	130	0.0	214	47.2
47	22.7	131	0.0	215	47.4
48	22.9	132	0.0	216	47.9
49	22.7	133	0.0	217	48.6
50	22.6	134	0.0	218	49.1
51	21.3	135	0.0	219	49.5
52	19.0	136	0.0	220	50.0
53	17.1	137	0.0	221	50.6
54	15.8	138	0.0	222	51.0
55	15.8	139	0.0	223	51.5
56	17.7	140	0.0	224	52.2
57	19.8	141	0.0	225	53.2
58	21.6	142	0.0	226	54.1
59	23.2	143	0.0	227	54.6
60	24.2	144	0.0	228	54.9
61	24.6	145	0.0	229	55.0
62	24.9	146	0.0	230	54.9
63	25.0	147	0.0	231	54.6
64	24.6	148	0.0	232	54.6
65	24.5	149	0.0	233	54.8
66	24.7	150	0.0	234	55.1
67	24.8	151	0.0	235	55.5
68	24.7	152	0.0	236	55.7
69	24.6	153	0.0	237	56.1
70	24.6	154	0.0	238	56.3
71	25.1	155	0.0	239	56.6
72	25.6	156	0.0	240	56.7
73	25.7	157	0.0	241	56.7
74	25.4	158	0.0	242	56.5
75	24.9	159	0.0	243	56.5
76	25.0	160	0.0	244	56.5
77	25.4	161	0.0	245	56.5
78	26.0	162	0.0	246	56.5
79	26.0	163	0.0	247	56.5
80	25.7	164	3.3	248	56.4
81	26.1	165	6.6	249	56.1
82	26.7	166	9.9	250	55.8
83	27.5	167	13.2	251	55.1

APPENDIX A—Continued

Time (sec.)	Speed (m.p.h.)	Time (sec.)	Speed (m.p.h.)	Time (sec.)	Speed (m.p.h.)
252	54.6	339	0.0	426	8.5
253	54.2	340	0.0	427	5.2
254	54.0	341	0.0	428	1.9
255	53.7	342	0.0	429	0.0
256	53.6	343	0.0	430	0.0
257	53.9	344	0.0	431	0.0
258	54.0	345	0.0	432	0.0
259	54.1	346	0.0	433	0.0
260	54.1	347	1.0	434	0.0
261	53.8	348	4.3	435	0.0
262	53.4	349	7.6	436	0.0
263	53.0	350	10.9	437	0.0
264	52.6	351	14.2	438	0.0
265	52.1	352	17.3	439	0.0
266	52.4	353	20.0	440	0.0
267	52.0	354	22.5	441	0.0
268	51.9	355	23.7	442	0.0
269	51.7	356	25.2	443	0.0
270	51.5	357	26.6	444	0.0
271	51.6	358	28.1	445	0.0
272	51.8	359	30.0	446	0.0
273	52.1	360	30.8	447	0.0
274	52.5	361	31.6	448	3.3
275	53.0	362	32.1	449	6.6
276	53.5	363	32.8	450	9.9
277	54.0	364	33.6	451	13.2
278	54.9	365	34.5	452	16.5
279	55.4	366	34.6	453	19.8
280	55.6	367	34.9	454	23.1
281	56.0	368	34.8	455	26.4
282	56.0	369	34.5	456	27.8
283	55.8	370	34.7	457	29.1
284	55.2	371	35.5	458	31.5
285	54.5	372	36.0	459	33.0
286	53.6	373	36.0	460	33.6
287	52.5	374	36.0	461	34.8
288	51.5	375	36.0	462	35.1
289	51.5	376	36.0	463	35.6
290	51.5	377	36.0	464	36.1
291	51.1	378	36.1	465	36.0
292	50.1	379	36.4	466	36.1
293	50.0	380	36.5	467	36.2
294	50.1	381	36.4	468	36.0
295	50.0	382	36.0	469	35.7
296	49.6	383	35.1	470	36.0
297	49.5	384	34.1	471	36.0
298	49.5	385	33.5	472	35.6
299	49.5	386	31.4	473	35.5
300	49.1	387	29.0	474	35.4
301	48.6	388	25.7	475	36.2
302	48.1	389	23.0	476	35.2
303	47.2	390	20.3	477	35.2
304	46.1	391	17.5	478	35.2
305	45.0	392	14.5	479	35.2
306	43.8	393	12.0	480	35.2
307	42.6	394	8.7	481	35.0
308	41.5	395	5.4	482	35.1
309	40.3	396	2.1	483	35.2
310	38.5	397	0.0	484	35.5
311	37.0	398	0.0	485	35.2
312	35.2	399	0.0	486	35.0
313	33.8	400	0.0	487	35.0
314	32.5	401	0.0	488	35.0
315	31.5	402	0.0	489	34.8
316	30.6	403	2.6	490	34.6
317	30.5	404	5.9	491	34.5
318	30.0	405	9.2	492	33.5
319	29.0	406	12.5	493	32.0
320	27.5	407	15.8	494	30.1
321	24.8	408	19.1	495	28.0
322	21.5	409	22.4	496	25.5
323	20.1	410	25.0	497	22.5
324	19.1	411	25.6	498	19.8
325	18.5	412	27.5	499	16.5
326	17.0	413	29.0	500	13.2
327	15.5	414	30.0	501	10.3
328	12.5	415	30.1	502	7.2
329	10.8	416	30.0	503	4.0
330	8.0	417	29.7	504	1.0
331	4.7	418	29.3	505	0.0
332	1.4	419	28.8	506	0.0
333	0.0	420	28.0	507	0.0
334	0.0	421	25.0	508	0.0
335	0.0	422	21.7	509	0.0
336	0.0	423	18.4	510	0.0
337	0.0	424	15.1	511	1.2
338	0.0	425	11.8	512	3.5

APPENDIX A—Continued

Time (sec.)	Speed (m.p.h.)	Time (sec.)	Speed (m.p.h.)	Time (sec.)	Speed (m.p.h.)
513	5.5	600	21.6	686	0.0
514	6.5	601	22.0	687	0.0
515	8.5	602	22.4	688	0.0
516	9.6	603	22.5	689	0.0
517	10.5	604	22.5	690	0.0
518	11.9	605	22.5	691	0.0
519	14.0	606	22.7	692	0.0
520	16.0	607	23.7	693	0.0
521	17.7	608	25.1	694	1.4
522	19.0	609	26.0	695	3.3
523	20.1	610	26.5	696	4.4
524	21.0	611	27.0	697	6.5
525	22.0	612	26.1	698	9.2
526	23.0	613	22.3	699	11.3
527	23.8	614	19.5	700	13.5
528	24.5	615	16.2	701	14.6
529	24.9	616	12.9	702	16.4
530	25.0	617	9.6	703	16.7
531	25.0	618	6.3	704	16.5
532	25.0	619	3.0	705	16.5
533	25.0	620	0.0	706	18.2
534	25.0	621	0.0	707	19.2
535	25.0	622	0.0	708	20.1
536	25.6	623	0.0	709	21.5
537	25.8	624	0.0	710	22.5
538	26.0	625	0.0	711	22.8
539	25.6	626	0.0	712	22.1
540	25.2	627	0.0	713	22.7
541	25.0	628	0.0	714	23.3
542	25.0	629	0.0	715	23.5
543	25.0	630	0.0	716	22.5
544	24.4	631	0.0	717	21.6
545	23.1	632	0.0	718	20.5
546	19.8	633	0.0	719	18.0
547	16.5	634	0.0	720	15.0
548	13.2	635	0.0	721	12.0
549	9.9	636	0.0	722	9.0
550	6.6	637	0.0	723	6.2
551	3.3	638	0.0	724	4.5
552	0.0	639	0.0	725	3.0
553	0.0	640	0.0	726	2.1
554	0.0	641	0.0	727	0.5
555	0.0	642	0.0	728	0.5
556	0.0	643	0.0	729	3.2
557	0.0	644	0.0	730	6.5
558	0.0	645	0.0	731	9.6
559	0.0	646	2.0	732	12.5
560	0.0	647	4.5	733	14.0
561	0.0	648	7.8	734	16.0
562	0.0	649	10.2	735	18.0
563	0.0	650	12.5	736	19.0
564	0.0	651	14.0	737	21.5
565	0.0	652	15.3	738	23.1
566	0.0	653	17.5	739	24.5
567	0.0	654	19.6	740	25.5
568	0.0	655	21.0	741	26.5
569	3.3	656	22.2	742	27.1
570	6.6	657	23.3	743	27.6
571	9.9	658	24.5	744	27.0
572	13.0	659	25.3	745	28.3
573	14.6	660	25.6	746	28.6
574	16.0	661	26.0	747	28.6
575	17.0	662	26.1	748	28.3
576	17.0	663	26.2	749	28.2
577	17.0	664	26.2	750	28.0
578	17.5	665	26.4	751	27.5
579	17.7	666	26.5	752	26.8
580	17.7	667	26.5	753	25.5
581	17.5	668	26.0	754	23.5
582	17.0	669	25.5	755	21.5
583	16.9	670	23.6	756	19.0
584	16.6	671	21.4	757	16.5
585	17.0	672	18.5	758	14.0
586	17.1	673	16.4	759	12.5
587	17.0	674	14.5	760	9.4
588	16.6	675	11.6	761	6.2
589	16.5	676	8.7	762	3.0
590	16.5	677	5.8	763	1.5
591	16.6	678	3.5	764	1.5
592	17.0	679	2.0	765	0.5
593	17.6	680	0.0	766	0.0
594	18.5	681	0.0	767	3.0
595	19.2	682	0.0	768	6.3
596	20.2	683	0.0	769	9.6
597	21.0	684	0.0	770	12.9
598	21.1	685	0.0	771	15.8
599	21.2			772	17.5

Table APP-E1 DHEW Urban Dynamometer Driving Cycle

Sundstrand Aviation
division of Sundstrand Corporation

APPENDIX A—Continued

Time (sec.)	Speed (m.p.h.)	Time (sec.)	Speed (m.p.h.)	Time (sec.)	Speed (m.p.h.)
773	18.4	861	29.1	948	24.0
774	19.5	862	29.0	949	22.0
775	20.7	863	28.1	950	20.1
776	22.0	864	27.5	951	16.9
777	23.2	865	27.0	952	13.6
778	25.0	866	25.8	953	10.3
779	26.5	867	25.0	954	7.0
780	27.5	868	24.5	955	3.7
781	28.0	869	24.8	956	0.4
782	28.3	870	25.1	957	0.0
783	28.9	871	25.5	958	0.0
784	28.9	872	25.7	959	0.0
785	28.9	873	26.2	960	2.0
786	28.5	874	26.9	961	5.3
787	28.5	875	27.5	962	8.6
788	28.3	876	27.8	963	11.9
789	28.3	877	28.4	964	15.2
790	28.3	878	29.0	965	17.5
791	28.2	879	29.2	966	18.6
792	27.6	880	29.1	967	20.0
793	27.5	881	29.0	968	21.1
794	27.5	882	28.9	969	22.0
795	27.5	883	28.5	970	23.0
796	27.5	884	28.1	971	24.5
797	27.5	885	28.0	972	26.3
798	27.5	886	28.0	973	27.5
799	27.6	887	27.6	974	28.1
800	28.0	888	27.2	975	28.4
801	28.5	889	26.6	976	28.5
802	30.0	890	27.0	977	28.5
803	31.0	891	27.5	978	28.5
804	32.0	892	27.8	979	27.7
805	33.0	893	28.0	980	27.5
806	33.0	894	27.8	981	27.2
807	33.6	895	28.0	982	26.8
808	34.0	896	28.0	983	26.5
809	34.3	897	28.0	984	26.0
810	34.2	898	27.7	985	25.7
811	34.0	899	27.4	986	25.2
812	34.0	900	26.9	987	24.0
813	33.9	901	26.6	988	22.0
814	33.6	902	26.5	989	21.5
815	33.1	903	26.5	990	21.5
816	33.0	904	26.5	991	21.8
817	32.5	905	26.3	992	22.5
818	32.0	906	26.2	993	23.0
819	31.9	907	26.2	994	22.8
820	31.6	908	25.9	995	22.8
821	31.5	909	25.6	996	23.0
822	30.6	910	25.6	997	22.7
823	30.0	911	25.9	998	22.7
824	29.9	912	25.8	999	22.7
825	29.9	913	25.5	1,000	23.5
826	29.9	914	24.6	1,001	24.0
827	29.9	915	23.5	1,002	24.6
828	29.6	916	22.2	1,003	24.8
829	29.5	917	21.6	1,004	25.1
830	29.5	918	21.6	1,005	25.5
831	29.3	919	21.7	1,006	25.6
832	28.9	920	22.6	1,007	25.5
833	28.2	921	23.4	1,008	25.0
834	27.7	922	24.0	1,009	24.1
835	27.0	923	24.2	1,010	23.7
836	25.5	924	24.4	1,011	23.2
837	23.7	925	24.0	1,012	22.9
838	22.0	926	25.1	1,013	22.5
839	20.5	927	25.2	1,014	22.0
840	19.2	928	25.3	1,015	21.6
841	19.2	929	25.5	1,016	20.5
843	20.9	930	25.2	1,017	17.5
844	21.4	931	25.0	1,018	14.2
845	22.0	932	25.0	1,019	10.9
846	22.6	933	25.0	1,020	7.6
847	23.2	934	24.7	1,021	4.3
848	24.0	935	24.5	1,022	1.0
849	25.0	936	24.3	1,023	0.0
850	26.0	937	24.3	1,024	0.0
851	26.6	938	24.5	1,025	0.0
852	26.6	939	25.0	1,026	0.0
853	26.8	940	25.0	1,027	0.0
854	27.0	941	24.6	1,028	0.0
855	27.2	942	24.6	1,029	0.0
856	27.8	943	24.1	1,030	0.0
857	28.1	944	24.5	1,031	0.0
858	28.8	945	25.1	1,032	0.0
859	28.9	946	25.6	1,033	0.0
860	29.0	947	25.1	1,034	0.0

APPENDIX A—Continued

Time (sec.)	Speed (m.p.h.)	Time (sec.)	Speed (m.p.h.)	Time (sec.)	Speed (m.p.h.)
1,035	0.0	1,122	25.0	1,209	14.0
1,036	0.0	1,123	24.9	1,210	15.5
1,037	0.0	1,124	24.8	1,211	17.0
1,038	0.0	1,125	25.0	1,212	18.6
1,039	0.0	1,126	25.4	1,213	19.7
1,040	0.0	1,127	25.8	1,214	21.0
1,041	0.0	1,128	26.0	1,215	21.5
1,042	0.0	1,129	26.4	1,216	21.8
1,043	0.0	1,130	26.6	1,217	21.8
1,044	0.0	1,131	26.9	1,218	21.5
1,045	0.0	1,132	27.0	1,219	21.2
1,046	0.0	1,133	27.0	1,220	21.5
1,047	0.0	1,134	27.0	1,221	21.8
1,048	0.0	1,135	26.9	1,222	22.0
1,049	0.0	1,136	26.8	1,223	21.9
1,050	0.0	1,137	26.8	1,224	21.7
1,051	0.0	1,138	26.5	1,225	21.5
1,052	0.0	1,139	26.4	1,226	21.5
1,053	1.2	1,140	26.0	1,227	21.4
1,054	4.0	1,141	25.5	1,228	20.1
1,055	7.3	1,142	24.6	1,229	19.5
1,056	10.6	1,143	23.5	1,230	19.2
1,057	13.9	1,144	21.5	1,231	19.6
1,058	17.0	1,145	20.0	1,232	19.8
1,059	18.5	1,146	17.5	1,233	20.0
1,060	20.0	1,147	16.0	1,234	19.5
1,061	21.8	1,148	14.0	1,235	17.5
1,062	23.0	1,149	10.7	1,236	15.5
1,063	24.0	1,150	7.4	1,237	13.0
1,064	24.8	1,151	4.1	1,238	10.0
1,065	25.6	1,152	0.8	1,239	8.0
1,066	26.5	1,153	0.0	1,240	6.0
1,067	26.8	1,154	0.0	1,241	4.0
1,068	27.4	1,155	0.0	1,242	2.5
1,069	27.9	1,156	0.0	1,243	0.7
1,070	28.3	1,157	0.0	1,244	0.0
1,071	28.0	1,158	0.0	1,245	0.0
1,072	27.5	1,159	0.0	1,246	0.0
1,073	27.0	1,160	0.0	1,247	0.0
1,074	27.0	1,161	0.0	1,248	0.0
1,075	26.3	1,162	0.0	1,249	0.0
1,076	24.5	1,163	0.0	1,250	0.0
1,077	22.5	1,164	0.0	1,251	0.0
1,078	21.5	1,165	0.0	1,252	1.0
1,079	20.6	1,166	0.0	1,253	1.0
1,080	18.0	1,167	0.0	1,254	1.0
1,081	15.0	1,168	0.0	1,255	1.0
1,082	12.3	1,169	2.1	1,256	1.0
1,083	11.1	1,170	5.4	1,257	1.6
1,084	10.6	1,171	8.7	1,258	3.0
1,085	10.0	1,172	12.0	1,259	4.0
1,086	9.5	1,173	15.3	1,260	5.0
1,087	9.1	1,174	18.6	1,261	6.3
1,088	8.7	1,175	21.1	1,262	8.0
1,089	8.6	1,176	23.0	1,263	10.0
1,090	8.8	1,177	23.5	1,264	10.5
1,091	9.0	1,178	23.0	1,265	9.5
1,092	8.7	1,179	22.5	1,266	8.5
1,093	8.6	1,180	20.0	1,267	7.6
1,094	8.0	1,181	16.7	1,268	8.8
1,095	7.0	1,182	13.4	1,269	11.0
1,096	5.0	1,183	10.1	1,270	14.0
1,097	4.2	1,184	6.8	1,271	17.0
1,098	2.6	1,185	3.5	1,272	19.5
1,099	1.0	1,186	0.2	1,273	21.0
1,100	0.0	1,187	0.0	1,274	21.8
1,101	0.1	1,188	0.0	1,275	22.2
1,102	0.6	1,189	0.0	1,276	23.0
1,103	1.8	1,190	0.0	1,277	23.6
1,104	3.6	1,191	0.0	1,278	24.1
1,105	6.9	1,192	0.0	1,279	24.5
1,106	10.0	1,193	0.0	1,280	24.5
1,107	12.8	1,194	0.0	1,281	24.0
1,108	14.0	1,195	0.0	1,282	23.5
1,109	14.5	1,196	0.0	1,283	23.5
1,110	16.0	1,197	0.2	1,284	23.5
1,111	18.1	1,198	1.5	1,285	23.5
1,112	20.0	1,199	3.5	1,286	23.5
1,113	21.0	1,200	6.5	1,287	23.5
1,114	21.2	1,201	9.8	1,288	24.0
1,115	21.3	1,202	12.0	1,289	24.1
1,116	21.4	1,203	12.9	1,290	24.5
1,117	21.7	1,204	13.0	1,291	24.7
1,118	22.5	1,205	12.6	1,292	25.0
1,119	23.0	1,206	12.8	1,293	25.4
1,120	23.8	1,207	13.1	1,294	25.6
1,121	24.5	1,208	13.1	1,295	25.7

APPENDIX A—Continued

Time (sec.)	Speed (m.p.h.)	Time (sec.)	Speed (m.p.h.)	Time (sec.)	Speed (m.p.h.)
1,296	26.0	1,322	0.0	1,347	20.3
1,297	26.2	1,323	0.0	1,348	21.3
1,298	27.0	1,324	0.0	1,349	21.9
1,299	27.8	1,325	0.0	1,350	22.1
1,300	28.3	1,326	0.0	1,351	22.4
1,301	29.0	1,327	0.0	1,352	22.0
1,302	29.1	1,328	0.0	1,353	21.6
1,303	29.0	1,329	0.0	1,354	21.1
1,304	28.0	1,330	0.0	1,355	20.5
1,305	24.7	1,331	0.0	1,356	20.0
1,306	21.4	1,332	0.0	1,357	19.6
1,307	18.1	1,333	0.0	1,358	18.5
1,308	14.8	1,334	0.0	1,359	17.5
1,309	11.5	1,335	0.0	1,360	16.5
1,310	8.2	1,336	0.0	1,361	15.5
1,311	4.9	1,337	0.0	1,362	14.0
1,312	1.6	1,338	1.5	1,363	11.0
1,313	0.0	1,339	4.8	1,364	8.0
1,314	0.0	1,340	8.1	1,365	5.2
1,315	0.0	1,341	11.4	1,366	2.5
1,316	0.0	1,342	13.2	1,367	0.0
1,317	0.0	1,343	15.1	1,368	0.0
1,318	0.0	1,344	16.8	1,369	0.0
1,319	0.0	1,345	18.3	1,370	0.0
1,320	0.0	1,346	19.5	1,371	0.0
1,321	0.0				

Table APP-E1 DHEW Urban Dynamometer Driving Cycle (Continued)

Sundstrand Aviation
division of Sundstrand Corporation

Figure APP-E1 Plot of Federal Driving Cycle

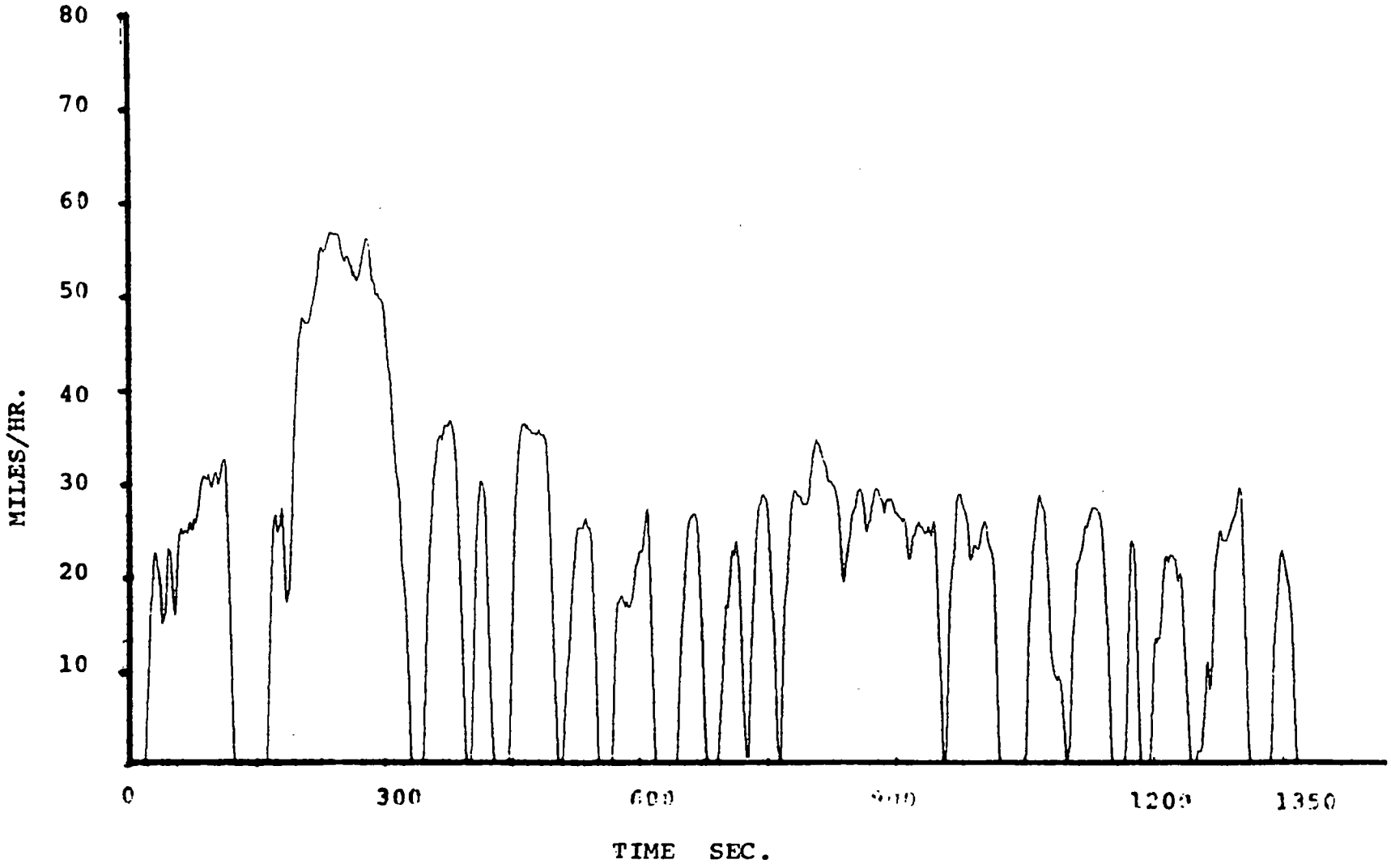

Sundstrand Aviation
division of Sundstrand Corporation

F. Tractive Effort Vs. Vehicle Speed

APPENDIX F

TRACTIVE EFFORT VS. VEHICLE SPEED

Figure APP-F1 shows the tractive effort vs. vehicle speed profile supplied to Sundstrand by EPA for the purpose of defining the flywheel transmission performance envelope.

In calculating the steady state tractive effort versus vehicle speed, the method outlined in "Vehicle Design Goals - Six Passenger Automobile", (reference Appendix B), was used. The following defines the equation and parameter values used in carrying out these calculations.

$$TE_{SS} = TE_{AERO} + TE_{RR}$$

$$TE_{AERO} = \frac{(A_{FRONTAL}\ (C_d)(\rho_{AIR})\ (V^2)}{2g}$$

$$TE_{RR} = \frac{W}{65}\left[1 + (1.4 \times 10^{-3})\ V + (1.2 \times 10^{-5} \times V^2)\right]$$

Where:

TE_{SS} - Tractive Effort Steady State (Lb_f)

TE_{AERO} - Tractive Effort Required to Overcome Aerodynamic Resistance (Lb_f)

TE_{RR} - Tractive Effort Required to Overcome Rolling Resistance (Lb_f)

$A_{FRONTAL}$ - Frontal Area (Ft^2)

C_d - Drag Coefficient

$(A_{FRONTAL}) \times (C_d) = 12$

ρ_{AIR} - Air Density (Used .0728 lb/ft^3 @ 85°F)

V - Vehicle Speed (ft/sec)

W - Vehicle Weight (lb)

Figure APP-F2 shows the tractive effort available for vehicle acceleration. Per discussions with EPA, for the purpose of defining part load acceleration, the following was established:

Example: (See Figure app-F2 for definition of terms)

50% Acceleration Load

50% Acceleration Load = $.5 \times TE_{TOT}$

Tractive effort available for acceleration therefore equals

$$(.5 \times TE_{TOT}) - TE_{SS}$$

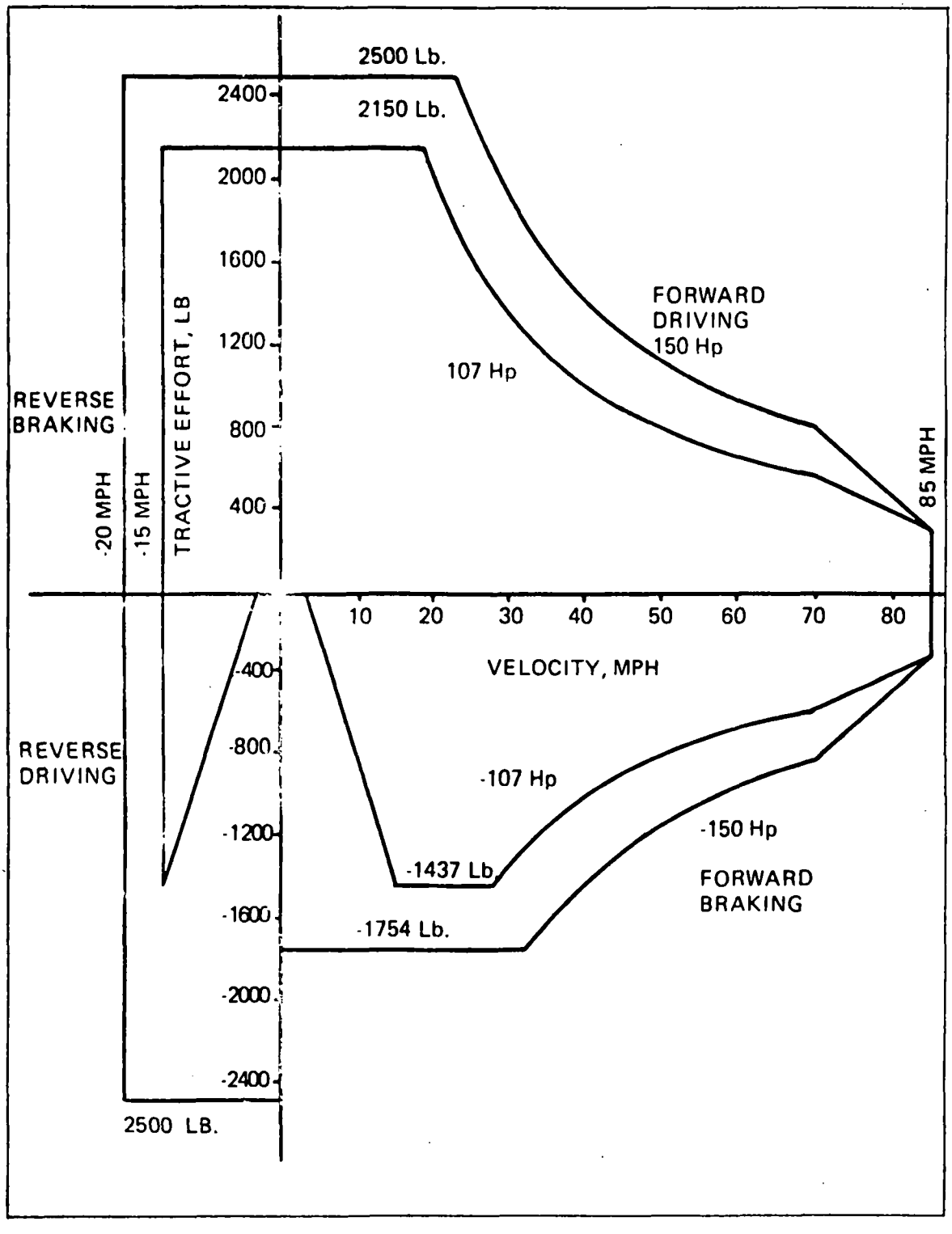

Figure APP-F1 Tractive Effort vs. Velocity Requirements for Heat Engine/Flywheel Hybrid Passenger Car Drive System

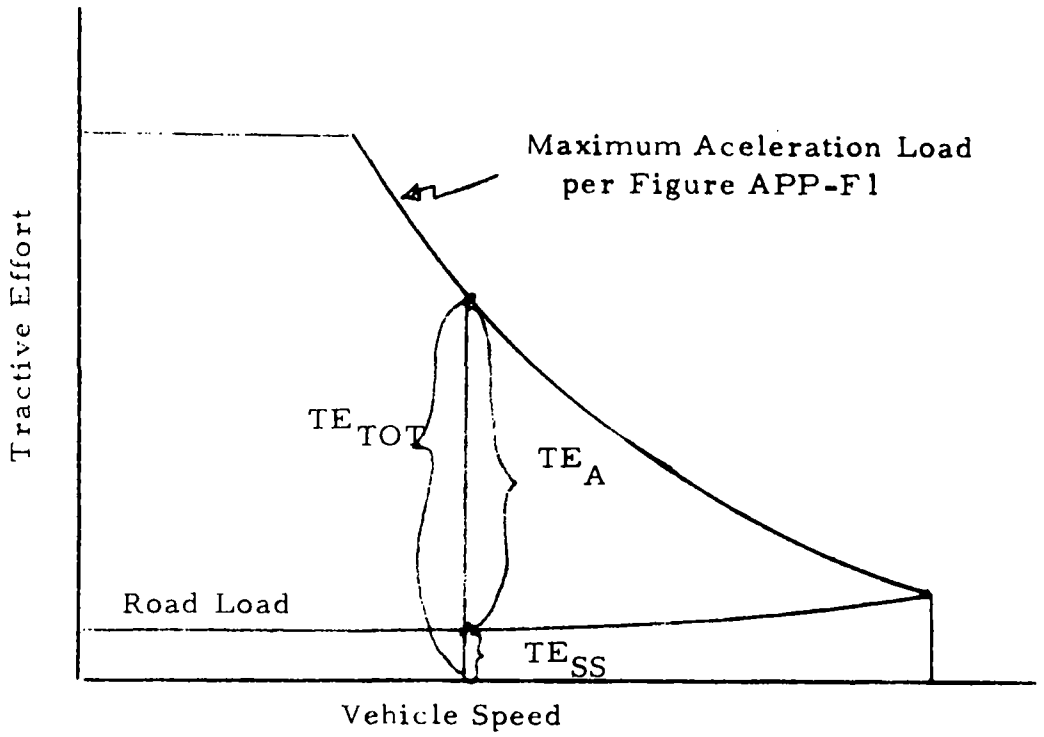

TE_{TOT} = Total Tractive Effort Available

TE_{SS} = Tractive Effort Required to maintain steady state speed

TE_A = Tractive Effort Available for Acceleration

Figure APP-F2 Tractive Effort Available for Acceleration

G. Computer Readouts Program T8H

APPENDIX G

COMPUTER READOUTS PROGRAM T8H

The following are examples of readouts obtained from Sundstrand computer program T8H described in Appendix A. Results are shown for 3 transmission configurations:

(1) Baseline (8A) transmission "Non Flywheel"

(2) Baseline (8A) transmission

(3) Alternate (8C) transmission

10-12-71
"No Feedback"
(8A)

FLYWHEEL TRANSMISSION ANALYSIS

VERSION 8H

A = 0.000000	D = 1.000000	R2= 1.000000	R5= 3.594000
B = 0.521800	R8= 2.768800	R3= 11.873001	DIAM= 26.023
C = 0.735300	R1= 1.000000	R4= 2.290000	DISP= 3.500

KS= 0.	KFW= 2.	KV= 1.	KF= 1.
KG= 0.		EG=0.985	KC= 2

V TESS TTEA	EFF EFF EFV	TE NE HPE	TFW NFW HPFW	TV NV HPV	TF NF HPF	TO NO HPO	PRESS PRESA PREST	PLF PLV PLT	HPSL HPGL HPAL	HPCL HPTL EOAT	
10.0	0.000	29.8	0.0	8.1	5.9	28.9	0.0	1.16	0.20	0.13	
74.0	0.000	1223.1	23838.2	3611.8	1285.3	357.6	0.0	2.98	0.10	4.96	
0.0	0.000	6.9	0.0	5.6	1.4	1.9	229.0	4.15	0.37	0.2842	
											IDAL
20.0	0.000	47.1	0.0	13.6	5.6	33.2	0.0	2.96	0.17	0.03	
85.0	0.000	1372.4	23346.4	3758.5	2570.7	715.2	0.0	4.03	0.18	7.77	LOAD
0.0	0.000	12.1	0.0	9.7	2.7	4.5	251.3	7.00	0.37	0.3683	
30.0	0.000	77.1	0.0	23.0	5.0	39.9	0.0	6.58	0.13	0.00	
102.0	0.000	1506.2	22502.9	3855.2	3856.0	1072.9	0.0	6.60	0.31	14.02	
0.0	0.000	22.1	0.0	16.9	3.7	8.1	300.7	13.18	0.38	0.3678	
10.0	0.000	49.6	0.0	13.5	19.8	84.1	0.0	1.27	0.58	0.13	
215.0	0.000	1223.1	23838.2	3611.8	1285.3	357.6	0.0	3.20	0.21	5.83	
0.0	0.000	11.5	0.0	9.3	4.8	5.7	535.4	4.47	0.42	0.4954	
20.0	0.000	73.5	0.0	21.3	16.2	78.3	0.0	3.11	0.41	0.03	
200.0	0.000	1372.4	23346.4	3758.5	2570.7	715.2	0.0	4.23	0.34	8.56	10%
0.0	0.000	19.2	0.0	15.2	7.9	10.6	487.4	7.35	0.41	0.5546	
30.0	0.000	87.3	0.0	26.0	7.9	52.8	0.0	6.64	0.18	0.00	
135.0	0.000	1506.2	22502.9	3855.2	3856.0	1072.9	0.0	6.66	0.37	14.26	
0.0	0.000	25.0	0.0	19.1	5.8	10.8	362.6	13.30	0.39	0.4308	
10.0	0.000	95.9	0.0	26.5	51.7	210.6	0.0	1.63	1.46	0.13	
535.0	0.000	1223.1	23838.2	3611.8	1285.3	357.6	0.0	3.96	0.46	9.22	
0.0	0.000	22.5	0.0	18.2	12.6	14.3	1240.0	5.60	0.55	0.6356	
20.0	0.000	144.3	0.0	41.9	43.5	195.8	0.0	3.70	1.03	0.03	
500.0	0.000	1372.4	23346.4	3758.5	2570.7	715.2	0.0	4.97	0.76	11.04	25%
0.0	0.000	37.7	0.0	29.9	21.3	26.6	1087.0	8.68	0.52	0.7070	
30.0	0.000	149.8	0.0	44.6	25.1	132.3	0.0	7.11	0.46	0.00	
448.0	0.000	1506.2	22502.9	3855.2	3856.0	1072.9	0.0	7.13	0.76	15.94	
0.0	0.000	42.9	0.0	32.7	18.5	77.0	743.4	14.75	0.46	0.6290	
10.0	0.000	178.9	0.0	49.1	104.3	420.9	0.0	2.51	2.93	0.13	
1075.0	0.000	1223.1	23838.2	3611.8	1285.3	357.6	0.0	5.77	0.89	13.01	
0.0	0.000	41.6	0.0	33.8	25.5	28.6	2412.4	8.28	0.77	0.6877	
20.0	0.000	265.8	0.0	77.2	88.8	391.6	0.0	5.11	2.07	0.03	50%
1000.0	0.000	1372.4	23346.4	3758.5	2570.7	715.2	0.0	6.72	1.48	16.14	
0.0	0.000	69.4	0.0	55.3	43.4	53.3	7094.6	11.84	0.71	0.7676	
30.0	0.000	255.7	0.0	76.0	53.7	264.3	0.0	8.19	0.92	0.00	
675.0	0.000	1506.2	22502.9	3855.2	3856.0	1072.9	0.0	8.21	1.42	19.33	
0.0	0.000	73.3	0.0	55.8	39.4	54.0	1376.2	16.40	0.58	0.7363	
10.0	0.000	264.4	0.0	72.8	156.7	631.6	0.0	3.63	4.40	0.13	
1613.0	0.000	1223.1	23838.2	3611.8	1285.3	357.6	0.0	8.08	1.32	18.57	
0.0	0.000	61.5	0.0	50.0	38.3	43.0	3587.7	11.72	0.98	0.6984	
20.0	0.000	390.8	0.0	113.7	133.7	587.4	0.0	6.91	3.10	0.03	
1500.0	0.000	1372.4	23346.4	3758.5	2570.7	715.2	0.0	8.94	2.20	22.14	75%
0.0	0.000	102.1	0.0	81.3	65.4	80.0	3098.4	15.90	0.89	0.7831	
30.0	0.000	363.7	0.0	108.2	82.1	396.7	0.0	9.56	1.38	0.00	
1013.0	0.000	1506.2	22502.9	3855.2	3856.0	1072.9	0.0	9.54	2.09	23.29	
0.0	0.000	104.3	0.0	79.4	60.3	81.0	2010.0	19.11	0.69	0.7767	

Sundstrand Aviation
division of Sundstrand Corporation

10.0	0.000	152.3	0.0	97.2	208.9	841.9	0.0	4.95	5.86	0.13	
2150.0	0.000	1723.1	23838.2	3611.8	1285.3	357.6	0.0	10.79	1.77	24.71	
0.0	0.000	82.0	0.0	66.8	51.1	57.3	4743.4	15.74	1.20	0.6987	
20.0	0.000	510.6	0.0	151.0	178.5	783.2	0.0	9.01	4.14	0.03	
2000.0	0.000	1372.4	23346.4	3758.5	2570.7	715.2	0.0	11.66	2.43	28.86	100%
0.0	0.000	135.5	0.0	108.0	87.3	106.6	4096.2	20.47	1.08	0.7870	
30.0	0.000	473.0	0.0	140.7	110.4	528.6	0.0	11.16	1.84	0.00	
1350.0	0.000	1506.2	22502.9	3855.2	3856.0	1072.9	0.0	11.08	2.76	27.67	
0.0	0.000	135.6	0.0	103.3	81.0	108.0	2640.1	22.24	0.81	0.7960	

END OF DATA

PAGE 1

// JOB 0060

LOG DRIVE	CART SPEC	CART AVAIL	PHY DRIVE
0000	0060	0060	0000

V2 M07 ACTUAL 16K CONFIG 16K

// XEQ T8MD2

FLYWHEEL TRANSMISSION ANALYSIS

VERSION 8MD2

A = 0.000000	D = 1.000000	R2= 1.000000	R5= 3.594000	R6= 1.561000
H = 0.521800	RA= 2.768800	R3= 11.873001	DIAW= 26.023	F= 1.680700
C = 0.735300	R1= 1.000000	R4= 2.290000	DISP= 3.500	

KE= 0.	KEW= 2.	KV= 1.	KF= 1.
KC= 0.		EG=0.985	KC= 2

V TESS TFEA	FTF FTE FTV	TE NE HPE	TEW NEW HPEW	TV NV HPV	TF NF HPF	TO NO HPO	PRESS PRESA PREST	PLF PLV PLT	HPSL HPGL HPAL	HPLL HPIL FHAT	
30.0	0.000	74.9	0.0	-7.9	9.3	19.9	0.0	6.39	0.13	0.00	
102.0	0.000	1506.2	22502.9	3855.2	3853.4	1072.9	0.0	6.29	0.19	13.34	
0.0	0.000	21.5	0.0	-5.8	6.8	8.1	14.5	12.68	0.33	0.3794	
40.0	0.000	74.9	0.0	-1.0	12.8	48.9	0.0	4.53	0.07	0.03	
125.0	0.000	1622.6	21265.8	3895.8	3198.8	1430.5	0.0	4.68	0.13	9.80	
0.0	0.000	23.1	0.0	-0.7	8.4	13.3	138.5	9.21	0.35	0.5761	
50.0	0.000	85.2	0.0	2.3	18.0	60.3	0.0	2.66	0.04	0.13	
154.0	0.000	1718.4	14560.6	3869.7	2440.4	1788.2	0.0	4.01	0.15	7.36	
0.0	0.000	27.9	0.0	1.6	8.3	20.5	266.5	6.67	0.37	0.7359	
60.0	0.000	106.7	0.0	2.5	22.2	74.7	0.0	1.39	0.20	0.29	FAD
191.0	0.000	1787.4	17249.0	3757.3	1547.5	2145.8	0.0	3.35	0.12	5.77	LOAD
0.0	0.000	36.3	0.0	1.8	6.5	30.5	380.2	4.75	0.38	0.8409	
70.0	0.000	138.0	0.0	-1.4	25.7	90.4	0.0	0.71	0.46	0.52	
231.0	0.000	1816.5	14034.6	3516.3	454.1	2503.4	0.0	2.46	0.04	4.62	
0.0	0.000	47.7	0.0	-0.9	2.2	43.1	378.8	3.17	0.39	0.9032	
80.0	0.000	196.9	0.0	16.4	27.1	109.6	0.0	1.19	0.91	0.82	
280.0	0.000	1765.2	8996.7	3015.6	-1043.7	2861.1	0.0	2.84	0.22	6.46	
0.0	0.000	66.1	0.0	9.4	5.4	59.7	707.4	4.03	0.45	0.9024	
85.0	0.000	250.6	0.0	35.7	24.9	119.8	0.0	2.65	1.29	0.99	
306.0	0.000	1636.3	4138.2	2432.0	-2311.8	3039.9	0.0	2.92	0.41	8.73	
0.0	0.000	78.0	0.0	16.5	10.9	69.3	659.9	5.57	0.45	0.8882	
30.0	0.000	84.6	0.0	-2.9	14.4	52.8	0.0	6.43	0.17	0.00	
135.0	0.000	1506.2	22502.9	3855.2	3853.4	1072.9	0.0	6.32	0.19	13.48	
0.0	0.000	24.2	0.0	-2.1	10.6	10.8	123.0	12.76	0.35	0.4447	
40.0	0.000	65.9	0.0	-3.9	10.2	39.1	0.0	4.49	0.05	0.03	100%
100.0	0.000	1622.6	21265.8	3895.8	3198.8	1430.5	0.0	4.65	0.13	9.72	
0.0	0.000	20.3	0.0	-2.9	6.2	10.6	61.6	9.15	0.34	0.5231	

96.0	0.000	149.2	0.0	26.0	45.2	132.3	0.0	7.14	0.42	0.00	
338.0	0.000	1506.2	22502.9	3855.2	3853.4	1072.9	0.0	6.93	0.78	15.75	
0.0	0.000	42.7	0.0	19.0	33.1	27.0	772.2	14.07	0.47	0.6317	
40.0	0.000	121.3	0.0	12.8	31.7	97.9	0.0	4.82	0.14	0.03	
290.0	0.000	1622.6	21265.8	3895.8	3198.8	1430.5	0.0	4.95	0.43	10.81	
0.0	0.000	37.4	0.0	9.5	19.3	26.6	516.9	9.77	0.42	0.7115	25%
50.0	0.000	165.9	0.0	5.9	24.2	78.3	0.0	2.74	0.04	0.13	
290.0	0.000	1718.4	19560.6	3869.7	2440.4	1788.2	0.0	4.19	0.21	7.66	
0.0	0.000	34.3	0.0	4.3	11.2	26.6	397.3	6.85	0.40	0.7768	
60.0	0.000	96.5	0.0	1.5	19.6	66.5	0.0	1.37	0.17	0.29	
170.0	0.000	1787.4	17249.0	3757.3	1547.5	2145.8	0.0	3.31	0.10	5.46	
0.0	0.000	32.8	0.0	1.0	5.7	27.2	324.3	4.69	0.38	0.8276	
30.0	0.000	262.1	0.0	71.1	95.4	264.3	0.0	9.12	0.84	0.00	
675.0	0.000	1506.2	22502.9	3855.2	3853.4	1072.9	0.0	8.71	1.83	21.18	
0.0	0.000	75.1	0.0	52.2	70.0	54.0	1821.8	17.83	0.66	0.7182	
40.0	0.000	216.6	0.0	19.3	67.1	195.8	0.0	5.78	0.27	0.03	
500.0	0.000	1622.6	21265.8	3895.8	3198.8	1430.5	0.0	5.89	1.05	13.60	
0.0	0.000	66.7	0.0	29.1	40.8	51.3	1258.8	11.68	0.56	0.7967	
50.0	0.000	191.2	0.0	21.3	50.4	156.6	0.0	3.22	0.08	0.13	
400.0	0.000	1718.4	19560.6	3869.7	2440.4	1788.2	0.0	4.70	0.59	9.24	
0.0	0.000	62.5	0.0	15.7	23.6	53.3	959.5	7.93	0.50	0.8522	
60.0	0.000	179.5	0.0	9.4	40.9	133.1	0.0	1.59	0.35	0.29	
340.0	0.000	1787.4	17249.0	3757.3	1547.5	2145.8	0.0	3.70	0.28	4.71	
0.0	0.000	51.1	0.0	6.7	12.0	54.4	773.8	5.30	0.47	0.8401	50%
70.0	0.000	173.4	0.0	-0.6	33.1	115.5	0.0	0.73	0.59	0.52	
295.0	0.000	1816.5	14034.6	3516.3	454.1	2503.4	0.0	2.57	0.04	4.91	
0.0	0.000	59.9	0.0	-0.4	2.8	55.0	535.6	3.31	0.42	0.9180	
80.0	0.000	144.5	0.0	13.2	19.0	78.3	0.0	1.12	0.65	0.82	
200.0	0.000	1765.2	8996.7	3015.6	-1043.7	2861.1	0.0	2.70	0.17	5.91	
0.0	0.000	48.5	0.0	7.6	3.7	42.6	527.0	3.83	0.42	0.8782	
85.0	0.000	140.3	0.0	22.5	11.9	62.6	0.0	2.45	0.67	0.99	
160.0	0.000	1636.3	4138.2	2432.0	-2311.8	3039.9	0.0	2.70	0.23	7.47	
0.0	0.000	43.7	0.0	10.4	5.2	36.2	375.0	5.16	0.39	0.8291	
30.0	0.000	379.6	0.0	114.0	145.2	396.7	0.0	11.75	1.27	0.00	
1013.0	0.000	1506.2	22502.9	3855.2	3853.4	1072.9	0.0	11.11	2.85	27.84	
0.0	0.000	108.8	0.0	83.6	106.5	81.0	2856.8	22.86	0.85	0.7442	
40.0	0.000	314.1	0.0	64.7	102.2	293.7	0.0	7.07	0.41	0.03	
750.0	0.000	1622.6	21265.8	3895.8	3198.8	1430.5	0.0	7.18	1.65	17.05	
0.0	0.000	97.0	0.0	47.9	62.2	80.0	1990.1	14.25	0.69	0.8242	
50.0	0.000	278.7	0.0	36.1	77.5	234.9	0.0	3.87	0.12	0.13	
600.0	0.000	1718.4	19560.6	3869.7	2440.4	1788.2	0.0	5.50	0.94	11.18	
0.0	0.000	91.1	0.0	26.6	36.0	80.0	1514.9	9.38	0.60	0.8772	
60.0	0.000	263.1	0.0	17.0	62.2	199.7	0.0	1.89	0.53	0.29	
510.0	0.000	1787.4	17249.0	3757.3	1547.5	2145.8	0.0	4.22	0.45	7.96	
0.0	0.000	89.5	0.0	12.2	18.3	81.6	1218.8	6.11	0.55	0.9111	75%
70.0	0.000	255.5	0.0	0.9	50.3	173.4	0.0	0.79	0.89	0.52	
443.0	0.000	1816.5	14034.6	3516.3	454.1	2503.4	0.0	2.90	0.07	5.69	
0.0	0.000	88.3	0.0	0.6	4.3	82.6	895.9	3.70	0.49	0.9355	
80.0	0.000	210.0	0.0	17.2	29.2	117.4	0.0	1.20	0.97	0.82	
300.0	0.000	1765.2	8996.7	3015.6	-1043.7	2861.1	0.0	2.88	0.23	6.60	
0.0	0.000	70.6	0.0	9.9	5.8	64.0	752.6	4.09	0.46	0.9065	
85.0	0.000	200.7	0.0	29.7	19.0	93.9	0.0	2.55	1.01	0.99	
240.0	0.000	1636.3	4138.2	2432.0	-2311.8	3039.9	0.0	2.81	0.33	8.14	
0.0	0.000	62.5	0.0	13.7	8.3	54.4	531.1	5.37	0.42	0.8697	

Sundstrand Aviation
division of Sundstrand Corporation

30.0	0.000	500.0	0.0	155.0	194.3	529.5	0.0	14.87	1.69	0.00	
1350.0	0.000	1506.2	22507.9	3855.2	3853.4	1072.9	0.0	13.94	3.54	35.40	
0.0	0.000	143.4	0.0	113.8	142.6	108.0	1878.2	28.82	1.04	0.7531	
40.0	0.000	413.1	0.0	89.1	137.0	391.6	0.0	8.60	0.55	0.03	
1000.0	0.000	1622.6	21265.8	3895.8	3198.8	1430.5	0.0	8.71	2.24	20.99	
0.0	0.000	127.6	0.0	66.1	83.4	106.6	2714.8	17.32	0.82	0.8355	
50.0	0.000	366.9	0.0	50.5	104.0	313.2	0.0	4.65	0.16	0.13	
800.0	0.000	1718.4	19560.6	3869.7	2440.4	1788.2	0.0	6.46	1.28	13.40	
0.0	0.000	120.0	0.0	37.2	48.3	106.6	2066.0	11.12	0.70	0.8883	
60.0	0.000	347.2	0.0	24.4	83.4	266.2	0.0	2.24	0.71	0.29	
680.0	0.000	1707.4	17249.0	3757.3	1547.5	2145.8	0.0	4.84	0.63	9.36	
0.0	0.000	118.1	0.0	17.4	24.5	108.8	1660.9	7.08	0.63	0.9207	
70.0	0.000	337.4	0.0	2.4	67.3	231.0	0.0	0.86	1.17	0.52	105.76
590.0	0.000	1816.5	14034.6	3516.3	454.1	2503.4	0.0	3.30	0.11	6.56	
0.0	0.000	116.7	0.0	1.6	5.8	110.1	1251.6	4.17	0.55	0.9437	
80.0	0.000	275.6	0.0	21.2	39.4	156.6	0.0	1.30	1.30	0.82	
400.0	0.000	1765.2	8996.7	3015.6	-1043.7	2861.1	0.0	3.08	0.30	7.32	
0.0	0.000	92.6	0.0	12.2	7.8	85.3	978.6	4.38	0.50	0.9209	
85.0	0.000	261.2	0.0	36.9	26.1	125.3	0.0	2.67	1.34	0.99	
320.0	0.000	1636.3	4138.2	2432.0	-2311.8	3039.9	0.0	2.94	0.42	8.85	
0.0	0.000	81.3	0.0	17.1	11.5	72.5	687.2	5.62	0.45	0.8911	

END OF DATA

(54)

FLYWHEEL TRANSMISSION ANALYSIS

VERSION 8H

A = 0.000000	D = 1.000000	R2= 1.000000	R5= 3.594000
B = 0.521800	RA= 2.768800	R3= 11.823001	DIAW= 26.023
C = 0.735300	R1= 1.000000	R4= 2.290000	DISP= 3.500

KE= 0.	KFW= 2.	KV= 1.	KF= 1.
FO= 0.		EG=0.985	KC= 7

V TESS TTEA	LTI LTF LTV	TL TL HPE	TFW NFW HPFW	TV NV HPV	TF NF HPF	TO NO HPO	PRESS PRESA PREST	PLF PLV PLT	HPSL HPGL HPAL	HPCL HPTL EOAT	
0.0	0.000	14.3	0.0	-3.0	6.8	27.4	0.0	0.07	0.23	0.29	
70.0	0.000	1059.2	24000.0	3418.0	0.0	0.0	0.0	1.99	0.02	2.95	
0.0	0.000	2.8	0.0	-1.9	0.0	0.0	0.0	2.06	0.33	-0.0247	
10.0	0.000	29.8	0.0	8.1	5.9	28.9	0.0	1.16	0.20	0.13	
74.0	0.000	1223.1	23838.2	3611.8	1285.3	357.6	0.0	2.98	0.10	4.96	
0.0	0.000	6.9	0.0	5.6	1.4	1.9	229.0	4.15	0.37	0.2842	
20.0	0.000	47.1	0.0	13.6	5.6	33.2	0.0	2.96	0.17	0.03	ROAD LOAD
85.0	0.000	1372.4	23346.4	3758.5	2570.7	715.2	0.0	4.03	0.18	7.77	
0.0	0.000	12.3	0.0	9.7	2.7	4.5	251.3	7.00	0.37	0.3683	
30.0	0.000	77.3	0.0	23.0	5.0	39.9	0.0	6.58	0.13	0.00	
102.0	0.000	1506.2	22502.9	3855.2	3856.0	1072.9	0.0	6.60	0.31	14.02	
0.0	0.000	22.1	0.0	16.9	3.7	8.1	300.7	13.18	0.38	0.3678	
10.0	0.000	35.6	0.9	15.7	25.2	94.7	0.0	1.32	0.71	0.13	
74.0	0.000	1223.1	23838.2	3611.8	1285.3	357.6	0.0	3.31	0.38	6.32	
168.0	0.000	8.2	4.4	10.8	6.1	6.4	653.7	4.63	0.45	0.5051	
20.0	0.000	51.8	1.3	23.9	19.7	78.3	0.0	3.18	0.47	0.03	10% OF MAX ACC.
85.0	0.000	1372.4	23346.4	3758.5	2570.7	715.2	0.0	4.30	0.58	9.01	
115.0	0.000	13.5	6.1	17.1	9.6	10.6	559.3	7.48	0.43	0.5419	
30.0	0.000	78.8	0.6	27.5	9.3	52.8	0.0	6.67	0.20	0.00	
102.0	0.000	1506.2	22502.9	3855.2	3856.0	1072.9	0.0	6.70	0.48	14.46	
33.0	0.000	22.6	2.6	20.2	6.8	10.8	394.5	13.37	0.40	0.4274	
10.0	0.000	47.7	2.7	29.6	58.9	210.2	0.0	1.74	1.61	0.13	
74.0	0.000	1223.1	23838.2	3611.8	1285.3	357.6	0.0	4.17	0.89	9.14	
463.0	0.000	11.1	12.3	20.3	14.4	14.3	1402.2	5.91	0.58	0.6102	
20.0	0.000	66.8	4.9	51.5	56.0	195.8	0.0	4.05	1.24	0.03	
85.0	0.000	1372.4	23346.4	3758.5	2570.7	715.2	0.0	5.39	1.62	12.73	
415.0	0.000	17.4	22.1	36.8	27.4	26.6	1364.8	9.44	0.58	0.6733	
											25% OF MAX. ACC.
30.0	0.000	89.4	4.4	55.9	35.5	132.3	0.0	7.46	0.58	0.00	
102.0	0.000	1506.2	22502.9	3855.2	3856.0	1072.9	0.0	7.49	1.57	17.62	
236.0	0.000	25.7	18.8	41.0	26.0	27.0	972.4	14.95	0.50	0.6054	
10.0	0.000	74.2	5.8	56.2	120.2	420.9	0.0	2.83	3.26	0.13	
74.0	0.000	1223.1	23838.2	3611.8	1285.3	357.6	0.0	6.42	1.82	15.31	
1001.0	0.000	17.2	26.6	38.6	29.4	28.6	2767.0	9.25	0.83	0.6518	
20.0	0.000	97.7	10.9	99.3	116.1	391.6	0.0	6.16	2.53	0.03	
85.0	0.000	1372.4	23346.4	3758.5	2570.7	715.2	0.0	8.05	3.38	21.00	50% OF MAX. ACC.
915.0	0.000	25.5	48.8	71.0	56.8	53.3	2705.0	14.21	0.82	0.7174	
30.0	0.000	112.2	10.6	104.1	78.6	264.3	0.0	9.38	1.22	0.00	
102.0	0.000	1506.2	22502.9	3855.2	3856.0	1072.9	0.0	9.36	3.38	24.04	
573.0	0.000	32.2	45.8	76.4	57.7	54.0	1931.4	18.74	0.68	0.6919	
10.0	0.000	104.7	9.0	84.1	181.0	631.6	0.0	4.22	4.90	0.13	
74.0	0.000	1223.1	23838.2	3611.8	1285.3	357.6	0.0	9.30	2.76	22.42	
1539.0	0.000	24.3	41.0	57.8	44.3	43.0	4124.4	13.53	1.08	0.6573	
20.0	0.000	133.8	16.9	148.7	175.8	587.4	0.0	8.87	3.82	0.03	75% OF MAX. ACC.
85.0	0.000	1372.4	23346.4	3758.5	2570.7	715.2	0.0	11.48	5.15	30.45	
1415.0	0.000	34.9	75.4	106.4	86.0	80.0	4036.0	20.36	1.07	0.7243	
30.0	0.000	138.4	17.0	153.7	121.5	396.7	0.0	11.85	1.86	0.00	
102.0	0.000	1506.2	22502.9	3855.2	3856.0	1072.9	0.0	11.73	5.21	31.53	
911.0	0.000	39.6	72.8	112.8	89.2	81.0	2889.4	23.59	0.85	0.7198	

Sundstrand Aviation
division of Sundstrand Corporation

10.0	0.000	138.4	12.1	112.9	241.5	841.9	0.0	5.86	6.54	0.13	
74.0	0.000	1223.1	23838.2	3611.8	1285.3	357.6	0.0	12.66	4.71	30.26	
2076.0	0.000	32.2	55.3	77.6	59.1	57.3	5468.3	18.53	1.33	0.6545	
20.0	0.000	174.2	22.9	199.4	235.1	783.2	0.0	12.05	5.12	0.03	
85.0	0.000	1372.4	23346.4	3758.5	2570.7	715.2	0.0	15.55	6.93	41.00	MAXIMUM
1915.0	0.000	45.5	102.1	142.7	115.1	106.6	5354.4	27.60	1.31	0.7223	ACCELERATION
30.0	0.000	167.2	23.3	204.0	164.[illegible]	528.6	0.0	14.75	2.49	0.00	
102.0	0.000	1506.2	22502.9	3855.2	3856.0	1072.9	0.0	14.46	7.04	39.80	
1248.0	0.000	47.9	99.8	149.7	120.5	108.0	3839.1	29.21	1.03	0.7307	

END OF DATA

PAGE 1

// JOB 0060

LOG DRIVE	CART SPEC	CART AVAIL	PHY DRIVE
0000	0060	0060	0001
		0001	0000

V2 M07 ACTUAL 16K CONFIG 16K

// REQ TAMD2

10-19 '71
INPUT TO 'E' CCG

FLYWHEEL TRANSMISSION ANALYSIS

VERSION 8MD2

A = 0.000000	B = 1.000000	R2= 1.000000	R5= 1.594000	R6= 1.561000
R = 0.521800	RA= 2.768800	R3= 11.823001	DIAW= 26.023	F= .680700
C = 0.735300	M1= 1.000000	R4= 2.290000	DISP= 3.500	

KE= 0. KFW= 2. KV= 1. KF= 1.
KO= 0. EG=0.985 KC= 2

V TESS TTEA	EIF EFF EFV	TF TE HPE	TFW NFW HPFW	TV NV HPV	TF NF HPF	TD ND HPD	PRESS PRESA PREST	PLF PLV PLT	HPSL HPGL HPAL	HPCL HPTL EDAT	
50.0	0.000	74.9	0.0	-7.9	9.3	39.9	0.0	6.39	0.13	0.00	
102.0	0.000	1506.2	22502.9	3855.2	3853.4	1072.9	0.0	6.29	0.19	13.34	
0.0	0.000	21.5	0.0	-5.8	6.8	8.1	14.5	12.68	0.33	0.3794	
40.0	0.000	74.9	0.0	-1.0	13.0	48.9	0.0	4.53	0.07	0.03	
125.0	0.000	1622.6	21265.8	3895.8	3198.8	1430.5	0.0	4.68	0.13	9.80	
0.0	0.000	23.1	0.0	-0.7	8.4	13.3	138.5	9.21	0.35	0.5761	
50.0	0.000	85.2	0.0	2.3	18.0	60.3	0.0	2.66	0.03	0.13	
154.0	0.000	1718.4	19560.6	3869.7	2440.4	1788.2	0.0	4.01	0.15	7.36	
0.0	0.000	27.9	0.0	1.6	8.3	20.5	266.5	6.67	0.37	0.7359	
60.0	0.000	106.7	0.0	2.5	22.2	74.7	0.0	1.39	0.20	0.29	ROAD
191.0	0.000	1787.4	17249.0	3757.3	1547.5	2145.8	0.0	3.35	0.12	5.77	LOAD
0.0	0.000	36.3	0.0	1.8	6.5	30.5	380.2	4.75	0.39	0.8409	
70.0	0.000	138.0	0.0	-1.4	25.7	90.4	0.0	0.71	0.46	0.52	
231.0	0.000	1816.5	14034.6	3516.3	454.1	2503.4	0.0	2.46	0.04	4.62	
0.0	0.000	47.7	0.0	-0.9	2.2	43.1	378.8	3.17	0.39	0.9032	
80.0	0.000	196.9	0.0	16.4	27.1	109.6	0.0	1.19	0.91	0.82	
280.0	0.000	1765.2	8996.7	3015.6	-1043.7	2861.1	0.0	2.84	0.22	4.46	
0.0	0.000	66.1	0.0	9.4	5.4	59.7	707.4	4.03	0.45	0.9074	
85.0	0.000	250.6	0.0	35.7	24.9	119.8	0.0	2.65	1.29	0.99	
306.0	0.000	1636.3	4136.2	2432.0	-2311.8	3039.9	0.0	2.92	0.41	8.73	
0.0	0.000	78.0	0.0	16.5	10.9	69.3	659.9	5.57	0.45	0.8882	
30.0	0.000	76.0	0.6	-0.4	17.0	52.8	0.0	6.47	0.18	0.00	10% OF
102.0	0.000	1506.2	22502.9	3855.2	3853.4	1072.9	0.0	6.35	0.27	13.65	MAX ACC.
33.0	0.000	21.8	2.6	-0.3	12.5	10.8	178.5	12.82	0.36	0.4417	
50.0	0.000	91.4	4.4	42.6	63.4	132.3	0.0	7.76	0.53	0.00	
102.0	0.000	1506.2	22502.9	3855.2	3853.4	1072.9	0.0	7.49	1.73	18.07	
236.0	0.000	26.2	18.8	31.3	46.5	27.0	1154.7	15.26	0.54	0.5993	
											25% OF MAX ACC.
40.0	0.000	82.4	3.2	22.6	44.6	97.9	0.0	5.13	0.17	0.03	
125.0	0.000	1622.6	21265.8	3895.8	3198.8	1430.5	0.0	5.24	1.06	12.12	
125.0	0.000	25.4	13.3	16.8	27.2	26.6	789.0	10.37	0.47	0.6874	

30.0	0.000	176.9	10.6	108.7	139.0	264.3	0.0	11.39	1.11	0.00	
102.0	0.000	1506.2	22502.9	3855.2	3853.4	1072.9	0.0	10.74	4.10	28.23	
573.0	0.000	36.3	45.8	79.8	102.0	54.0	2728.9	22.18	0.83	0.6566	
45.0	0.000	103.2	9.8	67.0	105.4	199.8	0.0	7.20	0.38	0.03	50% OF MAX ACC
125.0	0.000	1622.6	21265.8	3895.8	3198.8	1430.5	0.0	7.31	2.90	18.56	
375.0	0.000	31.8	40.0	49.7	64.2	53.3	2058.0	14.52	0.70	0.7418	
50.0	0.000	101.3	8.8	34.3	83.3	156.6	0.0	4.03	0.11	0.13	
154.0	0.000	1718.4	19560.6	3869.7	2440.4	1788.2	0.0	5.70	1.99	12.62	
246.0	0.000	33.1	32.7	28.9	38.7	53.3	1635.5	9.74	0.63	0.8086	
30.0	0.000	170.1	17.0	170.8	213.7	396.7	0.0	16.22	1.69	0.00	
102.0	0.000	1506.2	22502.9	3855.2	3853.4	1072.9	0.0	15.17	6.42	40.63	
911.0	0.000	48.7	72.8	125.4	156.8	81.0	4281.1	31.40	1.11	0.6660	
40.0	0.000	128.9	16.4	108.6	165.5	293.7	0.0	10.02	0.60	0.03	
125.0	0.000	1622.6	21265.8	3895.8	3198.8	1430.5	0.0	10.17	4.72	26.49	
625.0	0.000	39.8	66.6	80.6	100.8	80.0	3306.8	20.20	0.93	0.7511	
50.0	0.000	118.2	15.9	67.3	135.8	234.9	0.0	5.73	0.18	0.13	
154.0	0.000	1718.4	19560.6	3869.7	2440.4	1788.2	0.0	7.78	3.47	18.14	
446.0	0.000	38.6	59.4	49.6	63.1	80.0	2728.4	13.52	0.83	0.8150	
60.0	0.000	128.5	15.5	35.3	115.7	199.7	0.0	2.88	0.86	0.29	75% OF MAX ACC.
191.0	0.000	1787.4	17249.0	3757.3	1547.5	2145.8	0.0	5.95	2.42	13.17	
319.0	0.000	43.7	51.0	25.2	34.0	81.6	2333.0	8.83	0.75	0.8609	
70.0	0.000	151.3	14.7	4.5	97.2	173.0	0.0	1.02	1.49	0.52	
231.0	0.000	1816.5	14034.6	3516.3	454.1	2503.4	0.0	4.15	1.35	9.22	
211.0	0.000	52.3	39.3	3.2	8.4	82.5	1876.7	5.17	0.67	0.8994	
80.0	0.000	179.0	2.4	20.0	36.2	117.4	0.0	1.27	1.14	0.82	
280.0	0.000	1765.2	8996.7	3015.6	-1043.7	2861.1	0.0	3.01	0.40	7.16	
20.0	0.000	66.8	4.2	11.4	7.2	64.0	908.3	4.29	0.49	0.6993	
30.0	0.000	218.9	23.3	229.6	287.3	528.6	0.0	21.96	2.27	0.00	
102.0	0.000	1506.2	22502.9	3855.2	3853.4	1072.9	0.0	20.31	8.68	54.63	
1240.0	0.000	62.8	79.6	168.5	210.8	108.0	5814.6	42.28	1.39	0.6640	
40.0	0.000	158.4	23.0	148.2	225.0	391.6	0.0	13.41	0.81	0.03	
125.0	0.000	1622.6	21265.8	3895.8	3198.8	1430.5	0.0	13.67	6.50	35.60	
875.0	0.000	48.9	93.3	110.0	137.0	106.6	4544.3	27.08	1.16	0.7497	
50.0	0.000	137.5	23.1	94.0	188.0	313.2	0.0	7.80	0.25	0.13	
154.0	0.000	1718.4	19560.6	3869.7	2440.4	1788.2	0.0	10.30	4.93	24.45	
646.0	0.000	44.9	86.1	69.2	87.3	106.6	3812.7	18.10	1.02	0.8134	
60.0	0.000	142.9	23.8	51.2	165.1	266.2	0.0	4.03	1.21	0.29	MAXIMUM ACCELERATION
191.0	0.000	1787.4	17249.0	3757.3	1547.5	2145.8	0.0	7.97	3.62	18.10	
489.0	0.000	48.6	78.2	36.6	48.6	108.8	3359.3	12.01	0.94	0.8573	
70.0	0.000	162.6	25.0	6.2	147.2	231.0	0.0	1.33	2.21	0.52	
231.0	0.000	1816.5	14034.6	3516.3	454.1	2503.4	0.0	5.89	2.28	13.12	
359.0	0.000	56.2	67.0	5.5	12.7	110.1	2915.1	7.23	0.86	0.8935	
80.0	0.000	210.7	14.9	38.5	81.4	156.6	0.0	1.81	2.28	0.82	
280.0	0.000	1765.2	8996.7	3015.6	-1043.7	2861.1	0.0	4.15	1.34	11.09	
120.0	0.000	70.8	25.5	22.1	16.1	85.3	1913.7	5.96	0.68	0.8849	
65.0	0.000	254.2	4.0	47.1	35.9	125.3	0.0	2.87	1.69	0.99	
306.0	0.000	1636.3	4138.2	2432.0	-2311.8	3039.9	0.0	3.14	0.66	9.86	
14.0	0.000	79.2	3.1	21.8	15.8	72.5	904.7	6.01	0.49	0.8802	

END OF DATA

10-14-71

(8c)

FLYWHEEL TRANSMISSION ANALYSIS

VERSION 8H

A = 0.000000 D = 1.000000 R2= 1.000000 R5= 3.594000
B = 0.735300 RA= 2.768800 R3= 11.823001 DIAW= 7.023
C = 0.735300 R1= 0.535830 R4= 2.290000 DISP= 3.500

KI= 1. KFW= 2. KV= 1. KF= 1.
KO= 0. EG=0.985 KC= 2

V TFSS TTEA	EFF FFF EFV	TF NE HPE	TFW NFW HPFW	TV NV HPV	TF NF HPF	TO NO HPO	PRESS PRESA PREST	PLF PLV PLT	HPSL HPGL HPAL	HPLL HPIL EOAT	
0.0	0.000	19.1	0.0	-3.0	7.6	27.4	0.0	0.07	0.23	0.29	
70.0	0.000	799.7	24000.0	3418.0	0.0	0.0	0.0	1.99	0.05	2.98	
0.0	0.000	2.9	0.0	-1.9	0.0	0.0	0.0	2.06	0.33	-0.0244	
10.0	0.000	44.1	0.0	8.9	8.0	28.9	0.0	1.18	0.20	0.13	
74.0	0.000	845.1	23838.2	3611.8	1285.3	357.6	0.0	3.01	0.21	5.12	
0.0	0.000	7.0	0.0	6.1	1.9	1.9	275.6	4.19	0.38	0.2779	
20.0	0.000	75.5	0.0	16.2	9.2	33.2	0.0	3.01	0.17	0.03	FOAP
85.0	0.000	879.4	23346.4	3758.5	2570.7	715.2	0.0	4.09	0.41	8.12	-OAP
0.0	0.000	12.6	0.0	11.6	4.5	4.5	329.5	7.10	0.39	0.3581	
30.0	0.000	133.5	0.0	29.4	11.1	39.9	0.0	6.71	0.13	0.00	
102.0	0.000	902.0	22502.9	3855.2	3856.0	1072.9	0.0	6.74	0.77	14.77	
0.0	0.000	22.9	0.0	21.6	8.1	8.1	432.8	13.45	0.40	0.3557	
10.0	0.000	52.7	0.9	16.6	27.5	94.7	0.0	1.34	0.71	0.13	
74.0	0.000	845.1	23838.2	3611.8	1285.3	357.6	0.0	3.35	0.50	6.51	
168.0	0.000	8.4	4.4	11.4	6.7	6.4	704.3	4.70	0.45	0.4974	
20.0	0.000	83.3	1.3	26.7	23.4	78.3	0.0	3.25	0.47	0.03	
85.0	0.000	879.4	23346.4	3758.5	2570.7	715.2	0.0	4.39	0.82	9.42	10% OF
115.0	0.000	13.9	6.1	19.1	11.4	10.6	641.3	7.64	0.44	0.5308	MAX ACC.
30.0	0.000	136.3	0.6	34.0	15.4	52.8	0.0	6.82	0.20	0.00	
102.0	0.000	902.0	22502.9	3855.2	3856.0	1072.9	0.0	6.85	0.95	15.25	
33.0	0.000	23.4	2.6	25.0	11.3	10.8	528.0	13.67	0.42	0.4144	
10.0	0.000	70.0	2.7	30.7	61.7	210.2	0.0	1.78	1.61	0.13	
74.0	0.000	845.1	23838.2	3611.8	1285.3	357.6	0.0	4.26	1.03	9.42	
663.0	0.000	11.4	12.3	21.1	15.1	14.3	1463.2	6.04	0.59	0.6030	
20.0	0.000	107.8	4.9	54.8	60.3	195.8	0.0	4.17	1.24	0.03	
85.0	0.000	879.4	23346.4	3758.5	2570.7	715.2	0.0	5.55	1.91	13.52	
415.0	0.000	18.0	22.1	39.2	29.5	26.6	1461.0	9.73	0.59	0.6634	
											25% OF MAX ACC.
30.0	0.000	156.0	4.4	63.0	42.0	132.3	0.0	7.71	0.58	0.00	
102.0	0.000	902.0	22502.9	3855.2	3856.0	1072.9	0.0	7.73	2.07	18.64	
236.0	0.000	26.8	18.8	46.3	30.8	27.0	1116.9	15.44	0.53	0.5918	
10.0	0.000	110.3	5.8	57.9	124.0	420.9	0.0	2.91	3.26	0.13	
74.0	0.000	845.1	23838.2	3611.8	1285.3	357.6	0.0	6.59	2.02	15.77	
1001.0	0.000	17.7	26.6	39.8	30.3	28.6	2854.0	9.50	0.85	0.6449	
20.0	0.000	158.1	10.9	104.0	121.9	391.6	0.0	6.40	2.53	0.03	
85.0	0.000	879.4	23346.4	3758.5	2570.7	715.2	0.0	8.35	3.76	21.94	50% OF
915.0	0.000	26.4	46.8	74.4	59.6	53.3	2834.4	14.75	0.85	0.7084	MAX ACC
30.0	0.000	195.7	10.6	112.8	86.2	264.3	-0.0	9.78	1.22	0.00	
102.0	0.000	902.0	22502.9	3855.2	3856.0	1072.9	0.0	9.75	3.98	25.45	
573.0	0.000	33.6	45.8	82.8	63.3	54.0	2100.4	19.53	0.71	0.6796	
10.0	0.000	156.0	9.0	86.6	186.4	631.6	0.0	4.36	4.90	0.13	
74.0	0.000	845.1	23838.2	3611.8	1285.3	357.6	0.0	9.58	3.04	23.14	
1539.0	0.000	25.1	41.0	59.5	45.6	43.0	4244.1	13.94	1.10	0.6501	
20.0	0.000	217.4	16.9	155.2	183.5	587.4	0.0	9.26	3.82	0.03	
85.0	0.000	879.4	23346.4	3758.5	2570.7	715.2	0.0	11.98	5.66	31.87	75% OF
1415.0	0.000	36.4	75.4	111.0	89.8	80.0	4207.3	21.24	1.10	0.7151	MAX ACC.
30.0	0.000	241.9	17.0	164.2	130.5	396.7	0.0	12.43	1.86	0.00	
102.0	0.000	902.0	22502.9	3855.2	3856.0	1072.9	0.0	12.28	5.92	33.40	
911.0	0.000	41.5	72.8	120.5	95.8	81.0	3089.0	24.71	0.89	0.7081	

10.0	0.000	206.7	12.1	116.3	248.7	841.9	0.0	6.06	6.54	0.13	
74.0	0.000	845.1	23838.2	3611.8	1285.3	357.6	0.0	13.09	4.09	31.29	
2076.0	0.000	33.2	55.3	80.0	60.8	57.3	5625.7	19.16	1.36	0.6469	
20.0	0.000	283.9	22.9	208.0	245.1	783.2	0.0	12.61	5.12	0.03	MAXIMUM ACCELERATION
85.0	0.000	879.4	23346.4	3758.5	2570.7	715.2	0.0	16.28	7.59	43.01	
1915.0	0.000	47.5	102.1	148.8	119.9	106.6	5574.4	28.90	1.35	0.7176	
30.0	0.000	293.1	23.3	216.5	174.6	528.6	0.0	15.53	2.49	0.00	
102.0	0.000	902.0	22502.9	3855.2	3856.0	1072.9	0.0	15.18	7.88	42.18	
1248.0	0.000	50.3	99.8	158.9	128.2	108.0	4073.7	30.72	1.07	0.7191	

* END OF DATA

PAGE 1

// JOB 0060

LOG DRIVE	CART SPEC	CART AVAIL	PHY DRIVE
0000	0060	0060	0001
		0003	0000

V2 M07 ACTUAL 16K CONFIG 16K

// XEQ T8M02

10-14-71

INPUT T8"V" CODE

FLYWHEEL TRANSMISSION ANALYSIS

VERSION 8M02

A = 0.000000	D = 1.000000	R2= 1.000000	R5= 3.594000	R6= 1.561000
B = 0.735300	RA= 2.768800	R3= 11.823001	DIAW= 26.023	E= 1.680700
C = 0.735300	R1= 0.535830	R4= 2.290000	DISP= 3.500	

KE= 1.	KFW= 2.	KV= 1.	KF= 1.
KO= 0.		EG=0.985	KC= 2

V TESS TTEA	EFF EFF EFV	TE TE HPE	TFW NFW HPFW	TV NV HPV	TF NF HPF	TO NO HPO	PRESS PRESA PREST	PLF PLV PLT	HPSL HPGL HPAL	HPGL HPTL EQAT	
30.0	0.000	126.8	0.0	2.3	19.9	39.9	0.0	6.52	0.12	0.00	
102.0	0.000	902.0	22502.9	3855.2	3853.4	1072.9	0.0	6.39	0.56	13.96	
0.0	0.000	22.1	0.0	1.6	14.6	8.1	238.8	12.91	0.37	0.3687	
40.0	0.000	138.1	0.0	7.2	24.3	48.9	0.0	4.68	0.06	0.03	
125.0	0.000	911.5	21265.8	3895.8	3198.8	1430.5	0.0	4.81	0.64	10.64	
0.0	0.000	23.9	0.0	5.3	14.8	13.3	362.4	9.50	0.39	0.5560	
50.0	0.000	167.6	0.0	9.3	30.0	60.3	0.0	2.83	0.03	0.13	
154.0	0.000	905.4	19560.6	3869.7	2440.4	1788.2	0.0	4.21	0.72	8.36	
0.0	0.000	28.8	0.0	6.9	13.9	20.5	520.6	7.04	0.42	0.7106	
60.0	0.000	223.8	0.0	8.1	37.2	74.7	0.0	1.55	0.19	0.29	
191.0	0.000	879.1	17249.0	3757.3	1547.5	2145.8	0.0	3.62	0.78	6.91	
0.0	0.000	37.4	0.0	5.8	10.9	30.5	696.3	5.17	0.45	0.8155	ROAD LOAD
70.0	0.000	312.1	0.0	0.4	45.0	90.4	0.0	0.77	0.44	0.52	
231.0	0.000	822.7	14034.6	3516.3	454.1	2503.4	0.0	2.79	0.76	5.78	
0.0	0.000	48.9	0.0	0.3	3.8	43.1	786.3	3.57	0.47	0.8817	
80.0	0.000	508.0	0.0	27.4	54.6	109.6	0.0	1.46	0.85	0.82	
280.0	0.000	705.6	8996.7	3015.6	-1043.7	2861.1	0.0	3.42	1.36	8.52	
0.0	0.000	68.2	0.0	15.7	10.8	59.7	1316.2	4.89	0.57	0.8751	
85.0	0.000	751.0	0.0	72.2	59.7	119.8	0.0	3.43	1.20	0.99	
306.0	0.000	569.0	4138.2	2432.0	-2311.8	3039.9	0.0	3.73	2.04	12.01	
0.0	0.000	81.3	0.0	33.4	26.2	69.3	1431.7	7.17	0.59	0.8523	
30.0	0.000	132.4	0.6	9.6	27.6	52.8	0.0	6.67	0.18	0.00	
102.0	0.000	902.0	22502.9	3855.2	3853.4	1072.9	0.0	6.52	0.81	14.58	10% OF MAX ACC.
33.0	0.000	22.7	2.6	7.0	20.2	10.8	402.7	13.19	0.40	0.4253	
30.0	0.000	161.6	4.4	53.2	75.2	132.3	0.0	8.23	0.52	0.00	
102.0	0.000	902.0	22502.9	3855.2	3853.4	1072.9	0.0	7.91	2.34	19.60	
236.0	0.000	27.7	18.8	39.0	55.2	27.0	1401.4	16.14	0.58	0.5797	
											26% OF MAX ACC.
40.0	0.000	153.6	3.2	30.9	55.7	97.9	0.0	5.43	0.17	0.03	
125.0	0.000	911.5	21265.8	3895.8	3198.8	1430.5	0.0	5.55	1.61	13.32	
125.0	0.000	26.6	13.3	22.9	33.9	26.6	1021.6	10.98	0.51	0.6667	

Sundstrand Aviation
division of Sundstrand Corporation

30.0	0.000	226.8	10.6	121.7	154.3	264.3	0.0	12.29	1.16	0.00	
102.0	0.000	902.0	22502.9	3855.2	3853.4	1072.9	0.0	11.61	4.89	30.79	
573.0	0.000	38.9	45.8	89.3	113.2	54.0	3047.0	23.91	0.86	0.6369	
40.0	0.000	194.2	9.8	76.2	118.5	195.8	0.0	7.76	0.38	0.03	
125.0	0.000	911.5	21265.8	3895.8	3198.8	1430.5	0.0	7.87	3.56	20.37	
375.0	0.000	33.7	40.0	56.5	72.1	53.3	2329.2	15.63	0.75	0.7235	50% OF MAX. ACC.
50.0	0.000	201.3	8.8	46.5	96.7	156.6	0.0	4.42	0.11	0.13	
154.0	0.000	905.4	19560.6	3869.7	2440.4	1788.2	0.0	6.18	2.64	14.18	
246.0	0.000	34.7	32.7	34.3	44.9	53.3	1914.3	10.61	0.68	0.7699	
30.0	0.000	306.6	17.0	187.0	233.7	396.7	0.0	17.69	1.67	0.00	
102.0	0.000	902.0	22502.9	3855.2	3853.4	1072.9	0.0	16.49	7.45	44.50	
911.0	0.000	52.6	72.8	137.3	171.4	81.0	4696.4	34.18	1.19	0.6454	
40.0	0.000	244.2	16.4	119.2	181.2	293.7	0.0	10.87	0.59	0.03	
125.0	0.000	911.5	21265.8	3895.8	3198.8	1430.5	0.0	11.05	5.51	29.05	
625.0	0.000	42.3	66.6	88.4	110.3	80.0	3633.1	21.92	0.99	0.7335	
50.0	0.000	236.1	15.9	75.1	150.9	234.9	0.0	6.29	0.19	0.13	
154.0	0.000	905.4	19560.6	3869.7	2440.4	1788.2	0.0	8.47	4.19	20.17	
446.0	0.000	40.7	59.4	55.3	70.1	80.0	3041.3	14.77	0.88	0.7486	
60.0	0.000	272.0	15.5	40.7	132.4	199.7	0.0	3.25	0.85	0.29	
191.0	0.000	879.1	17249.0	3757.3	1547.5	2145.8	0.0	6.59	3.16	14.98	75% OF MAX ACC.
319.0	0.000	45.5	51.0	29.1	39.0	81.6	2681.2	9.84	0.82	0.8448	
70.0	0.000	344.4	14.7	6.2	117.4	173.0	0.0	1.13	1.46	0.52	
231.0	0.000	822.7	14034.6	3516.3	454.1	2503.4	0.0	4.81	2.13	10.63	
211.0	0.000	53.9	39.3	4.2	10.1	82.5	2297.0	5.95	0.75	0.9839	
80.0	0.000	514.0	2.4	31.2	63.8	117.4	0.0	1.57	1.08	0.82	
280.0	0.000	705.6	8996.7	3015.6	-1043.7	2861.1	0.0	3.66	1.56	9.32	
20.0	0.000	69.0	4.2	17.9	12.6	64.0	1520.6	5.23	0.60	0.9728	
30.0	0.000	397.7	23.3	249.4	312.8	528.6	0.0	24.14	2.25	0.00	
102.0	0.000	902.0	22502.9	3855.2	3853.4	1072.9	0.0	22.25	10.03	60.15	
1248.0	0.000	68.3	99.8	183.1	229.5	108.0	6346.2	46.40	1.49	0.6422	
40.0	0.000	301.6	23.0	160.5	244.0	391.6	0.0	14.60	0.80	0.03	
125.0	0.000	911.5	21265.8	3895.8	3198.8	1430.5	0.0	14.88	7.45	39.02	
875.0	0.000	52.3	93.3	119.1	148.6	106.6	4938.4	29.48	1.23	0.7321	
50.0	0.000	275.7	23.1	102.5	205.1	313.2	0.0	8.55	0.25	0.13	
154.0	0.000	905.4	19560.6	3869.7	2440.4	1788.2	0.0	11.21	5.75	27.00	
646.0	0.000	47.5	86.1	75.5	95.3	106.6	4167.9	19.76	1.03	0.7979	
60.0	0.000	303.6	23.8	56.8	183.1	266.2	0.0	4.51	1.20	0.29	
191.0	0.000	879.1	17249.0	3757.3	1547.5	2145.8	0.0	8.81	4.42	20.26	MAXIMUM ACCELERATION
489.0	0.000	50.8	78.2	40.6	53.9	108.8	3735.4	13.32	1.01	0.8429	
70.0	0.000	370.8	25.0	9.4	168.3	231.0	0.0	1.48	2.18	0.52	
231.0	0.000	822.7	14034.6	3516.3	454.1	2503.4	0.0	6.73	3.03	14.97	
359.0	0.000	58.1	67.0	6.3	14.5	110.1	3352.7	8.22	0.94	0.9802	
80.0	0.000	546.3	14.9	50.6	109.7	156.6	0.0	2.23	2.22	0.82	
280.0	0.000	705.6	8996.7	3015.6	-1043.7	2861.1	0.0	5.04	2.53	13.66	
120.0	0.000	73.4	25.5	29.0	21.8	85.3	2544.6	7.28	0.74	0.8619	
85.0	0.000	763.5	4.0	84.3	70.9	125.3	0.0	3.75	1.63	0.99	
306.0	0.000	569.0	4138.2	2432.0	-2311.8	3039.9	0.0	4.06	2.30	13.36	
14.0	0.000	82.7	3.1	39.0	31.2	72.5	1682.7	7.81	0.63	0.8443	

END OF DATA

H. Engine Fuel Economy Map

APPENDIX H

ENGINE FUEL ECONOMY MAP

Figure APP-H1 shows a fuel economy map for a typical medium sized automobile engine. This curve was supplied to Sundstrand by EPA. Figure APP-H2 shows the minimum specific fuel consumption curve generated by Sundstrand from the data on figure APP-H1 for the purpose of use with the Sundstrand computer programs. It should be noted that the fuel consumption performance shown throughout this report is predicated on the fuel consumption plots shown on figure APP-H1. A different fuel consumption profile could significantly effect the fuel consumption results of this study.

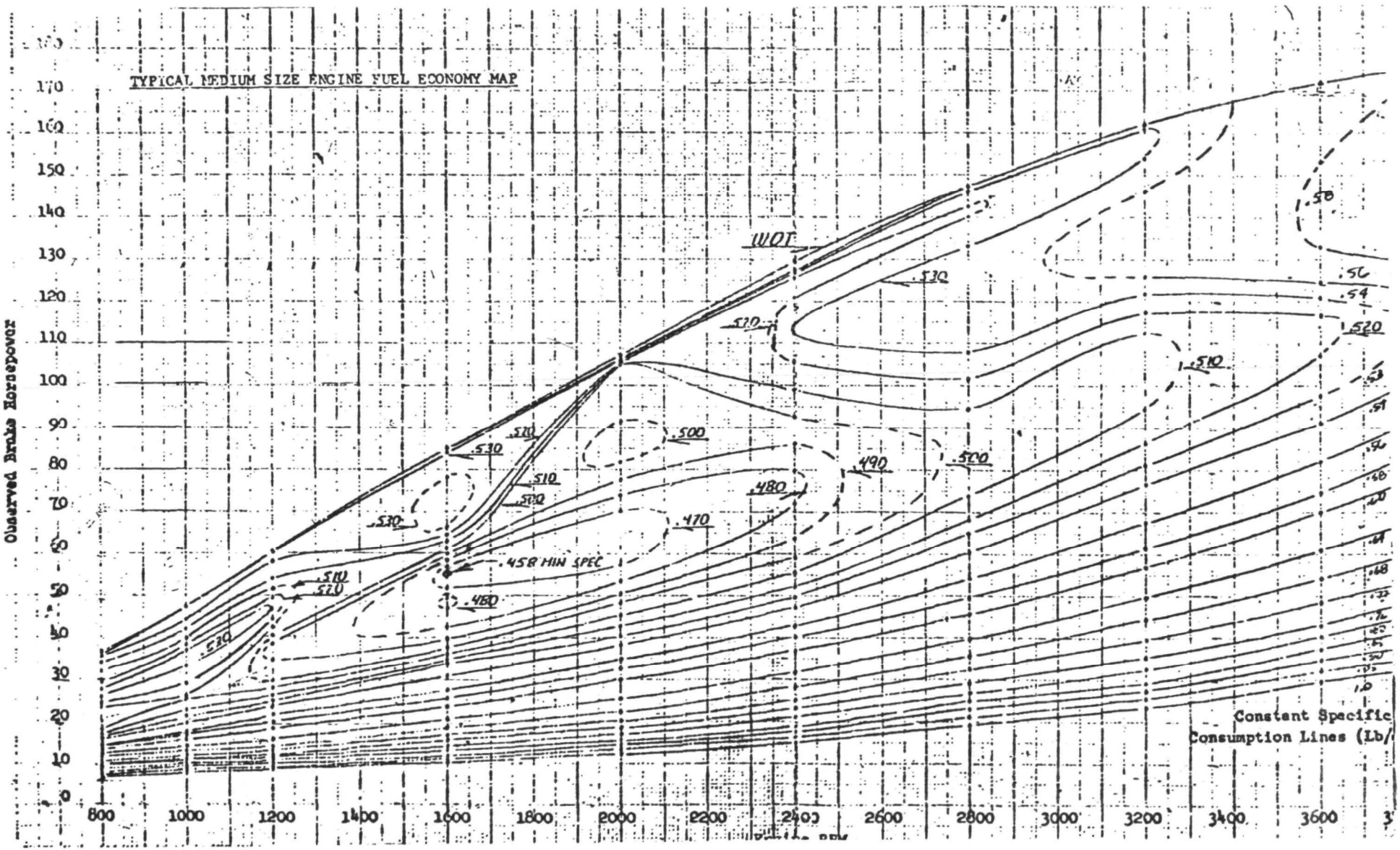

Figure APP-H1 Typical Medium Size Engine Fuel Economy Map

Sundstrand Aviation
division of Sundstrand Corporation

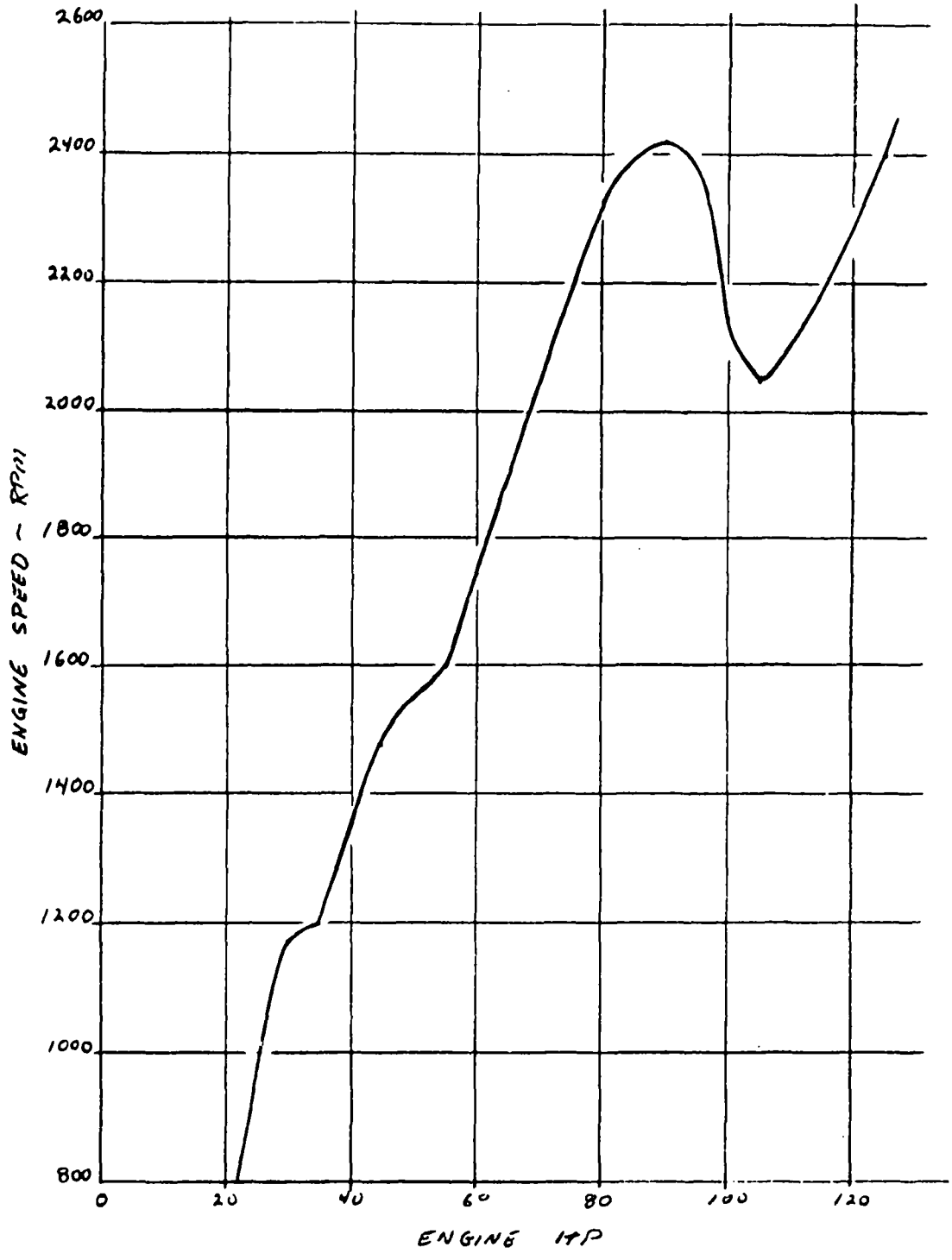

Figure APP-H2 Engine Speed vs. Engine Power for Minimum SFC

I. HP Flow Within the Transmission

APPENDIX I

HP Flow Within the Transmission

The following figures define the direction of horsepower flow within the transmission (8A) during the various conditions of operation. Each figure shows a schematic of the system with arrows to show direction of power flow, a speed nomograph and a torque nomograph.

The symbols used on the following figures are listed below:

Eng	Engine Input Leg
Out	Transmission Output Leg
Σ_5	Five Element Planetary
V	Variable Displacement Hydraulic Unit
F	Fixed Displacement Hydraulic Unit
⊣⊢	Clutch (Open)
⫼	Clutch (Closed)
FW	Flywheel
Ø	Output Link
F_1	Fixed Hydraulic Unit Link (1st Mode)
F_2	Fixed Hydraulic Unit Link (2nd Mode)
E	Engine Link
V	Variable Hydraulic Link
FW	Flywheel Link

The plus and minus symbols at the bottom of each figure indicate the product of the speed and torque vectors. A positive sign indicates that the horsepower flow is into the summer and a negative sign indicates that the horsepower flow is out of the summer.

Also given are the transmission system speeds, torques, and horsepower for 20 MPH and 70 MPH for both Versions 8A and 8C (Figure APP-10).

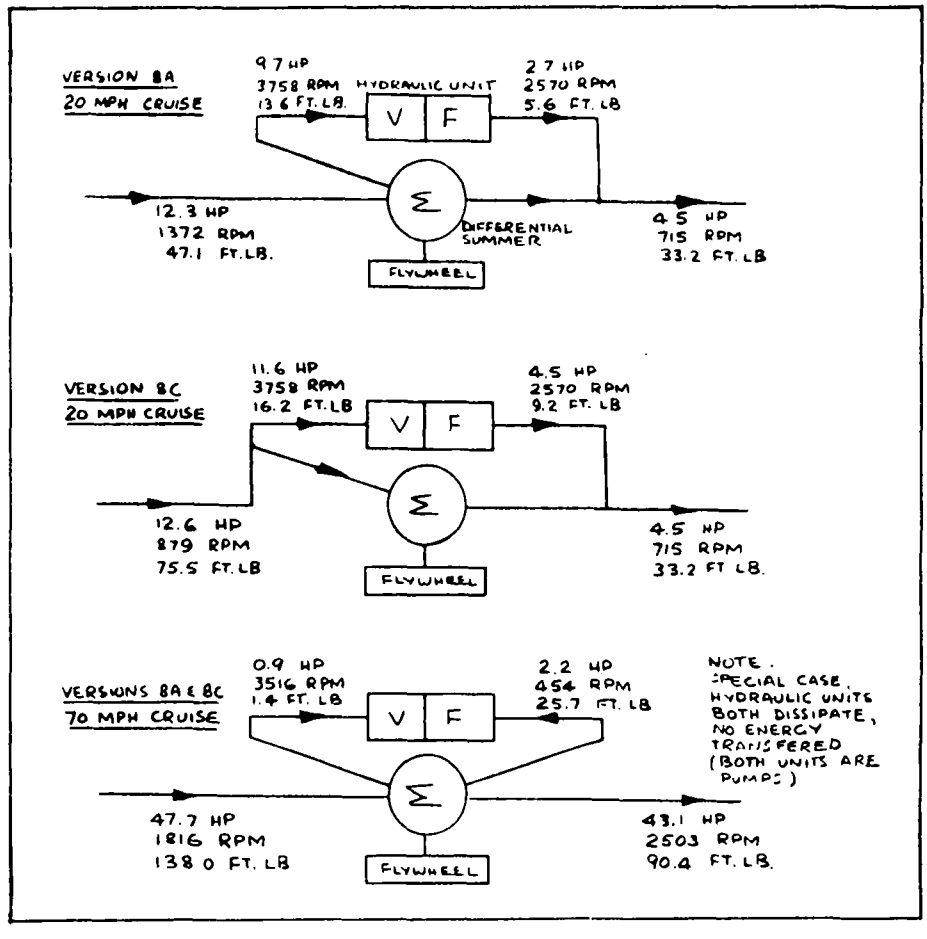

Figure APP-I O System Torques, Speeds, and Power Flow at 20 MPH and 70 MPH Cruise Conditions

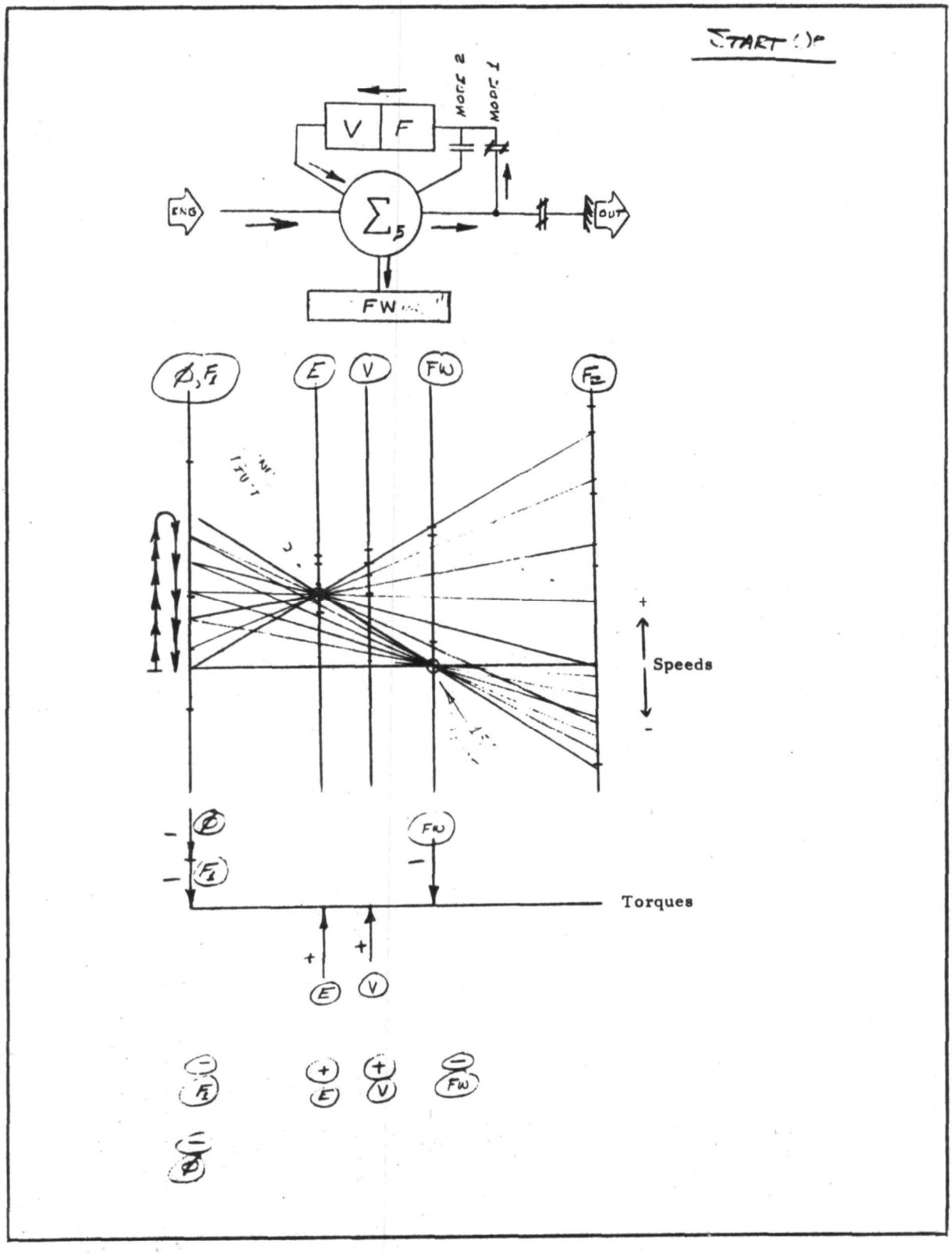

Figure APP-11
Start Up

Sundstrand Aviation
division of Sundstrand Corporation

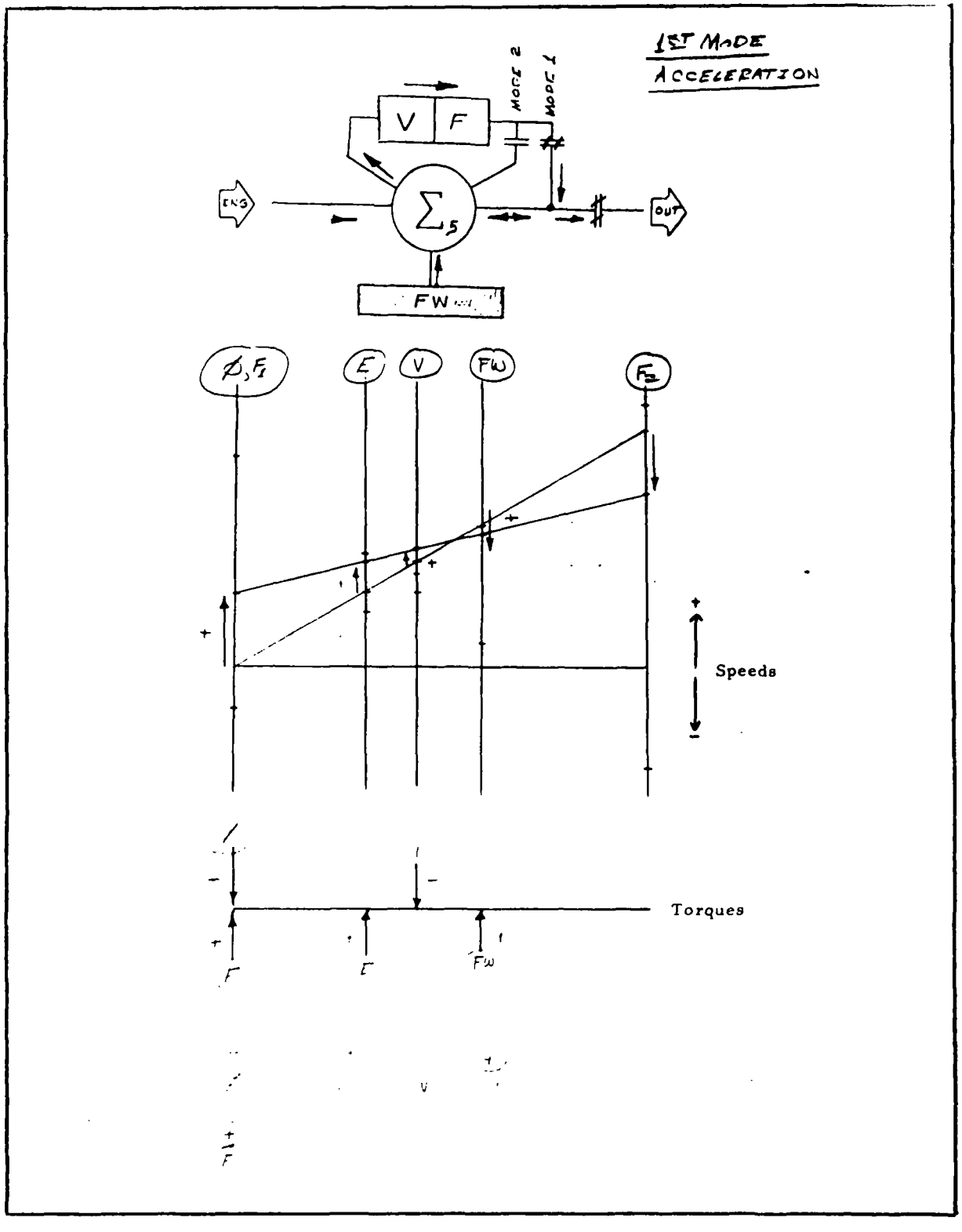

Figure APP-I2
1st Mode - Acceleration

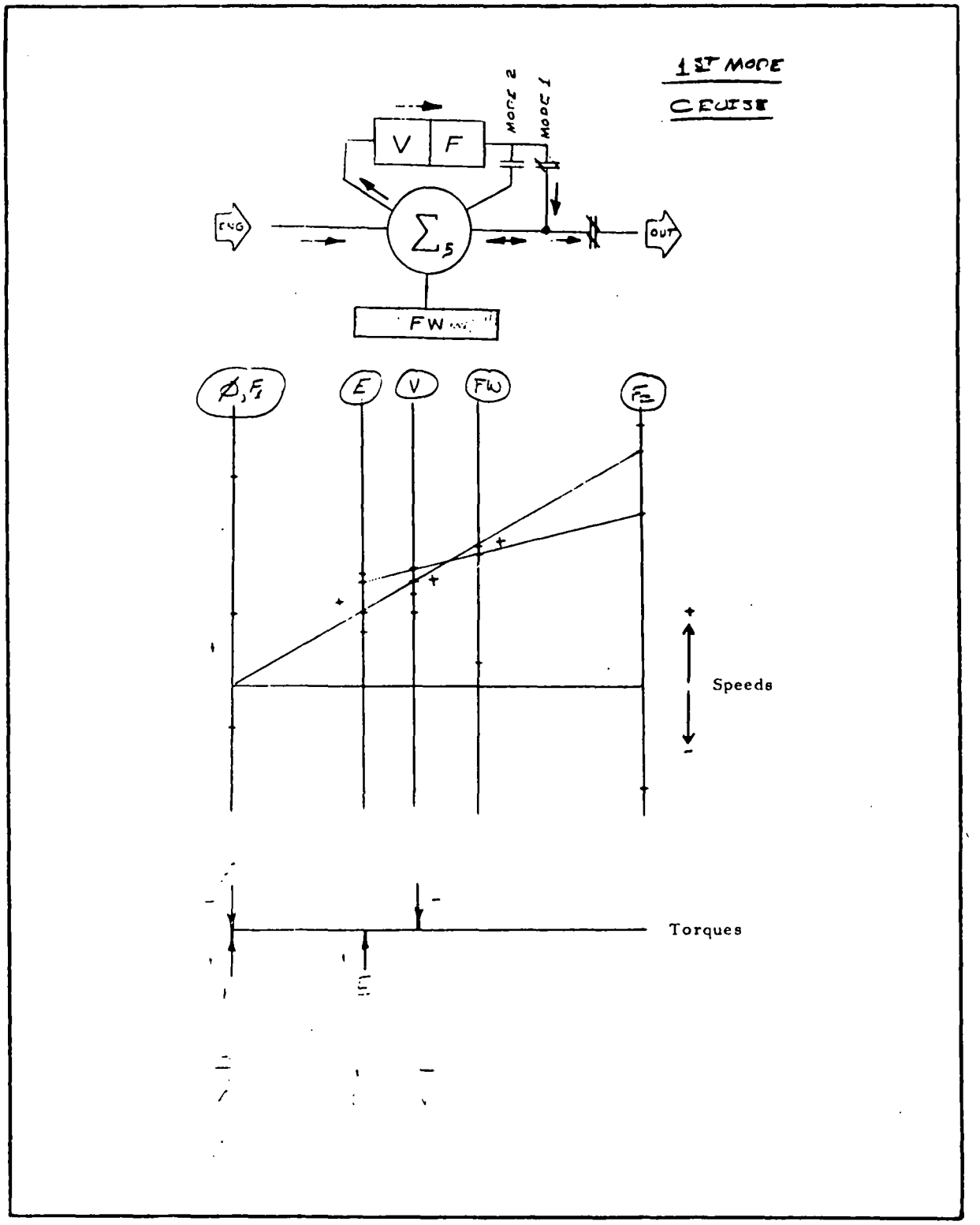

Figure APP-I3
1st Mode- Cruise

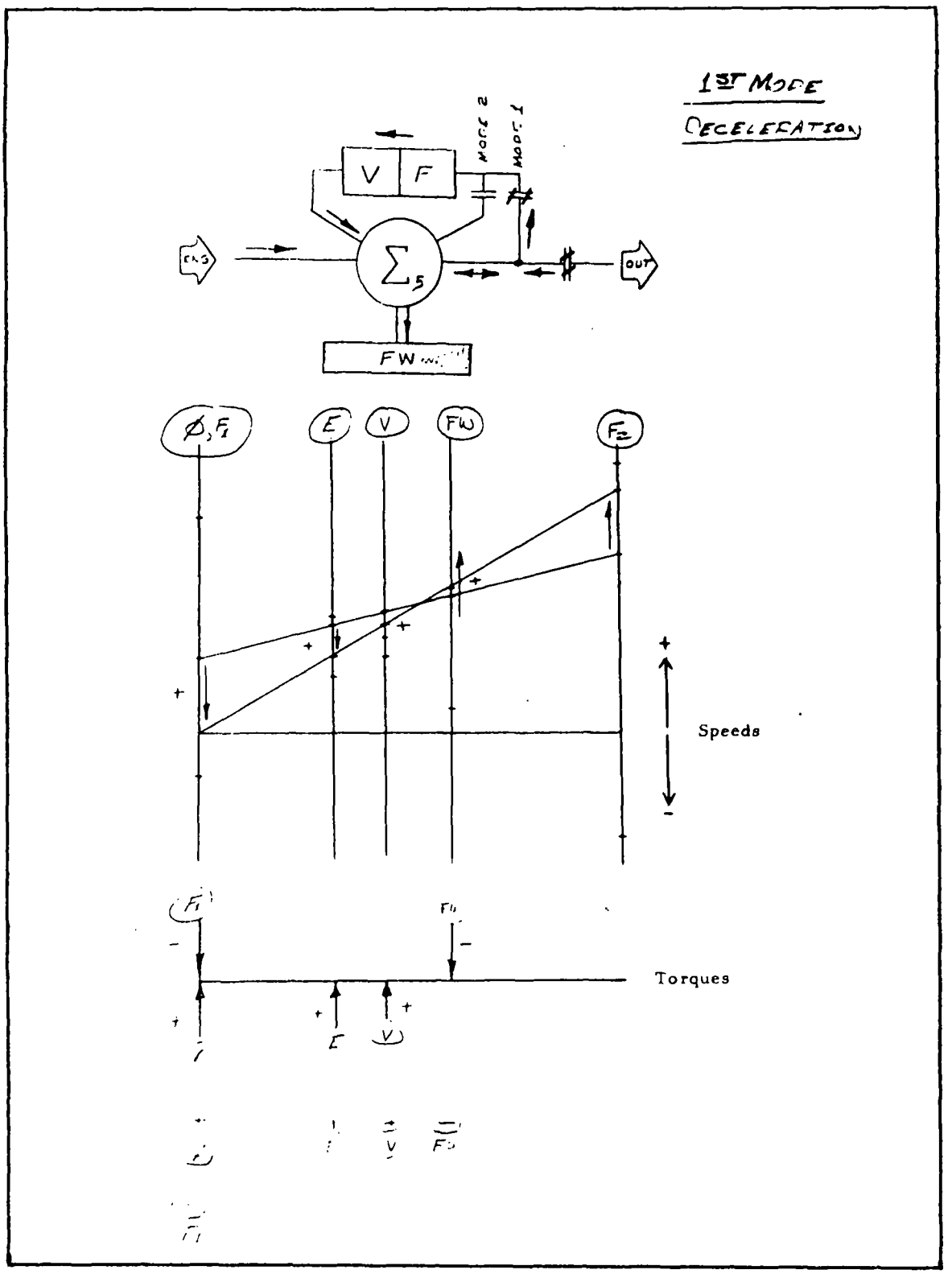

Figure APP-I4
1st Mode - Deceleration

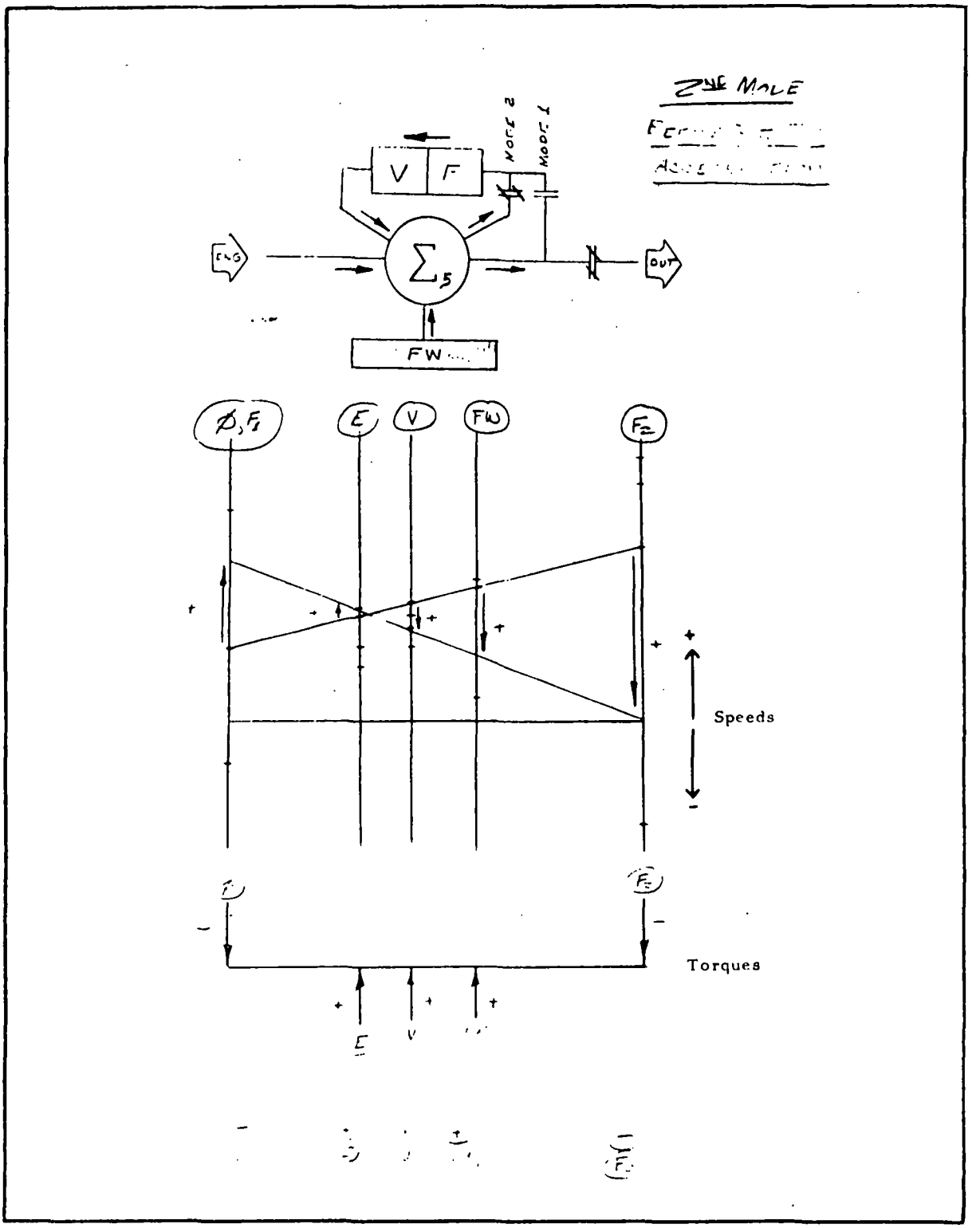

Figure APP-I5
2nd Mode - Before St. Tru.
Acceleration

Sundstrand Aviation
division of Sundstrand Corporation

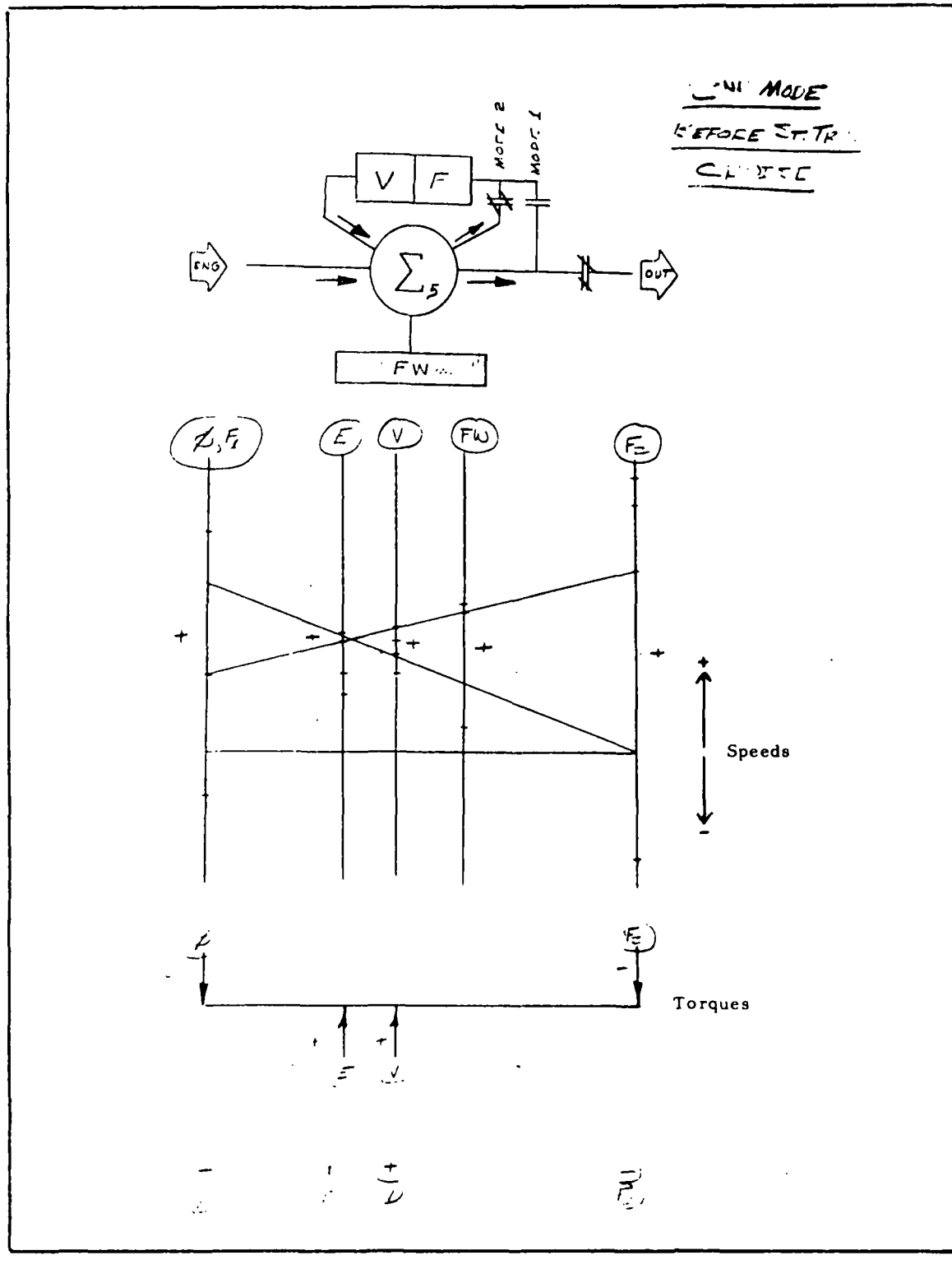

Figure APP-I6
2nd Mode - Before St. Tru.
Cruise

Sundstrand Aviation
division of Sundstrand Corporation

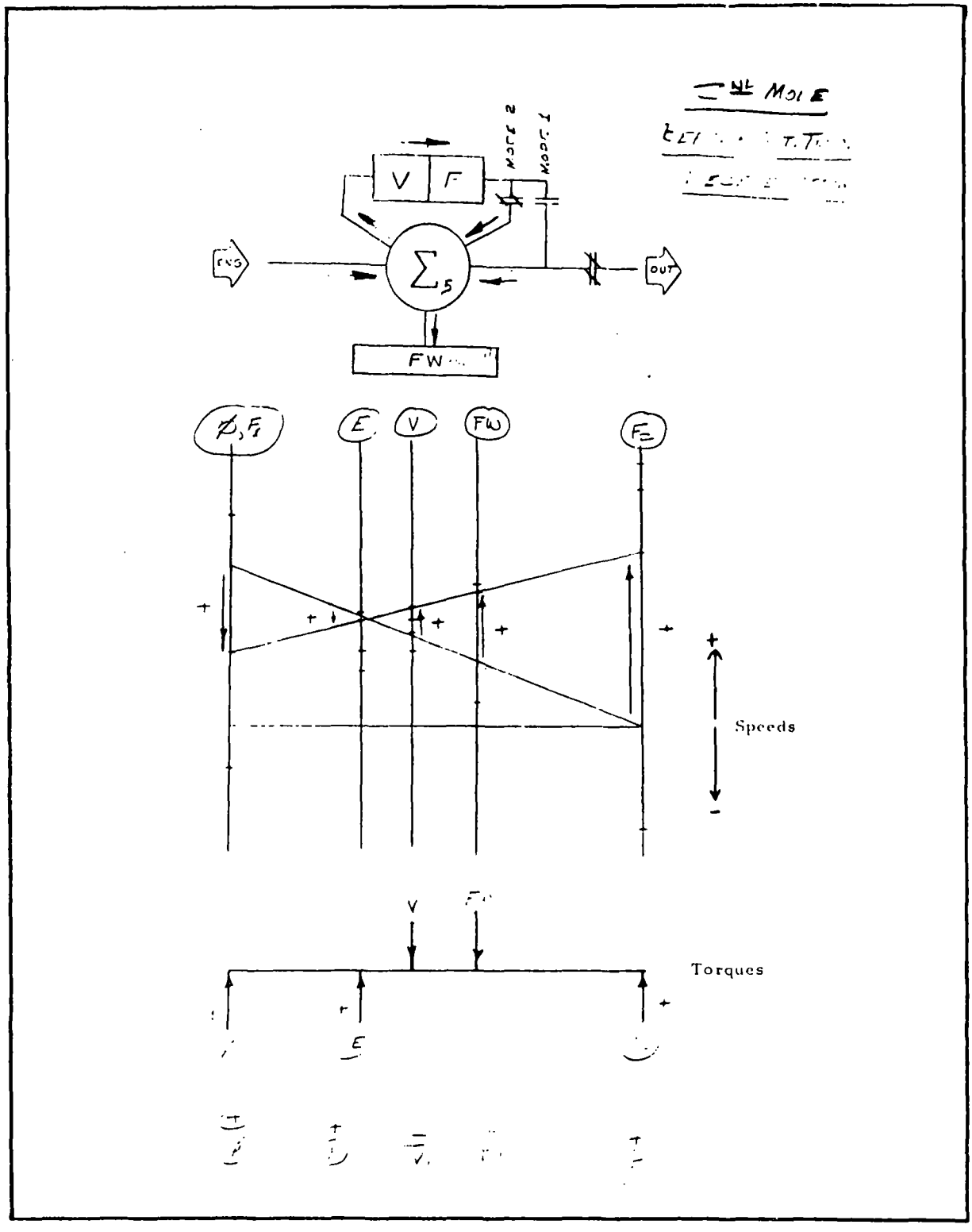

Figure APP-I7
2nd Mode - Before St. Tru.
Deceleration

Sundstrand Aviation
division of Sundstrand Corporation

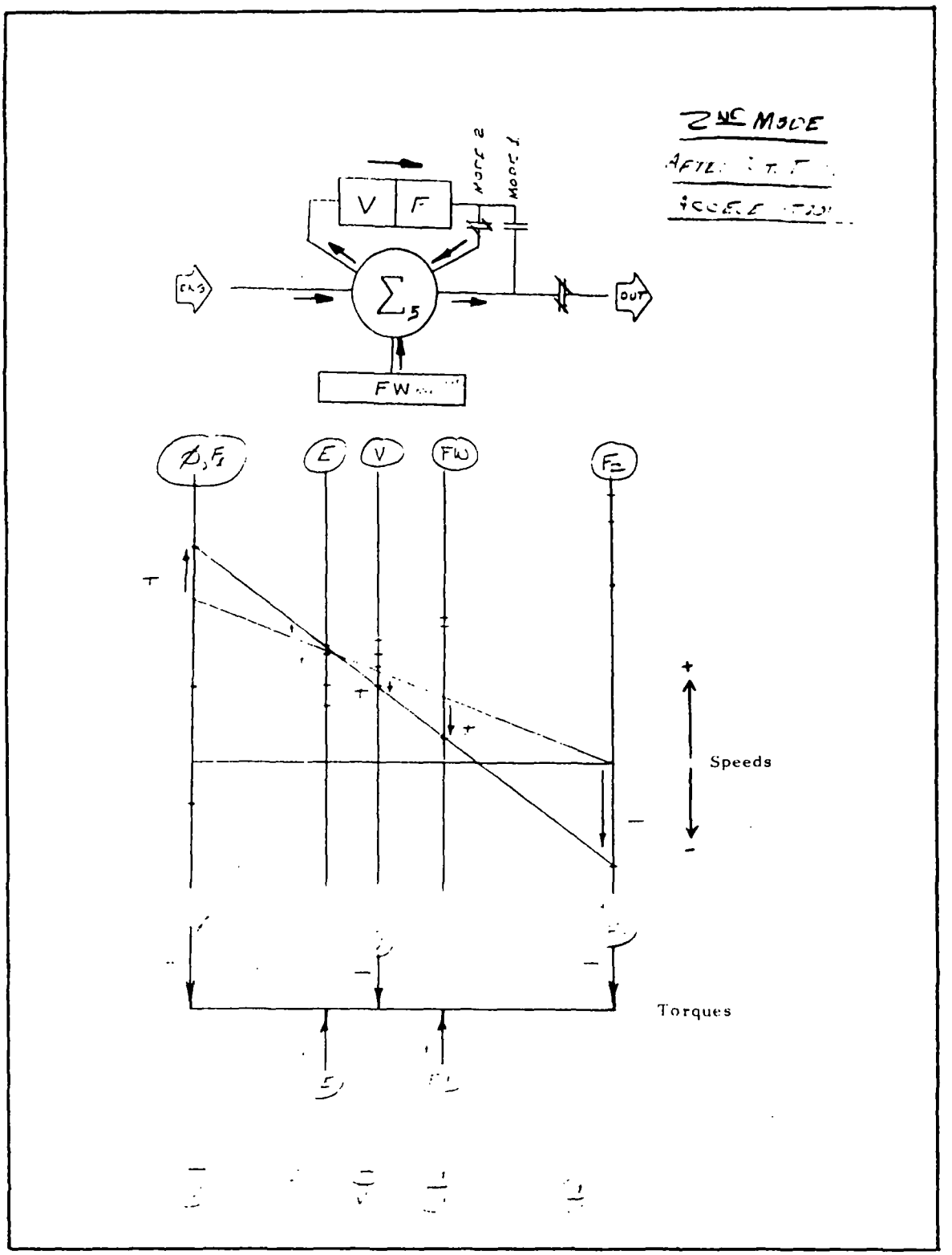

Figure APP-I8
2 nd Mode - After St. Tru.
Acceleration

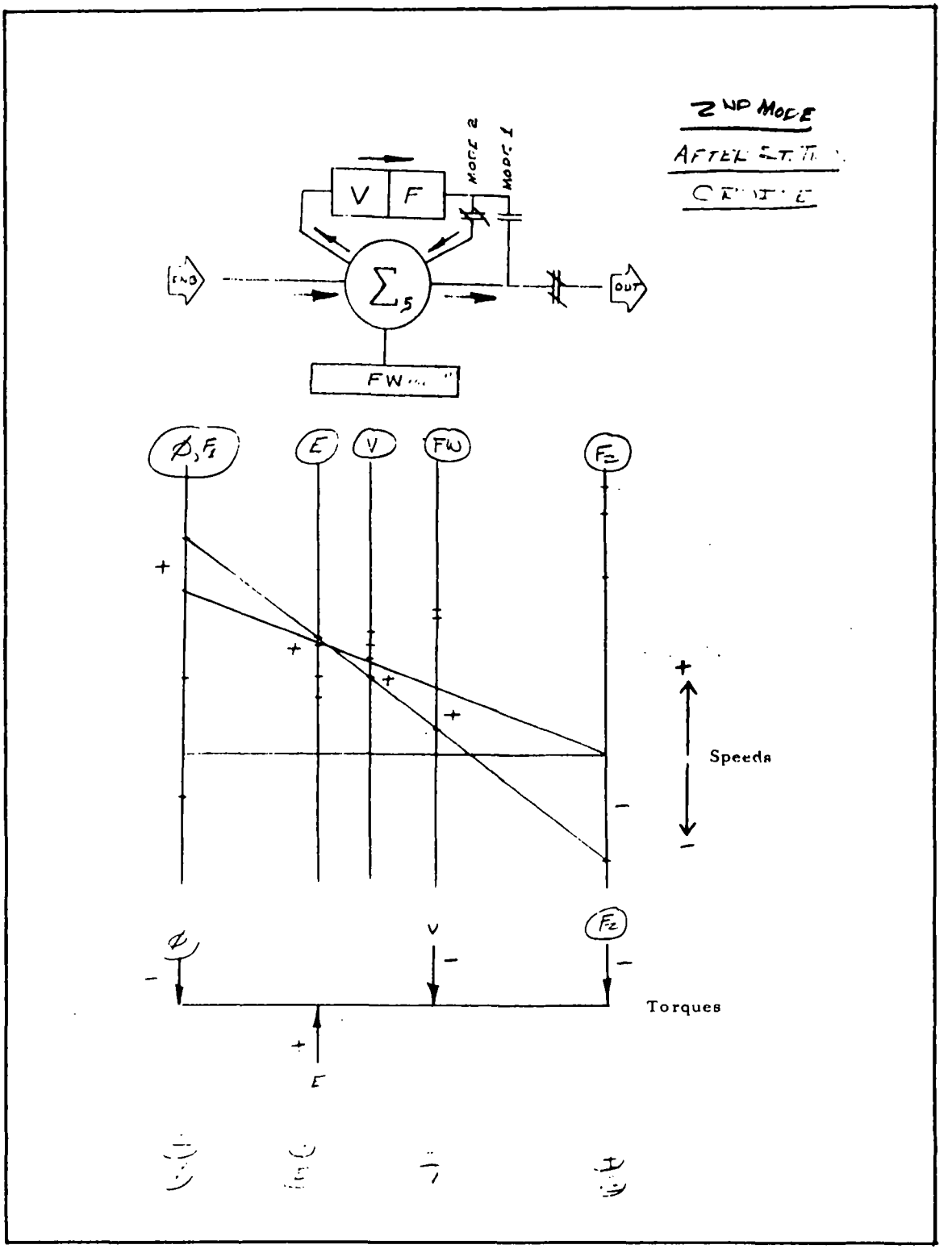

Figure APP-I9
2nd Mode - After St. Tru.
Cruise

Sundstrand Aviation
division of Sundstrand Corporation

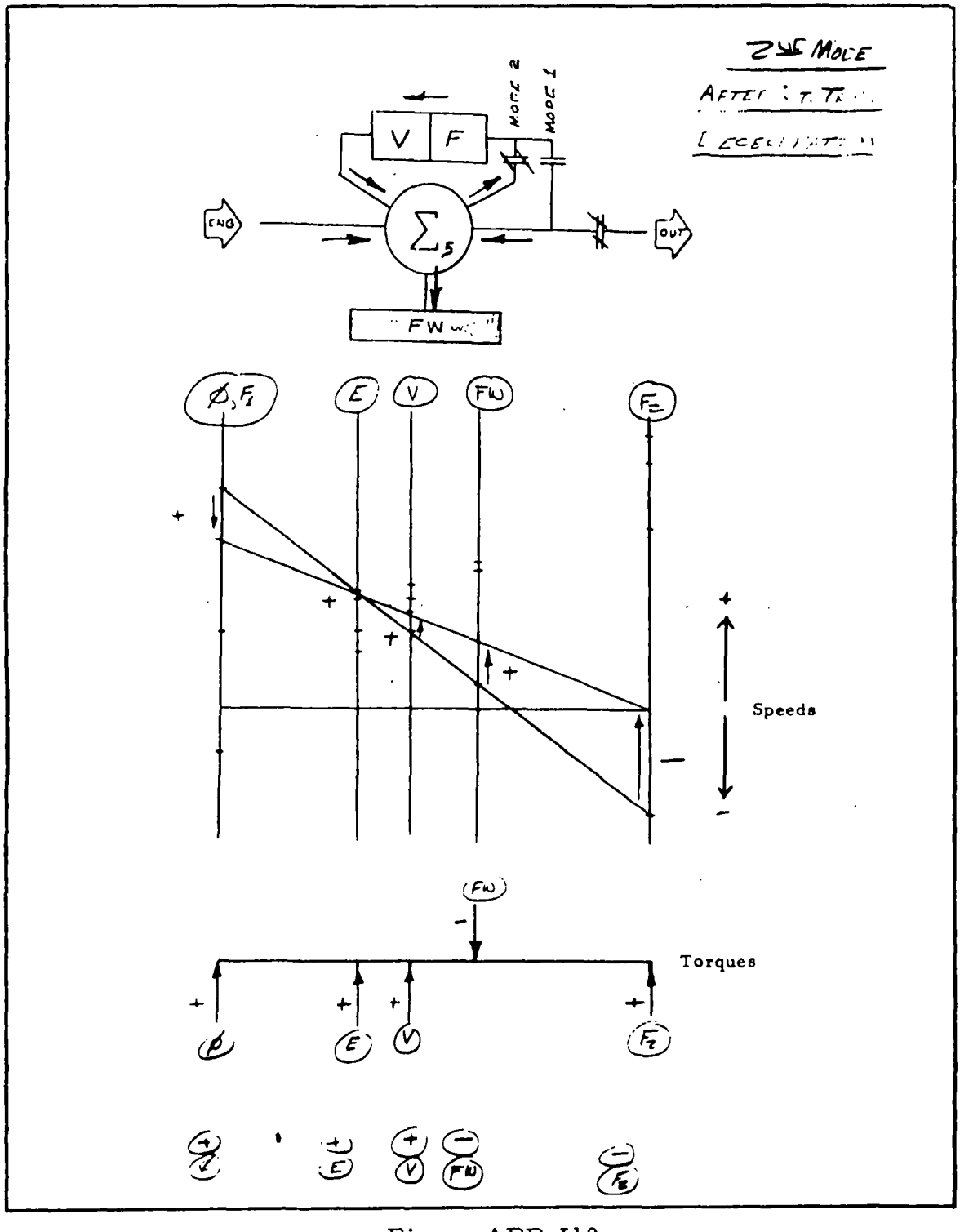

Figure APP-I10
2nd Mode - After St. Tru.
Deceleration

Sundstrand Aviation
division of Sundstrand Corporation

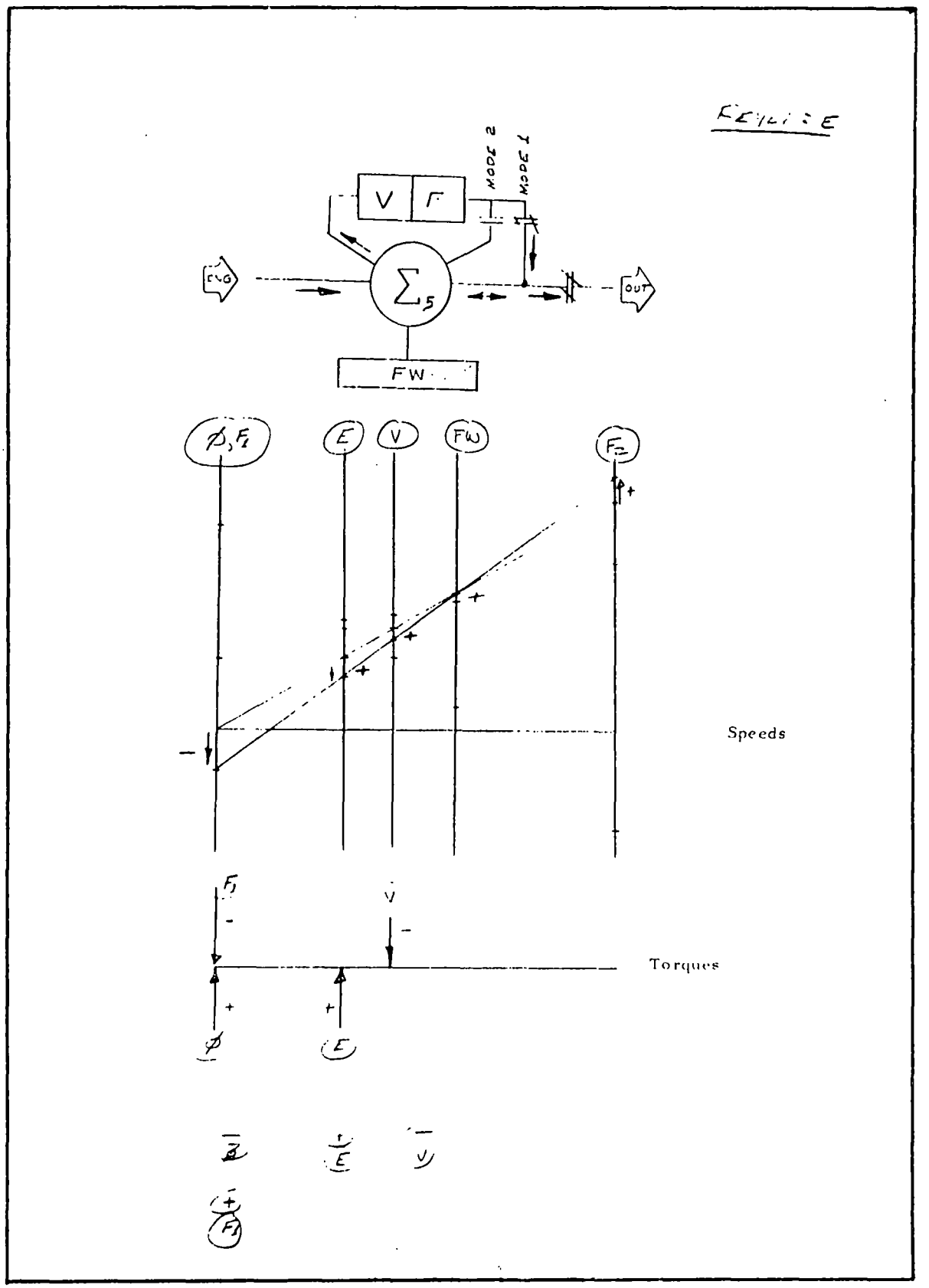

Figure APP-I11
Reverse

Sundstrand Aviation
division of Sundstrand Corporation

J. Attachment 1, Scope of Work, Contract No. 68-04-0034

APPENDIX J

Attachment 1, Scope of Work, Contract No. 68-04-0034

ATTACHMENT 1

SCOPE OF WORK

I. Purpose

The purpose of this contract is to quantitatively assess the practicality of a transmission that will meet the requirements of the heat engine/flywheel propulsion system. The contract will furnish information regarding the optimum transmission from both the technical and economic standpoint. The information about the ultimate practicality of such a transmission will be the major input for a go/no go decision on further development of the concept.

II. Requirements

1. The transmission system is to be considered for application to a full size "family car" automobile. The specifications of this vehicle are included in the attachment to the scope of work as Exhibit B-2 "Vehicle Design Goals."

2. Functionally, the transmission may be considered to consist of three links that transmit torque and power.

   A schematic diagram, for the purpose of identifying the links, is shown below.

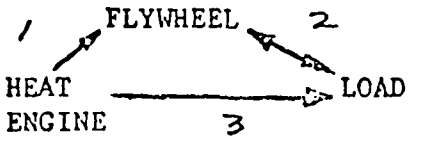

   A. Link 1 couples the heat engine to the flywheel for the purpose of increasing the flywheel energy.

   B. Link 2 couples the flywheel to the load for acceleration, and the load to the flywheel for regenerative braking.

   C. Link 3 couples the heat engine to the load, for cruise.

3. Transmission Link Characteristics

   A. Link 1

   Link 1 is the transmission subsystem that "recharges" the flywheel. For the purposes of Phase I, the control parameter that determines the flywheel "state of charge" is the requirement that the total kinetic energy of the flywheel plus vehicle remain constant. This is the key control parameter. The system time constraint should be such that the system shows minimal history dependence.

For example, the acceleration capability of the system should not be history dependent. The design ranges for Link 1 are set by the engine operational mode specified in Link 3.

B. Link Two

Link two includes supplying the acceleration and some regenerative braking from the flywheel to the road and vice versa. This is expected to be the most difficult problem area. Since the usable energy in a flywheel is proportional to the difference of the squares of the operational speeds, this implies a high flywheel speed ratio. This ratio is one of the Phase I parameters.

It shall range from 3:1 (24000 rpm to 8000 rpm) to 3:2 (24000 rpm to 16000 rpm). Since the flywheel decreases speed as the vehicle accelerates the product of the vehicle speed ratio and the flywheel speed ratio is necessary for Link two. The overall Link 2 speed ratio is another parameter and shall vary from maximum output to input speed ratio (No/Ni) for .10 to .033. Over this speed ratio the "gear ratio" must be continuously variable. The vehicle speed ratio for Link 2 has to be aided by some low speed mechanism. This "clutching" function is another parameter to be studied in Phase I.

The nominal peak values for the torque and horsepower for Link 2 are 300 ft-lb and 200 horsepower respectively. These are nominal figures and indicate the acceleration figures. Regeneration imposes a different and unusual requirement on Link 2. It is recognized that vehicles under maximum braking may develop instantaneous horsepowers in excess of three times the maximum installed horsepower. However, since the application of front wheel drive or four wheel drive does not appear at this time to be a cost-effective solution, the vehicle is considered to have rear wheel drive. This limits the amount of regeneration that is possible. Another of the parameters of Phase I will be the ratio of maximum regeneration power to maximum acceleration power. For values of this parameter exceeding one, the regeneration power is the Link 2 sizing parameter. Due to the rearwheel drive aspect of the considered vehicle the parameter probably will not exceed one by a large amount. One of the tasks of Phase I will be to assess the amount of power practically generated by the rear wheel service brakes of conventional vehicles and consider the effects on transmission cost and complexity of using all or a fraction of this power.

C. Link Three

Link one includes supplying the cruise power to the road, between 60 and 100 horsepower, and supplying flywheel windage and bearing losses and makeup in the transmission/control system.

The input speed and load ratio for link one (essentially the operating range of the heat engine: - which here is taken to be a spark ignition internal combustion engine) will consist of four cases:

1. Variable speed, variable load.
2. Variable speed, constant load.
3. Constant speed, variable load.
4. Constant speed, constant load.

The maximum speed ratio is 3.1. The maximum load ratio is from idle to continuous rated power. Each of the four heat engine operational modes is to be analyzed for its effect on the total transmission and associated control system feasibility and cost.

The transmission types for each of the three links to be considered include:

1. Mechanical
2. Hydrostatic
3. Power splitting (a combination of 1 and 2).

Each of the transmission types are to be studied for each of the 3 Link functions. This does not imply that three separate transmissions are considered necessary. The three Links are to be considered power and torque transfer functions.

III. Statement of Work

Phase I

Task I - Feasibility Analysis

The contractor shall conduct feasibility analysis of the various types of transmission for the Link functions outlined in II 3. The contractor shall provide, when requested by the project officer, but not earlier than 90 days from the effective date of the contract layout drawings of the transmission or parts of the transmission, in order that independent checks of stress analysis, thermal analysis and safety analysis can be made.

Task 2 - Control System Analysis

The contractor shall conduct control systems analysis on the entire transmission/engine/vehicle system. Control system analysis shall include:

a) stability analysis
b) safety analysis
c) analysis of possible "pathological case" operator induced instability.

Task 3 - Performance Analysis

The contractor shall compute transmission efficiency based on full load acceleration operation to maximum vehicle speed, and part load acceleration efficiency at 10 percent load, 20 percent load, 30 percent load and 50 percent load. Steady state cruise calculations of efficiency shall be made for vehicle speeds of 30, 50, and 70 miles per hour.

Task 4 - Cost Analysis

The contractor shall perform cost analysis of the various transmission concepts. The quantity of transmissions in units per year to be considered are 100,000 and 1,000,000. This shall be original equipment manufacturer (OEM) cost. The reference transmission, against which all cost and performance comparisons shall be made, is the conventional multi-speed torque converter ("automatic") transmissions.

Task 5 - Transmission Recommendation

A recommendation of an optimum transmission based on the system cost and efficiency shall be made. This recommendation shall include designs of the optimum transmission in such detail that accurate cost estimates required in Task 4 above can be made. The recommendation shall include the optimum flywheel speed ratio, heat engine operational mode and physical configuration of the system.

If in the opinion of the Contractor no optimum transmission/control system can actually be found that fulfills the requirements this conclusion should be made.

Phase II

Task I - Transmission Detail Design

The contractor shall make shop drawings for the fabrication of the optimum transmission of Phase I.

Task 2 - Test Plan

A. The contractor shall submit to the Project Officer a detailed plan for the testing of the optimum transmission.

B. The system to be tested shall be a "breadboard" consisting of a heat engine, a flywheel, and an engine dynamometer. The choice of flywheel and engine shall be made jointly by the project officer and the contractor.

C. The contractor shall make measurements of system efficiency at the points calculated in Phase I.

D. The contractor shall make off design system specific fuel consumption maps.

E. The contractor shall perform detailed control system tests, including experimental exploration of possible operator induced stability.

F. The contractor shall identify and attempt to resolve and explain any discrepancies that arise between the predictions Phase I and the experimental results.

G. The contractor shall make graphical representations of all efficiency data generated in Phase II including part load data. Comparisons to the reference transmission identified in Phase I, point 6 shall be made.

Task 3 - Transmission Fabrication

The contractor shall build the transmission from the detail plans obtained in Task 1.

Task 4 - Test Program

The contractor shall, after the concurrence of the project officer, conduct a transmission test program from the plans outlined in Task 2.

Task 5 - Program Plans

The contractor shall, after the completion of the major portion of the test program, prepare program plans for future work; which would be oriented toward system installation in a vehicle.

Task 6 - Reporting

See Article III - Reports.

Sundstrand Aviation
division of Sundstrand Corporation

K. Drawings

APPENDIX K

DRAWINGS

This section contains the following drawings:

2724A-L1	Layout Baseline (8A) Transmission
2724A-L2	Layout Alternate (8C) Transmission
2724A-L3	Layout Baseline (8A) Control Schematic
2724A-E1	Outline Baseline (8A) Transmission

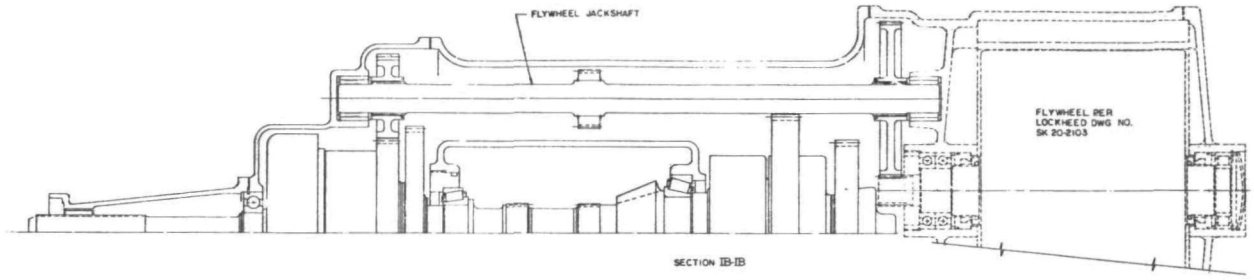

SECTION B-B

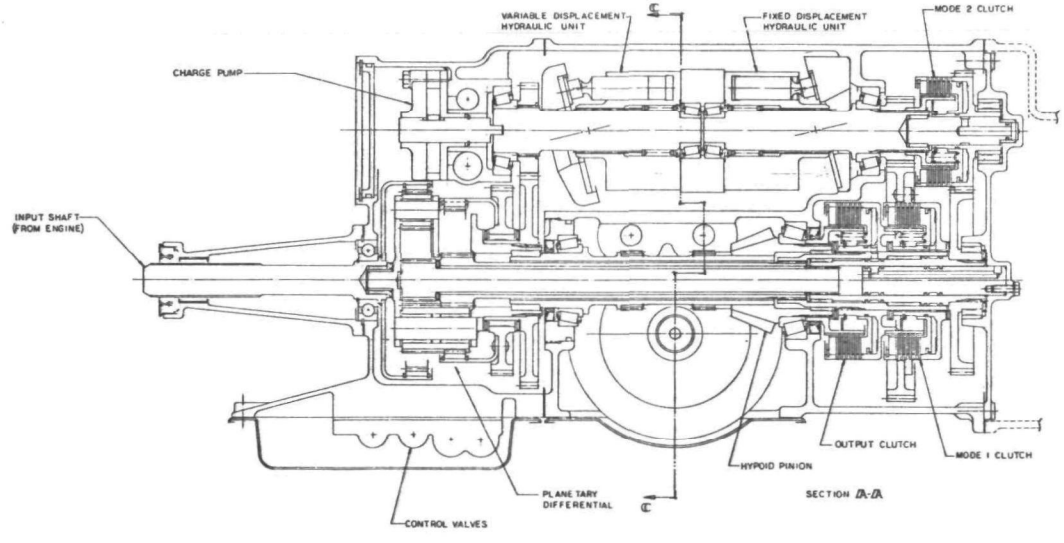

SECTION A-A

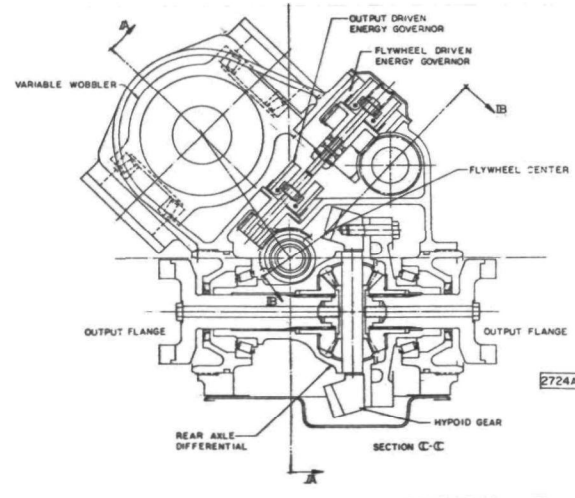

SECTION C-C

2724A-L1

LAYOUT - HYDRO-MECHANICAL TRANSMISSION (BA)

SUNDSTRAND AVIATION

EPA FAMILY CAR

2724A-L1

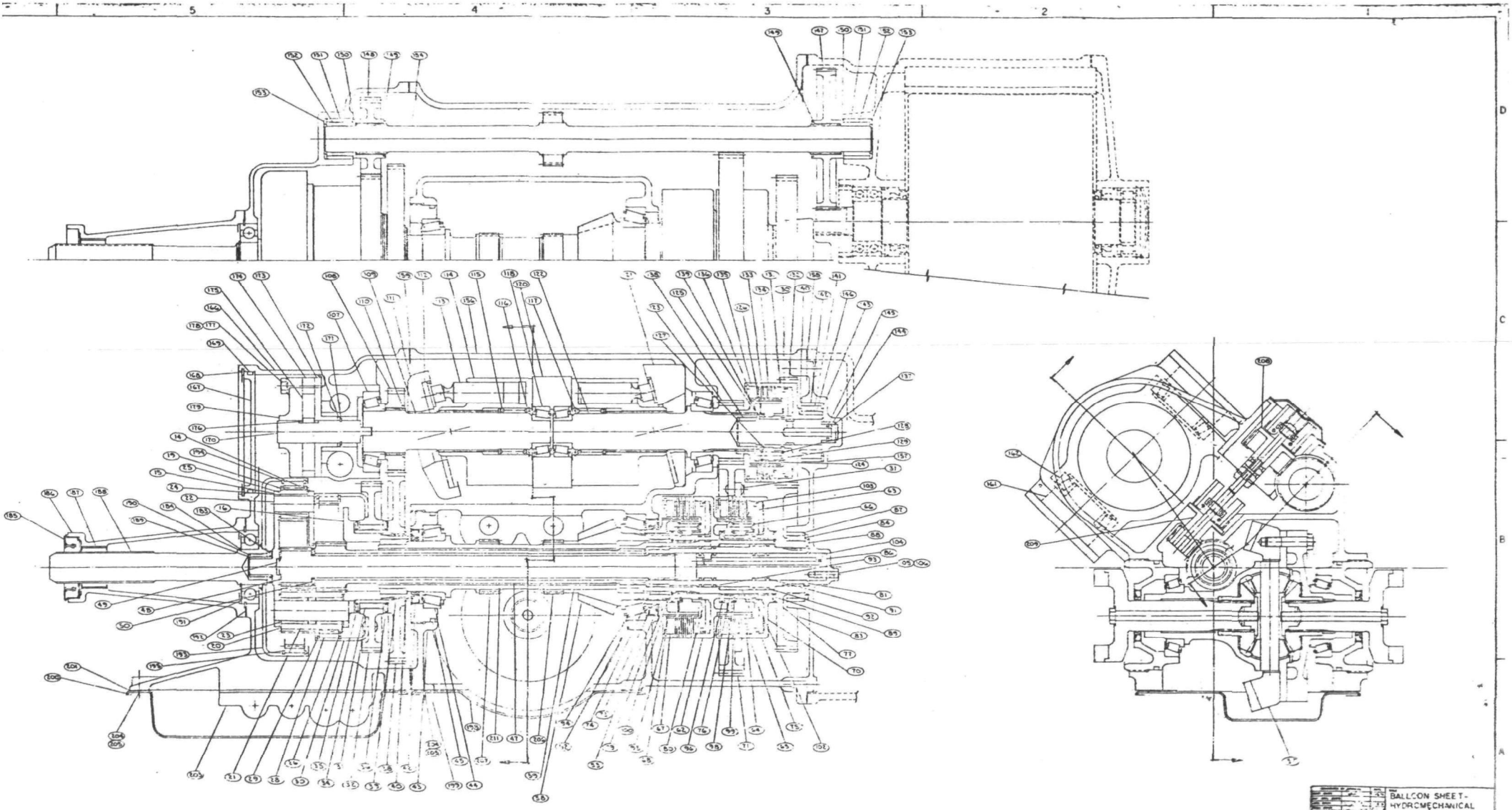
BALLOON SHEET-
HYDROMECHANICAL
TRANSMISSION
SUNDSTRAND AVIATION
2724A
EPA FAMILY

REF NO	NEXT HIGHER ASSY.	ZONE	DESCRIPTION	QTY	PART NO OLD	PART NO NEW	SIMILAR TO	TOTAL WEIGHT ACT'L	TOTAL WEIGHT CALC	DIGIT OF REFER	MATERIAL	REMARKS	REV
1													
2													
3													
4													
5													
6													
7													
8													
9													
10	~	~	TRANSMISSION ASSY.	1									
11													
12	10	~	PLANETARY ASSY	1									
13	12	~	CARRIER-MATCHED SET	1									
14	13	5C	CARRIER	1									
15	13	5B	COVER	1									
16	13	5B	COVER	1									
17	13	NOT SHOWN	PIN	2									
18	13	NOT SHOWN	BOLT	3									
19		5C	GEAR, HELICAL	6									
20		5B	GEAR, HELICAL	3									
21		5A	SHAFT	6									
22		5B	SHAFT	3									
23		5B	BEARING	6									
24		5B	BEARING	6									
25		5C	WASHER, THRUST	12									

REVISIONS

CHANGE NO	DATE	BY	CHECKED	CHANGE NO	DATE	BY	CHECKED	CHANGE NO	DATE	BY	CHECKED

TOTAL WEIGHT
CALC
ACT'L

APPROVALS
GROUP ENG'R
PROJ. ENG'R
SYS. ENG'R
REV. ENG'R.
CHF. DRFTSMAN

TITLE
PARTS LIST-
HYDROMECHANICAL
TRANSMISSION (8A)

DRAFTING SUP.
DESIGN SUP.
DESIGNER Anthony Smith 8 Nov 71

SUNDSTRAND AVIATION
DIV. OF SUNDSTRAND CORP.
ROCKFORD, ILLINOIS

DWG NO 2724A-L1

SHEET 3 OF 10

REV.

JOB SERIAL NO
DESIGN LD
DRAFTING

CHARGE NO
DESIGN LD
DRAFTING

DRAFTING LEADMAN
CHECKING LEADMAN

REF. NOS. ON THIS SHEET 1 THRU 25

RCH

FORM LOPL 7011

Sundstrand Aviation
division of Sundstrand Corporation
SUNDSTRAND

26		5A	WASHER, THRUST	6								
27												
28		5A	GEAR, INTERNAL	1								
29		5A	RING, RETAINING	2								
30		5A	DRUM, GEAR	1								
31		[illegible]	RIVET	8								
32		4A	GEAR, HELICAL	1								
33												
34		5A	BEARING, ROLLER	1								
35		5A	BEARING, THRUST & THRUST RACES	1								
36		4A	BEARING, THRUST & THRUST RACES	1								
37												
38		4A	GEAR, HELICAL	1								
39		4A	BEARING	1								
40		4A	RING, RETAINING	1								
41												
42		4A	SEAL, LIP									
43		4A	SLEEVE, ADJ	1								
44		4A	BEARING	1								
45		4A	PACKING	1								
46												
47		4A	GEARSHAFT, HELICAL	1								
48		5B	GEARSHAFT, HELICAL	1								
49		5B	WASHER	1								
50		5B	BEARING, THRUST & THRUST RACES	1								
51												
52		4A	BEARING	1								
53		4A	SEAL, LIP	1								
54												
55												

SHEET 4 OF 10

2724A-L1

REF. DWG. ON THIS SHEET 26

TOTAL 55

Sundstrand Aviation
division of Sundstrand Corporation

REF. NO.	NEXT HIGHER ASSY.	ZONE	DESCRIPTION	QTY.	PART NO. OLD	PART NO. NEW	SIMILAR TO	TOTAL WEIGHT ACTL	TOTAL WEIGHT CALC	MOMENT OF INERTIA	MATERIAL	REMARKS	REV
56		~	GEAR SET	1									
57		1A	GEAR, HYPOID	1									
58		4A	PINION, HYPOID	1									
59		4A	SHAFT	1									
60													
61													
62		3A	HOUSING, CLUTCH	1									
63		3B	PISTON	2									
64		3A	PLATE, CLUTCH, INNER	10									
65		3A	PLATE, CLUTCH, OUTER	12									
66		3B	SPRING, HELICAL, COMP	12									
67		3A	PLATE	2									
68		3A	RING, RETAINING	2									
69													
70		3A	HOUSING, CLUTCH	1									
71		3A	GEAR, HELICAL	1									
72													
73		4A	BEARING	1									
74		4A	BEARING	1									
75		3A	BEARING	1									
76		3A	BUSHING	1									
77		3B	BUSHING	1									
78													
79		4A	SHAFT, CLUTCH	1									
80		3A	SHAFT, CLUTCH	1									
81		3B	SHAFT, CLUTCH	1									
82													
83		3B	GEAR, HELICAL	1									
84		3B	BEARING	1									
85													

SUNDSTRAND AVIATION

SHEET 5 OF 10 DWG NO 2724A-L1 REV

REF NOS ON THIS SHEET 56 TO 85 RCL

FORM L-2274, 1969

Sundstrand Aviation
division of Sundstrand Corporation
SUNDSTRAND ®

REF. NO.		SYMB	DESCRIPTION	QTY.	PART NO. OLD	PART NO. NEW	SIMILAR TO	WEIGHT ACTUAL	WEIGHT CALC	WEIGHT OF INSTLN	MATERIAL	REMARKS	
86		3B	SHAFT, PORT	1									
87		3B	LINER	1									
88		3B	BEARING, THRUST & THRUST RACES	1									
89		3B	BEARING, THRUST & THRUST RACES	1									
90													
91		3B	PISTON RING	4									
92		3B	PISTON RING	2									
93		3B	PISTON RING	2									
94		4A	WASHER, THRUST	1									
95		3A	BEARING, THRUST & THRUST RACES	1									
96		3A	BEARING, THRUST & THRUST RACES	1									
97													
98		3A	SEAT, SPRING	2									
99		3A	RING, RETAINING	2									
100		3A	RING, RETAINING	1									
101													
102		3A	SEAL RING	2									
103		3B	SEAL RING	2									
104		3B	PACKING	1									
105		3B	BOLT	1									
106		3B	WASHER	1									
107		5C	BEARING	2									
108		5C	GEAR, HELICAL	1									
109		4C	SHAFT, SPLINED	1									
110		4C	RING, RETAING	2									
111		4C	WOBBLER, VARIABLE	1									
112		4C	BEARING, PLATE	1									
113		4C	PISTON & SLIPPER ASSY	18									
114		4C	CYLINDER BLOCK	2									
115		4C	SPRING	2									

SUNDSTRAND AVIATION

SHEET 6 OF 10

DWG. NO. 2724A-L1

REP. NOS. ON THIS SHEET 86 TO 115

Sundstrand Aviation
division of Sundstrand Corporation

[illegible]		4C	WASHER	4									
[illegible]		4C	RING, RETAINING	2									
[illegible]		4C	BEARING	2									
119													
[illegible]		4C	PORT PLATE	1									
121		3C	WOBBLER, FIXED	1									
122		4C	SHAFT, SPLINED	1									
123		3C	GEAR, HELICAL	1									
124		3B	SHAFT, CLUTCH	1									
125		3C	RING, RETAINING	1									
[illegible]		3C	SEAT, SPRING	1									
127		3C	RING, RETAINING	1									
[illegible]		3C	SPRING	6									
129		3B	PISTON, CLUTCH	1									
130		3C	SEAL RING	1									
131		3C	SEAL RING	1									
132		3C	GEAR & CLUTCH HOUSING	1									
[illegible]		3C	PLATE, CLUTCH, INNER	5									
134		3C	PLATE, CLUTCH, OUTER	6									
135		3C	PLATE	1									
[illegible]		3C	RING, RETAINING	1									
137		3C	SHAFT	1									
[illegible]		3C	BEARING	1									
139		3C	WASHER, THRUST	1									
140		3C	WASHER, THRUST	1									
141		3C	BEARING	1									
142		3C	LINER	1									
143		3C	WASHER, THRUST	1									
144		3C	LINER	1									
145		3C	PISTON RING	1									

SHEET 7 OF 10 | 2724A-L1

REF. DWG. ON THIS SHEET 116 TOTAL 145

Sundstrand Aviation
division of Sundstrand Corporation

REF. NO.	NEXT HIGHER ASSY.	ZONE	DESCRIPTION	QTY	PART NO OLD	PART NO NEW	SIMILAR TO	TOTAL WEIGHT ACT'L	TOTAL WEIGHT CALC	MOMENT OF INERTIA	MATERIAL	REMARKS	REV
146		3C	SLEEVE	1									
147		3D	GEAR, HELICAL	1									
148		4D	GEAR, HELICAL	1									
149		3D 4D	RING, RETAINING	2									
150		3D 4D	WASHER, THRUST	2									
151		3D 5D	BEARING	2									
152		3D 5D	LINER	2									
153		3D 5D	WASHER, THRUST	2									
154		4D	SHAFT	2									
155													
156		4C	HOUSING, DIFFERENTIAL	1									
157		3B	HOUSING, CLUTCH	1									
158		3C	GASKET	1									
159		4C	GASKET	1									
160													
161		2B	TRUNNION	2									
162		2B	BEARING	2									
163													
164													
165													
166		5C	HOUSING	1									
167		5C	COVER	1									
168		5C	RING, RETAINING	1									
169		5C	PACKING	1									
170		5C	SHAFT, PUMP	1									
171		4C	RING, RETAINING	1									
172		5C	WASHER, THRUST	1									
173		5C	PLATE, PUMP	1									
174		5C	HOUSING, PUMP	1									
175		5C	GEROTOR SET - MATCHED SET	1									

SUNDSTRAND AVIATION

SHEET 8 OF 10 DOC NO 2724A-L1 REV.

FORM L-0-P-L 7-69

REF NOS ON THIS SHEET 146 THRU 175 RCH

Sundstrand Aviation
division of Sundstrand Corporation
SUNDSTRAND ®

REF. NO.	NEXT HIGHER ASSY.	CODE	DESCRIPTION	QTY.	PART NO. OLD	PART NO. NEW	SIMILAR TO	TOTAL WEIGHT ACT'L	TOTAL WEIGHT CALC	MOMENT OF INERTIA	MATERIAL	REMARKS	REV.
176		5C	KEY	1									
177		5C	WASHER	6									
178		5C	BOLT	6									
179		5C	COVER, PUMP	1									
180													
181													
182													
183		5B	BEARING, THRUST & THRUST RACES	1									
184		5B	RING, RETAINING	1									
185		6B	SEAL, LIP	1									
186		5B	HOUSING, EXTENSION	1									
187		5B	BUSHING, SLEEVE	1									
188		6B	SHAFT, INPUT	1									
189		5B	SLEEVE										
190		5B	BEARING	1									
191		5B	BEARING, BALL	1									
192		5B	GASKET	1									
193		5B	DRUM	1									
194		5C	RING, RETAINING	1									
195		5A	GEAR, SPUR, INTERNAL	1									
196													
197													
198		4A	COVER	1									
199		4A	GASKET	1									
200		5A	FAN	1									
201		6A	GASKET	1									
202													
203		5A	CONTROL VALVE ASSY	1									
204		5A	BOLT	30									
205		5A	WASHER	30									

SUNDSTRAND AVIATION

SHEET 9 OF 10 DOC. NO. 2724A-L1 REV.

REF. NOS. ON THIS SHEET 176 TO 205

Sundstrand Aviation
division of Sundstrand Corporation

REF. NO.	NEXT NUMBER REF.	ZONE	DESCRIPTION	QTY.	PART NO. OLD	PART NO. NEW	SIMILAR TO	WEIGHT ACTUAL	WEIGHT CALC.	CONTENT OF MONTH	MATERIAL	REMARKS	
206		4A	GEAR, GOVERNOR	1									
207		4A	GEAR, GOVERNOR	1									
208		1C	GOVERNOR	1									
209		2B	GOVERNOR	1									
210		NOT SHOWN	GOVERNOR	1									
211		4A	RING, RETAINING	2									
212													
213													
214													
215													
216													
217													
218													
219													
220													
221													
222													
223													
224													
225													
226													
227													
228													
229													
230													
231													
232													
233													
234													
235													

SUNDSTRAND AVIATION

SHEET 10 OF 10 DWG. NO. 2724A-L1

REF. NOS. ON THIS SHEET 206 TOTAL 235

Sundstrand Aviation
division of Sundstrand Corporation
SUNDSTRAND

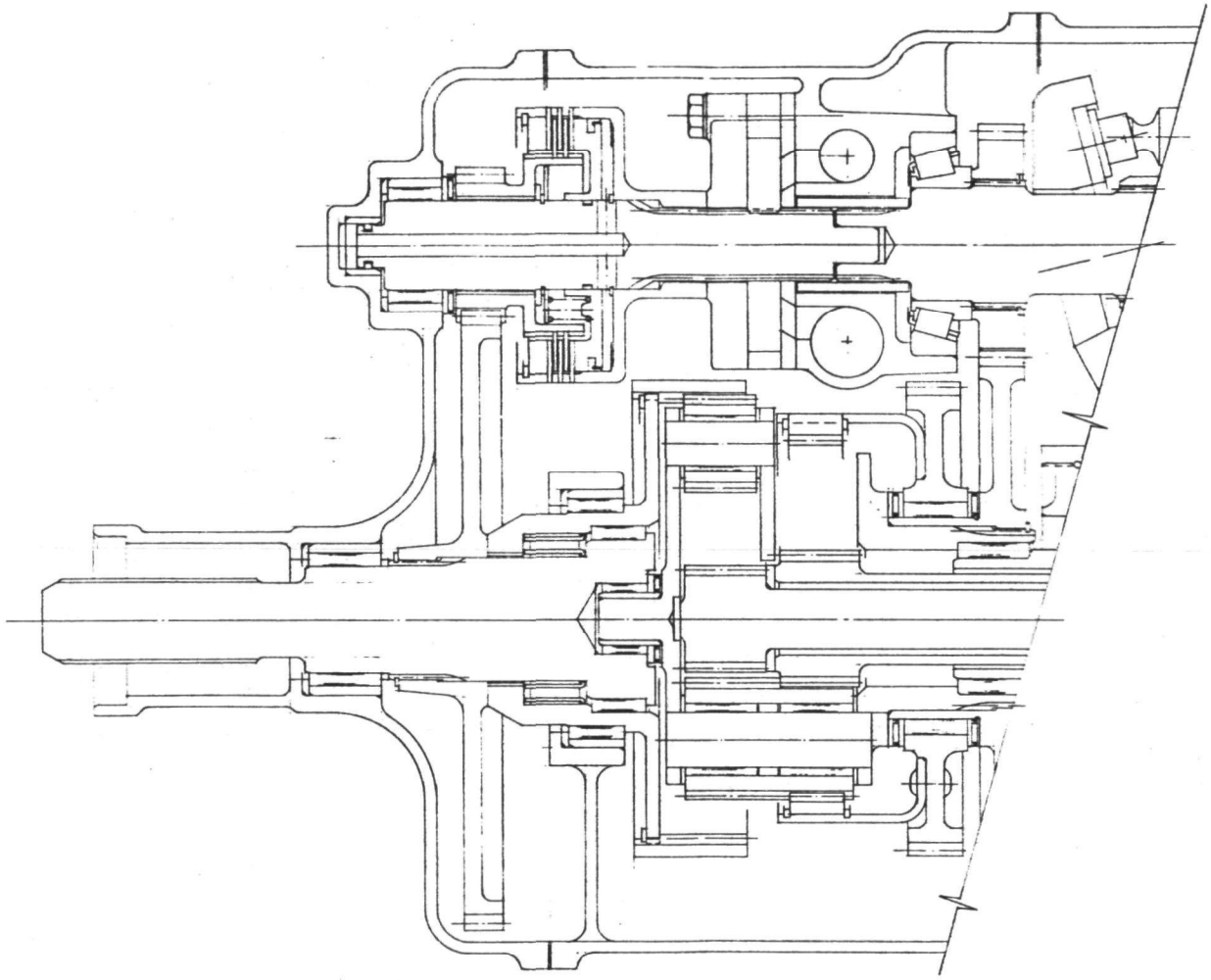

SIGNATURES OF APPROVAL	TITLE LAYOUT - ALTERNATE INPUT, HYDROMECHANICAL TRANSMISSION (BC)
SCALE FULL	SHEET 1 OF 4
WEIGHT	LBS.
PROPOSAL NO. 2724A	SUNDSTRAND AVIATION DIVISION OF SUNDSTRAND CORPORATION ROCKFORD, ILLINOIS
APPLICATION EPA FAMILY CAR	DWG. 2724A-L2

REQUEST SER NO. 3791

RCH

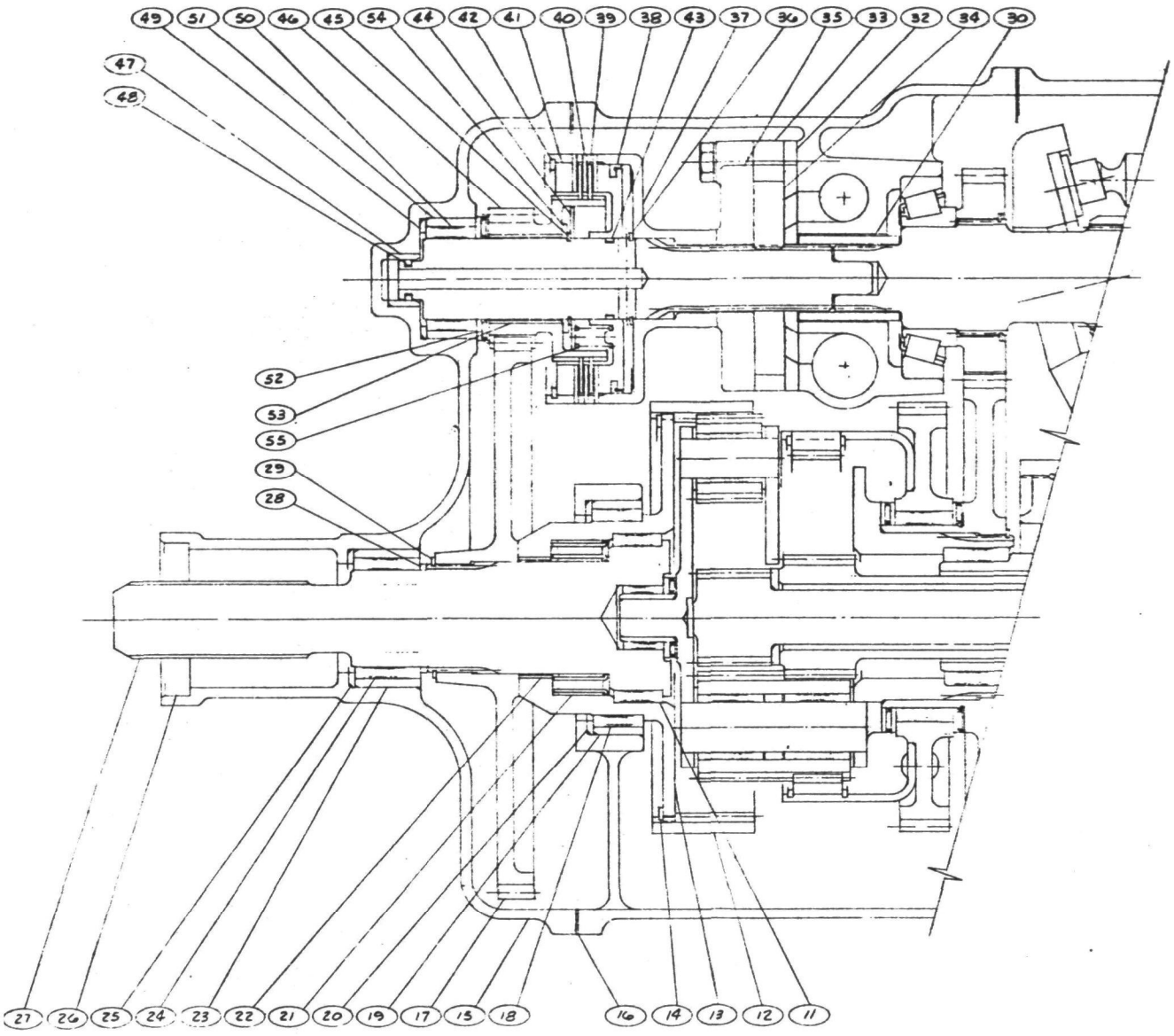

SIGNATURES OF APPROVAL		DATE
DEPT. MG'R		
APPL. ENG'R		
PROJ. ENG'R		
CHF DEV. ENG'R		
CHF DES. ENG'R		
CHIEF ENGINEER		
DESIGN SUP		
DRAWN BY		

TITLE: BALLOON SHEET - ALTERNATE INPUT HYDROMECHANICAL TRANSMISSION (EC)

SCALE FULL | SHEET 2 OF 4

WEIGHT LBS. NET / GROSS

PROPOSAL NO. 2724A

SUNDSTRAND AVIATION
DIVISION OF SUNDSTRAND CORPORATION
ROCKFORD, ILLINOIS

APPLICATION: EPA FAMILY CAR

DWG. NO. 2724A-L2

REQUEST SER NO. 3791

REF NO	NEXT HIGHER ASSY	QUAN	DESCRIPTION	MATERIAL
1				
2				
3				
4				
5				
6				
7				
8				
9				
10			FAN & MISSION ASSY ALTERNATE INPUT	
11	2A	1	BEARING	
12	2A	1	GEAR, INTERNAL	
13	3A	1	SHAFT CLUTCH	
14	3A	1	RING, RETAINING	
15	3A	1	HOUSING, INPUT	
16	3A	1	GASKET	
17	3A	1	GEAR, HELICAL	
18	3A	1	BEARING	
19	3A	1	LINER	
20	3A	1	WASHER, THRUST	
21	3A	1	CLUTCH, SPRAG	
22	3A	1	BUSHING, SLEEVE	
23	3A	1	LINER	
24	4A	1	BEARING	
25	4A	1	WASHER, THRUST	

TOTAL WEIGHT

SCALE

APPROVALS

GROUP ENG'R
PROJ. ENG'R
STRS ENG'R
MAT. ENG'R
CHF DRFTSMAN
DRAFTING SUP
DESIGN SUP
DESIGNER William F. Smith

TITLE
PARTS LIST - ALTERNATE INPUT (8C)

SUNDSTRAND AVIATION
DIV OF SUNDSTRAND CORP
ROCKFORD, ILLINOIS

DWG NO 2724A-L2

SHEET 3 OF 4

REV.

REVISIONS

NUMBER	DATE	BY	CHECKED	NUMBER	DATE	BY	CHECKED	NUMBER	DATE	BY	CHECKED

JOB SERIAL NO

DESIGN NO
DRAFTING

CHARGE NO

DESIGN NO
DRAFTING

DRAFTING LEADMAN

CHECKING LEADMAN

REF NOS ON THIS SHEET 1 THRU 25

RCH

Sundstrand Aviation
SUNDSTRAND
division of Sundstrand Corporation

REF NO.	NEXT HIGHER ASSY	CODE	DESCRIPTION	QTY.	PART NO. NEW	PART NO. OLD	TOTAL WEIGHT ACTUAL	TOTAL WEIGHT SCALE	NUMBER OF NEXT A	MATERIAL	REVISION	REV
26		4A	SEAL, LIP	1								
27		4A	SHAFT, INPUT	1								
28		3A	WASHER, THRUST	1								
29		3A	RING, RETAINING	1								
30		2A	COUPLING, SPLINED	1								
31												
32		2B	PLATE, PUMP	1								
33		2B	HOUSING, PUMP	1								
34		2B	GEROTOR SET	1								
35		2B	COVER, PUMP	1								
36		2B	RING, RETAINING	1								
37		2B	HOUSING, CLUTCH	1								
38		3B	SEAL RING	1								
39		3B	PLATE, CLUTCH, INNER	2								
40		3B	PLATE, CLUTCH, OUTER	3								
41		3B	PLATE	1								
42		3B	RING, RETAINING	1								
43		3B	SEAL RING	1								
44		3B	SEAT, SPRING	1								
45		3B	RING, RETAINING	1								
46		3A	GEAR & CLUTCH SHAFT	1								
47		4B	LINER	1								
48		4B	PISTON RING	1								
49		4B	WASHER, THRUST	1								
50		3B	BEARING	1								
51		3B	LINER	1								
52		3B	BEARING, THRUST & THRUST RACES	1								
53		3B	BUSHING, SLEEVE	1								
54		3B	WASHER, THRUST	1								
55		3B	SPRING	6								

SUNDSTRAND AVIATION SHEET 4 OF 4 2724A-L2 REV.

FORM LOPL 7911 REF NOS ON THIS SHEET 26 TO 55

Sundstrand Aviation
Division of Sundstrand Corporation
SUNDSTRAND

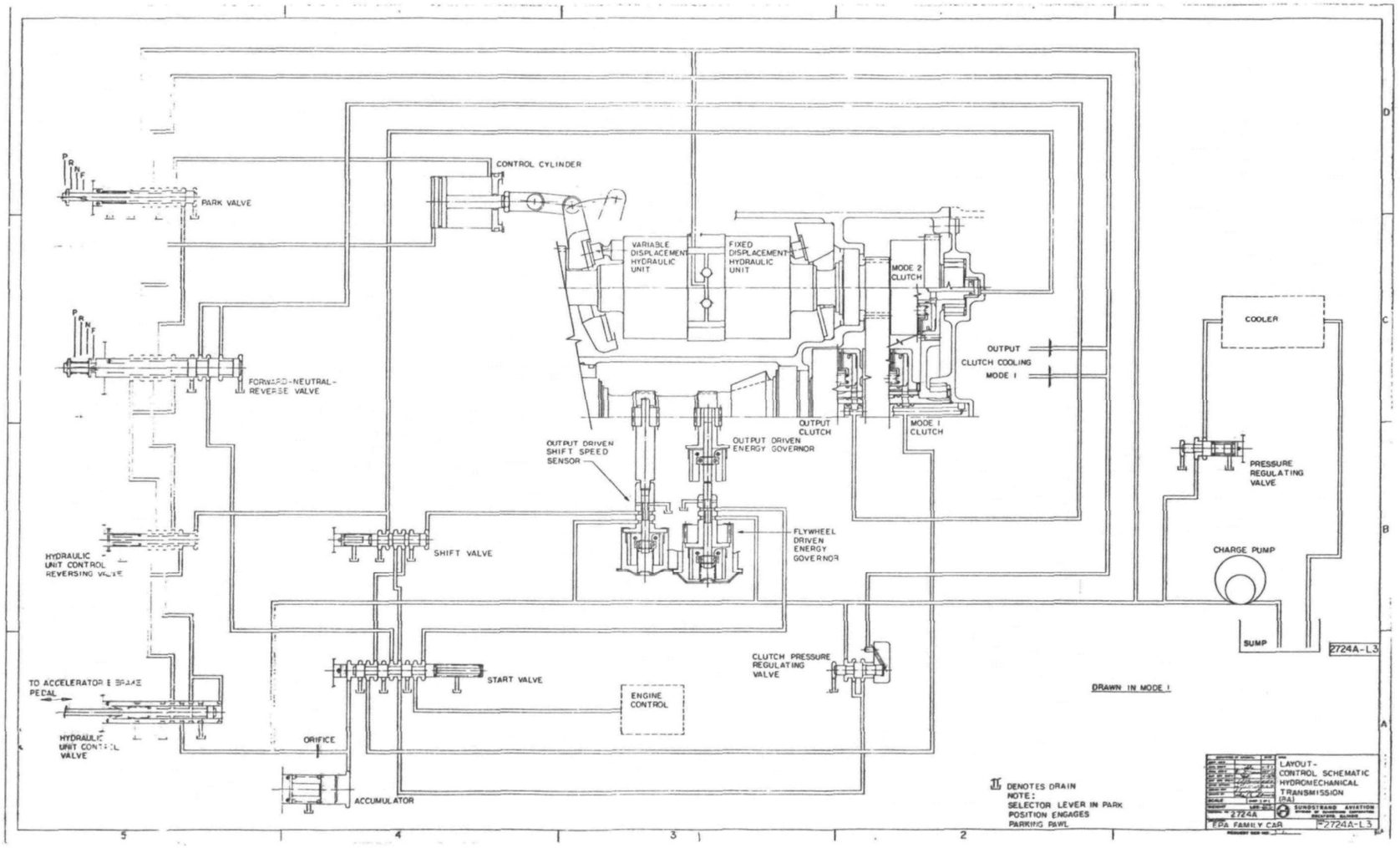
CONTROL CYLINDER
PARK VALVE
VARIABLE DISPLACEMENT HYDRAULIC UNIT
FIXED DISPLACEMENT HYDRAULIC UNIT
MODE 2 CLUTCH
COOLER
OUTPUT
CLUTCH COOLING
MODE 1
FORWARD-NEUTRAL-REVERSE VALVE
OUTPUT CLUTCH
MODE 1 CLUTCH
OUTPUT DRIVEN SHIFT SPEED SENSOR
OUTPUT DRIVEN ENERGY GOVERNOR
PRESSURE REGULATING VALVE
FLYWHEEL DRIVEN ENERGY GOVERNOR
SHIFT VALVE
HYDRAULIC UNIT CONTROL REVERSING VALVE
CHARGE PUMP
SUMP
2724A-L3
CLUTCH PRESSURE REGULATING VALVE
START VALVE
TO ACCELERATOR & BRAKE PEDAL
ENGINE CONTROL
DRAWN IN MODE 1
HYDRAULIC UNIT CONTROL VALVE
ORIFICE
ACCUMULATOR
DENOTES DRAIN
NOTE:
SELECTOR LEVER IN PARK POSITION ENGAGES PARKING PAWL
LAYOUT-CONTROL SCHEMATIC HYDROMECHANICAL TRANSMISSION (PA)
SUNDSTRAND AVIATION
2724A
FPA FAMILY CAR
2724A-L3

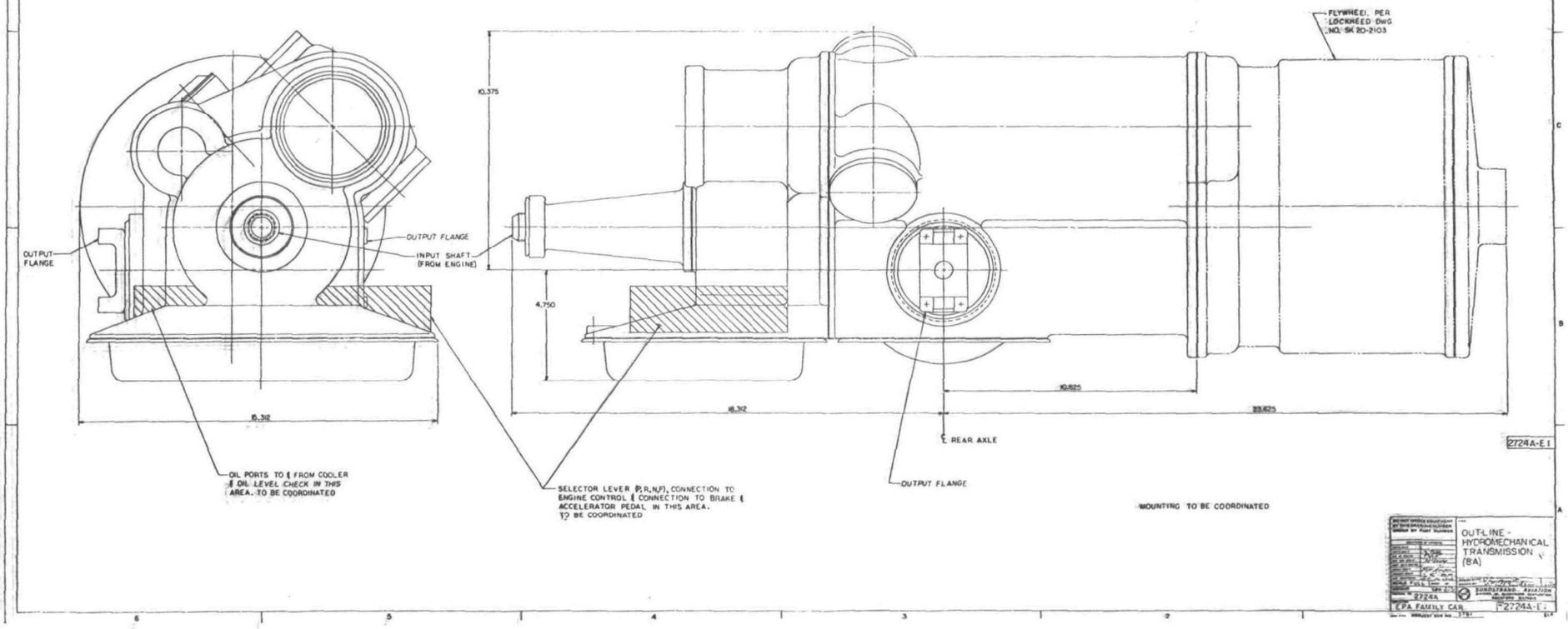
FLYWHEEL PER LOCKHEED DWG NO. SK 20-2103
10.375
OUTPUT FLANGE
OUTPUT FLANGE
INPUT SHAFT (FROM ENGINE)
4.750
15.312
16.312
10.625
23.625
℄ REAR AXLE
OIL PORTS TO & FROM COOLER & OIL LEVEL CHECK IN THIS AREA. TO BE COORDINATED
SELECTOR LEVER (P,R,N,F), CONNECTION TO ENGINE CONTROL & CONNECTION TO BRAKE & ACCELERATOR PEDAL IN THIS AREA. TO BE COORDINATED
OUTPUT FLANGE
MOUNTING TO BE COORDINATED
2724A-E.1
OUTLINE - HYDROMECHANICAL TRANSMISSION (8A)
2724A
EPA FAMILY CAR
P-2724A-E.1
SUNDSTRAND AVIATION

L. Major Component Cost Breakdown

APPENDIX L

COST ESTIMATE

BREAKDOWN BY MAJOR

SUBASSEMBLY

(Baseline 8A Transmission)

Item	1,000,000 Per Year	100,000 Per Year
Planetary Gear Set (14-26, 28-30, 193-195)*	$14.20	$21.30
Transfer Gears (30, 108, 32, 148, 71, 123, 83, 147)	$13.50	$24.30
Shafting (188, 46, 47, 81, 80, 59, 86, 137, 109, 122, 154)	$27.50	$44.00
Mode 1 Clutch (Excluding Clutch Hub) (70, 63-68, 98)	$ 5.26	$ 8.95
Output Clutch (Including Mode 1 Clutch Hub) (62-68, 79, 98)	$ 8.46	$14.40
Mode 2 Clutch (Including Clutch Drive Gear) (124, 126, 128, 129, 132-136)	$ 8.90	$15.10
Hydraulic Units (115-117, 120, 121, 161)	$36.35	$60.45
Charge Pump (170, 173-179)	$ 2.75	$ 4.13
Housing, Covers, Oil Pan (156, 157, 166-169, 186)	$24.70	$33.40
Control System (203, 208-210)	$13.05	$19.60
Anti-Friction Bearings	$13.75	$13.75
Thrust Washers, Liners	$ 2.10	$ 2.10
Seals, Gaskets	$ 1.55	$ 1.55
Misc. Hardware	$ .60	$ .60
TOTAL	$172.67	$263.63

* Reference Balloon sheet and parts list Drawing 2724A-L1 (Appendix K)

These costs include assembly and production test costs.

M. Analog Computer Simulation

APPENDIX M

ANALOG COMPUTER SIMULATION

Analysis of the dynamic properties of a hydromechanical, energy storage transmission and its controls was accomplished on an EAI 690 hybrid computer.

Figure APP-M1 shows a pictorial diagram of the system analyzed. Figure APP-M2 shows the gear ratio's and torque nomenclature used in the anlaysis. Table APP-M1 shows the equations used in the analysis. Table APP-M2 defines parameter nomenclature.

Table APP-M3 defines the torque required out of the transmission to maintain constant road speed. Figure APP-M3 shows the torque available from the engine at various throttle settings and engine speeds. These curves were assumed from the "typical medium size engine fuel economy map" (reference Appendix H) supplied by EPA.

Figure APP-M4 and APP-M5 show the analog computer wiring diagrams. Figures APP-M6 and APP-M7 show representative analog traces of vehicle acceleration and deceleration.

Only one mode of operation was simulated due to the similarity of both operationg modes.

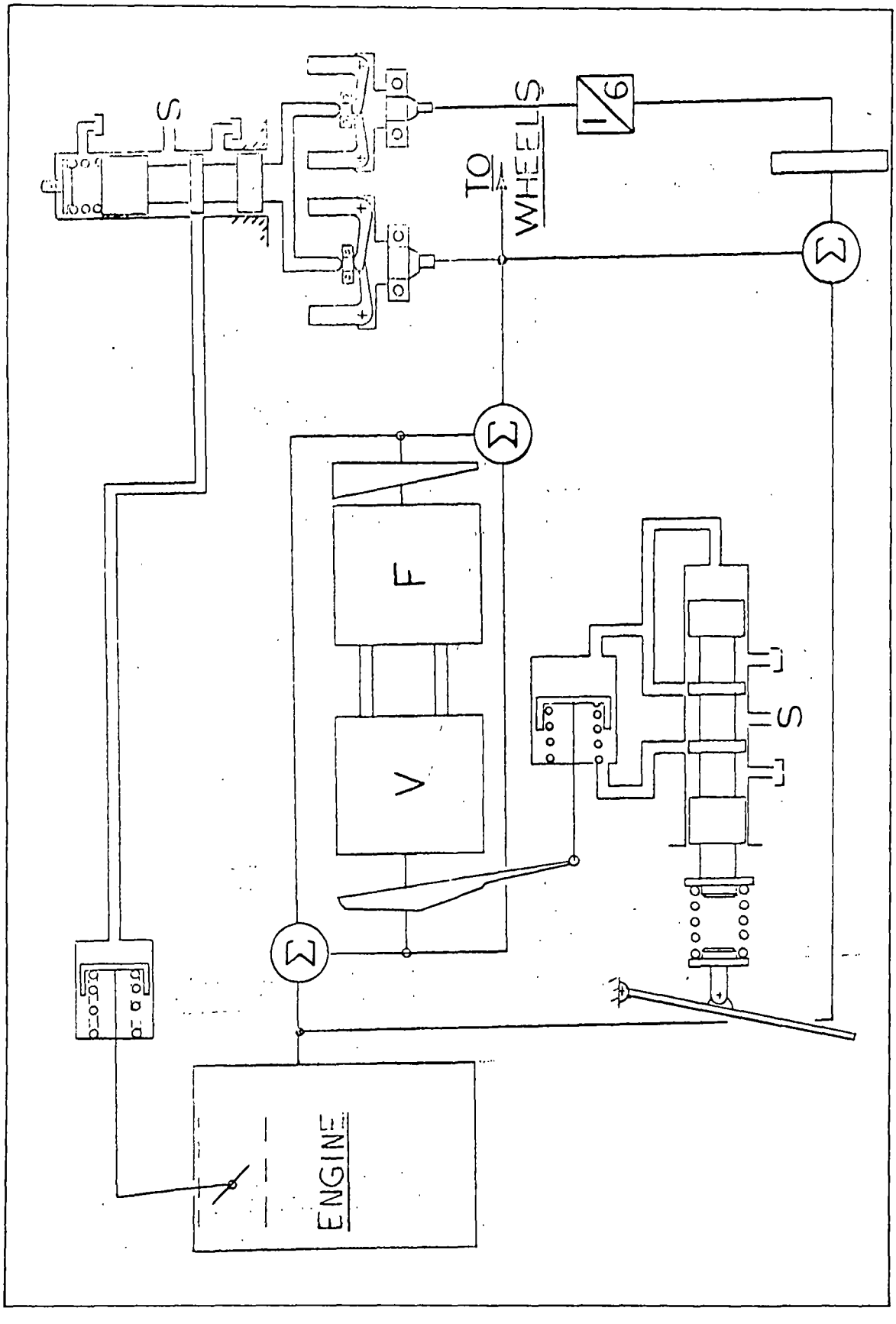

Figure APP-M1 Pictorial Diagram, Transmission System

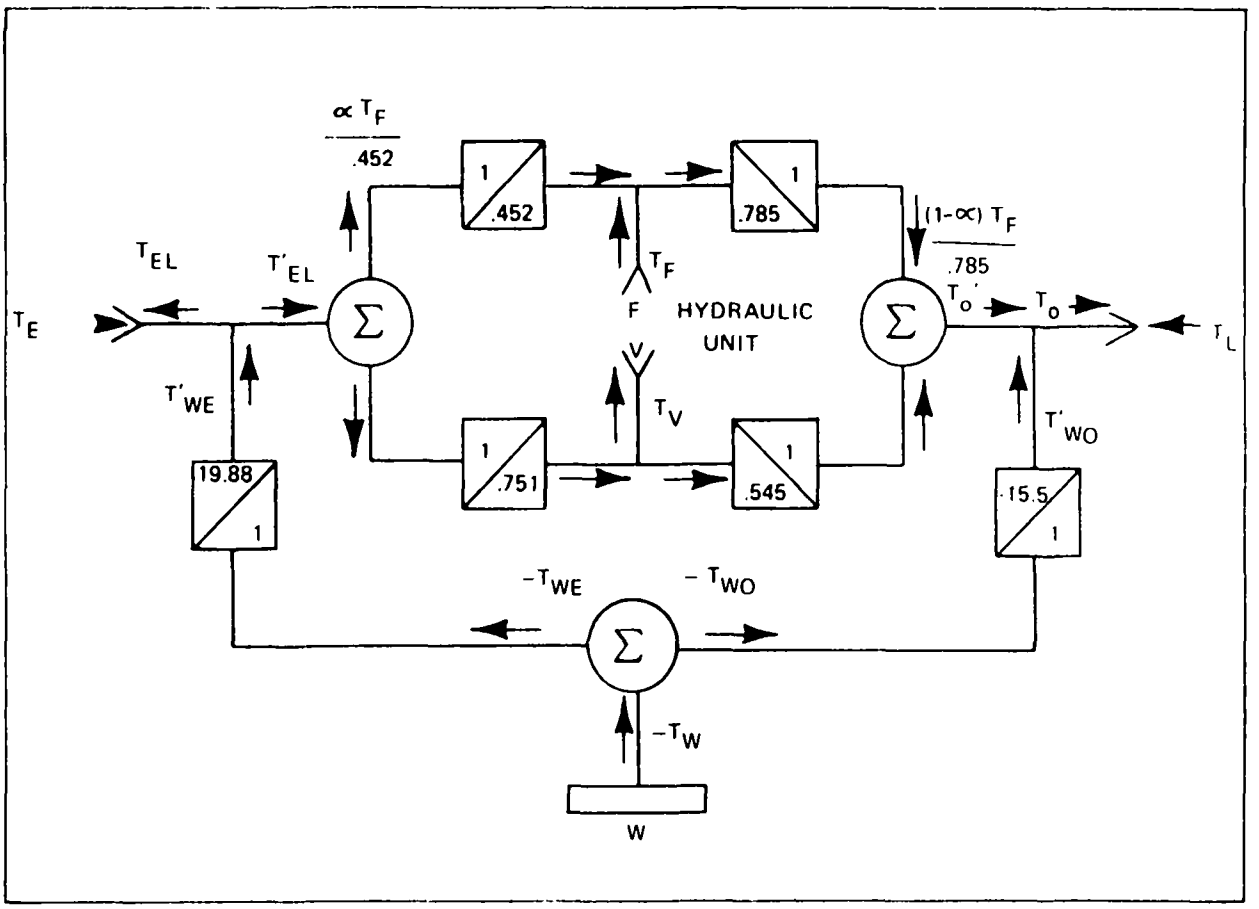

Figure APP-M2 Transmission System Schematic

TABLE APP-M1

Equations

Variable Unit Flow, Q_v -

$Q_v = Q_f + Q_l + Q_c$ cis

Where:

$Q_v = D_v X_v W_v$

$Q_f = D_f W_f$

$Q_l = LP_w$

$Q_c = (V/B)\ \dot{P}_w$

$D_v X_v W_v = D_f W_f + LP_w + (V/B)\ \dot{P}_w$

Solving For P_w, Yields -

$P_w = (B/VS)\ (D_v X_v W_v - D_f W_f - LP_w)$

Also:

$P_w = T_f/D_f$; Substituting this into the previous equation and solving for T_f, yields -

1) $T_f = (BD_f/VS)\ [D_v X_v W_v - D_f W_f - (L/D_f)\ T_f]$ in-lb.

2) $T_v = (D_v X_v/D_f)\ T_f$ in-lb.

3) $T_e = f\ (W_e, \Theta_t)$ in-lb.

4) $T_l = f\ (W_o)$ in-lb.

Referring to Figure APP-M2.

$T_{el} = T'_{we} - T'_{el}$

$T'_{el} = \alpha T_f/.452$

Where: $\alpha = -1.2164\ X_v - 0.71778$

Therefore -

$T'_{el} = -2.691\ X_v T_f - 1.588\ T_f$ AND

$T_{el} = 19.88\ T_w + 2.691\ X_v T_f + 1.588\ T_f$

$W_e = (T_e - T_{el})/J_e s$

Sundstrand Aviation
division of Sundstrand Corporation

5) $W_e = (T_e - 19.88\ T_w - 2.691\ X_v T_f - 1.588\ T_f)/J_e\ S$ Rad./Sec.

$T_o = T_o' + T_{wo}$

$T_o' = (1-\alpha)\ T_f/.785 = 1.5496\ X_v T_f + 2.1883\ T_f$

$T_o = 1.5496\ X_v T_f + 2.1883\ T_f + 15.5\ T_w$

$W_o = (T_o - T_1)/J_o s$

6) $W_o = (1.5496\ X_v T_f + 2.1883\ T_f + 15.5\ T_w - T_1)/J_o s$ Rad./Sec.

The three equations which relate the speeds for Figure APP-M2 are:

$W_e = 0.751\ W_v + 0.452\ W_f$

$W_o = 0.545\ W_v + 0.785\ W_f$

$W_w = 19.88\ W_e - 15.5\ W_o$

Also -

7) $\dot{W}_w = 19.88\ \dot{W}_e - 15.5\ \dot{W}_o = T_w/J_w$ Rad./Sec.^{2}

Equations 5, 6, & 7 can be combined and solved for T_w

8) $T_w = (.049815\ T_e - .080243\ T_f - .13486\ X_v T_f + .00052\ T_1)$ in.-lb.

The foregoing equations describe the basic rotating hardware. The load torque, equation 4, was generated on an analog variable diode function generator. The engine torque, equation 3, being a function of two variables, was generated on the digital computer using a bi-variable D.F.G. subroutine.

The controls consist of an acceleration valve (or stroke control valve) and an energy balance valve (or engine throttle control valve). The following equations apply to the controls:

$$Q_x = A_c\dot{X}_v = k_o\ (\overset{+}{A}_y\sqrt{P_s-P_o} - \overset{-}{A}_y\sqrt{P_c-P_d})$$

9) $X_v = (ko/A_cS)\ (\overset{+}{A}_y\sqrt{P_s-P_c} - \overset{-}{A}_y\sqrt{P_c-P_d})$ in.

10) $A_y = C_yY''$ in.^{2}

$$\Sigma F_y = K_y\ (Y'-Y'') - A_vP_c + F_{ply}$$

11) $y'' = y' - (A_v/K_y)\ P_c + F_{ply}/K_y$ in.

12) $y' = y/20$ in.

$$\Sigma F_x = A_cP_c = k_xX_v - A_bP_b$$

13) $P_c = (k_vX_v + A_bP_b)/A_c$ psi

14) $P_b = P_s-P_c$ psi

$$\Sigma F_z = F_o + F_w - k_zZ - F_{plz}$$

15) $Z = (F_o + F_w - F_{plz})/kz$ in.

16) $F_o = (mr)_o\ W_o^2$ lb.

17) $F_w = (mr)_w\ (W_w/6)^2$ lb.

$$Q_t = A_t\dot{W}_t = ko\ (\overset{+}{A}_z\sqrt{P_s-P_t} - \overset{-}{A}_z\sqrt{P_t-P_d})$$

18) $W_t = (k_o/A_tS)\ (\overset{+}{A}_z\sqrt{P_s-P_t} - \overset{-}{A}_z\sqrt{P_t-P_d})$

19) $A_z = C_zZ$ in.^{2}

20) $P_t = k_tW_t/A_t$ psi

21) $\Theta_t = C_tW_t$ degrees

TABLE APP-M2
PARAMETER NOMENCLATURE

Q_V	- Variable Unit Flow	cis
Q_f	- Fixed Unit Flow	cis
Q_L	- Internal Leakage Flow	cis
Q_C	- Compressibility	cis
D_V	- Variable Unit Displacement Per Unit Stroke	1.218 in^2/rad
D_F	- Fixed Unit Displacement	1.035 in^3/rad
L	- Internal Leakage Coef.	.00624 cis/psi
B_W	- Bulk Modules of Working Fluid	200,000 psi
V_W	- Volume of Working Fluid	10 cu. - in.
P_W	- Working Pressure	psi
ω_f	- Angular Velocity of Fixed Unit	rad/sec.
ω_v	- Angular Velocity of Variable Unit	rad/sec.
ω_e	- Angular Velocity of Engine	rad/sec.
ω_w	- Angular Velocity of Flywheel	rad/sec.
T_f	- Fixed Unit Torque	in-lb.
T_v	- Variable Unit Torque	in-lb.
T_o	- Transmission Output Torque	in-lb.
T_e	- Engine Output Torque	in-lb.
T_w	- Flywheel Output	in-lb.
T_l	- Vehicle Retarding Torque	in-lb.
J_o	- Equivalent Polar Moment of Inertia of Vehicle Refered to the Transmission Output	223.9 in-lb-sec^2
J_e	- Polar Moment of Inertia of Engine	3.0 in-lb-sec^2
J_w	- Polar Moment of Inertia of Flywheel	4.68 in-lb-sec^2
θ_t	- Engine Throttle Angle	degrees
X_v	- Variable Unit Control Stroke Position	$\pm$ 0.85 in. (max.)

k_z	- Energy Valve Spring Coef.	100 lb/in.
k_y	- Accel. Valve Spring Coef.	1000 lb/in.
k_x	- Control Piston Spring Coef.	50 lb/in.
k_o	- Porting Area Flow Coef.	100
A_c	- Area of Control Piston	0.4 in^2
A_b	- Area of Control Piston	0.4 in^2
A_v	- Area of Accelerator Valve	0.0491 in^2
P_b	- Control Piston Bias Pressure	psi
P_s	- System Supply Pressure	200 psi
P_c	- Control Pressure	psi
P_d	- Drain Pressure	psi
A_y	- Acceleration Valve Porting Area	in^2
A_z	- Energy Valve Porting Area	in^2
y	- Accelerator Pedal Position	2.0 in. (max.)
y'	- Accelerator Pedal Position Referenced to Accelerator Valve	0.1 in. (max.)
y"	- Accelerator Valve Spool Position	in.
Z	- Energy Valve Spool Position	in.
C_y	- Circumference of Accel. Valve Spool	1.57 in.
C_z	- Circumference of Energy Valve Spool	1.57 in.
C_t	- Throttle Control Linkage Ratio	80 deg./in.
F_{ply}	- Preload Force on Accel. Valve Spool	lb.
F_{plz}	- Preload Force on Energy Valve Spool	lb.
F_o	- Output Governor Flyweight Force @ 3294 rpm	9.75 lb.
F_w	- Flywheel Governor Flyweight Force @ 4000 rpm	10.0 lb.
W_t	- Throttle Control Piston Position	1.0 in. (max.)
A_t	- Area of Throttle Control Piston	0.5 $in.^2$

TABLE APP-M3

TORQUE REQUIRED TO MAINTAIN
CONSTANT ROAD SPEED

Vehicle Speed (mph)	Transm. Output Speed (rpm)	Transm. Output Torque (in-lb)
0	0	312
10	387.5	330
20	775.0	378
30	1162.5	454
40	1550.0	556
50	1937.5	686
60	2325.0	850
70	2712.5	1029
80	3100.0	1246
85	3293.7	1362

Vehicle Tractive Effort

$T_L = f\ (W_O)$

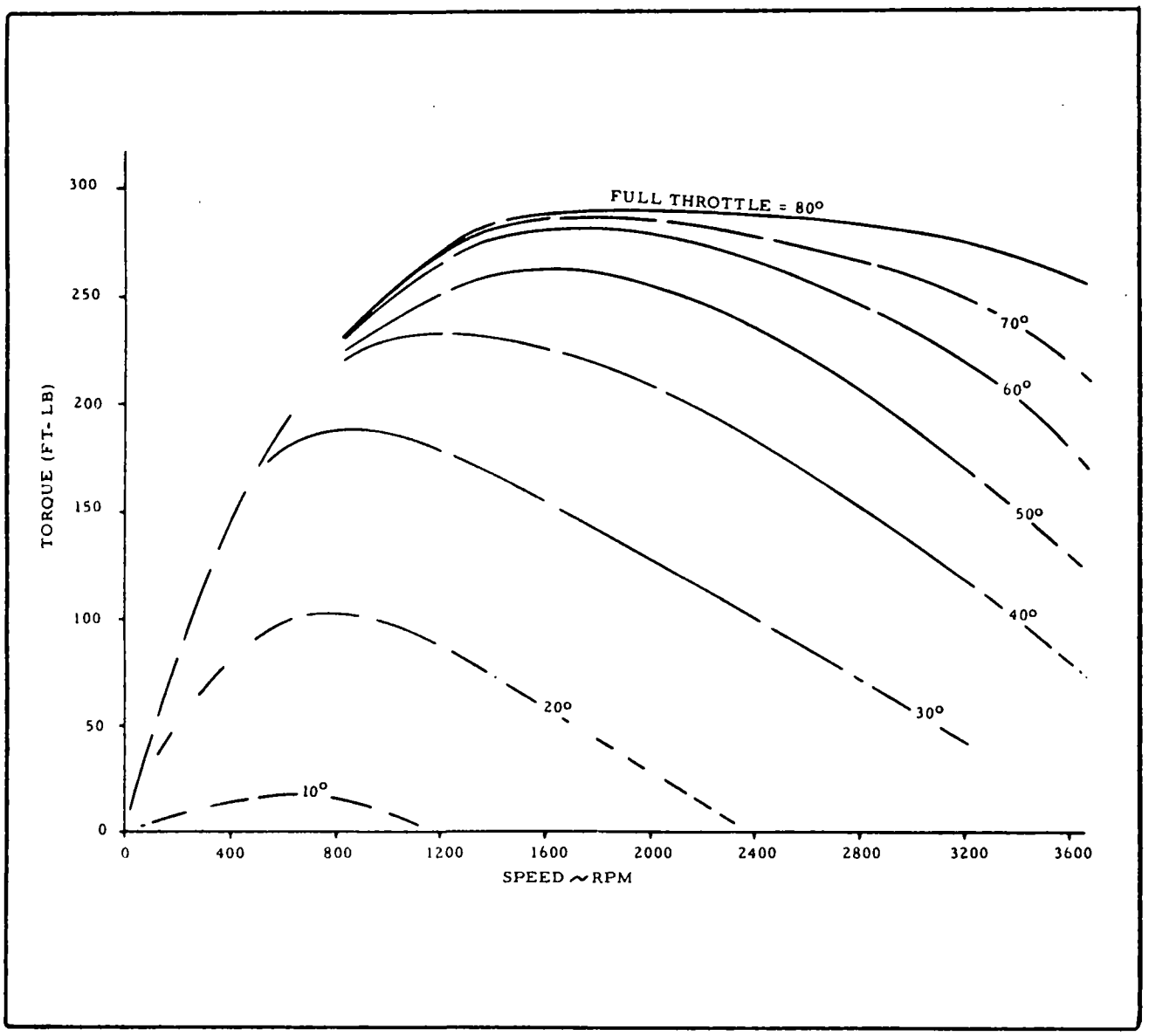

Figure APP-M3 Engine Torque vs. Speed

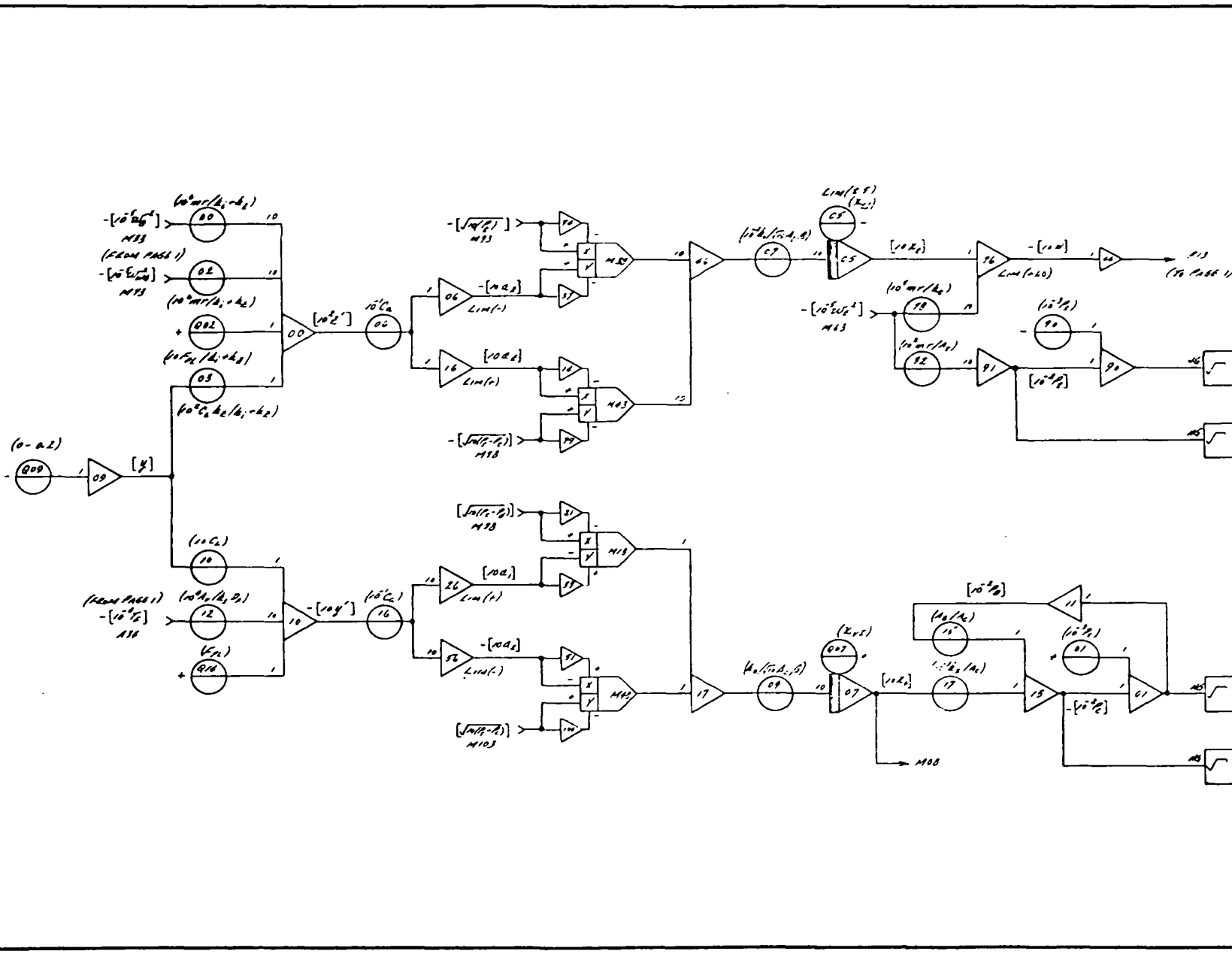

Figure APP-M4 Analog Computer Wiring Diagram

Figure APP-M5 Analog Computer Wiring Diagram

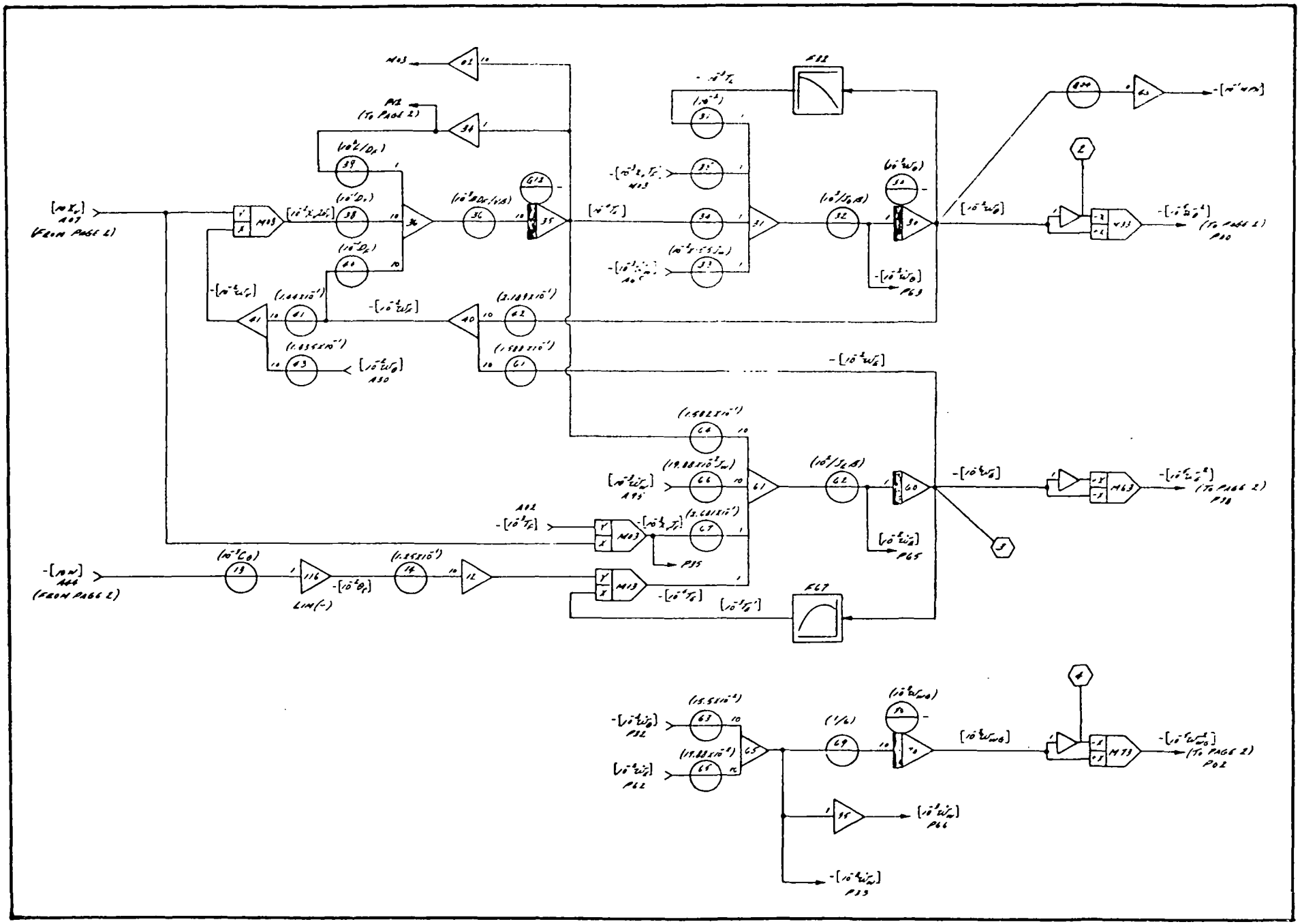

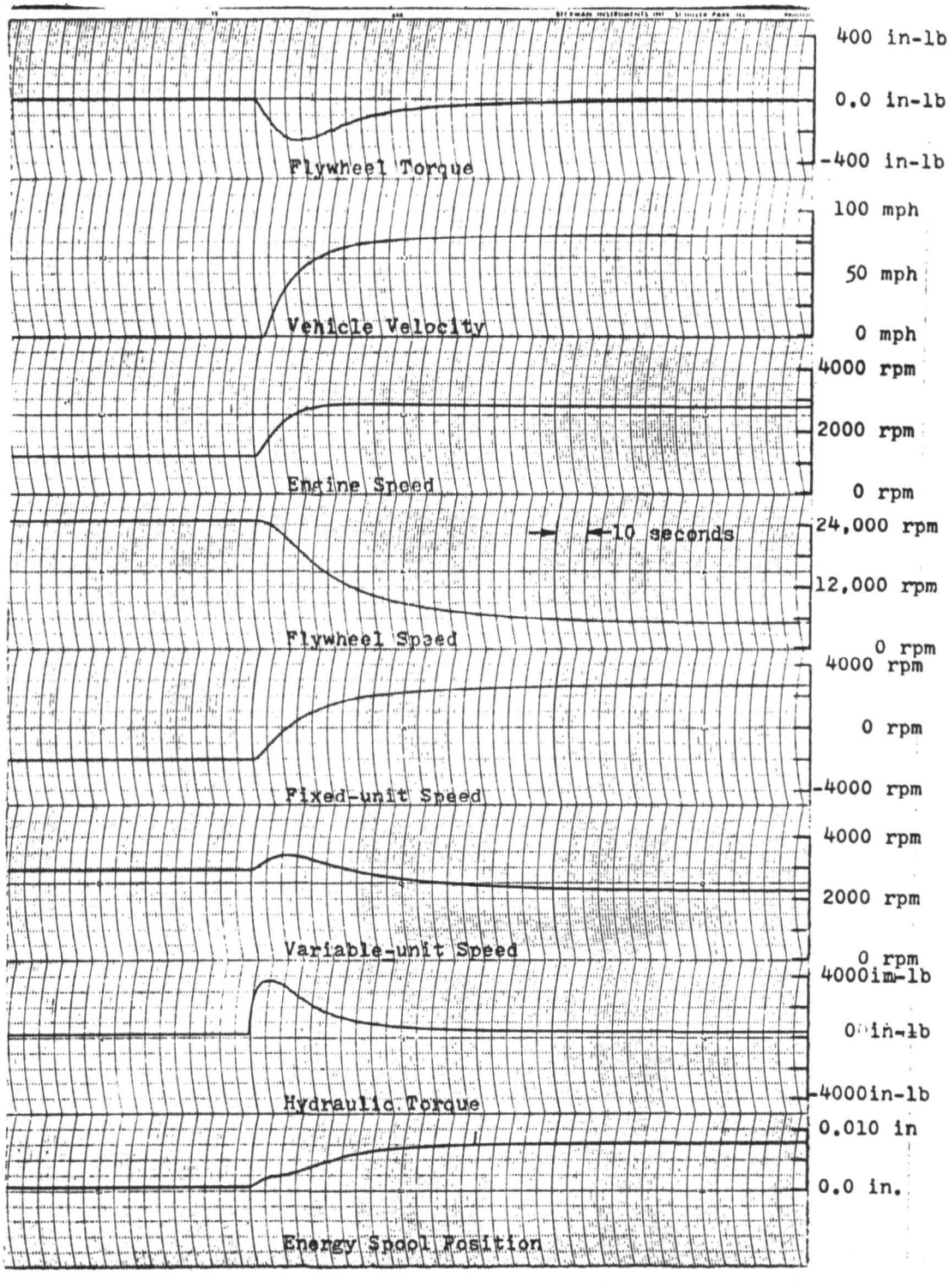

Figure APP-M6 Representative Analog Trace Vehicle Acceleration

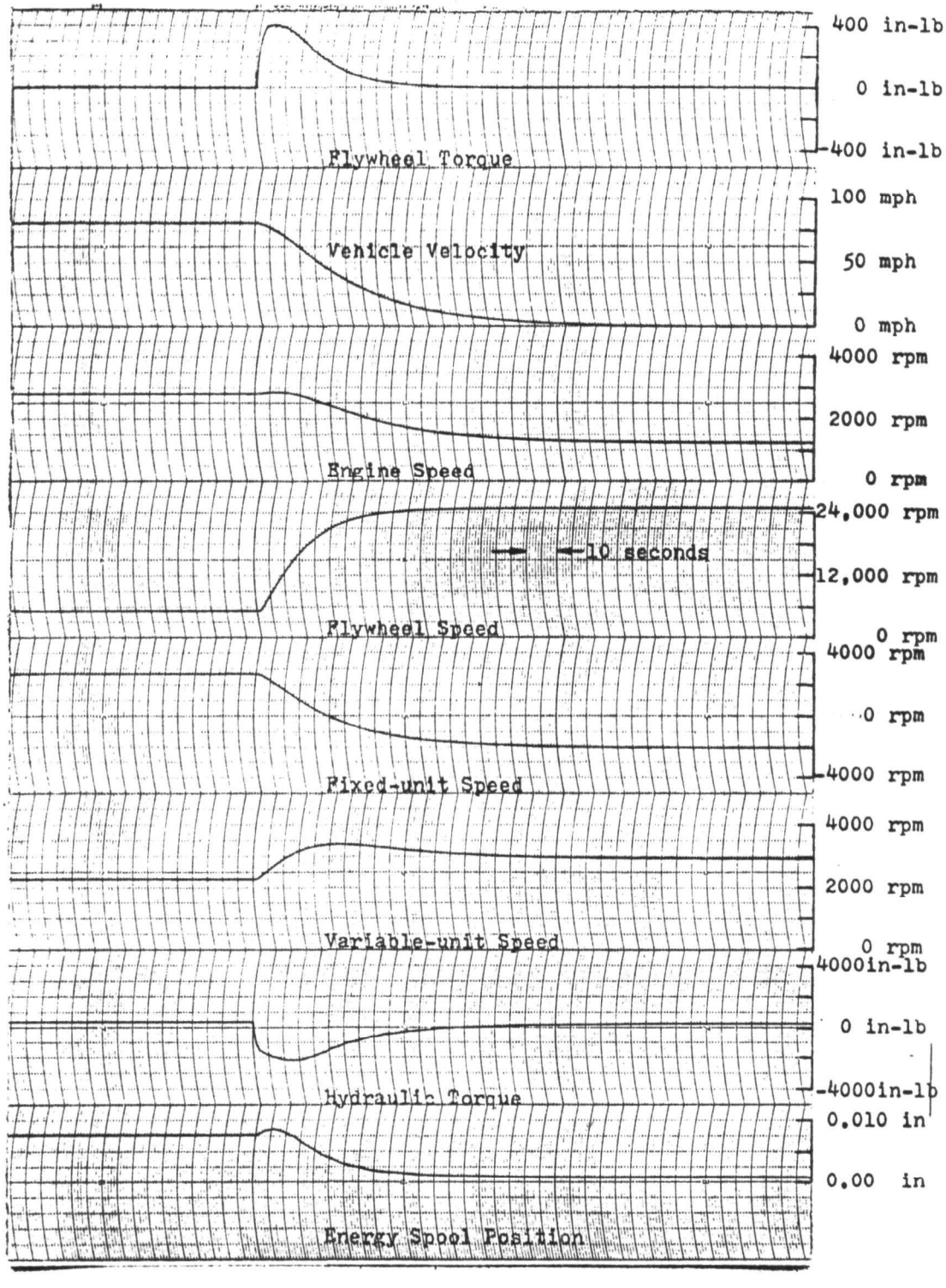

Figure APP-M7 Representative Analog Trace
Vehicle Deceleration

N. Weight Summary

APPENDIX N

WEIGHT SUMMARY

	ESTIMATED WEIGHT
PLANETARY GEAR SET	18.0
TRANSFER GEARS	19.6
SHAFTING & BEARINGS	30.5
CLUTCHES	19.5
HYDRAULIC UNITS (Excluding Shafts)	42.0
HOUSING	68.0
CONTROL SYSTEM & CHARGE PUMP	10.5
MISC. HARDWARE	15.0
TOTAL, BASELINE (8A)	223.1 Lb.

OPTIONAL INPUT:

Total Additional Weight (Approx.) Clutch, Gears, Housing, Etc.	15.2 Lb.
TOTAL, ALTERNATE (8C)	238.3 Lb.

O. Transmission Schematics Considered

APPENDIX O

TRANSMISSION SCHEMATIC EVALUATION

Many transmission schematics were derived and considered in the early part of this study by procedures discussed in Section II A. These procedures can be summarized as follows:

1) Elimination of undesirable schematics using the link function matrix.
2) Using existing and known hydromechanical schematics.
3) Trial and error coverage of possible combinations of hydraulic units and differential summers.
4) Logical Progression - refinement of a known schematic.
5) Combination of the features of two or more schematics.

The various schematics were tested in the preliminary schematic evaluation to see if they satisfied a set of "schematic ground rules" which were established. If any schematic failed to satisfy all of the ground rules, it was eliminated from further consideration.

The following is a tabulation of the "schematic ground rules" as stated previously in Section II A.

a) Speed relationships must be reasonable and functional.
b) Torque reactions must be in directions that will balance each other at all times, be reasonable in magnitude, and functional.

c) Power flow must be in the right direction at all times so that the power loops close or balance, be reasonable in magnitude, and functional.

d) Schematic must be capable of translation into reasonable hardware as far as planetary gear sets, shaft arrangement, and general ability to be packaged within the limitations of the vehicle installation.

e) "Special" performance conditions such as flywheel charge and reverse capability must be attainable without undue complication.

f) The transmission must be capable of being controlled within the general framework of a reasonable and established control system philosophy.

g) The transmission must be capable of operating throughout the entire range of operation with a reasonable degree of efficiency.

Schematics which failed to meet any of the ground rules and could not be modified to meet them were dropped from further consideration. Many more schematics were considered than are presented here. Only those that appeared to have some merit are presented. The schematics not discussed here had some obvious flaw, such as not meeting the speed criteria.

The schematics which were felt to initially have sufficient merit to warrant further study are shown on Figures APP-01, APP-02, and APP-03. These schematics have been grouped according to the reasons for their rejection.

The specific reason or reasons for schematic rejection is discussed below.

SCHEMATICS CONSIDERED AND REJECTED

The first prerequisite was that the speed variations of the various transmission elements had to be reasonable and functional. All the schematics presented here meet this basic prerequisite.

Schematics 1 and 2 fail ground rules (b) and (c). The torque reactions do not balance and the horsepower loops don't close properly. Torque is exerted on the flywheel during certain steady state operating conditions causing power to flow from the flywheel in violation of the constant energy restraint placed on the system. It appears very difficult to design a system using "sprag" (or overrunning) clutches as shown in schematic 2 since power tends to flow in opposite directions during acceleration and deceleration.

Schematics 3, 4, 5, and 6 were developed in an effort to provide a system with independent engine speed control so that the full advantage could be taken of operating on the engine minimum specific fuel consumption curve. In schematics 3 and 4, the torques and horsepowers don't balance.

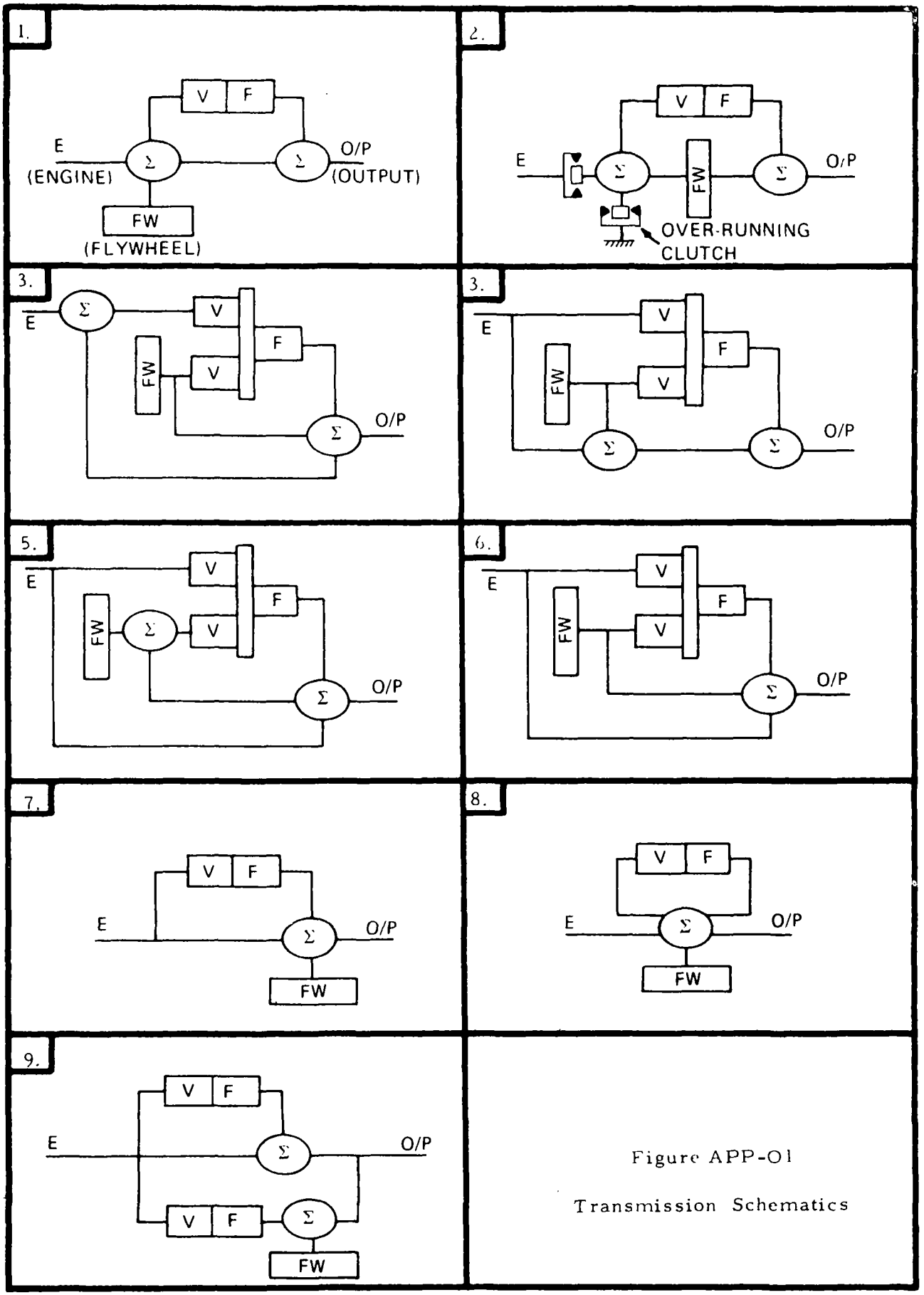

Figure APP-01

Transmission Schematics

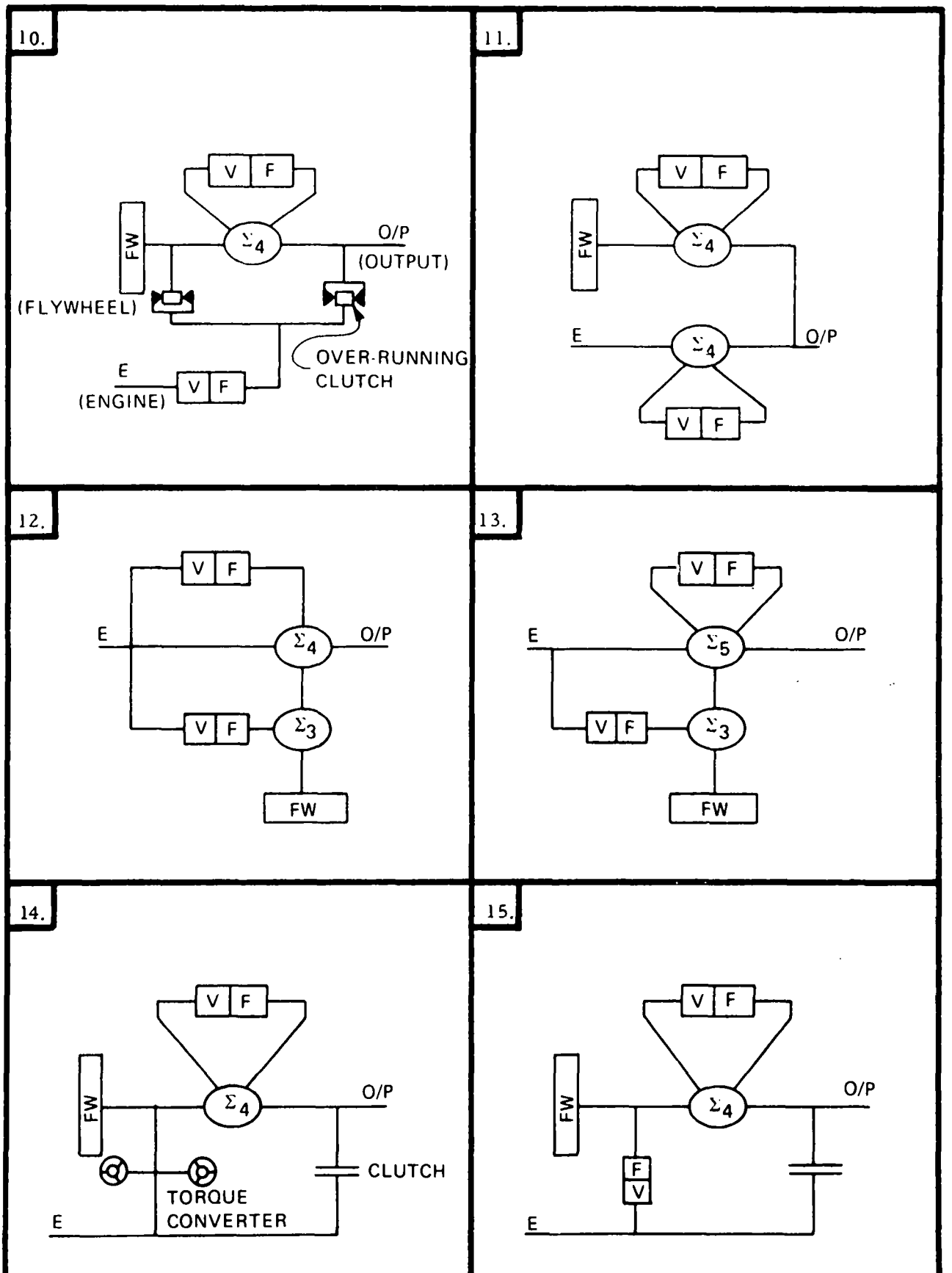

Figure APP-O2 Transmission Schematics

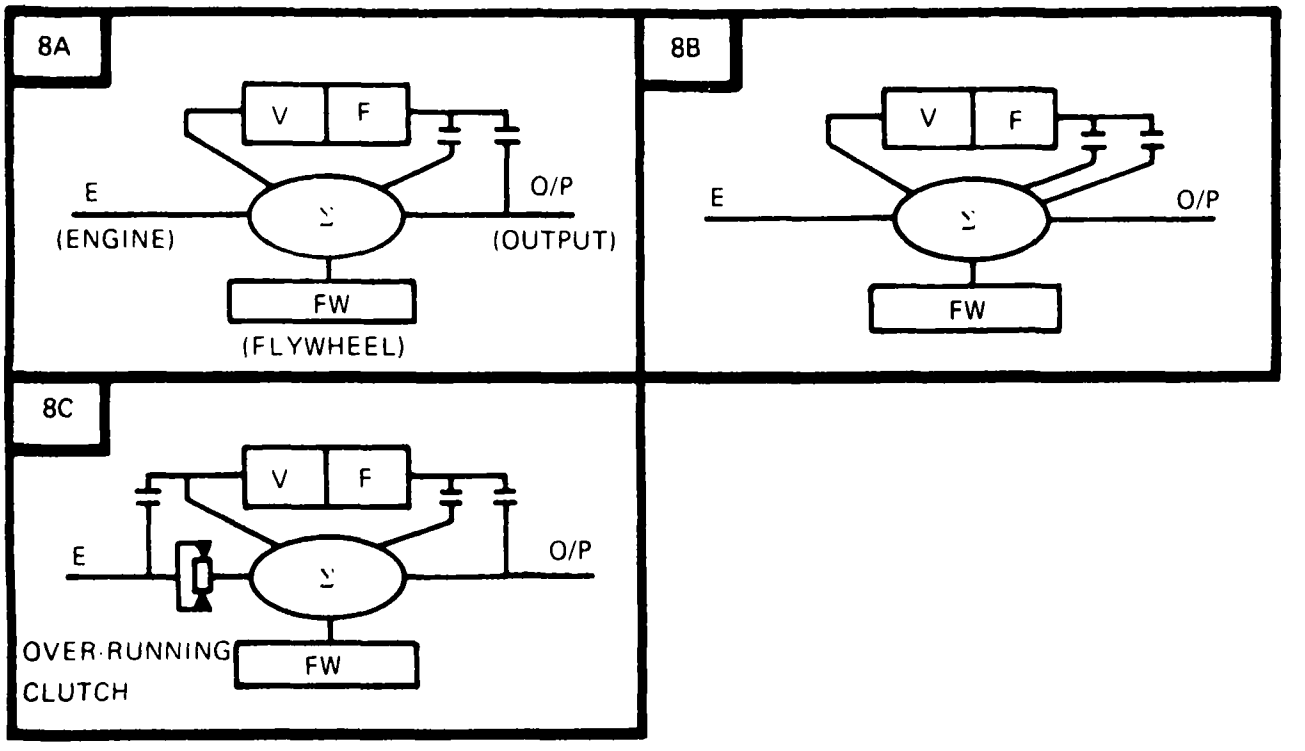

Figure APP-O3 Transmission Schematics

These schematics were eliminated from further consideration. Although schematics 5 and 6 seem to work in principle, torque and control problems would be encountered at small variable unit displacements. Controls in general would be complicated because two variable hydraulic units would have to be controlled in conjunction with each other. The port plate between the hydraulic units would be large and heavy because hydraulic forces aren't balanced as they are in a normal back-to-back hydraulic unit configuration.

Schematic 7 satisfies all the ground rules. Its only fault is that it doesn't satisfy them as well as version 8. It requires larger hydraulic units and is less efficient than version 8. Schematic 8 became the basis for the final transmission configuration as it is presented in this report.

Schematics 9, 10, 11, 12, 13, 14, and 15 satisfy all of the schematic ground rules with the possible exception of ground rule (d) (reasonable hardware), and ground (g) (reasonable efficiency). The following is a discussion of the rational associated with their rejection.

The hydraulic horsepower in schematic 9 tends to be very large due to recirculate in the power loops. The hydraulic units would have to be very large and the efficiency would be poor.

Schematic 10 is quite versatile and satisfies all the ground rules except that the efficiency at low power levels is quite poor.

Schematic 11, which is essentially two separate hydromechanical transmissions coupled at the output, has large parasitic losses and therefore poor efficiency because both sets of hydraulic units must be relatively large.

Schematics 12 and 13 are the result of an attempt to carry a greater share of the engine power mechanically rather than hydraulically. The second set of hydraulic units serves only a speed trim function. The efficiency is improved, but not enough to justify the associated complexity.

Schematics 14 and 15 resulted from an attempt to improve the fuel economy at both low and high vehicle speeds. Schematic 14, as well as several other torque converter versions, were rejected for several reasons. Flywheel spin-up presented a problem. It is impossible to back drive through a torque converter without creating a speed difference such that the output side of the converter goes slower than the input side. It is difficult to control the speed ratio, and a torque converter is a dissipative device which didn't seem desirable.

Schematic 15 seemed to hold some promise, but after considerable analysis, it became apparent that the parasitic loss from the second hydraulic unit tended to cancel any engine speed optimization gains.

FINAL CANDIDATES

Much of the schematic survey was dedicated to trying to find a schematic that would allow independent engine speed variation and the associated specific fuel consumption optimization. However, optimization gains seemed to be voided by excessive losses associated with additional or larger hydraulic units.

The most promising schematic candidate has proven to be version 8 and its variations. Without any modifications, version 8 was a main initial contender of this study. It was then realized that efficiency gains and hydraulic unit size reduction could be realized by going to a dual mode configuration which is similar to Sundstrand's dual mode truck transmission. Hence, version 8A was derived. Schematic 8B was derived from 8A and offers slight improvements in efficiency. However, 8B proved to be very difficult to translate into hardware. (A six element summer would have been required.)

Schematic 8C was derived in an attempt to operate the engine closer to its minimum specific fuel consumption curve by mechanical means.

ENGINE SPEED VARIATION

The following table (APP-01) indicates the manner in which engine speed varies with respect to vehicle and flywheel speeds for each of the schematics considered herein:

TABLE APP-01
ENGINE SPEED VARIATION

SCHEMATIC	ENGINE SPEED VARIATION
1	D
2	D
3	I
4	I
5	I
6	I
7	ID
8, 8A, 8B, 8C	ID
9	I
10	I
11	I
12	I
13	I
14	*D/D
15	**I/D

I = Independent
D= Dependent
ID = Inter-dependent

*Torque Converter Dependent (D) in First Mode
Mechanically Dependent (D) in Second Mode
**Independent First Mode, Dependent Second Mode

Sundstrand Aviation
division of Sundstrand Corporation

P. Sundstrand Dynamic Simulation and Performance Analysis Programs (ESTMN and ESTPF)

APPENDIX P

SUNDSTRAND DYNAMIC SIMULATION AND PERFORMANCE ANALYSIS PROGRAMS (ESTMN AND ESTPF)

The following is a discussion of Sundstrand's system dynamic simulation and performance analysis computer programs.

In order to evaluate the system's performance characteristics in response to various types of operating environments, it has been necessary to develop a set of mathematical representations for the individual components within the system and to combine these sub-totals into an interactive simulation of the complete system. There have been two approaches taken in developing this system simulation starting from the same basic set of component sub-models.

The first step in this analysis was to resolve the total system into a set of self-contained functional units and then to identify the mathematical relations representing the stimuli-response characteristics of those units. Then with knowledge of the input-output requirements of the individual blocks, the second step was to inter-relate them to form the aggregate simulation. This may be accomplished by treating the dynamic operation as a continuous process evolving from the system's response to environmental stimulations or as a discrete process imposing the environment and deriving the resulting system response. Both approaches start from a set of differential equations for the time response of the system's inertial components and differ only in the method of solution employed.

A continuous simulation duplicates as realistically as possible the actual dynamic operation of the system and is limited only by the detail included in defining the individual functional blocks. The simulation progresses in time as the real system would respond to the environment with the actual physical processes replaced with their mathematical analogs. This type of simulation is identical in concept to the analog computer except a numerical integration algorithm replaces the electronic integrators. The discrete simulation reverses the cause and effect relation from the continuous approach. It starts with the response required and computes the conditions necessary within the system to obtain that response. The results obtained by both methods are equally correct, but differ due to two factors. The continuous simulation allows the inclusion of a representation of the control system found on the actual system and reflects the ability of that control to cause the system to follow the environmental stimuli. Since the discrete simulation starts with the result desired and directly derives the internal conditions required, it does not reflect the effect of the controls. Lastly, the resolution of the discrete simulation may not be as accurate as the continuous simulation. This is a controllable difference and is incurred only if the time step size is too large. Since the main advantage of the discrete simulation is computation speed, this difference may be voluntarily accepted so that many experiments may be made to study system performance qualitatively, if not with high precision. If the effect of controls and greater precision are needed, the experiment may be repeated with the continuous simulation.

Both approaches begin with the system schematic (Figure APP-P1) and two differential equations for the inertia components in the system. These equations in simplified form are:

$$\text{Vehicle Acceleration} = \frac{\text{Tractive Force - Drag Force}}{\text{(Vehicle Total Inertia)}} \qquad (1)$$

$$\text{Flywheel Acceleration} = \frac{\text{(Torque Applied - Drag Torque)}}{\text{Flywheel Moment of Inertia}} \qquad (2)$$

To determine the forces and torques necessary to solve these equations, the system must be resolved into the functional relations generating its operation.

The speeds and torques applied to the summing gear-set establish all others in the system. Therefore, starting at the summer, speeds may be related by a nomagram (Figure APP-P2) which is based on the linear relation between the speeds. With knowledge of any two speeds in the system, all others are set. Logically these two are the speeds of the system inertial components - vehicle and flywheel - which may be calculated by integration of the differential equations above. The torques are established by a set of simultaneous linear equations (Figure APP-P3) based on conservation of torques and power within the summer. There are three controllable torques in the system which form the input to the torque matrix, the engine torque and the two reactions generated within the hydrostatic loop. By applying these torques and solving the torque matrix, all other torques are fixed. To complete the system representation, to the basic speed and torque calculation, several refinements must be added.

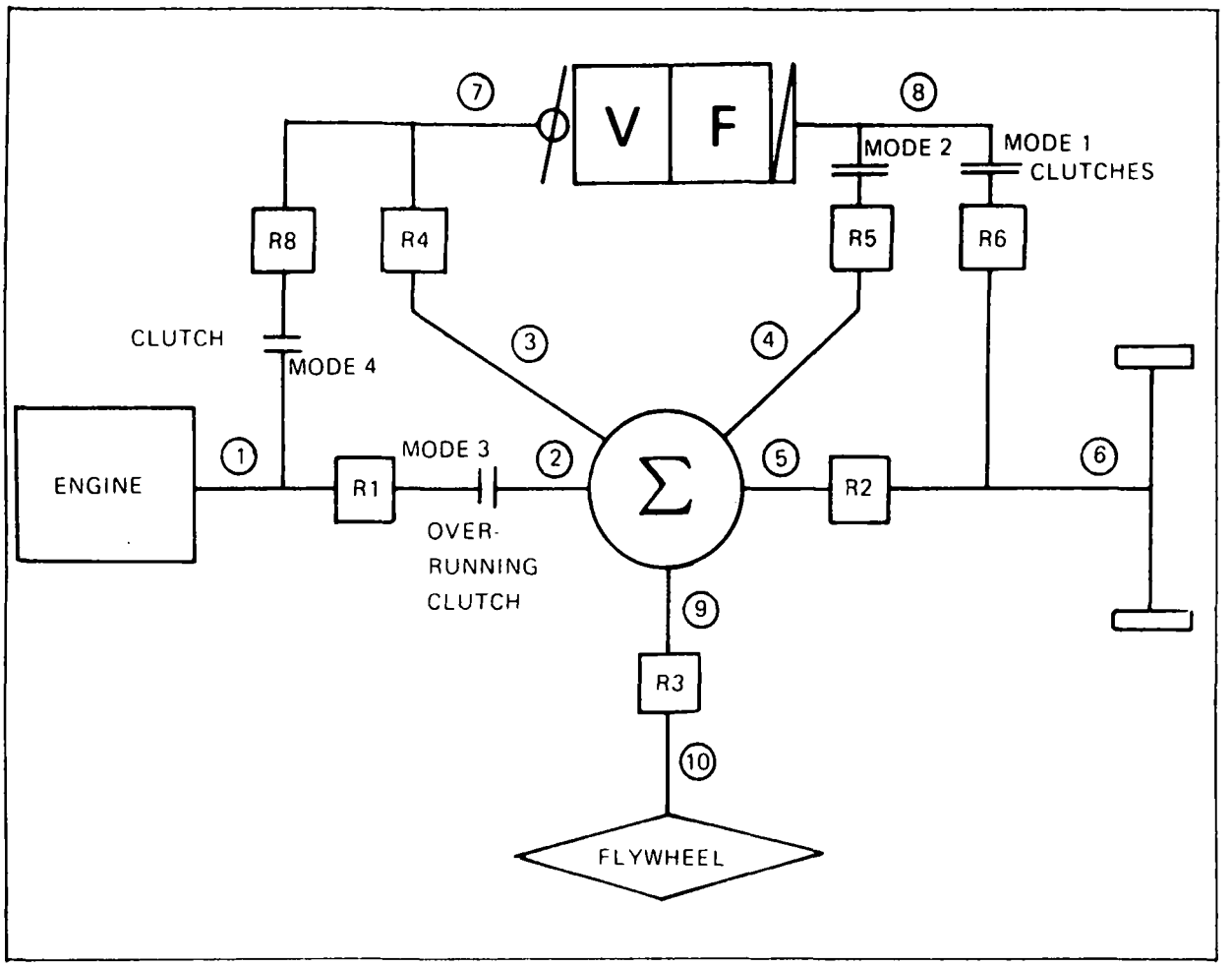

Figure APP-P1 System Schematic (Version 8C)

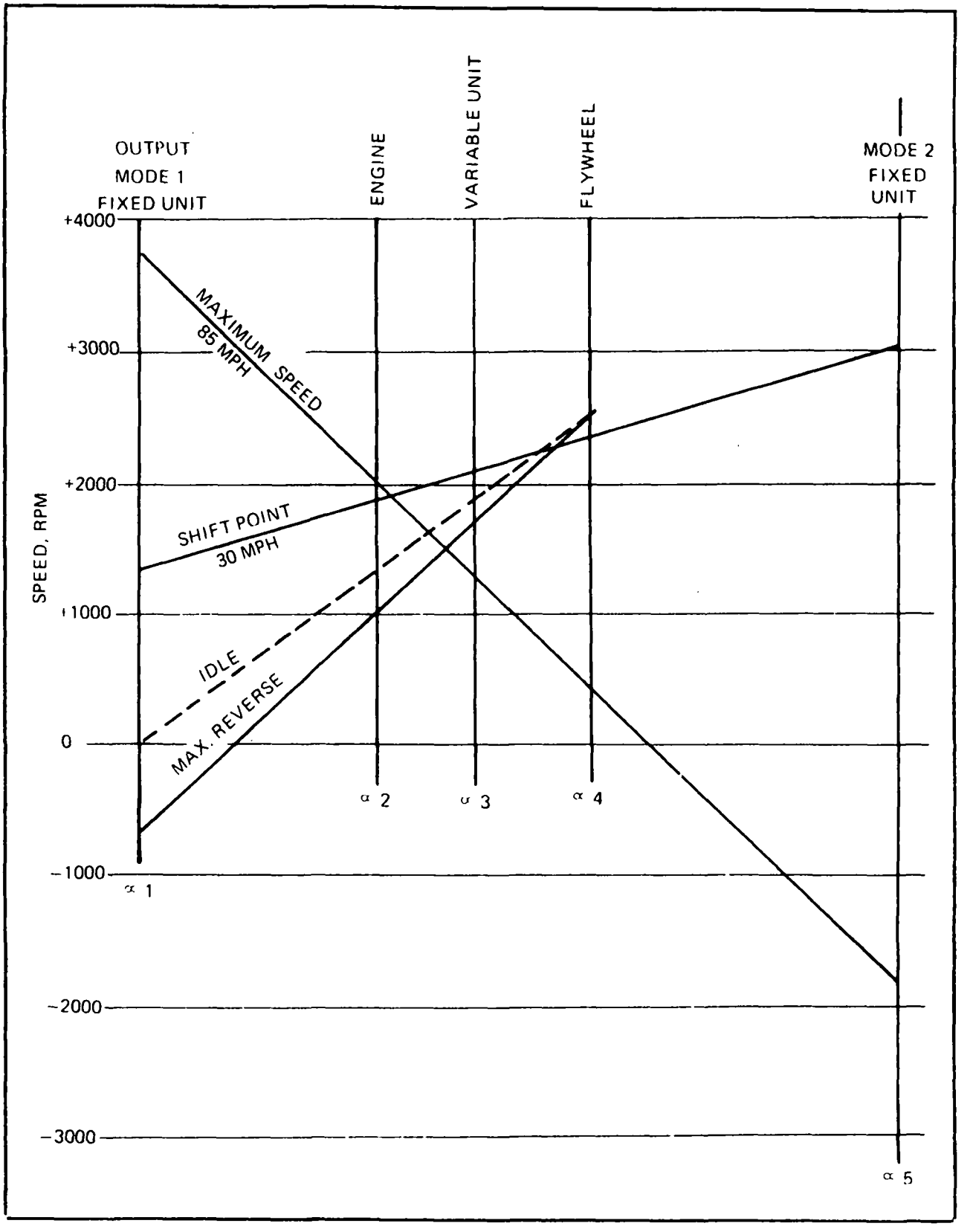

Figure APP-P2 Summer Speed Nomagram

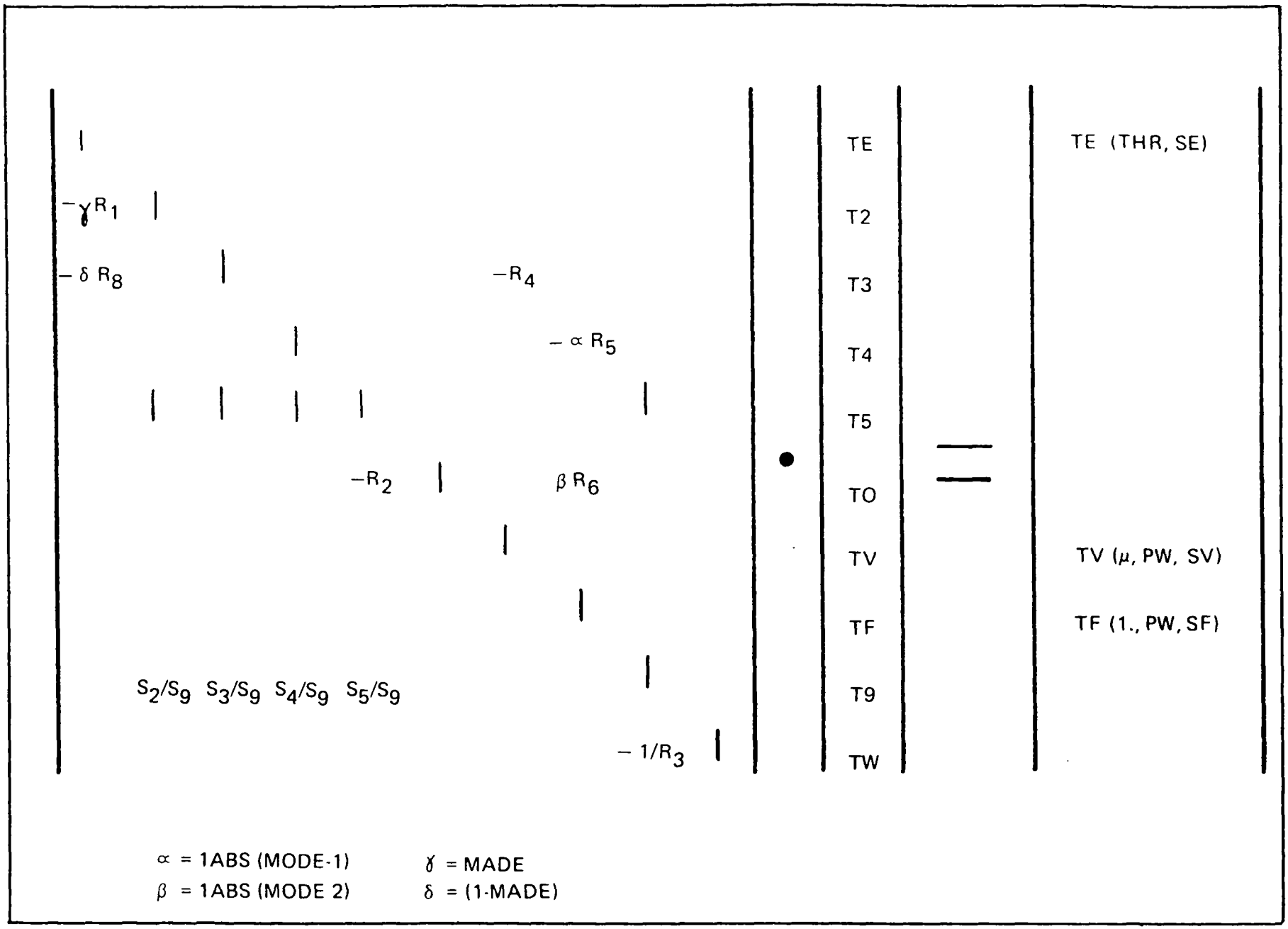

Figure APP-P3 System Torque Relations

Sundstrand Aviation
division of Sundstrand Corporation

These involve such things as engine speed - torque - throttle relations, engine speed - power - fuel consumption relations, hydrostatic losses, accessory losses, flywheel windage, control concepts and parameters, transmission mode switching, and driving cycle generation. Each of these areas was analyzed and reduced to either mathematical functional relations or data tables for numerical interpolation.

The remaining problem was to integrate all of the functional elements into an operational structure, so that the system response could be determined. This can be accomplished in either of two ways, continuous or discrete; and diagrams of how this was done are shown in Figures APP-P4 and APP-P5. The simulation was then programmed to run over a variety of duty cycles, for example the Federal Driving Cycle (DHEW) (Figure APP-P5). The results of one such run are shown in Figure APP-P6.

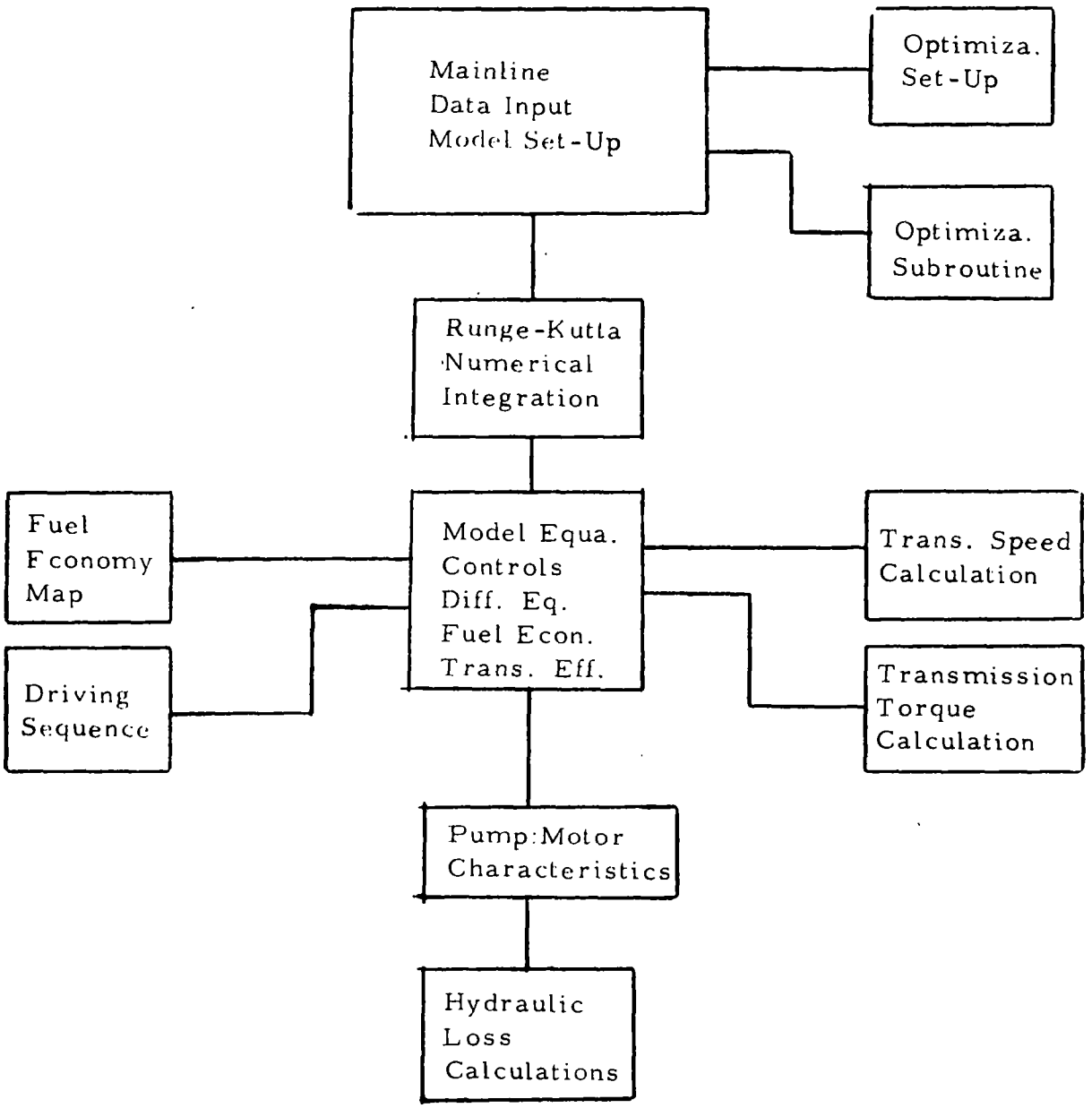

Figure APP-P4 Continuous Dynamic Simulation Program Structure

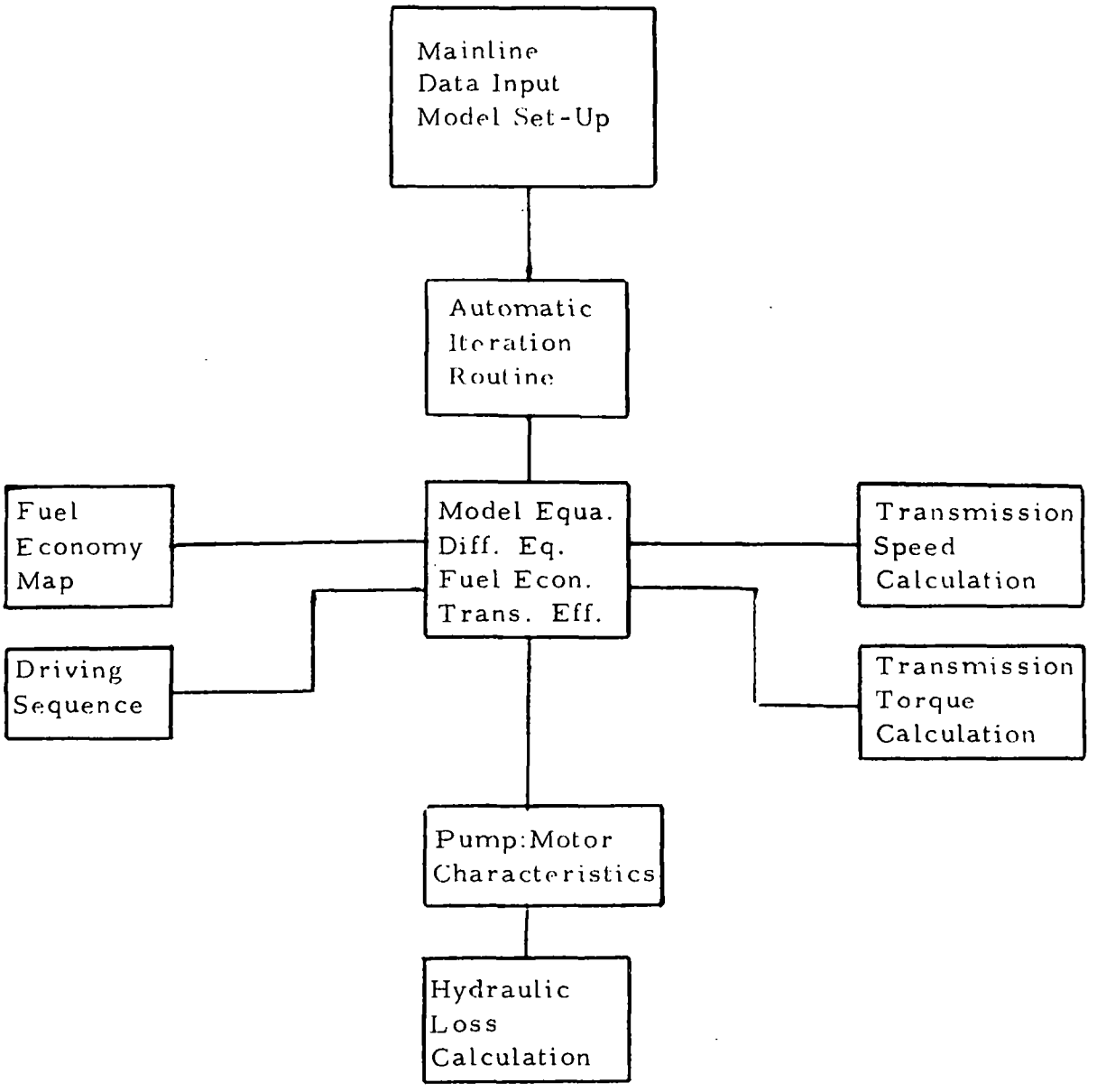

Figure APP-P5 Discrete Simulation Program Structure

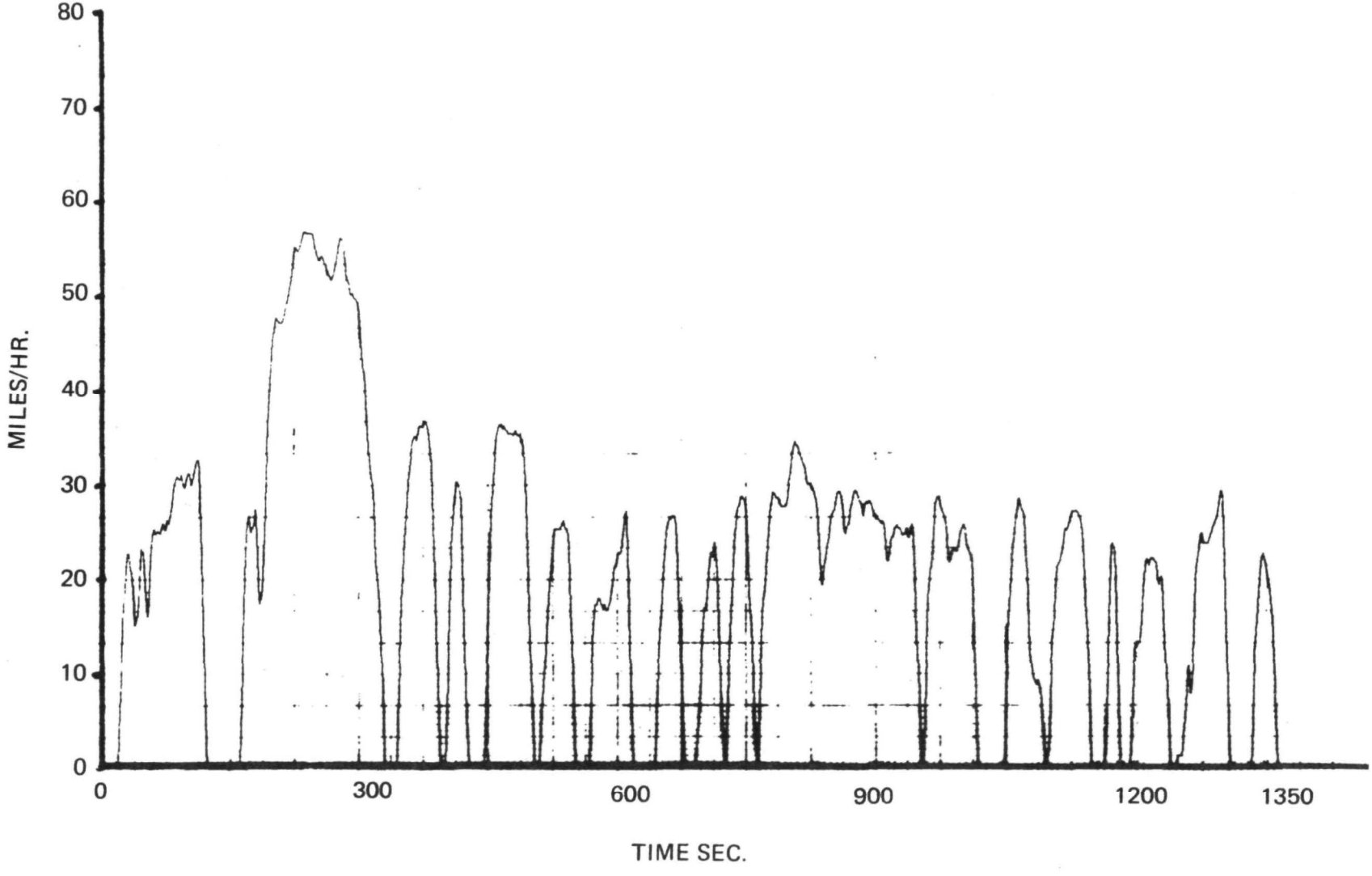

Figure APP-P6 Federal Driving Cycle

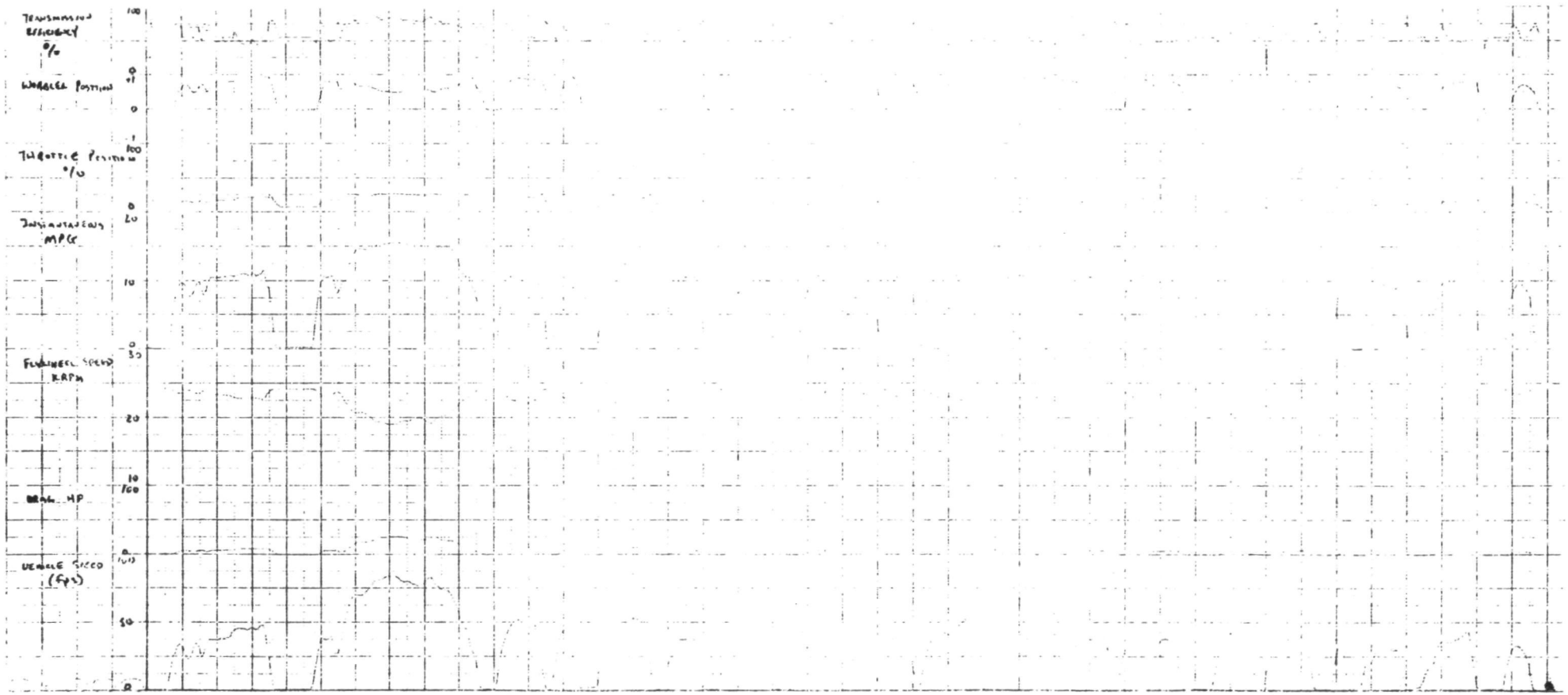

1380 SEC.

ENERGY STORING TRANSMISSION PERFORMANCE OVER COMPLETE FEDERAL DRIVING CYCLE

Figure APP-P7 Example of Dynamic Simulation Output

SYSTEM DYNAMIC SIMULATION PROGRAM

MAINPGM	Mainline Program for Continuous Dynamic Simulation
ESTDV	Differential Equation Generation and Interconnection of All Other Routines

```
0001          EXTERNAL ESTDV
0002          DIMENSION Y(30),DY(4,30),YO(30),IPAR(25),YINT(30)
0003          DIMENSION R(10),AL(5)
0004          COMMON B(40)
0005          EQUIVALENCE (IPAR(25),KTOT)
0006          EQUIVALENCE (B(  1),R(1)      ),(B( 11),AL(1)    ),(B( 16),DISP    )
0007          EQUIVALENCE (B( 25),VWGT      ),(B( 26),WJW      ),(B( 27),TDIA    )
0008          EQUIVALENCE (B( 28),FWGT      ),(B( 29),TYRE     ),(B( 30),PWL     )
0009          EQUIVALENCE (B( 34),GNA       ),(B( 35),GNB      ),(B( 36),ENDES   )
0010          EQUIVALENCE (B( 37),GNC       ),(B(38),GND       ),(B(39),GNE      )
0011          EQUIVALENCE (B( 40),GNF       )
0012          DATA IPAR/25*0/
0013          DATA G/32.174/
0014          DATA IR,IP,IW/1,2,3/
0015        1 CONTINUE
0016          DO 2 J=1,40
0017        2 B(J)=0
0018          DO 4 J=1,30
0019          Y(J)=0
0020          YO(J)=0
0021          YINT(J)=0
0022          DO 3 I=1,4
0023        3 DY(I,J)=0
0024        4 CONTINUE
0025          READ(IR,101) TSTRT,TMX,XINT,XPRT,XPUN,XDER
0026          IF(TMX)99,99,10
0027       10 READ(IR,102) (IPAR(J),J=1,24)
0028          KTOT=0
0029          DO 12 I=1,24
0030          IF(IPAR(I)) 12,12,11
0031       11 KTOT=KTOT+1
0032       12 CONTINUE
0033          NSTP=IFIX(1000.*(TMX-TSTRT)/XINT+.2)
0034          NDER=XDER
0035          NPRT=IFIX(XPRT/XINT+.2)
0036          IF(XPUN) 49,49,50
0037       49 NPUN=NSTP+NSTP
0038          GO TO 51
0039       50 NPUN=IFIX(XPUN/XINT+.2)
0040       51 CONTINUE
0041          READ(IR,101) VWGT,WJW,TDIA,FWGT,TYRE,DISP
0042          READ(IR,101) ENDES,GNA,GNB,GNC,GND,GNE,GNF,PWL
```

```
0043          READ(IR,101) (R(J),J=1,8)
0044          READ(IR,101) AL
0045          READ(IR,101) (YINT(J),J=1,NDER)
0046          WRITE(IW,109)
0047          WRITE(IW,110) TSTRT,TMX,XPRT,XPUN,XINT
0048          WRITE(IW,111) VWGT,WJW,TDIA,DISP,TYRE,FWGT
0049          FWGT=5280./FWGT
0050          TYRE=TYRE*G/((TDIA/2.)**2)
0051          WRITE(IW,113) ENDES,PWL
0052          WRITE(IW,114) GNA,GNB,GNC,GND,GNE,GNF
0053          WRITE(IW,115) (R(J),J=1,8)
0054          WRITE(IW,116) AL
0055          WRITE(IW,107)
0056          WRITE(IW,106) (J,YINT(J),J=1,NDER)
0057          WRITE(IW,108)
0058          WRITE(IW,117) (IPAR(K),K=1,KTOT)
0059          WRITE(IW,109)
0060       55 CONTINUE
0061          DO 56 J=1,NDER
0062       56 Y(J)=YINT(J)
0063          TM=TSTRT
0064          CALL VAPRK(TM,Y,NDER,TMX,NSTP,NPUN,NPRT,ESTDV,IW,IP,YU,DY,IPAR)
0065       80 GO TO 1
0066       99 CALL EXIT
0067      101 FORMAT(8F10.5)
0068      102 FORMAT(40I2)
0069      106 FORMAT(4(I3,F15.5))
0070      107 FORMAT(//'  INTEGRATOR INITIAL CONDITIONS'/)
0071      108 FORMAT(//'  INTEGRATOR OUTPUT VARIABLES'/
             *          '  1    VEHICLE SPEED       FT/SEC'/
             *          '  2    FLYWHEEL SPEED      RPM'/
             *          '  3    DISTANCE MOVED      FT'/
             *          '  4    FUEL USED           POUNDS')
0072      109 FORMAT('1   ENERGY STORING TRANSMISSION DYNAMIC MODEL'//)
0073      110 FORMAT(
             1' TIME START    =',F9.0,' SEC        TIME FINISH    =',F9.0,' SEC  '/
             2' PRINT INT VAL=',F9.0,' MS          PUNCH INT VAL =',F9.0,' MS   '/
             3' INT INTERVAL =',F9.0,' MS')
0074      111 FORMAT(
             1' VEHICLE WGT   =',F9.0,' LBS        WHEEL INERTIA =',F9.4,' LFS2 '/
             2' TIRE DIA      =',F9.4,' FT         LOG DISP      =',F9.2,' IN3/R '/
             3' TIRE INERTIA =',F9.3,' F*L*S2      FUEL WEIGHT    =',F9.2,' LB/GL')
```


Sundstrand Aviation
division of Sundstrand Corporation

```
0075        113 FORMAT(
                1' ENERGY LEVEL =',E10.3,' FT*LBS   WKG PRES LIM  =',F9.0,' PSI  ')
0076        114 FORMAT(
                1' WOH GAIN     =',E10.3,'          THR GAIN PROP =',E10.3,'      '/
                2' THR GAIN INT =',E10.3,'          GAIN D        =',E10.3,'      '/
                3' GAIN E       =',E10.3,'          GAIN F        =',E10.3,'      ')
0077        115 FORMAT(//'  GEAR RATIOS'//
                *          ' 1',F12.4,'   E'/,'  2',F12.4,'   O'/
                *          ' 3',F12.4,'   W'/,'  4',F12.4,'   V'/
                *          ' 5',F12.4,'  F2'/,'  6',F12.4,'  F1'/
                *          ' 7',F12.4,'   SHIFT POINT (RPM)'/
                *          ' 8',F12.4,'   ENGINE SHIFT RATIO')
0078        116 FORMAT(//'  SUMMER RATIOS'//
                *          ' 1',F12.4,'   O'/,'  2',F12.4,'   E'/
                *          ' 3',F12.4,'   V'/,'  4',F12.4,'   W'/
                *          ' 5',F12.4,'   F')
0079        117 FORMAT(/' PUNCH VARIABLES   ', 8I3,/)
0080        120 FORMAT(' ***',E12.4,6(I3,E12.4))
0081            END
```

```
0001          SUBROUTINE ESTDV(T,Y,YD,DY,L,IW)
0002          DIMENSION Y(30),DY(6,30),YD(30),TQ(10),SP(10)
0003          DIMENSION TORQ(9),SPENG(9),R(10),AL(5),POW(10),      MODSW(2)
0004          DIMENSION SPAC(8),TAC(8),FSPD(5),FLOS(5)
0005          DIMENSION W(30)
0006          COMMON B(40)
0007          EQUIVALENCE (B( 1),R(1)      ),(B( 11),AL(1)    ),(B( 16),DISP    )
0008          EQUIVALENCE (B( 25),VWGT     ),(B( 26),WJW      ),(B( 27),TDIA    )
0009          EQUIVALENCE (B( 28),FWGT     ),(B( 29),TYRE     ),(B( 30),PWL     )
0010          EQUIVALENCE (B( 34),GNA      ),(B( 35),GNB      ),(B( 36),ENDES   )
0011          EQUIVALENCE (B( 37),GNC      ),(B(38),GND       ),(B(39),GNE      )
0012          EQUIVALENCE (B( 40),GNF      )
0013          EQUIVALENCE (W( 10),XMPGI    ),(W(11),TIME      ),(W(12),THROT    )
0014          EQUIVALENCE (W( 13),XMU      ),(W(14),PW        ),(W(15),EFF      )
        C
        C     ENGINE 100 O/O THROTTLE  SPEED - TORQUE RELATION
0015          DATA SPENG/800.,1200.,1600.,2000.,2500.,3000.,3500.,4000.,4500./
0016          DATA TORQ/236., 268., 279., 291., 282., 271., 255., 230., 198./
        C
        C     ACCESSORY TORQUE - ENGINE SPEED RELATION
0017          DATASPAC/0.0,500.,800.,1000.,1500.,2000.,2500.,3000./
0018          DATATAC/6.1,10.5,13.6,13.6,12.4,11.9,11.7,12.0/
        C
        C     FLYWHEEL LOSS HORSEPOWER VS. SPEED (KRPM)
0019          DATA FSPD/0.0,8.,12.,18.,24./
0020          DATA FLOS/0.0,.169,.44,1.26,2.746/
        C
0021          DATA PI,G,DEN,CON/3.14159265,32.174,.0728,.1903996E-3/
0022          DATAMADE/0/,THROT/0.0/
        C     MODSW(MODE) IS OUTPUT SHIFT SWITCH FUNCTION
0023          DATA MODSW/1,-1/
0024        1 CONTINUE
0025          DATASPOLD,TOLD/0.0,0.0/
0026          TIME=T
0027          DO 5 J=1,10
0028        5 TQ(J)=0
0029          SO=Y(1)/(   PI*TDIA)*60.
0030          SW=Y(2)*1000.
0031          DIST=Y(3)
        C     MADE IS ENGINE SHIFT SWITCH FUNCTION
0032          MADE=IFIX(Y(1)/73.3)+IFIX((MADE+1)*THROT/.95)
0033          ADE=MADE
```


Sundstrand Aviation
division of Sundstrand Corporation

```
0034          CALL CLIP(0.0,ADE,1.)
0035          MADE=ADE
0036          CALL ESTSP(SO,SW,SP,R,AL,MODE,MADE)
0037          CALL ESTDC(T,SPDES,GRAD)
0038          IF(L-1) 6,6,7
0039        6 ACCEL =(SPDES-SPOLD)/(T-TOLD)
0040          SPOLD=SPDES
0041          TOLD=T
0042        7 CONTINUE
        C
        C     GAIN C
        C
0043          GRAD=GNC
0044          SPDES=SPDES*1.46667
0045          SPDES=SPDES+.2
0046          DFRR=(VWGT/65.)*(1.+(.12E-4*Y(1)+.14E-2)*Y(1))
0047          DFRD=12.*DEN*Y(1)*Y(1)/(2.*G)
0048          DFGD=VWGT*SIN(GRAD*PI/2.)
0049          DRAG=DFRR+DFRD+DFGD
0050          ENVEH=(VWGT/G)*Y(1)*Y(1)/2.
0051          ENWHL=WJW*SW*SW*PI*PI/1800.
0052          ENRGY=ENVEH+ENWHL
        C
        C     GAIN A
        C
0053          WPR =GNA*MODSW(MODE)*(SPDES-Y(1))
0054          CALL CLIP(-PWL,WPR,PWL)
        C
        C     GAIN E
        C
0055          DY(L,5)=GNE*(WPR-Y(5))
0056          PW=Y(5)
0057          DHP=DRAG*Y(1)/550.
0058          TE=DHP/SP(1)/CON
0059          CALL INTPL(9,3,SPENG,TORQ,SP(1),TENG,INIT,IEND)
0060          CALL INTPL(8,2,SPAC,TAC,SP(1),TACC,INIT,IEND)
0061          THR=(TE+TACC)/TENG
        C
        C     GAIN B
        C     GAIN D
        C
0062          THROT=THR+GNB*(ENDES-ENRGY)+GND*ACCEL
```

```
0063          CALL CLIP(0.0,THROT,1.)
0064          TENG=TENG*THROT
0065          TQ(1)=TENG-TACC
0066          CALL ESTLG(XMU,PW,  SP(7),SP(8),TQ(7),TQ(8),DISP,CA,CB,CC)
0067          CALL ESTTR(SP,TQ,R,MODE,MADE,IW)
0068          TRAC=-TQ(6)/(TDIA/2.)
0069          DY(L,1)=(TRAC-DRAG)/((VWGT+TYRE)/G)
0070          CALL INTPL(5,2,FSPD,FLOS,Y(2),TWLOS,INIT,IEND)
0071          TWLOS=TWLOS/SW/CON
0072          DY(L,2)=(-TQ(10)-TWLOS)/WJW*(30./PI)/1000.
0073          DY(L,3)=Y(1)
0074          CALL ECON(SP(1),TENG,SFC)
0075          DY(L,4) = SP(1)*TENG *CON*SFC/3600.
0076          IF(Y(30)) 99,99,50
0077       50 EFRAC=CNVEH/ENRGY
0078          DO 25 J=1,10
0079       25 POW(J)=SP(J)*TQ(J)*CON
0080          XMPG=Y(3)/Y(4)/FWGT
0081          IF(THROT) 26,27,26
0082       26 XMPGI=DY(L,3)/DY(L,4)/FWGT
0083       27 PWH=POW(10)
0084          POU=POW(6)
0085          QWH=PWH
0086          QOU=POU
0087          CALL CLIP(0.0,PWH,1000.)
0088          CALL CLIP(0.0,POU,1000.)
0089          CALL CLIP(-1000.,QWH,0.0)
0090          CALL CLIP(-1000.,QOU,0.0)
0091          EFF=ABS(QOU+QWH)/(POW(1)+PWH+POU)
0092          WRITE(IW,110) SO,SW,Y(1),SPDES,XMU,WPR,THROT,SFC,TENG,TACC
0093          WRITE(IW,111) TRAC,DRAG,PW,TWLOS,ENRGY,EFRAC,XMPG,DHP,XMPGI,EFF
0094          WRITE(IW,101) (J,SP(J),TQ(J),POW(J),J=1,10)
0095          DO 90 LL=10,15
0096       90 Y(LL)=W(LL)
0097       99 RETURN
0098      101 FORMAT(2(I5,3F11.2))
0099      110 FORMAT(/
              1' OUTPUT        =',F9.3,' RPM        FLYWHEEL       =',F9.0,' RPM  '/
              2' OUTPUT        =',F9.2,' FPS        TARGET SPEED   =',F9.2,' FPS  '/
              3' LOG SPD RATIO=',F9.5,'             COMMAND PW     =',F9.1,' PSI  '/
              4' THROTTLE      =',F9.5,' 0/0        SFC            =',F9.5,' L/HH '/
              5' ENGINE TORQUE=',F9.2,' FTLB        ACCESSORY TORQ=',F9.2,' FTLB ')
```


Sundstrand Aviation
division of Sundstrand Corporation

```
0100          111 FORMAT(
                 1' TRACTIVE F    =',F9.2,' LB        DRAG FORCE     =',F9.2,' LB    '/
                 2' LOG PRES      =',F9.2,' PSI       FLYWHEEL DRAG =',F9.2,' FTLB '/
                 3' TOTAL ENERGY =',F9.0,' FTLB       OUT FRACTION   =',F9.5,' O/O   '/
                 4' FUEL CONS  C =',F9.3,' MPG        DRAG HP        =',F9.2,' HP   '/
                 5' FUEL CONS  I =',F9.3,' MPG        EFFICIENCY     =',F9.2,' O/O '/)
0101              END
```

MAINPGM Mainline Program for Discrete Performance Analysis

```
0001          DIMENSION TORQ(9),SPENG(9),R(10),AL(5),        TQ(10),SP(10)
0002          DIMENSION SPAC(8),TAC(8),FSPD(5),FLOS(5)
0003          COMMON B(40)
0004          DATA SPENG/800.,1200.,1600.,2000.,2500.,3000.,3500.,4000.,4500./
0005          DATA TORQ/236., 268., 279., 291., 282., 271., 255., 230., 198./
0006          DATA FSPD/0.0,8.,12.,18.,24./
0007          DATA FLOS/0.0,.169,.44,1.26,2.746/
0008          DATA PI,G,DEN,CON/3.14159265,32.174,.0728,.1903996E-3/
0009          DATAMADE/0/,THROT/0.0/
0010          DATA IR,IP,IW/1,2,3/
0011          DATAASTK/'*****'/
0012          DATANPAGE/35/
0013          IDUM=IP*IR*IW
0014          MPAGE=NPAGE
0015        1 CONTINUE
0016          READ(IR,101) TSTRT,TMX,XINT
0017          IF(TMX)99,99,2
0018        2 NSTP=IFIX(       (TMX-TSTRT)/XINT+.2)
0019          READ(IR,101) VWGT,WJW,TDIA,FWGT,TYRE,DISP,ENDES
0020          READ(IR,101) (R(J),J=1,8)
0021          READ(IR,101) AL
0022          READ(IR,101) SPAC
0023          READ(IR,101) TAC
0024          READ(IR,101) GRADE,B(40),VERS
0025          WRITE(IW,109)
0026          WRITE(IW,110) TSTRT,TMX,XINT
0027          WRITE(IW,111) VWGT,WJW,TDIA,DISP,TYRE,FWGT,ENDES
0028          WRITE(IW,112) GRADE,B(40),VERS
0029          FWGT=5280./FWGT
0030          TYRE=TYRE*G/((TDIA/2.)**2)
0031          WRITE(IW,115) (R(J),J=1,8)
0032          WRITE(IW,116) AL
0033          XMTOT=0
0034          PW=2280
0035          NP=0
0036          DO 79 NS=1,NSTP
0037          T=TSTRT+NS*XINT
0038          CALL ESTDC(T,SPDM ,GRAD)
0039          CALL ESTDC(T-.2,SPM,GRAD)
0040          CALL ESTDC(T+.2,SPP,GRAD)
0041          ACCEL=1.46667*(SPP-SPM)/.4
0042          CALL CLIP(-6.,ACCEL,6.)
```

```
0043          GRAD=GRADE
0044          SPDES=SPDM *1.46667
0045          SPDES=SPDES+.2
0046          SO=SPDES/(  PI*TDIA)*60.
0047          ENVEH=((VWGT+TYRC)/G)*SPDES*SPDES/2.
0048          SW=SQRT((1800./WJW)*(ENDES-ENVEH))/PI
0049          ENWHL=WJW*SW*SW*PI*PI/1800.
0050          ENRGY=ENVEH+ENWHL
0051          MADE=IFIX(SPDES/73.3)+IFIX((MADE+1)*THROT/.95)
0052          ADE=MADE+VERS
0053          CALL CLIP(0.0,ADE,1.)
0054          MADE=ADE
0055          CALL ESTSP(SO,SW,SP,R,AL,MODE,MADE)
0056          DFRR=(VWGT/65.)*(1.+(.12E-4*SPDES+.14E-2)*SPDES)
0057          DFRD=12.*DEN*SPDES*SPDES/(2.*G)
0058          DFGD=VWGT*SIN(GRAD*PI/2.)
0059          DRAG=DFRR+DFRD+DFGD
0060          DHP=DRAG*SPDES/550.
0061          TGOAL=((VWGT+TYRC)/G)*ACCEL+DRAG
0062          CALL INTPL(9,3,SPENG,TORQ,SP(1),TENG,INIT,IEND)
0063          CALL INTPL(8,2,SPAC,TAC,SP(1),TACC,INIT,IEND)
0064          CALL INTPL(5,2,FSPD,FLOS,SW/1000.,TWLOS,INIT,IEND)
0065          ITER=0
0066          PWLL=-4500
0067          PWUL=4500
0068       10 CONTINUE
0069          HPLS=0
0070          DO 13 L=1,3
0071          DO 5 K=1,10
0072        5 TQ(K)=0
0073          TQ(1)=(DHP+HPLS+TWLOS)/SP(1)/CON
0074          THROT=(TQ(1)+TACC)/TENG
0075          CALL CLIP(0.0,THROT,1.)
0076          TQ(1)=TENG*THROT-TACC
0077          CALL ESTLG(XMU,PW,SP(7),SP(8),TQ(7),TQ(8),DISP)
0078          CALL ESTTR(SP,TQ,R,MODE,MADE,IW)
0079          PLV=SP(7)*TQ(7)*CON
0080          PLF=SP(8)*TQ(8)*CON
0081          HPLS=ABS(PLV+PLF)
0082       13 CONTINUE
0083          TRAC=-TQ(6)/(TDIA/2.)
0084          IF (ABS((TRAC-TGOAL)/TGOAL)-1.E-3) 20,20,15
```


Sundstrand Aviation
division of Sundstrand Corporation

```
0085          19 CALL CNVRG(PW,PWLL,PWUL,   TRAC,TGOAL,ITER,XOLD,DXO,IW)
0086             IF(ITER-25) 10,16,16
0087          16 CONTINUE
0088             ACLIM=(TRAC-DRAG)*G/(VWGT+TYRE)
0089             WRITE(IW,108) TGOAL,TRAC,ACLIM
0090             MPAGE=MPAGE-1
0091          20 CONTINUE
0092             PE=SP(1)*TQ(1)*CON
0093             PWH=SP(10)*TQ(10)*CON
0094             POU=SP(6)*TQ(6)*CON
0095             QWH=PWH
0096             QOU=POU
0097             CALL CLIP(0.0,PWH,1000.)
0098             CALL CLIP(0.0,POU,1000.)
0099             CALL CLIP(-1000.,QWH,0.0)
0100             CALL CLIP(-1000.,QOU,0.0)
0101             EFF=  ABS(QOU+QWH)/(PE+PWH+POU)
0102             TE=TQ(1)+TACC
0103             PE=TE*SP(1)*CON
0104             CALL ECON(SP(1),TE,SFC)
0105             XMPGI=SPDES/(PE*SFC/3600.)/FWGT
0106             XMTOT=XMTOT+XMPGI
0107             XMPG=XMTOT/NS
0108             POU=SP(6)*TQ(6)*CON
0109             PWH=SP(10)*TQ(10)*CON
0110             IF(NS-NP*MPAGE) 78,77,77
0111          77 WRITE(IW,109)
0112             WRITE(IW,121)  (ASTK,JAST=1,52)
0113             NP=NP+1
0114             MPAGE=NPAGE
0115          78 WRITE(IW,120) T,SPDM,ACCEL,POU,SW,PWH,THROT,
               *                SP(1),PE,XMU,PW,SFC,XMPGI,XMPG,EFF
        C
        C        PUNCH FUNCTION
0116             XKSW=SW/1000.
0117         781 WRITE(IP,101) SPDES,XKSW,T,THROT,XMU,PW,EFF,XMPGI
        C
0118          79 CONTINUE
0119             GO TO 1
0120          99 CALL EXIT
0121         101 FORMAT(8F10.4)
0122         108 FORMAT('  CONVERGE FAILURE  TRAC GOAL =',F10.1,'  TRAC AVAILIBLE='
```

```
                 *        ,F10.1,' ACCEL LIMIT =',F10.3)
0123          109 FORMAT('1 ENERGY STORING TRANSMISSION PERFORMANCE ANALYSIS'//)
0124          110 FORMAT(
                 1' TIME START    =',F9.0,' SEC        TIME FINISH    =',F9.0,' SEC  '/
                 2' STEP SIZE     =',F9.1,' SEC'//)
0125          111 FORMAT(
                 1' VEHICLE WGT   =',F9.0,' LBS        WHEEL INERTIA =',F9.4,' LFS2 '/
                 2' TIRE DIA      =',F9.4,' FT         LOG DISP      =',F9.2,' IN3/R '/
                 3' TIRE INERTIA =',F9.3,' F*L*S2      FUEL WEIGHT    =',F9.2,' LB/GL'/
                 4' ENERGY LEVEL =',E10.3,' FT*LBS')
0126          112 FORMAT(
                 *' GRADE         =',F9.3,'            EFF FACTOR     =',F9.0,'      '/
                 *' VERSION CODE =',F9.0,'                                           ')
0127          115 FORMAT(//'  GEAR RATIOS'//
                 *          ' 1',F12.4,'   E'/,'  2',F12.4,'   O'/
                 *          ' 3',F12.4,'   W'/,'  4',F12.4,'   V'/
                 *          ' 5',F12.4,'  F2'/,'  6',F12.4,'  F1'/
                 *          ' 7',F12.4,'   SHIFT POINT (RPM)'/
                 *          ' 8',F12.4,'   ENGINE SHIFT RATIO')
0128          116 FORMAT(//'  SUMMER RATIOS'//
                 *          ' 1',F12.4,'   O'/,'  2',F12.4,'   E'/
                 *          ' 3',F12.4,'   V'/,'  4',F12.4,'   W'/
                 *          ' 5',F12.4,'   F')
0129          120 FORMAT(F6.0,3F7.2,F7.0,F7.2,F7.4,F7.1,F7.2,F7.4,F7.1,F7.4,3F7.3)
0130          121 FORMAT('  TIME  SPEED  ACCEL   OUT  FLYWL   FLYWL THROT  ENGINE EN
                 *GINE  WOBLR WORKG   SFC     I MPG  C MPG   EFF'/21X,
                 *' POWER SPEED   POWER        SPEED  POWER   RATIO PRES'/' ',26A4/
                 *'  SEC   MPH    FPS/S    HP  RPM      HP   O/O    RPM     HP
                 *       PSI   LB/H/HR   MPG    MPG    O/O'/' ',26A4/)
0131           END
```


Sundstrand Aviation
division of Sundstrand Corporation

SUB-ROUTINES COMMON TO BOTH PROGRAMS

ESTTR	Transmission Torque Simultaneous Equations
ESTSP	Transmission Speed Relations
ESTLG	Hydrostatic Loop Torque Generation
ESTLS	Hydrostatic Loop Loss Calculation
ECON	Engine Fuel Consumption Map
ESTDC	Numerical Evaluation of DHEW Driving Sequence

```
      SUBROUTINE ESTTR(S,T,R,MODE,MADE,IW)
      DIMENSION S(10),T(10),R(10),A(100)
      DO 10 J=1,100
   10 A(J)=0
      DO 50 J=1,100,11
   50 A(J)=1
      A(2)=-R(1)*MADE
      A(3)=-R(8)*(1-MADE)
      A(15)=1
      A(19)=S(2)/S(9)
      A(25)=1
      A(29)=S(3)/S(9)
      A(35)=1
      A(39)=S(4)/S(9)
      A(46)=-R(2)
      A(49)=S(5)/S(9)
      A(63)=-R(4)
      A(74)=-R(5)*(ABS(MODE-1)
      A(76)= R(6)*(ABS(MODE-2)
      A(85)=1
      A(90)=-1./R(3)
      CALL SIMQ(A,T,10,KS)
      IF(KS) 99,99,98
   98 WRITE(IW,102)
   99 RETURN
  102 FORMAT(' SINGULAR SOLUTION')
      END
```


Sundstrand Aviation
division of Sundstrand Corporation

```
0001          SUBROUTINE ESTSP(SO,SW,S,R,AL,MODE,MADE)
0002          DIMENSION S(10),R(10),AL(5)
0003        1 MODE=1
0004          S(6)=SO
0005          S(10)=SW
0006          IF(S(6)-R(7)) 10,5,5
0007        5 MODE=2
0008       10 CONTINUE
0009          S(5)=S(6)*R(2)
0010          S(9)=S(10)/R(3)
0011          SLOPE=(S(9)-S(5))/(AL(4)-AL(1))
0012          S(3)=SLOPE*AL(3)+S(5)
0013          S(4)=SLOPE*AL(5)+S(5)
0014          S(7)=S(3)*R(4)
0015          S(8)=S(6)*R(6)
0016          IF(MODE-1) 20,20,15
0017       15 S(8)=S(4)*R(5)
0018       20 CONTINUE
0019          S(2)=S(3)*R(8)
0020          IF(MADE) 30,30,25
0021       25 S(2)=SLOPE*AL(2)+S(5)
0022       30 CONTINUE
0023          S(1)=S(2)*R(1)
0024          RETURN
0025          END
```

```
0001          SUBROUTINE ESTLG(XMU,PWX,SV,SF,TV,TF,DISP)
0002          DATAPI/3.14159265/
0003          XMU=SF/SV
0004          PW=ABS(PWX)
0005          DEL=ABS((XMU+(PWX/1.E6))*SV)-ABS(SF)
0006          CALL ESTLS(XMU,SV,PW,DISP,PLV,TLV)
0007          CALL ESTLS(1.0,SF,PW,DISP,PLF,TLF)
0008          IF(DEL) 10,20,30
0009       10 HHP=SF
0010          GO TO 35
0011       20 HHP=0
0012          SDEL=1
0013          GO TO 45
0014       30 HHP=XMU*SV
0015       35 SDEL=DEL/ABS(DEL)
0016       40 HHP=ABS(HHP)*DISP*PW/12./33000.
0017       45 TV=-SDEL*(HHP+SDEL*PLV)/SV*(33000./2./PI)
0018          IF(SF) 47,46,47
0019       46 SF=1
0020       47 TF= SDEL*(HHP-SDEL*PLF)/SF*(33000./2./PI)
0021          RETURN
0022          END
```


Sundstrand Aviation
division of Sundstrand Corporation

```
0001          SUBROUTINE ECONIS,T,C)
0002          DIMENSION SS(15),PP(15),Z(15,15),PM(15)
0003          DIMENSION CA(15),CB(15),CC(15),CD(15),CE(15),CF(15),CG(15),CH(15)
0004          DIMENSION CI(15),CJ(15),CK(15),CL(15),CM(15),CN(15),CO(15)
0005          EQUIVALENCE (Z(  1),CA(1)),(Z( 16),CB(1)),(Z( 31),CC(1))
0006          EQUIVALENCE (Z( 46),CD(1)),(Z( 61),CE(1)),(Z( 76),CF(1))
0007          EQUIVALENCE (Z( 91),CG(1)),(Z(106),CH(1)),(Z(121),CI(1))
0008          EQUIVALENCE (Z(136),CJ(1)),(Z(151),CK(1)),(Z(166),CL(1))
0009          EQUIVALENCE (Z(181),CM(1)),(Z(196),CN(1)),(Z(211),CO(1))
0010          DATA CDN/.1903996E-3/
0011          DATA SS/ 800.,1000.,1200.,1400.,1600.,1800.,2000.,2200.,2400.,
             *        2600.,2800.,3000.,3200.,3400.,3600./
0012          DATA PM/36.5,47.3,60.5,73.,84.9,96.1,106.9,118.,129.4,139.2,147.4,
             *        155.,162.,168.,172./
0013          DATA PP/.1,.2,.3,.4,.5,.55,.6,.65,.7,.75,.8,.85,.9,.95,1./
0014          DATA CA/1.4740,0.9172,0.7236,0.5737,0.5096,0.5022,0.5039,0.5155,
             *        0.5282,0.5314,0.5197,0.5135,0.5024,0.5007,0.5300/
0015          DATA CB/1.3089,0.8936,0.6435,0.5439,0.5145,0.5105,0.5205,0.5266,
             *        0.5305,0.5345,0.5225,0.5092,0.5123,0.5216,0.5300/
0016          DATA CC/1.3880,0.7760,0.6008,0.5315,0.4980,0.4915,0.4867,0.4923,
             *        0.5067,0.5276,0.5253,0.5108,0.5104,0.5178,0.5300/
0017          DATA CD/1.1802,0.7331,0.5900,0.5239,0.4896,0.4800,0.4783,0.4815,
             *        0.4599,0.5020,0.5115,0.5232,0.5311,0.5350,0.5350/
0018          DATA CE/1.0812,0.7136,0.5705,0.5286,0.4906,0.4803,0.4748,0.4541,
             *        0.4867,0.5159,0.5316,0.5330,0.5312,0.5246,0.5400/
0019          DATA CF/1.0931,0.7029,0.5811,0.5202,0.4793,0.4724,0.4634,0.4664,
             *        0.4812,0.4813,0.4800,0.4981,0.5153,0.5118,0.5400/
0020          DATA CG/1.0877,0.6952,0.5799,0.5193,0.4789,0.4677,0.4647,0.4689,
             *        0.4833,0.4973,0.5020,0.5007,0.4947,0.4926,0.5600/
0021          DATA CH/1.0736,0.7032,0.5817,0.5198,0.4830,0.4750,0.4721,0.4774,
             *        0.4896,0.4940,0.4946,0.5036,0.5104,0.5139,0.5600/
0022          DATA CI/1.0875,0.7120,0.5878,0.5208,0.4886,0.4804,0.4785,0.4869,
             *        0.4970,0.5069,0.5169,0.5282,0.5252,0.5159,0.5700/
0023          DATA CJ/1.1147,0.7361,0.5954,0.5306,0.4981,0.4951,0.4942,0.5009,
             *        0.5129,0.5239,0.5332,0.5357,0.5301,0.5177,0.5700/
0024          DATA CK/1.1592,0.7609,0.6086,0.5447,0.5100,0.5051,0.5056,0.5116,
             *        0.5225,0.5323,0.5361,0.5354,0.5303,0.5201,0.5400/
0025          DATA CL/1.2153,0.7867,0.6245,0.5557,0.5190,0.5077,0.5027,0.5057,
             *        0.5171,0.5315,0.5383,0.5408,0.5324,0.5256,0.5320/
0026          DATA CM/1.2174,0.8144,0.6493,0.5690,0.5302,0.5159,0.5058,0.5030,
             *        0.5119,0.5290,0.5459,0.5484,0.5402,0.5300,0.5400/
0027          DATA CN/1.3096,0.8375,0.6698,0.5829,0.5400,0.5241,0.5117,0.5093,
```

```
                 *        0.5196,0.5403,0.5503,0.5511,0.5496,0.5459,0.5400/
0028              DATA CO/1.3809,0.8969,0.6975,0.6049,0.5502,0.5340,0.5227,0.5155,
                 *        0.5284,0.5523,0.5609,0.5612,0.5594,0.5557,0.5500/
0029              P=S*T*CON
0030              CALL INTPL(15,3,SS,PM,S,PC,INIT,IEND)
0031              PC=P/PC
0032              CALL INTRN(15,15,2,2,PP,SS,Z,PC,S,C,INX,KRX,INY,KRY,15)
0033              RETURN
0034              END
```

```
0001          SUBROUTINE ESTDC(T,SPD,GR)
0002          DIMENSION A(780),B(60),C(60),D(60),E(60),F(60),G(60),H(60)
0003          DIMENSION P(60),Q(60),R(60),S(60),U(60)
        C
        C     DHEW DRIVING CYCLE      WITH ACCEL RUN
        C
0004          EQUIVALENCE(A(1 61),B(1)),(A(121),C(1)),(A(181),D(1)),(A(241),E(1))
0005          EQUIVALENCE(A(301),F(1)),(A(361),G(1)),(A(421),H(1)),(A(481),P(1))
0006          EQUIVALENCE(A(541),Q(1)),(A(601),R(1)),(A(661),S(1)),(A(721),U(1))
0007          DATAA/ 0.0, 0.0, 0.0, 0.0, 0.0, 0.0, 0.0, 0.0, 0.0, 0.0, 0.0, 5.9,
             *      11.5,16.9,18.1,21.7,22.5,21.5,20.4,17.0,14.9,15.5,17.1,21.1,
             *      22.9,22.6,19.0,15.8,17.7,21.6,24.2,24.9,24.6,24.7,24.7,24.6,
             *      25.6,25.4,25.0,26.0,25.7,26.7,28.6,29.8,30.4,30.7,30.4,30.4,
             *      30.4,29.5,30.3,30.9,30.9,29.8,30.2,31.2,32.2,32.2,28.6,22.0/
0008          DATAB/15.4, 8.8, 2.2, 0.0, 0.0, 0.0, 0.0, 0.0, 0.0, 0.0, 0.0, 0.0,
             *       0.0, 0.0, 0.0, 0.0, 0.0, 0.0, 0.0, 0.0, 0.0, 0.0, 3.3, 9.9,
             *      16.5,22.2,25.8,25.7,24.7,25.2,25.8,26.5,22.7,17.7,18.1,20.0,
             *      24.5,30.5,36.2,39.3,42.1,45.1,46.8,47.5,47.2,47.0,47.0,47.2,
             *      47.9,49.1,50.0,51.0,52.2,54.1,54.9,54.9,54.6,55.1,55.7,56.3/
0009          DATAC/56.7,56.5,56.5,56.5,56.4,55.8,54.6,54.0,53.6,54.0,54.1,53.4,
             *      52.6,52.4,51.9,51.5,51.8,52.5,53.5,54.9,55.6,56.0,55.2,53.6,
             *      51.5,51.5,50.1,50.1,49.6,49.5,49.1,48.1,46.1,43.8,41.5,38.5,
             *      35.2,32.5,30.6,30.0,27.5,21.5,19.1,17.0,12.5, 8.0, 1.4, 0.0,
             *       0.0, 0.0, 0.0, 0.0, 0.0, 0.0, 4.3,10.9,17.3,22.5,25.2,28.1/
0010          DATAD/30.8,32.1,33.6,34.6,34.8,34.7,36.0,36.0,36.0,36.1,36.5,36.0,
             *      34.1,31.4,25.7,20.3,14.5, 8.7, 2.1, 0.0, 0.0, 0.0, 5.9,12.5,
             *      19.1,25.0,27.5,30.0,30.0,29.3,28.0,21.7,15.1, 8.5, 1.9, 0.0,
             *       0.0, 0.0, 0.0, 0.0, 0.0, 0.0, 0.0, 0.0, 3.3, 9.9,16.5,23.1,
             *      27.8,31.5,33.6,35.1,36.1,36.1,36.0,36.0,35.6,35.4,35.2,35.2/
0011          DATAE/35.2,35.1,35.5,35.0,35.0,34.6,33.5,30.1,25.5,19.8,13.2, 7.2,
             *       1.0, 0.0, 0.0, 0.0, 3.5, 6.5, 9.6,11.9,16.0,19.0,21.0,23.0,
             *      24.5,25.0,25.0,25.0,25.6,26.0,25.2,25.0,24.4,19.8,13.2, 6.6,
             *       0.0, 0.0, 0.0, 0.0, 0.0, 0.0, 0.0, 0.0, 0.0, 6.6,13.0,16.0,
             *      17.0,17.5,17.7,17.0,16.6,17.1,16.6,16.5,17.0,18.5,20.2,21.1/
0012          DATAF/21.6,22.4,22.5,22.7,25.1,26.5,26.1,19.5,12.9, 6.3, 0.0, 0.0,
             *       0.0, 0.0, 0.0, 0.0, 0.0, 0.0, 0.0, 0.0, 0.0, 0.0, 0.0, 2.0,
             *       7.8,12.5,15.3,19.6,22.2,24.5,25.6,26.1,26.2,26.5,26.0,23.6,
             *      18.5,14.5, 8.7, 3.5, 0.0, 0.0, 0.0, 0.0, 0.0, 0.0, 0.0, 1.4,
             *       4.4, 9.2,13.5,16.4,16.5,18.2,20.1,22.5,22.1,23.3,22.5,20.5/
0013          DATAG/15.0, 9.0, 4.5, 2.1, 0.5, 6.5,12.5,16.0,19.6,23.1,25.5,27.1,
             *      27.9,28.6,28.3,28.0,26.8,23.5,19.0,14.9, 9.4, 3.0, 1.5, 0.0,
             *       6.3,12.9,17.5,19.5,22.0,25.0,27.5,28.3,28.9,28.8,28.3,28.3,
```

```
                 *      27.6,27.5,27.5,27.5,28.0,30.0,32.0,33.0,34.0,34.2,34.0,33.6,
                 *      33.0,32.0,31.6,30.6,29.9,29.9,29.6,29.5,28.9,27.7,25.5,22.0/
0014              DATAH/19.2,20.1,21.4,22.6,24.0,26.0,26.6,27.0,27.0,28.8,29.0,29.0,
                 *      27.5,25.8,24.5,25.1,25.7,26.9,27.8,29.0,29.1,28.9,28.1,28.0,
                 *      27.2,27.0,27.8,27.8,28.0,27.7,26.9,26.5,26.5,26.2,25.9,25.6,
                 *      25.8,24.6,22.2,21.6,22.6,24.0,24.4,25.1,25.9,25.2,25.0,24.7,
                 *      24.3,24.5,25.0,24.6,24.5,25.6,24.0,20.1,13.6, 7.0, 0.4, 0.0/
0015              DATAP/ 2.0, 8.6,15.2,18.6,21.1,23.0,26.3,28.1,28.5,28.5,27.5,26.8,
                 *      26.0,25.2,22.0,21.5,22.5,22.8,23.0,22.7,23.5,24.6,25.1,25.6,
                 *      25.0,23.7,22.9,22.0,20.5,14.2, 7.6, 1.0, 0.0, 0.0, 0.0, 0.0,
                 *       0.0, 0.0, 0.0, 0.0, 0.0, 0.0, 0.0, 0.0, 0.0, 0.0, 0.0, 4.0,
                 *      10.6,17.0,20.0,23.0,24.8,26.5,27.4,28.3,27.5,27.0,24.5,21.5/
0016              DATAQ/18.0,12.3,10.6, 9.5, 8.7, 8.8, 8.7, 8.0, 5.0, 2.6, 0.0, 0.6,
                 *       3.6,10.0,14.0,16.0,20.0,21.2,21.4,22.5,23.8,25.0,24.8,25.4,
                 *      26.0,26.6,27.0,27.0,26.8,26.5,26.0,24.6,21.5,17.5,14.0, 7.4,
                 *       0.8, 0.0, 0.0, 0.0, 0.0, 0.0, 0.0, 0.0, 0.0, 5.4,12.0,18.6,
                 *      23.0,23.0,20.0,13.4, 6.8, 0.2, 0.0, 0.0, 0.0, 0.0, 0.0, 1.5/
0017              DATAR/ 6.5,12.0,13.0,12.8,13.1,15.5,18.6,21.0,21.8,21.5,21.5,22.0,
                 *      21.7,21.5,20.1,19.2,19.8,19.5,15.5,10.0, 6.0, 2.5, 0.0, 0.0,
                 *       0.0, 0.0, 1.0, 1.0, 1.0, 3.0, 5.0, 8.0,10.5, 8.5, 8.8,14.0,
                 *      19.5,21.8,23.0,24.1,24.5,23.5,23.5,23.5,24.0,24.5,25.0,25.6,
                 *      26.0,27.0,28.3,29.1,28.3,21.4,14.8, 8.2, 1.6, 0.0, 0.0, 0.0/
0018              DATAS/ 0.0, 0.0, 0.0, 0.0, 0.0, 0.0, 0.0, 0.0, 0.0, 1.5, 8.1,13.2,
                 *      16.8,19.5,21.3,22.1,22.0,21.1,20.0,18.5,16.5,14.0, 8.0, 2.5,
                 *       0.0, 0.0, 0.0, 0.0, 0.0, 0.0, 0.0, 0.0, 0.0, 0.0, 0.0, 0.0,
                 *       0.0, 0.0, 0.0, 0.0, 0.0, 0.0, 0.0, 0.0, 0.0, 0.0, 0.0, 0.0,
                 *       0.0, 0.0, 0.0, 0.0, 0.0, 0.0, 0.0, 0.0, 0.0, 0.0, 0.0, 0.0/
0019              DATAU/ 0.0, 0.0, 0.0, 0.0, 0.0, 0.0, 0.0, 0.0, 0.0, 0.0, 0.0, 0.0,
                 *       5.0,10.0,15.0,20.0,25.0,30.0,35.0,40.0,45.0,50.0,55.0,60.0,
                 *      65.0,70.0,72.5,75.0,77.5,80.0,82.5,85.0,85.0,82.5,80.0,77.5,
                 *      75.0,72.5,70.0,65.0,60.0,55.0,50.0,45.0,40.0,35.0,30.0,25.0,
                 *      20.0,15.0,10.0, 5.0, 0.0, 0.0, 0.0, 0.0, 0.0, 0.0, 0.0, 0.0/
0020              GR=0
0021              INIT=T/2+1
0022              SPD=A(INIT)+(A(INIT+1)-A(INIT))*(T-2.*(INIT-1))/2.
0023              RETURN
0024              END
```

MATHEMATICAL ROUTINES

SIMQ	Solution of Simultaneous Equations
INTPL	One Dimensional LaGrange Interpolation
INTRN	Two Dimensional LaGrange Interpolation
VAPRK	Runge-Kutta Fourth Order Numerical Integration
CNVRG	Automatic Iteration Routine
CLIP	Min/Max. Limiter
OPT	Multivariable Optimization by Scope Curvature Technique
OPTSU	Set-Up Routine for OPT

Q. Lockheed Computer Program Results

APPENDIX Q

LOCKHEED COMPUTER PROGRAM RESULTS

Lockheed's computer program calculates fuel consumption over the Federal Driving Cycle from Sundstrand supplied data. Sundstrand data gives transmission efficiency versus vehicle speed and engine speed versus vehicle speed. The Lockheed computer program is different from the Sundstrand program in that results are quickly and economically available, and are not dependent on the particular transmission schematic. The Sundstrand program simulates the actual transmission schematic and its controls, and calculates the transmission losses directly.

The results of the Lockheed program which follow are typical. To conserve space only the first 138 seconds of the Federal Driving Cycle for the Baseline (8A) transmission in its "real" (actual losses) and "ideal" (zero transmission losses) conditions are shown.

TRAN DATA FROM /7.0 TRAN 112/ DATE: 10/19 16:58

WEIGHT... 4100 LBS
F.AREA... 24 SQ FT
D.COEF... .5
FUEL DEN. 5.75 LB/GAL

BASELINE (8A) TRANSMISSION ("REAL")
• INCLUDES TRANSMISSION LOSSES
• INCLUDES FLYWHEEL LOSSES
• EXCLUDES AIR-CONDITIONING

DHEW CYCLE NO. 2

TIME (SC)	ACCEL (MPH/S)	VELOC (MPH)	DIST (FT)	HP (ROAD)	EFF. (%)	HP (ENG)	ENG RPM	SFC (J/W.H)	FUEL (VCUM)	CONSUMPTION (MPGI)	(MPGA)
1	.0	.0		.0	.0	8.4	1071	1.034	.002	.00	.00
2	.0	.0		.0	.0	8.4	1071	1.034	.005	.00	.00
3	.0	.0		.0	.0	8.4	1071	1.034	.007	.00	.00
4	.0	.0		.0	.0	8.4	1071	1.034	.010	.00	.00
5	.0	.0		.0	.0	8.4	1071	1.034	.012	.00	.00
6	.0	.0		.0	.0	8.4	1071	1.034	.015	.00	.00
7	.0	.0		.0	.0	8.4	1071	1.034	.017	.00	.00
8	.0	.0		.0	.0	8.4	1071	1.034	.019	.00	.00
9	.0	.0		.0	.0	8.4	1071	1.034	.022	.00	.00
10	.0	.0		.0	.0	8.4	1071	1.034	.024	.00	.00
11	.0	.0		.0	.0	8.4	1071	1.034	.027	.00	.00
12	.0	.0		.0	.0	8.4	1071	1.034	.029	.00	.00
13	.0	.0		.0	.0	8.4	1071	1.034	.032	.00	.00
14	.0	.0		.0	.0	8.4	1071	1.034	.034	.00	.00
15	.0	.0		.0	.0	8.4	1071	1.034	.036	.00	.00
16	.0	.0		.0	.0	8.4	1071	1.034	.039	.00	.00
17	.0	.0		.0	.0	8.4	1071	1.034	.041	.00	.00
18	.0	.0		.0	.0	8.4	1071	1.034	.044	.00	.00
19	.0	.0		.0	.0	8.4	1071	1.034	.046	.00	.00
20	.0	.0		.0	.0	8.4	1071	1.034	.049	.00	.00
21	3.0	3.0	2	2.9	14.7	22.3	1091	.532	.052	.73	.05
22	2.9	5.9	9	8.2	37.4	20.1	1131	.568	.055	2.24	.17
23	2.7	8.6	19	12.6	52.3	18.4	1170	.596	.058	3.79	.36
24	2.9	11.5	34	18.7	62.4	18.8	1211	.595	.061	5.16	.61
25	2.8	14.3	53	23.3	67.8	19.3	1253	.596	.064	6.44	.90
26	2.6	16.9	76	26.5	69.5	20.6	1293	.589	.068	7.40	1.22
27	.4	17.3	101	7.5	42.8	19.3	1315	.617	.071	8.24	1.55
28	.8	18.1	127	11.9	57.3	18.4	1324	.642	.074	8.63	1.86
29	2.6	20.7	155	33.2	68.9	25.0	1350	.554	.078	8.05	2.17
30	1.0	21.7	186	16.9	58.2	22.7	1377	.580	.082	9.26	2.48
31	.7	22.4	219	13.9	54.8	22.3	1390	.585	.085	9.72	2.79
32	.1	22.5	252	6.4	30.9	25.3	1395	.559	.089	9.14	3.07
33	-.4	22.1	284	-.1	.3	11.0	1393	.956	.092	12.23	3.36
34	-.6	21.5	316	-2.6	12.8	13.0	1386	.825	.095	11.66	3.62
35	-.6	20.9	348	-2.6	12.8	12.8	1377	.836	.098	11.38	3.85
36	-.5	20.4	378	-1.4	6.9	11.7	1369	.909	.101	11.20	4.07
37	-.6	19.8	407	-2.5	12.8	12.4	1360	.855	.104	10.87	4.26
38	-2.8	17.0	434	-25.7	67.8	18.0	1335	.654	.107	9.00	4.40
39	-2.1	14.9	458	-16.0	62.5	15.0	1298	.714	.110	8.54	4.52
40	.0	14.9	480	3.0	19.7	21.0	1282	.583	.114	7.01	4.59
41	.3	15.2	502	5.6	36.7	18.5	1285	.626	.117	7.46	4.67
42	.3	15.5	524	5.8	36.8	18.8	1289	.622	.120	7.57	4.75
43	.5	16.0	547	7.7	48.2	17.3	1295	.659	.123	7.94	4.83
44	1.1	17.1	571	13.9	60.1	18.4	1307	.636	.127	8.13	4.91
45	2.0	19.1	598	24.6	67.4	21.6	1330	.584	.130	8.26	5.00
46	2.0	21.1	628	27.5	67.5	23.5	1360	.570	.134	8.63	5.10
47	1.6	22.7	660	25.1	64.4	24.6	1387	.563	.138	9.07	5.22
48	.2	22.9	693	7.9	37.6	24.1	1401	.570	.142	9.53	5.33
49	-.2	22.7	727	2.6	12.5	29.4	1401	.523	.146	8.53	5.43
50	-.1	22.6	760	3.9	18.6	28.0	1398	.535	.150	8.71	5.52
51	-1.3	21.3	792	-11.4	52.8	16.2	1388	.701	.153	11.12	5.63
52	-2.3	19.0	821	-22.2	63.6	18.3	1361	.652	.156	9.69	5.72
53	-1.9	17.1	848	-15.9	60.3	15.9	1330	.698	.160	9.33	5.79
54	-1.3	15.8	872	-8.9	53.2	13.3	1306	.759	.162	9.34	5.85
55	.0	15.8	895	3.2	20.0	21.9	1296	.576	.166	7.21	5.88
56	1.9	17.7	920	21.8	66.8	20.1	1310	.599	.169	8.02	5.92
57	2.1	19.8	947	26.6	68.1	22.3	1340	.578	.173	8.36	5.97
58	1.8	21.6	978	26.0	66.2	23.7	1369	.570	.177	8.83	6.03
59	1.6	23.2	1011	25.7	64.5	25.1	1395	.560	.180	9.16	6.10
60	1.0	24.2	1045	19.2	57.5	25.5	1414	.559	.184	9.54	6.17
61	.4	24.6	1081	11.4	49.8	23.1	1424	.582	.188	10.43	6.26

Sundstrand Aviation
division of Sundstrand Corporation

62	.3	24.9	1117	10.2	46.3	23.5	1429	.579	.192	10.44	6.34
63	.1	25.0	1154	7.4	33.5	26.5	1432	.554	.196	9.77	6.41
64	-.4	24.6	1190	.2	1.0	33.5	1430	.508	.201	8.37	6.46
65	-.1	24.5	1226	4.4	20.2	29.1	1427	.531	.205	9.14	6.51
66	.2	24.7	1262	8.7	39.7	24.9	1427	.567	.209	10.02	6.58
67	.1	24.8	1299	7.3	33.3	26.4	1429	.555	.213	9.72	6.64
68	-.1	24.7	1335	4.5	20.4	29.2	1429	.530	.217	9.18	6.69
69	-.1	24.6	1371	4.4	20.3	29.2	1428	.531	.222	9.16	6.74
70	.0	24.6	1407	5.8	26.7	27.7	1427	.543	.226	9.40	6.79
71	.5	25.1	1444	13.1	50.8	24.5	1431	.571	.230	10.22	6.85
72	.5	25.6	1481	13.4	50.4	25.1	1438	.567	.234	10.24	6.90
73	.1	25.7	1519	7.7	34.2	24.9	1443	.553	.238	9.93	6.96
74	-.3	25.4	1556	1.8	7.9	32.7	1441	.513	.242	8.76	6.99
75	-.5	24.9	1593	-1.2	5.4	13.0	1435	.845	.245	13.15	7.07
76	.1	25.0	1629	7.4	33.5	26.5	1432	.554	.250	9.77	7.11
77	.4	25.4	1666	11.9	49.2	24.1	1436	.575	.253	10.44	7.16
78	.6	26.0	1704	15.1	51.6	26.3	1443	.558	.257	10.09	7.21
79	.0	26.0	1742	6.4	28.0	28.5	1448	.540	.262	9.70	7.25
80	-.3	25.7	1780	1.8	8.1	32.9	1446	.513	.266	8.81	7.28
81	.4	26.1	1818	12.3	48.7	25.1	1446	.568	.270	10.45	7.32
82	.6	26.7	1857	15.6	51.3	27.2	1454	.552	.275	10.12	7.37
83	.8	27.5	1897	19.2	54.1	28.9	1464	.540	.279	9.98	7.41
84	1.1	28.6	1938	24.9	59.1	30.2	1477	.532	.283	10.03	7.45
85	.7	29.3	1980	19.2	52.7	30.6	1490	.532	.288	10.24	7.49
86	.5	29.8	2024	16.3	49.2	30.4	1499	.535	.292	10.46	7.54
87	.3	30.1	2067	13.1	45.5	29.5	1504	.543	.297	10.77	7.59
88	.3	30.4	2112	13.3	45.8	29.6	1508	.542	.301	10.83	7.63
89	.3	30.7	2157	13.5	46.4	29.6	1513	.543	.306	10.93	7.68
90	.0	30.7	2202	8.3	33.7	30.4	1515	.538	.310	10.81	7.73
91	-.2	30.5	2247	4.7	19.1	34.0	1513	.517	.315	10.02	7.76
92	-.1	30.4	2291	6.4	25.9	32.3	1511	.524	.320	10.33	7.80
93	-.1	30.3	2336	6.4	25.6	32.4	1510	.524	.325	10.29	7.84
94	.1	30.4	2380	9.9	39.7	28.9	1510	.548	.329	11.03	7.88
95	.4	30.8	2425	15.3	48.4	30.3	1513	.538	.334	10.78	7.92
96	-.4	30.4	2470	1.2	4.8	37.5	1513	.501	.339	9.37	7.94
97	-.5	29.9	2514	-.7	2.6	14.5	1507	.793	.342	15.08	8.01
98	-.4	29.5	2558	1.0	4.0	37.5	1501	.499	.347	9.12	8.02
99	.3	29.8	2601	12.9	45.5	29.1	1500	.545	.352	10.76	8.06
100	.5	30.3	2645	16.6	49.2	31.0	1506	.532	.356	10.49	8.09
101	.4	30.7	2690	15.2	48.2	30.3	1512	.538	.361	10.75	8.12
102	.2	30.9	2735	11.8	45.0	28.6	1516	.551	.365	11.24	8.16
103	.1	31.0	2781	10.1	41.7	28.4	1518	.553	.369	11.34	8.20
104	-.1	30.9	2826	6.6	27.1	32.0	1518	.527	.374	10.57	8.23
105	-.5	30.4	2871	-.6	2.3	14.6	1514	.789	.377	15.27	8.29
106	-.6	29.8	2915	-2.4	9.6	14.0	1506	.720	.380	15.02	8.34
107	.1	29.9	2959	9.6	38.6	29.1	1503	.545	.385	10.83	8.37
108	.3	30.2	3003	13.2	45.4	29.6	1506	.542	.389	10.77	8.40
109	.6	30.7	3048	16.9	50.0	30.9	1511	.533	.394	10.62	8.43
110	.5	31.2	3093	17.3	50.9	30.9	1518	.535	.398	10.78	8.45
111	.6	31.8	3139	19.5	53.8	31.2	1526	.534	.403	10.88	8.48
112	.4	32.2	3186	16.2	51.0	30.2	1533	.542	.408	11.23	8.51
113	.2	32.4	3234	12.7	47.9	28.7	1537	.553	.412	11.71	8.55
114	-.2	32.2	3281	5.3	22.6	32.9	1537	.525	.417	10.76	8.57
115	-.5	31.7	3328	-.4	1.5	15.0	1532	.777	.420	15.75	8.63
116	-3.1	28.6	3372	-45.7	64.4	30.1	1507	.538	.425	10.70	8.65
117	-3.3	25.3	3412	-44.4	65.8	27.7	1462	.549	.429	10.18	8.66
118	-3.3	22.0	3446	-39.4	66.6	24.5	1413	.569	.433	9.77	8.67
119	-3.3	18.7	3476	-34.1	68.4	21.1	1364	.595	.436	9.33	8.68
120	-3.3	15.4	3501	-28.8	69.5	18.1	1315	.645	.439	8.39	8.68
121	-3.3	12.1	3521	-23.4	68.4	15.8	1265	.687	.442	7.26	8.67
122	-3.3	8.8	3537	-17.8	63.0	14.3	1216	.717	.445	5.87	8.65
123	-3.3	5.5	3547	-12.3	51.8	12.8	1169	.757	.448	4.23	8.62
124	-3.3	2.2	3553	-6.6	33.2	10.7	1122	.862	.451	2.41	8.59
125	-2.2	.0	3554	-1.2	9.9	6.7	1085	1.206	.453	.00	8.55
126	.0	.0	3554	.0	.0	8.4	1071	1.034	.455	.00	8.50
127	.0	.0	3554	.0	.0	8.4	1071	1.034	.458	.00	8.46
128	.0	.0	3554	.0	.0	8.4	1071	1.034	.460	.00	8.41
129	.0	.0	3554	.0	.0	8.4	1071	1.034	.463	.00	8.37
130	.0	.0	3554	.0	.0	8.4	1071	1.034	.465	.00	8.33
131	.0	.0	3554	.0	.0	8.4	1071	1.034	.467	.00	8.28
132	.0	.0	3554	.0	.0	8.4	1071	1.034	.470	.00	8.24
133	.0	.0	3554	.0	.0	8.4	1071	1.034	.472	.00	8.20
134	.0	.0	3554	.0	.0	8.4	1071	1.034	.475	.00	8.16
135	.0	.0	3554	.0	.0	8.4	1071	1.034	.477	.00	8.11
136	.0	.0	3554	.0	.0	8.4	1071	1.034	.479	.00	8.07
137	.0	.0	3554	.0	.0	8.4	1071	1.034	.482	.00	8.03
138	.0	.0	3554	.0	.0	8.4	1071	1.034	.484	.00	7.99
139	.0	.0	3554	.0	.0	8.4	1071	1.034	.487	.00	7.95

TRAN DATA FROM /7.0 TRAN 11A/ DATE: 10/23 14:41

WEIGHT... 4300 LBS
F.AREA... 24 SQ FT
D.COEF... .5
FUEL DEN: 6.75 LB/GAL

BASELINE (8A) TRANSMISSION (IDEAL)

- NO TRANSMISSION LOSSES
- INCLUDES FLYWHEEL LOSSES
- EXCLUDES AIR-CONDITIONING

DHEW CYCLE NO. 2

TIME (SC)	ACCEL (MPH/S)	VELOC (MPH)	DIST (FT)	HP (ROAD)	EFF. (%)	HP (ENG)	ENG RPM	SFC (J/H-H)	FUEL CONSUMPTION (VCUM)	(MPGI)	(MPGA)
1	.0	.0		.0	.0	8.4	1071	1.034	.002	.00	.00
2	.0	.0		.0	.0	8.4	1071	1.034	.005	.00	.00
3	.0	.0		.0	.0	8.4	1071	1.034	.007	.00	.00
4	.0	.0		.0	.0	8.4	1071	1.034	.010	.00	.00
5	.0	.0		.0	.0	8.4	1071	1.034	.012	.00	.00
6	.0	.0		.0	.0	8.4	1071	1.034	.015	.00	.00
7	.0	.0		.0	.0	8.4	1071	1.034	.017	.00	.00
8	.0	.0		.0	.0	8.4	1071	1.034	.019	.00	.00
9	.0	.0		.0	.0	8.4	1071	1.034	.022	.00	.00
10	.0	.0		.0	.0	8.4	1071	1.034	.024	.00	.00
11	.0	.0		.0	.0	8.4	1071	1.034	.027	.00	.00
12	.0	.0		.0	.0	8.4	1071	1.034	.029	.00	.00
13	.0	.0		.0	.0	8.4	1071	1.034	.032	.00	.00
14	.0	.0		.0	.0	8.4	1071	1.034	.034	.00	.00
15	.0	.0		.0	.0	8.4	1071	1.034	.036	.00	.00
16	.0	.0		.0	.0	8.4	1071	1.034	.039	.00	.00
17	.0	.0		.0	.0	8.4	1071	1.034	.041	.00	.00
18	.0	.0		.0	.0	8.4	1071	1.034	.044	.00	.00
19	.0	.0		.0	.0	8.4	1071	1.034	.046	.00	.00
20	.0	.0		.0	.0	8.4	1071	1.034	.049	.00	.00
21	3.0	3.0	2	2.9	100.0	5.8	1091	1.305	.051	1.15	.05
22	2.9	5.9	9	8.2	100.0	6.4	1131	1.285	.053	3.13	.18
23	2.7	8.6	19	12.6	100.0	7.0	1170	1.265	.055	4.73	.38
24	2.9	11.5	34	18.7	100.0	7.6	1211	1.231	.058	6.18	.64
25	2.8	14.3	53	23.3	100.0	8.3	1253	1.165	.061	7.70	.95
26	2.6	16.9	76	26.5	100.0	9.0	1293	1.104	.063	9.07	1.31
27	.8	17.3	101	7.5	100.0	9.4	1316	1.071	.066	9.81	1.66
28	.8	18.1	127	11.9	100.0	9.5	1324	1.058	.069	10.11	2.01
29	2.6	20.7	155	33.2	100.0	10.0	1350	1.020	.072	10.91	2.36
30	1.0	21.7	186	16.9	100.0	10.6	1377	.982	.075	11.75	2.72
31	.7	22.4	219	13.9	100.0	10.8	1390	.964	.078	12.14	3.07
32	.1	22.5	252	6.4	100.0	11.0	1395	.956	.080	12.32	3.41
33	-.5	22.1	284	-.1	100.0	10.9	1393	.959	.083	12.25	3.72
34	-.6	21.5	316	-2.6	100.0	10.7	1386	.970	.086	12.02	4.00
35	-.6	20.9	348	-2.6	100.0	10.6	1377	.983	.089	11.75	4.25
36	-.5	20.4	378	-1.4	100.0	10.4	1369	.994	.092	11.50	4.47
37	-.6	19.8	407	-2.5	100.0	10.2	1360	1.006	.095	11.24	4.68
38	-2.5	17.0	434	-25.7	100.0	9.7	1335	1.043	.098	10.44	4.84
39	-2.1	14.9	458	-16.0	100.0	9.0	1298	1.097	.100	9.25	4.94
40	.0	14.9	480	3.0	100.0	8.8	1282	1.120	.103	8.73	5.06
41	.3	15.2	502	5.6	100.0	8.8	1285	1.116	.106	8.80	5.16
42	.3	15.5	524	5.8	100.0	8.9	1289	1.110	.109	8.95	5.25
43	.5	16.0	547	7.7	100.0	9.0	1295	1.101	.111	9.15	5.35
44	1.1	17.1	571	13.9	100.0	9.2	1307	1.083	.114	9.55	5.45
45	2.0	19.1	598	24.6	100.0	9.6	1330	1.049	.117	10.30	5.57
46	2.0	21.1	628	27.5	100.0	10.2	1360	1.005	.120	11.24	5.70
47	1.6	22.7	660	25.1	100.0	10.8	1387	.967	.123	12.07	5.85
48	.2	22.9	693	7.9	100.0	11.1	1401	.949	.126	12.47	6.01
49	-.2	22.7	727	2.6	100.0	11.1	1401	.949	.129	12.47	6.15
50	-.1	22.6	760	3.9	100.0	11.0	1398	.952	.131	12.41	6.29
51	-1.3	21.3	792	-11.4	100.0	10.8	1388	.967	.134	12.09	6.42
52	-2.3	19.0	821	-22.2	100.0	10.2	1361	1.005	.137	11.27	6.52
53	-1.9	17.1	848	-15.0	100.0	9.6	1330	1.051	.140	10.28	6.59
54	-1.3	15.8	872	-8.9	100.0	9.2	1306	1.086	.143	9.60	6.65
55	.0	15.8	895	3.2	100.0	9.0	1296	1.100	.146	9.18	6.70
56	1.9	17.7	920	21.8	100.0	9.3	1310	1.078	.148	9.64	6.75
57	2.1	19.8	947	26.6	100.0	9.8	1340	1.034	.151	10.61	6.83
58	1.8	21.6	978	26.0	100.0	10.4	1369	.993	.154	11.52	6.91
59	1.6	23.2	1011	25.7	100.0	11.0	1395	.957	.157	12.29	7.01
60	1.0	24.2	1045	19.2	100.0	11.4	1414	.934	.160	12.82	7.12
61	.4	24.6	1081	11.4	100.0	11.6	1424	.923	.163	13.08	7.23

Sundstrand Aviation
division of Sundstrand Corporation

62	.3	24.3	1117	10.2	100.0	11.7	1429	.917	.166	13.21	7.34
63	.1	25.0	1154	7.4	100.0	11.8	1432	.914	.169	13.29	7.44
64	-.4	24.6	1190	1.2	100.0	11.8	1430	.916	.172	13.23	7.54
65	-.1	24.5	1226	4.4	100.0	11.7	1427	.920	.175	13.18	7.64
66	.2	24.7	1262	8.7	100.0	11.7	1427	.919	.178	13.16	7.73
67	.1	24.8	1299	7.3	100.0	11.7	1429	.917	.181	13.21	7.82
68	-.1	24.7	1336	4.5	100.0	11.7	1429	.917	.184	13.21	7.91
69	-.1	24.6	1371	4.4	100.0	11.7	1428	.919	.187	13.18	7.99
70	.0	24.8	1407	5.8	100.0	11.7	1427	.919	.190	13.16	8.08
71	.5	25.1	1444	13.1	100.0	11.8	1431	.915	.193	13.25	8.16
72	.5	25.6	1481	13.4	100.0	12.0	1438	.907	.196	13.44	8.24
73	.1	25.7	1519	7.7	100.0	12.1	1443	.902	.199	13.55	8.32
74	-.3	25.4	1556	1.8	100.0	12.0	1441	.904	.202	13.51	8.40
75	-.5	24.9	1593	-1.2	100.0	11.9	1435	.910	.205	13.36	8.47
76	.1	25.0	1629	7.4	100.0	11.8	1432	.914	.208	13.29	8.54
77	.4	25.4	1666	11.9	100.0	11.9	1436	.909	.211	13.38	8.61
78	.6	26.0	1704	15.1	100.0	12.1	1443	.901	.214	13.57	8.68
79	.0	26.0	1742	6.4	100.0	12.2	1448	.896	.217	13.68	8.75
80	-.3	25.7	1780	1.3	100.0	12.1	1446	.897	.220	13.66	8.82
81	.4	26.1	1818	12.3	100.0	12.2	1446	.898	.223	13.69	8.88
82	.6	26.7	1857	15.6	100.0	12.4	1454	.889	.226	13.82	8.95
83	.8	27.5	1897	19.2	100.0	12.6	1464	.877	.229	14.07	9.02
84	1.1	28.6	1938	24.9	100.0	13.0	1477	.861	.232	14.41	9.09
85	.7	29.3	1980	19.2	100.0	13.4	1490	.846	.235	14.73	9.16
86	.5	29.8	2024	16.3	100.0	13.6	1499	.836	.238	14.94	9.24
87	.3	30.1	2067	13.1	100.0	13.8	1504	.829	.242	15.09	9.32
88	.3	30.4	2112	13.3	100.0	14.0	1508	.824	.245	15.19	9.39
89	.3	30.7	2157	13.5	100.0	14.0	1513	.818	.248	15.30	9.47
90	.0	30.7	2202	8.3	100.0	14.1	1515	.816	.251	15.35	9.54
91	-.2	30.5	2247	4.7	100.0	14.1	1513	.818	.254	15.31	9.62
92	-.1	30.4	2291	6.4	100.0	14.0	1511	.820	.256	15.26	9.69
93	-.1	30.3	2336	6.4	100.0	13.9	1510	.822	.261	15.23	9.75
94	.1	30.4	2380	9.9	100.0	13.9	1510	.822	.264	15.23	9.82
95	.4	30.8	2425	15.3	100.0	14.1	1513	.817	.267	15.31	9.89
96	-.4	30.4	2470	1.2	100.0	14.1	1513	.818	.270	15.31	9.95
97	-.5	29.9	2514	-.7	100.0	13.9	1507	.826	.274	15.16	10.01
98	-.4	29.5	2558	1.0	100.0	13.7	1501	.833	.277	15.00	10.07
99	.3	29.8	2601	12.9	100.0	13.6	1500	.834	.280	14.98	10.12
100	.5	30.3	2645	16.6	100.0	13.8	1506	.827	.283	15.12	10.18
101	.4	30.7	2690	15.2	100.0	14.0	1512	.819	.286	15.28	10.24
102	.2	30.9	2735	11.8	100.0	14.1	1516	.814	.289	15.36	10.27
103	.1	31.0	2781	10.1	100.0	14.2	1518	.812	.293	15.44	10.35
104	-.1	30.9	2826	6.6	100.0	14.2	1518	.812	.296	15.44	10.40
105	-.5	30.4	2871	-.5	100.0	14.1	1514	.817	.299	15.33	10.46
106	-.6	29.8	2915	-2.4	100.0	13.8	1506	.826	.302	15.14	10.51
107	.1	29.9	2959	9.6	100.0	13.7	1503	.831	.305	15.05	10.55
108	.3	30.2	3003	13.2	100.0	13.8	1506	.827	.309	15.12	10.60
109	.5	30.7	3048	16.9	100.0	14.0	1511	.820	.312	15.26	10.65
110	.5	31.2	3093	17.4	100.0	14.2	1518	.811	.315	15.43	10.70
111	.6	31.8	3139	19.5	100.0	14.5	1526	.802	.318	15.63	10.75
112	.4	32.2	3184	16.2	100.0	14.7	1533	.793	.321	15.80	10.80
113	.2	32.4	3234	12.7	100.0	14.8	1537	.788	.325	15.91	10.85
114	-.2	32.2	3281	-5.3	100.0	14.8	1537	.788	.328	15.91	10.90
115	-.5	31.7	3328	-.4	100.0	14.7	1532	.794	.331	15.78	10.95
116	-3.1	28.6	3372	-45.7	100.0	13.6	1507	.826	.334	15.16	10.99
117	-3.3	25.3	3412	-44.4	100.0	12.5	1462	.881	.337	14.03	11.01
118	-3.3	22.0	3446	-39.4	100.0	11.3	1413	.936	.340	12.80	11.03
119	-3.3	18.7	3476	-34.1	100.0	10.3	1364	1.001	.343	11.36	11.03
120	-3.3	15.4	3501	-28.8	100.0	9.3	1315	1.073	.346	9.79	11.02
121	-3.3	12.1	3521	-23.4	100.0	8.5	1265	1.147	.349	8.19	11.00
122	-3.3	8.8	3537	-17.8	100.0	7.7	1216	1.223	.351	6.40	10.97
123	-3.3	5.5	3547	-12.3	100.0	6.9	1169	1.297	.354	4.68	10.92
124	-3.3	2.2	3553	-6.6	100.0	6.2	1122	1.370	.356	2.75	10.87
125	-2.2	.0	3554	-1.2	100.0	5.7	1085	1.437	.358	.00	10.81
126	.0	.0	3554	.0	.0	8.4	1071	1.034	.360	.00	10.74
127	.0	.0	3554	.0	.0	8.4	1071	1.034	.363	.00	10.67
128	.0	.0	3554	.0	.0	8.4	1071	1.034	.365	.00	10.60
129	.0	.0	3554	.0	.0	8.4	1071	1.034	.368	.00	10.53
130	.0	.0	3554	.0	.0	8.4	1071	1.034	.370	.00	10.46
131	.0	.0	3554	.0	.0	8.4	1071	1.034	.373	.00	10.39
132	.0	.0	3554	.0	.0	8.4	1071	1.034	.375	.00	10.32
133	.0	.0	3554	.0	.0	8.4	1071	1.034	.377	.00	10.26
134	.0	.0	3554	.0	.0	8.4	1071	1.034	.380	.00	10.19
135	.0	.0	3554	.0	.0	8.4	1071	1.034	.382	.00	10.13
136	.0	.0	3554	.0	.0	8.4	1071	1.034	.385	.00	10.06
137	.0	.0	3554	.0	.0	8.4	1071	1.034	.387	.00	10.00
138	.0	.0	3554	.0	.0	8.4	1071	1.034	.390	.00	9.94
139	.0	.0	3554	.0	.0	8.4	1071	1.034	.392	.00	9.88

R. Sundstrand Vehicle Performance Program (B32)
For Automatic Transmissions

APPENDIX R

VEHICLE PERFORMANCE WITH AN AUTOMATIC TORQUE CONVERTER TRANSMISSION

A. Sundstrand Vehicle Performance Program B32 for Automatic Transmissions

The following curves (APP-R1, R2, R3, R4) and computer output were generated from Sundstrand Vehicle Performance Program B32. (This program was not developed under this contract, but previous to it.) This is a digital program and computes the system conditions every one mile per hour (for compactness, a print-out increment of two miles per hour was used for this appendix).

This program can be used to predict vehicle performance in either of two modes:

(1) Acceleration. Using the given engine speed-torque data, the program accelerates the vehicle from rest through the gears (changing ratios at the given shift point speeds) until maximum vehicle speed is reached. The program does this by incrementing road speed, and for each increment calculating time and distance since start, instantaneous acceleration rate, system speeds, torque efficiencies, and road drag and driving forces. (See Run No.'s 01, 02, 03, and 04.)

(2) Constant Speed Cruise. Here the vehicle is not accelerating, and all the calculated speeds, torques, and efficiencies, etc., are for constant speed cruising at the speed given in the left hand column.

It should be noted that for each speed print-out, the road drag and driving forces are equal, indicating constant speed equilibrium. Values of time, distance, and acceleration are printed out as zero as they are meaningless for this mode of operation.

Assumptions used in Performance Calculations

The following data was supplied by EPA or assumed from their data.

(1) Engine power curve (Appendix H)

(2) Engine accessory loss curves (Appendix C)

(3) Torque converter, transmission ratio, and spin loss data (given as input data on computer print-out sheets)

(4) Vehicle drag and resistance forces (Appendix B)

(5) Test vehicle weight, 4300 lb.

(6) Gross vehicle weight, 5000 lb.

(7) Ambient air temperature, 85°F.

The following data was assumed by Sundstrand.

(1) Rear axle ratio 2.75:1

(2) Rolling radius of drive wheels, 1.10 feet

(3) Transmission shift speeds (see Fig. APP-R3)

(4) Tire-road slip factors, transmission and axle efficiency (given as input data on computer printout sheets)

(5) Total wheel, tire, and brake inertia, 11.2 slug ft^2

(6) Engine and torque converter inertia, .3 slug ft^2

Transmission Efficiency

The values given for transmission efficiency in the computer print-out sheets include the torque converter efficiency, and represents the power out of the transmission divided by the power into the torque converter.

B. Performance Summary for the "Typical" 3 Speed Automatic Transmission

Grade and Acceleration Performance

(test vehicle weight 4300 lb. except where noted)

(1)	Acceleration from Standing Start	
	Distance in 10 sec.	482 ft
	Time to 60 MPH	10.9 sec.
(2)	Acceleration in Merging Traffic	
	Time 25 to 70 MPH	11.8 sec.
(3)	Acceleration, DOT High Speed Pass Maneuver	
	Time to Complete	12.0 sec.
	Distance to Complete	1175 ft.
(4)	Grade Velocity	
	Speed Sustained from Rest on a 30% Grade	31 MPH
	Speed Sustained on a 5% Grade	94 MPH
	Speed Sustained on a 0% Grade (vehicle weight 5000 lb.)	114 MPH

Fuel Consumption Performance

(1) Constant speed fuel consumption. (4300 lb. vehicle weight)

Speed MPH	Without Air Conditioner MPG	With Air Conditioner MPG
20	15.58	14.81
30	17.86	16.20
40	17.92	16.60
50	16.92	15.48
60	14.30	13.21
70	11.91	11.18
80	10.34	9.72

(2) Federal Driving Cycle fuel consumption. 4300 lb. vehicle weight, without air conditioner - 11.41 MPG. (This figure was computed by Lockheed based on efficiency and engine speed data supplied by Sundstrand.)

C. Cost and Weight Assumptions for the "Typical" 3 Speed Automatic Transmission

(1) Estimated unit total manufacturing cost based on 1,000,000 units per year (which includes labor, materials, and plant operating expenses, and excludes engineering, development, advertising, sales, etc.). ($89)

(2) Estimated weight for a "typical" 3 speed automatic transmission, including torque converter (150 lb.).

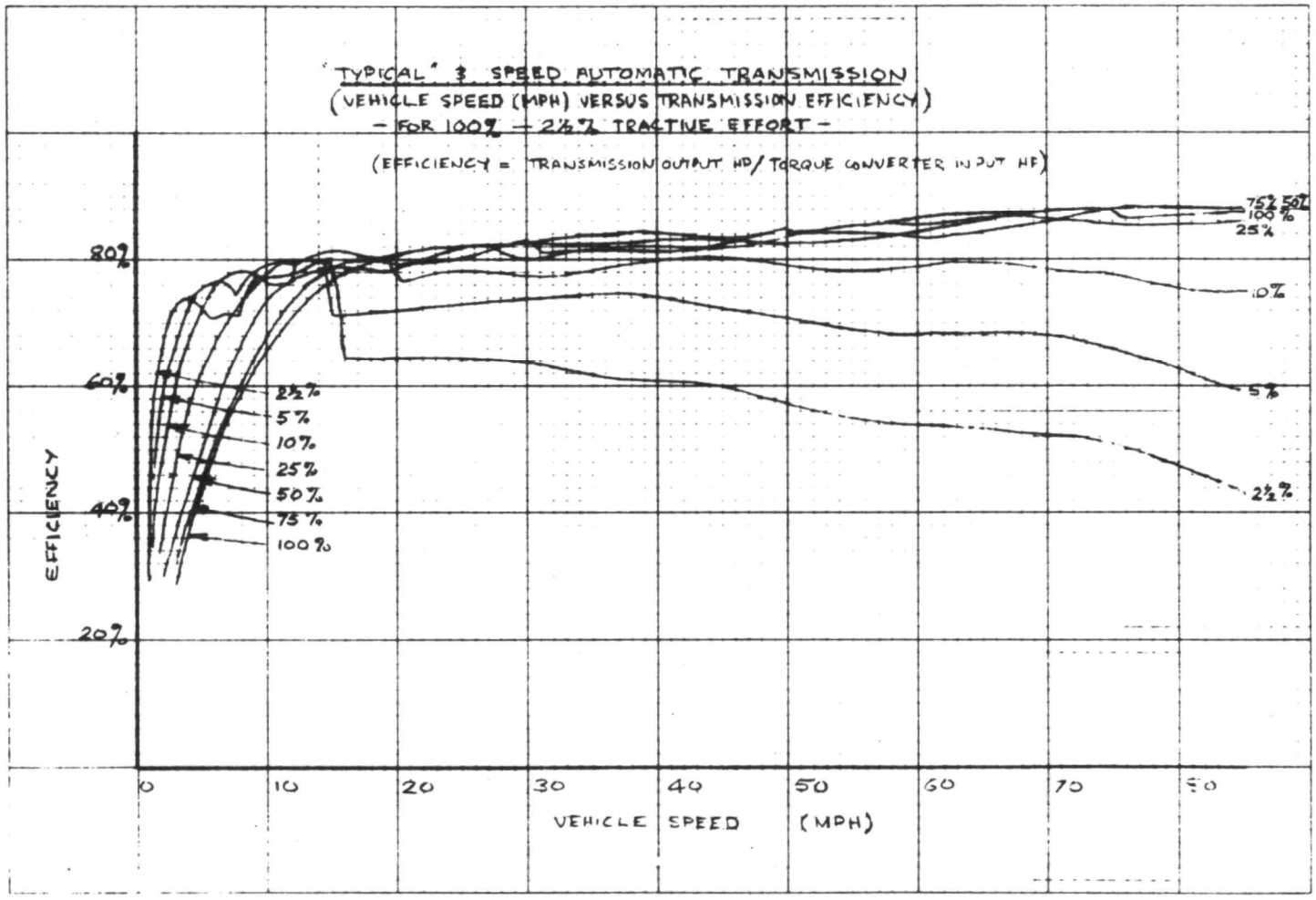

Figure APP-R1 "Typical" 3 Speed Automatic Transmission
(Vehicle Speed versus Transmission Efficiency

Sundstrand Aviation
division of Sundstrand Corporation

SHEET 1.

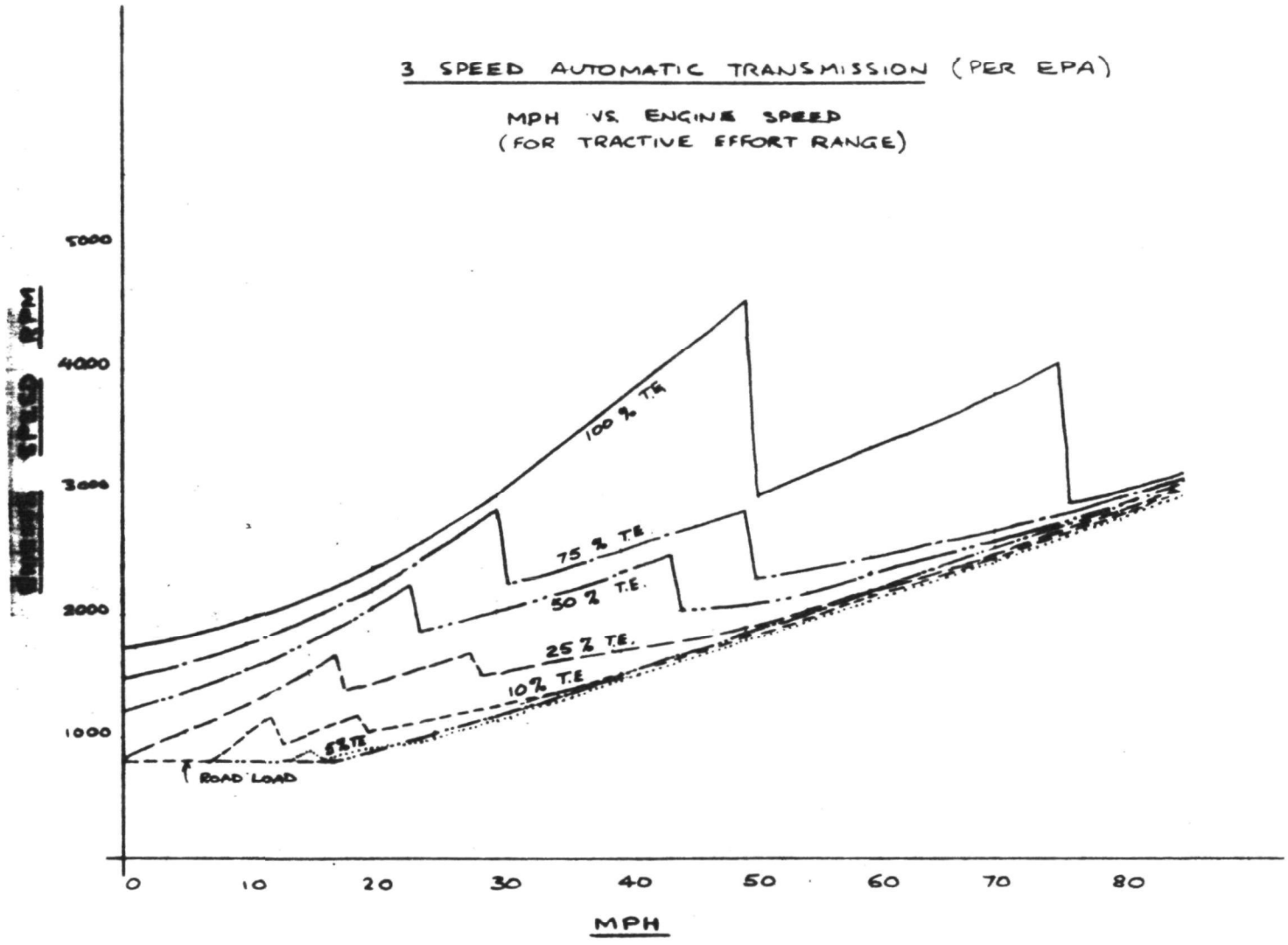

Figure APP-R2 3 Speed Automatic Transmission (per EPA)
MPH versus Engine Speed

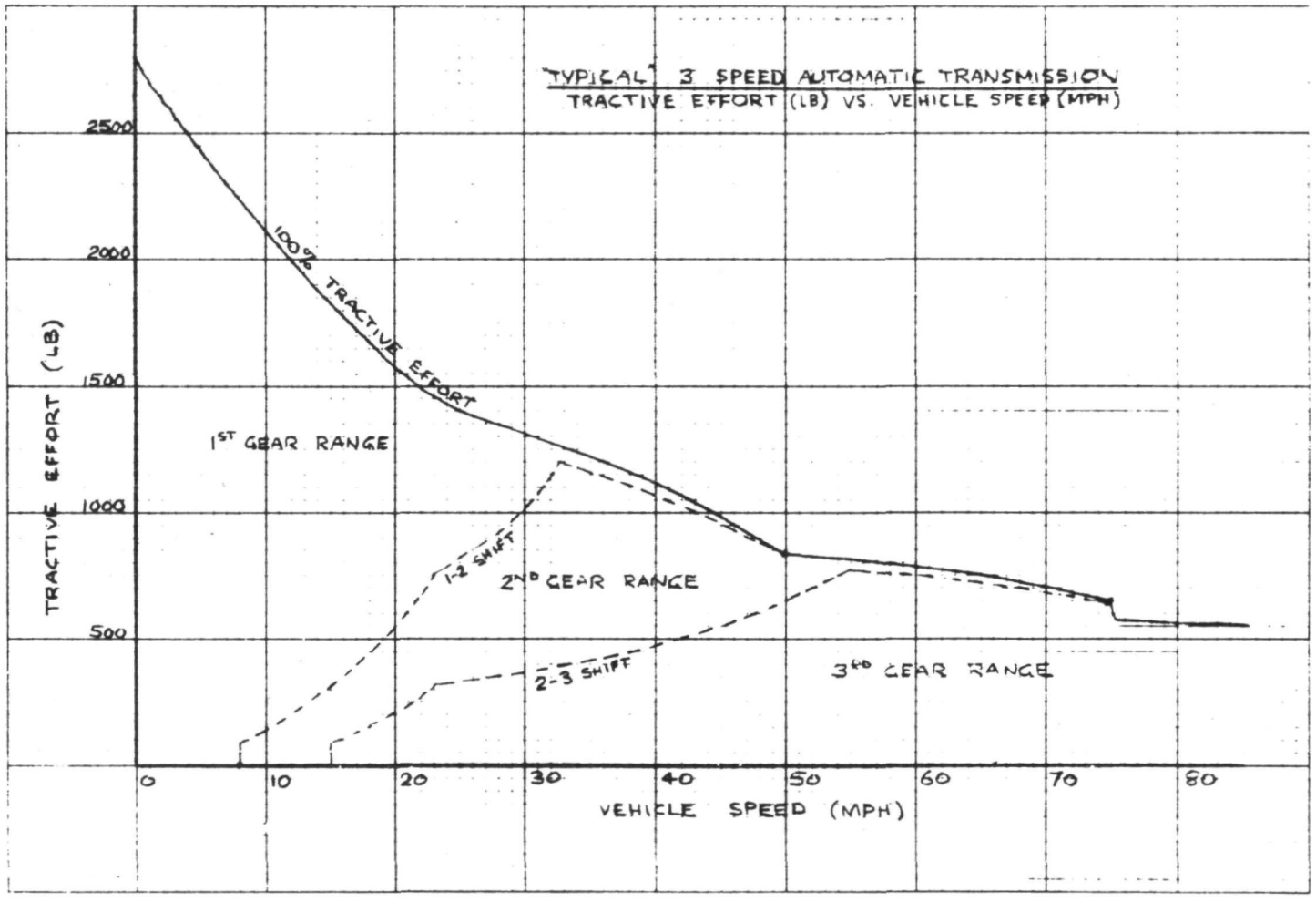

Figure APP-R3 "Typical" 3 Speed Automatic Transmission
Tractive Effort versus Vehicle Speed

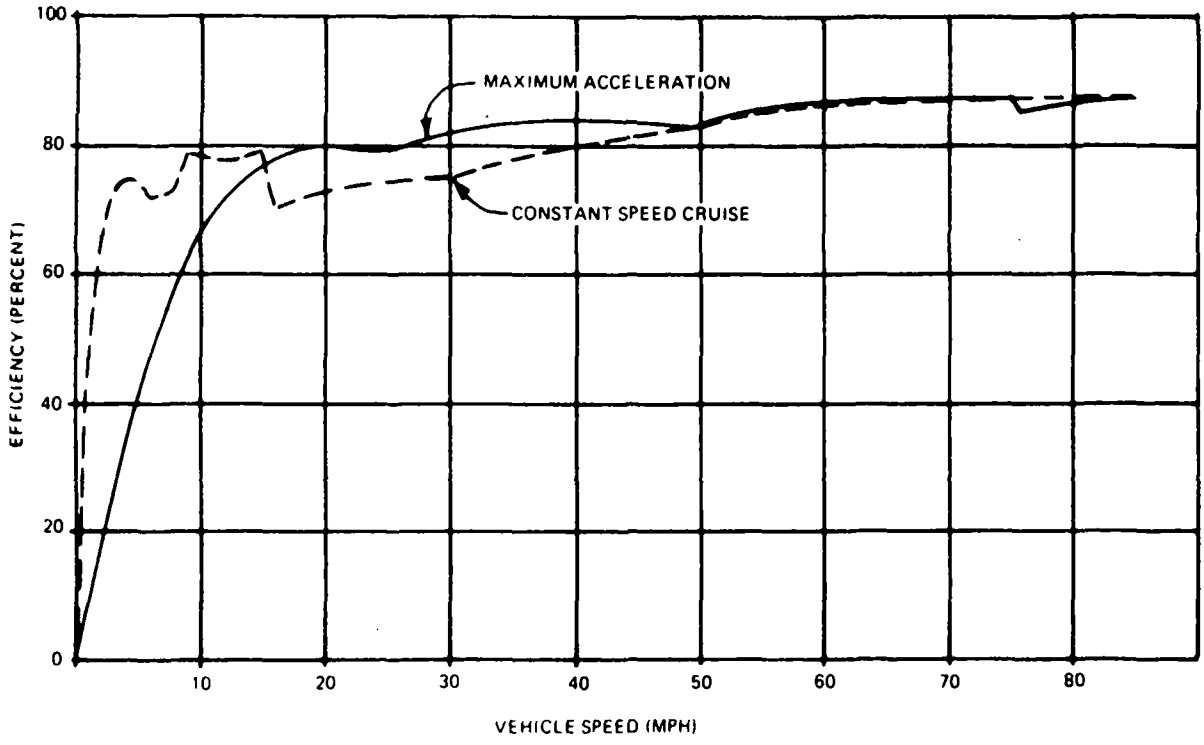

Figure APP-R4 Transmission Efficiency vs. Vehicle Speed

"Typical" 3 Speed Automatic Transmission

RUN NO. 01

```
1130-B32,TORQUE CONVERTER-FLUID COUPLING SIZING AND PERFORMANCE ANALYSIS
VEHICLE PERFORMANCE VERSION----------------------------------------REVISION E

VEHICLE.......FULL SIZED CAR (PER EPA)
ENGINE........TYPICAL MEDIUM SIZE -AIR CONDITIONER OFF  (PER EPA)
TRANSMISSION..3 SPEED AUTOMATIC (2.5 1ST,1.5 2ND) (PER EPA)
CONVERTER.....11.75 INS DIA ,2.0 STR (PER EPA)
-----------------------------------------------------------------------------
                                  INPUT DATA
                                  ----------

AXLE RATIO.............................................  2.750

AXLE EFFICIENCY........................................  0.960

VEHICLE WEIGHT.........................................  5000.

DRIVE WHEEL RADIUS,FT..................................  1.100

TOTAL WHEEL INERTIA,SLUG-FT-FT.........................  11.200

FRONTAL AREA,SQ.FT.....................................  24.00

AIR TEMP.,DEG.F........................................   85.0

AERODYNAMIC DRAG FACTOR................................  0.500

ROAD GRADE,PERCENT.....................................   0.00

INPUT CONDITIONS
----------------
      INPUT INERTIA       0.30000 SLUG-FT-FT

      INPUT SPEED,RPM
        800. 1200. 1600. 2000. 2500. 3000. 3500. 4000. 4500.

      INPUT TORQUE, LB-FT
        223.  254.  267.  269.  269.  260.  243.  217.  184.


TRANSMISSION
------------
      RATIOS
       2.500 1.500 1.000

      EFFICIENCIES
       0.920 0.930 0.970

      SHIFT SPEEDS,MPH (ENGINE RPM IF GREATER THAN 100.)
         50.   75.

SPEED FOR TIRE SLIP FACTORS,MPH
         0.0  10.0  20.0  30.0  40.0  50.0  60.0

TIRE SLIP FACTORS
       0.880 0.910 0.940 0.960 0.970 0.980 0.990
```

RUN NO. 01

```
1130-B32,TORQUE CONVERTER-FLUID COUPLING SIZING AND PERFORMANCE ANALYSIS
VEHICLE PERFORMANCE VERSION-----------------------------------------REVISION E

VEHICLE.......FULL SIZED CAR (PER EPA)
ENGINE........TYPICAL MEDIUM SIZE -AIR CONDITIONER OFF  (PER EPA)
TRANSMISSION..3 SPEED AUTOMATIC (2.5 1ST,1.5 2ND) (PER EPA)
CONVERTER.....11.75 INS DIA ,2.0 STR (PER EPA)
-------------------------------------------------------------------------


TRANSMISSION ACCESSORY LOSSES
-----------------------------
      H.P. LOSS = 0.00000 *(TRANS. I/P SPD.) +    0.00

      TRANS.INPUT SPEED,RPM
          0. 1000. 2000. 3000. 4000. 5000.


      TRANS.INPUT TORQ.,FT.LB,GEAR NO.  1
         0.0    3.0    6.0    8.5   11.5   14.5


      TRANS.INPUT TORQ.,FT.LB,GEAR NO.  2
         0.0    1.5    2.2    3.5    4.5    5.6


      TRANS.INPUT TORQ.,FT.LB,GEAR NO.  3
         6.5    6.4    6.5    7.0    7.5    8.5


 11.75 IN. REFERENCE CONVERTER/COUPLING WAS GIVEN AS INPUT DATA
-------------------------------------------------------------

      SPEED RATIO
       0.000 0.200 0.400 0.600 0.800 0.900 0.925 0.950 0.975 0.985 0.990

      TORQUE RATIO
       2.000 1.800 1.600 1.370 1.120 1.000 1.000 1.000 1.000 1.000 1.000

      CAPACITY FACTOR,K
        106.  112.  120.  131.  151.  171.  190.  222.  343.  380.  422.
```


Sundstrand Aviation
division of Sundstrand Corporation

RUN NO. 01

1130-B32,TORQUE CONVERTER-FLUID COUPLING SIZING AND PERFORMANCE ANALYSIS
VEHICLE PERFORMANCE VERSION----------REVISION E

VEHICLE.....FULL SIZED CAR (PER EPA)
ENGINE.....TYPICAL MEDIUM SIZE -AIR CONDITIONER OFF (PER EPA)
TRANSMISSION..3 SPEED AUTOMATIC (2.5 1ST,1.5 2ND) (PER EPA)
CONVERTER.....11.75 INS DIA ,2.0 STR (PER EPA)

-------VEHICLE-------				----ENGINE-----			---CONVERTER---			---TRANS--		---ROAD---	
MPH	TIME SEC	DIST FT	ACCEL F/S/S	RPM	FTLB	HP	SPD RATIO	TORQ RATIO	EFF	O/P RPM	EFF	DRAG LB	DRIVE LB
TRANSMISSION IS IN GEAR 1 REAR AXLE EFFICIENCY = 0.960													
0	0.00	0	17.53	1736	268	88	0.00	2.00	0.00	0	0.00	76	2962
2	0.17	0	16.10	1767	268	88	0.11	1.88	0.21	79	0.19	77	2726
4	0.37	0	15.08	1816	268	90	0.21	1.78	0.38	157	0.35	78	2559
6	0.57	0	14.20	1873	269	92	0.31	1.68	0.52	233	0.48	78	2416
8	0.78	2	13.39	1935	269	95	0.40	1.59	0.64	309	0.58	80	2283
10	1.01	4	12.60	1997	269	99	0.48	1.50	0.72	384	0.66	81	2154
12	1.26	7	11.82	2065	269	102	0.55	1.42	0.79	458	0.72	83	2028
14	1.52	11	11.11	2137	269	106	0.62	1.34	0.83	531	0.75	85	1913
16	1.79	16	10.42	2211	269	109	0.68	1.26	0.86	603	0.78	87	1803
18	2.09	22	9.79	2295	269	113	0.73	1.20	0.88	674	0.79	89	1701
20	2.40	30	9.24	2387	269	118	0.77	1.14	0.89	744	0.80	92	1613
22	2.73	39	8.74	2450	269	124	0.83	1.06	0.88	814	0.79	95	1534
24	3.09	50	8.03	2538	268	125	0.87	1.01	0.88	884	0.79	98	1420
26	3.47	63	7.73	2671	266	129	0.89	1.00	0.89	954	0.80	102	1375
28	3.85	77	7.58	2814	264	135	0.90	0.99	0.90	1024	0.81	105	1353
30	4.25	93	7.42	2963	260	140	0.92	0.99	0.92	1093	0.82	109	1330
32	4.65	110	7.27	3107	257	145	0.93	1.00	0.93	1163	0.83	113	1311
34	5.06	129	7.04	3264	252	149	0.94	1.00	0.94	1233	0.83	118	1277
36	5.49	150	6.83	3429	245	153	0.95	1.00	0.95	1303	0.83	123	1247
38	5.93	173	6.49	3599	238	155	0.95	1.00	0.95	1373	0.83	127	1195
40	6.40	199	6.17	3769	229	156	0.95	1.00	0.95	1443	0.83	133	1148
42	6.90	228	5.84	3936	220	157	0.96	1.00	0.96	1512	0.83	138	1099
44	7.42	261	5.48	4100	210	156	0.96	1.00	0.96	1581	0.83	144	1046
46	7.99	298	5.11	4261	200	155	0.96	1.00	0.96	1649	0.83	150	991
48	8.60	339	4.72	4419	189	152	0.97	1.00	0.97	1717	0.83	156	933
50	9.25	386	4.37	4568	179	150	0.97	1.00	0.97	1785	0.83	162	882
TRANSMISSION SHIFTED INTO GEAR 2 AT 50. MPH. DRIVE AXLE EFFIENCY = 0.960													
52	9.69	418	4.91	3053	258	171	0.91	0.99	0.91	1853	0.83	169	977
54	10.41	473	4.03	3093	257	149	0.93	1.00	0.93	1920	0.85	176	840
56	11.15	532	3.92	3178	254	152	0.93	1.00	0.93	1987	0.86	183	829
58	11.92	595	3.81	3268	251	154	0.94	1.00	0.94	2054	0.86	190	819
60	12.70	662	3.70	3360	248	156	0.94	1.00	0.94	2121	0.86	198	808
62	13.51	733	3.60	3454	244	159	0.94	1.00	0.94	2187	0.86	206	799
64	14.35	810	3.43	3550	240	160	0.95	1.00	0.95	2253	0.87	214	780
66	15.24	893	3.29	3647	236	161	0.95	1.00	0.95	2319	0.87	223	765
68	16.16	983	3.14	3742	231	162	0.95	1.00	0.95	2384	0.87	231	749
70	17.12	1079	2.99	3837	226	163	0.95	1.00	0.95	2450	0.87	240	733
72	18.15	1185	2.83	3931	221	163	0.95	1.00	0.95	2514	0.87	249	715
74	19.23	1300	2.66	4024	215	163	0.96	1.00	0.96	2579	0.87	259	697
TRANSMISSION SHIFTED INTO GEAR 3 AT 75. MPH. DRIVE AXLE EFFIENCY = 0.960													
76	20.29	1416	2.96	2979	260	187	0.88	1.00	0.89	2644	0.84	268	756

RUN NO. 01

78	21.81	1587	1.88	2952	261	146	0.91	0.99	0.91	2706	0.86	278	589
80	23.42	1772	1.80	3007	259	148	0.92	0.99	0.92	2772	0.87	289	586
82	25.10	1971	1.72	3061	258	150	0.92	1.00	0.92	2835	0.87	299	583
84	26.87	2185	1.64	3110	256	151	0.93	1.00	0.93	2899	0.87	310	580
86	28.73	2416	1.55	3164	255	153	0.93	1.00	0.93	2962	0.88	321	576
88	30.71	2668	1.45	3219	253	154	0.93	1.00	0.93	3025	0.88	332	572
90	32.83	2943	1.36	3276	251	156	0.94	1.00	0.94	3088	0.88	343	567
92	35.10	3246	1.26	3333	249	158	0.94	1.00	0.94	3150	0.89	355	563
94	37.58	3583	1.16	3391	247	159	0.94	1.00	0.94	3212	0.89	367	558
96	40.28	3958	1.06	3449	245	160	0.94	1.00	0.94	3274	0.89	379	553
98	43.27	4383	0.95	3509	242	162	0.95	1.00	0.95	3336	0.89	391	548
100	46.71	4880	0.82	3569	239	162	0.95	1.00	0.95	3398	0.89	404	539
102	50.70	5471	0.70	3629	237	163	0.95	1.00	0.95	3459	0.89	417	533
104	55.47	6190	0.58	3688	234	164	0.95	1.00	0.95	3520	0.89	430	526
106	61.41	7105	0.46	3747	231	164	0.95	1.00	0.95	3581	0.89	443	520
108	69.39	8357	0.33	3806	227	165	0.95	1.00	0.95	3641	0.89	457	513
110	81.77	10337	0.20	3864	224	165	0.95	1.00	0.95	3701	0.89	471	505
112	109.91	14923	0.08	3922	221	165	0.95	1.00	0.95	3761	0.89	484	498

ROAD LOAD SPEED REACHED AT 114. MPH

RUN NO. 02

```
1130-B32,TORQUE CONVERTER-FLUID COUPLING SIZING AND PERFORMANCE ANALYSIS
VEHICLE PERFORMANCE VERSION----------------------------------------REVISION E

VEHICLE.......FULL SIZED CAR (PER EPA)
ENGINE........TYPICAL MEDIUM SIZE -AIR CONDITIONER OFF  (PER EPA)
TRANSMISSION..3 SPEED AUTOMATIC (2.5 1ST,1.5 2ND) (PER EPA)
CONVERTER.....11.75 INS DIA ,2.0 STR (PER EPA)
-----------------------------------------------------------------------------
                                INPUT DATA
                                ----------

AXLE RATIO.......................................... 2.750

AXLE EFFICIENCY..................................... 0.960

VEHICLE WEIGHT...................................... 4300.   DIFF. FROM LAST RUN

DRIVE WHEEL RADIUS,FT............................... 1.100

TOTAL WHEEL INERTIA,SLUG-FT-FT...................... 11.200

FRONTAL AREA,SQ.FT.................................. 24.00

AIR TEMP.,DEG.F..................................... 85.0

AERODYNAMIC DRAG FACTOR............................. 0.500

ROAD GRADE,PERCENT.................................. 0.00

INPUT CONDITIONS
----------------
      INPUT INERTIA       0.30000 SLUG-FT-FT

      INPUT SPEED,RPM
        800. 1200. 1600. 2000. 2500. 3000. 3500. 4000. 4500.

      INPUT TORQUE, LB-FT
        223.  254.  267.  269.  269.  260.  243.  217.  184.


TRANSMISSION
------------
      RATIOS
       2.500 1.500 1.000

      EFFICIENCIES
       0.920 0.930 0.970

      SHIFT SPEEDS,MPH (ENGINE RPM IF GREATER THAN 100.)
         50.   75.

SPEED FOR TIRE SLIP FACTORS,MPH
         0.0  10.0  20.0  30.0  40.0  50.0  60.0

TIRE SLIP FACTORS
       0.880 0.910 0.940 0.960 0.970 0.980 0.990
```

RUN NO. 02

1130-B32,TORQUE CONVERTER-FLUID COUPLING SIZING AND PERFORMANCE ANALYSIS
VEHICLE PERFORMANCE VERSION----------REVISION E

VEHICLE.....FULL SIZED CAR (PER EPA)
ENGINE.....TYPICAL MEDIUM SIZE -AIR CONDITIONER OFF (PER EPA)
TRANSMISSION..3 SPEED AUTOMATIC (2.5 1ST,1.5 2ND) (PER EPA)
CONVERTER.....11.75 INS DIA ,2.0 STR (PER EPA)

VEHICLE				ENGINE			CONVERTER			TRANS		ROAD	
MPH	TIME SEC	DIST FT	ACCEL F/S/S	RPM	FTLB	HP	SPD RATIO	TORQ RATIO	EFF	O/P RPM	EFF	DRAG LB	DRIVE LB
TRANSMISSION IS IN GEAR 1 REAR AXLE EFFICIENCY = 0.960													
0	0.00	0	20.28	1736	268	88	0.00	2.00	0.00	0	0.00	66	2962
2	0.15	0	18.58	1765	268	87	0.11	1.88	0.21	79	0.19	66	2719
4	0.32	0	17.37	1813	268	89	0.21	1.78	0.38	157	0.35	67	2548
6	0.49	0	16.35	1869	269	92	0.31	1.68	0.52	233	0.48	68	2403
8	0.68	1	15.41	1931	269	95	0.40	1.59	0.64	309	0.58	69	2270
10	0.88	3	14.50	1993	269	98	0.48	1.50	0.72	384	0.66	70	2142
12	1.09	5	13.61	2060	269	101	0.55	1.42	0.79	458	0.72	72	2016
14	1.32	9	12.79	2133	269	105	0.62	1.34	0.83	531	0.75	74	1901
16	1.56	13	12.01	2207	269	109	0.68	1.26	0.86	603	0.78	76	1791
18	1.81	19	11.28	2291	269	113	0.73	1.20	0.88	674	0.79	78	1690
20	2.08	25	10.65	2383	269	117	0.78	1.14	0.89	744	0.80	81	1602
22	2.37	33	10.10	2447	269	123	0.83	1.06	0.88	814	0.79	84	1526
24	2.68	43	9.27	2535	268	124	0.87	1.01	0.88	884	0.79	87	1411
26	3.01	54	8.92	2669	266	128	0.89	1.00	0.89	954	0.80	90	1364
28	3.34	66	8.74	2812	264	134	0.91	0.99	0.91	1024	0.81	94	1343
30	3.68	80	8.55	2961	260	139	0.92	0.99	0.92	1093	0.82	98	1320
32	4.03	95	8.39	3105	257	144	0.93	1.00	0.93	1163	0.83	102	1301
34	4.39	111	8.12	3262	252	148	0.94	1.00	0.94	1233	0.83	106	1267
36	4.76	129	7.86	3428	245	152	0.95	1.00	0.95	1303	0.83	111	1234
38	5.14	149	7.49	3598	238	153	0.95	1.00	0.95	1373	0.83	115	1186
40	5.55	171	7.13	3768	230	155	0.95	1.00	0.95	1443	0.83	121	1139
42	5.98	196	6.75	3935	220	156	0.96	1.00	0.96	1512	0.83	126	1090
44	6.43	223	6.34	4099	210	155	0.96	1.00	0.96	1581	0.83	131	1038
46	6.92	254	5.93	4260	200	154	0.96	1.00	0.96	1649	0.83	137	984
48	7.44	289	5.48	4418	189	151	0.97	1.00	0.97	1717	0.83	143	927
50	8.01	328	5.09	4567	179	149	0.97	1.00	0.97	1785	0.83	150	877
TRANSMISSION SHIFTED INTO GEAR 2 AT 50. MPH. DRIVE AXLE EFFIENCY = 0.960													
52	8.35	352	6.20	3075	257	184	0.90	0.99	0.90	1853	0.83	156	1042
54	8.96	399	4.73	3092	257	149	0.93	1.00	0.93	1920	0.85	163	839
56	9.60	449	4.60	3177	254	151	0.93	1.00	0.93	1987	0.86	170	827
58	10.25	502	4.47	3267	251	154	0.94	1.00	0.94	2054	0.86	177	817
60	10.92	559	4.34	3359	248	156	0.94	1.00	0.94	2121	0.86	185	805
62	11.61	620	4.23	3454	244	159	0.94	1.00	0.94	2187	0.86	193	798
64	12.32	685	4.04	3550	240	159	0.95	1.00	0.95	2253	0.87	201	778
66	13.07	756	3.87	3646	236	161	0.95	1.00	0.95	2319	0.87	209	763
68	13.86	832	3.70	3742	231	162	0.95	1.00	0.95	2384	0.87	218	747
70	14.68	914	3.53	3837	226	162	0.95	1.00	0.95	2450	0.87	227	731
72	15.54	1003	3.34	3931	221	162	0.95	1.00	0.95	2514	0.87	236	714
74	16.46	1100	3.15	4024	215	162	0.96	1.00	0.96	2579	0.87	245	695
TRANSMISSION SHIFTED INTO GEAR 3 AT 75. MPH. DRIVE AXLE EFFIENCY = 0.960													
76	17.32	1194	3.82	3002	259	198	0.88	1.01	0.88	2644	0.84	254	801

Sundstrand Aviation
division of Sundstrand Corporation

RUN NO. 02

78	18.58	1335	2.27	2952	261	146	0.91	0.99	0.91	2708	0.86	264	589
80	19.91	1488	2.17	3007	259	148	0.92	0.99	0.92	2772	0.87	274	585
82	21.30	1653	2.08	3060	258	149	0.92	1.00	0.92	2835	0.87	284	582
84	22.76	1830	1.99	3110	256	151	0.93	1.00	0.93	2899	0.87	295	579
86	24.29	2020	1.88	3163	255	153	0.93	1.00	0.93	2962	0.88	306	575
88	25.91	2226	1.78	3219	253	154	0.93	1.00	0.93	3025	0.88	317	571
90	27.64	2451	1.67	3275	251	156	0.94	1.00	0.94	3088	0.88	328	567
92	29.49	2697	1.55	3333	249	157	0.94	1.00	0.94	3150	0.89	340	562
94	31.48	2968	1.44	3391	247	159	0.94	1.00	0.94	3212	0.89	351	557
96	33.64	3268	1.32	3449	245	160	0.94	1.00	0.94	3274	0.89	363	553
98	36.02	3605	1.20	3509	242	162	0.95	1.00	0.95	3336	0.89	376	548
100	38.71	3994	1.05	3569	239	162	0.95	1.00	0.95	3398	0.89	388	539
102	41.78	4448	0.92	3628	237	163	0.95	1.00	0.95	3459	0.89	401	533
104	45.36	4988	0.78	3688	234	163	0.95	1.00	0.95	3520	0.89	414	526
106	49.67	5651	0.64	3747	231	164	0.95	1.00	0.95	3581	0.89	427	520
108	55.13	6507	0.50	3806	227	164	0.95	1.00	0.95	3641	0.89	441	512
110	62.67	7713	0.35	3864	224	165	0.95	1.00	0.95	3701	0.89	454	505
112	74.86	9697	0.20	3922	221	165	0.95	1.00	0.95	3761	0.89	468	498
114	108.70	15314	0.06	3980	218	165	0.96	1.00	0.96	3821	0.89	481	490

ROAD LOAD SPEED REACHED AT 115. MPH

RUN NO. 03

```
1130-B32,TORQUE CONVERTER-FLUID COUPLING SIZING AND PERFORMANCE ANALYSIS
VEHICLE PERFORMANCE VERSION----------------------------------------REVISION E

VEHICLE.......FULL SIZED CAR (PER EPA)
ENGINE........TYPICAL MEDIUM SIZE -AIR CONDITIONER OFF  (PER EPA)
TRANSMISSION..3 SPEED AUTOMATIC (2.5 1ST,1.5 2ND) (PER EPA)
CONVERTER.....11.75 INS DIA ,2.0 STR (PER EPA)
-----------------------------------------------------------------------
                              INPUT DATA
                              ----------

AXLE RATIO.............................................  2.750

AXLE EFFICIENCY........................................  0.960

VEHICLE WEIGHT.........................................  4300.

DRIVE WHEEL RADIUS,FT..................................  1.100

TOTAL WHEEL INERTIA,SLUG-FT-FT.........................  11.200

FRONTAL AREA,SQ.FT.....................................  24.00

AIR TEMP.,DEG.F........................................   85.0

AERODYNAMIC DRAG FACTOR................................  0.500

ROAD GRADE,PERCENT.....................................   5.00  DIFF. FROM LAST RUN

INPUT CONDITIONS
----------------
      INPUT INERTIA       0.30000 SLUG-FT-FT

      INPUT SPEED,RPM
        800. 1200. 1600. 2000. 2500. 3000. 3500. 4000. 4500.

      INPUT TORQUE, LB-FT
        223.  254.  267.  269.  269.  260.  243.  217.  184.


TRANSMISSION
------------
      RATIOS
       2.500 1.500 1.000

      EFFICIENCIES
       0.920 0.930 0.970

      SHIFT SPEEDS,MPH (ENGINE RPM IF GREATER THAN 100.)
         50.   75.

SPEED FOR TIRE SLIP FACTORS,MPH
         0.0  10.0  20.0  30.0  40.0  50.0  60.0

TIRE SLIP FACTORS
       0.880 0.910 0.940 0.960 0.970 0.980 0.990
```


Sundstrand Aviation
division of Sundstrand Corporation

RUN NO. 03

1130-B32,TORQUE CONVERTER-FLUID COUPLING SIZING AND PERFORMANCE ANALYSIS
VEHICLE PERFORMANCE VERSION----------REVISION E

VEHICLE.....FULL SIZED CAR (PER EPA)
ENGINE.....TYPICAL MEDIUM SIZE -AIR CONDITIONER OFF (PER EPA)
TRANSMISSION..3 SPEED AUTOMATIC (2.5 1ST,1.5 2ND) (PER EPA)
CONVERTER.....11.75 INS DIA ,2.0 STR (PER EPA)

-------VEHICLE-------				----ENGINE-----			---CONVERTER---			---TRANS--		---ROAD---	
MPH	TIME SEC	DIST FT	ACCEL F/S/S	RPM	FTLB	HP	SPD RATIO	TORQ RATIO	EFF	O/P RPM	EFF	DRAG LB	DRIVE LB
TRANSMISSION IS IN GEAR 1 REAR AXLE EFFICIENCY = 0.960													
0	0.00	0	18.77	1736	268	88	0.00	2.00	0.00	0	0.00	281	2962
2	0.16	0	17.10	1766	268	88	0.11	1.88	0.21	79	0.19	281	2723
4	0.34	0	15.91	1815	268	89	0.21	1.78	0.38	157	0.35	282	2555
6	0.54	0	14.91	1872	269	92	0.31	1.68	0.52	233	0.46	283	2412
8	0.74	1	13.97	1934	269	95	0.40	1.59	0.64	309	0.58	284	2280
10	0.96	3	13.06	1996	269	98	0.48	1.50	0.72	384	0.66	285	2151
12	1.20	6	12.17	2064	269	102	0.55	1.42	0.79	458	0.72	287	2026
14	1.46	10	11.35	2136	269	106	0.62	1.34	0.83	531	0.75	269	1911
16	1.73	15	10.57	2211	269	109	0.68	1.26	0.86	603	0.78	291	1801
18	2.02	21	9.85	2294	269	113	0.73	1.20	0.88	674	0.79	293	1700
20	2.33	29	9.22	2387	269	118	0.77	1.14	0.89	744	0.80	296	1613
22	2.67	38	8.65	2450	269	124	0.83	1.06	0.88	814	0.79	299	1534
24	3.03	49	7.84	2538	268	125	0.87	1.01	0.88	884	0.79	302	1422
26	3.42	62	7.50	2671	266	130	0.89	1.00	0.89	954	0.80	305	1377
28	3.82	77	7.32	2815	264	135	0.90	0.99	0.90	1024	0.81	309	1355
30	4.23	93	7.14	2963	260	140	0.92	0.99	0.92	1093	0.82	313	1333
32	4.64	111	6.97	3107	257	145	0.93	1.00	0.93	1163	0.83	317	1313
34	5.08	131	6.71	3264	252	149	0.94	1.00	0.94	1233	0.83	321	1280
36	5.53	153	6.48	3429	245	154	0.95	1.00	0.95	1303	0.84	326	1252
38	6.00	178	6.08	3599	238	155	0.95	1.00	0.95	1373	0.83	330	1199
40	6.51	206	5.72	3769	229	157	0.95	1.00	0.95	1443	0.83	336	1153
42	7.05	237	5.34	3936	220	158	0.96	1.00	0.96	1512	0.83	341	1104
44	7.63	272	4.93	4100	210	157	0.96	1.00	0.96	1581	0.83	346	1051
46	8.26	313	4.51	4262	200	156	0.96	1.00	0.96	1649	0.83	352	997
48	8.97	361	4.06	4420	189	153	0.97	1.00	0.97	1717	0.83	358	939
50	9.75	417	3.65	4570	179	151	0.97	1.00	0.97	1785	0.83	365	887
TRANSMISSION SHIFTED INTO GEAR 2 AT 50. MPH. DRIVE AXLE EFFIENCY = 0.960													
52	10.24	452	4.15	3049	258	169	0.91	0.99	0.91	1853	0.83	371	965
54	11.13	520	3.24	3093	257	150	0.93	1.00	0.93	1920	0.85	378	842
56	12.06	594	3.12	3178	254	152	0.93	1.00	0.93	1987	0.86	385	832
58	13.02	674	3.00	3268	251	154	0.94	1.00	0.94	2054	0.86	392	821
60	14.03	760	2.87	3360	248	157	0.94	1.00	0.94	2121	0.86	400	810
62	15.09	854	2.75	3454	244	159	0.94	1.00	0.94	2187	0.86	408	801
64	16.21	957	2.56	3550	240	160	0.95	1.00	0.95	2253	0.87	416	783
66	17.41	1070	2.40	3647	236	162	0.95	1.00	0.95	2319	0.87	424	768
68	18.70	1195	2.23	3743	231	163	0.95	1.00	0.95	2384	0.87	433	752
70	20.09	1335	2.06	3838	226	163	0.95	1.00	0.95	2450	0.87	442	736
72	21.61	1492	1.87	3932	220	164	0.95	1.00	0.95	2514	0.87	451	719
74	23.31	1672	1.68	4025	215	163	0.96	1.00	0.96	2579	0.87	460	700
TRANSMISSION SHIFTED INTO GEAR 3 AT 75. MPH. DRIVE AXLE EFFIENCY = 0.960													
76	25.26	1886	1.42	2939	261	165	0.89	1.00	0.89	2644	0.85	469	673

RUN NO. 03

78	28.90	2295	0.77	2952	261	146	0.91	0.99	0.91	2708	0.86	479	590
80	33.03	2774	0.68	3007	259	148	0.92	0.99	0.92	2772	0.87	489	587
82	37.80	3339	0.59	3062	258	150	0.92	1.00	0.92	2835	0.87	499	584
84	43.43	4023	0.49	3111	256	152	0.93	1.00	0.93	2899	0.87	510	581
86	50.42	4893	0.39	3164	255	153	0.93	1.00	0.93	2962	0.88	521	577
88	59.74	6083	0.29	3219	253	155	0.93	1.00	0.93	3025	0.88	532	573
90	74.03	7949	0.18	3276	251	157	0.94	1.00	0.94	3088	0.88	543	569
92	107.21	12384	0.06	3333	249	158	0.94	1.00	0.94	3150	0.89	555	564

ROAD LOAD SPEED REACHED AT 94. MPH

RUN NO. 04

```
1130-B32,TORQUE CONVERTER-FLUID COUPLING SIZING AND PERFORMANCE ANALYSIS
VEHICLE PERFORMANCE VERSION----------------------------------------REVISION E

VEHICLE.......FULL SIZED CAR (PER EPA)
ENGINE........TYPICAL MEDIUM SIZE -AIR CONDITIONER OFF  (PER EPA)
TRANSMISSION..3 SPEED AUTOMATIC (2.5 1ST,1.5 2ND) (PER EPA)
CONVERTER.....11.75 INS DIA ,2.0 STR (PER EPA)
-------------------------------------------------------------------------
                                INPUT DATA
                                ----------

AXLE RATIO.............................................  2.750

AXLE EFFICIENCY........................................  0.960

VEHICLE WEIGHT.........................................  4300.

DRIVE WHEEL RADIUS,FT..................................  1.100

TOTAL WHEEL INERTIA,SLUG-FT-FT.........................  11.200

FRONTAL AREA,SQ.FT.....................................  24.00

AIR TEMP.,DEG.F........................................   85.0

AERODYNAMIC DRAG FACTOR................................  0.500

ROAD GRADE,PERCENT.....................................  30.00  DIFFERENT FROM LAST RUN

INPUT CONDITIONS
----------------
      INPUT INERTIA       0.30000 SLUG-FT-FT

      INPUT SPEED,RPM
        800. 1200. 1600. 2000. 2500. 3000. 3500. 4000. 4500.

      INPUT TORQUE, LB-FT
        223.  254.  267.  269.  269.  260.  243.  217.  184.


TRANSMISSION
------------
      RATIOS
       2.500 1.500 1.000

      EFFICIENCIES
       0.920 0.930 0.970

      SHIFT SPEEDS,MPH (ENGINE RPM IF GREATER THAN 100.)
         50.   75.

SPEED FOR TIRE SLIP FACTORS,MPH
         0.0  10.0  20.0  30.0  40.0  50.0  60.0

TIRE SLIP FACTORS
       0.880 0.910 0.940 0.960 0.970 0.980 0.990
```

RUN NO. 04

1130-832,TORQUE CONVERTER-FLUID COUPLING SIZING AND PERFORMANCE ANALYSIS
VEHICLE PERFORMANCE VERSION----------REVISION E

VEHICLE.....FULL SIZED CAR (PER EPA)
ENGINE.....TYPICAL MEDIUM SIZE -AIR CONDITIONER OFF (PER EPA)
TRANSMISSION..3 SPEED AUTOMATIC (2.5 1ST,1.5 2ND) (PER EPA)
CONVERTER.....11.75 INS DIA ,2.0 STR (PER EPA)

-------VEHICLE-------				----ENGINE-----			---CONVERTER---			---TRANS--		---ROAD---	
MPH	TIME SEC	DIST FT	ACCEL F/S/S	RPM	FTLB	HP	SPD RATIO	TORQ RATIO	EFF	O/P RPM	EFF	DRAG LB	DRIVE LB

TRANSMISSION IS IN GEAR 1 REAR AXLE EFFICIENCY = 0.960

0	0.00	0	11.25	1736	268	88	0.00	2.00	0.00	0	0.00	1356	2962
2	0.29	0	9.73	1773	268	89	0.11	1.88	0.21	79	0.19	1356	2747
4	0.62	0	8.65	1827	268	91	0.21	1.78	0.38	157	0.35	1357	2593
6	0.99	2	7.69	1886	269	94	0.31	1.69	0.52	233	0.48	1358	2456
8	1.41	5	6.77	1949	269	98	0.39	1.60	0.63	309	0.58	1359	2326
10	1.89	10	5.86	2012	269	101	0.47	1.51	0.72	384	0.66	1360	2198
12	2.45	18	4.99	2080	269	105	0.55	1.42	0.78	458	0.71	1362	2075
14	3.12	29	4.18	2154	269	109	0.61	1.34	0.83	531	0.75	1364	1961
16	3.94	46	3.40	2228	269	113	0.67	1.27	0.86	603	0.78	1366	1852
18	4.96	70	2.70	2312	269	117	0.72	1.20	0.88	674	0.79	1368	1754
20	6.28	106	2.09	2405	269	122	0.77	1.15	0.89	744	0.80	1371	1669
22	8.22	165	1.30	2461	269	126	0.82	1.07	0.88	814	0.79	1374	1560
24	11.98	292	0.68	2552	268	130	0.86	1.02	0.88	884	0.79	1377	1474
26	18.46	529	0.39	2685	266	136	0.88	1.00	0.89	954	0.80	1380	1437
28	30.35	1000	0.21	2828	264	142	0.90	0.99	0.90	1024	0.80	1384	1414
30	72.63	2812	0.04	2975	260	147	0.91	0.99	0.91	1093	0.81	1388	1394

ROAD LOAD SPEED REACHED AT 31. MPH

Sundstrand Aviation
division of Sundstrand Corporation

S. Distance and Velocity as a Function of Time

APPENDIX S

DISTANCE AND VELOCITY AS A FUNCTION OF TIME

Figures APP-S1 and APP-S2 show distance and velocity as a function of time for the baseline (8A) transmission with the maximum hydraulic pressure limited to 6000 and 4500 psi respectively. These curves were plotted for zero grade acceleration from data obtained from Sundstrand's continuous computer program (ref. Appendix P).

Figure APP-S3 shows the same type curve for the "typical" 3 speed automatic transmission using Sundstrand's torque converter program (ref. Appendix R).

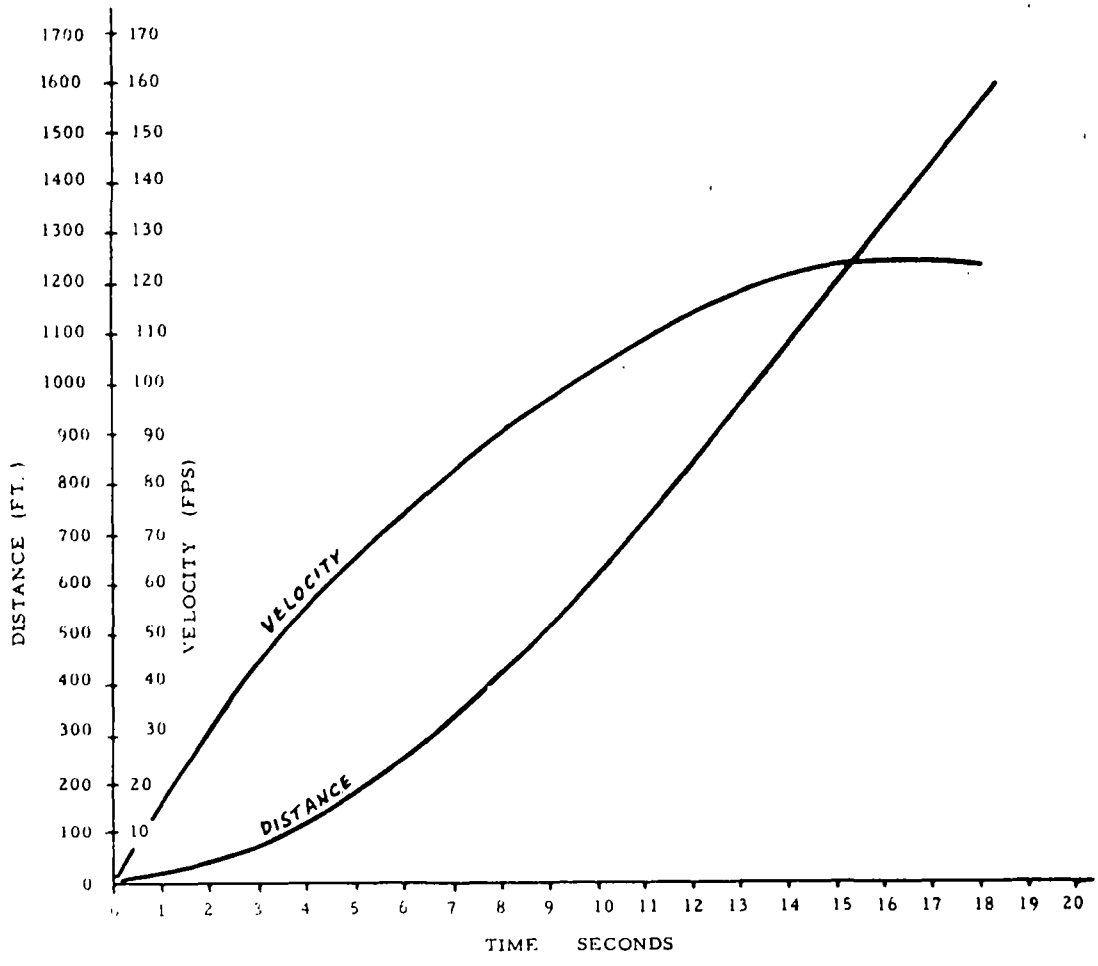

Figure APP-S1 Distance and Velocity vs. Time
Pressure Limited to 6000 PSI

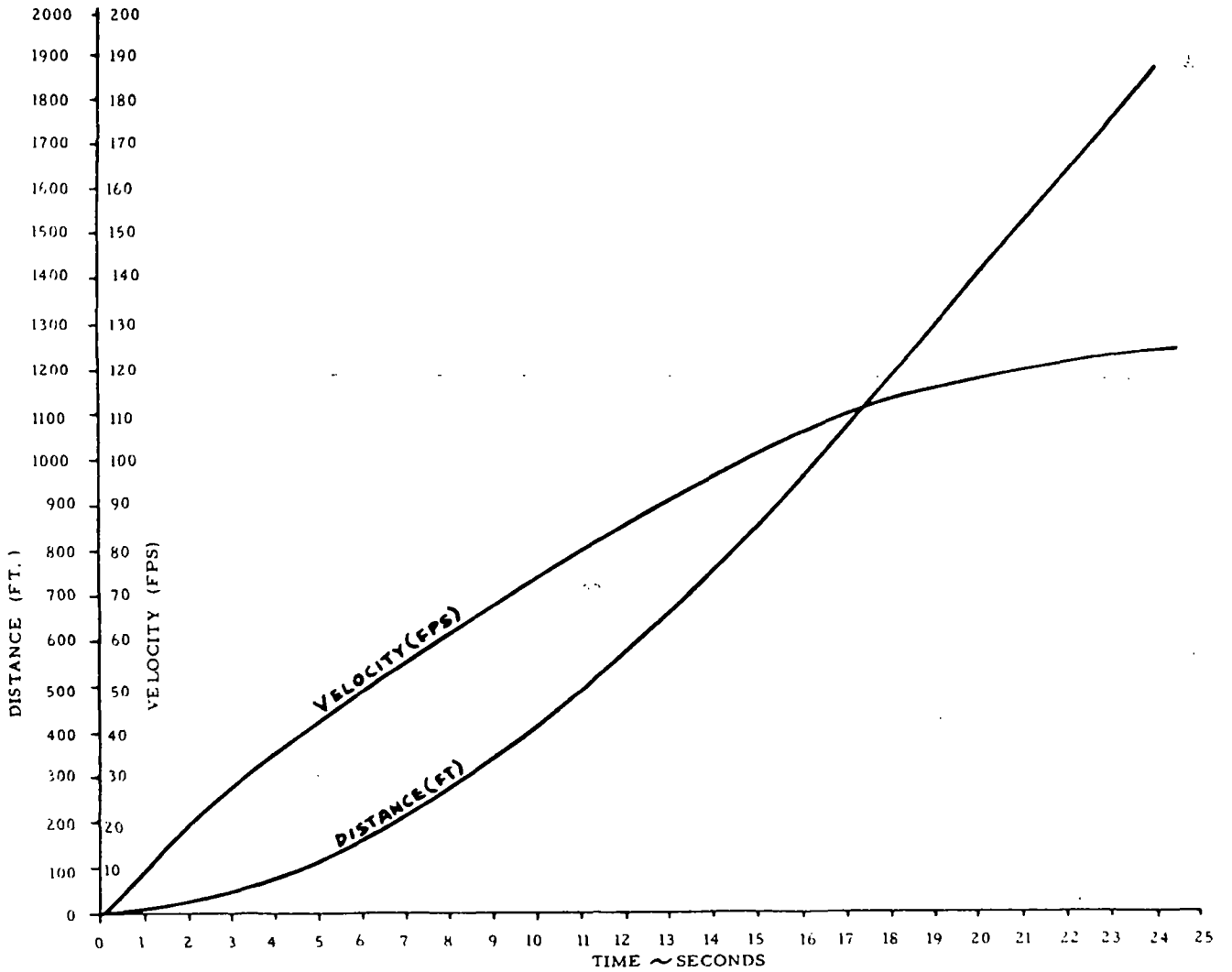

Figure APP-S2 Distance and Velocity vs. Time
Pressure Limited to 4500 PSI

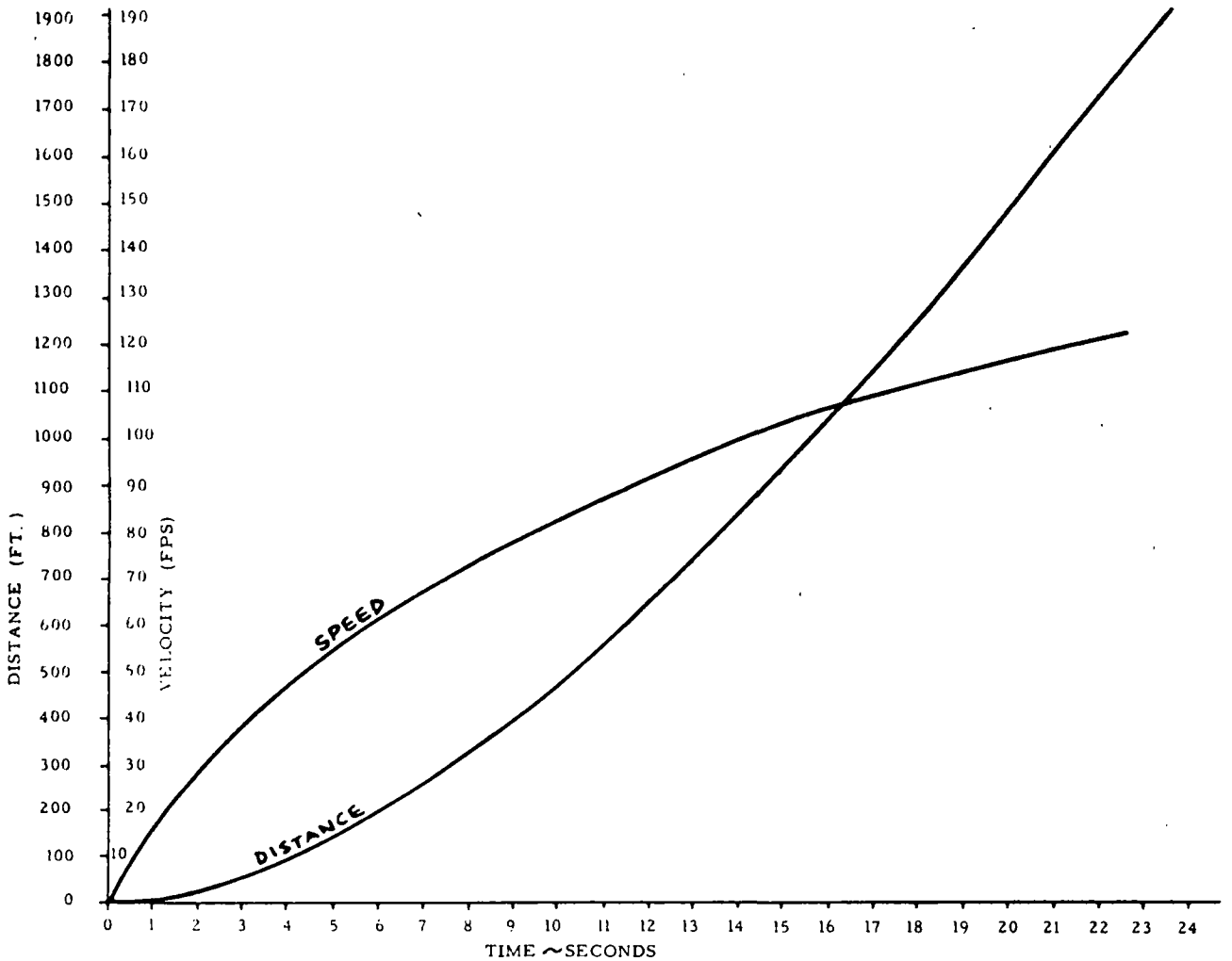

Figure APP-S3 Distance and Speed vs. Time
"Typical" 3 Speed Automatic Transmission

T. Constant Speed Fuel Consumption Calculations

APPENDIX T

CONSTANT SPEED FUEL CONSUMPTION CALCULATIONS

For transmissions 8A and 8C, the fuel consumption in MPG was calculated in the following manner:

$$\text{Fuel Consumption (MPG)} = \frac{(\rho)(V)}{(Q)(HP)}$$

Where:

MPG - Miles Per Gallon

ρ - Density of Fuel (5.75 Lb/Gal)

V - Vehicle Speed - MPH

Q - Specific Fuel Consumption - $\frac{LB}{BHP\ HR}$
(Reference Appendix H)

$$HP = HP_E + HP_{FW} + HP_{ACC}$$

HP_E - Engine HP from Computer Program
(Reference Appendix A)

HP_{FW} - Flywheel HP (Reference Appendix D)

HP_{ACC} - Engine Accessory HP (Reference Appendix C)

Example: Transmission 8A at 60 MPH
Without Air Conditioning

$$HP = HP_E + HP_{FW} + HP_{ACC}$$

HP_E = 36.3 HP @ 1787 RPM (From Computer Program T8H, Reference Appendix A)

HP_{FW} = 1.1 HP (From Figure APP-D1, Reference Appendix D)

HP_{ACC} = 4.2 HP (From Figure APP-C1, Reference Appendix C)

$$HP = 36.3 + 1.1 + 4.2$$

$$= 41.6$$

$$MPG = \frac{(\rho)(V)}{(Q)(HP)}$$

ρ = 5.75 Lb/Gal

V = 60 MPH

HP = 41.6

$Q = .50 \frac{LB}{BHP\ HR}$ (from Figure APP-H1, Reference Appendix H)

$$MPG = \frac{(5.75)(60)}{(.50)(41.6)}$$

$$= 16.59$$

Tables APP-T1 through APP-T3 show the calculations of the constant speed fuel consumption for transmission 8A, 8C, and the "typical" three-speed automatic.

The energy required from the engine in terms of BTU/Mile was calculated for transmissions 8A, 8C, and the "typical" three-speed automatic under steady speed conditions. The results of these calculations is shown in Tables APP-T4 through APP-T6.

TABLE APP-T1

CONSTANT SPEED FUEL CONSUMPTION, VERSION 8A

$$MPG = (\rho \times V) / (Q \times HP)$$

ρ = 5.75 Lb/Gal

(A) With Air Conditioning:

V_{MPH}	N_E	HP_E	HP_{ACC}	HP_{FW}	HP_{TOTAL}	Q	MPG
20	1372	12.3	7.1	2.5	21.9	.580	9.05
30	1506	21.5	7.8	2.3	31.6	.530	10.30
40	1622	23.1	8.1	2.0	33.2	.530	13.07
50	1718	27.9	8.6	1.6	38.1	.510	14.80
60	1787	36.3	8.8	1.1	46.2	.495	15.09
70	1817	47.7	8.9	.7	57.3	.465	15.11
80	1765	66.1	9.1	.2	75.4	.495	12.32

(B) Without Air Conditioning:

20	1372	12.3	3.5	2.5	18.3	.640	9.82
30	1506	21.5	3.7	2.3	27.5	.550	11.41
40	1622	23.1	3.9	2.0	29.0	.550	14.42
50	1718	27.9	4.0	1.6	33.5	.535	16.04
60	1787	36.3	4.2	1.1	41.6	.500	16.59
70	1817	47.7	4.3	.7	52.7	.470	16.25
80	1765	66.1	4.2	.2	70.5	.490	13.32

TABLE APP-T2

CONSTANT SPEED FUEL CONSUMPTION, VERSION 8C

$$MPG = (\rho \times V) / (Q \times HP)$$

ρ = 5.75 Lb/Gal

(A) With Air Conditioning:

V_{MPH}	N_E	HP_E	HP_{ACC}	HP_{FW}	HP_{TOTAL}	Q	MPG
20	879	12.6	5.0	2.5	20.1	.505	11.33
30	902	22.1	5.1	2.3	29.5	.530	11.03
40	912	23.9	5.2	2.0	31.1	.530	13.95
50	905	28.8	5.1	1.6	35.5	.510	15.88
60	1787	36.3	8.8	1.1	46.2	.495	15.09
70	1817	47.7	8.9	.7	57.3	.465	15.11
80	1765	66.1	9.1	.2	75.4	.495	12.32

(B) Without Air Conditioning:

20	879	12.6	2.1	2.5	17.2	.530	12.62
30	902	22.1	2.2	2.3	26.6	.520	12.47
40	912	23.9	2.2	2.0	28.1	.525	15.59
50	905	28.8	2.2	1.6	32.6	.525	16.80
60	1787	36.3	4.2	1.1	41.6	.500	16.59
70	1817	47.7	4.3	.7	52.7	.470	16.25
80	1765	66.1	4.2	.2	70.5	.490	13.32

TABLE APP-T3

CONSTANT SPEED FUEL CONSUMPTION

THREE-SPEED AUTOMATIC TRANSMISSION

$$MPG = \frac{5.75 \times MPH}{LB/HR}$$

(A) With Air Conditioning:

MPH	N_E	HP_E	HP_{ACC}	HP_{TOTAL}	SFC	LB/HR	MPG
20	893	6.1	5.0	11.1	.700	7.76	14.81
30	1167	10.7	6.2	16.9	.630	10.65	16.20
40	1483	16.4	7.5	23.9	.580	13.85	16.60
50	1837	24.5	9.1	33.6	.553	18.58	15.48
60	2353	38.5	11.2	49.7	.525	26.10	13.21
70	2826	56.1	13.2	69.3	.520	36.0	11.18
80	3248	77.0	15.0	92.0	.515	47.4	9.72

(B) Without Air Conditioning:

20	893	6.1	2.3	8.4	.880	7.39	15.58
30	1167	10.7	3.1	13.8	.700	9.66	17.86
40	1483	16.4	3.8	20.2	.635	12.83	17.92
50	1837	24.5	4.3	28.8	.590	17.0	16.92
60	2353	38.5	5.4	43.9	.550	24.1	14.30
70	2826	56.1	6.5	62.6	.540	33.8	11.91
80	3248	77.0	7.2	84.2	.528	44.5	10.34

TABLE APP-T4

CONSTANT SPEED FUEL CONSUMPTION IN BTU/MILE

BASELINE 8A

$$\frac{BTU}{MI} = \frac{2545 \times HP_E}{V_{MPH}}$$

V	HP_E w/o Air	BTU/MI w/o Air	HP_E w/Air	BTU/MI w/Air
20	18.3	2329	21.9	2787
30	27.5	2333	31.6	2680
40	29.0	1845	33.2	2112
50	33.5	1705	38.1	1939
60	41.6	1765	46.2	1960
70	52.7	1916	57.3	2072
80	70.5	2243	75.4	2399

TABLE APP-T5

CONSTANT SPEED FUEL CONSUMPTION IN BTU/MILE

ALTERNATE 8C

$$\frac{BTU}{MI} = \frac{2545 \times HP_E}{V_{MPH}}$$

V	HP_E w/o Air	BTU/MI w/o Air	HP_E w/Air	BTU/MI w/Air
20	17.2	2189	20.1	2558
30	26.6	2257	29.5	2503
40	28.1	1788	31.1	1979
50	32.6	1659	35.5	1807
60	41.6	1765	46.2	1960
70	52.7	1916	57.3	2072
80	70.5	2243	75.4	2399

Sundstrand Aviation
division of Sundstrand Corporation

TABLE APP-T6

CONSTANT SPEED FUEL CONSUMPTION IN BTU/MILE

CONVENTIONAL AUTOMATIC

$$\frac{BTU}{MI} = \frac{2545 \times HP_E}{V_{MPH}}$$

V	HP_E w/o Air	BTU/MI w/o Air	HP_E w/Air	BTU/MI w/Air
20	8.4	1069	11.1	1412
30	13.8	1171	16.9	1434
40	20.2	1285	23.9	1521
50	28.8	1466	33.6	1710
60	43.9	1862	49.7	1862
70	62.6	2261	69.3	2520
80	84.2	2679	92.0	2927

U. Flywheel Data Supplied by Lockheed

APPENDIX U

FLYWHEEL DATA SUPPLIED BY LOCKHEED

The following is flywheel data supplied to Sundstrand by Lockheed Missile and Space Corporation - Ground Vehicle Division. The version (A) data was used by Sundstrand in carrying out the study effort. It should be noted that the version (B) flywheel configuration would have resulted in a lighter and less expensive system. This data was unfortunately not available until after the transmission layout drawing had been completed. The transmission could easily accept the version (B) flywheel.

Lockheed Missiles & Space Company

FLYWHEEL ASSEMBLY DATA

(Based on Available Information Nov. 2, 1971)

I. CONFIGURATION - FLYWHEEL (B)

Flywheel 13.06 dia per LMSC Dwg. No. SK 20-2102

II. WEIGHT BREAKDOWN

Flywheel	86.16 lb
Containment Ring	33.45
Bearing set "A"	0.90
Bearing "B"	0.45
Seal (2)	0.24
Housing ring	21.67
Housing cover (2)	40.50
Bearing nut	0.21
Vac pump element	0.46
Misc	2.82
	186.86 lb

III. POWER LOSS

	Speed RPM				
	28000	24000	18000	12000	8000
Windage	3.112	2.021	0.903	0.290	0.093
Bearing	0.162	0.102	0.043	0.013	0.004
Seal (2)	0.224	0.192	0.144	0.096	0.064
Lube pump	0.016	0.016	0.016	0.016	0.016
Vac pump	0.090	0.090	0.090	0.090	0.090
Total	3.604	2.421	1.196	0.505	0.267

Conditions:
(1) 30 mm Hg pressure in housing.
(2) Face type rotary seal.
(3) Seal leakage rate 0.1 cfm
(4) Vac pump capacity 3 cfm

IV. ESTIMATED UNIT COST

Flywheel 13.06" diameter per LMSC Drawing No. SK-20-2102

Description	Production Quantities at: 100,000/year	1,000,000/year
Flywheel	$25.60	$24.37
Containment Ring	13.00	12.06
Bearing Set A	8.00	7.14
Bearing B	4.00	3.57
Seal (2)	7.70	6.86
Housing Ring	9.15	8.68
Housing Cover	17.40	16.43
Vacuum Pump Element	4.75	4.23
Bearing Retainment Nut	.91	.82
Studs, Nuts, Washers, etc.	1.51	1.46
Assembly	1.98	1.50
Total Unit Cost	$94.00	$87.12
Initial cost of required Machinery & Equipment	$1,956,000.00	$10,580,000.00

Note: Above unit cost does not include profit

Lockheed Missiles & Space Company

FLYWHEEL ASSEMBLY DATA

(Based on Information Available on Nov. 2, 1971)

I. CONFIGURATION - FLYWHEEL (A)

Flywheel, 20.44 diameter per LMSC Drawing No. SK 20-2103

II. WEIGHT BREAKDOWN

Flywheel	44.11 lb
Containment ring	33.45
Bearing set "A"	0.56
Bearing "B"	0.28
Seal (1)	0.12
Housing	74.54
Housing cover	71.90
Spacers	0.83
Vac pump element	1.84
Bearing ret. nut	.21
Misc	2.00
Total	229.84 lb

III. POWER LOSSES

	Speed RPM				
	28000	24000	18000	12000	8000
Windage	3.201	2.076	0.922	0.296	0.095
Bearing	0.112	0.071	0.030	0.090	0.003
Seal (1)	0.113	0.096	0.072	0.048	0.032
Lube pump	0.016	0.016	0.016	0.016	0.016
Vac pump	0.247	0.247	0.247	0.247	0.247
Total	3.689	2.506	1.287	0.697	0.393

Conditions:
(1) 5 mm Hg press in housing
(2) Face type rotary seal
(3) Seal leakage rate 0.1 cfm
(4) Vac pump capacity 13.0 cfm

IV. ESTIMATED UNIT COST

Flywheel 20.44" diameter per LMSC drawing no. SK-20-2103

Description	Production Quantities at: 100,000/year	1,000,000/year
Flywheel	$ 15.50	$ 14.29
Containment ring	14.39	13.45
Bearing set "A"	8.00	7.14
Bearing "B"	4.00	3.57
Seal (1)	3.85	3.43
Housing	26.61	26.13
Housing cover	27.74	26.79
Spacers	.10	.10
Bearing retainment nut	.91	.82
Vacuum pump element	3.00	2.68
Studs, nuts, washers, etc.	1.71	1.63
Assembly	1.98	1.50
Total Unit Cost	$107.79	$101.53
Initial cost of required Machinery & Equipment	$1,956,000.00	$10,580,000.00

Note: Above unit cost does not include profit.

V. Stress and Sizing Data

APPENDIX V

STRESS AND SIZING DATA

The stresses that exist in the various baseline (8A) transmission components were estimated at the maximum torque that could exist in each respective component. The conclusion of this effort was that the transmission is of a mechanically feasible design that could be constructed with only those changes normally associated with development.

Maximum system torques were calculated by computer programs T8H and T8HD2 (reference Appendix A). The way in which the stress levels were estimated is outlined below:

Gears

After the maximum torque levels that occur in the gears were determined estimated bending stresses were calculated. It should be noted that no attempt was made to optimize the gear design. Knowing the approximate gear diameters, face widths, and diametral pitches, maximum bending stresses were estimated with the following formulas. Helix angle was not used in the calculations below, so the calculated face widths are conservative.

$$W_T = \frac{T \times 2}{D}$$

$$\sigma_B = \frac{W_T \times D_P}{FW \times J}$$

T = maximum torque (in-lb)

D = gear pitch diameter (in)

W_T = tangential load (lb)

D_P = diametral pitch

FW = face width (in)

J = geometry factor

σ_B = bending stress (psi)

The calculated gear bending stresses are summarized in Table APP-V1.

Shafts

The shafts that appeared to be highly torqued for their cross-sectional size were checked for maximum shear stress, and found to be acceptable. The following formula was used to estimate the maximum shaft shear stresses.

$$\tau = \frac{16 \times T \times D}{\pi \times (D^4 - d^4)}$$

τ = shaft shear stress (psi)

T = shaft torque (in-lb)

D = shaft outside diameter

d = shaft inside diameter

Shaft shear stresses are summarized in Table APP-V2.

Clutches

Since the clutches in this transmission are normally required to engage only at zero differential speed, they were not sized on energy considerations.

The output and mode 1 clutches, however, must carry a dissipative load for a short time during initial flywheel spin-up. The power absorbed by

TABLE APP-VI

GEAR BENDING STRESSES

At Maximum Torque:

Gear Identification	Maximum Torque (in-lb)	Bending Stress (psi)
Flywheel Input to Summer	3547	36.9K
V-Unit Link	6320	68.8K
Mode 1 Clutch Gear	10437	75.1K
Mode 2 F-Unit Link	5376	53.6K
V-Unit	2760	69.1K
Mode 1 F-Unit	2904	83.2K
Mode 2 F-Unit Clutch	3444	68.1K
Flywheel Pinion	300	31.5K
Flywheel Jackshaft Gear	1629	22.1K
Flywheel Jackshaft Pinion	1629	39.2K
Planetary Large Ring	3048	11.7K
Planetary Small Ring	3547	16.6K
Planetary Large Sun	6348	72.9K
Planetary Small Sun	5376	84.1K

TABLE APP-V2

SHAFT SHEAR STRESSES

At Maximum Torque:

Shaft Identification	Maximum Torque (in-lb)	Shear Stress (psi)
Small Sun (Mode 2 F-Unit)	5376	44.6K
Large Sun (Output)	6348	26.1K
Input	3048	12.3K

the clutch lining under this condition is initially .4 to .5 horsepower per square inch, decreasing to zero as the flywheel comes up to operating speed. This would not cause significant plate wear with automotive type clutch linings. Provisions have been made to carry away clutch heat during start up with a supply of cooling oil.

Piston areas were sized to give a unit loading on the clutch plate material of about 500 lb/in^2 at maximum static load. (Unit loading is lower during flywheel spin up.) This is within acceptable limits for commonly used automotive lining materials.

Clutch diameter was determined by space available in the transmission. The number of plates in each clutch were selected to give the clutches a torque capacity which exceeds torque requirements so that slipping would not occur under normal operating conditions.

The formula that was used to calculate clutch torque capacity is given below.

$$T = N\mu F r_e$$

T = clutch torque capacity (in-lb)

N = number of friction surfaces
(a 5 plate clutch has 10 friction surfaces)

F = total axial force (lb)

r_e = effective radius (in)

$$r_e = \frac{(D^3 - d^3)}{(3)(D^2 - d^2)}$$

D = plate outside diameter

d = plate inside diameter

μ = coefficient of friction (static) for clutch lining under consideration.

The results of clutch sizing are summarized in Table APP-V3.

TABLE APP-V3

CLUTCH SIZING

Clutch	Req. Capacity (in-lb)	Calculated Capacity (in-lb)
Input Clutch (8C Only)	1,040	1,314
Output Clutch	10,104	11,261
Mode 1 Clutch	10,437	11,261
Mode 2 Clutch	3,444	4,280

W. Typical Results Sundstrand Performance Analysis Program

APPENDIX W

TYPICAL RESULTS SUNDSTRAND PERFORMANCE ANALYSIS COMPUTER PROGRAM

The following is a typical readout of the Sundstrand performance analysis computer program over the Federal Driving Cycle. Figure APP-W1 is a plot of these results. The run was for the Alternate (8C) transmission with air conditioning.

Figure APP-W1 (8C) Transmission (with Air Conditioning) Performance over the Federal Driving Cycle

Sundstrand Aviation
division of Sundstrand Corporation

ENERGY STORING TRANSMISSION PERFORMANCE ANALYSIS

TIME START = 0. SEC TIME FINISH = 1870. SEC
STEP SIZE = 2.000 SEC

VEHICLE WGT = 4300. LBS WHEEL INERTIA = 0.3615 LFS2
TIRE DIA = 2.1800 FT LOG DISP = 3.50 IN3/R
TIRE INERTIA = 11.200 FOLOS2 FUEL WEIGHT = 5.75 LB/GL
ENERGY LEVEL = 0.114E 07 FTOLBS
GRADE = C.0 EFF FACTOR = 0.
VERSION CODE = 0.

B3

R3

GEAR RATIOS

1	1.0000	E
2	2.7688	D
3	11.8230	*
4	2.2900	V
5	1.5610	F2
6	10.9476	F1
7	385.4800	SHIFT POINT (RPM)
8	0.5258	ENGINE SHIFT RATIO

SUMMER RATIOS

1	0.0	U
2	0.5218	E
3	0.7351	V
4	1.0000	W
5	1.6807	F

ENERGY STORING TRANSMISSION PERFORMANCE ANALYSIS

TIME SEC	SPEED MPH	ACCEL FPS/S	OUT POWER HP	FLYWL SPEED RPM	FLYWL POWER HP	THROT O/D	ENGINE SPEED RPM	ENGINE POWER HP	WOBLR RATIO	WORKG PRES PSI	SFC LB/HP/HR	I MPG MPG	C MPG MPG	EFF O/D
2.	-0.0	0.0	-0.07	24000.	-2.75	0.2109	785.5	7.39	0.0056	790.3	0.9066	0.117	0.117	0.515
4.	-0.0	0.0	-0.02	24000.	-2.75	0.2109	785.5	7.39	0.0056	790.3	0.9066	0.117	0.117	0.515
6.	-0.0	0.0	-0.02	24000.	-2.75	0.2109	785.5	7.39	0.0056	790.3	0.9066	0.117	0.117	0.515
8.	-0.0	0.0	-0.07	24000.	-2.75	0.2109	785.5	7.39	0.0056	790.3	0.9066	0.117	0.117	0.515
10.	-0.0	0.0	-0.02	24000.	-2.75	0.2109	785.5	7.39	0.0056	790.3	0.9066	0.117	0.117	0.515
12.	-0.0	0.0	-0.02	24000.	-2.75	0.2109	785.5	7.39	0.0056	790.3	0.9066	0.117	0.117	0.515
14.	-0.0	0.0	-0.02	24000.	-2.75	0.2109	785.5	7.39	0.0056	790.3	0.9066	0.117	0.117	0.515
16.	-0.0	0.0	-0.02	24000.	-2.75	0.2109	785.5	7.39	0.0056	790.3	0.9066	0.117	0.117	0.515
18.	-0.0	0.0	-0.02	24000.	-2.75	0.2109	785.5	7.39	0.0056	790.3	0.9066	0.117	0.117	0.515
20.	-0.0	2.16	-0.14	24000.	-2.63	0.2335	785.5	8.19	0.0056	1491.2	0.8647	0.111	0.116	0.449
22.	5.90	4.22	-10.81	23941.	6.98	0.3139	812.8	11.53	0.2399	1669.6	0.7030	4.283	0.495	0.659
24.	11.50	4.03	-20.14	23760.	15.22	0.3725	835.3	14.20	0.4500	1632.3	0.6088	7.741	1.099	0.739
26.	16.90	2.42	-19.26	23525.	13.11	0.4192	853.7	16.46	0.6446	1133.3	0.5546	10.732	1.840	0.704
28.	18.10	1.76	-16.08	23456.	9.63	0.4262	857.4	16.83	0.6871	913.6	0.5502	11.326	2.517	0.663
30.	21.70	1.61	-18.34	23216.	10.90	0.4974	867.3	19.95	0.8132	915.1	0.5112	12.312	3.170	0.641
32.	22.50	-0.07	-4.50	23156.	-3.17	0.4829	869.3	19.43	0.8411	306.9	0.5186	12.920	3.780	0.447
34.	21.50	-0.77	1.54	23230.	-8.91	0.4530	866.5	18.15	0.8062	44.5	0.5345	12.821	4.312	0.511
36.	20.40	-1.65	8.44	23307.	-15.50	0.4361	863.9	17.40	0.7678	-260.4	0.5438	12.480	4.765	0.657
38.	17.00	-2.02	9.63	23520.	-15.81	0.3833	854.0	15.05	0.6481	-408.2	0.5871	11.148	5.101	0.703
40.	14.90	-0.55	0.14	23631.	-5.81	0.3442	847.2	13.38	0.5733	67.2	0.6434	10.047	5.349	0.513
42.	15.50	0.81	-7.97	23601.	2.16	0.3665	849.2	14.29	0.5947	541.8	0.6118	10.286	5.584	0.559
44.	17.10	2.05	-17.07	23514.	10.88	0.4146	854.3	16.29	0.6517	1004.1	0.5571	10.921	5.826	0.684
46.	21.10	2.13	-21.93	23259.	14.67	0.4940	865.8	19.85	0.7923	1095.9	0.5118	12.021	6.096	0.680
48.	22.90	0.55	-10.10	23125.	2.31	0.5030	870.3	20.26	0.8550	537.9	0.5105	12.803	6.375	0.497
50.	22.60	-1.43	7.23	23148.	-14.94	0.4805	869.6	19.34	0.8445	-173.5	0.5198	13.005	6.640	0.614
52.	19.00	-2.49	14.12	23400.	-20.80	0.4227	860.0	16.76	0.7188	-554.5	0.5516	11.901	6.843	0.726
54.	15.80	-0.48	-0.34	23585.	-5.54	0.3568	850.2	13.93	0.6054	98.7	0.6249	10.528	6.979	0.501
56.	17.70	2.13	-18.19	23479.	11.85	0.4269	856.2	16.82	0.6729	1039.2	0.5500	11.084	7.126	0.688
58.	21.60	2.38	-24.62	23223.	17.22	0.5152	867.1	20.65	0.8097	1197.5	0.5090	11.890	7.290	0.691
60.	24.20	1.21	-16.93	23022.	8.73	0.5506	873.4	22.29	0.9001	797.0	0.5057	12.415	7.461	0.589
62.	24.90	0.15	-7.34	22963.	-1.09	0.5459	874.9	22.15	0.9243	411.0	0.5053	12.861	7.635	0.424
64.	24.60	-0.07	-5.14	22989.	-3.18	0.5344	874.3	21.66	0.9139	327.0	0.5067	12.958	7.801	0.429
66.	24.70	0.04	-6.22	22980.	-2.15	0.5388	874.5	21.85	0.9174	368.3	0.5062	12.914	7.956	0.427
68.	24.70	-0.04	-5.52	22980.	-2.84	0.5376	874.5	21.80	0.9174	341.4	0.5063	12.939	8.103	0.428

ENERGY STORING TRANSMISSION PERFORMANCE ANALYSIS

TIME	SPEED	ACCEL	OUT POWER	FLYWL SPEED	FLYWL POWER	THRUST	ENGINE SPEED	ENGINE POWER	WOBBLE RATIO	WORKG PRES	SFC	I MPG	C MPG	EFF
SEC	MPH	FPS/S	HP	RPM	HP	O/D	RPM	HP		PSI	LB/HP/HR	MPG	MPG	O/O
70.	24.60	0.33	-8.95	22789.	0.62	0.5415	874.3	21.95	0.9139	475.5	0.5058	12.810	8.237	0.441
72.	25.60	0.29	-9.07	22903.	0.41	0.5672	876.4	23.07	0.9485	473.0	0.5075	12.640	8.360	0.428
74.	25.40	-0.22	-3.97	22921.	-4.62	0.5528	876.0	22.47	0.9416	281.0	0.5061	12.912	8.483	0.425
76.	25.00	0.22	-8.08	22955.	-0.38	0.5499	875.2	22.32	0.9278	439.2	0.5057	12.804	8.596	0.422
78.	26.00	0.26	-8.89	22868.	0.09	0.5772	877.3	23.51	0.9623	463.9	0.5086	12.571	8.698	0.417
80.	25.70	0.26	-8.75	22895.	0.06	0.5691	876.6	23.16	0.9520	460.5	0.5077	12.637	8.797	0.418
82.	26.70	1.06	-17.48	22805.	8.44	0.6155	878.7	25.12	0.9865	775.1	0.5144	11.942	8.873	0.559
84.	28.60	1.14	-19.79	22625.	10.06	0.6618	882.2	27.15	1.0522	828.6	0.5233	11.627	8.939	0.567
86.	29.80	0.66	-15.37	22504.	5.18	0.6756	884.7	27.81	1.0937	661.3	0.5260	11.769	9.005	0.501
88.	30.40	0.33	-11.92	22441.	1.49	0.6305	885.1	25.99	0.5924	-438.4	0.5178	13.049	9.097	0.473
90.	30.70	0.0	-8.20	22409.	-2.35	0.6201	885.5	25.57	0.9871	-207.6	0.5154	13.440	9.193	0.453
92.	30.40	-0.11	-6.79	22441.	-3.64	0.6173	885.1	25.44	0.9924	-125.4	0.5153	13.391	9.285	0.451
94.	30.40	0.0	-8.07	22441.	-2.36	0.6199	885.1	25.55	0.9924	-204.1	0.5158	13.324	9.370	0.449
96.	30.40	-0.33	-4.23	22441.	-6.20	0.6153	885.1	25.36	0.9924	33.6	0.5149	13.446	9.455	0.452
98.	29.50	-0.04	-7.28	22534.	-2.80	0.6532	883.7	26.87	1.0833	391.5	0.5219	12.154	9.510	0.410
100.	30.30	0.51	-13.99	22451.	3.60	0.6378	884.9	26.28	0.9942	-566.3	0.5191	12.827	9.577	0.507
102.	30.90	0.22	-10.89	22388.	0.26	0.6269	885.8	25.86	0.9836	-366.8	0.5172	13.341	9.651	0.457
104.	30.90	-0.40	-3.51	22388.	-7.12	0.6163	885.8	25.43	0.9836	82.7	0.5152	13.621	9.727	0.460
106.	29.80	-0.26	-4.89	22504.	-5.31	0.6558	884.2	26.99	1.0937	311.0	0.5224	12.210	9.774	0.413
108.	30.20	0.51	-13.93	22462.	3.58	0.6378	884.8	26.27	0.9959	-564.9	0.5191	12.789	9.830	0.505
110.	31.20	0.73	-17.18	22355.	6.43	0.6484	886.2	26.77	0.9784	-733.4	0.5212	12.914	9.886	0.556
112.	32.20	0.37	-13.19	22244.	2.21	0.6335	887.6	26.21	0.9607	-487.9	0.5186	13.681	9.953	0.513
114.	32.20	-1.32	7.41	22244.	-18.60	0.6508	887.6	26.92	0.9607	767.1	0.5217	13.237	10.011	0.580
116.	28.60	-1.74	33.67	22625.	-43.40	0.6711	882.2	27.54	1.0522	-949.9	0.5251	11.428	10.035	0.737
118.	22.00	-4.84	35.90	23194.	-43.42	0.5350	868.1	21.48	0.8237	-1327.0	0.5065	11.699	10.064	0.788
120.	15.40	-4.84	25.54	23606.	-31.32	0.4076	848.9	15.88	0.5912	-1327.0	0.5620	10.011	10.063	0.799
122.	8.80	-4.84	14.84	23870.	-19.22	0.3212	824.9	12.11	0.3499	-1285.9	0.6833	6.210	10.000	0.774
124.	2.20	-3.23	2.46	23991.	-5.62	0.2358	796.1	8.42	0.0948	-664.7	0.8564	1.863	9.868	0.637
126.	-0.0	-0.81	0.02	24000.	-2.79	0.2045	785.5	7.17	0.0056	537.3	0.9184	0.119	9.714	0.538
128.	-0.0	0.0	-0.02	24000.	-2.75	0.2109	785.5	7.39	0.0056	790.3	0.9066	0.117	9.564	0.515
130.	-0.0	0.0	-0.02	24000.	-2.75	0.2109	785.5	7.39	0.0056	790.3	0.9066	0.117	9.418	0.515
132.	-0.0	0.0	-0.02	24000.	-2.75	0.2109	785.5	7.39	0.0056	790.3	0.9066	0.117	9.277	0.515
134.	-0.0	0.0	-0.02	24000.	-2.75	0.2109	785.5	7.39	0.0056	790.3	0.9066	0.117	9.141	0.515
136.	-0.0	0.0	-0.02	24000.	-2.75	0.2109	785.5	7.39	0.0056	790.3	0.9066	0.117	9.008	0.515
138.	-0.0	0.0	-0.02	24000.	-2.75	0.2109	785.5	7.39	0.0056	790.3	0.9066	0.117	8.879	0.515

ENERGY STORING TRANSMISSION PERFORMANCE ANALYSIS

TIME	SPEED	ACCEL	OUT POWER	FLYWL SPEED	FLYWL POWER	THRUST	ENGINE SPEED	ENGINE POWER	WOBBLE RATIO	WORKG PRES	SFC	I MPG	C MPG	EFF
SEC	MPH	FPS/S	HP	RPM	HP	O/D	RPM	HP		PSI	LB/HP/HR	MPG	MPG	O/O
140.	-0.0	0.0	-0.02	24000.	-2.75	0.2109	785.5	7.39	0.0056	790.3	0.9066	0.117	8.754	0.515
142.	-0.0	0.0	-0.02	24000.	-2.75	0.2109	785.5	7.39	0.0056	790.3	0.9066	0.117	8.632	0.515
144.	-0.0	0.0	-0.02	24000.	-2.75	0.2109	785.5	7.39	0.0056	790.3	0.9066	0.117	8.514	0.515
146.	-0.0	0.0	-0.02	24000.	-2.75	0.2109	785.5	7.39	0.0056	790.3	0.9066	0.117	8.399	0.515
148.	-0.0	0.0	-0.02	24000.	-2.75	0.2109	785.5	7.39	0.0056	790.3	0.9066	0.117	8.287	0.515
150.	-0.0	0.0	-0.02	24000.	-2.75	0.2109	785.5	7.39	0.0056	790.3	0.9066	0.117	8.178	0.515
152.	-0.0	0.0	-0.02	24000.	-2.75	0.2109	785.5	7.39	0.0056	790.3	0.9066	0.117	8.072	0.515
154.	-0.0	0.0	-0.02	24000.	-2.75	0.2109	785.5	7.39	0.0056	790.3	0.9066	0.117	7.969	0.515
156.	-0.0	0.0	-0.02	24000.	-2.75	0.2109	785.5	7.39	0.0056	790.3	0.9066	0.117	7.868	0.515
158.	-0.0	0.0	-0.02	24000.	-2.75	0.2109	785.5	7.39	0.0056	790.3	0.9066	0.117	7.770	0.515
160.	-0.0	0.0	-0.02	24000.	-2.75	0.2109	785.5	7.39	0.0056	790.3	0.9066	0.117	7.674	0.515
162.	-0.0	1.21	-0.04	24000.	-2.68	0.2226	785.5	7.81	0.0056	1180.9	0.8849	0.114	7.581	0.478
164.	3.30	3.63	-5.17	23900.	2.02	0.2780	801.2	10.01	0.1305	1493.4	0.7737	2.550	7.520	0.540
166.	9.90	4.84	-20.44	23836.	15.84	0.3703	829.2	13.98	0.3910	1900.5	0.6142	6.722	7.510	0.739
168.	16.50	4.51	-32.04	23548.	25.99	0.4664	852.4	18.27	0.6304	1881.5	0.5288	9.899	7.538	0.762
170.	22.20	3.41	-34.11	23179.	26.53	0.5622	868.6	22.59	0.8306	1509.5	0.5065	11.224	7.582	0.728
172.	25.80	1.28	-18.96	22886.	10.23	0.5961	876.9	24.26	0.9554	845.9	0.5105	12.043	7.634	0.588
174.	25.70	-0.40	-2.25	22895.	-6.45	0.5581	876.6	22.71	0.9520	216.5	0.5066	12.914	7.694	0.425
176.	24.70	-0.18	-4.13	22980.	-4.23	0.5353	874.5	21.71	0.9174	287.5	0.5066	12.987	7.755	0.430
178.	25.20	0.40	-9.94	22938.	1.42	0.5587	875.6	22.70	0.9347	509.3	0.5066	12.671	7.810	0.455
180.	25.80	0.48	-10.97	22886.	2.25	0.5764	876.9	23.46	0.9554	543.6	0.5084	12.504	7.862	0.468
182.	26.50	-1.14	5.04	22823.	-14.01	0.5742	878.3	23.42	0.9796	-43.8	0.5083	12.864	7.917	0.535
184.	22.70	-3.23	22.91	23141.	-40.65	0.5127	869.8	20.64	0.8480	-786.5	0.5093	12.490	7.967	0.742
186.	17.70	-1.69	7.75	23479.	-14.10	0.3902	856.2	15.38	0.6729	-294.7	0.5770	11.558	8.005	0.674
188.	18.10	0.84	-9.70	23456.	3.26	0.4086	857.4	16.13	0.6871	585.5	0.5597	11.611	8.044	0.565
190.	20.00	2.35	-22.40	23335.	15.45	0.4776	862.8	19.02	0.7538	1159.1	0.5218	11.665	8.082	0.695
192.	24.50	3.85	-42.02	22997.	33.72	0.6439	874.1	26.09	0.9104	1799.0	0.5194	10.452	8.106	0.730
194.	30.50	4.29	-58.26	22430.	47.79	0.9149	885.2	37.72	0.9907	-3155.6	0.5081	9.193	8.118	0.700
196.	36.20	3.23	-55.54	21760.	42.51	0.8266	891.5	34.40	0.8898	-2585.7	0.5143	11.808	8.155	0.749
198.	39.30	2.16	-45.10	21337.	30.44	0.7565	893.0	31.56	0.8341	-1908.2	0.5292	13.579	8.210	0.756
200.	42.10	2.11	-48.58	20916.	32.29	0.7699	893.2	32.12	0.7828	-1951.1	0.5260	14.376	8.272	0.782
202.	45.10	1.72	-46.09	20424.	27.88	0.7740	891.9	32.23	0.7265	-1725.8	0.5250	15.372	8.342	0.797
204.	46.80	0.88	-33.35	20124.	13.96	0.7453	890.5	30.97	0.6939	-1120.0	0.5319	16.382	8.421	0.782
206.	47.50	0.15	-20.80	19996.	0.91	0.7221	889.8	29.97	0.6803	-559.4	0.5314	17.198	8.506	0.728
208.	47.20	-0.18	-14.59	20051.	-5.08	0.7079	890.1	29.40	0.6862	-290.9	0.5304	17.458	8.592	0.726

Sundstrand Aviation
division of Sundstrand Corporation
SUNDSTRAND

ENERGY STORING TRANSMISSION PERFORMANCE ANALYSIS

TIME SEC	SPEED MPH	ACCEL FPS/S	OUT POWER HP	FLYWL SPEED RPM	FLYWL POWER HP	THROT G/D	ENGINE SPEED RPM	ENGINE POWER HP	WOBLR RATIO	WORKG PRES PSI	SFC LB/HP/HR	I MPG MPG	C MPG MPG	EFF G/D
210.	47.60	-0.07	-16.43	20087.	-4.10	0.7045	890.3	29.43	0.6900	-375.2	0.5304	17.363	8.676	0.720
212.	47.00	0.07	-19.07	20087.	-0.46	0.7137	890.3	29.63	0.6900	-491.6	0.5307	17.237	8.756	0.715
214.	47.20	0.13	-23.86	20051.	4.19	0.7252	890.1	30.12	0.6862	-698.1	0.5316	17.000	8.833	0.746
216.	47.90	0.70	-31.20	19921.	11.02	0.7504	889.3	31.13	0.6725	-1000.8	0.5307	16.719	8.906	0.783
218.	49.10	0.77	-33.87	19692.	12.79	0.7706	887.8	31.89	0.6488	-1086.1	0.5259	16.879	8.980	0.799
220.	50.00	0.70	-33.44	19515.	11.66	0.3591	1714.3	33.31	0.6108	-779.1	0.5438	15.916	9.043	0.816
222.	51.00	0.81	-36.73	19313.	14.15	0.3654	1722.3	34.09	0.6105	-886.3	0.5398	15.980	9.105	0.810
224.	52.20	1.14	-44.72	19062.	21.16	0.3774	1731.7	35.44	0.5858	-1172.2	0.5323	15.950	9.166	0.850
226.	54.10	0.94	-44.27	18645.	19.06	0.3842	1745.6	36.44	0.5456	-1094.5	0.5275	16.226	9.229	0.860
228.	54.40	0.29	-30.71	18462.	4.79	0.3772	1751.1	35.91	0.5283	-535.1	0.5313	16.586	9.293	0.838
230.	54.40	-0.11	-22.22	18462.	-3.70	0.3727	1751.1	35.48	0.5283	-194.5	0.5340	16.703	9.358	0.825
232.	54.60	0.07	-25.78	18531.	0.13	0.3727	1749.1	35.43	0.5349	-345.9	0.5341	16.631	9.420	0.818
234.	55.10	0.40	-31.24	18416.	7.14	0.3799	1752.5	36.20	0.5240	-629.8	0.5296	16.565	9.481	0.846
236.	55.70	0.44	-34.70	18275.	8.05	0.3841	1756.5	36.70	0.5108	-669.7	0.5269	16.603	9.542	0.853
238.	56.30	0.37	-33.82	18131.	6.60	0.3868	1760.3	37.06	0.4974	-616.9	0.5250	16.678	9.602	0.854
240.	56.70	0.07	-27.90	18034.	0.30	0.3857	1762.8	37.02	0.4884	-371.7	0.5255	16.799	9.662	0.839
242.	56.50	-0.07	-24.54	18082.	-2.87	0.3830	1761.6	36.72	0.4929	-244.1	0.5273	16.819	9.721	0.839
244.	56.50	0.0	-26.13	18082.	-1.28	0.3847	1761.6	36.79	0.4929	-307.4	0.5268	16.802	9.779	0.838
246.	56.50	-0.04	-25.34	18082.	-2.07	0.3833	1761.6	36.76	0.4929	-275.8	0.5271	16.810	9.836	0.839
248.	56.40	-0.26	-20.49	18107.	-6.82	0.3810	1761.0	36.52	0.4952	-84.3	0.5285	16.845	9.893	0.842
250.	55.80	-0.66	-11.34	18251.	-15.41	0.3790	1757.1	36.23	0.5086	284.4	0.5299	16.752	9.948	0.832
252.	54.60	-0.66	-10.48	18531.	-15.17	0.3720	1749.1	35.37	0.5349	293.1	0.5345	16.649	10.001	0.819
254.	54.00	-0.17	-16.12	18667.	-9.00	0.3664	1744.9	34.73	0.5478	35.5	0.5381	16.656	10.053	0.818
256.	53.60	-0.00	-23.31	18757.	-1.45	0.3663	1742.0	34.65	0.5563	-272.0	0.5383	16.566	10.104	0.809
258.	54.00	0.18	-27.47	18667.	2.35	0.3706	1744.9	35.13	0.5478	-430.1	0.5356	16.546	10.154	0.821
260.	54.10	-0.22	-19.23	18645.	-5.98	0.3672	1745.6	34.83	0.5456	-92.1	0.5375	16.658	10.204	0.819
262.	53.40	-0.55	-11.89	18801.	-12.70	0.3645	1740.6	34.44	0.5606	204.4	0.5394	16.568	10.253	0.808
264.	52.60	-0.17	-15.02	18976.	-8.89	0.3591	1734.7	33.80	0.5774	50.7	0.5429	16.527	10.300	0.803
266.	52.40	-0.26	-17.06	19019.	-6.67	0.3581	1733.2	33.66	0.5816	-41.2	0.5435	16.509	10.347	0.800
268.	51.40	-0.33	-15.21	19125.	-8.11	0.3556	1729.4	33.34	0.5920	27.3	0.5452	16.461	10.392	0.795
270.	51.50	-0.04	-20.68	19209.	-2.30	0.3593	1726.3	33.24	0.6003	-213.2	0.5455	16.375	10.437	0.786
272.	51.80	0.17	-28.95	19146.	5.72	0.3617	1728.6	33.89	0.5941	-547.7	0.5417	16.267	10.480	0.813
274.	52.50	0.62	-34.83	18998.	11.01	0.3692	1733.9	34.72	0.5795	-767.3	0.5370	16.231	10.522	0.835
276.	53.50	0.88	-41.24	18779.	16.56	0.3789	1741.3	35.82	0.5585	-993.6	0.5309	16.216	10.563	0.853
278.	54.40	0.77	-40.72	18462.	14.80	0.3847	1751.1	36.62	0.5283	-930.4	0.5269	16.401	10.605	0.860

ENERGY STORING TRANSMISSION PERFORMANCE ANALYSIS

TIME SEC	SPEED MPH	ACCEL FPS/S	OUT POWER HP	FLYWL SPEED RPM	FLYWL POWER HP	THROT G/D	ENGINE SPEED RPM	ENGINE POWER HP	WOBLR RATIO	WORKG PRES PSI	SFC LB/HP/HR	I MPG MPG	C MPG MPG	EFF G/D
280.	55.60	0.40	-31.78	18298.	7.22	0.3829	1755.8	36.57	0.5130	-636.4	0.5276	16.608	10.648	0.850
282.	56.00	-0.15	-22.50	18203.	-4.44	0.3791	1758.4	36.28	0.5041	-176.2	0.5298	16.796	10.691	0.836
284.	55.20	-0.88	-6.26	18392.	-19.94	0.3782	1753.2	36.06	0.5218	490.8	0.5306	16.631	10.733	0.819
286.	53.60	-1.36	4.51	18757.	-29.27	0.3782	1742.0	35.77	0.5563	940.0	0.5313	16.258	10.772	0.808
288.	51.50	-0.77	-6.24	19209.	-16.74	0.3581	1726.3	33.51	0.6003	418.6	0.5438	16.295	10.810	0.779
290.	51.50	-0.51	-11.31	19209.	-11.67	0.3551	1726.3	33.22	0.6003	190.7	0.5454	16.382	10.849	0.787
292.	50.10	-0.51	-10.38	19495.	-11.48	0.3493	1715.1	32.42	0.6288	206.6	0.5494	16.219	10.885	0.769
294.	50.10	-0.18	-16.70	19495.	-5.15	0.3480	1715.1	32.30	0.6288	-74.3	0.5502	16.256	10.922	0.772
296.	49.60	-0.22	-15.63	19595.	-5.84	0.7397	887.1	30.58	0.6388	-300.5	0.5326	17.561	10.967	0.759
298.	49.50	-0.18	-16.26	19614.	-5.13	0.7392	887.2	30.56	0.6408	-329.1	0.5325	17.535	11.011	0.757
300.	49.10	-0.51	-9.76	19692.	-11.32	0.7267	887.8	30.07	0.6488	-53.0	0.5317	17.707	11.055	0.759
302.	48.10	-1.10	1.64	19884.	-21.97	0.7251	889.1	30.07	0.6686	456.6	0.5316	17.354	11.097	0.747
304.	46.10	-1.58	10.74	20249.	-29.64	0.7232	891.2	30.08	0.7074	883.7	0.5315	16.628	11.134	0.769
306.	43.80	-1.69	12.84	20643.	-30.20	0.7084	892.6	29.53	0.7511	995.6	0.5305	16.126	11.166	0.754
308.	41.50	-1.94	16.95	21010.	-32.87	0.7053	893.2	29.43	0.7938	1218.7	0.5302	15.342	11.193	0.746
310.	38.50	-2.31	21.96	21450.	-36.18	0.7196	892.8	30.00	0.8485	1529.7	0.5313	13.937	11.211	0.729
312.	35.20	-2.20	19.35	21887.	-31.90	0.7068	890.7	29.38	0.9077	1446.5	0.5303	13.040	11.223	0.687
314.	32.50	-1.69	12.01	22210.	-23.32	0.6719	887.9	27.81	0.9555	1050.3	0.5255	12.839	11.233	0.621
316.	30.60	-0.92	2.60	22420.	-13.11	0.6322	885.4	26.07	0.9889	470.7	0.5181	13.084	11.245	0.497
318.	30.00	-1.14	5.17	22483.	-15.44	0.6426	884.5	26.46	0.9994	641.0	0.5200	12.594	11.253	0.526
320.	27.50	-3.12	25.96	22731.	-35.28	0.6320	880.2	25.85	1.0142	-734.9	0.5176	11.875	11.257	0.712
322.	21.50	-3.08	20.62	23230.	-28.00	0.4818	866.8	19.31	0.8062	-739.6	0.5193	12.408	11.264	0.743
324.	19.10	-1.65	8.00	23393.	-14.71	0.4129	860.3	16.38	0.7223	-272.0	0.5569	12.127	11.270	0.664
326.	17.00	-2.42	12.28	23520.	-18.45	0.3888	854.0	15.27	0.6481	-541.5	0.5797	11.132	11.269	0.728
328.	12.50	-3.30	13.45	23740.	-18.59	0.3406	838.9	13.06	0.4865	-831.3	0.6520	8.533	11.252	0.764
330.	8.00	-4.07	11.13	23892.	-15.36	0.3038	821.6	11.32	0.3199	-1039.7	0.7127	5.797	11.219	0.755
332.	1.40	-2.94	1.45	23996.	-4.47	0.2234	792.3	7.92	0.0626	-544.8	0.8811	1.265	11.159	0.609
334.	-0.0	-0.51	0.00	24000.	-2.77	0.2067	785.5	7.25	0.0056	625.7	0.9144	0.118	11.093	0.529
336.	-0.0	0.0	-0.02	24000.	-2.75	0.2109	785.5	7.39	0.0056	790.4	0.9066	0.117	11.028	0.515
338.	-0.0	0.0	-0.02	24000.	-2.75	0.2109	785.5	7.39	0.0056	790.4	0.9066	0.117	10.963	0.515
340.	-0.0	0.0	-0.02	24000.	-2.75	0.2109	785.5	7.39	0.0056	790.4	0.9066	0.117	10.899	0.515
342.	-0.0	0.0	-0.02	24000.	-2.75	0.2109	785.5	7.39	0.0056	790.4	0.9066	0.117	10.836	0.515
344.	-0.0	0.0	-0.02	24000.	-2.75	0.2109	785.5	7.39	0.0056	790.4	0.9066	0.117	10.774	0.515
346.	-0.0	1.58	-0.11	24000.	-2.66	0.2266	785.5	7.95	0.0056	1299.9	0.8774	0.112	10.712	0.467
348.	4.30	4.00	-7.56	23968.	4.03	0.2940	805.8	10.67	0.1778	1634.8	0.7405	3.228	10.669	0.600

ENERGY STORING TRANSMISSION PERFORMANCE ANALYSIS

TIME	SPEED	ACCEL	OUT POWER	FLYWL SPEED	FLYWL POWER	THROT	ENGINE SPEED	ENGINE POWER	WOBLR RATIO	WORKG PRES	SFC	I MPG	C MPG	EFF
SEC	MPH	FPS/S	HP	RPM	HP	O/O	RPM	HP		PSI	LB/HP/HR	MPG	MPG	O/O
350.	10.90	4.77	-22.18	23802.	17.38	0.3813	833.0	14.48	0.4279	1884.5	0.5972	7.338	10.650	0.747
352.	17.30	4.26	-31.93	23503.	25.69	0.4749	854.9	18.68	0.6588	1804.7	0.5239	10.244	10.648	0.758
354.	22.50	2.90	-30.17	23156.	22.49	0.5536	869.3	22.27	0.8411	1402.4	0.5057	11.556	10.653	0.710
356.	25.20	2.05	-25.91	22938.	17.38	0.6016	875.6	24.44	0.9347	1128.2	0.5114	11.658	10.659	0.655
358.	28.10	2.05	-29.25	22673.	19.71	0.6793	881.3	27.83	1.0349	1173.6	0.5265	11.079	10.661	0.646
360.	30.60	1.47	-25.57	22398.	14.97	0.6886	885.7	28.40	0.9854	-1239.6	0.5284	11.852	10.668	0.622
362.	32.10	1.03	-21.44	22256.	10.30	0.6643	887.4	27.48	0.9625	-953.1	0.5241	12.871	10.680	0.604
364.	33.60	0.92	-21.33	22082.	9.53	0.6609	889.2	27.41	0.9360	-900.6	0.5236	13.515	10.695	0.616
366.	34.60	0.44	-15.84	21962.	3.58	0.6407	890.2	26.61	0.9183	-573.5	0.5201	14.430	10.716	0.568
368.	34.80	0.04	-10.61	21937.	-1.75	0.6268	890.4	26.04	0.9148	-283.6	0.5176	14.904	10.739	0.521
370.	34.70	0.44	-15.92	21949.	3.61	0.6410	890.3	26.63	0.9165	-575.3	0.5202	14.462	10.759	0.570
372.	36.00	0.48	-17.32	21906.	4.18	0.6461	891.4	26.88	0.8934	-621.6	0.5212	14.831	10.781	0.598
374.	36.00	0.0	-10.73	21906.	-2.21	0.6289	891.4	26.17	0.8934	-271.6	0.5180	15.328	10.805	0.547
376.	36.00	0.04	-11.24	21786.	-1.69	0.6300	891.4	26.21	0.8934	-299.0	0.5182	15.296	10.829	0.541
378.	36.10	0.18	-13.32	21773.	0.34	0.6350	891.5	26.42	0.8916	-408.1	0.5192	15.188	10.852	0.545
380.	36.50	-0.04	-10.49	21721.	-2.69	0.6294	891.7	26.20	0.8845	-251.4	0.5182	15.515	10.876	0.552
382.	36.00	-0.88	1.40	21786.	-14.33	0.6343	891.4	26.39	0.8934	397.2	0.5190	15.170	10.899	0.562
384.	34.10	-1.69	12.26	22027.	-24.29	0.6720	889.7	27.89	0.9272	1042.5	0.5256	13.428	10.912	0.642
386.	31.40	-3.08	28.56	22333.	-39.40	0.7810	886.5	32.26	0.9748	2144.0	0.5235	10.738	10.911	0.673
388.	25.70	-4.07	33.91	22895.	-42.61	0.6104	876.6	24.83	0.9520	-1068.8	0.5132	11.657	10.915	0.754
390.	20.30	-4.11	27.57	23314.	-34.61	0.4783	863.6	19.07	0.7643	-1083.3	0.5214	11.816	10.920	0.779
392.	14.50	-4.25	20.84	23651.	-26.42	0.3826	845.9	14.84	0.5589	-1139.5	0.5908	9.602	10.913	0.789
394.	8.70	-4.55	13.69	23873.	-18.05	0.3177	824.5	11.90	0.3462	-1194.9	0.6913	6.178	10.889	0.770
396.	2.10	-3.19	2.33	23991.	-5.47	0.2343	795.7	8.36	0.0908	-650.7	0.8594	1.790	10.843	0.633
398.	-0.0	-0.77	0.02	24000.	-2.79	0.2048	785.5	7.18	0.0056	543.6	0.9179	0.119	10.789	0.537
400.	-0.0	0.0	-0.02	24000.	-2.75	0.2109	785.5	7.39	0.0056	790.3	0.9066	0.117	10.736	0.515
402.	-0.0	2.16	-0.14	24000.	-2.63	0.2335	785.5	8.19	0.0056	1491.0	0.8647	0.111	10.683	0.449
404.	5.90	4.58	-11.66	23941.	7.83	0.3205	812.8	11.77	0.2399	1795.1	0.6934	4.253	10.651	0.666
406.	12.50	4.84	-25.80	23740.	20.66	0.4052	838.9	15.53	0.4865	1931.0	0.5654	8.273	10.639	0.758
408.	19.10	4.59	-37.77	23393.	31.06	0.5245	860.3	20.80	0.7223	1965.3	0.5077	10.473	10.638	0.761
410.	25.00	3.09	-35.53	22955.	27.07	0.6301	875.2	25.58	0.9278	1514.4	0.5168	10.933	10.640	0.705
412.	27.50	1.83	-26.24	22731.	16.92	0.6586	880.2	26.94	1.0142	1080.1	0.5226	11.286	10.643	0.631
414.	30.00	0.92	-18.45	22483.	8.18	0.6568	884.5	27.04	0.9994	-844.7	0.5226	12.261	10.651	0.560
416.	30.00	-0.26	-4.95	22483.	-5.32	0.6151	884.5	25.33	0.9994	-16.0	0.5148	13.290	10.663	0.446
418.	29.30	-0.73	0.63	22555.	-10.63	0.6381	883.4	26.23	1.0764	127.0	0.5191	12.432	10.672	0.432

ENERGY STORING TRANSMISSION PERFORMANCE ANALYSIS

TIME	SPEED	ACCEL	OUT POWER	FLYWL SPEED	FLYWL POWER	THROT	ENGINE SPEED	ENGINE POWER	WOBLR RATIO	WORKG PRES	SFC	I MPG	C MPG	EFF
SEC	MPH	FPS/S	HP	RPM	HP	O/O	RPM	HP		PSI	LB/HP/HR	MPG	MPG	O/O
420.	28.00	-2.79	22.83	22683.	-12.33	0.6346	881.1	26.00	1.0314	-617.9	0.5182	12.010	10.678	0.695
422.	21.70	-4.73	34.54	23216.	-41.97	0.5248	867.3	21.05	0.8132	-1290.6	0.5078	11.749	10.683	0.787
424.	15.10	-4.84	25.08	23621.	-30.80	0.4030	847.9	15.68	0.5804	-1327.8	0.5647	9.897	10.680	0.799
426.	8.50	-4.84	14.35	23879.	-18.67	0.3200	823.7	11.97	0.3387	-1282.7	0.6884	6.027	10.658	0.772
428.	1.90	-3.12	2.06	23993.	-5.17	0.2312	794.7	8.24	0.0828	-621.5	0.8655	1.643	10.616	0.626
430.	-0.0	-0.70	0.01	24000.	-2.78	0.2053	785.5	7.20	0.0056	567.2	0.9169	0.119	10.567	0.535
432.	-0.0	0.0	-0.02	24000.	-2.75	0.2109	785.5	7.39	0.0056	790.3	0.9066	0.117	10.518	0.515
434.	-0.0	0.0	-0.02	24000.	-2.75	0.2109	785.5	7.39	0.0056	790.3	0.9066	0.117	10.471	0.515
436.	-0.0	0.0	-0.02	24000.	-2.75	0.2109	785.5	7.39	0.0056	790.3	0.9066	0.117	10.423	0.515
438.	-0.0	0.0	-0.02	24000.	-2.75	0.2109	785.5	7.39	0.0056	790.3	0.9066	0.117	10.376	0.515
440.	-0.0	0.0	-0.02	24000.	-2.75	0.2109	785.5	7.39	0.0056	790.3	0.9066	0.117	10.329	0.515
442.	-0.0	0.0	-0.02	24000.	-2.75	0.2109	785.5	7.39	0.0056	790.3	0.9066	0.117	10.283	0.515
444.	-0.0	0.0	-0.02	24000.	-2.75	0.2109	785.5	7.39	0.0056	790.3	0.9066	0.117	10.237	0.515
446.	-0.0	1.21	-0.09	24000.	-2.68	0.2226	785.5	7.81	0.0056	1180.8	0.8849	0.114	10.192	0.478
448.	3.30	3.63	-5.38	23980.	2.02	0.2780	801.2	10.01	0.1385	1493.6	0.7737	2.550	10.158	0.540
450.	9.90	4.84	-20.45	23836.	15.85	0.3704	829.2	13.98	0.3910	1901.0	0.6142	6.722	10.143	0.739
452.	16.50	4.84	-34.15	23548.	28.10	0.4763	852.4	18.66	0.6304	2002.5	0.5234	9.794	10.141	0.766
454.	23.10	4.15	-42.08	23110.	34.22	0.6135	870.8	24.74	0.8619	1882.5	0.5132	10.525	10.143	0.742
456.	27.80	3.08	-39.86	22702.	30.43	0.7102	880.8	29.08	1.0245	1565.9	0.5303	10.417	10.144	0.697
458.	31.50	2.13	-34.24	22322.	23.35	0.7332	886.7	30.29	0.9731	-1709.7	0.5321	11.287	10.149	0.667
460.	33.60	1.32	-26.51	22082.	14.71	0.6833	889.2	28.34	0.9360	-1185.9	0.5276	12.975	10.161	0.651
462.	35.10	0.92	-22.60	21900.	10.10	0.6643	890.7	27.61	0.9094	-925.3	0.5243	13.995	10.178	0.638
464.	36.10	0.37	-15.85	21773.	2.87	0.6418	891.5	26.71	0.8916	-542.2	0.5204	14.990	10.199	0.581
466.	36.10	-0.04	-10.28	21773.	-2.70	0.6282	891.5	26.14	0.8916	-246.2	0.5179	15.390	10.221	0.545
468.	36.00	-0.04	-10.23	21786.	-2.70	0.6279	891.4	26.13	0.8934	-244.9	0.5179	15.358	10.243	0.543
470.	36.00	-0.15	-8.71	21786.	-4.22	0.6252	891.4	26.01	0.8934	-163.4	0.5174	15.440	10.265	0.546
472.	35.60	-0.22	-7.53	21837.	-5.21	0.6226	891.1	25.89	0.9005	-104.2	0.5169	15.353	10.286	0.540
474.	35.40	-0.15	-8.44	21862.	-4.21	0.6236	890.9	25.93	0.9041	-156.2	0.5170	15.243	10.307	0.535
476.	35.20	-0.07	-9.33	21887.	-3.21	0.6248	890.7	25.97	0.9077	-207.8	0.5172	15.126	10.328	0.530
478.	35.20	0.0	-10.32	21887.	-2.22	0.6267	890.7	26.05	0.9077	-261.8	0.5176	15.068	10.347	0.528
480.	35.20	-0.04	-9.83	21887.	-2.72	0.6257	890.7	26.01	0.9077	-234.8	0.5174	15.098	10.367	0.529
482.	35.10	0.11	-11.75	21900.	-0.75	0.6298	890.7	26.18	0.9094	-340.9	0.5181	14.938	10.386	0.524
484.	35.50	-0.04	-9.98	21849.	-2.71	0.6265	891.0	26.05	0.9023	-238.6	0.5176	15.196	10.406	0.534
486.	35.00	-0.18	-7.76	21912.	-4.69	0.6218	890.6	25.84	0.9112	-124.1	0.5167	15.132	10.426	0.529
488.	35.00	-0.15	-8.26	21912.	-4.19	0.6226	890.6	25.87	0.9112	-151.5	0.5168	15.109	10.445	0.528

Sundstrand Aviation
division of Sundstrand Corporation

ENERGY STORING TRANSMISSION PERFORMANCE ANALYSIS

TIME	SPEED	ACCEL	OUT POWER	FLYWL SPEED	FLYWL POWER	TORQT	ENGINE SPEED	ENGINE POWER	MODER RATIO	WORKG PRES	SFC	I MPG	C MPG	EFF
SEC	MPH	FPS/S	HP	RPM	HP	G/O	RPM	HP		PSI	LB/H/HR	MPG	MPG	O/O
490.	34.60	-0.55	2.73	21962.	-9.53	0.6220	890.2	25.83	0.9183	155.8	0.5167	14.965	10.463	0.521
492.	33.50	-1.65	11.65	22054.	-23.45	0.6696	889.1	27.76	0.9378	1016.4	0.5252	13.265	10.475	0.631
494.	30.10	-2.73	25.96	22472.	-36.22	0.7701	884.6	31.72	0.9977	2025.5	0.5261	10.419	10.474	0.655
496.	25.50	-3.78	39.80	22912.	-39.44	0.5971	876.2	24.28	0.9450	-968.6	0.5106	11.892	10.480	0.747
498.	19.80	-4.51	29.99	23348.	-36.99	0.4779	862.3	19.01	0.7468-1217.5		0.5217	11.556	10.484	0.789
500.	13.26	-4.62	20.96	23710.	-26.19	0.3713	841.4	14.29	0.5120-1752.4		0.6082	8.822	10.478	0.793
502.	7.20	-4.47	11.18	23912.	-15.25	0.4013	818.3	11.17	0.2896-1152.4		0.7188	5.254	10.457	0.754
504.	1.00	-2.64	0.94	23957.	-3.89	0.2159	790.4	7.64	0.0464	-433.8	0.8957	0.955	10.419	0.594
506.	-0.0	-0.37	-0.00	24000.	-2.76	0.2078	785.5	7.29	0.0056	672.7	0.9123	0.118	10.378	0.525
508.	-0.0	0.0	-0.02	24000.	-2.75	0.2109	785.5	7.39	0.0056	790.4	0.9066	0.117	10.348	0.515
510.	-0.0	1.28	-0.09	24000.	-2.68	0.2234	785.5	7.83	0.0056	1204.6	0.8834	0.119	10.298	0.476
512.	3.50	2.38	-3.96	23978.	0.57	0.2641	802.1	9.49	0.1464	1076.4	0.8017	2.747	10.268	0.496
514.	6.50	2.24	-6.88	23928.	2.94	0.2883	815.4	10.63	0.2629	997.9	0.7461	4.809	10.247	0.600
516.	9.60	1.98	-9.19	23846.	4.65	0.3132	828.0	11.80	0.3798	907.9	0.6959	6.819	10.234	0.662
518.	11.90	2.35	-13.10	23764.	8.09	0.3440	836.7	13.14	0.4646	1046.2	0.6482	8.123	10.226	0.687
520.	16.00	2.60	-19.32	23575.	13.40	0.4079	850.9	15.94	0.6126	1185.0	0.5614	10.368	10.226	0.712
522.	19.00	1.83	-17.47	23400.	10.79	0.4448	860.0	17.64	0.7188	954.0	0.5397	11.559	10.231	0.667
524.	21.00	1.47	-16.50	23260.	9.27	0.4775	865.5	19.09	0.7888	852.9	0.5217	12.200	10.239	0.632
526.	23.00	1.28	-16.63	23118.	8.81	0.5214	870.6	21.02	0.8584	809.1	0.5082	12.455	10.247	0.603
528.	24.50	0.73	-12.71	22997.	4.41	0.5473	874.1	22.18	0.9104	624.2	0.5054	12.637	10.256	0.522
530.	25.00	0.18	-7.73	22955.	-0.73	0.5492	875.2	22.29	0.9278	425.7	0.5057	12.822	10.266	0.422
532.	25.00	0.0	-5.97	22955.	-2.49	0.5459	875.2	22.16	0.9278	358.0	0.5053	12.906	10.276	0.425
534.	25.00	0.22	-6.08	22955.	-0.38	0.5498	875.2	22.32	0.9278	439.1	0.5057	12.865	10.286	0.422
536.	25.60	0.37	-9.79	22903.	1.13	0.5687	876.4	23.13	0.9485	500.3	0.5076	12.664	10.294	0.445
538.	26.00	-0.15	-4.87	22868.	-3.93	0.5699	877.3	23.21	0.9623	314.2	0.5078	12.751	10.303	0.420
540.	25.20	-0.37	-2.50	22938.	-6.03	0.5455	875.6	22.16	0.9347	225.0	0.5054	13.009	10.313	0.429
542.	25.00	-0.29	-3.16	22955.	-5.30	0.5414	875.2	21.98	0.9278	250.1	0.5059	13.001	10.323	0.429
544.	24.40	-1.91	12.07	23005.	-20.34	0.5294	873.8	21.45	0.9070	-328.1	0.5073	12.967	10.333	0.651
546.	19.80	-4.11	26.93	23348.	-33.83	0.4686	862.3	18.64	0.7468-1085.0		0.5267	11.674	10.338	0.781
548.	13.20	-4.84	22.02	23710.	-27.30	0.3753	841.4	14.45	0.5120-1321.3		0.6026	8.809	10.332	0.796
550.	6.60	-4.84	11.21	23926.	-15.17	0.3003	815.8	11.09	0.2667-1254.3		0.7222	4.817	10.312	0.751
552.	-0.0	-2.42	0.10	24000.	-2.87	0.1968	785.5	6.90	0.0056	23.5	0.9604	0.118	10.275	0.576
554.	-0.0	0.0	-0.02	24000.	-2.75	0.2109	785.5	7.39	0.0056	790.3	0.9066	0.117	10.239	0.515
556.	-0.0	0.0	-0.02	24000.	-2.75	0.2109	785.5	7.39	0.0056	790.3	0.9066	0.117	10.202	0.515
558.	-0.0	0.0	-0.02	24000.	-2.75	0.2109	785.5	7.39	0.0056	790.3	0.9066	0.117	10.166	0.515

ENERGY STORING TRANSMISSION PERFORMANCE ANALYSIS

TIME	SPEED	ACCEL	OUT POWER	FLYWL SPEED	FLYWL POWER	TORQT	ENGINE SPEED	ENGINE POWER	MODER RATIO	WORKG PRES	SFC	I MPG	C MPG	EFF
SEC	MPH	FPS/S	HP	RPM	HP	G/O	RPM	HP		PSI	LB/H/HR	MPG	MPG	O/O
560.	-0.0	0.0	-0.02	24000.	-2.75	0.2109	785.5	7.39	0.0056	790.3	0.9066	0.117	10.130	0.515
562.	-0.0	0.0	-0.02	24000.	-2.75	0.2109	785.5	7.39	0.0056	790.3	0.9066	0.117	10.095	0.515
564.	-0.0	0.0	-0.02	24000.	-2.75	0.2109	785.5	7.39	0.0056	790.3	0.9066	0.117	10.059	0.515
566.	-0.0	0.0	-0.02	24000.	-2.75	0.2109	785.5	7.39	0.0056	790.3	0.9066	0.117	10.024	0.515
568.	-0.0	2.42	-0.15	24000.	-2.62	0.2366	785.5	8.30	0.0056	1574.9	0.8589	0.110	9.989	0.441
570.	6.60	4.77	-13.49	23926.	9.53	0.3312	815.8	12.23	0.2667	1857.5	0.6763	4.684	9.971	0.687
572.	13.00	3.45	-19.85	23719.	14.61	0.3800	840.7	14.61	0.5047	1443.7	0.5963	8.669	9.966	0.734
574.	16.00	1.47	-12.12	23575.	6.40	0.3848	850.9	15.04	0.6126	780.3	0.5861	10.527	9.968	0.641
576.	17.00	0.55	-7.14	23520.	0.97	0.3857	854.0	15.15	0.6481	468.2	0.5839	11.141	9.972	0.514
578.	17.50	0.26	-5.41	23491.	-0.89	0.3847	855.5	15.34	0.6659	370.5	0.5779	11.437	9.977	0.480
580.	17.70	-0.18	-2.48	23479.	-3.06	0.3879	856.2	15.29	0.6729	218.0	0.5802	11.564	9.983	0.466
582.	17.00	-0.40	-0.91	23520.	-5.27	0.3749	854.0	14.72	0.6481	134.2	0.5987	11.179	9.987	0.493
584.	16.60	0.04	-3.67	23542.	-2.40	0.3729	852.8	14.62	0.6339	283.6	0.6018	10.940	9.990	0.489
586.	17.10	0.00	-3.57	23514.	-2.62	0.3802	854.3	14.94	0.6517	275.9	0.5912	11.220	9.994	0.487
588.	16.60	-0.22	-2.03	23542.	-4.04	0.3703	852.8	14.52	0.6339	194.2	0.6053	10.952	9.997	0.493
590.	16.50	0.15	-4.35	23548.	-1.70	0.3726	852.4	14.60	0.6304	321.2	0.6023	10.879	10.000	0.488
592.	17.00	0.73	-8.14	23520.	2.17	0.3884	854.0	15.25	0.6481	532.7	0.5802	11.133	10.004	0.548
594.	18.50	1.17	-12.30	23431.	5.74	0.4217	858.5	16.68	0.7012	709.4	0.5524	11.678	10.010	0.609
596.	20.20	0.95	-11.83	23321.	4.82	0.4500	863.4	17.93	0.7608	655.3	0.5365	12.152	10.017	0.577
598.	21.10	0.51	-8.86	23259.	1.60	0.4603	865.8	18.42	0.7923	506.9	0.5308	12.492	10.025	0.499
600.	21.60	0.48	-8.81	23223.	1.40	0.4709	867.1	18.88	0.8097	498.1	0.5251	12.609	10.034	0.488
602.	22.40	0.33	-7.94	23164.	0.30	0.4869	869.1	19.58	0.8376	452.5	0.5165	12.813	10.043	0.451
604.	22.50	0.11	-6.09	23156.	-1.58	0.4856	869.3	19.54	0.8411	373.5	0.5172	12.882	10.052	0.444
606.	22.70	0.95	-13.50	23141.	5.77	0.5064	869.8	20.39	0.8480	683.6	0.5101	12.627	10.061	0.561
608.	25.10	1.39	-19.44	22946.	10.95	0.5796	875.4	23.54	0.9312	878.2	0.5086	12.121	10.068	0.603
610.	26.50	0.37	-10.25	22823.	1.28	0.5912	878.3	24.19	0.9796	510.9	0.5102	12.407	10.075	0.442
612.	26.10	-2.57	19.32	22859.	-28.15	0.5847	877.5	23.82	0.9658	-548.9	0.5093	12.437	10.083	0.689
614.	19.50	-4.84	32.05	23368.	-38.86	0.4800	861.4	19.07	0.7363-1327.1		0.5207	11.370	10.087	0.795
616.	12.90	-4.84	21.54	23723.	-26.76	0.3712	840.4	14.27	0.5011-1320.4		0.6087	8.633	10.083	0.796
618.	6.30	-4.73	10.45	23932.	-14.35	0.2958	814.5	10.90	0.2552-1215.7		0.7319	4.641	10.065	0.746
620.	-0.0	-2.51	0.10	24000.	-2.87	0.1970	785.5	6.91	0.0056	57.7	0.9592	0.118	10.033	0.574
622.	-0.0	0.0	-0.02	24000.	-2.75	0.2109	785.5	7.39	0.0056	790.3	0.9066	0.117	10.001	0.515
624.	-0.0	0.0	-0.02	24000.	-2.75	0.2109	785.5	7.39	0.0056	790.3	0.9066	0.117	9.969	0.515
626.	-0.0	0.0	-0.02	24000.	-2.75	0.2109	785.5	7.39	0.0056	790.3	0.9066	0.117	9.938	0.515
628.	-0.0	0.0	-0.02	24000.	-2.75	0.2109	785.5	7.39	0.0056	790.3	0.9066	0.117	9.907	0.515

ENERGY STORING TRANSMISSION PERFORMANCE ANALYSIS

TIME	SPEED	ACCEL	OUT POWER	FLYWL SPEED	FLYWL POWER	THRST	ENGINE SPEED	ENGINE POWER	WOBLR RATIO	WORKG PRES	SFC	I MPG	C MPG	EFF
SEC	MPH	FPS/S	HP	RPM	HP	O/O	RPM	HP		PSI	LB/H/HR	MPG	MPG	O/O
630.	-0.0	0.0	-0.07	24000.	-2.75	0.2109	785.5	7.39	0.0056	790.3	0.9066	0.117	9.875	0.515
632.	-0.0	0.0	-0.07	24000.	-2.75	0.2109	785.5	7.39	0.0056	790.3	0.9066	0.117	9.849	0.515
634.	-0.0	0.0	-0.02	24000.	-2.75	0.2109	785.5	7.39	0.0056	790.3	0.9066	0.117	9.814	0.515
636.	-0.0	0.0	-0.02	24000.	-2.75	0.2109	785.5	7.39	0.0056	790.3	0.9066	0.117	9.783	0.515
638.	-0.0	0.0	-0.02	24000.	-2.75	0.2109	785.5	7.39	0.0056	790.3	0.9066	0.117	9.753	0.515
640.	-0.0	0.0	-0.02	24000.	-2.75	0.2109	785.5	7.39	0.0056	790.3	0.9066	0.117	9.723	0.515
642.	-0.0	0.0	-0.07	24000.	-2.75	0.2109	785.5	7.39	0.0056	790.3	0.9066	0.117	9.693	0.515
644.	-0.0	0.73	-0.06	24000.	-2.71	0.2177	785.5	7.63	0.0056	1026.5	0.8940	0.115	9.663	0.493
646.	2.00	2.86	-2.71	23992.	-0.41	0.2533	795.2	9.03	0.0868	1265.2	0.8236	1.652	9.638	0.448
648.	7.80	3.85	-13.13	23897.	8.95	0.3266	820.8	12.16	0.3123	1544.8	0.6805	5.517	9.626	0.692
650.	12.50	2.75	-15.73	23740.	10.59	0.3589	838.9	13.76	0.4865	1193.5	0.6264	8.429	9.622	0.709
652.	15.60	2.60	-18.45	23611.	12.69	0.3964	848.6	15.44	0.5876	1174.5	0.5708	10.072	9.623	0.712
654.	19.60	2.53	-23.32	23361.	16.47	0.4740	861.7	18.84	0.7399	1219.3	0.5238	11.496	9.629	0.705
656.	22.20	1.80	-20.36	23179.	12.77	0.5142	868.6	20.66	0.8308	988.6	0.5091	12.209	9.637	0.653
658.	24.50	1.25	-17.53	22997.	9.24	0.5595	874.1	22.67	0.9104	815.3	0.5066	12.333	9.645	0.591
660.	25.60	0.55	-11.96	22901.	3.30	0.5734	876.4	23.32	0.9485	582.7	0.5081	12.489	9.654	0.491
662.	26.10	0.22	-8.57	22859.	-0.26	0.5792	877.5	23.60	0.9658	451.5	0.5088	12.567	9.663	0.414
664.	26.20	0.15	-7.88	22850.	-0.99	0.5805	877.7	23.66	0.9693	425.2	0.5089	12.579	9.671	0.415
666.	26.50	-0.07	-5.77	22823.	-3.19	0.5846	878.3	23.85	0.9796	346.7	0.5094	12.610	9.680	0.416
668.	26.00	-1.06	4.27	22868.	-13.07	0.5608	877.3	22.84	0.9623	-21.4	0.5069	12.980	9.690	0.526
670.	23.60	-2.75	19.41	23070.	-27.42	0.5246	872.0	21.19	0.8793	-622.3	0.5079	12.681	9.699	0.715
672.	18.50	-3.34	19.79	23431.	-26.34	0.4287	858.5	16.96	0.7012	-836.5	0.5486	11.517	9.704	0.763
674.	14.50	-3.59	17.15	23651.	-22.73	0.3709	845.9	14.38	0.5589	-928.3	0.6070	9.640	9.704	0.775
676.	8.70	-4.03	11.96	23873.	-16.32	0.3103	824.5	11.62	0.3462	-1036.8	0.7019	6.230	9.694	0.761
678.	3.50	-3.19	3.77	23978.	-7.16	0.2501	802.1	9.02	0.1464	-691.0	0.8267	2.803	9.674	0.668
680.	-0.0	-1.28	0.04	24000.	-2.81	0.2014	785.5	7.06	0.0056	380.3	0.9345	0.119	9.646	0.552
682.	-0.0	0.0	-0.02	24000.	-2.75	0.2109	785.5	7.39	0.0056	790.3	0.9066	0.117	9.618	0.515
684.	-0.0	0.0	-0.02	24000.	-2.75	0.2109	785.5	7.39	0.0056	790.3	0.9066	0.117	9.590	0.515
686.	-0.0	0.0	-0.02	24000.	-2.75	0.2109	785.5	7.39	0.0056	790.3	0.9066	0.117	9.562	0.515
688.	-0.0	0.0	-0.02	24000.	-2.75	0.2109	785.5	7.39	0.0056	790.3	0.9066	0.117	9.535	0.515
690.	-0.0	0.0	-0.02	24000.	-2.75	0.2109	785.5	7.39	0.0056	790.3	0.9066	0.117	9.508	0.515
692.	-0.0	0.51	-0.05	24000.	-2.77	0.2156	785.5	7.56	0.0056	955.6	0.8979	0.116	9.480	0.499
694.	1.40	1.61	-1.22	23996.	-1.80	0.2325	792.3	8.25	0.0626	878.3	0.8639	1.240	9.457	0.486
696.	4.40	2.86	-5.76	23966.	2.21	0.2780	806.2	10.10	0.1817	1221.7	0.7711	3.350	9.439	0.564
698.	9.20	3.34	-13.64	23858.	9.18	0.3317	826.4	12.46	0.3649	1372.5	0.6703	6.426	9.430	0.699

ENERGY STORING TRANSMISSION PERFORMANCE ANALYSIS

TIME	SPEED	ACCEL	OUT POWER	FLYWL SPEED	FLYWL POWER	THRST	ENGINE SPEED	ENGINE POWER	WOBLR RATIO	WORKG PRES	SFC	I MPG	C MPG	EFF
SEC	MPH	FPS/S	HP	RPM	HP	O/O	RPM	HP		PSI	LB/H/HR	MPG	MPG	O/O
700.	13.50	2.64	-16.43	23697.	11.08	0.3703	842.5	14.28	0.5228	1165.1	0.6092	9.015	9.429	0.709
702.	16.40	1.10	-10.34	23553.	4.31	0.3847	852.1	15.07	0.6268	655.5	0.5858	10.774	9.433	0.602
704.	16.50	0.66	-7.60	23548.	1.56	0.3794	852.4	14.86	0.6304	501.0	0.5930	10.852	9.437	0.535
706.	18.20	1.32	-13.10	23449.	6.69	0.4191	857.7	16.55	0.6906	757.5	0.5540	11.496	9.443	0.625
708.	20.10	1.58	-16.58	23328.	9.60	0.4610	863.1	18.37	0.7573	879.8	0.5307	11.938	9.450	0.644
710.	22.50	0.73	-11.48	23156.	3.81	0.4969	869.3	19.99	0.8411	601.3	0.5113	12.734	9.459	0.533
712.	22.10	0.29	-7.49	23186.	-0.06	0.4792	868.4	19.25	0.8271	436.1	0.5206	12.759	9.468	0.444
714.	23.30	0.15	-6.71	23094.	-1.21	0.5054	871.3	20.40	0.8688	394.6	0.5102	12.950	9.478	0.436
716.	22.50	-1.03	3.73	23156.	-11.40	0.4751	869.3	19.11	0.8411	-34.3	0.5227	13.029	9.488	0.554
718.	20.50	-2.75	17.13	23301.	-24.23	0.4544	864.2	18.14	0.7713	-630.3	0.5341	12.251	9.496	0.733
720.	15.00	-4.22	21.32	23626.	-27.01	0.3892	847.6	15.13	0.5768	-1128.4	0.5811	9.898	9.497	0.789
722.	9.00	-3.05	11.72	23864.	-16.14	0.3107	825.7	11.66	0.3574	-983.1	0.7006	6.431	9.488	0.760
724.	4.50	-2.53	3.64	23965.	-7.21	0.2542	806.7	9.24	0.1857	-513.4	0.8167	3.532	9.472	0.668
726.	2.10	-1.47	0.86	23991.	-4.00	0.2235	795.7	7.97	0.0908	-129.7	0.8798	1.833	9.451	0.590
728.	0.50	1.61	-0.50	23999.	-2.35	0.2228	788.0	7.84	0.0261	951.9	0.8837	0.528	9.426	0.491
730.	6.50	4.40	-12.36	23928.	8.42	0.3233	815.4	11.93	0.2629	1731.6	0.6880	4.651	9.413	0.678
732.	12.50	3.49	-19.26	23740.	14.12	0.3738	838.9	14.33	0.4865	1450.8	0.6056	8.371	9.411	0.733
734.	16.00	2.60	-19.33	23575.	13.40	0.4079	850.9	15.94	0.6126	1185.3	0.5614	10.368	9.413	0.712
736.	19.60	2.60	-23.87	23361.	17.02	0.4760	861.7	18.92	0.7398	1246.0	0.5228	11.472	9.419	0.708
738.	23.10	2.16	-24.52	23110.	16.66	0.5473	870.8	22.07	0.8619	1137.4	0.5052	11.984	9.426	0.672
740.	25.50	1.47	-20.50	22912.	11.87	0.5927	876.2	24.10	0.9450	910.7	0.5100	11.994	9.433	0.608
742.	27.10	0.88	-15.90	22768.	6.72	0.6221	879.4	25.42	1.0004	711.7	0.5157	11.947	9.439	0.532
744.	27.90	0.55	-12.94	22693.	3.47	0.6311	880.9	25.85	1.0280	596.4	0.5175	12.051	9.446	0.479
746.	28.60	0.15	-8.94	22625.	-0.79	0.6373	882.2	26.15	1.0522	451.7	0.5188	12.179	9.454	0.408
748.	28.30	-0.22	-4.82	22654.	-4.80	0.6239	881.7	25.58	1.0418	310.3	0.5162	12.382	9.462	0.413
750.	28.00	-0.55	-1.18	22683.	-8.32	0.6125	881.1	25.09	1.0314	184.0	0.5140	12.543	9.470	0.417
752.	26.80	-1.65	10.33	22796.	-19.41	0.5874	878.9	23.98	0.9900	-224.1	0.5097	12.672	9.478	0.606
754.	23.50	-2.86	20.32	23078.	-28.30	0.5243	871.8	21.17	0.8758	-659.6	0.5079	12.638	9.487	0.721
756.	19.00	-3.15	18.95	23400.	-25.63	0.4341	860.0	17.21	0.7188	-773.8	0.5455	11.720	9.493	0.755
758.	14.90	-3.52	17.18	23631.	-22.85	0.3753	847.2	14.58	0.5733	-904.7	0.6005	9.874	9.494	0.773
760.	9.40	-4.36	14.09	23852.	-18.58	0.3222	827.2	12.12	0.3724	-1145.5	0.6834	6.619	9.486	0.772
762.	3.00	-2.90	2.91	23984.	-6.21	0.2423	799.9	8.71	0.1267	-590.5	0.8425	2.458	9.468	0.691
764.	1.50	-1.10	0.40	23995.	-3.43	0.2158	792.8	7.66	0.0667	5.9	0.8952	1.372	9.446	0.570
766.	-0.0	1.76	-0.12	24000.	-2.65	0.2287	785.5	8.02	0.0056	1359.3	0.8736	0.112	9.422	0.461
768.	6.30	4.73	-12.80	23932.	8.90	0.3274	814.5	12.06	0.2552	1846.0	0.6824	4.497	9.409	0.679

Sundstrand Aviation
division of Sundstrand Corporation

ENERGY STORING TRANSMISSION PERFORMANCE ANALYSIS

TIME	SPEED	ACCEL	OUT POWER	FLYWL SPEED	FLYWL POWER	THROT	ENGINE SPEED	ENGINE POWER	WORLR RATIO	WORKG PRES	SFC	I MPG	C MPG	EFF
SEC	MPH	FPS/S	HP	RPM	HP	O/O	RPM	HP		PSI	LB/H/HR	MPG	MPG	O/O
770.	12.90	4.11	-22.98	23723.	17.76	0.3934	840.4	15.12	0.5011	1676.1	0.5777	8.582	9.407	0.748
772.	17.50	2.42	-19.99	23491.	13.69	0.4301	855.5	16.93	0.6659	1143.5	0.5484	10.921	9.411	0.704
774.	19.50	1.65	-16.59	23368.	9.77	0.4505	861.4	17.90	0.7363	896.2	0.5365	11.756	9.417	0.652
776.	22.00	2.02	-22.01	23194.	14.49	0.5150	868.1	20.68	0.8237	1067.2	0.5090	12.092	9.424	0.669
778.	25.00	2.02	-25.32	22955.	16.86	0.5948	875.2	24.14	0.9278	1210.9	0.5161	11.736	9.410	0.694
780.	27.50	1.21	-19.64	22731.	10.32	0.6396	880.2	26.17	1.0142	841.3	0.5191	11.700	9.416	0.574
782.	28.10	0.51	-12.79	22654.	3.17	0.6370	881.7	26.70	1.0418	587.5	0.5191	12.024	9.442	0.472
784.	28.90	0.18	-9.48	22595.	-0.36	0.6446	882.7	26.47	1.0625	468.9	0.5202	12.124	9.449	0.407
786.	28.80	-0.22	-4.98	22605.	-4.83	0.6347	882.5	26.06	1.0591	315.2	0.5183	12.320	9.456	0.413
788.	28.30	-0.18	-5.21	22654.	-4.40	0.6245	881.7	25.60	1.0418	324.0	0.5164	12.367	9.464	0.412
790.	28.10	-0.26	-4.42	22654.	-5.20	0.6233	881.7	25.55	1.0418	296.5	0.5161	12.397	9.471	0.413
792.	27.60	-0.29	-3.82	22721.	-5.54	0.6078	880.4	24.87	1.0176	275.7	0.5131	12.499	9.479	0.414
794.	27.50	-0.04	-6.51	22731.	-2.81	0.6101	880.2	24.96	1.0142	370.9	0.5135	12.400	9.486	0.411
796.	27.50	0.0	-6.89	22731.	-2.43	0.6108	880.2	24.99	1.0142	384.5	0.5136	12.383	9.494	0.411
798.	27.50	0.18	-8.82	22731.	-0.50	0.6144	880.2	25.13	1.0142	453.3	0.5143	12.294	9.501	0.408
800.	28.00	0.92	-16.93	22683.	7.42	0.6425	881.1	26.32	1.0314	736.6	0.5197	11.827	9.506	0.538
802.	30.00	1.47	-24.77	22483.	14.50	0.6881	884.5	28.33	0.9994	-1225.4	0.5283	11.578	9.512	0.611
804.	32.00	1.10	-22.27	22267.	11.18	0.6683	887.3	27.63	0.9643	-1004.0	0.5248	12.741	9.520	0.610
806.	33.00	0.73	-18.52	22153.	6.99	0.6507	888.5	26.96	0.9466	-760.6	0.5218	13.545	9.530	0.585
808.	34.00	0.44	-15.46	22035.	3.47	0.6394	889.6	26.54	0.9290	-565.5	0.5198	14.229	9.541	0.558
810.	34.20	0.00	-9.81	22010.	-2.26	0.6244	889.8	25.92	0.9254	-248.8	0.5171	14.730	9.554	0.511
812.	34.00	-0.22	-6.86	22035.	-5.12	0.6191	889.6	25.69	0.9290	-85.7	0.5161	14.804	9.567	0.512
814.	33.60	-0.37	-4.81	22082.	-6.99	0.6175	889.2	25.61	0.9360	27.5	0.5157	14.668	9.580	0.506
816.	33.00	-0.59	-1.82	22153.	-9.71	0.6211	888.5	25.73	0.9466	149.7	0.5164	14.340	9.591	0.492
818.	32.00	-0.51	-2.48	22267.	-8.62	0.6188	887.3	25.59	0.9643	154.3	0.5158	14.000	9.602	0.476
820.	31.60	-0.51	-2.30	22311.	-8.54	0.6187	886.8	25.56	0.9713	158.0	0.5157	13.842	9.612	0.470
822.	30.60	-0.62	-0.84	22420.	-9.67	0.6217	885.4	25.63	0.9889	249.9	0.5162	13.358	9.621	0.450
824.	29.90	-0.26	-4.91	22493.	-5.32	0.6148	884.3	25.31	1.0012	-14.8	0.5148	13.255	9.630	0.444
826.	29.90	-0.11	-6.60	22493.	-3.64	0.6170	884.3	25.40	1.0012	-120.1	0.5152	13.199	9.639	0.443
828.	29.60	-0.15	-6.07	22524.	-4.09	0.6534	883.8	26.88	1.0867	350.7	0.5219	12.189	9.645	0.411
830.	29.50	-0.26	-4.79	22534.	-5.28	0.6492	883.7	26.70	1.0833	308.2	0.5212	12.247	9.651	0.413
832.	28.90	-0.66	-0.13	22595.	-9.71	0.6303	882.7	25.88	1.0625	151.0	0.5176	12.463	9.658	0.417
834.	27.70	-1.25	6.27	22712.	-15.67	0.6031	880.6	24.69	1.0211	-74.2	0.5122	12.659	9.665	0.546
836.	25.50	-2.09	14.30	22912.	-22.92	0.5601	876.2	22.78	0.9450	-386.3	0.5068	12.771	9.673	0.659
838.	22.00	-2.31	14.54	23194.	-22.06	0.4740	868.1	19.23	0.8237	-478.0	0.5207	12.710	9.680	0.700

ENERGY STORING TRANSMISSION PERFORMANCE ANALYSIS

TIME	SPEED	ACCEL	OUT POWER	FLYWL SPEED	FLYWL POWER	THROT	ENGINE SPEED	ENGINE POWER	WORLR RATIO	WORKG PRES	SFC	I MPG	C MPG	EFF
SEC	MPH	FPS/S	HP	RPM	HP	O/O	RPM	HP		PSI	LB/H/HR	MPG	MPG	O/O
840.	19.20	-0.70	1.01	23387.	-7.74	0.4091	860.6	16.24	0.7258	53.8	0.5589	12.254	9.686	0.516
842.	20.10	0.81	-10.63	23328.	3.65	0.4452	863.1	17.74	0.7573	600.7	0.5391	12.169	9.692	0.555
844.	21.40	0.92	-12.33	23237.	4.98	0.4747	866.6	19.02	0.8028	656.3	0.5231	12.450	9.699	0.567
846.	22.60	0.95	-13.44	23148.	5.74	0.5039	869.6	20.28	0.8445	682.6	0.5104	12.629	9.705	0.565
848.	24.00	1.25	-17.11	23038.	8.98	0.5462	872.9	22.10	0.8931	808.2	0.5052	12.431	9.712	0.594
850.	26.00	0.95	-15.85	22868.	7.05	0.5930	877.3	24.15	0.9623	724.8	0.5101	12.199	9.718	0.548
852.	26.60	0.37	-10.29	22814.	1.29	0.5959	878.5	24.31	0.9831	511.9	0.5106	12.383	9.724	0.441
854.	27.00	0.44	-11.26	22778.	2.11	0.6087	879.3	24.86	0.9969	544.1	0.5131	12.230	9.730	0.456
856.	27.80	0.66	-14.05	22702.	4.61	0.6316	880.8	25.86	1.0245	636.8	0.5176	12.001	9.735	0.498
858.	28.80	0.44	-12.27	22605.	2.46	0.6481	882.5	26.61	1.0591	565.2	0.5209	12.005	9.740	0.458
860.	29.00	0.07	-8.30	22585.	-1.58	0.6445	882.9	26.47	1.0660	428.2	0.5202	12.165	9.746	0.409
862.	29.00	-0.55	-1.37	22585.	-8.51	0.6339	882.9	26.04	1.0660	193.1	0.5182	12.416	9.752	0.416
864.	27.50	-1.17	5.48	22731.	-14.81	0.5985	880.2	24.48	1.0142	-49.4	0.5113	12.695	9.759	0.535
866.	25.80	-1.10	4.63	22886.	-13.36	0.5558	876.9	22.62	0.9554	-36.3	0.5064	13.019	9.767	0.535
868.	24.50	-0.26	-3.38	22997.	-4.91	0.5291	874.1	21.44	0.9104	258.5	0.5073	13.022	9.774	0.433
870.	25.10	0.44	-10.25	22946.	1.75	0.5568	875.4	22.61	0.9312	521.8	0.5064	12.673	9.781	0.464
872.	25.70	0.66	-12.73	22895.	4.04	0.5777	876.6	23.51	0.9520	610.9	0.5085	12.428	9.787	0.504
874.	26.90	0.77	-14.61	22787.	5.50	0.6137	879.1	25.06	0.9934	667.2	0.5141	12.068	9.792	0.517
876.	27.80	0.77	-15.22	22702.	5.78	0.6343	880.8	25.97	1.0245	678.5	0.5181	11.937	9.797	0.516
878.	29.00	0.48	-12.79	22585.	2.91	0.6534	882.9	26.84	1.0660	581.7	0.5219	11.962	9.802	0.466
880.	29.10	-0.04	-7.12	22575.	-2.80	0.6445	883.0	26.48	1.0695	387.5	0.5202	12.203	9.807	0.410
882.	28.90	-0.17	-3.39	22595.	-6.46	0.6344	882.7	26.05	1.0625	261.1	0.5183	12.365	9.813	0.414
884.	28.10	-0.33	-3.57	22673.	-5.98	0.6178	881.3	25.32	1.0349	266.9	0.5151	12.452	9.819	0.414
886.	28.00	-0.33	-3.54	22683.	-5.96	0.6157	881.1	25.22	1.0314	266.1	0.5146	12.464	9.825	0.414
888.	27.20	-0.37	-2.95	22759.	-6.27	0.5982	879.6	24.45	1.0038	244.5	0.5112	12.576	9.831	0.416
890.	27.00	0.22	-8.48	22778.	-0.17	0.6039	879.3	24.67	0.9969	461.4	0.5122	12.348	9.837	0.408
892.	27.80	0.29	-10.14	22702.	0.71	0.6231	880.8	25.51	1.0245	498.2	0.5160	12.202	9.842	0.424
894.	27.80	0.07	-7.79	22702.	-1.64	0.6186	880.8	25.33	1.0245	415.4	0.5151	12.312	9.848	0.409
896.	28.00	-0.04	-6.70	22683.	-2.81	0.6207	881.1	25.43	1.0314	376.1	0.5156	12.339	9.853	0.411
898.	27.70	-0.40	-2.69	22712.	-6.71	0.6082	880.6	24.89	1.0211	235.8	0.5132	12.529	9.859	0.415
900.	26.90	-0.44	-2.12	22787.	-6.99	0.5897	879.1	24.08	0.9934	214.4	0.5100	12.659	9.865	0.418
902.	26.50	-0.15	-5.02	22823.	-3.95	0.5833	878.3	23.79	0.9796	319.2	0.5092	12.640	9.872	0.417
904.	26.50	-0.11	-5.40	22823.	-3.57	0.5840	878.3	23.82	0.9796	332.9	0.5093	12.625	9.878	0.416
906.	26.20	-0.22	-4.19	22850.	-4.67	0.5741	877.7	23.39	0.9693	289.0	0.5083	12.736	9.884	0.420
908.	25.90	-0.22	-4.11	22877.	-4.65	0.5660	877.1	23.05	0.9589	286.0	0.5074	12.802	9.890	0.422

ENERGY STORING TRANSMISSION PERFORMANCE ANALYSIS

TIME	SPEED	ACCEL	OUT POWER	FLYWL SPEED	FLYWL POWER	THROT	ENGINE SPEED	ENGINE POWER	WOBLR RATIO	WORKG PRES	SFC	I MPG	C MPG	EFF
SEC	MPH	FPS/S	HP	RPM	HP	O/O	RPM	HP		PSI	LB/HP/HR	MPG	MPG	O/O
910.	25.60	-0.04	-5.82	22903.	-2.83	0.5611	876.4	22.82	0.9485	350.7	0.5069	12.793	9.897	0.421
912.	25.80	-0.17	-2.63	22886.	-6.09	0.5612	876.9	22.84	0.9554	231.1	0.5069	12.879	9.903	0.424
914.	24.60	-1.32	6.63	22989.	-14.95	0.5271	874.3	21.37	0.9139	-122.8	0.5076	13.113	9.910	0.501
916.	22.20	-1.10	4.34	23179.	-11.92	0.4687	868.6	18.84	0.8306	-62.0	0.5261	12.962	9.917	0.570
918.	21.60	0.15	-6.07	23223.	-1.34	0.4654	867.1	18.66	0.8097	378.4	0.5279	12.688	9.923	0.451
920.	22.60	0.48	-12.81	23140.	5.10	0.5024	869.6	20.22	0.8445	655.8	0.5106	12.664	9.929	0.555
922.	24.00	0.66	-11.71	23038.	3.57	0.5327	872.9	21.55	0.8931	590.7	0.5064	12.705	9.935	0.512
924.	24.40	0.40	-9.54	23005.	1.28	0.5378	873.8	21.79	0.9070	500.4	0.5063	12.792	9.941	0.459
926.	25.10	0.33	-9.18	22946.	0.69	0.5546	875.4	22.52	0.9312	480.9	0.5062	12.729	9.947	0.438
928.	25.30	0.04	-6.44	22929.	-2.12	0.5544	875.8	22.53	0.9381	374.7	0.5062	12.826	9.953	0.422
930.	25.20	-0.11	-4.98	22918.	-3.55	0.5494	875.6	22.31	0.9347	319.5	0.5057	12.911	9.960	0.425
932.	25.00	-0.18	-4.21	22955.	-4.25	0.5430	875.2	22.04	0.9278	290.5	0.5057	12.968	9.966	0.428
934.	24.70	-0.26	-3.43	22980.	-4.93	0.5342	874.5	21.66	0.9174	260.6	0.5067	13.010	9.973	0.431
936.	24.30	-0.07	-5.05	23014.	-3.19	0.5268	873.6	21.33	0.9035	323.8	0.5076	12.976	9.979	0.432
938.	24.50	0.26	-8.21	22997.	-0.08	0.5375	874.1	21.78	0.9104	447.4	0.5063	12.844	9.985	0.425
940.	25.00	0.04	-6.33	22955.	-2.13	0.5466	875.2	22.19	0.9278	371.5	0.5054	12.890	9.991	0.425
942.	24.60	-0.18	-4.10	22989.	-4.27	0.5327	874.3	21.60	0.9139	286.6	0.5069	12.993	9.998	0.431
944.	24.50	0.37	-9.24	22997.	0.95	0.5396	874.1	21.87	0.9104	487.8	0.5060	12.801	10.004	0.450
946.	25.60	-0.18	-4.39	22901.	-4.27	0.5587	876.4	22.72	0.9485	296.7	0.5067	12.854	10.010	0.423
948.	24.00	-2.02	12.94	23038.	-21.08	0.5213	872.9	21.09	0.8931	-368.7	0.5083	12.947	10.016	0.663
950.	20.10	-3.81	25.05	23328.	-32.03	0.4679	863.1	18.64	0.7573	-986.8	0.5270	11.845	10.020	0.773
952.	13.60	-4.61	22.47	23692.	-27.85	0.3802	842.8	14.67	0.5264	-1311.5	0.5953	9.046	10.018	0.797
954.	7.00	-4.84	11.88	23917.	-15.91	0.3044	817.5	11.27	0.2820	-1261.0	0.7141	5.049	10.007	0.757
956.	0.40	-2.57	0.43	23999.	-3.27	0.2063	787.5	7.26	0.0220	-340.5	0.9146	0.465	9.987	0.577
958.	-0.0	0.59	-0.05	24000.	-2.72	0.2163	785.5	7.58	0.0056	979.1	0.8966	0.115	9.967	0.497
960.	2.00	3.15	-2.95	23992.	-0.17	0.2570	795.2	9.16	0.0868	1368.3	0.8166	1.642	9.949	0.439
962.	8.60	4.84	-17.78	23876.	13.44	0.3549	824.1	13.78	0.3424	1890.9	0.6384	5.925	9.941	0.723
964.	15.20	3.67	-24.56	23616.	18.82	0.4197	848.2	16.33	0.5840	1554.1	0.5553	9.722	9.941	0.745
966.	18.60	2.16	-19.45	23425.	12.87	0.4447	859.8	17.60	0.7047	1068.3	0.5399	11.337	9.943	0.689
968.	21.10	1.61	-17.77	23259.	10.51	0.4832	865.8	19.33	0.7923	907.4	0.5187	12.179	9.948	0.664
970.	23.00	1.41	-22.13	23118.	14.31	0.5374	870.6	21.66	0.8584	1040.1	0.5062	12.131	9.953	0.656
972.	26.30	1.87	-25.31	22841.	16.41	0.6275	877.9	25.58	0.9727	1075.4	0.5166	11.504	9.956	0.637
974.	28.10	0.81	-15.82	22673.	6.28	0.6418	881.3	26.30	1.0349	696.3	0.5196	11.881	9.960	0.522
976.	28.40	0.15	-8.89	22635.	-0.60	0.6351	882.0	26.05	1.0487	450.6	0.5184	12.191	9.964	0.408
978.	28.50	-0.37	-3.28	22635.	-6.41	0.6258	882.0	25.67	1.0487	257.2	0.5166	12.415	9.969	0.414

ENERGY STORING TRANSMISSION PERFORMANCE ANALYSIS

TIME	SPEED	ACCEL	OUT POWER	FLYWL SPEED	FLYWL POWER	THROT	ENGINE SPEED	ENGINE POWER	WOBLR RATIO	WORKG PRES	SFC	I MPG	C MPG	EFF
SEC	MPH	FPS/S	HP	RPM	HP	O/O	RPM	HP		PSI	LB/HP/HR	MPG	MPG	O/O
980.	27.50	-0.62	-0.32	22731.	-9.01	0.6011	880.2	24.59	1.0142	152.0	0.5118	12.628	9.975	0.418
982.	26.80	-0.55	-0.97	22796.	-8.10	0.5856	878.9	23.91	0.9900	172.8	0.5095	12.716	9.980	0.419
984.	26.00	-0.59	-0.48	22868.	-8.32	0.5638	877.3	22.96	0.9623	151.9	0.5072	12.905	9.986	0.425
986.	25.20	-1.47	6.13	22938.	-16.66	0.5437	875.6	22.08	0.9347	-170.1	0.5056	13.048	9.992	0.596
988.	22.00	-1.36	6.43	23194.	-14.01	0.4663	868.1	18.72	0.8237	-152.1	0.5274	12.890	9.998	0.610
990.	21.50	0.18	-6.33	23230.	-1.04	0.4637	866.8	18.58	0.8062	390.8	0.5289	12.658	10.004	0.451
992.	22.30	0.48	-9.26	23156.	1.58	0.4919	869.3	19.79	0.8411	507.0	0.5139	12.799	10.009	0.484
994.	22.80	0.18	-6.84	23133.	-0.92	0.4939	870.1	19.89	0.8515	403.0	0.5128	12.929	10.015	0.440
996.	23.00	-0.04	-4.98	23118.	-2.85	0.4953	870.6	19.96	0.8584	324.9	0.5121	13.015	10.021	0.442
998.	22.70	0.18	-6.79	23141.	-0.94	0.4915	869.8	19.79	0.8480	401.8	0.5140	12.908	10.027	0.441
1000.	23.50	0.70	-11.75	23078.	3.78	0.5208	871.8	21.03	0.8758	598.7	0.5083	12.713	10.032	0.521
1002.	24.60	0.59	-11.37	22989.	3.04	0.5467	874.3	22.16	0.9139	570.5	0.5054	12.699	10.038	0.496
1004.	25.10	0.37	-9.54	22946.	1.05	0.5553	875.4	22.55	0.9312	494.6	0.5063	12.711	10.043	0.447
1006.	25.60	-0.04	-5.83	22903.	-2.83	0.5611	876.4	22.82	0.9485	350.8	0.5069	12.793	10.048	0.421
1008.	25.00	-0.70	0.71	22955.	-9.17	0.5367	875.2	21.79	0.9278	102.8	0.5064	13.100	10.054	0.453
1010.	23.70	-0.77	1.48	23062.	-9.52	0.5038	872.2	20.36	0.8827	65.3	0.5105	13.190	10.061	0.486
1012.	22.90	-0.62	0.22	23125.	-8.01	0.4858	870.3	19.57	0.8550	111.7	0.5170	13.089	10.067	0.457
1014.	22.00	-0.88	2.46	23194.	-9.98	0.4636	868.1	18.61	0.8237	13.8	0.5288	12.931	10.072	0.530
1016.	20.50	-2.86	18.00	23301.	-25.09	0.4564	864.2	18.21	0.7713	-667.1	0.5330	12.222	10.077	0.738
1018.	14.20	-4.73	23.03	23665.	-28.54	0.3874	844.9	14.59	0.5681	-1290.6	0.5846	9.404	10.075	0.796
1020.	7.60	-4.84	12.87	23903.	-17.01	0.3106	820.0	11.55	0.3048	-1270.3	0.7038	5.474	10.066	0.763
1022.	1.00	-2.79	1.01	23997.	-3.95	0.2169	790.4	7.67	0.0464	-477.7	0.8939	0.953	10.048	0.595
1024.	-0.0	-0.37	-0.00	24000.	-2.76	0.2078	785.5	7.29	0.0056	672.7	0.9123	0.118	10.029	0.525
1026.	-0.0	0.0	-0.02	24000.	-2.75	0.2109	785.5	7.39	0.0056	790.4	0.9066	0.117	10.010	0.515
1028.	-0.0	0.0	-0.02	24000.	-2.75	0.2109	785.5	7.39	0.0056	790.4	0.9066	0.117	9.990	0.515
1030.	-0.0	0.0	-0.02	24000.	-2.75	0.2109	785.5	7.39	0.0056	790.4	0.9066	0.117	9.971	0.515
1032.	-0.0	0.0	-0.02	24000.	-2.75	0.2109	785.5	7.39	0.0056	790.4	0.9066	0.117	9.952	0.515
1034.	-0.0	0.0	-0.02	24000.	-2.75	0.2109	785.5	7.39	0.0056	790.4	0.9066	0.117	9.933	0.515
1036.	-0.0	0.0	-0.02	24000.	-2.75	0.2109	785.5	7.39	0.0056	790.4	0.9066	0.117	9.914	0.515
1038.	-0.0	0.0	-0.02	24000.	-2.75	0.2109	785.5	7.39	0.0056	790.4	0.9066	0.117	9.895	0.515
1040.	-0.0	0.0	-0.02	24000.	-2.75	0.2109	785.5	7.39	0.0056	790.4	0.9066	0.117	9.876	0.515
1042.	-0.0	0.0	-0.02	24000.	-2.75	0.2109	785.5	7.39	0.0056	790.4	0.9066	0.117	9.858	0.515
1044.	-0.0	0.0	-0.02	24000.	-2.75	0.2109	785.5	7.39	0.0056	790.4	0.9066	0.117	9.839	0.515
1046.	-0.0	0.0	-0.02	24000.	-2.75	0.2109	785.5	7.39	0.0056	790.4	0.9066	0.117	9.820	0.515
1048.	-0.0	0.0	-0.02	24000.	-2.75	0.2109	785.5	7.39	0.0056	790.4	0.9066	0.117	9.802	0.515

ENERGY STORING TRANSMISSION PERFORMANCE ANALYSIS

TIME	SPEED	ACCEL	OUT POWER	FLYWL SPEED	FLYWL POWER	THROT	ENGINE SPEED	ENGINE POWER	WHEEL RATIO	WORKG PRES	SFC	I MPG	C MPG	EFF
SEC	MPH	FPS/S	HP	RPM	HP	O/O	RPM	HP		PSI	LB/HP/HR	MPG	MPG	O/O
1050.	-0.0	0.0	-0.02	24000.	-2.75	0.2109	785.5	7.39	0.0056	790.4	0.9066	0.117	9.783	0.515
1052.	-0.0	1.47	-0.10	24000.	-2.67	0.2254	785.5	7.90	0.0056	1264.1	0.8797	0.113	9.769	0.470
1054.	4.00	3.89	-6.88	23972.	3.40	0.2892	804.4	10.47	0.1661	1570.7	0.7505	3.026	9.752	0.584
1056.	10.60	4.77	-21.57	23812.	16.84	0.3774	831.9	14.31	0.4169	1881.1	0.6031	7.154	9.747	0.744
1058.	17.00	3.65	-26.10	23520.	19.93	0.4464	854.0	17.53	0.6481	1505.7	0.5396	10.414	9.749	0.740
1060.	20.00	2.20	-21.29	23335.	14.34	0.4739	862.8	18.87	0.7538	1106.1	0.5236	11.712	9.752	0.687
1062.	23.00	1.76	-20.84	23118.	13.02	0.5335	870.6	21.50	0.8584	985.8	0.5067	12.209	9.757	0.646
1064.	24.80	1.78	-18.12	22972.	9.72	0.5685	874.7	23.06	0.9208	832.5	0.5075	12.251	9.762	0.594
1066.	26.50	0.95	-16.21	22823.	7.24	0.6070	878.3	24.76	0.9796	731.3	0.5127	12.065	9.766	0.545
1068.	27.40	0.66	-13.79	22740.	4.50	0.6230	880.0	25.48	1.0107	631.9	0.5159	12.046	9.770	0.498
1070.	28.30	0.04	-7.61	22654.	-2.01	0.6286	881.7	25.77	1.0418	407.0	0.5171	12.580	9.775	0.409
1072.	27.50	-0.48	-1.86	22731.	-7.46	0.6029	880.2	24.67	1.0142	206.5	0.5121	12.580	9.780	0.416
1074.	27.00	-1.10	4.69	22778.	-13.83	0.5873	879.3	23.99	0.9969	-26.7	0.5097	12.760	9.786	0.524
1076.	24.50	-2.02	13.16	22997.	-21.46	0.5336	874.1	21.63	0.9104	-366.3	0.5068	12.926	9.791	0.660
1078.	21.50	-2.38	14.85	23230.	-22.23	0.4690	866.8	18.79	0.8062	-504.1	0.5261	12.583	9.797	0.708
1080.	18.00	-3.37	19.52	23462.	-25.95	0.4207	857.1	16.61	0.6835	-849.7	0.5532	11.353	9.799	0.765
1082.	12.30	-2.72	10.47	23748.	-15.57	0.3303	838.2	12.65	0.4792	-645.2	0.6667	8.478	9.797	0.743
1084.	10.60	-1.03	2.17	23812.	-6.91	0.2970	831.9	11.26	0.4169	-102.2	0.7194	7.623	9.793	0.613
1086.	9.50	-0.70	0.76	23849.	-5.27	0.2859	827.6	10.76	0.3761	7.3	0.7440	6.919	9.788	0.562
1088.	8.70	-0.26	-0.78	23873.	-3.58	0.2808	824.5	10.52	0.3462	155.1	0.7559	6.392	9.781	0.520
1090.	8.60	0.00	-1.66	23870.	-2.71	0.2833	824.9	10.62	0.3499	239.9	0.7507	6.447	9.775	0.516
1092.	8.70	-0.29	-0.66	23873.	-3.70	0.2806	824.5	10.51	0.3462	143.1	0.7563	6.393	9.769	0.521
1094.	8.00	-1.46	2.71	23892.	-6.93	0.2757	821.6	10.27	0.3199	-195.5	0.7676	5.932	9.762	0.638
1096.	5.00	-1.98	2.95	23957.	-6.61	0.2545	808.9	9.29	0.2051	-353.7	0.8152	3.901	9.751	0.652
1098.	2.60	-1.83	1.43	23987.	-4.66	0.2306	798.0	8.26	0.1108	-256.6	0.8654	2.201	9.738	0.611
1100.	-0.0	-0.73	0.01	24000.	-2.78	0.2051	785.5	7.19	0.0056	555.3	0.9174	0.119	9.720	0.536
1102.	0.60	1.32	-0.50	23999.	-2.37	0.2209	788.5	7.79	0.0302	842.4	0.8870	0.613	9.704	0.499
1104.	3.60	3.65	-5.58	23977.	2.17	0.2784	802.6	10.05	0.1504	1427.8	0.7721	2.768	9.691	0.550
1106.	10.00	3.42	-16.67	23833.	12.05	0.3497	829.6	13.21	0.3947	1542.5	0.6433	6.860	9.686	0.721
1108.	14.00	2.20	-14.67	23674.	9.21	0.4848	844.2	14.26	0.5409	1015.5	0.6106	9.335	9.685	0.689
1110.	16.00	2.20	-16.83	23575.	10.91	0.3991	850.9	15.60	0.6126	1040.5	0.5664	10.501	9.687	0.693
1112.	20.00	1.91	-19.03	23335.	12.08	0.4667	862.8	18.58	0.7538	498.7	0.5277	11.807	9.691	0.669
1114.	21.20	0.51	-8.91	23252.	1.62	0.4625	866.0	18.51	0.7958	507.8	0.5296	12.514	9.696	0.498
1116.	21.40	0.48	-8.71	23237.	1.36	0.4664	866.6	18.68	0.8028	496.2	0.5275	12.566	9.701	0.489
1118.	22.50	0.88	-12.74	23156.	5.07	0.4999	869.3	20.11	0.8411	654.8	0.5109	12.667	9.706	0.556

ENERGY STORING TRANSMISSION PERFORMANCE ANALYSIS

TIME	SPEED	ACCEL	OUT POWER	FLYWL SPEED	FLYWL POWER	THROT	ENGINE SPEED	ENGINE POWER	WHEEL RATIO	WORKG PRES	SFC	I MPG	C MPG	EFF
SEC	MPH	FPS/S	HP	RPM	HP	O/O	RPM	HP		PSI	LB/HP/HR	MPG	MPG	O/O
1120.	23.80	0.92	-13.94	23054.	5.86	0.5332	872.5	21.55	0.8862	683.2	0.5068	12.599	9.711	0.554
1122.	25.00	0.47	-9.49	22955.	1.03	0.5527	875.2	22.44	0.9278	493.6	0.5060	12.732	9.717	0.448
1124.	24.80	0.15	-7.30	22972.	-1.09	0.5433	874.7	22.04	0.9208	410.0	0.5056	12.868	9.722	0.424
1126.	25.40	0.44	-10.40	22921.	1.81	0.5648	876.0	22.96	0.9416	525.4	0.5072	12.609	9.727	0.462
1128.	26.00	0.44	-10.72	22868.	1.92	0.5810	877.3	23.66	0.9623	532.3	0.5089	12.460	9.732	0.460
1130.	26.60	0.37	-10.29	22814.	1.29	0.5959	878.5	24.31	0.9831	511.9	0.5106	12.383	9.737	0.441
1132.	27.00	0.15	-8.27	22778.	-0.92	0.6025	879.3	24.61	0.9969	434.1	0.5119	12.385	9.742	0.409
1134.	27.00	-0.07	-5.95	22778.	-3.20	0.5983	879.3	24.44	0.9969	351.9	0.5111	12.490	9.746	0.413
1136.	26.80	-0.18	-4.74	22796.	-4.33	0.5909	878.9	24.12	0.9900	308.7	0.5101	12.588	9.751	0.415
1138.	26.50	-0.29	-3.53	22823.	-5.43	0.5810	878.3	23.70	0.9796	264.9	0.5090	12.697	9.757	0.419
1140.	26.00	-0.70	0.62	22868.	-9.41	0.5626	877.3	22.91	0.9623	111.6	0.5071	12.935	9.762	0.443
1142.	24.60	-1.65	9.74	22989.	-18.07	0.5308	874.3	21.52	0.9139	-238.2	0.5071	13.033	9.768	0.623
1144.	21.50	-2.60	16.68	23230.	-24.05	0.4728	866.8	18.95	0.8062	-578.7	0.5241	12.530	9.773	0.721
1146.	17.50	-2.75	14.83	23491.	-21.13	0.4017	855.5	15.82	0.6659	-647.9	0.5639	11.372	9.776	0.743
1148.	14.00	-3.70	17.17	23674.	-22.63	0.3659	844.2	14.15	0.5409	-962.4	0.6146	9.347	9.775	0.777
1150.	7.40	-4.64	12.53	23908.	-16.64	0.3085	819.2	11.45	0.2972	-1266.9	0.7073	5.350	9.767	0.761
1152.	0.80	-2.72	0.80	23998.	-3.72	0.2135	789.4	7.54	0.0383	-439.9	0.9005	0.793	9.752	0.588
1154.	-0.0	-0.29	-0.01	24000.	-2.76	0.2084	785.5	7.31	0.0056	696.1	0.9112	0.118	9.735	0.523
1156.	-0.0	0.0	-0.02	24000.	-2.75	0.2109	785.5	7.39	0.0056	790.4	0.9066	0.117	9.718	0.515
1158.	-0.0	0.0	-0.02	24000.	-2.75	0.2109	785.5	7.39	0.0056	790.4	0.9066	0.117	9.702	0.515
1160.	-0.0	0.0	-0.02	24000.	-2.75	0.2109	785.5	7.39	0.0056	790.4	0.9066	0.117	9.685	0.515
1162.	-0.0	0.0	-0.02	24000.	-2.75	0.2109	785.5	7.39	0.0056	790.4	0.9066	0.117	9.669	0.515
1164.	-0.0	0.0	-0.02	24000.	-2.75	0.2109	785.5	7.39	0.0056	790.4	0.9066	0.117	9.652	0.515
1166.	-0.0	0.0	-0.02	24000.	-2.75	0.2109	785.5	7.39	0.0056	790.4	0.9066	0.117	9.636	0.515
1168.	-0.0	1.98	-0.13	24000.	-2.64	0.2313	785.5	8.11	0.0056	1431.2	0.8688	0.111	9.619	0.454
1170.	5.40	4.40	-10.30	23950.	6.56	0.3120	810.6	11.42	0.2206	1734.2	0.7068	3.944	9.610	0.648
1172.	12.00	4.84	-24.76	23760.	19.74	0.3980	837.1	15.21	0.4683	1924.2	0.5724	8.013	9.607	0.755
1174.	18.60	4.04	-32.82	23425.	26.24	0.4957	858.8	19.62	0.7047	1751.3	0.5124	10.719	9.609	0.752
1176.	23.00	1.61	-19.53	23118.	11.71	0.5296	870.6	21.35	0.8584	930.9	0.5072	12.287	9.613	0.634
1178.	23.00	-1.10	4.41	23118.	-12.23	0.4870	870.6	19.63	0.8584	-56.4	0.5164	13.125	9.619	0.562
1180.	20.00	-3.52	22.67	23335.	-29.63	0.4597	862.8	18.31	0.7538	-890.0	0.5314	11.901	9.623	0.765
1182.	13.40	-4.84	22.35	23701.	-27.68	0.3781	842.1	14.57	0.5192	-1322.6	0.5984	8.926	9.622	0.797
1184.	6.80	-4.84	11.54	23922.	-15.54	0.3024	816.6	11.18	0.2744	-1257.7	0.7177	4.972	9.614	0.754
1186.	0.20	-2.50	0.26	23999.	-3.07	0.2020	786.5	7.10	0.0138	-250.8	0.9306	0.293	9.599	0.574
1188.	-0.0	-0.07	-0.02	24000.	-2.75	0.2103	785.5	7.37	0.0056	766.7	0.9078	0.117	9.583	0.517

ENERGY STORING TRANSMISSION PERFORMANCE ANALYSIS

TIME SEC	SPEED MPH	ACCEL FPS/S	OUT POWER HP	FLYWL SPEED RPM	FLYWL POWER HP	THROT O/D	ENGINE SPEED RPM	ENGINE POWER HP	WORLR RATIO	WORKG PRES PSI	SFC LB/HP/HR	I MPG MPG	C MPG MPG	EFF O/O
1190.	-0.0	0.0	-0.02	24000.	-2.75	0.2109	785.5	7.39	0.0056	790.3	0.9066	0.117	9.567	0.515
1192.	-0.0	0.0	-0.02	24000.	-2.75	0.2109	785.5	7.39	0.0056	790.3	0.9066	0.117	9.551	0.515
1194.	-0.0	0.0	-0.02	24000.	-2.75	0.2109	785.5	7.39	0.0056	790.3	0.9066	0.117	9.535	0.515
1196.	-0.0	0.55	-0.05	24000.	-2.72	0.2159	785.5	7.57	0.0056	967.4	0.8973	0.115	9.519	0.498
1198.	1.50	2.38	-1.78	23995.	-1.26	0.2419	797.8	8.59	0.0667	1124.8	0.8461	1.295	9.506	0.464
1200.	6.50	3.85	-10.96	23928.	7.02	0.3134	815.4	11.56	0.2629	1544.0	0.7022	4.700	9.498	0.665
1202.	12.00	2.59	-16.35	23760.	8.36	0.3459	837.1	13.22	0.4683	1060.6	0.6454	8.177	9.495	0.690
1204.	13.60	0.29	-6.04	23719.	-1.20	0.3276	840.7	12.60	0.5047	344.4	0.6693	8.958	9.494	0.503
1206.	12.80	0.04	-2.70	23727.	-2.50	0.3229	840.0	12.40	0.4974	255.6	0.6763	8.869	9.493	0.508
1208.	13.10	0.49	-7.57	23714.	2.13	0.3172	841.1	12.97	0.5083	584.8	0.6558	8.946	9.492	0.579
1210.	15.50	2.02	-15.20	23601.	9.39	0.3874	849.2	15.10	0.5947	968.9	0.5830	10.211	9.494	0.682
1212.	18.60	2.02	-18.40	23425.	11.82	0.4413	858.8	17.46	0.7047	1014.8	0.5418	11.386	9.497	0.680
1214.	21.00	1.17	-14.14	23266.	6.90	0.4710	865.5	18.83	0.7888	745.8	0.5252	12.287	9.501	0.602
1216.	21.80	0.18	-6.45	23208.	-1.01	0.4705	867.6	18.88	0.8167	393.7	0.5252	12.721	9.507	0.449
1218.	21.50	-0.11	-3.97	23230.	-3.44	0.4595	866.8	18.41	0.8062	285.3	0.5311	12.721	9.512	0.456
1220.	21.50	0.18	-6.34	23230.	-1.04	0.4638	866.8	18.58	0.8062	391.1	0.5288	12.658	9.517	0.451
1222.	22.00	0.07	-5.60	23194.	-1.93	0.4734	868.1	19.01	0.8237	355.6	0.5236	12.787	9.522	0.449
1224.	21.70	-0.18	-3.36	23216.	-4.08	0.4630	867.3	18.57	0.8132	260.5	0.5292	12.777	9.528	0.455
1226.	21.50	-0.59	0.02	23230.	-7.40	0.4543	866.8	18.20	0.8062	114.6	0.5338	12.801	9.533	0.463
1228.	20.10	-0.84	2.11	23328.	-9.09	0.4247	863.1	16.92	0.7573	12.5	0.5500	12.501	9.538	0.541
1230.	19.20	-0.11	-3.33	23387.	-3.41	0.4143	860.6	16.44	0.7258	260.6	0.5561	12.161	9.542	0.474
1232.	19.80	0.11	-5.15	23348.	-1.75	0.4281	862.3	17.03	0.7468	346.5	0.5484	12.272	9.547	0.466
1234.	19.50	-1.58	7.58	23368.	-14.40	0.4191	861.4	16.65	0.7363	-243.4	0.5534	12.253	9.551	0.654
1236.	15.50	-3.48	17.62	23601.	-23.43	0.3833	849.2	14.94	0.5947	-892.5	0.5888	10.221	9.552	0.772
1238.	10.00	-3.48	11.56	23833.	-16.18	0.3158	829.6	11.93	0.3947	-877.7	0.6913	7.068	9.548	0.758
1240.	6.00	-2.75	5.33	23939.	-9.17	0.2698	813.2	9.92	0.2437	-606.8	0.7834	4.542	9.540	0.698
1242.	2.50	-2.20	1.74	23988.	-4.96	0.2317	797.5	8.29	0.1068	-365.3	0.8636	2.117	9.528	0.621
1244.	-0.0	-0.92	0.02	24000.	-2.79	0.2038	785.5	7.15	0.0056	496.9	0.9216	0.119	9.513	0.542
1246.	-0.0	0.0	-0.02	24000.	-2.75	0.2109	785.5	7.39	0.0056	790.3	0.9066	0.117	9.498	0.515
1248.	-0.0	0.0	-0.02	24000.	-2.75	0.2109	785.5	7.39	0.0056	790.3	0.9066	0.117	9.483	0.515
1250.	-0.0	0.37	-0.04	24000.	-2.73	0.2142	785.5	7.51	0.0056	908.4	0.9005	0.116	9.468	0.504
1252.	1.00	0.37	-0.36	23997.	-2.59	0.2173	790.6	7.69	0.0464	498.4	0.8931	0.952	9.454	0.521
1254.	1.00	0.0	-0.20	23997.	-2.75	0.2149	790.4	7.60	0.0464	381.3	0.8977	0.958	9.441	0.529
1256.	1.00	0.73	-0.52	23997.	-2.43	0.2201	790.4	7.78	0.0464	616.2	0.8878	0.945	9.427	0.512
1258.	3.00	-1.47	-2.32	23984.	-0.99	0.2479	799.9	8.91	0.1267	783.8	0.8318	2.434	9.416	0.483

ENERGY STORING TRANSMISSION PERFORMANCE ANALYSIS

TIME SEC	SPEED MPH	ACCEL FPS/S	OUT POWER HP	FLYWL SPEED RPM	FLYWL POWER HP	THROT O/D	ENGINE SPEED RPM	ENGINE POWER HP	WORLR RATIO	WORKG PRES PSI	SFC LB/HP/HR	I MPG MPG	C MPG MPG	EFF O/O
1260.	5.00	1.83	-4.52	23957.	0.86	0.2701	808.9	9.86	0.2051	874.4	0.7849	3.817	9.407	0.524
1262.	8.00	2.02	-7.77	23892.	3.54	0.2986	821.6	11.13	0.3199	919.2	0.7221	5.821	9.401	0.619
1264.	10.50	0.18	-2.76	23816.	-1.95	0.3002	831.5	11.37	0.4132	299.3	0.7132	7.541	9.398	0.512
1266.	8.50	-0.62	0.45	23879.	-4.77	0.2775	823.7	10.38	0.3387	35.4	0.7629	6.272	9.393	0.549
1268.	8.80	2.02	-8.54	23870.	4.16	0.3060	824.9	11.47	0.3499	918.6	0.7078	6.331	9.389	0.633
1270.	14.00	3.92	-23.97	23674.	18.50	0.4061	844.2	15.70	0.5409	1626.4	0.5637	9.181	9.388	0.748
1272.	19.50	2.86	-25.67	23168.	18.85	0.4808	861.4	19.11	0.7363	1338.5	0.5202	11.360	9.391	0.718
1274.	21.80	1.28	-15.66	23208.	8.20	0.4920	867.6	19.74	0.8167	794.7	0.5139	12.434	9.396	0.610
1276.	23.00	0.84	-12.74	23118.	4.92	0.5114	870.6	20.61	0.8584	646.8	0.5095	12.668	9.401	0.547
1278.	24.10	0.55	-10.75	23030.	2.59	0.5330	873.2	21.57	0.8986	551.3	0.5068	12.747	9.407	0.491
1280.	24.50	-0.22	-3.73	22997.	-4.56	0.5296	874.1	21.46	0.9104	272.2	0.5073	13.011	9.412	0.432
1282.	23.50	-0.37	-2.15	23078.	-5.83	0.5028	871.8	20.30	0.8758	209.3	0.5106	13.110	9.418	0.442
1284.	23.50	0.0	-5.47	23078.	-2.51	0.5080	871.8	20.51	0.8758	343.0	0.5099	12.993	9.424	0.437
1286.	23.50	0.18	-7.11	23078.	-0.86	0.5110	871.8	20.63	0.8758	409.8	0.5096	12.927	9.429	0.434
1288.	24.00	0.37	-9.01	23038.	0.87	0.5268	872.9	21.31	0.8931	482.4	0.5076	12.829	9.434	0.452
1290.	24.50	0.37	-9.25	22997.	0.95	0.5396	874.1	21.87	0.9104	487.9	0.5060	12.801	9.439	0.450
1292.	25.00	0.40	-9.84	22955.	1.38	0.5534	875.2	22.47	0.9278	507.1	0.5061	12.713	9.445	0.456
1294.	25.60	0.37	-9.79	22903.	1.13	0.5687	876.4	23.13	0.9485	500.3	0.5076	12.604	9.449	0.445
1296.	26.00	0.51	-11.45	22868.	2.65	0.5876	877.3	23.73	0.9623	559.7	0.5091	12.442	9.454	0.475
1298.	27.00	0.44	-15.44	22778.	6.30	0.6184	879.3	25.26	0.9969	696.2	0.5150	11.996	9.458	0.527
1300.	28.30	0.77	-15.56	22654.	5.95	0.6453	881.7	26.46	1.0418	684.8	0.5203	11.879	9.462	0.517
1302.	29.10	0.00	-7.54	22575.	-2.38	0.6453	883.0	26.91	1.0695	401.7	0.5204	12.186	9.466	0.410
1304.	28.30	-2.82	23.42	22654.	-33.04	0.6416	881.7	26.31	1.0418	-629.7	0.5196	11.962	9.470	0.696
1306.	21.40	-4.95	35.90	23237.	-43.29	0.5233	866.6	20.96	0.8028	-1363.0	0.5079	11.630	9.473	0.792
1308.	14.80	-4.84	24.58	23636.	-30.23	0.3983	846.9	15.47	0.5697	-1325.9	0.5687	9.761	9.473	0.798
1310.	8.20	-4.84	13.86	23887.	-18.12	0.3169	822.4	11.83	0.3274	-1278.7	0.6935	5.844	9.468	0.769
1312.	1.60	-3.01	1.69	23995.	-4.74	0.2265	793.3	8.05	0.0707	-576.2	0.8748	1.418	9.456	0.616
1314.	-0.0	-0.59	0.01	24000.	-2.78	0.2061	785.5	7.23	0.0056	602.3	0.9154	0.119	9.441	0.532
1316.	-0.0	0.0	-0.02	24000.	-2.75	0.2109	785.5	7.39	0.0056	790.4	0.9066	0.117	9.427	0.515
1318.	-0.0	0.0	-0.02	24000.	-2.75	0.2109	785.5	7.39	0.0056	790.4	0.9066	0.117	9.413	0.515
1320.	-0.0	0.0	-0.02	24000.	-2.75	0.2109	785.5	7.39	0.0056	790.4	0.9066	0.117	9.399	0.515
1322.	-0.0	0.0	-0.02	24000.	-2.75	0.2109	785.5	7.39	0.0056	790.4	0.9066	0.117	9.385	0.515
1324.	-0.0	0.0	-0.02	24000.	-2.75	0.2109	785.5	7.39	0.0056	790.4	0.9066	0.117	9.371	0.515
1326.	-0.0	0.0	-0.02	24000.	-2.75	0.2109	785.5	7.39	0.0056	790.4	0.9066	0.117	9.357	0.515
1328.	-0.0	0.0	-0.02	24000.	-2.75	0.2109	785.5	7.39	0.0056	790.4	0.9066	0.117	9.343	0.515

Sundstrand Aviation
division of Sundstrand Corporation

ENERGY STORING TRANSMISSION PERFORMANCE ANALYSIS

TIME	SPEED	ACCEL	OUT POWER	FLYWL SPEED	FLYWL POWER	THROT	ENGINE SPEED	ENGINE POWER	WCOLR RATIO	WORKG PRES	SFC	I MPG	C MPG	EFF
SEC	MPH	FPS/S	HP	RPM	HP	O/O	RPM	HP		PSI	LB/H/HR	MPG	MPG	O/O
1330.	-0.0	0.0	-0.02	24000.	-2.75	0.2109	785.5	7.39	0.0056	790.4	0.9066	0.117	9.329	0.515
1332.	-0.0	0.0	-0.02	24000.	-2.75	0.2109	785.5	7.39	0.0056	790.4	0.9066	0.117	9.315	0.515
1334.	-0.0	0.0	-0.02	24000.	-2.75	0.2109	785.5	7.39	0.0056	790.4	0.9066	0.117	9.302	0.515
1336.	-0.0	0.55	-0.05	24000.	-2.72	0.2159	785.5	7.57	0.0056	967.4	0.8973	0.115	9.288	0.498
1338.	1.50	2.97	-2.14	23995.	-0.89	0.2489	797.8	8.84	0.0667	1317.2	0.8330	1.278	9.276	0.447
1340.	8.10	4.29	-15.01	23490.	10.77	0.3381	822.0	12.61	0.3236	1696.9	0.6634	5.662	9.270	0.706
1342.	13.20	3.19	-18.83	23710.	13.55	0.3773	841.4	14.52	0.5120	1354.0	0.5999	8.803	9.270	0.727
1344.	16.80	2.31	-18.43	23531.	12.31	0.4150	853.4	16.28	0.6410	1092.1	0.5570	10.737	9.272	0.699
1346.	19.50	1.65	-16.59	23368.	9.77	0.4506	861.4	17.90	0.7363	896.4	0.5365	11.756	9.276	0.652
1348.	21.30	0.95	-12.57	23245.	5.25	0.4732	866.3	18.95	0.7991	669.0	0.5239	12.417	9.280	0.573
1350.	22.10	0.26	-7.19	23186.	-0.36	0.4786	868.4	19.23	0.8271	423.0	0.5209	12.767	9.285	0.445
1352.	22.00	-0.37	-1.88	23194.	-5.64	0.4676	868.1	18.78	0.8237	196.9	0.5267	12.871	9.291	0.455
1354.	21.10	-0.73	1.24	23259.	-8.51	0.4446	865.8	17.79	0.7923	60.0	0.5391	12.734	9.296	0.507
1356.	20.00	-0.95	2.95	23335.	-9.91	0.4230	862.8	16.85	0.7538	-26.6	0.5510	12.473	9.300	0.564
1358.	18.50	-1.28	5.18	23431.	-11.73	0.3992	858.5	15.79	0.7012	-153.2	0.5646	12.019	9.304	0.626
1360.	16.50	-1.65	7.06	23548.	-13.11	0.3716	852.4	14.56	0.6304	-290.3	0.6036	10.884	9.307	0.675
1362.	14.00	-1.12	14.01	23674.	-19.47	0.3566	844.2	13.79	0.5409	-774.9	0.6275	9.194	9.307	0.760
1364.	8.00	-4.27	11.59	23892.	-15.81	0.3058	821.6	11.40	0.3199	-1084.4	0.7099	5.783	9.302	0.758
1366.	2.50	-2.94	2.48	23988.	-5.69	0.2369	797.5	8.48	0.1068	-586.7	0.8536	2.094	9.291	0.640
1368.	-0.0	-0.92	0.02	24000.	-2.79	0.2038	785.5	7.15	0.0056	496.9	0.9216	0.119	9.278	0.542
1370.	-0.0	0.0	-0.02	24000.	-2.75	0.2109	785.5	7.39	0.0056	790.3	0.9066	0.117	9.264	0.515