MTI-71TR75

APTD-1181

FEASIBILITY ANALYSIS OF THE TRANSMISSION FOR A FLYWHEEL/HEAT ENGINE HYBRID PROPULSION SYSTEM

NOVEMBER 1971

prepared for

ENVIRONMENTAL PROTECTION AGENCY
OFFICE OF AIR PROGRAMS
DIVISION OF ADVANCED AUTOMOTIVE POWER SYSTEMS

CONTRACT NO. 68-04-0033

MECHANICAL TECHNOLOGY INCORPORATED

FOREWORD

This report presents a summary of the work performed by Mechanical Technology Incorporated and Bendix Research Laboratories, Bendix Corporation with cooperation from the Ford Motor Company. The work was performed for the Environmental Protection Agency (EPA), Office of Air Programs, Division of Advanced Automotive Power Systems under Contract 68-04-0033.

Key consultants to the project were Mr. George DeLalio, with respect to overall transmission design, and Mr. Edwin Charles in regard to costing analysis.

Mr. R. C. Bowlin was responsible for overall project direction. Other major contributors from MTI were P. Lewis, H. Jones, Dr. A. Smalley and Mrs. Linda Almstead. Also participating were John Broderick and Paul Dean of MTI.

Mr. W. Datwyler was responsible for coordinating the Bendix work on controls. Other major contributors from Bendix include R. Presley and N. Sikora.

The EPA Project Officer was James C. Wood of the NASA Lewis Research Center. Mr. Wood worked for EPA under a special technical assistance agreement between NASA and EPA. The contribution of Dr. Karl Hellman of EPA is also acknowledged.

TABLE OF CONTENTS

		Page
	FOREWORD	iii
I.	SUMMARY	1
II.	INTRODUCTION	3
III.	DISCUSSION OF RESULTS	9
	A. Selection of Candidate Transmission	9
	B. Description of Transmission Design	10
	C. Controls and Operational Aspects	15
	D. Comparative Performance	20
	E. Safety Aspects	34
	F. Regenerative Braking Analysis	35
	G. Cost and Physical Comparisons	36
IV.	CONCLUSIONS AND RECOMMENDATIONS	43
V.	APPLICATION TO OTHER PROPULSION SYSTEMS	47
VI.	SUPPORTING INFORMATION	
	A. SELECTION OF CANDIDATE TRANSMISSION	A-1
	B. DETAILED DESCRIPTION OF TRANSMISSION	B-1
	C. PERFORMANCE ANALYSIS	C-1
	D. CONTROLS DESIGN AND ANALYSIS	D-1
	E. COST ANALYSIS	E-1
	F. SAFETY ANALYSIS	F-1
	G. REGENERATIVE BRAKING ANALYSIS	G-1
	H. REFERENCES	H-1
APPENDICES		
I.	PROCEDURE FOR OBTAINING THE LOSS COEFFICIENTS AND EFFICIENCIES USED FOR PERFORMANCE CALCULATIONS	I-1
II.	STABILITY AND ANALOG COMPUTER SIMULATION ANALYSIS	II-1

SECTION I

SUMMARY

The overall purpose of this study was to quantitatively assess the practicality, from both a performance and cost viewpoint, of a transmission that will meet the requirements of a flywheel/heat engine hybrid propulsion system for a family car.

The scope of the study included: consideration of various types of feasible transmissions; selection of a candidate transmission; detailed performance and controls analysis of the candidate transmission; and lastly, a detailed cost analysis of the transmission. The heat engine considered in the study was a standard internal combustion engine typically used in present-day, medium sized, family cars.

In theory, the flywheel/hybrid propulsion system is quite simple. However, from a practical viewpoint the system interrelationships of the control and transmission are much more complex than those that exist in a present family car with an automatic transmission. Thus, even though the transmission designed in this study is compact and highly efficient, it would be 75 percent heavier and have 65 percent more parts than a comparable conventional automatic transmission. Based upon cost information of the Ford Motor Company, this resulted in the "original equipment manufacturer" (O.E.M.) cost of the transmission being at least 125 percent higher than a present day automatic transmission for production quantities of 1,000,000 units per year. On a "variable cost" basis (more meaningful to the automotive industry in comparing designs), the increase in cost was 140 percent.

Consideration of propulsion system costs showed that the flywheel/hybrid propulsion system (130 HP conventional IC engine, flywheel and transmission) can be expected to have an O.E.M. cost at least 60 to 70 percent more than a comparable propulsion system (177 HP engine and automatic transmission) currently used in automobiles.

Although the main objective for considering a flywheel/hybrid propulsion system is to reduce emissions, the resultant effect on emission levels was not evaluated due to lack of emission data for the engine. Consequently, study efforts were directed at minimizing engine fuel consumption.

From a performance viewpoint, the efficiency of the transmission was higher than a conventional automatic transmission at cruise power and slightly lower at maximum power conditions. Due to flywheel losses, the fuel consumption of the flywheel/hybrid propulsion system was higher than a conventional system at idle and low-speed cruise power conditions often encountered in urban driving situations.

A simplified control approach was selected and shown to be generally feasible. However, additional studies are required in order to investigate system interactions and optimize the control system. The selected control approach provides perfect "Total Kinetic Energy" (TKE) control (flywheel plus vehicle kinetic energy remains constant) for a given schedule of vehicle loads and approximates it at other loads.

In summary, the most significant conclusions and recommendations of this study are as follows:

1. The design concept using the power-splitting transmission can effectively couple a heat engine with a flywheel power storage system.
2. Significant deviations from the desired total energy concept will be encountered during rapid or emergency vehicle stops. This is because the rear drive wheels are the only wheels which can regenerate energy to the flywheel and only a fraction of the required energy can be recovered. This deficiency in flywheel energy must be provided by the heat engine to return the system to normal operation.
3. System complexity and developments which are required for safety as well as further control development, suggest that the practical implementation of such a system would not accrue by 1975.
4. The cost of the flywheel/hybrid propulsion system and associated transmission is significantly higher than a comparable present-day propulsion system and automatic transmission.
5. Based upon the above conclusions, hardware development of the transmission for the flywheel/hybrid propulsion system is not recommended without further detailed studies. These studies should include: (a) a realistic appraisal of emission reductions (when emission data becomes available), and (b) a comparison on a systems trade-off basis against other propulsion systems which are currently being investigated by the Environmental Protection Agency, Division of Advanced Automotive Power Systems.
6. Other implications of the study are that the power-splitting transmission without power storage would have applicability to several engine types including the conventional IC engine, the gas turbine engine, the turbo-Rankine engine, and the diesel derivative engines.

Section II
INTRODUCTION

The concept of a hybrid propulsion system for automobiles has recently received considerable attention because it offers the possibility of reducing air pollution. In this concept, an engine and energy storage device are combined so that acceleration power is supplied by the energy storage device. Then ideally, during decelerations, the energy storage device is recharged by absorbing energy from the vehicle. Compared to present automobile propulsion systems, this would result in a smaller engine which could be operated at optimum running conditions to reduce emissions.

However, in order for a hybrid propulsion system to be a viable alternative to present or future automotive propulsion systems it should:

1. Meet the Federal emission standards
2. Meet vehicle requirements as established by the Environmental Protection Agency (1)*
3. Require minimum increase in cost compared to present engine/transmission systems
4. Be operational and ready for mass production by automotive model year 1975 or soon after.

In addition, in our opinion, it is desirable for the hybrid propulsion system to require no significant changes in driving habits by the operator and to require minimum changes to the vehicle.

In a previous study, Lockheed Missiles and Space Company (LMSC) (2) investigated the feasibility of flywheels for various types of vehicles. As a result of that study, LMSC recommended that a hybrid propulsion system for a family car consisting of a flywheel and a heat engine offered considerable promise for reducing emissions. In addition, LMSC recommended that in order to minimize

* Numbers in parenthesis refer to references listed at the end of this report.

history dependent vehicle performance and flywheel size, the best control approach for the flywheel was a Total Kinetic Energy (TKE) concept. In that concept the sum of the vehicle plus flywheel kinetic energies is maintained constant by transmission controls.

Since the transmission which links the flywheel, heat engine, and vehicle drive train together in an optimum manner is the critical link in a flywheel/hybrid system, this study was initiated by the Environmental Protection Agency, Division of Advanced Automotive Power Systems (EPA/AAPS).

As part of a parallel effort, LMSC was the systems contractor for EPA/AAPS. As the system contractor LMSC supplied information for this study pertaining to 1) desired vehicle tractive efforts, 2) flywheel characteristics (including costs), and 3) preliminary characteristics of flywheel containment housings.

In order to quantitatively assess the practicality, from both a performance and cost viewpoint, of a transmission that will meet the requirements of a family car flywheel/heat engine hybrid propulsion system, the detailed objectives of this study were as follows:

1. Establish feasible design concepts for linking the power transfer between an IC heat engine, flywheel, and load (vehicle) by considering mechanical, hydrostatic, and hydromechanical (power-splitting) types of transmissions.

2. Establish practical control system conceptual designs for the entire integrated system consisting of the heat engine, flywheel, selected transmission concept and the vehicle including analysis of stability, safety, and possible operator induced instability.

3. Determine the comparative performance efficiencies of the various transmission design concepts as a basis for screening and selection of a final concept and design approach.

4. Determine how cost and complexity of the transmission design concepts are affected by using all or a fraction of the regenerative power from the rear wheels of the vehicle.

5. Estimate, from sufficiently detailed preliminary designs, the original equipment manufacturer (OEM) cost of the transmission and control system design concepts for selected production quantities.

6. Determine the performance efficiencies of the selected transmission design concept on both a steady-state and dynamic (efficiency versus time) basis for selected vehicle operating conditions with the transmissions as an integral part of the overall propulsion/vehicle system with controls.

7. Comparatively evaluate the cost and performance of the selected transmission and control system concept to a conventional multispeed torque converter transmission.

8. Recommend an optimum transmission based upon system cost and efficiency. The recommendation shall include all pertinent physical configuration and operation characteristics (optimum flywheel speed ratio, heat engine operational mode, etc.). If, in the opinion of MTI the optimum transmission/control system cannot actually be found that fulfills the requirements this conclusion should be made.

In developing an approach to accomplish the aforementioned objectives consistent with the necessary and desirable goals for a hybrid propulsion system mentioned earlier, emphasis was placed on selecting transmission concepts and components which were based upon current technology. In addition, EPA/AAPS directed that the basic approach to the transmission (system) controls was to follow the TKE control concept originally suggested by LMSC.

The methodology of the study approach is shown diagrammatically by Figure II-1. Initially, several transmission concepts were investigated. These included mechanical, hydrostatic, and power splitting. Then, by a screening process, a "candidate" transmission concept was selected for more detailed investigation. In a similar manner, two control concepts were investigated for stability and other considerations. As part of the control studies the propulsion system was simulated on an analog computer. Final assessments of the candidate transmission and a preferred control system included system comparisons of cost,

PHASE I APPROACH

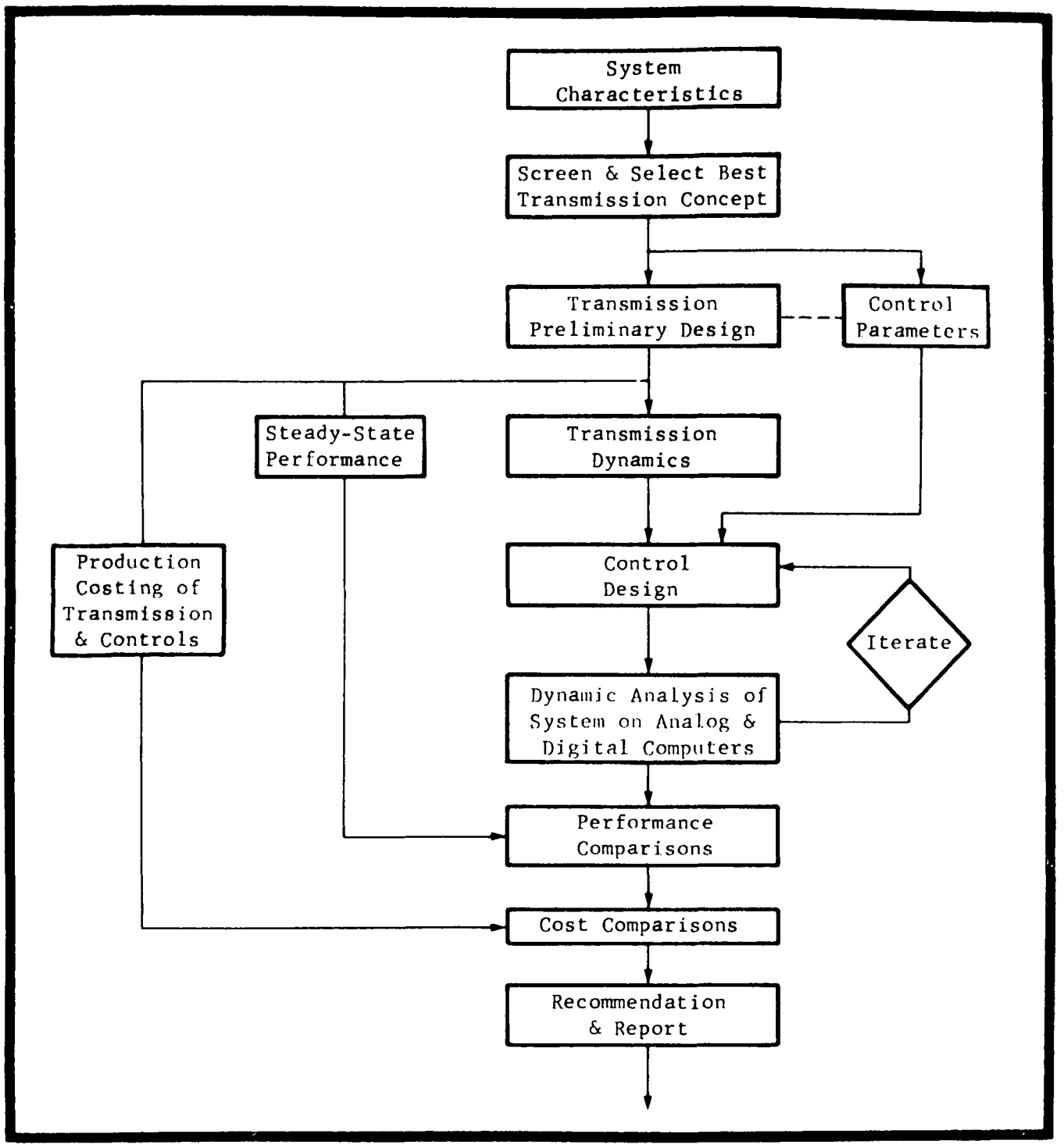

Fig. II-1 Phase I Study Approach

package-size, weight - as well as steady-state and dynamic performance based upon the results obtained from digital computer models of the complete propulsion system.

The following sections of the report: 1) summarize the study results; 2) present conclusions and recommendations; and 3) discuss applications to other propulsion systems. Detailed supporting information is contained at the end of the report.

SECTION III

DISCUSSION OF RESULTS

This section summarizes the results of the study. Additional supporting details are given by topical headings in Section VI - Supporting Information.

A. Selection of Candidate Transmission

There are various transmission concepts that can transfer power from the engine and flywheel to accommodate the required road loads. In order to determine which concept would be the best suited as a candidate transmission for the flywheel/hybrid propulsion system, various applicable power transmitting devices were separated into two categories: hydraulic and mechanical.

The following devices were investigated in each category:

Hydraulic

1. Hydrostatic or positive displacement hydraulic pumps and motors
2. Hydrokinetic fluid drive or fluid coupling
3. Hydrodynamic coupling or torque converter
4. Hydroviscous shear drive or slipping clutch

Mechanical

1. Traction drives
2. Cam or gear drives
3. Belt drives

As discussed in more detail in Section VI-A, the most promising of these devices were used as the basis for seven different transmission design concepts. Schematics and sketch layouts were made for each concept in sufficient detail so that selected evaluation factors could be estimated.

The resulting evaluation of transmission concepts is summarized by Table III-1. The comparative ratings shown have been normalized in each category such that the lowest numbers indicate the best rating. As shown by Table III-1, the Two Element Hydrodynamic concept had the best overall rating on a numerical basis. In that concept, the variable ratio could be achieved by using two fluid couplings or two torque converters. Since fluid coupling slip significantly lowers transmission efficiency, the two converter approach was selected. However, with that approach, a valve was required to schedule flow of fluid and power for the converters. Based upon our available information, this concept (including valving) has not been reduced to practice or developed. Thus, this concept and other concepts which required component development were excluded from consideration on the basis of lacking near-term availability.

Consequently, the power splitter with the flywheel axis in line with the engine shaft (to reduce complexity) was selected as the most promising transmission concept. The basis for the selection was because: 1) it did not require component development; 2) it was considered the best concept with regard to the factors of cost, specific fuel consumption (SFC), and efficiency; and 3) with all evaluation factors considered, it was only exceeded by one other concept and that concept required component development.

B. Description of Transmission Design

The basic design approach followed in determining the best arrangement of the power splitting transmission was to:

1. Minimize package size and weight to reduce cost.
2. Have the design as compatible as possible with present automobiles so as to minimize vehicle body or suspension system changes
3. To transmit power at high efficiencies – from the engine to the road and engine to the flywheel in order to minimize emissions under steady-state driving conditions

Based on size, power path efficiency and vehicle compatibility, the design was oriented to place the flywheel in the region currently occupied by the torque converter. The required hydraulic units and associated planetary gearing were integrated by design to form a single, compact transmission package. This was

TABLE III-1 NORMALIZED SCREENING FOR TRANSMISSION CONCEPTS

	Cost	Weight	SFC	Size	No. Parts	Eff.*	Overall Rating	Rating Cost-SFC Eff.	Notes
SK-J-4258 3 Element Hydrodynamic	1.266	1.146	1.3	1.21	1.44	1.39	7.757	3.961	(a)
SK-E-4260 2 Element Hydrodynamic	1.0	1.0	1.4	1.00	1.23	1.07	6.700	3.470	(a)
SK-J-4257 Hydrostatic	1.4	1.265	1.0	1.46	1.00	1.26	7.385	3.66	(b)
SK-E-4256 Power Split	1.266	1.142	1.0	1.35	1.27	1.00	7.028	3.266	(b)
SK-E-4261 Power Split (Offset)	1.333	1.173	1.0	1.46	1.44	1.00	7.406	3.333	(b)
SK-D-4259 Hydrodynamic Hydrostatic	1.266	1.064	1.3	1.13	1.41	1.13	7.300	3.696	
SK-A-4262 Hydrodynamic 2 Coupling	1.133	1.059	1.4	1.02	1.30	1.38	7.292	3.913	(a)

* The normalized efficiency is obtained using the weighted efficiency data.
(a) Component development is required.
(b) Optimum availability of engine power.

considered a more efficient approach than, for example, using two functionally separate power splitting transmissions.

Figure III-1 presents a schematic of the recommended transmission design. As discussed in more detail in Section VI-B, the primary transmission utilizes a simple pump-motor circuit (Elements I and II) in combination with a planetary gear train to provide a wide stepless variable speed and torque ratio. The ratio is changed by varying the displacements of Elements I and II. With this type of construction, the hydrostatic units are not subjected to more than 33 percent of the power over a great percentage of the operating range.

The proposed design has two modes of operation. In the low-output-speed range the hydraulic circuit functions as a straight hydrostatic system driving through the Planetary "C" gear set. This provides high output torque and variable operation in both the forward and reverse directions. In the high-output speed stage, the Planetary "B" gear set and hydrostatic circuit act as a split torque or hydromechanical system. This extends the range of output speed and increases the efficiency with positive control. By utilizing a combination hydrostatic-hydromechanical construction, the range and pressure level over which the hydrostatic circuit must operate, is minimized. This substantially reduces the displacement and size of the hydrostatic elements which increases the efficiency by transmitting most of the power through the more efficient mechanical elements and at the same time provides a smaller and more compact design.

In the proposed design, the planetary gear train was constructed so that the clutch and brake elements are in synchronization during transition from one stage to the other. This eliminates high inertial loads on the clutch and brake which reduces wear and provides positive and even drive over the entire operating range.

The secondary transmission provides a power path from the prime mover through the carrier of Planetary "A" to the flywheel or from the flywheel to the planetary carrier and on to the rear axle. The path to the flywheel is direct and efficient. The displacements of the hydrostatic pump-motor circuit (Elements III and IV) are varied to establish whether the flywheel is accelerated or decelerated with respect to the input. The hydrostatic drive functions on

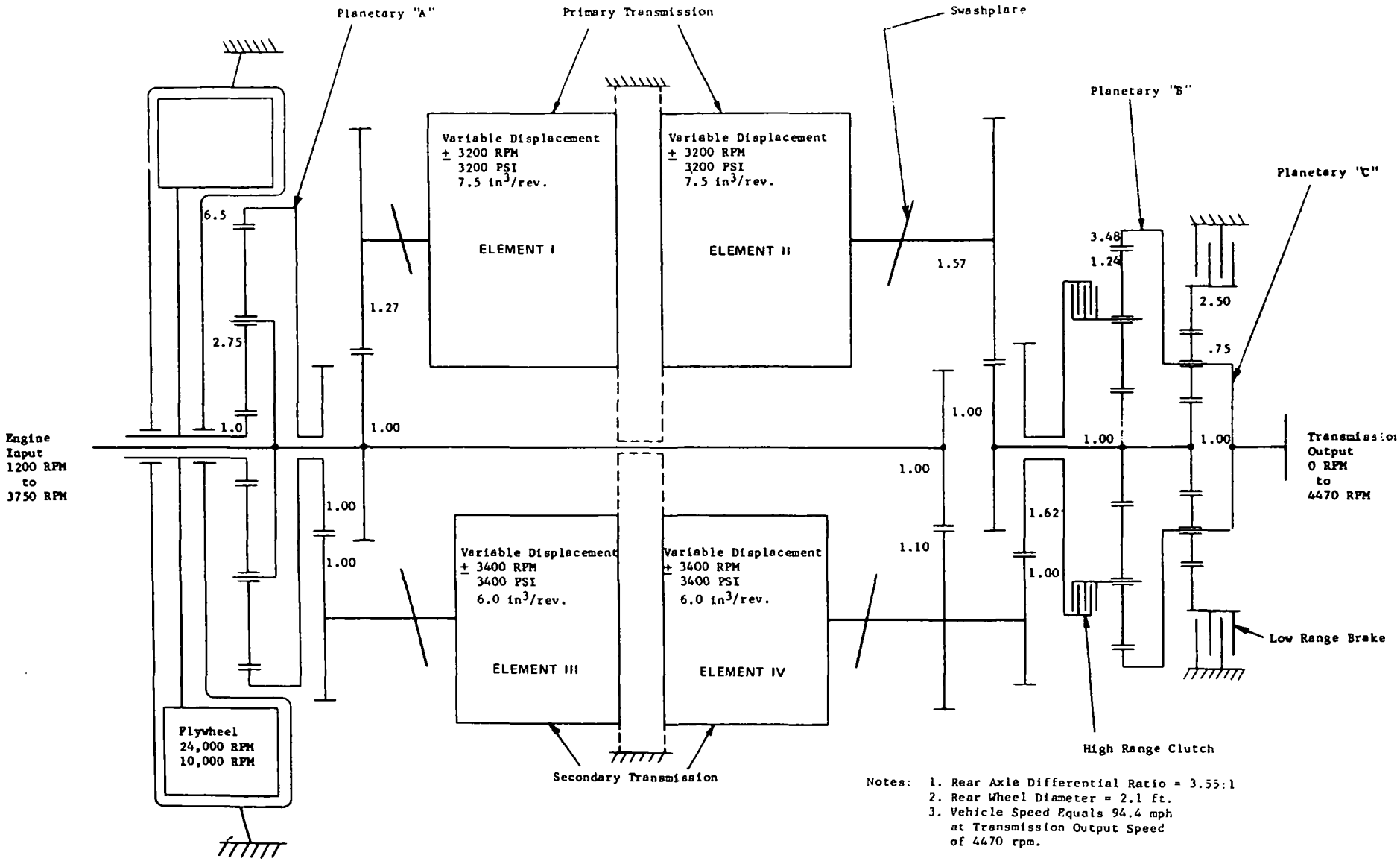

Fig. III-1 Schematic of Recommended Transmission Design

MTI-12340

both sides of the mechanical drive of Planetary "A" only as a means to add or subtract speed to effect positive control. This reduces the hydrostatic portion of the flywheel drive to a minimum. The flow of power from the flywheel to the output is carried through the primary transmission. Since the primary transmission is already sized to provide maximum torque multiplication to the output, the flywheel acceleration power does not change the size of the hydraulic or mechanical elements.

An important feature of the transmission design was the hydraulic units. These type of hydraulic units are fully developed and have been successfully used for aircraft constant speed drives, tractor transmissions, truck transmissions, and in postal vehicle transmissions. The key features of the unit are that they have high efficiency and high power densities (2 horsepower/cubic inch) at reasonable operating pressures in order to reduce wear and achieve reliability. Additional details on the hydraulic units are given in Section VI-B Supporting Information.

Although the foregoing design utilizes an inline flywheel to achieve the efficiency, compactness and compatibility discussed previously, offsetting the flywheel for systems reasons (such as gyroscopic effect) could be readily accommodated.

Other flywheel locations were also explored. For example, location of the flywheel further downstream (nearer to the rear wheels) was evaluated. However, an even greater ratio would be required in the planetary gearing resulting in larger sizes and less efficient operation.

It should be noted that the design presented can be further enhanced by the use of compound planetaries. The basic benefit of this approach would be to provide additional operational points where transmission of power through the hydraulic elements would be even further reduced with a resulting performance increase. Because this approach will require additional components with attendant increase in complexity and cost, it was not further evaluated for the current program.

C. Controls and Operational Aspects

The controls required for the flywheel/hybrid propulsion system, of necessity, will be more complicated than those presently employed in an automobile with an automatic transmission. This results not only from the fact that there are two sources of power to the rear wheels but also because the system is compounded by other characteristics which include:

1. Initial charging of the flywheel with no power flow to rear wheels
2. Flywheel charging by engine while vehicle is moving or at a stop
3. Engine operation geared to produce minimum emissions
4. Design and functioning compatible with minimum need for changing the habits of motorists

Furthermore, as recommended by Lockheed Missiles and Space Company (2) in a preliminary study of the flywheel/hybrid propulsion system, it is desirable to have the control system of the transmission follow a "Total Kinetic Energy" (TKE) control law. This tends to minimize flywheel weight and offers the possibility of not having the propulsion system "history dependent". The basic idea of the TKE approach is to control the heat-engine output so as to have the kinetic energy of the vehicle plus flywheel remain constant.

Maintaining ideal TKE is complicated by factors such as:

1. Hills — which can introduce significant, unscheduled, system kinetic energy variations due to potential energy variations;
2. Dissipative Braking — which can introduce rapid and significant unscheduled changes in system TKE level which must be made up by the engine;
3. Variable Loading — the number of passengers carried, trunk loading, or pulling a trailing vehicle can change the vehicle mass from the value used in computing and implementing the TKE control scheme
4. Wheel Slip — which can introduce unrealistic indications of actual vehicle kinetic energy status to the control system, especially if the rear drive wheel speed is used to measure vehicle speed in the control.

As described in more detail in Section VI-D, two types of control approaches were investigated on a non-linear basis by simulating the complete propulsion system as an analog computer (Appendix II).

Many operational features were common to both control approahces. These included:

1. Control of the primary transmission by a schedule cam from driver pedal position and measured engine speed. The cam schedule can be contoured so that engine speed is varied to follow as closely as possible a minimum emissions curve for the engine. Since no emissions data were available for the engine, the schedule cam was set for minimum specific fuel consumption (SFC).

2. A position on the driver shift lever for initial flywheel charging. Other positions were similar to a present car with an automatic transmission.

3. Complete disengagement of the transmission at engine speeds below 900 RPM to permit engine startup with the shift lever in either Neutral or Park.

4. Engagement of only the secondary transmission when the shift lever is in the charge position to permit rapid initial flywheel charging with the control automatically regulating engine power.

5. When the shift lever is in Drive, the primary transmission automatically disengages at zero vehicle speed while the secondary transmission remains engaged. In addition to minimizing ideal fuel flow requirements, this permits flywheel charging at stops. The amount of engine power available for charging under these conditions is limited by engine capability at low speeds (about 40 horsepower at 1200 RPM).

The major difference between the two approaches was the method of deriving vehicle velocity for TKE when operating with the gear shift lever in the Drive position. The closed-loop control (Type A), shown by Figure III-2, measured

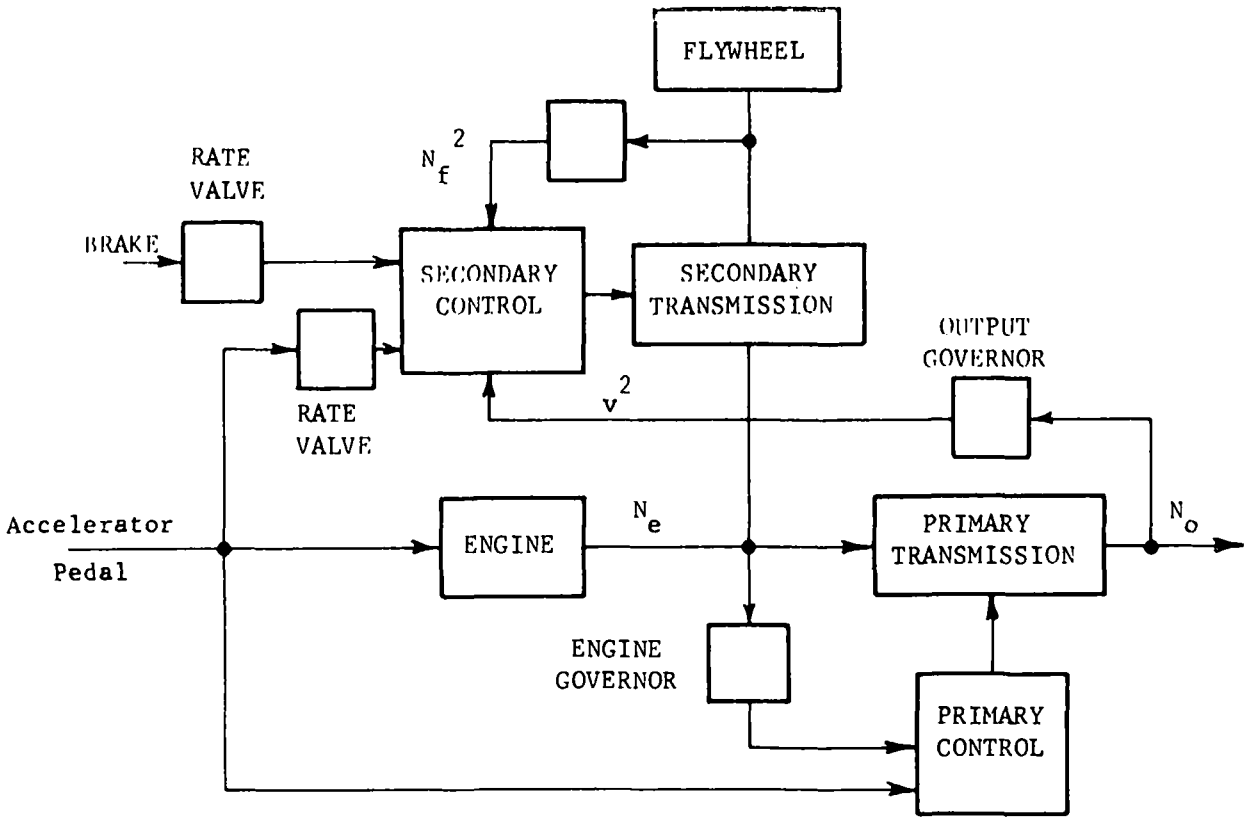

Fig. III-2 Closed-Loop TKE Control (Type A)

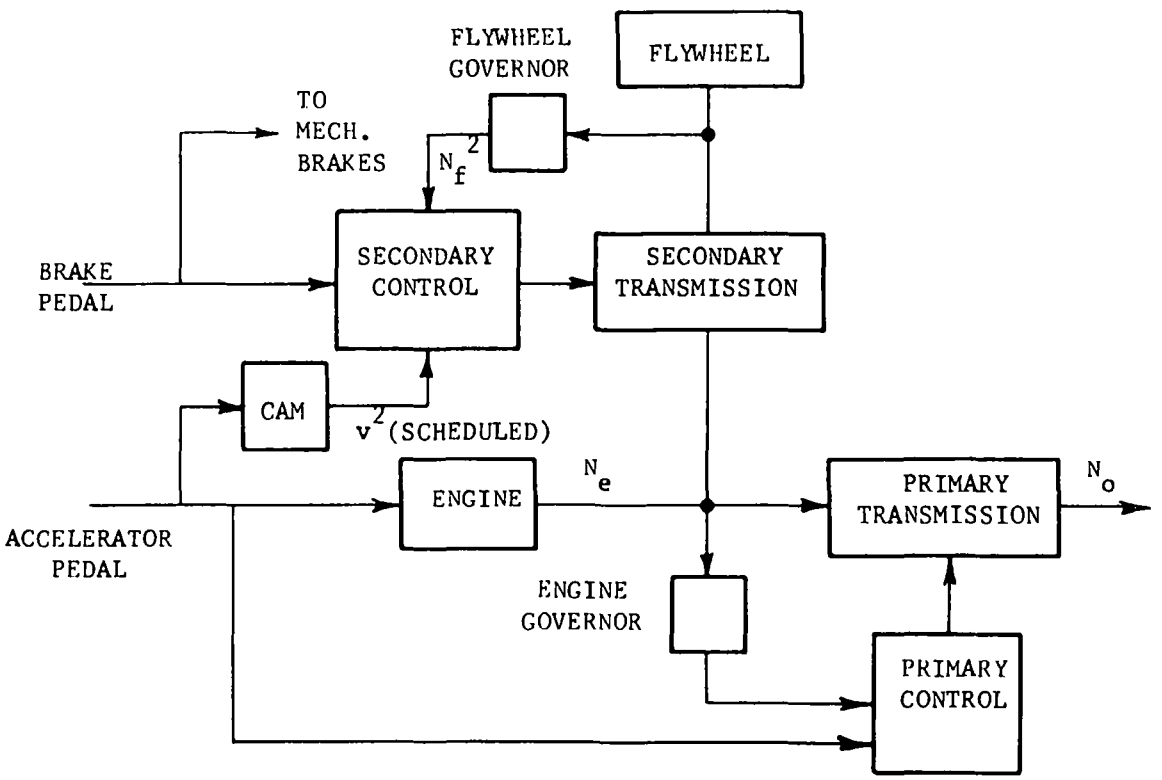

Fig. III-3 Open-Loop Scheduled TKE Control (Type B)

MTI-12527

vehicle speed (transmission output speed) and flywheel speed to maintain TKE constant by modulating the secondary (flywheel) ratio. The open-loop Type B control (Figure III-3) approximated vehicle speed based upon a predetermined scheduled with driver pedal position and compared that to measured flywheel speed in order to approximate constant TKE.

Due to the nature of the TKE computation with the Type A control, the vehicle speed feedback is positive (regenerative) in that an increase in vehicle speed commands a decrease in flywheel speed which in turn results in a further increase in vehicle speed. This could result in a difficult driver control situation whenever wheel-slip occurs (e.g., icy roads). Also, as the vehicle proceeds down a hill, the resultant increase in speed commands the flywheel to accelerate the vehicle even more — thus, a destabilizing feeling for the driver.

Although control systems can be implemented with positive feedback loops, the gain of these loops must be less than unity for stable operation. As shown by the analog computer analysis this restricts the dynamic operation of the system, especially with the large variation in gains inherent to the Type A control.

With the open-loop Type B control approach (Figure III-3), changes in vehicle load torque from that torque used to establish schedule settings will cause deviations from desired TKE as shown by Figure III-4. For example, with a schedule set for perfect TKE control on the level when proceeding up a five percent grade, the flywheel would not be able to provide power at speeds greater than 60 MPH. However, this situation is somewhat analogous to that which exists in a present car where increased load torque decreases acceleration capability.

In addition, with the Type B control, the driver pedal tends to act like a torque command for the propulsion system. This is a desirable feature since it is analogous to present automotive systems. Thus, hills do not result in the flywheel influencing vehicle speed unless the driver commands it to. Also, the driver can use the flywheel (departing from TKE) to aid in climbing hills and for dynamic braking when descending hills. However, there is a disadvantage when going down a long steep hill when the driver has his foot off the pedal;

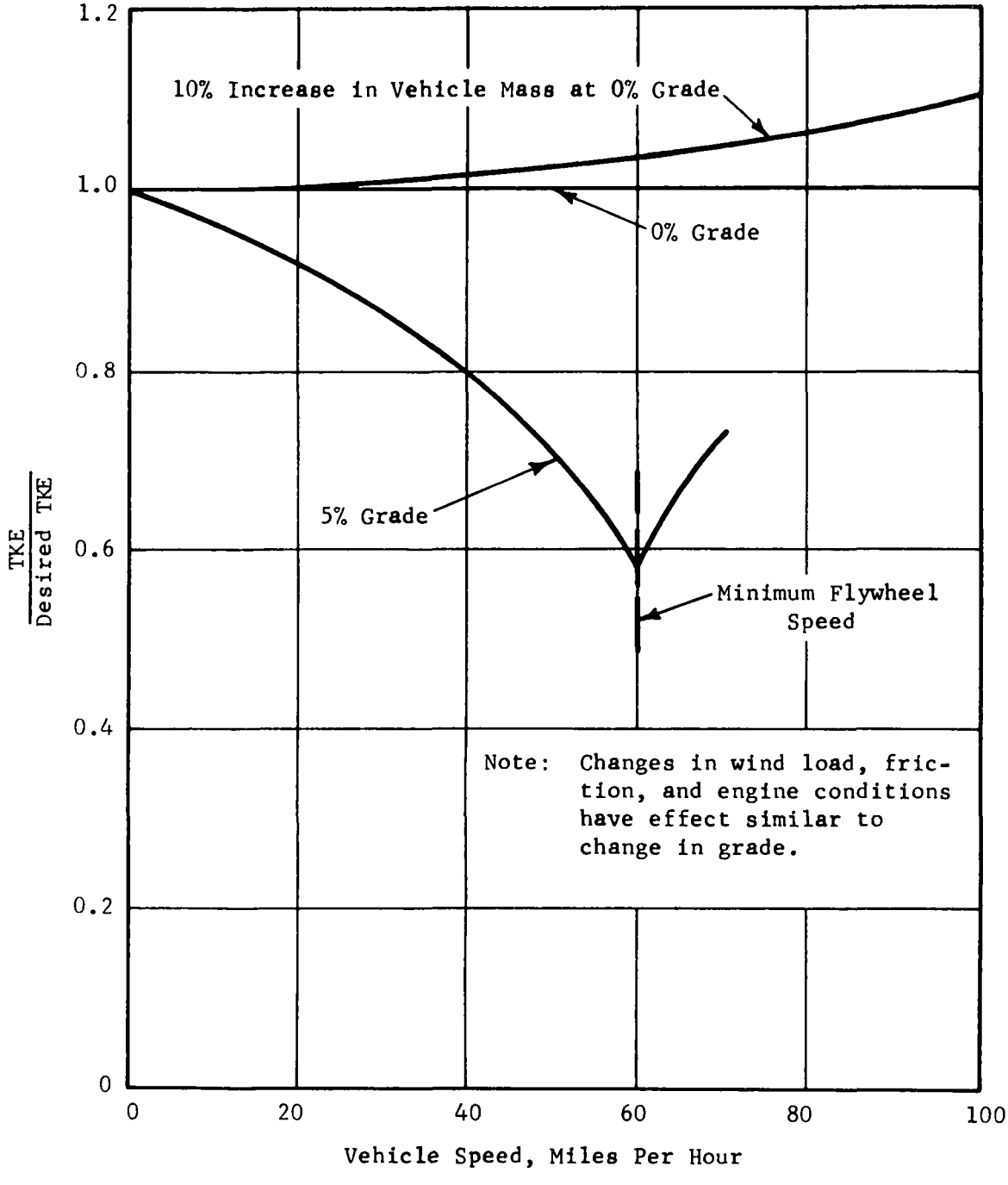

Fig. III-4 Effect on TKE of Varying Vehicle Mass and Grade Conditions — Type B Open-Loop Control

MTI-12499

eventually the flywheel reaches its maximum speed. This results in loss of dynamic braking from the flywheel which could cause an undesirable feeling for the driver.

On a comparative basis, although the Type A control is initially attractive because it measures vehicle speed to control TKE, the Type B approach was selected for final design evaluation and costing at this time for the following reasons:

1) reduced complexity
2) lower cost
3) inherently better stability
4) better operational performance and driver feel characteristics

From an implementation viewpoint, a hydraulic-mechanical type of control was considered preferable on a near term basis when compared to other types (such as an electronic type), since it is compatible with the hydraulics in the transmission, power is readily available and maximum use can be made of control components presently available, in a conventional automatic transmission in order to reduce cost. A detailed discussion of the implementation and operation of the control system is presented in Section VI-D.

In summary, it is important to point out that (even with the control approach selected) there are the previously discussed problems that remain to be solved. These and others which, in general, related to overall systems operation and interactions during the multitude of conditions under which a family car must be capable of operating must be explored. In theory, the flywheel/hybrid propulsion system is quite simple; however, from a practical viewpoint, the control and system interrelationships are much more complex than those that exist in a present family car having an automatic transmission.

D. Comparative Performance

Performance characteristics were determined for the transmission as an integral part of the flywheel/hybrid propulsion system. A detailed discussion of these results is contained in Section VI-C. Power levels selected included idle, steady-state cruise, and a full power transient. In addition, the time required initially to charge the flywheel was evaluated.

The vehicle characteristics were defined by the EPA/AAPS Design Goals (1). The heat engine for the flywheel/hybrid propulsion system was a conventional internal combustion engine with characteristics specified by EPA/AAPS. Maximum engine power at 3800 RPM was approximately 177 horsepower. Accessory and/or auxiliary power losses assumed were typical for this size engine with air conditioning included.

Comparable performance for a present day car were determined by using the same vehicle characteristics with the aforementioned IC engine and a conventional automatic transmission whose characteristics were specified by EPA/AAPS.

1. Idle Conditions

An important operating condition for a family car is when the vehicle is idling. This condition occurs more frequently than any other on the DHEW driving cycle and, of course, is quite common to urban driving. At idle conditions, the fuel flow rate for the flywheel/hybrid system would be approximately 18 percent more than the conventional system. This increase was a direct result of the higher engine idling speed required in order to have the capability to maintain flywheel speed due to flywheel losses and possible deficiencies in TKE. Recalling that the primary transmission is disengaged at idle to minimize losses, these results indicate comparatively poor performance for the flywheel/hybrid system at idle conditions.

2. Steady State Cruise Power Conditions

As described in Section VI-C, performance characteristics at cruise power were calculated based upon a steady-state model of the complete propulsion system which included transmission losses accounted for on a component basis as a function of component operating levels (see Appendix I).

Under steady-state level road conditions for the selected vehicle characteristics, the transmission was in the high-speed range for all vehicle speeds above 11 mph. Based upon the detailed breakdown of transmission power of flow paths given in Section VI-C, it was shown that for the aforementioned conditions the hydraulic elements were not an important factor in determining transmission efficiency — particularly at vehicle speeds around 20 mph characteristic of

urban driving. For example, at 20 mph, 94 percent of the power in the primary flows through the mechanical path to the rear wheels with the remaining 6 percent flowing through the hydraulic units.

A comparison between the transmission efficiency of the flywheel/hybrid and conventional automatic transmissions is shown by Figure III-5. The transmission efficiency includes the engine power to the flywheel. For the particular flywheel configuration assumed, the efficiency of the hybrid transmission ranged from 85 to 90 percent. On a comparative basis, the hybrid transmission had a higher efficiency than the conventional transmission, particularly at cruise speeds from 20 to 40 mph. For example, at a vehicle speed of 25 mph, the efficiency was 20 percent higher than the conventional transmission. However, decreasing the flywheel losses will require less power flow in the transmission and the effect of residual (or parasitic) power losses in the transmission will result in a lower transmission efficiency at low vehicle speeds. As pointed out in Section VI-C, a substantial reduction (57) percent) in flywheel losses resulted in about a 13 percent decrease in efficiency from that shown by Figure III-5 at 10 mph.

Figure III-6 presents a comparison of power train efficiencies at cruise power. Note that the power train efficiency (defined on Figure III-6) does not include flywheel power. The effect of flywheel losses is clearly evident in the lower power train efficiency of the flywheel/hybrid transmission at low vehicle speeds.

A more important comparison is on the basis of fuel economy. Figures III-7 and III-8 present this comparison at cruise power conditions. These results indicate that the flywheel/hybrid propulsion system will decrease in cruise fuel economy at speeds typically encountered in urban driving. This loss in fuel economy is primarily due to flywheel losses as shown by Figure III-8. For the higher loss flywheel (Pc = 2.94 psi) the decrease in miles per gallon at 20 mph was 18 percent. Reducing the flywheel power losses by a total of 57 percent resulted in improved fuel economy but it was still 10 percent less than the conventional system at 20 mph. Thus, even with the improved performance capabilities of the variable ratio transmission (compared to the conventional automatic), a decrease in cruise performance at low speeds can be expected. At higher speeds, as shown by Figure III-7, an improvement up to nine percent in fuel economy was obtained since flywheel losses are minimal.

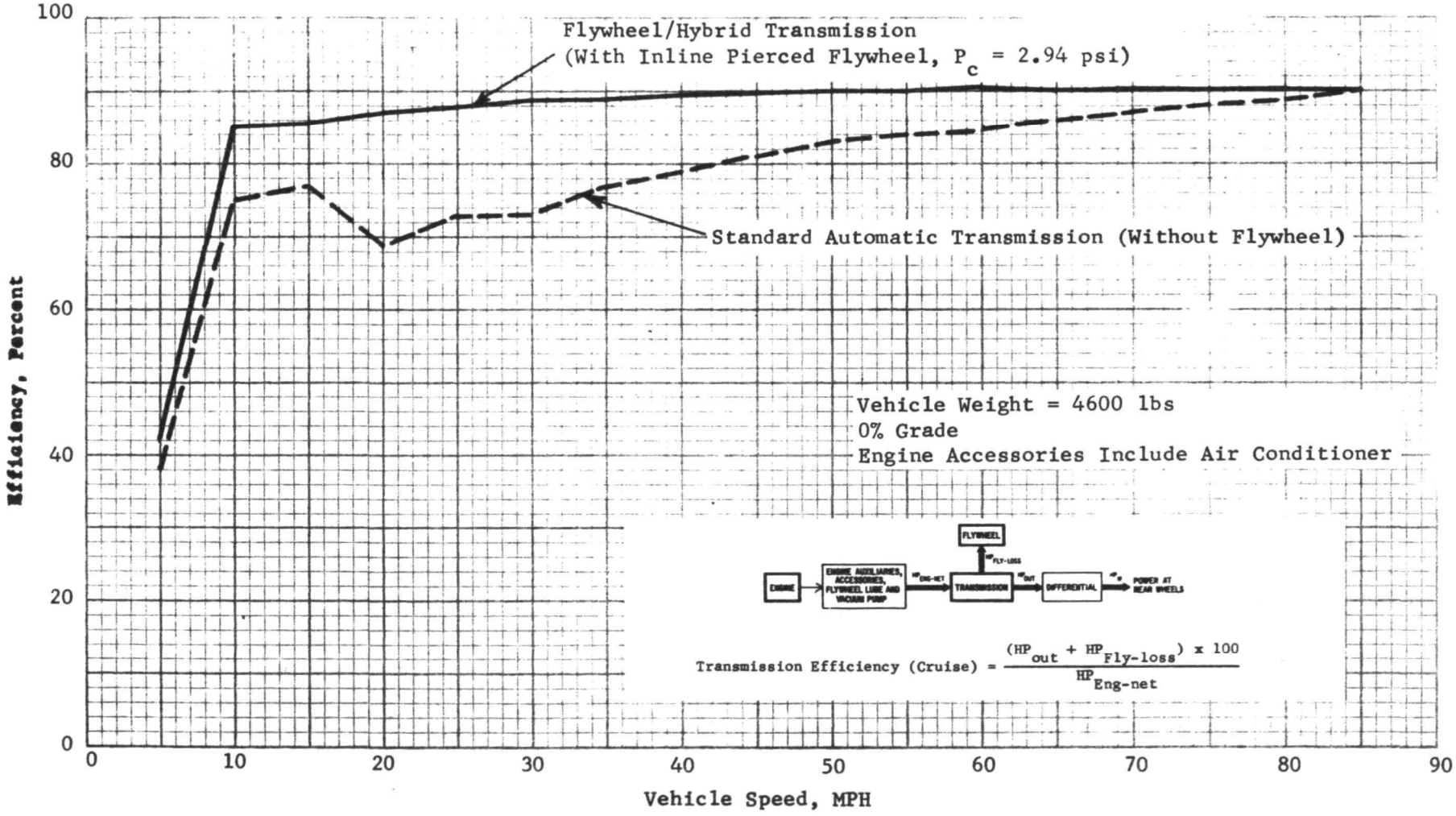

Fig. III-5 Comparison of Transmission Efficiencies at Cruise Power

MTI-12492

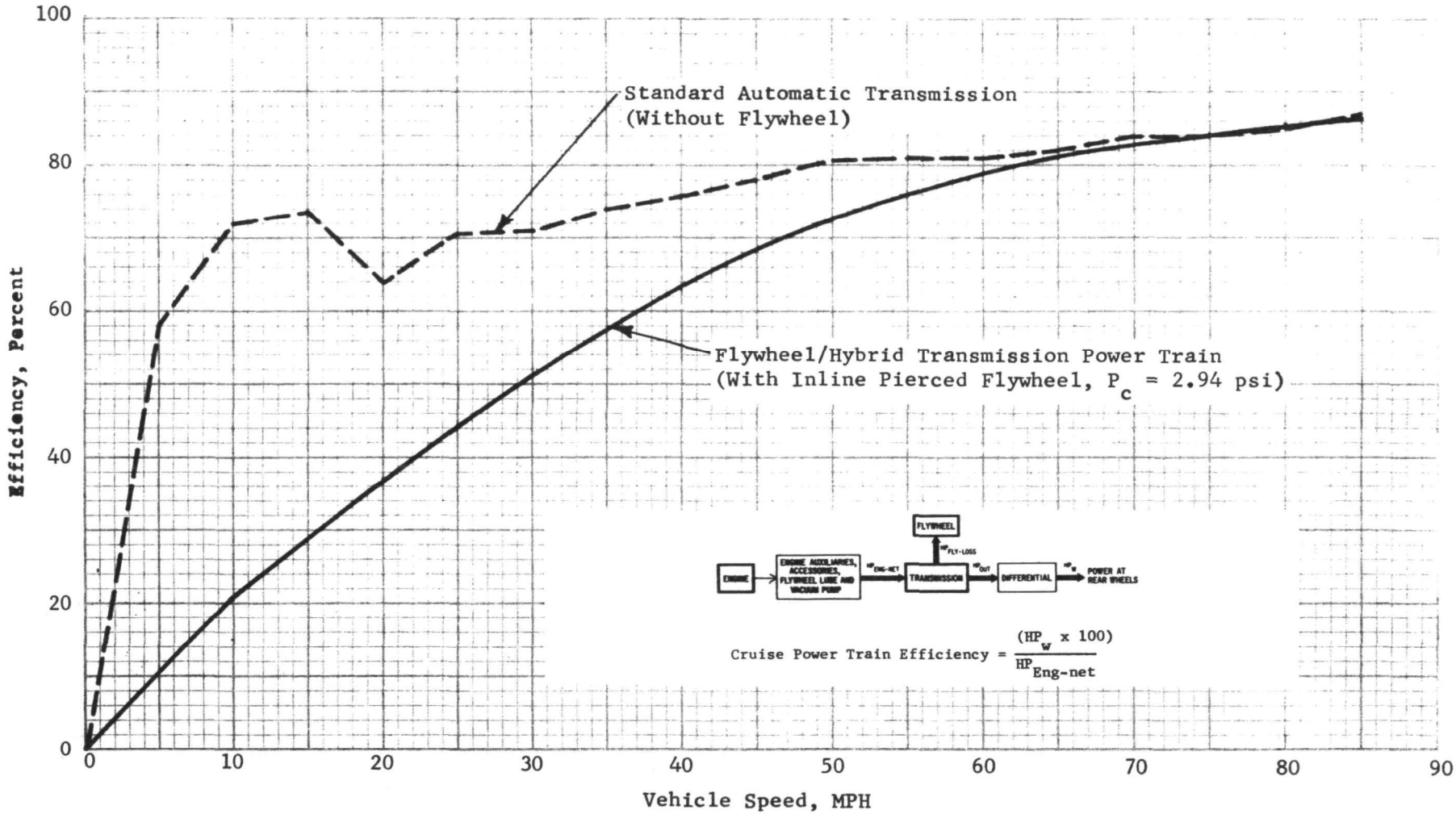

Fig. III-6 Power Train Efficiency Comparison at Cruise Power

MTI-12493

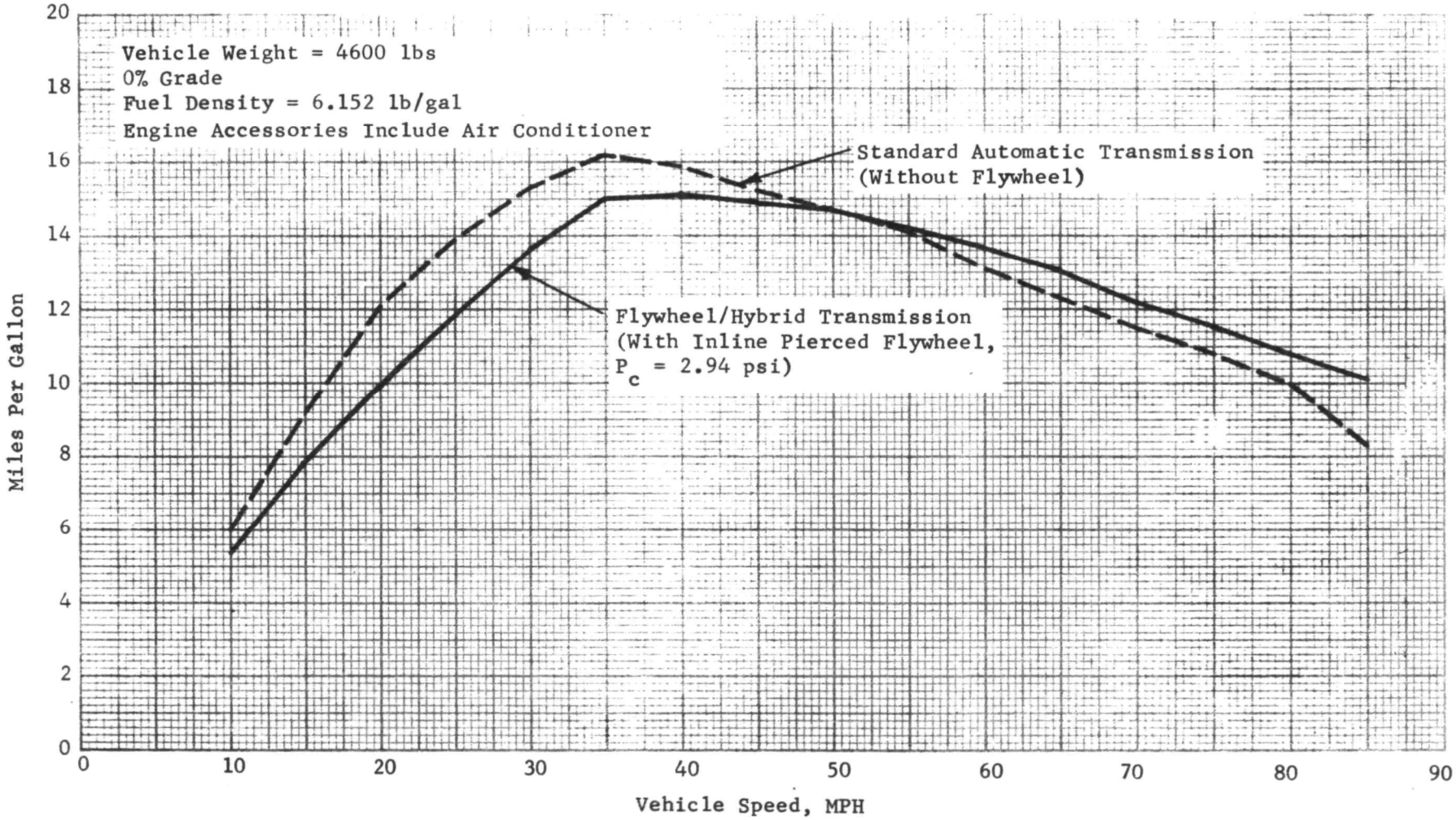

Fig. III-7 Comparison of Fuel Economy at Cruise Power

MTI-12494

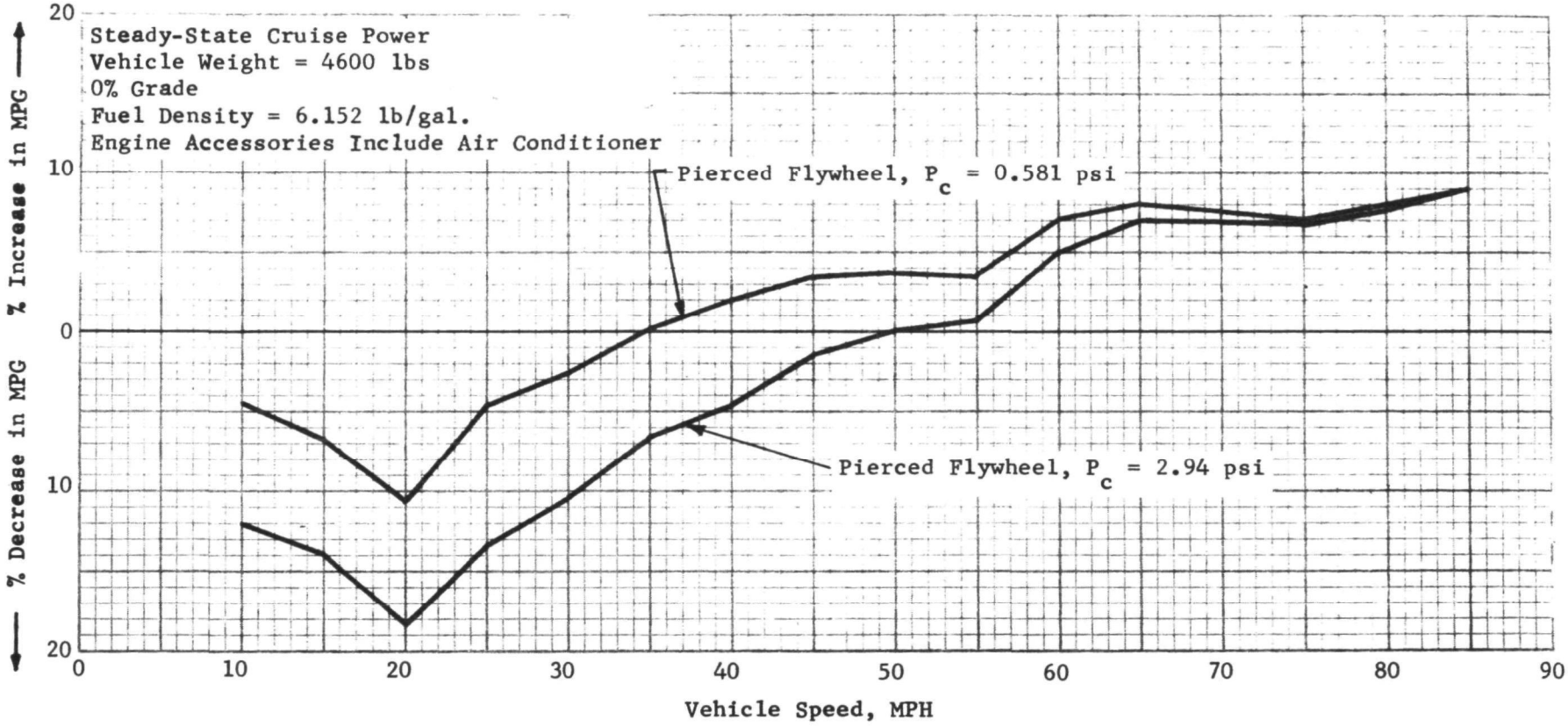

Fig. III-8 Percentage Change in Cruise MPG Compared to Conventional Automatic Power Train

MTI-12495

Engine operation at minimum specific fuel consumption (SFC) conditions is, of course, desirable in order to achieve good fuel economy. However, since no emission data were available for the engine during the course of this study, it cannot be ascertained at this time whether this type of engine operation would indeed result in minimizing engine emissions.

Consequently, the transmission and control systems were designed to control the engine so that it operated at minimum SFC as much as possible based upon the assumption that, if this did not result in minimizing emissions, some other operating schedule which did so could be achieved without extensive redesign. In order to permit random flywheel charging and for other reasons (see Section VI-C) a minimum engine speed of 1400 RPM was selected. Whenever the engine power demanded is less than the minimum SFC horsepower at 1400 RPM, operation at a higher SFC will result.

A comparison of the engine SFC at cruise power is shown by Figure III-9. In general, the flywheel/hybrid propulsion system tended to result in operation closer to minimum SFC than did the conventional system. At 10 mph, a decrease of 20 to 32 percent (dependent upon flywheel losses) in engine SFC was obtained. Operation at improved engine SFC was due to flywheel losses (more engine power required) and the design features of the transmission.

Since the size of the heat engine required for the flywheel/hybrid propulsion system is dependent upon the selection of maximum steady-state cruise power, EPA/AAPS concurred that a 5300-pound vehicle should be capable of climbing a five percent grade at 70 mph without flywheel acceleration power for a period of 100 seconds.

After accounting for all losses (including transmission losses), an engine capable of developing at least 130 horsepower will be required: 26 percent smaller than the 177 horsepower engine specified for this study. This is an indication of the reduction in engine size possible for the flywheel/hybrid system compared to an engine commonly used in present day propulsion systems for medium-sized family cars.

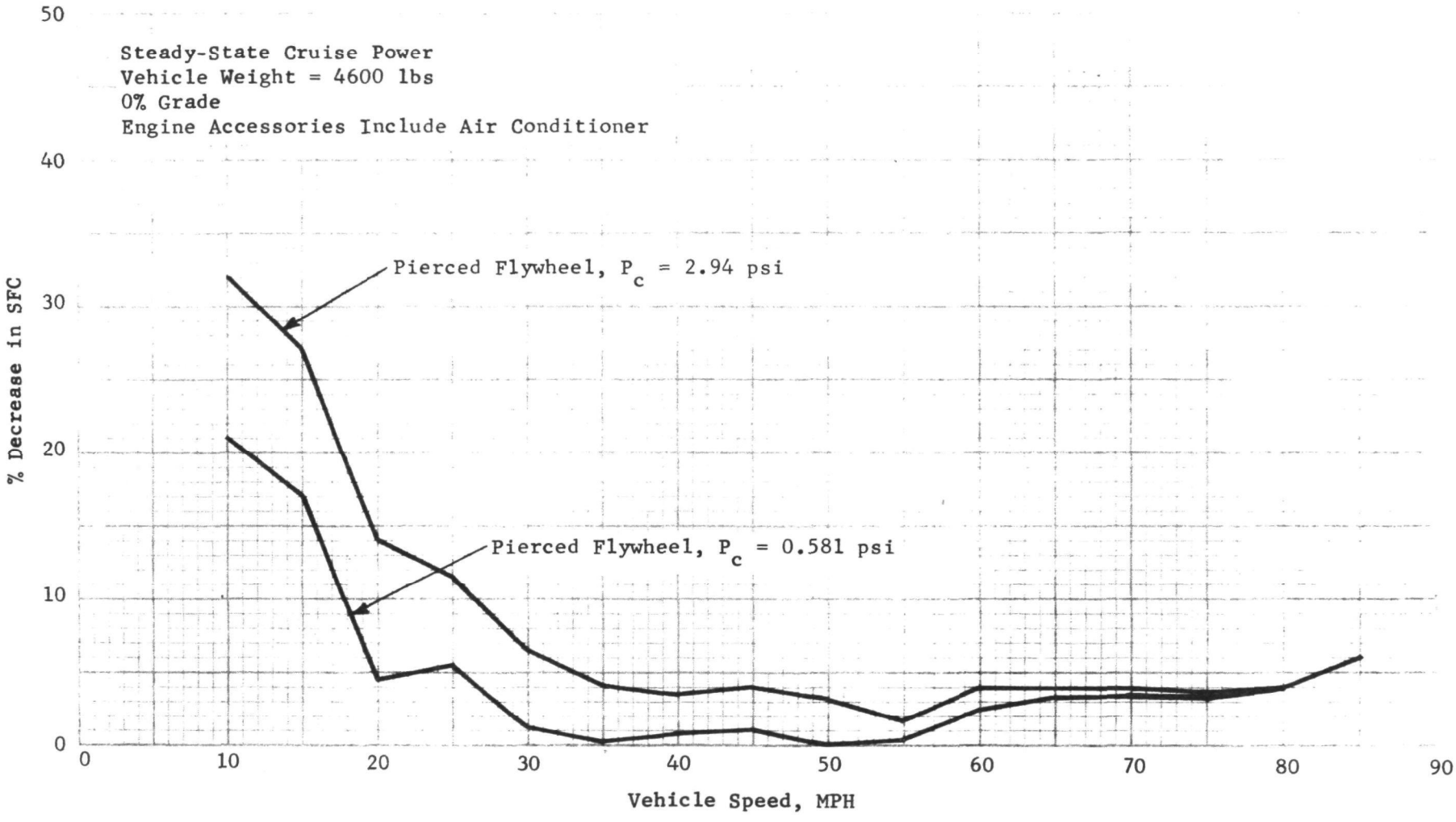

Fig. III-9 Percent Decrease in Cruise SFC Compared To Conventional Automatic Power Train

MTI-12549

3. Full-Power Transient

In order to obtain dynamic performance results a nonlinear model of the complete propulsion system was set up on the digital computer. The model simulated all significant dynamics (torque and speed relationships) of the flywheel, transmission with controls, engine, and family car in the time domain. Compressibility dynamics in both hydraulic pump-motor circuits were included and transmission losses were calculated as described in Appendix I. Engagement and disengagement of the secondary and primary transmission were not included. Input to the model to initiate a transient was driver command pedal as a function of time.

The control system was the open-loop Type B control (discussed earlier) setup for TKE with flywheel speed varying between 24,000 rpm and 10,000 rpm for vehicle speeds of 0 to 85 mph. Control gains and rate limits were adjusted to maintain stability, but were not optimized for maximum performance capability. Additional tuning would have resulted in obtaining further improvement in vehicle acceleration characteristics.

The results of the full power transient demonstrated the performance capabilities of the transmission under a "worst case" condition with respect to the efficiency of power transfer from the engine and flywheel. In addition, it demonstrated the capabilities of the design under simulated operation conditions.

A detailed discussion of the results obtained is contained in Section VI-C. A summary of those results is presented in the following discussion.

Based upon an energy balance of the full-power transient, the following results were obtained:

1. The effective efficiency of the transmission was 89.5 percent and the power train efficiency was 86 percent.
2. The engine supplied approximately 13 percent less energy than it should have for ideal control; consequently, the flywheel had to provide the additional energy.

3. The engine supplied 41 percent of the input energy and the flywheel the remainder. This indicated that the engine could have been reduced about 50 percent in size if it were not for steady-state requirements.

Those results show that, although further tuning of the control system is required, the transmission operated at a relatively high efficiency and that, on an energy basis, the system operated reasonably close to desired conditions.

Figure III-10 presents the transmission efficiency obtained during a full power transient as a function of vehicle speed. The lowest efficiency (78 percent) occurred at 25 mph, where the primary shifts range under full power conditions.

Figure III-11 presents a comparison with a conventional automatic transmission on the basis of transmission efficiencies. These results indicate that the conventional transmission has better full-power efficiency than the flywheel/hybrid transmission at speeds between 15 and 30 mph and at very high speeds. For example, at 25 mph the efficiency was 13 percent lower than a conventional transmission. The lower efficiency occurred at the range switching point. At lower power levels, range switching occurs at lower vehicle speeds — 11 mph at cruise power. Thus, under normal driving conditions (power levels less than maximum), the efficiency of the flywheel/hybrid transmission should be comparable to a conventional automatic transmission.

A comparison on the basis of fuel economy (Figure III-12) clearly shows the advantage of the flywheel even though engine operation was not optimized. For about three seconds during the initial portions of the full-power transient (when the engine operates at low power levels), the engine SFC was about 50 percent higher than with a conventional system.

These results indicate that further improvements in the design will be necessary in order to obtain a better engine SFC during maximum acceleration. At lower acceleration rates (gradual changes in the driver pedal) more common to the DHEW driving cycle, the engine would tend to operate close to the minimum SFC operating conditions. As an example — with output power equivalent to a five percent grade — engine operation at minimum SFC was obtained for all vehicle speeds above 25 mph.

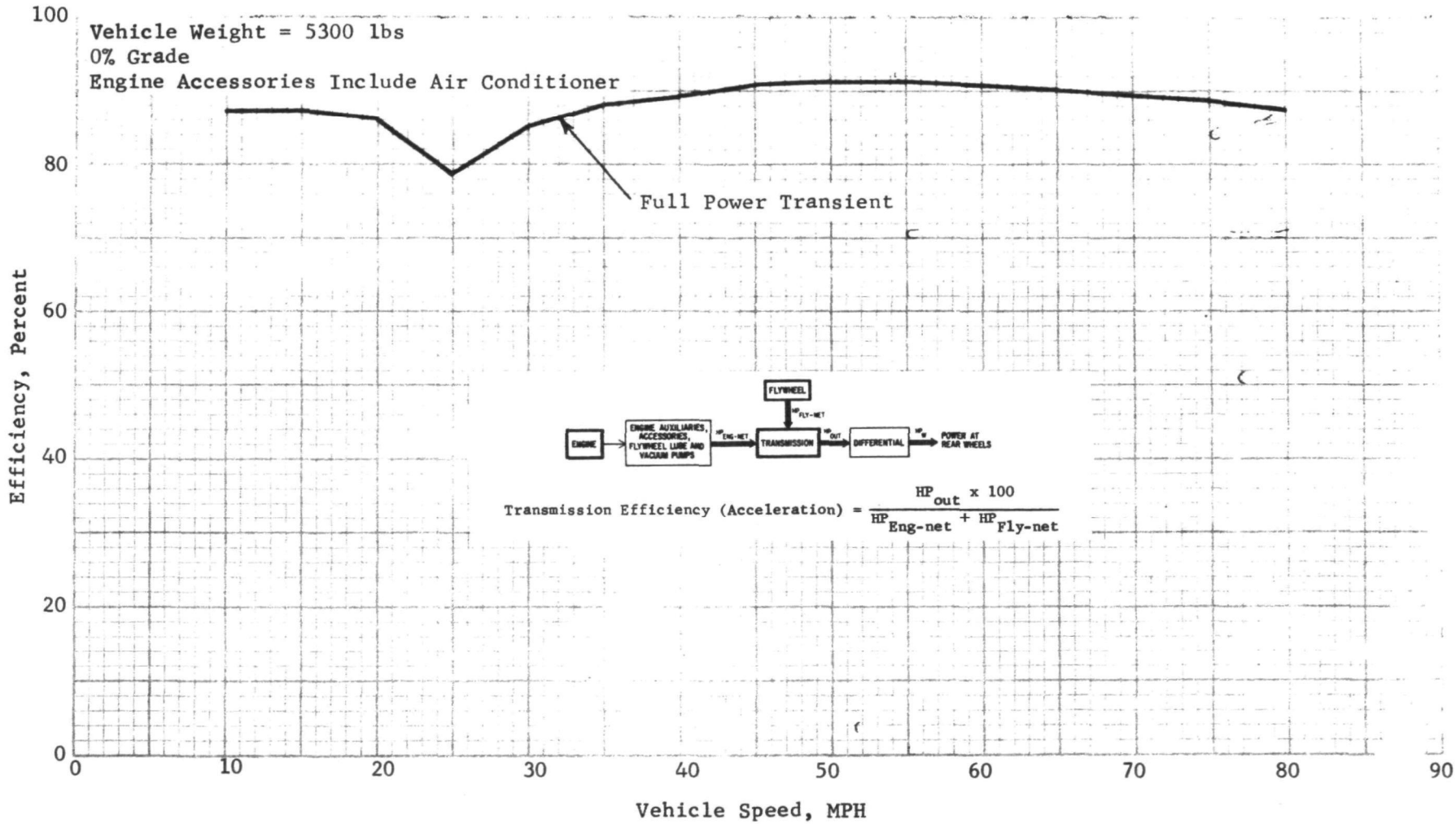

Fig. III-10 Flywheel/Hybrid Transmission Efficiency at Maximum Power

MTI-12544

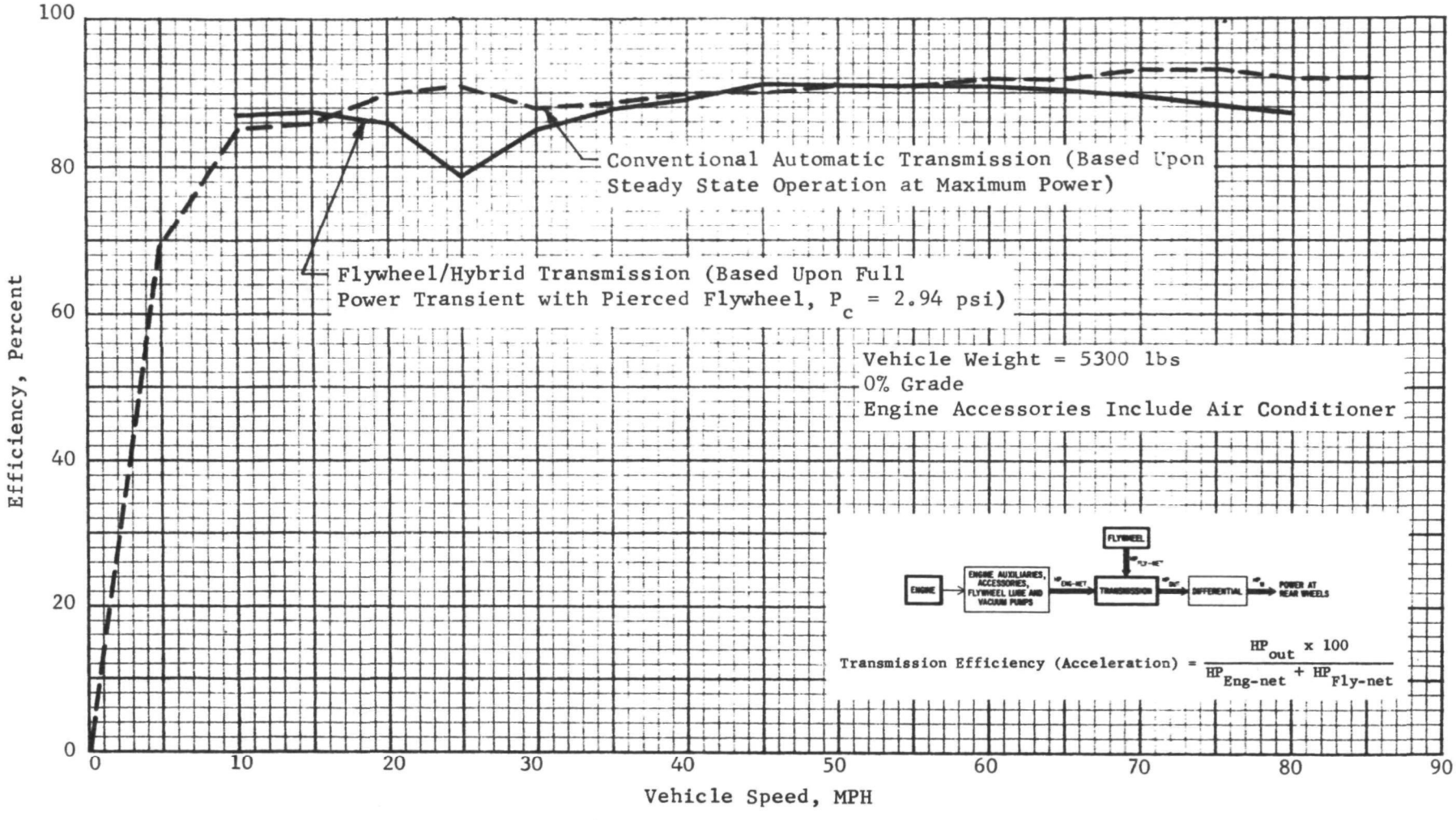

Fig. III-11 Comparison of Transmission Efficiencies at Full Power

MTI-12541

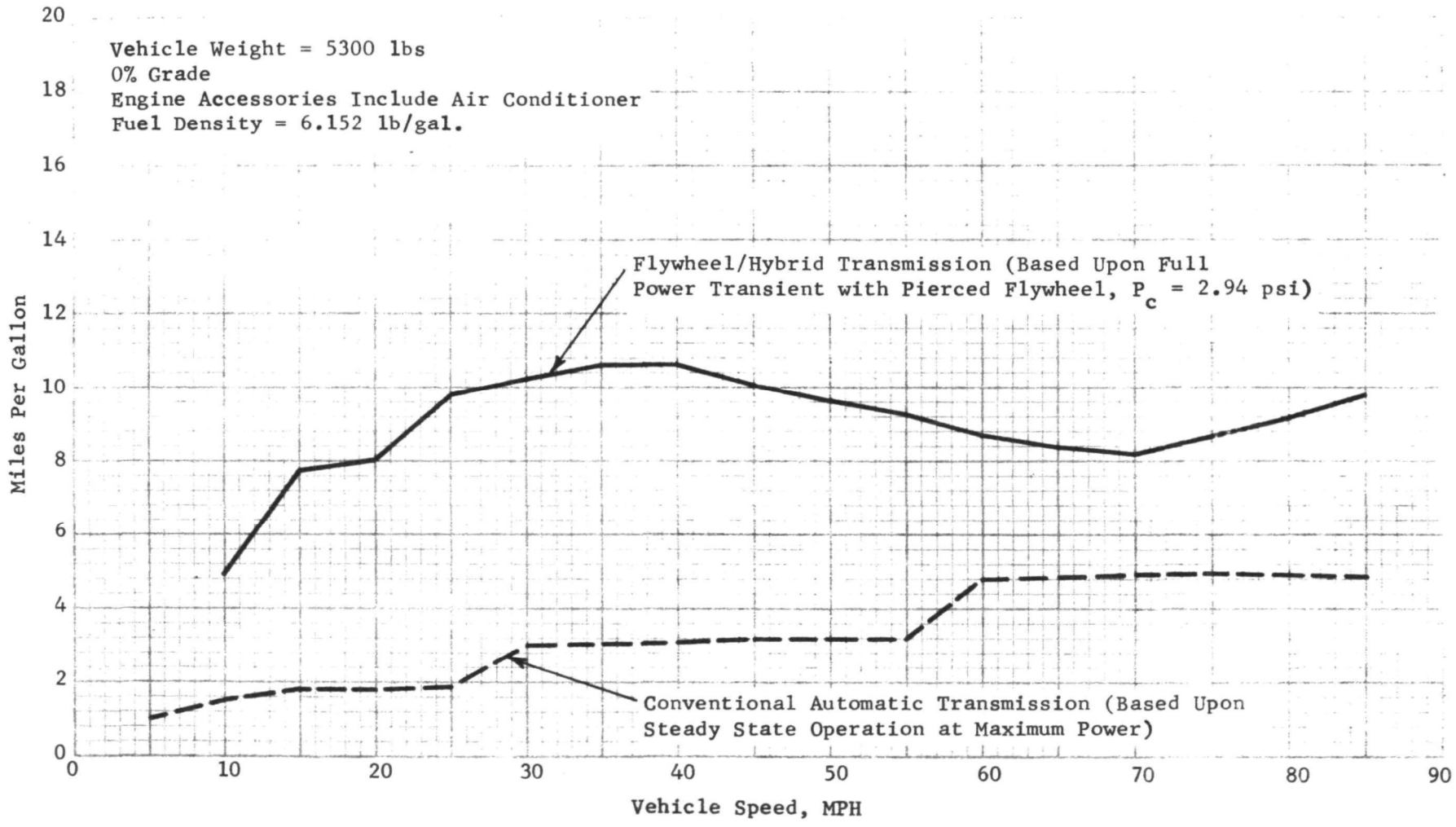

Fig. III-12 Comparison of Full Power Fuel Economy

MTI-12543

4. Flywheel Charging Times

As part of the subject investigation it was of significance to determine what magnitude of charging times could be expected for the system. In order to accomplish this, it was assumed that there is a fixed ratio between the engine speed and the flywheel speed. This implies that the hydraulic elements were not taking part in the charging cycle and that the charging was directed through the gearing with the ring gear held stationary. The inertia of the flywheel was referred to engine speed and the torque available for acceleration was determined from the engine performance map which related horsepower and speed.

Knowing torque and reflected inertia, the average rate of acceleration could be determined. The acceleration and the speed increment were then used to establish the time required between speed steps.

The subject calculation was made for charging at minimum SFC as well as charging at maximum engine horsepower. Two end points of engine speed were also considered, 3200 and 3800 rpm. The times required for full charging was greatest at 44.9 seconds at minimum SFC hp and an engine speed of 3200 rpm; and least, 25.1 seconds at maximum engine hp and an engine speed of 3800 rpm. This was well-within the goal that 65 percent of full power be available within 45 seconds.

E. Safety Aspects

Since the transmission controls the flywheel power flow, a preliminary analysis was made with regard to safety aspects. Based upon the details given in Section VI-F, it was concluded that failures of certain transmission elements and control failures leading to primary and secondary transmission ratio errors can result in potentially dangerous vehicle acceleration due to the energy storage capability of the flywheel.

In analyzing these types of failures, it was assumed that they would require the same type of driver reactions as conventional vehicles require. The malfunctions noted above, which fall into the pathological category, would not be immediately corrected by the normal reactions of the driver. For example,

under abnormal conditions, the driver would lift his foot from the accelerator and apply the brakes expecting to slow. He would still note an increase in vehicle speed or no indication of deceleration for a period of time. Similar comments apply to the condition where unexpected decelerations take place.

In summary, based upon the preliminary analysis conducted in this study (see Section VI-F), it was concluded that a more detailed investigation of the critical safety aspects identified herein and the remifications of their solution is required.

Although not included in our considerations, it is very probable that, should the flywheel/hybrid propulsion system come into common usage, certain corrective actions could be built in and integrated with what normally would be expected from the driver. This would require added control complexity.

F Regenerative Braking Analysis

In reviewing the requirements for dynamic (regenerative) braking, it was important to assess the feasibility of such braking and to determine if the use of flywheel dynamic braking would unduly penalize the overall transmission design. In the latter case, this would require a trade-off between any added complexity or design compromise and the extent of their benefit. In terms of assessing feasibility, this was considered on the basis of a total energy concept, practical braking limits for vehicles, peak torque and horsepower requirements, and any other influences brought about by the flywheel.

The first consideration with respect to braking was based on the premise that the driver must be capable of making an emergency stop which for purposes of this study was taken to be a deceleration rate of 20 ft/sec^2. This indicated that with rear wheel drive, a maximum of 35 percent of the required braking force could be realized through the rear wheels. This results from the fact that at this deceleration rate, the vehicle weight load on the rear wheels is 35 percent. Thus, it was concluded that four-wheel mechanical braking was definitely required, that in an emergency situation there is a severe limitation on regeneration and that additional engine energy sometime during the cycle would be required to bring the flywheel back to the desired energy level.

Further analyses indicated that, at a deceleration rate of 8.2 ft/sec^2, it was possible to have regeneration. However, the sizing of the flywheel transmission would have to be changed. In fact, the capacity would have to be doubled. As shown in Section VI-G, design modifications would be required to achieve the above. The estimate of cost change would be an additional 12 to 15 percent of overall transmission cost.

With the transmission design unaltered, the flywheel system could be utilized as a retarder to provide deceleration capability of 4.41 ft/sec^2 with full regeneration.

It was concluded that some benefit as a retarder could be realized, but this would not negate the requirement for four-wheel mechanical brakes. Provisions would have to be made for different levels of braking command such that this retarder action could be realized.

Further details regarding regenerative braking are given in Section VI-G.

G. Cost and Physical Comparisons

One of the most important aspects of any system being considered for automotive use is cost. Consequently, a detailed cost analysis (Section VI-E) was performed using procedures currently practiced by the Ford Motor Company, in order to determine the cost of the transmission and control system design presented herein. This analysis consisted of determining detailed costs for approximately 390 separate parts by procedures which are currently practiced in the automotive industry. The resulting costs were then compared to the current cost of an automatic transmission for a medium-sized family car. Since the cost of the automatic transmission was based upon proprietary information of the Ford Motor Company, the results of the cost analysis are presented as ratios.

Detailed costs were determined on a "variable cost" basis rather than an "original equipment manufacturer" (OEM) basis, since this approach is common to the automotive industry when comparing designs. Briefly, variable costs include the cost of material (in "as purchased" condition) and in-house costs to complete the necessary manufacturing and assembly. The latter costs include direct labor, indirect labor and nonvariable burden. The OEM costs (specified by EPS/AAPS) were estimated from the aggregate variable cost.

A summary of the cost analysis results is presented by Table III-2. These results show that in production quantities of 1,000,000 units per year, the variable cost of this transmission will be at least 2.40 times a conventional automatic transmission — an increase of 140 percent. On an OEM cost basis, the minimum increase ranged from 125 to 135 percent. For smaller production quantities (100,000 units per year), the minimum OEM cost was 124 to 135 percent higher than a conventional automatic transmission dependent upon the type of production tooling assumed. This increase in cost was primarily due to:

1. Two power sources - this required two transmissions to be packaged into a single unit and the costs reflect the torque transfer elements of two transmissions.

2. Added control complexity - the control system had more than twice as many parts compared to the controls for a conventional automatic transmission.

The results shown by Table III-2 also indicate that in order to minimize the cost of the transmission, it is desirable to have the axis of the flywheel in line with the engine shaft.

Another important comparison is on the basis of propulsion system costs. In order to determine this comparison, the total OEM cost of 1) a smaller engine, 2) the flywheel*, and 3) associated transmission were ratioed to the equivalent cost of a larger engine and an automatic transmission. These results showed that in production quantities of 1,000,000 units/year the ratio in OEM cost was 1.63. Thus, the flywheel/hybrid propulsion system can be expected to cost at least 60 to 70 percent more than a comparable propulsion system currently used in automobiles.

Consider now a comparison of pertinent physical characteristics. As summarized by Table III-3, the transmission design presented herein was five percent larger in volume, 75 percent heavier and had 65 percent more parts than a comparable conventional automatic transmission. These results clearly indicate the increased complexity of the transmission compared to a conventional automatic transmission.

*The flywheel assumed was the in-line pierced configuration. Cost data for the flywheel and its associated parts were supplied by LMSC.

TABLE III-2

Final Transmission Cost Analysis-Ratios

	Standard Multi-Speed Torque Converter ("Automatic") Transmission for Medium Size Vehicle			Power Splitting Transmission for Flywheel/Heat Engine Medium Size Vehicle (Inline Flywheel)			Power Splitting Transmission for Flywheel/Heat Engine Medium Size Vehicle (Offset Flywheel)		
	A	B	C	A	B	C	A	B	C
1) Variable Cost Ratio	1.00	1.19	1.29	2.40	2.85	3.10	2.53	3.01	3.26
2) O.E.M. Cost Ratio	1.00	1.15-1.25	1.25-1.35	2.25-2.35	2.70-2.80	2.95-3.05	2.35-2.45	2.85-2.95	3.10-3.20
3) Control Variable Cost Ratio	1.00	1.19	1.29	2.87	3.41	3.70	2.87	3.41	3.70
4) Labor Content Ratio	1.00	1.00	1.50	2.13	2.13	3.19	2.25	2.25	3.37
5) Material Content Ratio	1.00	1.20	1.20	2.65	3.18	3.18	2.79	3.35	3.35

A) Ratios based on manufacture of 1,000,000 units per year

B) Ratios based on manufacture of 100,000 units per year with tooling as for 1,000,000 units

c) Ratios based on manufacture of 100,000 units per year with tooling suitable for maximum yearly manufacture of 100,000 units.

TABLE III-3 TRANSMISSION PHYSICAL COMPARISONS

	Flywheel/Hybrid Transmission	Automatic Three Speed With Torque Converter Transmission	Percent Increase Compared to Conventional Automatic 3-Speed Transmission
Transmission Volume - Ft^3	1.70 Ft^3	1.85 Ft^3	
Control Volume Ft^3	.40 Ft^3	.15 Ft^3	
Transmission Weight - Lbs.	218 Lbs	123 Lbs	
Control Weight - Lbs.	31 Lbs	19 Lbs	
Transmission - Number of Parts	235	166	
Control - Number of Parts	155	70	
Total Transmission and Control Volume	2.1 Ft^3	2.0 Ft^3	5%
Total Transmission and Control Weight	249 Lbs	142 Lbs	75%
Total Transmission and Control Parts	390	236	65%

* Does not include the volume of the flywheel.

On a propulsion system basis, the weight of the flywheel/hybrid propulsion (Table III-4) was just barely within the limits specified by EPA/AAPS Design Goals. Table III-5 shows that the volume of the complete propulsion system was well within EPA/AAPS allowable limits.

TABLE III-4

Weight Summary

Weight of 1970 Propulsion Systems	=	1300 Pounds
" " " Transmissions	=	140 Pounds
" " " Propulsion System Minus Transmission	=	1160 Pounds
Weight of Hybrid Propulsion System Flywheel	=	185 Pounds
Weight of Hybrid Propulsion System Power Splitting Transmission	=	249 Pounds
Total Weight of Hybrid Propulsion System	=	1594 Pounds
Total Allowable System Weight	=	1600 Pounds

TABLE III-5

Volume Summary

Volume I.C. Engine and Accessories	=	20.2 Ft^3
Volume I.C. Engine Cooling and Heating System	=	3.0 Ft^3
Volume Drive Axle	=	.5 Ft^3
Volume Rear Axle	=	1.1 Ft^3
Volume Fuel Tank	=	2.7 Ft^3
Volume Exhaust System	=	.7 Ft^3
Volume Flywheel	=	1.3 Ft^3
Volume Power Splitting Transmission	=	2.1 Ft^3
Total Volume of Hybrid Propulsion System	=	31.6 Ft^3
Total Allowable System Volume	=	35 Ft^3

SECTION IV

CONCLUSIONS AND RECOMMENDATIONS

1. As a result of evaluating various transmission concepts, the power-splitting transmission was considered to be the best for the flywheel/hybrid propulsion system. Thus, a preliminary design of this type of transmission was made and evaluated in this study.

2. The transmission design presented herein has sufficient flexibility to accommodate flywheel speeds ranging from 8,000 to 24,000 rpm without major design changes. Therefore, the operating speed ratio of the flywheel can be based upon considerations other than transmission size.

3. After accounting for all losses (including transmission losses), it was determined that an engine capable of developing at least 130 horsepower is needed to meet EPA/AAPS requirements: 26 percent smaller than the engine specified for this study (177 horsepower). This is an indication of the reduction in engine size possible for the flywheel/hybrid system compared to an engine typically used for present day medium sized family cars.

4. Significant deviations from the desired total energy concept will be encountered during rapid or emergency decelerations (20 ft/sec^2). Under these conditions, the rear wheels can regenerate 35 percent or less of the required flywheel charge. Since full benefit of regenerative braking could not be realized: a) a conventional braking system was recommended for the vehicle and b) for lower cost, the transmission was sized compatible with acceleration requirements.

5. With the selected transmission size, during a 20 ft/sec^2 deceleration, only 17 percent of the required flywheel charge can be regenerated through the rear wheels. The engine supplies the additional energy to return the system to normal energy levels. However, at lower deceleration rates, characteristic of driving cycle operation, the flywheel (as a retarder) can be fully regenerated except for losses (transmission, dissipative braking, flywheel losses, etc.),

6. Based upon stability, system, and cost considerations, an open-loop scheduling-type of control was selected for the transmission. However, additional studies are required in order to more thoroughly investigate system interactions, operational aspects, and to optimize the control system. The selected control approach provides perfect TKE control for a given schedule of vehicle load and approximated it at other loads. In addition, it provides more flexible operation of the flywheel on hills and under wheel-slip conditions.

7. At idle conditions, the fuel flow rate for flywheel/hybrid system would be approximately 18 percent more than a conventional system.

8. At steady-state cruise power conditions, the efficiency of the transmission (after accounting for flywheel loss power) is better (20 to 25 percent higher) than a conventional automatic transmission. However, the fuel economy of the propulsion system would be 10 to 18 percent lower at 20 mph than a conventional system due to flywheel losses.

9. At maximum power conditions, the efficiency of the transmission was 13 percent lower than a conventional transmission at 25 mph. At other vehicle speeds, the efficiency was essentially the same as a conventional transmission.

10. The engine would operate at better SFC than a conventional system at cruise power conditions; at 10 mph the decrease (improvement) in SFC was 20 to 30 percent. Under maximum power accelerations, the engine operates for 3 seconds at 50% poorer SFC than a conventional system; thus, further design improvements are required. At lower acceleration rates, the engine tends to operate close to minimum SFC. With output power equivalent to that required for a 5 percent grade, the engine would operate at minimum SFC for all vehicle speeds above 25 mph.

11. Failures leading to primary and secondary ratio errors can result in potentially dangerous vehicle accelerations or decelerations. A more detailed investigation of critical safety aspects and the ramification of their solution is required.

12. Even though the transmission was designed to be compact, lightweight, and highly efficient, in comparison to a conventional automatic transmission, it was 75 percent heavier (249 versus 142 pounds) and would have 65 percent more parts (390 versus 236).

13. The OEM cost of the transmission is at least 125 percent higher than a standard automatic transmission for production quantities of 1,000,000 units per year. On a variable cost basis (more meaningful to the automotive industry), the increase in cost would be 140 percent. Decreasing the quantity of production had no major effect on cost comparisons.

14. Consideration of propulsion system costs showed that the flywheel/hybrid propulsion system can be expected to have an OEM cost at least 60 to 70 percent more than a comparable propulsion system currently used in automobiles.

15. On a propulsion system basis, the weight of the flywheel/hybrid propulsion is just within the limits specified by EPA/AAPS Design Goals, while the total volume of the complete propulsion system is well within EPA/AAPS allowable limits.

16. System complexity and developments which are required for safety (containment, overriding mechanisms, etc.,) as well as further control development, suggest that the practical production implementation of the transmission would not be possible by 1975.

17. Based upon the above, development of this transmission is not recommended until further evaluations are conducted. As part of these evaluations, the flywheel/hybrid propulsion should be compared on a trade-off basis to other alternative propulsion systems for the family car.

18. As pointed out in the following section of this report, the basic power-splitting transmission (without provisions for the flywheel) would have applicability to several engine types including the conventional IC engine, the gas turbine engine, the turbo-Rankine engine, and the diesel derivative engines.

SECTION V

APPLICATION TO OTHER PROPULSION SYSTEMS

The desirability of an infinitely variable transmission for vehicular applications is generally accepted. In terms of the technology, the ability to do this is available in both mechanical and hydraulic components. To date, the mechanical configurations have been limited by virtue of their stage of development or by virtue of limitations in power level where they can operate efficiently. Similarly, hydraulic elements such as a pure hydrostatic transmission accomplish the function; however, they are limited in terms of the hydraulic efficiencies. Thus the split transmission combining mechanical and hydraulic elements represents a logical path to pursue. Its major advantage is the ability to utilize the hydraulic elements for smoothly changing ratio and range while utilizing highly efficient mechanical gearing to transmit the bulk of the power flow.

Although many of the engine requirements particularly those which show promise for reducing vehicular contributions to pollution can effectively utilize an infinitely variable transmission, it is well to review a few of the important benefits which would accrue. In the Brayton cycle, or gas turbine area, it is desirable to maintain the engine at a given speed, that is, the high efficiency point at the desired pressure ratio. Where it is not possible to do this because of limiting ratios available in the transmission or because of the excessive losses during the shifting process; two spool type gas turbines have been extensively utilized. This configuration tends to approach the problem by keeping the gas generator at essentially constant speed and varying the output of the power turbine. Not only is the mechanical configuration more complex and expensive, but the controls are equally affected. An infinitely variable transmission which did not incur severe penalties over a wide operating speed range would permit the use of the more simple single shaft machine.

Similarly, the Turbo-Rankine cycle engines have an optimum speed where maximum efficiency can be realized. Such engines as the Wankel have characteristics similar to the diesel and the internal combustion heat engine; as such,

matching of engine characteristics for desired SFC performance and subsequently emissions and pollutants is well-known.

As a result of the current program, the design of a transmission which can provide a complete variable ratio was evolved. Although this transmission was designed for combined flywheel/heat engine hybrid propulsion requirements, the portion between heat engine and the vehicle represents a design which, with adaption and optimization, can provide performance benefits to the engines listed above. The current program has demonstrated advantages of this transmission in terms of many of the features required by passenger cars.

In order to demonstrate the application of this type of transmission to other prime movers, estimates were made of the characteristics of the transmission for constant-speed inputs at two different power levels: maximum and cruise. The road horsepower levels selected are shown by Figure V-1. The maximum power level selected corresponds to 140 horsepower at the road up to the skid limits of the rear wheels. This should be quite sufficient to meet EPA/AAPS acceleration power specifications.

The resultant efficiency of the transmission for the selected power levels is shown by Figure V-2. It is important to note that this transmission was not optimized for the Turbo-Rankine application and further improvements in performance would result from the program proposed herein.

The power train (or overall) efficiency from the turbine output shaft to road horsepower is shown by Figure V-3.

A comparison of efficiency between this transmission and a variable-blade-angle, torque-converter, multi-speed transmission is shown by Figure V-4. The transmitted power level of the variable torque converter for which data was available was approximately 100 road horsepower at 80 mph. These results indicate a significant improvement in power train efficiency.

Thus the improvement in efficiency coupled with the completely variable ratio capability of this type of transmission should result in optimum performance (maximum MPG) capability for engines such as the Turbo-Rankine over the

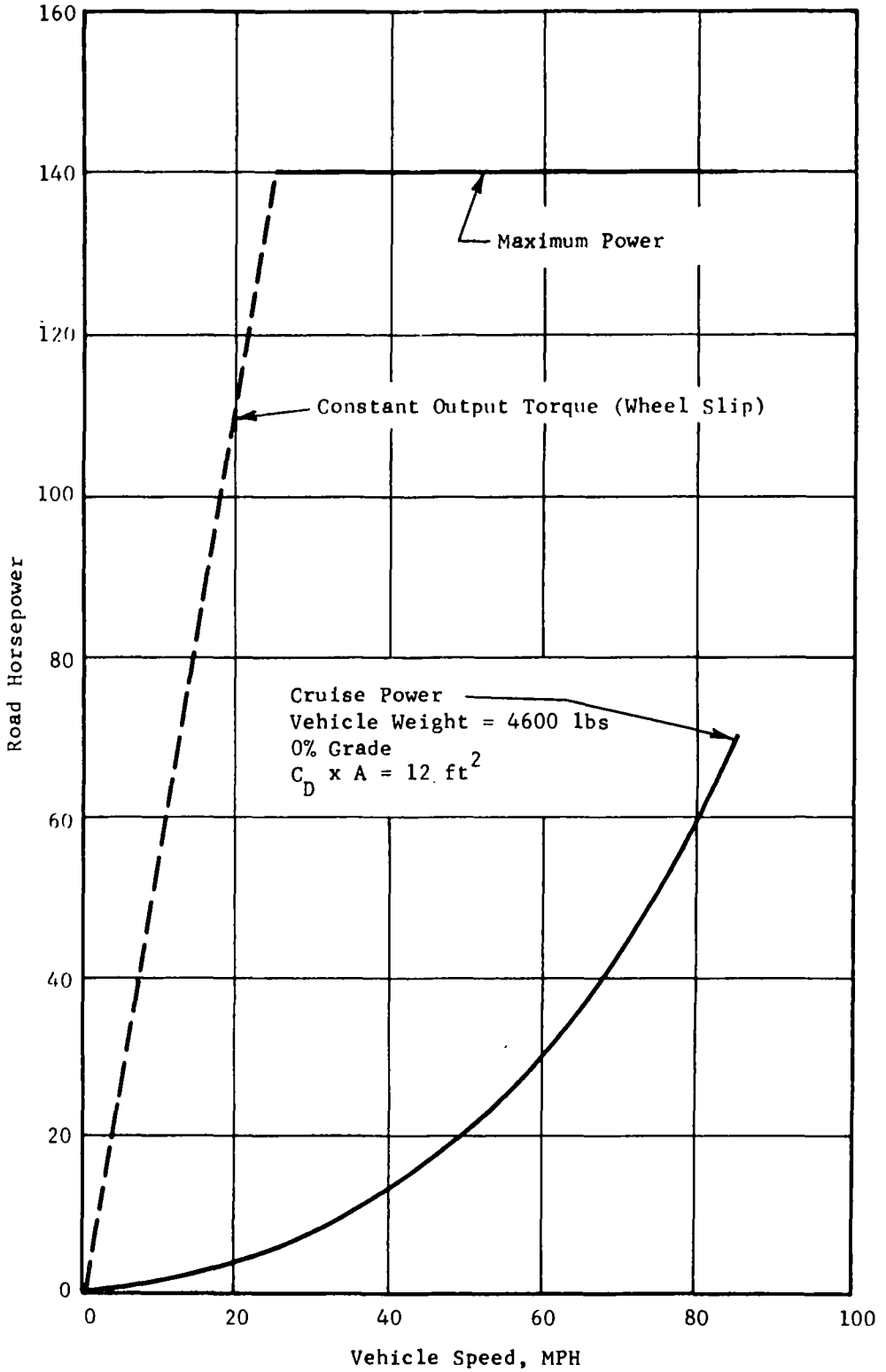

Fig. V-1 Power Levels Selected for Transmission Performance

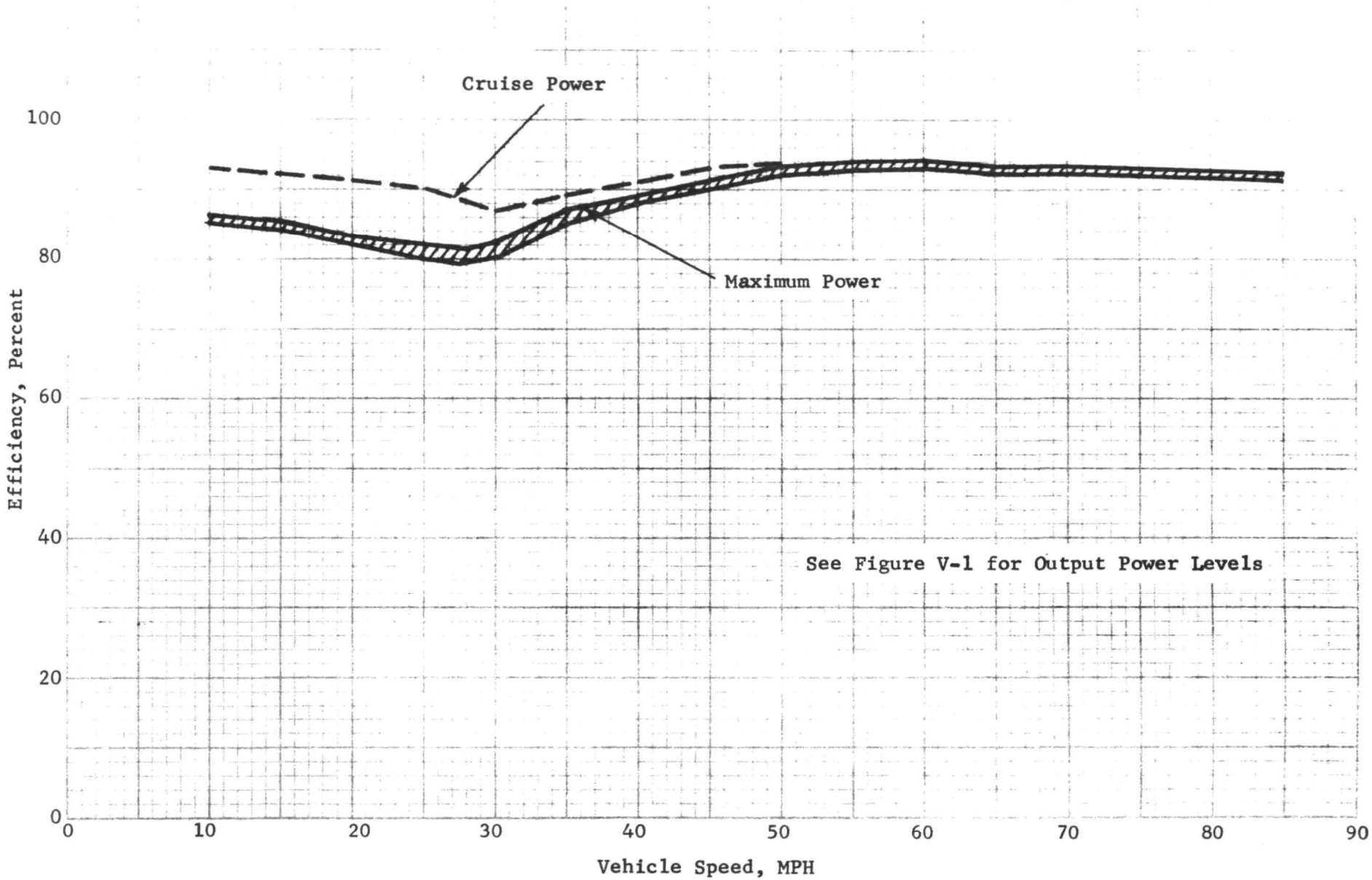

Fig. V-2 Transmission Efficiency of MTI Variable Ratio Transmission at Constant Input Speed

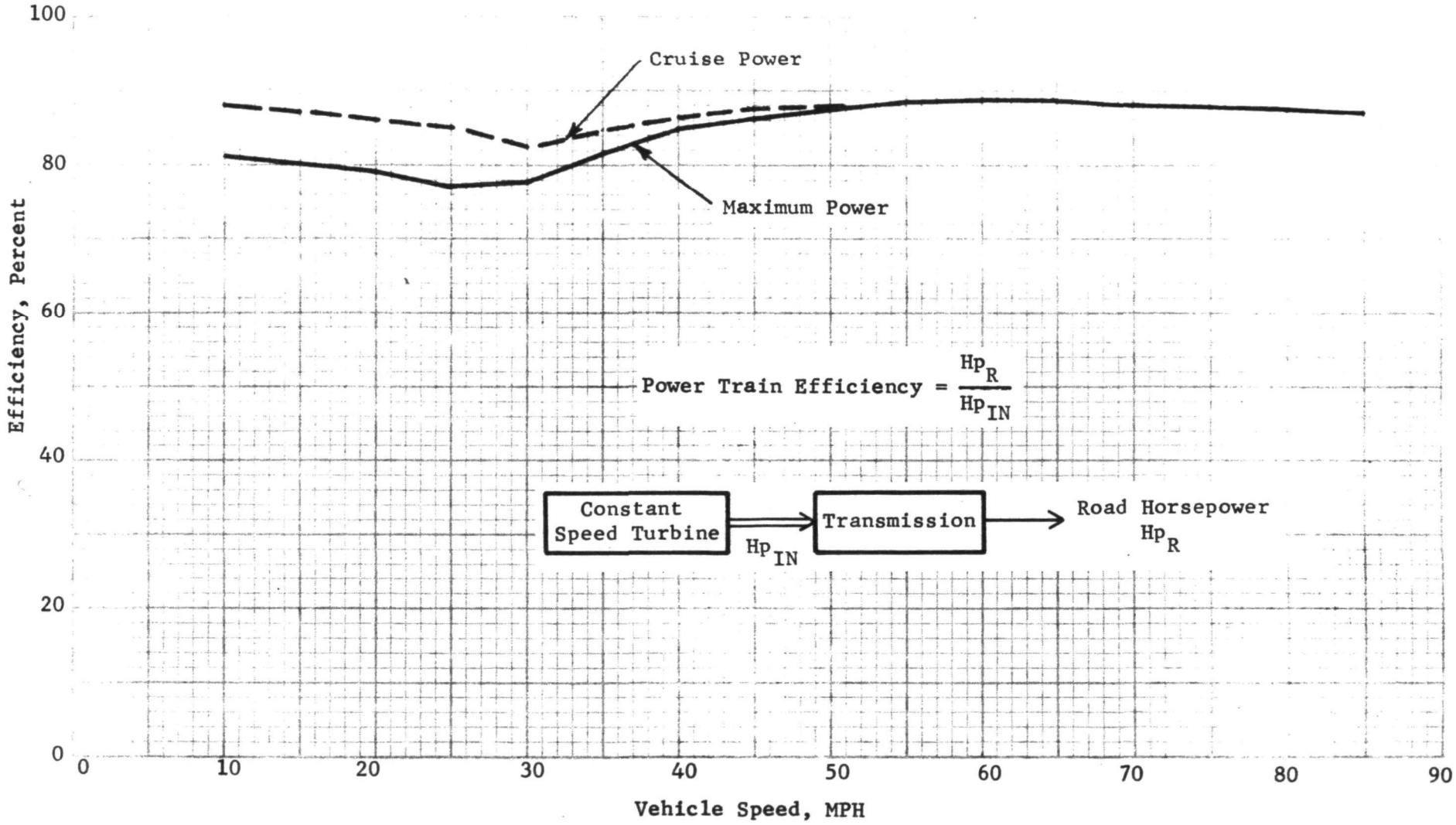

Fig. V-3 Power Train Efficiency of MTI 150A Transmission for Constant Speed Turbine Engine

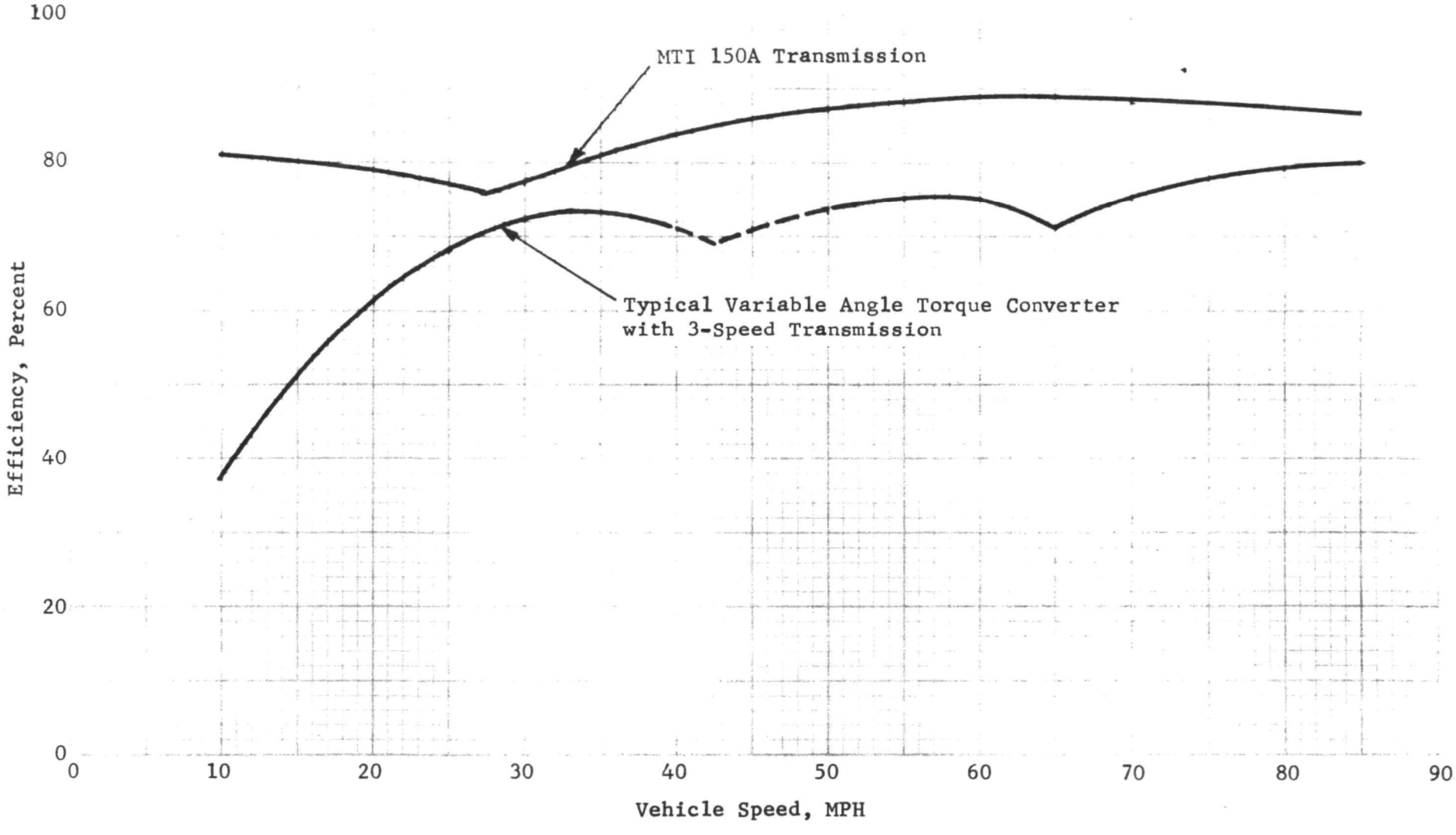

Fig. V-4 Power Train Efficiency Comparison at Maximum Power and Constant Input Speed

complete vehicle operating range. It is also important to note that, at idle conditions (zero output speed), the transmission is automatically disengaged which minimizes the idle fuel flow required for turbine-type engines.

In conclusion, a potential exists for improving the performance and reducing emissions of various engine types currently under consideration by EPA/AAPS with this type of transmission design.

VI. SUPPORTING INFORMATION

A. SELECTION OF CANDIDATE TRANSMISSION
B. DETAILED DESCRIPTION OF TRANSMISSION
C. PERFORMANCE ANALYSIS
D. CONTROLS DESIGN AND ANALYSIS
E. COST ANALYSIS
F. SAFETY ANALYSIS
G. REGENERATIVE BRAKING
H. REFERENCES

SECTION A

SELECTION OF CANDIDATE TRANSMISSION

A. SELECTION OF CANDIDATE TRANSMISSION

This section deals with the initial technical task of the heat engine flywheel propulsion system transmission study. It consisted of searching for power transmitting devices and screening these devices to select those most promising. The most promising candidates were subsequently combined into transmission concepts to transmit torque and speed from both the heat engine and the flywheel storage system to the rear wheel of a medium-size vehicle.

The basic methodology employed was to go through the following procedure:

1. Establish criteria for both selection and evaluation.
2. Gather data on available candidates.
3. Screen all but the most promising.
4. Combine these into overall transmission concepts.
5. Evaluate and review these concepts.
6. Select the most promising candidate for analysis.

In terms of the program, shown below is the flow chart of the process discussed above.

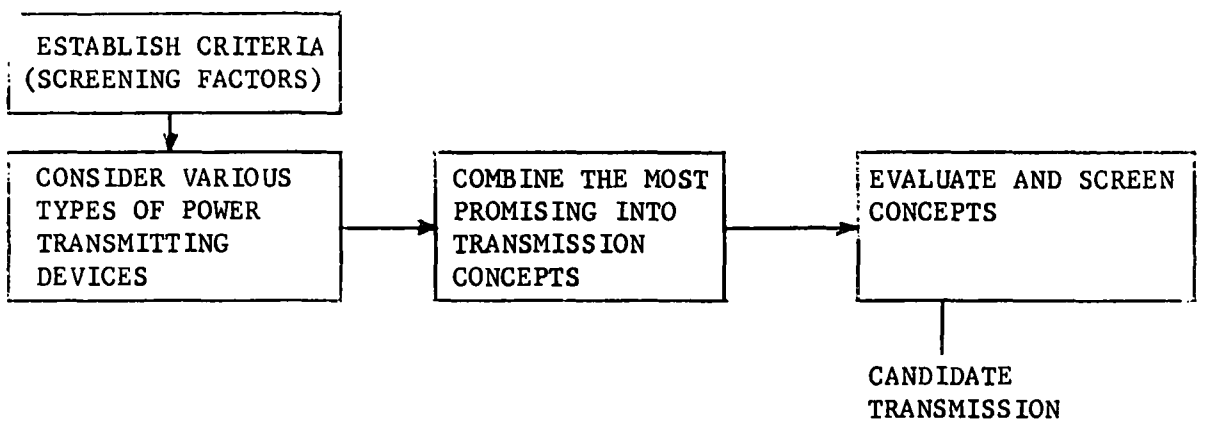

Evaluation Factors

The application required that the two sources of energy input be joined by the transmission to provide one source of output. Such torque transmitting components are many and varied; therefore, to expeditiously arrive at a promising candidate evaluation, screening factors were established using the combined engineering experience of MTI, Bendix and Consulting personnel. The factors were as follows:

1. Availability of components
2. Control and stability aspects
3. Compatibility with vehicular requirements
4. Safety
5. Performance
   - efficiency
   - emissions level of system
   - fuel economy
   - dynamic response
   - operational aspects (startup, braking, idle)
6. Packaging
7. Weight
8. Complexity
9. Cost
10. Required development
11. Regenerative power aspects.

The same combination of engineering experience was called upon to select for evaluation only those components considered practical for such a transmission. It should be recognized that there are probably areas of research or development of torque transmitting components unknown to the group which were not considered. Unpublished research accomplished by private industry would be the most likely area of omission. The specification that the transmission was to be built within the year established the first evaluation factor — availability of components. Therefore, it was decided that torque

transmitting components in the research or initial development phase would not be used and any such omission would not adversely affect the conclusions reached for the evaluation and selection task.

For the initial evaluations, preliminary comparisons of these factors for the transmission under consideration to that of an existing transmission were made. A more detailed treatment was reserved for the selected candidate design concept.

Power Transmitting Devices

By contract definition the transmission must transmit engine power to the road for all steady-state requirements and must also feed in power from a variable high-speed flywheel to a variable low-speed output shaft and provide vehicle acceleration.

The definition of possible transmissions which then could be evaluated using the factors previously listed required the initial selection of torque transmitting apparatus for each function.

These devices were separated into two categories — hydraulic and mechanical.

Under the hydraulic category the following elements were studied:

1. Hydrostatic or positive displacement hydraulic pumps and motors.
2. Hydrokinetic fluid drive or fluid coupling.
3. Hydrodynamic coupling or torque converter.
4. Hydroviscous shear drive or slipping clutch.

All of these did offer the following desired characteristics:

1. Variable speed ratio
2. Controllable output torque
3. Developed technology
4. Existing applications
5. Ample horsepower capacity

Many drive applications using hydraulic devices were reviewed. Some of the more relevant are summarized in Table A-1.

Under the mechanical category the following elements were studied:

1. Traction drives
2. Cam or gear drives
3. Belt drives

Several of the mechanical devices reviewed are summarized in Table A-2.

Candidate Transmissions

In addition to the concepts generated by combining the most promising components, several concepts from other studies were reviewed. Although not specifically included in our screening chart, they merit discussion. One of these is a flywheel/transmission for automobiles as proposed by R. C. Clerk. His paper, The Utilization of Flywheel Energy, dated June 1963, discussed the concept. The flywheel was controlled to follow the speed of the engine resulting in a low speed ratio and a low percentage use (approximately 20 percent) of the flywheel energy. Thus, the flywheel had to be quite large and heavy to provide the desired acceleration torque. In addition, a variable fluid coupling was used as the flywheel connecting link which would have a low efficiency at high speed ratios. Although heavy, the arrangement did prove the feasibility of such a hybrid/flywheel propulsion system.

Another concept locating the transmission as part of the rear axle could make use of the rear axle differential to lead the power from the engine and flywheel to the rear wheels. Such transmission arrangements were discussed in detail in Mr. G. M. DeLalio's patent, Number 3,212,358, dated October 1965.

The heavy rear axle and transmission assembly would mandate that the assembly be fixed and that the rear wheels be independently suspended. This is a major change to American car design.

TABLE A-1

Description	Comments
1. Variable Hydraulic Drive	
The device uses a planetary gear train as positive displacement hydraulic pump and a valve to control the amount of oil or air in the gear train and the flow of oil out of the gear train. Torque and speed are controllable.	The feature of bypassing oil as a control means results in a low efficiency at speeds other than the straight through or lock-up speed. Thus the unit is limited to low horsepower applications (under 50 hp) which do not necessarily require high efficiency.
2. Internal Gear Torque Motor	
An internal gear pump and motor and a bypass control valve are used to provide torque multiplication. The element is used in a small tractor transmission.	The overall efficiency is low and the unit is limited to below 50 horsepower.
3. Vane, Axial Piston & Radial Piston Pump and Motor	
These drives use positive displacement hydraulic pumps and motors to provide a variable output speed and torque. The unit transmits all of the power through the hydraulic pump and motor.	Has an lower overall efficiency than the power splitting type drive. The unit manufactured for industrial applications is too bulky for automotive application.
4. Clutch/Brake Drive	
These drives transmit torque and speed by viscous shear of a thin oil film between the discs. The slipping-clutch-type drive has been developed and a long life can be expected.	The disadvantage of a low efficiency at all part-load conditions has not been overcome.
5. Fluid Couplings as Manufactured for the Automotive Companies	
The SAE Paper 359B, 1961, Fluid Couplings, by J. Qualman and E. Egbert, General Motors Corporation, was used to investigate the capabilities of these elements.	These elements do provide a versatile variable drive coupling necessary for the transmission; however, the hydrokinetic action used to transmit torque and speed results in a very low efficiency at part load conditions where the slip of the input of the coupling relative to the output of the coupling is high.

TABLE A-1 (Continued)

Description	Comments
6. Torque Converters as Manufactured for the Automotive Companies	
The SAE papers 359A, 1961, Application of Hydrodynamic Drive Units to Passenger Car Automatic Transmissions, by E. Upton, G.M. Corp., and 359C, 1961, Multiturbine Torque Converters, by F. Walker, G.M. Corp.	The torque converter offers the advantage of a simple, automatic and reliable method of changing torque ratios or speed ratios. The converter has been manufactured in single, two and three stage configurations which provide a wide range of torque multiplication. Development models of a single-stage converter with a variable reactor have been tested successfully. The variable reactor provides a way to match the speed characteristics of a particular engine to the requirements of a particular vehicle. The efficiency remains high over much of the driving requirements. However, as the torque ratio increases and the output speed decreases the efficiency falls off rapidly.

TABLE A-2

Description	Comments
1. Several companies have been engaged in programs that use traction drives as transmissions. These drives are in the form of planetary friction drives which make use of a tilting traction roller or adjustable disc to adjust ratio.	There appears to be no horsepower or speed limit and the noise level is low while the efficiency is high. The operational technology and development of the drive is encouraging and indicates the possibilities of many applications within the next few years. However, the development status of the drive eliminated its application for the system under immediate consideration.
2. Many versions of the cam, roller or gear type drive have been produced or proposed. These devices are in production as high ratio speed reducers.	Introducing a ratio controlling element would place these drives in the development category only to be considered for transmissions of the future.
3. The Maroth drive proposed by Tranco, Inc., is a high ratio, in-line drive that uses tapered rollers and a nutating motion to transmit torque.	A small hydraulic pump and motor could be used to obtain varying torque and speed ratio. The drive offered low weight, high efficiency, low noise and low vulnerability as possible advantages. However, the development status of the drive again placed it in the category of transmissions in the future.
4. Many companies have built variable speed transmissions using belts and chains.	To date the package size needed to transmit the horsepower required for an automobile is larger than the installation space if composition belts or chains are used. When using metal belts or chains the problems of preventing metal fatigue and preventing or removing the heat has limited the amount of power than can be handled within a given package size. Transmissions using these elements require both technology and operational development.

In summary, the R. C. Clerk concept, transaxle concept and several others of a similar nature were abandoned because of the attending design and structure changes to the car.

Those power transmitting devices that were selected as applicable were arranged as transmission configurations:

1. Figures A-1 and A-2 (package drawing SK-J-4258) present a concept that uses three torque converter automotive-type transmissions. Transmission 1 runs the engine at the optimum point for low emissions; Transmission 2 provides speed flexibility for the flywheel; and Transmission 3 provides the correct output speed and torque.

2. Figures A-3 and A-4 (package drawing SK-E-4260) show a concept that uses two torque converter automotive-type transmissions. Similar functions to that described in the first transmission are performed by the transmission. The engine will operate off the minimum specific fuel consumption line since the engine speed range is fixed by Transmission 1 which does not include a torque converter.

3. Figure A-5 is a concept that uses two variable fluid couplings to provide the variable speed ratio. A valve is used to control the speed ratio. Development of a valve to control speed and torque without introducing a large efficiency penalty is not, to our knowledge, being explored by any of today's transmission manufacturers.

4. Figures A-6 and A-7 (package drawing SK-D-4259) are a concept that uses a torque converter automotive-type transmission and a hydrostatic transmission to provide control for the flywheel.

5. Figures A-8 and A-9 (package drawing SK-J-4257) give a concept that uses three hydrostatic units for primary torque and speed control and three hydrostatic units for flywheel torque and speed control. The arrangement is essentially two separate transmissions which would ease the

Scheme A

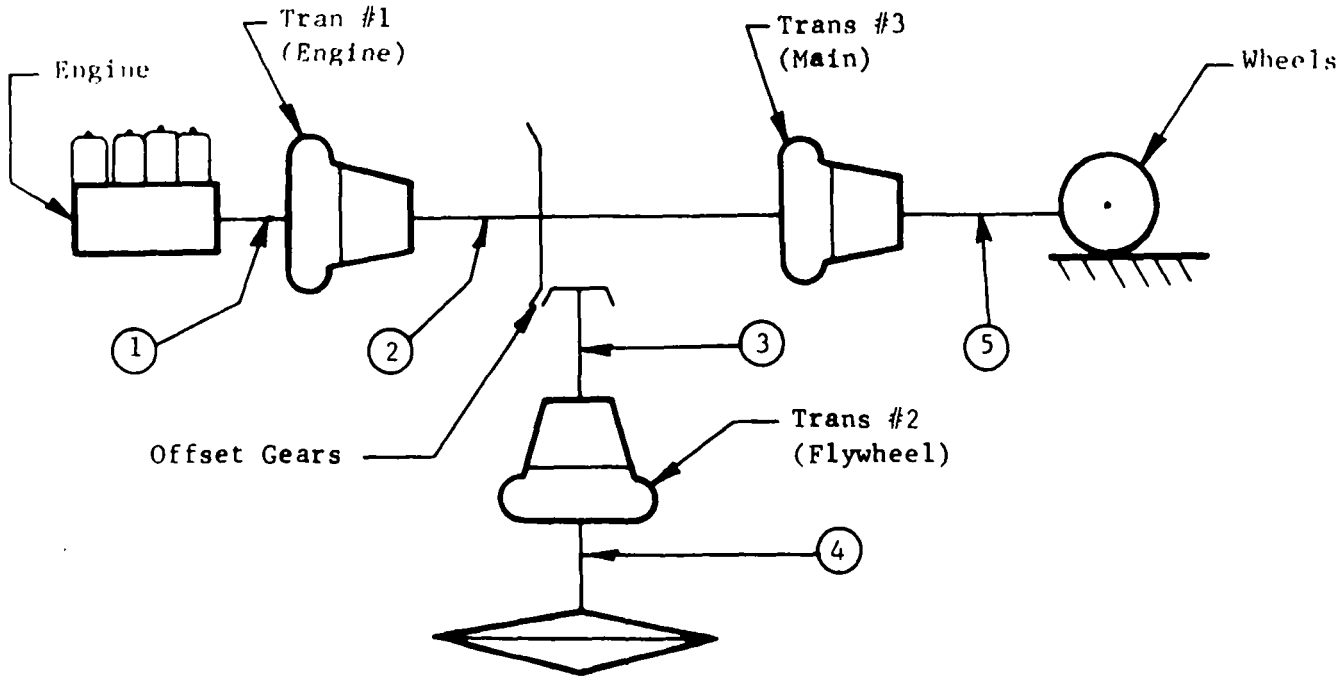

Fig. A-1 Automotive 3-Element Hydrodynamic (Ref. SK-J-4258)

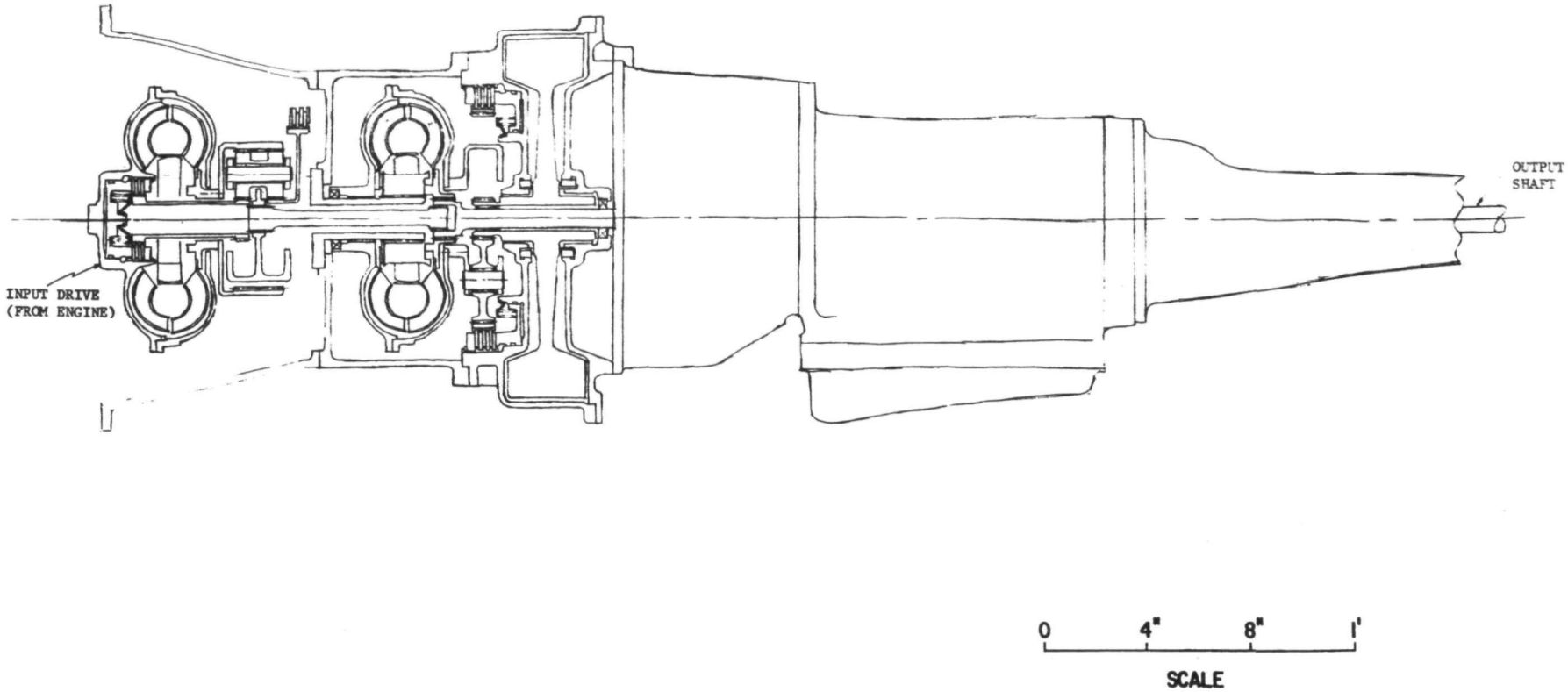

Fig. A-2 Three-Element Automotive Transmission (SK-J-4258)

MTI-12518

Scheme A'

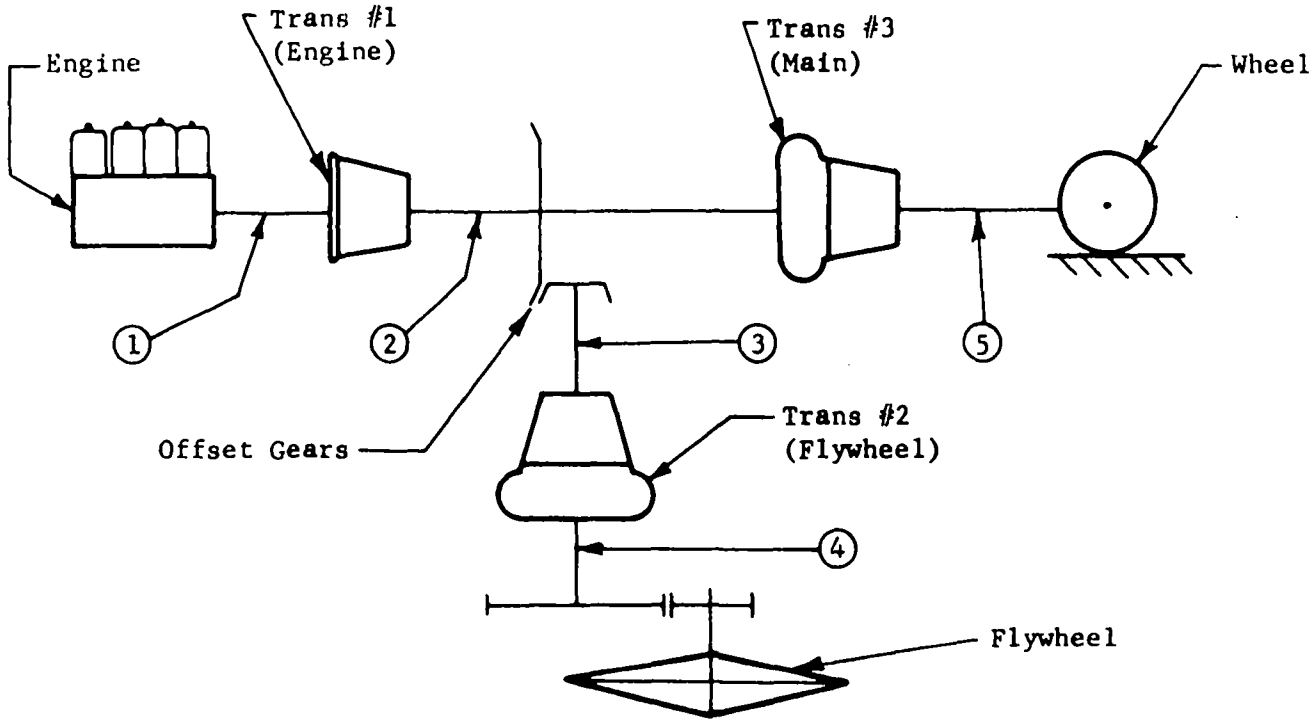

Fig. A-3 Automotive 2-Element Hydrodynamic (Ref. SK-E-4260)

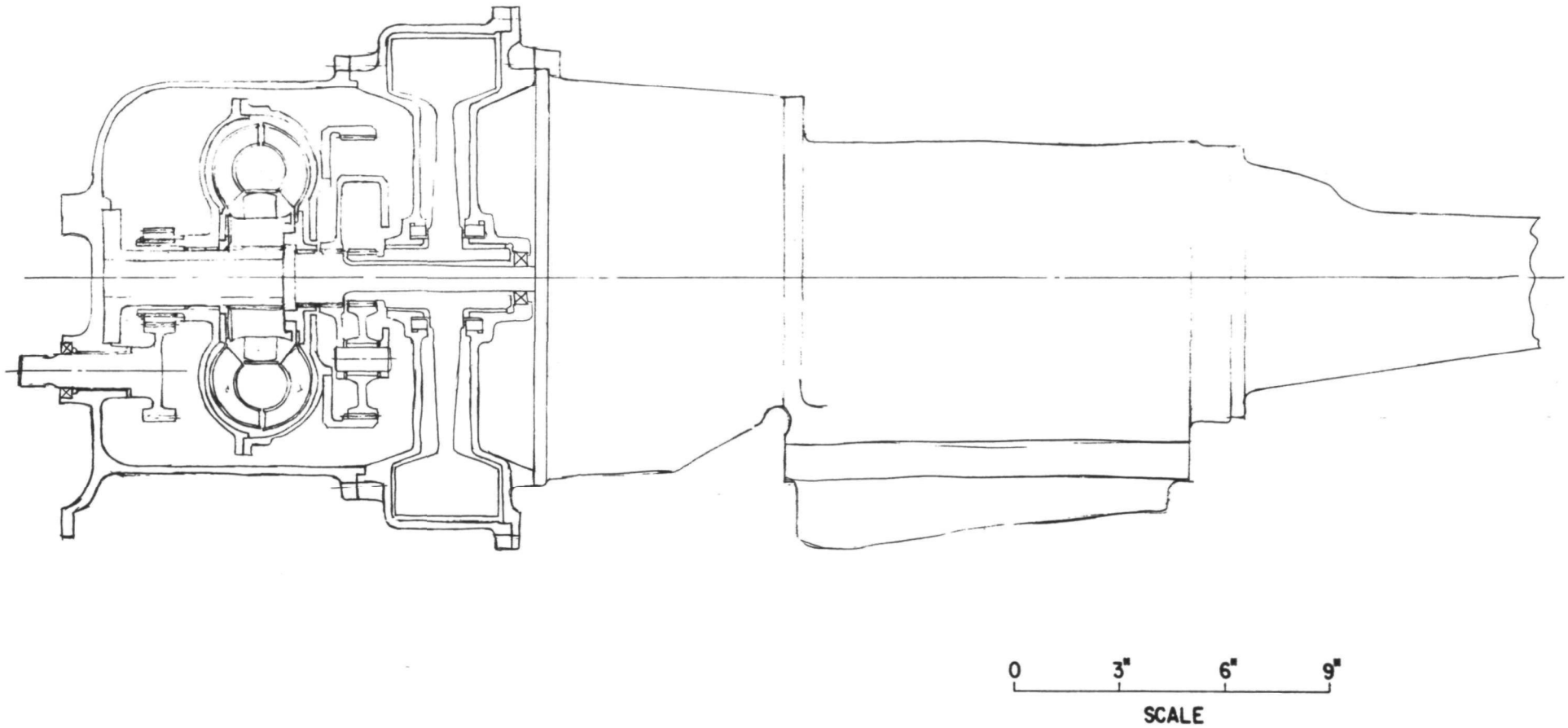

Fig. A-4 Two-Element Automotive Transmission (SK-E-4260)

MTI-12517

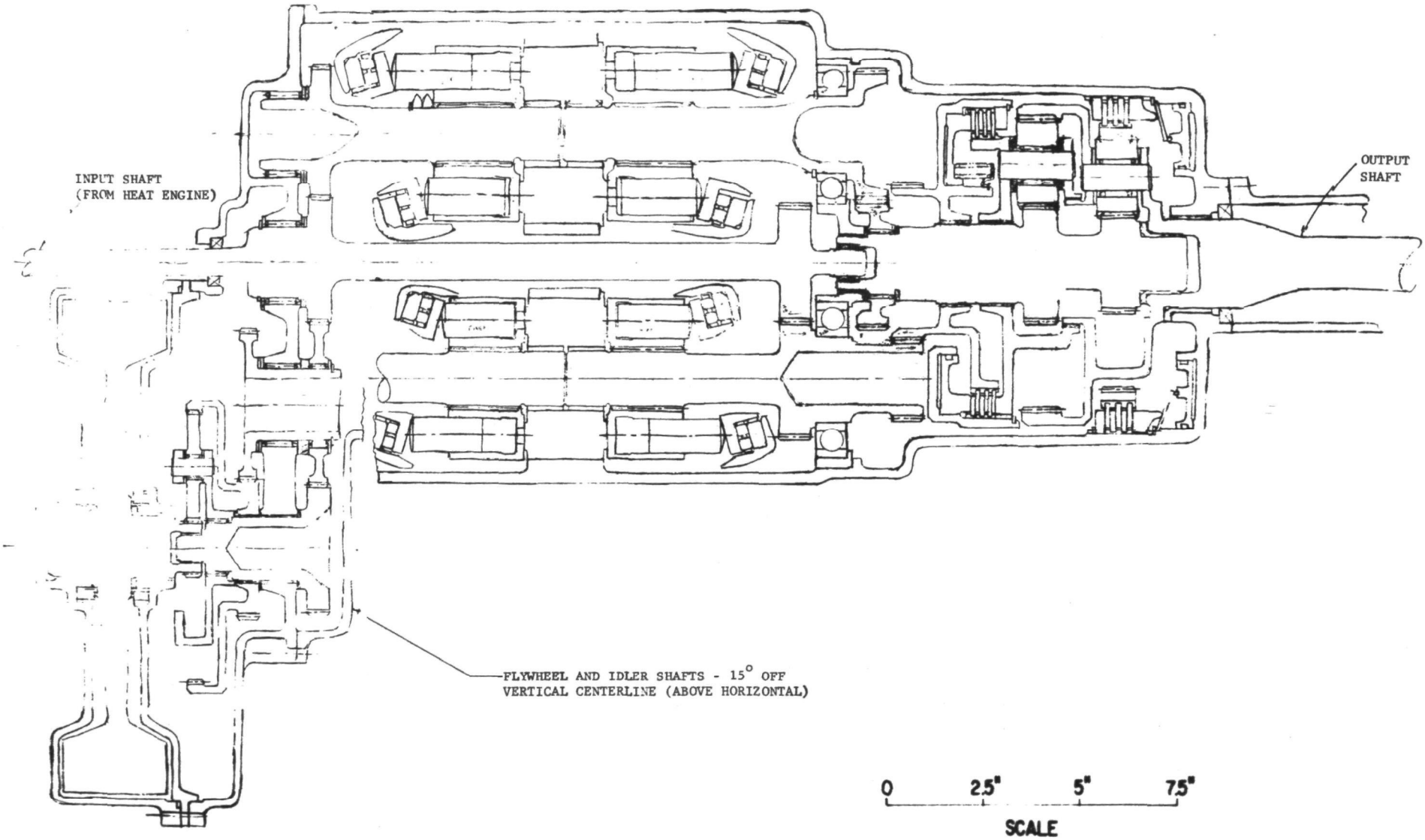

Fig. A-5 Transmission Automotive-2 Coupling Hydrodynamic Heat Engine/Flywheel (SK-A-4262)

MTI-12523

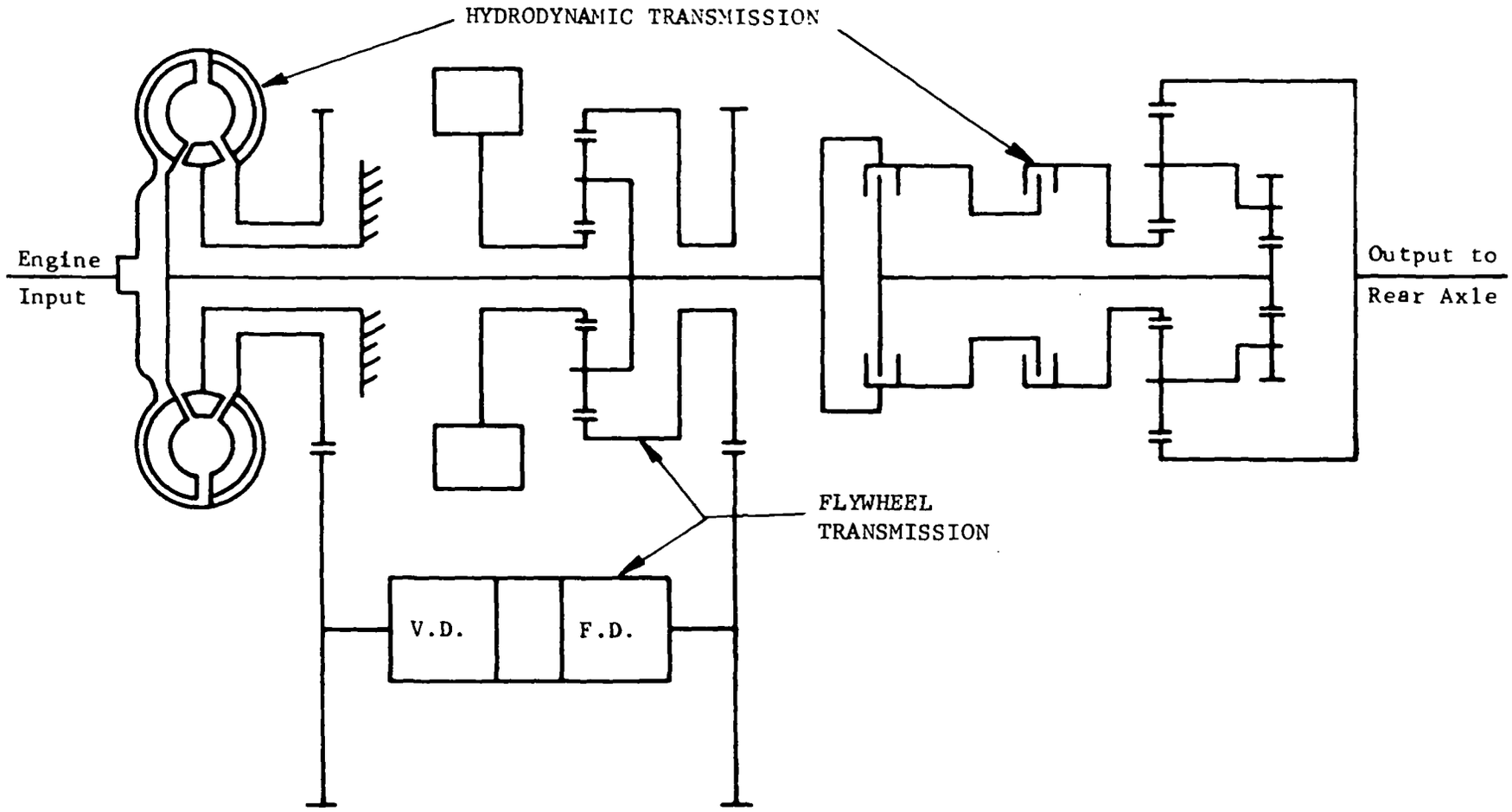

Fig. A-6 Automotive Hydrodynamic/Hydrostatic (Ref. SK-D-4259)

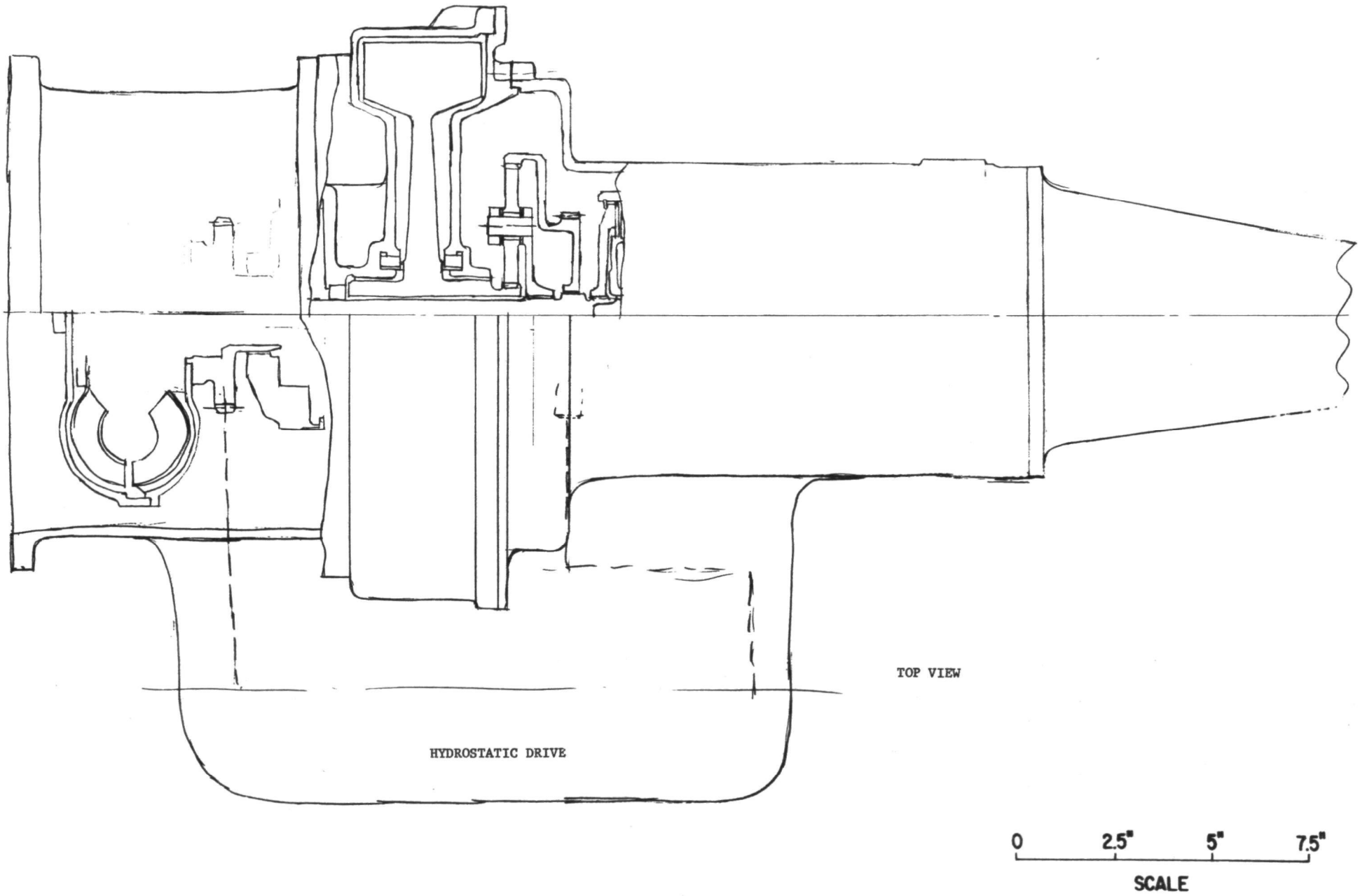

Fig. A-7 Hydrodynamic/Hydrostatic Automotive Transmission (SK-D-4259)

MTI-12498

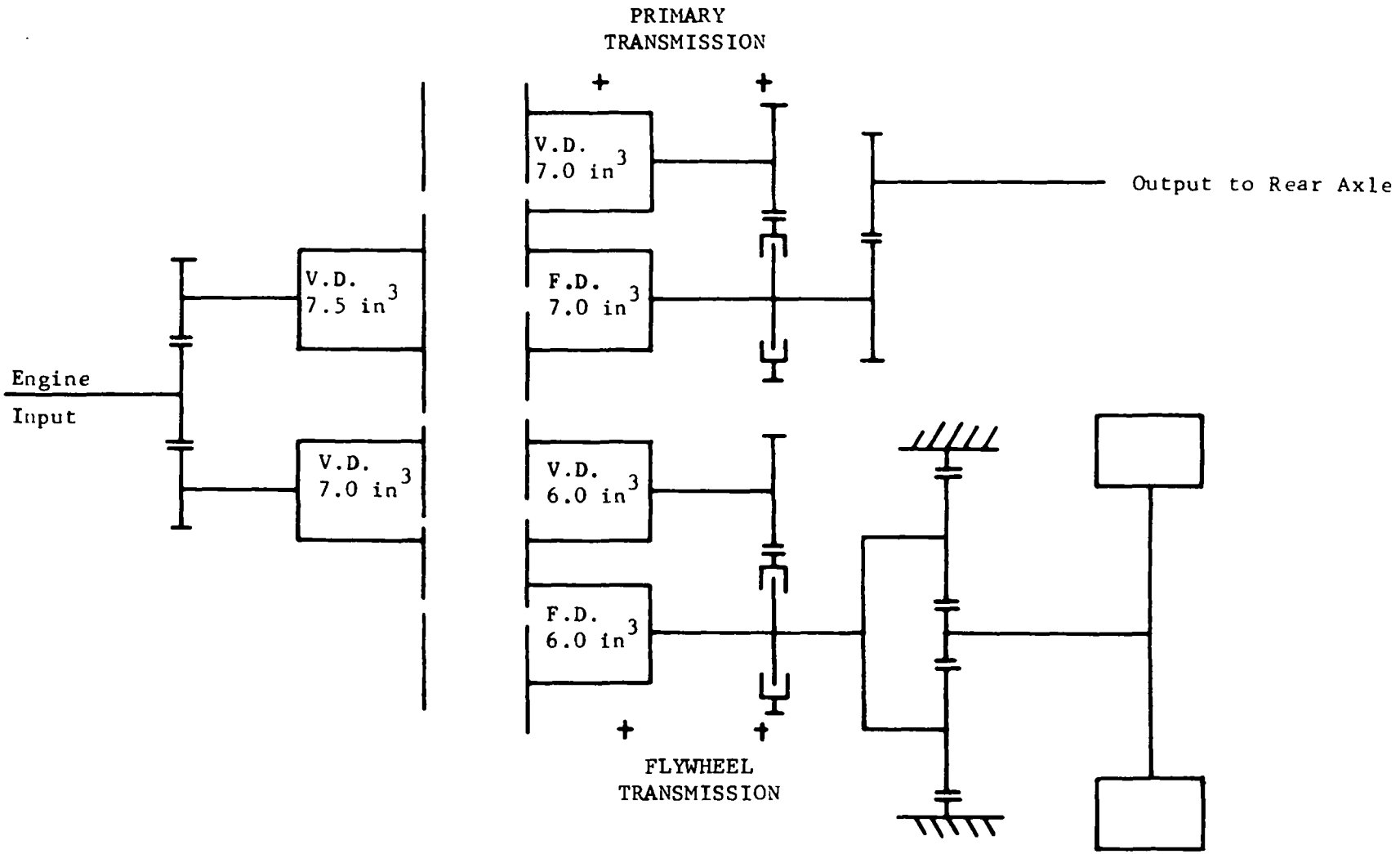

Fig. A-8 Hydrostatic Transmission (Ref. SK-J-4257)

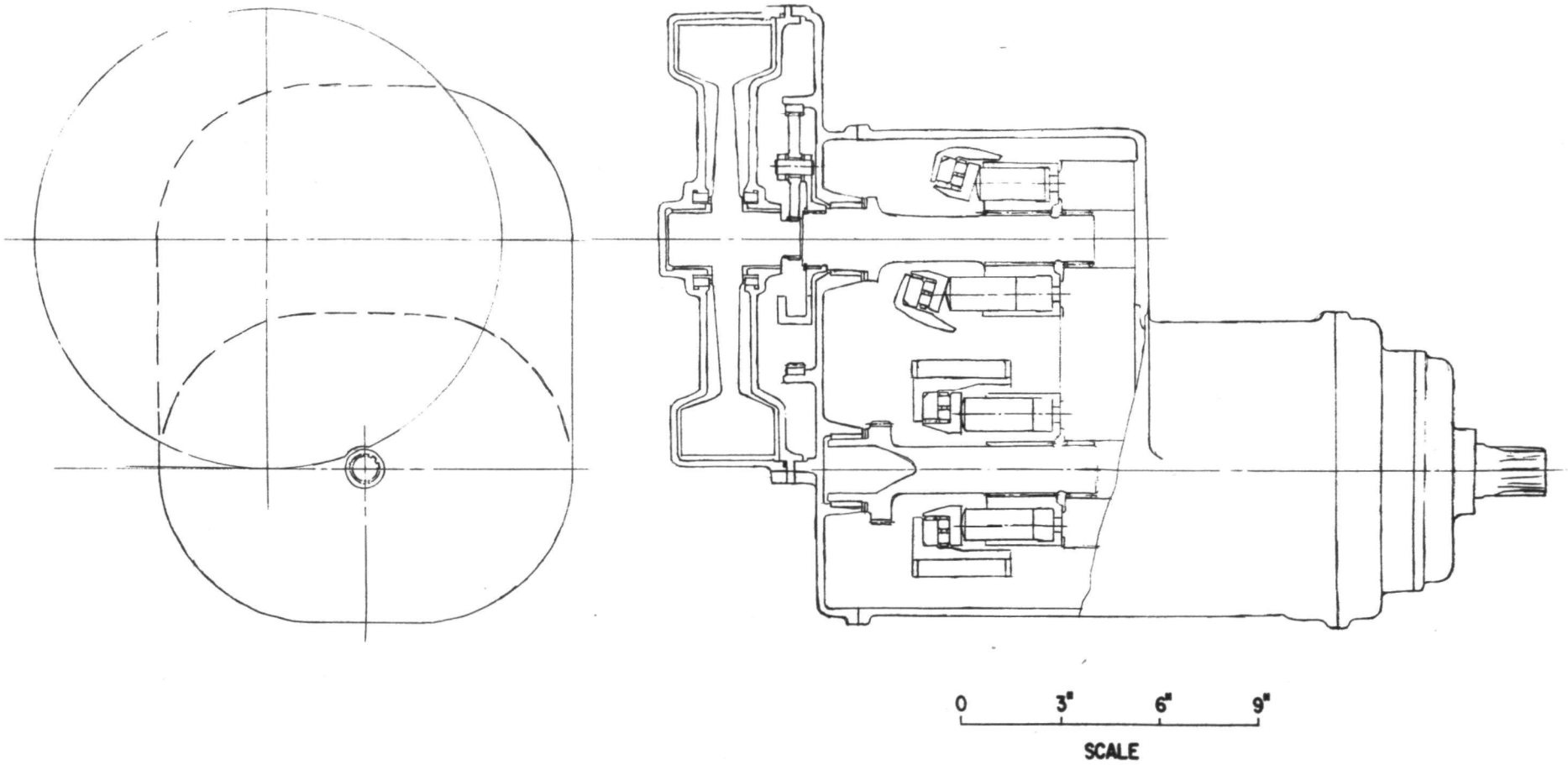

Fig. A-9(a) SK-J-4257 (Sheet 1)

MTI-12525

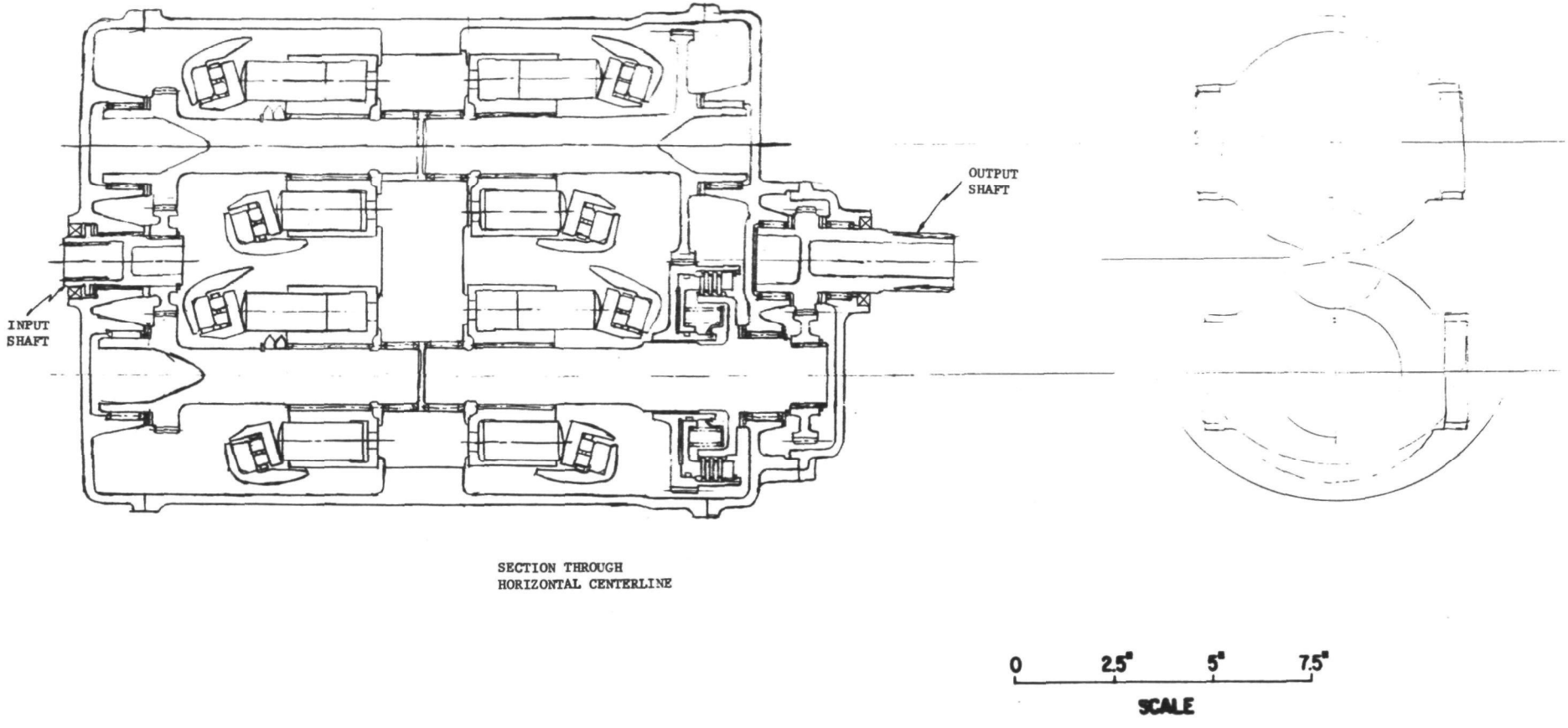

Fig. A-9(b) SK-J-4257 (Sheet 2)

MTI-12526

problem of controlling the flywheel acceleration torque. However, the two transmissions would result in low efficiency.

6. Figures A-10, A-11 and Figures A-12, A-13 and A-14 (package drawings SK-E-4283, SK-E-4261, and SK-J-4301) are concepts that use hydrostatic units and planetary gear trains to control speed and torque from the engine and flywheel to the output. The three concepts vary only in the location of the flywheel.

Screening of Transmission Candidates

Seven different transmissions were evaluated using the screening factors previously discussed. The results are shown in Table A-3. As preparation for this final table several additional tables were generated. In all of these tables data for the standard-multi-speed automatic torque converter transmission were included to provide a present-day base for comparisons. This was the preliminary screening process previously described.

Tables A-4 and A-5 present the transmission's physical characteristics of weight, volume and number of major components. These numbers were obtained by using the package drawings generated for the candidates.

As expected, the existing standard transmission is lower in weight, volume and number of components.

A comparison of cost in terms of a ratio of the estimated cost of the new transmission versus the standard automatic transmission is given in Table A-6. Cost ratios as used and discussed in the final power-splitting transmission cost analysis were used. Mr. E. Charles, using the drawings generated, provided the cost information.

An estimate of the efficiencies as determined by following the power paths for varying output load and speed, assigning an efficiency for each path and multiplying those numbers to obtain an overall efficiency are given in Table A-7.

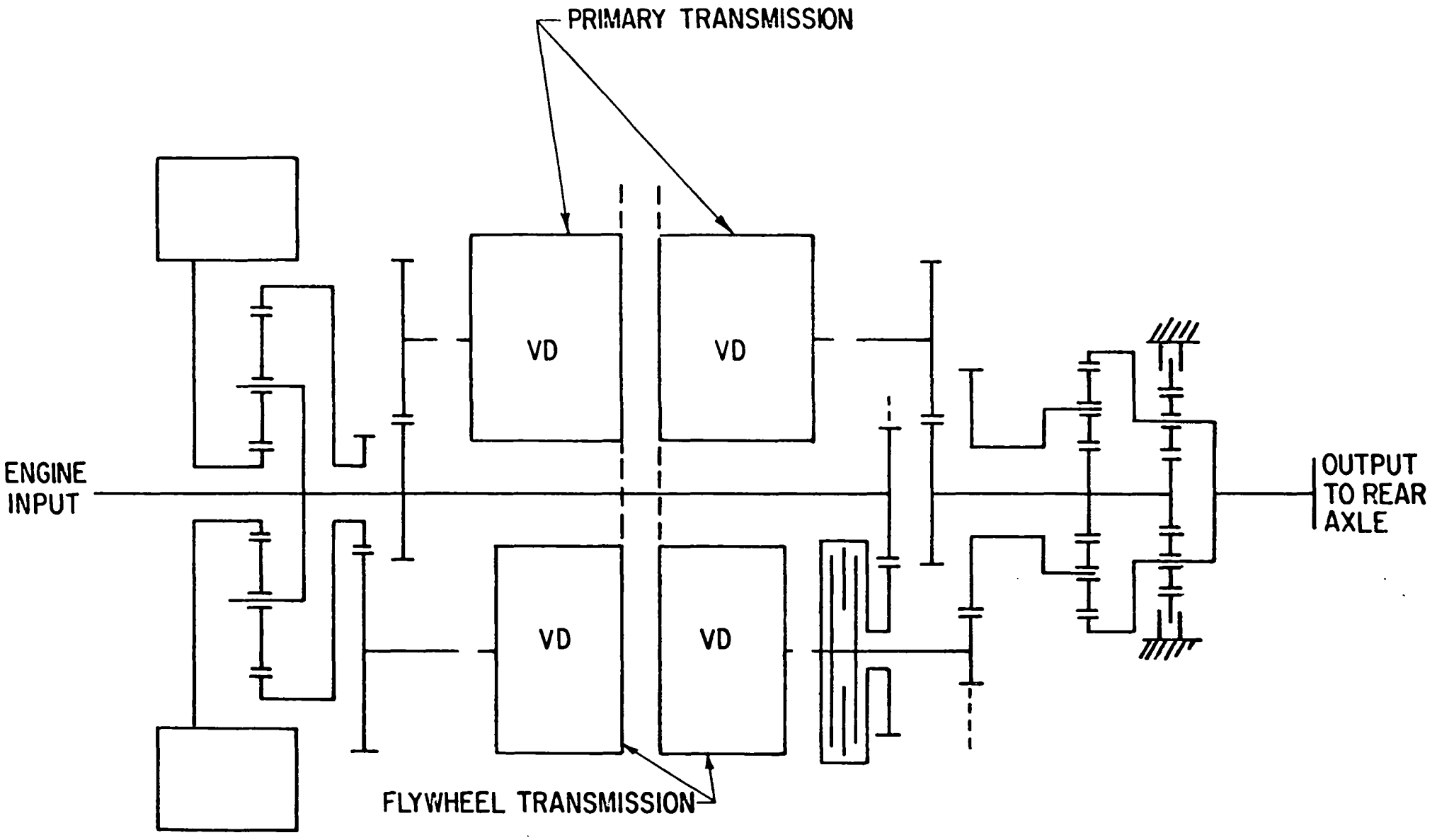

Fig. A-10 Power- Splitting Transmission

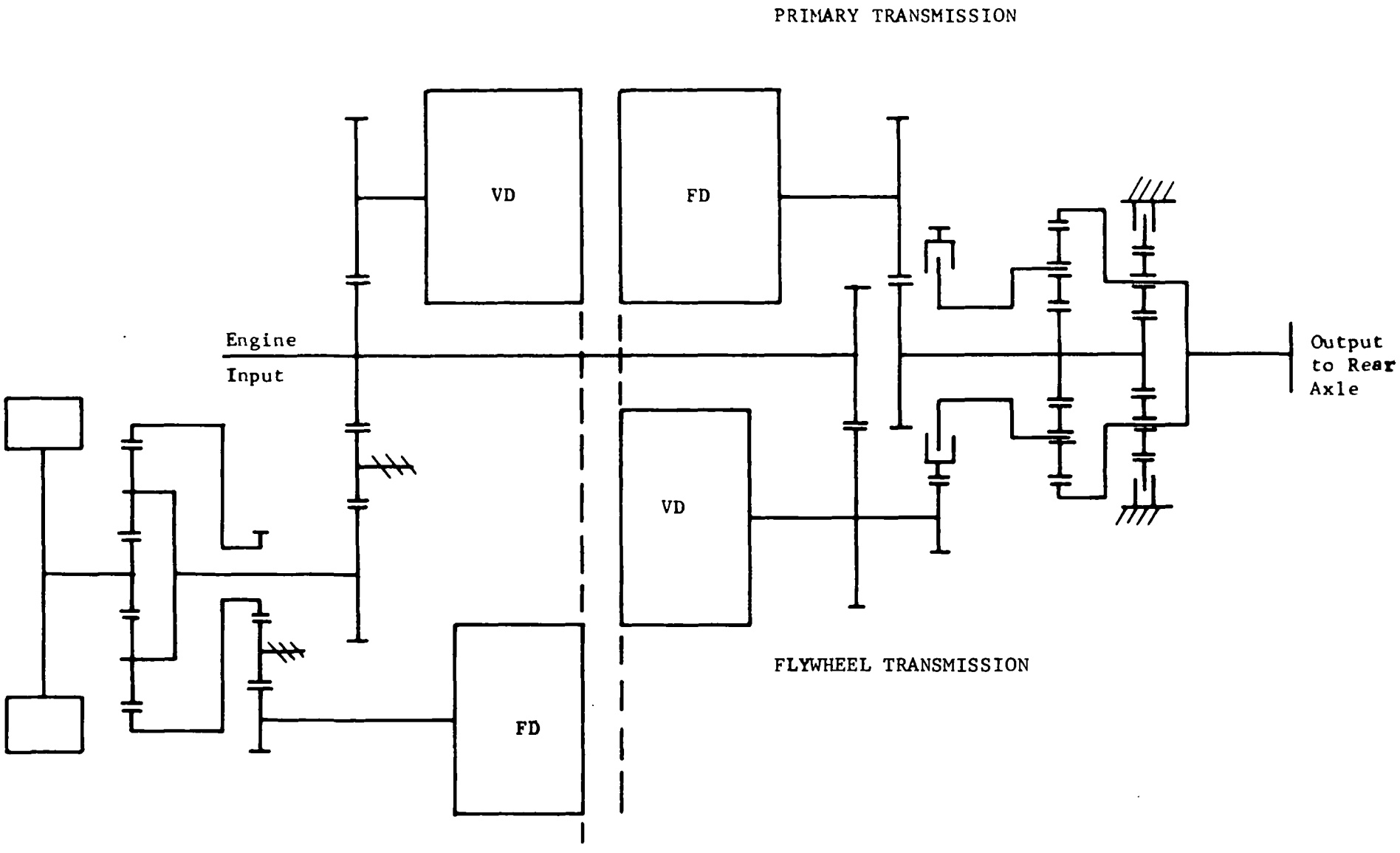

Fig. A-11 Power-Splitting-Offset Flywheel (Ref. SK-E-4261)

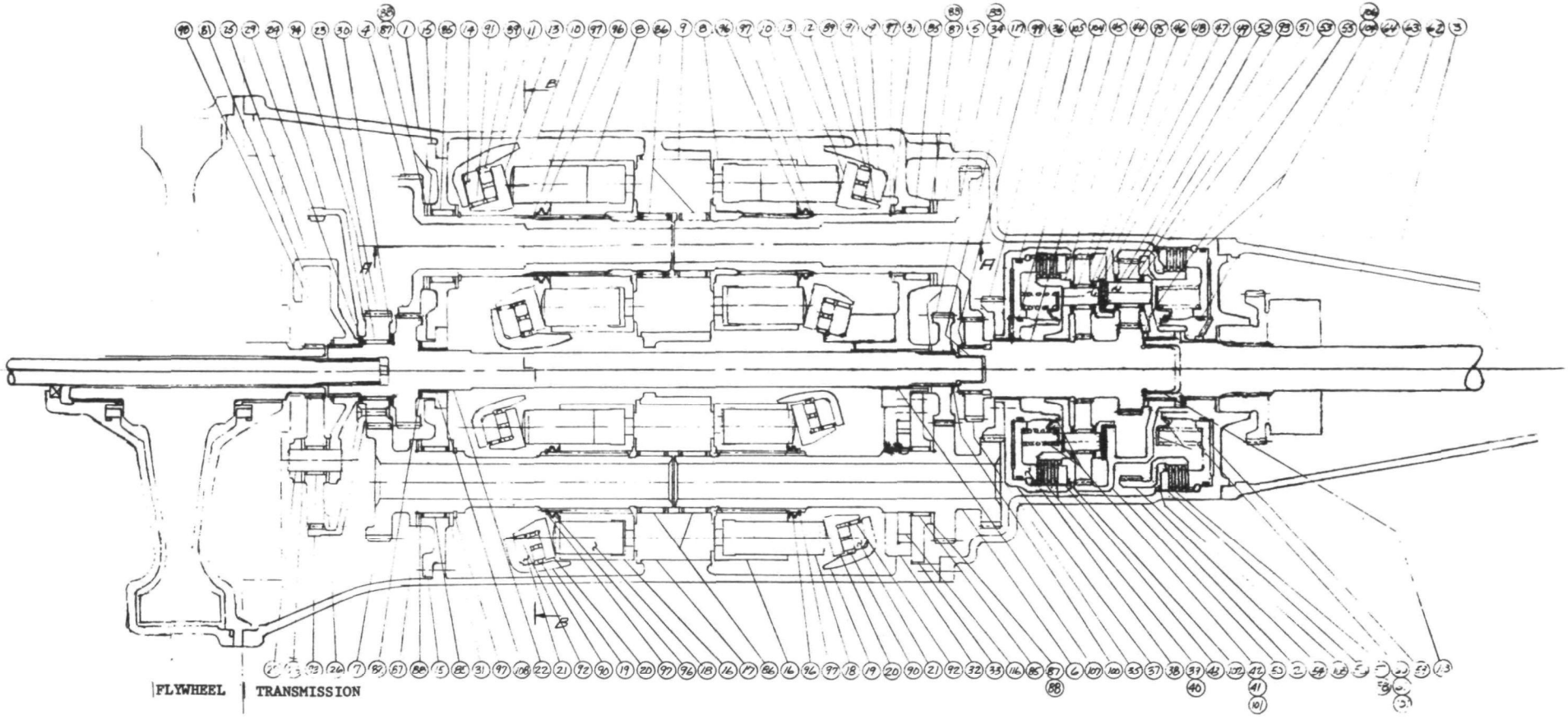

HORIZONTAL SECTION

0 3" 6" 9"

SCALE

Fig. A-12(a) SK-E-4283 (Sheet 1)

MTI-12519

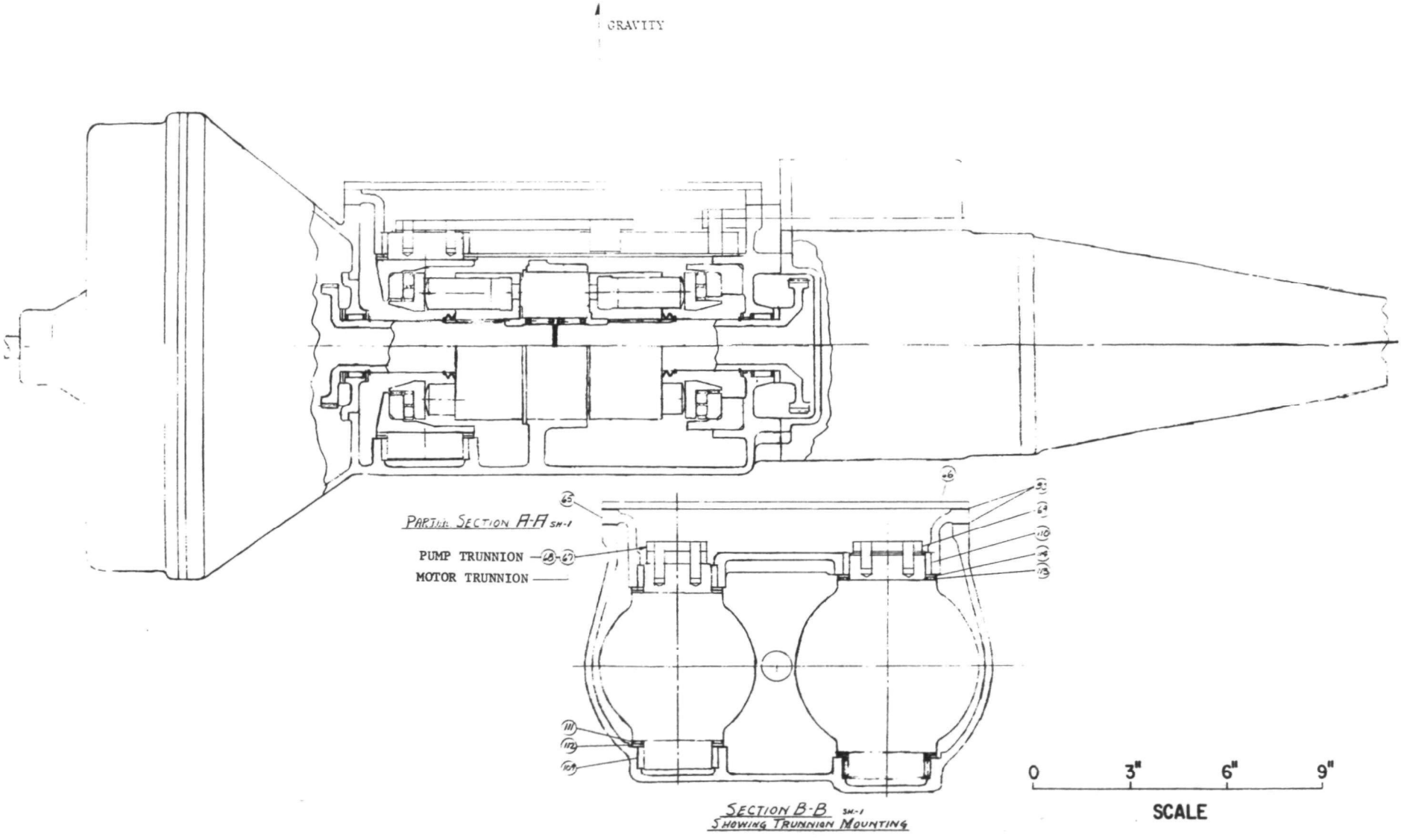

Fig. A-12(b) SK-E-4283 (Sheet 2)

MTI-12521

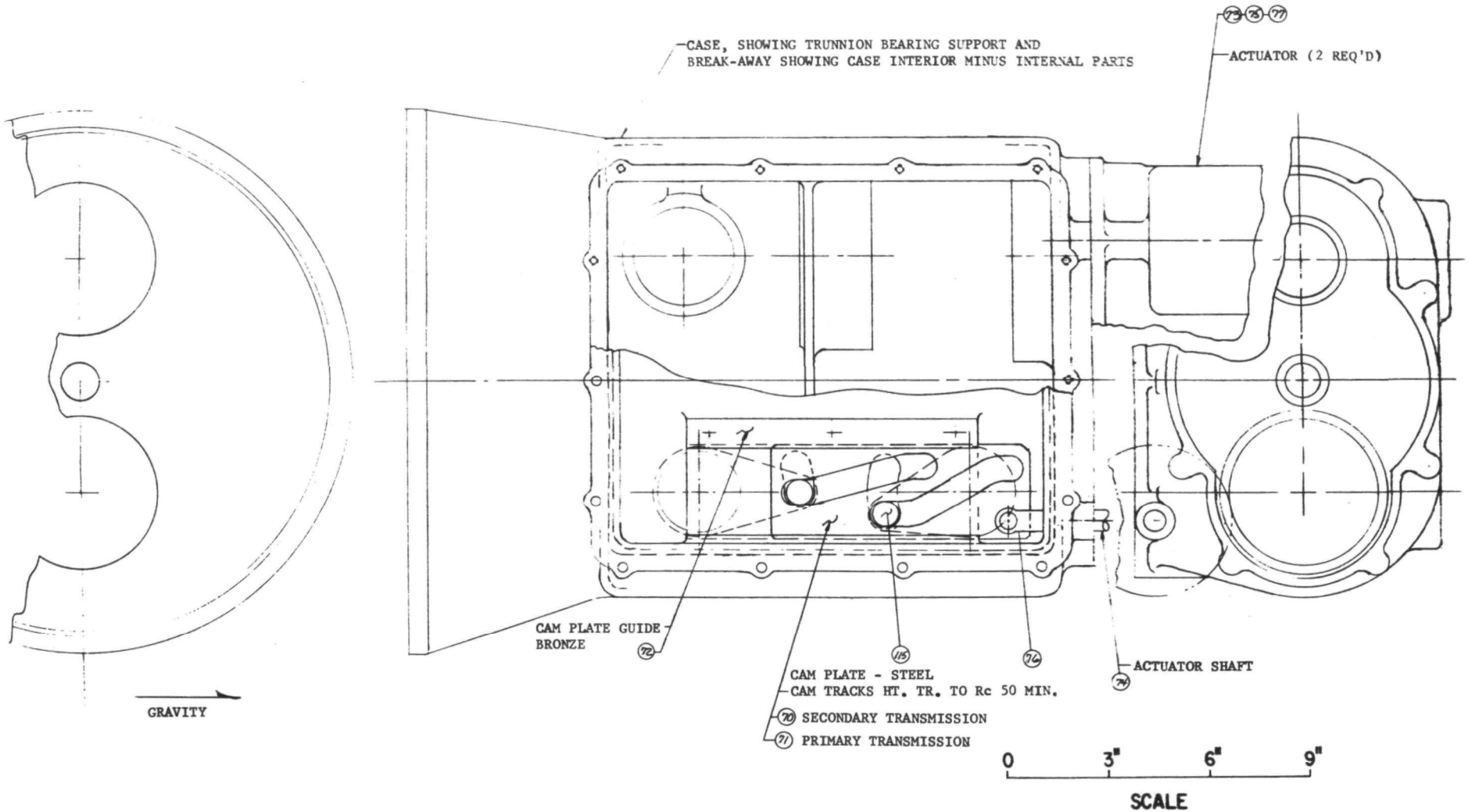

Fig. A-12(c) SK-E-4283 (Sheet 3)

MTI-12496

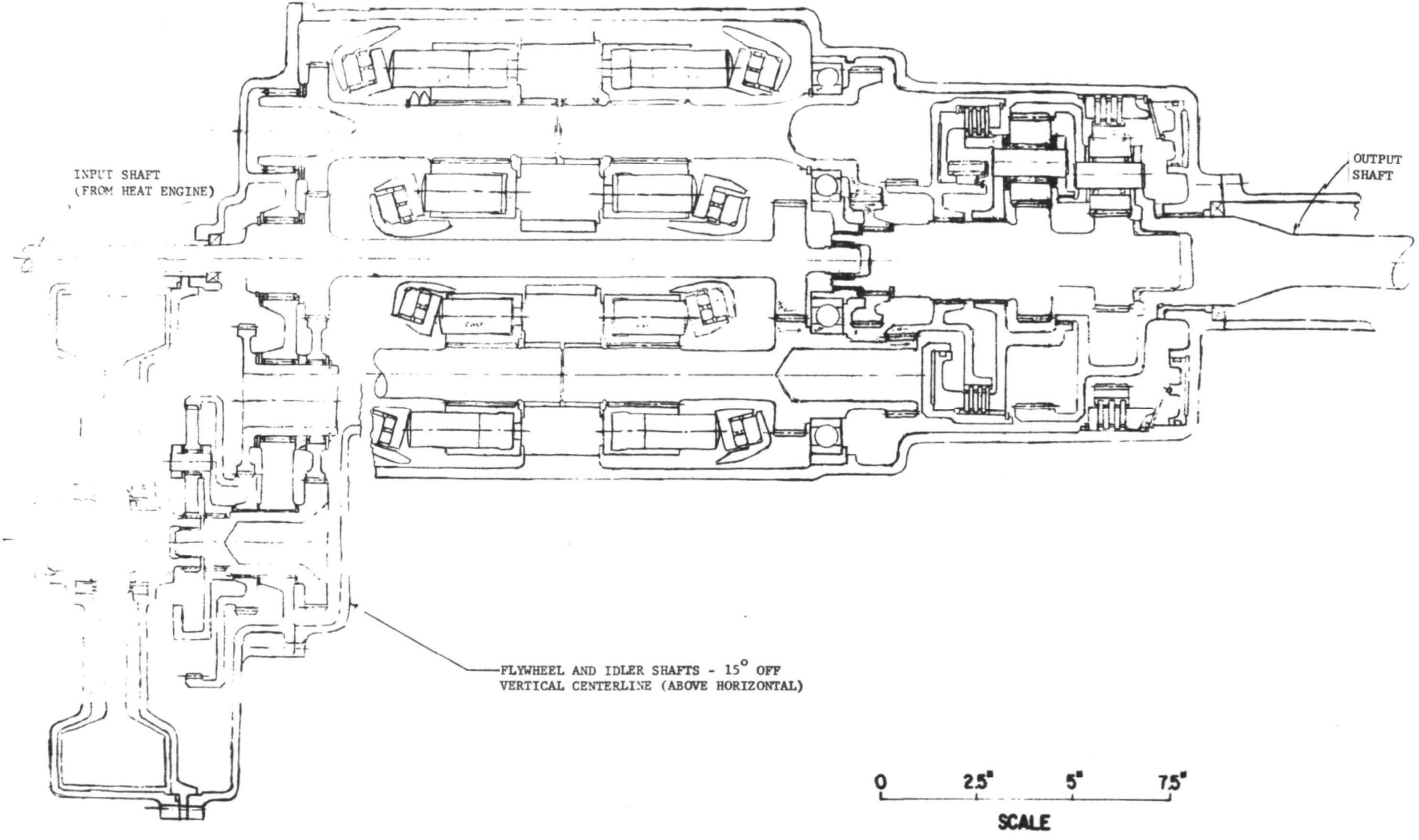

Fig. A-13 Power-Splitting - Offset Flywheel Transmission (SK-E-4261)

MTI-12530

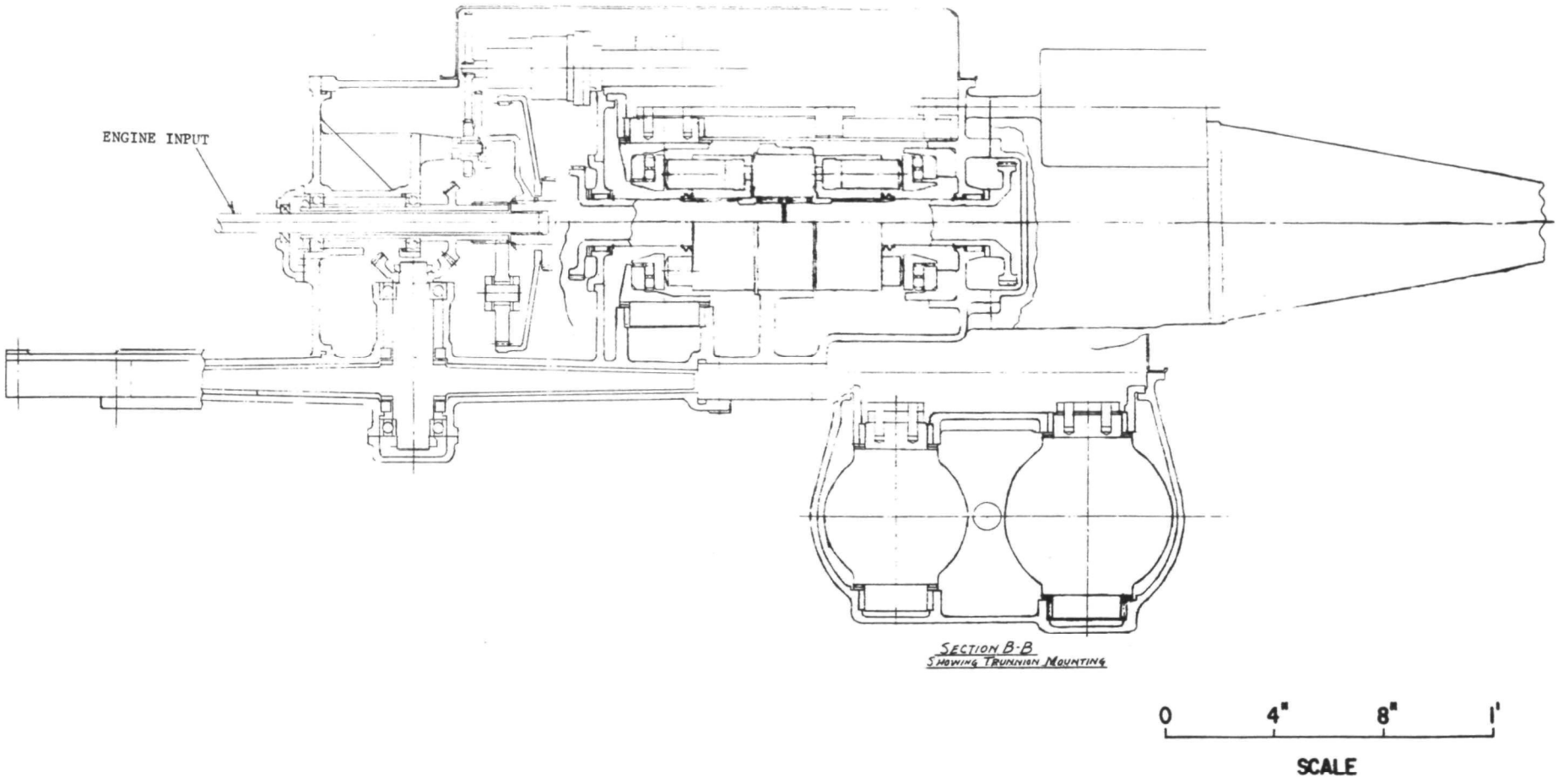

Fig. A-14 Vertical Flywheel Axis Installation Concept (SK-J-4301)

MTI-12524

TABLE A-3 NORMALIZED SCREENING FOR TRANSMISSION CONCEPTS

	Cost	Weight	SFC	Size	No. Parts	Eff.*	Overall Rating	Rating Cost-SFC Eff.	Notes
SK-J-4258 3 Element Hydrodynamic	1.266	1.146	1.3	1.21	1.44	1.39	7.757	3.961	(a)
SK-E-4260 2 Element Hydrodynamic	1.0	1.0	1.4	1.00	1.23	1.07	6.700	3.470	(a)
SK-J-4257 Hydrostatic	1.4	1.265	1.0	1.46	1.00	1.26	7.385	3.66	(b)
SK-E-4256 Power Split	1.266	1.142	1.0	1.35	1.27	1.00	7.028	3.266	(b)
SK-E-4261 Power Split (Offset)	1.333	1.173	1.0	1.46	1.44	1.00	7.406	3.333	(b)
SK-D-4259 Hydrodynamic Hydrostatic	1.266	1.064	1.3	1.13	1.41	1.13	7.300	3.696	
SK-A-4262 Hydrodynamic 2 Coupling	1.133	1.059	1.4	1.02	1.30	1.38	7.292	3.913	(a)
Std-Multi Speed Automatic Transmission w/o Flywheel	.67	.46	1.3	.96	.93	1.03	Note: Comparative Information for Standard Transmission is Shown for Reference Purposes Only.		

* The normalized efficiency is obtained using the weighted efficiency data.
(a) Component development is required.
(b) Optimum availability of engine power.

TABLE A-4

ESTIMATED

TRANSMISSION WEIGHTS AND VOLUMES

(Weights are dry weights and include flywheel, controls, and housing)

	Wt. (lbs)	Vol. (ct.ft.)
SK-E-4283 Power Split	337	2.80
SK-E-4261 Power Split Offset Flywheel	347	3.05
SK-J4257 Hydrostatic	374	3.04
SK-J-4258 Automotive 3-Element Hydrodynamic	339	2.52
SK-E-4260 Automotive 2-Element	295	2.08
SK-D-4259 Automotive Hydrodynamic/ Hydrostatic	314	2.37
SK-A-4262 Automotive Hydrodynamic 2-Couplings	313	2.12
STD Transmission Without Flywheel or Flywheel Transmission	140	2.0

TABLE A-5

Number of Components in Transmission*

	Variable Hydrostatic Elements	Fluid Couplings	Torque Couplings	Slipping Clutches	Standard Clutches	Overrunning Clutches	Planetary Gear Drives	Gears	Shafts	Sleeve Bearings	Rolling Element Bearings	Thrust Bearing Bi-metal	Housings	Valve Plates	Total
Power Splitting SK-E-4283	4	-	-	-	2	-	3	10	8	10	17	24	2	2	82
Auto-3 Element Hydrodynamic SK-J-4258	-	-	3	4	3	2	4	-	8	12	23	29	5	-	93
Auto-2 Element Hydrodynamic SK-E 4260	-	-	2	4	2	2	3	2	7	11	17	26	4	-	80
Hydrostatic SK-J-4257	4	-	-	-	2	-	1	9	8	2	26	4	4	3	63
Auto Hydrodynamic/Hydrostatic SK-D-4259	1	-	1	1	2	3	3	4	9	12	22	25	4	1	91
Auto Hydrodynamic 2-Coupling SK-A-4262	-	2	-	2	2	2	4	-	9	15	17	27	4	-	89
Power Split-Offset Flywheel SK-E-4261	4	-	-	-	2	-	3	12	10	11	19	29	3	-	93
Standard Transmission	-	-	1	2	2	2	2	-	5	9	14	17	3	-	57

*Does include flywheel transmission components but not the flywheel components.

TABLE A-6

Preliminary Transmission Cost Analysis - Ratios

	1,000,000 Units Per Year Cost	1,000,000 Units Per Year Cost
SK-J-4258 3 Element Hydrodynamic	1.9	2.45
SK-E-4260 2 Element Hydrodynamic	1.5	1.94
SK-J-4257 Hydrostatic	2.1	2.71
SK-E-4283 Power Split	1.9	2.48
SK-E-4261 Power Split (Offset)	2.0	2.58
SK-D-4259 Hydrodynamic Hydrostatic	1.9	2.48
SK-A-4262 Hydrodynamic 2 Coupling	1.7	2.19
Standard Multi-Speed Torque Converter ("Automatic")	1.00	1.29

TABLE A-7

ESTIMATED TRANSMISSION EFFICIENCIES

	20 MPH	50 MPH	80 MPH	WEIGHTED*	50 MPH PLUS FLYWHEEL ACCELERATION
Power Splitting	75-70%	92-87%	84-79%	76.8%	80-75%
Hydrostatic SK-J-4257	60-55%	73-68%	71-66%	60.8%	73-78%
Auto - 3 Element Hydrodynamic SK-J-4258	50-45%	80-75%	85-80%	55%	72-67%
Auto - 2 Element Hydrodynamic SK-E-4260	70-65%	85-80%	90-85%	71.3%	75-70%
Hydrodynamic/ Hydrostatic	68-63%	78-73%	83-78%	67.7%	74-69%
Auto-Hydrodynamic 2 Couplings	51-46%	80-75%	82-77%	55.8%	69-64%
Std-Multi Speed Automatic Transmission without Flywheel	73-68%	89-84%	93-88%	74.5%	——

* The weighted efficiency combines the efficiencies of the 20 MPH and 50 MPH cases for the amount of time spent at each of these speeds during the driving cycle.

The efficiency used for the screening process was the weighted efficiency. This efficiency was normalized using the 20 MPH and 50 MPH estimates and was weighted to account for the amount of time spent at each of these speeds for a driving cycle by using the Velocity Histogram of the DHEW Urban Dynamometer Driving Schedule dated 8-5-71.

The factors from these tables and several additional factors were combined into rating Table A-3. The specific fuel concumption for each candidate was an estimate made by Mr. G. DeLalio. His estimates were based on the power paths through the transmissions and whether the engine could or could not run on the minimum SFC line.

Table A-3 which summarizes the screening performed on the transmission concepts and their basic comparison to the standard automatic transmission would basically indicate that the two-element hydrodynamic transmission would be the primary overall selection. (The overall rating of Table A-3 was simply the addition of all of the weighting factors). The second choice and close contender would be the power-splitting transmission with the inline flywheel. Accepting this overall rating at face value and introducing one of the major criteria with respect to the urgency of implementation led us to reject the two-element hydrodynamic unit on the basis of the valve development required. It should be recognized, however, that considerable optimism regarding the torque converter efficiency is included in the subject rating. With this additional constraint, however, it was clear that the power-splitting transmission because of its overall comparative rating as well as the level of development of all the components made is the primary selection. Referring again to Table A-3, if one were to select three criteria which would cover the objective of reduced pollutants and acceptance by the public of a new concept, we concluded that the elements of cost, specific fuel consumption and efficiency fulfilled this requirement. On this basis, the power-splitting transmission was clearly the favored selection (Figures A-10 and A-12 — drawing SK-E-4283).

The selected power-splitting transmission has four hydraulic elements as the major torque and speed control elements. These represent approximately 50 percent of the transmission weight and 50 percent of the volume. The successful

application of the transmission depends to a great extent on the proper selection of the hydraulic elements. Therefore, prior to finalizing this concept, a study was made to select the best type of pump and motor. The results of the study are presented in Table A-8. All of the different pumps and motors are currently manufactured by several companies.

The conclusion drawn from this study and summarized on Table A-8 is that the axial piston pump and motor was the correct selection for the transmission.

The limited installation space and transmission weight required that the elements be as small as possible. Therefore, a high density hydraulic element was considered an advantage. A drawing of such an element is shown on Figure A-15 (drawing SK-C-4266) and a picture on Figure A-16. The unit is packaged very compactly to achieve maximum power per cubic inch of volume. The pump or motor designated for the MTI power-splitting transmission produces approximately 2 horsepower per cubic inch of volume.

A relative comparison of the operation of a three-speed manual, a three-speed torque converter, and a power-splitting transmission can be shown using a plot of the amount of engine power available at the rear axle versus the vehicle speed (see sketch on page A-37).

The manual transmission is capable of delivering the maximum amount of engine input power to the rear wheels. Therefore, it could be concluded that a smaller engine, less fuel and lower emissions are possible when using a manual transmission. This is true if there are a sufficient number of gear ratio steps, approximately 6; but, this is not considered reasonable based upon present driving habits of vehicle operators.

As is shown by the curve the percent of output power to the rear wheels falls off drastically when the vehicle speed does not match the optimum point of operation for the gear ratio being used. In fact it falls below that of both the torque converter and power-splitting transmission.

One additional comparison should be discussed which is how these transmissions permit the engine to operate with respect to the minimum SFC line.

TABLE A-8

Hydraulic Pump and Motor Rating

	Previous Use For Such An Application	Reliability	Efficiency	High Pressure Capability	Modulation Capability	Control Adaptability	Range
Axial Piston	1	1	1	1	1	1	1
Vane	3	3	3	3	1	2	2
Gear	3	2	2	3	2	3	2
Gerotor	3	2	2	2	1	2	2
Radial Piston	2	1	1	1	1	2	1

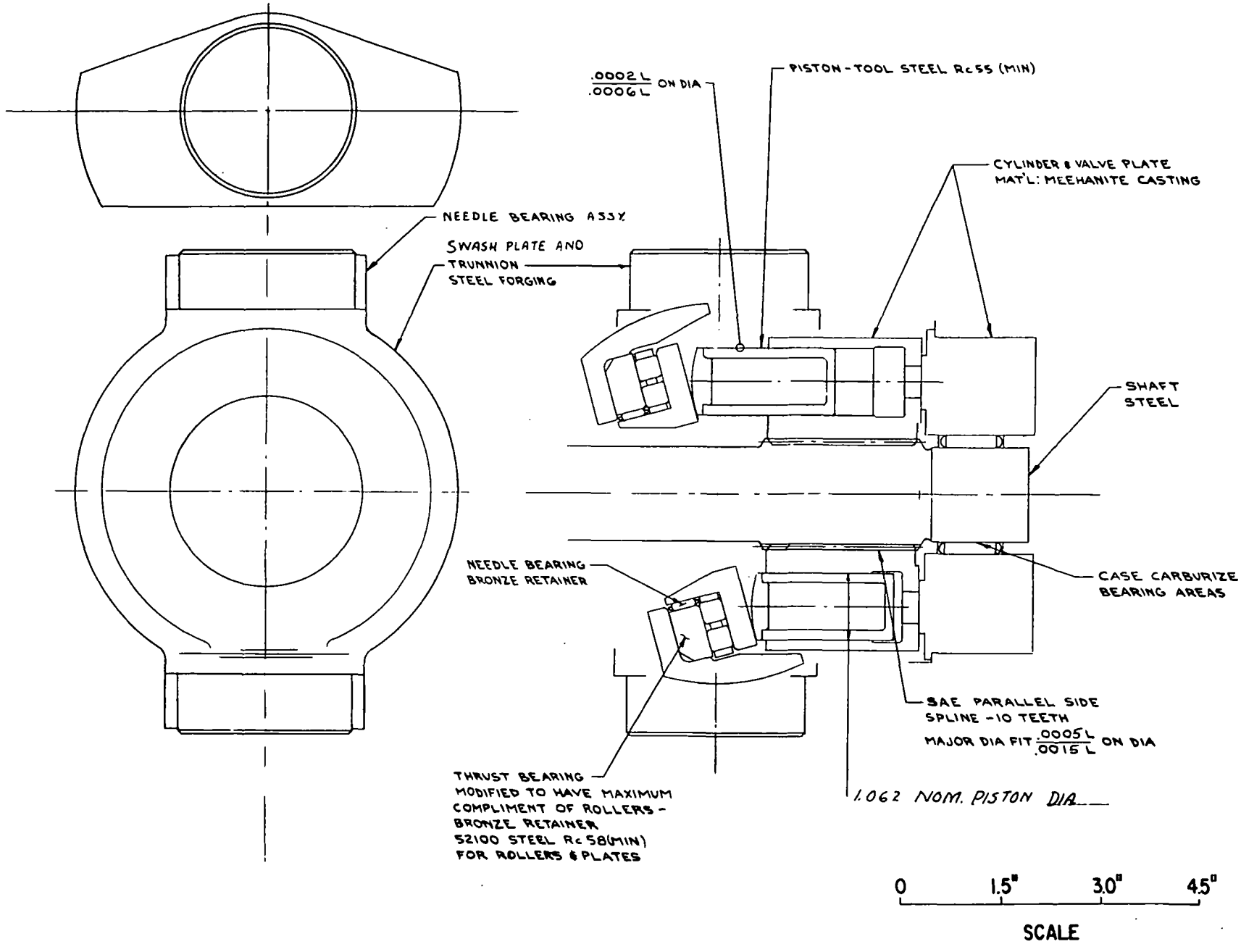

Fig. A-15 Drawing of High-Density Hydraulic Element (SK-C-4266)

MTI-12520

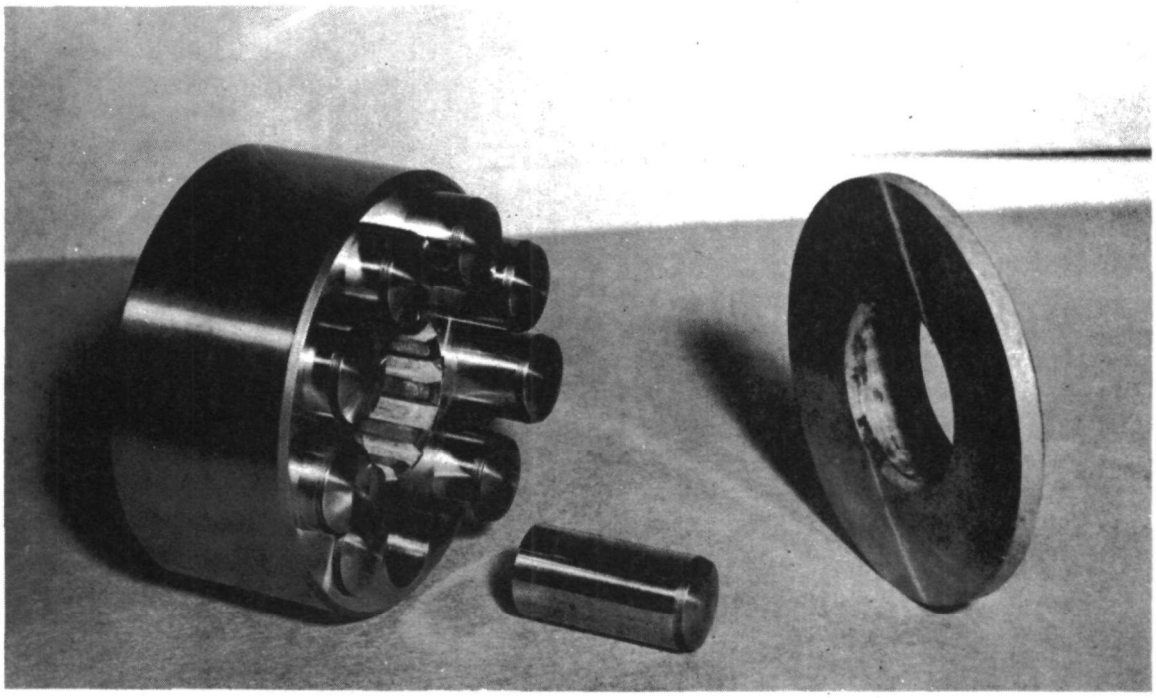

Fig. A-16 Typical Axial Piston Hydraulic Element

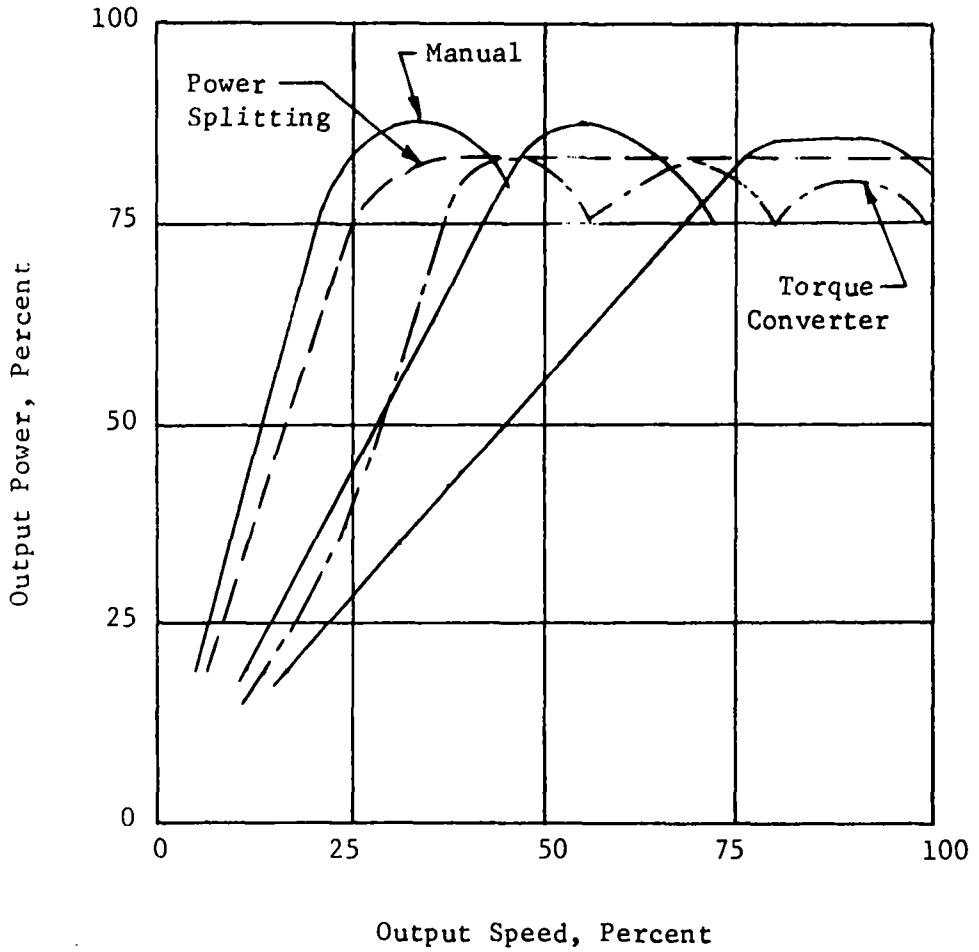

A manual transmission establishes a fixed-speed relationship between the engine and output. At any one output speed and power demand the gear ratio can be arranged to allow the engine to operate on the minimum SFC line. If the vehicle speed changes and the power demand remains unchanged then the fixed gear ratio will cause the engine to move off of the minimum SFC line. The results are similar if the speed is unchanged and the power demand changes. Only one optimum operation point can be established for each gear ratio in the transmission. All other operation will be off of the minimum SFC line for the engine.

The torque converter transmission will permit operation of the engine on the minimum SFC line over a larger percentage of the time. However, when high slip in the torque converter is required to accomplish the minimum SFC load and speed line, the efficiency of the transmission is quite low.

The power-splitting transmission with the infinitely variable ratio is a compromise that will provide the maximum power to the wheels while providing maximum overall engine efficiency by operating on the minimum SFC line for a greater percentage of the time.

SECTION B

DETAILED DESCRIPTION OF TRANSMISSION

B. DETAILED DESCRIPTION OF TRANSMISSION

The operation and mechanical description of the power-splitting transmission as proposed by MTI is covered in this section.

Figure A-12, shown previously, depicts the parts of the transmission in sufficient detail to perform an accurate cost analysis. Figure B-1 is a simplified schematic of the transmission which was used for the performance analysis. Shown in Figure B-2 is a preliminary plot of the operational parameters of the transmission when the engine is operated at maximum speed and power. A plot of the displacements of the hydraulic elements which control the flywheel acceleration and deceleration is presented in Figure B-3. Figures B-4, B-5, B-6 and B-7 are schematics of the power path through the transmission when operating in low range, high range, flywheel accelerating the vehicle in low range, and flywheel accelerating the vehicle in high range.

The MTI power-splitting transmission is an infinitely variable, stepless unit that obtains torque multiplication and control by means of hydraulic principles. It is intended for use in a medium-size automobile.

The unit differs from the torque converter or fluid coupling hydrodynamic-type transmissions in that the power in the hydraulic circuit is transferred by fluid static pressure at low flows, whereas the hydrodynamic unit utilizes high flows and the dynamic or inertial motion of the fluid to transfer power. Further, the power-splitting unit is a "hard" type drive in that the transmission slip is less than two percent under full load.

Basically the unit consists of engine input shaft, flywheel, flywheel planetary gear train, hydraulic variable displacement elements, connecting drive gears, output planetary gear train, output gear train and a control system. The control system is described in the control section. The transmission description may be understood by reference to Figures A-12 and B-2.

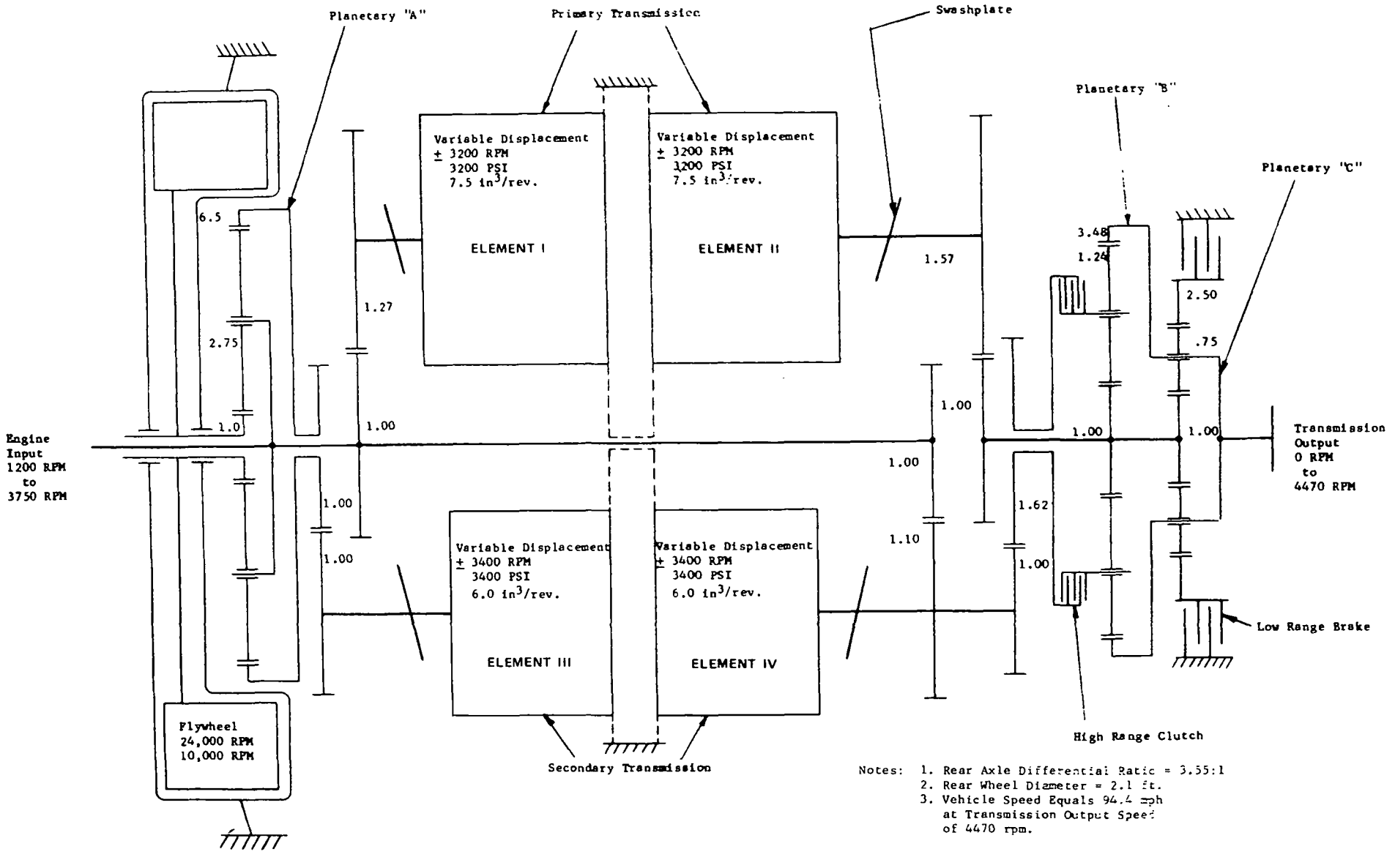

Fig. B-1 Schematic of the Recommended Transmission Design

MTI-12341

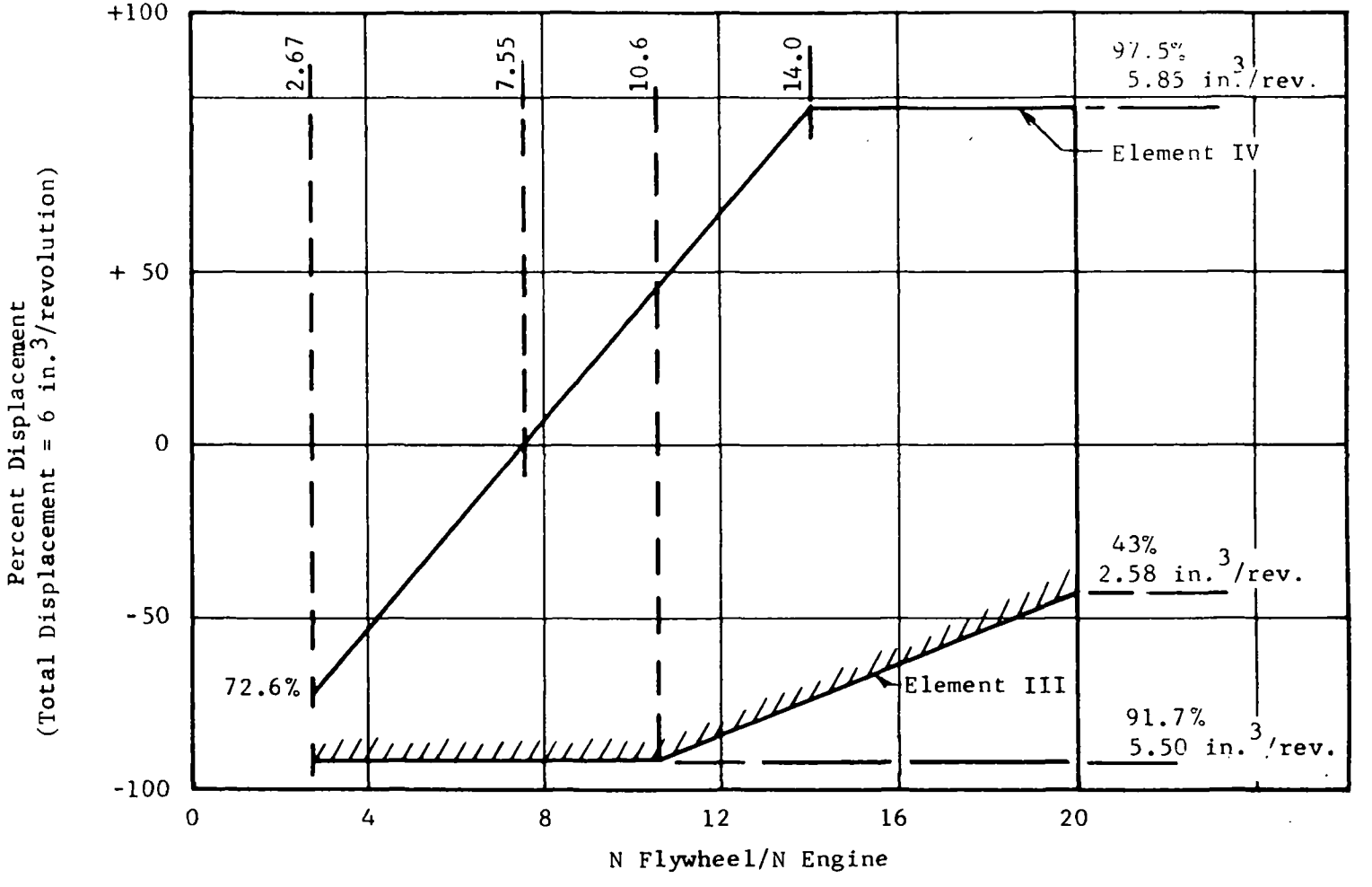

Fig. B-2 Secondary Hydraulic System

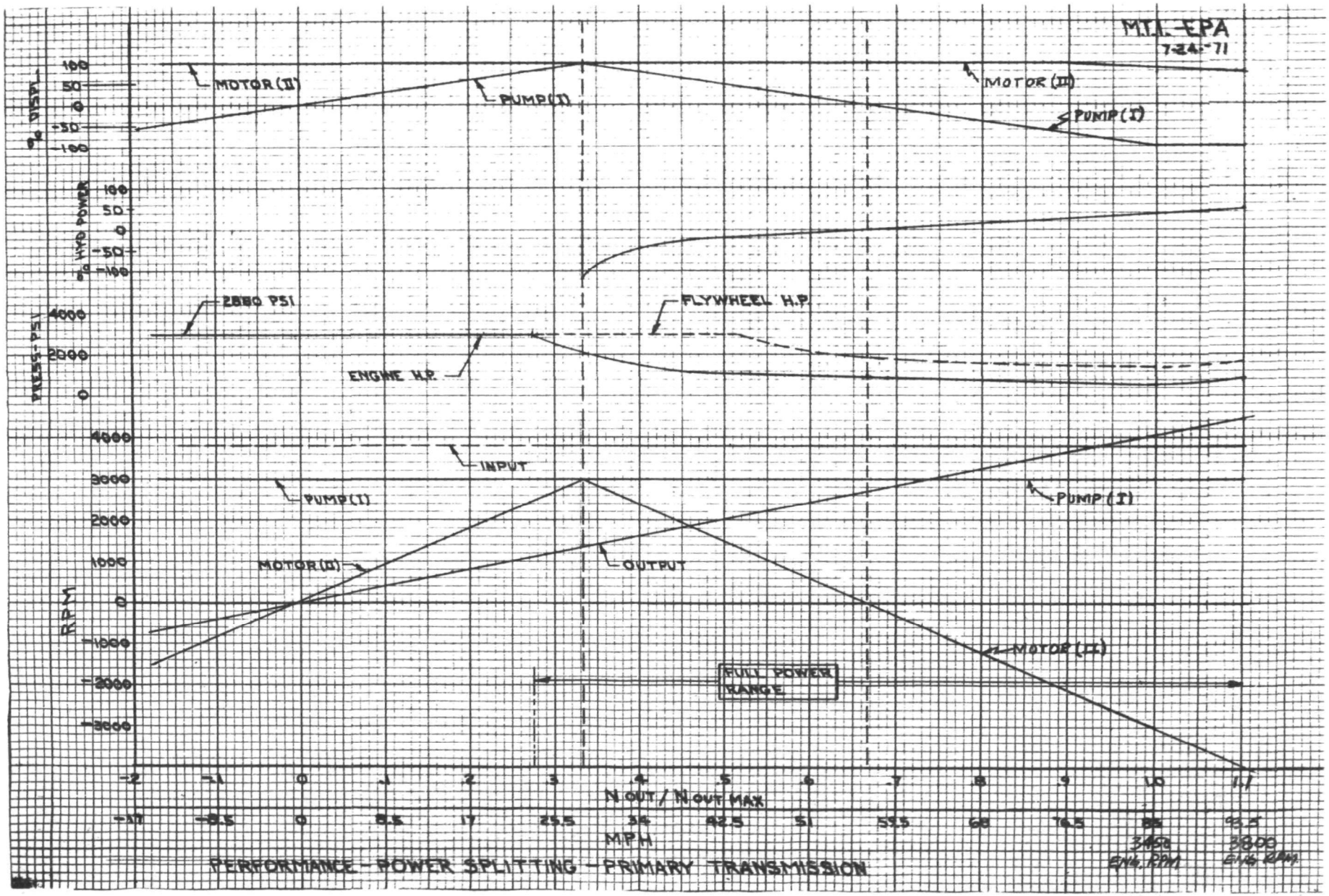

Fig. B-3 A Plot of Hydraulic Element Displacements

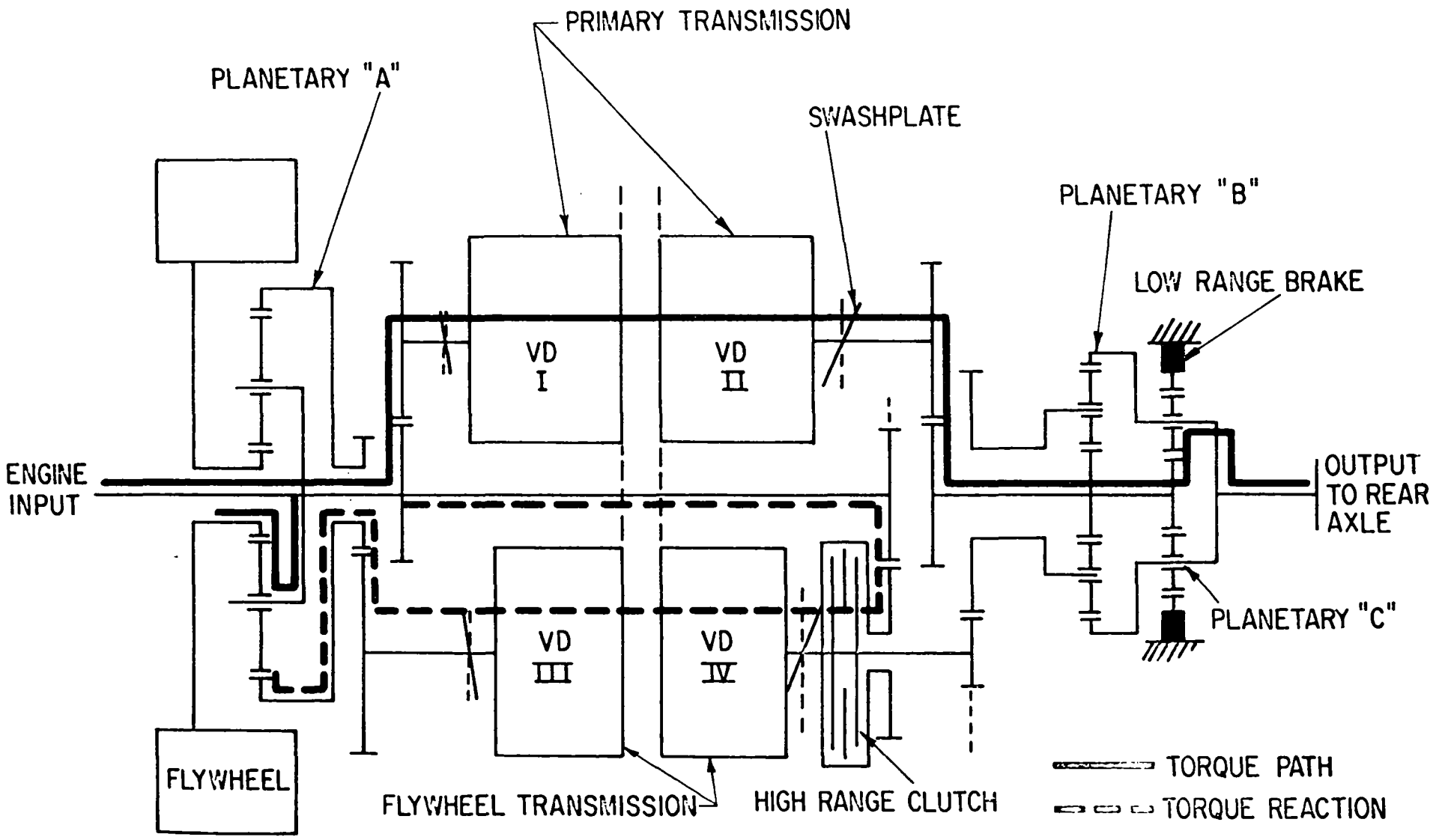

Fig. B-4 Power Path for Low-Range Steady State

MTI-12538

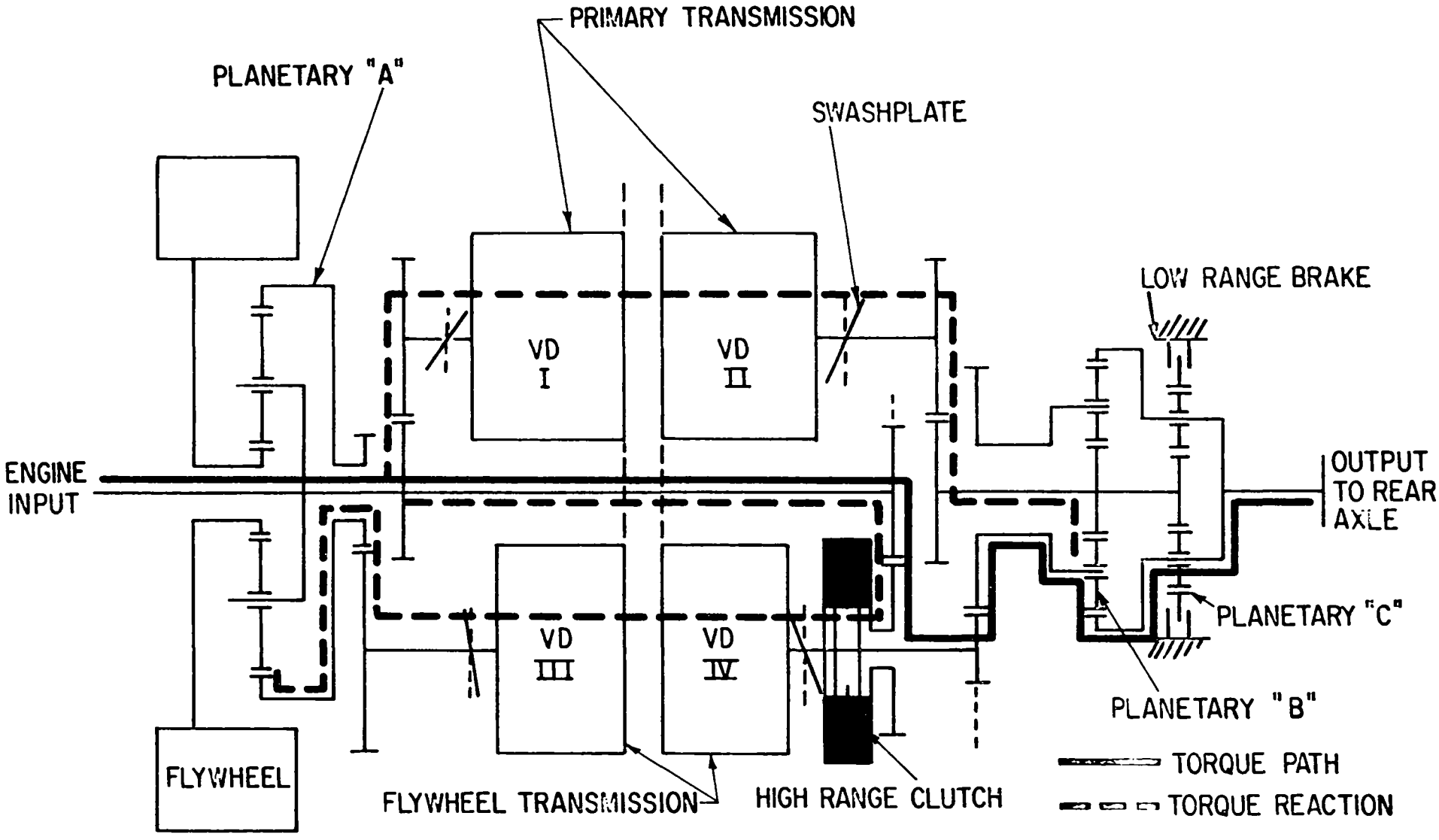

Fig. B-5 Power Path for High-Range Steady State

MTI-12515

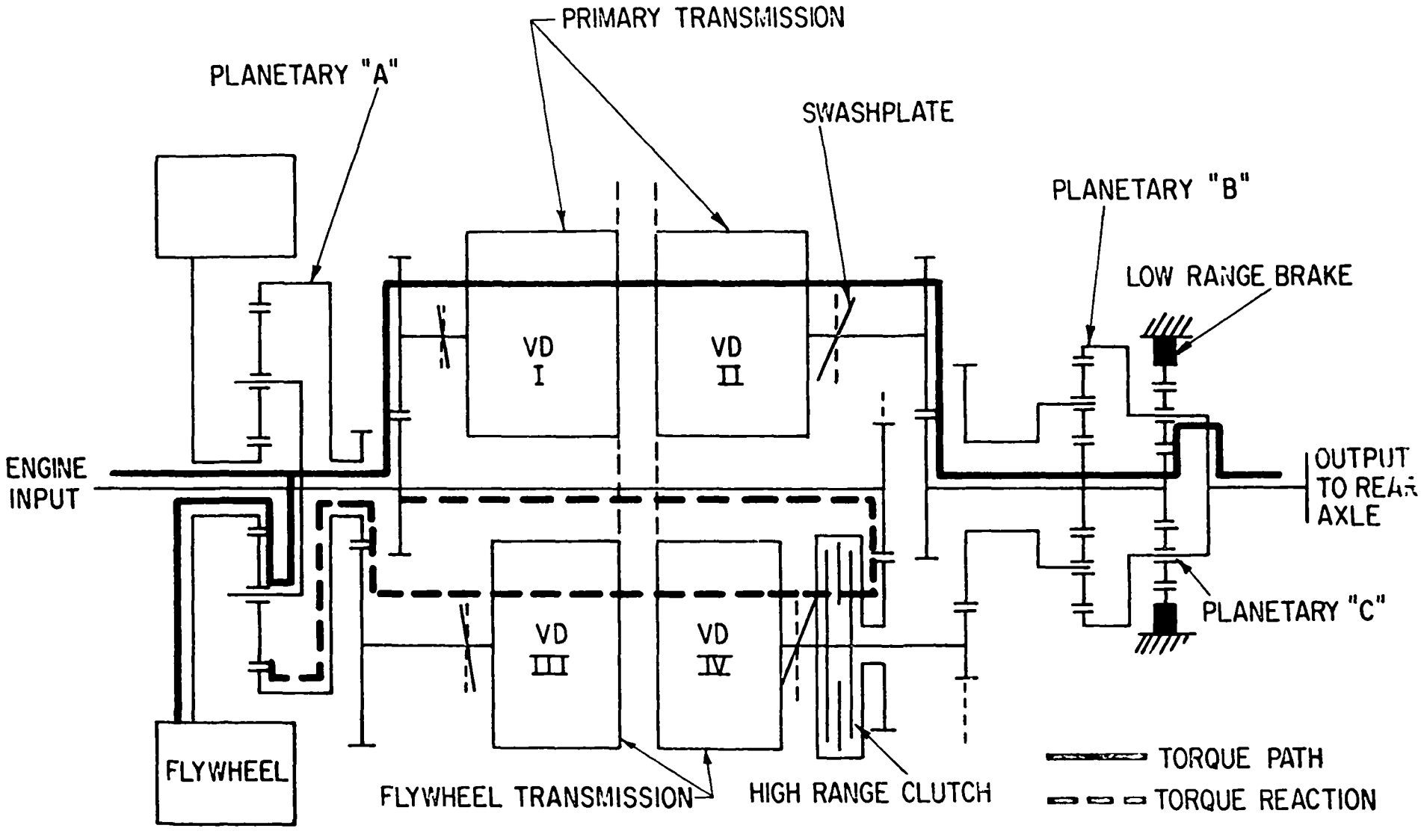

Fig. B-6 Power Path for Low-Range Acceleration

MTI-12546

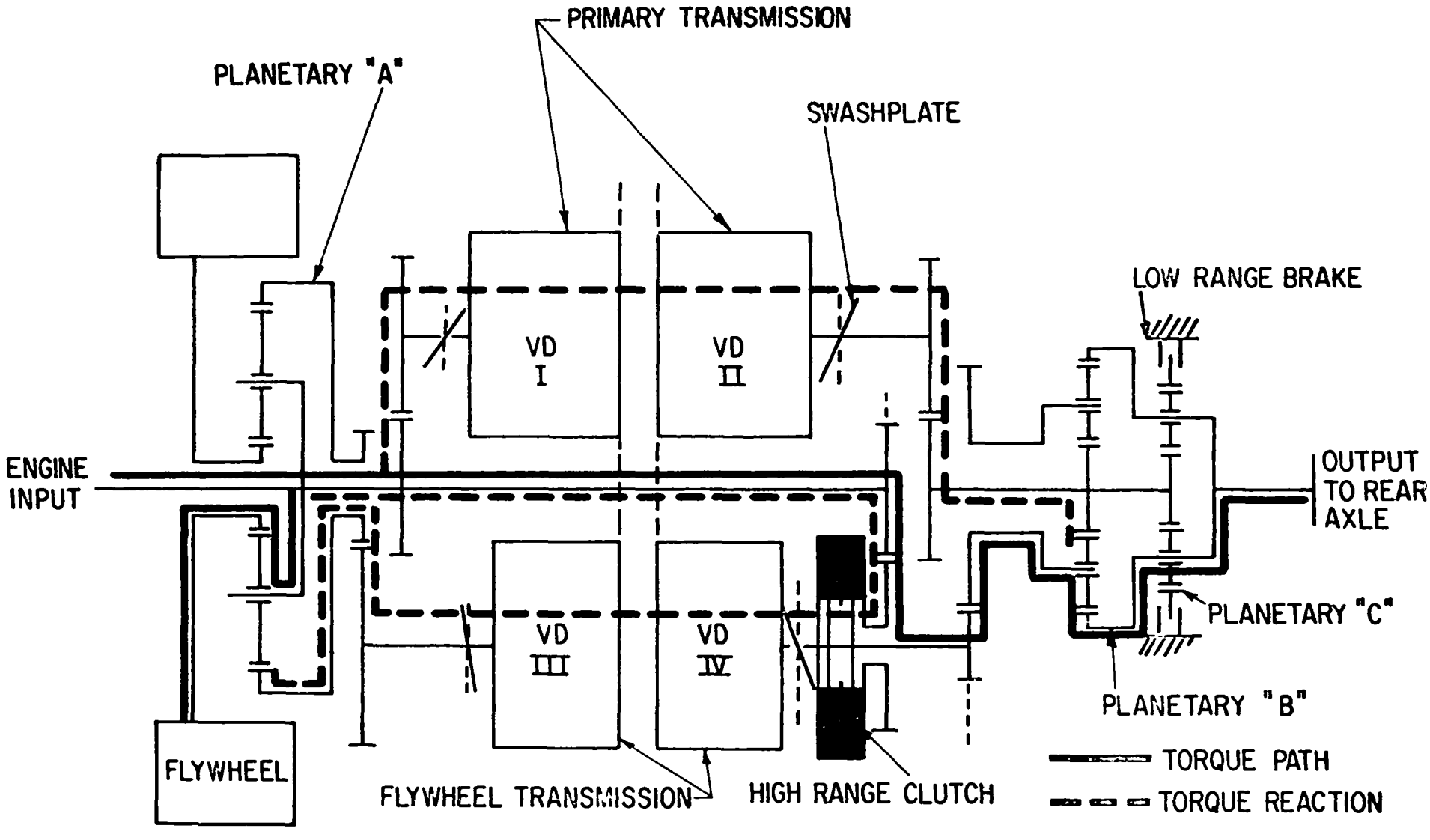

Fig. B-7 Power Path for High-Range Acceleration

Component Description

The flywheel is located in line with the transmission and in the cavity normally occupied by the torque converter of a standard automatic transmission. It was believed that the location would best meet the specification that the flywheel and transmission be capable of fitting into an existing medium-size car with no major structural or design changes to the car. However, the location and the design of the flywheel are to be decided on a system basis.

Three planetary gear trains are used in the assembly: 1) to provide a power path for the flywheel; 2) to direct the output power when the vehicle is in the high ratio range; and 3) to provide a low-ratio range power path. These gears and the gears that connect the hydraulic elements to the power shafts are manufactured using automotive practices.

The gears are made of automotive gear materials such as forged and surface-hardened AISI 8620 steel and are machined to an AGMA gear quality level of 8 with a final polish.

The four variable hydraulic elements are based upon a design originated by Dr. H. Ebert* and recommended by Mr. G. DeLalio. They are considered a high power density construction which produces the maximum capacity using the minimum volume and weight. Typical power densities are approximately 2 horsepower/cubic inch. The construction of the unit is described by Figure A-15 (earlier). The compact size of these hydraulic elements is achieved by using a rolling element bearing for the swashplate bearing** and close coupling it to the drum.

---

* Independent consultant. Dr. Ebert formally supervised the development of hydromechanical transmissions at Palmer-Benz, Austin, NSV and Allgaier in Germany.

** The design of the swashplate bearing was established by many hours of testing in Germany and at the Stratos Division of the Fairchild Corporation.

This type of hydraulic element has been successfully used in selected applications for aircraft constant speed drives, tractor transmissions, truck transmissions and in postal vehicle transmissions. For example, these types of hydraulic elements were specifically used in the following programs conducted by the Stratos Division of the Fairchild Corporation:

1. 25 horsepower constant speed drive electric supply and hydraulic pump for Fairchild Goose Missile.

2. 200 horsepower hydromechanical transmission for trucks evaluated by Detroit Arsenal.

3. 150 horsepower hydromechanical transmission for M-34 trucks evaluated by Detroit Arsenal under Contract DA-30-069-ORD-2340.

4. 50 horsepower hydrostatic transmission for off-road vehicles evaluated by Detroit Arsenal.

Tests conducted in various applications of the hydraulic elements have established the requirements that must be met to achieve long life. These results have shown that, for the 7.5 in^3/rev size element (primary transmission), the system should operate at pressure of 2500 psi or lower and speeds of 3000 RPM or lower for 90% of the load schedule if a life greater than 3500 hours is expected. Pressures to 3200 psi and speeds of 3200 RPM for 10% of the load schedule will not reduce the life of the elements below the 3500 hours.

With regard to structural aspects of the transmission, the main housings, control housings and mounting plates will all be aluminum pressure die castings. Automotive practices of thin-wall design, intricate sections for less machining, high strength, maximum heat disipation and favorable economics will be followed.

The high-range clutch and low-range brake are of conventional automotive construction used in existing transmissions.

The displacement of the hydraulic unit is varied using a piston actuator which moves a cam plate linked to the trunnion and swashplate of the element. The actuator is similar in construction to that of the automobile transmission actuators used to engage clutches and brakes. The cam plate is steel with hardened cam tracks. A cam roller bearing is used to link the cam to the trunnion.

The automotive practice of using sleeve bearings or needle bearings to support the radial and thrust loads has been followed.

As in the case of the gears, the shafts were constructed using a forged steel similar to AISI 8620. The bearing raceways and splines are hardened.

The mechanical description of the controls is covered in the control section.

The necessary control by the driver is to be established by the appropriate positioning of a single lever. The lever is so located to be hand-operated from the driver's position much the same as the control of present automobiles.

Operation

The general operation may be followed by reference to Figures B-1, B-2 and B-3. The arrangement combines the primary and secondary transmission functions into a single integrated unit.

Figure B-1 is a schematic of the working elements of the transmission. The input and output speed, the data for the hydraulic elements, and the relative ratio of the gears are shown. Figures B-2 and B-3 are plots of the operational characteristics of the transmission. Figure B-2 is plotted for an engine speed of 3750 RPM.

The number of mechanical elements has been minimized to emphasize the simplicity of such a transmission, maintain a high reliability and keep the cost as low as possible. Additional gear trains and sketches could have been added to increase

the capabilities of the transmission or reduce the amount of power in the hydrostatic portion of the transmission; however, the time schedule from design to production mandated the straightforward approach.

Referring to the primary section of the transmission, the hydrostatic power circuit consists of two identical positive displacement units which are referred to as Unit I and Unit II. These are hydraulically-connected by porting in the common valve plate member. Both units are variable displacement and the displacement is regulated by controlling the swashplate position, which is generally indicated by a heavy line on Figure B-1. When the swashplate is parallel to the drum face, the respective unit is at zero displacement and when the swashplate is at 15° angle, the unit is at full displacement. The engine drives Unit I through a 1:1.27 gear reduction. As shown on Figure B-2, Element I is varied to full displacement to drive Element II through zero speed to full output speed, at which time Element II is varied to achieve the overdrive speed ratio of 1:1.1. Unit II through a step-up gear ratio of 1.57:1.0 drives the sun gears of planetary "B" and "C". The low-range steady-state power path through the transmission is shown on Figure B-4. The heavy solid lines represent the flow of torque through the transmission while the heavy dotted lines represent the torque reaction when needed.

The output torque is a function of the hydraulic pressure and the displacement of the hydrostatic units. If the torque load increases the displacement or pressure of the units must increase. The pressures shown on Figure B-1 are considered to be maximum for reliable operation when using high-density pump and motor construction. The hydraulic elements have been sized for a pressure level of less than 2500 psi during most of their operating life. At this pressure level, infinite life can be expected. Typical output torques for a 7.5 in^3/rev displacement element are 250 ft-lb at 2500 psi and 320 ft-lb at 3200 psi (maximum pressure).

In low-range operation corresponding to high output torques, the low-range brake is applied. Element II drives the sun gear of Planetary C. The sun gear drives

the planet gears which react on the locked ring gear to drive the rear planet carrier and output shaft at a reduced speed. Planetary "C" has a reduction ratio of 1:3.50. The power then proceeds through the rear axle with a reduction ratio of 1:3.55 to the wheels. In this mode of operation the vehicle can be driven in reverse. Unit 1 is positioned past its zero displacement to a negative displacement. Flow is therefore reversed, pumping fluid into Element II in the reverse direction turning the output shaft in the reverse direction for reverse operation of the vehicle.

The transmission stays in low range to 1/3 of maximum output speed. Maximum output speed is dependent upon the engine input speed. Thus, the absolute speed value for the maximum low-range operation depends on engine input which is required to provide the engine power to satisfy the wheel torque load.

In order to provide higher output speed, a mechanical change in the planetaries is required.

Referring to the forward gear set of Planetary B: when Element II is driving through the rear sun gear, it also drives the forward sun gear. The forward sun gear drives corresponding planet gears which are also driven by the forward ring gear. This ring is connected to the rear planetary carrier and output. The forward carrier is geared to the high-range clutch which is connected to the transmission input.

This unique construction effects a synchronous mechanical range change. In low range as the Element II drives the output it also drives through the forward planetary to drive the inner element of the high-range clutch in the same direction as the outer elements are driven by the input. The gear ratios are selected so that when Element II is driving the output at maximum speed in low range, the forward planetary is driving the inner elements of the clutch at the same speed as the input is driving the outer elements. At this point of operation, the low-range brake is disconnected and the high-range clutch is applied.

Since there is no difference of speed between the engaging and disengaging elements, there is no change in input-to-output ratio, direction of rotation of

components, or control position of Elements I and II. Accordingly, this range transition is completely smooth and with substantially no slippage or wear of clutch and brake elements. When changing from high range to low range, this same operation occurs in the reverse direction. At the point where the low-range brake is applied the ring gear is stationary.

With the high-range clutch engaged, a mechanical connection from the input to Planetary B is established. this changes the mode of operation of the primary transmission from pure hydrostatic in low range to hydromechanical in high range.

In high range as the Element II speed is decreased, higher output speed is effected by the differential action of the forward gear set of Planetary B. As the Element I displacement is decreased to zero, locking Element II from rotating, the forward sun gear of Planetary B is stationary and all the power flow is mechanical from the input through the gear set to the output. This corresponds to 67 percent of operating range.

Since the Element II rotation is controlled in the opposite direction of rotation, its speed is additive to the mechanical drive of the Planetary "B", and at the maximum speed of Element II the output is also driven at maximum speed.

The introduction of the mechanical connection reduces the range over which the hydrostatic drive must operate to approximately one third. Since the mechanical elements are much more efficient, compact and less costly to produce on a high-production basis, this approach provides an optimum construction wherein the transmission is completely variable over its range, the size of the hydrostatic elements is minimized, the mechanical construction is kept simple, and the range change is completely synchronous without any steps, slippage, or wear of brake and clutch elements.

Figure B-5 shows the flow of power through the transmission* when operating in

---

*Refer to Section VI-C, Performance Analysis for values of power levels and other operating characteristics in the transmission at vheicle speeds of 20 and 70 mph.

the high range, while Figure B-2 shows the speeds and displacements of the units. Although little or no power flows through the primary units pressure is developed in these units to provide a torque reaction at the sun gear of Planetary "B".

To achieve the overdrive or 1:1.1 speed ratio Element I is held at maximum displacement while the displacement of Element II is decreased. The increased speed of Element II increases the output speed.

If the torque load remains constant for the overdrive condition, then the pressure must increase to compensate for the drecrease in displacement.

In the overdrive condition, the power flowing through the hydrualic path may be greater than the 33 percent previously discussed (See Section VI-C). However, if overdrive is desired, the straight-through point could be altered to reduce this power. With the addition of some mechanical components the maximum hydraulic power could be reduced below 20 percent.

The torque ratio available when the power path is through the hydraulic branch is 2.7 from engine input to transmission output and is 9.6 from engine input to rear axle output when a standard rear axle ratio (3) of 3.55:1 is used.

The torque ratio available when the power path is through the mechanical branch is 1.38 from engine input to transmission output and is 4.9 from engine input to rear axle output.

The secondary or flywheel drive section will now be examined. Since the flywheel operates over a relatively small speed ratio and only operates for short bursts of power in and out, the drive is connected to the relatively constant speed transmission input. This reduces the operating range to approximately 3:1. Since the primary transmission already is sized to provide maximum torque multiplication to the output, approximately 10:1, there is no advantage in building a parallel power path in the secondary drive.

Referring to the schematic Figure B-1, the input drives the Planetary "A" carrier and extends to the rear and drives hydrostatic displacement Element IV. Hydrostatic Element III connects to the ring gear. Hydrostatic Elements III and IV form an infinitely variable and reversible drive similar to Elements I and II. Elements III and IV are not hydraulically-connected to Elements I and II.

The operation of this section is quite straightforward. The displacement of Units III and IV at any particular flywheel to engine speed ratio is shown in Figure B-3. Primary control of power is effected by varying the displacement of Element IV.

When Element IV is at zero displacement, Element III is stationary —— locking the ring gear. The input drives the carrier and planet gears which react on the locked ring gear to drive the sun gear and flywheel at a speed 7.55 times engine speed. At this point of operation, there is no hydraulic flow and all power to and from the flywheel is through Planetary "A". When the Element IV displacement is controlled to drive Element III and the ring gear in the same direction as the input, the speed component is subtractive and the flywheel is driven at a lesser speed. Similarly, when Element III and the ring gear are driven in the opposite direction to the input, the speed component is additive, driving the flywheel at a higher speed. The operating speed range of the flywheel required the displacements shown in Figure B-3.

The flow of power in and out of the flywheel is completely reversible through the secondary drive, and any small change in the displacement of Element IV will determine whether the flywheel is accelerated or decelerated with respect to the input.

The advantages of this construction are apparent. The major power to and from the flywheel is transmitted by the planetary. The hydrostatic drive functions on both sides of the mechanical drive to serve only as a positive speed control. This reduces the size of Elements III and IV to less than 6 in^3/rev. Since the hydraulic portion of the drive is small, the movement of power to and from the flywheel is achieved at the maximum efficiency.

The flow of accelerating power from the flywheel to the output when operating in the low range is shown on Figure B-6. Again, the path for the required torque reaction is shown using dotted lines.

The flow of accelerating power and the torque reaction for the flywheel to the output when operating in the high range is shown on Figure B-7.

In all of the hydraulic units, the movement of the swashplate which controls the pump and motor displacement is a continuous function; therefore, the transmission ratio control is completely stepless and infinitely variable within the operating range.

The variable power-splitting transmission herein described affords maximum efficiency while maintaining minimum complexity and improved operating characteristics. The general construction, weight, and size are within the present state of development of conventional automobile transmissions.

SECTION C

PERFORMANCE ANALYSIS

C. PERFORMANCE ANALYSIS

Presented in this section in the following order are: 1) a review of the system considerations and requirements, 2) a definition of efficiencies, 3) a description of the method of analysis, 4) typical cruise power flows through the transmission, 5) steady-state performance results and comparisons, 6) dynamic performance results and comparisons, and, 7) a discussion of flywheel charging characteristics.

1. System Considerations and Requirements

The design of a transmission to transfer power between the flywheel, heat engine, and vehicle wheels is dependent upon the overall propulsion system design goals. These goals were defined by EPA/AAPS for a family car (1) and then were related specially to the hybrid flywheel/heat engine propulsion system by LMSC as the systems contractor for EPA/AAPS.

As a result LMSC defined (4) the maximum tractive effort in order to meet the EPA/AAPS acceleration design goals. These tractive effort requirements as a function of vehicle speed are shown by Figure C-1. Since the size of the heat engine is dependent upon the selection of maximum steady-state cruise power, EPA/AAPS concurred that a 5300 pound vehicle should be capable of climbing a five percent grade at 70 MPH without flywheel acceleration power for a period of 100 seconds. The resulting road horsepower required to meet those cruise power conditions is shown by Figure C-2 to be 95 horsepower. Then at zero grade conditions with vehicle weight reduced to 4600 pounds (per EPA/AAPS design goals), Figure C-2 shows that the vehicle will be capable of achieving a speed of 96 MPH.

As the systems contractor, LMSC was responsible for determining all characteristics of the flywheel. From a performance viewpoint, an important parameter of the flywheel is its loss characteristics. In order to minimize windage losses and tip heating, it is necessary to operate the flywheel in a reduced chamber pressure environment. The flywheel losses, as determined by LMSC (5)*, are

*Since the completion of this study, slightly lower values of flywheel losses have been determined by LMSC.

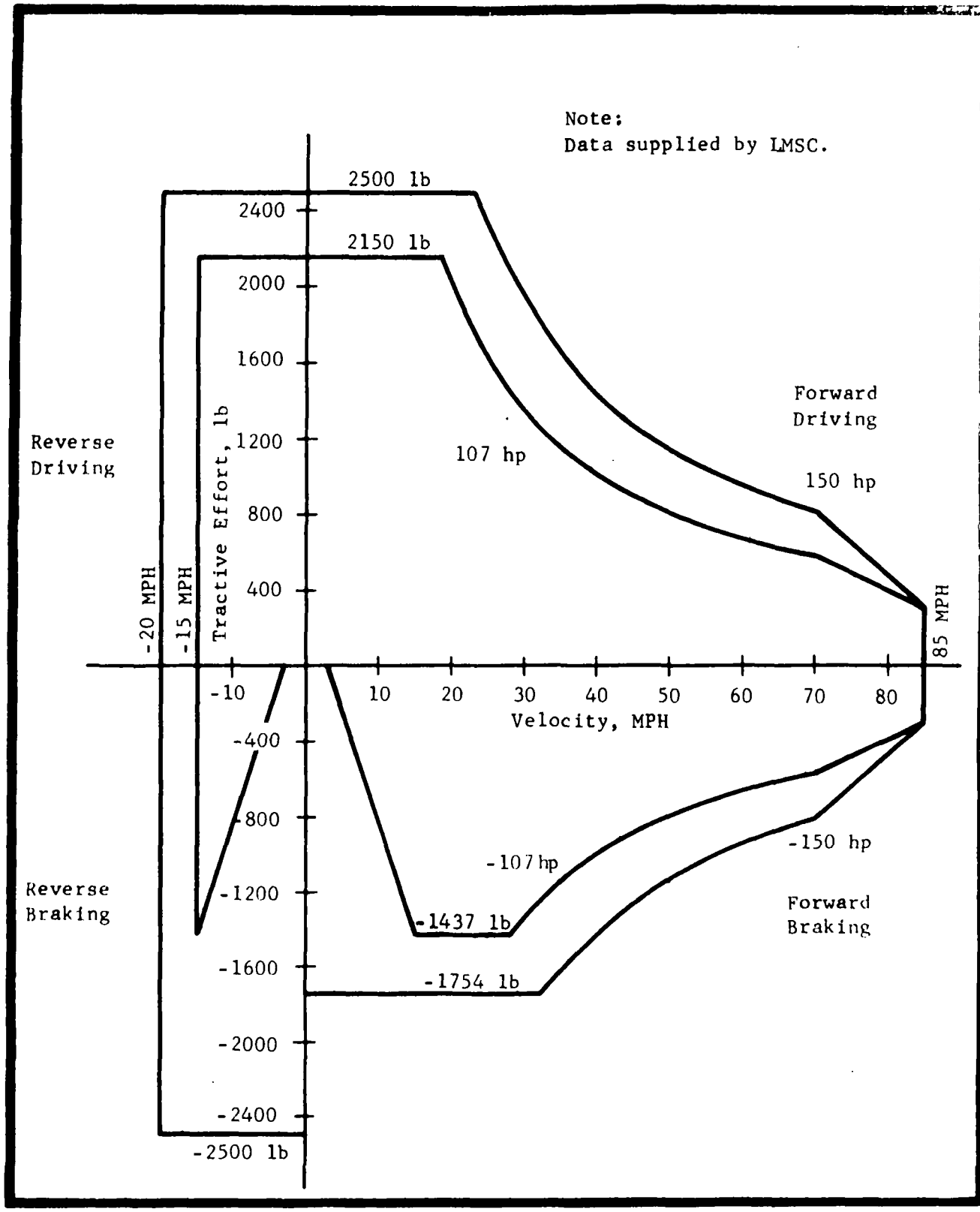

Fig. C-1 Tractive Effort vs. Velocity Requirements for Heat Engine/Flywheel/Hybrid Passenger Car Drive System

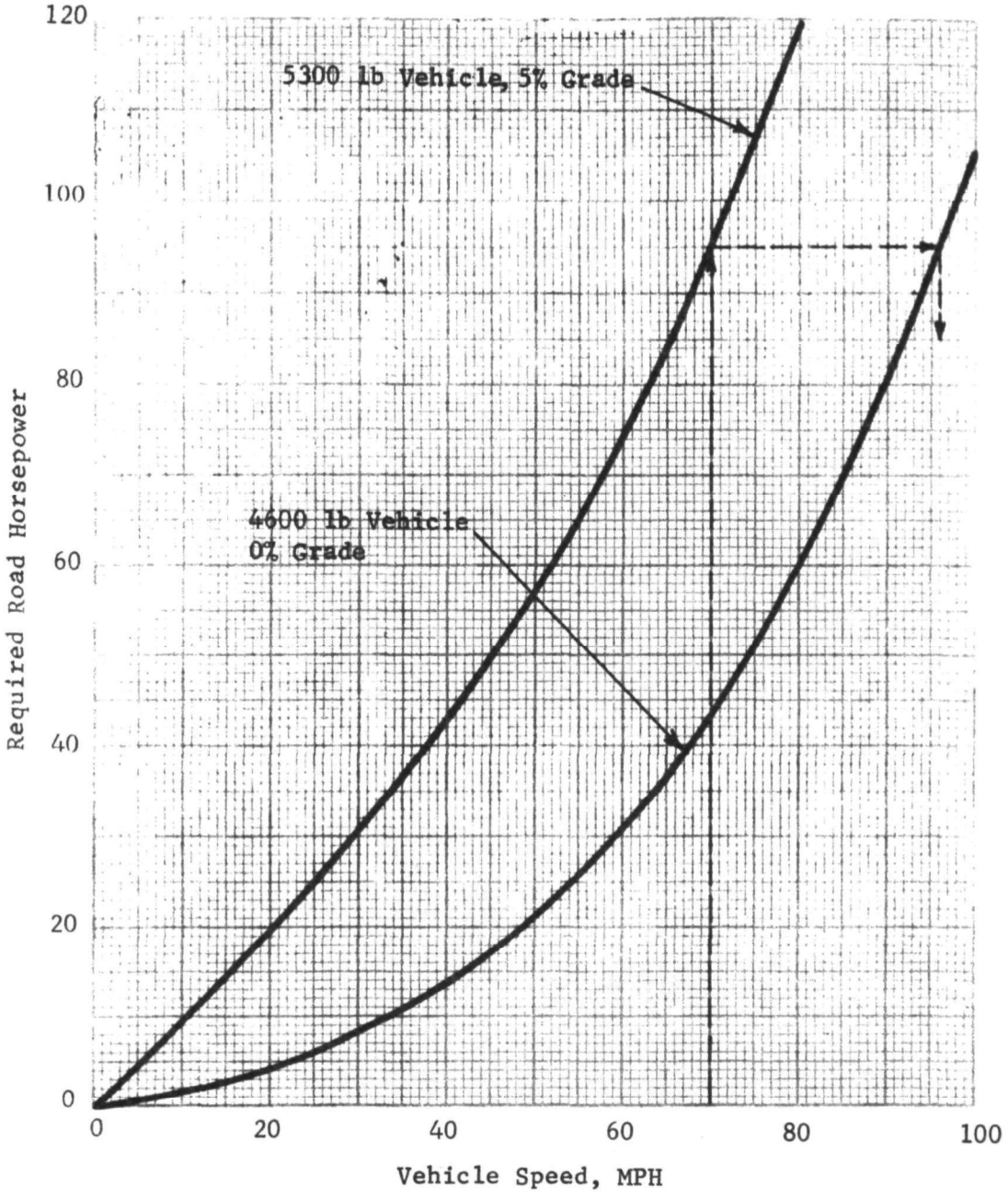

Fig. C-2 Required Cruise Road Power

shown by Figure C-3. Representative flywheel types applicable for the transmission configurations were pierced and non-pierced operating at the chamber pressures shown by Figure C-3. A chamber pressure of 2.94 psi was considered by LMSC as a reasonable pressure which could be maintained by engine vacuum. From a performance viewpoint, the pierced flywheel operating at chamber pressures of 0.581 and 2.94 psi was considered representative of a reasonable range of flywheel losses and therefore was used as a performance parameter for results discussed subsequently.

The characteristics of the heat engine, a conventional IC engine, and the conventional automatic transmission used for this study were defined by EPA/AAPS. The observed horsepower as a function of engine speed for the engine is shown by Figure C-4. Figures C-5 and C-6 give the pertinent characteristics which defined the conventional transmission.

The accessory and/or auxiliary horsepower requirements of the heat engine (except) for the water pump) were defined by EPA/AAPS. The resultant horsepower required as a function of engine speed is shown by Figure C-7. For the performance results presented herein, it is important to note that the air conditioner was included, since the propulsion system should realistically have the capability of handling the extra load. The sizable additional horsepower required to handle the air conditioner is indicated on Figure C-7.

As suggested by LMSC in an initial study (2) of the flywheel/hybrid propulsion system, it is desirable to have the control system of the transmission follow a "Total Kinetic Energy" (TKE) control law. This tends to result in a minimum weight flywheel and theoretically offers the possibility of not having the propulsion system "history dependent." The basic idea of the TKE approach is to control the heat-engine output so as to hold at a constant value the sum of the kinetic energies of the flywheel and vehicle. This can be expressed by:

$$MV^2 + J\omega^2 = \text{constant} \qquad \text{(C-1)}$$

Then for a selected maximum vehicle speed and maximum flywheel speed knowing that maximum flywheel speed occurs at zero vehicle speed, it can be shown that:

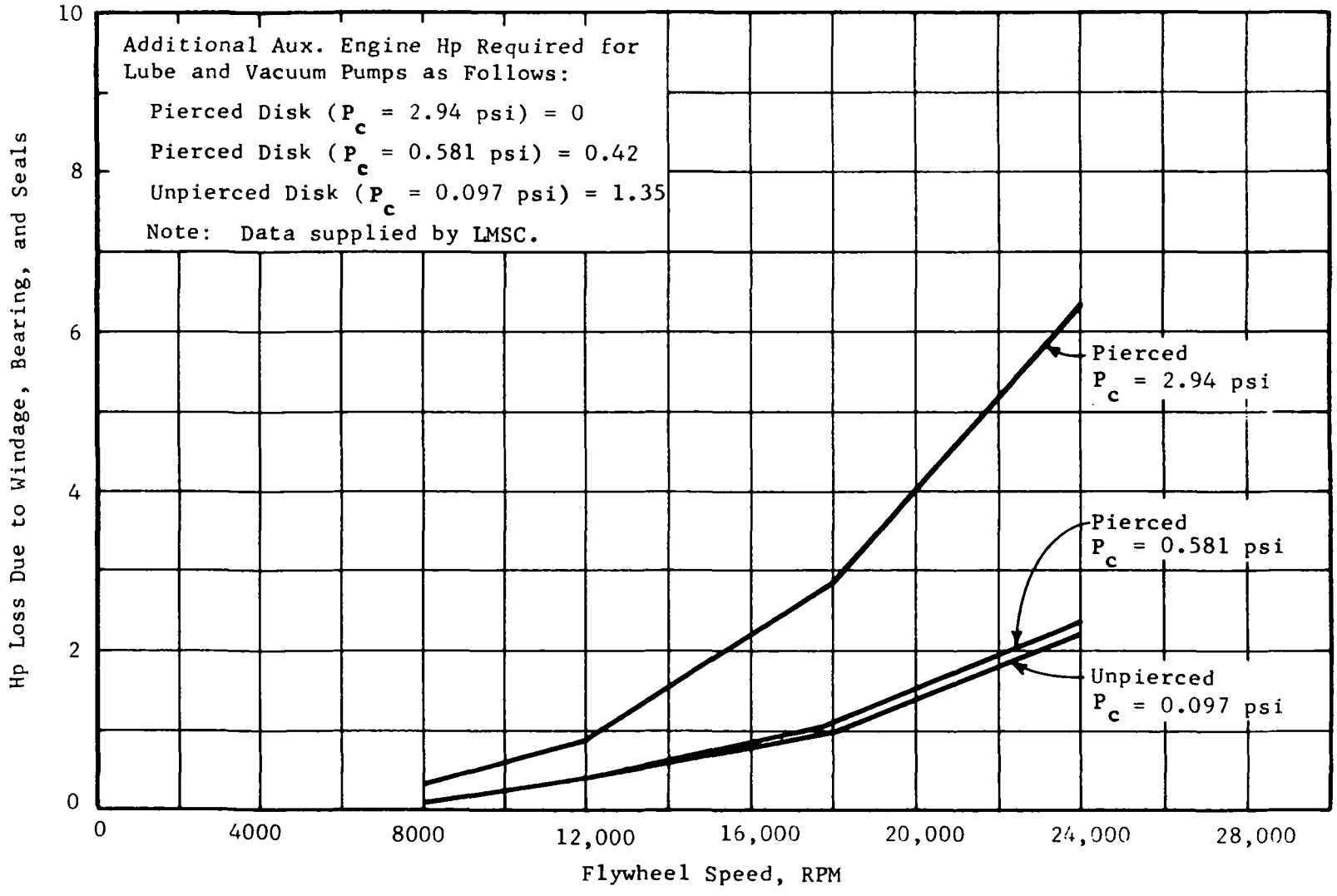

Fig. C-3 Flywheel Losses

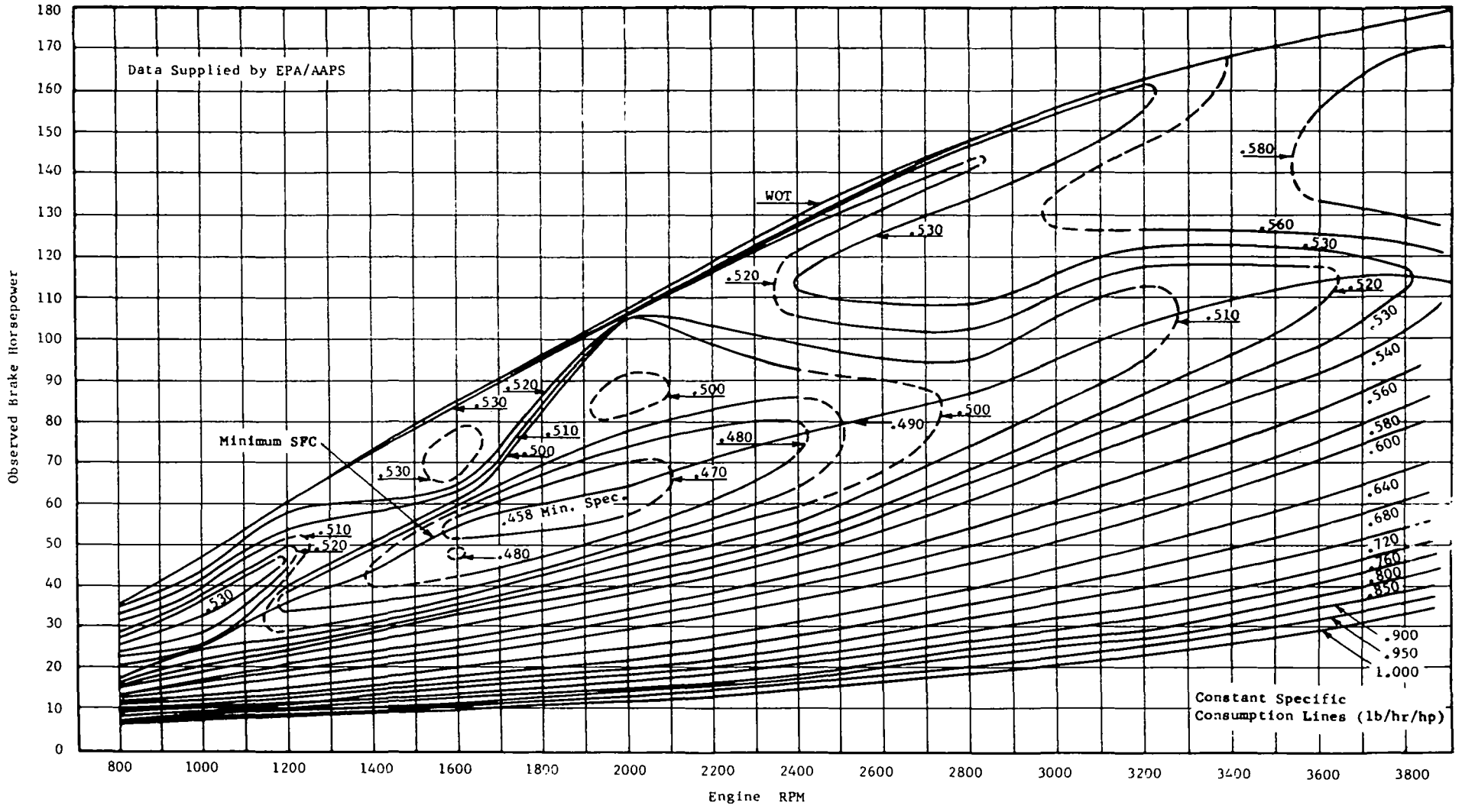

Fig. C-4 Medium Size Engine Fuel Economy Map

MTI-12338

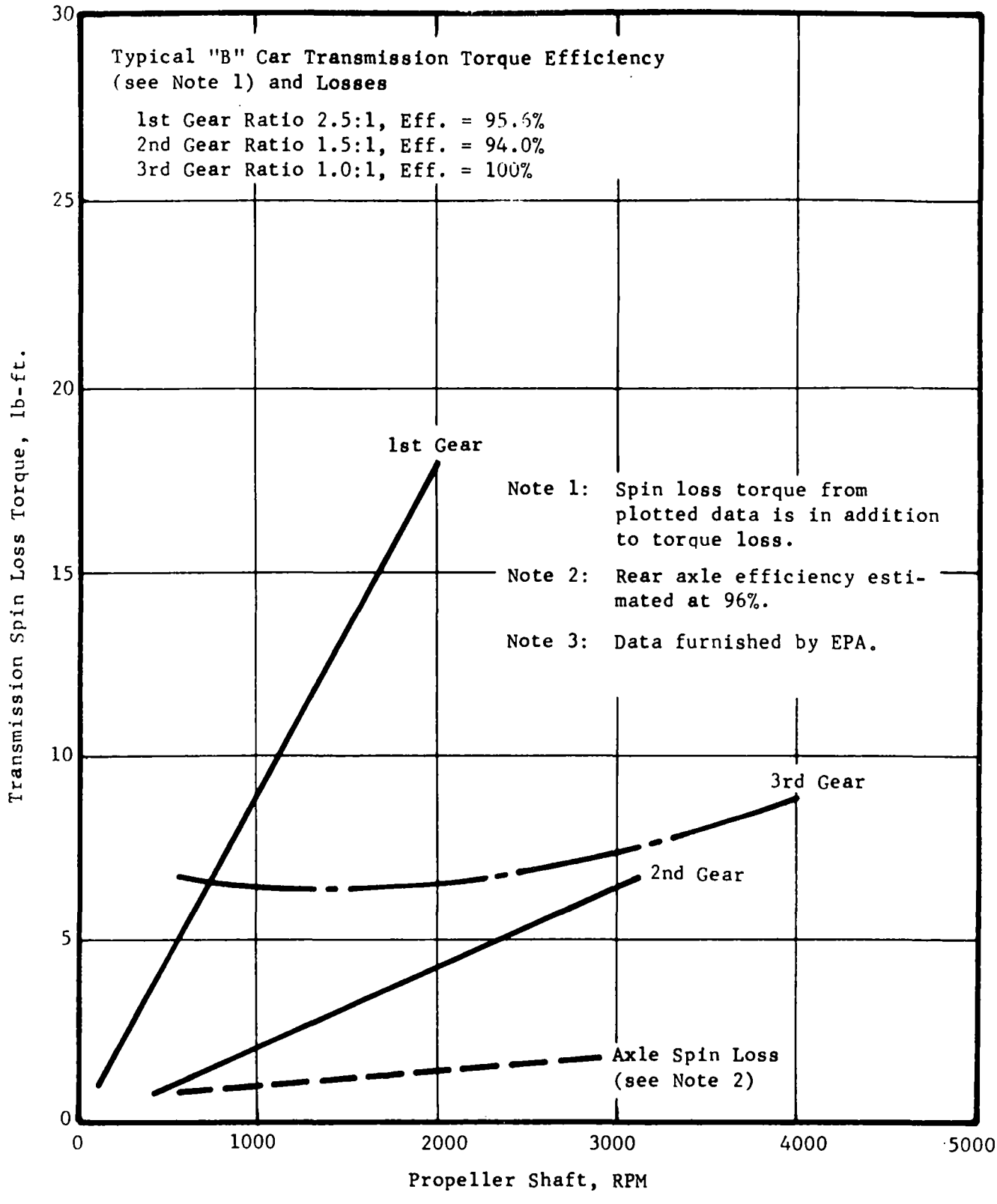

Fig. C-5 Typical "B" Car Transmission Torque Efficiency and Losses

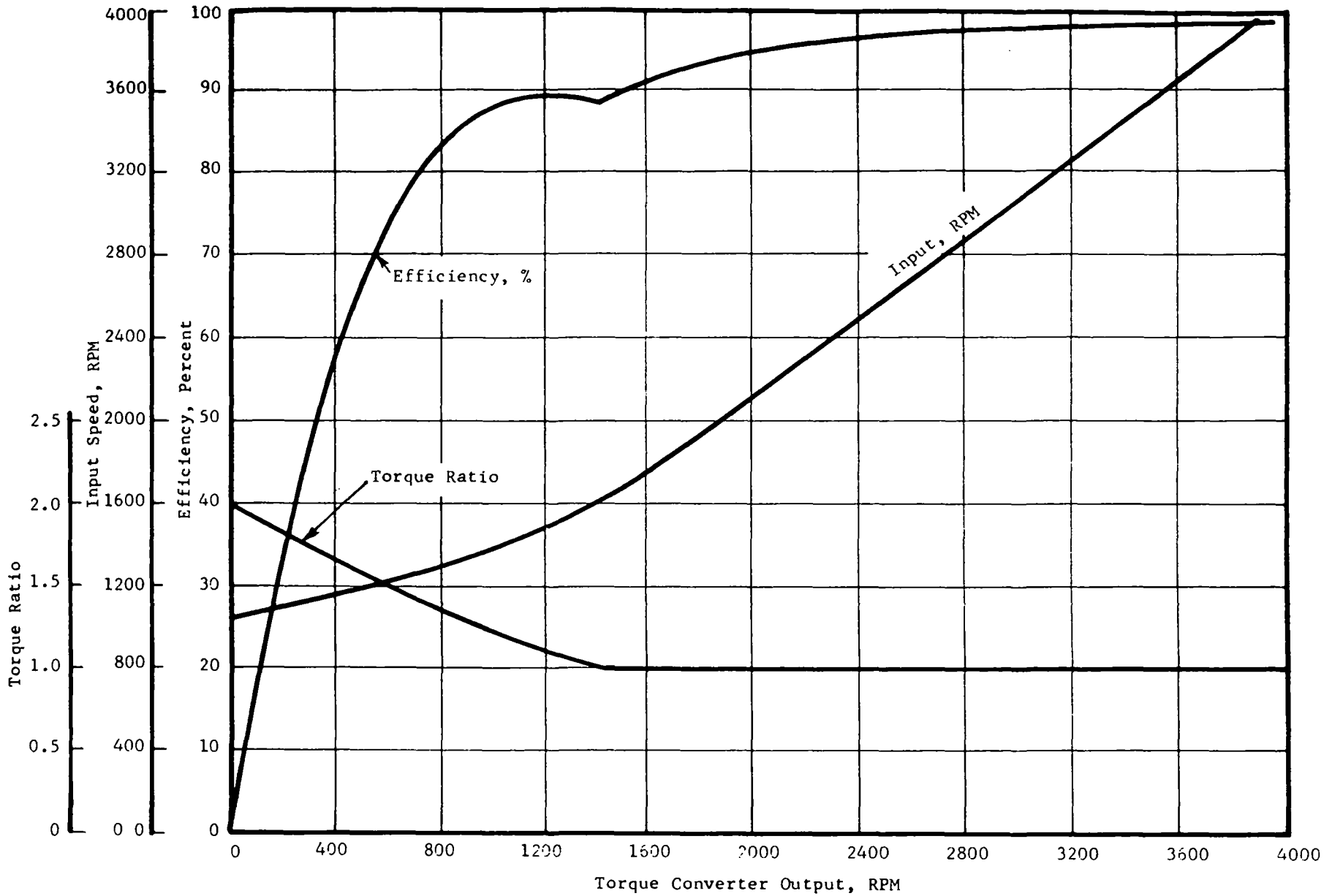

Fig. C-6 Typical Torque Converter Characteristics — "B" Car Versus Output Speed

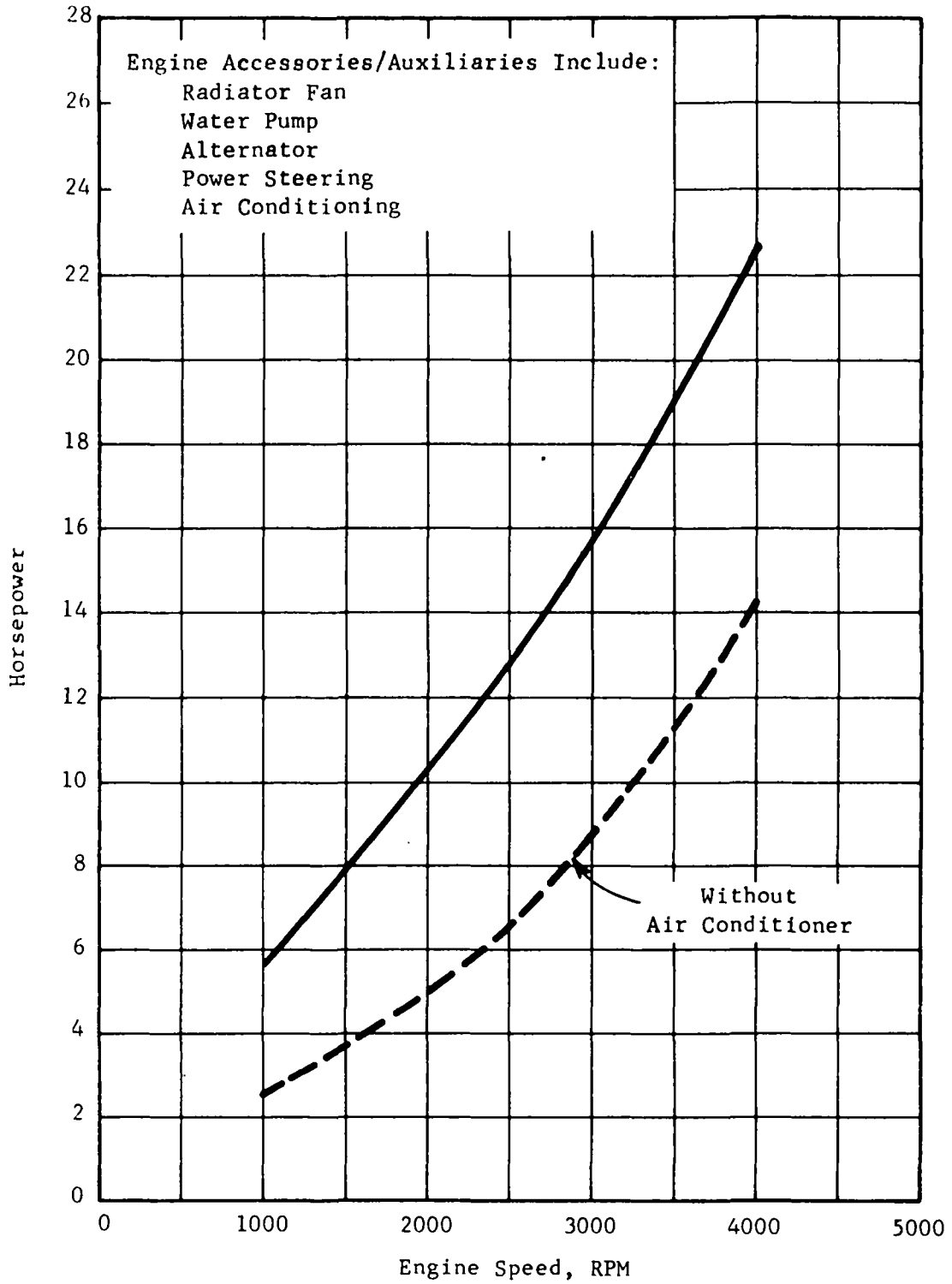

Fig. C-7 Engine Accessory plus Auxiliary Power

$$\frac{M}{J} = \left[\frac{\omega_{max}}{V_{max}}\right]^2 \left[1 - \left(\frac{\omega_{min}}{\omega_{max}}\right)^2\right] \qquad \text{(C-2)}$$

Therefore, setting the flywheel speed ratio, maximum vehicle speed, and maximum flywheel speed determines a fixed ratio of vehicle mass-to-flywheel inertia. Figure C-8 presents typical flywheel inertias as a function of vehicle weight for various flywheel speed ratios. It can be seen that for a flywheel speed ratio of 24,000/10,000 and a vehicle weight of 5300 pounds*, the required flywheel inertia is 0.49 lb-ft-sec^2 in order to follow TKE at vehicle speeds up to 85 mph. Consequently, the aforementioned value of flywheel inertias was used for the transient performance results subsequently discussed.

In addition, it should be noted that, for the cruise-power results which follow, the flywheel losses were computed by assuming the flywheel followed TKE between 24,000 RPM and 10,000 RPM corresponding to vehicle speeds from 0 to 85 MPH, respectively.

2. Definition of Efficiencies

It is worthwhile to clearly define various efficiencies which were used to describe the performance of the flywheel/hybrid transmission in this study. The approach used to define the efficiency of the flywheel/hybrid transmission was to follow the customary definition of efficiency for a conventional automotive transmission.

For a conventional automotive transmission, transmission efficiency is simply defined as:

$$\text{Transmission Efficiency} = \frac{\text{Transmission Output Power}}{\text{Transmission Input Power}} \times 100 \qquad \text{(C-3)}$$

At steady-state (cruise-power) conditions with the flywhee/hybrid system, it is necessary for the engine to supply power through the transmission to the flywheel

*Car weight specified by EPA/AAPS (1) for acceleration and grade requirement design goals.

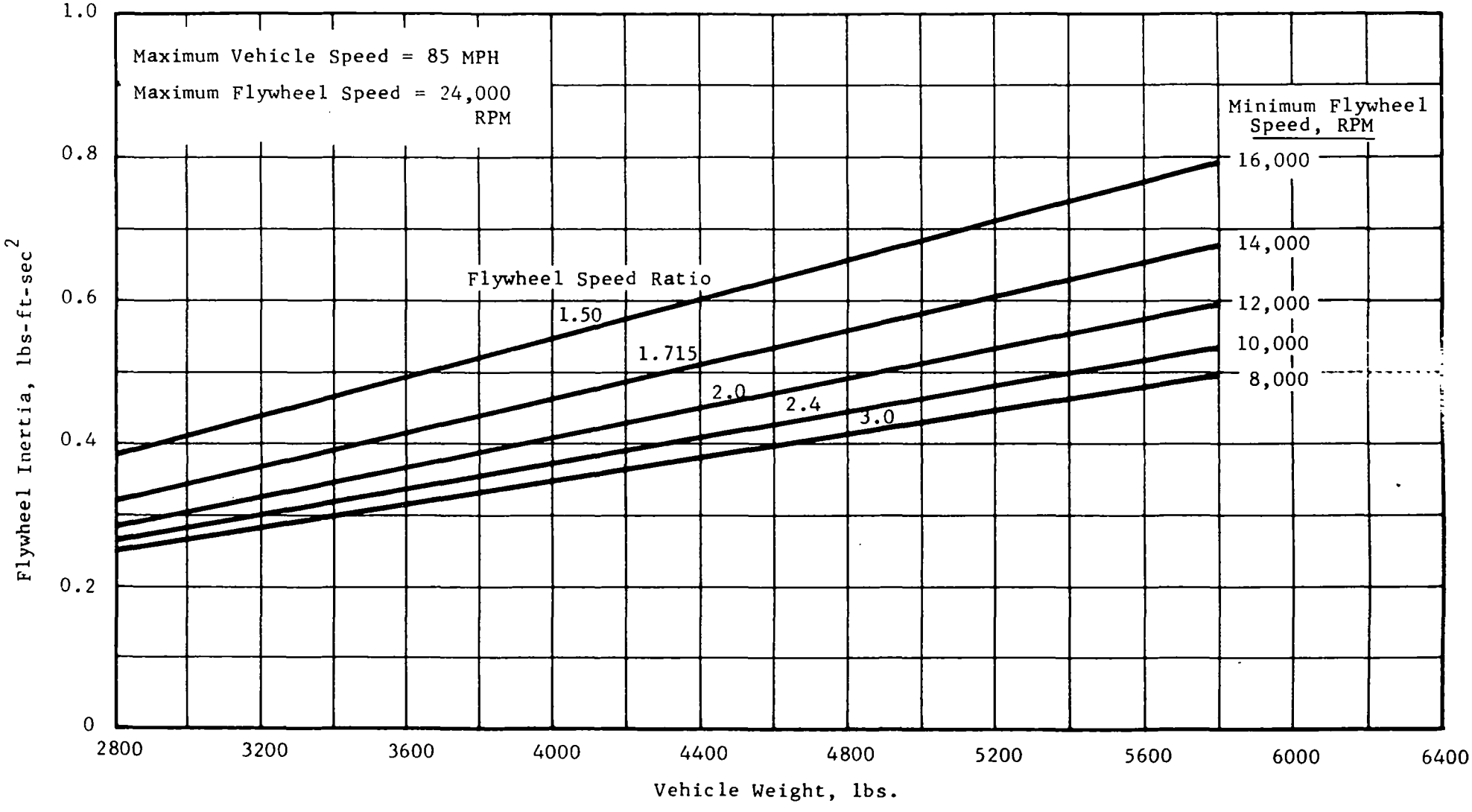

Fig. C-8 Required Flywheel Inertia for TKE Control Approach

for flywheel bearing, seal, and windage losses in order to maintain the flywheel at constant speed according to TKE control. This results in transmission output power which is in addition to that power going to the vehicle wheels. Thus, it follows from Equation C-3 that, at cruise-condition, the flywheel/hybrid transmission efficiency was defined as:

$$\text{Transmission Efficiency (Cruise)} = \frac{HP_{out} + HP_{fly\text{-}loss}}{HP_{Eng\text{-}net}} \qquad \text{(C-4)}$$

where:

$HP_{Fly\text{-}loss}$ = Power required at flywheel due to bearings, seals and windage losses (see Figure C-3).

$HP_{Eng\text{-}net}$ = Net power from engine at transmission input or observed brake horsepower of engine (Figure C-4) minus auxiliary and accessory power (Figure C-7).

HP_{out} = Drive train power at transmission output or the road horsepower developed at the vehicle wheels divided by the rear-end differential efficiency.

Any power required for flywheel vacuum and lube pumps (shown earlier by Figure C-3) was assumed to be additional engine accessory power.

The overall efficiency at which steady-state cruise-power was transmitted to the rear wheels was termed power train efficiency and defined as:

$$\text{Cruise Power Train Efficiency} = \frac{\text{Road Horsepower}}{\text{Transmission Input Power}} \times 100$$

or

$$\text{Cruise Power Train Efficiency} = \frac{HP_w}{HP_{Eng\text{-}net}} \times 100 \qquad \text{(C-5)}$$

Where HP_w was that road horsepower required at the vehicle rear wheels to maintain a given vehicle speed and $HP_{Eng\text{-}net}$ was the transmission input power as previously defined by Equation C-4.

During vehicle acceleration, when the flywheel supplies power to the rear wheels, the transmission input power from the flywheel is given by:

$$HP_{Fly\text{-}net} = J_f N_f \cdot \alpha - HP_{Fly\text{-}loss} \qquad \text{(C-6)}$$

where:

J_f = Flywheel Inertia
N_f = Flywheel Speed
α = Flywheel Acceleration (dN_f/dt)

Thus, the efficiency of the flywheel/hybrid transmission during vehicle accelerations was defined as:

$$\text{Transmission Efficiency (Acc)} = \frac{HP_{out}}{HP_{Eng\text{-}net} + HP_{Fly\text{-}net}} \times 100 \qquad \text{(C-7)}$$

A more refined breakdown in efficiencies, for example, in order to account for the efficiency at which power is being supplied from or to the flywheel, was not possible with the type of transmission design presented herein. This was because engine power and flywheel power flowed through common paths.

For comparative performance evaluations, the efficiency of a conventional automatic transmission was calculated. The characteristics of the conventional transmission were given earlier by Figures C-5 and C-6. Since no flywheel was involved, the efficiency of the conventional transmission was simply defined by Equations C-3 and C-5 presented earlier.

3. Method of Analysis

In order to determine the performance of the flywheel hybrid transmission, nonlinear models of the complete propulsion system were developed and programmed on a digital computer to calculate: 1) steady-state performance and 2) dynamic performance. Refer to Appendix I for details of the equations used to describe the transmission (including losses) and a description of the computer programs. In addition, a model of the complete propulsion system was setup on the Bendix analog computer in order to investigate system stability (see Appendix II).

The steady-state computer model included the transmission (with losses described on a component basis), engine, flywheel and associated vehicle characteristics. The basic input to the model was desired vehicle speed.

The dynamic performance digital computer model was a simulation of the complete propulsion system. The model simulated all significant dynamics (torque and speed relationships) of the flywheel, transmission with controls, engine and vehicle (characteristic of a family car) in the time domain. Compressibility dynamics in both hydraulic pump-motor circuits (primary and secondary) were included in addition to other losses in the transmission on a component basis. Engagement and disengagement of the secondary and primary transmissions were not included on the model. The basic input to the dynamic model was driver command pedal as a function of time.

In both the steady-state and dynamic models of the transmission, losses were accounted for on a component basis as a function of component operating levels. Component losses were based upon correlation with measured losses for similar components. For example, typical losses in the hydraulic elements which were calculated based upon correlation to experimental data included:

1. Compressibility of oil
2. Leakage which includes leakage past the pistons and past the valve plate and drum seals.
3. Mechanical which includes piston friction, bearing friction, and valve plate friction.
4. Flow which includes valve inlet and outlet hydrodynamic losses and duct losses.

As shown in Appendix I, these losses vary with system pressure, element speed, swashplate displacement, and flowrate.

It is important to realize that in the flywheel/hybrid transmission design presented herein that it is possible for the hydraulic elements to have low component efficiency and yet not have a major effect upon transmission efficiency. This is because the hydraulic elements can transmit high torque while

transmitting low power. Since pressure is proportional to torque, a high torque results in high pressure which in turn causes high compressibility and leakage losses. This, of course, results in a relatively low efficiency for the hydraulic element on a component basis. However, since little power is going through the hydraulic element, the effect on transmission efficiency is negligible.

4. Typical Cruise Power Flows in Transmissions

As discussed earlier in Section VI-B, one of the key features of the split-power transmission design presented herein was that, in the primary transmission, most of the power flowed through the mechanical rather than the hydraulic path in order to achieve high efficiency. In order to give a typical example of the power-split and also to provide some insight to the performance calculations, consider the results obtained for steady-state vehicle speeds of 20 and 70 MPH, with a pierced-flywheel configuration operating at a chamber pressure of 2.94 psi. A complete table of computer results for these conditions is given in Appendix I

Figure C-9 shows all the power paths through the transmission in the high-speed range. Under steady-state, level-road conditions the transmission was in the high-speed range for vehicle speeds above 11 MPH.

Locations throughout the power paths are identified and values of power at each of these locations are shown by Figure C-9. Also shown are the resultant efficiencies for the transmission, primary hydraulics, and secondary hydraulics. Note that negative values of power indicate power flow in a direction opposite to the arrows shown on the diagram of Figure C-9.

At 20 MPH, 94 percent of the power in the primary flows through the mechanical path to the rear wheels. Under these conditions, the power through the primary hydraulics (about 0.3 horsepower) flows in a reverse direction. Since the primary hydraulic units are at very low pressure (121 psi), speed, and flow conditions for their respective ratings, their losses are negligible. For all practical purposes, at 20 MPH steady-state speed, the transmission can be considered similar to a mechanical geared drive.

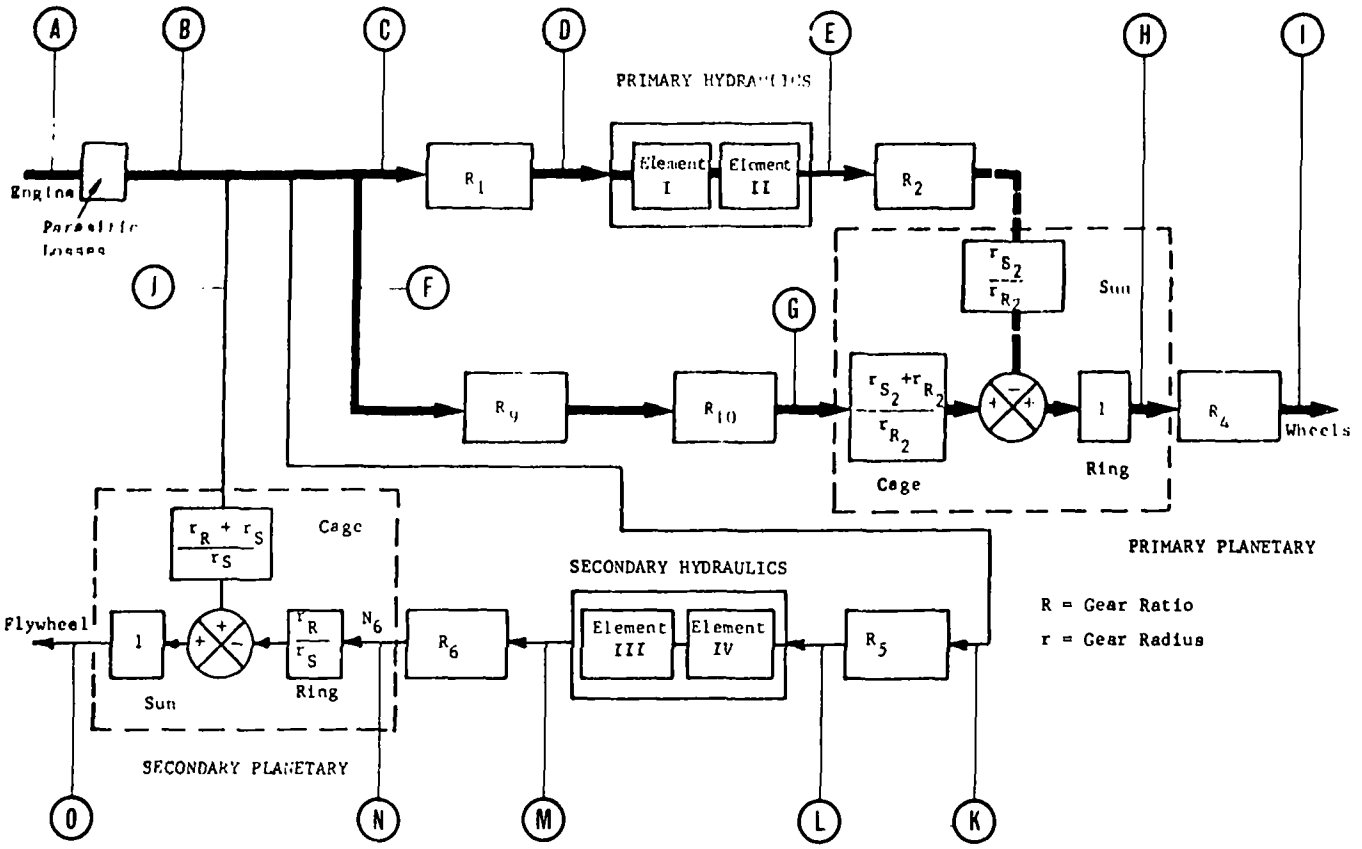

R = Gear Ratio

r = Gear Radius

	Power Path Location	Vehicle Speed, MPH 20	70
A	Transmission Input Power	12.37 HP	52.51 HP
B	. . . . .	11.37 HP	51.11 HP
C	. . . . .	-.32 HP	19.38 HP
D	. . . . .	-.32 HP	19.18 HP
E	. . . . .	-.33 HP	18.26 HP
F	. . . . .	5.39 HP	29.25 HP
G	. . . . .	5.26 HP	28.54 HP
H	Transmission Output Power	4.77 HP	45.25 HP
I	Road Horsepower	4.59 HP	43.51 HP
J	. . . . .	2.71 HP	2.94 HP
K	. . . . .	3.55 HP	-.70 HP
L	. . . . .	3.51 HP	-.71 HP
M	. . . . .	3.41 HP	-.71 HP
N	. . . . .	3.38 HP	-.72 HP
O	Flywheel Power	6.00 HP	2.19 HP

Performance Summary		
Power Train Efficiency	37.11%	82.86%
Transmission Efficiency	87.10%	90.37%
Primary Hydraulics Efficiency	100.32%	95.17%
Secondary Hydraulics Efficiency	97.13%	100.89%
Primary Pressure	120.7 PSI	455.2 PSI
Secondary Pressure	187.0 PSI	63.8 PSI
Engine Horsepower	19.98 HP	67.17 HP
Auxiliary Horsepower	7.61 HP	14.67 HP
Engine Speed	1400 RPM	2817 RPM
Flywheel Speed	23,444 RPM	15,911 RPM

Note: 1. Efficiency greater than 100% and negative powers mean power flow in direction opposite to arrows.

2. Refer to Appendix I for additional detailed results.

Fig. C-9 Typical Power Flow in Transmission at Steady-State Speeds of 20 and 70 MPH

MTI-12342

Although the effect of flywheel losses is subsequently discussed, it should be observed here from Figure C-9 that at 20 MPH 12.4 horsepower was coming into the transmission and 6 horsepower was required at the flywheel with only 4.8 horsepower at the transmission output to produce 4.6 road horsepower. Thus it is clear why the power train efficiency was only 4.6/12.4 or 37.1 percent when the transmission efficiency was (4.8 + 6)/12.4 or 87.1 percent.

At 70 MPH, the results given by Figure C-9 can be interpreted to show that 39 percent of the power in the primary flows through the hydraulic elements and 61 percent through the mechanical path. Under these conditions, the pressure in the primary (455 psi) was only 15 percent of maximum rated for the hydraulic units. As a result of the relatively low pressure, the efficiency of the hydraulic units was 95 percent.

As pointed out earlier in this section, the efficiency of all hydraulic units was correlated to measured experimental data. The resultant loss coefficients are presented in Appendix I with the equations used to describe the characteristics of these hydraulic units in the performance models of the transmission. It can be readily shown from the loss coefficients presented in Appendix I that, under the worst combination of rated conditions (pressure, speed, displacement, etc.) these hydraulic units would have an efficiency of 85 percent. Under comparable conditions other types of hydraulic units have slightly lower efficiencies. The higher efficiency capability as well as the higher power density are important features of the hydraulic units selected for the transmission design.

As shown by the results of Figure C-9, under steady-state level road conditions, particularly at low vehicle speeds, characteristic of urban driving, the hydraulic elements were not an important factor in determining transmission performance. This was due to the design characteristics of the transmission resulting in element operation at high efficiency and low-power flow.

5. Steady-State Performance Results and Comparisons

Consider now the steady-state performance of the flywheel/hybrid transmission over a range of vehicle speeds. The calculated transmission efficiency is shown by Figure C-10 for two different but representative flywheel losses. Note that

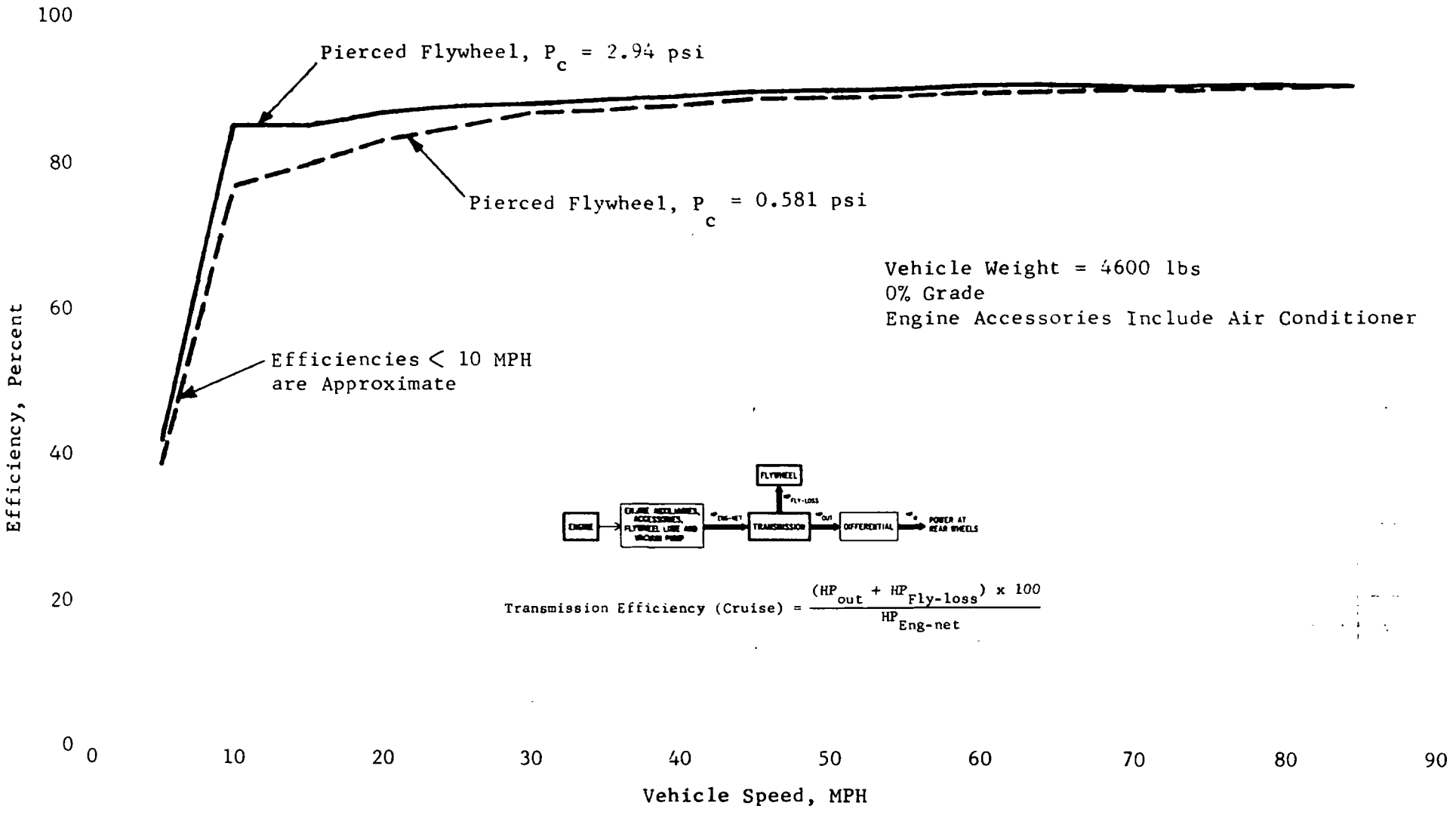

$$\text{Transmission Efficiency (Cruise)} = \frac{(HP_{out} + HP_{Fly\text{-}loss}) \times 100}{HP_{Eng\text{-}net}}$$

Fig. C-10 Cruise Power Transmission Efficiency of Flywheel/Hybrid Transmission

efficiencies below 10 MPH are at best only an approximation. Referring to Figure C-10, it can be seen that the efficiency varied between 77 and 90 percent for vehicle speeds from 10 to 85 MPH, respectively, with the low-loss flywheel (Pc = 0.581 psi). With the higher-loss flywheel, efficiencies varied from 85 to 90 percent over a similar vehicle speed range. This trend is as expected, since increased flywheel losses require additional power flow in the transmission and the effect of residual (or parasitic) power losses in the transmission are reduced - particularly at low vehicle speeds.

In order to minimize emissions, it is important that the transmission be capable of transferring engine power to the road and flywheel with high efficiencies at cruise power. The relatively high efficiencies shown by Figure C-10 indicate important design feature of the transmission presented here.

In a similar manner, Figure C-11 presents the calculated cruise-power train efficiency. The rapid decrease in power train efficiency as vehicle speed is decreased is due to flywheel losses. This occurred because the power loss of the flywheel was, of course, not reflected in wheel horsepower. Thus, reducing the flywheel losses caused a substantial improvement in power train efficiency as shown by Figure C-11.

A most important performance parameter of the flywheel/hybrid propulsion system at steady-state cruise power conditions is the level of engine emissions. Since emission data were not available for the engine from EPA/AAPS during the course of this study, discussion must be limited to fuel consumed by the engine (or miles/gallon) with the assumption that on a first approximation basis this is a reasonable indication of emissions.

Figure C-12 presents the calculated fuel economy of the flywheel/hybrid propulsion system at steady-state cruise power as a function of vehicle speed. These results indicate that with a low-loss flywheel (Pc = 0.581 psi), the best fuel economy obtained was 16.2 miles/gallon at 30 MPH. Increasing the flywheel losses (Pc - 2.94 psi) lowered the results to 15 miles/gallon at 30 MPH.

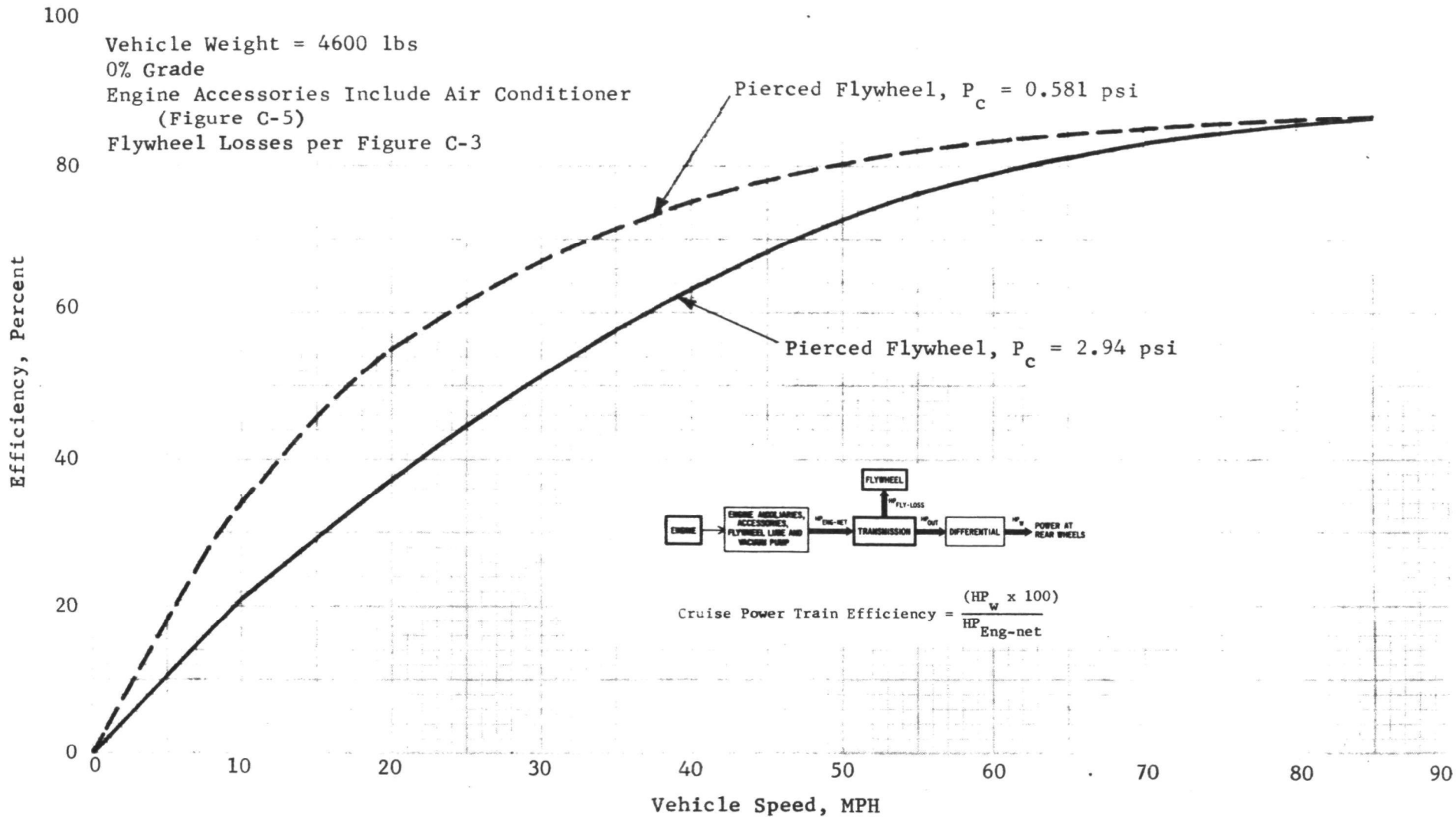

Fig. C-11 Cruise Power Train Efficiency of Flywheel/Hybrid Transmission

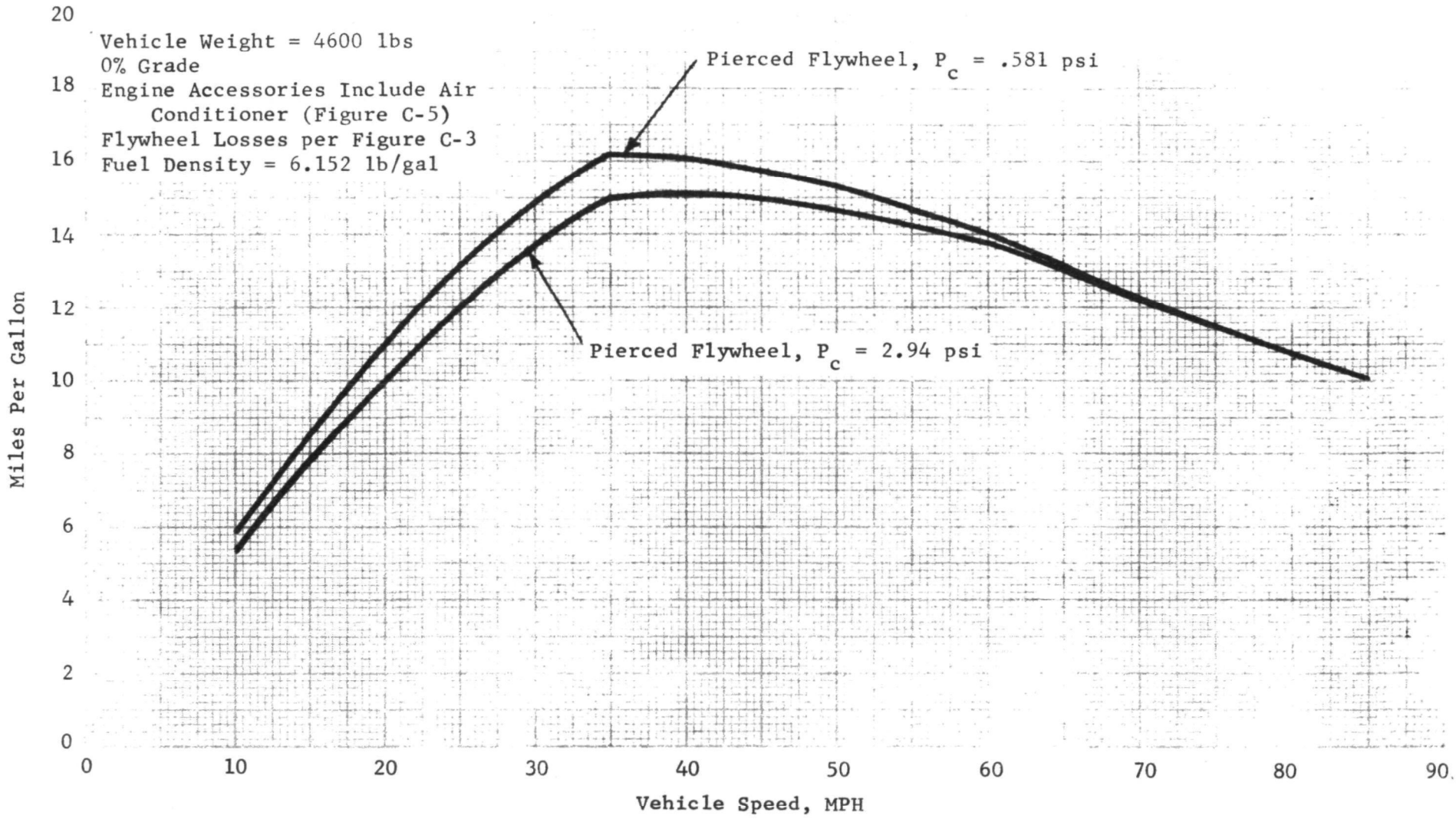

Fig. C-12 Fuel Economy of Flywheel/Hybrid Propulsion System at Cruise Power

Comparable steady-state cruise power performance calculations were made for a conventional propulsion system with a conventional automatic transmission and the same size IC engine (defined by Figure C-4). It was assumed on a level road at cruise power that the conventional automatic transmission was in first gear at up to 10 MPH, second gear at 15 MPH and in third gear from 20 to 85 MPH. Depending upon the particular characteristics of the transmission controls and their design settings, it is quite possible that the automatic transmission could be in third gear from 10 to 85 MPH at cruise conditions.

The resultant transmission efficiency calculated for the conventional automatic transmission is shown by Figure C-13. The affect on transmission efficiency of operating in various gears is clearly indicated. The corresponding fuel economy is shown by Figure C-14.

A comparison between the transmission efficiency of the flywheel/hybrid and conventional automatic transmissions is shown by Figure C-15. These results indicate that the hybrid transmission design presented herein should be more efficient than the automatic transmission particularly at cruise speeds from 20 to 40 MPH. Although flywheel losses tend to improve the efficiency of the flywheel/hybrid transmission as noted earlier, the hydromechanical (power-splitting) transmission design used will still exhibit better efficiency at low vehicle speeds even without flywheel losses.

Figure C-16 presents a comparison of power train efficiencies at cruise power. The affect of flywheel losses is clearly evident in the lower power train efficiency of the flywheel/hybrid transmission at low vehicle speeds. These results can be misleading since they do not indicate the relative effect upon engine performance and emissions.

A more important comparison is on the basis of fuel economy. Figure C-17 presents this comparison at cruise power in terms of miles/gallon. The comparable percentage change in fuel economy is then shown by Figure C-18 for two different flywheel losses. These results indicate that the flywheel/hybrid propulsion system will have a decrease in cruise fuel economy at low vehicle speeds

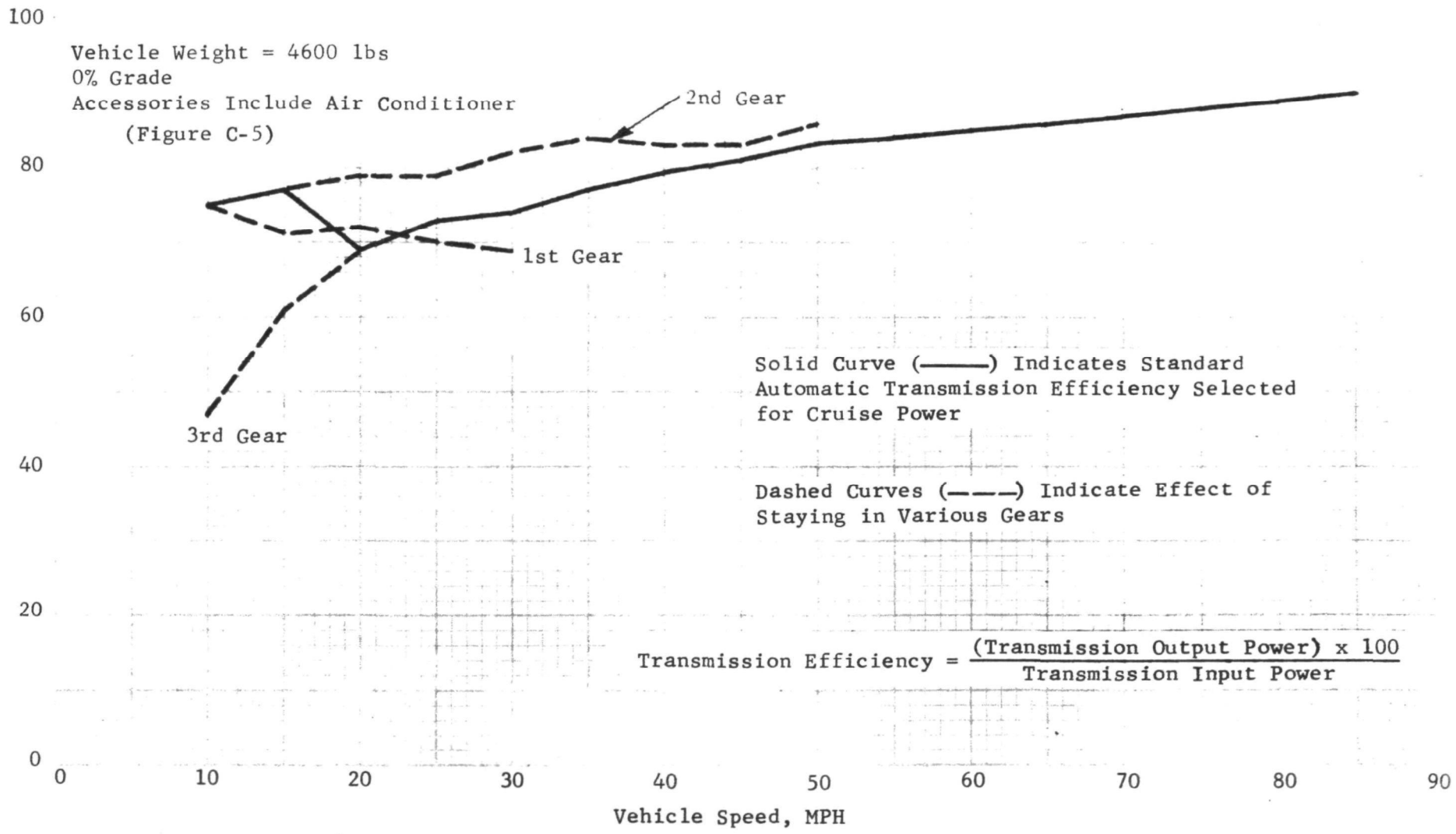

Fig. C-13 Transmission Efficiency at Cruise Power — Conventional Automatic Transmission

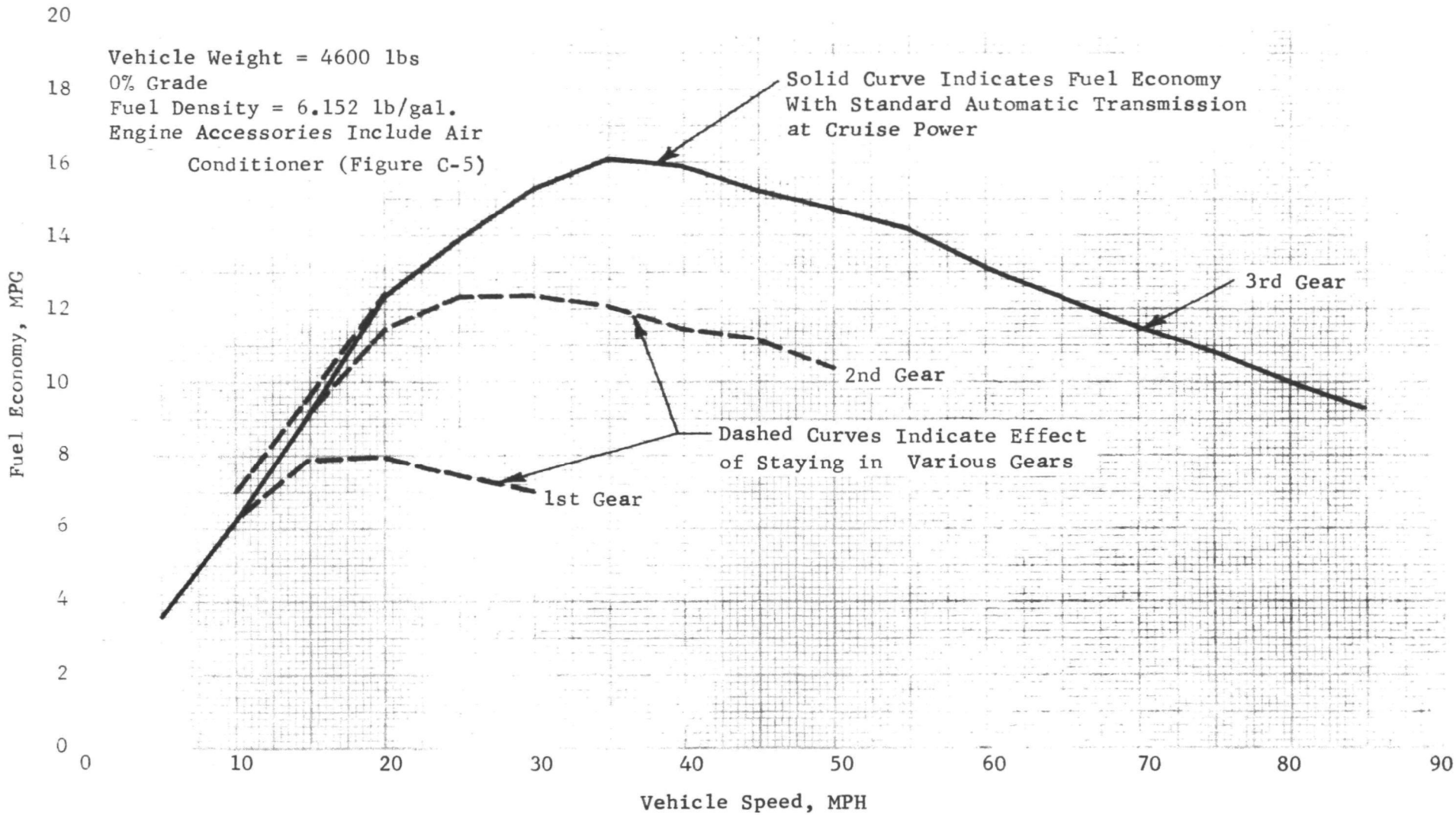

Fig. C-14 Fuel Economy at Cruise Power — Conventional Automatic Transmission (No Flywheel)

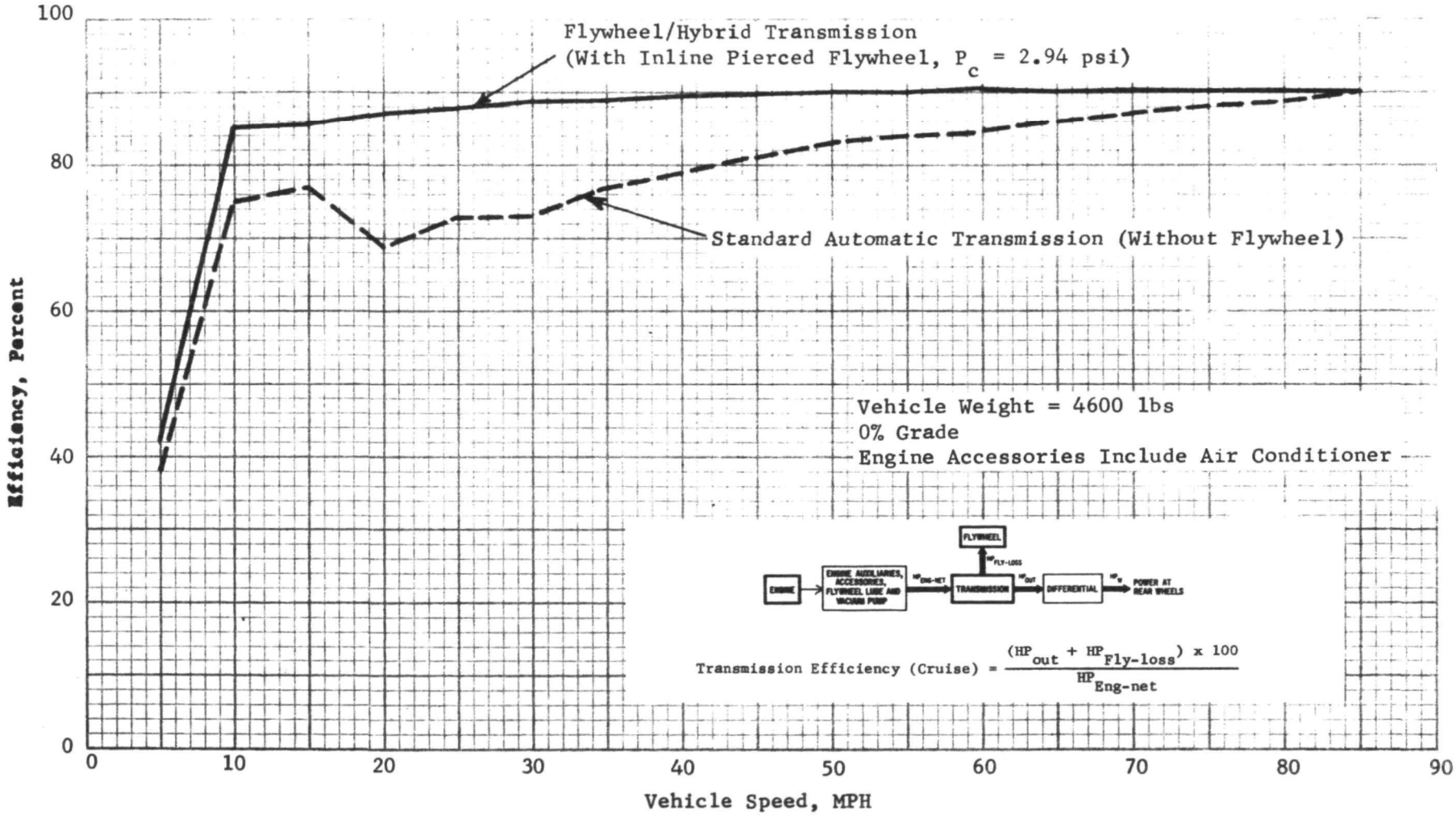

Fig. C-15 Comparison of Transmission Efficiencies at Cruise Power

MTI-12492

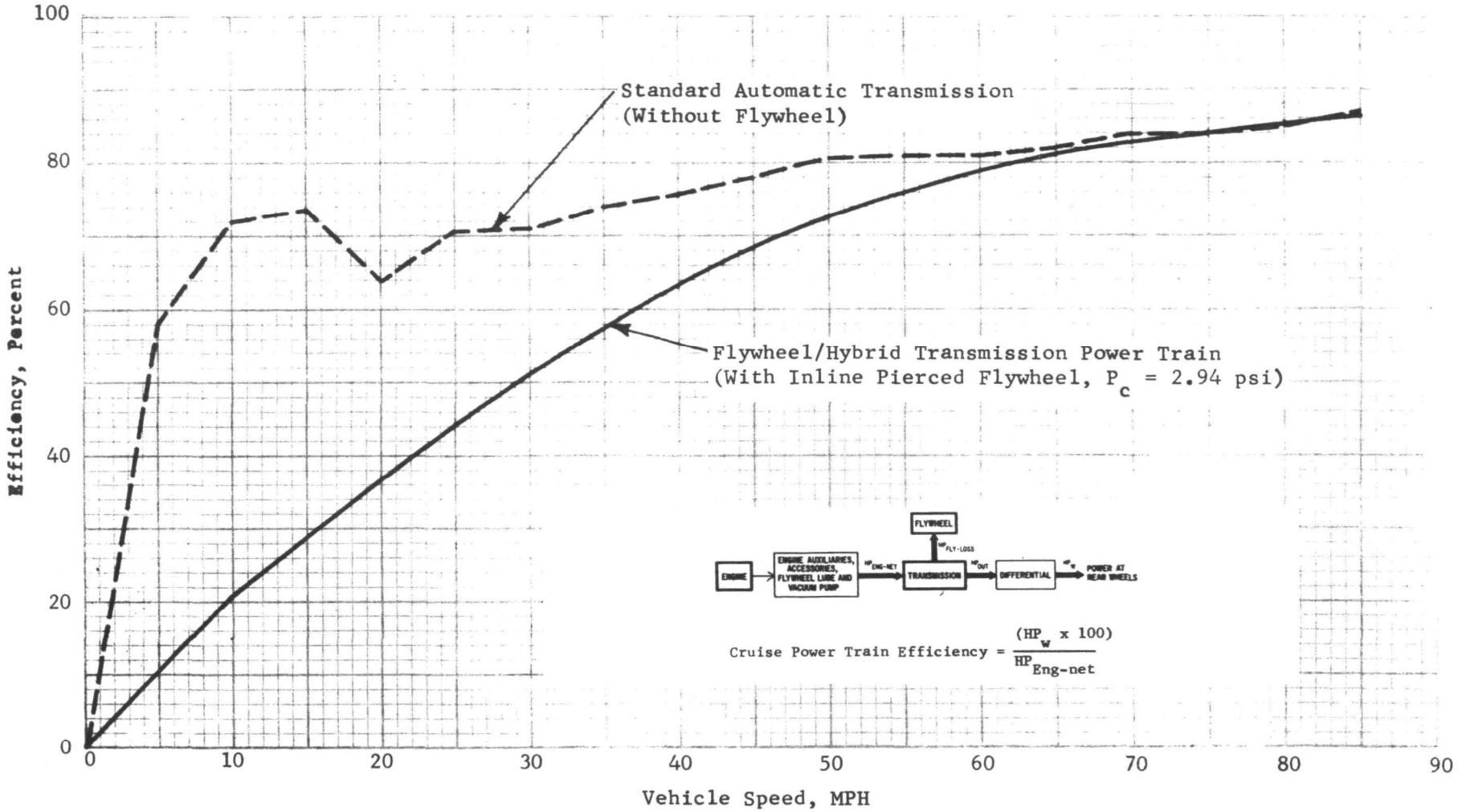

Fig. C-16 Power Train Efficiency Comparison at Cruise Power

MTI-12493

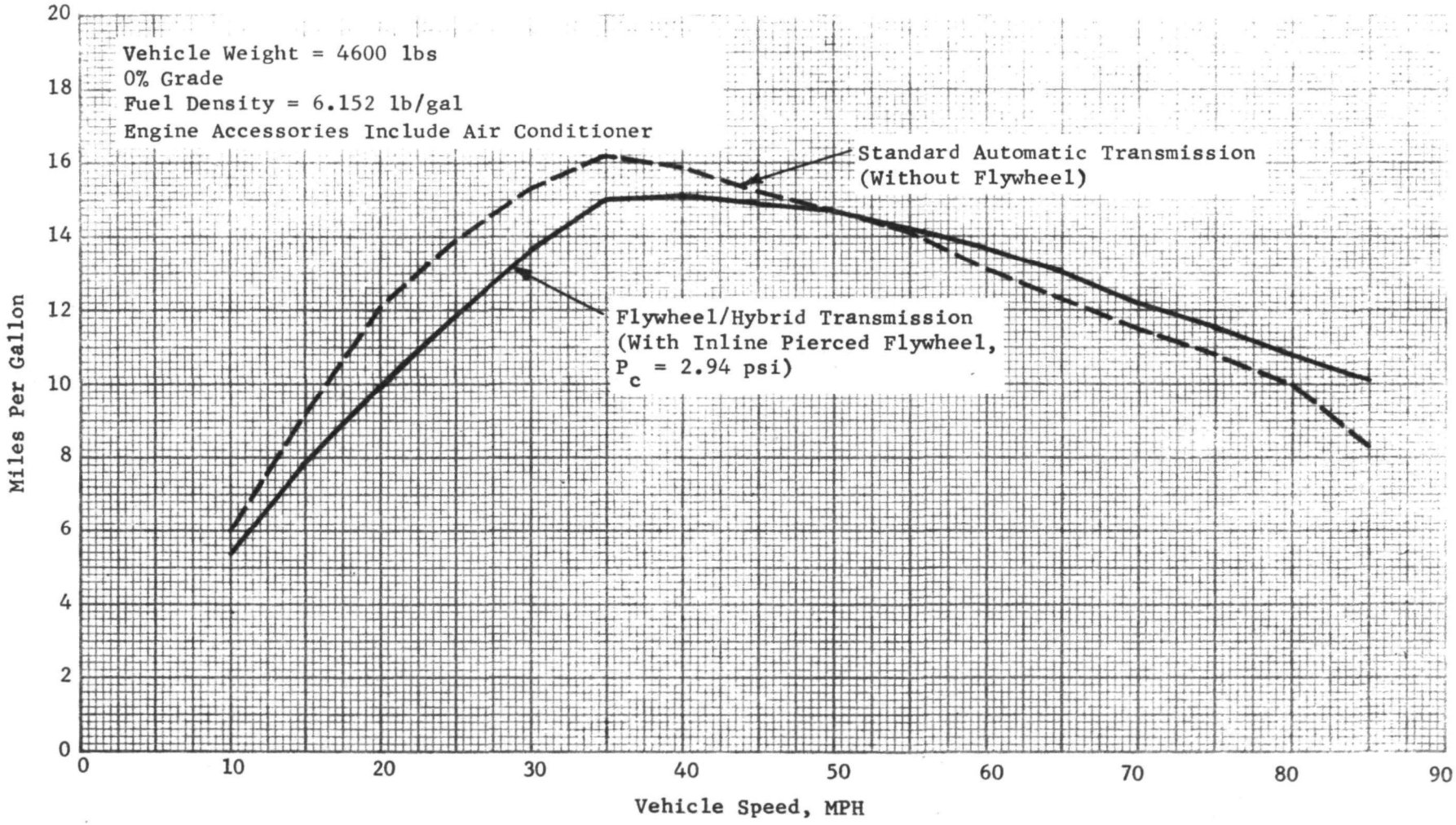

Fig. C-17 Comparison of Fuel Economy at Cruise Power

MTI-12494

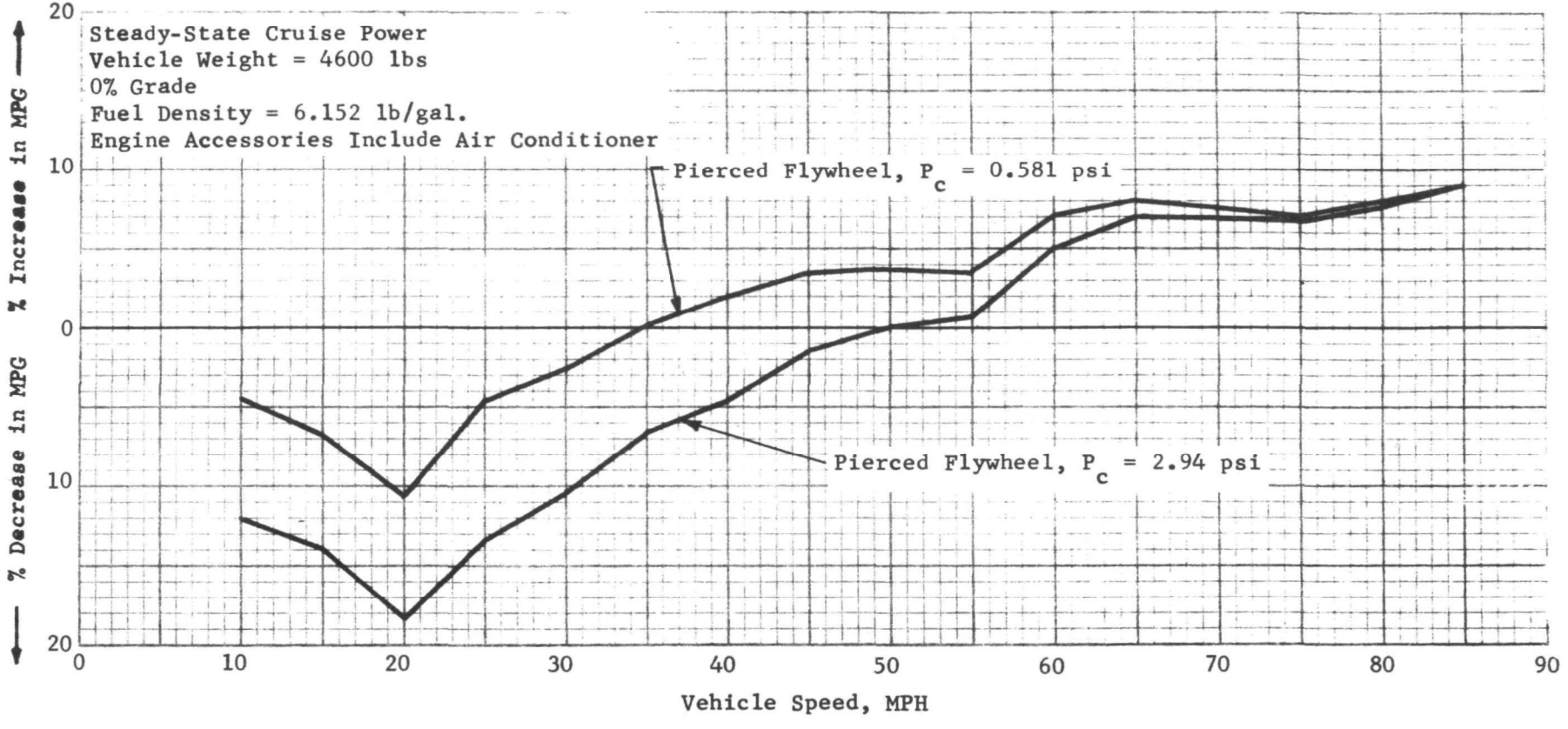

Fig. C-18 Percentage Change in Cruise MPG Compared to Conventional Automatic Power Train

MTI-12495

(typically encountered in urban driving) compared to a conventional propulsion system with an automatic transmission. The maximum decrease occurred at 20 MPH. This loss in fuel economy is due to flywheel losses. For the higher loss flywheel (Pc = 2.94 psi) the decrease in miles/gallon at 20 MPH was 18 percent. Reducing the flywheel power losses by a total of 57% (see Figure C-3 earlier) resulted in improved fuel economy, but it was still 10 percent less than the conventional system at 20 MPH. Thus, even with the improved performance capabilities of the variable ratio transmission (compared to the conventional automatic), a decrease in cruise performance at low speeds can be expected. At higher speeds, as shown by Figure C-18, an improvement up to nine percent in fuel economy was obtained since flywheel losses are minimal.

A comparison of fuel flow used at idle by the existing heat engine/conventional automatic transmission system and the heat engine/flywheel power-splitting transmission system was made. The heat engine/flywheel system uses approximately 18 percent more fuel. The increased fuel flow is a direct result of the higher idling speed for the flywheel system. The standard engine idles at 800 RPM, has an idling torque requirement of approximately 85 foot-pounds and has a fuel flow of 7.7 pounds per hour. The flywheel system idles at 1200 RPM, has a torque requirement of 52 foot-pounds and a fuel flow of 9.2 pounds per hour.

The idling speed for the flywheel engine was selected to provide sufficient engine horsepower to charge the flywheel within an acceptable time span. At the speed selected, approximately 40 engine horsepower is available to charge the flywheel. If the flywheel required a 20 percent makeup in energy this would take approximately 12 seconds.

Any trade-off that would lower the hybrid system idling speed would reduce the fuel flow and tend to equalize the idling performance of the two systems.

The flywheel/hybrid transmission was designed to allow the engine to operate at minimum SFC whenever possible. Operation at minimum SFC was considered desirable in order to minimize emissions. For the engine size specified by EPA/AAPS (see Figure C-4) it was difficult to have engine operation at minimum SFC at low

engine power requirements and: 1) transmit engine cruise power to the rear wheels (and flywheel) at maximum efficiency; 2) have a minimum weight transmission; and 3) provide the capability of charging the flywheel at zero vehicle speed.

A comparison of the engine SFC at cruise power is shown by Figure C-19. In general, the flywheel/hybrid propulsion system tended to result in operation closer to minimum SFC than the conventional system. At 10 MPH, a decrease of 20 to 32 percent in engine SFC was obtained dependent upon flywheel losses. Operation at improved engine SFC was due to flywheel losses (more engine power required) and the design features of the transmission.

The resultant engine horsepower required for the flywheel/hybrid propulsion system at cruise conditions is given by Figure C-20. Also shown is the engine horsepower required by a conventional system with a conventional automatic transmission. Recall that flywheel losses and accessory losses were given earlier, the maximum engine power at 3800 RPM is approximately 177 horsepower. Thus, the IC engine could have been reduced approximately 26 percent in size for the flywheel/hybrid propulsion system and still meet the EPA/AAPS design goals. Reducing flywheel losses will have little effect on the sizing of the IC engine since at 70 MPH, the flywheel losses are relatively small.

It is important to point out that the reduced engine size required for the flywheel/hybrid propulsion system could, perhaps, result in better cruise performance than the results presented earlier. Further analysis is required in order to determine whether such an improvement is possible.

3. Dynamic Performance

Before discussing the dynamic performance of the flywheel/hybrid propulsion system, some fundamental differences between that system and a conventional automotive propulsion system should be clarified. The basic concept of the flywheel/hybrid system is that the flywheel supplies the kinetic energy to accelerate the vehicle, and the heat engine only supplies that power required to

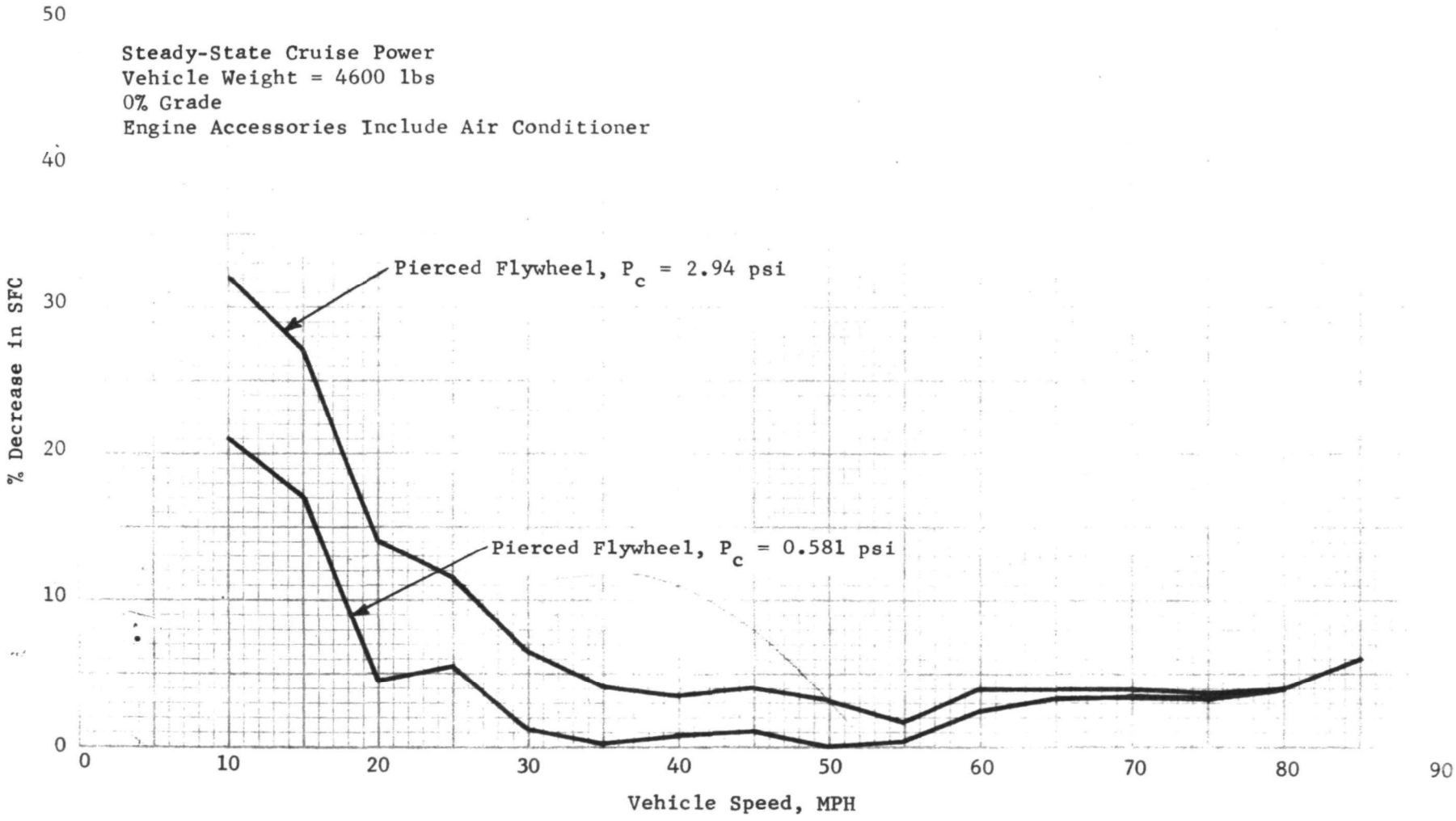

Fig. C-19 Percent Decrease in Cruise SFC Compared to Conventional Automatic Power Train

MTI-12549

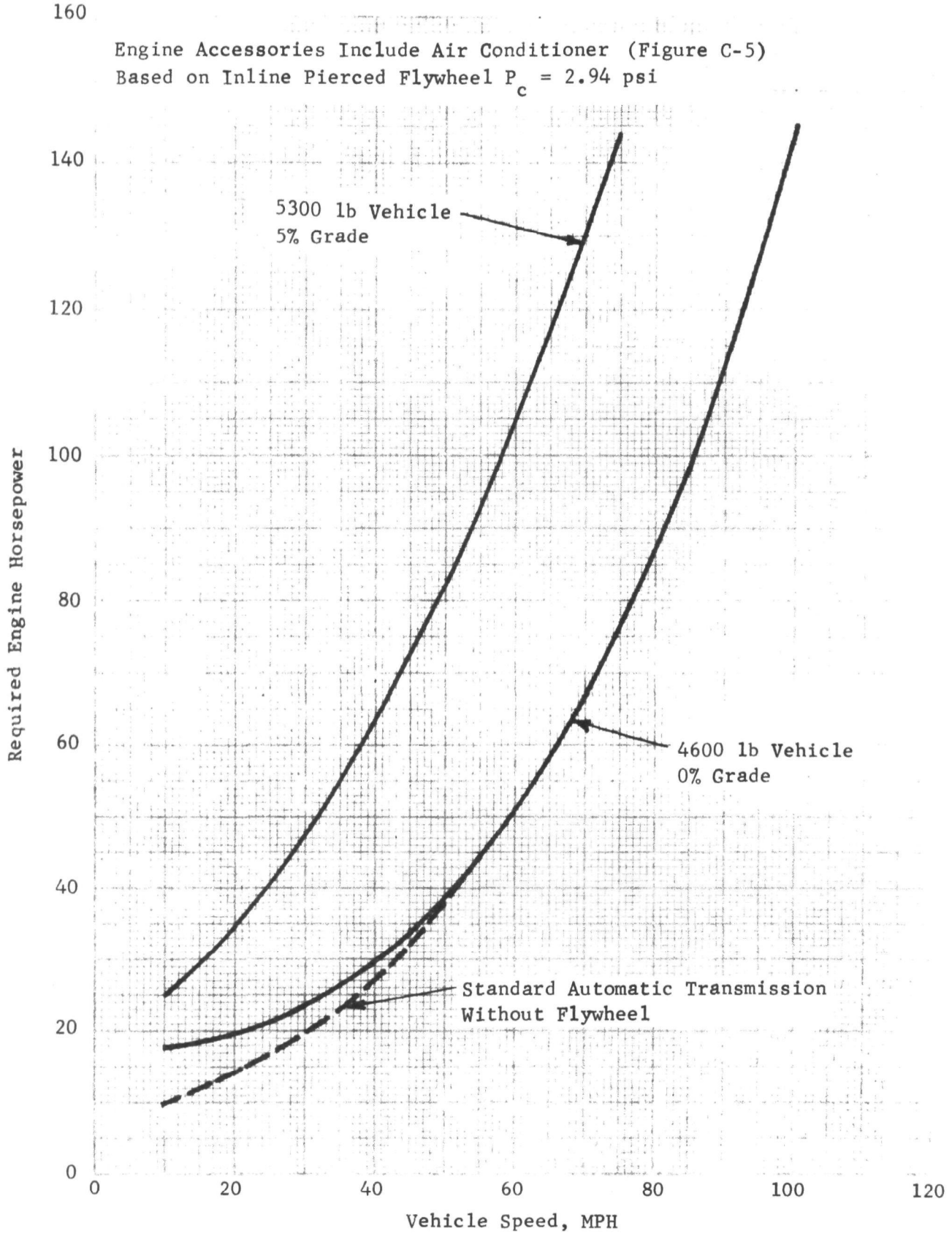

Fig. C-20 Required Engine Power at Cruise Conditions

provide steady-state power and to overcome system energy losses. These losses include accessory, auxiliary, flywheel, transmission, air drag, and rolling resistance losses. Since the torque (or power) developed by the flywheel is proportional to its angular acceleration, the flywheel produces no useful power at steady-state conditions $\left(\frac{dn}{dt} = 0\right)$. Unlike a conventional automotive propulsion system, it is not feasible to obtain steady-state performance maps over the complete output power spectrum of the flywheel/hybrid propulsion system. This means that maximum torque output can only be achieved when flywheel and vehicle speed are changing as a function of time.

Furthermore, the dynamic response of a flywheel/hybrid propulsion system for a given engine, flywheel, and vehicle is primarily governed by the transmission design characteristics and its associated controls. Design characteristics such as the speed ratio are particularly important. With variable ratio transmissions, the time rate of change of ratio can have a significant affect upon system response during accelerations or decelerations.

Two types of vehicle operating modes can be considered in order to evaluate the dynamic performance of the flywheel/hybrid propulsion system:

1. Maximum Performance ..... defined by EPA/AAPS Design Goals (1).

2. Driving Cycle Performance ..... defined by DHEW driving cycle.

Analytical determination of realistic performance characteristics for either of these modes requires solution of torque and speed relationships in the time domain. Comparison to a conventional propulsion system requires a similar approach to be followed for the conventional system (6).

Since the scope of this study was limited to determining transmission efficiency, dynamic performance analysis was limited to the maximum power mode. This is a "worst case" condition for the transmission with respect to efficiency of power transfer from the engine and flywheel. Also, it demonstrates the maximum capabilities of the design.

The dynamic results for the flywheel/hybrid propulsion system under the maximum power mode were then cross-plotted versus vehicle speed so that a comparison could be made to maximum power performance of a conventional system with a standard automatic transmission.

As pointed out elsewhere in this report, the desired maximum power capability of the transmission determines the size (capacity) of the hydraulic units in the transmission. Hydraulic units were sized to meet the tractive effort requirements given earlier by Figure C-1. Once a particular size is selected, the maximum power throughout is limited by the pressure relief valve settings in the hydraulic units. Thus, control characteristics in the secondary transmission (governing the flywheel) must be selected so as to call for control power outputs that do not exceed, except for very short durations, the maximum capability of the hydraulic units in the secondary transmission. In addition, the control characteristics must provide for stable operation of the complete system with desired engine performance.

Pertinent characteristics of the full-range digital simulation of the propulsion system used to determine dynamic performance were as follows. The full-power transient was initiated by a step input in the driver pedal commanding a speed change from 8 to 85 MPH.* Vehicle weight was 5300 pounds (per EPA/AAPS Design Goals) operating on a level road. Engine accessory horsepower was given earlier by Figure C-7. The flywheel was a pierced configuration operating at a chamber pressure of 2.94 psi with an inertia of 0.49 ft-lb-sec^2. The IC engine used was defined earlier by Figure C-4. An engine inertia of 0.0568 ft-lb-sec^2, typical for that size engine, was assumed. Other inertias

*A lower speed of 8 MPH was selected to safely avoid operation at lesser speeds where the model was invalid.

included in the dynamic model were the vehicle rear axle and differential, vehicle wheels, and major rotating components in the transmission.

The control system was the open loop scheduling or Type B (see Section VI-D) setup for TKE with the flywheel speed varying between 24,000 RPM and 10,000 RPM for vehicle speeds of 0 to 85 MPH, respectively. Control gains and rate limits were adjusted in order to:

1. Provide a reasonable level of performance.
2. Avoid wheel slip (which was not simulated).
3. Stay within maximum power limitations of the transmission.
4. Provide engine power to make up for system losses.
5. Stay within control stability limits.

Additional tuning and optimization of the system controls would have easily resulted in improved acceleration characteristics of the vehicle.

Figure C-21 presents the resulting vehicle and flywheel speed transients for 36 seconds after the step change in driver pedal. The vehicle reached 60 MPH in 14 seconds and 80 MPH in 26 seconds. This was slightly below the EPA/AAPS goal of 0 to 60 MPH in 13.5 seconds. As previously mentioned, further tuning of the controls (closer to wheel slip) would have resulted in achieving the goal without altering the propulsion system. Since the average power developed at the wheels from 25 to 80 MPH was 120 HP and within the limits specified by LMSC (see Figure C-1) for that speed range, these data were considered representative of a full power transient.

As shown in Figure C-21, flywheel speed reached its minimum value (10,000 RPM) prior to vehicle speed reaching 85 MPH. This was caused by the control system in order to minimize excessive "undershoot" in flywheel speed. Lowest flywheel speed was 9891 RPM at 32 seconds. Thus, the maximum "undershoot" in flywheel speed was only 1.1 percent less than the final steady-state speed. This demonstrates quite acceptable control performance.

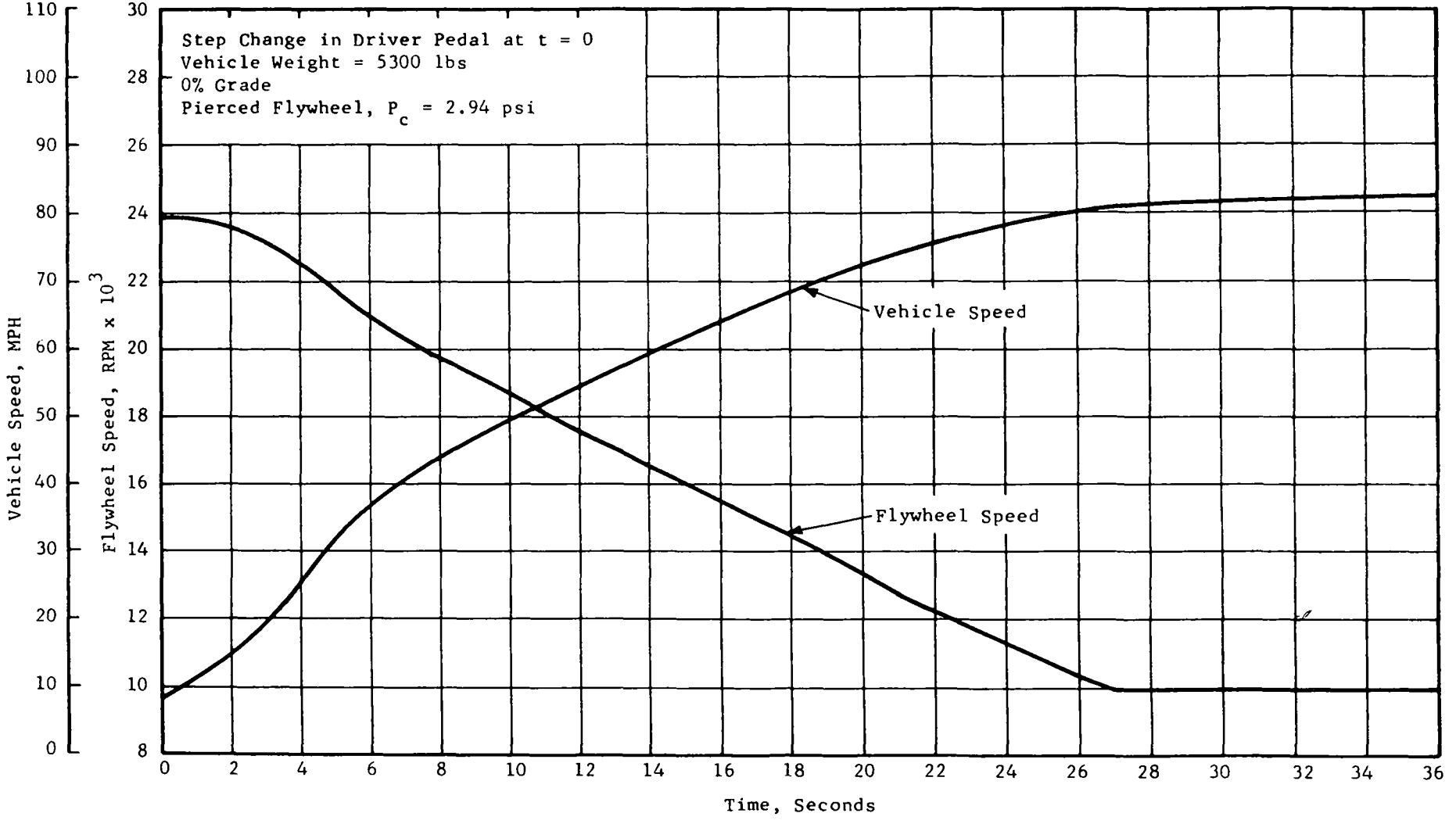

Fig. C-21 Engine and Flywheel Speed During Full-Power Transient

MTI-' 514

Referring again to Figure C-21 it can be seen that at 36 seconds (end of computer run) vehicle speed is within three percent and gradually approaching its steady-state value of 85 mph. Final steady-state conditions would have been reached in approximately another 14 seconds. This type of damped response is desirable since it shows that as the system transient settles out, there are no undesirable oscillations in vehicle speed.

The change in energy developed by the flywheel (less losses) and engine during the transient is presented by Figure C-22. Table C-1 presents an energy balance for the transient for a vehicle speed change from 8 to 80 mph. The latter speed was selected since the flywheel contribution was minimal at higher speeds as shown by Figure C-22. These results indicate that during the full power transient:

1. Total energy transferred to the rear wheels was 2845 horsepower-seconds or 74 percent of the input energy from the flywheel and engine (3852 horsepower-seconds). If accessory power is subtracted, 84 percent of the input energy is transferred to the rear wheels.

2. The transmission and rear axle (power train) losses were 12 percent (475 horsepower-seconds) of the input energy. This resulted in an effective power train efficiency of 86 percent calculated as follows:

$$\text{Power Train Eff} = \frac{2845 \times 100}{2845 + 475} = 86\%$$

   Dividing by the rear axle efficiency (96 percent) results in a transmission efficiency of 89.5 percent on an energy transfer basis. Thus, the transmission under full power transient conditions transferred energy to the vehicle wheels at a relatively high efficiency.

3. Although control settings were not optimized, the engine supplied only 13 percent less energy than it should have in order to follow ideal TKE control; the change in vehicle kinetic energy was 90 percent of the change in flywheel energy. This can be seen by noting in Table C-1 that the engine supplied 1576 horsepower-seconds or 41 percent of the input energy required. For perfect TKE control, the engine must supply the total energy input minus the vehicle change in kinetic energy or 3852-2047 = 1805 horsepower seconds. Similarly, the flywheel change in kinetic energy was 2276 horsepower-seconds, while the vehicle change in kinetic energy was only 2047 horsepower seconds.

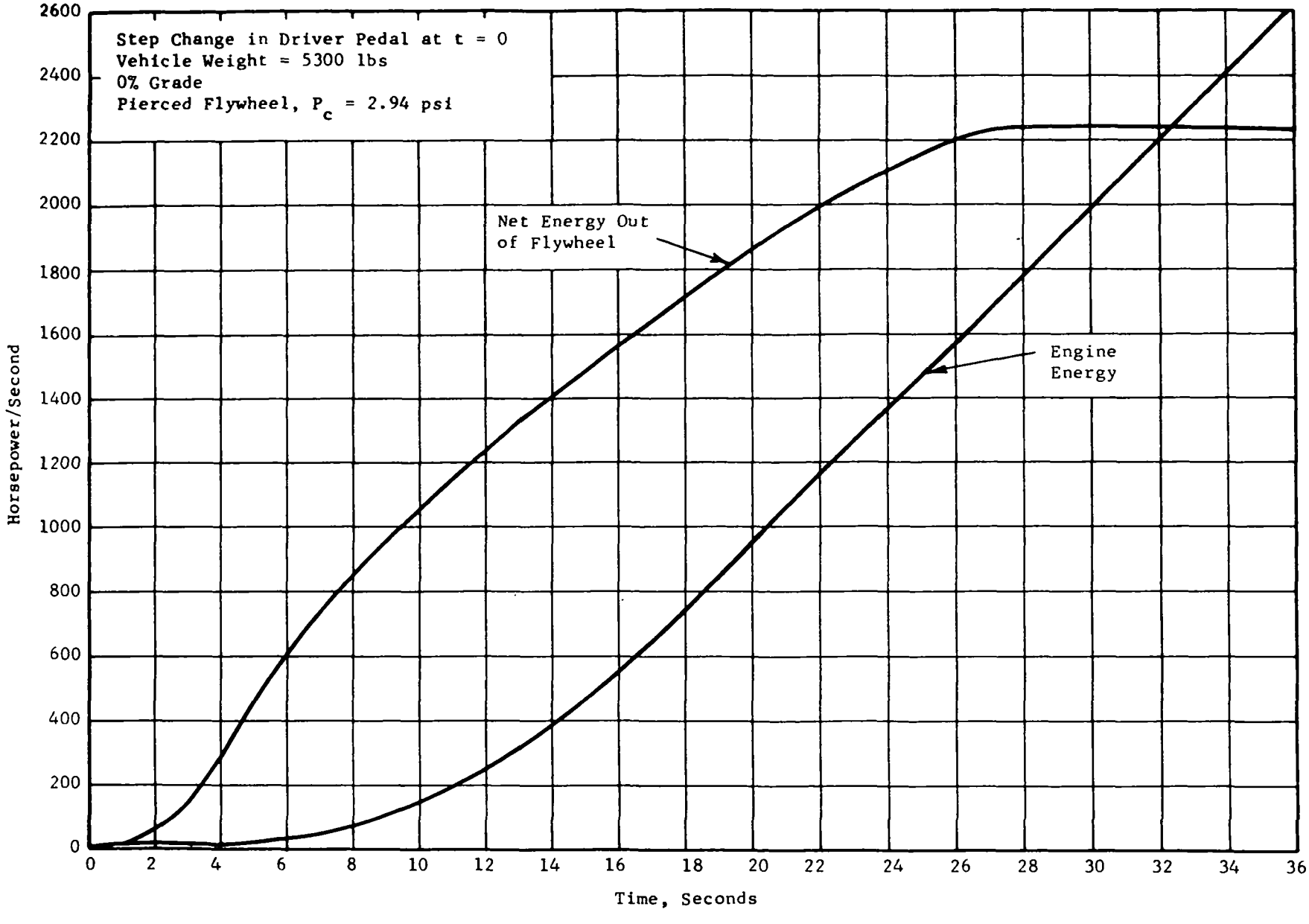

Fig. C-22 Change in Energy Produced by Engine and Flywheel During Full Power Transient

MTI-12501

TABLE C-1

Energy Balance for Full-Power Transient From 8 to 80 mph

Description	HP-Sec	Percent
Change in Vehicle Kinetic Energy	2047	53
Change in Engine Kinetic Energy	7	≈ 0
Flywheel Losses	76	2
Road Resistance & Air Drag Losses	798	21
Accessory Losses	449	12
Transmission & Rear End (power train) Losses	475	12
	3852	100%
Change in Flywheel Kinetic Energy	2276	59
Change in Engine Energy	1576	41
	3852	100%

These results indicate the system approximated TKE control fairly close. Further adjustments in control should provide somewhat better performance.

4. The combined energy from the flywheel and engine was 3852 horsepower seconds (800 watt-hours) with the flywheel supplying 59 percent of the energy required and the engine furnishing the remaining 41 percent. These results imply that for level road operation, it would have been possible to reduce the engine size roughly 50 percent, with some margin, if it were not necessary to meet EPA/AAPS steady-state design goals for climbing a five percent grade as discussed earlier.

Consider now the resultant transmission efficiency as a function of vehicle speed during the full-power transient. Figure C-23 presents these results from 10 to 80 MPH. The lowest efficiency, 78 percent, occurred at approximately 25 MPH where the primary transmission shifts range. Efficiencies above 90 percent were obtained at higher vehicle speeds. As noted earlier, the average efficiency during the full-power transient was 89.5 percent.

Before presenting a comparison in performance to a conventional system employing a conventional automatic transmission, the method used to calculate the performance of the conventional system under full-power conditions is summarized as follows. The engine, defined earlier by Figure C-4, was assumed to operate at maximum horsepower. The automatic transmission under full-power conditions was in 1st gear from 0 to 25 MPH, 2nd gear from 30 to 55 MPH, and 3rd gear from 60 to 85 MPH. Engine accessory losses were as defined earlier by Figure C-5 and included air conditioning. The resulting wheel horsepower developed as a function of steady-state vehicle speed was approximately equivalent to that obtained for the flywheel/hybrid system during the full-power transient.

The resultant comparison of transmission efficiencies as a function of vehicle speed is presented by Figure C-24. These results indicate that the conventional transmission had better full-power efficiency than the flywheel/hybrid transmission at speeds between 15 and 30 MPH and at speeds over 65 MPH. For example, at 25 MPH the hybrid transmission efficiency was 13 percent lower than the efficiency of a conventional transmission. This lower efficiency, which occurs at the range switching point, is characteristic of power-splitting transmission and is similar to the gear-shift points of a conventional transmission.

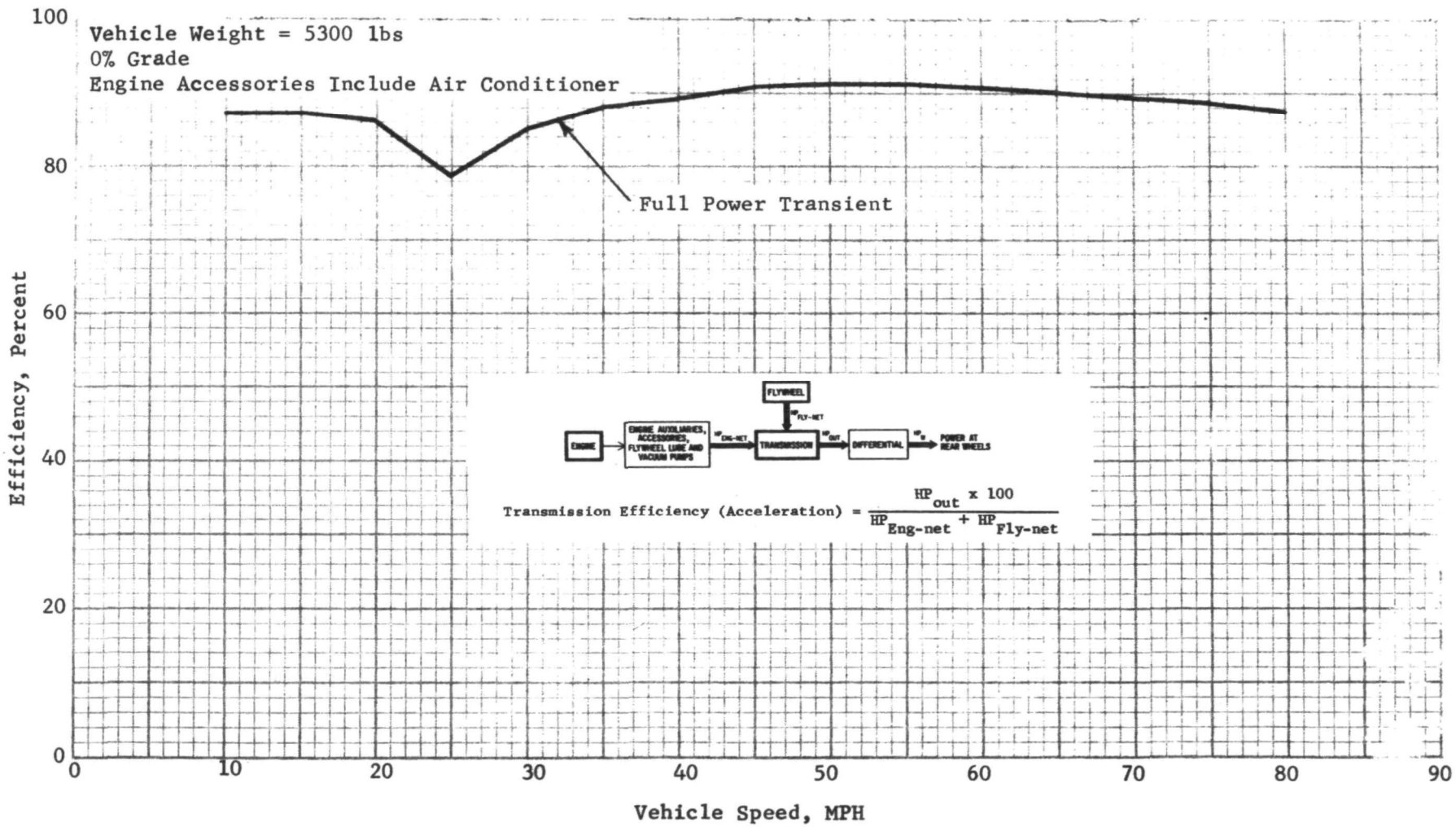

Fig. C-23 Flywheel/Hybrid Transmission Efficiency at Maximum Power

MTI-12544

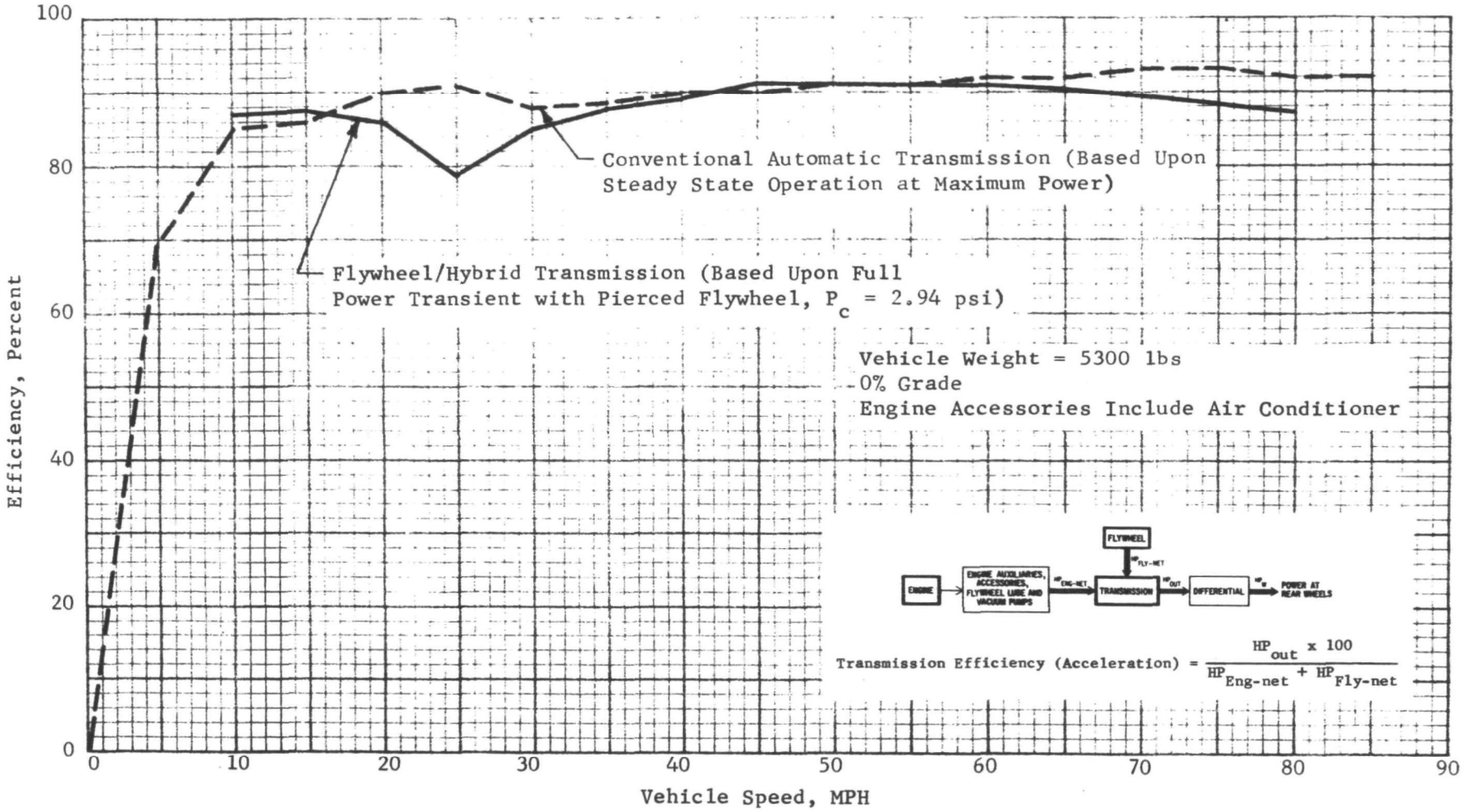

Fig. C-24 Comparison of Transmission Efficiencies at Full Power

MTI-12541

At lower power levels, range switching occurs at lower vehicle speeds. For example, under cruise power conditions range switching occurs at 11 mph. Thus, under normal driving cycle conditions and reduced power levels the lower efficiency at range switching should be comparable to the efficiency of a conventional transmission.

A more important performance comparison is fuel economy. Figure C-25 presents this comparison. At full power, the advantage of the flywheel/hybrid system is maximized and this is reflected in the dramatic improvement in miles/gallon shown by Figure C-25. For example, at 25 mph vehicle speed the hybrid system fuel economy was approximately 10 MPG compared to 2 MPG for the conventional system — an improvement of 400 percent even with somewhat lower transmission efficiency.

Before discussing a comparison of engine operation, it is helpful to consider some of the operational aspects of the flywheel/hybrid transmission in more detail during a full-power acceleration from a low vehicle speed. A step change in the driver's command pedal, initiates the ratio control in the secondary transmission to decrease flywheel speed and the ratio control in the primary transmission moves to give the maximum possible ratio (torque multiplication). Since engine fuel flow is scheduled to produce little engine power at low speeds (in order to approximate TKE control), the engine fuel flow is only increasing gradually as a result of the step change in driver pedal. Recalling that the engine and flywheel are linked together* by the secondary transmission ratio control (see Section VI-B), this results in a rapid increase in engine speed until the error signal in engine speed sensed by the primary control system starts the primary ratio to decrease. This can be seen by referring to Figure C-26 which presents the engine speed transient during the full power transient.

Prior to the transient, the engine was operating at a steady-state speed of 1400 rpm (selected idle during low speed cruise conditions in order to supply flywheel charging capability). As a result of the step change in pedal, the engine speed rapidly increased to 3500 rpm and was subsequently regulated by changing the ratio in the primary transmission at approximately 3200 rpm. Thus,

*This is done to allow flywheel charging as a result of deviations from TKE due to system losses during deceleration or application of mechanical braking.

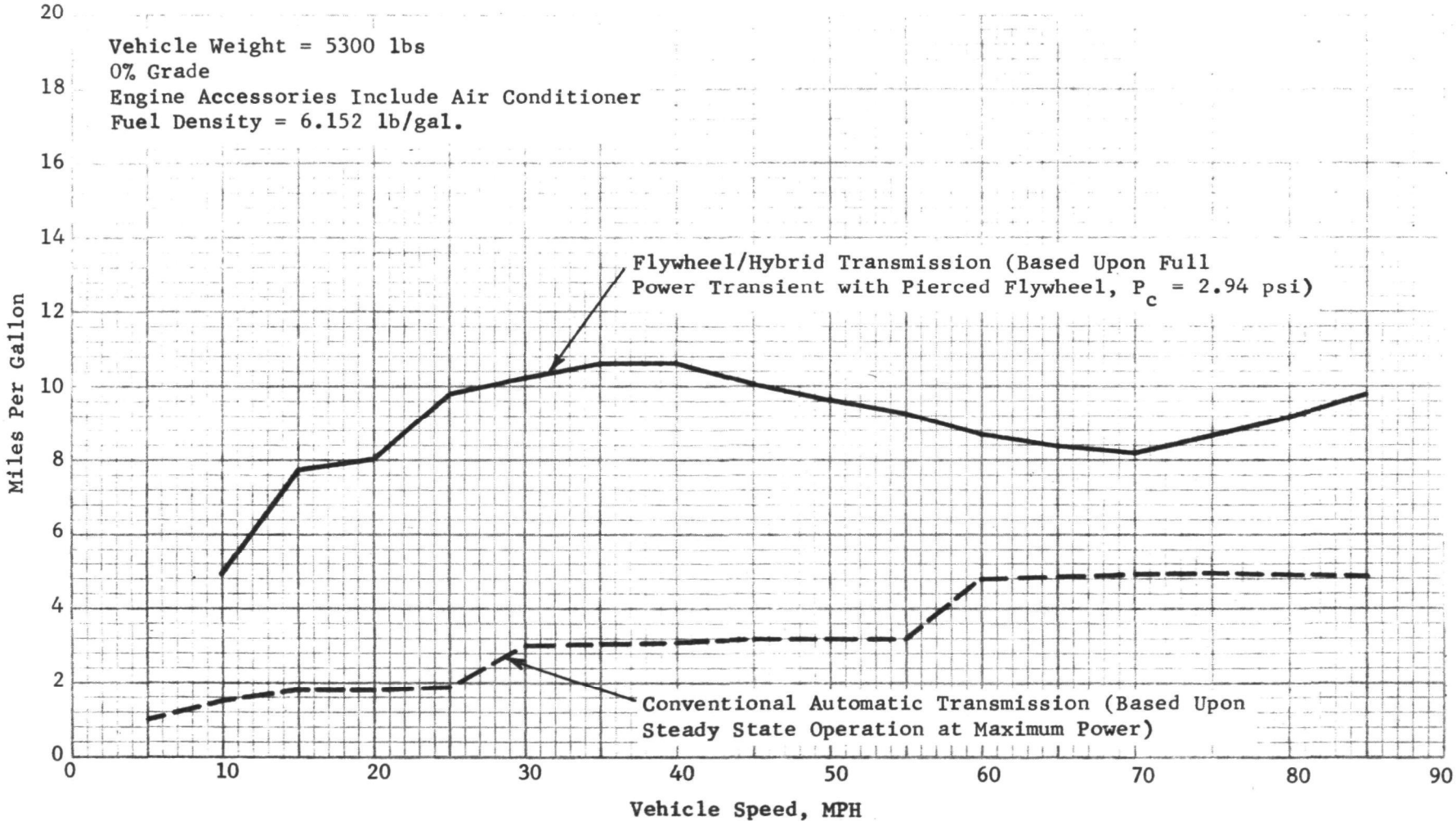

Fig. C-25 Comparison of Full Power Fuel Economy

MTI-12543

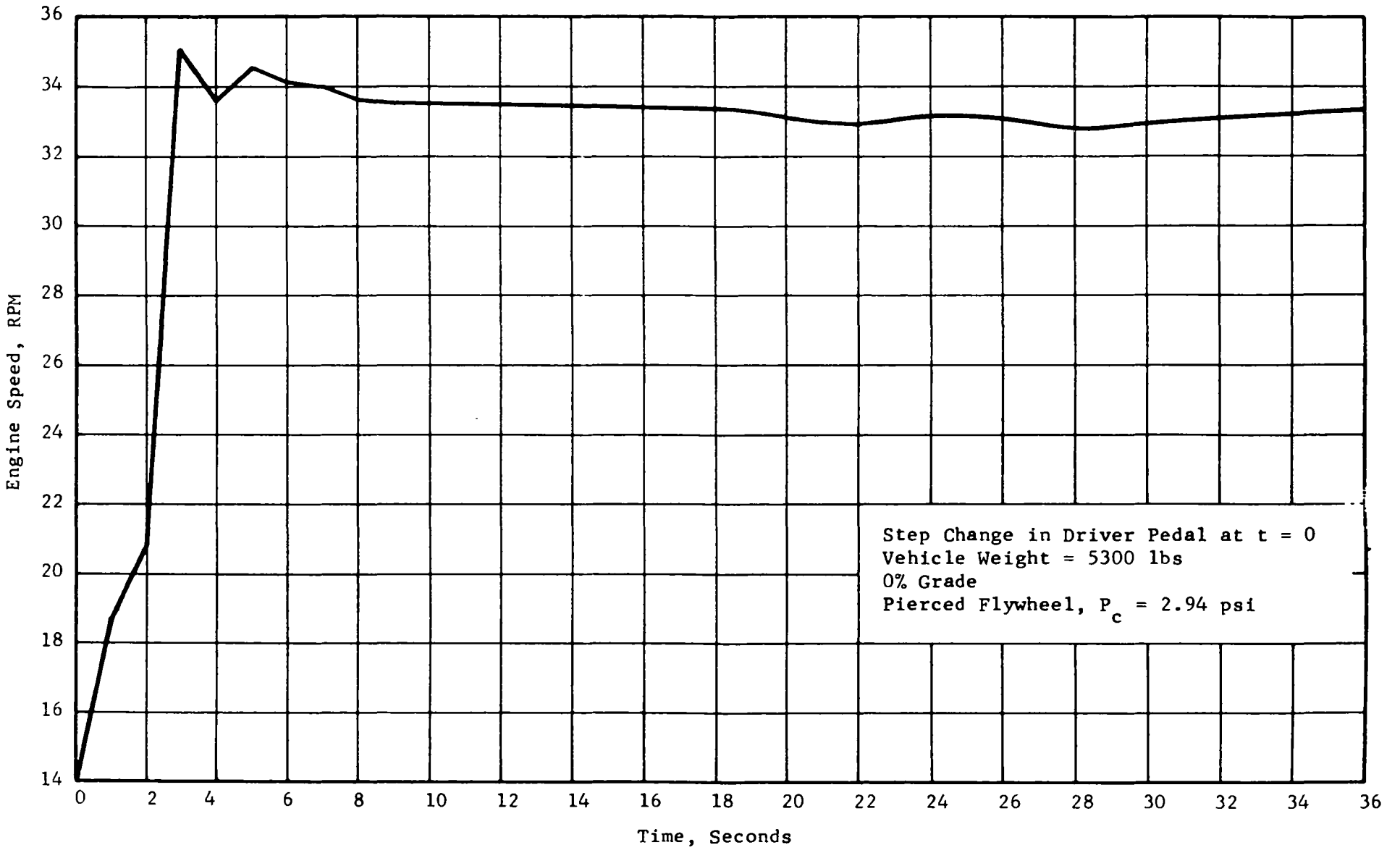

Fig. C-26 Engine Speed Transient During Full Power Transient

during most of the full power transient, the engine was operating at approximately a constant speed of 3200 RPM.

As a result, during the initial portions of the full-power transient (at very low engine power) the engine operated for about 3 seconds at a specific fuel consumption which was about 50 percent higher than a conventional system at full power. These results indicate that further improvements in the transmission and control design will be necessary in order to obtain engine operation at a better SFC during maximum acceleration. At lower acceleration rates (gradual changes in the driver pedal), more common to the DHEW driving cycle, the engine would tend to operate close to the minimum SFC operating conditions. As an example, with output power equivalent to a five percent grade, engine operation at minimum SFC was obtained for all vehicle speeds above 25 MPH.

As mentioned earlier, emission data were not available for the engine specified by EPA/AAPS. Thus, at this time no conclusion can be made with respect to the possible reduction in emissions for the flywheel/hybrid propulsion system during transients with this transmission.

4. Flywheel Charging Analysis

As part of the subject investigation it was of significance to determine what magnitude of charging times would be expected for the system. In order to accomplish this, it was assumed that there was a fixed ratio between the engine speed and the flywheel speed. This would imply that the hydraulic elements were not taking part in the charging cycle and that the charging was directed through the gearing with the ring gear held stationary. The inertia of the flywheel was referred to engine speed and the torque available for acceleration was determined from the engine performance map which related horsepower and speed. Knowing torque and reflected inertia, the average rate of accelerating could be determined. The acceleration and the speed increment were then used to establish the time required between speed steps.

The subject calculation was made for charging at minimum SFC as well as charging at maximum engine horsepower. Two end points of engine speed were also considered, 3200 and 3800 rpm. The key results are summarized below.

TABLE C-2

Flywheel Charging Time

Condition	Engine Speed RPM	Time To Reach Idle Sec.	Time-Idle To Full Speed Sec.	Total Charge Time Sec.
Min. SFC HP	3200	2.2	42.7	44.9
Min. SFC HP	3800	2.2	37.7	39.9
Max. HP	3200	2.2	25.5	27.7
Max. HP	3800	2.2	22.9	25.1

SECTION D

CONTROLS DESIGN AND ANALYSIS

D. CONTROLS DESIGN AND ANALYSIS

This section presents: 1) an overview of the basic control approach; 2) a review of the constant total energy control constraint; 3) a discussion of the two control approaches considered; and 4) a detailed description of the implementation and operation of the selected control approach. Additional detailed analysis of the control system is contained in Appendix II - Stability and Analog Computer Simulation Analyses.

1. Basic Control Approach

The basic interrelationships of the engine, flywheel, transmission and vehicle are indicated in the block diagram of Figure D-1. The power paths of the engine, flywheel and vehicle are interconnected through the transmission. Allocating and directing of system power flow is established by the controls, which accept acceleration, deceleration and modal commands from the operator; engine, flywheel and output speed signals from the system; and provide throttle and ratio commands to the engine and transmission, respectively.

The overall transmission consists of two separately controlled split-path hydrostatic links: the Primary path, which establishes a given ratio between the engine and vehicle for optimum torque-speed loading condition of the engine in the steady-state; and the Secondary path which controls the direction and magnitude of power flow to and from the flywheel during vehicle velocity transients.

2. Constant Total Energy Constraint

As pointed out by LMSC (2), it is advantageous to maintain the flywheel charge by following the requirement that the total kinetic energy (TKE) of the system remains constant. In other words, the kinetic energy of the flywheel plus the kinetic energy of the vehicle equals a constant. This relationship is shown graphically in Figure D-2.

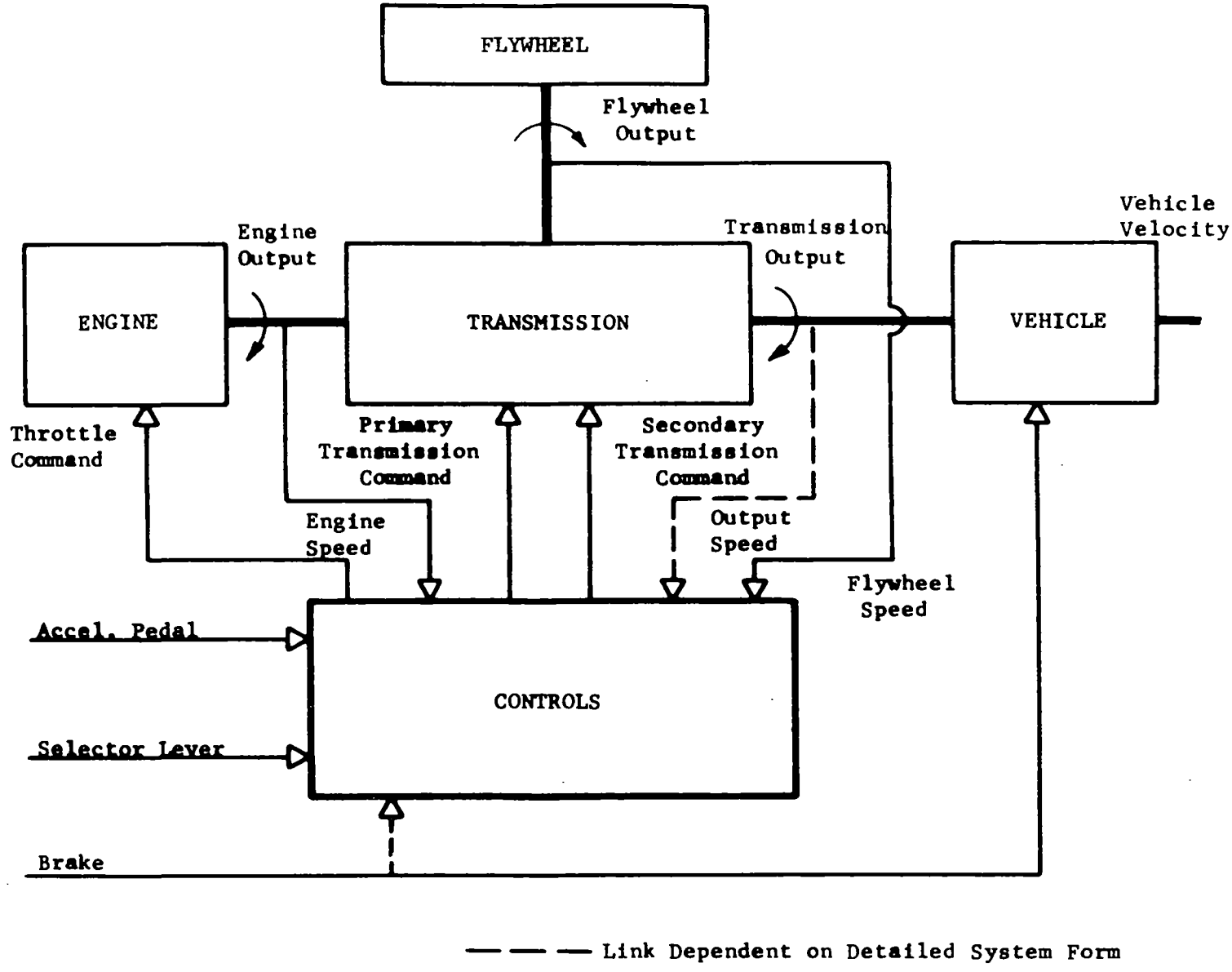

Fig. D-1 System and Controls Interrelationships

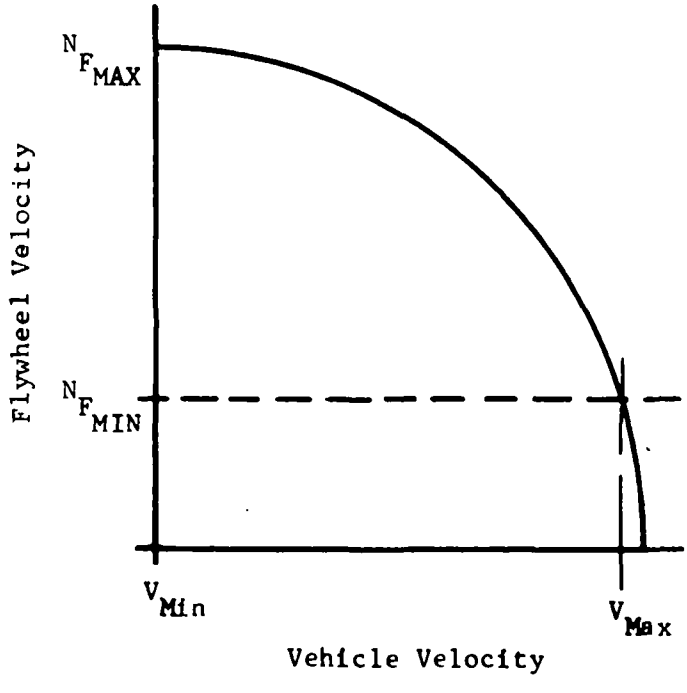

Fig. D-2 Flywheel-Vehicle TKE Velocity Locus

As indicated by the locus curve of Figure D-2, the maintenance of a constant TKE level implies that the flywheel velocity (hence, the "state of charge") will be maximum when the vehicle is stopped, and at its specified minimum when the vehicle is at its specified maximum velocity. Considered as an energy storage element, the flywheel has the highest charge level when the vehicle is in most need of energy for acceleration, and conversely is in best condition to accept energy from the vehicle for deceleration when the vehicle velocity (hence, charge) is highest.

To the extent that a constant TKE value is maintained on an instantaneous basis, the energy utilization and storage action of the system is constant and independent of load conditions and immediate past history.

In an ideal case where the road is horizontal and all losses (including those due to the transmission and dissipative braking) are zero, total system kinetic energy would inherently be preserved. Energy would be transferred back and forth between the flywheel and vehicle, and only the rate of transfer (hence, accel-decel rate of the vehicle) would be of concern.

In the real case, observation of the TKE constraint is complicated by factors such as:

(1) hills — which can introduce significant unscheduled system kinetic energy variations due to potential energy variations,

(2) dissipative braking — which can introduce rapid and significant unscheduled changes in system TKE level, and

(3) variable loading — as by the number of passengers and/or trunk load carried, or in pulling trailing vehicles, which can significantly alter the value of vehicle mass used in computing and implementing the TKE control scheme.

3. Control Approaches Considered

Two basic approaches to maintaining constant TKE were considered: one involving the measuring and utilization of vehicle velocity in an attempt to maintain system TKE by closed-loop feedback control techniques; and the second using an approximated value for vehicle velocity based upon driver pedal position in

an open loop scheduled manner.

Functional block diagrams for the two basic types of TKE control are shown in Figures D-3 and D-4, respectively.

The major basic difference between the two control configurations is the method of deriving a vehicle velocity value for controlling system total kinetic energy. The closed-loop (Type A) control of Figure D-3 uses a speed governor for measuring output shaft (hence, vehicle) speed. In the open-loop scheduled (Type B) control, output speed is approximated from pedal position by a cam-generated schedule.

The Type A configuration (Figure D-3) constitutes closed-loop control of TKE since actual vehicle velocity feedback is used, allowing a continuous comparison of flywheel and vehicle velocities to be made.

Due to the nature of the TKE computation ($TKE = 1/2\ J_F\ N_F^2 + 1/2\ M_V\ v^2$), the vehicle speed feedback is positive (regenerative) in that an <u>increase</u> in vehicle speed commands a <u>decrease</u> in flywheel speed, which in turn results in a further <u>increase</u> in vehicle speed.

It is important to point out that whenever wheel slip occurs, such as vehicle operation on road ice, these regenerative control effects could result in difficult driver control situations. Also, with this type of control approach, a destabilizing feel can occur when climbing or descending hills. In other words, as the vehicle proceeds down a hill, the resultant increase in vehicle velocity commands the flywheel to accelerate the vehicle. This situation would be disturbing to the driver.

Although control systems can be implemented with positive feedback loops, the magnitude of gain must be carefully restricted to be less than unity to prevent regenerative behavior. If gain is equal to or greater than unity, the system will be unstable in that, once the output is started in motion, it will continue to move until system saturation occurs, even without an input to the control loop. If the gain is too low, system transient response will be too slow and general performance poor. Thus, in principle there is little range for adjusting

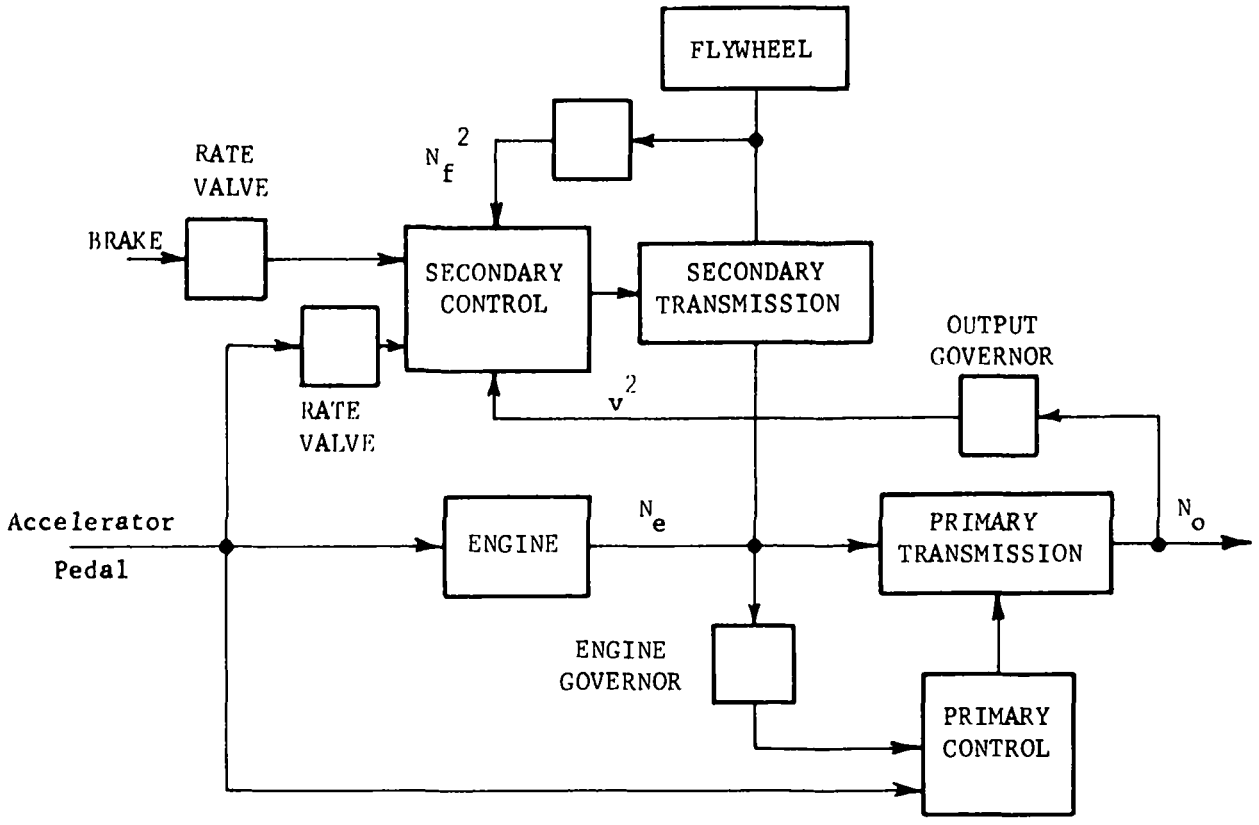

Fig. D-3 Closed-Loop TKE Control (Type A)

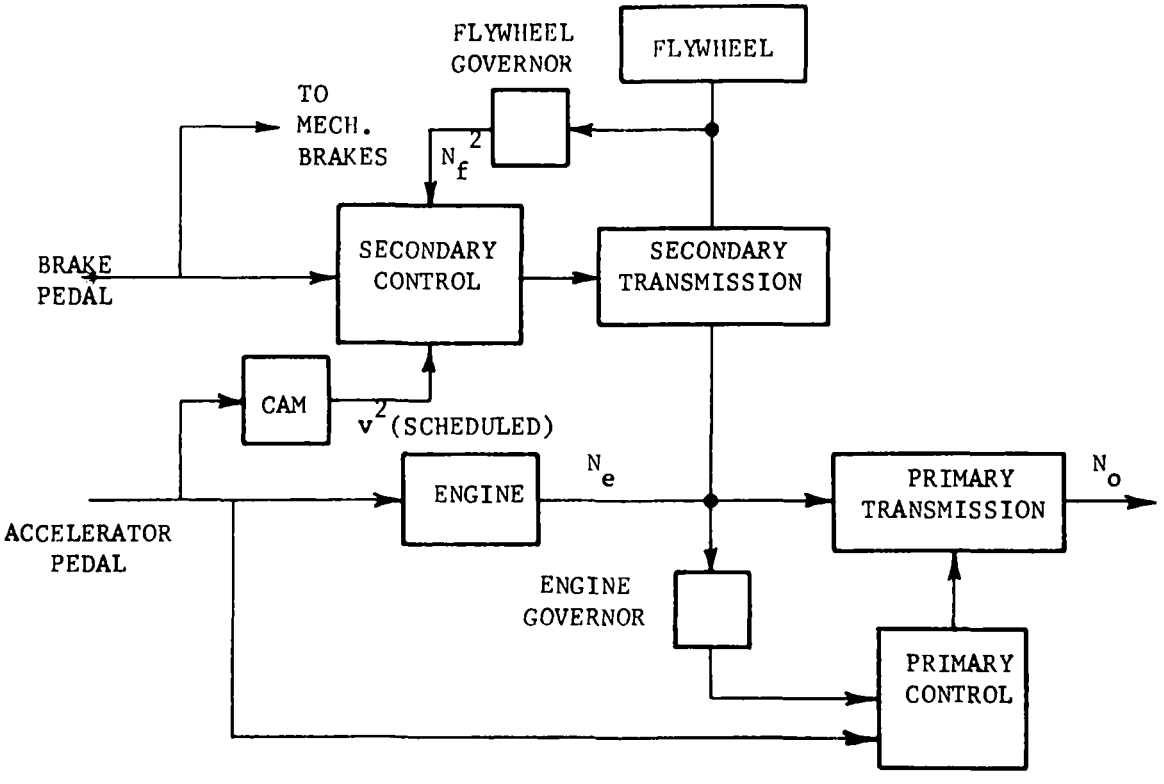

Fig. D-4 Open-Loop Scheduled TKE Control (Type B)

MTI-12527

the gain for performance considerations. From an implementation standpoint, gain variations can result in inadvertant regeneration with a resultant loss of control.

In the Type A TKE control, the sensitivity to gain normally experienced with positive feedback is complicated by the fact that the feedback velocity function is actually the square of velocity as required to follow the kinetic energy equation. This means that the effective feedback gain increases with vehicle velocity (is proportional to it) and, for stability, the gain must be restricted to less than unity at the highest velocity and allowed to degrade at lower velocities — resulting in significant variations in response with velocity.

As indicated by the curve of Figure D-2, the TKE equation as implemented by the Type A approach merely prescribes the locus of flywheel and vehicle velocity pairs for a given constant TKE value. The rate valves shown in Figure D-3 are required to provide transient signals to the secondary (flywheel) transmission to establish and direct the rate of energy flow to and from the flywheel for vehicle acceleration and dynamic braking.

With the Type B open-loop control approach (Figure D-4) the vehicle "kinetic energy" input for the TKE control function has the form of a well-defined command rather than an instantaneous feedback signal — eliminating the positive feedback effect inherent in the Type A approach. System gains can therefore be varied over a wider range to optimize performance and stability; and normal gain variations will not result in instability or loss of control. Also, the driver pedal tends to act like a torque command for the propulsion system which is analogous to present automotive systems.

As previously mentioned, the regenerative effect of the Type A approach would cause a destabilizing feel to hill climbing and descending; however, with the Type B control hills would not result in the flywheel influencing vehicle speed unless the driver commands it to.

As shown in Figure D-4, the Type B control is programmed by a cam driven by the accelerator pedal to provide a signal proportional to vehicle kinetic energy at specific values of grade, vehicle mass, wind load, friction, and engine

condition. A change in any of these parameters could cause the vehicle speed and thus the vehicle kinetic energy to be different from the programmed value. Thus, some compromise or selection of nominal condition is required in order to establish the optimum open loop schedule. This is illustrated by Figufe D-5 where the schedule was selected to provide constant TKE at zero grade. Operation at five percent grade conditions then results in lower flywheel speeds at the same vehicle velocity under steady-state conditions.

Figure D-6 shows the possible variation of TKE at different vehicle speeds due to the effect of changing vehicle mass and grade conditions. These results clearly indicate that as the load torque increases, the driver will have less available torque to accelerate the vehicle. A situation similar to that encountered with conventional propulsion systems.

Figure D-7 shows the change in flywheel speed which occurs in going up or down a hill, at constant vehicle speed with the Type B control. Flywheel speed decreases when going up a hill, thus providing some power for climbing the hill. Flywheel speed increases when going down a hill, thus transferring part of the vehicle potential to the flywheel. One of the significant advantages of the Type B control configuration is the use of flywheel power to aid in climbing short hills. Of course, the total kinetic energy will not remain constant during hill climbing. Upon reaching the top of a hill, the flywheel speed will be low. The accelerator pedal must be depressed farther, at a given vehicle speed, to provide power for accelerating the flywheel. After the flywheel is charged, the accelerator pedal can be returned to the normal position.

Upon reaching the bottom of a hill, the flywheel speed will be high. Therefore, dynamic braking cannot be used until the flywheel returns to the normal speed. If a stop must be made at the bottom of a hill, the brake pedal must be depressed far enough to engage the mechanical brakes. There will be a difference in brake feel under this condition. It should be possible to maintain constant brake pedal feeling by adding compensation to the brake pedal. However, this would add to the control complexity. Upon coming to a stop, flywheel speed will be at the correct value. An overspeed limiter prevents the flywheel from accelerating to a higher speed.

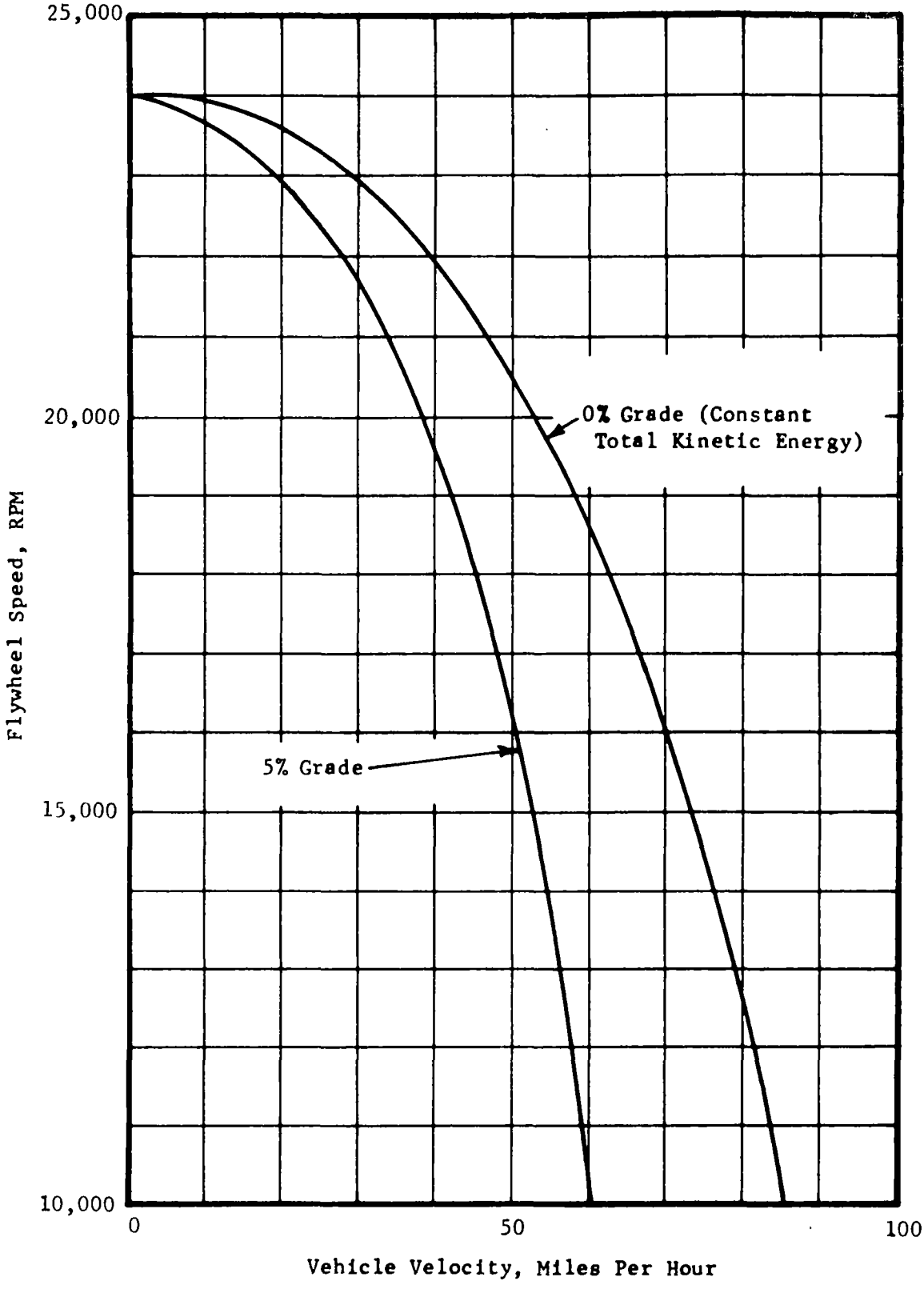

Fig. D-5 Flywheel Speed Versus Vehicle Velocity
Type B Open Valve Control

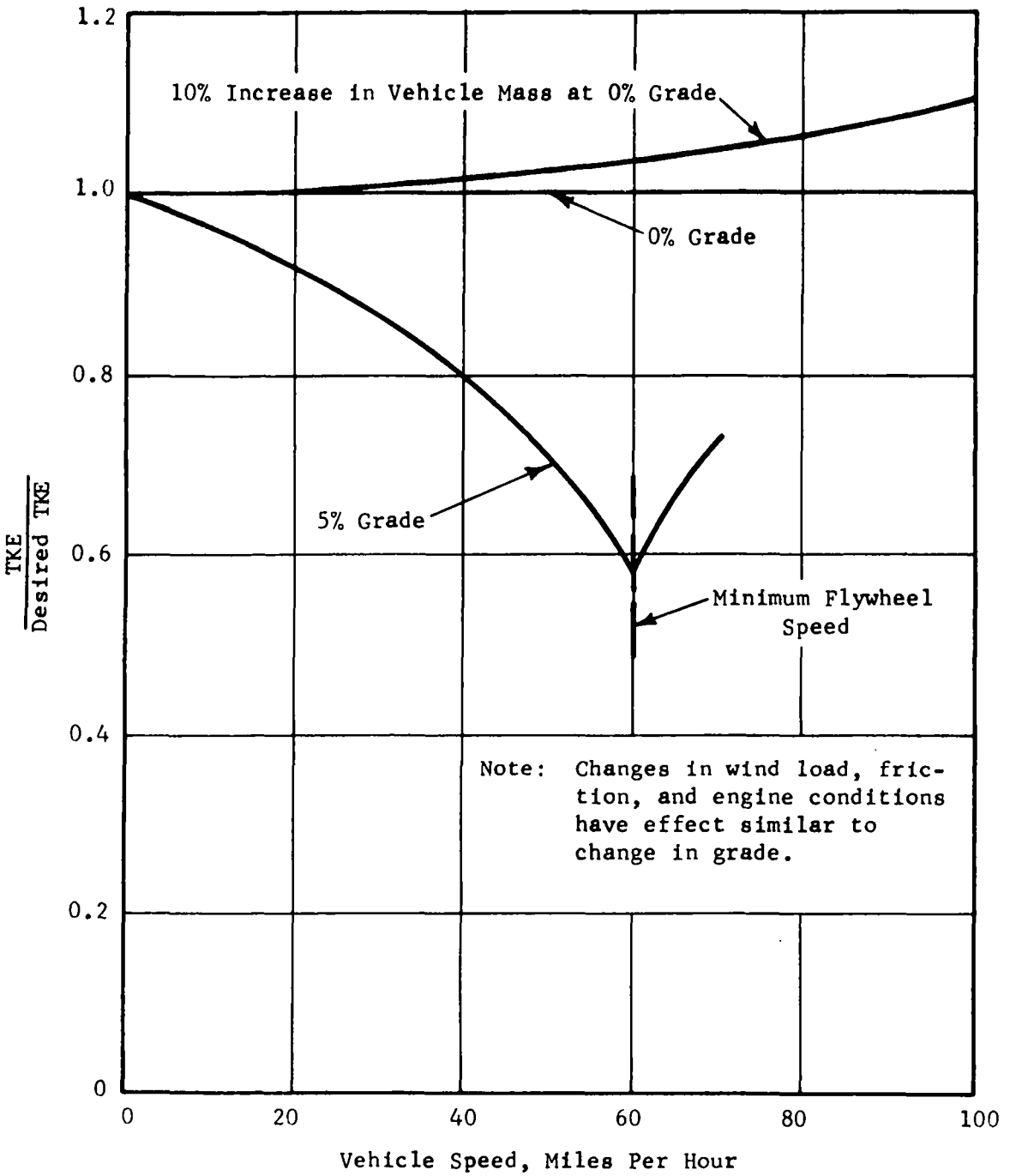

Fig. D-6 Effect on TKE of Varying Vehicle Mass and Grade Conditions — Type B Open-Loop Control

MTI-12499

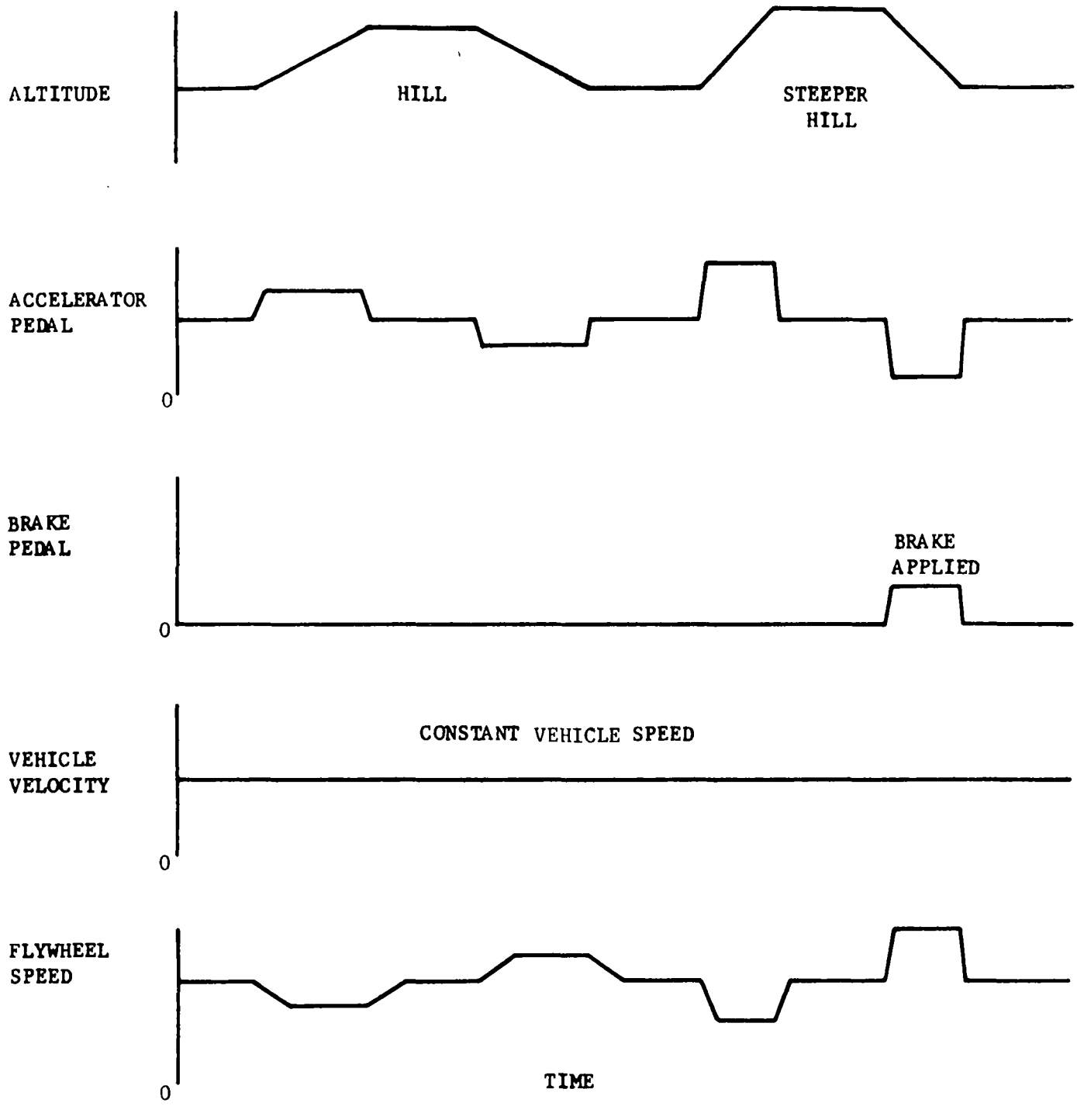

Fig. D-7 Effect of Hills on Flywheel Speed at Constant Vehicle Speed

On a comparative basis, although the Type A TKE control is initially attractive because it would monitor vehicle velocity and would therefore utilize an accurately computed value of kinetic energy, the Type B approach was selected for final design evaluation and costing on the following major bases:

(1) Control System Complexity and Cost

The Type B approach is inherently less costly by virtue of eliminating the output speed sensor and the brake and accelerator rate valves. Although the detailed dynamic signal shaping techniques were not finalized for either Type A or Type B approaches, within the scope of the study, the Type B requirements appear to be basically simpler because of the inherent better stability of that approach.

(2) General Performance and Feel

Assuming the Type A approach is compensated appropriately to achieve acceptable stability, the steady-state TKE performance of the Type A and B systems would be similar for horizontal driving conditions. As indicated previously, the Type A approach increases driver control requirements on hills and icy roads, and it eliminates the possibility of using the flywheel (assuming no TKE error) either to provide energy in climbing or to store energy on descending a hill. At some departure from TKE, the Type B approach provides the capability for the flywheel to provide energy during hill climbing and to store energy (as desired) when on descending hills. Also, the Type B control tends to make the driver pedal a torque command to the system.

4. Implementation and Operation of the Type B Open-Loop Control System

General Description

A simplified system diagram is illustrated in Figure D-8. The inputs to the system are the same as those of the typical family car; selector lever position (plus a position for initially charging the flywheel), accelerator pedal position, and brake pedal position. The control variables are the heat engine throttle position, and the continuously variable ratios of the two transmissions. Feedback signals are engine speed and flywheel speed.

Acceleration

A step change in accelerator pedal position in the direction to increase vehicle speed results in three inputs to the control system. The first input acts through the primary control system to command a new steady-state engine speed. The second input acts through the secondary control system to effectively vary the secondary transmission ratio between the flywheel and engine speed. Fuel flow to the engine is modulated by the third input providing engine power approximately equal to the steady-state losses at each speed.

Varying the secondary transmission ratio results in a decelerating torque being applied to the flywheel and an accelerating torque applied to the engine shaft. The engine speed increases to the commanded steady-state value and is held at this speed by the primary transmission ratio being varied with changes in load through action of the primary transmission controls.

Kinetic energy is transferred from the flywheel to the vehicle with vehicle acceleration resulting.

Dynamic compensation is used to maintain the correct sequence and rates between the control functions.

Deceleration

When the accelerator pedal is returned to the idle position at high vehicle speed, the vehicle speed decreases slowly in the same manner as a conventional vehicle. Depressing the brake pedal part way varies the secondary transmission ratio to transfer kinetic energy from the vehicle to the flywheel — thereby using dynamic braking for decelerating the vehicle. Depressing the brake pedal farther engages the mechanical brakes for faster deceleration.

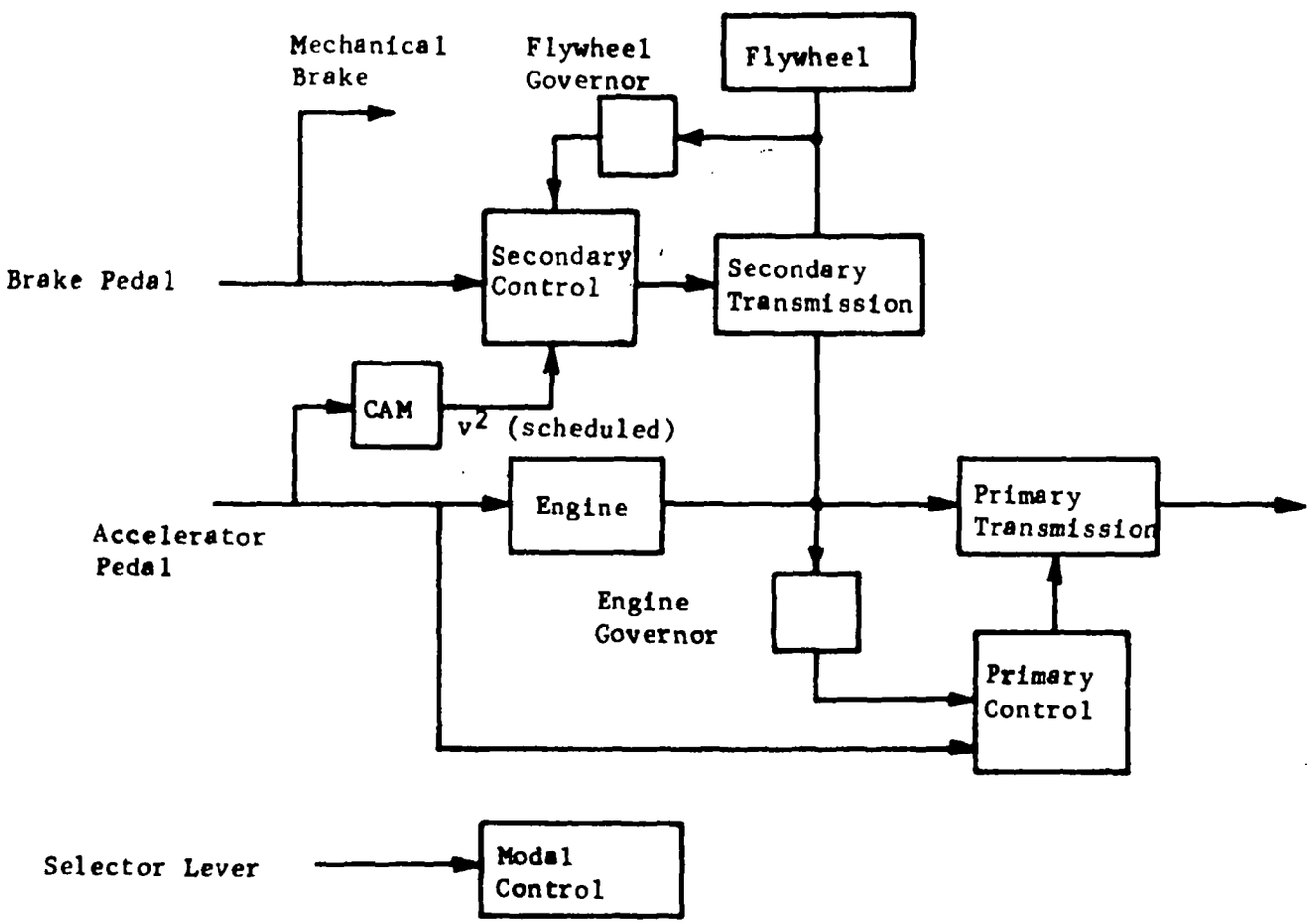

Fig. D-8 Basic System Functional Diagram

Fast Stop

The reduction of engine speed when the vehicle is brought to a stop results in disengagement of the primary transmission. The secondary transmission normally remains engaged.

The flywheel speed will be approximately correct when the vehicle stops due to dynamic braking only. After a fast stop in which the mechanical brakes are applied, the flywheel speed will be low. The secondary control system then causes the flywheel to slowly accelerate to the correct speed at a rate within the power capability of the engine at idle.

Total Kinetic Energy Behavior

The secondary control system is programmed to vary the flywheel speed to maintain the total system kinetic energy (flywheel plus vehicle) at a constant value for zero grade nominal load conditions. Variations of grade, load and engine condition can cause variation of the total kinetic energy.

Implementation and Operation

A control component diagram and hardware implementation schematic are shown in Figures D-9 and D-10.

The manual shift lever is used to select the operating mode. The shift pattern schematic as shown below follows the present day automobile shift pattern as closely as practical.

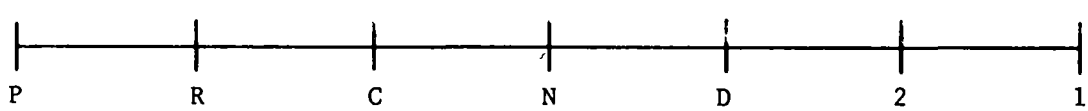

P - Park
R - Reverse
C - Charge
N - Neutral
D - Drive
2 - Second
1 - Low

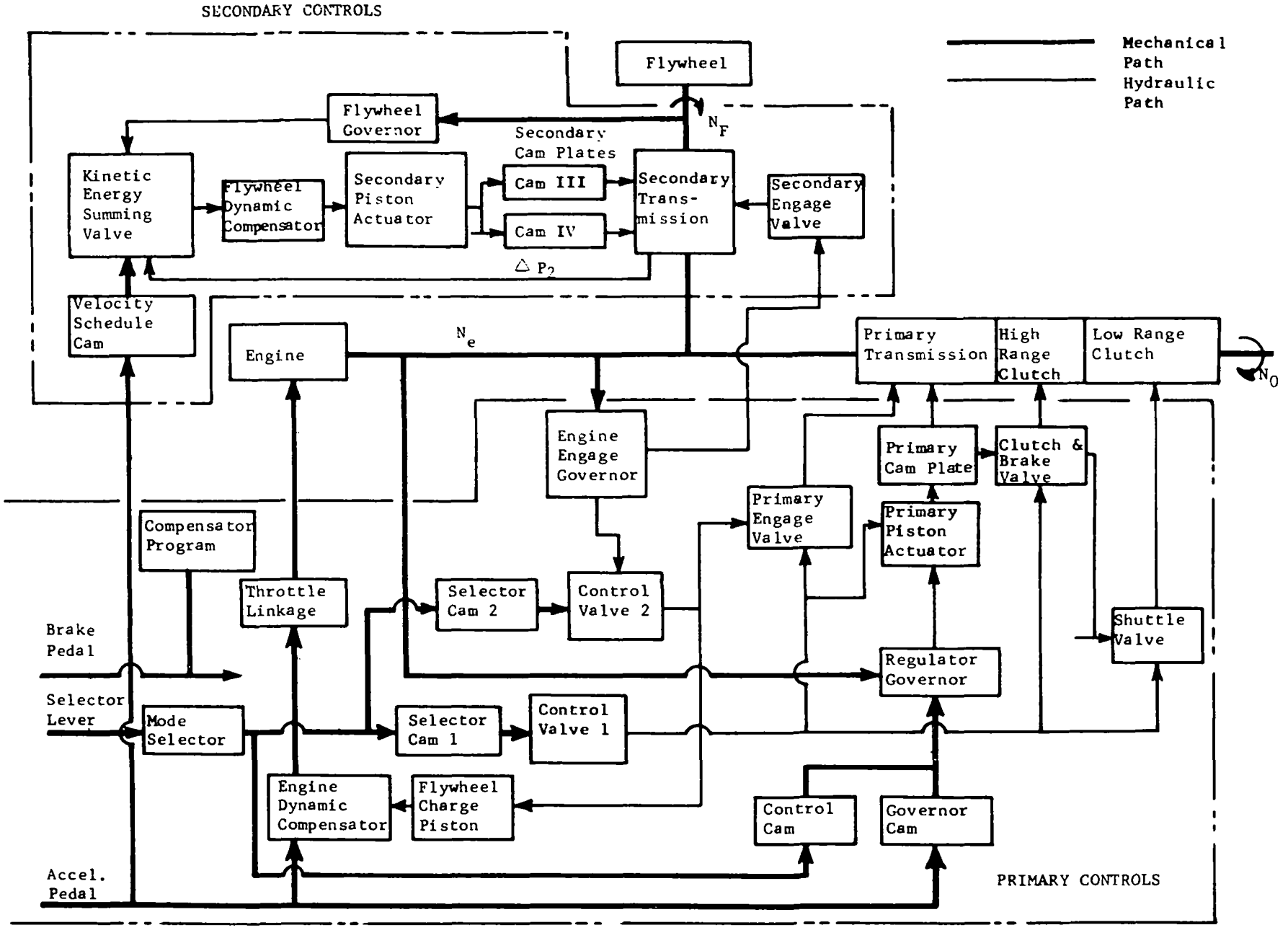

Fig. D-9 Flywheel/Hybrid Transmission — Control Component Diagram

MTI-12536

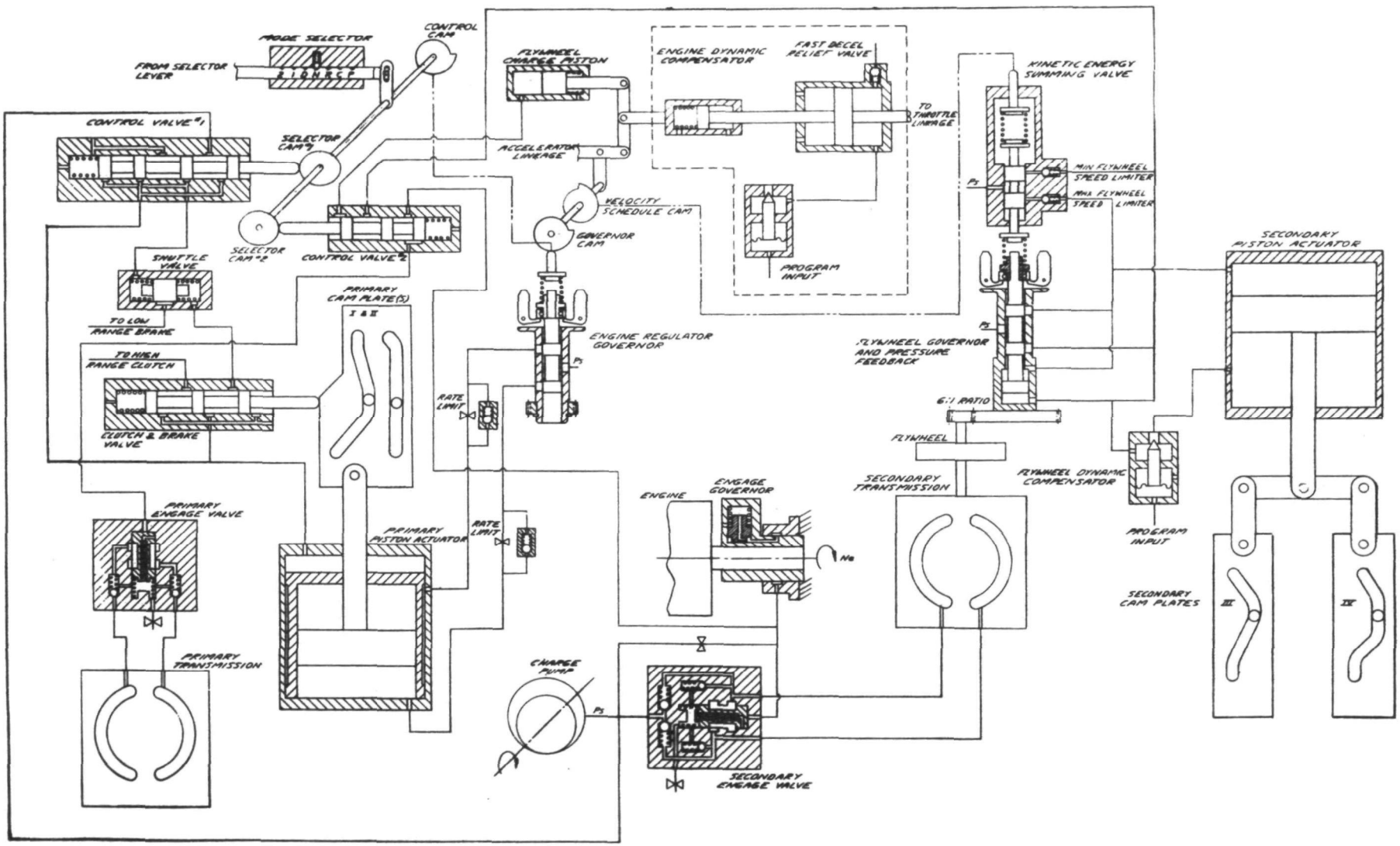

Fig. D-10 Control System - Hardware Implementation Schematic

MTI-12522

Control Valves 1 and 2, which are positioned by the shift lever, direct pressures to the control elements as required in each mode.

In the charge mode, the primary transmission and high-range clutch are disengaged. The kinetic energy summing valve provides a pressure proportional to kinetic energy error which acts on the flywheel charge piston to move the throttle. Thus, the engine speeds up to charge the flywheel. When the flywheel is fully charged, kinetic energy error is zero and the engine slows down to idle speed. The secondary engage valve is actuated at an engine speed of 900 to 1100 rpm, providing pressure to hydrostatic elements III and IV, thus engaging the secondary transmission. The secondary transmission remains engaged for all shift lever positions as long as engine speed is above approximately 900 rpm.

In neutral, pressure is directed by Control Valve 1 to the primary piston actuator to move the sleeve to the position which limits piston stroke. Pressure is transmitted through the shuttle valve to engage the low-range brake. The engage valve is in the open position and the swashplate of Element I is near zero displacement which allows this element to rotate freely to effect zero output torque. A cam driven by the shift lever sets the engine regulator governor bias load to overcome the flyweight force, thus moving the governor valve. The resultant position of the governor valve provides flow to the primary actuator which moves the piston to the maximum torque position C. Accordingly, in neutral, the control system presets the primary swashplate and low-range brake for low ratio output for initial vehicle acceleration from a stopped position.

When the control valves are shifted to the drive position, the fluid pressure connections to the low-range brake and high-range clutch remain the same as in the neutral position. Pressure from the engage governor is transmitted through Control Valve 2 to the primary and secondary engage valves. The output pressure from the engage governor increases as engine speed increases. This pressure acts on the primary and secondary engage valves to engage the secondary transmission at 900 to 1100 rpm engine speed and to engage the primary transmission at 1200 to 1400 rpm engine speed.

During drive operation the engine regulator governor controls hydraulic flow to the opposite sides of the primary actuator piston to effect movement of the Element I swashplate. The movement of the governor valve is regulated in part by the position of the cam which adjusts the speed setting as a function of the accelerator pedal position. Accordingly, for every throttle position, the governor valve mechanism continuously controls the position of the primary actuator piston to vary the operating ratio to maintain a set engine speed. This provides a means for ideally matching the engine and vehicle speeds as a function of throttle position to provide optimum engine performance for minimizing emissions.

It will be noted that in initially accelerating, the clutch and brake valve rides upon the upper surface of the control cam, thereby providing fluid pressure, through the shuttle valve, to engage the low-range brake. When the primary transmission output speed increases, movement of the cam causes the clutch and brake valve to move down to the lower surface of the cam. In the extended position of this valve, the fluid pressure to the low-range brake is vented, thereby releasing the low-range brake. Also, when this valve is extended, fluid pressure is provided to the high-range clutch, thereby engaging this clutch. This transition is made while both the high-range clutch and low-range brake are in synchronization to effect very smooth operation. This, in addition to non-power shift of both the clutch and brake, provides wear-free operation.

In Modes 2 and 1, the control cam introduces a bias to the engine regulator governor which varies the engine speed setpoint at which the primary transmission switches from low to high range.

In reverse, fluid pressure is transmitted from Control Valve 1, through the shuttle valve, to engage the low-range brake. The control cam is positioned by the mode selector to provide additional force on the engine regulator governor spring thus moving the engine regulator governor valve downward and providing fluid pressure to the bottom of the primary piston actuator. Pressure in the top chamber of the primary actuator is vented through Control Valve 1. Thus, the piston and sleeve of the primary actuator both move to the top position. The additional stroke of the cam plate due to movement of the

sleeve causes the pin connected with the swashplate housing to move into the negative angle portion of the cam slot, thereby positioning Element I swashplate at a negative angle for reverse output.

It will be noted that, when Control Valve I is moved to the reverse position, fluid pressure is directed to the primary engage valve so as to engage the primary hydrostatic transmission.

Park, which opens the engage valve to bypass fluid around the hydraulic motor and pump (Elements I and II) permits the engine to idle without transmitting any torque to the transmission output shaft. The engine idles below 1200 rpm. In addition the parking lock is positioned to lock the transmission output shaft to the rear wheels.

The secondary transmission and control system continuously vary the ratio between the engine and flywheel to maintain a nominal constant total kinetic energy. The kinetic energy summing valve provides an output pressure proportional to kinetic energy error, which acts on the secondary piston actuator to vary the swashplate angles of hydrostatic Elements III and IV, thus varying the ratio.

Each position of the accelerator pedal, at constant grade and road load, corresponds to a steady-state vehicle velocity and therefore to a scheduled vehicle kinetic energy. A cam driven by the accelerator pedal varies the load on the kinetic energy summing valve spring in proportion to the commanded value of vehicle kinetic energy. The spring preload is proportional to the desired value of total kinetic energy. The flywheel governor, which is driven by the flywheel through a 6 to 1 reduction ratio, provides a force proportional to flywheel kinetic energy. This force is applied to the kinetic energy summing valve through a coupling spring.

At zero accelerator pedal position, the kinetic energy summing valve spring applies the maximum load to the flywheel speed governor valve. A cam causes this spring force to decrease as the accelerator pedal is depressed. At any accelerator pedal position, if the flywheel speed is too low, the kinetic energy summing valve spring forces the governor valve downward. High pressure is then

directed to the bottom of the secondary piston actuator, and the top is vented. The secondary piston actuator then moves the swashplates in the direction to increase the ratio of flywheel to engine speed, thus increasing flywheel speed. When the flywheel speed reaches the desired value, the flywheel governor force equals the kinetic energy summing valve spring force. The governor valve then moves to the neutral position and the actuator motion ceases. If flywheel speed is too high, the governor flyweight force moves the governor valve upward, thus providing flow to move the actuator as required to decrease flywheel speed.

Pressure feedback from the secondary actuator to the kinetic energy summing valve is used to reduce the phase lag of the actuator as required for stable operation. The pressure feedback also reduces the effect of engine speed on the secondary control system. A further advantage of the pressure feedback is that torque applied to the flywheel becomes proportional to kinetic energy error.

The flywheel dynamic compensator is used to limit the secondary piston actuator velocity as required to obtain fast acceleration without saturating the secondary pressure.

The hydrostatic transmission relief valves, which are located in the primary and secondary engage valve housings, are set at approximately 3600 psi. The control system should hold the pressures below 3000 psi during normal operation for maximum efficiency and minimum wear. Pressure surges are held below the relief valve settings, during normal operation, by the primary actuator rate limits, and by the engine dynamic compensator and flywheel dynamic compensator.

SECTION E

COST ANALYSIS

E. COST ANALYSIS

Described in this section is the method employed to determine transmission costs and a discussion of the results is included. The cost data presented was based on the experience of automotive cost consultants based upon cost information and practices of the Ford Motor Company. Therefore, this procedure provides a sound approach to comparing the cost of the flywheel-hybrid transmission with that of the standard multispeed torque converter (automatic) transmission.

The objectives of the cost analysis were to determine the original equipment manufacturer cost (O.E.M) for production quantities of 100,000 and 1,000,000 units per year of the flywheel-hybrid transmission and then compare that cost to similar costs for a multispeed (automatic) transmission.

Feasible Transmission Concept Cost

During the initial feasibility analysis, seven transmission concepts were identified as possible candidates and sketch layouts were drawn. Estimates of the O.E.M. costs for these transmission concepts were made and referenced against the automatic transmission used on current medium sized vehicles. The results are presented in Table E-1.

The power-splitting transmission was selected from the seven candidates as the type of transmission required to accommodate the dual power path propulsion system. Estimates of the final cost ratios were made and are presented in Table E-2.

The method of establishing the information presented is discussed in the following paragraphs. Preliminary cost ratios did not have the depth of analysis as did the final ratios and were, as a result, optimistic. Since the same optimism prevailed throughout the analysis of the seven candidates, the ratios of Table E-1 were on a consistent basis and adequate for the purpose — that of assessing the cost category for the intial screening task.

TABLE E-1

Preliminary Transmission Cost Analysis - Ratios

	1,000,000 Units Per Year O.E.M. Cost	100,000 Units Per Year O.E.M. Cost
SK-J-4258 3 Element Hydrodynamic	1.9	2.45
SK-E-4260 2 Element Hydrodynamic	1.5	1.94
SK-J-4257 Hydrostatic	2.1	2.71
SK-E-4256 Power Split	1.9	2.48
SK-E-4261 Power Split (Offset)	2.0	2.58
SK-D-4259 Hydrodynamic Hydrostatic	1.9	2.48
SK-A-4262 Hydrodynamic 2 Coupling	1.7	2.19
Standard Multi-Speed Torque Converter ("Automatic")	1.0	1.29

TABLE E-2 FINAL TRANSMISSION COST ANALYSIS RATIOS

	Standard Multi-Speed Torque Converter ("Automatic") Transmission for Medium Size Vehicle			Power Splitting Transmission for Flywheel/Heat Engine Medium Size Vehicle (Inline Flywheel)			Power Splitting Transmission for Flywheel/Heat Engine Medium Size Vehicle (Offset Flywheel)		
	A	B	C	A	B	C	A	B	C
1) Variable Cost Ratio	1.00	1.19	1.29	2.40	2.85	3.10	2.53	3.01	3.26
2) O.E.M. Cost Ratio	1.00	1.15-1.25	1.25-1.35	2.25-2.35	2.70-2.80	2.95-3.05	2.35-2.45	2.85-2.95	3.10-3.20
3) Control Variable Cost Ratio	1.00	1.19	1.29	2.87	3.41	3.70	2.87	3.41	3.70
4) Labor Content Ratio	1.00	1.00	1.50	2.13	2.13	3.19	2.25	2.25	3.37
5) Material Content Ratio	1.00	1.20	1.20	2.65	3.18	3.18	2.79	3.35	3.35

A) Ratios based on manufacture of 1,000,000 units per year

B) Ratios based on manufacture of 100,000 units per year with tooling as for 1,000,000 units

c) Ratios based on manufacture of 100,000 units per year with tooling suitable for maximum yearly manufacture of 100,000 units.

Although not shown on the transmission concept sketches, cost saving design improvements suggested by the automotive consultants were factored into the finalized cost ratios.

Costing Procedures

The technique for obtaining the costs for the power-splitting transmission is outlined and a sample sheet is included as Table E-3. It was necesary to review a total of 390 items to obtain a valid cost comparison. The few examples presented on the sample sheet were, in most instances, selected to present the costs of the hydraulic components peculiar to the power-splitting transmission.

The package drawing, SK-E-4283 (Figure A-12, pp. A-22 to A-24), was used to identify the items for costing. Components, such as the hydrostatic pumps and motors — not normally found in an automobile transmission, were detailed with sufficient dimensional and material information for an accurate cost estimate. The approach is similar to that used by high volume car manufacturers and is discussed in the following paragraphs.

The initial column of Table E-3 describes the part or function to be costed.

Columns 2 and 3 are the part number and number of such parts called out on the transmission parts list.

Column 4 presents the method of manufacturing the part as established by the automotive company.

In Column 5 the material costs were established, and they include all costs to bring the part to the "as-purchased" condition. For example, a die cast component would have rough weight established to develop material cost. The material cost was the actual purchase price in the "as-purchased" condition.

The "in-house" manufacturing costs to finish a specific part are developed on an extension of variable minute costs times labor minute content. Variable minute costs include direct labor, indirect labor and non-variable burden.

TABLE E-3 COST SAMPLE SHEET

	DESCRIPTION	ITEM NO.	QTY	MAKE BUY	TOTAL PER ASS'Y MAT'L COST (DOLLARS)	LABOR MIN.	LABOR COST (VAR)(DOLLARS)	TOTAL COST(DOLLARS)	REMARKS	
1.	Transmission Ass'y	1A	1	A	—	64.18	11.199	11.199	Incl. Sub Ass'y not Specified.	(Cost Sht 1)
2.										
3.	Shaft, Element I	4	1	PR	1.120	9.70	1.693	2.813	Forging - AISI 8620 Steel	(Cost Sht 1)
4.										
5.	Cylinder Block - Primary Transmission	8	2	PR	2.440	18.00	3.140	5.580	Mechanite Casting (Shell Mold)	(Cost Sht 1)
6.										
7.	Valve Plate - Primary Transmission	9	1	PR	.990	7.60	1.326	2.316	Mechanite Casting (Shell Mold)	(Cost Sht 1)
8.										
9.	Piston - Motor-Pump - Pri. Transmission	10	18	PS/F	2.592	4.50	.785	3.377	Cold Extrusion (H.T)	(Cost Sht 1)
10.										
11.	Trunnion - Swashplate - Pri.	11	1	PR	1.510	12.00	2.094	3.604	Nodular Iron (H.T.) (Pearl. Mall)	(Cost Sht 1)
12.										
13.	Support - Swashplate - Pri.	12	1	PR	.900	7.02	1.225	2.125	Cast Iron	(Cost Sht 1)
14.										
15.	Swashplate - Motor-Pump - Pri.	13	2	PF	4.800	—	—	4.800	Heavy Coined Stpg. for Blank per Torr.	(Cost Sht 1)
16.										
17.	Thrustplate - Brg. Pri. Trans.	14	2	PF	3.800	—	—	3.800	Torr. or Equiv.	
18.										
19.	Planet Gear - Fly. Planetary	26	3	M	.810	5.70	.995	1.805	Stl. Bar	(Cost Sht 2)
20.										
21.	Ring Gear - Fly. Planetary	24	1	PR	1.860	8.30	1.448	3.308	Heat Treat Nodular Iron	(Cost Sht 1)
22.										
23.	Carrier - Fly. Planetary	25	1	PR	1.380	6.80	1.187	2.567	Malleable Iron	(Cost Sht 1)
24.										
25.	Gear - Element III - Fly. Planetary	23	1	RR	.581	6.30	1.099	1.679	Forging - AISI 8620 Steel	(Cost Sht 1)
26.										
27.	Planetary Assy - Flywheel	28A	1	A	--	2.21	.386	.386	Sub-Assembly	(Cost Sht 1)
28.										
29.	Governor - Engage - Flywheel	--	1	PF	1.611	10.25	1.789	3.400		(Cost Sht 7)
30.										
31.	TKE Valve and Governor Assy	--	1	PF	6.717	22.50	3.933	10.650		(Cost Sht 10)
32.										
33.										
34.										
35.										
36.										
37.										
38.										
39.	NOMENCLATURE		P.F.	Purchased as finished item						
40.			P.R.	Purchased in rough condition, such as casting, and forgings						
41.			P.S./F	Purchased as a semi-finished item						
42.			M	Manufactured in house						
43.			A	Assemble						
44.										
45.										
46.										
47.										
48.										
49.										
50.										

In Column 6, the actual "in-house" number of labor minutes to complete the manufacturing task were listed and in Column 7 the variable minute costs were listed.

Column 8 is the total cost dollars for each item or task labeled in Column 2.

The study was based on variable costs and not O.E.M. costs. The O.E.M. or transfer costs would include cost allocations for fixed burden, scrap, factory cost adjustments, general and administrative costs, profit and capital investment. Capital investment would include costs for facilities, tooling and engineering expense. Since many of these transfer costs would vary with different automotive companies, the O.E.M. data were not as basic as the variable cost data, and; therefore, were not considered as reliable when comparing information from different sources.

In addition, transfer costs for facilities would not reflect the same in the transmission cost ratios. For instance, the cost of the facilities for the automatic and power-splitting transmissions could be the same.

As an example, let:

1.0 = Variable costs of automatic transmission
2.0 = Variable costs of power-splitting transmission
0.1 = Facilities costs for either transmission.

Variable cost ratio without facilities included $= \frac{2.0}{1.0} = 2.0$

O.E.M. or cost ratio with facilities included $= \frac{2.1}{1.1} = 1.9$

Therefore, when dealing with ratios the increased cost of the basic transmission is not correctly identified if only the O.E.M. cost ratios were presented.

The cost analysis task dealt in ratios because the actual variable dollar cost of an automatic transmission was automotive company proprietary information.

The range in the O.E.M. ratios provided in Table E-2 account for the possible variances associated with the costs.

The cost estimates are presented in Tables E-1 and E-2 as a ratio of hybrid propulsion system transmission costs to conventional automatic transmission costs for a medium-size car line.

All ratios represent the cost of the item being considered divided by the cost of a multi-speed torque converter ("automatic") transmission for medium-size vehicles as now produced in quantity by automotive manufacturers.

The detailed cost study was made for 1,000,000 units per year volume of both standard automatic and power-splitting transmissions. A second estimate for the manufacture of 100,000 units per year volume was presented. This estimate assumes the same tooling and facilities as for the 1,000,000 units per year volume. Essentially it reflects the increase in purchase costs when the volume is reduced.

A third estimate for the manufacture of 100,000 units per year volume was presented. This estimate uses tooling and facilities suitable for the manufacture of 100,000 units per year with no increase in production predicted for the future. This number represents the increase in purchase material costs and labor content costs.

As shown in Table E-2, the ratio of the variable costs for the power-splitting to that of the multi-speed converter transmission was 2.40 — an increase of 140 per cent. Primarily, two factors were responsible for the increased cost:

1. In reality, the power-splitting transmission was designed to accept power from two separate propulsion sources. Such a feat required that the components of two transmissions be packaged as one. Therefore, the costs reflect the major torque transfer elements of two transmissions.

2. The control required to properly relate the heat engine, flywheel, heat engine transmission and flywheel transmission has essentially two times the number of components as the standard transmission control.

Also in Table E-2 the control variable cost ratio has been presented. The ratio of 2.87 or an increase of 187 percent in costs reflects the complexity of providing controls for such a propulsion system.

Finally, the labor content ratio and material content ratio are given to establish the area of the major portion of the increased cost. Since the power-splitting type has the torque elements of two transmissions, the increase in material costs was the major contributor to the high cost ratio.

Included as part of Table E-2 are the cost ratios for a power-splitting transmission with an offset flywheel. The increased values reflect the additional gear shafts needed to offset the flywheel. Again the material content contributed the major portion of the cost increase.

In summary, the hybrid propulsion system transmission requires twice the number of torque transmitting components and the control components resulting in a cost of 2.40 times that of the standard automatic transmission.

One additional cost comparison was investigated. This was a determination of the ratio of the costs of the smaller engine plus the inline pierced flywheel plus the power-splitting transmission divided by the costs of the large engine plus the standard automatic transmission. Costs were based on the production of 1,000,000 units per year. The ratio was 1.63.

If the non-pierced flywheel is used, the cost ratio is 1.69.

Therefore, the hybrid propulsion system would cost approximately 60 to 70 percent more than the system presently installed in automobiles.

SECTION F

SAFETY ANALYSIS

F. SAFETY ANALYSIS

The approach for evaluating potential safety problems with the heat engine/flywheel hybrid transmission was to look initially at the main assemblies and how they would influence operation in the event of a malfunction or failure. Using this approach, we found that the basic operation would fall into two categories: 1) a loss of performance which would be similar to what would happen with a standard transmission, that is, loss of power to the road and requirement that the automobile would have to be driven to the shoulder and repair would be required; 2) a behavior which might be startling to the driver which would be classed as malfunctions which result in a pathological effect.

Transmission Elements

Rather than dwell on what we might term as standard failures, Table F-1 summarizes the malfunctions and the effects as determined by the first review. These are identified in accordance with the transmission schematic in Figure B-1. However, noted in Table F-1, are three specific failures in the transmission which fall into the pathological category and which could result in significant safety hazards unless some corrective means was incorporated into the design. In general, these latter types of failures are associated with the fact that the flywheel is a separate source of power which in the event of malfunction can operate in an unexpected and uncontrolled fashion. The three failures in this category are as follows:

1. Lockup of the Output Planetary B

   The effect would be to rapidly change the gear ratio between the flywheel and output shaft such that a rapid change of output speed would be realized. For example, during this type of failure, the vehicle may accelerate without driver command. Generally speaking, this type of problem will be of short duration. However, it would present a significant surprise and probably a pathological reaction.

TABLE F-1

TRANSMISSION FAILURE ANALSIS SUMMARY

TRANSMISSION COMPONENT	TYPE OF FAILURE	EXAMPLE OF FAILURE	EFFECT	CORRECTIVE ACTION
Primary Hydrostatic (Elements I & II)	Lockup	Bearing Seizure	Lock rear wheels with probable slip of brake and clutch. Gradual vehicle deceleration. Engine stall. Flywheel overdrives Element III with subsequent opening of pressure relief valve.	Set slip level for clutch and brake. Size relief for required flow.
"	Free Wheeling	Loss of Hydraulic Pressure. Mode Switch	Loss of drive torque. Vehicle slows.	
"	Fixed Ratio	Trunnion Bearing Failure	Loss of variable speed control with subsequent engine stall.	
Clutch & Brake	Open or Closed	Actuator Failure	Abnormal high or low range operation.	Use interlock system.
Interlock System for Clutch and Brake	Open or Closed	Valve Seizure	Abnormal high or low range operation.	

TABLE F-1 (cont.)

TRANSMISSION FAILURE ANALYSIS SUMMARY

TRANSMISSION COMPONENT	TYPE OF FAILURE	EXAMPLE OF FAILURE	EFFECT	CORRECTIVE ACTION
Secondary Hydrostatic Element III*	Freeze Up or Lockup	Bearing Failure	Change of vehicle speed.	Hydraulic dump output of Element III.
			Possible flywheel over-speed.	Containment or growth ring.
Element IV	Freeze Up or Lockup	Bearing Failure	No output. Engine stalls. Same as Planetary "A" lockup.	
Element III and/or IV	Free Wheeling	Sheared Shaft or Loss of Hydraulic Pressure Mode Switch	Loss of Planetary "A" reaction and loss of fly-wheel power.	
Output Planetaries Planetary B*	Lockup	Bearing or Gear Failure (Freeze Up)	Rapid change of vehicle speed, + or −, depending on range condition. Engine stall.	Shear joint or override mechanism.
Planetary B	Free Wheeling	Sheared or Fractured Shaft.	Loss of output power.	
Planetary C	Lockup	Bearing Seizure	Slip of low-range brake with gradual loss of vehicle speed.	
	Free Wheeling	Loss of Gear Teeth	No low range power.	

TABLE F-1 (cont.)

TRANSMISSION FAILURE ANALYSIS SUMMARY

TRANSMISSION COMPONENT	TYPE OF FAILURE	EXAMPLE OF FAILURE	EFFECT	CORRECTIVE ACTION
Input Planetary Planetary A*	Lockup	Bearing Seizure	Rapid increase in engine speed and vehicle speed. Blow relief valve.	Shear joint or override mechanism.
Planetary A	Free Wheeling	Sheared Shaft or Loss of Gear Teeth	Loss of flywheel power.	
Flywheel	Lockup	Bearing Seizure	High torque to transmission housing and mounting.	Bearing outer race slip. Shear section.
Vacuum	Loss of Pump		Overheating	Warning system.
Flywheel Fracture	Breakup	Tri-hub	Lockup or free wheel Planetary A.	Containment.

*Pathological failures.

2. Freezeup of Element Three in the Secondary Hydrostatic Transmission

Again, this can result in a sudden unexpected change in vehicle speed without driver command. Because the flywheel is tied to the engine, a second effect could be flywheel overspeed.

3. Lockup of Planetary A

Once again, the major effect will be the change in vehicle velocity without driver command.

In all probability, pressure buildup, relief valve venting, and slipping of the clutch and brake system will minimize this effect for all three of the above faults. With respect to the planetary gearing, some form of shear joint or override member could be introduced into the design to minimize or eliminate this condition. Certainly the failure mode which could result in flywheel overspeed would ultimately rely on some form of containment or possibly a growthring-type of failure brake mechanism.

Control System

Regardless of the detailed source, a failure in a control system signal component becomes important only in terms of how it ultimately affects functioning of the transmission and the flow of system power. For example, a variety of detailed failures can occur in the components which control the secondary transmission. The net result will be a value of the command transmission ratio, either higher or lower than the correct value, which would result in undesired vehicle deceleration or acceleration, respectively.

Viewed in this manner, failures in the control system can be analyzed as command errors in: 1) Primary Transmission Ratio, 2) Primary Transmission Range, 3) Secondary Transmission Ratio, 4) Mode Switching, 5) Engage-Disengage, and 6) Engine Throttle Position.

Of these failures, the Primary Transmission Ratio, Primary Range, Secondary Transmission Ratio, Failure of Mode Switching from Charge to Drive fall into the pathological category as defined for the transmission. These, as well as the loss of performance variety, are discussed below.

1. Primary Transmission Ratio

Errors in primary ratio result in improper loading at the engine shaft. If a higher ratio is commanded, the vehicle will try to speed up the engine shaft; a lower ratio will try to drag the shaft speed down. Since the significant flywheel inertia will tend to hold the engine speed constant, a step increase in primary ratio will also tend to decelerate the vehicle as it accelerates the engine and flywheel. A step decrease in primary ratio will tend to accelerate the vehicle. Both deceleration and acceleration levels will be limited by the relief valves in the hydrostatic links, but a step primary ratio error can result in a harsher and potentially more dangerous undesired velocity change with a flywheel system than with a conventional vehicle where inertia storage is much less.

2. Primary Range

Results of errors in commands to the high-speed clutch and low-speed brake are similar to malfunctions in those components as discussed previously.

3. Secondary Transmission Ratio

Erroneous ratio commands to the secondary transmission will result in undesired vehicle acceleration or deceleration due to flywheel action. Although not exactly like a full pedal or brake input, a fast full secondary ratio error would call for essentially maximum acceleration or deceleration capability of the flywheel augmented system.

4. Mode Switching

As in a conventional vehicle, failures in mode selection or establishment logic mainly result in abnormal driving conditions with improper available power or engine loading conditions. In a flywheel vehicle a failure into the charge mode disengages the primary transmission and could initiate abnormal flywheel chargeup until limited by the flywheel velocity limit. Change without a command from charge to drive could cause a brief vehicle acceleration burst.

5. Engage-Disengage

Failures in the primary and secondary engage-disengage systems lead to inconvenient but not dangerous maloperation. Erroneous disengage opens the hydrostatic links and causes loss of drive or flywheel capabilities. Erroneous engage can lead to stalling the engine or prevent a startup.

6. Engine Throttle Position

As with a conventional vehicle, an erroneous throttle "on" command leads to runaway vehicle acceleration. The "normal" driver response is to apply the brake and/or cut the ignition.

Summary

As indicated, failures of certain transmission elements and control failures leading to primary and secondary transmission ratio errors can result in potentially dangerous vehicle acceleration or deceleration due to the special energy storage capability of the flywheel.

In the preceding discussion, it was assumed that these types of malfunctions would require the same type of driver reaction as conventional vehicles require. The malfunctions noted above which fall into the pathological category would not be immediately corrected by the normal reactions of the driver. For example, under abnormal conditions the driver would lift his foot from the accelerator and apply the brakes expecting to slow down. He would still note

an increase in vehicle speed or no indication of deceleration for a period of time. Similar comments apply to the condition where unexpected decelerations take place.

Although not included in our considerations, it is very probable that, should the flywheel hybrid propulsion system come into common usage, certain corrective action could be built in and integrated with what would normally be expected from the driver.

Runaway accelerations can be simply guarded against by providing a solenoid input to the secondary disengage valve such that the normal response of turning off the ignition will also open the secondary link.

Corrective action to abnormal abrupt deceleration is not as simple, since the normal response to a quick surprise braking would not be to cut the ignition. An automatic means for protecting against such a situation would be to sense the vehicle gross acceleration or deceleration levels and disengage the secondary if the respective levels are not commensurate with the existing accelerator or brake pedal positions.

SECTION G

REGENERATIVE BRAKING

G. REGENERATIVE BRAKING ANALYSIS

In reviewing the requirements for dynamic (regenerative) braking, it was important to assess the feasibility of braking and to determine if the use of flywheel dynamic braking would unduly penalize the overall transmission design. In the latter case, this would require a trade-off between any added complexity or design compromise and the extent of their benefit. In terms of assessing feasibility, this was considered on the basis of a total energy concept, practical braking limits for vehicles, peak torque and horsepower requirements, and any other influences brought about by the flywheel.

In terms of the total energy concept, there is no real question that in theory, sufficient energy can be absorbed in the flywheel to effectively absorb the kinetic energy of the vehicle in going between two speeds. The questions have to do with the practical limitations of road coefficient of adhesion, flow of power from the rear wheels only, and possible modifications if some combination of flywheel and mechanical braking is required for overall vehicle passenger safety.

One of the primary considerations with respect to braking must concern itself with operator or passenger safety. Therefore, the initial point for assessment concerns itself with an emergency stop type situation, which for analysis purposes was taken to be a deceleration rate of 20 ft/sec^2. For purposes of establishing the outside limit, a vehicle weight of 5300 lbs. was selected and a factor to compensate for the inertia of wheels and transmission parts of 1.05 was applied to this value giving a total equivalent vehicle weight of 5565 lbs. The deceleration rate of 20 ft/sec^2 is equivalent to a coefficient of road adhesion of 0.62 which gives a braking force of 3450 lbs. with the above vehicle weight. During a deceleration of this magnitude, the distribution of vehicle weight is such that approximately 35 percent will be applied to the rear wheels. This represents a rear wheel braking force of 1208 lbs. At this point, several conclusions regarding the braking situation can be made:

1. For an emergency stop, braking must utilize an assist to the dynamic

braking possible from the flywheel since only 35 percent can be dissipated through the rear wheels.

2. There is a limitation with regard to regeneration if this is to come purely from rear wheel braking energy alone. (The engine must make up at least 65 percent of the total flywheel energy required.)

3. Energy dissipated from other elements such as front wheel brakes and the combined effects of air resistance and rolling resistance are not recovered as regeneration energy.

There are several implications of the above data with respect to operator safety. Certainly the basic conclusion is that there can be modes of operation where the flywheel would be unable to dissipate the required energy necessary for emergency stopping. Recent literature indicates that one-half g stops are certainly common and that the use of a 20 ft/sec^2 stopping rate is not unreasonable. (See Reference 7.) Thus, it is concluded that the four-wheel braking capability currently utilized in vehicles could not be eliminated nor significantly compromised. However, further consideration must be given to other implications of the system and lesser rates of deceleration which are more consistent with the typical driving cycle. Before discussing these, it is appropriate to consider some additional qualitative implications suggested by the above discussion. These items are as follows:

1. If recuperation of the flywheel is achieved by dynamic braking and engine input, there is a dual power path which involves additional complexity in control. Extreme care would be necessary to preclude the rotating inertia from coupling to the vehicle to reflect itself as an even larger equivalent vehicle weight.

2. During this engine-assisted flywheel charging process, it would be an additional control requirement to match the conditions necessary to maintain a reasonable engine specific fuel consumption.

Based on the above it is logical to consider the lower rates of deceleration and recovering energy as a retarder which might be set up with minimum modification and provide added brake-shoe life on both front and rear wheels. In order to demonstrate this we considered the same road coefficient of adhesion (0.62), an effective vehicle weight of 5565 lbs., and took into account the revised weight distribution resulting from the deceleration rate to determine that a deceleration of 8.2 ft/sec^2 would just permit regeneration. The braking force corresponding to this rate of deceleration is 1,417 lbs. As in the previous calculations, the effects of air resistance and rolling resistance were neglected since this is a conservative approach with respect to braking safety. Figure G-1 shows the braking behavior for the maximum tractive force and constant rates of deceleration.

Since the deceleration of 8.2 ft/sec^2 was determined to be the value where full regeneration was possible, this was considered further in terms of the transmission system concept. One of the important factors concerning the ability of the system to provide recuperation is the instantaneous flow of power which must be delivered from the rear wheels to the flywheel. At 85 miles per hour, the instantaneous power requirement is 319.7 hp. The size of the hydrostatic components permits a peak power transfer rate of 164.4 hp. This power is referenced to the wheels and includes the braking benefits due to system losses. In terms of a rear wheel braking force, the 164.4 hp corresponds to 725.6 lbs. The conclusion here is that to achieve regeneration up to a maximum deceleration rate of 8.2 ft/sec^2, the capacity of the flywheel transmission must be doubled. The attached Figure G-2 shows how the system could be altered to realize this additional capacity. The added components and control complexity were estimated to add between 12 and 15 percent to the overall transmission cost.

Finally, the flywheel was considered for a retarder. In essence this considered that the maximum braking force available would be the 725.6 lbs. If this is now used in conjunction with normal brakes for an emergency deceleration, again taken to be 20 ft/sec^2, the flywheel would be capable of absorbing approximately 16.8 percent of the vehicle kinetic energy when stopping from 85 miles per hour. The above calculation is based on an assumption of 80 percent efficiency in returning the regenerative energy to the flywheel. Still another way to consider this is to determine what deceleration or retarding capability could be provided

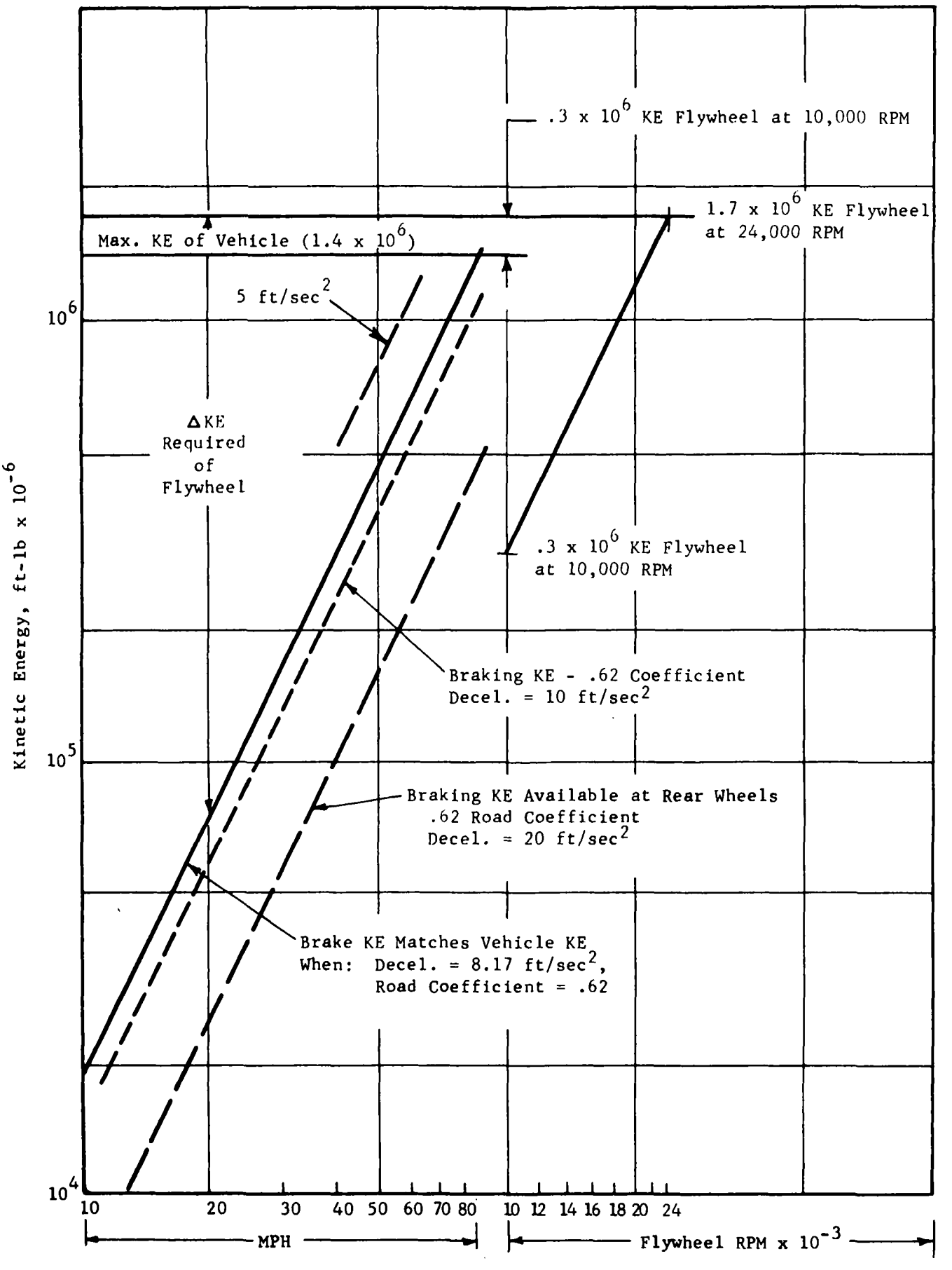

Fig. G-1 Flywheel Regenerative Braking Behavior

MTI-12502

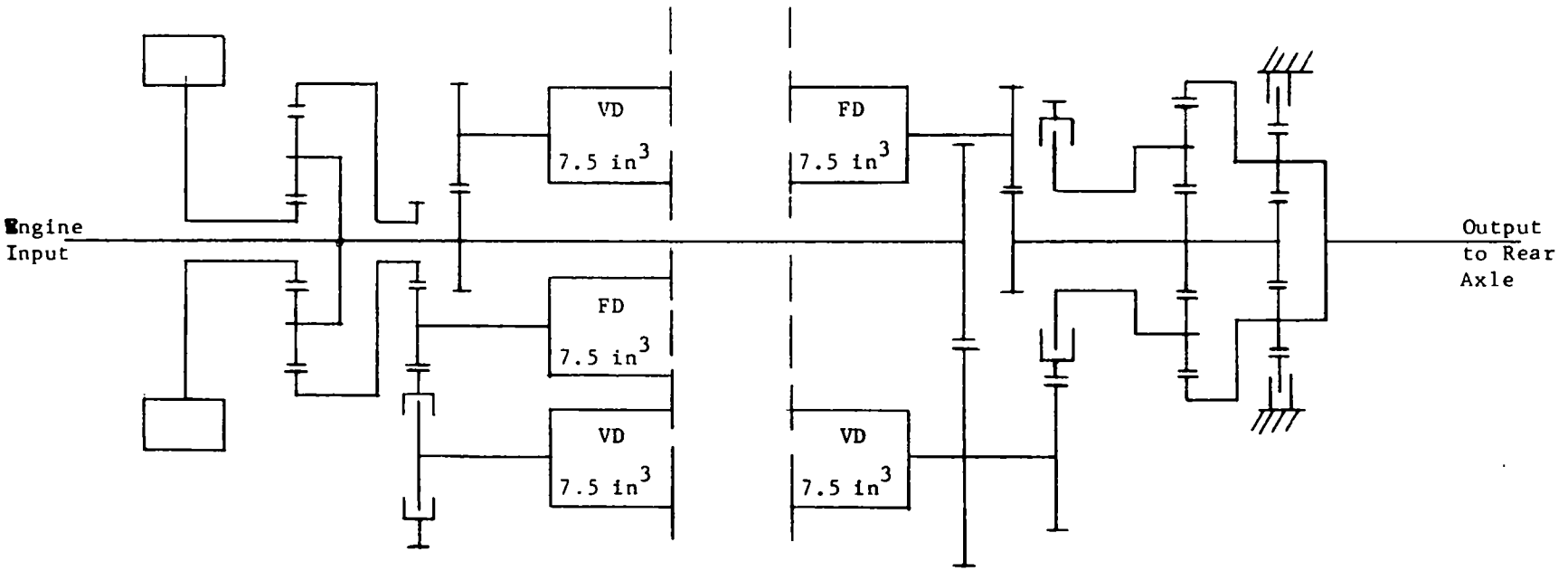

Fig. G-2 Power-Splitting Transmission Sized for Regenerative Braking

MTI-12503

by the flywheel transmission as shown in Figure B-1, page B-2. In this instance, the flywheel could provide a deceleration capability of 4.41 ft/sec^2 with full regeneration.

It was felt that the above represented reasonable guidelines for what could be expected from regenerative braking. There are obviously certain technical problems which would have to be resolved to take advantage of the flywheel even as a retarder. For example, there would have to be some mechanism provided so that the proper braking force at the rear wheels could be shared by the rear wheel brakes and the flywheel circuit in agreement with the proportion discussed above. This would, in turn, have to be reconsidered in terms of the implication on safety. Automatic retarding action would be realized when there was no throttle requirement (foot removed from the accelerator).

H. REFERENCES

1. Environmental Protection Agency, Advanced Automotive Power Systems, "Vehicle Design Goals - Six Passenger Automobile," Revision C, May 28, 1971.

2. Lockheed Missiles and Space Company, "Flywheel Feasibility Study and Demonstration," Final Report LMSC-D007915, April 30, 1971.

3. Automotive-Industries, March, 1969, Page 131.

4. Lockheed Missiles and Space Company, Letter LMSC-D179983 0/50-33, B/528, August 12, 1971.

5. Lockheed Missiles and Space Company, Letter LMSC-D244218, October 20, 1971.

6. David N. Hwang, "Fundamental Parameters of Vehicle Fuel Economy and Acceleration," Paper #690541, Society of Automotive Engineers, October 30, 1968.

7. Rudolf G. Mortimer, "Hard Braking is More Common Than You Might Think," Automotive Engineering, August, 1971.

APPENDIX

APPENDIX I

DESCRIPTION OF METHODS FOR DETERMINING TRANSMISSION AND PROPULSION SYSTEM PERFORMANCE

Presented herein are (1) a discussion of the transmission performance analysis, (2) a description of the computer program for steady-state performance, and (3) a discussion of the digital dynamic simulation used for determining transient performance.

A. Transmission Performance Analysis

The transmission is considered to comprise the following components:

- Spur Gears
- Planetary Gears
- Pumps
- Motors

In transmitting power either under steady or transient conditions, each of these components is a source of power loss. The losses considered may be grouped into three types:

1. Mechanical Losses

Mechanical losses always act to oppose rotation of a shaft, and arise from such sources as friction in the bearings, friction at gear teeth, and windage. All of the components listed above are subject to mechanical losses.

2. Flow Losses

Flow losses represent deviations from ideal performance of a hydraulic pump or motor. Thus, while nominal performance assumes that pump flow (in^3/sec) is equal to the product of speed (rad/sec) and displacement (in^3/rad), the actual flow differs from this product by a small amount — similarly for the motor. The direction in which flow losses act is determined by the direction of power flow. Only hydraulic units are subject to flow losses.

3. Compressibility and Leakage Losses

Compressibility and leakage losses represent deviations from ideal performance in the transfer of flow from one hydraulic unit to the other. Thus, while nominally the flow transferred to the motor equals the flow generated by the pump, the actual or effective flows differ by a small amount due to compressibility of the fluid and leakage through seals. The direction in which compressibility and leakage losses act is also determined by the direction of power flow. Only the hydraulic units are subject to compressibility and leakage losses.

The treatment of the various components including losses is as follows:

Spur Gears

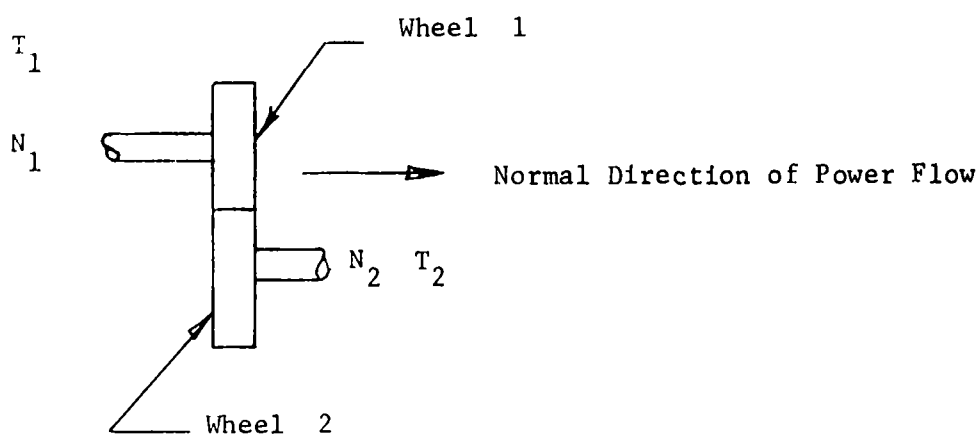

Speed Equation:

$$N_2 = RN_1 \tag{I-1}$$

Mechanical Loss Equation:

$$T_2 = [T_1 - | (1 - \eta) T_1 | \text{ sign } (N_1)]/R \tag{I-2}$$

where

R is the gear ratio

T_1, T_2 are the input and output torques acting in the normal direction of rotation

N_1, N_2 are the input and output speed

η is the efficiency of transmission

$|(1 - \eta)T_1|$ represents the absolute value of the quality $(1 - \eta)T_1$

Sign (N_1) represents the algebraic sign of the quality N_1; i.e., if N_1 is positive, Sign $(N_1) = +1$; if N_1 is negative, Sign $(N_1) = -1$.

<u>Planetary Gears</u>

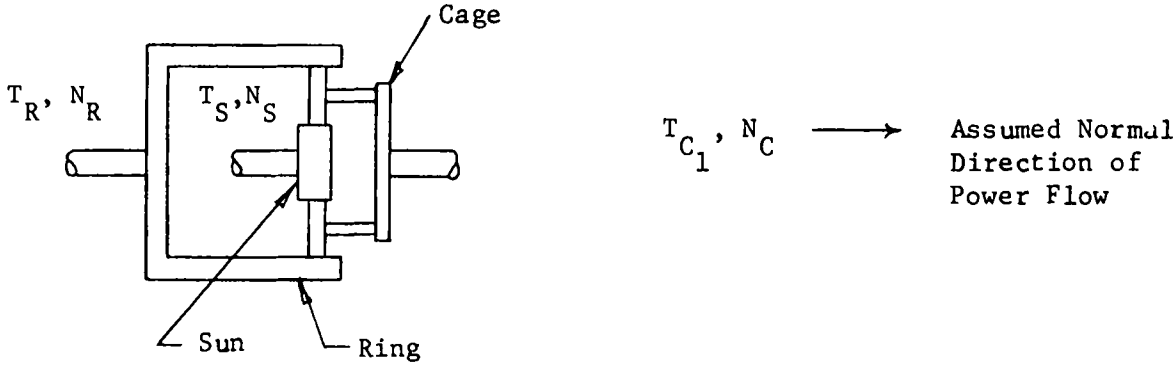

Speed Equation:

$$N_C = N_S \left(\frac{r_S}{r_S + r_R}\right) + N_R \left(\frac{r_R}{r_S + r_R}\right) \tag{I-3}$$

Mechanical Loss Equations:

$$\left.\begin{aligned} T_S' &= T_S - T_{LS} \\ T_R' &= T_R - T_{LR} \\ T_C &= T_C' + T_{LC} \end{aligned}\right\} \tag{I-4}$$

Torque Relationships:

$$T_C' = 2\left(\frac{r_C}{r_S}\right) T_S' \tag{I-5}$$

$$T_R' = \left(\frac{r_R}{r_S}\right) T_S'$$

Mechanical Loss Definition:

$$T_{LS} = \left|(1-\eta_S)\ T_S\right| \text{ sign } (N_S)$$

$$T_{LR} = \left|(1-\eta_R)\ T_R\right| \text{ sign } (N_R)$$

$$T_{LC} = \left|(1-\eta_C)\ T_C\right| \text{ sign } (N_C)$$

where

T_S, T_R are the input torques to the sun and ring gears

T_C is the output torque from the cage

T_S', T_C', T_R' are corresponding effective torques

T_{LS}, T_{LR}, T_{LC} are loss torques associated with the sun, ring and cage

η_S, η_R, η_C are corresponding efficiencies of transmission

r_S, r_R, r_C are radii of sun, ring and cage.

The above system of equations allows the cage output torque and speed and ring torque to be calculated from the torque and speed input to the sun and ring speed.

<u>Pumps</u>

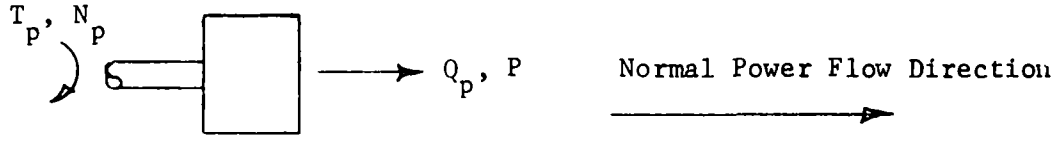

Mechanical Loss Equation:

$$T_P' = T_P - T_{LP}$$

where

$$T_{LP} = \left|T_P \frac{P'}{P_{max}} \frac{\bar{N}_P}{} \text{ X } (K_{2M} + K_{3M}\ \bar{D}_P)\right| \text{ sign } (N_P)$$

$$P' = T_P \left| D_P \right.$$

Flow Loss Equation:

$$Q_P = N_P D_P \left(1 - \left|\bar{N}_P \bar{D}_P K_{1f}\right| \text{ sign } (N_P T_P)\right) \tag{I-6}$$

Pressure Calculation:

$$P = T_P'/D_P \tag{I-7}$$

Motors

Mechanical Loss Equation:

$$T_M = T_M' - T_{LM} \tag{I-8}$$

where

$$T_M' = P\ D_M$$

$$T_{LM} = \left|T_M' \frac{P}{P_{max}} \bar{N}_M \text{ X } (K_{2M} + K_{3M} \bar{D}_P\right| \text{ sign } (N_M)$$

Flow Loss Equation:

$$Q_M = N_M D_M \left(1 + \left|\bar{N}_M \bar{D}_P K_{1f}\right| \text{ sign } (N_M T_M)\right) \tag{I-9}$$

Transfer of Flow From Pump to Motor

$$Q_M = Q_P - Q_{LC} \tag{I-10}$$

where

$$Q_{LC} = L_1 P/P_{max}$$

$$L_1 = \left[K_{1L} + K_{2L} + K_{3L} \bar{D}_1\right] \left|Q_P\right| + \left[K_{1L}\right] \left|Q_M\right|$$

In calculating hydraulic transmission performance, the pump and motor are considered in combination. Equations (I-5) through (I-9) relate the six values of torque, speed and displacement for the pump and motor in such a

way that given four of the six values, the remaining unknown two may be determined.

In the above treatment of hydraulic units, the following definitions apply:

T_P, T_M	are the input torque to pump, and output torque from the motor respectively.
D_P, D_M	are the pump and motor displacements
$\bar{D}_P$	is the ratio of pump displacement to its maximum value for the unit
N_P, N_M	are pump and motor speeds, rad/sec
$\bar{N}_P, \bar{N}_M$	are ratios of pump and motor speeds to the maximum values for the unit
P	is pressure, lb/in^2
P_{max}	is maximum pressure value for the unit
K_{1f}	is a flow loss coefficient (see below for values imposed for all loss coefficients)
K_{2M}, K_{3M}	are mechanical loss coefficient
K_{1L}, K_{2L}, K_{3L}	are coefficients relating to compressibility and leakage losses
Q_P, Q_M	are the effective pump and motor flows, in^3/sec
Q_{LC}	is a leakage flow

Additional Losses

In addition to losses in gears and hydraulic units, further losses are considered to occur at various points in the transmission to account for the power needed to drive such components as the flywheel vacuum pump. (See Figures AI-1 and AI-2 — Parasitic Losses.) Such losses are treated in a manner exactly analogous to the spur gear losses using a unit gear ratio. Additional losses are also considered to overcome flywheel windage and bearing friction (as specified by LMSC), to overcome road resistance (as specified by EPA).

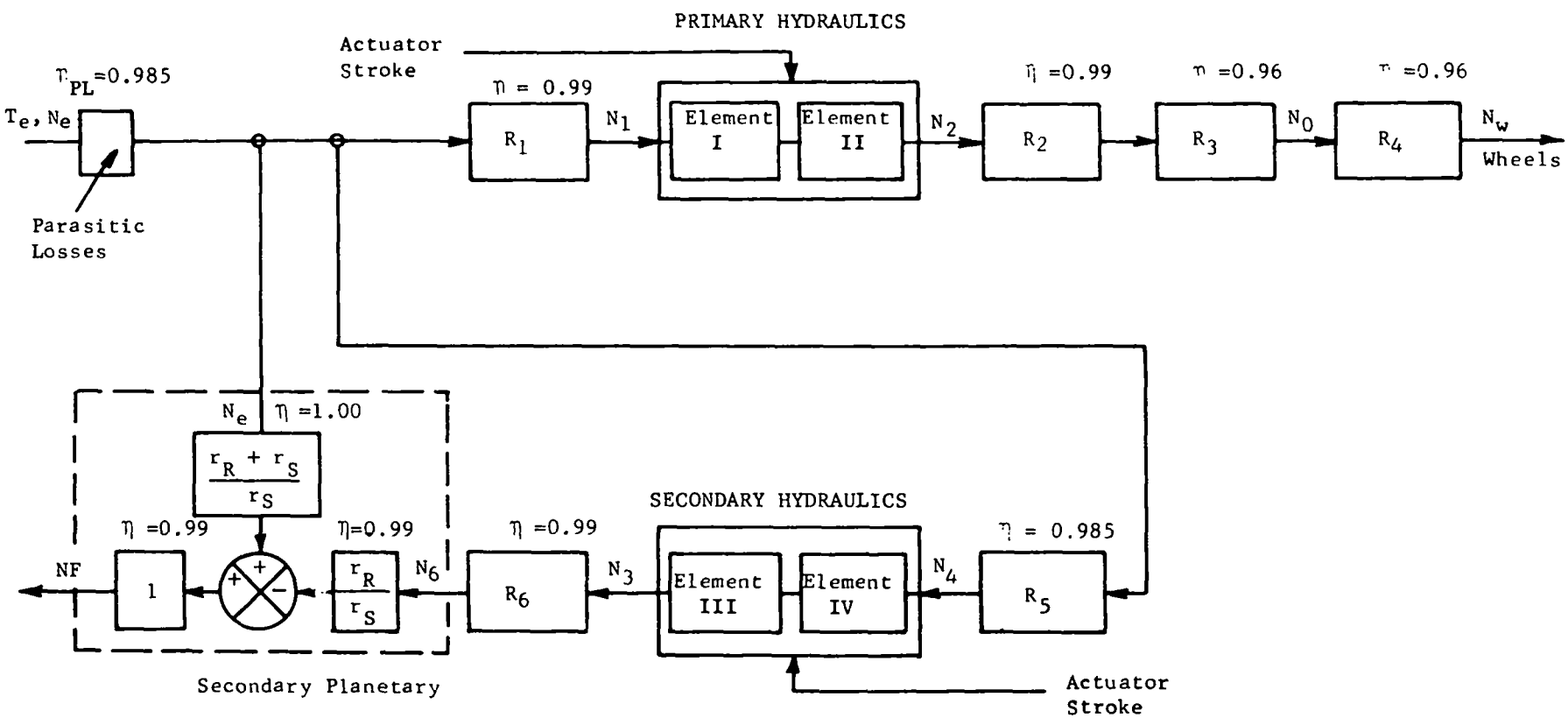

R = Gear Ratio

r = Gear Radius

N_e = Engine Speed

Fig. AI-1 Power-Splitting Transmission — Low-Speed Range Diagram

MTI-12516

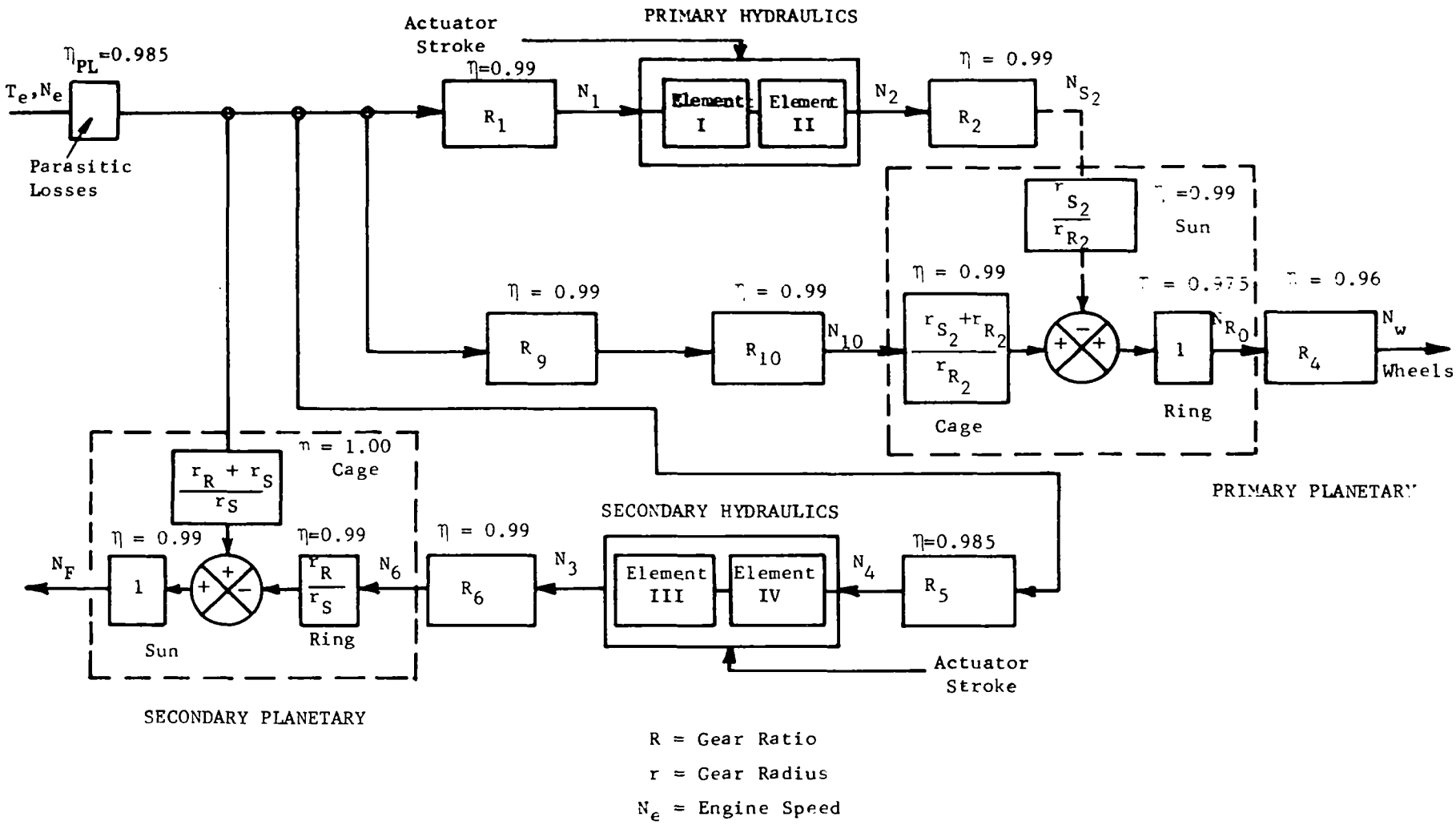

R = Gear Ratio

r = Gear Radius

N_e = Engine Speed

Fig. AI-2 Power-Splitting Transmission — High-Speed Range Diagram

MTI-12548

Numerical Values for Efficiencies and Loss Coefficients

The loss coefficients and mechanical efficiency numbers for the considered components were generated from previous experimental work.

Values for mechanical losses were typical for the type of gearing specified in the transmission design. The numerical values of efficiency used for performance calculations are shown in Figures AI-1 and AI-2 for the low-speed and high-speed ranges, respectively. The loss associated with η_{PL} has a minimum value of 1.5 hp at engine speeds above 3200 rpm. At lower speeds the minimum loss is linearly interpolated between 1 hp at 1400 rpm and 1.5 hp at 3200 rpm.

The equations defining losses in all hydraulic elements (presented earlier) were correlated to experimental data obtained for similar hydraulic units operating in various different transmissions that ranged in power rating from 25 to 200 horsepower. The resultant values of hydraulic element loss coefficients employed in all performance analysis calculations were as follows:

K_{1f}	= 0.0225	K_{1L}	= 0.0075
K_{2M}	= 0.025	K_{2L}	= 0.025
K_{3M}	= 0.005	K_{3L}	= 0.005

B. Digital Computer Program for Steady-State Performance Analysis

In broad terms, the computer program operates by moving backwards, from the wheels and the flywheel, towards the engine. At each point in the transmission the program calculates the torque required to overcome all hydraulic and mechanical losses between that point and the wheels or flywheel, together with the torque to overcome resistance to motion of the wheels (resistance specified by EPA) or flywheel (windage and friction specified by LMSC). The flywheel speed is related to the wheel speed by the TKE relationship. The primary and secondary (flywheel) transmissions are linked together to satisfy the necessary speed and torque relationships of a geared torsional system under steady-state operation.

The above statement of operation requires the addition of some constraint to define engine speed. The standard procedure followed by the program is to seek the engine speed which provides the necessary power at a condition of minimum SFC. To do this and not overconstrain the problem it is necessary to leave one displacement in each of the two hydraulic power converters undefined. The program then establishes the displacement value for each hydraulic power converter which provides the necessary transfer of speed and torque. Thus, in addition to calculating performance, the program provides a means of defining the primary and secondary displacement schedules as a function of speed.

Under certain conditions of speed and load, steady-state operation on the minimum SFC line cannot be achieved, due to displacement limits of the hydraulic units or limits on the engine speed. These special conditions will be amplified subsequently.

Detailed Program Procedure

The following sequence of operations describes the actual procedures followed by the computer program. Figures AI-1 and AI-2 provide a reference for this description. The terms upstream and downstream describe relative locations which, respectively, follow or oppose the arrows of Figures AI-1 and AI-2. Operation of the transmission in low range (Fig. AI-1) is described first (items 1-20) followed by modifications (items 21-25) to handle the high-range operation (Fig. AI-2)

1. For each vehicle speed of interest the program initially calculates the resistance torque to be overcome at the wheels, which must, therefore be supplied to the wheels by the transmission. This torque is based on EPA specifications.

2. The flywheel speed corresponding to the vehicle speed of interest is calculated via the TKE relationship.

3. The flywheel windage and friction losses corresponding to this flywheel speed are calculated according to LMSC specifications.

4. That engine speed is calculated which will provide the required power at minimum SFC. This first calculation of speed is made assuming no intermediate losses apart from resistance and windage.

5. Using equations I-1 and I-2, the speed and torque acting immediately upstream of the rear axle differential (R4) are computed.
6. Using equations I-1 and I-2, the speed and torque acting immediately upstream of the output gear ratio (R3) are computed.
7. Using equations I-1 and I-2, the speed and torque acting immediately upstream of the primary hydraulic output gear (R2) are computed.
8. Using equation I-1, the speed downstream of the primary pump input gear (R1) is calculated from the current value of engine speed.
9. Using equations I-6, 7, 8, 9 and 10, with pump and motor speed, motor torque, and motor displacement specified, the pump displacement and pump torque are determined for the primary hydraulic power converter (this system of equations is mildyly non-linear in displacement, but is solved effectively by direct (Picard) iteration).
10. Using equation I-2, the torque upstream of the primary pump input gear (R1) is calculated from the torque at input to the primary pump (element I).
11. Using equations I-4 and I-5, the torques at the ring and cage of the flywheel planetary are calculated from the flywheel windage torque (sun torque).
12. Using equation I-3, the speed of the ring of the flywheel planetary is calculated from the flywheel (sun) and engine (cage) speeds.
13. Using equation I-2 for R_6, the torque acting at output from the secondary motor (element III) is calculated.
14. Using equation I-1 for R_5, the speed of the secondary pump (element IV) is calculated from the engine speed.
15. Using equations I-6, 7, 8, 9 and 10 with motor torque, motor speed, motor displacement and pump speed specified, the pump torque and displacement are calculated for the secondary hydraulic power converter. (Direct iteration is again used to handle the non-linearities in this system of equations).
16. Using equation I-2 the torque upstream of the secondary pump gear (R_5) is calculated.
17. All the torques acting on the engine output shaft downstream of the parasitic losses are now defined. These torques are added to give the torque downstream of the parasitic losses.

18. Equation I-2 with a gear ratio of unity is imposed to calculate the power upstream of the parasitic losses, which is also the engine output torque.
19. From the engine performance charts the engine speed to define this torque at minimum SFC is interpolated.
20. The above procedure, starting at item 5, is repeated until engine speed and displacement values are repeatable between successive iterations within 1 part in 10,000.

For operation of the transmission in the high range, the following steps replace Steps 6 and 7:

21. Using equation I-1 for gears R_9 and R_{10}, the speed downstream of R_{10} is calculated. This speed is also the cage speed for the output planetary.
22. With cage and ring (upstream of R_4) speeds specified, equation I-3 is used to calculate the sun speed - which is the speed downstream of R_2.
23. Using equation I-4 and I-5, the sun and cage torques for the output planetary are calculated. The sun torque is the torque downstream of R_2. The cage torque is the torque downstream of R_9.
24. Using equation I-2 for ratio R_{10}, the torque upstream of R_{10} is calculated from the cage torque.
25. Using equation I-2 for ratio R_9, the torque upstream of R_9 is calculated.

Apart from the above modifications to handle the output planetary and ratios R_9 and R_{10}, the treatment for high-range operation parallels that for low-range operation.

The following additional constraints apply:

A. If the speed which provides the required torque at minimum SFC is less than 1400 RPM or greater than 3800 RPM, the desired speed is taken to be 1400 RPM or 3800 RPM respectively.

B. If any of the engine speed requirements call for displacements of either of the primary hydraulic units which exceed the allowable limits, then the value of displacement is set at that limiting value and the equations solved for engine speed. This constraint overrides Constraint A.

Sample Calculation

Table AI-1 shows sets of computed quantities at vehicle speeds of 20 and 70 MPH. The tables include quantities at every major point in the transmission.

C. DIGITAL DYNAMIC SIMULATION ANALYSIS AND COMPUTER PROGRAM

For the purposes of dynamic analysis the vehicle and transmission are modeled as a three-inertia system consisting of the Engine (J_e), Flywheel (J_f), and Output (J_o) inertias. The output inertia represents the vehicle mass referred to the rear axle. All secondary inertias are referred to the appropriate speed and combined with one of these three model inertias.

The equations of motion for the three inertias are:

$$J_o \dot{N}_w = T_w - T_R \qquad \text{(I-11)}$$

$$J_e \dot{N}_e = T_{in} - T_e \qquad \text{(I-12)}$$

$$J_f \dot{N}_f = T_{wind} - T_f \qquad \text{(I-13)}$$

Where N_w, N_e, N_f are the angular speeds of the output, engine, and flywheel inertias respectively in rad/sec.

T_w is the torque transmitted to the wheels via the transmission

T_R is the resistance torque acting on the wheels (rolling, wind and grade as specified by EPA)

TABLE AI-1 TYPICAL DETAILED RESULTS OF STEADY-STATE PERFORMANCE COMPUTER PROGRAM

INPUT DATA:

Vehicle Weight	4600 LB
C_d x A	12.00 FT^2
Grade	0.00 Per Cent
Ambient Temperature	85.00 °F
Ambient Pressure	14.70 PSI
Fuel Density	6.152 LB/GAL

Gear ratios as specified in Fig. B-1
Engine characteristics as specified by EPA
Pierced Flywheel — chamber pressure = 2.94 PSI
Resistance losses as specified by EPA

VEHICLE VELOCITY	20 M.P.H.		70 M.P.H.	
Power Train Efficiency	37.114	per cent	82.864	per cent
Transmission Efficiency	87.100	per cent	90.355	per cent
Primary Efficiency	100.317*	per cent	95.172	per cent
Secondary Efficiency	97.135	per cent	100.886*	per cent
Wheel Speed	266.774	RPM	933.710	RPM
Output Speed	947.049	RPM	3314.671	RPM
Flywheel Speed	23444.553	RPM	15911.520	RPM
Engine Speed	1400.000	RPM	2817.460	RPM
Speed At Element I	1102.360	RPM	2218.468	RPM
Speed At Element II	142.699	RPM	-2835.430	RPM
Speed At Element III	-1991.470	RPM	802.989	RPM
Speed At Element IV	1272.740	RPM	2561.353	RPM
Road Torque	90.400	Ft. Lb.	244.733	Ft. Lb.
Output Torque	26.483	Ft. Lb.	71.696	Ft. Lb.
Flywheel Torque	-1.344	Ft. Lb.	-0.724	Ft. Lb.
Engine Torque	74.974	Ft. Lb.	125.222	Ft. Lb.
Torque At Element I	-1.549	Ft. Lb.	45.419	Ft. Lb.
Torque At Element II	-12.003	Ft. Lb.	-33.821	Ft. Lb.
Torque At Element III	-9.003	Ft. Lb.	-4.657	Ft. Lb.
Torque At Element IV	14.502	Ft. Lb.	-1.447	Ft. Lb.
Road Horse Power	4.592	HP	43.508	HP
Output Horse Power	4.775	HP	45.248	HP
Flywheel Horse Power	-6.001	HP	-2.193	HP
Engine Horse Power	19.985	HP	67.174	HP
HP At Element I	-0.325	HP	19.185	HP
HP At Element II	-0.326	HP	18.259	HP
HP At Element III	3.414	HP	-0.712	HP
HP At Element IV	3.514	HP	-0.706	HP
Auxiliary Horse Power	7.613	HP	14.669	HP
Fuel Flow	12.276	Lb. Hr.	35.309	Lb. Hr.
SFC	0.614	Lb. Hr. HP	0.526	Lb. Hr. HP
MPG	10.023		12.196	
Displacement Of Element I	0.968	In^3/Rev	-7.500	In^3/Rev
Displacement Of Element II	7.500	In^3/Rev	5.625	In^3/Rev
Displacement Of Element III	3.633	In^3/Rev	5.500	In^3/Rev
Displacement Of Element IV	-5.841	In^3/Rev	1.710	In^3/Rev
Primary Pressure	120.661	Psi	455.166	Psi
Secondary Pressure	187.056	Psi	63.831	Psi
Ideal Flow At Element I	17.788	In^3/Sec	-277.308	In^3/Sec
Ideal Flow At Element II	17.837	In^3/Sec	-205.822	In^3/Sec
Ideal Flow At Element III	-120.584	In^3/Sec	73.607	In^3/Sec
Ideal Flow At Element IV	-123.901	In^3/Sec	73.004	In^3/Sec
Effective Flow At Element I	17.806	In^3/Sec	-272.983	In^3/Sec
Effective Flow At Element II	17.835	In^3/Sec	-271.121	In^3/Sec
Effective Flow At Element III	-122.723	In^3/Sec	73.413	In^3/Sec
Effective Flow At Element IV	-123.070	In^3/Sec	73.192	In^3/Sec
Primary Leakage Flow	-0.029	In^3/Sec	-1.862	In^3/Sec
Secondary Leakage Flow	-0.347	In^3/Sec	-0.221	In^3/Sec

*Efficiency > 100% implies that flow of power is in reverse of arrows in Figs. AI-1 and AI-2 (see values for power).

MT1-12335

T_{in} is the engine input torque

T_e is the engine output torque (acting on transmission)

T_{wind} is the windage and friction torque acting on the flywheel (as specified by Lockheed)

T_f is the flywheel output torque (acting on transmission)

The interrelationship between the system torques, including mechanical losses follows the treatment of Section A of this Appendix.

The flow, compressibility and leakage losses are also calculated according to the procedure of Section A of this Appendix.

Thus, the torques T_w, T_R, T_{in}, T_e, T_{wind}, T_f, can be calculated at any time, t, as a function of the three velocities N_w, N_f, N_e, and the primary and secondary pressures.

In determining the pressure in the hydraulic units the treatment differs from the steady state procedure. Under dynamic conditions, the rate of change of pressure, rather than the pressure itself is determined by the torques and speeds of the pump and motor as follows:

$$\frac{\partial p}{\partial t} = \frac{\beta Q}{V} \qquad \text{(I-14)}$$

where: p is the pressure

β is the bulk modulus of the fluid

Q is the net mismatch in pump and motor flows

V is the volume of fluid in the unit.

Equation I-14 is applied both to the primary and to the secondary hydraulic transmission units. Thus, together with the three equations of motion, I-11, 12, 13, the dynamics of the mechanical and hydraulic system are described by 5 dynamic equations, and the torque-speed pressure relationships of Section A of this Appendix. A further series of dynamic equations define the performance of the control system, whose function is to adjust the displacements of the hydraulic units in response to commands of the pedal and requirements of maintaining constant TKE. The control system is defined by the full range block diagram, Figure AII-7.

The complete system of twelve equations defining the dynamic performance of the vehicle and transmission in response to pedal commands is solved via a fourth order Runge-Kutta integration algorithm. Output quantities are printed at regularly spaced time intervals (typically every 0.1 sec).

The following quantities are calculated and printed by the computer program as a function of time.

Vehicle Velocity
Vehicle Acceleration
Wheel Speed
Flywheel Speed
Engine Speed
Transmission Output Speed
Wheel Torque
Road Torque
Engine Input Torque
Engine Output Torque
Flywheel Loss Torque
Flywheel Output Torque
Transmission Output Torque
Engine HP
Road HP
Flywheel HP
Overall Efficiency
Overall Transmission Efficiency
Primary Efficiency
Secondary Efficiency
Fuel Flow
Specific Fuel Consumption
MPG
Speed, Torque, HP at Hydraulic Units

Primary Pressure
Secondary Pressure
Displacements of Hydraulic Units
Ideal Hydraulic Flows
Cumulative Fuel Consumption
Cumulative Engine HP-Sec.
Cumulative Flywheel HP-Sec.

Input to the computer program consists of:

Initial Values of Spped, Pressure, Control Settings
Control Gains, Time Constants
Hydraulic Fluid Compressibility
Primary, Secondary Volumes
TKE
Wheel Radius
Grade
Car Frontal Area
Wind Resistance Coefficient
Ambient Pressure, Temperature
Vehicle Weight
Accessory HP Tables as a Function of Engine Speed
Engine Performance Tables
Idle Fuel Flow
Inertia Values
Gear Ratios
Sun, Gear, Cage Radii for Flywheel and Output Planetary Gears
Mechanical Efficiencies
Compressibility, Leakage and Flow Coefficients
Numerical Integration Controls
Range Switch Controls
Limits of: Pressure; Fuel Flow Rate of Change; Actuator Position; Displacements; Rate of Change of Actuator Position.

APPENDIX II

STABILITY AND ANALOG COMPUTER SIMULATION ANALYSIS

Presented herein is a discussion of the stability analysis performed for the transmission as an integral part of the flywheel/hybrid propulsion system. This is followed by a discussion of the related analog computer simulation analysis.

1. Stability Analysis

The objectives of the linearized stability analysis were:

A. To determine whether the feedback control loops are basically stable or unstable.

B. If unstable loops exist, add compensation as required to obtain stable operation.

C. To determine the optimum (maximum allowed) gain values. If the gains are too low, the transient response will be too slow. If the gains are too high, the system will be unstable.

From a general viewpoint, open loop gain and phase lag both vary with frequency. If the phase lag between the input to a control loop and the feedback signal is 180 degrees and the gain is 1.0 (zero decibels) or greater at the same frequency, the loop will be unstable. The open loop gain is usually set to give zero decibels at about 135 degrees, to provide adequate damping.

Stability analysis techniques apply only to linear systems. Therefore, the system nonlinearities must be replaced with equivalent linear functions. The gain varies with the operating point for a nonlinear system. Therefore, stability must be investigated over the full range of the parameters.

The effects of nonlinearities and interaction between control loops is best investigated on an analog computer. Some modification of the calculated gain values is usually required because of these effects.

The full-range nonlinear block diagram for the complete system is shown in Figure AII-7. The linearized block diagram of the secondary control system is shown in Figure AII-1. The linearized models were derived from the nonlinear block diagram.

Secondary Transmission Control

The secondary transmission has two integrations: one from the flywheel, and one from the piston actuator. Since two integrations provide 180 degrees phase lag at all frequencies, the secondary transmission will be unstable for any reasonable gain unless feedback compensation is used to reduce the phase lag. Two types of feedback around the piston actuator were considered: a mechanical feedback linkage and pressure feedback.

The steady-state displacement of hydrostatic Element IV, D_4,* varies with the values of engine speed and flywheel speed. With a mechanical feedback linkage around the secondary piston actuator, D_4 is given by

$$D_4 = \frac{K_{13} K_4}{K_f} \Delta KE$$

where

K_f = feedback gain around primary piston actuator

ΔKE = kinetic energy error

Thus, a kinetic energy error is required to maintain a steady-state value of D_4. The kinetic energy error is proportional to D_4. The kinetic energy error inherent with this type of feedback would not be desirable.

With pressure feedback, a kinetic energy error is not required to maintain steady-state values of D_4. The pressure feedback is equivalent to flywheel torque. Thus, with pressure feedback, flywheel torque is proportional to kinetic energy error. At steady-state, the kinetic energy error is proportional to flywheel friction. Flywheel friction torque is small compared to the maximum flywheel torque. Therefore, the steady-state kinetic energy error will be small.

*Nomenclature is given at the end of this Appendix.

At a constant value of D_4, an increase of engine speed results in an increase of flywheel speed. Engine speed is an undesired signal input to the secondary control system. Pressure feedback will reduce the effect of this undesired engine speed input. Pressure feedback will also reduce any tendency of the secondary transmission pressures to saturate. Therefore, pressure feedback was selected to reduce the phase lag of the piston actuator.

The linearized block diagram of the secondary control system is shown in Figure AII-1. The speed of hydrostatic Element IV, N_4, is considered constant in the linearized model. The square function in the flywheel speed feedback was linearized as follows. The square function is described by the equation

$$X = N_f^2 \qquad \text{(II-1)}$$

Differentiating

$$\Delta X = 2 N_f \Delta N_f \qquad \text{(II-2)}$$

In Equation II-2, ΔN_f and ΔX are the linearized variables. $2N_f$ is the gain of the square function. Next, the open-loop gain and phase lag versus frequency curves were plotted (Bode plots). A Nichols chart was used to determine closed-loop frequency response from the open loop Bode plot.

Figure AII-2 shows open- and closed-loop Bode plots of the inner control loop with pressure feedback, K_p. The gain of this loop varies with engine speed by 2.7 (9 db) over the operating range. The gains must be selected for adequate damping at the highest engine speed. The highest open-loop gain for stable operation at 3800 rpm engine speed is 18 (25 db) as shown in Figure AII-2. The required combined value for the gain parameters K_p and K_4 for 25 db open-loop gain is $K_p K_4 = 4.1 \times 10^{-5}$.

Figure AII-3 shows the Bode plots for the secondary transmission outer loop with linearized flywheel speed feedback. The maximum allowable gain at maximum engine speed and maximum flywheel speed is 8.5 (18.5 db). The required value of the

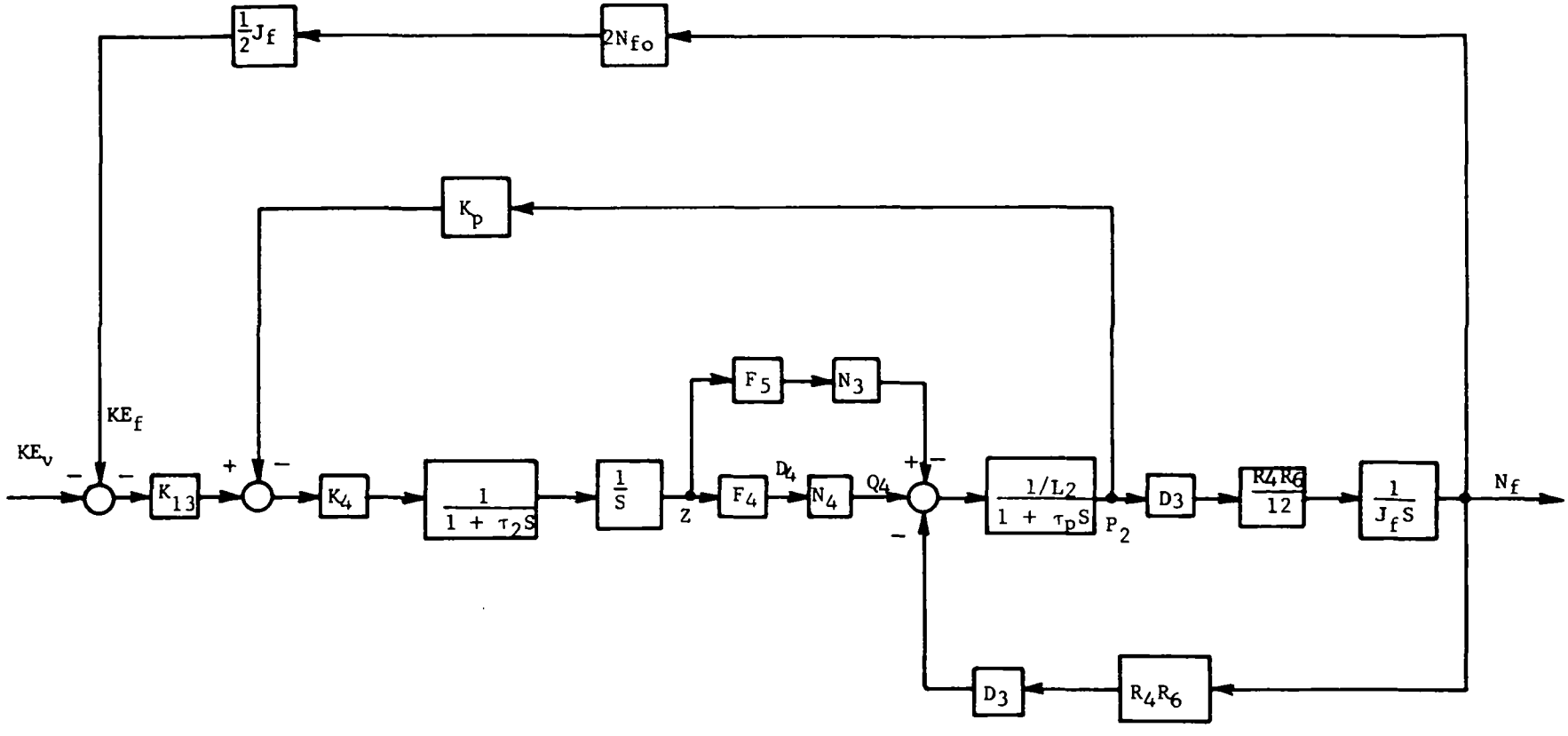

Fig. AII-1 Linear Block Diagram — Secondary Control System

MTI-12545

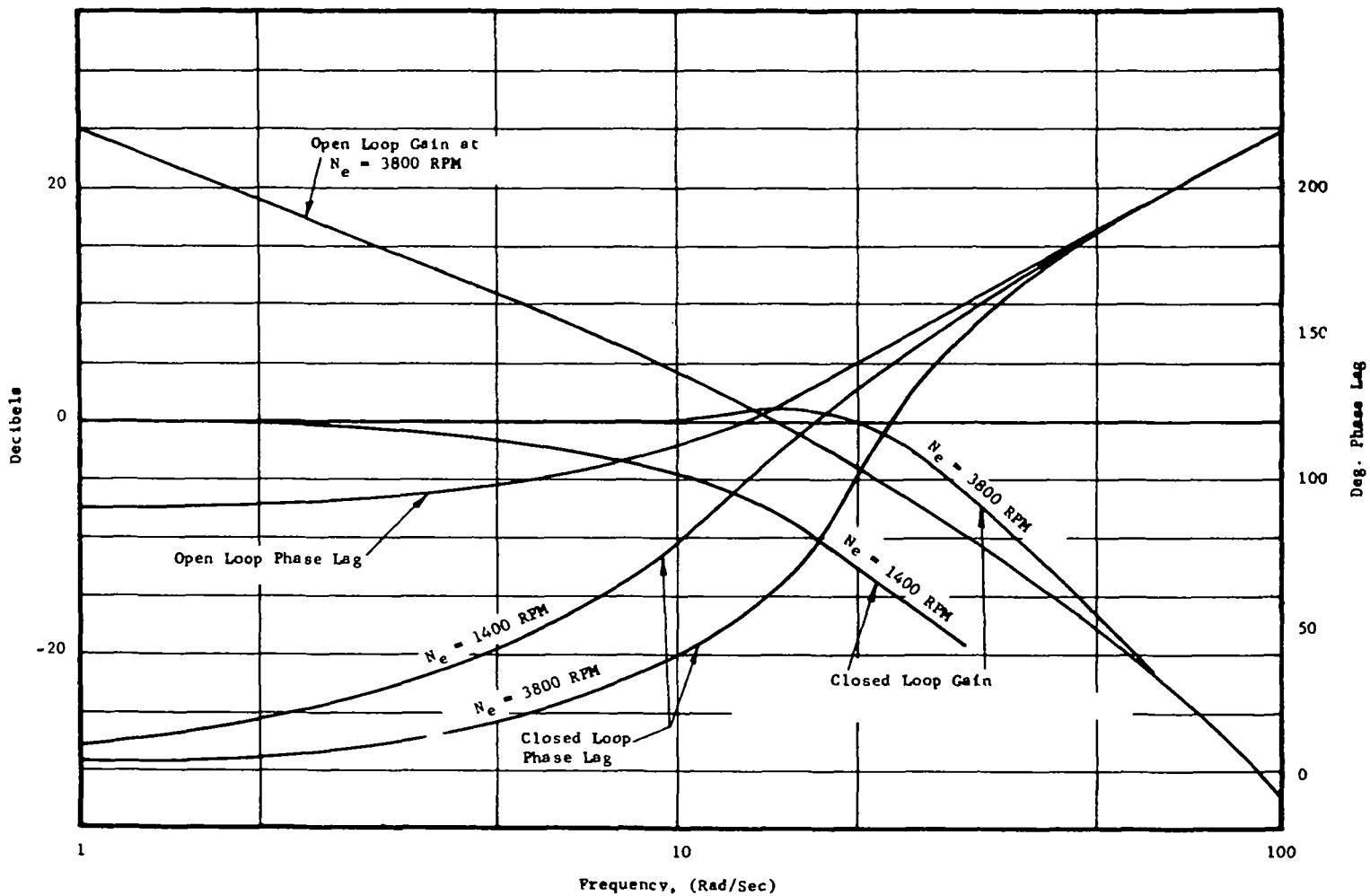

Fig. AII-2 Bode Plots - Secondary Transmission Inner Loop

MTI-12339

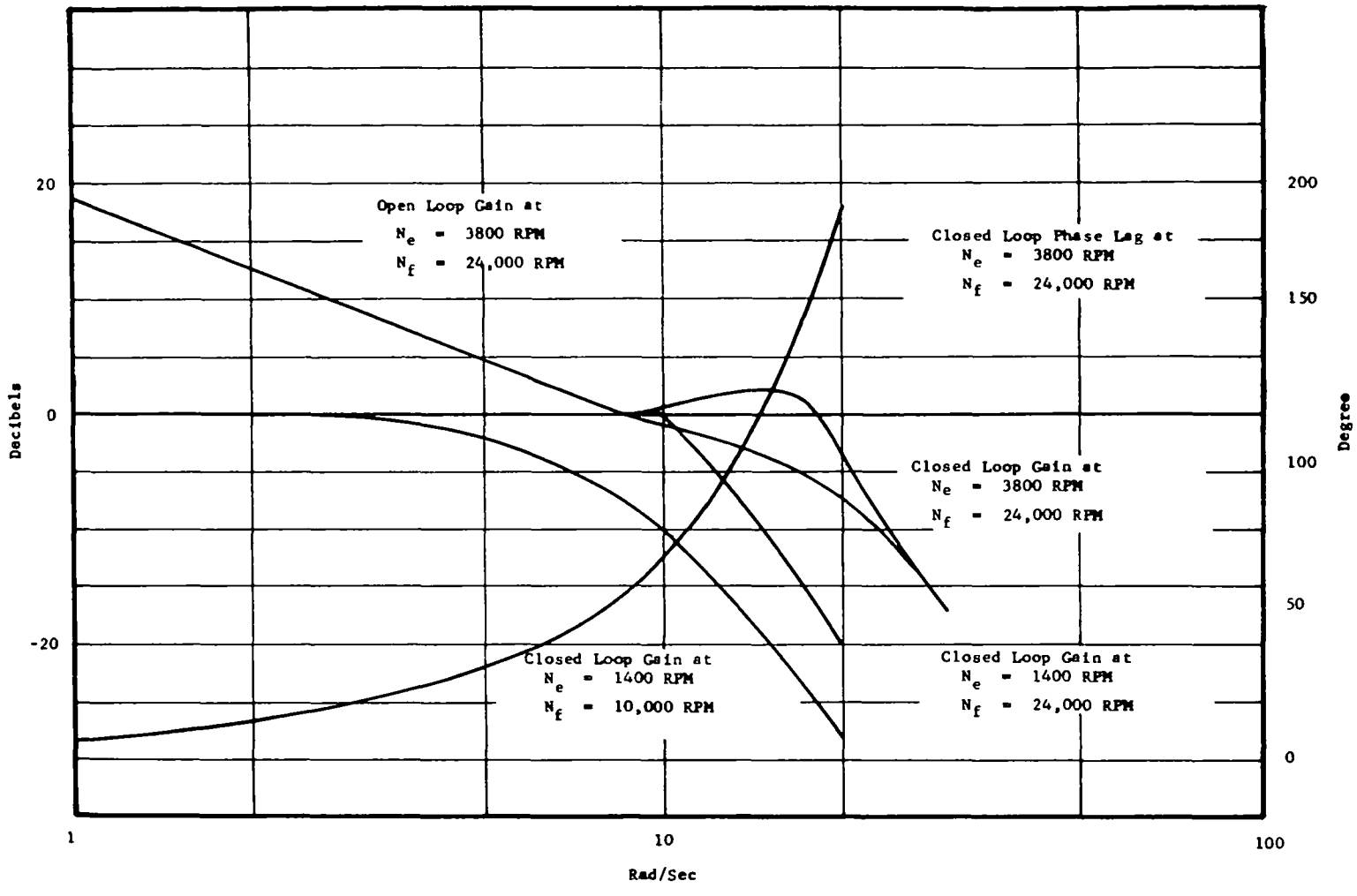

Fig. AII-3 Bode Plots - Secondary Transmission Outer Loop

MTI-12337

gain parameters K_{13} and K_p to give 18.5 db outer loop gain is $K_{13}/K_p = 0.264$.

Primary Control System — High Range

The linearized block diagram for the primary control system in high range is shown in Figure AII-4. This block diagram includes the engine and vehicle dynamics. It is necessary to simplify this model before applying linear analysis techniques due to the number of feedback loops.

There are two parallel feedback paths from P_1 (the hydrostatic differential pressure) to the gain block $R_2\ D_2$. The gain through the vehicle is less than the gain through the engine by a factor of about 100. Therefore, the signal path through the vehicle has negligible effect on primary control stability, and this path can be eliminated from the model. The signal through gain block $R_1\ P_1/12$ is small for normal values of P_1; therefore, this path can also be omitted from the analysis.

There are two feedback loops from engine speed, N_e, to the compressibility block. Closing these loops gives the transfer function

$$\frac{N_e}{N_1\ D_1} = \frac{C}{1 + \frac{2\zeta}{\omega_n} S + \frac{1}{\omega_n^2} S^2}$$

The parameters of the transfer function vary with the value of D_1 as shown below

D_1 in^3/rad	C	ω_n rad/sec	ζ
0	0.52	158	0.085
+1.19	0.35	80	0.17
-1.19	1.03	80	0.17

The set of parameters having the greatest effect on stability is on the lower line since the gain is highest and the natural frequency is lowest. Those parameters were used for the inner loop transfer function. The open- and closed-loop Bode plots for the outer loop are shown in Figure AII-5. The inner-loop dynamics actually have negligible effect on the outer loop dynamics. The value

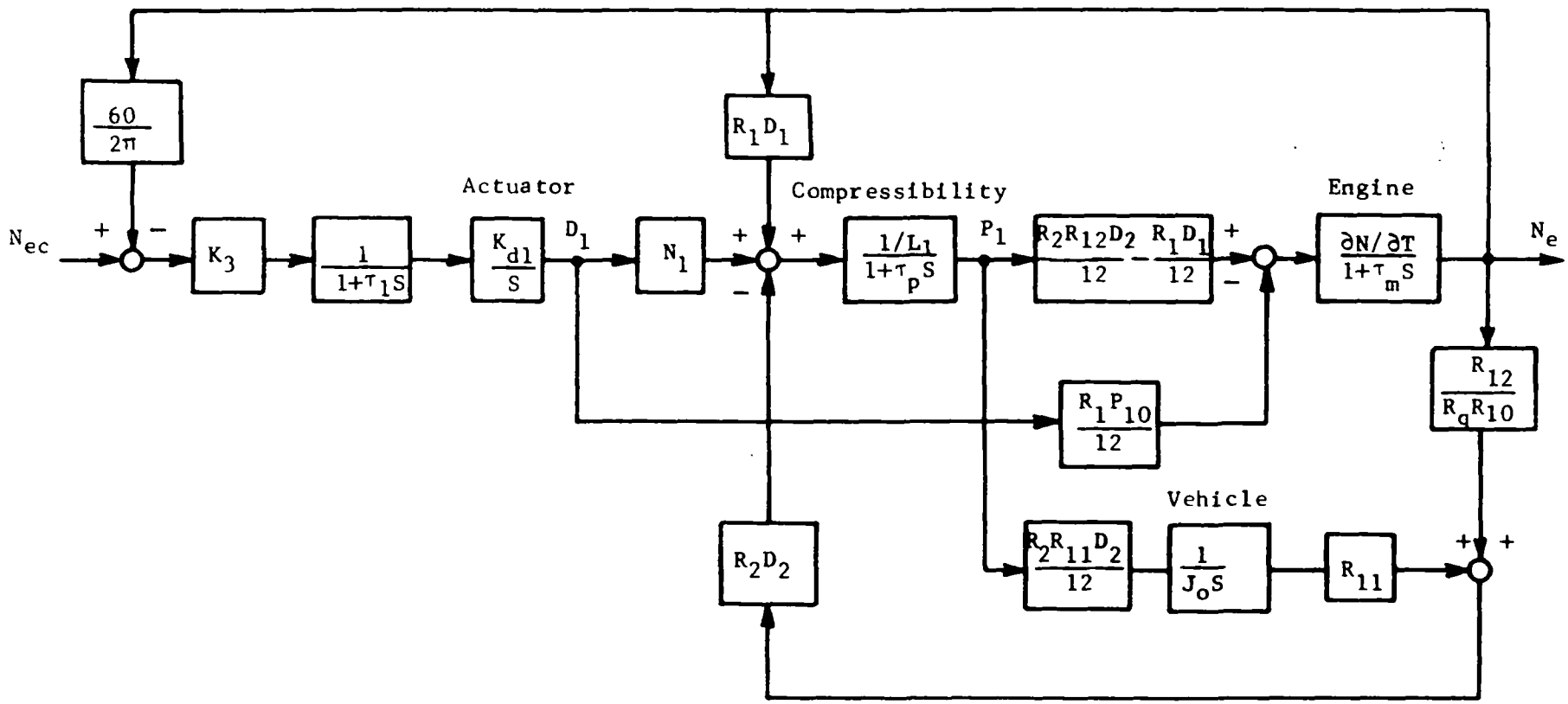

Fig. AII-4. Linear Block Diagram - Primary Control System - High Range

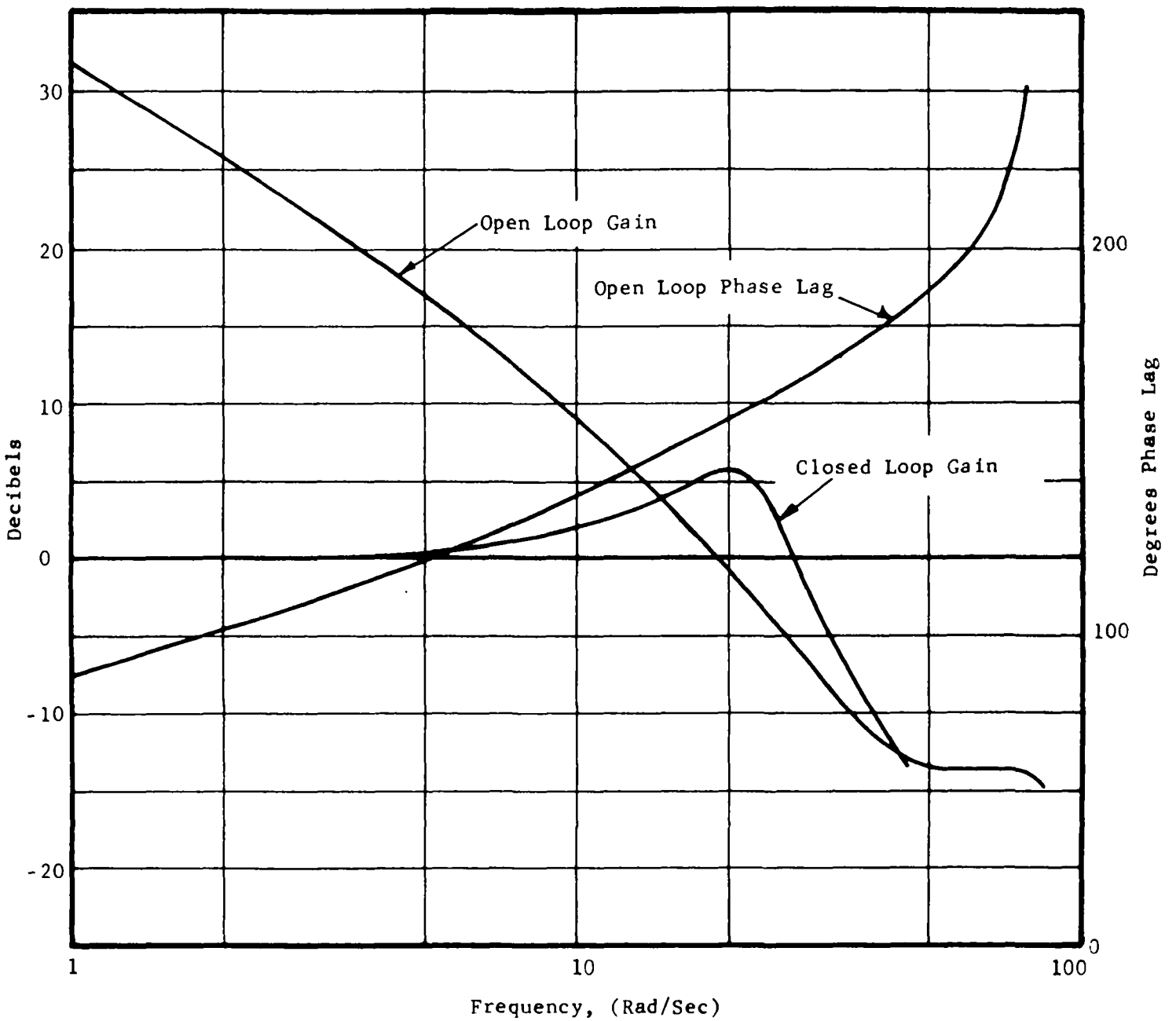

Fig. AII-5. Primary Control System Frequency Response

of gain term K_3 which was used for this Bode plot is $K_3 = 3.68 \times 10^{-3}$.

Primary Control System — Low Range

The linear block diagram for the primary control system in low range is shown in Figure AII-6. The signal paths through the vehicle inertia and $R_1 P_1/12$ gain block can be omitted for reasons explained in the high-range analysis. Closure of the inner feedback loop gives the transfer function

$$\frac{N_e}{N_1 D_1} = \frac{C_2}{1 + \frac{2\zeta_2}{\omega_{n2}} S + \frac{1}{\omega_{n2}^2} S^2}$$

where

$C_2 = 1.35$

$\zeta_2 = 0.25$

$\omega_{n2} = 52$ rad/sec

The outer loop is not closed over most of the low range since Hydrostatic Element I, Displacement D_1, does not change. At the upper end of the low range, the outer loop is closed. The outer loop is then the same as in the high range. The primary control system is therefore stable in low range. At the upper end of the low range, damping is a little lower than in the high range due to the higher gain, and lower natural frequency of the inner loop.

Results of Stability Analysis

The stability analysis above thus indicates that both the primary and secondary control systems are basically stable with the gain values established.

2. Analog Computer Simulation

The objectives of the analog computer study were to:

A. Verify validity and accuracy of mathematical model.

B. Modify the gain values determined from the linear analysis, if required, to compensate for the effect of nonlinearities.

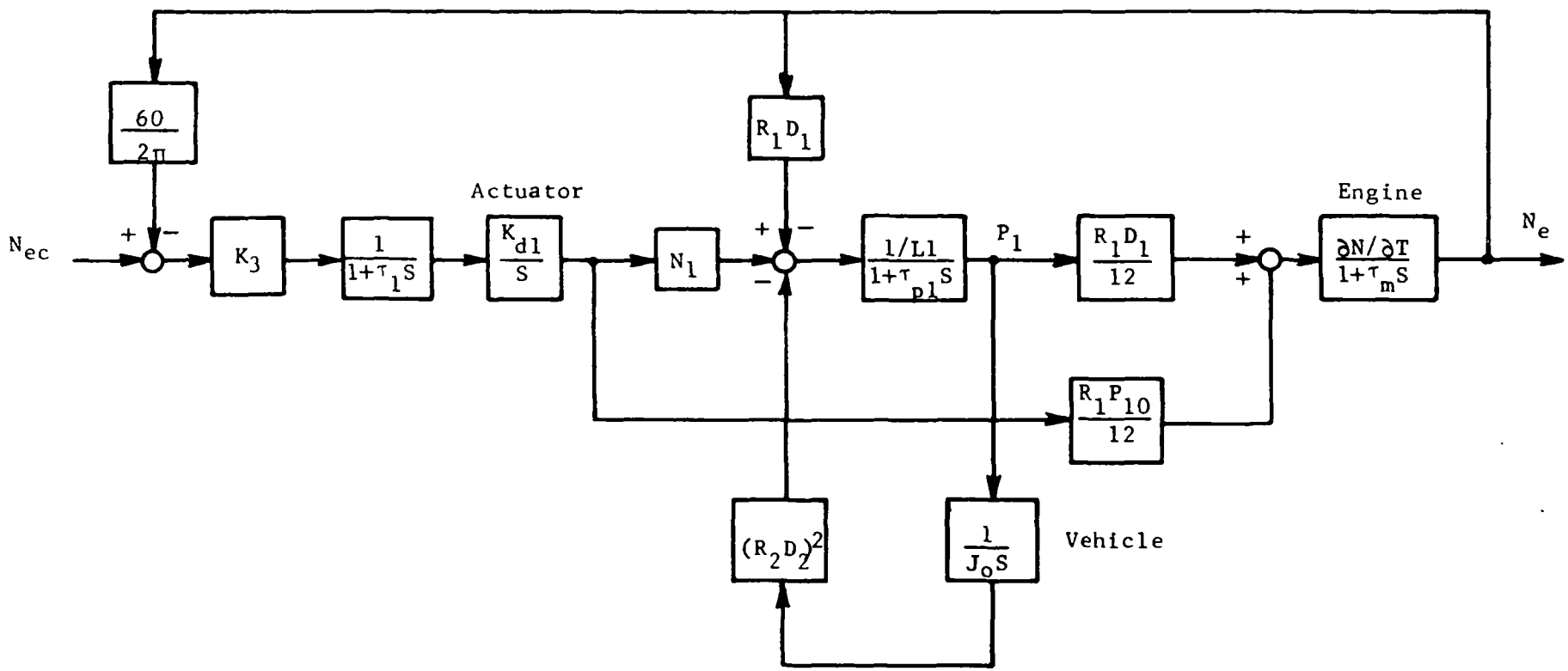

Fig. AII-6. Linear Block Diagram - Primary Control System - Low Range

C. Study operation of system and determine whether compensation is required to meet performance goals without saturating pressures.

D. Determine the effects of variation of parameters.

The block diagram of the mathematical model used for computer simulation is shown in Figure AII-7. The significant nonlinearities of the engine, vehicle, and hydrostatic transmissions are included in this model. Only those transmission losses affecting dynamics were included.

The control functions were partially linearized, since the control configuration was not established at the time of the computer study.

The system was simulated on an Applied Dynamics AD/4 Analog Computer.

The secondary control system was initially observed to be unstable for all values of gain K_4. This instability resulted from two integrations within the secondary control system. The first integration is performed by the secondary piston actuator and the second by the flywheel. These two integrations provide 180 degrees phase lag at all frequencies, and thus result in instability. A mechanical feedback linkage around the secondary piston actuator was then simulated to reduce the phase lag of this integration. This feedback corrected the instability. Performance was not satisfactory however. When the secondary piston actuator acts as an integrator, the flywheel speed will continuously change as long as a kinetic energy error exists. With the feedback linkage, integration is no longer performed by the secondary piston actuator. A large kinetic energy error is then required to obtain a significant change in flywheel speed. It is necessary to have a significant kinetic energy error at all speeds to obtain a steady-state value of D_4. Therefore, the feedback linkage was considered unsatisfactory.

Pressure feedback from the secondary hydrostatic transmission around the secondary piston actuator was then simulated. The use of pressure feedback with appropriate values of the gain parameters eliminated the instability in the secondary control system which occurred as a result of the double integration.

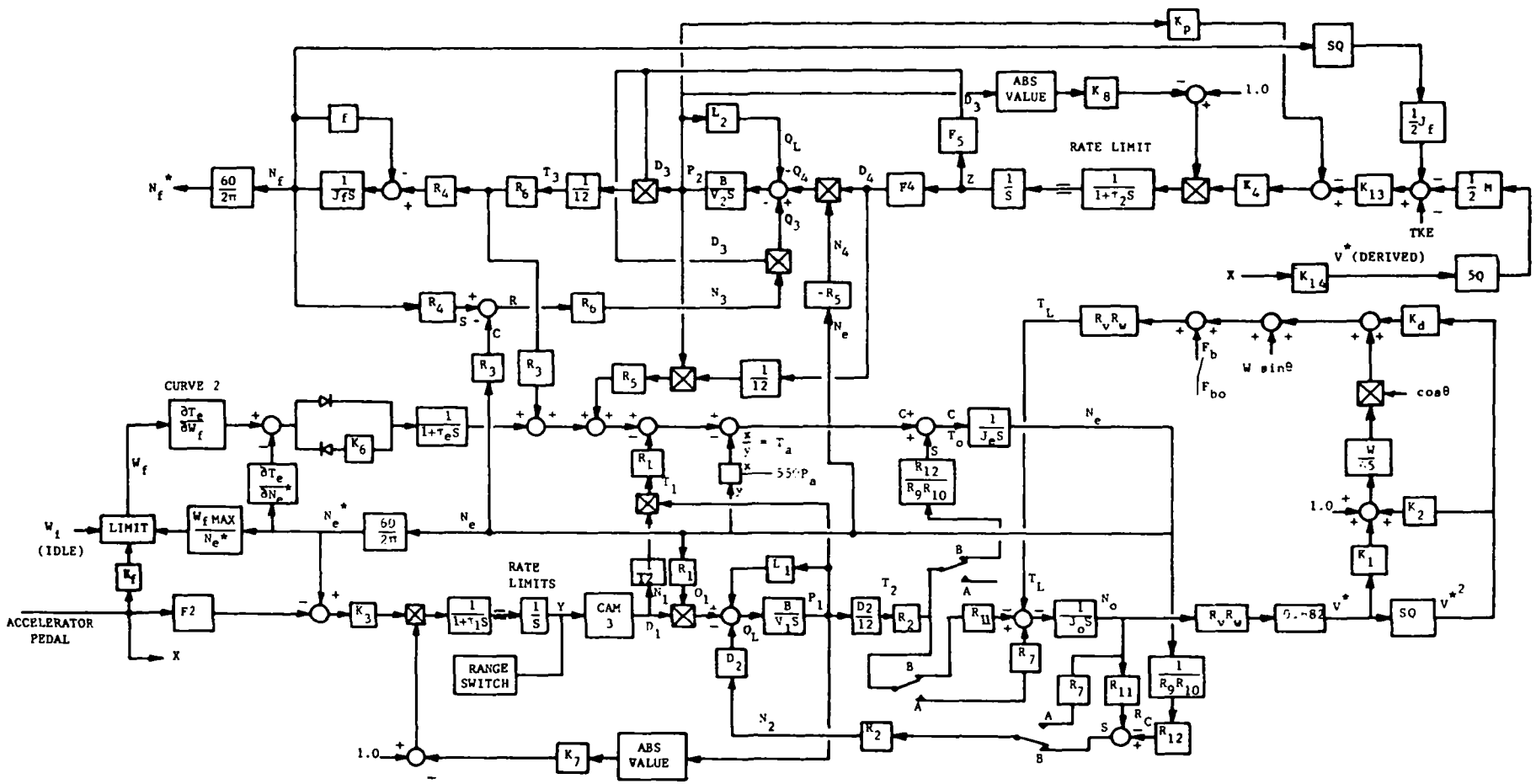

Fig. AII-7 Full-Range Block Diagram - Engine Flywheel Propulsion System

MTI-12539

The Type A control system was then investigated. The Type A control system utilizes an output speed governor for computing vehicle kinetic energy as illustrated in Figure D-3, page D-6 . The output speed input to the secondary control system forms a positive feedback, or regenerative, type of control loop. When the secondary control system gain, K_4, was too high, the system was difficult to control at high vehicle speed. Once the vehicle speed started to increase, it would continue to increase until the computer overloaded. Returning the accelerator pedal to zero would not stop this runaway condition. It was possible to bring the system under control by depressing the brake pedal.

Reducing K_4 eliminated the runaway condition at high vehicle speed. However, with reduced K_4 gain, the transient response at low vehicle speed was too slow. Several methods of eliminating the regenerative condition at high speed without reducing the transient response at low speed were considered.

One possible method is to schedule gain K_4 as a function of vehicle speed. At low speed, K_4 would be high to obtain good transient response. At high speed, K_4 would be reduced as required for stable operation.

The square function in the output speed input to the secondary loop is the cause of the gain variation. The effective gain of this input is proportional to output speed as a result of the square function. Eliminating the square function would eliminate the variable gain and a constant value of K_4 could be used at all speeds. However, with this control configuration, flywheel speed would decrease linearly with increasing vehicle speed. The total kinetic energy would then vary with vehicle speed.

Several other approaches were also considered. However, with any of these approaches, the positive feedback loop seemed objectional. An unexpected gain variation could possibly lead to loss of control. Therefore, the B-type control system configuration shown in Figure D-4, page D-6 , was selected in preference to the A-type.

The B-type control system uses scheduled vehicle velocity as a function of accelerator pedal position for the input to the secondary control system. The

positive feedback loop, which is the major problem with the A-type control, does not exist in the B-type control.

The primary control system gain determined in the linear stability analysis was found to be the optimum value. The secondary control gains used were a little lower than the values determined from the stability analysis. The system was stable with these gain values.

The computer study indicated that some type of dynamic compensation was required in order to achieve the desired acceleration rates without exceeding the pressure limits. When fuel flow increases too rapidly, the engine leads the flywheel. Engine lead results in engine power being used to accelerate the vehicle, and also can result in the flywheel accelerating during a vehicle acceleration. When flywheel torque increases too rapidly, excessive vehicle acceleration and pressure saturation can occur.

Several compensation techniques were investigated, including lagged accelerator pedal input signal, and lagged fuel flow. The best results were achieved with dynamic compensation of fuel flow and the secondary piston actuator. These dynamic compensators effectively modulate the fuel flow and secondary actuator rate limits to achieve the desired acceleration rates without pressure saturation. There are several possible sources for the input signals to the dynamic compensators, including primary piston actuator displacement, primary piston actuator differential pressure, secondary piston actuator displacement, and fuel flow. The signals from each of these sources appeared to be effective in modulating the dynamic compensators. A more detailed study is required to select the dynamic compensator input function.

Conclusions

1. Pressure feedback from the secondary hydrostatic transmission around the secondary piston actuator is required to stabilize the secondary transmission.

2. The use of an output governor for computing vehicle kinetic energy is undesirable. This input to the secondary control forms a positive feedback loop with resulting control problems.

3. Dynamic compensation of the fuel flow and secondary piston actuator is required.

4. The system is stable and is capable of meeting the performance goals with the gain values selected and with dynamic compensation of fuel flow and secondary piston actuator.

NOMENCLATURE

D	displacement of hydrostatic unit, in^3/rad
F_4	gain of hydrostatic unit 4 cam block, in^2
F_5	gain of hydrostatic unit 3 cam block, in^2
J	inertia, ft lb sec^2
K_3	primary control system gain, in/sec/rpm
K_4	gain parameter
K_{13}	gain parameter, in/sec/ft lb
K_{d1}	gain of hydrostatic unit 1 cam block, in^2
K_p	pressure feedback gain, in/sec/psi
L_1	primary hydrostatic transmission leakage parameter, in^3/sec/psi
L_2	secondary hydrostatic transmission leakage parameter, in^3/sec/psi
N	speed, rad/sec
P_1	primary hydrostatic transmission pressure, psi
P_2	secondary hydrostatic transmission pressure, psi
Q	flow rate, in^3/sec
R	transmission ratio
S	d/dt, 1/sec
τ_m	engine time constant (J_e $\partial N/\partial T$), sec
τ_p	compressibility time constant (V/LB), sec
$\partial N/\partial T$	reciprocal of slope of engine torque-speed curve, 1/ft lb sec

Subscripts (except as noted in Nomenclature)

e	engine
f	flywheel

o	primary transmission output
1	hydrostatic unit 1
2	hydrostatic unit 2
3	hydrostatic unit 3
4	hydrostatic unit 4