United States
Environmental Protection
Agency

Industrial Environmental Research
Laboratory
Research Triangle Park NC 27711

EPA-600/7-80-012b
March 1980

EPA

Waste and Water Management for Conventional Coal Combustion Assessment Report - 1979; Volume II. Water Management

Interagency Energy/Environment R&D Program Report

RESEARCH REPORTING SERIES

Research reports of the Office of Research and Development, U.S. Environmental Protection Agency, have been grouped into nine series. These nine broad categories were established to facilitate further development and application of environmental technology. Elimination of traditional grouping was consciously planned to foster technology transfer and a maximum interface in related fields. The nine series are:

1. Environmental Health Effects Research
2. Environmental Protection Technology
3. Ecological Research
4. Environmental Monitoring
5. Socioeconomic Environmental Studies
6. Scientific and Technical Assessment Reports (STAR)
7. Interagency Energy-Environment Research and Development
8. "Special" Reports
9. Miscellaneous Reports

This report has been assigned to the INTERAGENCY ENERGY-ENVIRONMENT RESEARCH AND DEVELOPMENT series. Reports in this series result from the effort funded under the 17-agency Federal Energy/Environment Research and Development Program. These studies relate to EPA's mission to protect the public health and welfare from adverse effects of pollutants associated with energy systems. The goal of the Program is to assure the rapid development of domestic energy supplies in an environmentally-compatible manner by providing the necessary environmental data and control technology. Investigations include analyses of the transport of energy-related pollutants and their health and ecological effects; assessments of, and development of, control technologies for energy systems; and integrated assessments of a wide range of energy-related environmental issues.

EPA REVIEW NOTICE

This report has been reviewed by the participating Federal Agencies, and approved for publication. Approval does not signify that the contents necessarily reflect the views and policies of the Government, nor does mention of trade names or commercial products constitute endorsement or recommendation for use.

This document is available to the public through the National Technical Information Service, Springfield, Virginia 22161.

EPA-600/7-80-012b

March 1980

Waste and Water Management for Conventional Coal Combustion Assessment Report - 1979; Volume II. Water Management

by

C.J. Santhanam, R.R. Lunt, C.B. Cooper,
D.E. Klimschmidt, I. Bodek, and W.A. Tucker (ADL);
and C.R. Ullrich (University of Louisville)

Arthur D. Little, Inc.
20 Acorn Park
Cambridge, Massachusetts 02140

Contract No. 68-02-2654
Program Element No. EHE624A

EPA Project Officer: Julian W. Jones

Industrial Environmental Research Laboratory
Office of Environmental Engineering and Technology
Research Triangle Park, NC 27711

Prepared for

U.S. ENVIRONMENTAL PROTECTION AGENCY
Office of Research and Development
Washington, DC 20460

PARTICIPANTS IN THIS STUDY

This First Annual R&D Report is submitted by Arthur D. Little, Inc. to the U. S. Environmental Protection Agency (EPA) under Contract No. 68-02-2654. The Report reflects the work of many members of the Arthur D. Little staff, subcontractors and consultants. Those participating in the study are listed below.

Principal Investigators

Chakra J. Santhanam
Richard R. Lunt
Charles B. Cooper
David E. Kleinschmidt
Itamar Bodek
William A. Tucker

Contributing Staff

Armand A. Balasco
James D. Birkett
Sara E. Bysshe
Diane E. Gilbert
Sandra L. Johnson
Warren J. Lyman
Shashank S. Nadgauda
James E. Oberholtzer
James I. Stevens
James R. Valentine

Subcontractors

D. Joseph Hagerty — University of Louisville
C. Robert Ullrich — University of Louisville

We would like to note the helpful views offered by and discussions with Michael Osborne of EPA-IERL in Research Triangle Park, N. C., and John Lum of EPA-Effluent Guidelines Division in Washington, D. C.

Above all, we thank Julian W. Jones, the EPA Project Officer, for his guidance throughout the course of this work and in the preparation of this report.

ACKNOWLEDGEMENTS

Many other individuals and organizations helped by discussions with the principal investigators. In particular, grateful appreciation is expressed to:

Aerospace Corporation - Paul Leo, Jerome Rossoff

Auburn University - Ray Tarrer and others

Department of Energy - Val E. Weaver

Dravo Corporation - Carl Gilbert, Carl Labovitz, Earl Rothfuss and others

Electric Power Research Institute (EPRI) - John Maulbetsch, Thomas Moraski and Dean Golden

Environmental Protection Agency, Municipal Environmental Research Laboratory - Robert Landreth, Michael Roulier, and Don Sanning

Federal Highway Authority - W. Clayton Ormsby

IU Conversion Systems (IUCS) - Ron Bacskai, Hugh Mullen Beverly Roberts, and others

Louisville Gas and Electric Company - Robert P. Van Ness

National Ash Association - John Faber

National Bureau of Standards - Paul Brown

Southern Services - Reed Edwards, Lamont Larrimore, and Randall Rush

Tennessee Valley Authority (TVA) - James Crowe, T-Y. J. Chu, H. William Elder, Hollis B. Flora, R. James Ruane, Steven K. Seale, and others

CONVERSION FACTORS

English/American Units	Metric Equivalent
Length:	
1 inch	2.540 centimeters
1 foot	0.3048 meters
1 fathom	1.829 meters
1 mile (statute)	1.609 kilometers
1 mile (nautical)	1.852 kilometers
Area:	
1 square foot	0.0929 square meters
1 acre	4,047 square meters
Volume:	
1 cubic foot	28.316 liters
1 cubic yard	0.7641 cubic meters
1 gallon	3.785 liters
1 barrel (42 gals)	0.1589 cu. meters
Weight/Mass:	
1 pound	0.4536 kilograms
1 ton (short)	0.9072 metric tons
Pressure:	
1 atmosphere (Normal)	101,325 pascal
1 pound per square inch	0.07031 kilograms per square centimeter
1 pound per square inch	6894 pascal
Concentration:	
1 part per million (weight)	1 milligram per liter
Speed:	
1 knot	1.853 kilometers per hour
Energy/Power:	
1 British Thermal Unit	1,054.8 joules
1 megawatt	3.600×10^9 joules per hour
1 kilowatt hour	3.60×10^6 joules
Temperature:	
1 degree Fahrenheit	5/9 degree Centigrade

GLOSSARY

Cementitious: A chemically precipitated binding of particles resulting in the formation of a solid mass.

Fixation: The process of putting into a stable or unalterable form.

Impoundment: Reservoir, pond, or area used to retain, confine, or accumulate a fluid material.

Leachate: Soluble constituents removed from a substance by the action of a percolating liquid.

Leaching Agent: A material used to percolate through something that results in the leaching of soluble constituents.

Pozzolan: A siliceous or aluminosiliceous material that in itself possess little or no cementitious value but that in finely divided form and in the presence of moisture will react with alkali or alkaline earth hydroxide to form compounds possessing cementitious properties.

Pozzolanic Reaction: A reaction producing a pozzolanic product.

Stabilization: Making stable by physical or chemical treatment.

ABBREVIATIONS

BOD	biochemical oxygen demand
Btu	British thermal unit
cc	cubic centimeter
cm	centimeter
COD	chemical oxygen demand
°C	degrees Centigrade (Celcius)
°F	degrees Fahrenheit
ESP	electrostatic precipitator
FGC	flue gas cleaning
FGD	flue gas desulfurization
ft	feet
g	gram
gal	gallon
gpd	gallons per day
gpm	gallons per minute
hp	horsepower
hr	hour
in.	inch
j	joule
j/s	joule per second
k	thousand
kg	kilogram
kCal	kilocalorie
km	kilometer
kw	kilowatt
kwh	kilowatthour
ℓ or lit	liter
lb	pound
M	million
m^2	square meter
m^3	cubic meter
mg	milligram
MGD	million gallons per day
MW	megawatt
MWe	megawatt electric
MWH	megawatt hour
μg	microgram
mil	milliliter
min	minute
ppm	parts per million
psi	pounds per square inch
psia	pounds per square inch absolute
scf/m	standard cubic feet per minute
sec	second
TDS	total dissolved solids
TOS	total oxidizable sulfur
TSS	total suspended solids
tpy	tons per year
yr	year

TABLE OF CONTENTS

	Page
ACKNOWLEDGEMENTS	iv
CONVERSION FACTORS	v
GLOSSARY	vi
ABBREVIATIONS	vii
LIST OF TABLES	xii
LIST OF FIGURES	xvii
1.0 INTRODUCTION	1-1
1.1 Purpose and Content	1-1
1.2 Report Organization	1-5
2.0 WATER USAGE IN POWER PLANTS	2-1
2.1 Overall Perspective	2-1
2.2 Water Balance in Coal-Fired Plants	2-22
2.3 Current R&D Studies	2-26
3.0 OVERALL WATER BALANCES IN POWER PLANTS	3-1
3.1 Waste Stream Flows	3-1
3.1.1 Condenser Cooling System	3-1
3.1.2 Steam Generation	3-2
3.1.3 Water Treatment Systems	3-2
3.1.4 Ash Handling Systems	3-5
3.1.5 Flue Gas Desulfurization (FGD) Systems	3-5
3.1.6 Miscellaneous Operations	3-6
3.1.7 Maintenance Cleaning	3-7
3.1.8 Drainage	3-8
3.2 Treatment Technology in General	3-9
3.3 Condenser Cooling System Wastes	3-17
3.3.1 General	3-17
3.3.2 Once-Through Cooling	3-17
3.3.3 Recirculating Systems	3-20
3.3.4 Water Conservation and Chemical Waste Streams	3-23
3.3.5 Wet Cooling Tower	3-24
3.3.6 Cooling Tower Blowdown Treatment	3-36
3.4 Steam Generation Wastes	3-62

TABLE OF CONTENTS
(Continued)

	Page
3.4.1 System Operation	3-62
3.4.2 Waste Characteristics	3-66
3.4.3 Boiler Blowdown Treatment Options	3-66
3.5 Water Treatment Systems	3-69
3.5.1 System Operation	3-69
3.5.2 Waste Characteristics	3-70
3.5.3 Treatment Options and Economics	3-76
3.5.4 Trends in Water Treatment	3-76
3.6 Ash Handling	3-79
3.6.1 Ash Characteristics	3-79
3.6.2 Ash Collection-Handling Systems	3-82
3.6.3 Conveying Systems to Storage or Disposal	3-87
3.6.4 System Design Considerations	3-89
3.6.5 Waste Streams from Ash Handling	3-90
3.6.6 Present Treatment Methods	3-101
3.6.7 Treatment Options for Recycle/Reuse	3-104
3.6.8 Dry Handling Systems	3-112
3.6.9 Economics of Treatment	3-112
3.7 FGD Systems	3-113
3.7.1 Process Description	3-113
3.7.2 Makeup Water Requirements	3-120
3.7.3 Water Recycle Options	3-127
3.7.4 Recent Studies	3-130
3.8 Miscellaneous Operations	3-132
3.8.1 Description of Operations	3-132
3.8.2 Waste Characteristics	3-133
3.8.3 Treatment Options	3-133
3.8.4 Recycle/Reuse	3-133
3.9 Maintenance Cleaning Wastes	3-135
3.9.1 Description of Operations	3-135
3.9.2 Waste Characteristics	3-138
3.9.3 Treatment Options	3-139
3.10 Drainage	3-146
3.10.1 Description	3-146

TABLE OF CONTENTS
(Continued)

		Page
3.10.2	Waste Characteristics	3-147
3.10.3	Treatment Options	3-150
4.0	REGULATORY CONSIDERATIONS	4-1
4.1	Existing and Proposed Regulations	4-1
4.1.1	Wastewater Discharges Requiring NPDES Permit	4-1
4.1.2	Discharges to a Publicly Owned Treatment Works (POTW)	4-4
4.1.3	Water Intakes	4-6
4.1.4	Remand Decision	4-7
4.1.5	Priority Pollutant Removal	4-9
4.1.6	"Zero Discharge" Goal of PL 92-500	4-11
4.1.7	Clean Water Act of 1977 (PL 95-217)	4-13
4.1.8	Resource Conservation and Recovery Act of 1976 (RCRA)	4-13
4.1.9	National Energy Act of 1978	4-14
4.2	Possible Future Regulations	4-15
4.2.1	A Multimedia Approach May be Required	4-15
4.2.2	Interrelationship of Toxics Controls and Water Reuse Technology	4-16
5.0	RECYCLE/REUSE OF WATER	5-1
5.1	General	5-1
5.2	Combined Central Treatment	5-1
5.2.1	Wastewater Management	5-1
5.2.2	Treatment Technology	5-2
5.2.3	Central Treatment System	5-2
5.3	Water Reuse Considerations	5-5
5.3.1	General	5-5
5.3.2	Technology for Reuse	5-8
5.3.3	Reuse Schemes	5-14
5.3.4	Toxic Substances Control	5-28
5.3.5	Dry Systems	5-30
5.4	Overview on System Constraints	5-39

LIST OF TABLES

Table No.		Page
2.1	Water Used for Electric Utility Generation of Thermoelectric Power, In Million Gallons per Day, By States, 1975	2-2
2.2	Power Production, 1975	2-4
2.3	Trends in Steam Electric Power Generation	2-5
2.4	Projected Electric Power Generation by Fuel	2-7
2.5	Water Used for Electric Utility Generation of Thermoelectric Power, in Million Gallons per Day, By Region, 1975	2-8
2.6	Annual Water Requirements for Steam-Electric Power Plants	2-10
2.7	General Information Summary Condenser Cooling Systems	2-13
2.8	Number of Plants, Capacities, and Types of Cooling by Water Resource Region, 1973	2-15
2.9	Average Cooling Water Use, By Water Resource Regions, 1973	2-16
2.10	Coal-Fired Steam-Electric Power Plants with Cooling Towers, 1975	2-17
2.11	Coal-Fired Steam-Electric Power Plants with Cooling Ponds, 1975	2-20
2.12	Use of Chemical Additives by Water Resources Region 1973	2-23
2.13	EPA Projects Concerning Water Recycle/Treatment/ Reuse in Power Plants	2-27
2.14	EPRI Projects Concerning Water Recycle/Treading/ Reuse in Power Plants	2-28
3.1	Chemical Waste Categories - Coal-Fired Power Plants	3-10
3.2	Summary of Chemical Characteristics of Utility Effluent Systems (Coal-Fired Plants)	3-11

LIST OF TABLES
(Continued)

Table No.		Page
3.21	Boiler Blowdown Flowrates	3-68
3.22	Typical Water Treatment Wastewater Flows	3-73
3.23	Water Treatment Wastes in Coal-Fired Power Plants	3-75
3.24	Ion Exchange Material Types and Regenerant Requirement	3-78
3.25	Fly Ash/Bottom Ash Percentages	3-81
3.26	Ash Handling Systems	3-83
3.27	Coal Ash Handling at Power Plants	3-91
3.28	Typical Ash Pond Inlet and Discharge	3-93
3.29	Characteristics of Once-Through Combined Ash Pond Discharges	3-97
3.30	Relationships Between Plant Operation Conditions and pH Values of Ash Pond Effluents at Ten Coal-Fired Power Plants	3-98
3.31	Ash Reactivity Determined from Leaching Studies	3-100
3.32	Effluent Guidelines and Standards for Power Plant Ash Ponds	3-105
3.33	Ryznar Stability Index	3-108
3.34	Suggested Control Limits for Ash Pond Recirculating Water	3-110
3.35	Recirculating Bottom Ash System with Treatment of Bottom Ash Blowdown	3-114
3.36	Recirculating Bottom Ash System with Combined Ash Pond Overflow	3-115
3.37	Process Factors Affecting Water Balances in Nonregenerable FGC Scrubber Systems	3-124

LIST OF TABLES
(Continued)

Table No.		Page
3.38	Water Requirements for Generalized Nonrecovery Scrubbing Systems	3-126
3.39	FGD Systems in Coal-Fired Plants	3-128
3.40	Sanitary Wastes in Power Plants	3-134
3.41	Wastewater Flow Range - Maintenance Cleaning	3-140
3.42	Raw Waste Flow and Loadings - Maintenance Cleaning	3-141
3.43	Coal Pile Drainage	3-148
3.44	Typical Coal Pile Runoff Characteristics	3-149
4.1	Summary of Wastewater Guidelines and Standards for Steam Electric Power Plants (excluding heated discharges)	4-2
4.2	Summary of Effluent Limitations Guidelines and Standards for Heat	4-3
4.3	Threshold Concentrations of Pollutants that are Inhibitory to Biological Treatment Processes	4-5
4.4	Priority Pollutants Potentially Present in Utility Effluents	4-10
4.5	Total Metals Discharged from Power Plants in the U.S. (1973) Compared to Other Industrial Sources	4-12
4.6	Total Iron and Copper Discharges from Coal-Fired Power Plants in the U.S., 1973	4-12
5.1	Treatment Technology for Wastewaters in Power Plants	5-3
5.2	Capital and Operating Costs - Central Treatment	5-7
5.3	Radian Study for the EPA - Selected Plants for Water Recycle/Reuse Study	5-18

LIST OF TABLES
(Continued)

Table No.		Page
5.4	Radian Study for the EPA	5-20
5.5	Radian Study for the EPA	5-21
5.6	Radian Study for the EPA	5-22
5.7	Radian Study for the EPA	5-23
5.8	Radian Study for the EPA	5-24
5.9	Pollutants Reported in 308 Form for Cooling Systems in Coal-Fired Power Plants	5-29
5.10	Priority Pollutant Removal on Selected Technologies	5-31
5.11	Comparison of Technologies for Priority Pollutants	5-32
5.12	Summary of Fly Ash Handling Systems Reported by Coal-Fired Steam Electric Power Plants	5-36
5.13	Fly Ash Handling: Comparison of Wet and Dry System Costs	5-38
6.1	Potential Impact Issues for Coal-Fired Utility Cooling Systems and Ash Disposal Systems	6-2
6.2	Examples of Chemical Additives Characteristically Found in Cooling Tower Blowdown as a Result of Makeup Water Treatment	6-8
6.3	EPA Projects Concerning Water Recycle/Treatment Reuse in Power Plants	6-25
6.4	EPRI Projects Concerning Water Recycle/Treatment Reuse in Power Plants	6-26

LIST OF FIGURES

Figure No.		Page
2.1	Water Resource Regions	2-9
2.2	Generalized Schematic Water Balance for a Typical 1000 MW Coal-Fired Power Plant	2-25
3.1	Power Cycle Diagram	3-3
3.2	An Example of Recycle/Treatment/Reuse Scheme for Coal-Fired Power Plants with FGD	3-15
3.3	Cooling Systems	3-18
3.4	Lime-Soda Ash Softening for Zero Discharge	3-48
3.5	Zeolite Softening for Zero Discharge	3-48
3.6	Chromate Removal by Reduction	3-50
3.7	Chromate Removal by Ion Exchange	3-51
3.8	Electrochemical Reduction of Chromium	3-52
3.9	Typical Water Treatment Processes	3-71
3.10	Silica Concentration in Boiler Water	3-72
3.11	Example of a Recirculating Bottom Ash System	3-94
3.12	Water Balance-Fly Ash Handling	3-95
3.13	Recirculating Bottom Ash Sluicing System Blowdown Treatment	3-102
3.14	Treatment of Combined Ash Overflow	3-103
3.15	Langelier Saturation Index	3-106
3.16	Generalized FGD System	3-117
3.17	Limestone Slurry FGD System	3-118
3.18	Water Balance Factors for Nonregenerable FGD Systems	3-121
5.1	Coal-Fired Plant - Central Treatment of Wastewater	5-6

LIST OF FIGURES
(Continued)

Figure No.		Page
5.2	Vapor Compression Evaporator	5-9
5.3	Vapor Compression Evaporator for Cooling Tower Blowdown Reuse	5-10
5.4	Water Management at a 600 MW Coal-Fired Unit	5-15
5.5	Reuse of Water at a Typical Coal-Fired Power Plant	5-16
5.6	Water Recycle/Reuse at a 1100 MW Coal-Fired Power Plant	5-26
5.7	Water Management at a Typical 1980 Coal Fired Power Plant	5-27

1.0 INTRODUCTION

1.1 Purpose and Content

The issue of water management in steam-electric power plants is a complex one encompassing technology, environmental protection, aesthetics and economics. Prior to the advent of national environmental legislation, the magnitude and nature of water management including recycle, treatment, and/or reuse was determined principally by the two factors of water supply availability and economics. Since by far the largest water usage is for cooling, those regions of limited water availability were the first to focus on recycle systems such as cooling towers or ponds, whereas those regions with ample water supplies often utilized once-through cooling. The installation of water treatment systems prior to environmental regulations was based principally upon operational economics, i.e., the necessity to control the quality of the water going into the boiler, and so on in order to sustain operability, reduce maintenance, etc. The large population centers and, concomitantly, the large electric users are predominantly located in water-plentiful parts of the United States; hence, the usage of water management systems was, until recently, limited.

With the passage of the Water Pollution Control Act Amendments of 1972 (PL-92-500) the Clean Water Act of 1977 and other increasingly stringent environmental regulations on industrial effluent discharges and increasing pressure on available water supplies, water management in power plants assumed increasing importance. In recent years, substantial focus has been on technology for water recycle and reuse. With the mid-course corrections effected under the Clean Water Act Amendments of 1977, the emphasis on zero discharge requirements under the 1983 guidelines for the nation has been modified. The emphasis is probably likely to be on control of priority pollutants in the effluent discharges; zero discharge may still be a distant goal. The other regulatory framework which will impact water management is the Resource Conservation and Recovery Act of 1976 (RCRA). Against this background of these regulatory requirements, the emphasis is likely to be on optimum water management at power plants rather than total water reuse.

The multiplicity of uses of water in a power plant and the widely varying requirements for water quality in those uses, present power plants with major opportunities for water management through a combination of:

- Proper wastewater management to minimize net effluent leaving the plant. For example, boiler blowdown is often of higher purity than the original source of supply and may be used as makeup to demineralizers.
- Combining of compatible wastewater streams with appropriate equalization.
- Treatment of the appropriate streams for potential reuse in the power plant itself or, if that is unjustified on economic or regulatory grounds, for discharge to a receiving stream after meeting regulatory requirements for effluents. In the future, concentrations of priority pollutants in effluents are likely to be major considerations.

This is the second volume in a five-volume report assessing water and waste management for conventional combustion sources and assesses the current status of various studies and programs in water management and trends in water recycle/reuse.

Water management at coal-fired power plants involves the maximum technical and economic constraints among fossil fuel units due to the need for broad application of particulate and sulfur control technology. In view of the nation's commitment to increasing use of coal, water management at coal-fired power plants has become the focus of substantial exploration by the EPA.

While the primary focus of this section is coal-fired power plants, many of the assessment considerations discussed apply to power plants using other types of fossil fuels (gas and oil). Since coal-fired plants generate the maximum range of wastes, they can serve as the logical focus to assess all environmental and technological problems of water management at fossil fuel power plants.

A coal-fired (or any steam-electric) power plant produces two broad categories of wastes:

1. Chemical wastes from various processes and operations in the plant. Usually these are aqueous since water is often the process fluid and handling medium.

2. Thermal wastes produced in the process of steam-electric generation. These are rejected into the atmosphere with water as an intermediate recipient of waste heat.

The above are separate subcategories in EPA guidelines documents. This report focuses on chemical pollution aspects in assessing water management including recycle/treatment/reuse and will mainly be concerned with item 1.

To the extent that chemicals are used in heat rejection processes, their impact on water treatment/reuse and on effluents are also considered. Water management will lead to increasing recycle/reuse of water even though zero discharge may not be achieved. Increasing the amounts of water recycled or reused in any or all of the various streams in a power plant is affected by the chemicals that enter either through their occurrence in natural waters or through the operation of the plant (for example, corrosion inhibitors, slimicides, etc.). Hence, the nature and type of treatment of water for recycle or reuse is determined both by these factors and the regulatory limitation now in existence and which may be placed in the future on discharges to the environment. Consequently, the water treatment technologies applicable to power plants attempting to achieve high recycle or reuse rates are influenced principally by site-specific and system-specific factors. In addition, the difference between existing and new (or planned) power plants on economic water recycle and reuse are many. In existing plants, piping and collection systems for wastewater management and increased recycle or reuse can be a major expense item and may potentially outweigh any other consideration.

On balance, if economic consideration were to be ignored, technology does exist for almost complete, if not total, reuse of water and elimination of pollutant discharges. In many cases, however, economic constraints may be prohibitive, particularly in old and existing plants. Economic considerations also raise two important factors:

1. Existing technology in many cases is from other industries and in some cases on a smaller scale than required in the utility industry.

2. Understandably, the utility industry being a regulated industry has been very reluctant to accept economic estimates on technology unless such technology is demonstrated on a large scale in this industry.

Increasingly stringent regulations and constraints on water availability will force further emphasis on water management. This will be resisted principally on an economic basis since the installation and operation of the technologies required to effect tighter water management may result in reduced overall plant efficiencies and increased capital investments with no concomitant increase in the generation of power. This situation will be exacerbated by the industry's reluctance to install systems which have not been widely demonstrated and, furthermore, which require a degree of integration with the power generation cycle which has not heretofore been necessary. Consequently, an effective program of technology transfer coupled with a judicious assessment of the techno-economic-environmental aspects of environmental regulations will be pre-eminent in determining the degree of water management in the steam-electric power industry.

The review and assessment has involved two separate efforts as described below:

1. Review of the data and information available as of February 1979 on the water management in power plants. The review is based upon published reports and documents as well as contacts with private companies and other organizations engaged in water management technology development or involved in the design and operation of wastewater disposal facilities. Much of the information has been drawn from the waste characterization studies and technology development/demonstration programs sponsored by the Environmental Protection Agency (EPA) and the Electric Power Research Institute (EPRI).

2. Based upon the review of the data and assessment of ongoing work in waste characterization, identification of data and information gaps relating to wastewater properties and the development of recommendations for potential EPA initiatives to assist in covering these gaps. The principal purpose of this effort is to ensure that, ultimately, adequate data will be available to permit reasonable assessment of the impacts associated with the management of water in power plants.

Throughout this work, emphasis has been placed upon technology now commercially demonstrated and, where data are available, upon technologies in advanced stages of development that are likely to achieve commercialization in the United States in the near future.

1.2 Report Organization

Based on an assessment of ongoing EPA and other programs, this report presents:

- Water balances and water use in coal-fired power plants.
- Available wastewater management and treatment technology practices from the point of view of increased water recycle/reuse. Economic data on technology, where available, are updated to mid-1978 levels and reported.
- Present regulatory requirements and trends for the future.
- Environmental impact issues discussed briefly against the background of water management technology and regulatory requirements.
- Based on the above assessment, identification of data gaps and prioritization of the same.

2.0 WATER USAGE IN POWER PLANTS

2.1 Overall Perspective

Water Use

A fossil-fired power plant requires water for several uses.

The major use points for water and, hence, generation points for effluents in a coal-fired power plant are:

I. Continuous
   1. Condenser Cooling
   2. Steam Generation
   3. Water Treatment
   4. Ash Handling
   5. Flue Gas Desulfurization
   6. Miscellaneous

II. Intermittent
   7. Maintenance Cleaning
   8. Drainage (including coal pile runoff)

Power Generation

Most electric power generated in the United States, particularly base load power, is generated through steam-electric systems (or thermo-electric systems). Use of gas turbines, advanced power cycles and other means are relatively minor and are expected to remain so in the near future. This report will focus on steam-electric power plants only; in such power plants, water is required for two purposes:

- Consumption uses such as evaporation in cooling towers to dispose of waste heat and unavoidable losses at various use points, and as a
- Handling and transportation medium for unit operations and unit processes such as ash handling.

Table 2.1 presents data (for 1975) on a state-by-state basis for water used in steam-electric power generation [1]. In 1975, total water use by steam electric plants amounted to 190 bgd, an increase of 18% over 1970. Total power production by utilities and industry is summarized in Table 2.2. Trends in power production by steam electric plants from 1971 to 1975 is summarized in Table 2.3. Because of large water demand, steam electric

Table 2.1

Water Used for Electric Utility Generation of Thermoelectric Power, In Million Gallons Per Day, By States, 1975

[Partial figures may not add to totals because of independent rounding]

State	Condenser and reactor cooling					Other thermoelectric uses					Water consumed	
	Self-supplied			Public supplies	Self-supplied and public supplies	Self-supplied			Public supplies	Self-supplied and public supplies		
	Fresh ground water	Surface water				Fresh ground water	Surface water					
		Fresh	Saline				Fresh	Saline			Fresh	Saline
Alabama	0	6,600	100	0	6,800	2.2	250	2.1	0.1	250	25	0.2
Alaska	2.2	18	1.0	0	22	0	0	0	0	0	1.0	0
Arizona	33	110	0	0	140	0	0	0	0	0	41	0
Arkansas	2.0	1,700	0	0	1,700	0	0	0	0	0	3.0	0
California	380	1,100	9,200	0	11,000	0	0	0	0	0	32	60
Colorado	32	100	0	0	130	0	.1	0	.1	.2	12	0
Connecticut	0	720	1,200	.1	1,900	.3	3.7	3.7	1.0	8.7	4.7	0
Delaware	27	0	1,400	0	1,500	0	0	0	0	0	0	0
Florida	52	1,600	11,000	1.5	13,000	8.5	2.3	0	1.6	12	36	91
Georgia	0	3,500	510	0	4,000	15	74	1.5	0	90	42	0
Hawaii	140	32	980	0	1,200	0	0	0	0	0	0	0
Idaho	6.8	0	0	0	6.8	.2	0	0	0	.2	1.8	0
Illinois	.7	8,800	0	1.0	8,800	7.0	320	0	3.0	320	5.0	0
Indiana	1.2	7,200	0	1.0	7,200	.4	110	0	0	110	65	0
Iowa	2.0	2,600	0	14	2,700	0	81	0	.3	82	15	0
Kansas	42	250	0	0	300	0	0	0	0	0	35	0
Kentucky	0	2,200	0	0	2,200	1.8	90	0	14	110	45	0
Louisiana	0	5,300	0	0	5,300	37	120	0	0	150	300	1.7
Maine	0	22	600	0	620	1.0	1.0	0	1.0	3.0	0	0
Maryland	0	410	5,200	0	5,600	1.0	10	0	0	11	2.0	18
Massachusetts	0	880	6,400	0	7,200	0	0	0	0	0	0	0
Michigan	0	12,000	0	0	12,000	0	58	0	0	58	0	0
Minnesota	32	2,700	0	15	2,800	.7	57	0	.3	58	58	0
Mississippi	11	120	540	0	660	2.0	0	0	0	2.0	8.0	9.0
Missouri	7.3	3,000	0	0	3,000	0	0	0	0	0	29	0
Montana	0	160	0	0	160	0	0	0	0	0	.3	0
Nebraska	270	620	0	84	970	0	0	0	0	0	8.4	0
Nevada	5.9	87	0	0	93	2.0	0	0	.3	2.3	22	0
New Hampshire	0	74	620	0	700	0	0	0	0	0	0	0
New Jersey	0	880	3,400	0	4,300	1.2	3.2	33	5.1	43	.8	1.7

Table 2.1 (Continued)

Water Used for Electric Utility Generation of Thermoelectric Power, In Million Gallons Per Day, By States, 1975

New Mexico	19	22	0	0	41	0	0	0	0	0	33	0
New York	0	6,800	12,000	36	19,000	190	370	0	6.0	570	15	24
North Carolina	0	3,500	950	0	4,500	.1	36	0	0	36	45	20
North Dakota	.3	620	0	0	620	0	0	0	0	0	19	0
Ohio	17	12,000	0	42	12,000	5.9	130	0	1.3	140	78	0
Oklahoma	1.0	180	0	0	180	0	1.4	0	.4	1.8	53	0
Oregon	0	22	0	0	22	0	0	0	0	0	0	0
Pennsylvania	1.3	11,000	160	0	11,000	2.5	96	0	0	98	230	1.0
Rhode Island	0	0	330	0	330	0	0	0	0	0	0	0
South Carolina	0	4,900	8.3	0	4,900	.1	40	.4	0	41	59	.2
South Dakota	.8	5.3	0	.2	6.3	.2	.1	0	0	.3	3.3	0
Tennessee	0	5,800	0	0	5,800	0	0	0	0	0	50	0
Texas	37	8,900	2,800	4.9	12,000	1.3	2.8	.3	.1	4.5	290	28
Utah	0	15	0	0	15	0	0	0	0	0	8.0	0
Vermont	0	220	0	0	220	0	22	0	0	22	94	0
Virginia	0	3,400	2,500	0	5,900	.9	0	0	0	0	0	0
Washington	0	7.0	0	0	7.0	0	0	0	0	0	7.0	0
West Virginia	0	5,200	0	0	5,200	0	140	0	0	140	1.2	0
Wisconsin	0	2,200	0	0	2,200	0	0	0	0	0	30	0
Wyoming	.4	180	0	0	180	.7	4.9	0	0	5.6	24	0
District of Columbia	0	130	0	0	130	0	0	0	0	0	2.0	0
Puerto Rico–Virgin Islands	0	0	3,300	5.0	3,300	0	0	0	0	0	5.0	2.0
United States[1]	1,100	130,000	64,000	200	190,000	290	2,000	41	35	2,400	1,900	260

[1] Including Puerto Rico and Virgin Islands.

Source: [1]

Table 2.2

Power Production, 1975

Basis: Billions of kWh

	Utility	Industry	Total
1. Thermoelectric			
Fossil Fuel	1445		
Nuclear	172		
Total Thermoelectric	1617	85	
2. Other Means			
(Hydroelectric)	301		
TOTAL POWER	1918	85	2003

Source: [1]

Table 2.3

Trends in Steam Electric Power Generation

Year	Installed Capacity Thousands of MW	Total Net Generation Trillions of kWh	Fuel Used Quads (10^{15}Btu)			
			Coal	Oil	Gas	Total
1971	283.4	1,293.7	7.244	2.328	3.841	13.413
1972	309.9	1,411.9	7.794	2.816	3.811	14.421
1973	340.0	1,536.4	8.583	3.270	3.517	15.370
1974	372.0	1,504.5	8.476	3.052	3.315	14.843
1975	396.0	1,558.4	8.679	3.010	3.101	14.790

Source: [2]

plants furnish practically all their own water. In 1975, less than 1/2% of water requirements by utilities were filled by purchases from public supplies. Saline water constituted 33% of water withdrawal for steam electric power generation in 1975. No data are available at present on the projected growth of power use and coal utilization taking into account the full implications of the National Energy Act of 1978. However, some earlier projections on power generation are presented in Table 2.4. Water use in steam-electric power generation by water resource regions is shown in Table 2.5; Figure 2.1 shows the corresponding water resource regions.

Future Trends

Not only does the power industry withdraw the largest quantity of water (of any industrial sector) for off-channel use, but the projected rate of increase in usage by thermoelectric power plants makes the latter the fastest growing of major withdrawal uses of water. Table 2.6 presents data on off-channel water use for steam-electric power generation by water quality regions in 1975 together with projected data for 1985 and 2000 [3].

Data for steam-electric water uses are based on steam-powered generation plants with 25 megawatts or more installed capacities. In general, smaller plants operate for limited periods during the year and use relatively minor quantities of water. The data for electric power generation do not include water used for hydroelectric generation which is primarily an instream use.

Water Availability for Steam Electric Power

A recent study by Cameron Engineers for the EPA [4] on water availability for steam electric power plants and other uses reaches the following conclusions (among others) for water availability:

- Under dry year conditions, there is not sufficient water in most regions of the conterminous United States to fully satisfy all users at their current rates of use. This situation is particularly critical in the Southwest and will become worse.

Table 2.4

Projected Electric Power Generation by Fuel[1]

Basis: Assessments made before the National Energy Act of 1978. The data presented below are based on projections in the Annual Environmental Analysis Report [Ref. 101] and are based on analysis of the energy situation conducted in 1977.

Number	Census Region	Coal 1975	Coal 1985	Coal 2000 Min	Coal 2000 Max	Oil 1975	Oil 1985	Oil 2000	Gas 1975	Gas 1985	Gas 2000	Others[2] 1975	Others[2] 1985	Others[2] 2000 Min.	Others[2] 2000 Max.
1.	New England (NE)	0.012	0.043	0.038	0.076	0.140	0.183	0.179	0.001	0.009	0.009	0.085	0.215	0.542	1.258
2.	Middle Atlantic (MA)	0.328	0.713	1.103	1.481	0.260	0.235	0.239	0.007	0.072	0.072	0.217	0.567	1.504	1.882
3.	East North Central (ENC)	0.956	1.215	1.793	2.308	0.064	0.154	0.161	0.033	0.072	0.075	0.149	0.649	1.169	1.684
4.	West North Central (WNC)	0.249	0.412	0.701	0.787	0.018	0.029	0.030	0.074	0.061	0.063	0.111	0.260	0.572	0.658
5.	South Atlantic (SA)	0.620	0.987	1.146	1.735	0.271	0.335	0.333	0.059	0.054	0.054	0.225	0.910	1.824	2.413
6.	East South Central (ESC)	0.510	0.541	0.604	0.976	0.024	0.036	0.038	0.011	0.045	0.046	0.103	0.520	0.995	1.367
7.	West South Central (WSC)	0.038	0.302	0.423	0.506	0.033	0.033	0.033	0.676	0.693	0.700	0.045	0.298	0.983	1.066
8.	Mountain (MT)	0.191	0.276	0.359	0.485	0.024	0.012	0.014	0.054	0.171	0.172	0.114	0.233	0.559	0.685
9.	Pacific (PAC)	0.024	0.071	0.119	0.311	0.181	0.314	0.306	0.102	0.003	0.003	0.580	0.899	1.364	1.556
	TOTAL[3]	2.928	4.560	6.286	8.665	1.015	1.331	1.333	1.018	1.180	1.194	1.630	4.561	9.511	11.89

Notes: 1. All numbers are in Quads (1 quad - 10^{15} Btu or

2. Others include nuclear, hydro, solar and geothermal power generation.

3. Last digits may not add up due to rounding.

Source: [101]

Table 2.5

Water Used for Electric Utility Generation of Thermoelectric Power, in Million Gallons per Day, by Regions, 1975

[Partial figures may not add to totals because of independent rounding]

Water Resources Council region	Condenser and reactor cooling					Other thermoelectric uses					Water consumed	
	Self-supplied			Public supplies	Self-supplied and public supplies	Self-supplied			Public supplies	Self-supplied and public supplies		
	Fresh ground water	Surface water				Fresh ground water	Surface water					
		Fresh	Saline				Fresh	Saline			Fresh	Saline
New England	0	1,900	9,200	0.1	11,000	1.3	24	3.7	2.0	31	96	0
Mid-Atlantic	27	14,000	25,000	36	39,000	140	300	33	9.3	480	140	46
South Atlantic-Gulf	63	18,000	14,000	1.5	31,000	28	330	4.0	1.7	360	210	120
Great Lakes	8.2	25,000	0	34	25,000	56	300	0	3.1	360	52	0
Ohio	20	26,000	0	9.8	26,000	13	420	0	15	450	280	0
Tennessee	0	8,600	0	0	8,600	0	74	0	0	74	59	0
Upper Mississippi	28	13,000	0	30	13,000	6.5	420	0	3.1	430	96	0
Lower Mississippi	0	5,900	0	0	5,900	27	120	0	0	140	290	1.7
Souris-Red-Rainy	0	190	0	0	190	0	1.0	0	0	1.0	1.2	0
Missouri Basin	310	3,900	0	85	4,300	.9	25	0	.1	26	68	0
Arkansas-White-Red	46	2,800	0	0	2,800	10	1.7	0	.4	12	95	0
Texas-Gulf	31	7,600	2,800	4.9	10,000	1.1	2.5	.3	.1	4.0	380	28
Rio Grande	22	5.2	0	0	27	.2	0	0	0	.2	20	0
Upper Colorado	0	160	0	0	160	0	2.1	0	0	2.1	60	0
Lower Colorado	36	110	0	0	150	2.0	0	0	.3	2.3	47	0
Great Basin	4.3	78	0	0	83	0	0	0	0	0	5.7	0
Pacific Northwest	6.8	29	0	0	36	.2	0	0	0	.2	8.8	0
California	380	1,100	9,200	0	11,000	0	0	0	0	0	32	60
Alaska	2.2	18	1.0	0	22	0	0	0	0	0	1.0	0
Hawaii	140	32	980	0	1,200	0	0	0	0	0	0	0
Caribbean	0	0	3,300	5.0	3,300	0	0	0	0	0	5.0	2.0
United States[1]	1,100	130,000	64,000	200	190,000	290	2,000	41	35	2,400	1,900	260

[1] Including Caribbean region.

Source: [1]

Figure 2.1 Water Resource Regions

Table 2.6

Annual Water Requirements for Steam-Electric Power Plants[1]

Basis: 1. **Hydroelectric power use is excluded.**
2. **Steam-electric plant use as % of total off-stream usage of water.**

		1975		1985 (Est.)		2000 (Est.)	
	Region	Steam Electric MGD	As % of Total Consumption[2]	Steam Electric MGD	As % of Total Consumption[2]	Steam Electric MGD	As % of Total Consumption[2]
1.	New England	21	4.30	18	2.76	167	15.68
2.	Mid-Atlantic	103	5.46	224	8.83	644	17.75
3.	South Atlantic-Gulf	153	2.70	722	9.38	1,857	16.75
4.	Great Lakes	175	6.68	497	14.90	1,384	29.21
5.	Ohio	324	17.94	656	25.86	1,692	38.89
6.	Tennessee	42	13.33	231	35.59	417	37.67
7.	Upper Mississippi	129	10.90	352	21.17	1,079	38.91
8.	Lower Mississippi	54	1.23	118	2.38	291	4.89
9.	Souris-Red-Rainy	1	0.82	0	0	0	0
10.	Missouri	68	0.39	243	1.12	644	2.87
11.	Arkansas-White-Red	89	0.96	237	2.38	457	4.56
12.	Texas Gulf	99	0.79	270	2.41	994	8.30

Table 2.6 (Continued)

Annual Water Requirements for Steam Electric Power Plants[1]

Basis: 1. Hydroelectric power use is excluded
2. Steam-electric plant use as % of total off-stream usage of water

Region	1975 Steam Electric MGD	1975 As % of Total Consumption[2]	1985 (Est.) Steam Electric MGD	1985 (Est.) As % of Total Consumption[2]	2000 (Est.) Steam Electric MGD	2000 (Est.) As % of Total Consumption
13. Rio Grande	18	0.39	9	0.19	5	0.11
14. Upper Colorado	43	1.61	120	3.63	155	4.40
15. Lower Colorado	63	1.34	134	2.75	126	2.62
16. Great Basin	8	0.19	44	1.04	52	1.15
17. Pacific Northwest	16	0.11	134	0.74	392	2.10
18. California	34	0.12	101	0.34	242	0.76
Conterminous United States	1,440	1.23	4,110	3.10	10,598	7.22

Source: [4]

- Relative to the total consumption, the percentage consumption for steam electric generation was 1.23% in 1975 and will grow to 3.10% in 1985 and to 7.22% in the year 2000. This major increase is due to anticipated growth in power generation and shift in fossil fuel use. Water conservation practices are likely to impact various industrial sectors differently.
- All segments of society which consume water must develop a water conservation strategy and implement that strategy. Since agriculture consumes the largest quantity of water by comparison with other water users, substantial water savings can be accomplished even with small percentage reductions in agricultural use through better utilization of the water resources. Conversely, a large percentage reduction in the consumption for steam electric power generation is small by comparison.

It is clear that increased emphasis on water management is going to be essential not only to minimize environmental impacts but also to assure availability and adequacy of supplies for various uses.

Use for Cooling

The operation of steam-electric power plants involves the disposal of large quantities of waste heat. Since, on the average, more than one-half of the heat input to a typical steam-electric power plant is rejected at the condenser, the condenser cooling water represents by far the largest water use in the plant. This heat added to the cooling water must then be dissipated into the environment by one or more of the following available cooling methods:

- Once-through cooling.
- Recirculating systems including cooling ponds, cooling towers, and combined systems.

Table 2.7 indicates the extent to which each of these various types of cooling methods were used by power plants during 1971-1975. The extent to which each method was used is expressed both as percent of total number

Table 2.7

General Information Summary Condenser Cooling Systems

1971-1975

Type of Cooling	Percent of Total Number of Plants				
	1971	1972	1973	1974	1975
Once-through, fresh	48.1	47.2	44.0	43.4	42.7
Once-through, saline	18.1	17.3	16.4	15.5	15.6
Cooling ponds	6.0	6.3	6.0	6.6	7.1
Cooling towers	18.1	18.6	21.5	23.4	22.8
Combined systems	9.7	10.6	12.1	11.1	11.8
Total	100.0	100.0	100.0	100.0	100.0

Type of Cooling	Percent of Total Installed Capacity				
	1971	1972	1973	1974	1975
Once-through, fresh	47.7	45.4	43.1	41.1	39.4
Once-through, saline	21.5	20.9	20.1	18.9	18.5
Cooling ponds	7.3	8.0	8.6	8.5	9.0
Cooling towers	12.9	13.4	14.4	16.1	16.6
Combined systems	10.6	12.3	13.8	15.4	16.5
Total	100.0	100.0	100.0	100.0	100.0

Source: [2]

of plants and as percent of total installed capacity. For comparison, corresponding percentages are also shown for the years 1969 through 1972. As indicated for 1973, most of the plants (approximately 60%) providing the major share of steam-electric power capacity (approximately 63%) employed once-through cooling using either fresh or saline water. The second most widely used method of cooling is cooling towers which account for approximately 20% of the total number of plants and about 15% of the total installed plant capacity. However, during the five-year period 1969-1973, there existed a trend away from once-through cooling toward the use of cooling ponds, cooling towers, and combined systems. This trend is expected to accelerate in the future.

Table 2.8 presents data compiled by the FPC [2] on the number of steam-electric power plants, capacities and types of cooling by water resource regions in 1973. Table 2.9 summarizes average cooling water use by water resource regions.

Water recycle/reuse for cooling purposes can employ cooling towers or cooling ponds. The technical considerations on these types insofar as they impact chemical wastes are discussed later. However, the following tables summarize the data on some exemplary plants:

- Table 2.10 is a listing of the more typical, exemplary, coal-fired steam-electric power plants employing cooling towers which exhibit minimal water usage (gal/MWH).
- Table 2.11 is a similar listing of the more typical, exemplary, coal-fired steam-electric power plants exhibiting minimal water usage (gal/MWH) employing cooling ponds.

Chemical Additives

Even prior to the advent of environmental concerns, power plants made substantial use of chemical additives for one of two reasons:

- Process requirements for steam generation requiring very high quality water.
- Water conservation needs that prompted water recycle related requirements. Scale and corrosion control are two examples.

Table 2.8

Number of Plants, Capacities, and Types of Cooling
by Water Resource Region, 1973

Line No.	Water Resource Region	Once Through Fresh		Once Through Saline		Cooling Ponds		Cooling Towers		Combined Systems		Line No.
		No. of Plants	Capacity (MW)	No. of Plants	Capacity (MW)	No. of Plants	Capacity (MW)	No. of Plants	Capacity (MW)	No. of Plants	Capacity (MW)	
1	New England	10	2,209.84	25	11,348.99			1	35.95	5	2,604.64	1
2	Middle Atlantic	35	12,275.29	40	21,828.85			2	1,679.20	8	4,197.68	2
3	South Atlantic - Gulf	37	17,553.01	25	10,739.43	5	6,186.44	9	2,857.93	13	8,449.02	3
4	Great Lakes	64	28,025.93			2	68.83	2	190.00	1	386.00	4
5	Ohio	70	35,846.15			1	99.00	19	14,897.35	9	9,668.20	5
6	Tennessee	10	11,058.19			1	413.63	1	712.50			6
7	Upper Mississippi	50	16,811.50			4	3,674.21	8	478.55	10	5,259.96	7
8	Lower Mississippi	14	9,901.96	2	1,183.25			11	2,125.27	4	1,1118.58	8
9	Souris - Red - Rainy	1	110.00							1	136.90	9
10	Missouri	28	5,427.32			4	1,994.75	17	2,553.80	6	1,508.65	10
11	Arkansas - White - Red	6	2,922.74			7	2,963.50	30	6,444.22	11	2,888.13	11
12	Texas - Gulf	9	2,093.62	2	1,547.50	18	10,495.55	20	4,307.49	10	8,220.82	12
13	Rio Grande							15	2,827.99	2	164.30	13
14	Upper Colorado					1	2,269.80	3	659.20	3	142.50	14
15	Lower Colorado					1	113.60	12	2,324.59	2	138.00	15
16	Great Basin	2	84.00			1	220.00	3	2,478.84	1	133.00	16
17	Columbia - North Pacific	5	1,085.80	1	59.00			1	1,329.80			17
18	California - South Pacific			22	17,589.65			14	3,369.61	2	2,085.15	18
19	Totals - Contiguous U.S.	341	145,405.35	117	64,296.67	45	28,499.31	168	49,272.29	88	47,101.53	19
20	Alaska									1	568.80	20
21	Hawaii			3	542.88					1	395.00	21
22	Puerto Rico			3	2,437.20							22
23	Totals - Non-Contiguous U.S.			7	3,241.08	1	1,186.80			2	963.80	23
24	TOTALS - UNITED STATES	341	145,405.35	124	67,537.75	46	29,686.11	168	49,272.29	90	48,065.33	24

Source: [2]

Table 2.9

Average Cooling Water Use, by Water Resource Region, 1973

Line No.	Water Resource Region	Total Designed Condenser Flow (CFS)		Average Rate of Water Use During the Year (CFS)						Line No.
				Withdrawal		Consumption		Discharge		
		Fresh	Saline	Fresh	Saline	Fresh	Saline	Fresh	Saline	
1	New England	5,601.70	14,359.12	4,763.80	10,643.30	13.00	2.33	4,750.80	10,652.97	1
2	Middle Atlantic	21,872.26	36,843.10	16,621.45	26,961.60	251.95	5.80	16,569.84	26,955.80	2
3	South Atlantic - Gulf	39,254.78	21,263.15	26,539.74	17,535.86	98.76	2.64	26,441.31	17,533.22	3
4	Great Lakes	48,226.61		33,501.54		95.35		33,405.48		4
5	Ohio	73,262.95		47,000.72		406.87		47,132.80		5
6	Tennessee	14,682.10		11,497.40		87.50		11,411.60		6
7	Upper Mississippi	37,106.55		17,549.32		129.15		17,423.17		7
8	Lower Mississippi	13,520.33	1,492.40	8,926.77	560.00	198.91		8,735.99	560.00	8
9	Souris - Red - Rainy	365.80		315.08		.11		314.97		9
10	Missouri	13,156.34		7,776.92		128.31		7,610.51		10
11	Arkansas - White - Red	19,843.18		4,485.38		104.25		4,383.19		11
12	Texas - Gulf	33,683.63	2,151.50	13,038.01	1,520.90	167.27	9.00	12,910.50	1,511.90	12
13	Rio Grande	5,475.44		90.06		30.16		59.22		13
14	Upper Colorado	3,447.90		242.64		46.14		196.50		14
15	Lower Colorado	2,793.13		204.94		45.66		158.36		15
16	Great Basin	3,086.10		192.04		35.04		157.00		16
17	Columbia - North Pacific	3,678.70	131.00	953.65	28.98	18.70		934.95	28.98	17
18	California - South Pacific	6,781.06	18,667.80	1,271.86	14,431.24	38.14	19.27	1,233.74	14,412.77	18
19	Totals - Contiguous U.S.	345,838.56	94,908.07	194,971.32	71,681.88	1,895.27	39.04	193,829.93	71,655.64	19
20	Alaska	645.00		388.50		4.90		383.60		20
21	Hawaii		2,027.00		1,571.00				1,550.00	21
22	Puerto Rico		3,657.00		3,649.34				3,649.34	22
23	Totals - Non-Contiguous U.S.	2,159.00	6,009.00	399.10	5,535.34	4.90		394.20	5,514.34	23
24	TOTALS - UNITED STATES	347,997.56	100,917.07	195,370.42	77,217.22	1,900.17	39.04	194,224.13	77,169.98	24

Source: [2]

Table 2.10

Coal-Fired Steam-Electric Power Plants With Cooling Towers, 1975

Plant No.	General Information	Plant Heat Rate (Btu/kwh)	Annual Generation (MWH)	Cooling Water Source	Cooling Water Usage (gal/MWH)	Cooling Water Additives CW[b]	Cooling Water Additives BFW[c]	Pond Discharge ('000 ft^3/yr) BD[d]	Pond Discharge ('000 ft^3/yr) AS[e]
1	• Utility Name Pennsylvania Electric Company • Plant Name Keystone • State Located Pennsylvania • Plant Capacity (MW) 1872 • Fuel Fired Coal, Oil	9,709	10,087,000	Creek	455	L,O	L,O,CS	-	-
2	• Utility Name Monogahela Power Company • Plant Name Fort Martin • State Located W. Virginia • Plant Capacity (MW) 1152 • Fuel Fired Coal, Oil	9,457	7,427,400	River	640	CS,C	CS,A, C, O	-	-
3	• Utility Name Empire Dist. Electric Co. • Plant Name Ashbury • State Located Missouri • Plant Capacity (MW) 200 • Fuel Fired Coal, Oil	10,434	1,292,000	Well	730	P,L, A,O	P, CS, O	-	-
4	• Utility Name Public Service Company of Colorado • Plant Name Comanche • State Located Colorado • Plant Capacity (MW) 778.5 • Fuel Fired Coal, Oil, Gas	10,834	1,909,800	River	780	P,L, A,O	P,CS, C,O	-	66,540
5	• Utility Name Pennsylvania Electric Company • Plant Name Conemaugh • State Located Pennsylvania • Plant Capacity (MW) 1872 • Fuel Fired Coal, Oil	9,814	8,693,200	River	800	L,O	CS,O	-	-
6	• Utility Name Monongahela Power Company • Plant Name Harrison • State Located W.Virginia • Plant Capacity (MW) 2052 • Fuel Fired Coal, Gas	9,668	11,313,900	River	825	C,O	CS,A, O	-	-

[a] P - Phosphate, CS - Caustic Soda, L - Lime, A - Alum, C - Chlorine, O - Others

[b] CW - Cooling Water

[c] BFW - Boiler Makeup

[d] BD - Boiler Blowdown Pond

[e] AS - Ash Settling Pond

Table 2.1 (Continued)

Coal-Fired Steam-Electric Power Plants With Cooling Towers, 1975

Plant No.	General Information	Plant Heat Rate (Btu/kwh)	Annual Generation (MWH)	Cooling Water Source	Cooling Water Usage (gal/MWH)	Cooling Water Additives CW[b]	Cooling Water Additives BFW[c]	Pond Discharge ('000 ft^3/yr) BD[d]	Pond Discharge ('000 ft^3/yr) AS[e]
7	• Utility Name Utah Power & Light Company • Plant Name Huntington • State Located Utah • Plant Capacity (MW) 411 • Fuel Fired Coal, Oil	10,154	2,536,400	River	830	C,O	P,O	-	-
8	• Utility Name Southern California Edison • Plant Name Mohave • State Located Nevada • Plant Capacity (MW) 1636.2 • Fuel Fired Coal, Gas	15,709	6,368,700	River	840	-	-	-	-
9	• Utility Name Pacific Power & Light Company • Plant Name Centralia • State Located Washington • Plant Capacity (MW) 1330 • Fuel Fired Coal, Oil	10,265	6,131,500	River	900	C,O	P, CS, A, O	-	-
10	• Utility Name Appalachian Power Company • Plant Name AMDS • State Located West Virginia • Plant Capacity (MW) 2900 • Fuel Fired Coal, Oil	9,505	15,575,700	River	965	C,O	P,CS C,O	-	-
11	• Utility Name Ohio Electric Company • Plant Name Gavin • State Located Ohio • Plant Capacity (MW) 2600 • Fuel Fired Coal, Oil	9,797	12,135,200	River	990	C,O	CS,A, C,O	635,00	635,000
12	• Utility Name Kentucky Power Company • Plant Name Big Sandy • State Located Kentucky • Plant Capacity (MW) 1060 • Fuel Fired Coal, Oil	9,480	5,018,800	River	1,050	C,O	P,CS, L,C,O	-	88,300

[a] P - Phosphate, CS - Caustic Soda, L - Lime, A - Alum, C - Chlorine, O - Others

[b] CW - Cooling Water

[c] BFW - Boiler Makeup

[d] BD - Boiler Blowdown Pond

[e] AS - Ash Settling Pond

Table 2.10 (Continued)

Coal-Fired Steam-Electric Power Plants With Cooling Towers, 1975

Plant No.	General Information	Plant Heat Rate (Btu/kwh)	Annual Generation (MWH)	Cooling Water Source	Cooling Water Usage (gal/MWH)	Cooling Water Additives CW[b]	Cooling Water Additives BFW[c]	Pond Discharge ('000 ft^3/yr) BD[d]	Pond Discharge ('000 ft^3/yr) AS[e]
13	• Utility Name Public Service Co. of New Mexico • Plant Name San Juan • State Located New Mexico • Plant Capacity (MW) 3287 • Fuel Fired Coal, Oil	10,155	2,432,000	River	1,075	P,C, O	P,CS, L,A,O	-	-
14	• Utility Name Pennsylvania Electric Company • Plant Name Homer City • State Located Pennsylvania • Plant Capacity (MW) 1320 • Fuel Fired Coal, Oil	10,338	4,445,800	Creek	1,140	L,C, O	CS,O	-	-
15	• Utility Name Pennsylvania Power & Light Company • Plant Name Montour • State Located Pennsylvania • Plant Capacity (MW) 1641.7 • Fuel Fired Coal, Oil	9,856	9,394,400	River	1,155	C	CS,A,O	-	98,000
	• Utility Name • Plant Name • State Located • Plant Capacity (MW) • Fuel Fired								
	• Utility Name • Plant Name • State Located • Plant Capacity (MW) • Fuel Fired								
	• Utility Name • Plant Name • State Located • Plant Capacity (MW) • Fuel Fired								

[a] P - Phosphate, CS - Caustic Soda, L - Lime, A - Alum, C - Chlorine, O - Others

[b] CW - Cooling Water

[c] BFW - Boiler Makeup

[d] BD - Boiler Blowdown Pond

[e] AS - Ash Settling Pond

Source: [2] and Arthur D. Little, Inc.

Table 2.11

Coal-Fired Steam-Electric Power Plants With Cooling Ponds, 1975

Plant No.	General Information	Plant Heat Rate (Btu/kwh)	Annual Generation (MWH)	Cooling Water Source	Cooling Water Usage (gal/MWH)	Additives CW[b]	Additives BFW[c]	Pond Discharge ('000 ft^3/yr) BD[d]	Pond Discharge ('000 ft^3/yr) AS[e]
1	• Utility Name: Texas Power & Light Co. • Plant Name: Big Brown • State Located: Texas • Plant Capacity (MW): 1186.8 • Fuel Fired: Coal, Gas	10,239	7,264,000	Creek	345	C	CS,O	-	-
2	• Utility Name: Minnkota Power Corporation • Plant Name: Young • State Located: North Dakota • Plant Capacity (MW): 256.5 • Fuel Fired: Coal, Oil	10,967	1,752,100	Creek	501	C	P,CS, L,A,O	-	-
3	• Utility Name: South Carolina Public Service Authority • Plant Name: Winyah • State Located: South Carolina • Plant Capacity (MW): 315 • Fuel Fired: Coal	9,622	1,302,000	River	545	-	CS,A,O	-	-
4	• Utility Name: Otter Tail Power Company • Plant Name: Big Stone • State Located: South Dakota • Plant Capacity (MW): 455.66 • Fuel Fired: Coal, Oil	11,779	1,406,100	Lake	595	C	CS,L, C,O	-	-
5	• Utility Name: Commonwealth Edison Company • Plant Name: Kincaid • State Located: Illinois • Plant Capacity (MW): 1319 • Fuel Fired: Coal, Oil, Gas	10,768	4,316,300	Other	600	C	CS,L,O	-	817,000
6	• Utility Name: Arizona Public Service Company • Plant Name: Four Corners • State Located: New Mexico • Plant Capacity (MW): 2212.20 • Fuel Fired: Coal, Gas	10,317	10,484,000	River	800	C	P,CS, L,A,O	-	77,000

[a] P - Phosphate, CS - Caustic Soda, L - Lime, A - Alum, C - Chlorine, O - Others

[b] CW - Cooling Water

[c] BFW - Boiler Makeup

[d] BD - Boiler Blowdown Pond

[e] AS - Ash Settling Pond

Table 2.11 (Continued)

Coal-Fired Steam-Electric Power Plants With Cooling Ponds, 1975

Plant No.	General Information	Plant Heat Rate (Btu/kwh)	Annual Generation (MWH)	Cooling Water Source	Cooling Water Usage (gal/MWH)	Additives CW[b]	Additives BFW[c]	Pond Discharge ('000 ft^3/yr) BD[d]	Pond Discharge ('000 ft^3/yr) AS[e]
7	• Utility Name: Illinois Power Company • Plant Name: Baldwin • State Located: Illinois • Plant Capacity (MW): 1892.05 • Fuel Fired: Coal, Oil	9,627	8,633,700	River	900	C	P,CS, L,A,O	-	374,000
8	• Utility Name: Wisconsin Power & Light Company • Plant Name: Columbia • State Located: Wisconsin • Plant Capacity (MW): 512 • Fuel Fired: Coal, Oil	10,044	1,565,000	River	3,365	C	P,O	-	-
9	• Utility Name: Carolina Power & Light Company • Plant Name: Sutton • State Located: North Carolina • Plant Capacity (MW): 671.62 • Fuel Fired: Coal, Oil	11,252	1,197,400	River	5,915	C	P,O	-	179,000
10	• Utility Name: Public Service Co. of Indiana, Inc. • Plant Name: Gibson • State Located: Indiana • Plant Capacity (MW): 650 • Fuel Fired: Coal, Oil	9,183	2,470,000	River	8,170	C	CS,L,O	-	200,000
	• Utility Name: • Plant Name: • State Located: • Plant Capacity (MW): • Fuel Fired:								
	• Utility Name: • Plant Name: • State Located: • Plant Capacity (MW): • Fuel Fired:								

[a] P - Phosphate, CS - Caustic Soda, L - Lime, A - Alum, C - Chlorine, O - Others

[b] CW - Cooling Water

[c] BFW - Boiler Makeup

[d] BD - Boiler Blowdown Pond

[e] AS - Ash Settling Pond

Source: [2] and Arthur D. Little, Inc.

Table 2.12 summarizes, by FPC-designated water resource regions, both the type and quantity of chemical additives used in the treatment of power plant cooling water and boiler feed water. The principal chemical additives reportedly used in 1973 for cooling water treatment (for the prevention of condenser tube fouling) were lime, alum, and chlorine, with chlorine being used in the largest quantity. In the case of boiler feed water treatment, the principal additives were phosphate, lime, alum and caustic soda, with caustic soda being the most widely used.

2.2 Water Balance in Coal-Fired Power Plants

The water balance in a power plant is dependent upon a number of factors such as:

- Site location
- Ambient conditions
- Plant size and age
- Fuel characteristics
- Source(s) of water
- Plant design
- Operating practices
- Management philosophies
- Environmental regulations

There are two entirely different types of wastes produced by steam-electric power plants:

(a) Chemical Wastes

The chemical wastes originate from different processes and operations within a plant. These wastes vary from plant to plant, depending on fuel, raw water quality, processes used in the plant, and other factors. Usually, water is employed as the handling and process medium and, hence, the chemical wastes are often present as aqueous streams.

(b) Thermal Wastes

These wastes are associated with the condenser heat rejection. The waste heat produced by the plant is disposed to the environment through the condenser cooling water system. Waste

Table 2.12

Use of Chemical Additives by Water Resources Region, 1973

Line No.	Water Resource Region	Cooling Water Additives (Tons)				Boiler Water Additives (Tons)					Line No.
		Phosphate	Lime	Alum	Chlorine	Phosphate	Caustic Soda	Lime	Alum	Chlorine	
1	New England	4.44		25.20	1,209.02	83.04	1,138.78	2.25	17.51	.97	1
2	Middle Atlantic	.34	.18	270.95	8,639.48	294.74	12,115.00	60.47	823.11	16.71	2
3	South Atlantic - Gulf	13.87		853.49	1,451.55	83.96	6,493.88	610.28	825.90	40.99	3
4	Great Lakes	.01			2,623.07	150.76	5,828.37	962.70	308.18	22.62	4
5	Ohio	47.79	8,585.67	584.87	2,989.32	77.57	8,792.95	2,191.09	381.89	66.71	5
6	Tennessee				301.56	13.08	365.35		125.49	4.74	6
7	Upper Mississippi	.24	202.15	84.10	4,200.80	190.86	6,667.25	1,330.26	229.91	182.42	7
8	Lower Mississippi	9.63	104.41	163.36	335.25	23.25	3,659.55	1,094.43	150.76	6.11	8
9	Souris - Red - Rainy	1.40			4.28	.72	.87		8.38	.73	9
10	Missouri	60.36	2,504.78	207.44	286.68	43.88	1,644.86	1,104.20	118.82	1.11	10
11	Arkansas - White - Red	204.94	2,709.38	191.46	410.50	22.99	3,753.49	686.31	16.98	12.97	11
12	Texas - Gulf	47.06	1,818.33	118.59	2,303.29	34.55	6,861.34	369.00	15.09	10.23	12
13	Rio Grande	54.13	202.45	19.70	84.92	7.07	85.69	17.10			13
14	Upper Colorado	14.84	3.69	65.70	69.00	2.50	168.78	131.13	55.69	.03	14
15	Lower Colorado	135.33	2,598.25		456.08	3.08	349.76	34.39		55.00	15
16	Great Basin				39.79	6.80	102.13	36.50			16
17	Columbia - North Pacific				36.00	9.40	234.83		5.45		17
18	California - South Pacific	101.81	2.19	5.77	1,084.14	50.97	1,654.71	431.29	32.02	7.53	18
19	Totals - Contiguous U.S.	696.19	18,731.48	2,590.63	26,524.73	1,099.22	59,917.59	9,061.40	3,115.18	428.87	19
20	Alaska				69.00		22.50				20
21	Hawaii					2.18	.37				21
22	Puerto Rico				4.50	6.56	1,357.58				22
23	Totals - Non-Contiguous U.S.				247.50	9.19	1,461.82				23
24	TOTALS - UNITED STATES	696.19	18,731.48	2,590.63	26,772.23	1,108.41	61,379.41	9,061.40	3,115.18	428.87	24

Source: [2]

heat is an integral part of the process of producing power by thermoelectric methods. The atmosphere is the final recipient for this heat, with water generally used as the intermediate recipient.

The EPA has been cognizant of the basic differences between these types of wastes and has established separate subcategories for chemical and thermal wastes [5]. Subcategorization for heat is approached separately from subcategorization for other pollutants because:

- Control and treatment technology for heat relate primarily to the characteristics of generating units, while non-thermal control and treatment technologies relate primarily to characteristics of stations.
- Control and treatment technologies are dissimilar.
- The costs of thermal control and treatment technology are much greater than non-thermal control and treatment technologies.

This report will focus on the chemical wastes in assessing water management in power plants. However, chemicals are extensively employed in cooling systems which also produce substantial quantities of effluents. To the extent these impact water management, they have been considered.

Overall, the basic factors which relate to chemical wastewater characteristics are the fuel storage and handling facilities, water treatment equipment, boiler, condenser, type of cooling systems, and auxiliary facilities. Steam-electric power plants are comprised of one or more generating units. In prevalent practice, a generating unit consists of a discrete boiler, a turbine-generator, and a condenser system. Fuel storage and handling facilities, water treatment equipment, electrical transmission facilities, and auxiliary components may be a part of a discrete generating unit or may service more than one generating unit.

Based on the flow ranges reported in the literature, a generalized schematic water balance for a new 1,000-MW coal-fired power plant with a cooling tower is presented in Figure 2.2. The waste streams are of continuous or intermittent nature and can be categorized by their sources

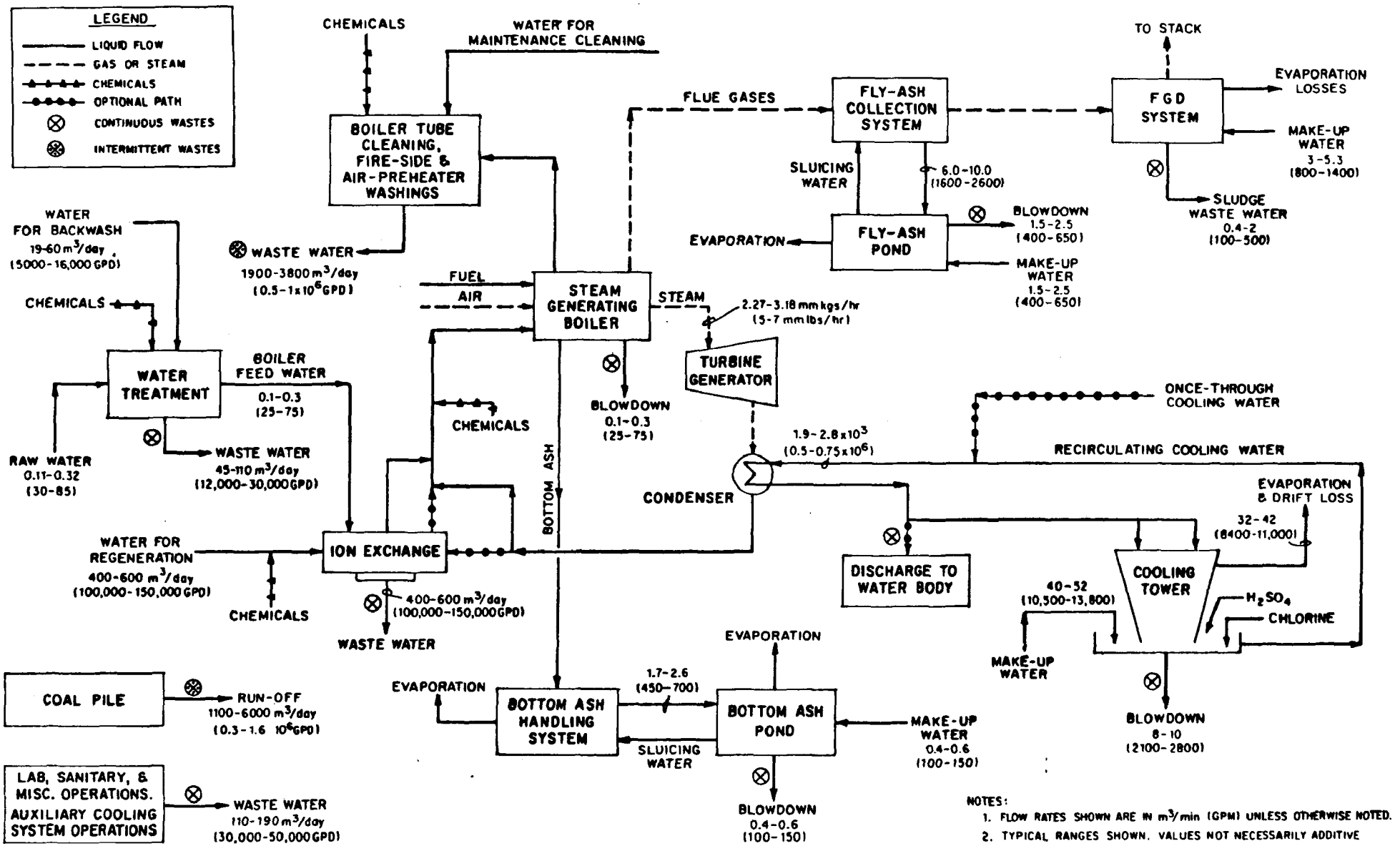

Source: Arthur D. Little, Inc.

Figure 2.2 Generalized Schematic Water Balance for a Typical 1000 MW Coal-Fired Power Plant (with a Cooling Tower)

of generation as follows:

(a) Continuous Wastes

- Condenser cooling system
- Steam generation
- Water treatment systems
- Ash handling systems
- Flue gas desulfurization systems
- Miscellaneous operations

(b) Intermittent Wastes

- Maintenance cleaning
- Drainage (principally coal pile runoff)

For assessing the treatment technology for power plant application, it is to be recognized that, depending upon the specifics of the application, the systems required for collecting these waters can be a major factor. For example, wastewater streams from maintenance cleaning operations originate at drain points which are located below grade. The piping and pumping systems for collecting these streams prior to treatment and recycle require large capital expenditure, and this aspect is particularly significant in existing plants for designing retrofit systems for increased recycle/reuse.

2.3 Current R&D Studies

The EPA, EPRI, and others have sponsored a number of studies in the field of water management. Some of the more important ongoing EPA programs are listed in Table 2.13 and those of EPRI are summarized in Table 2.14. While these are some of the generic studies on water management, it should be emphasized that many utilities have conducted in-house studies and sponsored those by equipment vendors and manufacturers. Many of these studies appear in the literature and are included in this assessment of water management technology.

Table 2.13

EPA Projects Concerning Water Recycle/Treatment/Reuse in Power Plants

Basis: Only currently ongoing (as of December 1978) projects pertaining to chemical waste stream production are listed. Further projects under EPA's Thermal Programs are not listed here.

No.	Project Title	Contractor	Project Focus/Status	Reference
1	Assessment of Technology for Control of Water and Waste Pollution from Combustion Sources	Arthur D. Little	Purpose is to assemble, review, evaluate, and report data from research, development, and demonstration activities pertaining to FGC waste disposal/utilization and power plant water recycle/treatment/reuse.	6
2	Water Recycle/Reuse Alternatives in Coal-Fired Steam Electric Power Plants	Radian Corporation	Investigate water recycle/reuse alternatives for coal-fired power plants employing cooling towers, ash sluicing, and SO_2/particulate scrubbing systems, as well as for combined systems develop rough cost estimates for several selected alternatives which would potentially minimize power plant water requirements and discharges.	7
3	Characterization of Effluents from Coal-Fired Utility Boilers	Tennessee Valley Authority	The objectives of this project are to (1) characterize coal pile drainage; (2) assess the effect of pH adjustment on ash pond effluent; (3) assess and then design an effective program for monitoring ash pond effluent; (4) evaluate chlorinated water effluent quality from a once-through cooling system; (5) assess, characterize and quantify coal ash leachate effects on groundwater quality; and (6) study gaseous and particulate emissions from several types of boilers.	*
4	Treatment of Power Plant Wastes with Membrane Technology	Tennessee Valley Authority	Investigate the feasibility of employing membrane technology in the treatment of power plant wastewater.	*
5	Assessment of Measurement Techniques from Hazardous Pollution from Thermal Cooling Systems	Lockheed Electronics Company (Northrop Corp.)	Investigate the feasibility of using an organic analytical technique to rapidly assess the effect of cooling water effluents on the environment.	*
6	Assessment of the Effects of Chlorinated Sea Water from Power Plants on Aquatic Organisms	TRW, Incorporated	Characterization and evaluation of the toxicity of compounds formed by chlorination of sea water by power plants.	*
7	Evaluation of Lime Precipitation for Treatment of Boiler Tube Cleaning Waste	Hittman Associates, Incorporated	Perform bench scale studies to evaluate lime precipitation as a technology to control metal discharges in boiler waterside tube cleaning wastewaters. Use of hydrochloric acid copper chemicals, citric acid, hydroxy acitic acid, and EDTA may be considered later.	*
8	Assess Comparative Merits of Reverse Osmosis, Vapor Compression Evaporation and Vertical Tube Foam Evaporation (Excluding Softening, Thermal Softening, and Multi-Stage Flash) for Treatment of Cooling Tower Blowdowns	Bechtel	a) Monitoring of EPRI funded demonstration of vertical tube foam evaporation demonstration (VTFE-D) b) Assess economic and energy efficiencies of VTFE. Reverse osmosis and vapor compression evaporation.	*
9	Characterization of Ash Pond Discharges	Hittman Associates, Incorporated	For the EPA-Effluent Guidelines Division development of industry wide data on ash pond discharges.	*

* Ongoing Projects

Overall Reference: [6]

Table 2.14

EPRI Projects Concerning Water Recycle/Treatment/Reuse in Power Plants

Basis: 1. Only currently ongoing (as of November 1978) projects are listed.
2. Only projects pertinent to chemical waste streams are listed. Purely thermal studies are not listed.

No.	Project Title	Contractor	Project Focus
1	Development of Comprehensive Water Management Methodology	Water Purification Associates	Develop Design and optimization guidelines for an integrated water management system in fossil fuel power plants.
2	Trace Element Removal by Adsorption on Iron Hydroxides	Stanford University	Demonstrate a novel insolubilization process as a feasible first step for trace metal removal from power plant discharge water streams.
3	Fundamental Studies of Mechanisms of Biofoulant Film Buildup and Destruction	Rice University	Laboratory study of slime film buildup in condensers and its destruction; control by biocidal agents, such as chlorine.
4	Numerical Modeling Techniques for Three-Dimensional, Recirculating Flows in the Near-Field of Cooling Tower Plumes	Environdyne, Ltd.	Development of a general three-dimensional, numerical model for representing the near-field behavior of cooling tower plumes.
5	Acceptance Test Methodology for Cooling Towers	Environmental Systems Corporation	Develop and demonstrate instrumentation and test procedures for performing definite acceptance tests on large mechanical draft cooling towers.
6	Validation of Cooling Tower Plume and Drift Deposition Models	Argonne National Laboratory	Assemble all available cooling tower plume field data in a common format suitable for model verification.
7	Agricultural Waste Water for Power Plant Cooling	California Department of Water Resources	Develop an economical and reliable pretreatment method for agricultural wastewater to reduce its scale-forming tendencies, so as to make it acceptable for power plant cooling.
8	Ozone Dosage and Contacting for Condenser Bio-Fouling Control	Public Service Electric & Gas (N.J.)	Experimentally determine the dosage required and the economic feasibility of using ozone to control biofouling in model power plant condensers.
9	Other Chemical Alternatives to Chlorination for Bio-Fouling Control	Northwestern University	Assess other chemical alternatives to chlorination.
10	Demonstration of Vertical Tube Foam Evaporation for Blowdown Treatment	University of California at Berkeley	Demonstration of Vertical Tube Foam Evaporation (VTFE-D). Equipment involved is funded by prior EPA study.

Source: [8][9]

3.0 OVERALL WATER BALANCES IN POWER PLANTS

3.1 Waste Stream Flows

3.1.1 Condenser Cooling System

Of the total heat input in the power plant, 55-60% is rejected as waste heat in the condenser. The condenser cooling systems can be of once-through or recirculating type. The once-through system with its resultant lower back-pressure at the turbine has been used predominantly for plants located in the proximity of large bodies of water.

The recirculating condenser cooling systems can utilize wet (evaporative) cooling tower, cooling ponds, dry cooling tower or a combination of the three. In a wet cooling tower, water is lost by evaporation, blowdown, and windage and drift losses. The windage and drift loss is small, generally in the range of 0.02-0.1% of the tower circulation rate. The evaporative loss is the largest part of the total loss, generally 0.7-0.8% of the tower circulation rate for every 5.5°C (10°F) rise in the condenser. The blowdown flow depends upon the maximum allowable concentration for each of the dissolved and suspended species in the circulating water without risking undue scale formation and corrosion in the cooling systems. An increase in cycles of concentration (defined as the ratio of concentration between circulating water and makeup water for a constituent species) will reduce proportionately the blowdown flow and, hence, the total makeup water requirements. However, the decrease in makeup water requirement beyond about five cycles of concentration is not appreciable because the evaporation loss becomes proportionately quite large at this level of recycle and does not change significantly with further increase in cycles of concentration.

The dry cooling tower is a recent technology and its long-term implications on water consumption cannot be evaluated comprehensively at the present time. Under certain favorable conditions, water consumption in systems using cooling ponds can be lower because only a portion of the heat is dissipated through evaporation while the rest dissipates through natural convection. However, usually the solar radiation adds to the water evaporation rate in cooling ponds. The radiation varies the amount of evaporation. Cooling ponds are potentially better in

dry years because of the amount of water they can hold. Cooling ponds makeup can be seasonable and not constant. The selection of a condenser cooling system is site-specific. The EPA and EPRI have sponsored studies and are currently reviewing the modeling of such systems in order to better understand all of the factors involved.

3.1.2 Steam Generation

In a modern 1,000-MW power plant with its high-pressure boiler, the steam production rate is in the range of 2.27-3.18 Mkg/hr (5-7 Mlb/hr). An example of a power cycle diagram is shown in Figure 3.1 [16]. The modern, high-pressure boilers require very high quality water; the water chemistry has to be strictly controlled to minimize scale and corrosion. This is achieved by proper feedwater treatment, condensate polishing, deaeration, addition of supplementary chemicals (internal treatment), and blowdown.

The boiler blowdown rate is generally in the range of 0.1-3% of the steam flow. The lower range of the rates is normally encountered in large, high-pressure boilers. The boiler blowdown is generally alkaline (pH of about 8) and contains 20-50 mg/ℓ of TDS (generally, the higher the pressure, the lower the total dissolved solids (TDS) value). Boiler blowdown does usually contain significant concentrations of trace metals including Cu, Fe, Ni and Zn. While boiler blowdown is a "clean" stream in the source of potential reuse within the plant, its discharge into the environment may be unacceptable due to the trace metals mentioned above.

3.1.3 Water Treatment Systems

It is necessary to treat raw water prior to its use as makeup in the boiler feed water loop. Depending upon the raw water source and the specific water quality required, the treatment operations consist of clarification, softening, filtration and ion exchange. In some of the older plants, distillation processes are used as part of the treatment system in lieu of ion exchange. In recent years, reverse osmosis has also been employed for boiler feed water treatment [11]. In high-pressure boiler applications, condensate polishing is normally included as a treatment step to achieve the required overall water quality.

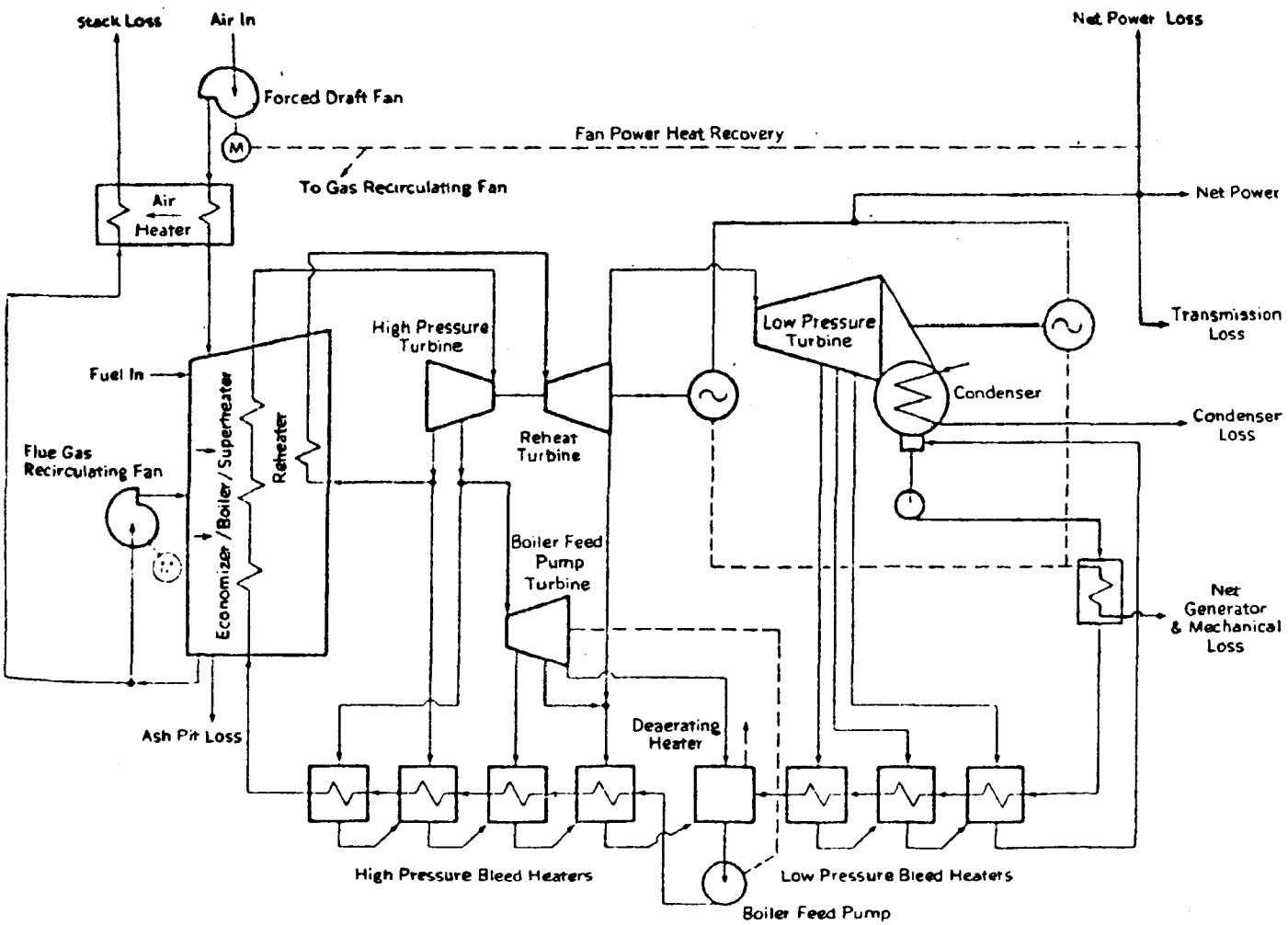

Source: [10]

Figure 3.1 Power Cycle Diagram, Fossil Fuel - Single Reheat, 8-stage Regenerative Feed Heating 3515 psia, 1000F/1000F steam

The quality and quantity of the waste streams from water treatment systems are dependent upon the specifics of the plant. However, in general, the technology for treating these wastes is fairly well established; the unit operations and processes involved are well defined.

3.1.4 Ash Handling Systems

The combustion of coal generates a large quantity of ash. Depending on the ash content of the coal, a 1,000-MW coal-fired plant can produce 31.8-68 Mkg/hr (70-150 Mlb/hr) of ash. The distribution between fly ash and bottom ash depends upon the type of boiler. The fly ash may constitute 85% of the total ash in a pulverized coal burner, compared with 65% in a spreader-stoker furnace or 20% in a cyclone furnace.

Ashes can be transported from points of collection (e.g., fly ash from electrostatic precipitators, and bottom ash from furnace) to disposal systems by either dry or hydraulic methods. However, in the United States, the hydraulic method is widely used and a large amount of sluicing water is required. The spent sluicing water, heavily laden with dissolved and suspended solids, can represent a serious disposal problem if recycling is not employed. Sluicing water requirements are dependent upon the hydraulic design considerations. The following ranges have been reported as typical values for sluicing water [5]:

- Bottom ash: 10-18 tons/ton of ash
- Fly ash: 5-12.5 tons/ton of ash

The TDS concentrations in sluicing water can vary between a few hundred to many thousand mg/ℓ. The species are diverse and include salts of sodium, magnesium, calcium, potassium, and numerous trace elements. The salts are generally present as sulfites, sulfates, chlorides, and oxides.

3.1.5 Flue Gas Desulfurization (FGD) Systems

Removal of sulfur dioxide from stack gases is required for most types of coal to comply with the current emission standards. FGD systems can be generally categorized into two groups: nonrecovery or throwaway systems which produce a waste material for disposal, and recovery systems which produce a saleable byproduct (sulfur or sulfuric acid). Recovery systems usually have prescrubbers and produce smaller quantities of wastes for disposal. There are now over 50,000 MW of coal-fired electric utility boilers in the United States to which FGD systems are being applied (including systems in operation, under construction, or in procurement). About 90% of this capacity involves recovery systems, most of which employ

lime or limestone to produce a solid waste, calcium-sulfur salt for disposal. This technology can be expected to dominate in boiler applications on FGD systems for the foreseeable future.

Water consumption in the nonrecovery FGD process includes that for saturating flue gases, 2.7-4.6 lit/min (0.7-1.2 gpm) per MW and water losses with the waste, 0.08-2 lit/min (0.02-0.53 gpm) per MW. Saturation losses depend primarily upon the type of boiler and boiler operating conditions, whereas water losses in FGD wastes depend upon the sulfur content of the coal and the sludge dewatering method employed in the FGD system. Makeup water for FGD systems can be overflow and/or wastewater from other plant operations such as ash pond overflow, coal pile runoff, and certain ion exchange regenerants. However, the chemistry of the wastewater must be well defined so that appropriate pretreatment can be employed if necessary. A detailed discussion of FGD technology is presented in Volume 3 and water consumption and usage reviewed in Section 3.7.

3.1.6 Miscellaneous Operations

Water used for miscellaneous operations can produce minor waste streams. These operations include laboratory and sampling activities, auxiliary cooling water system(s), sanitary facilities, and washing of intake screens.

Laboratory and sampling wastes can differ from plant to plant. Modern plants, where closer controls on operations are required, have more extensive sampling and laboratory activities. There are no quantitative data reported in the literature; however, these wastes are minor (perhaps in the range of 190 m^3/day or 50,000 gpd) and are relatively insensitive to plant size beyond 500 MW.

The auxiliary cooling water systems can be either once-through or recirculating type. The flow through the once-through system ranges from 1.9-133 lit/min (0.5-35 gpm) per MW with a typical value of approximately 40 lit/min (10 gpm) per MW. This total flow represents the wastewater stream. In closed systems, the recirculation rate is typically 91-95 lit/min (23-25 gpm) per MW. Blowdown from this system is reported to be 0-19 lit/day (0-5 gpd) per MW [5].

Sanitary wastes in a 1,000-MW coal-fired plant employing about 200 people are usually about 26.5 m^3/day (7,000 gpd), or less than <0.01 gpm per MW at 70% load. Wastes from washing of intake screens are minor and contain mainly suspended solids. Consequently, their impact on the overall water balance and treatment technology can be considered insignificant.

3.1.7 Maintenance Cleaning

Periodic maintenance cleaning of boiler tubes, boiler fireside air preheater, condenser, miscellaneous small equipment, stack, and cooling tower basin creates wastewater streams. These streams (especially those from boiler and air preheater) are characterized by high toxicity and large volumes. For these streams, flow equalization prior to treatment is usually required. However, in stations with multiple units, it is possible to schedule the cleaning frequencies so that storage requirements for flow equalization prior to treatment can be minimized.

The steps involved in cleaning of boiler tubes depend upon the scale composition and the chemicals selected to remove the scale. For example, copper scale is removed by alkaline solutions containing ammonia, soda ash, and an oxidizing agent such as bromates or by using ammoniated alkaline solutions which contain chelating compounds such as EDTA. Inhibited hydrochloric acid is used to remove iron scale. The volume of wastes resulting from boiler tube cleaning operations can vary between 3 to 10 times the boiler volume, depending upon the specifics of the application. The boiler fireside is cleaned with high-pressure alkaline water containing sodium salts such as soda ash, caustic soda, and/or phosphates. The frequency of cleaning boiler tubes and boiler fireside varies from once in seven months to once in 100 months. The typical cleaning frequency is once in 36 months [5,12].

Air preheaters are cleaned more frequently (once or twice a month). Alkaline water with detergents is used and the volume depends predominantly on the maintenance procedures. Condenser tubes are cleaned with inhibited acid solution. The steam side of the condenser is cleaned less frequently unless there is evidence of excessive tube leakage.

The stacks and cooling tower basins also require periodic cleaning, although less frequently than boilers. Cooling tower basins accumulate sludges over a period of time and need cleaning. Removal of these sludges is usually done by a front end-loader and a dump truck; such sludges are usually disposed of along with other solid wastes such as coal ash and FGD wastes. Wastes from stack cleaning can be acidic, depending upon flue gas composition (with or without FGD systems).

3.1.8 Drainage

Drainage is composed of two waste streams:

- Coal pile runoff which constitutes the major drainage stream in many cases, and
- Contaminated floor and yard drains.

Coal storage is dependent upon considerations such as distance from source, transportation methods, labor conditions, availability of land and coal prices. Typically, a 90-day supply is maintained as an active pile. This corresponds to 600-1800 m^3 (0.5-1.5 acre-ft) per MW. The storage piles are 8-12 meters (25-40 ft) high and thus the coal pile area ranges between 50-225 m^2 (0.013-0.06 acres) per MW. The quantity of the runoff depends upon the amount of rainfall and is initially highly acidic. Runoff contains significant concentrations of dissolved solids including iron, sulfate and manganese. Significant amounts of aluminum, zinc, copper, cadmium, chromium, vanadium, silver, lead, and other metals are also present in the runoff.

Contaminated floor and yard drains are another intermittent source but are often a minor one. Oil and grease are major contaminants in floor and yard drains.

3.2 Treatment Technology in General

In this subsection, the focus will be on the potential(s) for water recycle/treatment/reuse of individual streams.

Chemical wastes in power plants can be broken down into individual waste sources. In its evaluation of power plants for developing effluent guidelines, the EPA identified individual streams for a power plant. Table 3.1 provides a listing of these streams.

The degree of effluent reductions that can be achieved by the application of specific control and treatment technology is related to the type of source components involved and, further, to water use, quality, and other considerations specific to individual plants. Both site- and plant-related characteristics affect the degree of practicability of applying wastewater control and treatment technology.

The generalized chemical characteristics of wastewater streams in a coal-fired power plant are summarized in Table 3.2 [13,14,15]. An example of a water management scheme for a coal-fired power plant with an FGD system is shown in Figure 3.2. In the subsequent sections, an assessment of each waste stream will be presented including:

- A brief description of the system generating the waste.
- Waste characterization (typical).
- Conventional methods for minimizing or treating the particular waste stream.
- Data (if generically applicable and available) on economics of such treatment.
- Recent studies on water management of the waste streams.

In Sections 5.2 and 5.3, considerations on combining many of the waste streams for water management will be discussed. It should be emphasized that maximum technical potential for water management, including recycle/treatment/reuse at power plants lies in such combination of waste streams. Such an approach also usually provides economic optimum for water management under given regulatory and water supply constraints for the whole plant. In addition, water management will involve many site-specific and power plant system-specific

Table 3.1

Chemical Waste Categories - Coal-Fired Power Plants

I. Continuous

1. Condenser Cooling System
   - A. Once-through
   - B. Recirculating
2. Boiler
   - A. Blowdown
3. Water Treatment
   - A. Clarification
   - B. Softening
   - C. Ion Exchange
   - D. Evaporator
   - E. Filtration
   - F. Reverse Osmosis
   - G. Other Treatment
4. Ash Handling
   - A. Fly Ash
   - B. Bottom Ash
5. Flue Gas Desulfurization
6. Miscellaneous Waste Streams
   - A. Sanitary Wastes
   - B. Plant Laboratory and Sampling Systems
   - C. Intake Stream Backwash
   - D. Auxiliary Cooling Water Systems
   - E. Construction Activity

II. Intermittent

7. Maintenance Cleaning
   - A. Boiler Steam Generator Tubes
   - B. Boiler Fireside
   - C. Air Preheater
   - D. Miscellaneous Small Equipment
   - E. Stack
   - F. Cooling Tower Basin
8. Drainage
   - A. Coal Pile
   - B. Contaminated Floor and Yard Drains

Source: Arthur D. Little, Inc.

Table 3.2

Summary of Chemical Characteristics of Utility Effluent Systems (Coal-Fired Plants)

No.	Effluent Stream	Process or Operation	Chemical Additive(s)	Typical Conc. of Additive or Pollutant	Resulting Priority Pollutant Expected in Effluent	Expected Conc. of Pollutants in Effluent	Comments
1	Cooling Tower Blowdown	Corrosion Inhibition	Chromate	10-50 mg/l as CrO_4	Chromium	10-50 mg/l	
			Zinc	8-35 mg/l as Zn	Zinc	8-35 mg/l	
			Phosphate	15-60 mg/l as PO_4			
			Silicates	-----			
			Proprietary Organics	3-10 mg/l as organic	Potential priority organics		Organics can react with residual chlorine to form chlorinated compounds
		Scale Control	Acid (H_2SO_4)	2-5 mg/l			
			Inorganic Polyphosphates				
			Chelating Agents	-----			
			Polyelectrolyte Antiprecipitants	1-2 mg/l			
			Organic/Polymer Dispersants	20-50 mg/l	Potential priority organics		Organics can react with residual chlorine to form chlorinated compounds
		Biological Fouling (Algae Slimes, Fungi)	Chlorine	<0.5 mg/l residual			Supplies free chlorine for reaction with organics to form chlorinated organics
			Hypochlorite	------			
			Chlorophenates		Chlorinated Phenols		
			Thiocyanates		Cycanide		
			Organic Sulfur Compound	~30 mg/l residual concentrations			
		Suspended Solids Dispersion	Tannins				
			Lignins				
			Proprietary Organics/Polymers	20-50 mg/l	Potential Priority organics		Organics can react with residual chlorine to form chlorinated compounds
			Polyelectrolytes/Monionic Polymers	1-2 mg/l			
		Leaching of wood preservatives from wood cooling towers	Acid Copper Chromate	Unknown	Chromium		
			Chromated Copper Arsenate	Unknown	Arsenic		
			Creosote	Unknown			
			Pentachlorophenol	Unknown	Pentachlorophenol		

Table 3.2 (Continued)

Summary of Chemical Characteristics of Utility Effluent Systems (Coal-Fired Plants)

No.	Effluent Stream	Process or Operation	Chemical Additive(s)	Typical Conc. of Additive or Pollutant	Resulting Priority Pollutant Expected in Effluent	Expected Conc. of Pollutants in Effluent	Comments
2	Boiler Blowdown	Scale Control	Di & Tri Sodium Phosphates	3-60 mg/l of PO_4			
			Ethylene diaminetetracetic acid(EDTA)	20-100 mg/l			
			Nitrolatriacetic acid(NTA)	10-60 mg/l			
			Alginates	50-100 mg/l			
			Polyacrylates	50-100 mg/l			
			Polymethacrylates	50-100 mg/l			
		Corrosion Control	Sodium Sulfite	$<$200 mg/l			
			Hydrazine	5-45 mg/l			
			Morpholine	5-45 mg/l			
		pH Control	Sodium Hydroxide	variable added to adjust pH to 8-11.0			
			Sodium Carbonate				
			Ammonia				
			Morpholie				
			Hydrazine				
		Solids Deposition	Starch	20-50 mg/l			
			Alginates	20-50 mg/l			
			Polyacrylamides	20-50 mg/l			
			Polyacrylates	20-50 mg/l			
			Tannins	$<$200 mg/l			
			Lignin Derivatives	$<$200 mg/l			
			Polymethocrylates	20-50 mg/l			
3	Water Treatment Including Blowdown Wastes	Alum Treatment and Filtration					
		Ion Exchange Water Treatment	Regenerant Solutions added to reactivate bed		Priority pollutants present in source water	Significantly higher concentrations than source water	

Table 3.2 (Continued)

Summary of Chemical Characteristics of Utility Effluent Systems (Coal-Fired Plants)

No.	Effluent Stream	Process or Operation	Chemical Additive(s)	Typical Conc. of Additive or Pollutant	Resulting Priority Pollutant Expected in Effluent	Expected Conc. of Pollutants in Effluent	Comments
4	Ash Handling	Coal Ash Sluicing (fly ash and bottom ash)	None	Pollutants in sluice water before sluicing	In addition to Source Water: Cadmium, Chromium, Copper, Lead, Magnesium, Nickel		Trace metals in the coal or oil are leached into the sluicing liquor
5	FGD Systems	Lime/Limestone	Lime or Limestone	TDS=25,000 to 70,000	Cadmium, Arsenic, Mercury, Zinc, Others		Can be leached to surface or groundwater
		Alkaline Fly Ash, Dual Alkali					
6	Miscellaneous	Lab & Sampling, Sanitary, Intake Screen Backwash, Auxiliary Cooling					
7	Chemical Cleaning	boiler waterside cleaning and condenser waterside cleaning	Acid Solvents and Toxic Solvents	Nickel, Zinc, Aluminum, Copper			Heavy metals are dissolved into the cleaning solution from equipment surfaces
		boiler fireside	Water or slightly alkaline wash: Na_2CO_3, NaOH, Phosphates	iron, nickel, chromium, vanadium, zinc			Much of the priority pollutants come from dissolution of deposits on boiler tube surface. The deposits originate in the coal or oil burned

Table 3.2 (Continued)

Summary of Chemical Characteristics of Utility Effluent Systems (Coal-Fired Plants)

No.	Effluent Stream	Process or Operation	Chemical Additive(s)	Typical Conc. of Additive or Pollutant	Resulting Priority Pollutant Expected in Effluent	Expected Conc. of Pollutants in Effluent	Comments
8	Coal Storage & Handling	Rainfall/runoff Floor & Yard Drains			Aluminum Sulfates Chlorides Depends on intake water	Iron Cadmium Beryllium Nickel Chromium Vanadium Zinc Copper	Dissolution of trace metals into water
9	Process Spills and Leaks	Accidents involving general plant operations					

Source: [13, 14, 15]

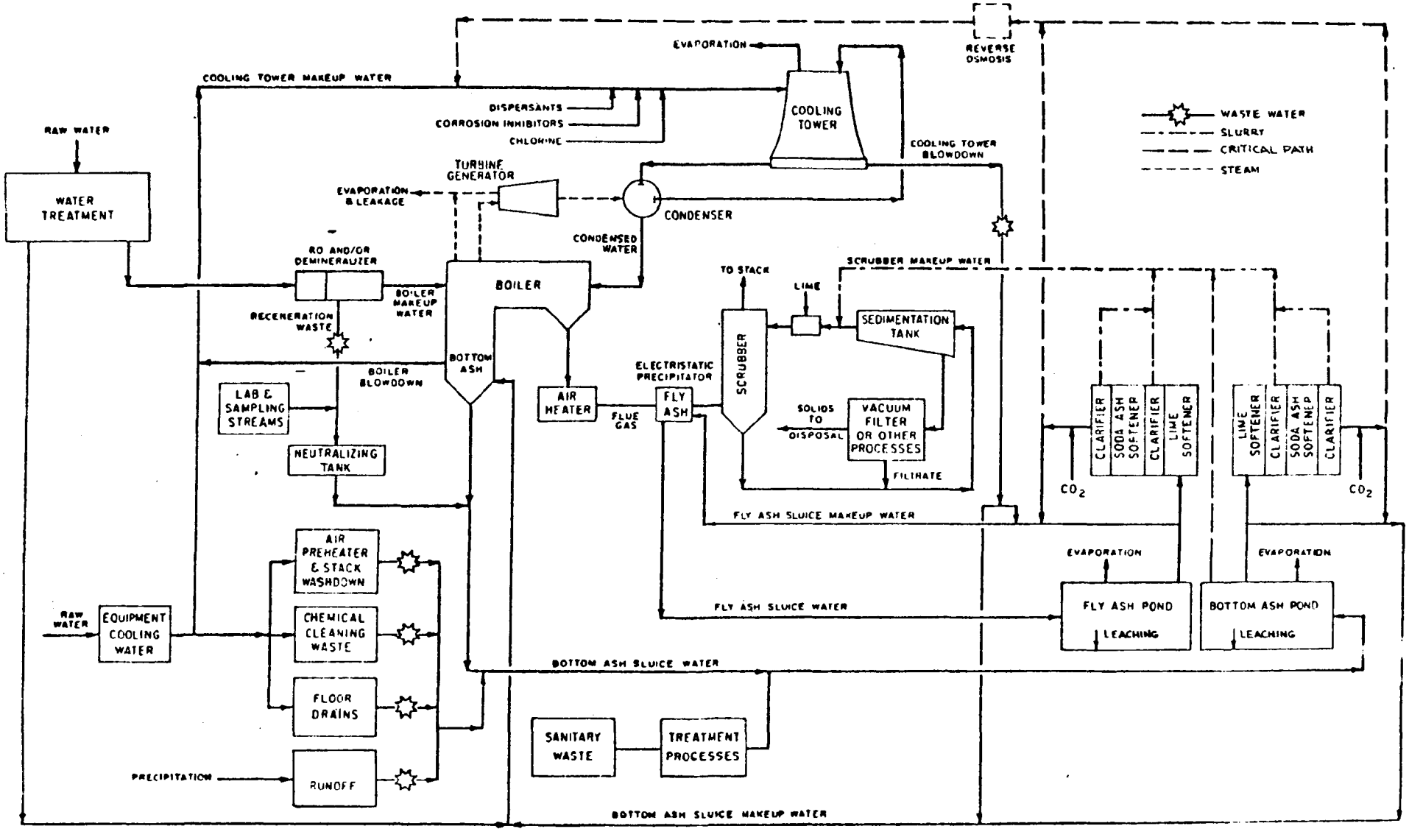

Source: [14]

Figure 3.2 An Example of Recycle/Treatment/Reuse Scheme for Coal-Fired Power Plants with FGD

considerations. Only broad generic possibilities will be discussed in this report.

In considering water management, one needs to be cognizant of substantial differences between new and existing power plants. The concern regarding collection and piping systems for waste streams for combined water management was mentioned earlier. In any retrofit application, the costs associated with piping and collection may exceed that of any treatment system for wastewater. In a new plant, the costs can be minimized by taking into account the systems requirements in the design phase.

3.3 Condenser Cooling System Wastes

3.3.1 General

In a large, coal-fired power plant, of the total heat input, 35-40% is converted to electricity and the remaining 60-65% is rejected as waste heat in stack gases and condenser. The energy lost in stack gases is about 10% of the amount rejected in the condenser. This means that about 55-60% of the heat input is rejected in the condenser. The water flow required in a power plant is inversely related to the operating temperature difference in the condenser (i.e., temperature of water out of the condenser minus the temperature of the water into the condenser). For a typical 1000-MW power plant, the water flow times the temperature difference is approximated as follows:

$$\text{gpm} \times \Delta + (°\text{F}) = 11.7 \times 10^6 \text{ or}$$

$$\text{m}^3/\text{min} \times \Delta + (°\text{C}) = 79.8 \times 10^3.$$

The condenser cooling system can be of the following types:

- Once-through
- Recirculating
  - Cooling ponds
  - Wet (evaporated) cooling tower
  - Dry cooling tower
  - Combination (hybrid) system.

Figure 3.3 presents simplified schematics of these types. Table 3.3 presents typical data on water requirements associated with each type of cooling system.

Based on data from 800 plants, EPA recently reported [101] that 67% of steam electric power plants use once-through cooling water in water in their condensers. Thus in spite of water availability constraints and environmental regulations, once-through cooling is the largest mode in power plants. However, in the future, new plants are expected to use cooling towers more widely.

3.3.2 Once-through Cooling

This is the earliest type of system and is now employed if the power plant is in proximity to large bodies of water; if seawater is employed for condenser cooling, once-through systems are usually employed. Figure 3.2 outlines the schematic. Once-through cooling systems are unique since the total cooling water flow is discharged as a wastewater effluent. After passing through the condenser, the cooling water is discharged to a receiving body (i.e., river, lake, pond). Water use in once-through cooling varies from 1×10^5 to 3.5×10^5 lit/MWH (2.6×10^4 to 9.3×10^4 gal/MWH) [5].

In a once-through system, the chemical composition of the effluent water is essentially equivalent to that of the influent water. Water quality parameters such as total dissolved and suspended solids, pH, etc., should be largely governed by the characteristics of the cooling water source and not by the operation of the cooling system. Slight changes in the chemical compositions between influent and effluent for these systems may occur, however, as a result of the formation of corrosion products and/or the addition of treatment chemicals (i.e., biocides).

Water-side corrosion of the main condenser will result in corrosion products (i.e., metal oxides) appearing in the cooling water effluent. Condenser metallurgy would normally be selected so as to minimize water-side corrosion problems.

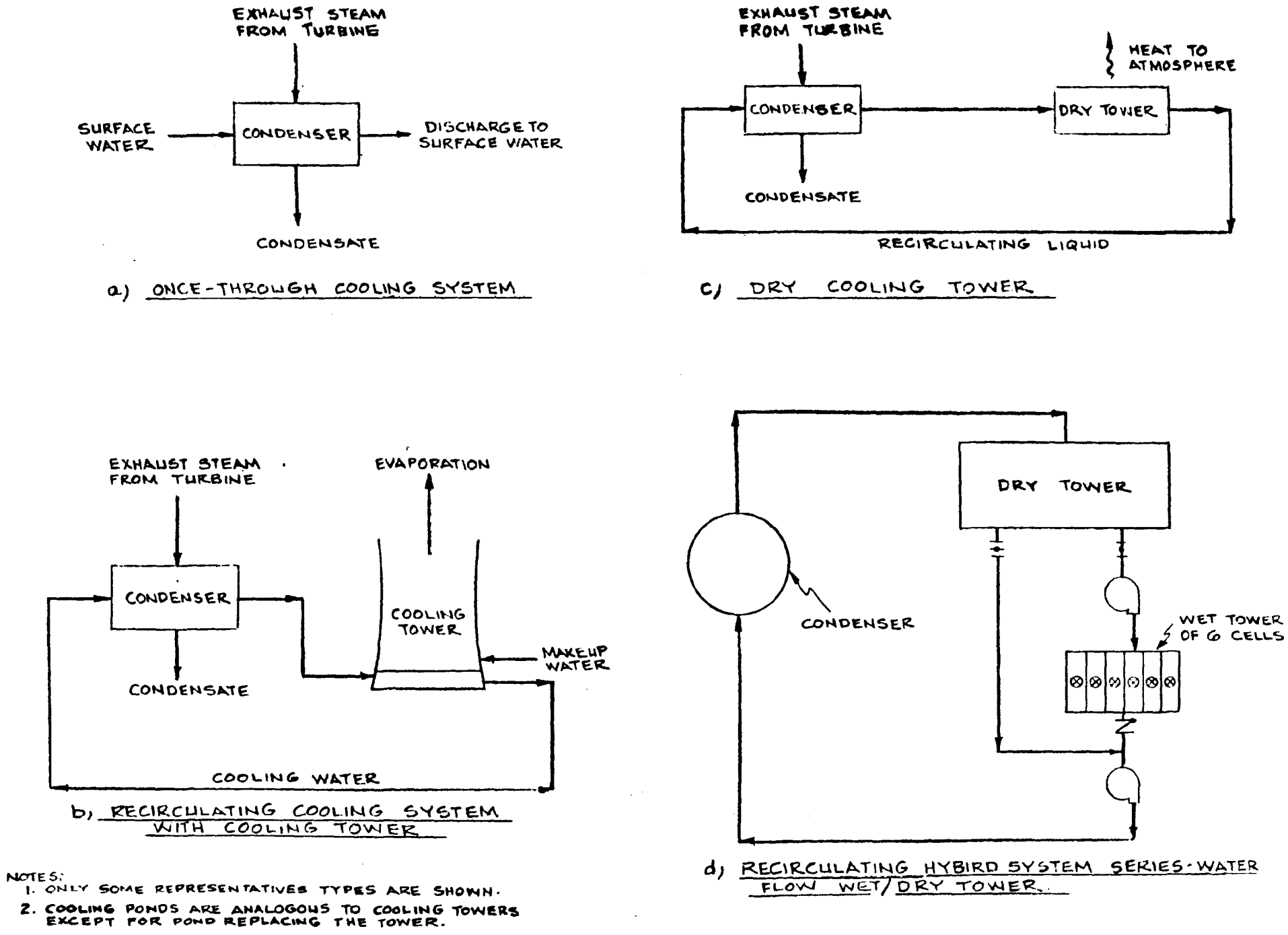

NOTES:
1. ONLY SOME REPRESENTATIVES TYPES ARE SHOWN.
2. COOLING PONDS ARE ANALOGOUS TO COOLING TOWERS EXCEPT FOR POND REPLACING THE TOWER.

Figure 3.3 Cooling Systems

Table 3.3

Typical Gross Water Intake Requirements

For Cooling Systems

No.	Type of Cooling	Relative Quantity of Water[1]
1	Once-through	1000
2	Cooling towers and ponds[2]	30-90
3	Hybrid (wet/dry)	1-10
4	Dry	0

[1] The quantities are specified as relative quantities. However, for a typical 1000-MW power plant, these are in cubic feet per second.

[2] Usually evaporation rate is about 18 to 23 and blowdown rate is 5 to 60.

Source: Arthur D. Little, Inc.

The only major potential pollutants are biocides used to control microbial growth in heat exchanger tubes. Chlorine and hypochlorite are the most common biocides used. Dosage of biocide is site-specific but may vary from 1 to 10 times per day; "shock" or "slug" type of treatment is frequently used. Residual chlorine concentration in the effluent varies from 0.1-1 mg/ℓ [5]. However, when using certain influent waters--such as seawater--chlorine concentration as high as 12 mg/ℓ or more may be used to inhibit crustacean growth [16].

The first major attempt at water recycle/reuse at power plants involved the transition from once-through to recirculating wet cooling systems. In recent years, research has focused on recirculating dry or hybrid (wet/dry) cooling systems.

3.3.3 Recirculating Systems

3.3.3.1 Recirculating Wet Systems

Condenser cooling water can be recirculated within the plant. This is accomplished by:

- Cooling Ponds - In these large, recirculating systems, the water for rejection of the waste heat is drawn from a large pond, canal or other body with substantial surface area exposure. The water, after absorbing the waste heat, is recycled back to the pond or canal. The rejection of waste heat from such cooling ponds is via evaporation from the pond and radiant heat transfer.

- Cooling Towers - In these systems, the rejection of heat is accomplished by allowing the water to spray through a cooling tower system. The more conventional systems are wet cooling towers; modifications that are now under development involve dry cooling towers and wet/dry combinations.

Wet cooling towers generally reject heat from the cooling water to the atmosphere by sensible heat exchange (about 20%) and evaporation (80%).

Ponds are used only where large areas of inexpensive land are available, since a large plant may require over 1,000 acres of pond surface. Cooling towers may be either of the wet or hybrid (wet/dry) types, and are used where sufficient land for ponds is unavailable or too expensive. Since all cooling devices (except dry cooling systems) transfer the process waste heat to the atmosphere mainly by evaporation (radiant and sensible transfer of heat may be significant for large ponds), additional water must be added to the system to make up for these losses due to evaporation, drift and blowdown. The potential for water recycle/reuse in cooling towers and ponds is analogous. However, cooling ponds offer substantial water storage capability to weather dry periods.

Figure 3.3(b) (page 3-18) outlines the schematic of a recirculating cooling system using cooling towers. EPA [116] has made some estimates on cooling tower water requirements assuming certain levels of typical intake water quality. While generic studies are useful, a site-specific analysis is normally required to determine water requirements adequately.

3.3.3.2 Recirculating Dry Systems

Dry recirculating systems use a recirculating fluid to transfer heat from the condenser to the atmosphere (see Figure 3.3[d]) via air-cooled heat exchangers. Thus, these function in a manner analogous to the radiator in an automobile and do not require make up water. Dry systems are more expensive than wet cooling towers or hybrid systems discussed later.

A recent survey article by Rossie and Cecil (17) suggests that there are a number of possible savings that can be effected by utilities using dry towers. For example, such plants can be located nearer the sources of fuel without regard for the availability of large quantities of water, which would effect a savings in the cost of fuel transportation. This added flexibility in location could be used also to optimize real estate costs, power-transmission costs, environmental damage, and aesthetic factors. Unlike the case in which plants use wet towers, the cost of energy will be free from the cost of water and the cost of effluent control.

Although these advantages may appear attractive on paper, the power industry has been reluctant to seriously consider using completely dry cooling for two main reasons: (1) Since a dry tower cannot cool the water below the ambient dry-bulb temperature, the design must be based on the maximum summertime temperatures. This leads to large and therefore expensive installations occupying large land areas. (2) The higher cold-water temperatures, which result part of the time (especially during summer operation), mean that the turbine has to operate at higher back pressures. Existing turbines, if operated at the required higher back pressures, will suffer in efficiency and thereby increase the fuel consumption. Turbine designers have not succeeded so far in building high back-pressure turbines without penalties in efficiency. On balance, it is unlikely that dry cooling towers will be used by themselves for large power plants in any significant proportions in the foreseeable future.

3.3.3.3 Recirculating Hybrid (Wet/Dry) System

The wet/dry cooling tower is a relatively new cooling system which provides for control of environmental impact from effluents as related to plume (fog) abatement and water conservation [18,19]. The wet/dry tower (see Figure 3.3(d)) combines air-cooled heat exchangers and conventional evaporative cooling sections into a configuration utilizing a common fan (predominantly induced draft). The heat exchangers (dry section) allow for the removal of part of the heat load via sensible heat transfer (constant absolute humidity), whereas the remaining heat

load is removed via latent and sensible heat transfer in the evaporative section. The effect is to reduce the relative humidity or moisture content of the tower effluent, thereby reducing the frequency of plume formation and decreasing to some extent water loss via evaporation and drift. Hybrid systems are normally intermediate between wet and dry cooling systems in terms of capital and operating costs and also in size.

3.3.4 Water Conservation and Chemical Waste Streams

All recirculating systems reduce water requirements from those for once-through systems. To provide a rough idea on gross water intake requirements (and remembering that the water in once-through cooling is returned to the source), the order of magnitude values shown in Table 3.3 may be suggested.

Wet and, to a lesser extent, hybrid (wet/dry) recirculating systems produce a blowdown for treatment. Dry cooling towers do not produce any blowdown but are more costly than any of the alternatives.

United Engineers recently completed a study for the EPA [18] on water consumption and costs for steam-electric power plant cooling systems. The principal conclusions from this study are:

1. Where water is available, wet cooling will continue to be the economic choice in most circumstances. However, for sites with remote water supply sources, the advantage of wet cooling over wet/dry cooling may be small. In cases where resource limitations or environmental criteria make water costs excessive, wet/dry cooling can reach economic parity with wet cooling.

2. Wet/dry cooling tower systems can be designed to provide a significant economic advantage over dry cooling, yet closely match the dry tower's ability to conserve water. The wet/dry systems which save as much as 98% of the makeup water required by a wet tower can maintain that economic advantage. Therefore, for power plant sites where water is in short supply, wet/dry cooling is the economic choice over dry cooling. Even where water supply is remote from the plant site, this advantage holds.

3. Ground fogging from low profile wet cooling towers can be significantly reduced by increasing the number of cells, thereby reducing the liquid water concentration in the plume. These design changes can be made without significantly increasing the total evaluated cost of the wet cooling tower. In cases of restrictive site conditions or fogging limitations, hybrid wet/dry cooling towers may be used effectively at costs which approximate those of enlarged wet towers.

From the viewpoint of chemical waste streams and control thereof (which is the focus of this report), recirculating wet cooling tower systems provide the maximum complexity. All other systems, in fact, require only parts of the overall considerations involved in wet cooling towers as far as technology and environmental impacts are concerned. Hence the focus of this subsection will be the recirculating cooling tower.

3.3.5 Wet Cooling Tower

3.3.5.1 Process Variables

The approach (difference between the water temperature leaving the tower and the ambient design wet-bulb temperature) is usually in the range of 4-8°C (7-14°F) and it depends upon the number of heat transfer units provided by the tower. Evaporation and drift losses are dependent upon the cooling load, ambient atmospheric conditions, and the tower design.

The term "cycles of concentration" is defined as the ratio of the recirculating species concentration to the makeup species concentration and can be expressed in terms of flow rate as in Equation 3.1 [5,16].

$$C = \frac{E + B + D}{B + D} \quad \frac{M}{B + D} \tag{3.1}$$

where C = cycles of concentration

E = evaporation rate

B = blowdown rate

D = drift rate

M = makeup rate.

In assessing pollutants from cooling towers, it is well to note that the past few years have seen major changes with regard to cooling tower design and construction. The typiccal cooling tower of some years ago was constructed of a wooden structure, employed wooden fill material and

The blowdown stream is a slip stream withdrawn from the system to control the cycles of concentration. In all recirculating systems, a blowdown must be withdrawn from the system to control the concentrations of impurities and contaminants. This stream represents the wastewater from the recirculating cooling system. The cooling tower blowdown (or the blowdown from any recirculating system) is thus a wastewater stream of concern from the condenser cooling water system and is maintained at a level sufficient to prevent scale formation in the condenser. Such scale formations on the condenser tubes reduce the heat transfer efficiency of the condenser, resulting in increased back pressure on the turbine which leads to an overall loss in the cycle efficiency. Scale formation depends upon the operating temperature, the makeup water quality and the cycles of concentration. In practice, C is usually between 4 and 6. For very high quality makeup water, C may be as high as 15, and for very saline water, C may be as low as 1.2-1.5. The evaporation rate (E) from cooling towers averages about 1.5% of the cooling water flow for every 10°C (10°F) rise in cooling water temperature as the water passes through the condensers. The drift rate (D) for new cooling towers is about 0.005% of the cooling water flow for mechanical draft towers, and about 0.002% for natural draft towers.

Blowdown quantity is set by the maximum concentration of a limiting impurity (i.e., hardness, dissolved solids, suspended solids) that can be tolerated in the system or by the solubility limit of scaling salts such as calcium sulfate, calcium carbonate, etc. The blowdown rate typically ranges between 0.5-3.0% of the recirculating water flow. (19,20) The recirculating flow required is about 0.1 lit/Kcal (12 gal/1,000 Btu) of heat removal for every 10°C (10°F) rise in cooling water temperature. Typically, blowdown will contain everything in the makeup times the cycles of concentration factor C except the volatiles. Additionally, various amounts of the conditioning chemicals will be present. Table 3.4 presents a typical cooling tower blowdown analysis.

In recirculating systems, the chemical characteristics of the recirculating water influence the maximum cycles of concentration C. Table 3.4 presents some broad guidelines in establishing the quality of water in recirculating cooling tower sytems.

Table 3.4

Cooling Tower Recirculating Water Quality Guidelines

Parameters	LIMITS Minimum	LIMITS Maximum	Remarks
Langelier Saturation Index[1]	+0.5	+1.5	Nonchromate treatment
Ryznar Stability Index[2]	+6.5	+7.5	Nonchromate treatment
pH	6.0	8.0	
Calcium, mg/ℓ as $CaCO_3$	20-50	300	Nonchromate treatment
		400	Chromate treatment
Total iron, mg/ℓ		0.5	
Manganese, mg/ℓ		0.5	
Copper, mg/ℓ		0.08	
Aluminum, mg/ℓ		1	
Sulfide, mg/ℓ		5	
Silica, mg/ℓ		150	For pH < 7.5
		100	For pH > 7.5
$(Ca)\cdot(SO_4)$, product		500,000	Both calcium and sulfate expressed as mg/ℓ $CaCO_3$
Total dissolved solids, mg/ℓ		2,500	
Conductivity, micromhos/cm[3]		4,000	
Suspended solids, mg/ℓ		100-150	

[1]The limits for the Langelier Saturation Index (an indication of $CaCO_3$ saturation) presume the presence of precipitation inhibitors in non-chromate treatment programs. In the absence of such additives, the limits would be reduced to 0 and 0.5.

[2]For a discussion of Langelier Saturation Index and Ryznar Stability Index, see Section 3.6.7.

Source: [21]

trend in utility cooling towers is towards concrete structures, asbestos cement fill and natural draft operation. In recent years, there has been substantial focus on the carcinogenicity of asbestos. In cooling towers constructed of asbestos cement fill, the cooling tower blowdown has been reported to contain asbestos [101,115]. Erosion of the fill material is the principal reason for asbestos fibers in the blowdown. No asbestos was reported in the effluents to the receiving waters. Also, lignins and tannins in wooden cooling towers affect scaling.

3.3.5.2 Makeup Water Treatment

In all recirculating cooling systems, the concentration of non-volatile dissolved solids increases with increasing cycles of concentration. Furthermore, microorganisms such as fungi, algae, and bacteria can also cause rapid and severe wood rot and metal corrosion [63]. Hence, various chemicals are added to the cooling tower either in the makeup waters or in a slip stream to prevent biological growth in cooling towers and to prevent scale accumulation and corrosion in condensers. Usually, such additives include:

- Corrosion inhibitors,
- Scale control chemicals,
- Chemicals for biofouling control, and
- Suspended solids dispersants (antiprecipitants).

Table 3.5 outlines typical treatments commonly employed. A full list of compounds employed as chemical additives for cooling tower systems is reported [102]. In addition, as mentioned earlier, chrysolite asbestos and acrolein have been reported in the tower basins [101] but not in any final effluents [115]. The asbestos is presumably from asbestos cement used in natural draft cooling towers.

The basic purpose in chemical conditioning is to maintain condenser tubes or other heat exchange equipment with an inherent new-tube cleanliness which is most important to keep the efficiency and economics of the process at its designed level. The cost penalty of tube fouling increases proportionately as the cleanliness decreases. If allowed to continue, an unscheduled outage may be required to clean the tubes, thereby losing production and further compounding additional costs.

Chemical Treatment Summary for Recirculating Cooling Systems

Treatment Objective	Chemical Additive	Typical Additive Concentrations in Blowdown	Comments
Corrosion Inhibition	Chromate	10-50 mg/ℓ as CrO_4	Chromate treatment has been the traditional corrosion inhibitor system. Since chromate has been found to be highly toxic to aquatic life, water treatment vendors are now offering alternative corrosion inhibitor treatments which employ various combinations of chromate, zinc, phosphate, silicate, and organic additives. These alternative treatments are designed to either minimize the chromate concentration that is necessary for corrosion protection or to completely eliminate the need for chromate by substituting other chemical additives.
	Zinc	8-35 mg/ℓ as Zn	
	Phosphate	15-60 mg/ℓ as PO_4	
	Silicates	-----	
	Proprietary Organics	3-10 mg/ℓ as organic	
Scale Control	Acid Treatment	Cooling water pH is maintained between 6.5 and 8.0.	Scale control allows recirculating cooling systems to operate at higher concentration factors without the formation of scale on condenser heat transfer surfaces. Acid treatment, polyphosphates, and chelating agents maintain the solubility of the common scaling salts (i.e., $CaCO_3$, $CaSO_4$, etc.) below the scaling limit (the point at which they will precipitate from solution). Polyelectrolyte antiprecipitants allow supersaturation of the cooling water with respect to scaling salts without precipitation of these salts occurring. Dispersants do not inhibit scale precipitation, but prevent precipitated salts from settling and adhering to heat transfer surfaces.
	Inorganic Polyphosphates	2-5 mg/ℓ	
	Chelating Agents	-----	
	Polyelectrolyte Antiprecipitants	1-2 mg/ℓ	
	Organic/Polymer Dispersants	20-50 mg/ℓ	
Biological Fouling (algae, slimes, fungi) Control	Chlorine	$\leq$ 0.5 mg/ℓ residual Cl_2	Biocides used to control biological fouling are either the oxidizing or non-oxidizing types. Oxidizing biocides (chlorine and hypochlorite) have been discussed for once-through cooling systems in the "Once-Through Cooling Water" section. These biocides are used in recirculating cooling systems in a fashion similar to that described for once-through systems. Non-oxidizing biocides (chlorophenates, thiocyanates, organic sulfur compounds, etc.) are employed when other chemical additives such as organic corrosion inhibitors, scale control agents, or solids control agents are destroyed by the conventional oxidizing biocides.
	Hypochlorite	-----	
	Chlorophenates		
	Thiocyanates		
	Organic Sulfur Compounds	$\sim$ 30 mg/ℓ residual concentrations	
Suspended Solids Dispersion	Tannins	-----	Chemical dispersants maintain suspended solids from settling and adhering to heat transfer surfaces.
	Lignins	-----	
	Proprietary Organics/ Polymers	20-50 mg/ℓ	
	Polyelectrolytes/Non-ionic Polymers	1-2 mg/ℓ	

The objective is to maintain the cleanliness factor at an acceptable level by one or more methods. Chemical treatment of makeup water is only one technique to achieve this, although it is often employed. In general, available techniques include [5]:

1. Continuous and complete chemical conditioning of the cooling system while operating,
2. Chemical cleaning of the heat exchanger tubes at the scheduled outage,
3. Mechanical cleaning of the tubes while operating with equipment utilizing either sponge rubber balls or brushes, slightly oversized to pass through the tubes, and
4. Mechanical cleaning of the tubes at a scheduled outage.

Chemical treatment of makeup water (or a slip stream) can increase the number of cycles and reduce net blowdown. Thus, chemical treatment may be envisioned as the first step in recycle/reuse. Against this background, some of the major treatment methods outlined in Table 3.5 are discussed below.

a. Scale Control

Scale control allows recirculating cooling tower water to operate at higher levels of concentration of contaminants without forming scale on the condenser tubes. Important methods of scale control are:

1. Acid Treatment for Scale Control - Sulfuric acid is often employed in cooling towers to control the pH of the water and thereby control the precipitation of calcium carbonate, hydrated magnesium oxides, and some of the silicate scales. The level of acid required to control scales rises with the cycles of concentration in a nonlinear fashion. Another factor is the makeup water quality. The latter determines which species are more likely to scale. Potentially the acidic wastes from ion exchange units can be used as a source of H^+ ions. Chemical reactions involved are [18]:

$$CaCO_3 + H_2SO_4 \rightarrow CaSO_4 + H_2O + CO_2\uparrow$$

$$Mg(HCO_3)_2 + H_2SO_4 \rightarrow MgSO_4 + 2H_2O + 2CO_2\uparrow$$

2. Other Removal Processes for Scale Control - Conventional lime and lime/soda ash softening can be used to reduce Ca^{++}, Mg^{++} and silica constituents from the makeup water.

For example, one scale-forming species which cannot be controlled with acid treatment alone is gypsum ($CaSO_4 \cdot 2H_2O$). Softening is a technique used to reduce the calcium concentration in an aqueous stream. In lime softening, calcium oxide (as lime) is added to the liquid stream to increase the pH of the solution and precipitate calcium carbonate. Softening is among the less expensive systems to control gypsum scale. If gypsum scale formation is not controlled by an adequate calcium treatment, the cooling tower blowdown may have to be excessive and require more expensive treatment of the ultimate effluent in any zero discharge scheme. Removal processes can be carried out at elevated temperatures (hot versus cold softening) and higher removal efficiencies attained [21].

Softening is a more expensive treatment method when compared with acid treatment; it requires more capital outlay and greater maintenance. Hence, the size of the softened stream can have a major impact on the total cost of treatment. A small slip stream of the recirculated water can be softened to maintain total calcium level rather than treating a larger makeup stream. If softening of a small slip stream is used, it will generally have to be done with soda ash (instead of the usual lime) because of the loss of CO_2 in aeration, $2H^+ + CO_3^= \rightarrow CO_2 \uparrow + H_2O$. A major problem is that soda ash is five times more expensive than lime; however, soda ash is a better softening agent.

On balance, it appears that a combination of makeup and slip stream treatment would result in an optimum system. Stone and Webster Engineering Corporation at Sun Desert Nuclear Power Plant found that softening the makeup and slip stream combined to be the most efficient method [117].

Other methods which should be noted are:

- Ion exchange. Ion exchange technology can be employed for softening or demineralization. However, expense and the generation of additional waste tend to preclude use of ion exchange in this duty.

- Reverse osmosis. Reverse osmosis requires softening, pretreatment of the water and disposal of resultant waste brine.

- Evaporative techniques including Resource Conservation Company's (RCC) brine concentration discussed later in Section 5.3. However, evaporative methods should be considered augmenting softening rather than replacing it.

Where the water to be used in a cooling tower system is sufficiently hard (that is, the water contains moderately high concentrations of calcium and magnesium ions, which may produce scale-forming precipitates upon increasing the concentration at high temperatures), polyphosphates and silicates are sometimes added to inhibit scale formation. EDTA has also been used for this purpose in special applications but the relatively high cost of this substance prohibits its widespread use. In addition to these, a number of nitrogen containing organic, non-chromate corrosion inhibitors have also appeared in recent years and provide proper protection against corrosion. Many of these are proprietary formulations.

In the presence of polyelectrolyte antiprecipitants, the scaling salts can be maintained at supersaturated concentration without scaling. Organic/polymer dispersants prevent precipitated salts from settling on heat transfer surfaces. Many of these chemicals are proprietary compounds, and even though they reduce the blowdown flow, their presence in the blowdown can be a problem because of possible synergistic reaction with chlorine [13].

For a brief review of the theory of scale control, the reader is referred to [32].

b. Corrosion Inhibition

In addition to scale control, the use of corrosion controlling compounds is also practiced extensively. Corrosion control is one of the major requirements in cooling water systems. Corrosion control is usually accomplished by employing corrosion inhibitor chemicals. Such inhibitor chemicals can be classified as anodic or cathodic or both, depending on the corrosion control mechanism. Inhibition results from one or more of three mechanisms [32].

- The inhibitor molecule is adsorbed on the metal surface by the process of chemisorption, forming a thin protective film either by itself or in conjunction with metallic ions.
- Some inhibitors, however, merely cause a metal to form its own protective film of metal oxides, thereby increasing its resistance.
- The inhibitor reacts with a potentially corrosive substance in the water.

Choice of the proper inhibitor is determined by the cooling system design parameters and water composition. The type of metals in the system, stress conditions, cleanliness, and designed water velocity all affect inhibitor selection. In addition, other factors to be considered, include treatment levels required, pH, dissolved oxygen content, and salt and suspended matter composition.

The most effective inhibitor in use is chromate or dichromate which is an anodic inhibitor. Synergistic blends of zinc and chromium compounds have been standard in the treatment of cooling tower systems for many years. Thus, chromium and zinc are important heavy metals that may exist in cooling tower blowdown. Environmental regulations severely limit chromate discharge to levels as low as 0.05 mg/ℓ as chromium [33]. This is well below the effective level for good corrosion protection in the cooling water system and will require treatment. Zinc is often present since zinc salts are added to reduce total chromium loadings. Since methods for removal of chromium also remove zinc, these will be considered together.

Corrosion and erosion are caused by a number of factors, some of which are outlined in Table 3.6. Many of the chemical blends used to inhibit dissolved oxygen corrosion in cooling systems often contain at least two of the following three ions: zinc, chromate, and phosphate. Chromates and phosphates, both typical inorganic and anodic inhibitors, have been used separately or in combination for corrosion prevention in cooling tower recirculation systems. When used alone, chromates are often required in concentrations of about 200 mg/ℓ as Na_2CrO . In combination with polyphosphates, the total level of treatment is reduced to about 40-60 mg/ℓ. Chromates owe their protective action to their ability to form a thin passivating film directly on the anodic portion of metals. Besides chromates and phosphates, silicates, nitrites and ferrocyanides have also been employed as scale inhibitors. In recent years, the demerits of chromates and phosphates have been the focus of significant attention, and several alternatives are now available [32,33].

Table 3.7 lists the various corrosion inhibitor systems used and the typical levels of concentration in the blowdown streams from these systems. Chemicals based on chromates, orthophosphates, and nitrites form thin passivating film on anodic portions of metals (anodic corrosion inhibitors). Polyphosphates, silicates and zinc salts act as cathodic corrosion inhibitors [5].

c. Other Treatment

In addition to scale and corrosion control, other chemicals are added to control biofouling and disperse suspended solids (i.e., anti-precipitants); chlorine or hypochlorite are the common biocides. These are discussed in Section 3.3.6.

The complexity of optimizing the cost effectiveness of chemical treatment and environmental constraints on effluents from cooling tower systems have led to the development of data banks to optimize, by on-line computer control, chemical treatment. One system offered by Calgon [111] reportedly can achieve such optimization. It is likely that system optimization is likely to be more widely practiced not only on cooling water systems but overall water management in power plants.

Table 3.6

Factors Affecting Corrosion

Chemical

A. pH

Acid Soluble Metals—oxides more soluble as pH decreases. Increased corrosion.

Amphoteric Metals—oxides soluble at low or high pH. Protection favored at intermediate pH.

Noble Metals—oxides insoluble at any pH. Inert to corrosion.

B. Dissolved Salts

Chloride, Sulfate can penetrate passive metal oxide films and promote local attack.

Calcium, Magnesium, Alkalinity may precipitate to form protective barrier deposits.

C. Dissolved Gases

Carbon Dioxide—reduces pH and promotes acid attack.

Oxygen—depolarizes corrosion reaction at cathode, oxygen deficient areas become anodic (differential aeration cell).

Nitrogen—aggravates cavitation corrosion.

Ammonia—selectively corrosive to copper based metals.

Hydrogen Sulfide—promotes acid attack; forms deposits that promote galvanic corrosion.

Chlorine—promotes acid attack, strips corrosion inhibitor films.

D. Suspended Solids

Mud, sand, silt, clay, dirt, etc. settle to form deposits promoting differential aeration cell corrosion.

E. Microorganisms

Promote acid attack, differential aeration cell corrosion, cathodic depolarization, galvanic corrosion.

Physical

A. Relative Areas

In a galvanic couple, as ratio of cathodic to anode area increases, corrosion increases.

B. Temperature

Increased temperature favors oxygen depolarization, lowers hydrogen overvoltage, increases corrosion.

Higher temperature areas become anodic to other areas.

Higher temperatures change metal potentials (e.g. reverse galvanizing).

C. Velocity

High velocity promotes erosion corrosion, removes certain passivating corrosion products.

Low velocity increases sedimentation and differential aeration cell corrosion, decreases amount of corrosion inhibitor reaching and passivating metal surfaces.

D. Heat Transfer

Favors oxygen depolarization by "hot wall effects." Favors differential aeration cell formation by increasing precipitation and sedimentation of solids.

E. Metallurgy

Surface flaws—cuts, nicks, scratches, etc. favor anodic site formation.

Stress—internal stresses promote anodic site formation.

Microstructure—metal inclusions, precipation at grain boundaries, differing adjacent grains, etc. promote galvanic cell formation.

Source: [32]

Table 3.7

Waste Disposal Characteristics -
Typical Cooling Water Treatment Systems

Inhibitor System	Concentration in Recirculating Water (mg/ℓ)
Chromate Only	200 - 500 as CrO_4
Zinc	8 - 35 as Zn
Chromate	17 - 65 as CrO_4
Chromate	10 - 15 as CrO_4
Phosphate	30 - 45 as PO_4
Zinc	8 - 35 as Zn
Phosphate	15 - 60 as PO_4
Zinc	8 - 35 as Zn
Phosphate	15 - 60 as PO_4
Phosphate	15 - 60 as PO_4
Organic	3 - 10 as organic
Organic Only	100 - 200 as organic 10 est. as BOD 100 est. as COD 50 est. as CCl_4 extract 5 est. as MBAS
Organic Biocide	30 as clorophenol 5 as sulfone 1 as thiocyanate

Source: [5]

3.3.6 Cooling Tower Blowdown Treatment

3.3.6.1 Overall Approach

The blowdown from a recirculating cooling system will have the same chemical composition as the recirculating water. The composition of blowdown will be influenced by:

- Makeup water characteristics,
- Chemical treatment of the recirculating cooling water,
- Intimate contacting of air-water in the cooling device, and
- Cycles of concentration.

As mentioned earlier, the blowdown contains significant concentrations of dissolved solids from the source water, suspended solids, as well as small concentrations of chlorine and other chemical additives introduced into the system. Usually because of the multiple scale-forming species involved (Ca^{++}, Mg^{++}, SO_4^{--}, silica, phosphates, CO_3^{--}), the blowdown flow is maintained at a larger value than that predicted by theoretical considerations. The quality of cooling tower makeup water may be raw water or water extensively treated to permit high cycles of concentration. In all instances, chemicals are added continuously or at intervals to control corrosion, inhibit biological growth and prevent deposits. Withdrawal of blowdown may be on a continuous or intermittent basis.

Treatment of cooling tower blowdown for recycle/reuse can be considered from the following viewpoints:

a. Optimization of makeup water conditioning to maximize recycle,
b. Treatment for chlorine in blowdown,
c. Treatment for zinc and chromium in blowdown,
d. Utilization of treated or untreated cooling tower blowdown in other parts of the power plant, and
e. In dry areas, high TDS blowdown water may be unacceptable for discharge. Thus, it must be stored or evaporated.

Item (a) has been discussed earlier, and item (d) will be considered in Section 5.3; items (b) and (c) are discussed in the following Sections 3.3.6.2 and 3.3.6.3.

3.3.6.2 Residual Chlorine in Blowdown

Most power plants use chlorine for biofouling control. In 1972, the reported usages of chlorine for power plant cooling water treatment alone was 25,700 metric tons (28,600 short tons) compared with 233 metric tons (256 short tons) of chlorine for boiler feedwater treatment [24]. To show the pattern of chlorine usage, details on breakdown of chlorine use for different types of cooling systems are presented in Table 3.8.

On a megawatt basis, a saline water system consumes 0.150 metric ton (0.167 short ton) Cl_2/MW per year versus 0.068 metric ton (0.075 short ton) Cl_2/MW per year for fresh water.

Current chlorination practice is to provide adequate free chlorine residual (e.g., 0.2 to 1.0 mg/ℓ) at the outlet side of the condenser. As noted earlier, recent research has indicated that this free chlorine reacts with a variety of organic compounds to form carciogenic compounds, which are of great concern if they enter public drinking water systems.

It is noted that chlorinated organics can be formed by use of chlorine and many chlorinated organics are on the current list of 129 priority pollutants. (See Sec. 4.1.5.) To protect both the public and aquatic life, the EPA has established allowable concentrations of free chlorine in new plant effluents as an average of 0.2 mg/ℓ [25]; California has set an even more stringent limit of 0.1 mg/ℓ in undiluted effluent [26]. The EPA has also suggested that continuous exposure of the aquatic community to chlorine compounds, including chloramines, should not exceed 0.002 mg/ℓ [27]. Chlorination programs to achieve zero discharge of total residual chlorine from recirculating cooling water systems have been determined to be not fully demonstrated and therefore cannot be generally applied soon [5].

A substantial amount of research has been conducted on the formation of chlorinated organics in fresh water. Jolley et al. [106] isolated over 50 chlorinated organics from concentrates of Watts Bar lake water and Mississippi river water which were chlorinated. Saline water behaves in an analogous manner but product formation is more complex.

Table 3.8

Breakdown on Chlorine Usage for Different Types of Cooling Systems, 1970

System	Capacity		Cl_2			Cl_2/MW	
	MW	%	Metric Tons	Short Tons	%	Metric Tons	Short Tons
Once-through Cooling (fresh)	132,000	54.0	8,980	9,880	42.8	0.068	0.075
Once-through Cooling (saline)	57,800	23.7	8,890	9,780	42.3	0.154	0.169
Cooling Ponds	14,800	6.1	489	538	2.3	0.033	0.036
Cooling Towers	28,000	11.5	1,540	1,690	7.3	0.055	0.060
Combinations	11,500	4.7	1,110	1,220	5.3	0.095	0.105

Source: [2]

The frequency, level, and duration of chlorine injection which will insure adequate cleaning but not result in excessive chlorine addition needs to be determined for each cooling water system. The point of injection should be selected so that a minimum residence time for effective cleaning performance is achieved. As discussed later in the subsection, there is a choice of various control variables which may be used for instrumental feedback. These variables include total residual chlorine, turbine discharge vacuum, discharge water temperature, temperature differential across the inlet and outlet of the condenser. Minimizing the quantity of chlorine used is a feasible and desirable practice for all chlorine using power plants for these reasons:

- Minimizing cost of chlorine used and subsequent chlorine removal treatment, and
- Minimizing potentially adverse environmental impacts from discharges.

Various states and some EPA regional offices have required chlorine minimization of some type.

In order to decrease the potentially harmful environmental impacts (in the receiving waters) of current chlorination practices, the EPA has sponsored several studies on alternatives to chlorination [24,28]. Monsanto [24], in an EPA-sponsored study, explored several potential alternatives to chlorination. Table 3.9 outlines a summary of their conclusions. The problem with many of the alternative methods discussed in their report (as was pointed out by them) is the lack of a field test that readily establishes the efficiency of the processes.

It is clear from the Monsanto study [24] that . . . several improved methods for control of cooling water biofouling which use chlorine are available; such methods are more efficient and cause fewer problems than traditionally continuous chlorination. These are:

- Dosing near the inlet of condenser,
- Addition of dechlorination chemicals,
- Blowdown timing control, and
- Chlorination by feedback control of chlorine residuals.

Table 3.9

Summary of Alternative to Chlorination of Power Plant Cooling Water

Treatment alternative	Technical feasibility: Once-through Fresh	Once-through Marine	Closed cycle Fresh	Closed cycle Marine	Environmental effects	Engineering problems	Costs: Relative costs: Capital	Operation	Chemical	Dollar costs (1976 basis): c/m^3 (c/1,000 gals)	c/kg (c/lb)	Comments
Chemical treatment												
Chlorine (Cl_2)	E	E	E	E	Cl_2 residuals	None	Base	Base	Base	0.08 (0.3)	15.4 to 17.6 (7 to 8)	Still needed in the future
Bromine (Br_2)	P	P	P	P	None	Corrosive	L	L	M			BrCl is better than Br
Bromine chloride (BrCl)	E	E	E	E	Minimal	None	L	L	M		55 (25)	Pilot tested, but need more R&D
Iodine (I_2)	P	P	N	N	None	None	L	L	H		264 (120)	Poor algicide; used in swimming pools
Ozone (O_3)	E	E	P	P	None	Corrosive	H	H	H	0.08[0.3(electron)] to 0.8[3.0(corona)]	15.4 to 27.5 (7 to 12.5)	Lab scale; used in waste and drinking waters
Chlorine dioxide (ClO_2)	P	P	P	P	Chlorite	Explosive, volatile, photodecomposition	L	L	M		660 (300)	Only cost effective for water with excessive O_2 demand
Hypochlorite	P	P	P	P	Cl_2 residuals	None	M	M	M	0.08 (0.3)	33 (15)	Not better than Cl_2
Controlled-release pesticides	P	P	E	E	Biocide residuals	None	L	L	L			More R&D needed, high initial chemical application cost, low maintenance cost
On-line mechanical cleaning												
Sponge rubber balls (Amertap)	E	E	E	E	None	Some fouling	H	M	L			Practiced in some plants, but all systems are not capable of being converted to mechanical cleaning. Elimination of Cl_2 discharge
Brush device	P	P	P	P	None	Plugging, grooving	H	M	L			
Hot water backflush	N	P	N	P	Periodic thermal discharge	None	M	M	L			
Physical-chemical treatment												
Ultraviolet radiation	N	N	N	N	Radiation exposure	May need pretreatment	H	H	L		13.2 (6)	Only pilot scale in water and wastewater treatments. Costs are very expensive.
Gamma radiation	P	P	P	P	Radiation leakage	Need radiation shield	H	H	L		18,326 (8,330)	
Improved methods of chemical application												
Dosing at inlet of condensers, serially	E	E	E	E	Minimal	None	L	L	L			Limited usage in power plants, but the technology is available. Cl_2 discharge can be controlled to 0.2 mg/ℓ. Costs are negligible.
Dechlorination	E	E	E	E	Minimal	None	L	L	L			
Chlorination by feedback control of residuals	E	E	E	E	Minimal	None	L	L	L			
Blowdown timing control	E	E	E	E	Minimal	None	L	L	L			

N - Not applicable
E - Excellent
P - Partially applicable

H - High (>10 times over Cl_2)
M - Median
L - Low (comparable to Cl_2)

Source: [24]

Use of one or a combination of the above control techniques would make chlorination systems more complicated and may require some modifications while having an important compensation: The total amount of chlorine used and discharged chlorine residuals would be reduced to the practical minimum without impeding the control of biofouling of condenser tubes and other parts of cooling water circuits. The size of the chlorination system in terms of chlorine feed rate could be reduced by upto severalfold depending on the number of parallel condensers serving the power plant.

In addition, there are several potentially viable alternative methods of reducing the total residual chlorine in condenser cooling water systems. These include chemical treatment with other less harmful chemicals and use of on-line mechanical means of cleaning condenser tubes. Mechanical cleaning is employed in some plants, as a supplement to chlorination, but its practicability depends on the design configuration of the existing process piping and structures involved at the particular plant. Not all existing power plants can be retrofitted with mechanical cleaning techniques. Mechanical cleaning of condenser tubes, which is used in Europe, deserves to be explored more actively in the United States, especially for those power plants using cooling water with high chlorine demands. Use of mechanical cleaning usually reduces but does not fully eliminate use of chlorine. Chlorine may still be required because biological control may also be needed for other parts of the cooling system or for control of hard-shelled organisms in marine water circuits.

Other approaches to biofouling control include:

- Chemicals other than chlorine,
- Dechlorination chemicals, and
- Physical chemical dechlorination.

Biofouling could be accomplished by chemicals other than chlorine. Bromine chloride (BrCl), Ozone (O_3) and chlorine dioxide have been studied [24,28]. The chemical cost of bromine chloride is about three times that of chlorine, and the cost of ozonation is reported to be two

to ten times higher than of chlorination. Chlorination is currently much cheaper than ozonation in both capital and operating costs. However, it should be emphasized that the costs of cooling water treatment are a very small part of total power production costs. A more important factor is the potential impact of bromine components on the environment. These alternatives should be surveyed for potential production of carcinogins in the environment.

Martin Marietta [28] evaluated bromine chloride in low-level doses at a 575-MWe plant and concluded that it is about twice as effective at equal dosage as chlorine but 2-1/2 times as costly. Thus, it appears that potential ecological and cost advantages may be gained by using bromine chloride for chlorine. Products of chlorobromination of water containing ammonia or organic nitrogen are more easily degraded and less obnoxious than their chlorinated analogs; e.g., chloramines. The predominant products formed from several competitive reactions of BrCl in water are chloride and bromide salts. In addition to the fast decay feature, BrCl is less hazardous to marine life than chlorine while still exhibiting biocidal activity [29].

Dow Chemical, a manufacturer of BrCl, has currently undertaken field trials for its use in wastewater disinfection. The results indicate that BrCl is an alternative to chlorine [29, 30]. It is reported that BrCl costs about 0.8¢/1,000 gal more than chlorine for disinfection. Drawbacks for BrCl are that it is more difficult to feed (because it is a liquid with a low vapor pressure compared to that of chlorine) and it is very caustic (so that nickel-steel or fluorocarbon-based plastics are required to prevent corrosion) [31].

At present, chlorine dioxide is very expensive compared to chlorine. However, it does not react with ammonia, nitrogenous compounds, or most organic impurities before oxidizing them, and since its efficiency is not impaired in a high-pH (e.g., pH between 6 and 10) environment, chlorine dioxide could be considered cost-effective for treatment of cooling water which has an excessive chlorine demand, such as secondary-treated sewage effluent used as power plant makeup water.

Ozone is more expensive than chlorine; furthermore, poor ozone transfer efficiency, lack of residual protection against downstream contamination for the cooling tower, and lack of field demonstration are among the reasons why ozonation has not been practiced in power plant cooling water systems in the past. However, recent improvements in economics of ozone generation and stringent chlorine levels permissible by regulations may make this an area where further exploration may be worthwhile. At present, a study is being undertaken for EPRI by Public Service Electric & Gas (New Jersey) and Emery/Foster Wheeler to determine experimentally the dosage required and the economic feasibility of using ozone for biofouling control in model condensers (i.e., three tube) [8,9]. Some initial results from these studies may be in 1979.

Dechlorination, which is another approach, may be accomplished by sulfur dioxide, sodium bisulfite, or other analogous reductant. A dechlorination system has been tried at a nuclear plant using sodium bisulfite [5]. It should be noted that while dechlorination chemicals can remove free and combined chlorine, they are ineffective on chlorinated organics except for chloramines; this often is not a problem in cooling tower blowdown. Dechlorination chemicals are not in widespread use in power plants; however, these have been used commonly in municipal sewage treatment plants.

Dechlorination by SO_2 involves the following reactions:

$$SO_2 + H_2O \rightarrow H_2SO_3$$

$$H_2SO_3 + HOCl \rightarrow H_2SO_4 + HCl$$

$$NH_2Cl + H_2SO_3 + H_2O \rightarrow NH_4\ SO_4 + HCl$$

The reaction between residual chlorine and sulfur dioxide is very rapid; complete mixing of the sulfur dioxide prior to discharge in the receiving water is necessary and can be accomplished easily. Since the reaction is virtually instantaneous, the residence time requirement is minimal. Adequate mixing between the dechlorinating chemical and the cooling water stream can be achieved if the Reynolds number of the cooling water is over 2000 [102].

The reaction between residual chlorine and sulfur dioxide is virtually instantaneous, so that the only necessity is for complete mixing of the sulfur dioxide prior to discharge in the receiving water. Adequate mixing between the dechlorinating chemical and the cooling water stream can be achieved if the Reynolds number of the cooling water is over 2000 [109]. EPA reports [101] that several power plants are now operating dechlorination systems. The data on three plants are reported in Table 3.10. A system design to dechlorinate using SO_2 is described by Pacific Gas & Electric [108].

The current applicability of various biofouling methods is shown in Table 3.11. It appears that the alternatives to the use of chlorine in cooling water treatment in power plants are presently limited, especially where units that are already in operation must be included. Further research in this field may be a logical area for potential EPA initiatives.

3.3.6.3 Chromium and Zinc in Blowdown

As stated earlier, corrosion control is one of the major requirements in cooling water systems. Corrosion control is usually accomplished by employing corrosion inhibitor chemicals. Such inhibitor chemicals can be classified as anodic or cathodic or both depending on the corrosion control mechanism. Inhibition results from one or more of three mechanisms [32].

3.3.6.4 Chromium and Zinc in Blowdown

Several options are available in terms of meeting chromium standards in the effluent and still maintaining good corrosion protection in the condenser tubes. Among these are the following:

a. Recycle of all cooling tower blowdown,
b. Recovery or removal of chromium (and zinc) from the effluent, and
c. Non-chromate corrosion control.

Table 3.10

Comparison of Chlorination/Dechlorination Data Between Plants

	Plant 2603	Plant 2608	Plant 2607
Dechlorination chemical	Catalyzed Sodium Sulfite (11/77) Sodium Thiosulfate (4/6/78)	Catalyzed Sodium Sulfite (11/77)	Sodium Thiosulfate (11/77)
Amount fed per chlorination (concentration)	winter 50 lb (.9 ppm) summer 50 lb (.9 ppm)	winter 50 lb (.07 ppm) summer 150 lb (.2 ppm)	winter 18 lb (.14 ppm) summer 36 lb (.3 ppm)
Chlorination chemical	Chlorine Gas	Sodium Hypochlorite	Sodium Hypochlorite
Amount fed per chlorination (concentration available chlorine)	winter 8 lb (.22 ppm) summer 40 lb (1.06 ppm)	winter 30 lb (.04 ppm) summer 90 lb (.11 ppm)	winter 12 lb (.11 ppm) summer 24 lb (.22 ppm)
Total flow rate of discharge	150,000 gpm (2 circ pumps)	405,000 gpm (5 circ pumps)	214,000 gpm (3 circ pumps)
Delay time (condenser outlet to headwall)	calculated - 5 min actual - 4.5 min	calculated - 1-2 min	calculated - 6 min
Dechlorination feed	Gravity feed to condenser outlet then injected across duct through a distribution header	Gravity feed to condenser outlet then injected in side of duct	Gravity feed to condenser outlet then injected in side of duct

Source: [104]

Table 3.11

Current Applicability of Various Bio-fouling Control Techniques

Treatment Alternative	Old Plant	New Plant
Chlorination		
Dosing near the inlet of condenser, serially	Yes or no[a]	Yes
Addition of dechlorination chemicals	Yes	Yes
Blowdown timing control (closed cycle)	Yes	Yes
Chlorination by feedback control of chlorine residuals	Yes	Yes
Mechanical Cleaning[b]	Yes or no[a]	Yes
Other Alternative Chemicals[c]	-[c]	-[c]

[a] Not applicable to all plants due to design limitations of existing plants.

[b] Chlorine would probably be required.

[c] Requires further field testing and demonstration.

Source: [24]

a. Recycle of Cooling Tower Blowdown

Several methods of recycle with zero discharge have been considered with the objective of eliminating blowdown while maintaining good scale and corrosion protection in the system. Two typical methods are described below:

Lime Softening - One such method is to install a lime and soda ash softened for the cooling tower makeup water. In addition, chromate bearing blowdown is recycled through the lime softening [33, 34]. Figure 3.4 outlines the system. With certain types of makeup water and operating conditions, a lime and soda ash softener can reduce the dissolved and suspended solids sufficiently to provide a stable cooling tower water. In lime softening, blowdown losses occur in the sludge removed for disposal and in windage losses. Water supplies with high chlorides or high silica may create problems, since limited removal would be expected in the lime and soda ash softener. Silica removal is usually accomplished by magneseum compounds.

Ion Exchange - Ion exchange could be employed to treat cooling tower blowdown for recycle. Two important points to note about ion exchange are:

- cost
- need to treat or dispose of ion exchange wastes.

Zeolite Softening - Another method of achieving zero discharge that has been successful is to zeolite soften the cooling tower makeup water and run the cooling water concentrations up to 10 to 20 cycles as controlled by windage loss [35]. In other words, in this method, windage is the "blowdown" from the system. Figure 3.5 outlines the system. A potential hazard is the environmental impact of drift; windage losses can drift and deposit chromium and zinc into the environment. It may also be necessary to install a sidestream sediment filter to filter between 2% and 5% of the total circulation rate of the cooling tower water in order to prevent a build-up of suspended solids. Water supplies with high silica generally prevent utilization of this approach.

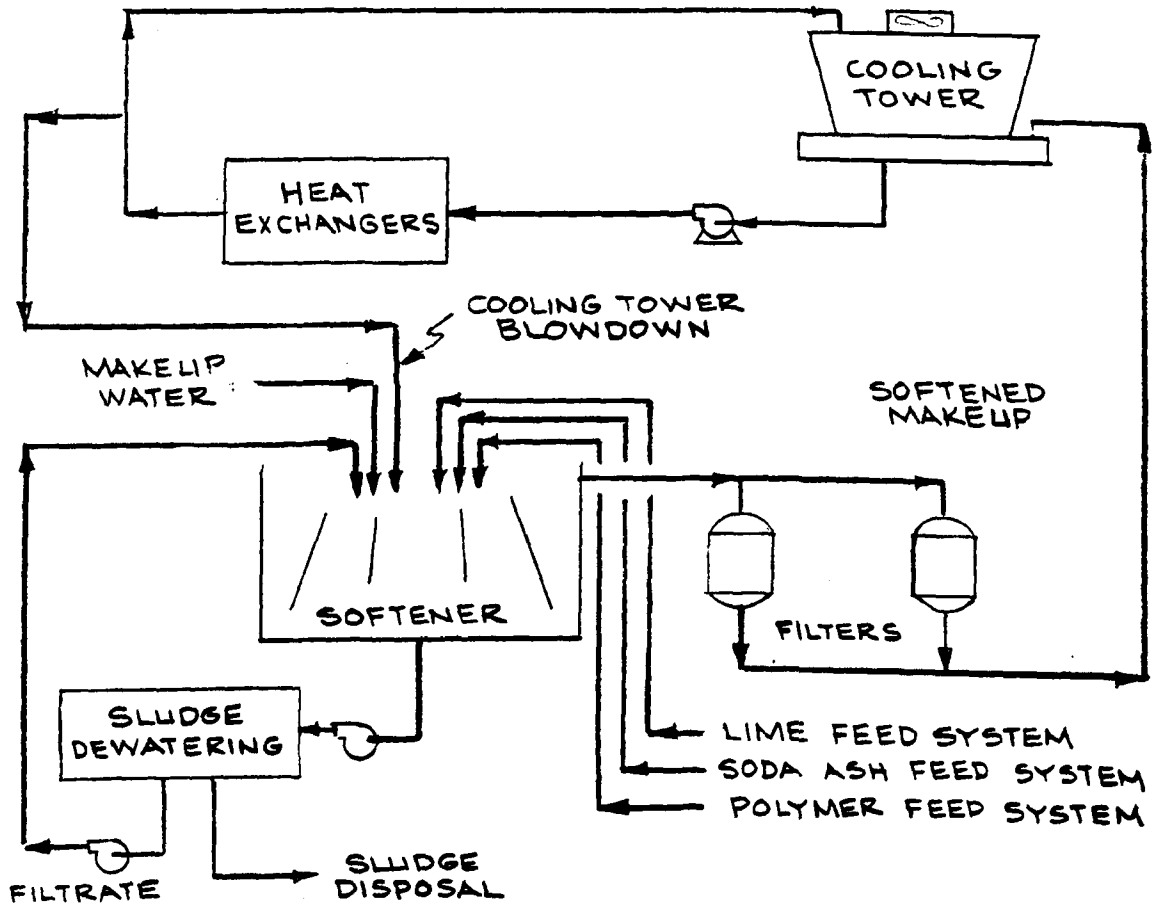

Figure 3.4 Lime-soda Ash Softening for Zero Discharge

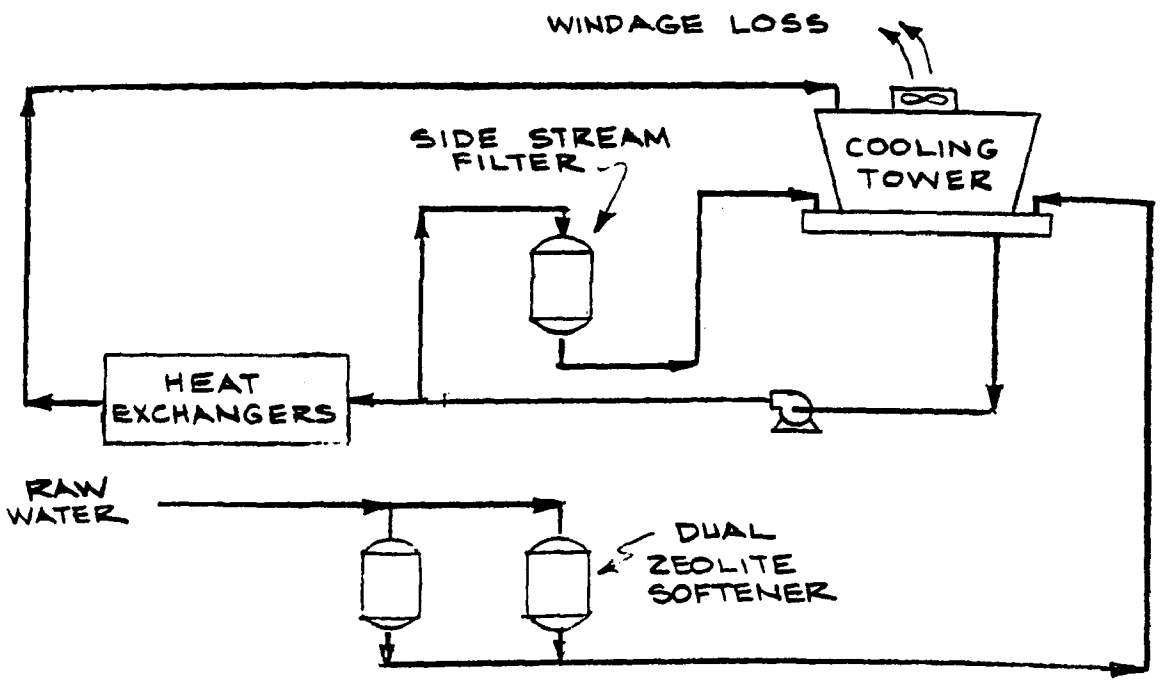

Figure 3.5 Zeolite Softening for Zero Discharge

All of the above methods of treating cooling tower blowdown generate sludges or waste streams that need to be disposed of. Such waste streams often contain significant concentrations of undesirable components including trace metals. Disposal of these in an environmentally sound manner needs to be included in any plan of cooling tower blowdown treatment.

b. Chromate Removal

A second approach is to remove all chromates (and zinc) from the blowdown prior to discharge. Important methods of chromate removal are:

Chemical Reduction - In this method, chromate is reduced to trivalent chromium and precipitated as chromium hydroxide; the latter is separated from the blowdown stream. Reduction of chromate is readily accomplished at a pH range of 2 to 3; most common reducing agents are SO_2, ferrous sulfate, sodium bisulfite or sodium metabisulfite [36]. A typical system is illustrated in Figure 3.6.

Ion Exchange - In this method a weakly basic anion exchange resin is employed to remove chromium [33,36]. A typical system is shown in Figure 3.7. Regeneration of the resin is usually done by sodium hydroxide. Published reports indicate that considerable experimental work has been done in this methodology [37].

Electrochemical Reduction - Chromate can also be removed by electrochemical methods using sacrificial iron anodes and cathodes. In such systems, direct electrical current on iron anodes and cathodes produces ferrous hydroxide; the latter reduces hexavalant chromium to trivalent. Figure 3.8 illustrates the system. This method is in commercial use today [36].

c. Non-Chromate Treatment Alternatives

Non-chromate alternatives to control corrosion can involve either of the following two approaches or a combination of the two:

- Use of better materials for construction with less property to corrosion [118]. For example, 316SS, other stainless

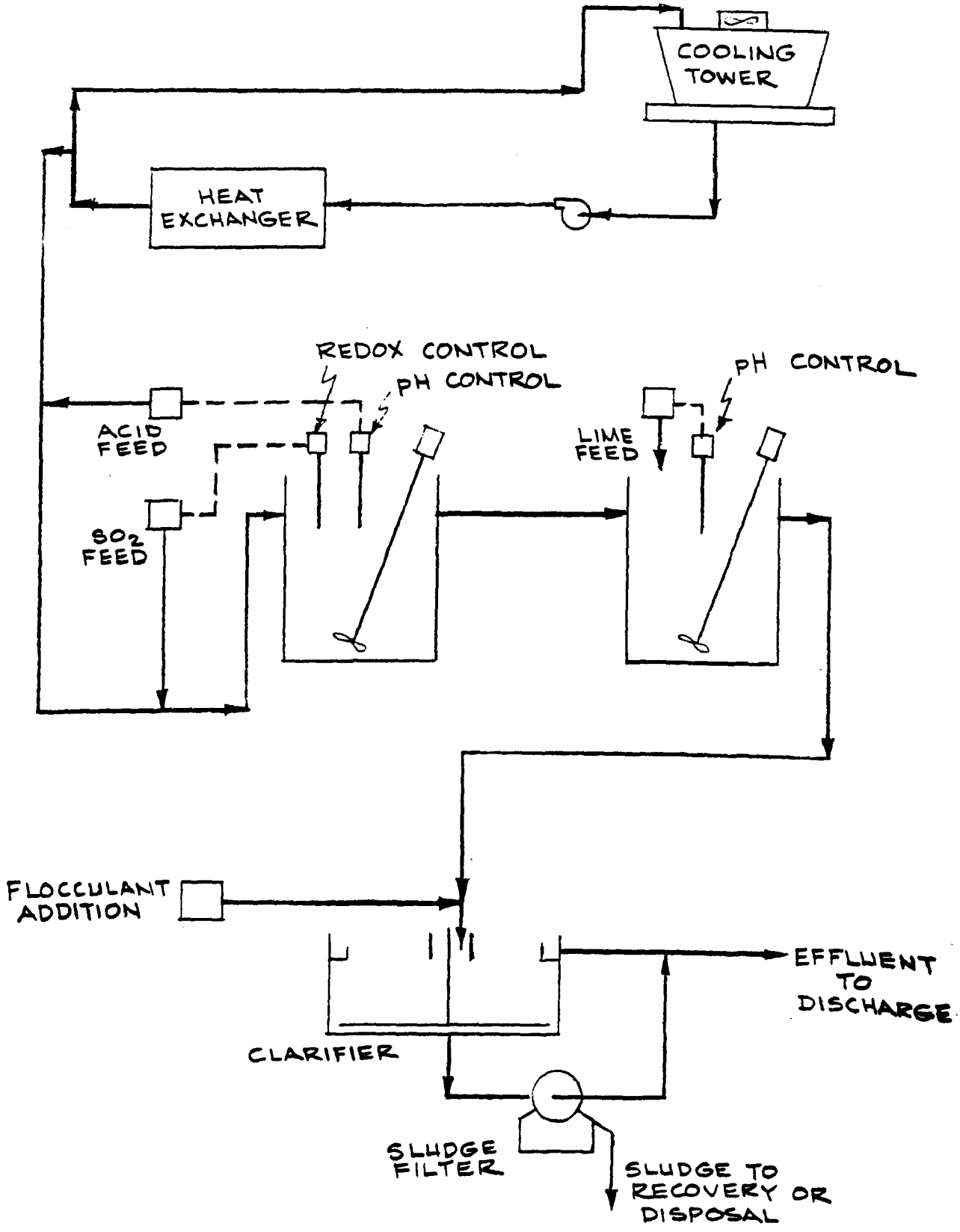

Figure 3.6 Chromate Removal by Reduction

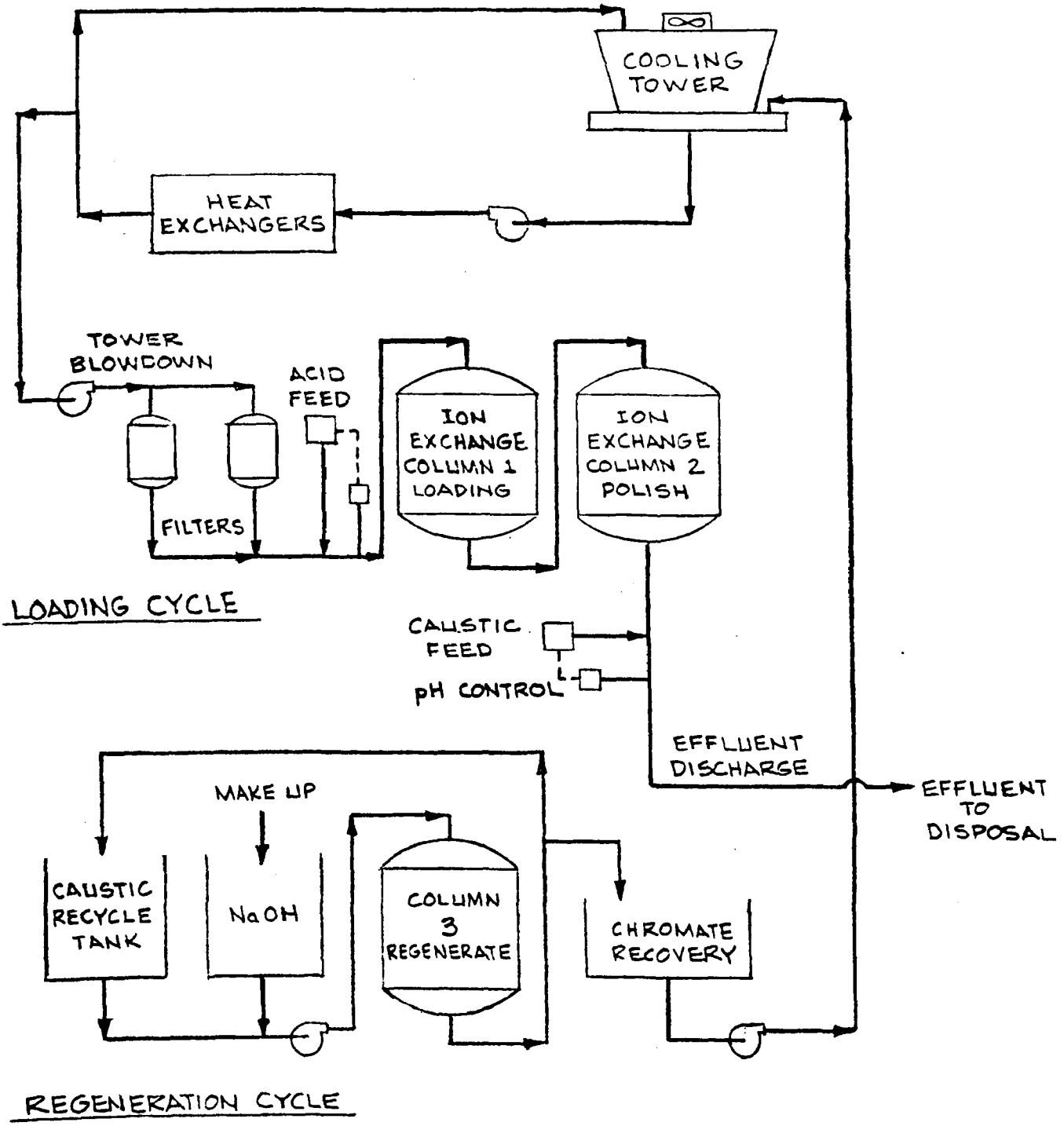

Figure 3.7 Chromate Removal by Ion Exchange

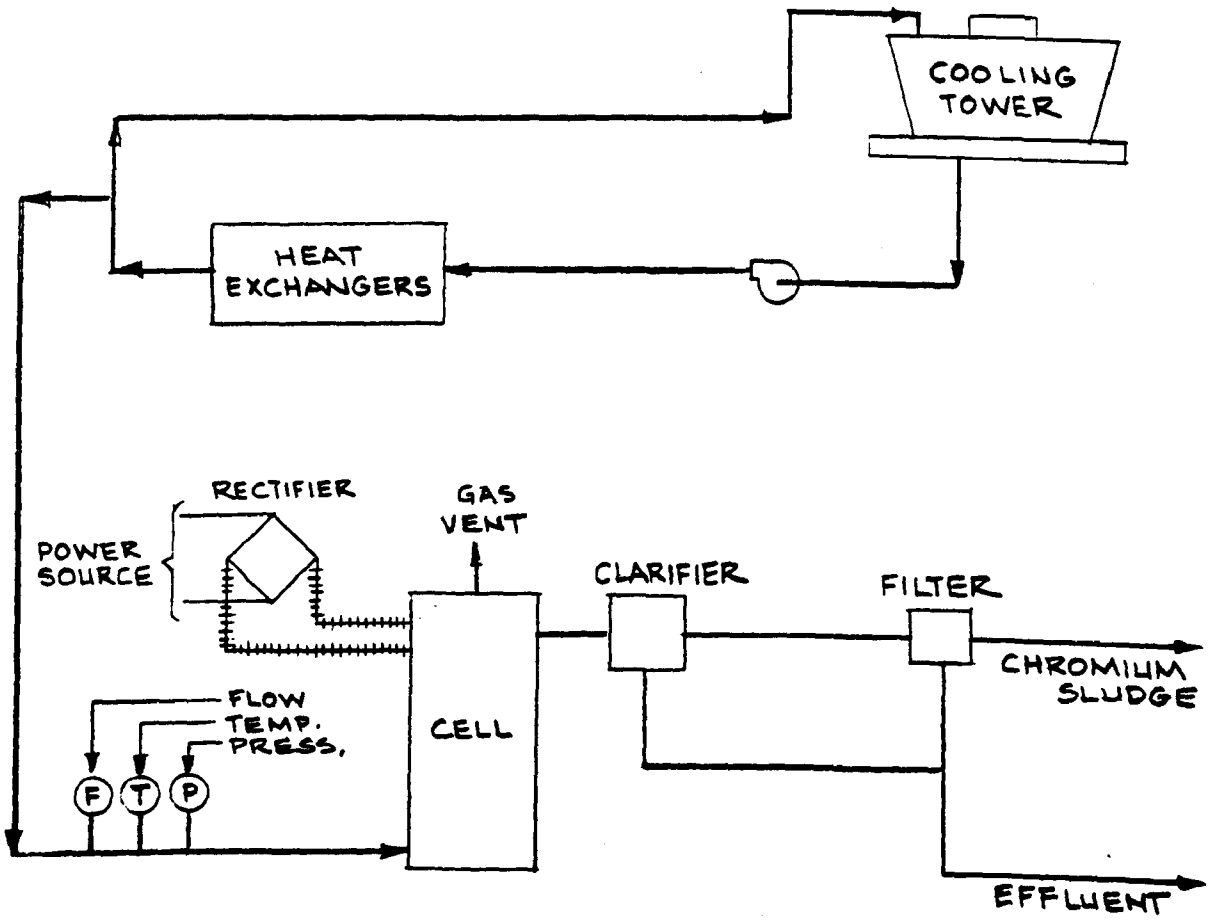

Figure 3.8 Electrochemical Reduction of Chromium

steels, and titanium are much less susceptible to corrosion. Capital costs will remain an important factor discouraging utilization of such materials. However, for new plants in the future, a case-by-case study on optimum materials is to be recommended. Furthermore, life cycle costs including costs of environmental controls should be evaluated in deciding on the optimum materials of construction.

- A number of alternatives to chromate treatment are in use. Table 3.12 presents data on some alternatives of associated corrosion rates. It is noted that chromium-zinc treatment is still the most effective. However, due to the capital outlay, operating costs and complexity of chromate removal or zero discharge operation of cooling tower systems, many plants are considering non-chromate programs.

3.3.6.4 Other Factors Contributing to Pollutants in Effluents

Chemical treatment as commonly practiced in cooling towers and its impact on waste streams has been discussed in the preceeding paragraphs. In addition, other factors contribute suspended and dissolved solids in the cooling tower blowdown [7,24]. The most important of these are as follows:

- The intimate contact which occurs between air and water in the cooling system enables particulate matter and soluble gases to be scrubbed from the air contacted. In addition, cooling towers can introduce contaminants into the air. Airborne solids captured by the cooling water can contribute significantly to the solids that accumulate in the cooling system. It is estimated that, in dusty regions, up to 80% of the suspended solids in recirculating systems originally come into the system as airborne particulates [23].
- Erosion of asbestos from asbestos concrete fill type towers has been mentioned earlier [5, 115].

Table 3.12

Typical Corrosion Rates Under Recirculating System Conditions

Treatment Program	*Dosage (ppm)	pH Range	Corrosion Rate (mpy)
Open System Inhibitors			
Chromate-zinc	50	6.5-7.0	0.7-1.9
Zinc-lignin	150	7.0-7.5	1.6-2.7
Zinc-phosphonate	75	7.0-7.5	1.8-2.6
Polyphosphate-phosphonate-polymer	100	7.0-7.5	1.7-2.4
Polyphosphate-zinc	50	7.0-7.5	2.2-3.4
Aromatic azole-phosphonate-lignin	150	8.0-8.5	2.6-3.6
Closed System Inhibitors			
Surface chelant	1000	7.0-7.5	0.1-1.3
Nitrite-borate-organic	2000	8.5-10.0	0.6-1.1
Sodium chromate	500	7.0-7.5	0.2-0.7
Untreated Control			50-100

*Dosage data is based on proprietary formulated products.

Source: [32]

- Leaching of preservatives from treated wood cooling towers constitutes an additional source of potentially hazardous components in cooling water blowdown. Preservatives commonly used include acid copper chromate (ACC), chromated copper arsenate (CCA), creosote and pentachlorophenol. The extent of this leaching is not currently known [13].

- Additional potential contaminants which may be present include insecticides and herbicides from agricultural runoff, or phenolic compounds from vegetation decay, which may be toxic. Chlorine addition to control biological fouling can result in chlorination of these or other hydrocarbons entering with the makeup and may result in highly undesirable reaction products. These could contain potential priority pollutants

3.3.6.5 Economics

Capital and operating costs associated with various treatment options for cooling tower blowdown and for any other waste stream described in subsequent subsections in this paper are difficult to estimate for several reasons.

a. Costs are site- and system-specific.

b. In many instances, treatment systems handle combined streams.

c. Good housekeeping practices and proper operation can have major positive impact on volumes to be treated.

d. Recycle/reuse possibilities within a power plant further complicate the economics of treatment.

Cost information presented in this R&D report needs to be considered with the above understanding of the limitations of such data.

While technical data on treatment systems for cooling tower blowdown are extensively available, cost information is somewhat limited. The most extensive data appear to be those in the Guidelines Development Documents [5,12]. These and other cost data (wherever indicated) have been updated to mid-1978 levels by using Chemical Engineering Plant Cost Index for both operating and capital costs. This procedure for operating

costs is only approximate; however, in view of the limitations on any cost data, and the fact that such data are presented only for an overall perspective on impacts, this may be satisfactory for such an assessment.

Cost data available in the literature on cooling tower-related streams are as follows:

a. Chlorination - Capital cost of direct chlorination equipment is low ($5,000-$8,000) for a typical system (100-600mw power plant [22]). The annualized costs are principally those associated with the consumed chlorine.

b. Capital and operating costs estimates for on-line tube cleaning equipment are shown in Table 3.13.

c. Capital and operating costs for chromate reduction systems are presented in Table 3.14. Impact of capacity factor on annualized cost is shown in Table 3.15.

The reader is also referred to Section 5.3 for a discussion on economics of central treatment.

3.3.6.6 Recycle/Reuse in Cooling Towers

Wastewater management and combined treatment considerations are discussed in Sections 3.3.3 and 3.3.4. However, some points specific to cooling towers should be noted here. The degree of recirculation is measured by the cycles of concentration. Increasing the cycles of concentration in a cooling tower will reduce the makeup and the blowdown rates but will increase the potential for scale formation. Treatment methods discussed earlier can reduce the scale potential of cooling towers which operate at high cycles of concentration.

In a recent study for the EPA, Radian [7] evaluated cooling systems at five power plants to explore reuse possibilities; four of these plants employed wet cooling towers. Table 3.16 outlines the design parameters for the cooling towers studied. Using computer simulation, Radian concludes that improvements over existing operations could be made

Table 3.13

Capital and Operating Costs For On Line Tube Cleaning Equipment

Basis: Mid-1978 Cost Levels (CE Cost Index 218.8)

System	Capital Costs		Operating and Maintenance
	$/10^6 Btu/hr Rejected	$/kw	$/10^6 Btu/hr Rejected
Recirculating Sponge Balls	190-460	0.77-1.86	4.56-8.24
Plastic Brushes	60-200	0.24-0.80	4.91-9.79

Source: [5] and Arthur D. Little, Inc., update of cost data.

Table 3.14

Capital Costs for Chromate Reduction Systems

Basis: Mid-1978 Cost Levels (CE Cost Index 218.8)

Blowdown Rate		Cycles of Concentration	Capital Cost
M^3/s	gpm		
0.34	5,400	3	$1,248,000
0.14	2,400	5	860,000
0.05	720	10	582,000

Assumptions: 1,000 MW fossil-fuel
Heat rate 10,400 Btu/kWh (Efficiency = 33%)
600,000 gpm at 20°F ΔT
Evap. - 2%

Source: [5] and Arthur D. Little, Inc., update of cost data.

Table 3.15

Unit Costs of Chromate Reduction Systems

Basis: Mid-1978 Cost Levels (CE Cost Index 218.8)

1000 MW fossil-fuel plant, 5 cycles, 10 mg/ℓ Chromate

Annual Costs: Capital Charges @ 15% x Total
Maintenance @ 3% x constr. cost
Labor $20,000/man/year

Materials and Supplies

Unit Costs, mills/kWh

Capacity Factor	1.00	0.67	0.35
Annualized Cost mills/kWh	0.092	0.104	0.133

Source: [5] and Arthur D. Little, Inc., update of cost data.

Table 3.16

Radian Study for the EPA - Cooling Tower System Design Parameters

	Georgia Power Co. * Plant Bowen	Colorado Public Service Comanche	Montana Power Co. Colstrip	Penn. Power & Light Montour
Note: The fifth plant studied by Radian for the EPA was the Four Corners Plant operated by Argona Public Source. This unit was cooling ponds.				
Type	Hyperbolic natural draft	Induced draft	Induced draft	Hyperbolic natural draft
Number of Towers	4	2	2	2
Electric Generating Capacity per Tower, MW	700 890	350	350	750
Circulating Water Rate per Tower, ℓ/sec (gpm)	16,000 (260,000) 19,000 (310,000)	9,100 (145,000)	6,500 (100,000)	15,800 (250,000)
Temperature Change Across Condenser, °C (°F)	14 (26) 16 (28)	14 (26)	18 (32)	16 (28)
Air Flow Rate per Tower, Tower, M^3/hr (ACFM)	2.5×10^7 (1.45×10^7) 3.5×10^7 (2.07×10^7)	2.7×10^7 (1.6×10^7)	1.7×10^7 (1.0×10^7)	3.5×10^7 (2.06×10^7)
Cooling Tower Drift Rate, ℓ/sec (gpm)	3.3 (52) 3.4 (62)	9.0 (142)	1.3 (20)	31.5 (500)
Cooling Water Approach, °C (°F)	11 (19) 10 (18)	8 (15)	12 (22)	10 (19)
Evaporation Rate per Tower, ℓ/sec (gpm)	340 (5,500) 400 (6,500)	190 (3,000)	160 (2,600)	390 (6,200)

*Plant Bowen has cooling towers of two different sizes. The first line refers to Units 1 & 2 and the second line refers to Units 3 & 4.

Source: [7]

which would reduce water use and discharge. In cooling tower cases where $CaCO_3$ or $CaSO_4 \cdot 2H_2O$ are the limiting scale-forming species, recirculation of the cooling water may be increased so that the entire blowdown can be used as makeup to another major water consumer(s) in the plant. Sulfuric acid addition and/or lime softening may be required to achieve this degree of recirculation depending on the plant makeup water quality. Kinetic studies are recommended by Radian for Silica-based scale-forming species so that the maximum safe degree of recirculation in tower systems where these solids are limiting may be more adequately defined.

3.4 Steam Generation Wastes

3.4.1 System Operation

The major waste stream from the boiler system is the boiler blowdown. Boiler blowdown is the purge from the boiler system of a small portion of boiler water to maintain the required boiler water quality. The blowdown rate is generally in the range of 0.1-3% of the steam flow [5,22], and it is either continuous or intermittent on a daily basis [5]. In a power plant, the boilers are either of a once-through or drum type. The former design is generally used in high-pressure super critical boilers and does not have a wastewater stream directly associated with the boiler operation. However, in a drum-type boiler, the impurities in the feedwater get concentrated as steam is generated (steam and water being at equilibrium) and blowdown is determined by the allowable cycles of concentration [32]. Mathematically,

$$\text{concentration of X in blowdown} = \frac{\text{concentration of X in feedwater}}{\text{cycles of concentration}}$$

The cycles of concentration are controlled by total suspended solids (TSS), total dissolved solids (TDS), total alkalinity, or silica. The recommended limits of total and suspended solids for boilers are shown in Table 3.17. The boiler blowdown contains these species as well as scale constituents formed in boiler water, boiler tube corrosion products and internal chemicals added to boiler water. Data for typical chemicals added for internal treatment and their residual concentration in boiler water (and hence, boiler blowdown) are shown in Table 3.18. The use of these chemicals is discussed briefly below. More detailed information is available in references (10).

Scale Control

Scale control requires that calcium, magnesium and silica be controlled. Calcium ions can be precipitated by phosphate and hydroxyl ions. Magnesium ions and in some cases silicates are removed by hydroxyl ions in a pre-treatment step. The reactions involved are as follows (40):

$$10(Ca^{++}) + 6(PO_4^{--}) + 2(OH^-) \rightarrow 3Ca_3(PO_4)_2 \cdot Ca(OH_2)$$

calcium hydroxyapatite

Table 3.17

Recommended Limits of Total Solids and Suspended Solids in Boiler Water for Drum Boilers

	Limits Recommended for Boiler Feedwater			
Drum Pressure	Below 40 atm	40 to 68 atm	60 to 136 atm	Over 136 atm
Total solids, mg/ℓ	*	*	0.15	0.05
Total hardness as mg/ℓ $CaCO_3$	0	0	0	0
Iron, mg/ℓ	0.1	0.05	0.01	0.01
Copper, mg/ℓ	0.05	0.03	0.005	0.002
Oxygen, mg/ℓ	0.007	0.007	0.007	0.007
pH	8.0-9.5	8.0-9.5	8.5-9.5	8.5-9.5
Organic	0	0	0	0

*No value reported

Limits Recommended for Total (Dissolved and Suspended) Solids

Drum Pressure (atm)	Drum Pressure (psi)	Total Solids (mg/ℓ)
0 - 20.4	0 - 300	3500
20.41 - 30.4	301 - 450	3000
30.51 - 40.8	451 - 600	2500
40.81 - 51.0	601 - 750	2000
51.01 - 61.1	751 - 900	1500
61.11 - 68.0	901 - 1000	1250
68.01 - 102.0	1001 - 1500	1000
102.01 - 136	1501 - 2000	750
>136	>2000	15

Source: [10]

Table 3.18

Chemical Additives Commonly Associated with Internal Boiler Treatment

Control Objective	Candidate Chemical Additives	Residual Concentration in Boiler Water
Scale	di- and tri-sodium phosphates	3-60 mg/ℓ as PO_4
	Ethylene diaminetetracetic acid (EDTA)	20-100 mg/ℓ
	Nitrilotriacetic acid (NTA)	10-60 mg/ℓ
	Alginates	up to 50-100 mg/ℓ
	Polyacrylates	up to 50-100 mg/ℓ
	Polymethacrylates	up to 50-100 mg/ℓ
Corrosion	Sodium sulfite and catalyzed sodium sulfite	less than 200 mg/ℓ
	Hydrazine	5-45 mg/ℓ
	Morpholine	5-45 mg/ℓ
pH	Sodium hydroxide	Added to adjust boiler water pH to the desired level, typically 8.0-11.0
	Sodium carbonate	
	Ammonia	
	Morpholine	
	Hydrazine	
Solids Deposition	Starch	20-50 mg/ℓ
	Alginates	20-50 mg/ℓ
	Polyacrylamides	20-50 mg/ℓ
	Polyacrylates	20-50 mg/ℓ
	Polymethacrylates	20-50 mg/ℓ
	Tannins	≤200 mg/ℓ
	Lignin derivatives	≤200 mg/ℓ

Source: [13]

$$3\ Mg^{++} + 6\ OH^{-} + 2\ SiO_2 \rightarrow 2\ MgSiO_3 \cdot Mg(OH)_2 \cdot 2H_2O$$

serpentine

Calcium hydroxyapatite and serpentine do not adhere to boiler tubes and, hence, are preferred. Organics such as lignin and tannin form a coating on the sludge, giving a negative charge to the particles and, hence, keeping them in suspension.

Chelating agents such as EDTA and NTA are used to solubilize Ca^{++} and Mg^{++} ions. Polymers (such as polyacrylates, polynethacrylates) select organics (such as tannin, lignins) and antiscalents (threshold sequesterants) are adsorbed on the precipitates; this prevents agglomeration and departition of larger solid partitions.

Corrosion Control

Dissolved oxygen in the boiler water (introduced via feedwater and condensate system leakage) causes corrosion. In addition to mechanical deaeration, sodium sulfite and hydrazine are used as oxygen scavengers. The reactions are [40]:

$$2\ Na_2SO_3 + O_2 \rightarrow 2\ Na_2SO_4$$

$$N_2H_4 + O_2 \rightarrow N_2 + 2\ H_2O$$

Sulfites can precipitate as solids on turbine blades; hence hydrazine is preferred for high pressure applications. If the reaction time is insufficient, catalyzed hydrazine is used.

pH Control

Leaks of organic or mineral acids in boiler water results in severe corrosion and hence, the pH is typically maintained between 8-11 by adding NaOH, Na_2CO_3, NH_3, volatile amines (morpholine and cyclohexylamine), or hydrazine. Excessive pH can cause caustic embrittlement by destroying the protective magnetic iron hydroxide film (Fe_3O_4) as follows [39]:

$$4\ NaOH + Fe_3O_4 \rightarrow Na_2FeO_2 + 2\ NaFeO_2 + 2\ H_2O$$

$$2\ NaOH + Fe \rightarrow Na_2FeO_2 + H_2$$

Filming amines such as octadeylamine can be added to prevent the corrosive condensate from attacking the metal surfaces.

Solids Deposition

Polymers, select organics, and threshold sequesterants prevent the precipitated matter formed in boiler water from adhering to boiler tubes. Long chain molecules in these additives attach themselves to an active site in the growing crystalline state and thus distort the crystalline scale, with the result that the precipitate is maintained as colloidal matter. The effectiveness of polymers in scale reduction is presented in Table 3.19 [32].

Afterboiler corrosion is a common problem and leads to increased maintenance costs for boiler and condensate systems. The usual causes are low pH caused by CO_2 and oxygen attack. CO_2-related corrosion occurs in the condensate system and is caused by CO_2 formation as below.

$$2\ HCO_3^- + \text{Heat} \rightarrow CO_3^{--} + CO_2\uparrow + H_2O$$

$$CO_3^{--} + H_2O + \text{Heat} = 2\ OH^- + CO_2\uparrow$$

3.4.2 Waste Characteristics

Boiler blowdown is an alkaline waste with pH from 9.5 to 10 for boilers treated with hydrazine and pH from 10 to 11 for boilers treated with phosphates. Blowdown from medium-pressure boilers has a TDS concentration in the range of 100-500 mg/ℓ. High pressure boiler blowdown has a TDS concentration in the range of 10-100 mg/ℓ. Blowdown from boiler plants using phosphate treatment contains 5-50 mg/ℓ phosphate and 10-100 mg/ℓ hydroxide alkalinity. Boiler plants with hydrazine treatment produce a blowdown containing 0-2 mg/ℓ ammonia [5].

Volume of boiler blowdown varies widely from 5 to 70 lit/MWH (1.3-18.5 gal/MWH). Some data for boiler blowdown from four plants, as presented by the EPA, are shown in Tables 3.20 and 3.21. EPA reports [101] that a total of 544 out of 794 plants surveyed recently have boiler blowdown treatment at their facilities.

3.4.3 Boiler Blowdown Treatment Options

Boiler blowdown is often treated in conjunction with many other streams [19]. The reader is referred to Section 5.2 for a technical

Table 3.19

Effectiveness of Polymers on Scale Reduction

Polymer	Molecular Weight	Typical Conc. (ppm)	Scale Reduction (%)
Polyacrylic acid	20,000	3	52
Polyacrylic acid	5,000	3	71
Polymethacrylic acid	10,000	3	62
Polymethacrylic acid	5,000	3	68
Polymaleic anhydride	10,000	3	85
Polymaleic anhydride	5,000	2	97

Source: [32]

Table 3.20

Boiler Blowdown, Raw Waste Concentrations
(Historical Data)

Pollutant Name	No. of Points	Mean Concentration (mg/l)
Copper	258	.14
Iron	273	.53
Oil & Grease	151	1.74
Phosphorus	19	17.07
Suspended	230	66.26

Source: [101]

Table 3.21

Boiler Blowdown Flowrates
(Flow in gpd, Flow/Gen in gpd/MW)

Variable	Number of Plants	Mean Value	Standard Deviation	Minimum Value	Maximum Value
Fuel: Coal					
Flow	231	33,259	71,682	0.11	650,000
Flow/gen	230	148	392	--	3,717
Fuel: Gas					
Flow	189	19,346	60,933	4	700,000
Flow/gen	189	163	669	0.08	8,470
Fuel: Oil					
Flow	148	66,173	320,106	2.7	3,810,000
Flow/gen	148	287	1,237	0.12	14,066

Source: [101]

discussion on such combined treatment and associated economics. Three plants have reported that they follow equalization, neutralization, and oil skimming or settling ponds prior to discharging the blowdown to publicly owned treatment works (POTW) [12]. TVA reports [91] on discharging blowdown from a low pressure drum type boiler to neutral and alkaline ash ponds to precipitate iron and copper.

Potentially, several options could be considered for using boiler blowdown:

- The blowdown causes flashing and the exhaust stream could be used in feedwater heaters or in deaerators.
- If the flow is large enough, the heat in water flow from the flash tank could be utilized in a heat recovery heat exchanger.
- The quality of boiler blowdown (from the viewpoint of total dissolved solids) is often better than the quality of the raw water supply and, hence, the blowdown could be used as makeup to the demineralizer system. It can also be used in other plant operations requiring water of such quality that boiler blowdown may be accomplished (e.g., cooling tower makeup, external washing of equipment, etc.).

There are no published data available regarding the extent of recycle/reuse practices followed for boiler blowdown. The blowdown quality and quantity are system-specific, and the blowdown stream can be controlled by judicious operating procedures for external and internal water treatment. However, it should be noted that among various waste streams in a power plant, boiler blowdown is generally among those of the highest quality. As such, ample possibilities usually exist to use such blowdown and achieve total recycle of this particular waste stream.

3.5 Water Treatment Systems

3.5.1 System Operation

Raw water has to be treated prior to its use as makeup in the boiler

feedwater loop. The makeup water requirement decreases with increasing production rate [39]. The treatment operations can be divided into the following categories [32]:

Group A Processes: First pretreatment step for removing hardness, silica and suspended solids in the preparation of higher quality water.

Group B Processes: Filtration--or special adaptation for the removal of suspended matter.

Group C Processes: Ion exchange and other techniques for the alteration of removal of dissolved solids by methods not involving chemical precipitation.

Figure 3.9 shows the possible combinations of external water treatment processes [32]. Based on the raw water source, specific combinations of these processes are selected for achieving the boiler water quality parameters such as total solids, alkalinity, silica, etc. [40]. The importance of these parameters (except silica) in boiler operations is described in relation to the internal boiler water treatment aspects of the boiler blowdown wastewater stream (Section 3.4). The control of silica and sodium compounds is necessary to prevent its volatilization and/or carry down from the boiler and subsequent deposition on turbine blades. Figure 3.10 shows allowable silica concentration in the boiler water as a function of operating pressures. At values above those shown, silica is known to volatilize and deposit on turbine blades [39].

3.5.2 Waste Characteristics

The quality and quantity of the waste streams from water treatment systems is dependent upon the specifics of the plant. The range of wastewater stream flows resulting from the various processes used in raw water treatment is shown in Table 3.22. The reported data for the quality of these wastes exhibit a large variation [5,12] and a meaningful correlation with feedwater or MW production is difficult. Waste sludges from clarifiers usually have a solids content in the range of 3,000 to

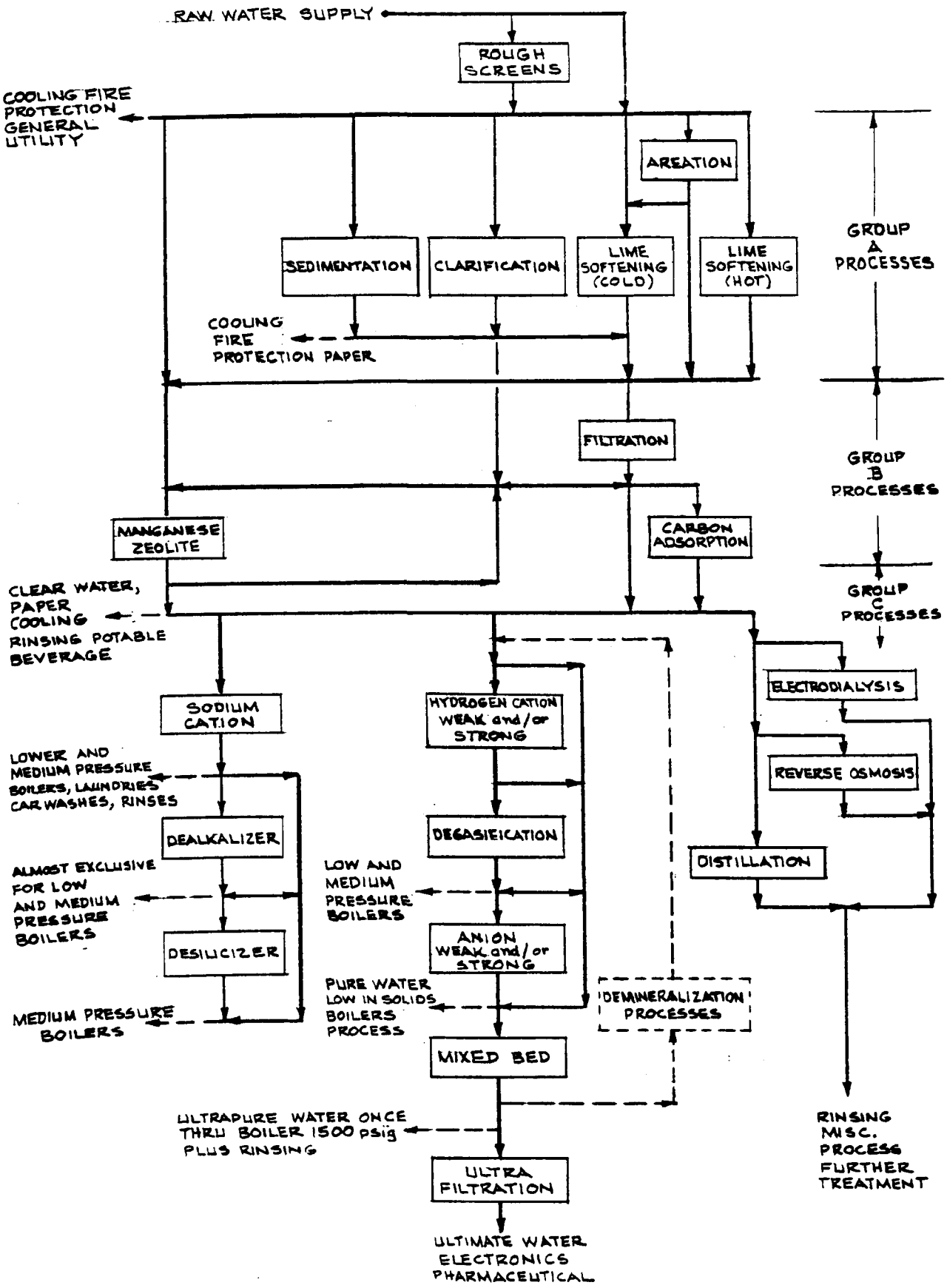

Source: [32]

Figure 3.9 Typical Water Treatment Processes

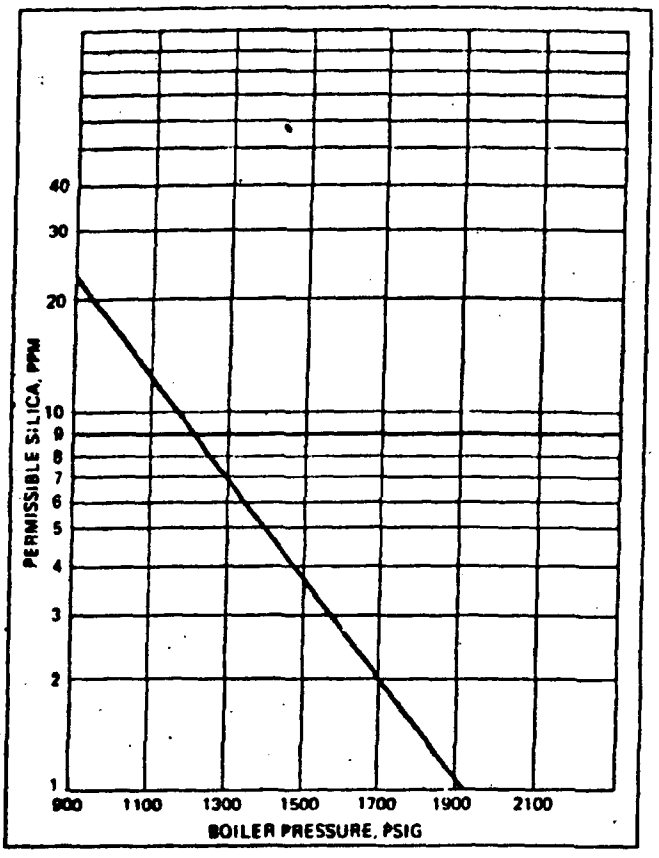

Source: [39]

Figure 3.10 Silica Concentration in Boiler Water

Table 3.22

Typical Water Treatment Wastewater Flows

Process	Range of Flows gal/1000 lb water treated
Clarifier blowdown	1 - 4
Lime-soda	1 - 4
Raw water filtration backwash	0 - 6
Feed water filter	0 - 6
Sodium zeolite regeneration	0.5 - 3
Cation exchange regeneration	0.5 - 3
Anion exchange regeneration	0.5 - 3
Evaporator blowdown	12 - 40
Condensate filtration and ion exchange	0.02- 0.6
Condensate powdex	0.01- 0.06

Source: [5]

15,000 mg/ℓ. Suspended solids amount to approximately 75-80% of total solids with the quantity of volatile solids being 20 to 25% of total solids. The BOD level usually is 30-100 mg/ℓ. A large corresponding COD level of 500-10,000 mg/ℓ shows that the sludge is not biodegradable, but that it is oxidizable. The sludge usually has a pH range of about 6 to 8.

Filter backwash is more dilute than the wastes from clarifiers. Generally, it is not a large volume waste. Turbidity of wash water is usually less than 5 JTU and the COD is about 160 mg/ℓ. The total solids existing in filter backwash from plants producing an alum sludge is about 400 mg/ℓ with only 40-100 mg/ℓ suspended solids.

Ion exchange wastes are either acidic or alkaline. While ion exchange wastes do not naturally have any significant amount of suspended solids, certain chemicals such as calcium sulfate and calcium carbonate have extremely low solubilities and are often precipitated because of common ion effects. Calcium sulfate precipitation is common in wastes from ion exchange systems using sulfuric acid as a regenerant. Its precipitation is prevented by using gradually increasing concentrations of acid so that the product of (Ca^{++}) and (SO_4^{--}) ion concentration is sufficiently low.

Evaporator blowdown consists of concentrated salts from the feedwater. Evaporators are usually operated to a point where the blowdown is three to five times the concentration of the feedwater. Due to the low solubility of calcium carbonate and calcium sulfate, precipitation of these components can occur if these are present in the feedwater. If bicarbonates are used as a buffer in the feedwater, two reactions occur:

$$2\ HCO_3^- + \text{Heat} \rightarrow CO_3^{--} + CO_2\uparrow + H_2O$$

$$CO_3^{--} + H_2O + \text{Heat} \rightarrow CO_2\uparrow + 2\ OH$$

Thus the buffering salt produces an alkaline waste stream from the evaporator.

Generalized data are reported on the above waste streams in a recent EPA technical report [101] and are summarized in Table 3.23.

Table 2.23

Water Treatment Wastes in Coal-Fired Power Plants

Number	Stream	No. of Plants	Flow (gpd)	Flow/gen (gpd/MW)	Other Data (Mean of reported values)
1	Clarifier Blowdown	88	26,966	64.8	
2	Filter Backwash	154	25,460	71.0	
3	Ion Exchange Regeneration	104	9,290	79.0	pH = 6.15, SS = 44 mg/l, TDS = 6057 mg/l oil & grease = 6.0 mg/l
4	Lime Softener Blowdown	37	26,228	56.0	
5	Reverse Osmosis Brine	3	10,674	31.0	
6	Evaporator Blowdown	104	29,310	126.0	Cu = 0.39, Fe = 0.54, Oil & Grease = 2.1 SS = 28.4

Source: [101]

3.5.3 Treatment Options and Economics

Water treatment system wastes are usually treated in a combined system (see Section 5.2). Neutralization and clarification are widely employed and produce a sludge. This sludge can be further dewatered by thickening or filtration and the supernatant recycled back, thus closing the water loop around the system. The backwash waste stream from sand and gravel filters contain TSS and coagulant compounds used as filter aids. The waste stream flow rates are small and can be sent to ash ponds for disposal. Alternatively, TSS from these streams can be removed by vacuum or pressure filtration.

Waste regenerants and rinses from both ion exchange units are normally collected in a neutralization tank and the pH is then adjusted to within the range of 6.0 to 9.0 on a batch basis by the addition of sulfuric acid or sodium hydroxide as required. If any precipitates are formed after neutralization, they are separated from the liquid by settling or by filtration. The neutralized wastes are high in TDS and would require further treatment before they could be used for other uses.

In those plants still utilizing evaporators to produce boiler feedwater makeup, the blowdown from the evaporator contains the salts of the original water supply in concentrated form, but generally still in the solution phase. Treatment is similar to the treatment of ion exchange wastes by adjusting the pH to the neutral range of 6.0 to 9.0 with sulfuric acid or sodium hydroxide. If precipitates are formed during neutralization, these are removed by sedimentation and filtration.

3.5.4 Trends in Water Treatment

Complex feedwater treatment and condensate polishing systems are required for high pressure supercritical boilers currently in use in the utility industry. The trends in these systems and other advanced treatment technologies are discussed below in brief because of their potential impact on the resulting wastewater streams as well as their potential use in treating power plant wastes containing TDS and toxic pollutants.

Ion exchange units contain cation resins, anion resins, or a mixture of the resins (mixed-bed units). Cation resins operate in the sodium cycle or hydrogen cycle (weak or strong acid). Anion resins operate in the chloride cycle or hydroxide cycle (weak or strong base) [41]. Table 3.24 shows typical ion exchange material types and regenerant requirements. Counter current regeneration of single resin units improves the product water quality and reduces disposal problems. The reduction in disposal problems results from higher regeneration efficiency and less water concentration required for "air hold down" type operations [42]. Pilot studies have indicated that ozone application can be successful in destroying high molecular weight resinic acids from the raw water, which were fouling the anion resin bed [43].

Substantial reductions in the volume of demineralizer wastes can be achieved by the use of systems which employ reverse osmosis (RO) or electrodialysis in conjunction with ion exchange (IE) instead of using ion exchange alone. One study shows that RO plus IE systems are less costly than IE systems alone for TDS of 500 mg/ℓ as $CaCO_3$ in the natural water available. The study, published in 1973 and based on 379 m^3/day (100,000 gpd) product capacity, reported a waste disposal cost of $5 per 1000 gal ($1.32/m^3) excluded labor costs in 1973 [5]. A recent pilot scale study by the EPA for organic chemical manufacturing wastewaters indicates that total annualized cost of wastewater renovation to boiler feedwater quality employing RO and IE would be $7.50/3.8 m^3 (1000 gal) in 1978 dollars [44]. Of this total cost, $1.95 and $1.15 are assocaited with the RO and IE, respectively. This cost does not include costs for sludge or brine disposal.

A similar experience with RO units in series with demineralizers was reported at the Willow Glen Power Station of Gulf States Utilities Company in Louisiana [45]. The RO unit addition .75 m^3 (200 gpm) capacity has improved feedwater quality, decreased the regeneration frequency and has resulted in a saving of approximately $30,000 per year for acid and caustic costs (presumably in 1977 dollars).

The Peoples Gas, Light and Coke Company in Chicago has achieved a zero discharge at their McDowell Energy Center which produces synthetic

Table 3.24

Ion-Exchange Material Types and Regenerant Requirement

Ion Exchange Material	Description of Operation	Regenerant Solution	Theoretical Amount
Cation Exchange Sodium Cycle	Sodium cycle ion exchange is used as a water softening process. Calcium, magnesium, and other divalent cations are exchanged for more soluble sodium cations, i.e., $2R_c - Na + Ca^{++} \rightleftarrows (R_c)_2 - Ca + 2\ Na^+$ $2R_c - Na + Mg^{++} \rightleftarrows (R_c)_2 - Mg + 2\ Na^+$	10% brine (NaCl) solution or some other solution with a relatively high sodium content such as sea water	—
Hydrogen Cycle Weak Acid	Weak acid ion exchange removes cations from water in quantities equivalent to the total alkalinity present in the water, i.e., $2R_c - H + Ca(HCO_3)_2 \rightleftarrows (R_c)_2 - Ca + 2H_2CO_3$	H_2SO_4 or HCl solutions with acid strengths as low as 0.5%	110-120%
Hydrogen Cycle Strong Acid	Strong acid ion exchange removes cations of <u>all</u> soluble salts in water, i.e.,	H_2SO_4 or HCl solutions with acid strengths ranging from 2.0-6.0%	200-400%
Anion Exchange Weak Base	Weak base ion exchange removes anions of all strong mineral acids (H_2SO_4, HCl, HNO_3, etc.), i.e., $2R_A - OH + H_2SO_4 \rightleftarrows (R_A)_2 - SO_4 + 2NOH$	NaOH, NH_4OH, Na_2CO_3 solutions of variable strength	120-140%
Anion Exchange Strong Base	Strong base ion exchange removes anions of all soluble salts in water, i.e., $R_A - OH + H_2CO_3 \rightleftarrows R_A - NCO_3 + NOH$	NaOH solutions at approximate 4.0% strength	150-300%

Source: [13]

natural gas (SNG). The SNG plant requires high purity steam for hydrogen production. By proper design of the deionizer system, multi-stage evaporation and spray dryer, the plant has achieved zero liquid discharge [46].

Deep-bed condensate polishing systems employ a mixture of cation and anion resins. The regeneration of these units must be properly achieved to eliminate the possibility of sodium carryover and/or leakage into the condensate system [47]. Magnetic filters have been pilot tested to remove iron impurities in the condensate prior to its demineralization. The results indicate that with these filters, the frequency of regeneration would be reduced; and correspondingly, the loss of condensate in backwash and regeneration would be decreased [48].

A study was completed recently for the EPA as part of its efforts to develop background information on effluent standards for priority pollutants in power plants [13]. This study evaluated various control technologies, which are also applicable in boiler feedwater treatment and/or wastewater treatment. The summary results of this study are shown in Table 5.10 in Section 5.

A previous study for the EPA evaluated 47 treatment processes applicable to industrial wastes [49]. It is noted that the data in this study (published in 1976) did not specifically evaluate the utility industry. However, in the absence of other data, this information can be used as a first starting point in evaluating the applicability of some of the treatment processes discussed above in a power plant.

3.6 Ash Handling

3.6.1 Ash Characteristics

Coal-fired utility and industrial boilers generate two types of coal ash--fly ash and bottom ash. The distribution of total ash into fly ash and bottom ash is determined by the design of the boiler. Both types of ashes together constitute the noncombustible (mineral) fraction of the coal and the unburned residuals. Fly ash, which accounts for the majority of the ash generated, is the fine ash fraction carried out of the boiler in the flue gas. Bottom ash represents that material which drops to the bottom of the boiler and is collected either as boiler slag or dry bottom ash, depending upon the type of boiler.

The total amount of coal ash produced is a function of the ash content of the coal fired and can range from a few percent of the weight of the coal fired to as much as 35%. Coal/ash/FGD waste relationships are discussed in Volume 3. Table 3.25 provides some data on the percentage of total coal ash that is produced as fly ash for various types of boilers.

The chemical composition of coal ash (bottom ash, fly ash, and slag) varies widely, both in concentrations of major and minor constituents. In Volume 3 the chemical composition and physical properties of both fly ash and bottom ash from a wide range of different coals are discussed. The principal factor affecting the variation in the composition is the variability in the mineralogy of the coal. However, differences in composition can exist between fly ash and bottom ash (or boiler slag) generated from the same coal due to differences in the degree of pulverization of the coal prior to firing, the type of boiler in which the coal is fired, and the boiler operating parameters and combustion efficiency. Regardless of the type of ash (either fly ash or bottom ash), more than 80% of the total weight of the ash is usually made up of silica, alumina, iron oxide, and lime.

While the major constituents of bottom ash and fly ash are generally similar, there is usually an enrichment of trace elements in the fly ash as compared with the bottom ash based upon the total quantity of trace elements in the coal fired. A few of the elements originally present in the coal (notably sulfur, mercury, and chlorine) are almost completely volatilized and leave the boiler as gaseous species which are not collected downstream in dry ash collection equipment. However, these can be collected in wet scrubber systems, as discussed later.

Up to 10% of fly ash can be water-soluble, so the potential exists for release of contaminants through leaching. The principal soluble species are usually calcium, magnesium, potassium, sulfate, and chloride.

Bench scale leaching tests using deionized water indicate that the ash reactivity varies considerably with pH and the specific ash being investigated [7]. Leachates resulting from ash are usually alkaline from the presence of calcium oxide and other alkaline species, although some ashes have been found to be inherently neutral or even acidic.

Table 3.25

Fly Ash/Bottom Ash Percentages

Basis: Average for a 13,000 Btu/lb coal

Type of Operation	Fly Ash (% of total ash)
Pulverized coal burners	
Dry bottom, regardless of type of burner	85
Wet bottom (without fly ash reinjection)	65
Cyclone furnaces	20
Spreader stokers (without fly ash reinjection)	65

Source: [5]

Bottom ash can be collected either dry or in a molten state, in which case it is generally referred to as boiler slag. Bottom ash is usually heavier than fly ash, with a larger particle size distribution. Its chemical composition is analogous to that of fly ash; however, it is usually less reactive than fly ash. Boiler slag is a black, glassy substance composed chiefly of angular or rod-like particles, with a particle size distribution ranging from fine gravel to sand. Boiler slag is porous, although not of so great a porosity as dry bottom ash.

3.6.2 Ash Collection-Handling Systems

As the size of boilers has grown, systems for handling ash have grown to more complex units with increasing levels of combustion. Ash handling can be broadly broken into:

- Ash collection (discussed in Volume 3) and handling systems, and
- Conveying systems to storage or disposal.

Ash collection and handling systems often handle the following [50]:

- Bottom ash or slag, the material dropped out of the main furnace in either the dry or wet (molten) state,
- Fly ash, the fine particles trapped by dust collectors, usually electrostatic precipitators,
- Economizer and air heater ash, the coarser particles dropped out of flue gases at changes in the direction of a gas stream, and
- Mill rejects, or pyrites, which may consist of a variety of coarse, heavy pieces of stone, slate and iron pyrite.

Table 3.26 lists the available methods of handling each class of material and the choice which is probably often the optimum from an economic standpoint for either utility or industrial boilers.

Ash handling systems include all components for handling the coal ash from the particulate collector and boiler to a disposal area. Fly

Table 3.26

Ash Handling Systems

		Practical System		Usual Economic Preference	
No.	Type of Ash	Hydraulic	Pneumatic	Utility	Industrial
1.	Dry Bottom Ash	X	X	H	H or P
2.	Slag (Wet Bottom Ash)	X	-	H	H
3.	Fly Ash Economizer	-	X	P	P
4.	Air Heater Ash	X	X	P	P
5.	Mill Rejects	X	X	H	H or P

Source: [50]

ash carried in the flue gas stream can be collected in a number of ways to meet current particulate emission control limitations. Typical methods include mechanical collection, electrostatic precipitation, fabric filtration, and wet scrubbing. Mechanical collectors generally are not capable of meeting present emissions control limitations and, when used, are generally followed by either an electrostatic precipitator or high efficiency wet scrubbing systems.

Bottom ash is typically removed from a boiler by periodic washing, and subsequent transport of the ash. The limited conveying capacity of pneumatic conveyors will usually eliminate considering them for handling bottom ash from the larger utility boiler plants. Fly ash, on the other hand, must be continuously removed from the flue gases to prevent the discharge of large amounts of particulate matter into the atmosphere through the stack. Once fly ash has been collected, it may be conveyed by pneumatic or hydraulic means. While in the past fly ash was simultaneously removed with SO_2 in the scrubber, the current trend in utilities is to have a separate fly ash collection system (usually an electrostatic precipitator) before FGD to ensure a more reliable service; this trend will accelerate with the tightening particulate limits in emissions. A small percentage (∿15%) of the total ash produced in the United States today is sold for further utilization. But the major part (about 85%) is disposed of in various land disposal sites. Fly ash may also be employed to stabilize FGD wastes. (See Volume 3.)

In the United States, fly ash handling at utilities usually is done by hydraulic methods; but pneumatic means are coming into use. For utility or industrial boilers located in congested areas where space and water supply are not available, dry pneumatic systems are preferred.

Mechanical conveyors, except for isolated segments in some ash handling systems, have not been applied in the United States; hydraulic and pneumatic conveyors are universally employed.

The ash handling system in a utility or large industrial operation may fall into one of the following types:

a. Hydraulic Bottom Ash Handling. This may involve:

- Sluicing by means of ejectors or centrifugal pumps to a disposal area,
- Conveying by water jet or pumping to dewatering bins for removal by trucks or railroad cars, and
- Conveying by water jet or pumping to dewatering bins as above with the addition of a complete water recovery system to permit recirculation and reuse of conveying water.

Bottom ash is usually removed from the furnace by mechanical means such as "drag-bar" conveyor, and water-quenched to approximately ambient temperatures. With proper control, liquid drainage from the quench operation can be eliminated or held to a minimum. Most of the quench water is either vaporized or sorbed by the ash. Water consumption in this method is pically lower by a factor of 15, than that of a wet thod on a once-through basis, and can importantly reduce the water pollution problems associated with ash handling operations.

b. Fly Ash Handling. This may involve one or more of a number of variations such as:

- Conveying the ash by vacuum produced by hydraulic means (i.e., water jet). In this case, the water mixes with the ash producing a slurry that is allowed to flow by gravity to a fill area.
- Pneumatic conveying to a dry storage silo with vacuum. The vacuum required can be created by hydraulic or mechanical means.

- Vacuum conveying to an intermediate pump or mixing tank where fly ash can be mixed with bottom ash for disposal.
- Pneumatic conveying by pressure from individually controlled air-locks to dry storage silos.
- Pressurized conveying to a wetting device with the resultant slurry discharged by gravity to a fill area through the bottom ash line or an independent slurry discharge line.
- In cases where the fly ash has residual heating value, pressurized conveying from fly ash hoppers to re-injection at the furnace.
- Vacuum conveying to a transfer point from which material is conveyed pneumatically by pressure to remote disposal point.

The following general observations on fly ash handling appear to be valid:

1. While hydraulic methods are employed after a central collection point, vacuum or pressure type pneumatic components are often part of fly ash handling from the particulate collector.
2. Vacuum systems cannot be designed except for limited lengths. The distance material can be conveyed depends on configuration of the system and plant altitude above sea level.

- Pressure systems are applied where the length of the conveying system is too great for vacuum conveying or where altitude limits the vacuum that can be developed.
- Vacuum-pressure systems usually are economical where the number of precipitator hoppers exceeds twenty and where the length of the conveying system

exceeds the capability of a vacuum system to attain a satisfactory conveying rate [50].

c. Economizer Ash Handling. The coarser fly ash particles which fall out under economizers and air heaters can be handled in the same systems described for fly ash. Precautions may be necessary to prevent the entrance of over-size material which may be caused by sintering where ash is allowed to remain for any length of time in hot areas. Where coarse material is formed, crushers are provided to reduce all ash to particles about 9.5 millimeter (3/8") in diameter which can be handled pneumatically in conventional systems [50].

Economizer and air heater ash may, under suitable conditions, be deposited continuously in water filled tanks from which it can be pumped periodically. Hydraulic storage and removal generally is acceptable only where ash can be disposed of on a fill area. Economizer ash is difficult to dewater when pumped into dewatering bins with bottom ash.

3.6.3 Conveying Systems to Storage or Disposal

The ash collected from particulate collectors or equipment as described above is conveyed to storage or disposal. The major systems are as follows:

a. Bottom Ash Conveying System: Hydraulic methods are universally employed. The terminal point of such an ash conveying system can be:

- A low area where the ash can be deposited and dried out by permitting run-off of the conveying water.
- A pond or lagoon in which the ash is allowed to settle to the bottom with excess water eventually overflowing to adjacent natural streams. With

proper layout, ponds can be arranged to recover conveying water for reuse.

- A dewatering bin into which the ash-water slurry is pumped; ashes are settled and water is removed through decanting and dewatering elements, so that relatively dry ash can be delivered to trucks or railroad cars. Dewatering bins are essential to closed-loop hydraulic ash handling systems where environmental regulations prohibit or minimize the discharge of ash-contaminated water into any bodies of natural water; the exceptions are areas of net evaporation (i.e., where evaporation exceeds precipitation). In such cases, dewatering bins become an integral part of recirculating systems.

Bottom ash is usually either trucked to a utilization or disposal site or sluiced to an ash pond for disposal.

b. Fly Ash Conveying System. Both pneumatic (vacuum, pressure or pressure/vacuum) and hydraulic systems are applicable although the latter is more common. If handled and conveyed to a central storage point by pneumatic means, water is often added to make a slurry for onward transfer and disposal.

c. Closed Loop Recirculation Systems. Fully closed cycle recirculating systems for ash handling may be considered if one of two constraints require such systems:

- Limited availability of water and hence the need to conserve it.
- Regulations prohibiting discharge of ash handling water into sewers or receiving waters.

At present, such recirculating systems are in wide use for bottom ash only. Recent studies have focussed on the requirements for recirculating fly ash water [14,110].

3.6.4 System Design Considerations

The chemical composition of the bottom ash and fly ash produced, as well as that of the conveying air or water, and the temperatures of the products of combustion at the various points of collection, all must be considered in system design. Furthermore, these considerations impact extent of water recycle/reuse in wet handling systems. Some important factors are:

a. Effect of Composition of Fly Ash on Flow. Probably the most trouble in obtaining the flow of fly ash from precipitator hoppers is caused by moisture which makes the dust into a sticky mass. This is the result of the presence of hydroscopic salts which will cause difficulty well above the dew point temperatures of the flue gases. The solution is to raise the temperature in the areas of dust storage by the application of heat to storage hoppers or by locating the dust collectors ahead of air heaters. Where permissible, external vibrators may be used as added insurance that dust is made to flow from the storage hoppers. Internal vibrating plates have generally proven to be unsatisfactory. Heated fluidizing air, introduced through porous stones properly located in the storage hoppers, is an effective means for promoting the free flow of dust into the conveying system. Usually fluidizing air will amount to about 0.283 m^3/min (10 ft^3/min) for each hopper feeding continuously into the conveying system [50].

b. Pipeline Velocities for Pneumatic Handling. The required conveying velocity for any material is dependent upon material density, particle size, concentration, and the physical characteristics of the conveying air or gas. Altitude is an important factor, particularly for vacuum systems. Critical velocities for any materials in a pneumatic conveying system are usually those at points most remote from the discharge end of the system. Usually

pickup velocities are in the range of 460 to 1200 meters/minute (about 1500-4000 ft/min).

c. Pipeline Velocities for Hydraulic Handling. Any boiler refuse can usually be conveyed hydraulically. Conveying velocities will range between 1.5 and 3.7 meters per second (5 to 12 ft/sec), depending on material density particle size and conveyor pipe configuration. For coarser materials, such as bottom ash and mill rejects, conveying velocities will be in the higher range, particularly in vertical pipes such as may be encountered when pumping to elevated dewatering bins. In long pipelines handling coarse materials, exceeding about 1200 meters (4000 ft) in length, velocities must be increased above those used for shorter lines. In addition, some device to create turbulence must be introduced beyond this limit to maintain homogeneous slurry mix, particularly when conveying bottom ash or mill rejects. Fly ash slurries with finer particles can be pumped at the lower range of velocities.

3.6.5 Waste Streams from Ash Handling

In a recent study, fly ash and coal ash handling practices were summarized and are outlined in Table 3.27. While some plants use dry systems, a typical ash handling system at utilities today use ash ponds. Usually sedimentation lagoons are commonly used although some plants use configured tanks [5]; the latter may be used more in industrial boilers.

Ash ponds are designed to have a disposal capacity to accept the total wastes produced during a designed length of plant life. Often, ash ponds are large; Chu [91] reports a range of 80,000 to 150,000 m^2 at TVA plants. Usually the ash pond is not designed for the whole life of the power plant. They are designed to serve for a few years and retire; then new ones are dug up. Another major factor in ash pond design is the clarity of the ash pond overflow. Settling tests indicate that most ash particles follow hindered settling characteristics while the remaining fine ash particles follow discrete settling characteristics.

Table 3.27

Coal Ash Handling at Power Plants

Basis: 308 Letter responses to EPA

Number	Ash	Type of System	No. of Plants
1	Bottom Ash	Dry	99
		Wet once-through	256
		Wet Recirculating	33
		Not Reported	399
2	Fly Ash	Dry	193
		Wet once-through	164
		Wet Recirculating	17
		Not Reported	413

Source: [101]

To meet an effluent guideline limit of 30 mg/ℓ, the fine ash particles and the floated cenospheres are the critical factors in ash pond design. Retention time in ash ponds is usually significantly more than 24 hours, providing effective removal of suspended particles to less than 30 mg/ℓ [91]. Clarified ash pond effluent is discharged through spillways; each spillway is encircled by a skimmer extending about 0.6 meters (about 2 ft) below the top of the weir to prevent floating cenospheres from entering the discharge. When more water depth is needed, spillways are elevated. Ash ponds are maintained at a freeboard of at least 1.2 meters (4 ft); to maintain this as more ash accumulates, the top of ash pond dikes are raised periodically.

Typical intake and pond discharge data for an ash pond are presented In Table 3.28. Figure 3.11 presents a typical recirculating bottom ash system for an 800-MW plant, while Figure 3.12 shows components of water balance for once-through flow and dry handling.

The characteristics of the water handling coal ash are related to:

- Type and amount of ash,
- Sluicing water flow rates,
- Makeup water quality, and
- Mode of operation
  - Once-through vs. recirculating
  - Separate vs. combined systems for fly ash and bottom ash.

The sluicing water requirement for ash handling varies widely in the following range [5,22]:

- Bottom Ash: 9 to 151 metric tons (10 to 167 short tons) per ton of ash conveyed. 10 to 170 m^3 (2,400 to 40,000 gal) per ton of ash.
- Fly Ash: 4.5 to 154 metric tons (5 to 167 short tons) per ton of ash conveyed. 5 to 170 m^3 (1,200 to 40,000 gal) per ton of ash.

Table 3.28

Typical Ash Pond Inlet and Discharge

Location	TSS mg/ℓ	pH	Aluminum* mg/ℓ	Chromium* mg/ℓ	Copper* mg/ℓ	Iron* mg/ℓ	Mercury* mg/ℓ	Zinc* mg/ℓ
Intake	22	6.3	0.7	<0.04	<0.04	0.5	<0.04	<0.05
Inlet to Ash Pond								
• from fly ash	76,440	4.4	1100	1.3	5.1	2500	0.1	2.8
• from bottom ash	4,110	5.6	56	0.1	0.3	112	<0.04	0.1
Ash Pond Discharge	14	4.3	6.0	<0.04	0.1	0.6	<0.1	0.1

*Note: Total

Source: [5]

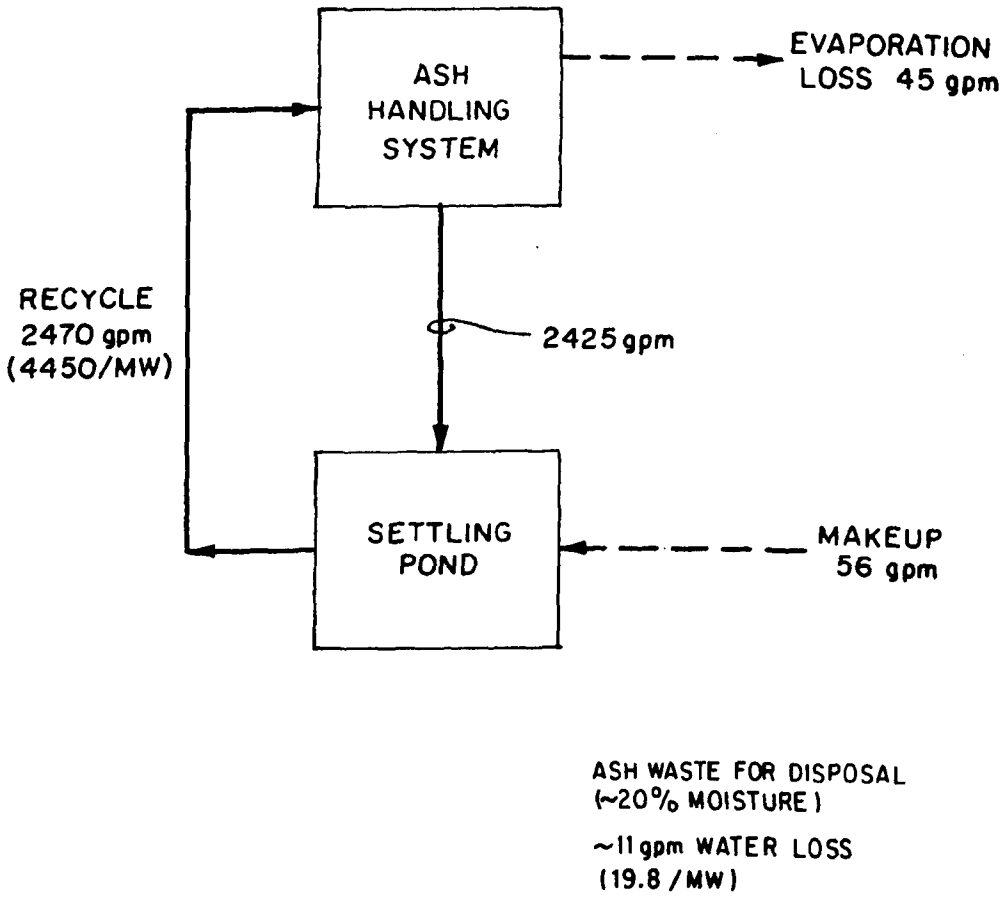

Source: [5]

Figure 3.11 Example of a Recirculating Bottom Ash System

a.) WET (SLUICING)

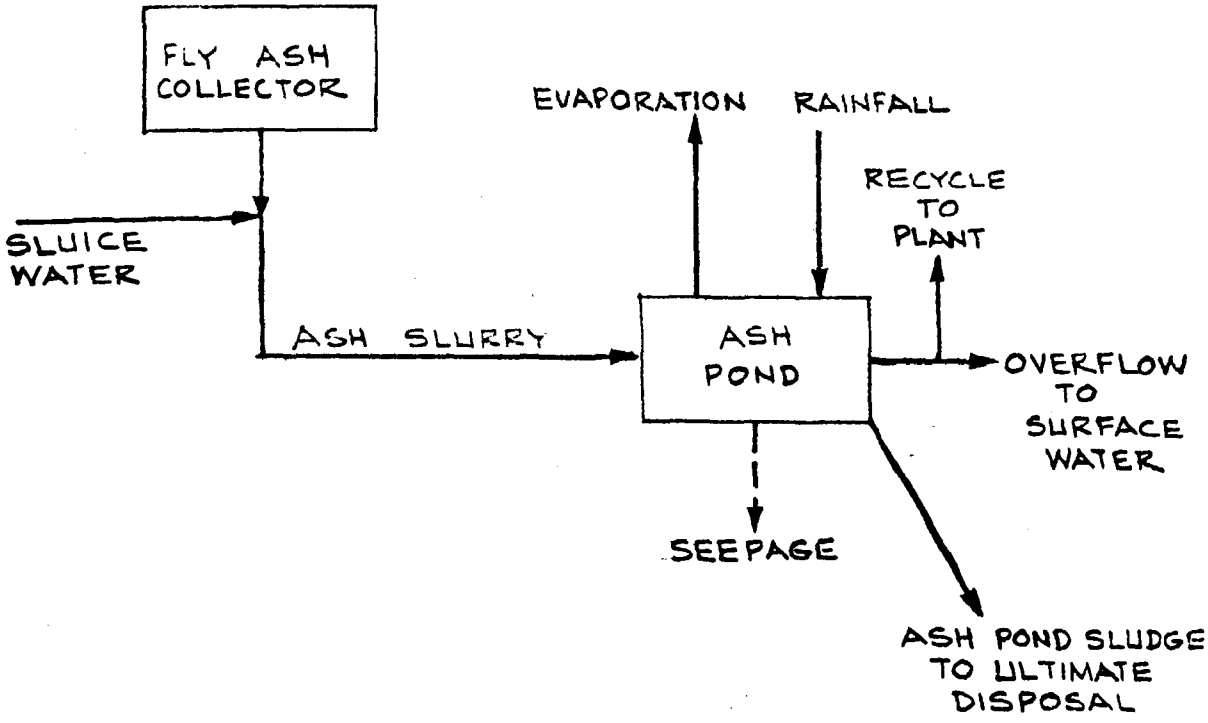

b.) DRY HANDLING

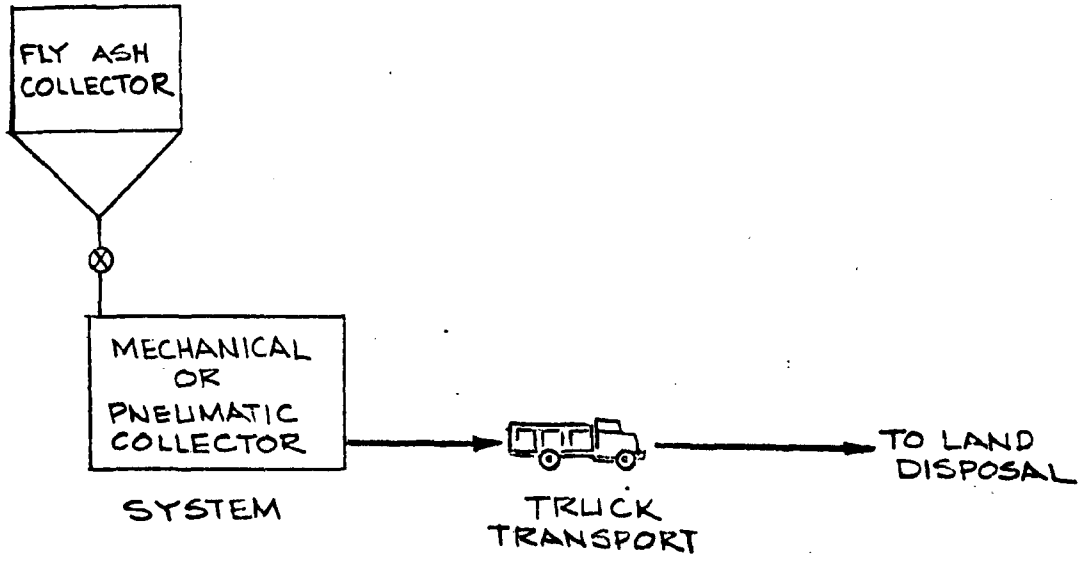

Figure 3.12 Water Balance-Fly Ash Handling

The ash pond effluent analyses for a large coal-fired plant, where separate fly ash and bottom ash ponds were used on a once-through basis, are shown in Table 3.29 [14]. Additional data on TVA's power plants are reported [14]. The relation between overall plant operations and quantity and pH ash pond effluents is summarized in Table 3.30.

The leachability of constituents, particularly trace metals from ash into the water is governed by the surface concentration of each constituent in the ash matrix [92], the nature of the chemical, bonding in the ash and the resulting pH of the solution. Neutralization of ash pond effluents, particularly acidic ones, usually removes some trace in the ash and the resulting pH of the solution. Neutralization of ash pond effluents, particularly acidic ones, usually removes some trace metals. However, trace metals such as arsenic and selenium are not effectively removed at neutral or alkaline pH [91]; if the levels of these are unacceptably high in the effluent, pH adjustment alone will be inadequate. While trace metals migrate to groundwater by seepage from ash ponds, the mass flow of trace metals into the environment is much greater from surface discharges than from leachates reaching groundwater [93].

Due to regulatory pressure and other reasons, circulating systems are being used more widely. Significant adverse environmental impacts and high water consumption are associated with the once-through systems. Of all the water streams in the power plant, the ash sluicing water in particular for bottom ash has the least stringent quality requirements. Consequently, other wastewater streams (e.g., equipment cleaning, coal pile runoff, cooling tower blowdown, etc.) can be used as makeup, particularly to the bottom ash handling system. This use as the sink for other wastewater streams will affect the composition of the blowdown from the ash handling system.

In all recirculating streams, makeup water requirements are influenced by:

- Pond evaporation rate,
- Sludge solids concentration, and
- Blowdown and method of handling the blowdown.

Table 3.29

Characteristics of Once-Through Combined Ash Pond Discharges

Parameters	Plant C	Plant E	Plant F	Plant H	Plant K
Flow (gal/min)	7,689	4,391	32,940	2,486	21,405
pH*	7.1	10.8	11.2	8.1	10.8
Total Alkalinity (mg/l as $CaCO_3$)*	69	176	113	61	79
Phen. Alkalinity (mg/l as $CaCO_3$)*	0	142	96	0	68
Total Hardness (mg/l as $CaCO_3$)*	222	266	301	110	172
Conductivity (μmhos/cm)*	521	796	855	408	427
Total Dissolved Solids (mg)*	403	340	452	268	261
Suspended Solids (mg/l)*	48	29	39	20	15
Phosphorous (mg/l)	0.02	0.01	0.02	0.09	0.02
Ammonia (mg/l as N)	0.10	0.05	0.23	0.71	0.05
Sulfate (mg/l)	178	130	144	98	97
Chloride (mg/l)	12	6	4	11	10
Cyanide (mg/l)	<0.01	<0.01	<0.01	<0.01	<0.01
Silica (mg/l)	7.5	5.8	6.8	5.4	7.1
Calcium (mg/l)	83	130	117	44	74
Magnesium (mg/l)	8.4	0.5	0.6	6.7	1.2
Aluminum (mg/l)	1.4	2.6	2.2	1.2	1.8
Arsenic (mg/L)	0.015	0.005	0.005	0.075	0.01
Berium (mg/l)	0.3	0.3	0.3	0.2	0.2
Beryllium (mg/l)	<0.01	<0.01	<0.24	<0.01	<0.01
Cadmium (mg/l)	0.004	0.002	0.001	<0.001	0.001
Chromium (mg/l)	0.01	0.02	0.05	0.005	0.02
Copper (mg/l)	0.06	0.07	0.03	0.07	0.08
Iron (mg/l)	2.0	0.45	0.15	0.6	0.3
Lead (mg/l)	0.02	0.03	0.02	0.01	0.02
Manganese (mg/l)	0.24	0.02	0.01	0.05	<0.01
Mercury (mg/l)	0.029	0.0002	0.075	0.0005	<0.0002
Nickel (mg/l)	0.06	<0.05	<0.05	0.06	<0.05
Selenium (mg/l)	0.004	0.011	0.018	0.012	0.010
Silver (mg/l)	<0.02	<0.01	<0.01	<0.01	<0.01
Zinc (mg/l)	0.16	0.06	0.06	0.07	0.06

Notes: 1. All numbers are averages of quarterly grab samples collected during 1974 except those shown with an asterisk are averages of weekly grab samples.
The reported values include background concentrations in the raw water supply.
2. All these data are from coal-fired plants of TVA.

Source: [51]

Table 3.30

Relationships Between Plant Operation Conditions and pH Values of Ash Pond Effluents at Ten Coal-Fired Power Plants

Parameters	Plant D	Plant H	Plant J	Plant E	Plant F	Plant G	Plant I	Plant K	Plant L	Plant C
Coal sources	E. Kentucky	Virginia E. Kentucky E. Tennessee	E. Kentucky E. Tennessee	W. Kentucky	W. Kentucky S. Illinois	W. Kentucky	W. Kentucky	S. Illinois W. Kentucky	W. Kentucky W. Alabama	W. Kentucky S. Illinois
Method of firing	Tangential	Tangential	Tangential	Circular tangential	Opposed	Tangential horizontal	Tangential	Circular	Horizontal tangential	Cyclone
Ash content in the coal[a], %	15.5	15	19.1	15.3	16.3	15.7	14	15.6	16	11
Fly ash of total ash[a], %	75	67	75	67	80	80	70	75	75	30
Bottom ash of total ash[a], %	25	33	25	33	20	20	30	25	25	70
Sluice water to ash ratio[a], (gal/tons)	10,770	11,425	9,520	9,585	19,490	12,345	42,430	17,265	15,370	23,065
pH value of raw water[a]	7.5	7.0	7.6	7.0	7.4	7.3	7.4	7.6	7.5	7.4
pH value of ash pond effluent[a]	8.6	8.9	6.3	11.1	11.2	9.6	11.2	10.8	10.1	7.1

[a]Based on average values during 1974.

Source: [112]

In some cases, as the power plant at Colstrip (7), the blowdown from bottom ash handling is sent to scrubber ponds. However, this is not typical for fly ash disposal, since the amount of leachable species in fly ash (Ca, Mg, Na and SO_4) is usually much greater than in bottom ash.

A recirculating ash sluicing system is more susceptible to scaling since dissolved solids are concentrated in addition to species leached from ash. The parameters that may influence scaling potential include:

- Ash reactivity,
- Makeup water quality,
- CO_2 transfer with atmosphere in the pond, and
- Degree of recycle.

Radian [7] in their evaluation of water recycle/reuse at five power plants for the EPA made the following comments:

a. Ash Reactivity. Data on ash reactivity as determined by leaching studies are reported in Table 3.31. Calcium and sulfate are major species leached. In the five plants studied, magnesium was present in significant amounts in only one case.

b. Makeup Water Quality. The composition of the makeup water used in a recirculating ash sluicing system will influence the composition of the sluice water and therefore the scaling tendency of the system. Bench-scale experiments and computer simulation led Radian to conclude that poor water quality, particularly in calcium and sulfate concentrations significantly increased scale potential in fly ash slurry liquor.

c. CO_2 Transfer. Degree of CO_2 transfer depends on the pH of the pond water and fly ash slurry composition. Both $CaCO_3$ and Mg $(OH)_2$ relative saturations are pH dependent (i.e., they tend to precipitate at higher pH); hence, CO_2 transfer has a significant effect on scaling tendency. Samples taken appear to indicate that complete equilibrium with CO_2 is not usually attained.

Table 3.31

Ash Reactivity Determined from Leaching Studies*

Species, wt. %	Montour		Bowen			Four Corners			Comanche		Colstrip		
pH	6.0	8.1	6.0	8.5	10.4	3.0	6.0	8.5	6.0	8.5	4.0	6.0	8.0
Ca	.32	.28	1.3	.76	.56	.83	.71	.62	2.9	2.2	5.1	3.7	3.2
Mg	.02	.02	--	--	--	--	--	--	.11	.05	.66	.21	.06
Na	.04	.04	.12	.10	.07	.02	.02	.02	.04	.03	--	--	--
SO_4	.76	.79	1.3	1.2	1.0	.15	.04	.07	1.2	.83	.55	.60	.57

*Reported as wt. % of ash.

Source: [7]

d. Degree of Recycle. The above discussions were for closed loop ash sluicing systems. Recirculation was practiced only for bottom ash; these studies by Radian revealed that recirculation is feasible for fly ash also, but that treatment may be necessary to prevent gypsum scale. Level of treatment is determined by ash reactivity and makeup water quality. Recirculation of ash pond overflow in other parts of the power plant may be feasible. For example, ash pond overflow may be usable as makeup to a scrubber system. Degree of slipstream treatment to control gypsum scale potential varies with the type of loop considered.

3.6.6 Present Treatment Methods

At present, ash ponds have an overflow either to a receiving water or a slipstream to another point in the power plant. Recirculation is often practiced with bottom ash that is non-reactive. The EPA in its survey for Effluent Guidelines Development Document [5] reported on two systems presented in Figures 3.13 and 3.14. In both cases (one for bottom ash and the other with combined overflow):

- recycle is limited to bottom ash; and
- filtration of suspended solids is practiced prior to discharge to receiving water (filter sludge is sent to disposal on land)

An increasing number of plants are now practicing recycle. EPA reports [101] that bottom ash water recycle is practiced at 33 plants. These plants recirculate the water from existing bottom ash or combined pond or hydrabins. Chemical addition is not normally required. Furthermore, recycle of fly ash water is practiced at 17 plants. As noted earlier, (unlike bottom ash) fly ash has higher concentrations of divalent cations, sulfates, suspended solids and trace metals. Lime/soda treatment (described later) or other options are required to recirculate fly ash water. EPA has a survey underway [101] to determine the treatment practices at these 17 plants that recirculate fly ash water.

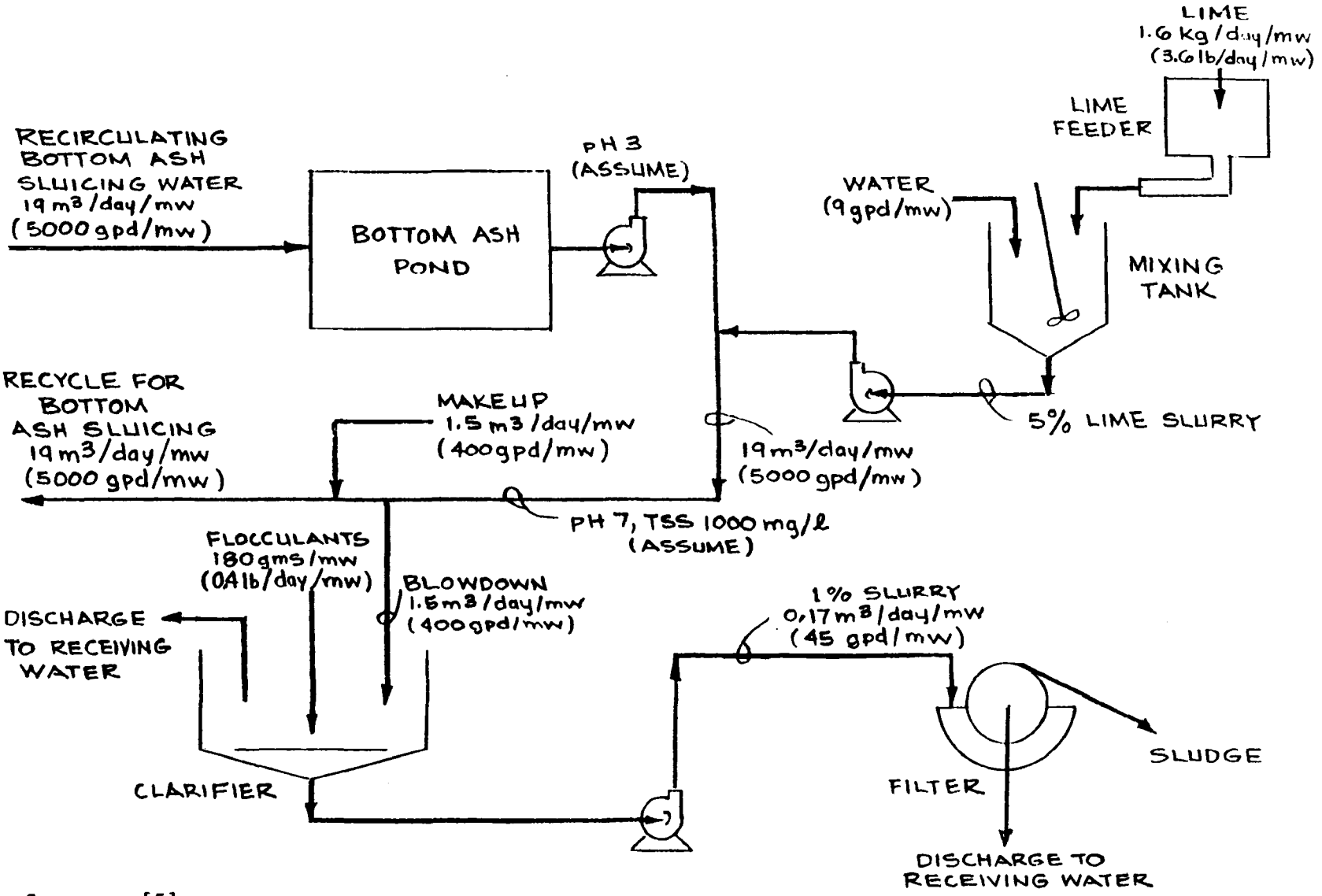

Source: [5]

Figure 3.13 Recirculating Bottom Ash Sluicing System Blowdown Treatment

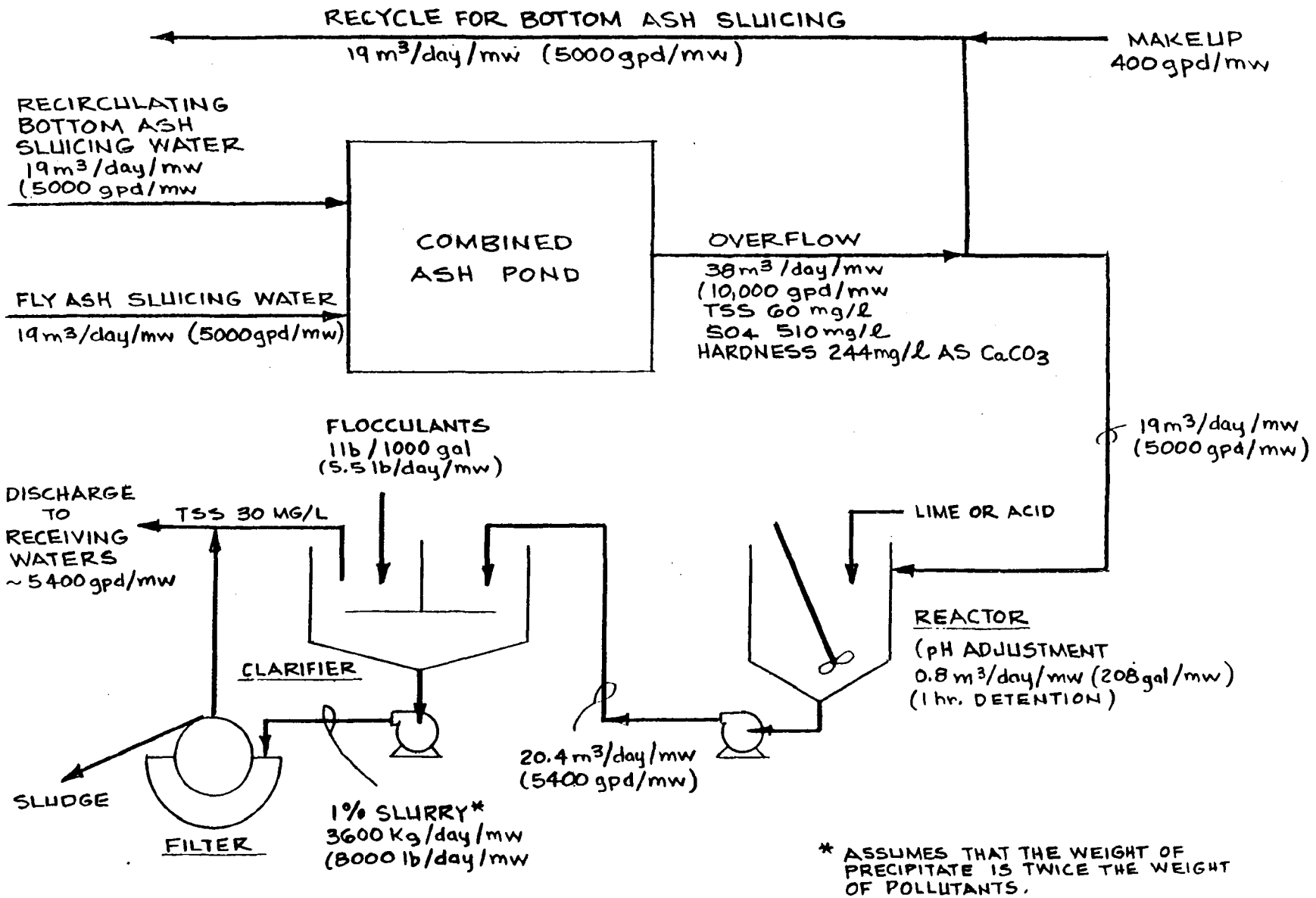

Source: [52]

Figure 3.14 Treatment of Combined Ash Overflow

3.6.7 Treatment Options for Recycle/Reuse

The EPA's effluent guidelines for ash ponds [6] are summarized in Table 3.32. Under best available technology (BAT) guidelines and those for new plants, the EPA has proposed separation of bottom and fly ash transport with different limits for each. For BAT, it is proposed that the bottom ash sluice water system be closed and recycled, with an estimated maximum blowdown of 8% of the recycle rate, but with a maximum of 5% blowdown for new sources. The once-through discharge of fly ash transport water would still be permitted, but not for new sources. Fly ash and bottom ash disposal may be combined within one pond and the sluice water discharged after once-through sluicing by existing plants provided the quantities of each ash sluice water are known and the weighted concentration of the combined discharge is less than or equal to that allowed in the guidelines. For the closed system, with increased cycle time and concentration, certain limitations and precautions may be needed to deal with higher levels of suspended solids, high alkalinity, and high concentrations of soluble salts to avoid exceeding the solubility limits of calcium carbonate, calcium sulfate, and others.

The problem of exceeding solubility limits has been mentioned earlier. Solubility limit of calcium carbonate is governed by the Langelier & Ryznar Indexes which are described below:

a. Langelier Index. A technique of predicting whether water will tend to dissolve or precipitate calcium carbonate. If the water precipitates calcium carbonate, scale formation may result. If the water dissolves calcium carbonate, it has a corrosive tendency. To calculate Langelier's Index, the actual pH value of the water and Langelier's saturation pH value is determined by the relationship between the calcium hardness, the total alkalinity, the total solids concentration and the temperature of the water. Langelier's Index is then determined from the expression pH-pHs. Figure 3.15 is a chart used for determining

Table 3.32

Effluent Guidelines and Standards for Power Plant Ash Ponds

Discharge Stream	Controlled Parameter	BPCTCA[a]		BATEA[a]		NSPS[a]	
All Plant Discharges	pH	6.0-9.0		6.0-9.0		6.0-9.0	
	Polychlorinated biphenyls (PCBs)	zero		zero		zero	
		30-day average	daily maximum	30-day average	daily maximum	30-day average	daily maximum
Bottom Ash Transport Water	total suspended solids (TSS)	30	100	30÷12.5[b]	100÷12.5	30÷20	100÷20
	oil and grease	15	20	15÷12.5	20÷12.5	15÷20	20÷20
Fly Ash Transport Water	TSS	30	100	30	100	zero	zero
	oil and grease	15	20	15	20	zero	zero

[a]All quantities except pH are in units of mg/ℓ.

[b]÷12.5 or ÷20 indicates the required degree of recycle (or "number of cycles") of water; ÷12.5 means 8% blowdown allowed, while ÷20 means 5% blowdown allowed.

Source: [6]

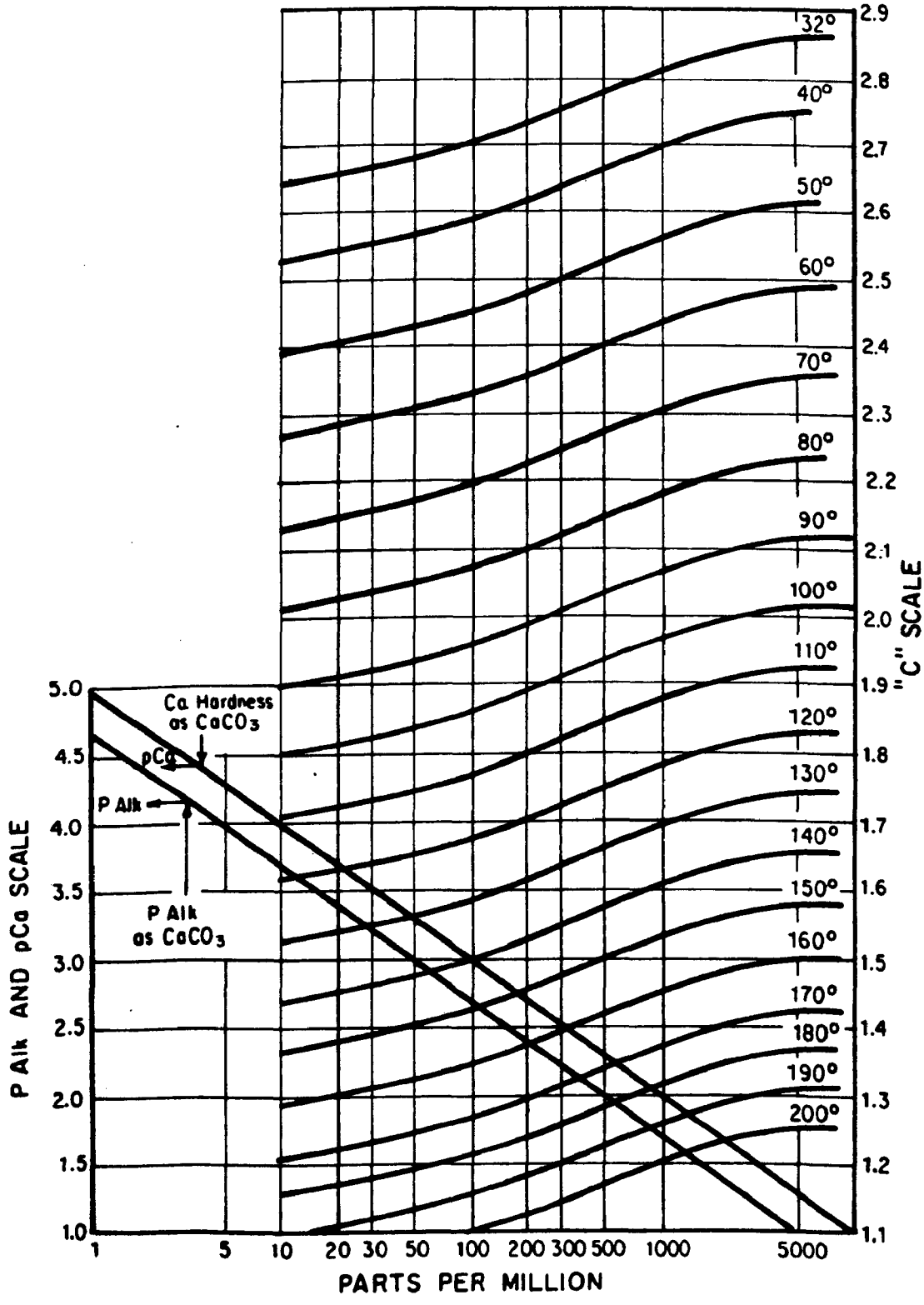

Source: [32]

Figure 3.15 Langelier Saturation Index

Langelier's Index. The interpretation of the results obtained are shown below:

pH-pHs	Tendency of Water
Positive value	Scale forming
Negative value	Corrosive
Zero	Neither scale forming nor corrosive

The presence of dissolved oxygen in the water may cause water with a "zero" Langelier's Index to be corrosive rather than "neutral." Furthermore, differences in temperature within a system and chemicals may adversely impact the applicability of the Index.

b. Ryznar Stability Index. This is an empirical method for predicting scaling tendencies of water based on a study of operating results with water of various saturation indices.

$$\text{Stability Index} = 2\ \text{pHs} - \text{pH}$$

where: pHs = Langelier's Saturation pH

This Index is often used in combination with the Langelier Index to improve the accuracy in predicting the scaling or corrosion tendencies of a water. Table 3.33 illustrates the use of this Index.

In addition to solubility of $CaCO_3$, solubility limits of $CaSO_4$ and seprolite $[Mg_2,Si_3O_8,(H_2O)_r]$ are important in considering recycle of ash pond water; these are determined by their respective solubility products and by temperature pH and common ion effects. Generally in a typical ash pond solubility limits for $CaSO_4$ and $CaCO_3$ can be exceeded in a few cycles in an untreated recirculating loop. Hence, any recirculating loop requires treatment for scale control. Such recycle may also be desirable to control ash pond water iron and removal of trace metals. Suggested control limits

Table 3.33

Ryznar Stability Index

Ryznar Stability Index	Tendency of Water
4.0 - 5.0	heavy scale
5.0 - 6.0	light scale
6.0 - 7.0	little scale or corrosion
7.0 - 7.5	corrosion significant
7.5 - 9.0	heavy corrosion
9.0 and higher	corrosion intolerable

Source: [32]

for ash pond recirculating water composition are presented in Table 3.34. It is noted that the solubility product of $CaSO_4$ varies significantly with ionic strength.

Chu et al. [14,110] evaluated the potential for complete reuse of ash pond effluents. Their report is from the perspective of TVA's coal-fired power plants. The TVA has two coal-fired plants with separate bottom and fly ash ponds, but ten are combined (bottom and fly ash) treatment ponds. Chu et al. [14] conclude (among other conclusions) that:

- Complete reuse may be possible using sidestream treatment. One option is to use lime soda softening. The softening process would eliminate the scaling problem, and complete reuse would reduce the discharge of trace metals to surface streams. The reuse scheme proposed would require softening of only a portion of the sluice water.
- Reverse osmosis or ion exchange may be applicable for high dissolved solids operation (supplementing lime-soda softening) for higher quality water usage.
- A mathematical model was developed for determining the proportion of ash sluice water that would require softening in order to prevent scaling in the sluicing system.
- Laboratory jar tests on lime-soda softening of concentrated bottom ash pond water showed good removal of turbidity, calcium, and magnesium, and some removal of silica. The addition of soda ash was necessary for adequate hardness removal because of the high non-carbonate calcium content. The sulfate buildup in the closed-loop system can be controlled by the addition of excess lime in the sidestream treatment processes. Because of the wide variation in water quality characteristics between various power plants, additional testing is needed.

Table 3.34

Suggested Control Limits for Ash Pond Recirculating Water

No.	Characteristics	Limit	Reference
1	pH and hardness	Langelier Saturation Index $I_{sat} = pH - pH_s = 0.0$ to 1.0	
		Ryznar Stability Index $I_{sat} = 2pH_s - pH = 6.0$ to 7.0	(51)
2	sulfate & calcium	$C_{SO_4} \times C_{Ca} = 200{,}000$	(52)
3	magnesium & silica	$C_{Mg} \times C_{SiO_2} = 8{,}505$	(52)

- Good removal of cadmium, copper, iron, lead, and zinc was obtained by addition of lime to an acidic fly ash pond effluent, raising the pH to a value of 10. The lime-soda process appears to be effective only for those species of trace metals which tend to form insoluble metal hydroxides or carbonates, or those which readily absorb on $CaCO_3$ or $Mg(OH)_2$.

The complete reuse scheme suggested in this study [14] is discussed in Section 5.3.

In a recent study [103], activated carbon, reverse osmosis, and chemical precipitation were tested on a bench scale for cooling tower and ash pond overflow. There exist very few organics in both the ash pond overflow and cooling tower blowdown. For those pollutants present, the test result does indicate some probable applicability of the various technologies as follows:

- Reverse Osmosis: Reverse osmosis was tested to determine the degree of flow reduction and pollutant concentration achievable. The result indicates that reverse osmosis is effective for concentrating copper, nickel, zinc, lead, silver, chromium and arsenic. RO was also found to be effective in concentrating dibromochloromethane and bromoform. Removal efficiency for the other pollutants was not determined because of its low concentration in the waste streams tested.

- Chemical Precipitation: Four chemicals were used in batch precipitation tests performed with sample water from both of the waste streams. Lime was used as the primary precipitating agent, but sodium sulfide was also tested for cadmium and mercury removal since lime treatment alone may not be effective for these metals [103]. In addition ferric sulfate and ferrous sulfate were also tested to examine their effect upon metal removal due to coprecipitation and adsorption mechanisms. Organic analysis was not performed

for evaluation of chemical precipitation as this technology was not intended as a method for removal of organics. The results indicate that chemical precipitation with lime is effective in decreasing copper, zinc, arsenic, chromium and lead.

- Activated Carbon: In most cases, the organics in the two waste streams are at such low concentration that removal efficiencies can not be determined. In the case of bromoform and dibromochloromethane from cooling tower blowdown of one plant, activate carbon was found to be effective.

3.6.8 Dry Handling Systems

In recent years, a shift towards dry handling systems for ash has been noted [52]. This trend will substantially impact water needs for ash ponds and potential pollution by effluent overflow. Recently, American Electric Power disclosed it was going to convert its major units from a wet system with sluice ponds to on-site collection silos and the placement of the ash they do not market into structural landfills. Space conservation was listed as the major reason for the shift [52].

However, the split among wet vs. dry systems remains pretty even among utility producers at present. New environmental regulations which will require closed loops on wet systems will also expedite the changeover. About 68% of the power plants have dry collection and unloading facilities for fly ash [52]. The switch to dry systems will also result in a separation of fly ash and bottom ash now being disposed of together at 72% of the installations. Some recent trends in dry handling of ash and associated economics are discussed in Section 5.3.5.

3.6.9 Economics of Treatment

The general observations regarding cost data for treatment of individual streams also apply to ash handling wastes. The EPA in developing guidelines [5] established approximate cost data for two cases:

- Recirculating bottom ash system with treatment of bottom ash blowdown. Figure 3.13 describes this type of system (see page 3.98). Table 3.35 presents capital and operating costs for such systems in 1978 dollars (CE Cost Index 218.8).
- Recirculating bottom ash with treatment of combined ash overflow. Figure 3.14 describes this type of system (see page 3.99). Table 3.36 presents capital and operating costs for such systems in 1978 dollars (CE Cost Index 218.8).

3.7 FGD Systems

3.7.1 Process Description

FGD systems can be generally categorized into two groups: non-regenerable, or throwaway, systems which produce a waste material for disposal; and regenerable, or recovery, systems which produce a saleable byproduct (sulfur or sulfuric acid). There are now over 50,000 MW of coal-fired electric utility boilers in the United States to which flue gas desulfurization systems are being applied (including systems in operation, under construction, or in procurement). About 90% of this capacity involves nonrecovery systems, most of which employ lime or limestone to produce a solid waste, calcium-sulfur salt for disposal. This technology can be expected to dominate in boiler applications on FGD systems for the foreseeable future.

All commercial nonrecovery processes today involve wet scrubbing where gases are contacted at some stage with aqueous slurries or solutions of absorbent; some dry solvent systems are expected to be operational by the early 1980's. Although most nonrecovery systems can withstand relatively high levels of particulate and trace contaminants and many in the past have been designed for simultaneous SO_2 and particulate removal, most systems being installed today, particularly on utility-scale boilers, follow high efficiency electrostatic precipitators in order to ensure a more reliable service. The notable exceptions to this are systems which utilize the alkalinity in the fly ash for SO_2 control and therefore frequently remove fly ash and SO_2 simultaneously.

Table 3.35

Recirculating Bottom Ash System

With Treatment of Bottom Ash Blowdown

Basis: 1. See Figure 3.15 for typical system (page

2. Cost in mid-1978 dollars (CE Index 218.8)

3. Capital cost = Major Equipment
+ 50% for installation in new plants
or 100% for installation in existing plants
+ 20% for instrumentation
+ 15% for engineering
+ 15% contingency

4. Annual Cost = 3% of capital for maintenance
+ 15% of capital for fixed costs
+ chemicals, labor and power

No.	Item	100 MW Retrofit ($1000)	100 MW New Sources ($1000)	1000 MW Retrofit ($1000)	1000 MW New Sources ($1000)
1	Total Capital Cost ($/kW)	213 (2.13)	164 (1.64)	671 (0.67)	518 (0.52)
2	Annualized Cost				
	a) Total $	231	188	572	400
	b) mills/kWh baseload (0.77 cap. factor)	0.341	0.279	0.085	0.059
	cyclic (0.44 cap. factor)	0.597	0.488	0.148	0.104
	peaking (0.09 cap. factor)	2.92	2.39	0.725	0.507

Source: [5] and Arthur D. Little, Inc., updates

Table 3.36

Recirculating Bottom Ash System

With Combined Ash Pond Overflow

Basis: 1. See Figure 3.16 for typical section (page ___)

2. Cost in mid-1978 dollars (CE Index 218.8)

3. Capital cost = Major Equipment
+ 50% for installation in new plants
or 100% for installation in existing plants
+ 20% for instrumentation
+ 15% for engineering
+ 15% for contingency

4. Annual Cost = 3% of capital for maintenance
+ 15% of capital for fixed costs
+ chemicals, labor and power

No.	Item	100 MW Retrofit ($1000)	100 MW New Sources ($1000)	1000 MW Retrofit ($1000)	1000 MW New Sources ($1000)
1	Total capital cost	481	371	1,767	1,365
	Cost ($/kW)	(4.80)	(3.71)	(1.77)	(1.37)
2.	Annualized cost				
	a) Total $	599	-	2,355	-
	b) mills/kWh				
	baseload (capital factor 0.77)	0.89	-	0.35	-
	cyclic (capital factor 0.44)	1.55	-	0.61	-
	peaking (capital factor 0.09)	7.60	-	3.00	-

Source: [5] and Arthur D. Little, Inc., update

The principal types of nonrecovery systems producing solid wastes as sludges for disposal are:

- Direct limestone scrubbing,
- Direct lime scrubbing,
- Alkaline fly ash scrubbing, and
- Double (dual) alkali scrubbing.

Most nonrecovery systems in operation today are lime or limestone scrubbing systems. These utilize a slurry of lime or limestone for SO_2 removal and can produce a waste ranging from a slurry to a relatively dry filter cake. Lime, limestone, and fly ash scrubbing are now considered to be a commercially available technology. A number of these systems have demonstrated high availability and reliability on utility-scale boiler applications. Double (dual) alkali systems represent a second generation technology which is now reaching commercial demonstration. Double alkali systems utilize solutions for sodium salts for SO_2 removal which are then reacted with lime outside the scrubber system to produce a waste discharged as filter cake. It is anticipated that for the next several years, nonrecovery systems will remain the only ones practical on a large scale. Excepting in site-specific instances where local economic considerations favor the byproduct or areas where stringent environmental regulations constrain both land and ocean disposal, recovery systems are not likely to find broad, large-scale use in the immediate future. Furthermore, most recovery systems will employ prescrubbers that produce wastes for disposal. Hence, in this report, the discussion on FGD wastes and its impact on water recycle/reuse in power plants will focus on such nonrecovery systems. For a brief review of regenerable systems, the reader is referred to Volume 3.

A generic FGD scrubber system (nonregenerable) is shown in Figure 3.16. Gas cleaning is accomplished in the scrubber while solid precipitation occurs in the reaction tank and solids concentration can be achieved in a solid liquid separator or in a land disposal site. A more detailed schematic for limestone based FGD systems is shown in Figure 3.17 [53].

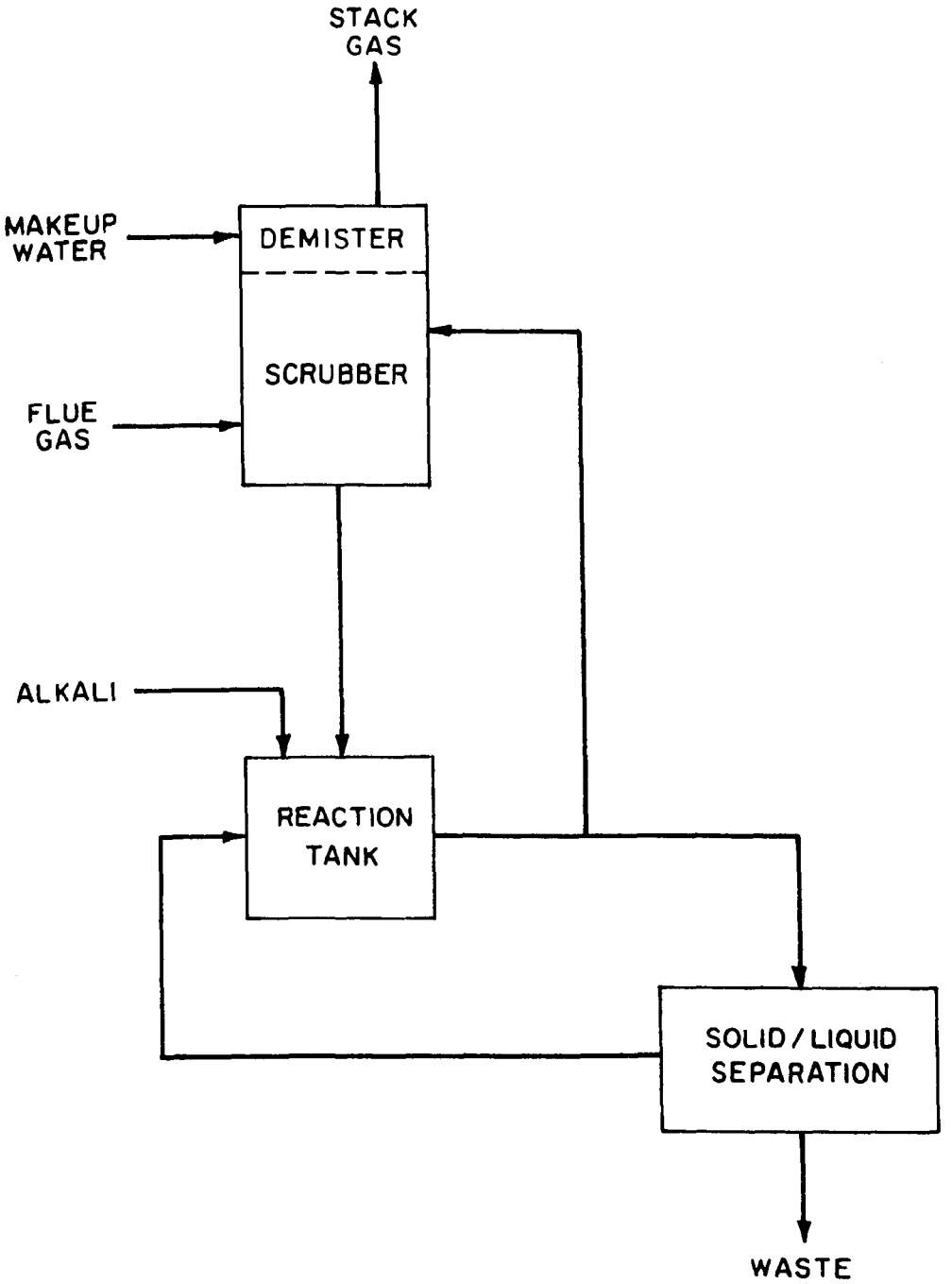

Figure 3.16 Generalized FGD System

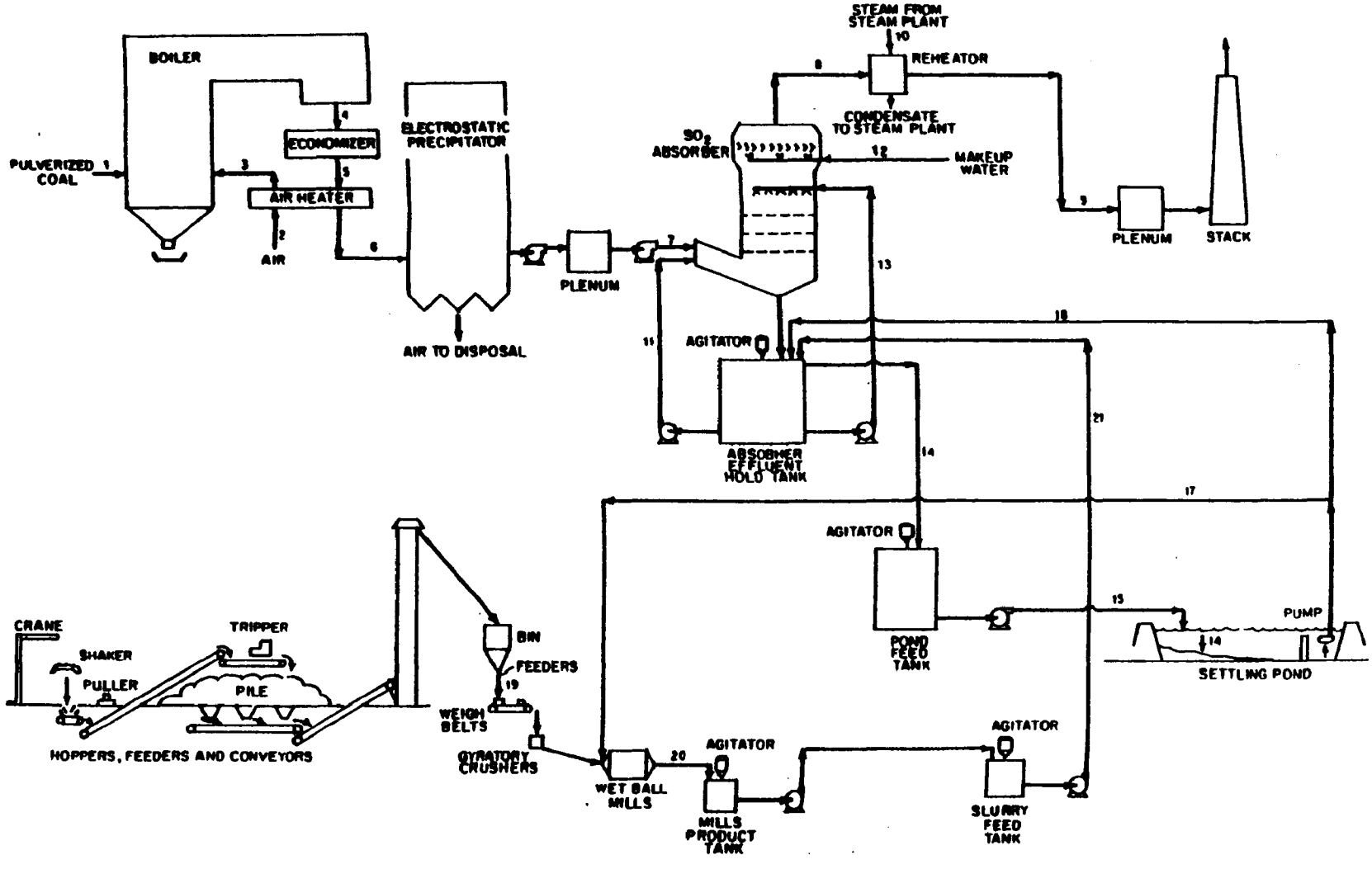

Source: [54]

Figure 3.17 Limestone Slurry FGD System

FGD scrubbing systems comprise three operations:

a. gas cleaning,

b. solids precipitation, and

c. solid/liquid separation.

a. Gas Cleaning

Gas cleaning in all commercially nonregenerable processes involves wet scrubbing where gases are contacted at some stage with aqueous slurries or solutions of absorbent. Most gas cleaning systems installed in utility boilers today involve high efficiency electrostatic precipitators for particulate removal followed by a scrubbing system for SO_2 removal. Such decoupling ensures a more reliable service. The exceptions are those cases employing the alkalinity of fly ash to remove SO_2.

b. Solids Precipitation

The second major operation in the scrubbing system is the solid precipitation. In direct lime and limestone scrubbing systems, the SO_2 is removed from the system by precipitation of calcium sulfate and sulfite. The required rate of precipitation is determined by the rate of absorption of SO_2 from the flue gas. The precipitation occurs in a reaction tank with adequate time for crystal growth of the recirculated particles. Waste solids (calcium sulfite/sulfate and fly ash) are removed from the scrubber in a bleed stream from the absorber recirculation. The rate of bleed (and hence, water makeup) is used to control the solids concentration to the desired level.

c. Solid/Liquid Separation

In order to minimize water requirements for the scrubbing system, the spent slurry is dewatered to recover a portion of the water. Dewatering can range from simple settling in a disposal pond to a thickening and filtration (centrifugation) to produce a relatively dry (soil) waste. The water recovered can be recycled to the scrubbing system to minimize aqueous discharge and reduce makeup water requirements. The final water content of the waste solids and evaporation occurring in the scrubber determines the makeup requirement for the total system.

3.7.2 Makeup Water Requirements

Flue gases contain both particulates and SO_x which are usually removed separately. Total wastes from both particulate and SO_x removal systems are referred to as FGC wastes while SO_x removal wastes alone are called FGD wastes. Many water recycle/reuse considerations for FGC and FGD wastes are analogous. Furthermore, in the future, FGD wastes will need to be stabilized prior to land disposal; often fly ash will be considered for this purpose. Hence, future trend may be to consider the total FGC system.

Makeup water requirements for nonregenerable scrubbing systems for SO_2 and combined SO_2/particulate control depend upon a number of process variables which define the quantity and quality of water needed, and, thereby the potential for use of power plant wastewater streams in the FGD or FGC system. In general, FGC systems (encompassing waste disposal) can be classified into two groups with regard to water balance--open-loop and closed-loop. This classification can be applied regardless of the type of system and disposal operation. The current criterion generally considered to define closed-loop operation of FGC systems is no discharge of process water other than that which is occluded with the dewatered solid, i.e., zero aqueous discharge.

Figure 3.18 shows block diagrams indicating the principal water balance factors (uses and disposition) for the two basic disposal approaches--one incorporating wet ponding, the other dry impoundment. The total quantity of makeup water is determined primarily by three factors:

- The evaporation of water in the scrubber to the flue gas,
- The quantity of waste solids produced, and
- The extent to which the waste solids are, or can be, dewatered (either mechanically or naturally).

Other factors which are generally of much lesser importance include:

- Rainfall and evaporation in open process tanks,
- The nature of the calcium-sulfur salts produced (gypsum contains four times the amount of bound water as calcium sulfite, although

(a) FGD SYSTEM WITH WET POND DISPOSAL
(Non Regenerable FGD Systems)

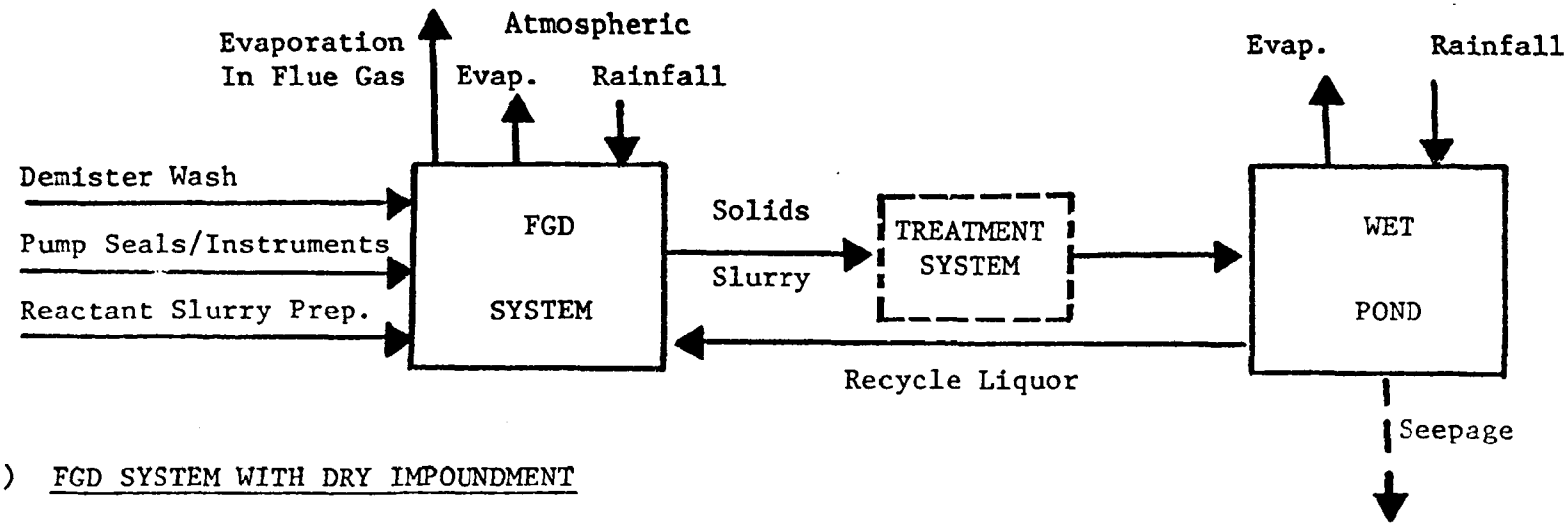

(b) FGD SYSTEM WITH DRY IMPOUNDMENT

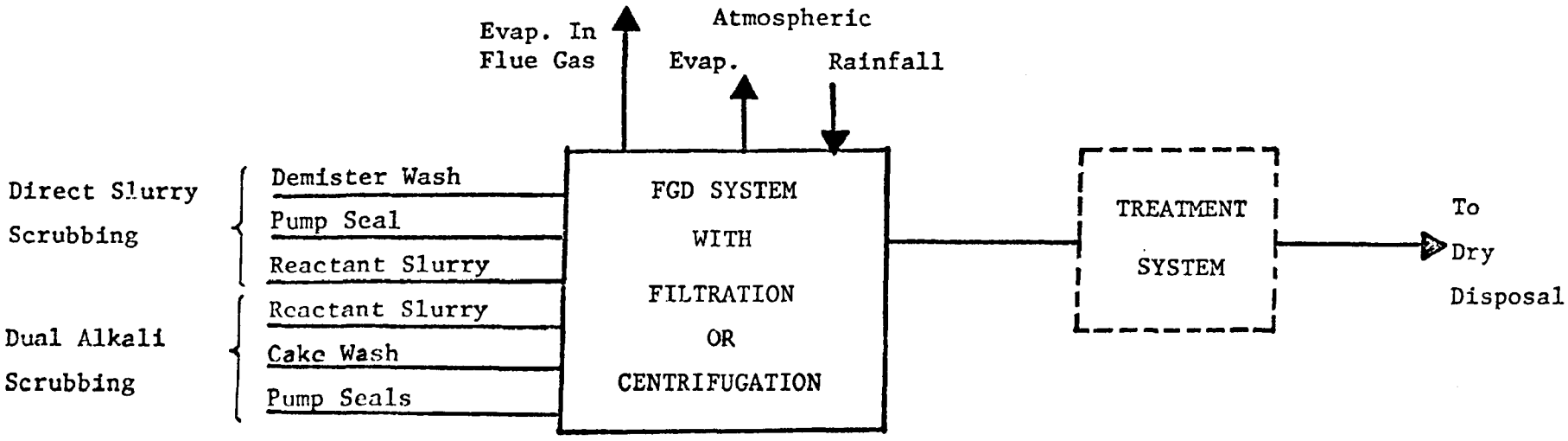

NOTE: Treatment System Refers to
Sludge Stabilization Processes

Figure 3.18 Water Balance Factors for
Nonregenerable FGD Systems

the absolute quantity is small in the context of the overall water balance), and

- For wet disposal, evaporation and rainfall at the disposal site.

Direct Scrubbing Systems

The principal uses for water in direct slurry scrubbing systems are demister wash and pump seals. Some amount of water may also be used in reactant slurry preparation; however, most systems utilize clarified liquor alone for this purpose.

One of the most important considerations in the design of direct scrubbing systems for closed-loop operation is scale control and the largest use of water is for this purpose. Scale control includes the prevention of:

- Chemically induced formation of calcium-sulfur salt scale either alone or in combination with fly ash and other constituents on scrubber internals,
- Chemical precipitation/deposition of other constitutents resulting from buildup of impurities in solution,
- Deposition of solids due to evaporation at wet/dry interfaces and on reheaters, and
- Buildup of precipitated solids due to physical deposition.

The prevention of calcium-sulfur salt scale formation (usually calcium sulfate) is a key factor in the design and operation of any direct slurry scrubbing system. An important aspect is the control of system chemistry to avoid supersaturation with respect to gypsum (actually a small degree of supersaturation is usually acceptable). This can involve many considerations such as the allowance for proper reaction time in hold tanks; control of pH, reactant stoichiometry, and/or scrubber liquid-to-gas ratios; control of solids concentration to ensure adequate nucleation sites for crystal growth; and makeup water control (both quality and how it us used).

One area of particular concern in slurry scrubbers is the demister which is prone to scale formation and plugging. It is washed (either continuously or intermittently) using fresh process makeup water or a

combination of fresh water and clarified liquor to remove physical deposits and prevent chemically induced scaling by reducing solution concentrations to below saturation levels. In some systems a tray is installed just ahead of the demister across which liquor is recirculated to remove solids before they reach the demister. A principal requirement is that the liquor used for washing the demister, or used on a wash tray, have a low level of suspended solids, calcium and sulfate levels low enough to prevent precipitation, and little or no dissolved solids which can cause chemical precipitation when contacted with scrubber liquor.

In most systems, all available makeup water is used in demister scale control, and efforts are made to minimize all other water uses. The water balance and the quality of makeup water, therefore, can be critical in controlling scaling. In some direct scrubbing systems, because of design and/or operational constraints, it is necessary to operate open-loop (continuously or intermittently) to prevent scaling, which can result in appreciable water discharge from disposal ponds. However, most recent direct scrubbing systems are designed for closed-loop operation, or at least as close an approach as site conditions and design constraints allow.

Dual Alkali Systems

In dual alkali systems, which involve solution scrubbing with regeneration of the spent solution using lime or limestone to produce a waste calcium-sulfur solid, no extensive scale control measures are required and therefore, no demister wash is needed. However, dual alkali systems do utilize fresh makeup water for washing of the filter cake to recover absorbent occluded with the solids and to prepare reactant (lime) slurries. (Clarified liquor cannot be used.) The principal uses are reactant slurry preparation and cake wash.

Table 3.37 lists the principal process factors affecting the water balance for closed-loop systems. It is important to note that while many of these process factors may vary among different systems, most are not really variables. For example, for a given boiler application where the site conditions (including water availability), boiler characteristics, fuel properties, and emissions and disposal requirements are defined,

Table 3.37

Process Factors Affecting Water Balances
in Nonregenerable FGC Scrubber Systems

	FGD Process Factors	
	Primary	Secondary
Water Inputs		
Reactant Slurry (Dual Alkali)	ΔSO_2	Reactant (Lime) Properties
Pump Seals/Instruments	--	ΔSO_2 ΔAsh
Demister Wash (Direct Scrubbing)	Scale Control	--
Filter Cake Wash (Dual Alkali)	ΔSO_2 ΔAsh	
Water Outputs		
Evaporation to Flue Gas	--	None --
Net Atmospheric Evaporation/Rainfall	Type of Disposal	Open Vessel Area
Waste Solids	ΔSO_2 ΔAsh Reactant Type & Stoichiometry Degree Oxidation Type/Degree Dewatering	

Source: Arthur D. Little, Inc.

most of the process factors are set (i.e., SO_2 removal, ash removal, type of disposal and, to a large extent, the degree of dewatering of the wastes). Once the general process type is selected (direct lime, direct limestone with/without forced oxidation, dual alkali, or fly ash alkalinity) there is little freedom left in many cases to manipulate the water balance. Thus, the selection of the type of process can be very important with regard to the ability of the FGD system to utilize other power plant wastewater streams.

Table 3.38 shows estimates of typical makeup water requirements and uses in nonrecovery FGC systems for a typical 500-MW boiler at full load firing 3.5% sulfur coal (with an emissions requirement of 85% SO_2 removal) and 1.0% sulfur coal (with an emissions requirement of 0.2 lb $SO_2/10^6$ Btu heat input). The purpose of this table is simply to illustrate the effects of SO_2 removal, ash removal, and waste solids on system water requirements. Some simplifying assumptions have been made regarding waste properties and process parameters. It has also been assumed that there is no net evaporation or rainfall.

It is apparent in Table 3.38 that evaporation of water to the flue gas is the single most important factor in a system water balance. The amount of evaporation is essentially independent of the type of process or process operation. Rather, it is a function of the boiler design and its operating conditions and is determined by the flue gas rate, temperature and humidity; all of which depend on the boiler efficiency (and design), fuel composition and combustion air rate (and humidity). By comparison, the amount of water lost with the waste solids amounts to less than 10% of the flue gas evaporation in low sulfur coal systems (less than about 1.0% sulfur) and as much as 30% for moderately higher sulfur coal (about 3.5% sulfur). In estimating water losses with waste solids, it has been assumed that the solids content of the wastes is roughly that which can be achieved with filtration and/or pond settlement. In this regard, it has been assumed that the presence of fly ash in sulfite-rich waste (from high sulfur coal) improves the dewatering properties slightly. The result is that there is only a slight increase in water losses with the wastes when ash is simultaneously removed.

Table 3.38

Water Requirements for Generalized Nonrecovery Scrubbing Systems

Basis: 500 MW Boiler
9500 Btu /kWh
Full Load Conditions

	Coal: 3.5% Sulfur, 10% Ash, 12,000 Btu/lb, SO_2: 85%				Coal: 1% Sulfur, 12% Ash, 10,000 Btu/lb, SO_2: 80%	
	Direct Scrubbing[a]		Dual Alkali[b]		Direct Scrubbing[a]	
	With Ash	Without Ash	With Ash	Without Ash	With Ash	Without Ash
Water Losses (gpm)						
Evaporation to Flue Gas	475	475	475	475	475	475
Waste Solids[c]	130	115	125	110	40	15
Total	605	590	600	585	515	490
Water Uses (gpm)						
Reactant Slurry[d]	-	-	205	205	-	-
Pump Seals[e]	150	120	80	50	130	100
Demister Wash	455	470	-	-	385	390
Filter Cake Wash	-	-	315	330	-	-
Total	605	590	600	585	515	490

[a] Lime Stoichiometry = 1.1 (90% CaO in Raw Lime) or
Limestone Stoichiometry = 1.3 (95% $CaCO_3$ in Raw Limestone).

[b] Lime Stoichiometry = 1.0 (90% CaO in Raw Lime).

[c] Waste Solids Properties Assumed:

	Waste Solids Content wo/Ash	Waste Solids Content With Ash
3.5% S Coal - 15% $CaSO_4$/85% $CaSO_3$	50 wt%	60 wt%
1.0% S Coal - 100% $CaSO_4$	80 wt%	80 wt%

[d] Lime Slurry Concentration = 20% Solids Based on CaO.

[e] Pump Seal Water Requirements are illustrative only since they can vary considerably from these numbers.

Source: Arthur D. Little, Inc.

These assumptions concerning the extent of dewatering and the effects of simultaneous ash removal are generalized and will actually vary from system to system. However, only where the ash and/or sulfur levels in the coal are quite high or the dewatering properties of the wastes particularly poor (less than 40% solids by filtration or settlement in a disposal pond) will the quantity of water lost with the wastes represent a significant fraction of the water lost to evaporation. For example, with a 5% sulfur coal (12,000 Btu/lb) containing about 15% ash, the water lost with FGC wastes (including SO_x and particulate removal) dewatered to 50% solids will equal about 60% of the evaporation rate.

In addition to sulfur and ash removal rates and the degree of dewatering, the type of system, the reactant used, and the reactant stoichiometry can all affect water losses in wastes.

It should be noted that the water requirements and consumption shown in Table 3.37 reflect full load conditions. The water balance can change significantly as load is reduced. In general, sulfur and ash removal and evaporation are a direct function of boiler load. As the load decreases, the water losses to evaporation and waste discharge decrease (almost proportionately). The requirement for pump seal water and demister wash, though, are not directly related to boiler load. These typically change in a step-wise fashion as modules (or trains) are taken off-line or put on-line; and this is usually dependent upon the turndown capability of the modules and the operating philosophy. Thus, as load decreases, water balance can become a concern. In fact, some direct scrubbing systems that operate in a closed-loop at relatively high average loads (>60%), require some amount of water discharge during extended periods at relatively low average loads.

A statistical analysis of raw wastewater and scrubber pond overflow was compiled in a recent study [101] and is summarized in Table 3.39.

3.7.3 Water Recycle Options

Some FGD systems now use cooling tower blowdown or ash sluice water for part or all of the scrubber makeup water requirement. The ability

Table 3.39

FGD Systems in Coal-Fired Plants

No.	Variable	No. of Plants	Flow (gpd)	Flow/Gen (gpd/MW)
1	Scrubber Blowdown	13	1,715,876	2,027
2	Pond Overflow	7	842,898	15,749

Source: [104]

to use these or other waste streams can only be determined under site-specific and system-specific conditions. However, two important factors that must be considered in evaluating the feasibility of using such water are:

- The chloride levels, and
- The calcium content.

High chloride levels in scrubber liquors can result in extreme corrosion problems. As shown in Table 3.37, scrubbing systems can concentrate highly soluble impurities by factors ranging from 2 to 10 times the levels present in the makeup water. Hence, the effects of high levels of chloride (or other species) can be magnified considerably.

High calcium levels in makeup water may limit the amount which can be used for demister wash. Calcium levels in many plant wastewater streams, such as ash sluice water or cooling tower blowdown, may be saturated with respect to gypsum. When contacted with scrubbing liquor, this calcium may precipitate causing scaling problems. This could limit its use even for pump seals.

There are other potential impurities as well which can cause problems. Dissolved silica, for example, may present a problem since it is relatively insoluble at low pH, and therefore, can precipitate in the scrubbing liquor. The presence or potential buildup of such species can only be evaluated from a relatively detailed analysis of the potential makeup water streams and the operating conditions and requirements of the FGC systems. In some cases, pilot plant testing is needed to ensure satisfactory FGC system operation. Such testing is frequently conducted as a part of the design work for many systems.

As a part of its contract with the EPA, Radian Corporation [7] has evaluated the potential for use of a number of plant wastewater streams as makeup to FGC systems at five plants. Results indicate the potential for use of combined cooling tower blowdown (CTBD) or ash pond water and fresh water as demister wash and in pump seals. However, careful process analyses and pilot studies are required in each case.

Incorporation of supernate from FGD systems into overall water management is feasible with treatment, but was practiced only in 6 out of 34 plants in 1977. [110] Some pertinent points on recirculation are:

- Wash water from the mist eliminator may be 2 to 4 times the makeup water amount.
- Bleedoff from a recirculating system is essential to prevent scaling and buildup of dissolved solids.
- To obtain effective closed loop, supernate from mechanical or pond dewatering should be included in the overall loop.

Data on scrubber liquors are presented in Volume III.

The impact of FGD waste disposal practices on groundwater is discussed in Volume 5.

3.7.4 Recent Studies

In recent years, the EPA had initiated studies concerning water pollution impact of SO_x control and effective control thereof. The important ones are as follows:

a. In a study completed in 1976, Aerospace [54] assessed potential reuse of scrubber liquid from nonrecovery FGD processes. A number of potentially available water treatment processes were studied to permit reuse. Lime-soda softening, ion exchange evaporation and membrane methods were assessed.

b. Radian Corporation [55] assessed the water pollution impact of controlling SO_x by nonrecovery processes as part of a review of New Source Performance Standards. They concluded that:

   - SO_x control increases total water demand by 8 to 11% depending on the process used. For a 500-MW plant, this amounts to 1.9 - 2.7 m^3 (500-700 gal) per minute.

- If physical coal cleaning is added, total water demand is increased by about 4% (in addition to scrubber needs).
- Stricter NSPS do not have significant effect on water use.
- Effluent streams can be heated to acceptable levels using commercially available technology.

c. Resource Conservation Company [56] studied the use of a vertical tube, falling film, vapor compression evaporator to treat wash water from Chiyoda FGD process. Their test program demonstrated that:

- Net discharge of wastewater could be reduced to as little as 1% of initial volume with the rest available as high quality water (<10 ppm TDS) for reuse.
- The system can operate for long periods without scaling. To prevent calcium sulfate scaling in feed heat exchangers and deaerators up to 15 mg/ℓ of scale inhibitor was added.
- At very high concentration factors (140) energy consumption was 2.6 to 3.2 kWh/m^3 (9.8 to 12.1 kWh per 1,000 gallons).
- Capital cost of full scale system was estimated at $1,350 to $2,300 per m^3/day ($5.11 to $8.71 per gpd) (1977 dollars). This is higher than current desalination technology costs. Operating costs were estimated at $0.65 to $0.95 per m^3 ($2.46 to $3.59 per 1,000 gal).

Overall, it appears that this is a technically feasible technology, but economics may not be acceptable in many cases.

The TVA [91] plans to discharge mist eliminator wash water from FGD systems to ash ponds at one power plant. Acidity of the wash water will help reduce alkalinity of the ash pond.

In a recent FGD system, SO_2 removal was reportedly attained [113] with zero discharge; water requirement was minimized by use of boiler and cooling tower blowdown to supplement well water supply for the FGD system. In principle, zero discharge can be attained by ponding, and solar evaporation in net evaporation areas. However, the overall objective should be optimum water management which would require minimum intake and environmental impacts associated with disposal. The Colstrip Plant of Montana Power [114] is a plant designed on closed loop mode wherein water only leaves the system by evaporation or in the FGD sludge. Close approach to the design has been achieved at Colstrip.

3.8 Miscellaneous Operations

3.8.1 Description of Operations

Water, used for miscellaneous operations such as laboratory and sampling activities, auxiliary cooling water system(s), sanitary facilities and washing of intake screens, can produce minor waste streams.

Laboratory and sampling wastes can differ from plant to plant. Modern plants, where closer controls on operations are required, have more extensive sampling and laboratory activities. There are no quantitative data reported in the literature; however, these wastes are minor (typically about 190 m^3/day or 50,000 gpd) and are probably relatively insensitive to plant size beyond 500 MW.

The auxiliary cooling water systems can be either once-through or recirculating type. The flow-through the once-through system ranges from 1.9-133 lit/min (0.5-35 gpm) per MW with a typical value of approximately 40 lit/min (10 gpm) per MW. This total flow represents the wastewater stream. In closed systems, the recirculation rate is typically 91-95 lit/min (23-25 gpm) per MW. Blowdown from this system is reported to be 0-19 lit/day (0-5 gpd) per MW (13).

Sanitary wastes in a 1,000-MW coal-fired plant employing about 200 people is usually about 26.5 m^3/day (7,000 gpd). Wastes from washing of

intake screens are minor and contain mainly suspended solids. Consequently, there impact on the overall water balance and treatment technology can be considered insignificant.

3.8.2 Waste Characteristics

Laboratory and sampling wastes contain pollutants from the plant stream being tested as well as the reagents used for measuring their concentrations. Data for the quality of laboratory and sampling wastes are not available [5, 12].

The once-through auxiliary cooling water systems are not chemically treated except for occasional shock chlorination [5, 12]. The closed systems employ high purity makeup water. In general, chromates are used up to the 250-mg/ℓ level with caustic soda to maintain pH at 9.5 to 10. Borate and nitrate corrosion system is also used to levels between 500 and 2000 mg/ℓ. Generally, there is no loss from these closed systems except during maintenance cleaning. This cleaning frequency is about once every three years [5].

The sanitary wastes are similar to domestic sewage except that the per capita hydraulic loading is small [.085-.132 m^3 (25-35 gal) per day in the power plant vs. .378-.567 m^3 (100-150 gal) per day for domestic sewage]. The sanitary wastes from a coal-fired plant can be estimated in Table 3.40.

3.8.3 Treatment Options

The laboratory and sampling wastes can be treated in a manner similar to the water treatment wastes. Some of the treatment possibilities mentioned for condenser cooling systems can be adapted for auxiliary cooling water systems. The sanitary wastes can be treated in packaged treatment plants or the wastes can be sent to POTW for disposal [5]. Usually these miscellaneous wastewaters are not treated separately but combined with other streams for central treatment. (See Section 5.2.)

3.8.4 Recycle/Reuse

The above mentioned miscellaneous wastes are minor in nature and they can potentially be sent to a bottom ash pond for reuse (except for sanitary wastes).

Table 3.40

Sanitary Wastes in Power Plants

	Flow m^3/day (gpd)	BOD-5 gm (lb)	TSS gm (lb)
Administrative Personnel	0.095 (25)	30 (0.07)	70 (0.15)
Plant Personnel	0.133 (85)	40 (0.09)	85 (0.19)

Source: [5]

3.9 Maintenance Cleaning Wastes

3.9.1 Description of Operations

Periodic maintenance cleaning of boiler tubes, boiler fireside, air preheater, condenser, feedwater heaters, miscellaneous small equipment, stack and cooling tower basin is essential in a power plant to preserve the cycle efficiencies. The quantity and quality of resulting aqueous wastes are determined by the plant operating and maintenance procedures as well as the cleaning practices followed by the utility.

Boiler Tube Cleaning

A variety of cleaning formulations are used to chemically clean boilers whose operation has deteriorated due to buildup of scale and corrosion products. Analyses of scale deposits are made on sample sections of tubes cut from the boiler. Based on the composition of scale discovered in these samples, a cleaning program is selected. The cleaning program may employ soak or circulation methods. In the former method, the boiler is filled with the cleaning solution and held stagnant (at the appropriate temperature) until the desired degree of cleaning is achieved. In the circulation method, the cleaning solution is circulated through the boiler internals [13].

Alkaline cleaning mixtures with oxidizing agents are used for copper removal. These formulations may contain free ammonia and ammonium salts, (sulfate or carbonate), an oxidizing agent such as potassium or sodium bromate or chlorate, or ammonium persulfate, nitrates or nitrites, sometimes caustic soda. Air is sometimes used as the oxidant. These mixtures clean by the following mechanism: oxidizing agents convert metallic copper deposits to copper oxide and ammonia reacts with the copper oxide to solubilize it as the copper ammonium blue complex. Since metallic copper interferes with the conventional acid cleaning process described below, this cleaning formulation is frequently used to precede acid cleaning when high copper levels are present in the boiler scale.

Acid cleaning mixtures are usually based on inhibited hydrochloric acid as solvent, although sulfuric, phosphoric, nitric and organic acids are also used. Hydrofluoric acid or fluoride salts are added for silica removal. Corrosion inhibitors, wetting agents, complexing agents to solubilize copper may also be included. The organic acids such as EDTA, oxalic, citric, gluconic, acetic, sulfamic, and formic acids are being used increasingly because they are less toxic and easier to handle than hydrochloric acid [57]. These acid mixtures are effective in removal of scale due to water hardness, iron oxides, and copper oxide, but not metallic copper.

Alkaline chelating rinses and alkaline passivating rinses formulations contain ammonia, caustic soda or soda ash, EDTA, NTA, citrates, gluconates, or other chelating agents, and may contain certain phosphates, chromates, nitrates, or nitrites as corrosion inhibitors. These cleaning mixtures may be used alone, or after acid cleaning to neutralize residual acidity and to remove additional amounts of iron, copper, alkaline earth scale compounds, and silica.

Finally, proprietary processes (e.g., Vertan, Citrisolov, etc.), offered by specialized companies, are also used for cleaning boiler tubes. These processes utilize chemicals which are similar to those used in the formulations mentioned earlier.

Waste streams from the soaking method which consist of:

- an acid iron waste in which the iron is not chelated with the cleaning solvent,
- an alkaline copper waste in which the copper is strongly complexed with ammonia, and
- a neutralization drain.

The waste streams from the circulation method usually consist of:

- an acid iron waste in which the iron is chelated with cleaning solvent such as citric acid, and
- a neutralization drain.

Condenser Cleaning

The second major heat transfer component in a power plant is the condenser. Condenser tubes are made out of stainless steel, titanium, or copper alloys. Operational cleaning on the steam side depends upon boiler water quality and is not done frequently. The water side of the condenser is cleaned with inhibited hydrochloric acid [19].

Boiler Fireside Cleaning

The fireside of boiler tubes collects fuel ash, corrosion products and airborne dust. In order to maintain an efficient heat transfer, boiler firesides are cleaned with high pressure fire hoses, while the boilers are hot. Soda ash or other alkaline materials may be used to enhance the cleaning.

Air Preheater Cleaning

Soot and fly ash accumulate on the preheater surfaces and the deposits must be removed periodically to maintain good heat transfer rates as well as to avoid plugging of the tubes or metallic elements. Preheaters are cleaned with high-pressure fire hoses. The washing fluid may contain soda ash and phosphates or detergents which are added to neutralize excess acidity.

Feedwater Heaters Cleaning

The number of closed feedwater heaters in the preboiler cycle ranges from 4 to 10. Tubes may be formed from admiralty brass; 90/10, 80/20, 70/30 cupro-nickel; monel and arsenical copper in the nonferrous group and carbon steel and stainless steel in the ferrous family. Tube sizes are 15.8 - 19.5 millimeter (5/8" or 3/4") O.D. by 4.5 - 24.2 meters (15' - 80') long. They may be straight or hairpin bent tubes. Feedwater flows through the tubes, extracting heat from the steam which surrounds the tubes.

Operational cleaning in general has not been required on the ferrous alloy tubes. Deposits found on the water side of the copper alloy tubing have been predominantly copper and iron oxides. The common solvent used has been 5-20% hydrochloric acid, circulated for six to eight hours at a temperature of 66°C (150°F). Neutralization of the system is often accomplished by circulating a 0.5-1.0% soda ash or caustic soda solution for two to three hours at 49-66°C (120-150°F) followed by rinsing with demineralized water.

Miscellaneous Small Equipment Cleaning

Occasionally, other plant components such as condensate coolers, hydrogen coolers, air compressor coolers, stator oil coolers, etc., are cleaned chemically. Inhibited hydrochloric acid is the common chemical used for cleaning. Detergents and wetting agents are also added when necessary. The waste volume is, of course, smaller than that encountered in other types of chemical cleaning.

Stack Cleaning

Depending upon the fossil fuel used, the stack may have deposits of fly ash, and soot. Acidity in these deposits can be imparted by the sulfur oxides in the flue gases. If a scrubber is used to clean the flue gas, process or equipment upsets can result in additional scaling on the stack interior. Normally, high pressure water is used to clean the deposits on stack walls.

Cooling Tower Basin Cleaning

Depending upon the quality of the makeup water used in the cooling tower, carbonates can be deposited in the tower basin; silt and sand also accumulate here. Similarly, depending upon the inefficiency of chlorine dosages, some algae growth may occur on basin walls. Some debris carried in the atmosphere may also collect in the basin. Consequently, periodic removal of sludge is carried out usually with front end loader and truck.

3.9.2 Waste Characteristics

Wastes resulting from maintenance cleaning operations are intermittent in nature and are characterized by extreme pH ranges, high toxicity and instantaneous large volumes. Chemical cleaning wastes contain scale constituents and the chemicals used for cleaning. Wastes from air preheater washing are generally acidic (pH being dependent upon the SO_x concentration in flue gases) and contain a large concentration of iron. Wastes from washing of stack and cooling tower basin originate less frequently than others and their composition depends upon FGD system and cooling tower performance, respectively.

The range of wastewater flows from maintenance cleaning is summarized in Table 3.41. The range of wastewater composition is shown in Table 3.42, Steiner, et al. [99] report on characteristics of metal cleaning wastes at TVA plants and indicate a volume of 1136 to 3400 cubic meters (300,000 to 900,000 gallons) per cleaning excluding hydroejectors used to discharge the cleaning solution from the boiler. Additional data from a number of plants are reported in a recent EPA study [101].

3.9.3 Treatment Options

The most significant of the periodic wastes in terms of potential environmental impact are the metal cleaning wastes. Pollutants in metal cleaning wastes include chemicals used for cleaning of metal and deposits removed by cleaning. However, options for process modification are minimal and end of pipe treatment is required. Three basic methodologies are available:

- incineration
- ash basin treatment
- physical-chemical treatment

Incineration

With increasing use of organics, incineration has gained in popularity. Some utilities have employed incineration for these wastes from various types of cleaning including ammoniated EDTA, ammoniacal bromate, citric acid, hydroxy acetic acid/formic acid containing ammonium bifluoride. [101] Incineration involves controlled injection of spent boiler cleaning chemicals into the furnace of an operational boiler.

Air Basin Treatment

Ash ponds are used to treat boiler cleaning wastes [101]. The theory is that ash ponds can be the equivalent of conventional lime treatment providing the ash is alkaline. (Many fly ashes are alkaline). In one demonstration project [112], other factors including the effect of dilution in breaking the ammonia complex bond for ammoniated bromate wastes was also considered important.

Table 3.41

Wastewater Flow Range - Maintenance Cleaning

	Flow/Volume Range	Frequency	Typical Flow/Volume
Boiler Tubes	3-5 boiler volumes	once/7 months-once/100 months	1 boiler/1-2 hours
Boiler Fireside	24-720 x 10^3 gal	2-8/year	300,000 gal
Air Preheater	43-600 x 10^3 gal	4-12/year	200,000 gal
Miscellaneous Small Equipment	No Data	--	--
Stack	No Data	--	--
Cooling Tower Basin	No Data	--	--

Source: [5]

Table 3.42

Raw Waste Flow and Loadings - Maintenance Cleaning

No. of Plants in Survey	7 plants	2 plants	7 plants
Wastewater Source	Air Preheater	Boiler Fireside	Boiler Tubes
Cleaning Frequency (#/yr)	4-12	2-8	0-2
Flow (1000 liter)	163-2,271	91-2,725	568-18,622
Parameter (kg)	Kg	Kg	Kg
BOD_5	0-6.82	0	----------
Bromide (Bromate)	---------	--------	----------
COD	2.6-15.9	8.63-515.00	0.45-19,387
Chromium (Total)	0.21-26.88	0.01-0.45	0.21-10,524
Chromium $^{+6}$	---------	--------	----------
Copper	0-2.02	0-0.11	0.06-931,185
Cyanide (Total)	---------	--------	----------
Iron	0.97-3862	13.63-408.90	0.51-595.96
Nickel	8.14-170.38	0-13.63	42,592-133,826
Oil and Grease	---------	--------	----------
Phosphate (Total)	0.02-2.66	0.12-5.04	0.02-3.48
Total Dissolved Solids	1,448-20,096	1,363-15,948	111.11-43,598
Total Suspended Solids	217-4,898	54.07-1,736	0-1,590
Total Solids	1,188-29,744	1,817-18,551	111.11-48,868
Surfactants	---------	--------	----------
Zinc	0.13-11.36	0.91-13.04	0.35-391,098

Source: [5]

Physical/Chemical Treatment

A number of treatment schemes employing physical/chemical processes have been tested, designed, and implemented for the treatment of boiler chemical cleaning wastes. The basic mechanism behind these treatment schemes involves neutralization with caustic or lime followed by precipitation of the metal-hydroxide compounds [101]. However, there are a number of additional unit processes which have been employed on certain waste chemical solutions in order to increase the degree of attainable reduction of certain constituents. These additional unit processes include: mixing with other metal cleaning waste source, oxidation, sulfide addition, filtration, membrane technology, and carbon adsorption. In the treatment of waste boiler chemical cleaning solutions, the use of these unit processes, either alone or in combination with others, is dependent upon which waste solution is being treated. Various characteristics of individual waste streams make the use of certain unit processes feasible. The overall scheme has to be highly system specific.

Since the maintenance cleaning wastes are intermittent in nature, flow equalization is necessary prior to treatment. The storage requirements can be minimized by scheduling the cleaning frequencies on a controlled basis. As was noted for many other wastewater streams, maintenance cleaning wastes are often mixed with other streams and treated in a control treatment facility see Section 5.2). However, specific treatment for heavy metals and organics removal has been practiced. In many cases, control treatment of maintenance cleaning wastes may be viable.

Heavy metals (Cu, Fe) from the maintenance cleaning wastes can be removed as insoluble hydroxides by lime addition [5]. The dissociation of complexed copper (copper-ammonia, copper-ammonia-EDTA) may require ammonia stripping to facilitate copper precipitation by lime. The presence of other heavy metals (mainly iron) from air preheating wastes will also facilitate the dissociation of copper complexes because of competition for hydroxyl ions. Oxidizing ions (such as chlorates and bromates) used for copper removal can be decomposed by reduction (to chloride and bromide ions).

Some specific treatment methods are:

- The iron waste from the soaking method can be treated by chemical neutralization of pH 9 with lime followed by sedimentation. TVA [91] has demonstrated that this acid iron waste can be treated in alkaline ash ponds that have a pH greater than 9. The high iron concentration in the waste will precipitate and be retained in the alkaline ash pond.

- Iron waste from the circulation method may not be effectively treated by conventional chemical neutralization-precipitation processes because of complex compounds such as iron citrate [91]. The structure of the complexing agent appears to determine the effectiveness of treatment. Bench-scale tests performed at TVA indicated [91] that iron could be removed from the citric acid cleaning waste from 4,000 mg/l to less than 1 mg/l at the high pH level of 13.

- The copper waste from the soaking method cannot be reduced to a copper concentration of less than 1 mg/l by chemical neutralization alone because of the strong, complex copper-ammonia compounds. Other treatment processes such as aeration plus chemical neutralization-precipitation, chemical precipitation with sodium sulfide, ion exchange, and reverse osmosis can reduce the copper concentration to less than 1 mg/l [96]. Aeration plus chemical precipitation can remove both copper and ammonia, however, column stripping may not be practical because of the scaling problem in the stripping tower. Chemical precipitation with sodium sulfide to break the complex copper-ammonia bonding is attractive, but post-treatment of residual sulfide would be required to control hydrogen sulfide gas evolution.

Reverse osmosis is a feasible method to remove copper after neutralization and precipitation has removed the bulk of the solubles in the waste. Thus some pretreatment states are required (to avoid the scaling problem in the membrane modules at high-volume recovery). Incineration of the copper waste in the steam plant furnace [95] is another alternative.

The incineration method may require extensive monitoring studies to ensure that copper would not redissolve in the ash sluice water and to assess the increase in levels of NO_x in the stack gas, which results from incinerating the nitrogen compounds.

Chu [96] reports that TVA has investigated a process of treating the copper waste in alkaline ash ponds. It was found that the chelated copper-ammonia bonds can be broken by dilution with ash pond water, after which copper ion is precipitated at alkaline pH levels. Also, copper adsorbs on fly ash. Although the adsorption capacity of copper on fly ash is limited (about 4.7 μg copper per gram of fly ash), the additional copper removal by ash adsorption can ensure the reduction of copper concentration (excluding the dilution factor) to less than 1 mg/l.

Steiner, et al. [99] based on bench-scale tests on TVA wastes, concludes that in general, six methods of treatment of metal cleaning wastes (which include acid, alkaline and passivation wastes) are potentially available.

a. Treatment of acid wastes in alkaline ash ponds.

b. Treatment of alkaline wastes in alkaline ash ponds. At four TVA plants where ammoniated bromate is used, it is reported that treatment would require five steps:

   1. Maintain the pH of the ash pond above 8.5.

   2. Hold the waste for several days in the holding pond to allow evolution of excess ammonia and precipitation of some copper.

   3. Discharge the waste from the holding pond into the ash pond near the fly ash sluice pipe to optimize copper adsorption on fly ash.

   4. Discharge the waste from the holding pond at a rate dependent on the copper and ammonia concentrations in the waste and the flow rate of the ash pond.

5. Maintain an approximate retention time in the ash pond of about 10 hours.

c. Combined chemical treatment.

d. Chemical treatment of acid and passivation wastes.

e. Chemical treatment of alkaline wastes.

f. Treatment of suspended metals.

In most of the above methods, pH control is used as a key variable.

Hittman Associates recently initiated a study [58] for the EPA to evaluate lime treatment of boiler cleaning wastes. This study, now under way, will evaluate the application of lime precipitation to boiler cleaning wastes to destabilize metal chelates and complexes. The plan of work includes the following:

- Perform an engineering analysis (including types of deposits to be removed, type of metal to be cleaned, cleaning economics, etc.) of several chemical cleaning systems applicable to waterside boiler tube cleaning.
- Perform lime precipitation, fireside wastewater dilution, flocculation and sedimentation bench-scale tests on selected boiler cleaning wastewater samples, so as to select the optimum wastewater control process scheme.
- Evaluate the performance of an existing full-scale, lime precipitation, boiler tube cleaning wastewater treatment system employing the previously selected optimum treatment scheme.

The overall objective of this effort is to determine the effectiveness of lime precipitation in meeting effluent guideline limitation of 1 mg/ℓ for iron and copper in the treated wastewater from boiler cleaning.

Chemical cleaning wastes containing organic compounds can be disposed by incineration [5, 57]. Some of the organic acids (citric acid, gluconic acid) are biodegradable and the cleaning wastes which contain these acids can be disposed by biological methods [57].

3.10 Drainage

3.10.1 Description

The principal wastewater streams comprising drainage are discussed below:

a. Floor and Yard Drains: These collect wastes from leakage, numerous cleaning operations, and process spills and leaks. Often the wastewater contains dust, fly ash, coal dust, oil and detergents [12]. Such wastes are at present discharged to POTW in many cases.

b. Coal Pile Runoff: Coal-fired power plants require the storage of large quantities of coal, at or near the site, to both ensure continuous plant operation and simplify delivery by the supplier. Normally, a supply of 90 days is maintained. Storage piles are generally 8 to 12 meters (25-40 ft) high, spread over an area of several square meters (or acres). Typically, from 600 to 1800 cubic meters (780 to 2340 cu yds) are required for coal storage for every MW of rated capacity [5]. Therefore, a 1000-MW plant would require from 600,000 to 1,800,000 cubic meters (780,000 to 2,340,000 cu yards) of storage. Depending on coal pile height, this represents between 60,000 and 300,000 square meters (15 to 75 acres) of coal storage. Coal pile reserves are stored in either active or inactive storage piles. Active storage piles are usually open and exposed to all weather conditions Inactive piles are generally sealed with a tar spray or some other impervious covering which provides protection from the weather. Consequently, only runoff from active coal storage piles is of major concern.

3.10.2 Waste Characteristics

a. Floor and Yard Drains: These are usually a minor stream but vary widely in total volume. With proper operating procedures, these can be minimized. In some of the open or dry areas of the country some plants do not need and do not have yard drains [5]. Typical characteristics of yard and floor drains are listed in Table 3.37.

b. Coal Pile Run-Off: Surface run-off and seepage from coal piles constitute coal pile runoff. Table 3.43 presents some typical coal piles and the volume of run-off.

Waste discharges from coal piles can be acidic or alkaline [12]. Acid drainage is the result of the reaction of pyrites (FeS_2) with water and oxygen (in air) which produces iron sulfate and sulfuric acid. Such drainage is highly acidic and often contains aluminum. Alkaline discharges occur when the acidic discharge is neutralized by other materials in the coal. Alkaline drainage has a pH of 6.5 to 7.5 or more, and has ferrous salts. If the pH and concentration are high enough, iron may precipitate by oxidation and hydrolysis. In addition, coal pile drainage contains high concentrations of other dissolved solids and significant amounts of copper, zinc and manganese. Some coal pile runoff data are presented in Table 3.44.

A recent study [61] undertaken by the TVA to characterize coal pile drainage at two TVA coal-fired power plants concludes that:

"1. Coal pile drainage is a highly acidic waste stream containing high concentrations of iron, manganese, sulfate, TDS, and a variety of trace elements.
2. About 73% of total rainfall results as direct runoff.
3. Shaker type elution studies in the lab cannot, at least at the time, be used to predict runoff quality.
4. Coal pile drainage can effectively be treated with alkaline fly ash."

Table 3.43

Coal Pile Drainage

Coal Consumed/Day		Area of Pile		Height of Pile		Annual Average Rainfall		Runoff Per Year	
$lbx10^6$	$kgx10^6$	Acres	M^2x10^3	Ft.	Meters	Inches	Meters	Million Gallons	M^3x10^3
15	6.81	25	101.85	40	12.19	44	1.117	20	75.7
15	6.81	75	305.55	17	5.18	54.7	1.389	25	94.62
20.6	9.35	18	73.33	40	12.19	45.84	1.164	25	94.62
14.34	6.51	21	85.55	25	7.62	43.1	1.094	17	64.34

For illustrative purposes only.

Source [5]

Table 3.44

Typical Coal Pile Runoff Characteristics

Plant No.	TDS (mg/ℓ)	TSS (mg/ℓ)	pH	Copper (mg/ℓ)	Zinc (mg/ℓ)	Iron (mg/ℓ)	Magnesium (mg/ℓ)
1	720	610	2.8	1.6	1.6	0.17	-
2	7,743	22	3.0	-	2.4	-	-
3	5,800	200	4.4	-	-	0.006	174
4	44,050	950	2.8	3.4	23.0	93,000	-

For illustrative purposes only.

Source [5]

3.10.3 Treatment Options

The drainage from coal piles is acidic; hence, the solubility of iron, manganese, and some other trace metals are increased. If the drainage is discharged to a receiving stream, some degree of treatment may be required to prevent adverse environmental impact. Treatment of coal pile drainage could be achieved by collecting and diverting the drainage to a storage basin for coal fine settling and for pH adjustment with lime before discharge to the river.

The extent of contamination from coal pile runoff can be substantially reduced by proper construction of the coal storage area. Inactive coal piles can be sprayed with tar or covered with plastic sheeting to seal the surface to water infiltration. In areas where the rate of evaporation is higher than the rate of precipitation, runoff can be disposed of by evaporation in ponds. Alternatively, a drainage system can be constructed so as to collect the coal pile drainage and use it in processes which tolerate low quality waters such as ash handling systems. If the plant is located near a mine, such water can be used in the coal washers to remove mineral matter.

Systems to collect coal pile runoff installed in recent years vary considerably in both complexity and costs. Elaborate collection systems would be required at some plants where unusual terrain conditions and space limitations exist. At one midwestern plant of about 1,000-MW capability a new system collects runoff by gravity in a concrete basin from which it is pumped to an adjacent ash settling basin. The collection and treatment systems would cost (mid-1978 dollars) about $800,000 to install. On the other hand, at one Eastern plant such collection is accomplished merely by grading the adjacent areas to route run-off by gravity to an existing ash pond. Such a system would cost (mid-1978 dollars) about $31,000 to install. These are updates on cost data (to mid-1978 levels) reported in the literature [5,12].

It is reported that at TVA [91,96], the present strategy for discharge of coal pile drainage is to route it through the ash pond before it is discharged into receiving streams. The ratio of total coal pile

drainage flow to total ash pond discharge flow averages 0.001 to 0.012 at TVA's 12 coal-fired power plants. The iron in the coal pile drainage can be removed to less than 1 mg/ℓ after it is combined with ash pond water having a pH above 6 [96]. Concentrations of trace metals are lower after dilution of the coal pile drainage with alkaline ash pond water; most of these trace metals precipitate on machinery near neutral or slightly alkaline pH values.

4.0 REGULATORY CONSIDERATIONS

4.1 Existing and Proposed Regulations

Existing regulations covering waste water discharges from steam-electric power plants are given in the Code of Federal Regulations (CFR), Part 423. They were formulated following the industry study which resulted in the publication of the Development Document in October, 1974 [5].

4.1.1 Waste Water Discharges Requiring NPDES Permit

A summary of National Pollutant Discharge Elimination System (NPDES) guidelines and standards for chemical parameters in steam-electric power plant effluents is given in Table 4.1. Eight waste streams from plant sites are regulated individually and the guidelines for each vary with the size of the generating units. Thermal effluents are similarly regulated by the size of the unit but an additional factor, the unit's age, is accounted for, as shown in Table 4.2.

The EPA's Effluent Guidelines Division is reconsidering several regulations successfully challenged by the industry in the courts. The remanded regulations included thermal discharges; zero discharge of TSS from fly ash ponds for new sources; and portions of the area runoff regulations (excluding coal piles and chemical handling areas). New regulations have not yet been proposed and may not be for some time. The impact of this court-ordered remand on discharge permits may not be significant since states and/or regional EPA offices where NPDES discharge permits are issued have a fairly wide latitude in using their own judgment and consideration of local and site specific factors in writing permits.

The existing regulations do exert some limited pressure, primarily on new plants, to increase the amount of water recycled and reused. The specific areas involved are: fly ash transport water, cooling tower blowdown, and heat from main condenser cooling water.

BAT guidelines for cooling tower blowdown are less stringent than NSPS (no detectable amount) which provide a more significant inducement for recycling water in existing units. In many cases it would be less costly to treat the used water for reuse rather than to meet the more

Table 4.1

Summary of Wastewater Guidelines and Standards for Steam Electric Power Plants
(excluding heated discharges)

WASTE STREAMS	PARAMETER	EFFLUENT CONCENTRATIONS (mg/l): AVERAGE (MAXIMUM)							
		SUBPART A: GENERATING UNITS			SUBPART B: SMALL UNITS			SUBPART C: OLD UNITS	
		BPT	BAT	NSPS	BPT	BAT	NSPS	BPT	BAT
1. Low Volume Waste Sources	TSS	30(100)	30(100)	30(100)	30(100)	30(100)	30(100)	30(100)	30(100)
	O&G	15(20)	15(20)	15(20)	15(20)	15(20)	15(20)	15(20)	15(20)
2. Ash Transport Water (Bottom and/or Fly)	TSS	30(100)	30(100)	* F:None B:30(100)	30(100)	30(100)	30(100)	30(100)	30(100)
	O&G	15(20)	15(20)	F:None B:15(20)	15(20)	15(20)	15(20)	15(20)	15(20)
3. Metal Cleaning Wastes, and	TSS	30(100)	30(100)	30(100)	30(100)	30(100)	30(100)	30(100)	30(100)
	O&G	15(20)	15(20)	15(20)	15(20)	15(20)	15(20)	15(20)	15(20)
4. Boiler Blowdown	Cu (Tot.)	1(1)	1(1)	1(1)	1(1)	1(1)	1(1)	1(1)	1(1)
	Fe (Tot.)	1(1)	1(1)	1(1)	1(1)	1(1)	1(1)	1(1)	1(1)
5. Once-through Cooling Water	Free Cl	.2(.5)	.2(.5)	.2(.5)	.2(.5)	.2(.5)	.2(.5)	.2(.5)	.2(.5)
6. Cooling Tower Blowdown	Free Cl	.2(.5)	.2(.5)	.2(.5)	.2(.5)	.2(.5)	.2(.5)	.2(.5)	.2(.5)
	Zn	—	1(1)	No detectable amount	—	1(1)	No detectable amount	—	1(1)
	Cr	—	.2(.2)		—	.2(.2)		—	.2(.2)
	P	—	5(5)		—	5(5)		—	5(5)
	Corrosion Inhibitors	—	case-by case		—	case-by case		—	case-by case
7. All of above (except #5 for pH)	pH, units	6-9	6-9	6-9	6-9	6-9	6-9	6-9	6-9
	PCB's	0	0	0	0	0	0	0	0
8. Material Storage and Construction Runoff (up to 10 yr.-24 hr. Rainfall	TSS	-(50)	-(50)	-(50)	-(50)	-(50)	-(50)	-(50)	-(50)
	pH	6-9	6-9	6-9	6-9	6-9	6-9	6-9	6-9

Source: 40 CFR 423

* F (Fly Ash) B (Bottom Ash)

Table 4.2

Summary of Effluent Limitations Guidelines and Standards for Heat*

All no-discharge limitations allow for blowdown to be discharged at a temperature not to exceed the cold-side temperature, except where a unit has existing closed-cycle cooling blowdown may exceed the cold-side temperature. All limitations for existing units to be achieved by no later than July 1, 1981, except where system reliability would be seriously impacted, the compliance date can be extended to no later than July 1, 1983.

EXISTING GENERATING UNITS	
Capacity 500 MW and greater	
Placed into service prior to January 1, 1970	NO LIMITATION
Placed into service January 1, 1970 to thereafter	NO DISCHARGE†
Capacity 25 MW to 499 MW	
Placed into service prior to January 1, 1974	NO LIMITATION
Placed into service January 1, 1974 or thereafter	NO DISCHARGE†
Capacity less than 25 MW	NO LIMITATION
†Note: Exceptions prescribed on a case-by-case basis for units in systems of less than 150 MW capacity, units with cooling ponds or cooling lakes, units without sufficient land available, units with blowdown TDS 30,000 mg/l or greater and neighboring land within 500 ft. of cooling tower(s), and units where FAA finds a hazard to commercial aviation would exist.	
NEW SOURCES	NO DISCHARGE

*Notes: No effluent limitations on heat from sources other than main condenser cooling water.

Source: 40 CFR 423

strict discharge requirements. New and recently built sources cannot discharge heated main condenser water except under unusual cooling circumstances. New sources are essentially forced to use a recycle system (with discharge of heated blowdown allowed) while older recently built systems have additional options. It is currently believed that while zero discharge under BAT may still be a distant goal, recent focus has been on priority pollutants discussed later.

4.1.2 Discharges to a Publicly Owned Treatment Works (POTW)

It is estimated [98] that 250 steam-electric power plants in the United States discharge some wastes to Publicly Owned Treatment Works (POTW). A significant fraction of these discharges (by number) may consist only of sanitary wastes since, in a separate report [12], the number of steam-electric power plants discharging "chemical" wastes to a POTW was estimated to be 98% (7.7% of the 1,273 plants in the United States).

The EPA's special treatment report for steam-electric power plants [12,98] recommended the promulgation of pretreatment standards for all existing dischargers to POTW's. The recommended standards are not so stringent with regard to chemical parameters as to provide incentive for increased recycle/reuse of water. The recommended maximum level for Poly Chlorinated Biphenyls (PCB's) was "no discharge"; for copper, 1 mg/ℓ; and, for oil and grease, 100 mg/ℓ.

On June 26, 1978, the EPA revised its general pretreatment standards such that they now apply to both new and existing sources. 40 CFR 128 was replaced by a new 40 CFR 403. These regulations do not list specific parameters and associated concentrations and/or loadings of pollutants. Such standards will be established separately. The June 26, 1978 regulations do provide the rationale for subsequent establishment of industry-specific standards -- they will be technology based, i.e., best available technology economically achievable. The general standards contain the standard prohibitions against the discharge of waste which could create a fire hazard, corrosion problems, obstruction problems, or POTW upsets. These upsets are predominantly due to the inhibition of biological treatment processes. Table 4.3 lists the threshold concentrations of

Table 4.3

Threshold Concentrations of Pollutants That Are Inhibitory to Biological Treatment Processes

Pollutant	Process		
	Activated Sludge (mg/ℓ)	Aerobic Digestion (mg/ℓ)	Nitrification (mg/ℓ)
Ammonia	480	1,500	
Arsenic	0.1	1.6	
Borate (Boron)	0.05-100	2	
Cadmium	10-100	0.02	
Calcium	2,500		
Chromium (Hexavalent)	1-10	50	0.25
Chromium (Trivalent)	50	50-500	
Copper	1.0	1.0-10	0.005-0.5
Cyanide	0.1-5	4	0.34
Iron	1,000	5	
Lead	0.1		0.5
Manganese	10		
Magnesium		1,000	50
Mercury	0.1-5.0	1,365	
Nickel	1.0-2.5		0.25
Silver	5		
Sodium		3,500	
Sulfate			500
Sulfide		50	
Zinc	0.08-10	5-20	0.08-0.5
Phenols:	200		
Phenol			4-10
Cresol			4-16
2-4 Dinitrophenol			150

Source: [99]

several pollutants that may inhibit biological treatment processes. Oil and grease, although not in this table, can also be inhibitory; in excessive amounts, they can lower the density of floc in an activated sludge wastewater system to the point where the sludge settling properties are destroyed. A concentration of 50 mg/ℓ of oil and grease in the influent to an activated sludge system would probably not be inhibitory.

The June 26, 1978, general pretreatment regulations are sufficiently flexible that local POTW's continue to have a major responsibility in setting specific standards and enforcing them. Thus, the federal pretreatment standards provide little or no inducement for increased water recycle and reuse. The fees charged by POTWs, often related to flows and waste loads, are more likely to be an inducement to recycle. When, and if, specific chemicals and concentrations are specified by EPA, it is possible that some pressure for increased recycle and reuse will result, since the cost for treatment for recycle could be lower than the cost of pretreatment for discharge to a POTW.

4.1.3 Water Intakes

As required by Section 316(b) of the Federal Water Pollution Control Act (FWPCA) Amendments of 1972, the EPA has required (40 CFR 402) that a determination be made whether the location, design, construction, and capacity of cooling water intake structures (for new sources) reflect the best technology available for minimizing environmental impact. A key concern is to minimize the entrainment and entrapment of fish and other aquatic life. A Development Document covering this subject area has been prepared by the EPA.

Even though the regulations issued on intake structures are broad and non-specific, they were challenged by the industry. The industry recently won a court-ordered remand (to the EPA for further consideration), but the impact of this is expected to be inconsequential because of:

- the nonspecificity of the initial regulations, and
- the flexibility available at the state and regional EPA offices for control of power plant designs and associated permits.

There are, apparently, no plans at present by the EPA to revise and reissue intake regulations in the near future.

It is not clear, at present, just how many new sources will be forced to use a closed-circuit cooling system as a result of the 316(b) regulations. It is likely to be a critical factor only in those cases where an intake is to be located in important spawning areas. Even here, an intake associated with a once-through system may be approved if it is designed (as it is possible to do) to keep intake velocities below (0.5 to 0.8 ft/sec).

4.1.4 Remand Decision

The U.S. Court of Appeals for the Fourth Circuit reviewed petitions by a number of utilities against certain aspects of EPA regulations concerning aqueous effluents from power plants. On July 16, 1976, the Court decided that the following regulations in Chapter 40 CFR should be set aside and remanded to the EPA for further consideration:

- §423.12(a) effluent limitation variances for BATEA,
- §423.13(1)(m) thermal backfit requirements,
- §423.13(1) ban on cooling lakes in closed-cycle cooling systems,
- §423.40 through 423.43 rainfall runoff limitations for material storage and construction site runoff, and
- §423.15(e) and 423.25(3) no-discharge limitation for fly ash transport water.

In addition, the Court directed that the EPA reevaluate (a) its requirements for closed-cycle cooling at generating units located along the nation's coastlines, and (b) its refusal to create a subcategory for AEC approved nuclear generating stations. They further direct the EPA to include a variance provision for new sources in accordance with this opinion.

The remand decision was based on the following considerations:

- that the EPA did not adequately consider the balance of costs and environmental benefits of its thermal backfit requirements; EPA's contention that such an analysis was beyond the state-of-the-art was not accepted by the court;

- that guidelines for granting of variances from the regulations must include economic considerations and environmental issues unrelated to water quality (cross media impacts);
- that the EPA should consider more thoroughly the impact of its ban on cooling lakes with respect to the consumptive use of water, particularly in arid regions;
- that the EPA had not presented sufficient data to show that its recommended technology for the control of suspended solids in runoff (settling ponds) would achieve the required effluent concentration of 50 mg/ℓ;
- and that the EPA had not presented sufficient data to demonstrate that dry ash handling was an available technology.

The court ruled in favor of the EPA in its implementation of Section 316(a) of FWPCA, finding that a demonstration of compliance with state water quality standards was not sufficient to show assurance of the protection and propagation of a balanced, indigenous population of shellfish, fish and wildlife.

As a result of the Remand Decision and other factors (namely the Consent Decree discussed in Section 4.1.5 and the Clean Water Act of 1977 discussed in Section 4.2.2) the Effluent Guidelines Division of the EPA undertook additional studies and evaluation with the objective of appropriately revising effluent guidelines for the steam electric industry (SIC 4911). A Technical Report in support of such efforts was issued in January 1979 [101]. Revisions to effluent guidelines for this industry are anticipated late 1979.

Some potential developments on some aspects of the Remand Decision are:

a. Dry Ash Handling. Dry ash handling is practiced at many plants today. It may be possible to gather data on such dry handling systems and if appropriate use the data base to require dry ash handling for new plants. Some organizations have found that dry ash handling for new plants

may be the more economical choice if environmental factors, cost of land, aesthetics and all other considerations are included. It is noted that 68% of the power plants have dry collection and unloading facilities for fly ash [52].

b. Technology for Control of Suspended Solids in Runoff. The 50 mg/ℓ limit for TSS may be a difficult one to achieve; however, conventional collection and retention basins for runoff and treatment of the latter to a reasonable degree may be feasible.

4.1.5 Priority Pollutant Removal

In June 1976, the EPA entered into a settlement agreement (consent decree) as the result of a court case by three public environmental action groups. The case gave the EPA a mandate to regulate effluents containing any of the agreed-upon priority pollutants. Steam-electric power plants have a number two priority on the list of 21 industrial categories to be regulated. In early 1979, the EPA was nearly on schedule with regard to the schedule requirements of the agreement. The Technical Report has been issued [101]. Revised effluent guidelines setting limitations on the discharge of any consent-decree compounds will be proposed by mid-1979.

Table 4.4 presents a list of priority pollutants potentially present in utility effluents. Many of these are additives (e.g., biocides, corrosion inhibitors), maintenance chemicals (e.g., cleaning solvents), or derived from construction materials (e.g., asbestos, PCB's in transformers). All of these chemicals might be eliminated from the effluent by switching to other chemicals and construction materials. Most other priority pollutants listed in Table 4.4 are "generated" by the processes carried out by the plant; for example, heavy metals are derived from the fly ash and bottom ash, from the corrosion of pipes, from the cleaning of metal parts, and from the leaching of coal piles by rain water. A variety of chemicals, including both organic and inorganic priority pollutants, may enter wastewaters after being scrubbed from

Table 4.4

Priority Pollutants Potentially Present in Utility Effluents

Toxic Substances Potentially Present in Utility Effluents	Sources: Cooling system treatment	Corrosion and scale inhibitor	Corrosion inhibitor	Biocide - cooling system	Condensate neutralizer	Cleaning product	Ash constituent	Construction material	Cooling tower material	Insulation	Maintenance material	Transformer fluid	Lab reagent	Instrument use
Acrolein				x										
Antimony and compounds							x							
Arsenic and compounds				x			x							
Asbestos									x	x				
Benzene				x										
Beryllium and compounds							x	x					x	
Cadmium and compounds							x	x						
Carbon tetrachloride				x										
Chlorinated benzenes				x									x	
Chlorinated ethanes						x								
Chloroalkyl ethers				x									x	
Chlorinated phenols				x										
Chloroform											x			
Chromium and compounds		x					x	x					x	
Copper and compounds			x				x	x						
Cyanides		x		x			x							
2,4-Dichlorophenol	x					x								
Lead and compounds							x							
Mercury and compounds				x			x							
Naphthalene														x
Nickel and compounds							x	x					x	
Nitrosamines					x									
Pentachlorophenol				x		x								
Phenol														
Polychlorinated biphenyls											x			
Polychlorinated aromatic hydrocarbons												x		
Selenium and compounds											x			
Silver and compounds							x							
Thallium and compounds							x							
Toluene							x							
Zinc and compounds						x								
				x			x	x					x	

Source: [13, 15]

the air in cooling towers. Particular emphasis may be placed on the heavy metals since, in many cases, these pollutants are generated in large quantities by the processes.

The overall magnitude of the metals problems was indicated in the Development Document for Steam-Electric Power Plants. It was found that effluents from steam-electric power plants contribute a significant portion (14%) of the total national discharge of metals from major industrial point sources, e.g., 50% of the chromium, 14% of the copper, 10% of the iron, 21% of the zinc, and 14% of all metals as a whole. Table 4.5 gives the estimated total and relative discharge of a few heavy metals from steam electric power plants. The contribution of ash ponds, boiler cleaning, and condenser cleaning represent the major fraction of iron and copper discharges as shown in Table 4.6.

If the regulations resulting from the consent decree are stringent, they will very likely prove to be a significant inducement for both new and existing sources to increase the amount of water recycled and reused. This will only happen, as previously stated, if the cost of treatment associated with recycle is less than the cost of treatment associated with discharge.

The EPA is also currently looking at other chemicals (i.e., other than consent decree compounds) in wastewaters from steam-electric power plants, and regulations on their discharge may eventually be promulgated.

4.1.6 "Zero Discharge" Goal of PL 92-500

The Federal Water Pollution Control Act Amendments of 1972 (PL 92-500) declared that "...it is the national goal that the discharge of pollutants into the navigable waters (of the United States) be eliminated by 1985." While it has become increasingly clear since the passage of this act that this goal may be very difficult to achieve there will no doubt be continued pressure on both industry and municipalities to reduce the discharge of pollutants to the absolute minimum. Moreover, in recent years it is becoming clear that a power plant has many different types of wastewater with different potential impacts. Zero discharge may be a goal necessary and practicable for some streams like ash pond

Table 4.5

Total Metals Discharged From Power Plants in the U. S., 1973

Compared to Other Industrial Sources

(Includes Cooling Water Discharges)

Pollutant	Discharges by Major Steam Electric Power Plants (lb/day)	Percentage of All Major Dischargers
Chromium	15,365	50
Copper	2,739	14
Iron	20,683	10
Zinc	20,099	21
Total	58,886	14

Source: [1]

Table 4.6

Total Iron and Copper Discharges from

Coal-Fired Power Plants in the U. S., 1973

Source	Iron (lb/day)	Copper (lb/day)
Ash Ponds	10,200	180
Boiler Cleaning	1,500	150
Condenser Cleaning	-	40
Total	11,700	370

Source: [1]

effluents. However, it may be quite difficult or impractical and indeed unnecessary from the viewpoint of environmental impacts for certain other effluents. At the same time, the importance of some specific pollutants has come into sharper focus. Thus the thrust of regulatory developments in the future may be increased to focus on control of specific priority pollutants rather than a categorized emphasis on zero discharge.

4.1.7 Clean Water Act of 1977 (PL 95-217)

The Clean Water Act of 1977 incorporates the list of priority pollutants from the 1976 consent-decree into specific portions of PL 92-500. Section 301 of PL 92-500 now requires the EPA to set effluent limitations for each pollutant based on best available technology economically achievable (BATEA). Point source discharges, other than (POTW's) must comply with these limitations by July 1, 1984.

The priority pollutants were also included in Section 307 of PL 92-500, which deals with "Toxic and Pretreatment Effluent Standards." The limitations may be relaxed - in some cases - if the POTW removes all or any part of the toxic pollutant.

It seems clear that the legislative mandate of PL 95-217 will, when implemented, significantly help the control of toxic chemical discharges and, in turn, put added pressure on industry for increased recycle and reuse of its waters.

4.1.8 Resource Conservation & Recovery Act of 1976 (RCRA)

RCRA provides for regulation of the disposal of solid wastes by governing the disposal practice and one of its principal impact (among other objectives) is expected to be the prevention of groundwater contamination by solid waste disposal. Proposal regulations have been issued under the Act and indicate the following [102]:

- Any solid wastes including FGC wastes will be tested using defined test procedures under Section 3001 of the Regulations.

- If a waste passes these tests, then such solid wastes are not governed by any federally-enforceable regulations. EPA will issue regulations under Section 4004 for environmentally sound disposal of non-hazardous solid wastes. States are responsible for implementing and enforcing the requirements of Section 4004.

- If a waste fails Section 3001 tests, it will be treated as a hazardous waste under Section 3002, 3003 and 3004 and a "special waste" category was created to cover large volume wastes with potentially low hazard level. It is proposed that FGC wastes if they fail Section 3001 tests will be placed in this "special" category. Such special wastes would be subject to environmental monitoring record keeping and other requirements. However, the engineering standards required for other hazardous wastes will not apply to FGC wastes until EPA promulgates storage, treatment, and disposal regulations specifically applicable to FGC wastes.

RCRA related matters are discussed further in Volume V. RCRA does specify specific design criteria for surface improvements of basins which are required to treat surface run-off and leachate. Further it is noted that increasingly stringent effluent guidelines will encourage conversion of many pollutants in effluents into solid wastes. Disposal of such solid wastes on land will be constrained by RCRA regulations.

4.1.9 National Energy Act of 1978

In 1978 the National Energy Act (NEA) was passed by Congress and encompasses five separate bills:

- National Energy Conservation Policy Act of 1978,
- Powerplant & Industral Fuel Use Act of 1978,
- Public Utilities Regulatory Policy Act,
- Natural Gas Policy Act of 1978, and
- Energy Tax Act of 1978.

At present, detailed regulations to implement the overall framework of NEA are being worked out by the Department of Energy (DOE). The regulations would promote the use of coal, renewable energy sources, and other alternative fuels over oil and natural gas wherever possible. While the full impact of NEA on utility and industrual power plants needs further definition, the following appear to be indicated:

a. All new boilers, gas turbines and combined cycle units with a capacity larger than 10 MW will be prohibited from using oil or natural gas unless specifically exempted by DOE.

b. Existing facilities that are coal capable but not using coal now may be required to switch to coal or an alternative fuel. Financial capability to use coal or alternate fuels will be considered by DOE. DOE will consider whether an existing boiler has furnace configuration and tube spacing to burn coal. However, addition of particulate and FGD systems may not be considered substantial modifications preventing a switch to coal. Furthermore, derating of less than 25% by switching to coal will not be considered substantial. These regulations will apply to single units of 100 MBtu/hr or more or multiple units in one site which is aggregate are by design capable of a fuel input rate of 250 MBtu/hr or more.

It is anticipated that NEA will encourage use of coal over the next twenty years. Additional solid wastes and wastewaters will be generated by a switch to coal. Focus on these incremental problems is essential.

4.2 Possible Future Regulations

4.2.1 A Multimedia Approach May Be Required

Power plants generate wastes that are discharged to the air and to the land as well as to the waters. And, in many cases, the relative amounts of pollutants eventually discharged to the three media (air, water, land) are interrelated. For example, control of air emissions

may generate additional fly ash and SO_2 scrubber sludges which must be disposed on land; also, a high level of wastewater treatment may require the use of significant amounts of energy which, in turn, results in the discharge of pollutants associated with the generation of that energy.

Thus, several questions are posed. Is the fragmented approach that is sometimes taken to the control of industrial pollution being implemented at cross purposes? What is the net environmental impact for disposal of all effluents? Can the system be optimized to reduce emissions (to all media) for maximum environmental protection? How site-specific would such an optimization program be?

It should be noted that RCRA's approach is multimedia (air, water, land) and may be expected to provide useful inputs in this regard.

It is possible that, in the future, a multimedia approach will be mandated for environmental assessments and control of all major point sources of pollution. In this approach, the regulation of wastewater discharges and the extent of water reuse will be intimately tied in with the totality of all air, land, and water emissions; with the associated energy and land use, and with other local factors that relate to environmental protection.

4.2.2 Interrelationship of Toxics Controls and Water Reuse Technology

The sections above discussed the regulatory interrelationships between the control of discharges of toxic chemicals in wastewaters and pressures for increased recycle of water in steam-electric power plants. Toxics need not necessarily need to be removed for recycle. However, some additional interrelationships may exist with regard to the technologies required. The common ground lies primarily in those areas where the toxics removal involves a substantial reduction in any parameter that may be a problem for recycle. The parameter may be total dissolved solids, hardness, acidity, oil and grease, suspended solids, or other such parameters. In general, a wastewater treatment process that only accomplished the removal or destruction of one (individual or class of chemical) - e.g., the destruction of cyanides by alkaline chlorination -

would do little for recycle potential. Where there is an interrelationship of technologies, it is likely that economic considerations will favor treatment for reuse over treatment for discharge, especially as stricter limitations on the discharge of toxic chemicals are implemented.

5.0 RECYCLE/REUSE OF WATER

5.1 General

As noted earlier, environmental regulations and constraints on water supply have placed increasing emphasis on tighter water management. While zero discharge and total reuse of water are not likely to be achieved in the immediate future, recycle/reuse of water will play an ever-increasing role in water management. In this section various approaches for recycle/reuse are discussed.

5.2 Combined Central Treatment

5.2.1 Wastewater Management

A power plant has many uses for water and the ranges of water quality requirements for these uses are very broad. Hence, power plants present unusual opportunities for wastewater management and water reuse. The highest water quality requirements are for the boiler feedwater supply. Makeup to this system must be demineralized to TDS concentrations on the order of 50 mg/ℓ for intermediate pressure plants and 2 mg/ℓ or less for high-pressure plants. Boiler blowdown is generally of higher purity than the original source of supply, and can be recycled for any other use in the plant, including makeup to the demineralizers. In plants using closed cooling water systems, the blowdown from the cooling system is of the same chemical quality as the water circulating in the condenser cooling system. Limits on the water quality in that system are governed by the need to remain below concentrations at which scale forms in the condenser. However, if calcium is the limiting component, the introduction of a softening step in the blowdown stream would restore the waste to a quality suitable for reuse. Even without softening, the blowdown from the condenser cooling water system may be suitable for makeup to the ash sluicing system, or for plants using alkaline FGD streams as makeup to that system. Plants located adjacent to mines (mine-mouth plants) often have additional requirements for low quality water for ore processing at the mine.

With such cascading water uses, it is frequently possible to manage water systems in which there is minimal net effluent from the power plant. These plants still have significant overall water requirements, but the

water is used mainly consumptively for evaporation and drift in cooling towers, for sulfur dioxide removal, or for ash handling and ore preparation. Such water management can play a major role in water reuse although such procedures require very precise operating practices and controls. Some plants which try for such zero discharge run into operating problems [5].

Southern Services Company [62] has conducted computer based conceptual studies to develop a plant profile for system-wide use including water and waste management aspects related to a coal-fired plant. Similarly, programs are available to predict and characterize cooling water performance and optimize the required treatment. Radian [7] in its work for the EPA employed a computer simulation package capable of modeling the major water consumers (cooling tower, ash sluicing, FGD systems) at coal-fired power plants. Such management studies can be useful in planning engineering, construction, operation and maintenance activities with increased recycle/reuse.

5.2.2 Treatment Technology

In addition to proper wastewater management, one can consider various options to treat individual streams. In order to assess total potential for water recycle/reuse, one needs to be cognizant of both common treatment options and specific methods for each pollutant. Table 5.1 lists treatment methods available, potential effluent reductions achievable and present use in proven plants. Aspects regarding some of the technologies were described earlier in Section 3.0.

5.2.3 Central Treatment System

Although power plants produce many wastewater streams with different pollutants and flow characteristics, the most feasible concept of treatment consists of:

- Proper wastewater management practices in the whole plant to minimize streams that need treatment,
- Combining all compatible wastewater streams with appropriate equalization basins or tanks, and

Table 5.1

Number	Pollutant Parameter	Control and/or Treatment Technology	Effluent Reduction Achievable	Utility Industry Usage
I	COMMON:			
	pH	Neutralization with chemicals	Neutral pH	Common
	Dissolved Solids	1. Concentration and evaporation	Complete Removal	Not generally in use - desalinization technology
		2. Reverse Osmosis	50-95%	Limited use - desalinization technology
		3. Distillation	60-90%	Not in use - desalinization technology
	Suspended Solids	1. Sedimentation	90-95%	Extensive
		2. Chemical Coagulation and Precipitation	95-99%	Moderate
		3. Filtration	95%	Not generally practiced - water treatment technology
II	SPECIFIC POLLUTANTS:			
	Aluminum/Zinc (Water Treatment, Chemical Cleaning, Coal Ash Handling, Coal Pile Drainage)	1. Chemical Precipitation	Removal to 1.0 mg/l	Limited usage
		2. Ion Exchange	Similar to Copper	----------
		3. Deep Well Disposal	----------As described above----------	
	Ammonia (Water Treatment, Blowdown, Chemical Cleaning, Closed Cooling Water Systems)	1. Stripping	50-90%	Not practiced; several installations in sewage treatment
		2. Biological Nitrification	Removal to 2 mg/l	Not practiced for these waste streams
		3. Ion Exchange	80-95%	Not practiced
	BOD/COD (Sanitary Wastes)	Biological Treatment	85-95%	Common practice
	COD (Water Treatment, Chemical Cleaning)	1. Chemical Oxidation	85-95%	Limited usage
		2. Aeration	85-95%	Not practiced
		3. Biological Treatment	85-95%	Not practiced
	Chromium (Cooling Tower)	1. Reduction	0.05 mg/l	Limited usage
		2. Ion Exchange	"	" "
		3. Electrochemical	"	" "
		4. Substitute Chemicals	-	" "
	Chlorine (Once-through Condenser Cooling)	1. Control of Residual Cl_2 with Automatic Instrumentation	Control to 0.2 mg/l	Limited usage in the industry - technology from sewage treatment practiced in some plants - all systems are not capable of being converted to mechanical cleanin
		2. Utilize mechanical Cleaning & Chlorine	Reduces Cl_2 Discharge	

Table 5.1 (Continued)

Treatment Technology for Wastewater in Power Plants

Number	Pollutant Parameter	Control and/or Treatment Technology	Effluent Reduction Achievable	Utility Industry Usage
II	SPECIFIC POLLUTANTS (Cont'd):			
	Chlorine (Recirculating)	1. Control of Residual Cl_2 with Automatic Instrumentation	----------As described above----------	
		2. Reduction of Cl_2 with Sodium Bisulfite	Below Detectable Limits	Installed in a new (nuclear) facility; however, excess $NaHSO_3$ is discharged
	Copper (Once-through Condenser Cooling)	1. Replace Condenser Tubes with Stainless Steel or Titanium	Elimination of Discharge	Done in several plants where tubes have eroded or corroded - not done for environmental reasons - expensive
	Copper (Blowdown, Chemical Cleaning)	1. Chemical Coagulation and Precipitation	Removal to 0.1 mg/l	Limited usage
		2. Ion Exchange	Removal to 0.1 mg/l	Not practiced
		3. Deep Well Disposal	----------As described above----------	
	Fluoride (Chemical Cleaning)	Chemical Precipitation	Removal to 1 mg/l	Limited usage
	Iron (Water Treatment, Chemical Cleaning, Coal Ash Handling, Coal Pile Drainage)	1. Oxidation, Chemical Coagulation and Precipitation	Removal to 0.1 mg/l	Limited usage
		2. Deep Well Disposal	----------As described above----------	
	Sulfate/Sulfite (Water Treatment, Chemical Cleaning, Ash Handling, Coal Pile Drainage, SO_2 Removal)	Ion Exchange (Sulfate) Oxidation & Ion Exchange (Sulfite)	75-95%	Not practiced in the industry
	Oil (Chemical Cleaning, Ash Handling, Floor & Yard Drains)	1. Oil-Water Separator (Sedimentation with Skimming)	Removal to 15 mg/l	Common usage
		2. Air Flotation	Removal to 10 mg/l	Limited usage
	Oxidizing Agents (Chemical Cleaning)	Neutralization with Reducing Agent and Precipitation where Necessary	Neutral pH & >95% Removal	Limited usage
	Phenols (Ash-Handling, Coal Pile Drainage, Floor & Yard Drains)	1. Biological Treatment	Removal to 1 mg/l	Not practiced in the industry
		2. Ozone Treatment	Removal to <0.01 mg/l	Not practiced in the industry
		3. Activated Carbon	Removal to <0.01 mg/l	Not practiced in the industry
	Phosphate (Blowdown, Chemical Cleaning, Floor & Yard Drains, Plant Laboratory & Sampling)	1. Chemical Coagulation and Precipitation	Removal to 5 mg/l	Not generally practiced - water treatment technology
		2. Deep Well Disposal	Ultimate Disposal	Not practiced
	Mercury (Coal Ash Handling & Coal Pile Drainage)	1. Reduction & Precipitation	Removal to 0.3 mg/l	Limited usage
		2. Ion Exchange	Removal to 0.1 mg/l	Not practiced
		3. Adsorption	Removal to 50 μg/l	Not practiced
	Vanadium (Chemical Cleaning)	1. H_2S Treatment & Precipitation	Removal of Low Concentrations	Not practiced
		2. Ion Exchange	Difficult to Achieve	Not practiced

Source: [5, 12] and Arthur D. Little, Inc.

- Central treatment for appropriate combinations of such waste streams.

Central treatment, however, is often not practiced. following waste streams [5]:

- Once-through cooling or cooling tower blowdown,
- Sanitary wastes,
- Roof and yard drains,
- Coal screen backwash,
- Non-circulating ash or FGD system wastes, and
- Recirculating bottom ash system (although in some cases this can be included in central treatment).

The point to note is that proper wastewater management can and should include the above wastes; however, a central treatment for chemical wastes cannot handle the above wastes. Such total water management is considered in greater detail in Section 5.3.

A typical system for central treatment is shown in Figure 5.1. Capital and operating costs for such central treatment were estimated by the EPA [5]. Updated versions (mid-1978 dollars) of these are presented in Table 5.2.

5.3 Water Reuse Considerations

5.3.1 General

There are many opportunities in a power plant for wastewater management via water recycle and reuse. The recycle/reuse options can be categorized as follows:

- Individual wastewater stream basis, and
- Total plant basis.

Recycle/reuse on an individual stream basis entails makeup water and/or en-of-pipe (blowdown) treatment. Such options include dewatering of clarifier sludge and recycle of effluent, recycle of boiler blowdown via feedwater ion exchange units, recycle of cooling tower and ash pond blowdown after lime softening, etc. These options have been described in Section 3.0.

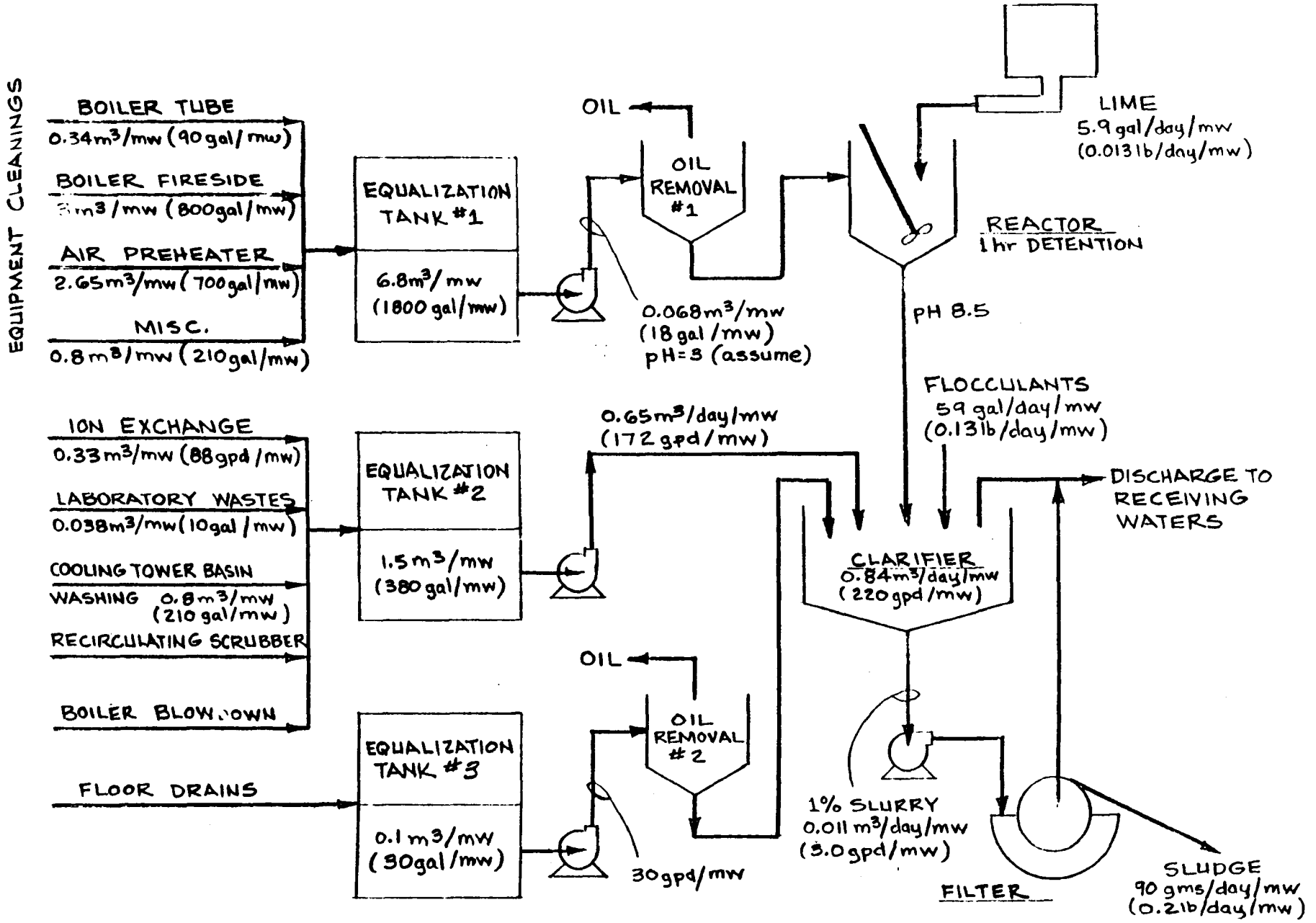

Source: [5]

Figure 5.1 Coal-Fired Plant - Central Treatment of Wastewater

Table 5.2

Capital and Operating Costs - Central Treatment

BASIS:
1. See Figure 5-1 for typical system
2. Costs in mid-1978 dollars, CE Index 218.8
3. Total Capital Costs (TCC) = Major equipment
   + 50% for installation - new source
   + 100% for installation - existing sources
   + 20% for instrumentation
   + 15% for engineering
   + 15% for contingency
4. Annualized Costs = Maintenance at 3% of TCC
   + Fixed charges at 15% of TCC
   + Chemicals + Labor + Power

Number	Item	100 MW Retrofit $ (1000)	100 MW New Sources $ (1000)	1000 MW Retrofit $ (1000)	1000 MW New Sources $ (1000)
1	Total Capital Cost ($/kW)	372 (3.72)	288 (2.88)	1211 (1.21)	936 (0.94)
2	Annualized Costs (Total $)	231	217	575	527
	Unit Cost, mills/kWh				
	Base load (0.7/ capacity factor)#	0.34	0.32	0.09	0.08
	Cyclic (0.44 capacity factor)#	0.60	0.56	0.15	0.14
	Peaking (0.09 capacity factor)#	2.94	2.75	0.75	0.68

Source: [5] and Arthur D. Little, Inc. update.

Recycle/reuse on a total plant basis is a more complex issue. It involves among other things, utilizing more advanced treatment technologies for total dissolved solids (TDS) removal, balancing and integrating all of the flows within the plant and being able to cope in real time with variations in plant performance, power demand, climatic variations, etc., so as to keep the entire system within balance. Fortunately, on a total plant basis, it is possible to separate certain wastes and cascade the water uses, so that it is not necessary to treat all the wastes originating from the plant [5].

5.3.2 Technology for Reuse

Technologies for desalination including evaporation, membrane processing, ion exchange, and chemical methods can be considered for reusing water in a power plant. Some technologies have been used or explored for power plant use and are as follows:

a. Employment of vertical tube vapor compression evaporation system (Figure 5.2) as a brine concentrator has been studied and piloted for cooling tower blowdown and ash sluice water. Figure 5.3 shows an application on cooling towers. Potentially such a system could be employed in boiler feedwater and several other effluents from a power plant [5]. For a Colorado River Basin power plant installation [64], such a system:

- Reduced waste from the condensate mixed-bed polisher by about 91%,
- Reduced the need for makeup water,
- Eliminated the need for cold lime softening and reduced the demineralizing requirement, and
- Reduced the generating system's overall liquid waste output from $3.5m^3$/minute (936 gpm) to only $0.07m^3$/minute (19 gpm), cutting the pond requirement to 98%.

While both titanium and stainless steel 316 have demonstrated satisfactory corrosion resistant properties in this application, the use of titanium as primary material of construction

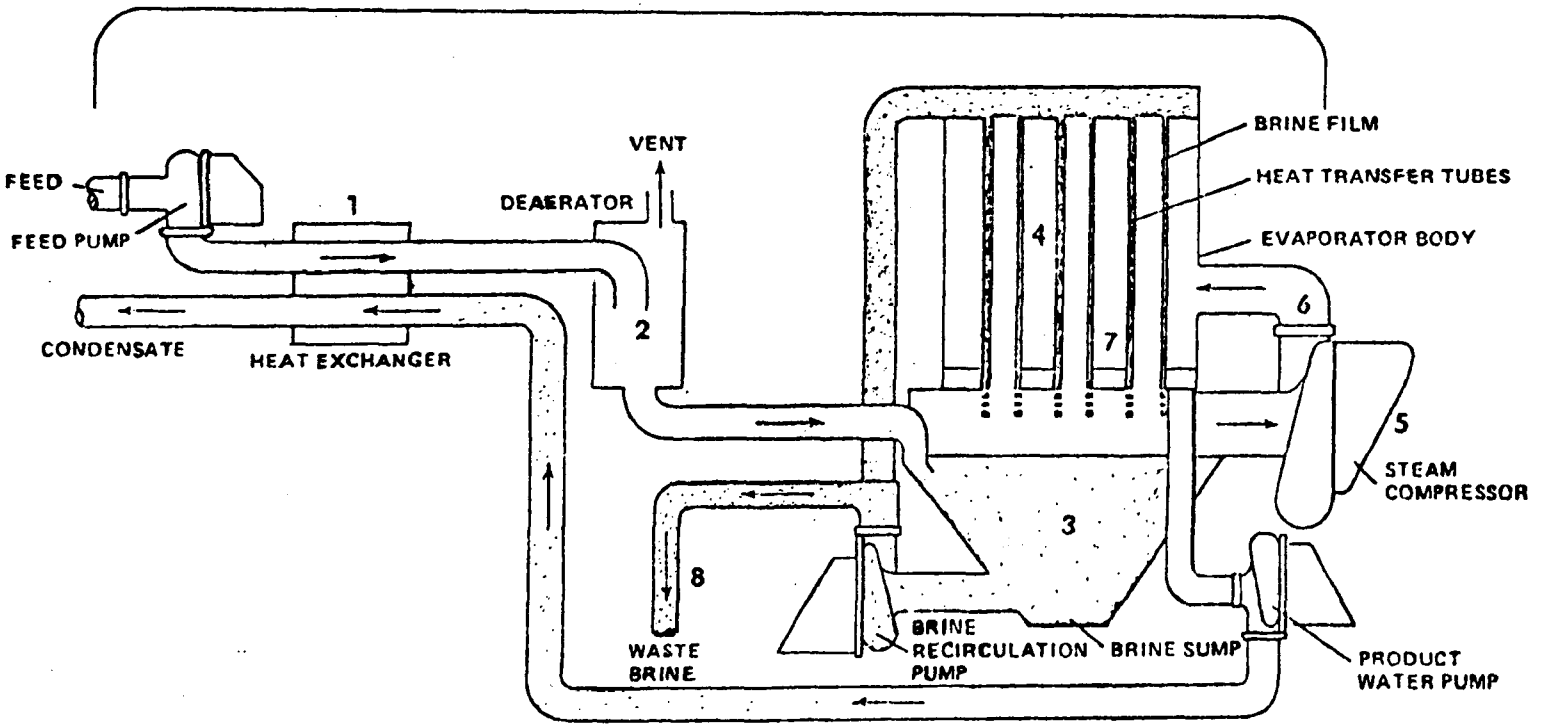

Source: [64]

Figure 5.2 Vapor Compression Evaporator

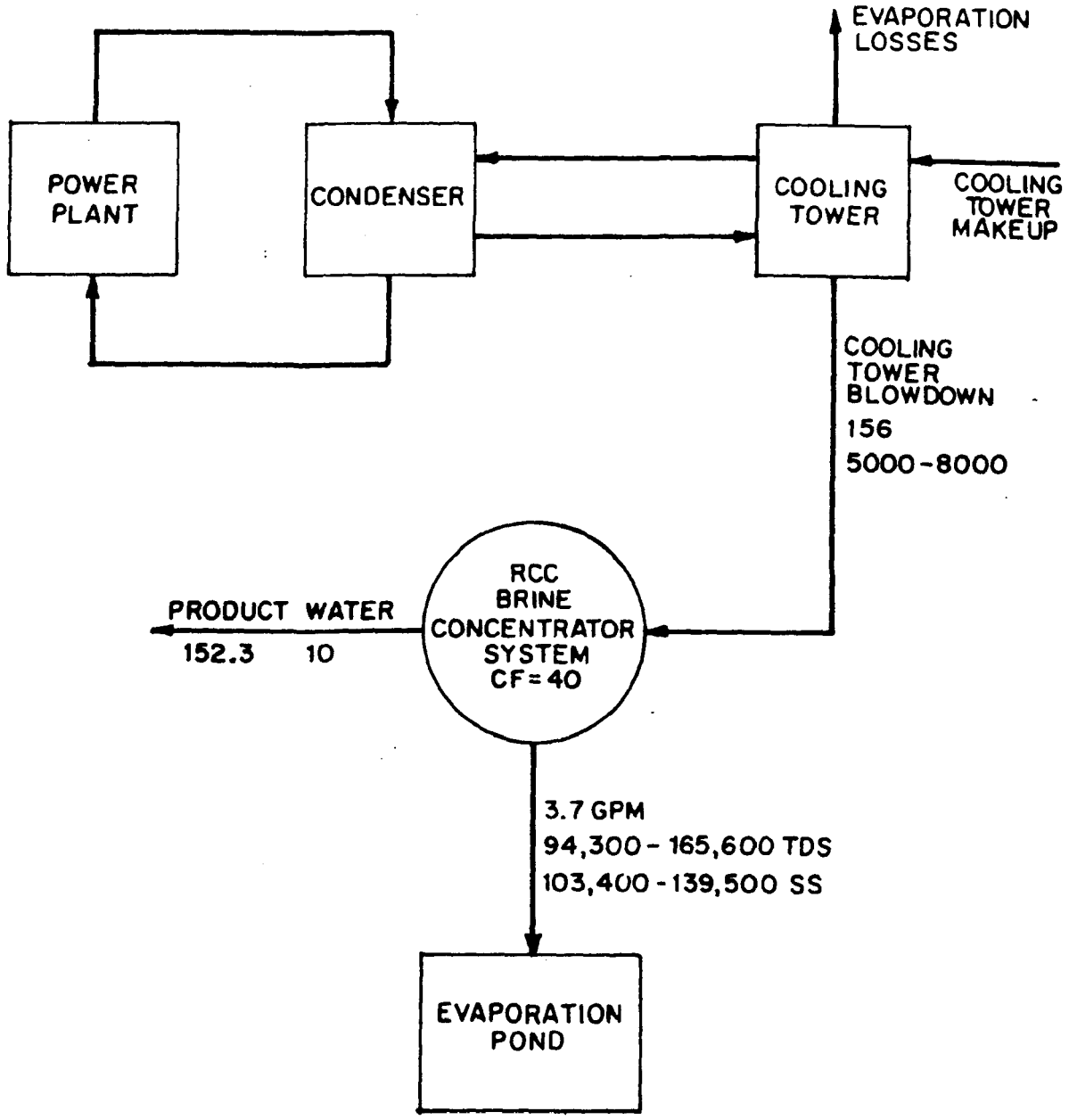

TDS = TOTAL DISSOLVED SOLIDES
SS = SUSPENDED SOLIDS

Source: [6, 65]

Figure 5.3 Vapor Compression Evaporator For Typical Cooling Tower Blowdown Reuse

will importantly promote longevity of the equipment.

For concentrating cooling tower blowdowns and other power plant waste streams, the vapor-compression evaporate requires 23 kWh/m^3 (39 Btu/lb) of feed while recovering 95 to 98% of water for reuse.

A 7.6m^3/minute (2,000-gpm) system combining this technology with reverse osmosis and sludge dewatering is currently being installed at a Western power generating station [65, 66]. The system is designed to process cooling towers and SO_2 scrubber blowdowns, demineralizer regenerant and ash system wastes, and other plant wastewater to achieve the objective of zero liquid discharge while recovering 95% of wastewater.

b. The San Juan Station owned jointly by Public Service of New Mexico and Tucson Gas & Electric utilizes the combination of reverse osmosis (RO) and vapor compression evaporation (VCE) for handling plant wastes (cooling tower blowdown, FGD prescrubber wash stream since San Juan was Wellman-Lord SO_2 recovery process, demineralizer wastes, etc.) The following costs (in 1977 dollars) are reported [66]:

- Capital $15/kWe
- Operating - RO = $1 to $1.2/1000 gals of treated water
  RO + VCE = $1.7 to $1.8/1000 gals of treated water

c. Another reported study concerns electrodialysis systems for cooling tower salinity control [67].

d. Evaporation ponds are in use at a number of steam electric power plants to reduce waste streams to dryness. Provided the plant is located in a net evaporation area, this is certainly usable. However, since land area requirement is determined by net annual evaporation, in many populated areas, this may be impractical.

A specific plant is reported to use 9,380m^2 (101,000 sq ft) of line evaporation pond to evaporate a maximum flow of

$163m^3$/day (43,000 gpd) of waste water to dryness [5].

e. Distillation or reverse osmosis techniques are practiced on a large scale for seawater or brackish water desalination. While present costs are high for use in most power plants on economic basis alone, future potential does exist. In a generic study on application of distillation and crystallization methods, Awerbuch et al. [68] present cost analysis on such waste concentration (in which the concentrated waste is a slurry) and conclude that:

- Addition of a process softener reduces costs since the evaporator crystallizer design is simplified, and
- Waste heat utilization can reduce costs further.

f. Another system that has been studied for treatment of wastewater, particularly cooling tower blowdown in vertical tube foam evaporation (VTFE). In this method a few ppm of a selected surfacant is added to the wastewater stream and the resultant liquid is caused to flow as a foamy layer over the vertical evaporating surface. As a result of the foam layer, heat transfer is substantially augmented [70,71]. Thus this method potentially can substantially improve the capabilities of vertical tube evaporation (which is the basis of much of industrial evaporators). Interface enhancement by foaming can improve vertical tube evaporation (VTE) by:

- Reducing ΔP, and
- Increasing evaporation side heat transfer coefficient.

A study by the University of California at Berkeley [70] concludes that:

1. Cooling tower blowdown can be renovated for reuse in VTFE.
2. Upflow mode VTFE is more effective than downflow mode.

3. Substantial capital and energy savings over conventional VTE are offered by VTFE.

In the case of samples from Mohave Plant [70], a 30-fold concentration of cooling tower blowdown was obtained at low temperatures (61.6°C or 143°F) with high heat transfer coefficients at a surfactant level of 15 mg/ℓ. It is reported [70] that the bulk delivery price of surfactants is 25 cents per lb (60% active solution) presumably in 1976 dollars.

The study led to the conclusion that larger scale testing is worthwhile. A mobile pilot plant with a 190m^3/day (50,000 gpd) VTFE unit and 19m^3/day (5,000 gpd) Evaporator Crystallizer (EC) unit is being assembled with EPA funding [72]. Recently EPRI [9,74] has decided to fund demonstration of this concept by testing the above mobile unit at one or more utilities.

g. Bechtel [73] is also undertaking for the EPA an assessment of VTFE reverse osmosis (RO) and vapor compression evaporation (VCE). Bechtel will study energy requirements, investment and operation costs for each of the systems.

h. Radian Corporation recently completed for the EPA bench-scale tests on reverse osmosis, lime precipitation, carbon absorption and vapor compression evaporation techniques for treating various streams including ash pond effluents and cooling tower blowdown [103]. Equipment employed in bench-scale tests were small (up to 10 gpm) units. Apparently, preliminary results indicate that heavy metals in the final effluent are well below threshold levels of detection. A draft report on this study is expected soon [103].

Hinman Associates, in assisting the EPA in preparing the technical report for revision of effluent guidelines [101], undertook a survey of effluent discharges at a number of plants. Results of their survey on end of pipeline technology and water management are reported. In addition,

guidelines for minimization of chemical additives, in particular chlorine in cooling towers, is offered [101].

5.3.3 Reuse Schemes

A number of schemes have been reported in the literature for recycle/reuse [5]. Water management for optimum reuse is highly site- and system-specific; it can only be accomplished on a case-by-case basis. Some examples are presented below to indicate broad approaches.

a. The system to achieve optimum reuse with no discharge of pollutants at a 600 MW coal-fired plant [5,69] is shown in Figure 5.4. This is achieved through the reuse of neutralized demineralizer wastewater, boiler cleaning effluents, floor drainage, boiler blowdown, and evaporation blowdown in the ash sluicing operation. Ultimate blowdown is achieved through the moisture content (15-20%) of the bottom ash discharged to trucks for off-site use. Fly ash, handled dry, is also trucked to off-site uses. If one were to update reported cost to mid-1978 levels, such a system on a retrofit basis for a pond normally practicing pond discharge may be $3.2 million. (Such costs are site- and system-specific.) It is not clear whether this system includes coal pile drainage treatment.

b. Other examples of recycle/reuse being followed in the industry such as combinations of cooling tower blowdown for ash sluicing and treated ash pond blowdown for condenser cooling, zero discharge for a plant being fed by a coal slurry pipeline and equipped with an evaporation pond, no discharge (except coal pile runoff) for a mine-mouth plant, etc., are reported [5].

c. A number of conceptual schemes have also been proposed. Figure 5.5 is an example proposed by TVA researchers [14]. This concept proposes the use of lime soda softening of a slipstream from ash sluicing for scale control. In this scheme, relatively small wastestreams, such as chemical

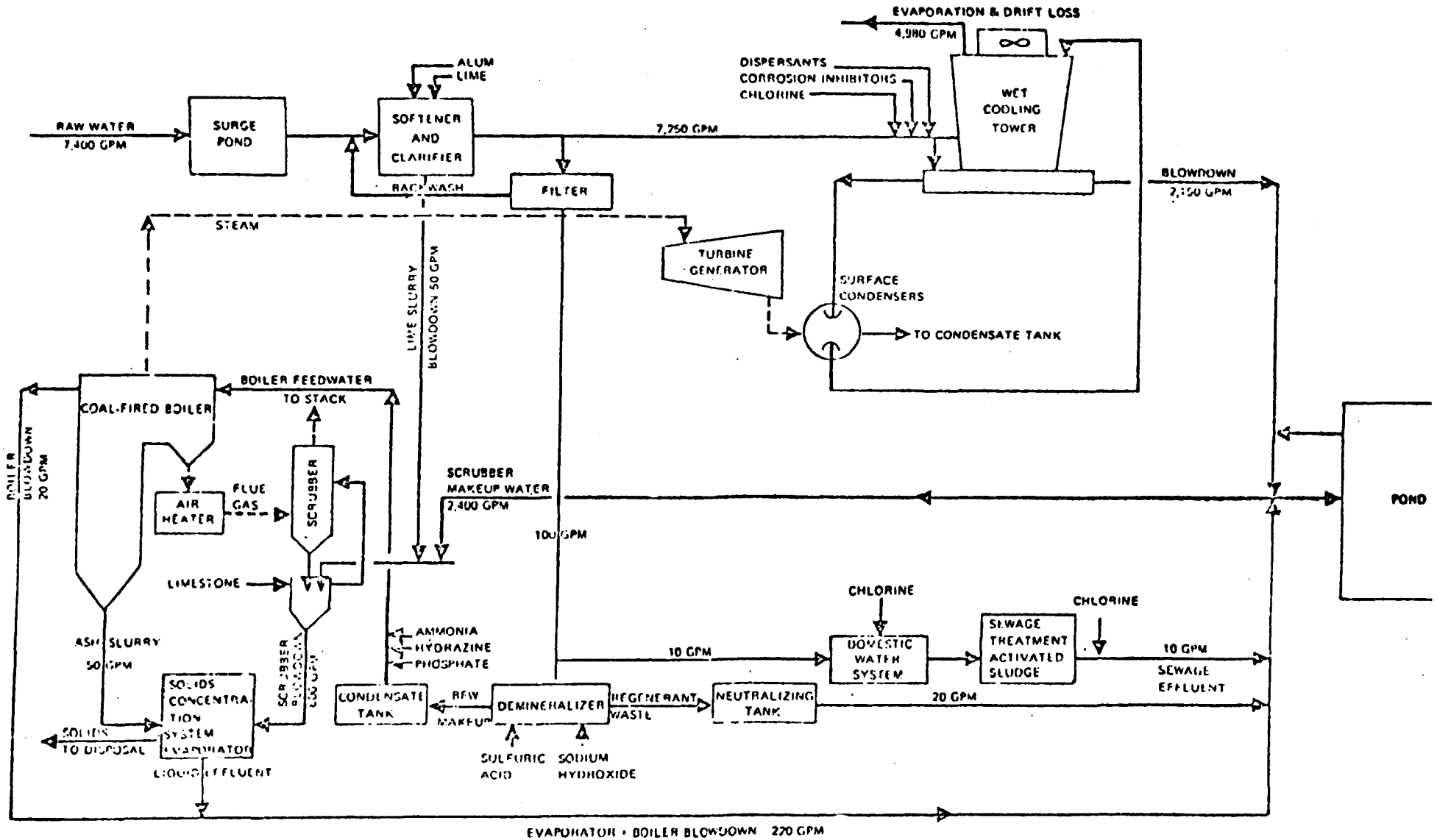

Source: [5]

Figure 5.4 Water Management at a 600-MW Coal-Fired Unit

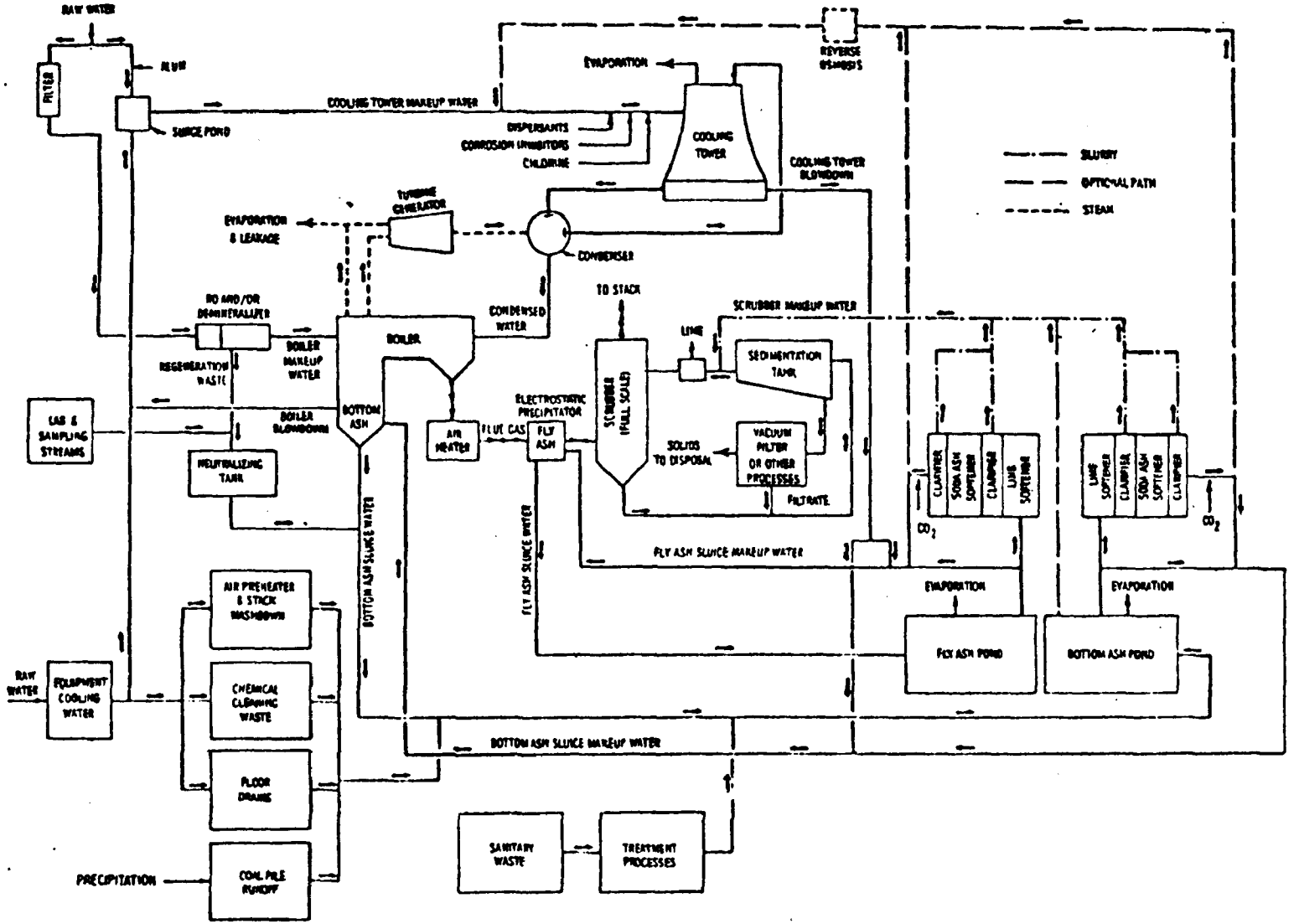

Source: [14]

Figure 5.5 Reuse of Water at a Typical Coal-Fired Power Plant

cleaning waste, floor drains, treated sanitary waste, etc. would be discharged into the closed-loop ash pond system. The cooling tower blowdown would be the main source of water to replenish the evaporative loss of water in the ash ponds. The clarified effluent would be reused to dilute the recycled water stream, thus avoiding the solubility limit within the ash sluicing process. Part of the clarified effluent could pass through a membrane process to produce cooling tower or boiler makeup water. This would depend on the quality and quantity of the local water supply. The waste from the first stage excess lime softening process is primarily calcium carbonate, magnesium hydroxide, calcium sulfate, and other solids, while the waste from the secondary stage soda-ash process would be strictly calcium carbonate. Both of these slurries could be mixed with either cooling tower blowdown or recycled ash pond effluent to be used as makeup water for a wet scrubber system, which controls sulfur dioxide in the stack gas. If a power plant had no scrubber system, these wastes could be dewatered for recovery or ultimate disposal. Reportedly, the authors tested actual ash pond effluents [14] at a TVA plant and found good removal of turbidity, Ca, Mg, as well as heavy metals like Cd, Cu, Fe, Pb, and Zn.

d. Another conceptual reuse scheme was included earlier in Figure 3.4.

e. Radian [7] undertook (for the EPA) a study of water recycle/reuse possibilities at five coal-fired utility power plants listed in Table 5.3. These plants were selected based on the criteria of location, availability, site characteristics and project timing. As part of this study, the three major water systems (cooling tower, ash sluicing, and SO_2/particulate scrubbing) were evaluated at these five power plants.

Table 5.3

Radian Study for the EPA - Selected Plants for Water Recycle/Reuse Study

Utility	Plant	Location	Capacity (MW)	Type Cooling	Ash Handling	Part. Control[3]	SO_2 Control[4]
Arizona Public Service	Four Corners	Farmington, New Mexico	2,150	CP	WSB WSF	Cyclones, ESP, venturi	UC
Public Service of Colorado	Comanche	Pueblo, Colorado	700	WCT	WSB[6]	ESP (Hotside)	None
Georgia Power Co.	Bowen	Taylorsville, Georgia	1,595[5]	WCT	WSB WSF	ESP	None
Pennsylvania Power and Light	Montour	Washington-ville, Pennsylvania	1,500	WCT	WSF WSB	ESP	None
Montana Power Co.	Colstrip	Colstrip, Montana	700	WCT	WSB WSF	Venturi	Lime/alkaline fly ash scrubbing

[1]WET = wet cooling tower, CP = cooling pond.

[2]WSB = wet sluicing of bottom ash, WSF = wet sluicing of fly ash.

[3]ESP = electrostatic precipitator.

[4]UC = under construction.

[5]Plant capacity as reported in FPC Form 67 Data; present capacity is 3200 MW (4 units).

[6]Dry fly ash disposal.

Source: [7]

Computer models were used to identify the degree of recirculation achievable in each of the three water systems without forming scale. The models were verified using the results of one-day spot samples at the selected plants. The results confirm that the recycle/reuse is dependent upon the limiting scale forming species such as $CaCO_3$, $CaSO_4 \cdot 2H_2O$, $Mg(OH)_2$, silica, etc. Besides the inherent causes such as ash leaching, SO_2 scrubbing, and evaporation in cooling tower on scale formation, the external transfer of CO_2 to ash pond water is also studied in this report. The report confirms that with increased CO_2 transfer, $CaCO_3$ scale potential in recirculating ash sluicing system increases, while $Mg(OH)_2$ scale potential decreases. Similarly, the study concludes that fly ash sluicing water recirculation is possible using treatment for scale control.

The conclusions on recycle/reuse options at the five plants studied by Radian for the EPA are among the suggestions, albeit of a preliminary nature, in the literature. These are summarized in the following tables:

- Table 5.4 for Four Corners Plant
- Table 5.5 for Comanche Plant
- Table 5.6 for Bowen Plant
- Table 5.7 for Montana Plant
- Table 5.8 for Colstrip Plant

The reported cost data should be considered approximate and appear to vary widely from 0.002 to 0.45 mills/kWh (in 1976 dollars).

f. Another conceptual scheme [5] involves three major process units to provide a complete treatment of chemical wastes for reuse within a power plant. These include a softener and chemical feed system to reduce the hardness of the cooling tower blowdown, a brine concentrator to preconcentrate

Table 5.4

Radian Study for the EPA - Summary of Recycle/Reuse Options at Four Corners

	Existing Condition		Alternative Two		Alternative Three		Alternative Four
	Case 1	Case 2	Case 1	Case 2	Case 1	Case 2	Case 1
Weight Percent Solids in Thickener Bottoms	10	30	30	30	30	30	30
Hold Tank Volume, m^3 (ft^3)	0	0	37,500 (1.33×10^6)	37,500 (1.33×10^6)	37,500 (1.33×10^6)	21,200 (0.75×10^6)	8,900 (0.31×10^6)
Liquid to Gas Ratio, ℓ/Nm^3 (gal/scf)	4.7 (35.2)	4.7 (35.2)	4.7 (35.2)	10.0 (74.8)	10.0 (74.8)	10.0 (74.8)	10.0 (74.8)
% Recycle from the Ash Pond	0	0	0	0	28	28	0
Oxidation, %	98.6	98.6	98.6	98.6	98.6	98.6	98.6
Particulate Removal Prior to Scrubber, %	None	None	None	None	None	None	60
Scrubber Makeup Rate, ℓ/sec (gpm)	223 (3540)	70.7 (1730)	70.7 (1120)	70.7 (1120)	50.8 (805)	50.8 (805)	41.0 (650)
Costs[1]							
Capital, 1976 $	--	—	3,334,000	4,275,000	4,328,000	3,317,000	3,385,000
Operating, 1976 $	—	--	628,000	1,101,000	1,109,000	958,000	968,000
(mills/kWh)			(.128)	(.225)	(.226)	(.195)	(.198)

[1]These rough cost estimates were made to compare technically feasible options and do not include a "difficulty to retrofit" factor.

Table 5.5

Radian Study for the EPA
Summary of Water Recycle/Reuse Options at Comanche

	Existing Conditioning	Alternative One	Alternative Two	Alternative Three
Cooling Tower Makeup Source	Softened River Water	Softened River Water	Softened River Water	Softened River Water
Cycles of Concentration in Cooling Towers	5.0	5.0	7.6	8.4
Cooling System Treatment	(Sulfuric acid and zinc polyphosphate used for all conditions)			
Fly Ash Disposal Method Type, % Solids	Dry	Wet, 10%	Wet, 10%	Dry
Bottom Ash Disposal Method Type, % Solids	Wet, 1%	Wet, 4%	Wet, 4%	Wet, 4%
Recycle in Fly Ash System, %	---	0	10%	---
Recycle in Bottom Ash System, %	0	0	100%	0
Treatment in Ash Systems	None	None	Brine Concentration of Makeup (50%)	None
Plant Makeup Requirements ℓ/sec (CPM)	590 (9350)	520 (8250)	455 (7210)	450 (7120)
Plant Discharge ℓ/sec (CPM)	156 (2470)	65.4 (1040)	28.8 (460)	30.2 (480)
Costs[1]				
Capital Investment, 1976 $	---	342,000	3,662,000	---
Operating Expenditures, 1976 $/yr	---	90,000	863,000	---
(mills/kWh)		(0.02)	(0.18)	
Additional Cost to Treat Pond Overflow for Zero Discharge				
Capital, 1976 $	---	8,280,000	3,706,000	3,883,000
Operating, 1976 $/yr	---	2,136,000	944,000	989,000
(mills/kWh)	---	(0.43)	(0.19)	(0.20)
Total Cost for Zero Discharge				
Capital, 1976 $	---	8,622,000	7,368,000	3,883,000
Operating, 1976 $/yr	---	2,226,000	1,807,000	989,000
(mills/kWh)	---	(0.45)	(0.37)	(0.20)

[1] The rough cost estimates were made to compare technically feasible options and do not include "difficulty to retrofit" factor.

Table 5.6

Radian Study for the EPA
Summary of Technically Feasible Options at Bowen

	Existing Condition	Alternative One	Alternative Two	Alternative Three
Cooling Tower Makeup Source	Makeup Pond, Service Water	Makeup Pond, Service Water	Makeup Pond, Service Water	Makeup Pond, Service Water Brine Concentrator Distillate
Cycles of Concentration in Towers	1.7	5.7	15.	15.
Cooling System Treatment	None	H_2SO_4	H_2SO_4	H_2SO_4
Acid Addition Rate, kg/day (lb/day)	0 (0)	481 (1060)	608 (1340)	608 (1340)
Ash Sluice Makeup Source	Cooling Tower Blowdown	Cooling Tower Blowdown	Cooling Tower Blowdown	Cooling Tower Blowdown
Recycle in Fly Ash System	0	0	60	60
Recycle in Bottom Ash System	0	0	100	100
Ash System Treatment	None	None	Recycle Softening	Recycle Softening, Brine Concentration of Pond Overflow
Plant Makeup Requirements, ℓ/sec (CPM)	3250 (51,500)	1880 (29,800)	1670 (26,400)	1630 (25,800)
Plant Discharge Rate, ℓ/sec (CPM)	1600 (25,000)	255 (4050)	41 (650)	0 (0)
Costs[1]				
Capital, 1976 $	—	100,000	1,223,000	6,380,000
Operating, 1976 $/yr	—	52,900	402,000	1,735,000
(mills/kWh)		(.002)	(.018)	(.028)

[1] These rough cost estimates were made to compare technically feasible options and do not include a "difficulty to retrofit" factor.

Table 5.7

Radian Study for the EPA
Summary of Technically Feasible Options at Montour

	Existing Condition	Alternative One	Alternative Two	Alternative Three	Alternative Four
Cycles of Concentration in Cooling Towers	1.5-2.0	8	20	20	20
Assumed Drift Rate in Cooling Towers /see (CPM)	62 (1,000)	62 (1,000)	0	40 (650)	40 (650)
Blowdown from Cooling Towers /see (CPM)	725 (11,500)	48 (760)	40 (650)	0	0
% Recycle in Fly Ash Sluicing System	0	89	89	89	73
Sluice System Makeup Source	Cooling Tower Blowdown	Cooling Tower Blowdown	Cooling Tower Blowdown	River Water	River Water
Total Makeup Water Rate, ℓ/see (CPM)	1,500 (24,000)	1,000 (16,000)	950 (15,000)	985 (15,600)	1,035 (16,400)
Ultimate Efficient Rate, ℓ/see (CPM)	500 (7,900)	0	0	0	50 (800)
Treatment Required	None	H_2SO_4 (Cooling Tower)[1] Na_2CO_3 (Pond Recycle)	H_2SO_4 (Cooling Tower)[1] Na_2CO_3 (Pond Recycle)	H_2SO_4 (Cooling Tower)[1] Na_2CO_3 (Pond Recycle)	H_2SO_4 (Cooling Tower)[1]
Costs[3]					
Capital, 1976 $	—	640,000	668,000	622,000	485,000
Operating, 1976 $/yr (mills/kWh)	—	123,000 (0.016)	187,000 (0.018)	169,000 (0.016)	103,000 (0.018)

[1]Sulfuric acid treatment for $CaCo_3$ scale control.

[2]Sa_2CO_3, softening for Ca removal.

[3]These rough cost estimates were made to compare technically feasible options and do not include a "difficulty to retrofit" factor.

Table 5.8

Radian Study for the EPA

Summary of Water Recycle/Reuse Options at Colstrip

	Existing Conditions	Alternative One	Alternative Two
Cooling Tower Makeup Source	Softened River Water	Softened River Water	Untreated River Water
Cycles of Concentration in Cooling Towers	13.5	13.5	20
Cooling System Treatment	Makeup Softening	Makeup Softening	Slip-stream Softening
Treatment Rate, ℓ/sec (gpm)	423 (6710)	397 (6300)	18 (284)
Cooling Tower Blowdown Rate, ℓ/sec (gpm)	23.6 (376)	23.6 (376)	14.6 (230)
Scrubber Makeup Source	Softened River Water, Brine Concentrator Distillate	Cooling Tower Blowdown, Untreated River Water	Cooling Tower Blowdown, Untreated River Water
Plant Makeup Rate, ℓ/sec (gpm)	423 (6710)	423 (6710)	423 (6710)
Plant Discharge Rate, ℓ/sec (gpm)	0.	0.	0.
Costs:[1]			
Capital, 1976 $	--	159,000	275,000
Operating, 1976 $/yr[2]	--	-237,000	-217,000
(mils/kWh)	--	(-.046)	(-0.44)

[1]These rough cost estimates were made to compare technically feasible options and do not include a "difficulty to retrofit" factor.

[2]Includes capital cost amortization at 15% per year.

the blowdown brines resulting from the recirculating of ash sluicing water, and an evaporator-dryer to finally reduce the waste to a solid cake for disposal by landfill. Figure 5.6 outlines this scheme.

g. Figure 5.7 shows a potential water management scheme at a 1980 coal-fired power plant [101]. The major difference between the scheme shown and a typical older plant is the emphasis on recovery and reuse. It is anticipated that 1980 plants will be equipped with more sophisticated waste control and treatment facilities to meet future water and air quality standards. Every effort will be directed to reuse waste materials.

In summary, among major water users in a power plant, the following overall comments are pertinent:

- Cooling towers demand good quality water and have substantial blowdown.
- FGD systems and ash handling could serve as water sinks for other wastes, due to losses in evaporation and occlusion with sludge wastes.
- Other streams can potentially be integrated with the above three.
- Technology is broadly available for reuse, but economic constraints in some cases are severe.
- In some cases technology demonstration would be necessary.

Updating an earlier EPA estimate (without independent cost estimate or analysis), the capital costs, operating costs, and annual and unit costs for a complete stabilizing system for aqueous chemical wastes exclusive of once-through cooling water and rainfall run-off are estimated in mid-1978 dollars [CE Cost Index 218.8) to be as follows [5] and Arthur D. Little, Inc. Update]:

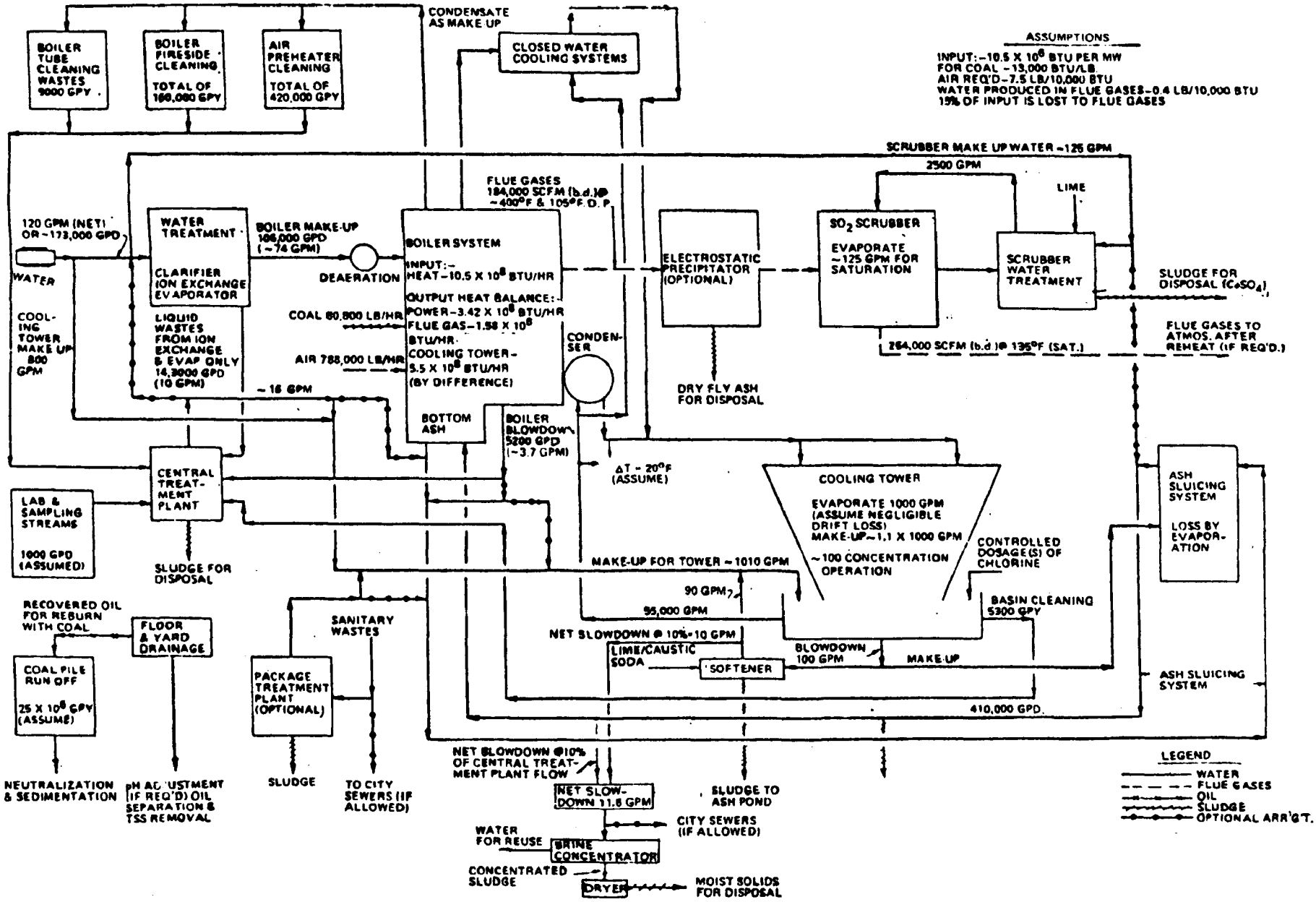

Source: [5]

Figure 5.6 Water Rechcle/Reuse at a 1100-MW Coal-Fired Plant (Conceptual)

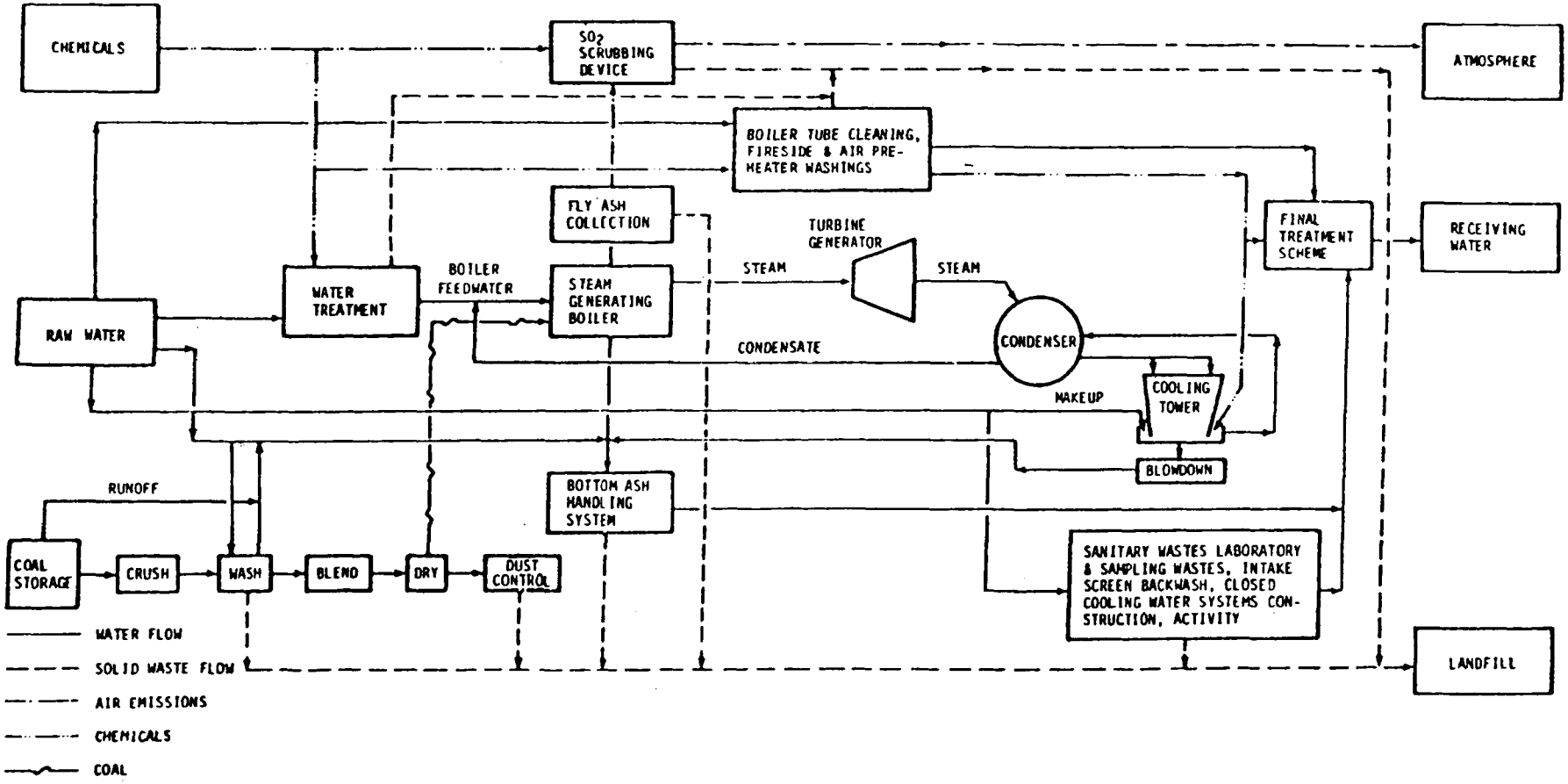

Source: [101]

Figure 5.7 Water Management at a Typical 1980 Coal-Fired Power Plant

- Capital Cost 5-10 $/kW
- Operating Cost $1.6 $/kW
- Annualized Cost 1.6 - 5.0 $/kW
- Unit Costs 0.3 - 0.8 Mills/kWh (on base load)

5.3.4 Toxic Substances Control

The EPA's ongoing review of BAT and NSPS limits in effluents will be focusing primarily on regulation of priority pollutants. The EPA has initiated an effort to develop baseline information on priority pollutants to support the establishment of effluent standards for these. Results of studies on this will also provide useful information on water recycle/reuse.

In order to carry out the requirements of the Consent Decree (see Section 4.1.5), EPA collected additional information on the production processes, raw waste loads, treatment methods, and effluent quality associated with the steam electric industry. This information was obtained pursuant to Section 308 of the Federal Water Pollution Control Act Amendments of 1972. A total of 794 plants responded to Section 308 letters. Eight of these plants were chosen for a screen sampling program. Table 5.9 presents data on pollutants reported in cooling towers. EPA's own screen sampling provides a detailed breakdown at eight plants [101].

It is noted in Table 5.9 that asbestos is also reported in cooling systems. This is not unexpected since the fill material in natural draft cooling towers is normally asbestos cement. Erosion of the fill material can result in the discharge of asbestos from cooling water blowdown. Ten of the 18 sites surveyed by the EPA contained detectable concentrations of chrysotile asbestos at the time of sampling particularly in basins. No asbestos was detected in the effluent to the receiving water [104].

Table 5.9

Pollutants Reported in 308 Form for Cooling Systems in Coal-Fired Power Plants

Total responding to 308 letters = 794

Compound name	Number of plants reporting presence
Antimony and compounds	3
Arsenic and compounds	2
Cadmium and compounds	3
Chlorinated phenols	7
Chloroform	1
Chromium and compounds	40
Copper and compounds	8
EDTA	6
Lead and compounds	3
Mercury and compounds	2
Nickel and compounds	3
Pentachlorophenol	9
Phenol	2
Selenium and compounds	2
Silver and compounds	2
Thallium and compounds	2
Vanadium	2
Zinc and compounds	22

Note: In addition, acrolein and asbestos have also been reported.

Source: [101]

Radian [13] in a study to assist the EPA's Effluent Guidelines Division on priority pollutant control, evaluated the application of carbon adsorption, lime precipitation, reverse osmosis, vapor compression distillation and evaporation ponds for priority pollutant control. Tables 5.10 and 5.11 outline their basic results. Radian concludes that:

- Wastewater technologies mentioned above have high potential for priority pollutant control.
- Vapor compression distillation and evaporation ponds are used in the utility industry. However, their effectiveness and secondary environmental impacts need better definition.
- Carbon adsorption has not been demonstrated in this industry. Chemical precipitation and reverse osmosis have been used but cannot be considered demonstrated for this purpose, but have high potential.

At present, none of the control technologies have been adequately studied for reasonably accurate cost estimates, but some preliminary estimates were made by Radian [13]. Continuation of these and other studies on technologies for priority pollutant control will provide additional baseline data for potential water recycle/reuse consideration.

5.3.5 Dry Systems

The potential for water recycle/reuse within the context of conventional consumptive use of water in a power plant has been discussed in earlier parts of this section.

The need for higher quality boiler water and the increasingly stringent environmental regulations will accelerate the improvements in treatment technologies and the acceptance of recycle/reuse practices in the utility industry. However, the plants will still require large quantities of water because of the following consumptive uses.

- Evaporation and drift in cooling towers,
- Evaporation in FGD systems,
- Occlusion loss with ash, FGD and water treatment wastes, and
- Net evaporation from ash ponds to atmosphere (if applicable).

Table 5.10

Priority Pollutant Removal on Selected Technologies

	CLASSES OF PRIORITY POLLUTANTS CONTROLLED																												
PROCESS	Aerolein	Antimony & Compounds	Arsenic & Compounds	Benzene	Beryllium & Compounds	Cadmium & Compounds	Carbon Tetrachloride	Chlorinated Benzenes	Chlorinated Ethanes	Chloroalkyl Ethers	Chlorinated Phenols	Chloroform	Chromium & Compounds	Copper & Compounds	Cyanides	2,4-Dichlorophenol	Lead & Compounds	Mercury & Compounds	Napthalene	Nickel & Compounds	Nitrosamines	Pentachlorophenol	Polychlorinated Biphenyls	Polynuclear Aromatic Hydrocarbons	Selenium & Compounds	Silver & Compounds	Thallium & Compounds	Toluene	Zinc & Compounds
ACTIVATED CARBON	✓		*	✓	*		✓	✓	✓	✓	✓	✓	*		*	✓			✓			✓	✓	✓	*				*
LIME PRECIPITATION		✓	✓			✓							✓	✓			✓	✓		✓						✓	✓		✓
REVERSE OSMOSIS	✓	✓	✓	✓	✓	✓	✓	✓	✓	✓	✓	✓	✓	✓	✓	✓	✓	✓	✓	✓	✓	✓	✓	✓	✓	✓	✓	✓	✓
VAPOR COMPRESSION DISTILLATION	✓	✓	✓	✓	✓	✓	✓	✓	✓	✓	✓	✓	✓	✓	✓	✓	✓	✓	✓	✓	✓	✓	✓	✓	✓	✓	✓	✓	✓
EVAPORATION PONDS	✓	✓	✓	✓	✓	✓	✓	✓	✓	✓	✓	✓	✓	✓	✓	✓	✓	✓	✓	✓	✓	✓	✓	✓	✓	✓	✓	✓	✓

* Highly site-specific

Note: This is an assessment of potential source application only.

Source: [13]

Table 5.11

Comparison of Technologies for Priority Pollutants

Control Technology	Projected Effectiveness	Estimated Energy Requirements (kWh/1000 gal)	Sources of Secondary Emissions		
			Air	Water	Solid
Activated Carbon	Good	.35	From regeneration step	Quench water	Spent carbon if no regeneration is used
Lime Precipitation	Good for removal of heavy metals Residual concentrations for metals are less than .1 ppm	8	—	Liquid occluded with solid sludge	Sludge produced from precipitation
Reverse Osmosis	90-98% rejection of dissolved solids; 95% removal of organics; 75% water recovery	8-10	—	Concentrated brine and membrane backwash	—
Vapor Compression Distillation	99.9% salt rejection; 90% water recovery	80-100	Vent from aerator	Concentrated brine slurry	Solids in concentrated slurry
Evaporation Ponds	Seepage is the only liquid discharge from evaporation ponds and is dependent upon the type of pond and liner.	.3-.5	Evaporation of organics in the feed water	Seepage	Precipitation products produced in pond
Graded Media Filter	Removes suspended solids in the particle size range of .1 to 50p.	.3	—	Filter backwash	Solids in filter backwash
Solid Waste Disposal by Landfill	Seepage is the only liquid discharge from sludge ponds and is dependent upon the type of liner used and whether the sludge is fixed or not	<2*	Evaporation of organics in sludge	Seepage	—

*Site specific

Source: [13]

In other words, with optimum reuse in a conventional water system at a power plant, the net consumptive requirement is considerable (about 56,850 m^3/day or 15 MGD for a 1,000-MW plant). An entirely different approach to water management, however, is the use of dry systems. Such systems would not employ water consumptively as a heat transfer or materials handling medium. The three major areas of water use (condenser cooling, ash handling and FGD) may be impacted by such potential dry systems in the future.

a. Condenser Cooling

Condenser cooling is the largest consumptive use of water. Because of constraints on water availability and environmental regulations on thermal discharges, new condenser cooling concepts using dry or hybrid wet/dry systems are being evaluated.

Dry systems have been described earlier. They require zero make-up and are analogous in principle to automobile radiators. The operating performance in Europe indicates that the plant reliability is satisfactory with dry cooling towers [74]. There is no baseline data to corroborate in U.S. power plants. Many in-depth studies have been done on dry tower economics [75]. In general, all dry systems achieve zero makeup at a considerable cost penalty. A recently completed report for ERDA indicates capital cost for dry cooling tower system is four to five times greater than that for an all wet cooling tower system in a 1,000-MW range plant [75].

An alternative approach would be to employ the combination wet/dry condenser cooling system (i.e., a hybrid system) to conserve makeup water, also described earlier. These alternatives and the thermal performance of combined wet/dry cooling tower systems have been reported in the literature [76,77]. The analysis indicates that in principle, the combination wet/dry condenser cooling systems can be used in a power plant for cycle heat rejection. Costs data for wet/dry cooling tower systems, were recently prepared under the sponsorship of ERDA and EPRI [75], which confirm the high costs associated with these systems (compared to wet cooling tower system).

From the above discussion, it is apparent that there are various new concepts possible for the condenser cooling system which will substantially reduce the makeup water requirements. However, it should be emphasized that the principal impetus in this direction are thermal discharge regulations(not effluent regulations). As the technology improves and the crunch for water supply increases, the practical use of these new concepts in the utility industry may impact on water utilization.

b. Flue Gas Desulfurization (FGD)

In wet FGD systems (recovery and nonrecovery), water is lost by evaporation in saturating the flue gases. In nonrecovery wet processes, water is also lost by occlusion with wastes. In recovery wet processes, the water loss with the product will depend upon whether elemental sulfur or sulfuric acid are produced.

An alternative approach would be to utilize dry FGD systems. These systems utilize various dry sorbent materials which can be either carbonaceous types or non-carbonaceous types (limestone, dolomite, alkalized alumina). The water loss in these processes will depend upon the SO_2 recovery temperature (since partial cooling of flue gases by evaporation may be necessary) and the type of product in dry recovery processes.

In general, the water consumption for the dry processes would be less than that in wet processes. Advancements in fluidized bed combustion technology (atmospheric and pressurized) may also accelerate the technology of dry systems. The reader is referred to Volume 3 for a discussion on dry sorbents.

At present, unlike the wet throwaway processes, both the dry processes and wet recovery process have not been commercialized to any great extent. Consequently, the impact on water consumption, though anticipated to be beneficial, cannot

be assessed at this time. However, in recent years, there has been an upsurge of interest in dry sorbent systems. In 1978 three commercial-size orders were placed for dry sorbent FGD units which would be in operation by the early 1980's.

c. Ash Handling

The most prevalent method of ash handling in coal-fired power plants in the United States is by wet (hydraulic) systems equipped with disposal ponds. Even if these systems are adapted for water recycle, water will be lost from these systems by occlusion with ash waste and in some cases also by net evaporation to atmosphere.

An alternative approach would be to use dry (pneumatic) ash handling systems. Besides decreasing water consumption (compared to all wet systems), such systems may offer potential advantages for the ultimate ash disposal and utilization. Certainly, if dry ash handling systems are utilized, the recycle/reuse potential for other plant streams will also be affected. For example, the cooling tower could be operated under increased cycles of concentration, thus reducing the flow to the brine concentrator.

While bottom ash handling is usually by wet sluicing, a significant number of plants use dry fly ash handling. Table 5.12 summarized the present situation.

Dry (pneumatic) fly ash handling systems can be of vacuum, pressure, or a combination type [50]. Vacuum systems are limited in length by the configuration and the plant altitude above sea level and in such cases pressure systems can be employed. Vacuum-pressure systems are usually economical where a number of precipitator hoppers are employed and where the length of conveying system exceeds the capability of a vacuum system to attain a satisfactory conveying rate [50].

Table 5.12

Summary of Fly Ash Handling Systems
Reported By Coal-Fired Steam Electric Power Plants

Dry	193
Wet (once-through)	164
Wet (recycled)	17
Not reported*	413
Total surveyed	787

*Includes plants which did not report or other systems not surveyed.

Source: [101]

If the fly ash is to be removed from the plant in a dry state, a minor quantity of water is sprayed on the collected fly ash to prevent fugitive dust during transportation.

Cost estimates for dry ash handling systems are reported [5]. Updating these to mid-1978 levels, a dry ash handling system for a new 1000-MW coal-fired plant (design capacity of 181 metric tons 200 short tons/hour of ash) may cost about $4.2 million installed ($0.42/kW).

Recently, a study was conducted by the utility industry to evaluate the cost of dry vs. wet fly ash removal for new power plants [107]. The study concludes that for a new plant, dry handling is less expensive than wet. Estimated costs for wet and dry handling systems are shown in Table 5.13. However, many site specific factors affect costs and hence, this conclusion may need modification in some cases.

The Remand Decision (Section 4.1.4) required that EPA has to demonstrate dry fly ash handling in a viable technology. At present there is substantial evidence that this is so. An assessment of this question indicates that in the future at least for new plants, dry fly ash handling may be required.

Table 5.13

Fly Ash Handling: Comparison of Wet and Dry System Costs

Basis: 1. 9.2 MM tons of dry ash over 35 years. Storage volume of 11.4 MM cu yd for wet, 9.08 MM cu yd for dry. 5' water cover for dirt. 1"-3" compacted soil for dry.

2. Costs in 1974-75 dollars.

	WET	DRY
Fly Ash Handling Equipment	$ 2,000,000	$2,000,000
Installation Cost (50%)	1,000,000	1,000,000
Return Line From Pond (Gravity)	750,000	--
Road Construction (Incl. Loading Area Collection Facilities)	(1)	600,000
Pond Construction	11,280,000	--
Disposal Site Preparation and Rainfall Runoff Treatment Facility	--	1,836,000
Total Construction Cost	15,030,000	5,436,000
Engineering @ 15%	2,250,000	815,000
Contingency @ 15%	2,250,000	815,000
Land Cost @ $3,000/acre	1,020,000	720,000
Total Capital Cost	20,550,000	7,786,000
Fixed Charge @ 15%	3,082,500	1,168,000
Annual Operating Cost		
Labor, Maintenance, Power on Equipment	136,000	115,000
Road Maintenance	--	11,000
Hauling @ $1/yd^3	--	325,000
Dozer Operation @ $300/day, 5 day week, 52 weeks/year	--	78,000
Total Annual Cost	3,218,500	1,697,000
Tons/Year	262,800	262,800
Cost/Ton	12.25	6.46

1 An access way is required for maintenance. Cost for this item is very site specific but probably small in comparison to other costs.

Source: [105]

5.4 Overview on System Constraints

5.4.1 General

The factors that affect the extent and nature of water recycle/reuse at power plants may vary from the relatively straightforward, such as the limited availability of water supplies at the plant site to a complex combination of factors such as effluent regulations, economic considerations, energy usage, space requirements, and social considerations including aesthetics as well as environmental factors. For each power plant there is probably a unique combination of these various factors that will be considered in arriving at the operational choices that will determine the magnitude of water recycle/reuse. To the extent possible in this area of shifting factors, some of the effects that should be considered by the EPA in establishing a posture on recycle/reuse by power plants are discussed in this section. The regulatory considerations are discussed separately in Section 4.0.

5.4.2 Technology Considerations

The technologies for providing a water stream of virtually any desired quality have been available for a long time. However, of paramount consideration are the economic implications that the application of these technologies might have on the electric power generating industry. Historically, the application of available technologies has been limited to specific areas such as boiler water treatment. As a consequence, there are only a limited number of demonstrated processes or systems of water recycle/reuse and these are predominantly, of course, for the recirculation of cooling waters. The steam-electric generating industry, like many other industries, is reluctant to concede to some extent that technology transfer can be utilized in predicting the performance of technologies in its industry. Consequently, virtually every utility stresses the importance of projects for demonstration of technologies. While these demonstrations are necessary, especially in showing the effectiveness of removal of trace constituents and defining economics of the technology, the large-scale demonstrations of water recycle/reuse technologies may not always be necessary from a technological

basis. In fact, for the important parameters of a recycle/reuse system such as chemical compositions, control of scaling and/or corrosion, total dissolved solids content, and so on, the application of well-known principles of chemistry coupled with limited amounts of field and laboratory testing can result in development of broad design and operational parameters for a water recycle/reuse system. However, engineering data including kinetics and operational considerations are required for reliable design.

While the availability of technologies for effecting high degrees of recycle/reuse of water is reasonably established, the availability of information on the implication of these technologies on the power plant design and operation has not been demonstrated to any significant degree. Consequently, most of the data on the implication of water recycle/reuse technologies on power plant design and operation must be based on engineering studies. However because site-specific factors such as the quality of makeup water, quality of water bodies receiving discharges, and so on, have such unique effects on water recycle/reuse systems, at least a preliminary engineering study is required for determining the magnitude of the effects. In general, as water is increasingly recycled or reused, the quality not only deteriorates, but the interrelationship between controls of the water recycle system and the power plant become increasingly significant. Consequently, in an industry where past water usage has been largely on a once-through basis, the introduction of requirements for controlling the quality of recycled water and the engineering and operational aspects of water treatment systems and controls would mandate a drastic change in operational philosophies which, as in any situation, is often resisted as much on technological bases as on economics. Obviously, there will be significant impacts on the power plant designs and operations as increasing amounts of water are recycled or reused. In particular, the changes in the quality of water, e.g., temperature, total dissolved solids, corrosivity, and so on, can be reflected in the need to change design and operations with their concomitant effects on plant performance.

As discussed earlier, there are many facets of water management that are considered by the electric power generating industry, and, consequently, there is no clear cut consensus. However, it appears generally that the degree of recycle/reuse considered in the industry is inversely related to the availability of a water supply of adequate quality and quantity. It is apparent, also, that the degree of recycle/reuse is, or will be, most affected by environmental regulations on discharges. As these regulations approach the 1985 goal of PL 92-500, the rate of water reuse throughout the industry will perforce increase because the alternatives of technologies and economics will have combined to force that position. (See Section 4.0.) Consequently, the interrelationship between recycle/reuse, potential minimization of discharge, and economics becomes increasingly strong. The elements of the interrelationships will increasingly be concerned with the environmental law so aptly stated by Barry Commoner, i.e., "there is no such thing as a free lunch."

5.4.3 Economic Considerations

Because pollution is a diseconomy spread across the population and environment in a manner often not readily perceived, i.e., the immediate effects may be apparently limited to small areas while the subtle impacts often take decades to be perceived, the costs of the environmental impacts are not readily perceived nor precisely estimable. On the other hand, the costs of recycle/reuse systems required to mitigate the environmental impacts are immediately perceivable in the form of increased capital and operating costs by the management and increased electricity costs by the consuming public. Consequently, the industry will be continually concerned with the costs of recycle/reuse while questioning the benefits to be gained. On the other hand, the environmental activists will be strongly concerned with the benefits gained. While it is relatively easy to establish the costs of recycle/reuse systems, unfortunately it is much more difficult to establish the benefits that accrue in areas such as health, aquatic life, overall aesthetics and so on. Therefore, it seems likely that there will be an increasing debate regarding the cost/benefits of recycle/reuse systems.

Increasingly stringent regulations on specific chemical species, i.e., the toxic, hazardous, or priority pollutants, would be expected to result in either elimination by replacement with other acceptable substances, or the introduction of appropriate removal systems. Since it appears that these priority pollutants will be principally organic compounds, the allowable concentration levels in recycle systems will probably be treatment of a small stream for their removal and either returning this stream to the recycle loop or discharging it at permitted levels of concentration. The cost of toxics removal from a once-through water stream versus the costs for recycle and removal would be dependent upon the particular toxic substance, the permitted concentration limits in discharges, and the usual site-specific parameters.

The problems of capital acquisition and investment as well as the increased operating and maintenance expenses incurred by installation of recycle/reuse systems in the electric utility industry are unusual in their magnitude, i.e., the large quantities of water that must be handled and treated. In this regulated industry, the costs for water handling systems in combination with air and solid waste pollution control systems will present the utility rate regulators with increasing problems. It can be expected that passing these added costs on to the public, will result in further increasing the intensity of the politicians speaking out against rising energy costs. Since there are no simple solutions--only hard choices--the environmental regulatory agencies will be faced with increasing need to consider the total economic impact of their regulations and must be alert to those economic considerations if they are to maintain their credibility with the public.

5.4.4 Other Considerations

Energy Requirements

The utilization of increasingly higher rates of recycle/reuse in consort with tightening regulations on emissions to the environment will increase the energy requirements for support facilities, i.e., many of which will be considered to be non-productive by industry operators. It is axiomatic that these trends will increase energy usage either

directly, e.g., through the need for more pumping of water streams, or indirectly in the energy required to provide the materials of construction, the treatment chemicals, and so on. The magnitude of the energy usage for pollution control systems varies widely and is principally related to air pollution control. Depending upon the sulfur content of the fuel, the energy usage for pollution control may be as great as 7% to 10% of the total energy content of the fuel for a high sulfur content fuel.

Space Requirements

The type of recycle/reuse water system selected will be dependent to a large degree upon the site situation. Where large land areas may be available, the cooling pond seems to be the method of usual choice while in more restricted areas the cooling towers find greatest use. Of all of the recycle loops, the cooling loop and the ash-handling loops are those having the greatest space requirements. For urban plants of limited space, the decisions on recycle/reuse systems may be dictated by the terrain, land availability, and atmospheric conditions.

Other Requirements

Other considerations such as aesthetics, e.g., the tall hyperbolic cooling tower versus the cooling pond or forced draft cooling tower, would have effects on the type of recycle/reuse systems employed. Many of these limitations will probably be site-specific and highly dependent upon the nature of the social pressures that might be generated at specific locations. It is highly doubtful in our vocal and advocacy oriented society that any clear cut consensus is likely to be attained on the degree to which water recycle/reuse systems should be incorporated into power plants.

6.0 RECYCLE/REUSE VERSUS POTENTIAL IMPACT ISSUES

6.1 Overview of Impact Issues

The large volumes of water required for electric utility operation result in a number of impact issues associated with such operation. Major issues focused on in this section include those associated with waste heat rejection and ash disposal (FGC wastes are considered separately in this report). The engineering basis for water use at various points and water effluent generation have been discussed in Section 3.0. In this subsection, the focus will be on the potential environmental impact issues and how they may be altered by water recycle/treatment/reuse. It may be noted that the principal focus of this R&D Report is the chemical waste streams and not the thermal wastes. However, insofar as the latter have chemical contamination they have been considered. These are reviewed in Table 6.1, noting that the degree of impact potential is relative to system design and site-specific environmental characteristics. Along with FGC waste systems, these represent the major water use processes within utility operation.

Traditional cooling systems have utilized once-through cooling whereby intake water is passed through condensers and returned to surface waters. The large quantity effluent typically contains corrosion products (metal oxides) and biocide treatment chemicals (chlorine or hypochlorite) in addition to waste heat energy. The major impacts associated with once-through cooling systems include:

- Potential for impingement and entrainment of aquatic organisms at intake ports,
- Potential damage to aquatic systems due to large volume heated effluents, and
- Toxicity potential of discharged residual chlorine as well as chlorinated compounds resulting from the mixture of treatment chemicals with constituents in intake waters.

The degree of impact is related to design of intake and effluent systems and the size and type of water body (e.g., lake, river estuary, marine coastal) on which the facility is located. Where water supply

Table 6.1

Potential Impact Issues for Coal-Fired Utility Cooling Systems and Ash Disposal Systems (See Key)

	Water Use Processes					Ash Disposal Systems		
	Cooling Systems							
Impact Media	Once-through Cooling System	Recycle Cooling System with Pond	Recycle Cooling System with Tower	Wet/Dry Hybrid System	Dry Cooling System	Once Through Wet Disposal System	Recycle Disposal System	Dry Disposal System
LAND								
Use/Reuse	Space Requirements[2] Aesthetics/Nuisance Issues[2]	Space Requirements[2] Aesthetics/Nuisance Issues[2]	Space Requirements[2] Aesthetics/Nuisance Issues[2]	Space Requirements[2] Aesthetics/Nuisance Issues[2]	Space Requirements[2] Aesthetics/Nuisance Issues[2]	Space Requirements[2] Aesthetics/Nuisance Issues[2]	Space Requirements[2] Aesthetics/Nuisance Issues[2]	Space Requirements[2] Aesthetics/Nuisance Issues[2]
Soil/Geology		Containment Migration[2]				Containment Migration[2]	Containment Migration[2]	Containment Migration[2]
WATER								
Use (Numbers in parenthesis represent relative units or degree of use assuming optimal operation/design	Cooling Water Requirement (1000)*	Make-up Water Requirement (30-90)*	Make-up Water Requirement (30-90)*	Make-up Water Requirement (1-10)*	(0)*	Sluicing Water Requirement (21-32)	Make-up water Requirement (4-6)	(0)
Quality	Cooling Water Discharge[2]	Blowdown Discharge[2,4] Seepage[4] Surface Runoff[2,4]	Blowdown Discharge[2,4] Seepage[3]	Blowdown Discharge[2,4]		Overflow Discharge[2,4] Seepage[2,4] Surface Runoff[2,4]	Blowdown Discharge[2,4] Seepage[2,4] Surface Runoff[2,4]	Seepage[2,4] Surface Runoff[2,4]
AIR								
		Drift and Plume Effects[2,4]	Drift and Plume Effects[2,4]	Drift and Plume Effects[2,4]				Fugitive Emissions[2]
Secondary Impacts (Biota)	Intake Impingement Entrainment[2,4] Effluent Toxicity[2,4] Construction Clearing[2]	Intake Impingement Entrainment[2,4] Effluent Toxicity[2,4] Construction Clearing[2]	Intake Impingement Entrainment[2,4] Effluent Toxicity[2,4] Construction Clearing[2]	Intake Impingement Entrainment[2,3] Effluent Toxicity[2,4] Construction Clearing[2]		Intake Impingement Entrainment[2,3] Effluent Toxicity[2,4] Construction Clearing[2]	Intake Impingement Entrainment[2,3] Effluent Toxicity[2,4] Construction Clearing[2]	Construction Clearing[2]

* These "units" are system specific and not for direct comparisons between systems. However, comparisons are valid for conceptualization of relative orders of magnitude between cooling and ash systems.

Sources: Modified from References (80) & (91).

Key:
1. Issue of potential general significance for cooling or ash disposal systems.
2. Issue of potential significance but degree of impact is related to system size, design and site specific environmental characteristics (see text).
3. Issue of relatively minor or reduced significance.
4. Significance uncertain due to data gaps.

Source: Modified from Reference [80 & 91]

is limited, the impact potential of once-through cooling for large facilities is severe. The more recent location of power plants near large bodies of water reflects this, although concern over the cumulative effect of increasing numbers of such facilities even on large water bodies, such as the Great Lakes, has been noted [79].

An existing alternative focuses on reuse of water within the utility system. Recirculation of cooling water is practiced at present in approximately 40% of steam electric utilities [80]. In such system design, far less intake water is required (needed for makeup water) with effluent volumes, from blowdown of recirculating water, also significantly reduced. Impacts associated with recirculating systems can include large land areas where cooling ponds are used, increased potential for makeup water treatment, and increased concentrations of water constituents from water losses due to drift and evaporation during the cycling process. Where blowdown water is utilized for fly ash transport or bottom ash sluicing, additional toxic contaminants could be present in the water finally discharged. Water quality in the effluent or recycle blowdown is not only dependent upon system design, but also related to intake water quality and "waste" water treatment capability [80]. In addition, contaminants present in seepage from ponded areas or in tower drift may represent impact issues.

Water requirements for ash disposal are at a maximum with once-through sluicing systems, and essentially eliminated in dry systems utilizing pneumatic transport. Contaminants present in discharge water in hydraulic systems, along with potential seepage of contaminants from ash ponds themselves, also represent impact issues. The degree of impact is again, site-specific. In general, contaminant concentrations in coal ash, coal ash leachate and supernatant water have a more significant impact potential.

The discussion that follows focuses on major environmental impact potential, in a generic sense, associated with water/recycle/reuse cooling systems and ash disposal systems. It should be emphasized that the purpose of this discussion (as well as summary Table 6.1) is not to

represent a comparison of cooling system and ash disposal impact potential, but rather to discuss the impact potential of various system designs within each process. Where possible, some comparisons are made to aid the reader in understanding relative degrees of impact potential. However, site-specific considerations can make judgments of impact potential inappropriate for such comparisons. Further, it should be noted that certain system approaches represent recent technology or technology where applicability to utility operations has not been demonstrated. In such cases, the degree of impact potential is even more difficult to define.

6.2 Mechanisms of Impact

6.2.1 Land Related

The most significant land related impact issue associated with cooling water recycle/reuse is derived from the large land requirements for systems utilizing cooling ponds. In one review, it was estimated that large facilities may require 4.1 km^2 (1,000 acres) of pond cooling surface. In addition to siting considerations (land availability) and economic feasibility (e.g., land purchase costs), major impact issues concern implications for concentration and/or migration of contaminants.*

If zero discharge is chosen as a goal for a power plant, then on-site disposal of brines and sludges becomes a major consideration. Considering the trend of environmental legislation, and the future developments on priority pollutants. This is especially important for new plants.

Such impact potential would certainly be site specific, utility design specific, and include:

- The type and amounts of chemical treatment additives in the ponded cooling water;
- The site-related potential for leaching of contaminants into groundwater supplies (based on soil/geology considerations; also a water related issue);

---

*Aesthetic/noise considerations are essentially site-specific impact issues which, in some cases, can be significant.

- The site-related potential for pond overflow dam failure with subsequent surface water and land impacts;* (based on topographic and location considerations; also a water related issue); and
- The potential for contaminant build-up in pond bottoms that could represent long-term contaminant sources, even after closure of the site.

The types of chemical additives referred to in the above list are discussed in further detail in the sub-section immediately below. In addition, completely closed system impact issues may develop as a result of land disposal of water treatment wastes. This potential would be directly related to waste characteristics and disposal methods.

Similar impact issues also apply to ash disposal ponds. However, land requirements are generally less, as pond surface area is not a determining factor in pond design.

Impact issues related to contaminant concentrations are generally far more significant for ash ponds. The high concentrations of contaminants (dissolved salts and trace metals are examples) in the ash itself, associated supernatant and in leachate represent significant impact potential. Contamination migration is a key issue associated with ash disposal ponds. Site-specific soil or geological characteristics may serve to contain seepage, but where such containment does not exist, water related impacts may result. Post closure land use potential of ash disposal ponds also represents a significant impact issue. For example, revegetation may be difficult without a soil cover. Upward migration of contaminants with subsequent incorporation of certain toxicants into the food chain may represent health and environmental impact issues. (See Section 6.0.) Ash pond dam failure with subsequent ash liquefaction, (an "abnormal event" impact issue) could result in significant impacts to downstream land and water users. The impact

---

*Dam failure represents an "abnormal event" impact. The design of waste pond dams is a well established engineering practice with risks of failure fairly well understood. Cooling pond dams, where they exist, would fall into this category.

potential of ash pond failure would be dependent upon pond size and site topography. Dam design would be similar to that utilized for other types of disposal ponds and, as such, represents a developed engineering practice with relatively well-defined risk potential.

6.2.2 Water-Related

The discussion of water-related impact issues associated with dry or recycle systems for waste heat rejection and ash disposal are of necessity generic in nature due to specific, site-related conditions and operational practice.

6.2.2.1 Issues Associated with Cooling Systems

While much of the discussion in this section will focus on the water-related impact potential of recycle/reuse cooling water systems, it is important to note that such systems were designed to mitigate two of the most significant impacts associated with once-through cooling systems: namely, large volume water intakes and large volume heated discharges.

Recycle/reuse technology significantly reduces net water intake requirements, even though consumptive use may remain the same. Thus, recycle/reuse reduces impacts associated with such requirements. The degree of impact reduction is dependent upon system design and site location. If cooling tower blowdown is discharged, water intake for recycle systems can be reduced over an order of magnitude below once-through cooling water requirements. (See Table 6.1.) In practice, the reduction has been much less in many cases due to intake water quality and subsequent cycles of concentration, along with other system operating design and parameters. Such reduction in water requirements is especially significant in areas of limited water availability. Completely closed power plant recycle/treatment/reuse water systems could potentially reduce net water intake requirements by over 95% of that required or once-through cooling systems with further reduction in water impacts; however, consumptive use remains the same.

Recycle cooling water systems also mitigate the impacts associated with the large volume heated discharges of once-through systems. While major reductions in impact potential are biological (discussed below), problems such as decreased oxygen saturation levels and alterations in

rates of chemical reactions in natural ecosystems are reduced significantly with recycle/reuse systems.

Recycle systems do require makeup water and, depending upon the source of that water, chemical treatment may be required. The concentration of non-volatile dissolved solids increases with increasing numbers of "cycles of concentration", the latter being based on intake water quality (especially dissolved solids content) and system operating practice. Chemical treatment is often required for:

- corrosion inhibition,
- scale control,
- biofouling control, and
- dispersal of suspended solids.

"Blowdown" is required in such systems to control concentrations of impurities and contaminants in the condensers. As such, blowdown water quality will be dependent upon:

- makeup water characteristics,
- chemical treatment(s) used,
- air-water contact in the cooling system, and
- cycles of concentration.

The impact potential of blowdown waste water streams is thus related to these operating characteristics.

Table 6.2 lists the more typical chemical additives that may be added for control of each of the noted operational problems in cooling tower recycle systems (ponding recycle systems would be similar). It should be noted that a selection, and not all of the listed additives would be chosen.

Effluent concentrations of added constituents are difficult to estimate without information concerning makeup water quality. Residual chlorine levels themselves may be problematic, although most concern over this contaminant is related to aquatic biota impacts [79]. The formation of chlorinated hydrocarbons, because of their toxicity potential, are receiving increasing attention. The amounts and types formed are the result of intake water organic content, the nature and types of organic additives, the level of chlorination used and resultant

Table 6.2

Examples of Chemical Additives Characteristically Found in Cooling Tower Blowdown as a Result of Makeup Water Treatment

No.	Effluent Stream	Process or Operation	Chemical Additive(s)	Typical Conc. of Additive or Pollutant	Resulting Priority Pollutant Expected in Effluent	Expected Conc. of Pollutants in Effluent	Comments
1	Cooling Tower Blowdown	Corrosion Inhibition	Chromate	10-50 mg/l as CrO_4	Chromium	10-50 mg/l	
			Zinc	8-35 mg/l as Zn	Zinc	8-35 mg/l	
			Phosphate	15-60 mg/l as PO_4			
			Silicates	-----			
			Proprietary Organics	3-10 mg/l as organic	Potential priority organics		Organics can react with residual chlorine to form chlorinated compounds
		Scale Control	Acid (H_2SO_4)	2-5 mg/l			
			Inorganic Polyphosphates				
			Chelating Agents	-----	Chelates heavy metals		
			Polyelectrolyte Antiprecipitants	1-2 mg/l			
			Organic/Polymer Dispersants	20-50 mg/l	Potential priority organics		Organics can react with residual chlorine to form chlorinated compounds
		Biological Fouling (Algae Slimes, Fungi)	Chlorine	<0.5 mg/l residual			Supplies free chlorine for reaction with organics to form chlorinated organics
			Hypochlorite	------			
			Chlorophenates		Chlorinated Phenols		
			Thiocyanates		Cycanide		
			Organic Sulfur Compound	~30 mg/l residual concentrations			
		Suspended Solids Dispersion	Tannins				
			Lignins				
			Proprietary Organics/Polymers	20-50 mg/l	Potential Priority organics		Organics can react with residual chlorine to form chlorinated compounds
			Polyelectrolytes/Monionic Polymers	1-2 mg/l			
		Leaching of wood preservatives from wood cooling towers	Acid Copper Chromate	Unknown	Chromium		
			Chromated Copper Arsenate	Unknown	Arsenic		
			Creosote	Unknown			
			Pentachlorophenol	Unknown	Pentachlorophenol		

Table 6.2 (Continued)

Examples of Chemical Additives Characteristically Found in Cooling Tower Blowdown as a Result of Makeup Water Treatment

No.	Effluent Stream	Process or Operation	Chemical Additive(s)	Typical Conc. of Additive or Pollutant	Resulting Priority Pollutant Expected in Effluent	Expected Conc. of Pollutants in Effluent	Comments
2	Boiler Blowdown	Scale Control	Di & Tri Sodium Phosphates	3-60 mg/l of PO_4	Chelates heavy metals		
			Ethylene diaminetetracetic acid(EDTA)	20-100 mg/l			
			Nitrolatriacetic acid(NTA)	10-60 mg/l			
			Alginates	50-100 mg/l			
			Polyacrylates	50-100 mg/l			
			Polymethacrylates	50-100 mg/l			
		Corrosion Control	Sodium Sulfite	< 200 mg/l			
			Hydrazine	5-45 mg/l			
			Morpholine	5-45 mg/l			
		pH Control	Sodium Hydroxide	variable added to adjust pH to 8-11.0			
			Sodium Carbonate				
			Ammonia				
			Morpholie				
			Hydrazine				
		Solids Deposition	Starch	20-50 mg/l			
			Alginates	20-50 mg/l			
			Polyacrylamides	20-50 mg/l			
			Polyacrylates	20-50 mg/l			
			Tannins	< 200 mg/l			
			Lignin Derivatives	< 200 mg/l			
			Polymethocrylates	20-50 mg/l			
3	Water Treatment Including Blowdown Wastes	Alum Treatment and Filtration					
		Ion Exchange Water Treatment	Regenerant Solutions added to reactivate bed		Priority pollutants present in source water	Significantly higher concentrations than source water	

Table 6.2 (Continued)

Examples of Chemical Additives Characteristically Found in Cooling Tower Blowdown as a Result of Makeup Water Treatment

No.	Effluent Stream	Process or Operation	Chemical Additive(s)	Typical Conc. of Additive or Pollutant	Resulting Priority Pollutant Expected in Effluent	Expected Conc. of Pollutants in Effluent	Comments
4	Ash Handling	Coal Ash Sluicing (fly ash and bottom ash)	None	Pollutants in sluice water before sluicing	In addition to Source Water: Cadmium, Chromium, Copper, Lead, Magnesium, Nickel		Trace metals in the coal or oil are leached into the sluicing liquor
5	FGD Systems	Lime/Limestone	Lime or Limestone	TDS=25,000 to 70,000	Cadmium, Arsenic, Mercury, Zinc, Others		Can be leached to surface or groundwater
		Alkaline Fly Ash, Dual Alkali					
6	Miscellaneous	Lab & Sampling Sanitary, Intake Screen Backwash, Auxiliary Cooling					
7	Chemical Cleaning	boiler waterside cleaning and condenser waterside cleaning	Acid Solvents and Toxic Solvents	Nickel, Zinc, Aluminum, Copper			Heavy metals are dissolved into the cleaning solution from equipment surfaces
		boiler fireside	Water or slightly alkaline wash, Na_2CO_3, NaOH, Phosphates	iron, nickel, chromium, vanadium, zinc			Much of the priority pollutants come from dissolution of deposits on boiler tube surface. The deposits originate in the coal or oil burned

Table 6.2 (Continued)

Examples of Chemical Additives Characteristically Found in Cooling Tower Blowdown as a Result of Makeup Water Treatment

No.	Effluent Stream	Process or Operation	Chemical Additive(s)	Typical Conc. of Additive or Pollutant	Resulting Priority Pollutant Expected in Effluent	Expected Conc. of Pollutants in Effluent	Comments
8	Coal Storage & Handling	Rainfall/runoff Floor & Yard Drains			Aluminum Sulfates Chlorides Iron Cadmium Beryllium Nickel Chromium Vanadium Zinc Copper	Depends on intake water	Dissolution of trace metals into water
9	Process Spills and Leaks	Accidents involving general plant operations					

residual chlorine content. Chloramines may also be problematic where ammonia levels are sufficiently high in intake and/or receiving water, or the potential exists for atmospheric scrubbing of ammonia. The presence in effluents of present or future "priority" organic pollutants due to additives is also receiving increasing attention.

Elevated levels of inorganics (some of which are also "priority pollutants"), either due to cycles of concentration and/or added chemicals have been examined. In one examination of blowdown water from 11 cooling towers, 7 were from air conditioning plant towers, and 4 were from power plant cooling towers. The following are some general observations made from this sampling program [80].

- Zinc concentrations, where zinc was used for treatment, were well in excess of currently acknowledged levels of toxicity to aquatic organisms.
- Ammonia, in some situations, might not meet effluent standards. Ammonia, along with nitrates and phosphates, could be sufficiently high to stimulate eutrophic conditions in certain nutrient-limited receiving waters.
- Concentrations of copper, iron, manganese, mercury, nickel, and cadmium could exceed water quality criteria.*
- Chromium, where chromates are used, can be sufficiently elevated to potentially produce adverse effects on aquatic biota.
- Sulfates (where sulfate chemicals are used) may be in excess of water quality objectives.
- Atmospheric scrubbing could potentially be the source of lead, chromium, and other trace metals.

The above discussion does not assume treatment of blowdown waste streams, hence identifying worse case type impact potential. Treatment technology and specifically, toxic substances control were discussed in Section 6.2 above.

*It was noted that a significant source of mercury could well be intake water. Atmospheric scrubbing or leaching of residual mercury from towers where mercury-based biocides were previously employed were hypothesized as potential sources.

Water in cooling ponds would contain the same additives found in blowdown water, although concentrations of specific parameters might vary. Contaminant seepage from such ponds is a potential impact. The degree of impact potential to groundwater systems is not well defined as an issue, and would be site specific.

Several water-related impact issues remain. The first is the use of alternatives in the treatment of cooling tower water. The problems with residual chlorine* and the potential for formation of chloramines and chlorinated hydrocarbons with the associated environmental impact potential has led to a review of alternatives to present common practice including: [81]

- More efficient chlorine use (e.g., serial dosing, use of dechlorination chemicals, blowdown timing control, and chlorination by feedback control of chlorine residual);
- Chemicals other than chlorine; and
- Physical chemical methods.

The first example would reduce discharge of chlorine residuals, thus reducing impact potential. It should be noted that while dechlorination chemicals could remove free chlorine, combined chlorine, and are effective for chloramines, they are ineffective in reduction of other chlorinated organics. The degree of problem associated with the latter compounds is dependent on intake water chemistry and the other types of chemical treatment utilized. Bromine chloride, chlorine dioxide and ozone have also been considered as alternative biocides, and from one review, it would appear that water-related impacts would be reduced with their use on a per water volume basis [81]. Ozonolysis has not been utilized in cooling tower water systems in the past, and while the technology and economics of generation of ozone have improved, lack of residual protection and field demonstration prevent analysis of its use as a biofouling control agent as well as its water impact potential [81]. Field scale use of both chlorine dioxide and

*Dechlorination chemicals are not presently utilized except in very few power plants.

bromine chloride is ongoing and indicate environmental improvements over chlorination: ClO_2 does not react with ammonia, nitrogenous compounds or most organic impurities before oxidizing them; the products of chlorobromination containing ammonia or organic nitrogen are more easily degraded, and less obnoxious than comparable byproducts of chlorination. Physical-chemical methods of treatment (e.g., radiation) have not been field tested and chemical additives may be required in any case [81].

With the impact issues associated with the use of chromium compounds or zinc/chromium compounds for corrosion protection in the condenser system, several available options could be utilized. These include:

- Recycle of all cooling tower blowdown,
- Recovery and removal of chromium and zinc from the effluent, or
- Non-chromate corrosion control and/or better materials of construction to resist corrosion.

The first two are certainly directed toward elimination of potential impacts due to zinc and/or chromium. Examples of non-chromate control are listed on Table 6.2. The impact potential of such compounds where blowdown water is discharged is dependent in part upon levels occurring in the effluent. Organic corrosion inhibitors can be chlorinated in chlorinated systems and could potentially be quite toxic. Increased phosphated loading, where significant, can lead to increased eutrophication.

The above discussion assumes direct discharge of blowdown water, without contact with other operating systems within the power plant. The design of water use in some facilities can include contact of blowdown waste streams with fly ash and bottom ash wastes. In these situations, the cooling tower waste stream is utilized for transport or sluicing of ash. In such cases, additional toxicants (salts and trace metals, for example) could be added to the waste stream in significant amounts. Levels in discharge would certainly be system specific due to:

- Makeup water and treatment for cooling tower use,
- The type of coal used, and
- Treatment of waste water stream prior to discharge.

The variables make it difficult to describe impact potential in the generic sense.

Additional reductions in water requirements can be achieved with wet/dr hybrid systems and dry cooling systems. The latter system type essentially eliminates potential water-related impacts of the sort that have been identified for wet systems.* Some makeup water is required for hybrid systems, but amounts needed are at least an order of magnitude below other recycle system requirements. (See Table 6.1.)

6.2.2.2 Issues Associated with Ash Disposal

Several major water-related impact issues are associated with ash disposal: water use for the disposal process, discharge of overflow or blowdown, and seepage losses from disposal ponds.

In the United States, hydraulic conveyance of fly ash is a common handling method: however, many plants do handle fly ash by pneumatic means. Bottom ash may also be sluiced to an ash pond. Water requirements for such disposal systems are maximum with once-through water use. While relative water requirements values used on Table 6.1 were computed for typical ash disposal and cooling systems separately, and hence, cannot be directly compared, the numbers were computed in a manner that allows relative order of magnitude comparison. Although ash disposal is one of the major water use processes, once-through systems do not approach water requirements for once-through cooling systems. Recycling of sluicing water does not achieve the same relative degree of water requirement reduction as is true for recycle cooling systems because of water retention by ash and seepage losses. In present practice, recycling is limited to bottom ash sluicing water. While recycle of fly ash water is theoretically feasible, it is far more difficult because of its dissolved solids content. Constraints on such recycle systems are discussed below in Section 5.4.

*Impacts related to abnormal events, such as spills from broken pipes in dry cooling systems, are not normal operating impact issues.

Pneumatic transport of ash for disposal, a dry system, is used by European utilities and available in the U.S. This would essentially reduce water requirements to zero (some wet down water for preventing dust emissions might be required).

The second major water impact issue associated with ash disposal is the discharge of pond overflow (or blowdown in recycled systems). The degree of impact potential is dependent upon such site-specific considerations as the size of receiving water body, and makeup water source, as well as coal composition. Overflow water may contain elevated levels of suspended solids, dissolved solids, trace metals, and possibly radionuclides (depends upon coal burned) [82]. Levels and types of organic compounds are not well documented [82]. Use of other waste streams, such as cooling tower blowdown, coal pile runoff or cleaning wastes may significantly increase levels of oil and grease, solids, organics, or trace metals in the ash handling waste stream. Such discharges are not associated with dry systems.

The third major water issue associated with ash disposal systems is seepage from ash ponds. The discussion here focuses on those ash ponds where settling takes place, although the same issue applies to final ash disposal, such as in a landfill. Up to 10% of fly ash can be water soluble, thus the potential exists for leaching from ash ponds (dry or wet). Trace metals and soluble species such as calcium, magnesium, potassium, sulfate, and chlorides represent some of the typical leachable constituents and the pH is typically in the alkaline range. While the potential exists for migration into groundwater, site specific soil and geological conditions are likely to determine the degree of migration potential. Hence, the degree of groundwater impact potential of such seepage is not well established [82]. The potential for upward and lateral migration of solutes is also an impact issue. Groundwater levels, surface evaporation, soil cover, and rainfall play roles in determining the relative degree of potential impact.

Additional water-related impact issues concern events that are either less frequent or classified as abnormal. Dam failure would be

an example of the latter (see Section 6.2.1) with risks fairly well understood and similar to those associated with dam construction for many types of waste ponds. The potential for impact on surface water bodies, should failure and ash liquefaction occur, could be great, but would depend upon site-specific relative locations of ash ponds and such water bodies.

Depending upon local topography and pond construction, surface runoff with precipitation events could also represent a potential for impact to local surface waters. Concentrations of suspended and dissolved solids, trace metals, and other ash pond contaminants could potentially be significant; but contents of such non-point source additions to surface waters (or soils) are not well documented [82].

By one estimate, the quantity of elements discharged to slag and fly ash ponds per year may be as high as or greater than 10% of the natural weathering rate for some elements. Such estimates pose the issue of impact potential of increased mobilization on the ecosystem. This is especially true for water systems, due to discharge, runoff, seepage, and atmospheric fallout contributions.

6.2.3 Air-Related

Air-related impacts are not a direct issue in water usage in power plants. They are briefly noted here because recycle systems for cooling water do create some air impact issues not present with once-through cooling.

The key air-related issues associated with wet recycle cooling systems concern the potential for cloud and/or fog formation (dependent upon system design and climatic conditions) and water/contaminant losses with drift. In both cases, the impact potential is greatest with the use of cooling towers. The significance of impact potential associated with local weather modifications (if and when they occur) would be related, in part, to the density of surrounding development. Drift droplets can potentially contain any of the constituents present in cooling water and transfer them to points of deposition. Drift deposition may result in accelerated corrosion in structures within drift transport range. Effects of containment deposition on biota, soil, or water are also potential

impact issues. Long-range transport and washout of major ionic species including toxins that can alter the pH of rainfall may also be an issue.

6.2.4 Biota-Related

The major biological impact issues associated with water use for electric power generation can be divided into three types of impacts:

- Direct effects on biological productivity.
- Acute and/or chronic toxicity.
- Long-term accumulation and/or food web effects.

Construction clearing, with associated losses of habitat, exist for all cooling and ash systems. Impact potential is site-specific, being related to the size and biological significance of the area cleared.

The EPA sponsored or co-sponsored studies with the TVA include [90]:

- At the Colbert Steam Plant about two years ago, an FGD sludge pond was vegetated with trees. Unfortunately the leaves were burnt in areas that did not have soil cover. The pond was about 9 meters (30 ft) in diameter or less and no nutrients were added. In a section of the pond (about half), about 150 millimeters (6 in.) of soil cover was laid out.
- The TVA has a Rhizotron lysimeter [117]. In this system, oxidized and unoxidized FGD wastes were placed and planted with alfalfa for some time. Many wastes were ash free. The sludges were placed in 150-millimeter (6-in.) layers plus soil above and below. FGC wastes were also studied. To date they have obtained several cuttings of alfalfa, including that from controls using standard soils. While the study is not complete yet, it appears that:
  - The parts with both oxidized and unoxidized FGD wastes did better than FGC wastes.
  - The FGD waste plantings also did better than soil.
  - FGC did the worst of all in such revegetation studies. Roots simply could not penetrate such wastes.

  Boron uptake in the above revegetation study was very high,

but the amount of uptake was not exorbitant. Even so, the uptake was considered enough to reach toxic levels of boron.

- Shawnee--The FGD waste pond [117] at Shawnee that is not being used has been revegetated with a variety of trees and grasses. Half of the area was vegetated with trees after placement of sewage sludge and the other half with no cover. At present, about 10 varieties have been planted; however, the survival rate is not very high. This could be due to the lack of moisture (no artificial watering was employed). Unfortunately, there was no control plot to determine if drought alone killed the trees or something in the wastes.

  In 1979 the E and F ponds at Shawnee will be resloped and covered with soil and seeded with grass. Utilities may not be able to place 60 centimeters (2 ft) of soil cover inexpensively. However, two different varieties of trees could still be planted over lesser depths of soil cover to see if there is an optimum or acceptable depth for soil cover for such revegitation. Control plots will also be employed. Small seedlings will be used.

6.2.4.1 Issues Associated with Cooling Systems

Direct effects on biological productivity have traditionally been associated with large-volume utility water intakes, especially impingement and entrainment of large numbers of aquatic organisms with subsequent potential reductions in aquatic populations. In general, such impact potential is associated with once-through cooling systems, and is greater in smaller water bodies, and for organisms with long life cycles (e.g., shellfish and finfish). Thus, the large reduction in water requirements by recycle/reuse of cooling tower water can represent a significant decrease in impact potential for aquatic organisms at some sites. Total water management with even greater reductions in water requirements would further mitigate biological impacts. Considering the proliferation of plants using cooling systems, even on large bodies of water, such reductions would appear to improve the problems of combined impacts due to multiple sources.

The impacts associated with the discharge of cooling water effluents are dependent upon the intake water treatment additives, receiving water quality* and degree of water treatment utilized prior to discharge. For large-volume once-through cooling discharges, the biological impact issues have largely been associated with effluent temperatures and residual chlorine levels [85]. Major impact potential associated with large-volume heated effluents include increased mortality of aquatic biota, altered population dynamics, and hence, community structure, and altered metabolic rates and timing in reproductive cycles. Where large temperature gradients occur between effluent plumes and ambient water (as could occur in colder climates during winter months) cold shock mortality and gas bubble disease have been reported for finfish populations [86]. The fact that some fish are attracted to discharge plumes can increase their exposure to potential toxicants such as residual chlorine, chloramines, zinc, etc., with toxic effects being associated with effluent levels, temperature (in some cases) and fish residence time in the plume.

Recycle/reuse of cooling tower waters mitigates many of the problems associated with the large water volume once-through cooling systems. However, discharge blowdown contains increased types and concentrations of potential toxicants. The toxicity of a large number of the more common chemical additives has been documented for some aquatic species [87]. Considerations of alternatives to chlorination (such as the use of bromine chloride) are due, in part, to the toxic potential exhibited by residual chlorine and various reaction products [88, 89, 90]. The degree of impact will depend upon the amount of blowdown water treatment, dilution potential of the receiving waters, toxic species present and, in some cases, the types of aquatic species present. Alterations in the more sedentary bottom dwelling communities frequently serve as an indication of toxic effects due to effluent discharge. While these organisms may not be among the most sensitive to given toxicants, their exposure is frequently of longer duration. Chronic or acute toxic effects to other

*Low organic content would reduce some of the problems with residual chlorine toxicity and also affect concentrations of toxic, persistent chlorinated hydrocarbons. Chloramine levels can also be reflective of intake water ammonia levels.

aquatic species is also related to exposure time in addition to life stage and degree of sensitivity but alterations in these populations are not necessarily as readily observed in situ, especially where toxic levels are in the chronic range. Furthermore, the toxic effects of combined contaminants, including their antagonistic or synergistic potential, are not at all well established. It should be emphasized that for all types of discharges, the degree of impact is related to ambient water quality, discharge diffuser design, receptor distribution, and the dilution potential or size of the receiving water body.

The long-term fate and effects of discharged contaminants have begun to receive more attention. The uptake potential and food chain accumulative effects has been established for certain contaminants and organisms (mercury, cadmium, PCB's, some pesticides are examples). These effects are far less well documented for many of the contaminants utilized in the cooling tower systems. Theoretical approximations based on such characteristics as the octanol/water partition coefficient are being utilized to approximate uptake for organic materials. The problem is complicated by lack of extensive field data, the latter being especially sparse for organic substances and for the long-term fate of combinations of contaminants. The long-term degradation patterns and effects of intermediate compounds or metabolites adds to the difficulty in establishing impact potential of many organic contaminants. Established laboratory procedures can provide estimates of acute and chronic toxicity, while long-term effects levels require techniques such as in-situ bioassay, which are far less well established and considerably more difficult to use. Field-scale verification of bioassay results is even less well documented or non-existent for most of the chemicals considered here.

The potential does exist for increases of contaminants in surface water, soils, and vegetation (hence, animals as well) with drift disposition of contaminants. The degree of impact potential is not at all well established [82]. Impacts would probably be much less significant for large water bodies, or atmospheric conditions promoting long range transport.

6.2.4.2 Issues Associated with Ash Disposal

The biological impact issues associated with ash disposal are of a similar nature to those described above.

Impact potential associated with water use requirements are significant to the degree that ash disposal water requirements are additive to cooling water requirements (the latter generally being more significant). Impingement/entrainment potential is related to velocity and volume of intake water, thus once-through system ash disposal water requirements are not very significant compared with once-through cooling requirements, and more significant when added to requirements for recycle cooling systems. Recycle of ash sluicing water and pneumatic transport reduce this potential impact on biota to an even greater degree.

The impact potential of ash pond overflow (or blowdown) is also of the same nature as impacts associated with cooling system blowdown. The degree of impact on aquatic biota is associated with, among other things:

- Size of receiving water body;
- Concentrations of dissolved solids, trace metals, radionuclides, organics, and effluent pH;
- Distribution of aquatic organisms, in relation to discharge, including resident time in that area; and
- Species and age group present (in some cases).

The potential for acute toxicity, chronic effects and bioaccumulation are all potential issues considering the range of containment species in the ash itself. Concentration/chemical availability in the effluent* and dilution potential of the receiving water contribute to the degree of issue significance. Although trace metals, radionuclides and organic constituents represent classes of compounds toxic to biota if present in sufficient concentrations, quantification of such discharges is not available [82].

Surface runoff from ash ponds has a similar impact potential, in terms of contaminant discharge. However, concentrations of contaminants, hence biological impact potential, is even less well defined.

*Treatment is not assumed in this discussion.

The major terrestrial biota impact issue associated with ash disposal results from the potential for upward and lateral movement of soluble contaminants. Soil accumulations of elements present in ash may be toxic to vegetation, or accumulate in vegetation, leading to potential toxic effects in animals.

6.3 Issue Definition Process

The key environmental impact issues surrounding recycle/reuse technology are essentially defined by water availability, treatment technology, the emerging regulatory climate, and economic considerations. Primary in developing pressure for recycle/reuse systems over once-through cooling or once-through ash disposal systems have been (1) concern over water availability in certain parts of the country and (2) the magnitude of water quality/biological impact potentials of power generation on small bodies of water. New once-through cooling systems tend to be located on large bodies of water and intake and discharge impacts can be mitigated by technical design (e.g., reduced intake velocities and diffuser discharge configurations). However, there does appear to be increasing concern over the large number of such systems with a compounding of impacts, even on large water bodies.

Regulation of the "129 priority pollutants" in terms of discharge limitations, while still an emerging issue, is likely to increase effluent treatment requirements. Such developments, in conjunction with increasing competition for water supply, will likely serve to increase pressure toward recycle/reuse systems where very little, if any, water is discharged. Here the economics and feasibility of treatment for reuse versus treatment for discharge will be operative in the decision process for system design. As understanding of biological impacts of intakes and discharges improves, this too may play a role in the decision-making process or in regulatory requirements. It is less clear how such pressures will operate toward possible retrofit of water reuse on existing once-through cooling systems and/or ash pond effluents, certainly site- and facility-specific situations.

Treatment of blowdown water and/or other recycled water for discharge or reuse in the plant usually leads to the production of additional solid wastes. Depending upon the extent that toxic substances can be recovered from such waste waters and reused in plant operation, the disposal could create additional impact issues. High levels of soluble salts and trace metals would be problematic for land or water disposal. In other words, some waste water discharge impacts could become solid waste disposal issues. The question remains whether or not such wastes would be considered hazardous under emerging Resource, Conservation and Recovery Act regulations, and the implications for disposal requirements. (See Section 4.0.)

The newest draft of Resource, Conservation and Recovery Act regulations [102] places fly ash and bottom ash in a "special waste" category, rather than on a list of hazardous materials. (See Section 6.1.) One implication of such regulation, if promulgated (due to lack of containment requirements) could be reduced requirements for monitoring of migration of contaminants.

In summary, the issues associated with power plant water use are substantially defined by water supply constraints of environmental regulation. System design and treatment technology further define environmental impact issues.

6.4 Ongoing Investigations

At present, there are 19 ongoing EPA- or EPRI-funded programs investigating aspects of water-related impact issues and principally associated with cooling and ash disposal systems. Tables 6.3 and 6.4 list these programs, identifying the issues being investigated and indicating which aspects of each impact issue are being covered.

As the above-mentioned tables illustrate, the emphasis of ongoing programs includes:

- Plume behavior,
- Waste stream and seepage characterization,
- Treatment technology,
- Guideline development for water management systems,

Table 6.3

EPA Projects Concerning Water Recycle/Treatment/Reuse in Power Plants

Basis: Only currently ongoing (as of December 1978) projects pertaining to chemical waste stream production are listed. Further projects under EPA's Thermal Programs are not listed here.

No.	Project Title	Contractor	Project Focus/Status	Reference	Issues Under Investigation (Aspects Covered)	
1	Assessment of Technology for Control of Water and Waste Pollution from Combustion Sources	Arthur D. Little	Purpose is to assemble, review, evaluate, and report data from research, development, and demonstration activities pertaining to FGC waste disposal/utilization and power plant water recycle/treatment/reuse.	6	Water Use Water Quality Effluent Toxicity	(Planning tool based on available data.)
2	Water Recycle/Reuse Alternatives in Coal-Fired Steam Electric Power Plants	Radian Corporation	Investigate water recycle/reuse alternatives for coal-fired power plants employing cooling towers, ash sluicing, and SO_2/particulate scrubbing systems, as well as for combined systems develop rough cost estimates for several selected alternatives which would potentially minimize power plant water requirements and discharges.	7	Water Use	(Water management alternatives.)
3	Characterization of Effluents from Coal-Fired Utility Boilers	Tennessee Valley Authority	The objectives of this project are to (1) characterize coal pile drainage; (2) assess the effect of pH adjustment on ash pond effluent; (3) assess and then design an effective program for monitoring ash pond effluent; (4) evaluate chlorinated water effluent quality from a once-through cooling system; (5) assess, characterize and quantify coal ash leachate effects on groundwater quality; and (6) study gaseous and particulate emissions from several types of boilers.	*	Water Quality Seepage Air Emissions	(Coal Ash Emissions from boilers being investigated todate.)
4	Treatment of Power Plant Wastes with Membrane Technology	Tennessee Valley Authority	Investigate the feasibility of employing membrane technology in the treatment of power plant wastewater.	*	Water Quality	(A Treatment Technology.)
5	Assessment of Measurement Techniques from Hazardous Pollution from Thermal Cooling Systems	Lockheed Electronics Company (Northrop Corp.)	Investigate the feasibility of using an organic analytical technique to rapidly assess the effect of cooling water effluents on the environment.	*	Water Quality	(A theoretical study of effects on biota or monitoring technique?)
6	Assessment of the Effects of Chlorinated Sea Water from Power Plants on Aquatic Organisms	TRW, Incorporated	Characterization and evaluation of the toxicity of compounds formed by chlorination of sea water by power plants.	*	Water Quality Effluent Toxicity	(Literature review at present.)
7	Evaluation of Lime Precipitation for Treatment of Boiler Tube Cleaning Waste	Hittman Associates, Incorporated	Perform bench scale studies to evaluate lime precipitation as a technology to control metal discharges in boiler water-side tube cleaning wastewaters. Use of hydrochloride acid copper chemicals, citric acid, hydroxy acitic acid, and EDTA may be considered later.	*	Water Quality	(Treatment technology.)
8	Assess Comparative Merits of Reverse Osmosis, Vapor Compression Evaporation and Vertical Tube Foam Evaporation (Excluding Softening, Thermal Softening, and Multi-Stage Flash) for Treatment of Cooling Tower Blowdowns	Bechtel	a) Monitoring of EPRI funded demonstration of vertical tube foam evaporation demonstration (VTFE-D) b) Assess economic and energy efficiencies of VTFE. Reverse osmosis and vapor compression evaporation.	*	Water Quality Drift	(Treatment technology.)
9	Characterization of Ash Pond Discharges	Hittman Associates, Incorporated	For the EPA-Effluent Guidelines Division development of industry wide data on ash pond discharges.	*	Water Quality	(Effluent Characterization.)

* Ongoing Projects

Source: [6]

Table 6.4

EPRI Projects Concerning Water Recycle/Treatment/Reuse in Power Plants

Basis: 1. Only currently ongoing (as of November 1978) projects are listed.
2. Only projects pertinent to chemical waste streams are listed. Purely thermal studies are not listed.

No.	Project Title	Contractor	Project Focus	Issues Under Investigation	(Aspects being Covered)
1	Development of Comprehensive Water Management Methodology	Water Purification Associates	Develop design and optimization guidelines for an integrated water management system in fossil fuel power plants.	Water Use	(Guidelines for design.)
2	Trace Element Removal by Adsorption on Iron Hydroxides	Stanford University	Demonstrate a novel insolubilization process as a feasible first step for trace metal removal from power plant discharge water streams.	Water Quality	(Treatment technology.)
3	Fundamental Studies of Mechanisms of Biofoulant Film Buildup and Destruction	Rice University	Laboratory study of slime film buildup in condensers and its destruction; control by biocidal agents, such as chlorine.	In-System Water Quality	(Theoretical study, not application.)
4	Numerical Modeling Techniques for Three-Dimensional, Recirculating Flows in the Near-Field of Cooling Tower Plumes	Environdyne, Ltd.	Development of a general three-dimensional, numerical model for representing the near-field behavior of cooling tower plumes.	Drift/Plume	(Model.)
5	Acceptance Test Methodology for Cooling Towers	Environmental Systems Corporation	Develop and demonstrate instrumentation and test procedures for performing definite acceptance tests on large mechanical draft cooling towers.	Drift Water Use Power Consumption	(Assessment technology.)
6	Validation of Cooling Tower Plume and Drift Deposition Models	Argonne National Laborat /	Assemble all available cooling tower plume field data in a common format suitable for model verification.	Drift/Plume	(Collection of existing data.)
7	Agricultural Waste Water for Power Plant Cooling	California Department of Water Resources	Develop an economical and reliable pretreatment method for agricultural wastewater to reduce its scale-forming tendencies, so as to make it acceptable for power plant cooling.	Water Use	(New water sources.)
8	Ozone Dosage and Contacting for Condenser Bio-Fouling Control	Public Service Electric & Gas (N.J.)	Experimentally determine the dosage required and the economic feasibility of using ozone to control biofouling in model power plant condensers.	Water Quality	(Treatment technology.)
9	Other Chemical Alternatives to Chlorination for Bio-Fouling Control	Northwestern University	Assess other chemical alternatives to chlorination.	Water Quality	(Treatment technology.)
10	Demonstration of Vertical Tube Foam Evaporation for Blowdown Treatment	University of California at Berkeley	Demonstration of Vertical Tube Foam Evaporation (VTFE-D). Equipment involved is funded by prior EPA study.	Water Use/Drift	(Technology demonstration see #8, Table 3.3-3)

Source: [8, 9]

- Cost estimate development for selected water reuse system alternatives, and
- Assessment of existing data on recycle/treatment/reuse for use as a planning tool.

A number of impact issues do not appear to be under investigation or are receiving less emphasis in these programs. Biological impact issues do not appear as a focus of the 19 programs listed: contaminant mobilization/migration, ecosystem fate and effects of contaminants, and combined contaminant effects are some examples of such issues.

Characterization of surface runoff from ponded wastes and impact potential do not appear to be covered by this ongoing research. Drift deposition impacts are likely to represent local, if any significance, but does not appear to be covered by these programs.*

---

*Long-range transport and washout of contaminants are also not covered, but more an exclusively air issue.

7.0 INFORMATION AND TECHNOLOGY GAPS

7.1 Categorization of Data Gaps

A survey of the broad area of water management in power plants indicates that existing gaps of data or information could be broadly classified into two categories:

- Information gaps. This refers to those questions or areas of technology in which detailed design and economic information are not readily available. A typical example of such an information gap is ash handling systems.. A substantial amount of information on the detailed design and economics of wet and dry ash handling is available in various organizations active in designing or building equipment for ash handling. But such information is not readily accessible in the open literature.
- A larger concern is technology or data gaps. For example, the disposal of ash, particularly in the dry state, on the large-scale on-land may be considered an area where there is some technology gap. Technology gaps in this sense should also include the lack of reliable economic data for large-scale utilization of a particular technology.

  In this connection, it is also well to note that utility power plant operations are on such a large scale that utilities have traditionally been very reluctant to accept any economic estimates except those obtained on demonstration-scale units of such size that very reliable economic projections are feasible. Given the regulated nature of utilities, their reluctance to accept any but the most reliable economic estimates for any technology on water recycle/reuse is not unreasonable. For this reason, the application of many technologies for total water reuse in power plants at this stage may be considered a technology gap. For example, reverse osmosis technology could be potentially employed for reuse of water. But economic estimates on any significant scale are sufficiently undetermined at this time that it may be considered an area where additional definition is necessary.

A broad overview of the existing information in the entire field of power plant water management indicates some specific areas where either information gaps or technology gaps, as defined above, exist. Tentatively, the major areas of concern are described below.

7.2 Information Gaps

The following are the major information gaps of significance in the area of water recycle/reuse.

1. Disposal methods for fly ash. Ash handling collection methods include dry, recirculating wet and once-through wet systems. At present, the trend in the United States could be considered to be towards dry fly ash systems. Dry fly ash systems have been employed for many years in Europe and elsewhere. Recirculating wet systems are not usually employed for fly ash even though they are common for bottom ash.

   Some of the major organizations in the field have a substantial amount of information in their files on dry handling of ash. Typical examples of organizations with ash collection information are Allen-Sherman-Hoff and United Conveyor.

   However, it may be noted that if the trend towards dry ash handling is based on water-related regulatory constraints, that disposal of dry ash on the ground may pose some environmental questions on which data gaps may exist at present; such impacts are determined by the method of disposal and site-specific factors. This will be discussed later.

2. Treatment and reuse options, particularly for equipment cleaning wastes, might be an area where there is some information gap in the open literature. Again, some information may exist in the possession of organizations active in designing and building such facilities.

As part of its overall mission of preserving the quality of the environment and encouraging increased focus on minimizing effluent discharges, the EPA is vitally interested in potential measures to minimize such information gaps. Such efforts will lead to easier acceptance of

regulatory guidelines and the associated recycle/reuse technology by industry.

It is noted that in the field of water recycle/treatment/reuse, there is exchange of information in the published technical literature, and at professional meetings and seminars for technical information exchange. However, there is no recognized forum for such technology transfer specifically geared to water recycle/treatment/reuse in power plants. The utility industry has unique constraints in terms of scale of operation, economics, regulatory constraints, and potential energy supply problems. Hence, such a forum for water recycle/treatment/reuse in power plants might be of substantial value from several viewpoints:

- It can serve as a technology clearinghouse.
- It can permit broad interaction of EPA technical staff with utilities and industry on their respective perceptions on technology and economics and subsequent impact on regulations.
- It may help focus on some of the interdisciplinary problems associated with energy/environment/economics for the utility industry. As part of fostering such technology transfer, the EPA may consider an annual or biennual (every 2 years), state-of-the-art assessment of technology for water recycle/treatment/reuse at power plants. To be effective, any such technology transfer needs the participation and/or cooperation of industry.

It is suggested that an extension of the periodic FGD Symposium to include a separate one-half- or one-day session for water recycle/reuse may be a worthwhile beginning.

7.3 Technology or Data Gaps

In some ways, technology gaps are more important. Potentially, these require far more effort and funding to correct. As stated earlier, technology gaps necessarily include gaps in reliable economic estimates on the large scale; for this is a key factor in utility acceptance of any environmentally desirable system or technology. In addition, it should be noted that utilities correctly demand very high reliability

of systems if it affects the performance of the power plant as a whole. Hence, any assessment of technology should also emphasize the need for extreme reliability before it can be considered in power plant applications.

Some of the major areas of technology gaps have been identified in previous years, and the EPA has already initiated programs in those areas. Some additional ones where some program planning might be useful are considered below.

1. Ash Handling and Disposal - In the area of ash handling and disposal, the following items require additional information:
   - Technology and constraints on recycle systems for fly ash. The TVA [51], Radian [13] and other studies have offered a beginning in this vital area. The ultimate emphasis of water management in this field should be on water reuse.
   - The technology for dry disposal of ash in landfill is known. Moreover, regulatory constraints also encourage trend to dry disposal. However, information on environmental impact of dry disposal of ash can only be considered a data gap at this time. Lacking such data, impact issue definition would be difficult.
   Development of optimum methods of disposal to minimize runoff and methods to treat runoff. Work in this area is very much needed and implementation of regulations includ- the RCRA make this imperative.

   Better definition of the overall impact of disposal of ash, including dry ash, on groundwater and land utilization is required. In the same context, the disposal method should be optimized to minimize runoff and also include methods to treat the runoff where necessary. Particularly because of the significant presence of trace elements in ash, this would be an important consideration. TVA's recent study [14,60] may serve as a useful starting point on this issue.

2. Chlorination and Potential Alternatives - Intermittent chlorination is widely practiced to control biofouling on the walls of cooling system tubes. However, active chlorine is toxic to aquatic biota. Hence, discharges should be regulated to protect aquatic life in receiving waters.

The EPA has already initiated a substantial number of studies on chlorination including a study of the magnitude of the problems and various alternatives. Particularly with the trend towards tightening of the water loop and ultimate reuse of all the water, chlorination may have impacts quite different from those of some years ago. As water is more and more reused at the power plant, the net discharge is reduced, and hence the discharge of residual chlorine in the effluent waters into the surroundings may assume lesser importance. On the other hand, the buildup of alternative chemicals within the power plant water may require some further technological definition. Such potential alternatives (which have been explored in earlier or ongoing EPA programs) to chlorination are as follows:

a. Alternative chemical methods such as bromine chloride, ozone, and chlorine dioxide.
b. Mechanical systems to control biofouling and thus, eliminate chemicals.
c. Coating condenser tubes with appropriate material to minimize or eliminate biofouling buildup. However, in some cases, such coatings may themselves contribute to reduction in heat transfer.
d. Use of surfactants to minimize chlorine requirements.
e. Dechlorination methods to ensure that residual chlorine in the discharge is low.
f. Thermal heating methods to control biofouling. This has been practiced in California for some years.

Evaluation of each of these methods should include

- Better assessment of the health and environmental impacts of presently practiced chlorination techniques

to provide baseline data.

- Assessment of the health and environmental impacts of each of the above potential methods after defining the technology involved.

Any alternative has to be assessed on a comparative engineering, environmental, and economic basis against chlorination.

As discussed in Volume 1, the EPA and EPRI have initiated programs on various aspects of biofouling control and alternatives to chlorination. Continuation of these and initiation of new programs within the above framework may provide further data to control toxicity effects of chlorine without impairing engineering and economic efficiency required in biofouling control.

3. Metal Cleaning Wastes - At present, metal cleaning wastewaters are another significant source of potential pollution from power plants. These are a major source of heavy metals in discharges. Moreover, treatment of such wastes containing chelated metal complexes is not well defined. Various options and recycle of this water and use of cooling tower blowdown for metal cleaning have been proposed. Furthermore, studies have been conducted on the application of advanced technology for reuse of metal cleaning wastes. In spite of these efforts, it is noted that the technology definition and the large-scale economic projections for reuse or treatment of metal cleaning wastes require some further study. The EPA has an on-going contract with Hittman Associates [58] on treatment of metal cleaning wastes which would provide some basic information on treating these streams.

4. Chemical Additives and their Environmental Impacts - In addition to the use of chlorine in condenser biofouling control mentioned above, various biocides and fungicides are used in the cooling tower systems of power plants. These additives are often toxic. With the EPA encouraging increasing use of cooling tower systems,

the use of such biocides, fungicides, and other chemicals may be expected to increase. An adequate environmental assessment of such chemical additives is required. If such an assessment indicates that environmental impacts may be at unacceptable levels, alternative treatment technology should be explored and developed.

The Remand Decision (see Section 4.1.4) has led to increased attention by the EPA on cooling towers vis-a-vis other means of thermal discharges. This issue, when resolved, will further impact use of chemical additives.

5. Toxic Components in Effluents - Recently, EPA-sponsored studies have focused on the application of advanced treatment techniques to control priority toxic pollutants[13]. The methods evaluated include: reverse osmosis, carbon adsorption, lime precipitation, vapor compressor distillation, and evaporation ponds. It may be noted that advanced technologies such as carbon adsorption, reverse osmosis, vapor compression evaporation, and lime precipitation are potentially applicable. However, for reverse osmosis, carbon adsorption, and vapor compression evaporation, specific information for applicability in power plants, and the projections on large-scale economics are somewhat limited. A beginning has certainly been made in this area by a Radian study [13]. Future Program planning in this field should include broader technology assessment, including:
   - Economic estimates and operational reliability of such advanced water reuse in power plants.
   - Environmental impacts of control of toxics.

6. Demonstration Program - A logical continuation of EPA-sponsored studies on water recycle/reuse [7] would be a demonstration of water recycle/treatment/reuse at a power plant. Such a demonstration program can help define technology options and economic considerations to an extent necessary in the utility industry. The power plant for the demonstration program

should be chosen after defining:

- a set of criteria for the power plant where demonstration can be most useful in terms of generating data. The generated data should be applicable to a broad segment of the utility industry.
- Technology options to be studied.
- Other public policy considerations including the desire or willingness of the utility involved to cooperate in this effort with the EPA.

REFERENCES

1. Geological Survey Circular 765. U.S. Geological Survey, Washington, D.C., 1976.

2. Steam-Electric Plant Air and Quality Control Data for the Year Ended December 31, 1975 - Summary Report - Federal Energy Regulatory Commission, Washington, D. C., January 1979.

3. The Nation's Water Resources, The Second National Assessment by the U.S. Water Resources Council, Statistical Appendix, Volume A-2.

4. Water Consumption & Costs for Various Steam Electric Power Plant Cooling Systems by M. C. Hu, G. F. Pavlinco & G. A. Englesson (United Engineers & Constructors) Cameron Engineers, Denver, Colorado, EPA 600/7-78-157, August 1978. U.S. EPA Office of Research & Development, Washington, D.C. 20460.

5. Development Document for Effluent Limitation Guidelines and New Source Performance Standards for Steam-Electric Power Generating Point Source Category, EPA 440/1-74/029-a, Group I, Environmental Protection Agency, Washington, D.C. 20460, October 1974.

6. Jones, Julian W., Disposal of Power Plant Wastes. Presented at The Third National Conference, Interagency Energy/Environment R & D Program, Washington, D.C., June 1 & 2, 1978.

7. Water Recycle/Reuse Alternatives in Coal-Fired Steam Electric Power Plants, Volume I, September 1977, Radian Corporation, DCN #77-200-118-13. EPA Contract No. 68-03-2339, (Draft).

8. "Research & Development Project", Electric Power Research Institute, Palo Alto, California 94302, May 4, 1978.

9. Personal Communication, Mr. John Maulbetsch, EPRI, October, 1978.

10. Steam - Its Generation and Use, The Babcock & Wilcox Company, New York, N.Y.

11. Hollier, M., Experiences with Reverse Osmosis Demineralizing for Boiler Feed Water, Industrial Water Engg., Spril 1978, pp 20-21.

12. Supplement for Pretreatment to the Development Document for the Steam Electric Power Generating, Point Source Category, April 1977, EPA 440/1-77/084, Environmental Protection Agency, Washington, D.C., April 1977.

13. Collay, J. D., C. A. Muela, M. L. Owen, N. P. Mesarole, J. B. Riggs and J. C. Terry, Assessment of Technology for Control of Toxic Effluents from the Electric Utility Industry, Radian Corporation, EPA 600/7-78-090. National Technical Information Service, Springfield, Va. 22161, June 1978.

14. Chu, T.-Y., J. Nicholas, W. R. Ruane, R. J., Complete Reuse of All Pond Effluents in Fossil Fuel Power Plants, Water, 1976. AIChE Symposium Series, pp 299-311. American Institute of Chemical Engineers, 365, E. 47th St., New York, NY, 10017, 1377.

15. Power, Section 7, Volume 120, No. 4, April 1977.

16. Marshall, W. L., Cooling Water Treatment in Power Plants, Ind. Water Eng., 9 (2), 38, 1972.

17. Rossie, J. P., and E. A. Cecil, Research on Dry Type Cooling Towers for Thermal Electric Generation, Part I, Water Pollution Control Research Series, Water Quality Office, Environmental Protection Agency, Project 161 30 EES, Superintendent of Documents, U.S. Government Printing Office, Washington, D.C., November 1970.

18. "Wet/Dry Cooling Systems for Fossil-Fueled Power Plants: Water Conservation & Plume Abatement." M. C. Hu & G. A. Englesson, United Engineers & Constructors, EPA 600/7-77-137 Environmental Protection Agency, Office of Research & Development, Washington, D.C. 20460, November 1977.

19. "Optimum Design of Dry/Wet Comination Cooling Towers for Power Plants" V. C. Patel, T. E. Croley, II & M. S. Cheng. Cooling Tower Environment - 1974. Office of Public Affairs, Energy Research & Development Administration, Washington, D.C., 1975.

20. Donahue, J. M., Chemical Treatment; Ind. Water Eng. 7 (5), 35, 1970.

21. Krisher, A. S., Raw Water Treatment in the CPI; Chem. Engg., August 28, 1978, pp 78-98.

22. Aynsley, Eric and Meryl R. Jackson, Industrial Waste Studies: Steam Generating Plants. Report under EPA Contract No. WQO 68-01-0032. Freeman Labs, Inc., Environmental Protection Agency, Washington, D.C. 20460, 1971.

23. Glover, G. E., Cooling Tower Blowdown Treatment Costs; in Industrial Process Design for Water Pollution Control, Vol. 2, Proceedings of the Workshop, N.Y., AIChE, pp 74ff.

24. "Alternatives to Chlorination for Control of Condensor Tube Biofouling," H. H. S. Yu, G. A. Richardson, and W. H. Hedley, Monsanto Research Corp., Dayton, Ohio, EPA Report No. EPA-600/7-77-030, Environmental Protection Agency, Office of Research & Development, Washington, D.C., March 1977.

25. Permissible Chlorine Concentrations in Effluents from New Sources; Federal Register, Vol. 39, October 8, 1974.

26. Collins, H. F., Sewage Chlorination Versus Toxicity--A Dilemma; Journal of the Environmental Engineering Division Proc. ASCE, 99, No. EE6, 761-72 (1973), December.

27. Environmental Studies Board, National Academy of Sciences, Water Quality Criteria 1972, EPA-R3-73-033.

28. Bromine Chloride - An Alternative to Chlorine for Fouling Control in Condenser Cooling Systems, Bongers, L. H., and T. P. O'Conner, Martin Marietta Corp., and D. T. Burton, Academy of Natural Sciences of Philadelphia. EPA Report EPA-600/7-77-053, Environmental Protection Agency, Office of Research & Development, Washington, D.C. 20460, May 1977.

29. Mills, J. F., The Chemistry of Bromine Chloride in Wastewater Disinfection. Presented at American Chemical Society Meeting, Chicago, Illinois, August 1973.

30. Anonymous, Chemical & Engineering News, 56 (41), p 6, October 9, 1978.

31. Anonymous, Chemical Engineering, 85 (25), p 71, November 6, 1978.

32. Principles of Industrial Water Treatment, Drew Chemical Corporation, Boonton, N. J., 1977.

33. Gasper, K. E., Non Chromate Methods of Cooling Water Treatment; Chem. Eng. Progress, March 1978, pp 52-56.

34. Hennings, J. C. Misenheimer and H. Templet, Proceedings of the Cooling Tower Institute Annual Meeting, Houston, Texas, January 31-February 2, 1977.

35. Lawlar, J. B., Proc. 37th Intl. Water Conference, Pittsburgh, Pa., pp 21-6, October 26-28, 1976.

36. Donahue, J. M., Treatment of Cooling Tower Blowdown; Indus. Water Engg. July/Aug. 1978, pp 8-13.

37. Ellis, M. J. and R. Kunin, Proc. 37th Intl. Water Conference, Pittsburgh, Pa., pp 41-8, October 26-28, 1976.

38. Boier, D. B., J. E. Levin and B. Baratz, Technical and Economic Evaluation of Cooling Tower Blowdown Control Techniques, EPA-660/2-73-026, Environmental Protection Agency, Washington, D. C., November 1973.

39. Herman, K. W., Internal Boiler Water Treatment. Proceedings of the 38th International Water Conference, Pittsburgh, Pennsylvania, Nov. 1-3, 1977.

40. Kenner, F. N., External Treatment for Industrial Boiler Systems, ibid.

41. Krisher, A. S., Raw Water Treatment in the CPI, Chemical Engineering, 85, No. 19, p 78, August 28, 1978.

42. Jackson, E. W., and J. N. Smith, Make-up Treatment Counter Current Regeneration Experience in the United Kingdom. Proceedings of the 38th International Water Conference, Pittsburgh, Pennslyvania, Nov. 1-3, 1977.

43. Hazen, C. N., Ozone Treatment of Boiler Feedwater, ibid.

44. Sherm, M. and H. E. Mynhier, Experiences with Reverse Osmosis in a Pilot-Scale Wastewater Renovation System, ibid.

45. Hollier, M., Operating Experiences With Reverse Osmosis Demineralizing for Boiler Feed Water and Make-up Treatment Systems at Willo Glen Power Station, ibid.

46. Krol, C. A., et al, Operating Experience With a 'Zero' Discharge Deionizer, ibid.

47. Wajer, C. W. and C. W. Smith, Operating Experience of a Deep-Bed Condensate Polishing System, ibid.

48. Davenport, J. W., On-Site Pilot Tests of a SALA-MGMF Magnetic Filter at New England Power Company, Brayton Point Station, ibid.

49. Physical, Chemical and Biological Treatment Techniques for Industrial Wastes. Report to U.S. EPA, Office of Solid Waste Management Programs, Submitted by Arthur D. Little, Inc., November 1976.

50. A Primer on Ash Handling Systems, prepared by Allen-Sherman-Hoff Co., a division of Ecolaire, Inc., Malvern, Pa. 19355, 1976.

51. Nelson, G. R., "Water Recycle/Reuse Possibilities," Report No. EPA 660/2-74-089, U. S. Environmental Protection Agency, Washington, D. C., 20460, December 1974.

52. Ash at Work, Vol. X, No. 4, 1978, pp 1 & 4. National Ash Association, Washington, D. C., 20006, 1978.

53. Tobstrick, R. L., L. J. Henson, and S. V. Tomlinson, Economic Evaluation Techniques, Results and Computer Modelling for Flue Gas Desulfurization. Presented at the FGD Symposium, Diplomat Hotel, Florida, November 8-11, 1977.

54. Reuse of Power Plant Desulfurization Waste Water, Aerospace Corporation. Prepared for Industrial Environmental Research Lab., February 1976. U.S. Department of Commerce National Technical Information Service No. PB-250-732, NTIS, Springfield, Va.

55. Controlling SO_2 Emissions from Coal-Fired Steam-Electric Generators: Water Pollution Impact, Vol. I, Executive Summary, Vol. II, Technical Discussions, Interagency R & D Program Report, EPA-600/7-78-045a & b, March 1978 (Radian Corp.) Environmental Protection Agency, Washington, D.C., 1978.

56. Weimer, Larry D., "Effective Control of Secondary Water Pollution From Flue Gas Desulfurization Systems" by Resource Conservation Co., EPA-600/7-77-106, Environmental Protection Agency, Washington, D.C. 20460, September 1977.

57. Roebuck, A. H., Safe Chemical Cleaning-The Organic Way, Chemical Engineering, pp 107, July 31, 1978.

58. Draft Work Plan - "An Evaluation of Lime Precipitation as a Technique for Treating Boiler Tube Cleaning Wastes" EPA Contract 68-02-2684 by Hittman Associates, Columbia, Md. 21045, April 1978.

59. State and Local Pretreatment Programs, Volume I, EPA, Office of Water Programs, Washington, D.C., Augsut 1975.

60. Cox, D. B., T.-Y. J. Chu, R. J. Ruane, Characterization of Coal Pile Drainage, TVA, under Interagency Agreement D7-E7-21-BB, Draft Report, Environmental Protection Agency, July 1978.

61. Drummards, N. L., "Power Plant Water and Waste Management," Power Engineering 82 (7), p 49, July 1978.

62. Anonymous, Chemical & Engineering News, 56 (45), p. 23, November 6, 1978.

63. Puckorious, P. R., "Controlling Corrosive Microorganisms in Cooling-Water Systems," Chemical Engineering, 85 (23), p 171, October 23, 1978.

64. Scale Free Vapor Compression Evaporation, Water Capsule Research Report, OWRT-DOI, Washington, D.C. 20240, 1977.

65. Brine Concentration Application to Steam Electric Utility Waste Streams. Comments by Resource Conservation Company to the Environmental Protection Agency, June 1974.

66. Dascher, R. E. and R. Lepper, "Meeting Water-Recycle Requirements at a Western Zero-Discharge Plant," Power, 121 (8), p 23, August 1977.

67. Wirth, Jr., L. and G. Westbrook, "Cooling Water Salinity & Brine Disposal Optimized with Electrodialysis Water Recovery/Brine Concentration System," Combustion, 48 (11), p 33, May 1977.

68. Awerbuch, L., A. N. Rogers, and S. May, Evaporation of Blowdown Water in Power Plants. Paper in WATER-1976, AIChE Symposium Series, AIChE, New York, N.Y., 1977.

69. Goldman, E., and P. J. Kelleher, Water Reuse in Fossil Fueled Power Stations, Paper at the National Conference on Complete Water Reuse, April 1973.

70. "Renovation of Power Plant Cooling Tower Blowdown for Recycle by Evaporation: Crystallization with Interface Enhancement." H. D. Sephton, Univ of California at Berkeley, EPA-600/7-77-063, Environmental Protection Agency, Office of Research & Development, Washington, D.C. 20460, June 1977.

71. Sephton, Hugo H., "Interface Enhancement Applied to Evaporation of Liquids" U.S. Patent 3,846,254, November 5, 1974.

72. "Power Plant Cooling Tower Blowdown Recycle by VTE with Interface Enhancement: Mobile Pilot Plant Construction & Field Testing." H. E. Sephton, Univ of California, EPA Contract 68-03-6781, EPA-IERL, June 1978.

73. "Monitoring of VTFE-Demonstration and the Assessment of Various Technologies for the Treatment of Cooling Tower Blowdown," E. H. Houle, Bechtel Corporation, EPA Contract No. 68-02-2616, EPA-IERL, October 24, 1978.

74. Schwarzenbach, A., The Operation of Steam Turbines With Dry Cooling Towers, Combustion 49 (11), 33, May 1978.

75. Larinoff, M. W., Performance and Capital Costs of Wet/Dry Cooling Towers in Power Plant Service, ibid, 9, May 1978.

76. Larinoff, M. W. and L. L. Forster, Dry and Wet-Peaking Tower Cooling Systems for Power Plant Applications, Combustion, 48 (11), May 8, 1977.

77. Smith, E. C. and M. W. Larinoff, Alternative Arrangements and Designs-Wet/Dry Cooling Towers for Power Plant Applications, ibid, May 23, 1977.

78. Edsall, Thomas A., "Electric Power Generation and Its Influence on Great Lakes Fish," in Proceedings of the Second Federal Conference on the Great Lakes, Great Lakes Basin Commission, 1976.

79. Bongers, Leonard and Thomas P. Conner, Martin Marietta Corp., and Dennis T. Burton, Academy of Natural Sciences of Phila., "Bromine Chloride - An Alternative to Chlorine for Fouling Control in Condenser Cooling Systems," EPA Contract No. 68-02-2158, May 1977.

80. Stratton, Charles L. and G. Fred Lee, "Cooling Towers and Water Quality," Journal WPC7, Vol. 47, No. 7, July 1975.

81. Yu, H. H. S., G. A. Richardson, and W. H. Hedley, Monsanto Research Corporation, "Alternatives to Chlorination for Control of Condenser Tube Bio-Fouling," EPA Contract No. 68-02-1320, March 1977.

82. Van Hook, R. I., "Potential Health and Environmental Effects of Trace Elements and Radionuclides from Increased Coal Utilization," Environmental Science Division, Oak Ridge National Laboratory, Draft, November 21, 1977.

83. Effects and Methods of Control of Thermal Discharges, Part 3, Report to the Congress by the Environmental Protection Agency in accordance with Section 104(E) of the Federal Water Pollution Control Act Amendments of 1972, November 1973.

84. Bardarik, Daniel G., et al, Aquatic Ecology Associates, "A Study of the Effects of the Operation of a Steam Electric Generating Station on the Aquatic Ecology of Presque Isle Bay, Pennsylvania," for Pennsylvania Electric Company, April 1973.

85. Becker, C. D. and T. O. Thatcher, Battelle Northwest Labs, "Toxicity of Power Plant Chemicals to Aquatic Life," U.S. Atomic Energy Commission, June 1973.

86. Bongers, Leonard and Thomas P. Conner, Martin Marietta Corp., and Dennis T. Burton, Academy of Natural Sciences of Phila., "Bromine Chloride - An Alternative to Chlorine for Fouling Control in Condenser Cooling Systems," EPA Contract No. 68-02-2158, May 1977.

87. Sung, R., D. Strehler, and C. Thorne, "Assessment of the Effects of Chlorinated Seawater from Power Plants on Aquatic Organisms," Draft EPA Contract No. 68-02-2613.

88. Brungs, William A., "Effects of Wastewater and Cooling Water Chlorination on Aquatic Life," EPA Environmental Research Laboratory, Duluth, Minnesota, EPA-600/3-76-098, August 1976.

89. Roffman, Amiram, "Environmental, Economic, and Social Considerations in Selecting a Cooling System for a Steam Electric Generating Plant," in Proceedings of Symposium Cooling Tower Environment - 1974, March 4-6, 1974, published by ERDA, 1975.

90. Personal Communication from Mike Osbourne, Project Officer, EPA-IERL to Chakra Santhanam, Arthur D. Little, Inc., November 1978.

91. Chu, T. -Y.J. and Ruane, R.J., "Wastewater Treatment for Coal-Fired Electric Generating Stations," Proceedings of the 1978 WWEMA Industrial Pollution Conference, St. Louis, Mo. April 11-13, 1978.

92. Theis, T.L., et al. "Sorbtive Characteristics of Heavy Metals in Fly Ash-Soil Environments." Proceedings of the 31st Annual Purdue Industrial Waste Conference, 1976.

93. Milligan, J.D., Cox, D.B., and Ruane, R.J., "Characterization of Coal Pile Drainage and Ash Pond Leachate." Presented at the 49th Annual WPCF Conference, Minneapolis, Mn. October 3-8, 1976.

94. Steiner, G.R., Chu, T.-Y.J. and McEntyre, C.L. "Treatment of Chemical Cleaning Wastes at TVA Fossil-Fueled Power Plants," Presented at 84th AIChE National Meeting, Atlanta, Georgia, February 26-March 1, 1978.

95. Sisson, A.B., and Lee, G.V. "Incineration Safety Disposes of Chemical Cleaning Solvents." Proceedings of American Power Conference, 1972. P. 757.

96. Chu, T.-Y.J., Steiner, G. R. and McEntyre, C. L. "Removal of Complex Cooper-Ammonia Ions from Aqueous Wastes with Fly Ash," Proceedings of 32nd Annual Purdue Industrial Waste Conference, 1977

97. Cox, D.B., Chu, T.-Y.J., and Ruane, R. J. "Quality and Treatment of Coal-Pile Runoff," Presented at NCR/BCR Coal Conference and EXPO IV, Louisville, Kentucky, October 18-20, 1977.

98. "Information for Proposed General Pretreatment Regulations (40 CFR 403)", Office of Planning and Evaluation, EPA, Wash., D.C. March, 1977.

99. Steiner, G.R., McEntyre, C.L., and Chu, T.-Y.J. "Treatment of Metal Cleaning Wastes at TVA Power Plants." Presented at the 84th Annual Meeting of AIChE., Atlanta, Georgia, February 26-March 1, 1978.

100. "Annual Environmental Analysis Report." Prepared under ERDA Contract EE-01-77-0135 by Mitre, Consad Research, Control Data and International Research and Technology for the Department of Energy, Washington, D.C., September 1977.

101. "Technical Report for Revision of Steam Electric Effluent Limitation Guidelines" EPA-Effluent Guideline Division, Washington, D.C., 20460. Draft Report, September, 1978.

102. Hazardous Wastes -- Proposed Guidelines and Regulations, and proposal on Identification and Listing, Federal Register, Monday December 18, 1978, Part IV, Pages 58946-59028.

103. Personal Communication, Michael Osborne of EPA-IERL to Chakra Santhanam of Arthur D. Little, Inc., November, 1978.

104. Lewis, B.G., December, 1977. Asbestos in Cooling Tower Waters. Report ANL/ES-63, Argonne National Laboratory, Argonne, Illinois.

105. Atwood, K.E. and W.R. Greenway. July, 1975. Fly Ash Handling Systems Study Relating to Steam Electric Power Generating Point Source Category Effluent Guidelines and Standards. Utility Water Act Groups, C.W. Rice Division of NUS Corporation, Pittsburgh, Pennsylvania.

106. Jolley, R.L., G. Jones, W.W. Pitts, and J.E. Thompson, Chlorination of Organics in Cooling Waters and Process Effluents. In: Proceedings of the Conference on Environmental Impact, Oak Ridge National Labs, Energy Research and Development Agency, pp. 27-43, 1975.

107. White, G.C., Chlorination and Dechlorination: A Scientific and Practical Approach. Journal of the American Water Works Association, pp. 540-555, 1968.

108. Crawford, T.N., Dechlorination of Pacific Gas and Electric Company's Power Plants; A System Description. The Pacific Gas and Electric Company, pp. 9, 1977.

109. Conger, H.C., "New Approach to Cooling Water Treatment," Hydrocarbon Processing, January, 1979, pp. 119-122.

110. Chu, T-Y.J. et.al., Characterization and Reuse of Ash Pond Effluents in Coal-Fired Power Plants, Forty-Ninth Annual Water Pollution Control Federation Conference, TVA, Minneapolis, Minnesota, October 3-8, 1976.

111. EPA Utility FGD Survey -- February, March, 1978, by PED Co., Environmental, Inc., EPA 600/7-78-0JIb, Environmental Protection Agency, Washington, D.C., 20460, June, 1978.

112. Halker, W.A., "Ash Basin Equivalency Demonstration," Company. Presented at the 39th Annual Meeting of the American Power Conference, Chicago, Illinois, April 19, 1977.

113. "SO_2 Removal with Zero Discharge," Environ. Science and Technology, Vol 13, No.1, Jan, 1979, pp. 25-30

114. Berube, D. T. and Grimm, C. D., "Status and Performance of the Montana Power Company's Flue Gas Desulfurication System," presented at the EPA FGD Symposium, Hollywood, Florida, November 1977.

115. "Asbestos in Cooling Tower Waters," by Lewis, B.G., Report No. ANL/ES-63, Argonne National Laboratory, Argonne, Illinois, December, 1977.

116. "Staff Report on Water Requirements for Power Plants with Wet Cooling Towers," Nelson, Guy R., EPA Pacific Northwest Environmental Research Laboratory, March, 1974.

117. Personal Communication to Chakra Santhanam, Arthur D. Little, Inc., October, 1978.

118. Maurer, J. T., "Controlling Corrosion Problems with High Technology Stainless Steels," Proc. of the 38th International Water Conference, Pittsburgh, Pa., November 1-3, 1977.

INDEX

Acid drainage from coal piles see Coal pile runoff
Activated carbon, use in water treatment 3-113
Agricultural runoff 3-55
Air preheater cleaning 3-7, 3-10, 3-138
Airborne particulates, in cooling tower blowdown 3-53
Alkaline fly ash scrubbing 3-117
Anion resins, use in water treatment 3-77, 3-78
Asbestos, in cooling tower blowdown 3-53
    in cooling water blowdown 5-28
Ash
    dewatering bins 3-88
    disposal impacts 6-2, 6-15
    distribution between fly and bottom 3-80 to 3-82
    hydraulic transport of 3-84 to 3-89, 3-113
    mechanical conveyors for 3-84
    pneumatic transport of 3-84 to 3-89, 3-113
    reactivity 3-99, 3-100
    transportation velocities during handling 3-89, 3-90
    water requirements for disposal 6-22
Ash disposal
    cost of 5-3
    dry methods 5-35 to 5-37
Ash handling
    ash characteristics 3-79 to 3-82
    metals in sluice water 3-13
    sluicing water 3-5, 3-101 to 3-103
    systems in use 3-82 to 3-87
    waste streams 3-90 to 3-101
Ash ponds
    discharge characteristics 3-97 to 3-99
    flows 3-93, 3-96 to 3-99
    trace metal leaching 3-96
    use in power plant operation 3-90 to 3-101
Ash pond effluents
    auxiliary cooling water systems 3-133, 3-135
    effect of limiting scale forming species 5-19
    quantity of 3-17

Biocides 6-13
Biological fouling control 3-11
    alternatives to chlorination 3-40, 3-41
    biocides, and additive concentrations in blowdown 3-20, 3-28
    chlorine in blowdown 3-37
Biological impacts 6-18
Biological impact issues 6-27
Biological productivity 6-19
Biological treatment inhibition 4-5

Boiler blowdown
characterization and treatment 3-62, 3-66
composition of 3-2
purity of 1-2
reuse of 3-68, 3-69
Boiler fireside, cleaning operations 3-138
Boiler slag see Ash handling
Boiler tube cleaning 3-7, 3-10, 3-136
Boiler types 3-62
Bottom ash see Ash handling

Cation resins, use in water treatment 3-111
Central treatment of power plant waste water, operating and capital costs 5-7
Chelating agents for scale control 3-137
Chemical additives
concentration in effluent streams 3-11 to 3-14
effect on the environment 7-6 to 7-7
impact on water reuse 1-3
need for in power plants 2-14, 3-36
used in treatment of cooling water and boiler feed water 2-22, 2-23
Chemical precipitation, use in water treatment 3-111
Chemical wastes, characterization 2-22, 2-24, 3-9 to 3-16
Chlorination 3-37 to 3-43, 3-46
alternatives 3-41 to 3-46, 7-5
effect on the environment 7-5 to 7-6
Chromium compounds, in cooling tower blowdown 3-44, 3-49 to 3-52
removal from blowdown 3-49 to 3-52, 3-58, 3-59
Clarification, use in water treatment 3-2, 3-70, 3-73, 3-75
Clean Water Act of 1977 4-13
Coal conversion 4-15
Coal pile runoff
characterization of 3-8, 3-10
composition of 3-148, 3-149
treatment of 3-150, 3-151
Condensate polishing
characterization 3-79
in water treatment 3-2, 3-76
Condenser cleaning 3-7, 3-10, 3-17, 3-138
Condenser cooling
dry systems 5-33 to 5-34
heat transfer in 3-17
system types 2-12 to 2-14, 3-1
waste streams from 2-26
water use in 2-1
wet/dry systems 5-33
Consent decree compounds 4-9
Contact cooling water waste streams 6-14
Contaminant fate 6-21
Contaminant migration 6-5, 6-13, 6-24

Cooling
    system types in use 2-15
    use of in steam-electric power plants 1-1, 2-12
    water flow rates in, by region 2-16
Cooling ponds
    advantages over cooling towers 3-1
    characterization of 3-17, 3-20
    impact issues 6-13
    trends 2-12 to 2-14
    usage, by plant 2-20, 2-21
Cooling tower drift 6-17, 6-21
Cooling tower fog 6-17
Cooling towers
    basins 3-139
    basin cleaning 3-8, 3-10
    blowdown, characterization 3-1, 3-11, 3-25, 3-36, 3-61, 6-8
    blowdown, water quality 6-7, 6-12
    characterization 3-1, 3-17, 3-21, 3-24 to 3-27
    design parameters 3-60
    generalized plant water balance 2-25
    trends 2-12 to 2-14
    usage, by plant 2-17 to 2-19
    water recirculation 3-56, 3-61
Cooling ponds vs. cooling towers for power plants 5-43
Cooling systems
    dry 3-21, 3-22
    hybrid 3-22, 3-23
    once through 3-17, 3-19, 3-20
    recirculating 3-20 to 3-23
Corrosion, rate dependence upon control method 3-54
Corrosion inhibition
    additive concentrations in blowdown 3-28, 3-32, 3-35
    chromates 3-32, 3-33
    chromium and zinc in blowdown 3-44
    impact issues 6-14
    non-chromate treatment 3-49, 3-53, 3-65
    trace metals from 3-11

Dam failure, impact issues 6-16
Disposal methods for fly ash
    information gaps 7-2 to 7-3
    technology gaps 7-4
Double alkali scrubbing see Dual alkali scrubbing
Drainage 3-147 to 3-152
    characterization 3-8, 3-10
Drift deposition 6-21
Dry cooling system impact issues 6-15
Dual alkali scrubbing 3-117, 3-124 to 3-128

Economic considerations
    constraints on 1-4, 3-55
    capital and operating costs for water treatment systems 3-59

EDTA, use in water softening 3-31, 3-65, 3-137
Effluent Guidelines, for pollutant control 5-30
    revisions 4-8
Electric Power Research Institute
    sponsored studies in water management 2-26, 2-28
Entrainment/entrapment of fish 4-6
Environmental Protection Agency (EPA)
    distinctions between chemical and thermal wastes 2-24
    effluent guidelines 3-104
    identification of chemical waste categories 3-9
    sponsored studies
        chlorination alternatives 3-39
        cooling systems 3-23
        water management 2-26, 2-27
        water pollution impact of SO_x control 3-131
        water reuse 3-56
Evaporation ponds at power plants 5-11
Evaporators, composition of blowdown 3-74, 3-75

Federal Power Commission (FPC) 2-14
Feedwater heaters, cleaning 3-138
FGD processes
    demister washing 3-123, 3-124, 3-130
    dewatering options 3-120
    makeup water requirements 3-121 to 3-131
    pump seals, water use for 3-123, 3-125, 3-130
    solids precipitation in 3-120
    water balance in 3-121 to 3-123, 3-125, 3-128, 3-129
    water evaporation effects 3-126 to 3-128
    water requirements, effect of boiler load on 3-128
FGD systems
    characterization 3-5, 3-6, 3-114 to 3-133
    dry scrubbing 5-34
    metals in effluents 3-13
Filtration
    composition of filter backwash 3-74
    use in water treatment 3-2, 3-70
Floor and yard drains, water streams from see Drainage

Heavy metals discharge 4-11, 4-12
Hydraulic conveyance of fly ash, impact issues 6-15

Incineration of metal cleaning wastes 3-140
Ion exchange
    in chromate removal 3-49, 3-51
    in water treatment 3-2, 3-31, 3-74 to 3-78, 3-109
    with cooling tower blowdown 3-47
    with makeup water 3-70

Laboratory and sampling activities, water use in 3-133 to 3-135
Land related impacts 6-4

Langelier Saturation Index 3-104, 3-106 to 3-108, 3-110
Lime scrubbing 3-114, 3-117
Limestone scrubbing 3-114, 3-117, 3-119

Makeup water treatment 3-29
Maintenance cleaning
    characterization 3-7
    metal additives 3-13
    operations 3-136, 3-146
    wastes, data gaps 7-6
Mechanical cleaning, as supplement to chlorination 3-41, 3-46
Metals, removed from maintenance cleaning wastes see Maintenance cleaning
Miscellaneous operations 3-6, 3-7, 3-133 to 3-135

National Energy Act of 1978 4-14
National Pollution Discharge Elimination System (NPDES), guidelines and standards 4-2
Neutralization in waste treatment 3-76

Once-through cooling impacts 6-1 to 6-21
Ozone
    Impact issues 6-13
    use as chlorine substitute 3-43

pH control in boiler blowdown 3-65
Pond overflow
    impacts 6-22
    issues 6-16
Post closure land use issues 6-5
Power cycle characterization 3-2, 3-3
Power generation
    annual quantity by fuel 3-4
    fuels use 2-7
    power cycles 3-2
    systems in use 2-1
    trends 2-5, 2-7
Pretreatment standards 4-4
Priority pollutants 4-9, 4-10, 6-12
Protection of wildlife 4-8
Publicly Owned Treatment Works (POTW) 4-4

Recycle cooling system impacts 6-6
Regulations 4-1
    Best Available Technology (BAT) guidelines 4-1, 4-2
    EPA effluent guidelines for ash ponds 3-104, 3-105
    federal legislation impacting water quality 1-1
    multimedia approach 4-15
    National Pollution Discharge Elimination System (NPDES) 4-2
    New Source Performance Standards (NSPS) 4-1, 4-2
    trends 1-4

Remand decision for utility effluents 4-7
Residual chlorine 6-13
    impacts 6-20
Resource Conservation and Recovery Act (RCRA) 4-14
Reverse osmosis, use in water treatment 3-2, 3-31, 3-75, 3-77, 3-109, 3-111

Sanitary facilities, water use in 3-133 to 3-135
Scale control 3-11, 3-28 to 3-32, 3-62 to 3-65, 3-66, 3-67, 3-123
    acid treatment 3-29, 3-30, 3-137
Seepage, impact issues 6-16
Settling ponds see Ash ponds
Silica, concentration in boiler water 3-72
Sludge disposal impact issues 6-4
Softening, use of lime in 3-30, 3-47, 3-48, 3-61, 3-75, 3-109
    use in water treatment 3-2
    use of zeolites in 3-47, 3-48
Solids deposition in boiler tubes 3-66
Solid waste disposal issues 6-24
Sponsored studies, see also EPA, EPRI, TVA
    EPA, water management 2-27, 2-28
    EPA, water pollution from SO_x control 3-131 to 3-133

Stack cleaning 3-8, 3-10, 3-139
Steam-electric systems see Power generation
Steam generation
    boiler blowdown from 3-62 to 3-69
    power cycles in 3-2
    quantity of power from 2-1, 2-4
Surface runoff, control under RCRA 4-14
    impact issues 6-17, 6-22, 6-27
Suspended solids dispersion 3-11, 3-28

Tennessee Valley Authority, study of metal cleaning waste treatment 3-145
Thermal wastes 2-22
    guidelines and standards 4-3
    impacts 6-20
Toxic chemicals
    impact issues 6-20
    regulatory control 4-16
Trace metals
    enrichment in fly ash 3-80
    from chemical additives 3-11 to 3-14
    in boiler blowdown 3-2
Treatment technology issue 6-23

Washing of intake screens, water use in 3-133, 3-134
Waste pond revegetation studies 6-18
Waste water treatment methods
    distillation 5-12
    reverse osmosis 5-12
    vapor compression evaporation (VCE) 5-8 to 5-11
    vertical tube foam evaporation (VTFE) 5-12

Water availability for steam-electric power 2-6, 2-9, 6-23
Water balance in power plants 2-22
    contribution of condenser cooling 3-1
    general for cooling tower 2-25
    schematic representation of recycle, treatment, reuse 3-15
    typical flows 3-73
Water consumption for power plants 5-2, 5-33
Water recycle/reuse options
    at Bowen plant 5-22
    at Colstrip plant 5-24
    at Comanche plant 5-21
    at Four Corners plant 5-20
    at Montour plant 5-23
Water recycle/reuse technologies
    economic estimates for 7-1
    effect on energy requirements for plants 5-42
    effect on plant costs/benefits 5-41 to 5-42
    effect on plant operations 5-40
    effect on power plant design 5-40
    for power plants 5-8 to 5-14
Water recycle/treatment/reuse, EPA projects 6-25
    EPRI projects 6-26
Water requirements
    impact issues 6-3, 6-6
    of utilities, by states 2-2, 2-3
    of utilities, by region 2-8
    trends 2-6, 2-10 to 2-12
Water reuse
    impact issues 6-3
    impact of chemical additives on 1-3
    overview of treatment in report 3-4
    regulatory control 4-16
Water treatment
    effluents from 2-1
    of makeup water 3-27 to 3-35, 3-70
    power plant streams entering 3-9
    systems used 3-2, 3-69 to 3-79
Water use impacts 6-1, 6-2
Wet/dry hybrid system impacts 6-15
Wildlife protection 4-8
Wood preservatives leaching 3-11, 3-55

Zero discharge, recycle with 3-47, 3-48, 3-77, 3-79, 3-121
Zinc compounds in cooling tower blowdown 3-44

TECHNICAL REPORT DATA
(Please read Instructions on the reverse before completing)

1. REPORT NO. EPA-600/7-80-012b	2.	3. RECIPIENT'S ACCESSION NO.
4. TITLE AND SUBTITLE Waste and Water Management for Conventional Coal Combustion Assessment Report--1979; Volume II. Water Management		5. REPORT DATE March 1980
		6. PERFORMING ORGANIZATION CODE
7. AUTHOR(S) C. J. Santhanam, R. R. Lunt, C. B. Cooper, D. E. Klimschmidt, I. Bodek, and W. A. Tucker (ADL); and C. R. Ullrich (Univ of Louisville)		8. PERFORMING ORGANIZATION REPORT NO.
9. PERFORMING ORGANIZATION NAME AND ADDRESS Arthur D. Little, Inc. 20 Acorn Park Cambridge, Massachusetts 02140		10. PROGRAM ELEMENT NO. EHE624A
		11. CONTRACT/GRANT NO. 68-02-2654
12. SPONSORING AGENCY NAME AND ADDRESS EPA, Office of Research and Development Industrial Environmental Research Laboratory Research Triangle Park, NC 27711		13. TYPE OF REPORT AND PERIOD COVERED Final; 9/77-8/79
		14. SPONSORING AGENCY CODE EPA/600/13

15. SUPPLEMENTARY NOTES IERL-RTP project officer is Julian W. Jones, Mail Drop 61, 919/541-2489.

16. ABSTRACT The report, the second of five volumes, describes water management for conventional combustion sources and assesses the current status of various studies and programs in water management and trends in water recycle/reuse. A coal-fired boiler produces both chemical and thermal pollution; the report focuses on the former. Major uses for water, hence generation points for effluents, are of two types: continuous (condenser cooling, steam generation, water treatment, ash handling, FGD, and miscellaneous) and intermittent (maintenance cleaning and drainage). The many uses of water in a power plant and the varying requirements of water quality in those uses present major opportunities for water conservation and pollution control through wastewater management, equalization, and treatment of appropriate waste streams. While technology exists for zero discharge of water, economics often preclude recycle/reuse beyond a certain point. Water management studies completed by EPA and industry can serve as models for new facilities. Treatment systems to maximize water reuse are being studied by the EPA, and improved evaporators appear promising. Effluent treatment to remove priority pollutants are also under study. Important data gaps concern environmental impacts in particular due to priority toxics in effluents including ash disposal and cooling water chlorination.

17. KEY WORDS AND DOCUMENT ANALYSIS

a. DESCRIPTORS	b. IDENTIFIERS/OPEN ENDED TERMS	c. COSATI Field/Group
Pollution	Pollution Control	13B
Coal	Stationary Sources	21D
Combustion		21B
Assessments		14B
Management		05A
Water		07B

18. DISTRIBUTION STATEMENT Release to Public	19. SECURITY CLASS (This Report) Unclassified	21. NO. OF PAGES 315
	20. SECURITY CLASS (This page) Unclassified	22. PRICE

EPA Form 2220-1 (9-73)