United States
Environmental Protection
Agency

Industrial Environmental Research
Laboratory
Research Triangle Park NC 27711

EPA-600/7-80-029a
January 1980

EPA

EPA Utility FGD Survey: October - December 1979

Interagency Energy/Environment R&D Program Report

RESEARCH REPORTING SERIES

Research reports of the Office of Research and Development, U.S. Environmental Protection Agency, have been grouped into nine series. These nine broad categories were established to facilitate further development and application of environmental technology. Elimination of traditional grouping was consciously planned to foster technology transfer and a maximum interface in related fields. The nine series are:

1. Environmental Health Effects Research
2. Environmental Protection Technology
3. Ecological Research
4. Environmental Monitoring
5. Socioeconomic Environmental Studies
6. Scientific and Technical Assessment Reports (STAR)
7. Interagency Energy-Environment Research and Development
8. "Special" Reports
9. Miscellaneous Reports

This report has been assigned to the INTERAGENCY ENERGY-ENVIRONMENT RESEARCH AND DEVELOPMENT series. Reports in this series result from the effort funded under the 17-agency Federal Energy/Environment Research and Development Program. These studies relate to EPA's mission to protect the public health and welfare from adverse effects of pollutants associated with energy systems. The goal of the Program is to assure the rapid development of domestic energy supplies in an environmentally-compatible manner by providing the necessary environmental data and control technology. Investigations include analyses of the transport of energy-related pollutants and their health and ecological effects; assessments of, and development of, control technologies for energy systems; and integrated assessments of a wide range of energy-related environmental issues.

EPA REVIEW NOTICE

EPA-600/7-80-029a

January 1980

EPA Utility FGD Survey: October - December 1979

by

M. Smith, M. Melia,
and N. Gregory

PEDCo Environmental, Inc.
11499 Chester Road
Cincinnati, Ohio 45246

Contract No. 68-01-4147
Task No. 113
Program Element No. EHE624

EPA Project Officers:

N. Kaplan

Industrial Environmental Research Laboratory
Office of Environmental Engineering and Technology
Research Triangle Park, NC 27711

J.C. Herlihy

Division of Stationary Source Enforcement
Office of Enforcement
Washington, DC 20460

Prepared for

U.S. ENVIRONMENTAL PROTECTION AGENCY
Office of Research and Development
Washington, DC 20460

NOTICE

This report, (prepared by PEDCo Environmental, Inc., Cincinnati, Ohio, under EPA Contract No. 68-01-4147, Task No. 113) is provided as an information transfer document. Data in this report are supplied voluntarily by utility representives; flue gas desulfurization (FGD) system designers, and suppliers; regulatory personnel; and others. Neither EPA nor the designated contractor warrants the accuracy or completeness of information contained in this report.

Initial distribution of the report (generally, one copy per company) is limited to organizations and individuals indicating a specific interest in the field of FGD technology. Additional copies of this report and succeeding issues can be purchased from National Technical Information Service, Springfield, Virginia 22151.

USE OF THIS REPORT

This report is the first in a series of four issues. The succeeding three issues will be supplemental in nature; therefore, it is suggested that the user retain this issue for reference throughout the year. Much of the design and performance data contained in this issue will not be published again until February 1981. Supplemental issues are cumulative in nature, so that it is necessary only to retain the latest issue and this report to have all the available information.

It should be noted that along with the design and performance data for operational FGD systems contained in Section 3, this report also contains a number of tables presenting tabulations of some of the key data. The Executive Summary contains the number and capacity of FGD systems as of the end of December, 1979, future projections (January 1990) of controlled and uncontrolled generating capacity, and unit by unit summaries of status changes and performance during the period.

Recent additions to this report include a section containing design and performance data for U.S. operational particle scrubbers (Section 14) and a section containing design and performance data for some coal fired operational foreign FGD systems (Section 15). The regulatory classifications were recently modified to accomodate the revised New Source Performance Standards (6/79) and, as a result, the categories will differ slightly from those of previous issues.

Appended to this report is a section containing reported and adjusted cost data for U.S. FGD systems in which operational systems are stressed (Appendix A). Also included in the appendices are FGD process flow diagrams, definitions, and a glossary of units.

ABSTRACT

This report is the first full compilation (not a supplement) since the December 1978 - January 1979 report. Because the next three reports are to be supplements, this issue should be retained for reference throughout the year. This report differs from the previous series in that a new section includes design and performance data for some foreign operational FGD systems and the regulatory classifications have been revised to accomodate the revised New Source Performance Standards (6/79). The report surveys operational, under construction, and planned utility FGD systems and operational particle scrubbers in the U.S., and some foreign operational FGD systems. It summarizes information contributed by the utility industry, system suppliers, regulatory agencies and consulting engineering firms. It presents data on system design, fuel characteristics, operating history and actual performance. Unit by unit dependability parameters are included and problems and solutions associated with the boilers, scrubbers, and FGD systems are discussed. The domestic FGD systems are tabulated alphabetically by development status (operational, under construction, or in the planning stages), utility company, system supplier, process, waste disposal practice, and regulatory class. Process flow diagrams and FGD system economic data are appended to the report. Current data for operational domestic FGD systems show 62 systems in operation, 39 systems under construction, and 75 planned systems. Projected 1990 FGD controlled capacity in the U.S. is 84,511 MW.

CONTENTS

CONTENTS (continued)

CONTENTS (continued)

CONTENTS (continued)

CONTENTS (continued)

TABLES

EXECUTIVE SUMMARY

This report is prepared quarterly (every three months) by PEDCo Environmental, Inc., under contract to the Industrial Environmental Research Laboratory/Research Triangle Park and the Division of Stationary Source Enforcement of the U.S. Environmental Protection Agency. It is generated by a computerized data base system, the structure of which is illustrated in Figure 1.

Table 1 summarizes the status of FGD systems in the United States at the end of December 1979. Table II lists the units that have changed status during the fourth quarter 1979, and Table III shows the performance of operating units during this period.

TABLE 1. NUMBER AND TOTAL CAPACITY OF FGD SYSTEMS

Status	No. of units	Total Controlled Capacity, MW*	Equivalent Scrubbed Capacity, MW†
Operational	62	23,297	21,510
Under construction	39	17,270	16,051
Planned:			
Contract awarded	23	11,949	11,651
Letter of intent	2	842	842
Requesting/evaluating bids	15	11,131	10,281
Considering only FGD systems	35	20,022	19,902
TOTAL	176	84,511	80,237

* Total Controlled Capacity (TCC) is the summation of the gross unit capacities (MW) brought into compliance with FGD systems regardless of the percent of the flue gas scrubbed by the FGD system(s).

† Equivalent Scrubbed Capacity (ESC) is the summation of the effective scrubbed flue gas in equivalent MW based on the percent of flue gas scrubbed by the FGD system(s).

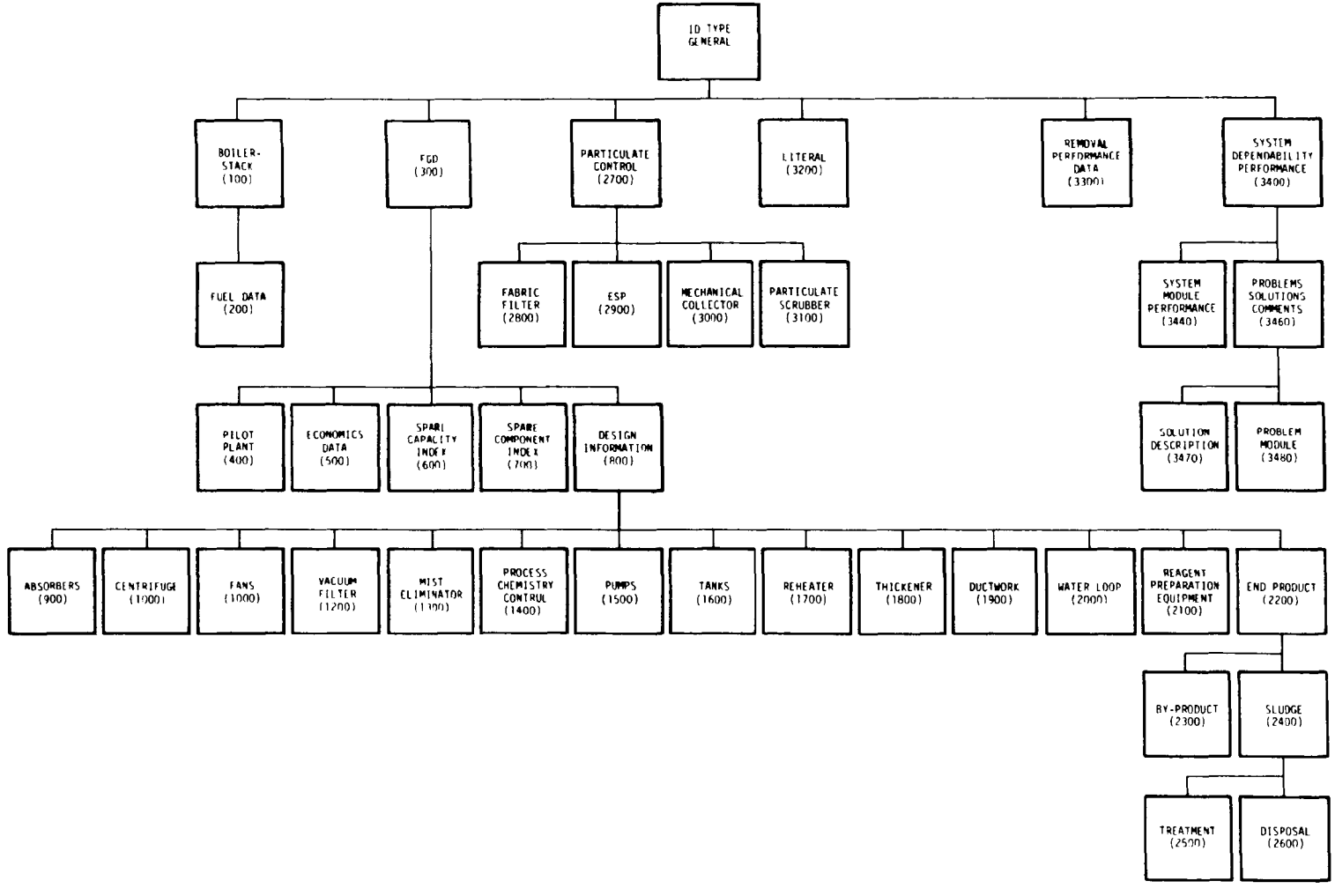

Figure 1. Computerized data base structure diagram.

TABLE II. SUMMARY OF CHANGES
FOURTH QUARTER 1979

FGD status report	Operational		Under construction		Contract awarded		Letter of intent		Requesting/ eval. bids		Considering FGD		Total	
	No.	MW[a]	No.	MW[a]	No.	MW[a]	No.	MW[a]	No.	MW[a]	No.	MW[a]	No.	MW[a]
9/30/79	56	19,397[a]	42	17,250	19	9,415	0		18	12,183	26	13,930	161	72,175
Basin Electric Power Coop														
Antelope Valley 1			+1	440	-1	440								
Antelope Valley 2									+1	440	-1	440		
Big Rivers Electric														
D. B. Wilson 1											+1	440	+1	440
D. B. Wilson 2											+1	440	+1	440
Green 1	+1	242	-1	242										
Colorado UTE Electric Assn.														
Craig 2	+1	447	-1	447										
Craig 3											+1	447	+1	447
Delmarva Power & Light														
Vienna Maryland 9											+1	550	+1	550
East Kentucky Power Coop														
J. K. Smith 1											+1	650	+1	650
J. K. Smith 2											+1	650	+1	650
General Public Utilities														
Gilbert 9											+1	625	+1	625
Scotsville 1											+1	625	+1	625
Wehrum 1											+1	625	+1	625
Indianapolis Power & Light														
Patriot 1											+1	650	+1	650
Patriot 2											+1	650	+1	650
Patriot 3											+1	650	+1	650
Lakeland Utilities														
McIntosh 3			+1	364	-1	364								
Northern Indiana Public Service														
Bailly 7											-1	190	-1	190
Bailly 8											-1	400	-1	400
Schahfer 17							+1	421	-1	421				
Schahfer 18							+1	421	-1	421				

(continued)

TABLE II (continued)

FGD status report	Operational		Under construction		Contract awarded		Letter of intent		Requesting/ eval. bids		Considering FGD		Total	
	No.	MW*	No.	MW*	No.	MW*	No.	MW*	No.	MW*	No.	MW*	No.	MW*
Northern States Power														
Riverside 6,7			+1	110									+1	110
Pacific Power & Light														
Jim Bridger 4	+1	550	-1	550										
Public Service of New Mexico														
San Juan 3	+1	534	-1	534										
Salt River Project														
Coronado 1	+1	280	-1	280										
St. Joe Zinc														
G. F. Weaton	+1	60	-1	60										
Texas Power & Light														
Twin Oaks 1					+1	750			-1	750				
Twin Oaks 2					+1	750			-1	750				
Tucson Gas & Electric														
Springerville 1					+1	370							+1	370
Springerville 2					+1	370							+1	370
Utah Power & Light														
Hunter 3					+1	400							+1	400
Hunter 4					+1	400							+1	400
TOTAL	62	21,510	39	16,051	23	11,651	2	842	15	10,281	35	19,902	176	80,237

* Equivalent scrubbed capacity.

[a] This value was modified slightly due to a MW correction.

TABLE III. PERFORMANCE OF OPERATIONAL UNITS
FOURTH QUARTER 1979

Plant	FGD system capacity, MW[a]	Flue gas % scrubbed	FGD capacity on line during period, MW[a,b]	No information for this period, MW[a]	Shut down through-out period, MW[a]	October 1979 Dependability %[c,e]				November 1979 Dependability %[c,e]				December 1979 Dependability %[c,e]			
						AVL	OPR	REL	UTL	AVL	OPR	REL	UTL	AVL	OPR	REL	UTL
Tombigbee 2	179	70	179			0	0		0	100	0		0	96	23		4
Tombigbee 3	179	70	179			99	95		95	96	91		91	100	95		83
Pleasants 1	519	83	519														
Apache 2	195	100	195							100	100	100	6	100	0	0	0
Apache 3	195	100	195							89	90	90	90	99	100	100	100
Cholla 1	119	100	119				96	99	44								
Cholla 2	350	100		350													
Green 1	242	100	242														
Duck Creek 1	378	90	378			90	84	91	84	32	38	41	31	39	53	58	39
Newton 1	617	100	617														
Craig 2	447	100	447														
Conesville 5	411	100	411			50	77	78	46	72	89	90	51	0	0	0	0
Conesville 6	411	100	411			59	45	45	43	59	54	54	45	87	82	82	82
Coal Creek 1	327	60	327														
Elrama 1-4	510	100	510			85	82		80	80	86		80				
Phillips 1-6	410	100	410			69	79		69	61	88		61				
Petersburg 3	532	100	532														
Hawthorn 3	90	100		90													
Hawthorn 4	90	100		90													
La Cygne 1	874	100	874			94				0				0			
Jeffrey 1	540	75		540													
Lawrence 4	125	100		125													
Lawrence 5	420	100		420													
Green River 1-3	64	100			64	100			0	100			0	100			0
Cane Run 4	188	100	188				30		12		94		58		39		20
Cane Run 5	200	100	200				84		66		95		46		82		63
Cane Run 6	288	100	288				81		29		98		64		95		90
Mill Creek 3	442	100	442				82		76		0		0		0		0
Paddy's Run 6	72	100			72												

(continued)

TABLE III (continued)

Plant	FGD system capacity, MW[a]	Flue gas % scrubbed	FGD capacity on line during period, MW[a,b]	No information for this period, MW[a]	Shut down through-out period, MW[a]	October 1979 Dependability %[c,e]				November 1979 Dependability %[c,e]				December 1979 Dependability %[c,e]			
						AVL	OPR	REL	UTL	AVL	OPR	REL	UTL	AVL	OPR	REL	UTL
Milton R. Young 2	405	92	405			31	31	31	31	16	17	17	16	36	43	43	36
Colstrip 1	360	100	360			92				97							
Colstrip 2	360	100	360			92				98							
Reid Gardner 1	125	100	125			45	62	62	45	99	97	99	88	98	99	99	99
Reid Gardner 2	125	100	125			38	100	100	39	43	96	97	43	97	98	98	98
Reid Gardner 3	125	100	125			97	97	97	97	81	95	100	77	39	72	75	40
Dean H. Mitchell 11	115	100	115			81		72	71	0		0	0				
Sherburne 1	740	100	740			77				97				95			
Sherburne 2	740	100	740			94				97				97			
Jim Bridger 4	550	100	550														
Bruce Mansfield 1	917	100	917			96				90				99			
Bruce Mansfield 2	917	100	917			97				100				96			
Eddystone 1A	120	N/A[d]		120													
San Juan 1	361	100	361											56	38		11
San Juan 2	350	100	350											50	38		32
San Juan 3	534	100	534											100[f]	11[f]		6[f]
Coronado 1	280	80	280														
Winyah 2	140	50		140													
R.D. Morrow 1	124	62			124	0	0	0	0	0	0	0	0	0	0	0	0
R.D. Morrow 2	124	62			124	0	0	0	0	0	0	0	0	0	0	0	0
Marion 4	184	100		184													
A.B. Brown 1	265	100	265			100	98	98	85	97	96	97	88	81	81	81	81
Southwest 1	194	100	194							20	21	21	20	59	32	32	29
G. F. Weaton 1	60	N/A[d]	60														
Shawnee 10A	10	N/A[d]	10														
Shawnee 10B	10	N/A[d]	10														
Widows Creek 8	550	100	550			87	91		64	91	93		68	95	80		65
Martin Lake 1	595	75	595														
Martin Lake 2	595	75	595														

(continued)

TABLE III (continued)

Plant	FGD system capacity, MW[a]	Flue gas % scrubbed	FGD capacity on line during period, MW[a,b]	No information for this period, MW[a]	Shut down throughout period, MW[a]	October 1979 Dependability %[c,e]				November 1979 Dependability %[c,e]				December 1979 Dependability %[c,e]			
						AVL	OPR	REL	UTL	AVL	OPR	REL	UTL	AVL	OPR	REL	UTL
Martin Lake 3	595	75	595														
Monticello 3	800	100	800														
Hunter 1	360	90	360														
Huntington 1	366	85	366														
TOTAL			19,067	2,059	384												

[a] Equivalent scrubbed capacity.
[b] This category includes the flue gas capacity being handled by the FGD system at least part of the time during the report period.
[c] The percent figures listed are average values for all system scrubbing trains during the period.
[d] Flue gas % scrubbed for prototype and demonstration units is not applicable unless the system is designed to bring a unit into compliance with SO_2 emission standard.
[e] Availability, operability, reliability, and utilization as defined in Appendix C of this report.
[f] The figures represent only one module presently in operation.

As indicated in Table 1, 62 power generating units (all coal-fired) are now equipped with operating FGD systems. These units represent a total controlled capacity of 23,297 MW. Current projections indicate that the total power generating capacity of the U.S. electric utility industry will be approximately 931 GW by 1990.[a] (This value reflects the annual loss resulting from the retirement of older units, which is considered to be 0.4 percent of the average generating capacity at the end of each year.[b]) Approximately 382 GW or 41 percent of the 1990 total will come from coal-fired units. The distribution of power generation sources, both present (April 1979) and future (January 1990) is as follows:[a]

	Coal	Nuclear	Oil	Hydro	Gas	Other	GW (total)
April 1979	39%	9%	26%	12%	13%	1%	588
January 1990	41%	22%	18%	10%	8%	1%	931

Based on the known commitments to FGD by utilities as presented in Table 1, the percentage of electrical generating capacity controlled by FGD for both the present (December 1979) and the future (Janaury 1990) is as follows:

	% of coal-fired generating capacity	% of total generating capacity
December 1979[a]	10.2	4.0
January 1990	22.1	9.1

In light of the revised New Source Performance Standards, actual FGD control is expected to be greater than what is reflected by the figures above. For example, about 55 to 60 systems representing approximately 36,000 to 41,000 MW of generating capacity presently fall into the uncommitted category. These are systems that cannot be included in the committed group at this time because information regarding their status is not ready for public release.

HIGHLIGHTS: FOURTH QUARTER 1979

The following paragraphs highlight FGD system developments during the fourth quarter, 1979.

Tombigbee 3 of Alabama Electric Cooperative achieved availabilities of 99%, 96%, and 100% for October, November and December. Tombigbee 2 was largely available throughout the quarter, however, boiler-related problems limited scrubbing operations.

---

[a] The number of committed FGD systems is as of December 1979; however, the figure used for the total generating capacity and coal fired generating capacity is based on April 1979 figures.

Apache 3 of Arizona Electric Power Cooperative achieved availabilities of 89% and 99% for November and December respectively and no problems were reported. Actual performance data was not available for the month of October. The Apache 2 FGD system was available most of October, November and December, however, the boiler was shutdown for annual inspection after only 40.5 hours of operation in November.

Arizona Public Service reported that the Cholla 1 FGD system demonstrated an average operability and reliabilty of 96% and 99%, respectively, during October, however, the system was not required for part of the month because of boiler-related problems. Figures were not available for November and December.

The lime/spray drying FGD system at Antelope Valley 1 of Basin Electric Power Cooperative is now under construction. The FGD system will consist of 5 Niro Atomizer spray dryers followed by two Western Precipitation baghouses. The system is designed to accomodate flue gas from the 440 MW unit with a 4% bypass for reheat. Basin Electric Power Coop is currently requesting/evaluating bids for the Antelope Valley 2 FGD system. Startup dates for Units 1 and 2 are scheduled for November 1981 and 1983 respectively.

FGD operations began at Green 1 of Big Rivers Electric in Sebree, Kentucky during the fourth quarter. Particulate matter from this 242 MW unit is collected by a cold side ESP upstream of an American Air Filter lime slurry spray tower FGD system. The design includes chevron mist eliminators followed by a hot air injection reheat system. Sludge is stabilized by a POZ-O-TEC treatment system at this closed loop facility. The FGD system is currently undergoing shakedown/debugging operations.

Although a specific process has not been decided, Big Rivers Electric announced plans for the installation of lime or limestone slurry, or dual alkali type FGD systems on the utility's new 440 MW D.B. Wilson 1 and 2 units for control of SO_2. D.B. Wilson 1 and 2 are scheduled to begin operations in 1984 and 1985 respectively.

Craig 1 of Colorado Ute Electric Association began FGD operations during the fourth quarter. Flue gas from this 447 MW unit passes through hot side ESP's and four parallel magnesium promoted limestone slurry spray towers for particulate matter and SO_2 control. The wet gas temperature is boosted with an in-line steam coil reheater before entering the acid brick-lined 600 ft stack. Sludge is stabilized before disposal on this closed loop system. FGD system operations have not yet stabilized as shakedown/debugging operations continue.

During the report period Colorado Ute announced plans for an additional 447 MW (gross) unit at Craig Station. Particulate matter will be controlled with a baghouse downstream of a lime spray dryer FGD system. Craig 3 is scheduled to begin operations sometime in 1982.

Delmarva Power and Light announced plans for a new coal-fired 500 MW (net) unit at DP&L's Vienna Maryland station. SO_2 emissions from Vienna Maryland 9 will be controlled with a limestone slurry FGD system. The unit is currently scheduled to begin operations in June 1987.

East Kentucky Power Cooperative announced plans for the installation of FGD systems on two new coal-fired 650 MW units, J.K. Smith 1 and 2. No process has been selected for SO_2 control. J.K. Smith 1 and 2 are currently scheduled for operation in January 1985 and 1986 respectively.

General Public Utilities announced plans for three new coal-fired 625 MW units; Scottsville 1, Wehrum 1 and Gilbert 9 to be built in Pennsylvania (Scottsville and Wehrum) and New Jersey (Gilbert). Because the units are not scheduled to begin operations until 1991, 1995 and 1990 respectively, specific plans for particulate matter and SO_2 control equipment have not yet been made.

Indianapolis Power and Light will be building three new 650 MW coal-fired units at the utility's Patriot station site in Patriot, Indiana. These units will burn coal having a 3.5% (maximum) sulfur content. IP&L intends to control SO_2 emissions with double loop type lime or limestone wet scrubbing systems. Initial startup for the first unit (Patriot 1) is tentatively scheduled for 1987.

At La Cygne 1 of Kansas City Power and Light, an average system availability of 94% was reported for October. The unit was shutdown on October 19 through December for a unit overhaul.

Lakeland Utilities reported that construction of the McIntosh 3 FGD system began during the fourth quarter. Particulate matter and SO_2 emissions from this 364 MW unit will be controlled by a cold side ESP and a Babcock and Wilcox limestone slurry FGD system. The closed loop system design includes an acid brick-lined 250 ft stack and a POZ-O-TEC sludge stabilization facility. The unit startup is scheduled for October 1981.

The Dual alkali system on Cane Run 6 of Louisville Gas and Electric achieved operabilities of 81%, 98% and 95% during October, November and December, respectively. The utility reported that only normal maintenance was required during the fourth quarter of 1979.

Montana Power reported that Colstrip 1 achieved average FGD availabilities of 92% and 97% for October and November, respectively. Reported availabilities for Colstrip 2 were 92% and 98% for the same period. Performance data for the month of December was not available for either unit.

A letter of intent was signed with FMC for the installation of a dual alkali FGD system on Schahfer 17 and 18 of Northern Indiana Public Service Company. Schahfer 17 and 18 are 421 MW (gross) coal-fired units which will be built at the Shahfer station in Wheatfield, Indiana. Operations are scheduled to begin in June 1983 and 1985 for Units 17 and 18, respectively.

The Northern Indiana Public Service Company reported during the fourth quarter that plans for FGD systems on Bailly 7 and 8 in Chesterton, Indiana, have been dropped.

A demonstration lime/spray drying FGD system is scheduled to begin operations in July 1980 at Northern States Power's Riverside station in Minneapolis, Minnesota. NSP reported that the 110 MW system is designed to accomodate flue gas from the existing 55 MW Riverside boilers 6 and 7. The retrofit FGD system is currently under construction and will include a lime spray dryer upstream of a baghouse for control of SO_2 and particulate matter.

At Sherburne 1 of Northern States Power, the FGD system had availabilities of 77%, 97% and 95% for October, November and December, respectively. The low October availability was due to an annual boiler/turbine outage during which time some scrubber related work was performed. The Sherburne 2 FGD system availabilities were 94%, 97%, and 97% for October, November, and December, respectively. No boiler or FGD system problems were encountered at Unit 2 during the fourth quarter.

Jim Bridger 4 of Pacific Power and Light began FGD operations during the fourth quarter. SO_2 is controlled with an Air Correction Div., UOP sodium carbonate FGD system preceded by a cold side ESP for particulate matter collection. The closed loop system design includes three sieve tray absorbers to accomodate flue gas from this 550 MW unit. Comments about early operations were not reported for this period.

Bruce Mansfield 1 of Pennsylvania Power achieved FGD system availabilities of 96%, 90%, and 99% for October, November, and December, respectively. The Bruce Mansfield 2 FGD system had reported availabilities of 97%, 100%, and 96% for the period. No major problems were reported other than the requirement of frequent sludge pump overhauls.

The first of four Wellman Lord absorber modules at San Juan 3 of the Public Service Company of New Mexico began operations in December. The balance of the FGD system will not be complete until 1982. The material collected by the Unit 3 FGD module is currently handled by the San Juan 1 and 2 chemical plant. Boiler operations during the period were irregular, however, no scrubber-related problems were reported.

Salt River Project reported that operations began at Coronado 1 in St. Johns, Arizona. Two limestone slurry Weir horizontal spray towers remove SO_2 from the flue gas downstream of two ESP's. 20% of the flue gas generated by this 350 MW unit bypass the scrubbing system remixing with the scrubbed gas for reheat before entering the 500 ft stack. Sludge is disposed in an unlined pond at this open loop facility. The utility reported that Coronado 1 had passed compliance testing during the period.

A.B. Brown 1 of Southern Indiana Gas and Electric Company achieved total system availabilities of 100%, 97%, and 81% for October, November, and December, respectively. Thickener rake problems contributed to the low availability during December.

The U.S. EPA/U.S. Bureau of Mines (USBM)- sponsored demonstration citrate FGD system installed on the 60 MW coal-fired boiler at the G. F. Weaton Station of the St. Joe Zinc Company in Monaco, Pennsylvania began operations in November. The citrate process, which has been developed through two separate pilot plant programs conducted by USBM and Pfizer Chemical Company, recovers the scrubbed SO_2 as elemental sulfur. Although the installation site is an industrial facility, this system is included in the utility FGD survey report because the G. F. Weaton Station is interconnected via a 25 MW interchange to the Duquesne Light Company (in addition to supplying the steam and electric load for smelting operations at the plant). The FGD system was originally designed to accomodate the entire 60 MW boiler; however, the St. Joe Zinc smelter has been shut down and, as a result, the FGD system has operated at 20-30 MW. During the fourth quarter electric motor failures occurred in the scrubber liquor recycle loop and piping leaks were encountered. Initial data indicates that the system SO_2 removal efficiency has been approximately 80-90%.

Tennessee Valley Authority reported October, November, and December availabilities of 88%, 91% and 95%, respectively, for Widows Creek 8. TVA reported limestone conveyor problems contributed to the lower system availability in October. Forced oxidation testing is continuing.

During the fourth quarter a contract was awarded to Chemico for the installation of FGD systems on the two new 750 MW Twin Oaks units (1 and 2) of Texas Power and Light. SO_2 generated by the

lignite-fired boilers will be controlled with limestone slurry FGD systems. The units are scheduled to begin operations in August 1984 and 1985 respectively.

Tucson Gas and Electric will be building two new 350 MW (nominal) coal-fired units, Springerville 1 and 2, in Springerville, Colorado. The boilers will fire pulverized subbituminous coal having a heating value of 8500 to 8900 Btu/lb and a sulfur content of 0.53 to 0.69%. The contract for the emissions control systems was awarded to Joy Manufacturing/Niro Atomizer. The FGD system design includes a lime spray dryer followed by a baghouse on each unit with accomodations made for the possible installation of reheaters. The FGD systems will operate in a closed loop. The cleaned flue gas will exit via a 500 ft concrete stack at each unit. Operations are scheduled to begin in 1985 and 1987 for Units 1 and 2 respectively.

Utah Power and Light reported that a contract was awarded to Chemico for the installation of FGD systems on the two new 400 MW units planned for Hunter Station. Like Hunter 1 and 2, SO_2 emissions from Hunter 3 and 4 will be controlled with lime slurry spray towers (designed to achieve 90% SO_2 removal), however, unlike Units 1 and 2, particulate matter will be collected up stream of the FGD systems with baghouses. Hunter 3 and 4 should begin operations in 1983 and 1985 respectively.

REFERENCES

a. U.S. Department of Energy. Energy Information Administration. Office of Energy Data Interpretation. Division of Coal Power Statistics. Inventory of Power Plants in the United States, April 1979. Pub. No. DOE/EIA-0095.

b. Rittenhouse, R.C. New Generating Capacity: When, Where and By Whom. Power Engineering 82(4):57. April 1978.

SECTION 1
SUMMARY LIST OF FGD SYSTEMS

COMPANY NAME/ UNIT NAME	UNIT NO.	UNIT LOCATION		START-UP DATE	STATUS	REG CLASS
ALABAMA ELECTRIC COOP						
TOMBIGBEE	2	LEROY	ALABAMA	9/78	1	B
TOMBIGBEE	3	LEROY	ALABAMA	6/79	1	B
ALLEGHENY POWER SYSTEM						
MITCHELL	33	COURTNEY	PENNSYLVANIA	8/82	3	C
PLEASANTS	1	BELMONT	WEST VIRGINIA	3/79	1	B
PLEASANTS	2	BELMONT	WEST VIRGINIA	9/80	2	B
ARIZONA ELECTRIC POWER COOP						
APACHE	2	COCHISE	ARIZONA	8/78	1	D
APACHE	3	COCHISE	ARIZONA	6/79	1	D
ARIZONA PUBLIC SERVICE						
CHOLLA	1	JOSEPH CITY	ARIZONA	10/73	1	C
CHOLLA	2	JOSEPH CITY	ARIZONA	4/78	1	C
CHOLLA	4	JOSEPH CITY	ARIZONA	6/80	2	C
FOUR CORNERS	1	FARMINGTON	NEW MEXICO	11/79	2	C
FOUR CORNERS	2	FARMINGTON	NEW MEXICO	11/79	2	C
FOUR CORNERS	3	FARMINGTON	NEW MEXICO	11/79	2	C
FOUR CORNERS	4	FARMINGTON	NEW MEXICO	0/82	3	C
FOUR CORNERS	5	FARMINGTON	NEW MEXICO	0/82	3	C
ASSOCIATED ELECTRIC COOP						
THOMAS HILL	3	MOBERLY	MISSOURI	1/82	2	A
BASIN ELECTRIC POWER COOP						
ANTELOPE VALLEY	1	BEULAH	NORTH DAKOTA	11/81	2	C
ANTELOPE VALLEY	2	BEULAH	NORTH DAKOTA	11/83	5	C
LARAMIE RIVER	1	WHEATLAND	WYOMING	4/80	2	A
LARAMIE RIVER	2	WHEATLAND	WYOMING	10/80	2	A
LARAMIE RIVER	3	WHEATLAND	WYOMING	7/81	3	A
BIG RIVERS ELECTRIC						
D. B. WILSON	1			0/84	6	A
D. B. WILSON	2			0/85	6	A
GREEN	1	SEBREE	KENTUCKY	12/79	1	B
GREEN	2	SEBREE	KENTUCKY	11/80	2	B
CENTRAL ILLINOIS LIGHT						
DUCK CREEK	1	CANTON	ILLINOIS	9/76	1	B
DUCK CREEK	2	CANTON	ILLINOIS	1/86	5	A
CENTRAL ILLINOIS PUBLIC SERV						
NEWTON	1	NEWTON	ILLINOIS	9/79	1	B
CENTRAL MAINE POWER						
SEARS ISLAND	1	PENOBSCOT BAY	MAINE	11/87	6	A
CINCINNATI GAS & ELECTRIC						
EAST BEND	2	RABBITHASH	KENTUCKY	9/80	2	B
COLORADO UTE ELECTRIC ASSN.						
CRAIG	1	CRAIG	COLORADO	4/80	2	D
CRAIG	2	CRAIG	COLORADO	8/79	1	D
CRAIG	3	CRAIG	COLORADO	0/82	6	D
COLUMBUS & SOUTHERN OHIO ELEC.						
CONESVILLE	5	CONESVILLE	OHIO	1/77	1	D
CONESVILLE	6	CONESVILLE	OHIO	6/78	1	D
POSTON	5	ATHENS	OHIO	0/83	6	D

1. OPERATIONAL UNITS
2. UNITS UNDER CONSTRUCTION
3. PLANNED - CONTRACT AWARDED
4. PLANNED - LETTER OF INTENT SIGNED
5. PLANNED - REQUESTING/EVALUATING BIDS
6. PLANNED - CONSIDERING ONLY FGD SYSTEMS
7. PLANNED - CONSIDERING FGD SYSTEMS; ALSO ALTERNATIVE METHODS

A. FEDERAL NSPS(6/79)
B. FEDERAL NSPS(12/71)
C. STANDARD(S) MORE STRINGENT THAN NSPS(6/79)
D. STANDARD(S) MORE STRINGENT THAN NSPS(12/71) BUT NOT MORE STRINGENT THAN NSPS(6/79)
E. STANDARD(S) EQUAL TO OR LESS STRINGENT THAN NSPS(12/71)

SECTION 1
SUMMARY LIST OF FGD SYSTEMS

COMPANY NAME/ UNIT NAME	UNIT NO.	UNIT LOCATION		START-UP DATE	STATUS	REG CLASS
COLUMBUS & SOUTHERN OHIO ELEC.						
POSTON	6	ATHENS	OHIO	0/89	6	D
COMMONWEALTH EDISON						
POWERTON	51	PERKIN	ILLINOIS	4/80	2	E
COOPERATIVE POWER ASSOCIATION						
COAL CREEK	1	UNDERWOOD	NORTH DAKOTA	8/79	1	B
COAL CREEK	2	UNDERWOOD	NORTH DAKOTA	10/80	2	B
DELMARVA POWER & LIGHT						
DELAWARE CITY	1-3	DELAWARE CITY	DELAWARE	4/80	2	E
VIENNA MARYLAND	9	VIENNA	MARYLAND	0/87	6	A
DUQUESNE LIGHT						
ELRAMA	1-4	ELRAMA	PENNSYLVANIA	10/75	1	D
PHILLIPS	1-6	SOUTH HEIGHT	PENNSYLVANIA	7/73	1	D
EAST KENTUCKY POWER COOP						
J. K. SMITH	1			1/85	6	A
J. K. SMITH	2			1/86	6	A
SPURLOCK	2	MAYSVILLE	KENTUCKY	10/80	2	B
GENERAL PUBLIC UTILITIES						
COHO	1	ERIE	PENNSYLVANIA	12/88	6	A
GILBERT	1	MILFORD	NEW JERSEY	0/90	6	A
SCOTTSVILLE	1	SCOTTSVILLE	PENNSYLVANIA	0/91	6	A
SEWARD	7	SEWARD	PENNSYLVANIA	12/87	6	A
WEHRUM	1	WEHRUM	PENNSYLVANIA	0/95	6	A
HOOSIER ENERGY						
MEROM	1	SULLIVAN	INDIANA	5/82	3	B
MEROM	2	SULLIVAN	INDIANA	7/81	2	B
HOUSTON LIGHTING & POWER CO.						
W.A. PARISH	8	THOMPSONS	TEXAS	11/82	3	A
INDIANAPOLIS POWER & LIGHT						
PATRIOT	1	PATRIOT	INDIANA	0/87	6	C
PATRIOT	2	PATRIOT	INDIANA	0/87	6	C
PATRIOT	3	PATRIOT	INDIANA	0/87	6	C
PETERSBURG	3	PETERSBURG	INDIANA	12/77	1	B
PETERSBURG	4	PETERSBURG	INDIANA	10/83	2	B
KANSAS CITY POWER & LIGHT						
HAWTHORN	3	KANSAS CITY	MISSOURI	11/72	1	D
HAWTHORN	4	KANSAS CITY	MISSOURI	8/72	1	D
LA CYGNE	1	LA CYGNE	KANSAS	2/73	1	E
KANSAS POWER & LIGHT						
JEFFREY	1	WAMEGO	KANSAS	8/78	1	D
JEFFREY	2	WAMEGO	KANSAS	6/80	2	D
LAWRENCE	4	LAWRENCE	KANSAS	1/76	1	D
LAWRENCE	5	LAWRENCE	KANSAS	11/71	1	D
KENTUCKY UTILITIES						
GREEN RIVER	1-3	CENTRAL CITY	KENTUCKY	9/75	1	E
LAKELAND UTILITIES						
MCINTOSH	3	LAKELAND	FLORIDA	10/81	2	A

1. OPERATIONAL UNITS
2. UNITS UNDER CONSTRUCTION
3. PLANNED - CONTRACT AWARDED
4. PLANNED - LETTER OF INTENT SIGNED
5. PLANNED - REQUESTING/EVALUATING BIDS
6. PLANNED - CONSIDERING ONLY FGD SYSTEMS
7. PLANNED - CONSIDERING FGD SYSTEMS; ALSO ALTERNATIVE METHODS

A. FEDERAL NSPS(6/79)
B. FEDERAL NSPS(12/71)
C. STANDARD(S) MORE STRINGENT THAN NSPS(6/79)
D. STANDARD(S) MORE STRINGENT THAN NSPS(12/71) BUT NOT MORE STRINGENT THAN NSPS(6/79)
E. STANDARD(S) EQUAL TO OR LESS STRINGENT THAN NSPS(12/71)

SECTION 1
SUMMARY LIST OF FGD SYSTEMS

COMPANY NAME/ UNIT NAME	UNIT NO.	UNIT LOCATION		START-UP DATE	STATUS	REG CLASS
LOUISVILLE GAS & ELECTRIC						
CANE RUN	4	LOUISVILLE	KENTUCKY	8/76	1	D
CANE RUN	5	LOUISVILLE	KENTUCKY	12/77	1	D
CANE RUN	6	LOUISVILLE	KENTUCKY	4/79	1	D
MILL CREEK	1	LOUISVILLE	KENTUCKY	4/81	2	E
MILL CREEK	2	LOUISVILLE	KENTUCKY	4/82	2	E
MILL CREEK	3	LOUISVILLE	KENTUCKY	8/78	1	D
MILL CREEK	4	LOUISVILLE	KENTUCKY	7/81	2	B
PADDY'S RUN	6	LOUISVILLE	KENTUCKY	4/73	1	E
TRIMBLE COUNTY	1	BEDFORD	KENTUCKY	7/84	6	A
TRIMBLE COUNTY	2	BEDFORD	KENTUCKY	7/86	6	A
MIDDLE SOUTH UTILETIES						
ARKANSAS COAL	5		ARKANSAS	1/86	5	A
ARKANSAS COAL	6		ARKANSAS	1/88	5	A
LOUISIANA COAL	1		LOUISIANA	0/86	5	A
LOUISIANA COAL	2		LOUISIANA	0/88	5	A
MISSISSIPPI COAL	1		MISSISSIPPI	0/85	5	A
MISSISSIPPI COAL	2		MISSISSIPPI	0/87	5	A
MINNESOTA POWER & LIGHT						
CLAY BOSWELL	4	COHASSET	MINNESOTA	2/80	2	B
MINNKOTA POWER COOPERATIVE						
MILTON R. YOUNG	2	CENTER	NORTH DAKOTA	9/77	1	D
MONTANA POWER						
COLSTRIP	1	COLSTRIP	MONTANA	9/75	1	B
COLSTRIP	2	COLSTRIP	MONTANA	5/76	1	B
COLSTRIP	3	COLSTRIP	MONTANA	1/84	2	C
COLSTRIP	4	COLSTRIP	MONTANA	0/84	2	C
MUSCATINE POWER & WATER						
MUSCATINE	9	MUSCATINE	IOWA	9/82	5	B
NEVADA POWER						
HARRY ALLEN	1	N.E. LAS VEGAS	NEVADA	6/86	6	A
HARRY ALLEN	2	N.E. LAS VEGAS	NEVADA	6/87	6	A
HARRY ALLEN	3	N.E. LAS VEGAS	NEVADA	6/88	6	A
HARRY ALLEN	4	N.E. LAS VEGAS	NEVADA	6/89	6	A
REID GARDNER	1	MOAPA	NEVADA	4/74	1	B
REID GARDNER	2	MOAPA	NEVADA	4/74	1	B
REID GARDNER	3	MOAPA	NEVADA	6/76	1	B
REID GARDNER	4	MOAPA	NEVADA	4/83	6	A
WARNER VALLEY	1	ST. GEORGE	UTAH	6/85	6	A
WARNER VALLEY	2	ST. GEORGE	UTAH	6/86	6	A
NEW YORK STATE ELEC & GAS						
SOMERSET	1	SOMERSET	NEW YORK	6/84	6	C
NIAGARA MOHAWK POWER COOP						
CHARLES R. HUNTLEY	66	BUFFALO	NEW YORK	4/82	2	E
NORTHERN INDIANA PUB SERVICE						
DEAN H. MITCHELL	11	GARY	INDIANA	7/76	1	E
SCHAHFER	17	WHEATFIELD	INDIANA	6/83	4	A
SCHAHFER	18	WHEATFIELD	INDIANA	6/85	4	A
NORTHERN STATES POWER						
RIVERSIDE	6,7	MINNEAPOLIS	MINNESOTA	7/80	2	E
SHERBURNE	1	BECKER	MINNESOTA	3/76	1	D

1. OPERATIONAL UNITS
2. UNITS UNDER CONSTRUCTION
3. PLANNED - CONTRACT AWARDED
4. PLANNED - LETTER OF INTENT SIGNED
5. PLANNED - REQUESTING/EVALUATING BIDS
6. PLANNED - CONSIDERING ONLY FGD SYSTEMS
7. PLANNED - CONSIDERING FGD SYSTEMS; ALSO ALTERNATIVE METHODS

A. FEDERAL NSPS(6/79)
B. FEDERAL NSPS(12/71)
C. STANDARD(S) MORE STRINGENT THAN NSPS(6/79)
D. STANDARD(S) MORE STRINGENT THAN NSPS(12/71) BUT NOT MORE STRINGENT THAN NSPS(6/79)
E. STANDARD(S) EQUAL TO OR LESS STRINGENT THAN NSPS(12/71)

SECTION 1
SUMMARY LIST OF FGD SYSTEMS

COMPANY NAME/ UNIT NAME	UNIT NO.	UNIT LOCATION		START-UP DATE	STATUS	REG CLASS
NORTHERN STATES POWER						
SHERBURNE	2	BECKER	MINNESOTA	4/77	1	D
SHERBURNE	3	BECKER	MINNESOTA	5/84	5	C
OTTER TAIL POWER						
COYOTE	1	BEULAH	NORTH DAKOTA	3/81	2	D
PACIFIC GAS & ELECTRIC						
MONTEZUMA	1	COLLINSVILLE	CALIFORNIA	6/86	6	C
MONTEZUMA	2	COLLINSVILLE	CALIFORNIA	6/87	6	C
PACIFIC POWER & LIGHT						
JIM BRIDGER	4	ROCK SPRINGS	WYOMING	9/79	1	D
PENNSYLVANIA POWER						
BRUCE MANSFIELD	1	SHIPPINGPORT	PENNSYLVANIA	12/75	1	D
BRUCE MANSFIELD	2	SHIPPINGPORT	PENNSYLVANIA	7/77	1	D
BRUCE MANSFIELD	3	SHIPPINGPORT	PENNSYLVANIA	5/80	2	D
PHILADELPHIA ELECTRIC						
CROMBY		PHOENIXVILLE	PENNSYLVANIA	6/80	3	D
EDDYSTONE	1A	EDDYSTONE	PENNSYLVANIA	9/75	1	D
EDDYSTONE	1B	EDDYSTONE	PENNSYLVANIA	6/80	3	D
EDDYSTONE	2	EDDYSTONE	PENNSYLVANIA	6/80	3	D
POTOMAC ELECTRIC POWER						
DICKERSON	4	DICKERSON	MARYLAND	0/87	6	A
POWER AUTHORITY OF NEW YORK						
ARTHUR KILL		STATEN ISLAND	NEW YORK	11/87	6	C
PUBLIC SERVICE OF INDIANA						
GIBSON	5	PRINCETON	INDIANA	0/82	3	A
PUBLIC SERVICE OF NEW MEXICO						
SAN JUAN	1	WATERFLOW	NEW MEXICO	4/78	1	C
SAN JUAN	2	WATERFLOW	NEW MEXICO	8/78	1	C
SAN JUAN	3	WATERFLOW	NEW MEXICO	12/79	1	C
SAN JUAN	4	WATERFLOW	NEW MEXICO	1/82	2	C
SALT RIVER PROJECT						
CORONADO	1	ST. JOHNS	ARIZONA	11/79	1	D
CORONADO	2	ST. JOHNS	ARIZONA	10/80	2	D
CORONADO	3	ST. JOHNS	ARIZONA	0/ 0	6	A
SAN MIGUEL ELECTRIC COOP						
SAN MIGUEL	1	SAN MIGUEL	TEXAS	9/80	2	B
SEMINOLE ELECTRIC						
SEMINOLE	1	PALATKA	FLORIDA	6/83	5	A
SEMINOLE	2	PALATKA	FLORIDA	6/85	5	A
SIKESTON BOARD OF MUNIC. UTIL.						
SIKESTON	1	SIKESTON	MISSOURI	1/81	2	B
SOUTH CAROLINA PUBLIC SERVICE						
WINYAH	2	GEORGETOWN	SOUTH CAROLINA	7/77	1	B
WINYAH	3	GEORGETOWN	SOUTH CAROLINA	5/80	2	B
WINYAH	4	GEORGETOWN	SOUTH CAROLINA	7/81	3	A

1. OPERATIONAL UNITS
2. UNITS UNDER CONSTRUCTION
3. PLANNED - CONTRACT AWARDED
4. PLANNED - LETTER OF INTENT SIGNED
5. PLANNED - REQUESTING/EVALUATING BIDS
6. PLANNED - CONSIDERING ONLY FGD SYSTEMS
7. PLANNED - CONSIDERING FGD SYSTEMS; ALSO ALTERNATIVE METHODS

A. FEDERAL NSPS(6/79)
B. FEDERAL NSPS(12/71)
C. STANDARD(S) MORE STRINGENT THAN NSPS(6/79)
D. STANDARD(S) MORE STRINGENT THAN NSPS(12/71) BUT NOT MORE STRINGENT THAN NSPS(6/79)
E. STANDARD(S) EQUAL TO OR LESS STRINGENT THAN NSPS(12/71)

SECTION 1
SUMMARY LIST OF FGD SYSTEMS

COMPANY NAME/ UNIT NAME	UNIT NO.	UNIT LOCATION		START-UP DATE	STATUS	REG CLASS
SOUTH MISSISSIPPI ELEC PWR						
R.D. MORROW	1	HATTISBURG	MISSISSIPPI	8/78	1	B
R.D. MORROW	2	HATTISBURG	MISSISSIPPI	6/79	1	B
SOUTHERN ILLINOIS POWER COOP						
MARION	4	MARION	ILLINOIS	5/79	1	B
MARION	5	MARION	ILLINOIS	0/84	6	A
SOUTHERN INDIANA GAS & ELEC						
A.B. BROWN	1	WEST FRANKLIN	INDIANA	3/79	1	B
SOUTHWESTERN ELECTRIC POWER						
HENRY W. PERKEY	1	HALLSVILLE	TEXAS	12/84	3	A
SPRINGFIELD CITY UTILITIES						
SOUTHWEST	1	SPRINGFIELD	MISSOURI	4/77	1	B
SPRINGFIELD WATER, LIGHT & PWR						
DALLMAN	3	SPRINGFIELD	ILLINOIS	9/80	2	B
ST. JOE ZINC						
G.F. WEATON	1	MONACA	PENNSYLVANIA	11/79	1	B
TAMPA ELECTRIC						
BIG BEND	4	TAMPA	FLORIDA	3/85	5	A
TENNESSEE VALLEY AUTHORITY						
JOHNSONVILLE	1-10	NEW JOHNSONVILL	TENNESSEE	12/81	5	E
PARADISE	1	PARADISE	KENTUCKY	6/82	3	E
PARADISE	2	PARADISE	KENTUCKY	3/82	3	E
SHAWNEE	10A	PADUCAH	KENTUCKY	4/72	1	E
SHAWNEE	10B	PADUCAH	KENTUCKY	4/72	1	E
WIDOWS CREEK	7	BRIDGEPORT	ALABAMA	10/80	2	E
WIDOWS CREEK	8	BRIDGEPORT	ALABAMA	5/77	1	E
TEXAS MUNICIPAL POWER AGENCY						
GIBBONS CREEK	1	CARLOS	TEXAS	1/82	3	A
TEXAS POWER & LIGHT						
SANDOW	4	ROCKDALE	TEXAS	7/80	2	B
TWIN OAKS	1	BREMOND	TEXAS	8/84	3	A
TWIN OAKS	2	BREMOND	TEXAS	8/85	3	A
TEXAS UTILITIES						
FOREST GROVE	1	ATHENS	TEXAS	0/81	5	A
MARTIN LAKE	1	TATUM	TEXAS	4/77	1	B
MARTIN LAKE	2	TATUM	TEXAS	5/78	1	B
MARTIN LAKE	3	TATUM	TEXAS	2/79	1	B
MARTIN LAKE	4	TATUM	TEXAS	0/85	3	A
MILL CREEK	1	HENDERSON	TEXAS	0/85	6	A
MILL CREEK	2	HENDERSON	TEXAS	0/86	6	A
MONTICELLO	3	MT. PLEASANT	TEXAS	5/78	1	B
TUCSON GAS & ELECTRIC						
SPRINGERVILLE	1	SPRINGERVILLE	ARIZONA	0/85	3	B
SPRINGERVILLE	2	SPRINGERVILLE	ARIZONA	0/87	3	B
UTAH POWER & LIGHT						
HUNTER	1	CASTLE DALE	UTAH	5/79	1	B
HUNTER	2	CASTLE DALE	UTAH	6/80	2	B
HUNTER	3	CASTLE DALE	UTAH	0/83	3	A

1. OPERATIONAL UNITS
2. UNITS UNDER CONSTRUCTION
3. PLANNED - CONTRACT AWARDED
4. PLANNED - LETTER OF INTENT SIGNED
5. PLANNED - REQUESTING/EVALUATING BIDS
6. PLANNED - CONSIDERING ONLY FGD SYSTEMS
7. PLANNED - CONSIDERING FGD SYSTEMS; ALSO ALTERNATIVE METHODS

A. FEDERAL NSPS(6/79)
B. FEDERAL NSPS(12/71)
C. STANDARD(S) MORE STRINGENT THAN NSPS(6/79)
D. STANDARD(S) MORE STRINGENT THAN NSPS(12/71) BUT NOT MORE STRINGENT THAN NSPS(6/79)
E. STANDARD(S) EQUAL TO OR LESS STRINGENT THAN NSPS(12/71)

SECTION 1
SUMMARY LIST OF FGD SYSTEMS

COMPANY NAME/ UNIT NAME	UNIT NO.	UNIT LOCATION		START-UP DATE	STATUS	REG CLASS
UTAH POWER & LIGHT						
HUNTER	4	CASTLE DALE	UTAH	0/85	3	A
HUNTINGTON	1	PRICE	UTAH	5/78	1	B
WISCONSIN POWER & LIGHT						
COLUMBIA	2	PORTAGE	WISCONSIN	1/82	3	B

1. OPERATIONAL UNITS
2. UNITS UNDER CONSTRUCTION
3. PLANNED - CONTRACT AWARDED
4. PLANNED - LETTER OF INTENT SIGNED
5. PLANNED - REQUESTING/EVALUATING BIDS
6. PLANNED - CONSIDERING ONLY FGD SYSTEMS
7. PLANNED - CONSIDERING FGD SYSTEMS; ALSO ALTERNATIVE METHODS

A. FEDERAL NSPS(6/79)
B. FEDERAL NSPS(12/71)
C. STANDARD(S) MORE STRINGENT THAN NSPS(6/79)
D. STANDARD(S) MORE STRINGENT THAN NSPS(12/71) BUT NOT MORE STRINGENT THAN NSPS(6/79)
E. STANDARD(S) EQUAL TO OR LESS STRINGENT THAN NSPS(12/71)

SECTION 2
STATUS OF FGD SYSTEMS

UNIT IDENTIFICATION	ABSTRACT
ALABAMA ELECTRIC COOP TOMBIGBEE 2 NEW 255.0 MW (GROSS) 179.0 MW (ESC) COAL 1.15 %S BITUMINOUS LIMESTONE PEABODY PROCESS SYSTEMS ENERGY CONSUMPTION: 3.1% STATUS 1 STARTUP 9/78	TOMBIGBEE 2 OF ALABAMA ELECTRIC COOP IS A PULVERIZED COAL BOILER LOCATED IN LEROY, ALABAMA. THE BOILER GENERATES A MAXIMUM FLUE GAS FLOW OF 953,000 ACFM AND BURNS BITUMINOUS COAL WITH AN AVERAGE SULFUR CONTENT OF 1.2% AND AN AVERAGE HEAT CONTENT OF 11,500 BTU/LB. THE UNIT SO2 EMMISSION LIMITATION VALUE IS 1.2 LB/MMBTU. PRIMARY PARTICULATE MATTER CONTROL IS PROVIDED BY A HOT SIDE ESP. THE SO2 REMOVAL EQUIPMENT CONSISTS OF TWO SPRAY TOWERS SUPPLIED BY PEABODY PROCESS SYSTEMS WHICH UTILIZE A LIMESTONE REAGENT. A CHEVRON MIST ELIMINATOR IS INCLUDED FOR EACH TOWER AND THE FLUE GAS IS REHEATED WITH BYPASSED GAS BEFORE BEING VENTED TO A 400 FOOT ACID-BRICK LINED STACK. THE SYSTEM OPERATES IN AN OPEN WATER LOOP MODE AND SPENT ABSORBENT IS DISPOSED OF IN AN ON-SITE LINED POND.
ALABAMA ELECTRIC COOP TOMBIGBEE 3 NEW 255.0 MW (GROSS) 179.0 MW (ESC) COAL 1.15 %S BITUMINOUS LIMESTONE PEABODY PROCESS SYSTEMS ENERGY CONSUMPTION: 3.1% STATUS 1 STARTUP 6/79	TOMBIGBEE 3 OF ALABAMA ELECTRIC COOP IS A PULVERIZED COAL BOILER LOCATED IN LEROY, ALABAMA. THE BOILER GENERATES A MAXIMUM FLUE GAS FLOW OF 953,000 ACFM AND BURNS BITUMINOUS COAL WITH AN AVERAGE SULFUR CONTENT OF 1.2% AND AN AVERAGE HEAT CONTENT OF 11,500 BTU/LB. THE UNIT SO2 EMISSION LIMITATION VALUE IS 1.2 LB/MMBTU. PRIMARY PARTICULATE CONTROL IS PROVIDED BY A HOT SIDE ESP. THE SO2 REMOVAL EQUIPMENT CONSISTS OF TWO SPRAY TOWERS SUPPLIED BY PEABODY PROCESS SYSTEMS WHICH UTILIZE A LIMESTONE REAGENT. A CHEVRON MIST ELIMINATOR IS INCLUDED IN EACH TOWER, AND THE FLUE GAS IS REHEATED WITH BYPASSED GAS BEFORE BEING VENTED TO A 400 FOOT ACID BRICK LINED STACK. THE SYSTEM OPERATES IN AN OPEN WATER LOOP MODE, AND SPENT ABSORBENT IS DISPOSED IN AN ON-SITE LINED POND.
ALLEGHENY POWER SYSTEM MITCHELL 33 RETROFIT 300.0 MW (GROSS) 300.0 MW (ESC) COAL 2.80 %S BITUMINOUS LIME CHEMICO ENERGY CONSUMPTION: ****% STATUS 3 STARTUP 8/82	UNIT 33 AT ALLEGHENY POWER SYSTEM'S MITCHELL POWER STATION IN COURTNEY, PENNSYLVANIA IS A 2.8% SULFUR COAL FIRED BOILER. A CONTRACT WAS AWARDED TO CHEMICO FOR A LIME SCRUBBING PROCESS. SO2 REMOVAL EFFICIENCY WILL BE 95%. START UP IS PLANNED FOR AUGUST OF 1982.
ALLEGHENY POWER SYSTEM PLEASANTS 1 NEW 625.0 MW (GROSS) 519.0 MW (ESC) COAL 3.70 %S BITUMINOUS LIME BABCOCK & WILCOX ENERGY CONSUMPTION: ****% STATUS 1 STARTUP 3/79	ALLEGHENY POWER SYSTEM'S PLEASANTS 1 IS A BITUMINOUS COAL (3.70% S, 12,150 BTU/LB) FIRED BOILER IN BELMONT, WEST VIRGINIA. BABCOCK AND WILCOX SUPPLIED A LIME FGD SYSTEM DESIGNED TO REMOVE 90% OF THE FLUE GAS SO2 FROM THIS UNIT. THE EMISSION CONTROL SYSTEM INCLUDES AN ESP UPSTREAM OF FOUR SPRAY TOWER ABSORBERS. A FLUE GAS BYPASS SYSTEM PROVIDES REHEAT OF THE CLEANED GAS BEFORE IT IS DISCHARGED THROUGH A 1200 FOOT PLACITE LINED STACK. THE SYSTEM OPERATES IN AN OPEN WATER LOOP. THE FGD SYSTEM ON THIS UNIT HAS BEEN OPERATIONAL SINCE MARCH OF 1979.
ALLEGHENY POWER SYSTEM PLEASANTS 2 NEW 625.0 MW (GROSS) 519.0 MW (ESC) COAL 4.50 %S BITUMINOUS LIME BABCOCK & WILCOX ENERGY CONSUMPTION: ****% STATUS 2 STARTUP 9/80	ALLEGHENY POWER SYSTEM'S PLEASANTS 2 IS A BITUMINOUS COAL (3.7% S, 12,150 BTU/LB) FIRED BOILER UNDER CONSTRUCTION IN BELMONT, WEST VIRGINIA. BABCOCK AND WILCOX IS SUPPLYING A LIME FGD SYSTEM DESIGNED TO REMOVE 90% OF THE BOILER FLUE GAS SO2. THE EMISSION CONTROL SYSTEM ON THIS UNIT WILL INCLUDE AN ESP UPSTREAM OF FOUR SPRAY TOWER ABSORBERS. A FLUE GAS BYPASS SYSTEM WILL PROVIDE REHEAT OF THE CLEANED GAS BEFORE IT IS DISCHARGED THROUGH A 1200 FOOT PLACITE LINED STACK. THE SYSTEM WILL OPERATE IN AN OPEN WATER LOOP. FGD SYSTEM START UP IS EXPECTED IN SEPTEMBER, 1980.
ARIZONA ELECTRIC POWER COOP APACHE 2 NEW 195.0 MW (GROSS) 195.0 MW (ESC) COAL .55 %S BITUMINOUS LIMESTONE RESEARCH COTTRELL ENERGY CONSUMPTION: 4.1% STATUS 1 STARTUP 8/78	APACHE 2 OF ARIZONA ELECTRIC POWER COOP IS LOCATED IN COCHISE, ARIZONA AND IS A DRY BOTTOM PULVERIZED COAL FIRED UNIT WITH A FLUE GAS FLOW OF 735,000 ACFM. BITUMINOUS COAL WITH A HEATING VALUE OF 10,000 BTU/LB, A SULFUR CONTENT OF 0.7% AND AN ASH CONTENT OF 15% IS THE FUEL USED FOR THIS UNIT. PARTICULATE CONTROL IS EFFECTED BY A HOT SIDE ESP. THE UNIT IS CURRENTLY IN OPERATION WITH STARTUP IN AUGUST 1978. TWO PACKED TOWERS EMPLOYING LIMESTONE ABSORBENT AND HAVING A DESIGN SO2 REMOVAL OF 85% WERE SUPPLIED BY RESEARCH COTTRELL. MIST ELIMINATION IS PROVIDED BY CHEVRON TYPE ELIMINATORS. NO REHEAT IS EMPLOYED. A 400 FT COLE BRAND CXL2000 LINED STACK IS IN USE. THE SYSTEM OPERATES IN AN OPEN WATER LOOP MODE AND WASTE MATERIAL IS DISPOSED OF IN OFF SITE SLUDGE PONDS.

SECTION 2
STATUS OF FGD SYSTEMS

UNIT IDENTIFICATION	ABSTRACT
ARIZONA ELECTRIC POWER COOP APACHE 3 NEW 195.0 MW (GROSS) 195.0 MW (ESC) COAL .55 %S BITUMINOUS LIMESTONE RESEARCH COTTRELL ENERGY CONSUMPTION: 4.1% STATUS 1 STARTUP 6/79	APACHE 3 OF ARIZONA ELECTRIC POWER COOP IS A DRY BOTTOM, PULVERIZED COAL FIRED UNIT IN COCHISE, ARIZONA. LOW (0.7%) SULFUR BITUMINOUS COAL WITH AN AVERAGE HEATING VALUE OF 10,000 BTU/LB PRODUCES A MAXIMUM FLUE GAS FLOW OF 735,000 ACFM. THE FLUE GAS PASSES THROUGH A HOT SIDE ESP TO TWO RESEARCH COTTRELL PACKED TOWERS, WHERE LIMESTONE IS USED TO REMOVE 85% (DESIGN) OF THE SO2. THE GAS EXITS A HORIZONTAL CHEVRON MIST ELIMINATOR INTO ITS OWN CEILCOTE LINED FLUE IN THE 400 FOOT STACK IT SHARES WITH UNIT 2. THE FGD, WHICH HAS BEEN OPERATIONAL SINCE JUNE OF 1979, USES NO REHEAT. THE SYSTEM OPERATES IN AN OPEN WATER LOOP AND SLUDGE IS DISPOSED OF IN TWO OFF SITE LINED PONDS WITH 20 YEARS EXPECTED LIFESPAN. TWO ADDITIONAL PONDS ARE PLANNED, WHICH WOULD ADD ANOTHER 20 YEARS' CAPACITY.
ARIZONA PUBLIC SERVICE CHOLLA 1 RETROFIT 119.0 MW (GROSS) 119.0 MW (ESC) COAL .50 %S BITUMINOUS LIMESTONE RESEARCH COTTRELL ENERGY CONSUMPTION: 3.4% STATUS 1 STARTUP 10/73	ARIZONA PUBLIC SERVICE'S CHOLLA 1 IS LOCATED IN JOSEPH CITY, ARIZONA AND IS A TANGENTIALLY FIRED, WET BOTTOM PULVERIZED COAL UNIT. IT IS FUELED BY BITUMINOUS COAL THAT HAS A SULFUR CONTENT OF 0.5% AND A HEATING VALUE OF 10,150 BTU/LB. PARTICULATE MATTER IS CONTROLLED BY TWO FLOODED DISC SCRUBBERS. THE FGD SYSTEM BEGAN IN OCTOBER, 1973 AND IS NOW OPERATIONAL. SO2 IS CONTROLLED BY ONE TOWER WITH MUNTERS PACKING EMPLOYING A LIMESTONE ABSORBENT. THE UNIT WAS SUPPLIED BY RESEARCH COTTRELL AND HAS A DESIGN REMOVAL OF 92%. CHEVRON MIST ELIMINATORS ARE LOCATED PRIOR TO AN IN-LINE STEAM REHEAT SYSTEM. THE TREATED FLUE GAS IS VENTED TO A 256 FT ACID BRICK LINED STACK. THE FGD SYSTEM OPERATES IN AN OPEN WATER LOOP MODE AND THE UNTREATED WASTE IS DISPOSED OF IN AN ON-SITE UNLINED POND.
ARIZONA PUBLIC SERVICE CHOLLA 2 NEW 350.0 MW (GROSS) 350.0 MW (ESC) COAL .50 %S BITUMINOUS LIMESTONE RESEARCH COTTRELL ENERGY CONSUMPTION: ****% STATUS 1 STARTUP 4/78	CHOLLA 2 OF ARIZONA PUBLIC SERVICE IS LOCATED IN JOSEPH CITY, ARIZONA. THE BOILER BURNS PULVERIZED BITUMINOUS COAL (0.5% S, 10,150 BTU/LB). MECHANICAL COLLECTORS PROVIDE PRIMARY PARTICULATE CONTROL. FOUR PARALLEL FLOODED DISC AND PACKED TOWER SO2 ABSORBER TRAINS (THREE ARE REQUIRED FOR FULL LOAD) REMOVE THE FLUE GAS SO2. THE DESIGN SO2 REMOVAL FOR THE SYSTEM, WHICH BEGAN OPERATIONS IN APRIL, 1978, IS 75%. THE CLEANED GAS PASSES THROUGH AN IN-LINE STEAM REHEATER INTO AN ACID BRICK LINED STACK. THE OPEN WATER LOOP SYSTEM DEPOSITS ITS SLUDGE INTO A FLY ASH POND.
ARIZONA PUBLIC SERVICE CHOLLA 4 NEW 350.0 MW (GROSS) 126.0 MW (ESC) COAL .50 %S LIMESTONE RESEARCH COTTRELL ENERGY CONSUMPTION: ****% STATUS 2 STARTUP 6/80	CHOLLA 4 OF ARIZONA PUBLIC SERVICE IS PRESENTLY UNDER CONSTRUCTION IN JOSEPH CITY, ARIZONA. START UP IS SCHEDULED FOR JUNE, 1980. THE PULVERIZED COAL (0.5% S, 10,150 BTU/LB) FIRED BOILER WILL EXHAUST FLUE GAS THROUGH AN ESP TO A PACKED TOWER WHICH WILL TREAT 36% OF THE GAS WITH LIMESTONE.
ARIZONA PUBLIC SERVICE FOUR CORNERS 1 RETROFIT 175.0 MW (GROSS) 175.0 MW (ESC) COAL .75 %S SUBBITUMINOUS LIME/ALKALINE FLYASH CHEMICO ENERGY CONSUMPTION: ****% STATUS 2 STARTUP 11/79	ARIZONA PUBLIC SERVICE IS UPGRADING THE OPERATIONAL PARTICULATE SCRUBBERS AT FOUR CORNERS 1, 2, AND 3 IN FARMINGTON, NEW MEXICO TO HANDLE ADDITIONAL SO2 REMOVAL. CURRENTLY, THE FRONT FIRED, DRY BOTTOM, PULVERIZED COAL (SUBBITUMINOUS, 0.75% S, 8650 BTU/LB) UNITS 1 AND 2 SUPPLY 814,000 ACFM EACH INTO 2 CHEMICO VENTURI SCRUBBERS PER UNIT FOR PRIMARY PARTICULATE CONTROL AND APPROXIMATELY 30% SO2 REMOVAL USING ALKALINE FLY ASH. THE DESIGN SO2 REMOVAL EFFICIENCY AFTER THE CONVERSION TO LIME AND ALKALINE FLY ASH SCRUBBING IS 67.5%. START UP IS EXPECTED SOMETIME IN 1979.
ARIZONA PUBLIC SERVICE FOUR CORNERS 2 RETROFIT 175.0 MW (GROSS) 175.0 MW (ESC) COAL .75 %S SUBBITUMINOUS LIME/ALKALINE FLYASH CHEMICO ENERGY CONSUMPTION: ****% STATUS 2 STARTUP 11/79	ARIZONA PUBLIC SERVICE IS UPGRADING THE OPERATIONAL PARTICULATE SCRUBBERS AT FOUR CORNERS 1,2, AND 3 IN FARMINGTON, NEW MEXICO TO HANDLE ADDITIONAL SO2 REMOVAL. CURRENTLY, THE FRONT FIRED, DRY BOTTOM, PULVERIZED COAL (SUBBITUMINOUS, 0.75% S, 8650 BTU/LB) UNITS 1 AND 2 SUPPLY 814,000 ACFM EACH INTO 2 CHEMICO VENTURI SCRUBBERS PER UNIT FOR PRIMARY PARTICULATE CONTROL AND APPROXIMATELY 30% SO2 REMOVAL USING ALKALINE FLY ASH. THE DESIGN SO2 REMOVAL EFFICIENCY AFTER THE CONVERSION TO LIME AND ALKALINE FLY ASH SCRUBBING IS 67.5%. START UP IS EXPECTED SOMETIME IN 1979.

SECTION 2
STATUS OF FGD SYSTEMS

UNIT IDENTIFICATION	ABSTRACT
ARIZONA PUBLIC SERVICE FOUR CORNERS 3 RETROFIT 229.0 MW (GROSS) 229.0 MW (ESC) COAL .75 %S SUBBITUMINOUS LIME/ALKALINE FLYASH CHEMICO ENERGY CONSUMPTION: ****% STATUS 2 STARTUP 11/79	ARIZONA PUBLIC SERVICE IS UPGRADING THE OPERATIONAL PARTICULATE SCRUBBERS AT FOUR CORNERS 1,2, AND 3 IN FARMINGTON, NEW MEXICO TO HANDLE ADDITIONAL SO2 REMOVAL. CURRENTLY, THE FRONT FIRED, DRY BOTTOM, PULVERIZED COAL (SUBBITUMINOUS, 0.75% S, 8650 BTU/LB) UNIT 3 SUPPLIES 1,030,000 ACFM INTO 2 CHEMICO VENTURI SCRUBBERS FOR PRIMARY PARTICULATE CONTROL AND APPROXIMATELY 30% SO2 REMOVAL USING ALKALINE FLY ASH. THE DESIGN SO2 REMOVAL EFFICIENCY AFTER THE CONVERSION TO LIME AND ALKALINE FLY ASH SCRUBBING IS 67.5%. STARTUP IS EXPECTED SOMETIME IN 1979.
ARIZONA PUBLIC SERVICE FOUR CORNERS 4 RETROFIT 755.0 MW (GROSS) 755.0 MW (ESC) COAL .75 %S LIME UNITED ENGINEERS ENERGY CONSUMPTION: ****% STATUS 3 STARTUP 0/82	ARIZONA PUBLIC SERVICE AWARDED A CONTRACT TO UNITED ENGINEERS FOR A LIME FGD SYSTEM TO BE RETROFITTED ONTO UNITS 4 AND 5 AT ITS FOUR CORNERS STATION IN FARMINGTON, NEW MEXICO. BASED ON THE PROTOTYPE HORIZONTAL SCRUBBING PROGRAM CONDUCTED BY THE UTILITY, A HORIZONTAL SYSTEM WAS CHOSEN TO CONTROL THE EMISSIONS FROM THESE COAL (0.75% S, 8650 BTU/LB) FIRED UNITS. THE PARTICULATE EMISSIONS ARE HANDLED BY AN ESP. START UP IS EXPECTED IN 1982.
ARIZONA PUBLIC SERVICE FOUR CORNERS 5 RETROFIT 755.0 MW (GROSS) 755.0 MW (ESC) COAL .75 %S LIME UNITED ENGINEERS ENERGY CONSUMPTION: ****% STATUS 3 STARTUP 0/82	ARIZONA PUBLIC SERVICE AWARDED A CONTRACT TO UNITED ENGINEERS FOR A LIME FGD SYSTEM TO BE RETROFITTED ONTO UNITS 4 AND 5 AT ITS FOUR CORNERS STATION IN FARMINGTON, NEW MEXICO. BASED ON THE PROTOTYPE HORIZONTAL SCRUBBING PROGRAM CONDUCTED BY THE UTILITY, A HORIZONTAL SYSTEM WAS CHOSEN TO CONTROL THE EMISSIONS FROM THESE COAL (0.75% S, 8650 BTU/LB) FIRED UNITS. THE PARTICULATE EMISSIONS ARE HANDLED BY AN ESP. START UP IS EXPECTED IN 1982.
ASSOCIATED ELECTRIC COOP THOMAS HILL 3 NEW 730.0 MW (GROSS) 670.0 MW (ESC) COAL 4.80 %S LIMESTONE PULLMAN KELLOGG ENERGY CONSUMPTION: ****% STATUS 2 STARTUP 1/82	THOMAS HILL 3 OF ASSOCIATED ELECTRIC COOP IS A PULVERIZED COAL (4.8% S, 9,700 BTU/LB) FIRED UNIT LOCATED IN MOBERLY, MISSOURI. TWO COLD SIDE ESP'S WILL PRECEDE THE FOUR 91.5% EFFICIENT PULLMAN KELLOGG HORIZONTAL WEIR FGD MODULES USING MAGNESIUM-PROMOTED LIMESTONE AS THE ABSORBENT. THE CLEANED GAS WILL PASS THROUGH A VERTICAL CHEVRON MIST ELIMINATOR TO A 620 FOOT BRICK LINED STACK. REHEAT WILL BE ACCOMPLISHED BY BYPASS. DRY FIXATED SLUDGE WILL BE TRUCKED TO AN ACTIVE STRIP MINE. THE SYSTEM WILL USE A CLOSED WATER LOOP. THE FGD SYSTEM IS UNDER CONSTRUCTION AND START UP IS EXPECTED IN JANUARY, 1982.
BASIN ELECTRIC POWER COOP ANTELOPE VALLEY 1 NEW 440.0 MW (GROSS) 440.0 MW (ESC) COAL .68 %S LIGNITE LIME/SPRAY DRYING JOY MFG/NIRO ATOMIZER ENERGY CONSUMPTION: ****% STATUS 2 STARTUP 11/81	UNIT 1 OF BASIN ELECTRIC POWER COOP'S ANTELOPE VALLEY PLANT IS PRESENTLY UNDER CONSTRUCTION IN BEULAH, NORTH DAKOTA. THIS UNIT WILL BURN PULVERIZED COAL (0.68% S, 6600 BTU/LB LIGNITE) AND SUPPLY 2,055,000 ACFM TO A DRY LIME FGD SYSTEM SUPPLIED BY WESTERN PRECIPITATION. THE 62% EFFICIENT SYSTEM WILL CONSIST OF 5 NIRO ATOMIZER SPRAY DRYERS AND TWO BAGHOUSES. THE CLEANED GAS, ALONG WITH A 4% BYPASS REHEAT, WILL EXIT A 600 FOOT PVC LINED STACK. THE SYSTEM WILL USE A CLOSED WATER LOOP AND THE DRY POWDER WILL BE USED FOR LANDFILL IN A COAL MINE. START UP IS EXPECTED IN NOVEMBER, 1981.
BASIN ELECTRIC POWER COOP ANTELOPE VALLEY 2 NEW 440.0 MW (GROSS) 440.0 MW (ESC) COAL .68 %S LIGNITE PROCESS NOT SELECTED VENDOR NOT SELECTED ENERGY CONSUMPTION: ****% STATUS 5 STARTUP 11/83	ANTELOPE VALLEY 2 OF BASIN ELECTRIC POWER COOP WILL BE LOCATED IN BEULAH, NORTH DAKOTA. THE UTILITY IS PRESENTLY CONSIDERING VARIOUS FGD PROCESSES FOR THIS LIGNITE (0.68% S, 6600 BTU/LB) FIRED UNIT. THE UNIT WILL BE REQUIRED TO COMPLY WITH STATE EMISSIONS STANDARDS VIA BEST AVAILABLE CONTROL TECHNOLOGY. START UP IS SCHEDULED FOR NOVEMBER, 1983.

SECTION 2
STATUS OF FGD SYSTEMS

UNIT IDENTIFICATION	ABSTRACT
BASIN ELECTRIC POWER COOP LARAMIE RIVER 1 NEW 600.0 MW (GROSS) 600.0 MW (ESC) COAL .80 %S LIMESTONE RESEARCH COTTRELL ENERGY CONSUMPTION: ****% STATUS 2 STARTUP 4/80	BASIN ELECTRIC POWER COOP'S LARAMIE RIVER 1 IS PRESENTLY UNDER CONSTRUCTION IN WHEATLAND, WYOMING. THE PULVERIZED COAL (0.81% S, 8139 BTU/LB) FIRED BOILER WILL FEED 2,300,000 ACFM OF FLUE GAS THROUGH A COLD SIDE ESP TO FIVE RESEARCH COTTRELL LIMESTONE PACKED TOWER MODULES, WHICH WILL REMOVE 90% OF THE SO2. THE CLEANED GAS WILL EXIT FROM A VERTICAL CHEVRON DEMISTER INTO A 600 FOOT ACID BRICK LINED STACK. NO REHEAT WILL BE USED. THE FLYASH FIXATED SLUDGE WILL BE DEWATERED TO 83% SOLIDS BEFORE BEING LANDFILLED, AND THE SYSTEM WILL EMPLOY A CLOSED WATER LOOP. START UP IS SCHEDULED FOR APRIL, 1980.
BASIN ELECTRIC POWER COOP LARAMIE RIVER 2 NEW 600.0 MW (GROSS) 600.0 MW (ESC) COAL .80 %S LIMESTONE RESEARCH COTTRELL ENERGY CONSUMPTION: ****% STATUS 2 STARTUP 10/80	BASIN ELECTRIC POWER COOP'S LARAMIE RIVER 2 IS PRESENTLY UNDER CONSTRUCTION IN WHEATLAND, WYOMING. THE PULVERIZED COAL (0.81% S, 8139 BTU/LB) FIRED BOILER WILL FEED 2,300,000 ACFM OF FLUE GAS THROUGH A OLD SIDE ESP TO FIVE RESEARCH COTTRELL LIMESTONE PACKED TOWER MODULES, WHICH WILL REMOVE 90% OF THE SO2. THE CLEANED GAS WILL EXIT FROM A VERTICAL CHEVRON DEMISTER INTO A 600 FOOT ACID BRICK LINED STACK. NO REHEAT WILL BE USED. THE FLYASH FIXATED SLUDGE WILL BE DEWATERED TO 83% SOLIDS BEFORE BEING LANDFILLED, AND THE SYSTEM WILL EMPLOY A CLOSED WATER LOOP. START UP IS SCHEDULED FOR OCTOBER, 1980.
BASIN ELECTRIC POWER COOP LARAMIE RIVER 3 NEW 600.0 MW (GROSS) 600.0 MW (ESC) COAL .54 %S LIME/SPRAY DRYING BABCOCK & WILCOX ENERGY CONSUMPTION: ****% STATUS 3 STARTUP 7/81	LARAMIE RIVER 3 OF BASIN ELECTRIC POWER COOP IS TO BE CONSTRUCTED IN WHEATLAND, WYOMING, AND WILL UTILIZE FOUR DRY LIME INJECTION MODULES, EACH FOLLOWED BY AN ESP. THE BOILER WILL FIRE PULVERIZED COAL (0.54% S, 8100 BTU/LB) AND WILL SUPPLY 2,800,000 ACFM OF FLUE GAS TO THE FGD SYSTEM, WHICH WILL REMOVE 85% OF THE SO2 BEFORE THE GAS EXITS THROUGH A 600 FOOT ACID BRICK LINED STACK. A 3% BYPASS WILL BE USED FOR REHEAT. THE SYSTEM WILL OPERATE IN A CLOSED WATER LOOP, AND WILL LANDFILL THE DRY POWDER WASTE. CONSTRUCTION IS SLATED TO BEGIN IN JANUARY, 1980, AND START UP IS SCHEDULED FOR JULY, 1981.
BIG RIVERS ELECTRIC D. B. WILSON 1 NEW 440.0 MW (GROSS) 440.0 MW (ESC) COAL ***** %S PROCESS NOT SELECTED VENDOR NOT SELECTED ENERGY CONSUMPTION: ****% STATUS 6 STARTUP 0/84	BIG RIVERS ELECTRIC HAS PLANS FOR TWO NEW UNITS, D.B. WILSON 1 AND 2. THE PULVERIZED COAL FIRED BOILERS WILL HAVE A MW RATING OF 440 EACH. THE UNITS WILL UTILIZE EITHER A LIME, LIMESTONE OR DUAL ALKALI FGD SYSTEM. START UP OF UNIT 1 IS EXPECTED IN 1984.
BIG RIVERS ELECTRIC D. B. WILSON 2 NEW 440.0 MW (GROSS) 440.0 MW (ESC) COAL ***** %S PROCESS NOT SELECTED VENDOR NOT SELECTED ENERGY CONSUMPTION: ****% STATUS 6 STARTUP 0/85	BIG RIVERS ELECTRIC HAS PLANS FOR TWO NEW UNITS, D.B. WILSON 1 AND 2. THE PULVERIZED COAL FIRED BOILERS WILL HAVE A MW RATING OF 440 EACH. THE UNITS WILL UTILIZE EITHER A LIME, LIMESTONE OR DUAL ALKALI FGD SYSTEM. START UP OF UNIT 2 IS EXPECTED IN 1985.
BIG RIVERS ELECTRIC GREEN 1 NEW 242.0 MW (GROSS) 242.0 MW (ESC) COAL 3.75 %S BITUMINOUS LIME AMERICAN AIR FILTER ENERGY CONSUMPTION: ****% STATUS 1 STARTUP 12/79	UNIT 1 OF BIG RIVERS ELECTRIC'S GREEN STATION IS LOCATED IN SEBREE, KENTUCKY. THE DRY BOTTOM PULVERIZED COAL (3.75% S, 9750 BTU/LB) FIRED BOILER SUPPLIES 1,000,000 ACFM TO A COLD SIDE ESP FOLLOWED BY TWO AMERICAN AIR FILTER LIME SPRAY TOWERS WHICH WILL REMOVE 90% OF THE SO2. THE CLEANED GAS PASSES THROUGH A CHEVRON MIST ELIMINATOR AND EXITS A SAUERISEN 72 LINED STACK AFTER IT IS HEATED BY STEAM COIL REHEATER. THE SLUDGE FROM THE CLOSED WATER LOOP SYSTEM IS POZ-O-TEC STABILIZED. OPERATIONS COMMENCED IN DECEMBER 1979.

SECTION 2
STATUS OF FGD SYSTEMS

UNIT IDENTIFICATION	ABSTRACT
BIG RIVERS ELECTRIC GREEN 2 NEW 242.0 MW (GROSS) 242.0 MW (ESC) COAL 3.75 %S BITUMINOUS LIME AMERICAN AIR FILTER ENERGY CONSUMPTION: ****% STATUS 2 STARTUP 11/80	UNIT 2 OF BIG RIVERS ELECTRIC'S GREEN STATION IS BEING CONSTRUCTED IN SEBREE, KENTUCKY. THE DRY BOTTOM PULVERIZED COAL (3.75% S, 9750 BTU/LB) FIRED BOILER WILL SUPPLY 1,000,000 ACFM TO A COLD SIDE ESP FOLLOWED BY TWO AMERICAN AIR FILTER LIME SPRAY TOWERS WHICH WILL REMOVE 90% OF THE SO2. THE CLEANED GAS WILL PASS THROUGH A CHEVRON MIST ELIMINATOR AND WILL EXIT A SAUERISEN 72 LINED STACK AFTER IT IS HEATED BY STEAM COIL REHEATER. THE SLUDGE FROM THE CLOSED WATER LOOP SYSTEM WILL BE POZ-O-TEC STABILIZED. START UP IS SCHEDULED FOR JUNE, 1980.
CENTRAL ILLINOIS LIGHT DUCK CREEK 1 NEW 416.0 MW (GROSS) 378.0 MW (ESC) COAL 3.30 %S BITUMINOUS LIMESTONE RILEY STOKER/ENVIRONEERING ENERGY CONSUMPTION: 2.9% STATUS 1 STARTUP 9/76	DUCK CREEK 1 OF CENTRAL ILLINOIS LIGHT IS LOCATED IN CANTON, ILLINOIS. THE BALANCED DRAFT, FRONT FIRED, DRY BOTTOM UNIT BURNS PULVERIZED BITUMINOUS COAL (3.3% S, 10,500 BTU/LB) AND SUPPLIES 2,415,000 ACFM OF FLUE GAS TO TWO COLD SIDE ESP'S FOLLOWED BY FOUR RILEY STOKER/ENVIRONEERING ROD DECK SPRAY TOWER MODULES. THE FGD SYSTEM HAS BEEN OPERATIONAL (ONE MODULE) SINCE JULY, 1976, AND IS DESIGNED TO REMOVE 85% OF THE SO2. HORIZONTAL CHEVRON MIST ELIMINATORS FOLLOW THE ABSORBERS, AND THE CLEANED GAS EXITS TO A 500 FOOT CEILCOTE LINED STACK WITHOUT REHEAT. THE SYSTEM OPERATES IN A CLOSED WATER LOOP, AND THE SLUDGE IS DISPOSED OF IN AN ON SITE CLAY LINED POND.
CENTRAL ILLINOIS LIGHT DUCK CREEK 2 NEW 416.0 MW (GROSS) 416.0 MW (ESC) COAL 3.30 %S BITUMINOUS LIMESTONE VENDOR NOT SELECTED ENERGY CONSUMPTION: 2.9% STATUS 5 STARTUP 1/86	CENTRAL ILLINOIS LIGHT IS CURRENTLY EVALUATING BIDS ON A LIMESTONE OR DUAL ALKALI FGD SYSTEM FOR UNIT 2 OF ITS DUCK CREEK STATION. THE BITUMINOUS COAL FIRED BOILER WILL FEED ITS FLUE GAS THROUGH A COLD SIDE ESP. THE SYSTEM WILL OPERATE IN A CLOSED WATER LOOP AND IS SCHEDULED TO BEGIN OPERATIONS IN JANUARY, 1984.
CENTRAL ILLINOIS PUBLIC SERV NEWTON 1 NEW 617.0 MW (GROSS) 617.0 MW (ESC) COAL 4.00 %S BITUMINOUS DUAL ALKALI BUELL/ENVIROTECH ENERGY CONSUMPTION: ****% STATUS 1 STARTUP 9/79	NEWTON 1 OF CENTRAL ILLINOIS PUBLIC SERVICE IS A TANGENTIALLY FIRED, DRY BOTTOM, PULVERIZED BITUMINOUS COAL (4% S, 10,900 BTU/LB) FIRED UNIT LOCATED IN NEWTON, ILLINOIS. A COLD SIDE ESP RECIEVES 2,163,480 ACFM OF FLUE GAS AND FEEDS IT TO FOUR BUELL ENVIROTECH POLYSPHERE PACKED TRAY TOWERS FOLLOWED BY TWO VERTICAL MIST ELIMINATORS PER MODULE. THE CLEANED GAS IS BOOSTED 25 DEG F BY A COMBINATION OF TWO DIFFERENT TYPES OF IN-LINE REHEATERS PLUS BYPASS REHEAT, AND THEN EXITS A 530 FOOT PRECRETE LINED STACK. THE WATER LOOP IS CLOSED, AND THE SLUDGE IS POZ-O-TEC TREATED.
CENTRAL MAINE POWER SEARS ISLAND 1 NEW 600.0 MW (GROSS) 600.0 MW (ESC) COAL ***** %S LIME/LIMESTONE VENDOR NOT SELECTED ENERGY CONSUMPTION: ****% STATUS 6 STARTUP 11/87	SEARS ISLAND 1 IS A PLANNED UNIT TO BE BUILT ON PENOBSCOT BAY BY CENTRAL MAINE POWER. BECAUSE OF THE DISCOVERY OF A GEOLOGICAL FAULT ON SEARS ISLAND, PLANS FOR A 1150 MW NUCLEAR POWER PLANT HAVE BEEN REPLACED WITH PLANS FOR A 600 MW COAL FIRED PLANT. LIME AND LIMESTONE SCRUBBING ARE THE PRIMARY METHODS BEING CONSIDERED FOR COMPLIANCE WITH THE NSPS. IT WILL BE TWO YEARS BEFORE ALL PERMITS REQUIRED HAVE BEEN RECIEVED. START UP IS SCHEDULED FOR NOVEMBER, 1987.
CINCINNATI GAS & ELECTRIC EAST BEND 2 NEW 650.0 MW (GROSS) 650.0 MW (ESC) COAL 5.00 %S LIME BABCOCK & WILCOX ENERGY CONSUMPTION: 2.9% STATUS 2 STARTUP 9/80	EAST BEND 2 OF CINCINNATI GAS AND ELECTRIC IS A PULVERIZED COAL (5% S) FIRED BOILER UNDER CONSTRUCTION IN RABBITHASH, KENTUCKY. THE EMISSION CONTROL SYSTEM CONSISTS OF A HOT SIDE ESP FOLLOWED BY THREE BABCOCK AND WILCOX LIME FGD MODULES. THE 87% CLEANED GAS WILL PASS THROUGH A CHEVRON MIST ELIMINATOR BEFORE BEING WARMED BY AN INDIRECT HOT AIR REHEATER AND EXITING THROUGH A BRICK LINED 650 FOOT STACK. THE SLUDGE FROM THIS CLOSED WATER LOOP SYSTEM WILL BE POZ-O-TEC STABILIZED BEFORE DISPOSAL IN AN ON SITE LANDFILL. START UP IS EXPECTED IN OCTOBER, 1981.

SECTION 2
STATUS OF FGD SYSTEMS

UNIT IDENTIFICATION	ABSTRACT
COLORADO UTE ELECTRIC ASSN. CRAIG 1 NEW 447.0 MW (GROSS) 447.0 MW (ESC) COAL .45 %S SUBBITUMINOUS LIMESTONE PEABODY PROCESS SYSTEMS ENERGY CONSUMPTION: 5.4% STATUS 2 STARTUP 4/80	THE COLORADO UTE ELECTRIC ASSN IS PRESENTLY CONSTRUCTING TWO IDENTICAL UNITS IN CRAIG, COLORADO, CRAIG 1 AND 2. BOTH UNITS WILL FIRE PULVERIZED SUBBITUMINOUS COAL (0.45% S, 10,000 BTU/LB). EACH UNIT'S HOT SIDE ESP AND FOUR MAGNESIUM PROMOTED LIMESTONE SPRAY TOWERS WILL REMOVE 85% OF THE SO2. THE SCRUBBER EXHAUST WILL BE WARMED BY AN IN-LINE STEAM COIL REHEATER AND WILL PASS THROUGH A 600 FOOT TALL ACID BRICK LINED STACK. THE SYSTEM WILL OPERATE IN A CLOSED WATER LOOP, AND THE STABILIZED SLUDGE WILL BE DISPOSED OF IN AN OFF SITE MINEFILL. UNIT 1 START UP IS EXPECTED IN APRIL, 1980.
COLORADO UTE ELECTREC ASSN. CRAIG 2 NEW 447.0 MW (GROSS) 447.0 MW (ESC) COAL .45 %S SUBBITUMINOUS LIMESTONE PEABODY PROCESS SYSTEMS ENERGY CONSUMPTION: 5.4% STATUS 1 STARTUP 8/79	THE CRAIG 2 UNIT OF THE COLORADO UTE ELECTRIC ASSN IS LOCATED IN CRAIG, COLORADO. THE CRAIG 2 UNIT FIRES PULVERIZED SUBBITUMINOUS COAL (0.45% S, 10,000 BTU/LB). THE UNIT'S HOT SIDE ESP AND FOUR MAGNESIUM PROMOTED LIMESTONE SPRAY TOWERS WILL REMOVE 85% OF THE SO2. THE SCRUBBER EXHAUST IS WARMED BY AN IN-LINE STEAM COIL REHEATER AND PASSES THROUGH A 600 FOOT TALL ACID BRICK LINED STACK. THE SYSTEM OPERATES IN A CLOSED WATER LOOP, AND THE STABILIZED SLUDGE IS DISPOSED OF IN AN OFF SITE MINEFILL. START UP OF UNIT 2 WAS IN AUGUST, 1979.
COLORADO UTE ELECTRIC ASSN. CRAIG 3 NEW 447.0 MW (GROSS) 447.0 MW (ESC) COAL .45 %S LIME/SPRAY DRYING VENDOR NOT SELECTED ENERGY CONSUMPTION: ****% STATUS 6 STARTUP 0/82	COLORADO UTE ELECTRIC ASSN. HAS PLANS FOR A NEW UNIT, CRAIG 3, TO BE LOCATED IN CRAIG, COLORADO ALONG WITH UNITS 1 AND 2. THE UNIT WILL FIRE PULVERIZED SUBBITUMINOUS COAL (0.45% S, 10,000 BTU/LB). THE SYSTEM WILL UTILIZE A DRY SCRUBBER WITH LIMESTONE INJECTION FOR EMISSION CONTROL. THE UNIT IS SCHEDULED TO COMMENCE OPERATIONS IN 1982.
COLUMBUS & SOUTHERN OHIO ELEC. CONESVILLE 5 NEW 411.0 MW (GROSS) 411.0 MW (ESC) COAL 4.67 %S BITUMINOUS LIME AIR CORRECTION DIVISION, UOP ENERGY CONSUMPTION: 3.9% STATUS 1 STARTUP 1/77	CONESVILLE 5 OF COLUMBUS AND SOUTHERN OHIO ELECTRIC IS A DRY BOTTOM, PULVERIZED BITUMINOUS COAL (4.67% S, 10,850 BTU/LB) FIRED UNIT LOCATED IN CONESVILLE, OHIO. A COLD SIDE ESP RECIEVES 1,393,893 ACFM OF FLUE GAS AND PASSES IT TO TWO THIOSORBIC LIME TCA MODULES SUPPLIED BY UOP. THE SO2 REMOVAL EFFICIENCY OF THE TWO MODULES, WHICH BEGAN INITIAL OPERATION IN JANUARY, 1977, IS 89.5% (DESIGN). EACH MODULE HAS ONE BULK ENTRAINMENT SEPARATOR AND TWO CHEVRON MIST ELIMINATORS. THE CLEANED GAS EXITS THROUGH AN 800 FOOT TALL ACID BRICK LINED STACK. THE POZ-O-TEC STABILIZED SLUDGE IS PUMPED INTO AN ON SITE DIKED LAND-FILL. THE SYSTEM OPERATES IN AN OPEN WATER LOOP.
COLUMBUS & SOUTHERN OHIO ELEC. CONESVILLE 6 NEW 411.0 MW (GROSS) 411.0 MW (ESC) COAL 4.67 %S BITUMINOUS LIME AIR CORRECTION DIVISION, UOP ENERGY CONSUMPTION: 3.9% STATUS 1 STARTUP 6/78	CONESVILLE 6 OF COLUMBUS AND SOUTHERN OHIO ELECTRIC IS A DRY BOTTOM, PULVERIZED BITUMINOUS COAL (4.67% S, 10,850 BTU/LB) FIRED UNIT LOCATED IN CONESVILLE, OHIO. A COLD SIDE ESP RECIEVES 1,393,893 ACFM OF FLUE GAS AND PASSES IT TO TWO THIOSORBIC LIME TCA MODULES SUPPLIED BY UOP. THE SO2 REMOVAL EFFICIENCY OF THE TWO MODULES, WHICH BEGAN INITIAL OPERATION IN JUNE, 1978, IS 89.5% (DESIGN). EACH MODULE HAS ONE BULK ENTRAINMENT SEPARATOR AND TWO CHEVRON MIST ELIMINATORS. THE CLEANED GAS EXITS THROUGH AN 800 FOOT TALL ACID BRICK LINED STACK. THE POZ-O-TEC STABILIZED SLUDGE IS PUMPED INTO AN ON SITE DIKED LAND-FILL. THE SYSTEM OPERATES IN AN OPEN WATER LOOP.
COLUMBUS & SOUTHERN OHIO ELEC. POSTON 5 NEW 375.0 MW (GROSS) 375.0 MW (ESC) COAL 2.50 %S PROCESS NOT SELECTED VENDOR NOT SELECTED ENERGY CONSUMPTION: ****% STATUS 6 STARTUP 0/83	COLUMBUS AND SOUTHERN OHIO ELECTRIC HAS PLANS FOR TWO NEW UNITS, POSTON 5 AND 6, TO BE LOCATED IN ATHENS, OHIO. THE COAL (2.5% S, 11,000 BTU/LB) FIRED UNITS WILL UTILIZE EITHER A LIME, LIMESTONE, OR DUAL ALKALI FGD SYSTEM. START UP OF UNIT 5 IS EXPECTED IN 1983.

SECTION 2
STATUS OF FGD SYSTEMS

UNIT IDENTIFICATION	ABSTRACT
COLUMBUS & SOUTHERN OHIO ELEC. POSTON 6 NEW 375.0 MW (GROSS) 375.0 MW (ESC) COAL 2.50 %S PROCESS NOT SELECTED VENDOR NOT SELECTED ENERGY CONSUMPTION: ****% STATUS 6 STARTUP 0/89	COLUMBUS AND SOUTHERN OHIO ELECTRIC HAS PLANS FOR TWO NEW UNITS, POSTON 5 AND 6, TO BE LOCATED IN ATHENS, OHIO. THE COAL (2.5% S, 11,000 BTU/LB) FIRED UNITS WILL UTILIZE EITHER A LIME, LIMESTONE, OR DUAL ALKALI FGD SYSTEM. START UP OF UNIT 6 IS EXPECTED IN 1989.
COMMONWEALTH EDISON POWERTON 51 RETROFIT 450.0 MW (GROSS) 450.0 MW (ESC) COAL 3.53 %S LIMESTONE AIR CORRECTION DIVISION, UOP ENERGY CONSUMPTION: 5.6% STATUS 2 STARTUP 4/80	COMMONWEALTH EDISON IS PRESENTLY RETROFITTING BOILER NUMBER 51 AT ITS POWERTON STATION WITH A UOP LIMESTONE FGD SYSTEM. UNIT 51 IS ONE OF TWO IDENTICAL BOILERS SUPPLYING STEAM TO AN 850 MW TURBINE. THE PULVERIZED COAL (3.6% S, 10,500 BTU/LB) FIRED BOILER FEEDS FLUE GAS THROUGH AN ESP TO 3 TCA MODULES WHICH ARE DESIGNED TO REMOVE 74% OF THE SO2. A STEAM INDIRECT HOT AIR REHEATER WILL BOOST THE TEMPERATURE BEFORE THE GAS EXITS AN ACID BRICK LINED STACK. THE SYSTEM WILL UTILIZE A CLOSED WATER LOOP, AND THE SLUDGE WILL BE POZ-O-TEC STABILIZED AND DISPOSED OF IN A LANDFILL. THE FGD SYSTEM IS UNDER CONSTRUCTION, AND THE START UP IS EXPECTED IN NOVEMBER, 1979.
COOPERATIVE POWER ASSOCIATION COAL CREEK 1 NEW 545.0 MW (GROSS) 327.0 MW (ESC) COAL .63 %S LIGNITE LIME/ALKALINE FLYASH COMBUSTION ENGINEERING ENERGY CONSUMPTION: ****% STATUS 1 STARTUP 8/79	COAL CREEK 1 AND 2 ARE TWO PULVERIZED LIGNITE (0.63% S, 6258 BTU/LB) FIRED UNITS OWNED BY THE COOPERATIVE POWER ASSN AND UNITED POWER. A COLD SIDE ESP RECEIVES 2,200,000 ACFM OF FLUE GAS AND EXHAUSTS IT TO FOUR COUNTER-CURRENT SPRAY TOWERS. MIST ELIMINATION IS PROVIDED BY A BULK ENTRAINMENT SEPARATOR AND TWO CHEVRON MIST ELIMINATORS. A MINIMUM OF 40% BYPASS REHEAT WILL BE PROVIDED BEFORE THE CLEANED GAS EXITS THE 650 FOOT ACID BRICK LINED STACK. THE TOWER DESIGN SO2 REMOVAL EFFICIENCY IS 90%. THE SYSTEM WILL OPERATE IN AN OPEN WATER LOOP, AND THE FLYASH STABILIZED SLUDGE WILL BE DISPOSED IN A CLAY LINED POND. UNIT 1 OPERATIONS BEGAN IN AUGUST 1979.
COOPERATIVE POWER ASSOCIATION COAL CREEK 2 NEW 545.0 MW (GROSS) 327.0 MW (ESC) COAL .63 %S LIGNITE LIME/ALKALINE FLYASH COMBUSTION ENGINEERING ENERGY CONSUMPTION: ****% STATUS 2 STARTUP 10/80	COAL CREEK 1 AND 2 ARE TWO PULVERIZED LIGNITE (0.63% S, 6258 BTU/LB) FIRED UNITS OWNED BY THE COOPERATIVE POWER ASSN AND UNITED POWER. A COLD SIDE ESP RECEIVES 2,200,000 ACFM OF FLUE GAS AND EXHAUSTS IT TO FOUR COUNTER-CURRENT SPRAY TOWERS. MIST ELIMINATION IS PROVIDED BY A BULK ENTRAINMENT SEPARATOR AND TWO CHEVRON MIST ELIMINATORS. A MINIMUM OF 40% BYPASS REHEAT WILL BE PROVIDED BEFORE THE CLEANED GAS EXITS THE 650 FOOT ACID BRICK LINED STACK. THE TOWER DESIGN SO2 REMOVAL EFFICIENCY IS 90%. THE SYSTEM WILL OPERATE IN AN OPEN WATER LOOP, AND THE FLYASH STABILIZED SLUDGE WILL BE DISPOSED OF IN A CLAY LINED POND. UNIT 2 IS PRESENTLY UNDER CONSTRUCTION AND SHOULD INITIALLY START OPERATIONS IN OCTOBER, 1980.
DELMARVA POWER & LIGHT DELAWARE CITY 1-3 RETROFIT 180.0 MW (GROSS) 180.0 MW (ESC) COKE 7.50 %S WELLMAN LORD DAVY POWERGAS ENERGY CONSUMPTION: ****% STATUS 2 STARTUP 4/80	DELMARVA POWER & LIGHT'S DELAWARE CITY PLANT HAS FOUR BOILERS, THREE OF WHICH HAVE STEAM CAPACITIES OF 500K LB/HR EACH. THE BOILERS GENERATE STEAM AS WELL AS ELECTRICITY FOR GETTY REFINING AND MARKETING. LOW SULFUR CRUDE OIL WILL BE REPLACED WITH COKE (7-8% S) IN THE BOILER WHEN THE FGD SYSTEM IS COMPLETE, IN APRIL, 1980. A VENTURI PARTICULATE SCRUBBER AND A WELLMAN-LORD FGD SYSTEM (90% DESIGN EFFICIENCY) SUPPLIED BY DAVY POWERGAS ARE PRESENTLY UNDER CONSTRUCTION. AN INDIRECT GAS REHEATER WILL BE USED. THE SYSTEM WILL OPERATE IN AN OPEN WATER LOOP.
DELMARVA POWER & LIGHT VIENNA MARYLAND 9 NEW 550.0 MW (GROSS) 550.0 MW (ESC) COAL 2.70 %S LIMESTONE VENDOR NOT SELECTED ENERGY CONSUMPTION: ****% STATUS 6 STARTUP 0/87	DELMARVA POWER AND LIGHT IS PLANNING A NEW UNIT, VIENNA MARYLAND 9, TO BE CONSTRUCTED IN VIENNA, MARYLAND. THE UTILITY IS PRESENTLY CONSIDERING A LIMESTONE FGD UNIT FOR EMISSION CONTROL. THE PULVERIZED COAL FIRED UNIT IS EXPECTED TO COMMENCE OPERATIONS IN JUNE 1987.

SECTION 2
STATUS OF FGD SYSTEMS

UNIT IDENTIFICATION	ABSTRACT
DUQUESNE LIGHT ELRAMA 1-4 RETROFIT 510.0 MW (GROSS) 510.0 MW (ESC) COAL 2.20 %S LIME CHEMICO ENERGY CONSUMPTION: 3.5% STATUS 1 STARTUP 10/75	ELRAMA 1-4 OF DUQUESNE LIGHT CONSISTS OF FOUR PULVERIZED COAL (2.2% S, 11,350 BTU/LB) FIRED UNITS LOCATED IN ELRAMA, PENNSYLVANIA. THE EMISSION CONTROL SYSTEM ON THIS SITE CONSISTS OF AN ESP FOLLOWED BY A MECHANICAL COLLECTOR AND FIVE VARIABLE THROAT VENTURI LIME ABSORBER MODULES SUPPLIED BY CHEMICO, WHICH ARE DESIGNED TO REMOVE 83% OF THE SO2 FROM THE FLUE GAS. THE CLEANED GAS PASSES THROUGH A DIRECT OIL FIRED REHEATER BEFORE EXITING A 400 FOOT ACID BRICK LINED STACK. THE SYSTEM OPERATES IN AN OPEN WATER LOOP, AND THE POZ-O-TEC STABILIZED SLUDGE IS HAULED TO AN OFF SITE LANDFILL. THE SYSTEM HAS BEEN OPERATIONAL SINCE OCTOBER, 1975.
DUQUESNE LIGHT PHILLIPS 1-6 RETROFIT 408.0 MW (GROSS) 410.0 MW (ESC) COAL 1.92 %S BITUMINOUS LIME CHEMICO ENERGY CONSUMPTION: 3.4% STATUS 1 STARTUP 7/73	THE PHILLIPS POWER STATION OF DUQUESNE LIGHT CONSISTS OF SIX DRY BOTTOM PULVERIZED COAL (2.2% S, 11,350 BTU/LB) FIRED UNITS LOCATED IN SOUTH HEIGHT, PENNSYLVANIA. PARTICULATE CONTROL IS ACCOMPLISHED BY SIX ESP/MECHANICAL COLLECTOR COMBINATIONS (ONE/BOILER). ONE TWO STAGE AND THREE SINGLE STAGE VARIABLE THROAT VENTURI LIME FGD MODULES SUPPLIED BY CHEMICO ARE DESIGNED TO REMOVE 83% OF THE SO2 FROM THE FLUE GAS. TWO CHEVRON MIST ELIMINATORS/MODULE ARE FOLLOWED BY A DIRECT OIL FIRED REHEATER WHICH RAISES THE GAS TEMPERATURE BY 20 DEG F BEFORE IT LEAVES VIA A 340 FOOT TALL ACID BRICK LINED STACK. THE SYSTEM OPERATES IN AN OPEN WATER LOOP, AND THE POZ-O-TEC STABILIZED SLUDGE IS TRUCKED TO AN OFF SITE LANDFILL. THE SYSTEM HAS BEEN OPERATIONAL SINCE JULY, 1973.
EAST KENTUCKY POWER COOP J. K. SMITH 1 NEW 650.0 MW (GROSS) 650.0 MW (ESC) COAL ***** %S PROCESS NOT SELECTED VENDOR NOT SELECTED ENERGY CONSUMPTION: ****% STATUS 6 STARTUP 1/85	THE EAST KENTUCKY POWER COOP HAS PLANS TO FIRE TWO NEW UNITS. THE J.K. SMITH 1 AND 2 WILL UTILIZE EITHER A DRY PROCESS OR A WET LIME PROCESS FOR EMISSION CONTROL. UNIT 1 IS EXPECTED TO START UP IN JANUARY 1985.
EAST KENTUCKY POWER COOP J. K. SMITH 2 NEW 650.0 MW (GROSS) 650.0 MW (ESC) COAL ***** %S PROCESS NOT SELECTED VENDOR NOT SELECTED ENERGY CONSUMPTION: ****% STATUS 6 STARTUP 1/86	THE EAST KENTUCKY POWER COOP HAS PLANS TO FIRE TWO NEW UNITS. THE J.K. SMITH 1 AND 2 WILL UTILIZE EITHER A DRY PROCESS OR A WET LIME PROCESS FOR EMISSION CONTROL. UNIT 2 IS EXPECTED TO START UP IN JANUARY 1986.
EAST KENTUCKY POWER COOP SPURLOCK 2 NEW 500.0 MW (GROSS) 500.0 MW (ESC) COAL 3.50 %S LIME ADL/COMBUSTION EQUIP ASSOCIATE ENERGY CONSUMPTION: ****% STATUS 2 STARTUP 10/80	SPURLOCK 2 OF EAST KENTUCKY POWER COOPERATIVE IS A BALANCED DRAFT PULVERIZED COAL (3.5% S, 11,000 BTU/LB) FIRED UNIT UNDER CONSTRUCTION IN MAYSVILLE, KENTUCKY. THE EMISSION CONTROL SYSTEM WILL CONSIST OF AN ESP FOLLOWED BY AN ADL/COMBUSTION EQUIPMENT ASSOCIATES LIME FGD SYSTEM (90% DESIGN SO2 REMOVAL EFFICIENCY). FLUE GAS FROM UNIT ONE WILL BE USED TO REHEAT THE CLEANED GAS. THE SYSTEM, SLATED FOR START UP IN OCTOBER, 1980, WILL EMPLOY A CLOSED WATER LOOP AND POZ-O-TEC SLUDGE STABILIZATION.
GENERAL PUBLIC UTILITIES COHO 1 NEW 800.0 MW (GROSS) 800.0 MW (ESC) COAL 3.50 %S PROCESS NOT SELECTED VENDOR NOT SELECTED ENERGY CONSUMPTION: ****% STATUS 6 STARTUP 12/88	COHO 1 IS A 3.5% S COAL FIRED UNIT PLANNED BY GENERAL PUBLIC UTILITIES TO BE LOCATED IN ERIE, PENNSYLVANIA. PRIMARY CONSIDERATION IS BEING GIVEN TO LIME AND LIMESTONE NON-SLURRY TYPE FGD SYSTEMS. THE UNIT AND FGD SYSTEM ARE SCHEDULED TO START UP IN DECEMBER, 1988.

SECTION 2
STATUS OF FGD SYSTEMS

UNIT IDENTIFICATION	ABSTRACT
GENERAL PUBLIC UTILITIES GILBERT 1 NEW 625.0 MW (GROSS) 625.0 MW (ESC) COAL 3.50 %S PROCESS NOT SELECTED VENDOR NOT SELECTEDD ENERGY CONSUMPTION: ****% STATUS 6 STARTUP 0/90	GENERAL PUBLIC UTILITIES HAS PLANS FOR A NEW UNIT, GILBERT 9, TO BE LOCATED IN MILFORD, NEW JERSEY. THE UTILITY IS CONSIDERING FGD AS AN EMISSION CONTROL STRATEGY. THE EXPECTED START UP DATE IS IN 1990.
GENERAL PUBLIC UTILITIES SCOTTSVILLE 1 NEW 625.0 MW (GROSS) 625.0 MW (ESC) COAL 3.50 %S PROCESS NOT SELECTED VENDOR NOT SELECTEDD ENERGY CONSUMPTION: ****% STATUS 6 STARTUP 0/91	GENERAL PUBLIC UTILITIES IS PLANNING A NEW UNIT TO BE LOCATED IN SCOTTSVILLE, PENNSYLVANIA. THE SCOTTSVILLE 1 UNIT IS EXPECTED TO START UP IN 1991. THE UTILITY IS PRESENTLY CONSIDERING ONLY FGD AS A EMISSION CONTROL STRATEGY.
GENERAL PUBLIC UTILITIES SEWARD 7 NEW 800.0 MW (GROSS) 800.0 MW (ESC) COAL ***** %S PROCESS NOT SELECTED VENDOR NOT SELECTED ENERGY CONSUMPTION: ****% STATUS 6 STARTUP 12/87	GENERAL PUBLIC UTILITIES IS PLANNING A NEW UNIT, SEWARD 7, TO BE BUILT IN SEWARD, PENNSYLVANIA. THE UTILITY IS PRESENTLY CONSIDERING ONLY FGD AS THE EMISSION CONTROL STRATEGY, WITH NON-SLURRY TYPE LIME AND LIMESTONE SYSTEMS LOOKING THE MOST PROMISING. START UP IS EXPECTED IN DECEMBER, 1987.
GENERAL PUBLIC UTILITIES WEHRUM 1 NEW 625.0 MW (GROSS) 625.0 MW (ESC) COAL 3.50 %S PROCESS NOT SELECTED VENDOR NOT SELECTEDD ENERGY CONSUMPTION: ****% STATUS 6 STARTUP 0/95	THE WEHRUM 1 UNIT PLANNED BY GENERAL PUBLIC UTILITIES IS TO BE LOCATED IN WEHRUM, PENNSYLVANIA. THE UTILITY IS PRESENTLY CONSIDERING FGD AS AN EMISSION CONTROL STRATEGY. THE UNIT IS EXPECTED TO COMMENCE OPERATIONS IN 1995.
HOOSIER ENERGY MEROM 1 NEW 490.0 MW (GROSS) 441.0 MW (ESC) COAL 3.50 %S LIMESTONE MITSUBISHI HEAVY INDUSTRIES ENERGY CONSUMPTION: ****% STATUS 3 STARTUP 5/82	MEROM 1 AND 2 ARE TWO NEW UNITS BEING BUILT BY HOOSIER ENERGY IN SULLIVAN, INDIANA. THESE PULVERIZED COAL (3.5% S) FIRED UNITS WITH PRODUCE 1,732,000 ACFM OF FLUE GAS WHICH WILL BE CLEANED BY A COLD SIDE ESP UPSTREAM OF A MITSUBISHI LIMESTONE GRID TOWER ABSORBER (90% DESIGN SO2 REMOVAL). THE SYSTEM WILL UTILIZE BYPASS REHEAT AND A 700 FOOT STACK. THE SLUDGE WILL BE STABILIZED AND LANDFILLED, AND THE SYSTEM WILL OPERATE IN A CLOSED WATER LOOP MODE. START UP OF UNIT 1 IS SCHEDULED FOR APRIL, 1981.
HOOSIER ENERGY MEROM 2 NEW 490.0 MW (GROSS) 441.0 MW (ESC) COAL 3.50 %S LIMESTONE MITSUBISHI HEAVY INDUSTRIES ENERGY CONSUMPTION: ****% STATUS 2 STARTUP 7/81	MEROM 1 AND 2 ARE TWO NEW UNITS BEING BUILT BY HOOSIER ENERGY IN SULLIVAN, INDIANA. THESE PULVERIZED COAL (3.5% S) FIRED UNITS WITH PRODUCE 1,732,000 ACFM OF FLUE GAS WHICH WILL BE CLEANED BY A COLD SIDE ESP UPSTREAM OF A MITSUBISHI LIMESTONE GRID TOWER ABSORBER (90% DESIGN SO2 REMOVAL). THE SYSTEM WILL UTILIZE BYPASS REHEAT AND A 700 FOOT STACK. THE SLUDGE WILL BE STABILIZED AND LANDFILLED, AND THE SYSTEM WILL OPERATE IN A CLOSED WATER LOOP MODE. START UP OF UNIT 2 IS SCHEDULED FOR JANUARY, 1982.

SECTION 2
STATUS OF FGD SYSTEMS

UNIT IDENTIFICATION	ABSTRACT
HOUSTON LIGHTING & POWER CO. W.A. PARISH 8 NEW 550.0 MW (GROSS) 512.0 MW (ESC) COAL .60 %S SUBBITUMINOUS LIMESTONE VENDOR NOT SELECTED ENERGY CONSUMPTION: ****% STATUS 3 STARTUP 11/82	W.A. PARISH 8 IS A PULVERIZED COAL (0.6% S, 8700 BTU/LB) FIRED UNIT PLANNED BY HOUSTON LIGHTING AND POWER CO TO BE LOCATED IN THOMPSONS, TEXAS. THE UTILITY HAS AWARDED A CONTRACT TO CHEMICO FOR A LIMESTONE FGD SYSTEM WHICH WILL REMOVE 85% OF THE FLUE GAS SO2. REHEAT WILL BE PROVIDED BY BYPASSING 7% OF THE PARTICULATE CLEANED FLUE GAS. SLUDGE WILL BE DEWATERED, BLENDED WITH FLYASH, AND DISPOSED IN AN ON SITE LANDFILL. START UP IS EXPECTED IN NOVEMBER, 1982.
INDIANAPOLIS POWER & LIGHT PATRIOT 1 NEW 650.0 MW (GROSS) 650.0 MW (ESC) COAL 3.50 %S LIMESTONE VENDOR NOT SELECTED ENERGY CONSUMPTION: ****% STATUS 6 STARTUP 0/87	INDIANAPOLIS POWER AND LIGHT HAS PLANS FOR THREE NEW UNITS, PATRIOT 1, 2, AND 3, TO BE LOCATED IN PATRIOT, INDIANA. THE UTILITY PLANS ON UTILIZING A LIMESTONE FGD PROCESS FOR EMISSION CONTROL.
INDIANAPOLIS POWER & LIGHT PATRIOT 2 NEW 650.0 MW (GROSS) 650.0 MW (ESC) COAL 3.50 %S LIMESTONE VENDOR NOT SELECTED ENERGY CONSUMPTION: ****% STATUS 6 STARTUP 0/87	INDIANAPOLIS POWER AND LIGHT HAS PLANS FOR THREE NEW UNITS, PATRIOT 1, 2, AND 3, TO BE LOCATED IN PATRIOT, INDIANA. THE UTILITY PLANS ON UTILIZING A LIMESTONE FGD PROCESS FOR EMISSION CONTROL.
INDIANAPOLIS POWER & LIGHT PATRIOT 3 NEW 650.0 MW (GROSS) 650.0 MW (ESC) COAL 3.50 %S LIMESTONE VENDOR NOT SELECTED ENERGY CONSUMPTION: ****% STATUS 6 STARTUP 0/87	INDIANAPOLIS POWER AND LIGHT HAS PLANS FOR THREE NEW UNITS, PATRIOT 1, 2, AND 3, TO BE LOCATED IN PATRIOT, INDIANA. THE UTILITY PLANS ON UTILIZING A LIMESTONE FGD PROCESS FOR EMISSION CONTROL.
INDIANAPOLIS POWER & LIGHT PETERSBURG 3 NEW 532.0 MW (GROSS) 532.0 MW (ESC) COAL 3.25 %S BITUMINOUS LIMESTONE AIR CORRECTION DIVISION, UOP ENERGY CONSUMPTION: 2.4% STATUS 1 STARTUP 12/77	PETERSBURG 3 OF INDIANAPOLIS POWER AND LIGHT IS LOCATED IN PETERSBURG, INDIANA, AND BURNS 4.[illegible]% S BITUMINOUS COAL (11,000 BTU/LB). TWO COLD SIDE ESP'S ARE LOCATED UPSTREAM OF 4 85% EFFICIENT UOP LIMESTONE TCA MODULES. A HORIZONTAL MIST ELIMINATOR PRECEDES AN INDIRECT HOT AIR REHEATER THAT BOOSTS THE GAS TEMPERATURE BY 30 DEG F BEFORE IT EXITS THE 616 FOOT RIGI-FLAKE 4850 LINED STACK. STABILIZED SLUDGE IS DISPOSED IN AN ON SITE POND, AND THE SYSTEM OPERATES IN A CLOSED WATER LOOP MODE. THIS UNIT HAS BEEN OPERATIONAL SINCE DECEMBER, 1977.
INDIANAPOLIS POWER & LIGHT PETERSBURG 4 NEW 530.0 MW (GROSS) 530.0 MW (ESC) COAL 3.50 %S BITUMINOUS LIMESTONE RESEARCH COTTRELL ENERGY CONSUMPTION: ****% STATUS 2 STARTUP 10/83	PETERSBURG 4 OF INDIANAPOLIS POWER AND LIGHT IS A BITUMINOUS COAL (3.50% S 11,000 BTU/LB) FIRED BOILER UNDER CONSTRUCTION IN PETERSBURG, INDIANA. THE LIMESTONE FGD SYSTEM FOR THIS UNIT WILL BE SUPPLIED BY RESEARCH COTTRELL. THE SYSTEM WILL OPERATE IN A CLOSED WATER LOOP, AND SLUDGE WILL BE POZ-O-TEC STABILIZED BEFORE PONDING. START UP IS SLATED FOR OCTOBER OF 1983.

SECTION 2
STATUS OF FGD SYSTEMS

UNIT IDENTIFICATION	ABSTRACT
KANSAS CITY POWER & LIGHT HAWTHORN 3 RETROFIT 90.0 MW (GROSS) 90.0 MW (ESC) COAL .60 %S BITUMINOUS LIME COMBUSTION ENGINEERING ENERGY CONSUMPTION: 2.2% STATUS 1 STARTUP 11/72	HAWTHORN 3 OF KANSAS CITY POWER AND LIGHT IS A DRY BOTTOM PULVERIZED BITUMINOUS COAL (0.6% S, 9800 BTU/LB) FIRED UNIT LOCATED IN KANSAS CITY, MISSOURI, WHICH WAS CONVERTED FROM LIMESTONE FURNACE INJECTION AND TAIL END SCRUBBING TO A LIME SLURRY SYSTEM. TWO COMBUSTION ENGINEERING MARBLE BED ABSORBERS, WHICH WERE DESIGNED TO REMOVE 70% OF THE FLUE GAS SO2, BEGAN OPERATION IN JANUARY, 1977. ONE HORIZONTAL CHEVRON MIST ELIMINATOR PER MODULE IS UPSTREAM OF AN IN-LINE FINNED TUBE REHEATER, WHICH RAISES THE TEMPERATURE OF THE CLEANED GAS BEFORE IT EXITS THROUGH A GUNITE LINED 200 FOOT STACK. THE FLYASH STABILIZED SLUDGE IS DEPOSITED IN AN UNLINED SLUDGE POND. THE SYSTEM OPERATES IN A CLOSED WATER LOOP MODE.
KANSAS CITY POWER & LIGHT HAWTHORN 4 RETROFIT 90.0 MW (GROSS) 90.0 MW (ESC) COAL .60 %S BITUMINOUS LIME COMBUSTION ENGINEERING ENERGY CONSUMPTION: 2.2% STATUS 1 STARTUP 8/72	HAWTHORN 4 OF KANSAS CITY POWER AND LIGHT IS A DRY BOTTOM PULVERIZED BITUMINOUS COAL (0.6% S, 9800 BTU/LB) FIRED UNIT LOCATED IN KANSAS CITY, MISSOURI, WHICH WAS CONVERTED FROM LIMESTONE FURNACE INJECTION AND TAIL END SCRUBBING TO A LIME SLURRY SYSTEM. TWO COMBUSTION ENGINEERING MARBLE BED ABSORBERS, WHICH WERE DESIGNED TO REMOVE 70% OF THE FLUE GAS SO2, BEGAN OPERATION IN JANUARY, 1977. ONE HORIZONTAL CHEVRON MIST ELIMINATOR PER MODULE IS UPSTREAM OF AN IN-LINE FINNED TUBE REHEATER, WHICH RAISES THE TEMPERATURE OF THE CLEANED GAS BEFORE IT EXITS THROUGH A GUNITE LINED 200 FOOT STACK. THE FLYASH STABILIZED SLUDGE IS DEPOSITED IN AN UNLINED SLUDGE POND. THE SYSTEM OPERATES IN A CLOSED WATER LOOP MODE.
KANSAS CITY POWER & LIGHT LA CYGNE 1 NEW 874.0 MW (GROSS) 874.0 MW (ESC) COAL 5.39 %S SUBBITUMINOUS LIMESTONE BABCOCK & WILCOX ENERGY CONSUMPTION: 2.7% STATUS 1 STARTUP 2/73	LA CYGNE 1 IS A WET BOTTOM, CYCLONE FIRED PULVERIZED SUBBITUMINOUS COAL (5.39% S, 9421 BTU/LB) FIRED UNIT OF KANSAS CITY POWER AND LIGHT, LOCATED IN LA CYGNE, KANSAS. THE EMISSION CONTROL SYSTEM CONSISTS OF EIGHT VARIABLE THROAT VENTURI/LIMESTONE SIEVE TRAY TOWER TRAINS SUPPLIED BY BABCOCK AND WILCOX. EACH 80% (SO2 REMOVAL, DESIGN) EFFICIENT TRAIN IS FOLLOWED BY A COMBINATION SIEVE TRAY AND CHEVRON MIST ELIMINATOR, FOLLOWED BY AN INDIRECT REHEATER. THE CLEANED GAS EXITS THROUGH A 700 FOOT STEEL LINED STACK. THE SYSTEM OPERATES IN A CLOSED WATER LOOP, AND THE SCRUBBER SLUDGE IS DISPOSED IN AN UNLINED POND. INITIAL OPERATIONS OF THE FGD SYSTEM BEGAN IN FEBRUARY, 1973.
KANSAS POWER & LIGHT JEFFREY 1 NEW 720.0 MW (GROSS) 540.0 MW (ESC) COAL .32 %S LIMESTONE COMBUSTION ENGINEERING ENERGY CONSUMPTION: ****% STATUS 1 STARTUP 8/78	KANSAS CITY POWER AND LIGHT'S JEFFREY 1 IS A TANGENTIAL FIRED PULVERIZED COAL (0.32% S, 8125 BTU/LB) UNIT IN WAMEGO, KANSAS. THE EMISSION CONTROL SYSTEM FOR THIS UNIT CONSISTS OF A COLD SIDE ESP FOLLOWED BY SIX (ONE SPARE) LIMESTONE SPRAY TOWER MODULES SUPPLIED BY COMBUSTION ENGINEERING. THE DESIGN SO2 REMOVAL EFFICIENCY IS 50% (INCLUDING A 30% BYPASS REHEAT). HAS BEEN OPERATIONAL SINCE AUGUST, 1978.
KANSAS POWER & LIGHT JEFFREY 2 NEW 700.0 MW (GROSS) 490.0 MW (ESC) COAL .30 %S LIMESTONE COMBUSTION ENGINEERING ENERGY CONSUMPTION: ****% STATUS 2 STARTUP 6/80	UNIT 2, PRESENTLY UNDER CONSTRUCTION AT KANSAS POWER AND LIGHT'S JEFFREY ENERGY CENTER IN JEFFREY, KANSAS, WILL BURN 0.3% S PULVERIZED COAL (8100 BTU/LB). THIS UNIT'S EMISSION CONTROL SYSTEM WILL CONSIST OF A COLD SIDE ESP AND COMBUSTION ENGINEERING LIMESTONE SPRAY TOWERS. A 30% FLUE GAS BYPASS WILL PROVIDE REHEAT OF THE CLEANED GAS BEFORE IT EXITS THROUGH A 600 FOOT STACK. THE SYSTEM WILL OPERATE IN A CLOSED WATER LOOP MODE, AND THE SLUDGE WILL BE STABILIZED WITH BOTTOM ASH AND PIPED TO AN ON-SITE CLAY LINED POND. SCHEDULED START UP OF THE SYSTEM IS JUNE 1980.
KANSAS POWER & LIGHT LAWRENCE 4 RETROFIT 125.0 MW (GROSS) 125.0 MW (ESC) COAL .55 %S LIMESTONE COMBUSTION ENGINEERING ENERGY CONSUMPTION: ****% STATUS 1 STARTUP 1/76	LAWRENCE 4 OF KANSAS POWER AND LIGHT IS A BALANCED DRAFT, TANGENTIAL FIRED PULVERIZED COAL (0.55% S, 10,000 BTU/LB) UNIT LOCATED IN LAWRENCE, KANSAS. A NEW COMBUSTION ENGINEERING LIMESTONE ROD DECK/SPRAY TOWER SYSTEM REPLACED THE EXISTING MARBLE BED TAIL END SCRUBBER IN JANUARY, 1977. THE SYSTEM TREATS 403,000 ACFM OF FLUE GAS, WITH A DESIGN SO2 REMOVAL OF 73%. MIST ELIMINATION IS ACCOMPLISHED BY TWO CHEVRONS AND ONE BULK ENTRAINMENT SEPARATOR FOLLOWING EACH OF THE TWO MODULES. A FINNED TUBE REHEATER BOOSTS THE TEMPERATURE OF THE CLEANED GAS BY 20 DEG F BEFORE IT IS EXHAUSTED THROUGH A 120 FOOT STACK. THE SLUDGE IS DISPOSED IN AN UNLINED INTERIM POND, WHICH OVERFLOWS INTO A FINAL DISPOSAL POND. THE SYSTEM OPERATES IN A CLOSED WATER LOOP.

SECTION 2
STATUS OF FGD SYSTEMS

UNIT IDENTIFICATION	ABSTRACT
KANSAS POWER & LIGHT LAWRENCE 5 RETROFIT 420.0 MW (GROSS) 420.0 MW (ESC) COAL .55 %S LIMESTONE COMBUSTION ENGINEERING ENERGY CONSUMPTION: ****% STATUS 1 STARTUP 11/71	LAWRENCE 5 OF KANSAS POWER AND LIGHT IS A BALANCED DRAFT, TANGENTIAL FIRED PULVERIZED COAL (0.55% S, 10,000 BTU/LB) UNIT LOCATED IN LAWRENCE, KANSAS. A NEW COMBUSTION ENGINEERING LIMESTONE ROD DECK/SPRAY TOWER SYSTEM REPLACED THE EXISTING MARBLE BED TAIL END SCRUBBER IN APRIL, 1978. THE SYSTEM TREATS 403,000 ACFM OF FLUE GAS, WITH A DESIGN SO2 REMOVAL OF 73%. MIST ELIMINATION IS ACCOMPLISHED BY TWO CHEVRONS AND ONE BULK ENTRAINMENT SEPARATOR FOLLOWING EACH OF THE TWO MODULES. A FINNED TUBE REHEATER BOOSTS THE TEMPERATURE OF THE CLEANED GAS BY 20 DEG F BEFORE IT IS EXHAUSTED THROUGH A 120 FOOT STACK. THE SLUDGE IS DISPOSED IN AN UNLINED INTERIM POND, WHICH OVERFLOWS INTO A FINAL DISPOSAL POND. THE SYSTEM OPERATES IN A CLOSED WATER LOOP.
KENTUCKY UTILITIES GREEN RIVER 1-3 RETROFIT 64.0 MW (GROSS) 64.0 MW (ESC) COAL 4.00 %S BITUMINOUS LIME AMERICAN AIR FILTER ENERGY CONSUMPTION: 3.1% STATUS 1 STARTUP 9/75	GREEN RIVER 1-3 OF KENTUCKY UTILITIES ARE THREE DRY BOTTOM PULVERIZED BITUMINOUS COAL (4% S, 11,000 BTU/LB) FIRED UNITS LOCATED IN CENTRAL CITY, KENTUCKY. EACH BOILER SUPPLIES 360,000 ACFM OF FLUE GAS TO A VARIABLE THROAT VENTURI FOLLOWED BY AN AMERICAN AIR FILTER LIME MOBILE BED CONTACTOR (80% DESIGN SO2 REMOVAL EFFICIENCY). A RADIAL VANE MIST ELIMINATOR IS FOLLOWED BY A STEAM TUBE REHEATER AND A 165 FOOT STACK. SLUDGE IS DISPOSED IN AN ON-SITE UNLINED POND, AND THE SYSTEM OPERATES IN A CLOSED WATER LOOP. THE SYSTEM HAS BEEN OPERATIONAL SINCE SEPTEMBER, 1975.
LAKELAND UTILITIES MCINTOSH 3 NEW 364.0 MW (GROSS) 364.0 MW (ESC) COAL 2.56 %S BITUMINOUS LIMESTONE BABCOCK & WILCOX ENERGY CONSUMPTION: ****% STATUS 2 STARTUP 10/81	MCINTOSH 3 OF LAKELAND UTILITIES IS BEING CONSTRUCTED IN LAKELAND, FLORIDA. BABCOCK AND WILCOX HAS BEEN AWARDED A CONTRACT TO SUPPLY AN 85% EFFICIENT (SO2) LIMESTONE FGD SYSTEM FOR THIS UNIT. THE EMISSION CONTROL SYSTEM WILL CONSIST OF A COLD SIDE ESP FOLLOWED BY TWO PARALLEL FGD MODULES AND A 250 FOOT ACID BRICK LINED STACK. THE SYSTEM WILL OPERATE IN A CLOSED WATER LOOP, AND THE POZ-O-TEC STABILIZED SLUDGE WILL BE USED AS A CONSTRUCTION BASE. CONSTRUCTION BEGAN IN NOVEMBER, 1979 AND START UP IS SCHEDULED TO BE IN OCTOBER, 1981.
LOUISVILLE GAS & ELECTRIC CANE RUN 4 RETROFIT 188.0 MW (GROSS) 188.0 MW (ESC) COAL 3.75 %S BITUMINOUS LIME AMERICAN AIR FILTER ENERGY CONSUMPTION: 1.6% STATUS 1 STARTUP 8/76	UNIT 4 AT LOUISVILLE GAS AND ELECTRIC'S CANE RUN STATION IS A PULVERIZED BITUMINOUS COAL (3.75% S, 11,500 BTU/LB) FIRED UNIT IN LOUISVILLE, KENTUCKY. AN ESP AND TWO AMERICAN AIR FILTER CARBIDE LIME MOBILE BED ABSORBER MODULES (85% DESIGN SO2 REMOVAL) TREAT 734,000 ACFM OF FLUE GAS FROM THE BOILER. TWO CHEVRON MIST ELIMINATORS/MODULE ARE FOLLOWED BY A DIRECT COMBUSTION REHEATER AND A 250 FOOT STACK. THE WATER LOOP IS OPEN, AND THE SLUDGE IS DISPOSED IN AN ON-SITE LINED POND. THIS RETROFIT SYSTEM HAS BEEN OPERATIONAL SINCE AUGUST, 1976.
LOUISVILLE GAS & ELECTRIC CANE RUN 5 RETROFIT 200.0 MW (GROSS) 200.0 MW (ESC) COAL 3.75 %S BITUMINOUS LIME COMBUSTION ENGINEERING ENERGY CONSUMPTION: 1.5% STATUS 1 STARTUP 12/77	CANE RUN 5 OF LOUISVILLE GAS AND ELECTRIC IS A PULVERIZED BITUMINOUS COAL (3.75% S, 11,500 BTU/LB) FIRED UNIT LOCATED IN LOUISVILLE, KENTUCKY. THE BOILER SUPPLIES 700,000 ACFM OF FLUE GAS TO AN EMISSION CONTROL SYSTEM CONSISTING OF AN ESP FOLLOWED AND TWO COMBUSTION ENGINEERING 85% EFFICIENT (DESIGN) CARBIDE LIME SPRAY TOWERS. A STEAM TUBE REHEATER RAISES THE GAS TEMPERATURE 40 DEG F. THE SYSTEM OPERATES IN AN OPEN WATER LOOP MODE, AND THE SLUDGE IS POZ-O-TEC STABILIZED. OPERATION OF THIS RETROFIT SYSTEM BEGAN IN DECEMBER, 1977.
LOUISVILLE GAS & ELECTRIC CANE RUN 6 RETROFIT 288.0 MW (GROSS) 288.0 MW (ESC) COAL 4.80 %S BITUMINOUS DUAL ALKALI ADL/COMBUSTION EQUIP ASSOCIATE ENERGY CONSUMPTION: 1.0% STATUS 1 STARTUP 4/79	LOUISVILLE GAS AND ELECTRIC'S CANE RUN 6 IS A PULVERIZED BITUMINOUS COAL (3.75% S, 11,500 BTU/LB) FIRED UNIT IN LOUISVILLE, KENTUCKY. ADL/COMBUSTION EQUIPMENT ASSOCIATES SUPPLIED A RETROFIT DUAL ALKALI DEMONSTRATION FGD SYSTEM FOR THIS UNIT. THE EMISSION CONTROL SYSTEM, DESIGNED TO REMOVE 95% OF THE FLUE GAS SO2, CONSISTS OF A COLD SIDE ESP AND TWO TRAY TOWER MODULES. THE CLEANED GAS PASSES THROUGH A CHEVRON MIST ELIMINATOR AND TWO DIRECT COMBUSTION REHEATERS BEFORE EXITING A 518 FOOT STACK. THE WATER LOOP IS OPEN, AND THE SLUDGE IS DISPOSED IN AN ON-SITE CLAY LINED POND. FOR A ONE YEAR PERIOD FOLLOWING THE FIRST QUARTER OF OPERATION (WHICH BEGAN IN APRIL, 1979), THE U.S.EPA WILL SUBSIDIZE A MAX OF $4.5 MM FOR OPERATION, R&D, AND REPORT WRITING (NOT APPLIED TO ANY CAPITAL EXPENDITURES).

SECTION 2
STATUS OF FGD SYSTEMS

UNIT IDENTIFICATION	ABSTRACT
LOUISVILLE GAS & ELECTRIC MILL CREEK 1 RETROFIT 358.0 MW (GROSS) 358.0 MW (ESC) COAL 3.75 %S LIME/LIMESTONE COMBUSTION ENGINEERING ENERGY CONSUMPTION: 1.4% STATUS 2 STARTUP 4/81	MILL CREEK 1 OF LOUISVILLE GAS AND ELECTRIC IS LOCATED IN LOUISVILLE, KENTUCKY. A RETROFIT LIME/LIMESTONE FGD SYSTEM IS PRESENTLY UNDER CONSTRUCTION ON THIS PULVERIZED COAL (3.75% S, 11,500 BTU/LB) FIRED UNIT. COMBUSTION ENGINEERING IS SUPPLYING THE LIME/LIMESTONE FGD SYSTEM WHICH WILL COMPLY WITH LOCAL EMISSION STANDARDS BY APRIL OF 1981.
LOUISVILLE GAS & ELECTRIC MILL CREEK 2 RETROFIT 350.0 MW (GROSS) 350.0 MW (ESC) COAL 3.75 %S LIME/LIMESTONE COMBUSTION ENGINEERING ENERGY CONSUMPTION: 1.4% STATUS 2 STARTUP 4/82	MILL CREEK 2 OF LOUISVILLE GAS AND ELECTRIC IS LOCATED IN LOUISVILLE, KENTUCKY. A RETROFIT LIME/LIMESTONE FGD SYSTEM IS PRESENTLY UNDER CONSTRUCTION ON THIS PULVERIZED COAL (3.75% S, 11,500 BTU/LB) FIRED UNIT. COMBUSTION ENGINEERING IS SUPPLYING THE LIME/LIMESTONE FGD SYSTEM WHICH WILL COMPLY WITH LOCAL EMISSION STANDARDS BY APRIL OF 1982.
LOUISVILLE GAS & ELECTRIC MILL CREEK 3 NEW 442.0 MW (GROSS) 442.0 MW (ESC) COAL 3.75 %S BITUMINOUS LIME AMERICAN AIR FILTER ENERGY CONSUMPTION: 1.6% STATUS 1 STARTUP 8/78	LOUISVILLE GAS AND ELECTRIC'S MILL CREEK 3 IS A 3.75% S COAL (11,500 BTU/LB) FIRED UNIT LOCATED IN LOUISVILLE, KENTUCKY. AMERICAN AIR FILTER SUPPLIED A CARBIDE LIME FGD SYSTEM FOR THIS UNIT WHICH WAS DESIGNED TO REMOVE 85% OF THE SO2 FROM THE FLUE GAS. AN ESP IS FOLLOWED BY FOUR MOBILE BED SPRAY TOWERS AND A STEAM TUBE REHEATER. THE WATER LOOP IS OPEN, AND THE FLYASH AND LIME STABILIZED SLUDGE IS PONDED. THIS UNIT HAS BEEN OPERATIONAL SINCE AUGUST, 1978.
LOUISVILLE GAS & ELECTRIC MILL CREEK 4 NEW 495.0 MW (GROSS) 495.0 MW (ESC) COAL 3.75 %S LIME AMERICAN AIR FILTER ENERGY CONSUMPTION: ****% STATUS 2 STARTUP 7/81	MILL CREEK 4 OF LOUISVILLE GAS AND ELECTRIC IS A PULVERIZED BITUMINOUS COAL (3.75% S, 11,500 BTU/LB) FIRED UNIT UNDER CONSTRUCTION IN LOUISVILLE, KENTUCKY. THE EMISSION CONTROL SYSTEM WILL CONSIST OF AN ESP AND FOUR MOBILE BED SPRAY TOWERS. THE SYSTEM'S WATER LOOP WILL BE CLOSED, AND THE SLUDGE WILL BE STABILIZED WITH LIME AND FLYASH. STEAM TUBES WILL PROVIDE REHEAT OF THE CLEANED GASES. THE SYSTEM IS SCHEDULED TO START UP IN JULY OF 1981.
LOUISVILLE GAS & ELECTRIC PADDY'S RUN 6 RETROFIT 72.0 MW (GROSS) 72.0 MW (ESC) COAL 2.50 %S BITUMINOUS LIME COMBUSTION ENGINEERING ENERGY CONSUMPTION: 2.8% STATUS 1 STARTUP 4/73	UNIT 6 AT LOUISVILLE GAS AND ELECTRIC'S PADDY'S RUN STATION IS A DRY BOTTOM PULVERIZED COAL (2.5% S, 11,500 BTU/LB) FIRED UNIT IN LOUISVILLE, KENTUCKY. A RETROFIT CARBIDE LIME FGD SYSTEM BY COMBUSTION ENGINEERING TREATS 400,000 ACFM OF FLUE GAS FROM THE BOILER. AN ESP IS FOLLOWED BY TWO MARBLE BED ABSORBERS, A DIRECT COMBUSTION REHEATER, AND A 250 FOOT STACK. MIST ELIMINATION IS PROVIDED BY ONE CHEVRON/MODULE. THE LIME FIXATED SLUDGE IS TRUCKED TO AN UNLINED POND, AND THE WATER LOOP IS CLOSED. THE FGD SYSTEM BEGAN INITIAL OPERATIONS IN APRIL, 1973.
LOUISVILLE GAS & ELECTRIC TRIMBLE COUNTY 1 NEW 575.0 MW (GROSS) 575.0 MW (ESC) COAL 4.00 %S BITUMINOUS PROCESS NOT SELECTED VENDOR NOT SELECTED ENERGY CONSUMPTION: ****% STATUS 6 STARTUP 7/84	LOUISVILLE GAS AND ELECTRIC WILL BE INSTALLING FGD SYSTEMS ON TWO OF THE FOUR BOILERS AT THE UTILITY'S PLANNED TRIMBLE COUNTY STATION IN BEDFORD, KENTUCKY. THE PULVERIZED 4% S (IF NO COAL WASH IS INCLUDED) COAL FIRED UNITS' FLUE GAS WILL BE CLEANED BY ESP'S AND WET SCRUBBING (90% REMOVAL EFFICIENCY). SLUDGE DISPOSAL STRATEGY IS UNDECIDED. UNIT 1 IS SCHEDULED FOR START UP IN JULY OF 1984.

SECTION 2
STATUS OF FGD SYSTEMS

UNIT IDENTIFICATION	ABSTRACT
LOUISVILLE GAS & ELECTRIC TRIMBLE COUNTY 2 NEW 575.0 MW (GROSS) 575.0 MW (ESC) COAL 4.00 %S BITUMINOUS PROCESS NOT SELECTED VENDOR NOT SELECTED ENERGY CONSUMPTION: ****% STATUS 6 STARTUP 7/86	LOUISVILLE GAS AND ELECTRIC WILL BE INSTALLING FGD SYSTEMS ON TWO OF THE FOUR BOILERS AT THE UTILITY'S PLANNED TRIMBLE COUNTY STATION IN BEDFORD, KENTUCKY. THE PULVERIZED 4% S (IF NO COAL WASH IS INCLUDED) COAL FIRED UNITS' FLUE GAS WILL BE CLEANED BY ESP'S AND WET SCRUBBING (90% REMOVAL EFFICIENCY). SLUDGE DISPOSAL STRATEGY IS UNDECIDED. UNIT 2 IS SCHEDULED FOR START UP IN 1986.
MIDDLE SOUTH UTILITIES ARKANSAS COAL 5 NEW 890.0 MW (GROSS) 890.0 MW (ESC) COAL .50 %S PROCESS NOT SELECTED VENDOR NOT SELECTED ENERGY CONSUMPTION: ****% STATUS 5 STARTUP 1/86	MIDDLE SOUTH UTILITIES HAS AWARDED CONTRACTS ON SIX NEW LOW SULFUR (0.5%) COAL FIRED UNITS. THE UTILITY IS CURRENTLY REQUESTING/EVALUATING BIDS FOR THE FGD SYSTEMS, ALTHOUGH THE TYPE OF SYSTEM HAS NOT BEEN DECIDED. ARKANSAS COAL 5 IS SCHEDULED TO BEGIN OPERATIONS IN JANUARY, 1986.
MIDDLE SOUTH UTILITIES ARKANSAS COAL 6 NEW 890.0 MW (GROSS) 890.0 MW (ESC) COAL .50 %S PROCESS NOT SELECTED VENDOR NOT SELECTED ENERGY CONSUMPTION: ****% STATUS 5 STARTUP 1/88	MIDDLE SOUTH UTILITIES HAS AWARDED CONTRACTS ON SIX NEW LOW SULFUR (0.5%) COAL FIRED UNITS. THE UTILITY IS CURRENTLY REQUESTING/EVALUATING BIDS FOR THE FGD SYSTEMS, ALTHOUGH THE TYPE OF SYSTEM HAS NOT BEEN DECIDED. ARKANSAS COAL 6 IS SCHEDULED TO BEGIN OPERATIONS IN JANUARY, 1988.
MIDDLE SOUTH UTILITIES LOUISIANA COAL 1 NEW 890.0 MW (GROSS) 890.0 MW (ESC) COAL .50 %S PROCESS NOT SELECTED VENDOR NOT SELECTED ENERGY CONSUMPTION: ****% STATUS 5 STARTUP 0/86	MIDDLE SOUTH UTILITIES HAS AWARDED CONTRACTS ON SIX NEW LOW SULFUR (0.5%) COAL FIRED UNITS. THE UTILITY IS CURRENTLY REQUESTING/EVALUATING BIDS FOR THE FGD SYSTEMS, ALTHOUGH THE TYPE OF SYSTEM HAS NOT BEEN DECIDED. LOUISIANA COAL 1 WILL START UP IN 1986.
MIDDLE SOUTH UTILITIES LOUISIANA COAL 2 NEW 890.0 MW (GROSS) 890.0 MW (ESC) COAL .50 %S PROCESS NOT SELECTED VENDOR NOT SELECTED ENERGY CONSUMPTION: ****% STATUS 5 STARTUP 0/88	MIDDLE SOUTH UTILITIES HAS AWARDED CONTRACTS ON SIX NEW LOW SULFUR (0.5%) COAL FIRED UNITS. THE UTILITY IS CURRENTLY REQUESTING/EVALUATING BIDS FOR THE FGD SYSTEMS, ALTHOUGH THE TYPE OF SYSTEM HAS NOT BEEN DECIDED. LOUISIANA COAL 2 WILL START UP IN 1988.
MIDDLE SOUTH UTILITIES MISSISSIPPI COAL 1 NEW 890.0 MW (GROSS) 890.0 MW (ESC) COAL .50 %S PROCESS NOT SELECTED VENDOR NOT SELECTED ENERGY CONSUMPTION: ****% STATUS 5 STARTUP 0/85	MIDDLE SOUTH UTILITIES HAS AWARDED CONTRACTS ON SIX NEW LOW SULFUR (0.5%) COAL FIRED UNITS. THE UTILITY IS CURRENTLY REQUESTING/EVALUATING BIDS FOR THE FGD SYSTEMS, ALTHOUGH THE TYPE OF SYSTEM HAS NOT BEEN DECIDED. MISSISSIPPI COAL 1 WILL START UP IN 1985.

SECTION 2
STATUS OF FGD SYSTEMS

UNIT IDENTIFICATION	ABSTRACT
MIDDLE SOUTH UTILITIES MISSISSIPPI COAL 2 NEW 890.0 MW (GROSS) 890.0 MW (ESC) COAL .50 %S PROCESS NOT SELECTED VENDOR NOT SELECTED ENERGY CONSUMPTION: ****% STATUS 5 STARTUP 0/87	MIDDLE SOUTH UTILITIES HAS AWARDED CONTRACTS ON SIX NEW LOW SULFUR (0.5%) COAL FIRED UNITS. THE UTILITY IS CURRENTLY REQUESTING/EVALUATING BIDS FOR THE FGD SYSTEMS, ALTHOUGH THE TYPE OF SYSTEM HAS NOT BEEN DECIDED. MISSISSIPPI COAL 2 WILL START UP IN 1987.
MINNESOTA POWER & LIGHT CLAY BOSWELL 4 NEW 554.0 MW (GROSS) 475.0 MW (ESC) COAL .94 %S SUBBITUMINOUS LIME/ALKALINE FLYASH PEABODY PROCESS SYSTEMS ENERGY CONSUMPTION: 1.3% STATUS 2 STARTUP 2/80	CLAY BOSWELL 4 OF MINNESOTA POWER AND LIGHT IS A SUBBITUMINOUS COAL (0.54% S, 8896 BTU/LB) FIRED UNIT UNDER CONSTRUCTION IN COHASSET, MINNESOTA. PEABODY PROCESS SYSTEMS WILL SUPPLY A LIME/ALKALINE FLYASH FGD SYSTEM DESIGNED TO REMOVE 89% OF THE SO2 IN THE FLUE GAS. TWO HOT SIDE ESP'S WILL BE FOLLOWED BY VENTURI/SPRAY TOWER TRAINS. MIST ELIMINATION WILL BE PROVIDED BY A SIEVE TRAY FOLLOWED BY A SPIN VANE CHEVRON, AND REHEAT WILL BE PROVIDED BY BYPASSING 5% OF THE FLUE GAS. THE SYSTEM WILL OPERATE IN A CLOSED WATER LOOP MODE, AND THE SLUDGE WILL BE DISPOSED IN A LINED POND. OPERATIONS ARE SCHEDULED TO COMMENCE IN FEBRUARY, 1980.
MINNKOTA POWER COOPERATIVE MILTON R. YOUNG 2 NEW 440.0 MW (GROSS) 405.0 MW (ESC) COAL .70 %S LIGNITE LIME/ALKALINE FLYASH ADL/COMBUSTION EQUIP ASSOCIATE ENERGY CONSUMPTION: 1.6% STATUS 1 STARTUP 9/77	MINNKOTA POWER COOPERATIVE'S MILTON R. YOUNG 2 IS A CYCLONE FIRED LIGNITE (0.70%S, 6500 BTU/LB) BOILER LOCATED IN CENTER, NORTH DAKOTA. THE BOILER PRODUCES 2,021,400 ACFM OF FLUE GAS, WHICH IS CLEANED BY TWO ESP'S AND TWO ADL/COMBUSTION EQUIPMENT ASSOCIATES LIME/ALKALINE FLYASH SPRAY TOWERS (75% DESIGN SO2 REMOVAL EFFICIENCY). THE CLEANED GAS PASSES THROUGH A CHEVRON MIST ELIMINATOR BEFORE IT JOINS A 15% BYPASS REHEAT AND EXITS A 550 FOOT STACK. THE WATER LOOP IS OPEN, AND THE SLUDGE IS TRUCKED TO AN OFF-SITE MINEFILL. THIS SYSTEM HAS BEEN OPERATIONAL SINCE SEPTEMBER, 1977.
MONTANA POWER COLSTRIP 1 NEW 360.0 MW (GROSS) 360.0 MW (ESC) COAL .77 %S SUBBITUMINOUS LIME/ALKALINE FLYASH ADL/COMBUSTION EQUIP ASSOCIATE ENERGY CONSUMPTION: 3.3% STATUS 1 STARTUP 9/75	COLSTRIP 1 OF MONTANA POWER IS A SUBBITUMINOUS COAL (0.77% S, 8843 BTU/LB) FIRED UNIT LOCATED IN COLSTRIP, MONTANA. ADL/COMBUSTION EQUIPMENT ASSOCIATES SUPPLIED A LIME/ALKALINE FLYASH FGD SYSTEM CONSISTING OF THREE VENTURI SCRUBBER/SPRAY TOWER ABSORBER TRAINS. THE ABSORBERS ARE FOLLOWED BY HORIZONTAL CHEVRON MIST ELIMINATORS, A STEAM TUBE REHEATER, AND A 500 FOOT STACK. THE UNSTABILIZED SLUDGE IS DISPOSED IN AN ON-SITE LINED POND. THE WATER LOOP IS CLOSED. OPERATIONS INITIALLY BEGAN IN SEPTEMBER OF 1975.
MONTANA POWER COLSTRIP 2 NEW 360.0 MW (GROSS) 360.0 MW (ESC) COAL .77 %S SUBBITUMINOUS LIME/ALKALINE FLYASH ADL/COMBUSTION EQUIP ASSOCIATE ENERGY CONSUMPTION: 3.3% STATUS 1 STARTUP 5/76	COLSTRIP 2 OF MONTANA POWER IS A SUBBITUMINOUS COAL (0.77% S, 8843 BTU/LB) FIRED UNIT LOCATED IN COLSTRIP, MONTANA. ADL/COMBUSTION EQUIPMENT ASSOCIATES SUPPLIED A LIME/ALKALINE FLYASH FGD SYSTEM CONSISTING OF THREE VENTURI SCRUBBER/SPRAY TOWER ABSORBER TRAINS. THE ABSORBERS ARE FOLLOWED BY HORIZONTAL CHEVRON MIST ELIMINATORS, A STEAM TUBE REHEATER, AND A 500 FOOT STACK. THE UNSTABILIZED SLUDGE IS DISPOSED IN AN ON-SITE LINED POND. THE WATER LOOP IS CLOSED. OPERATIONS INITIALLY BEGAN IN MAY OF 1976.
MONTANA POWER COLSTRIP 3 NEW 700.0 MW (GROSS) 700.0 MW (ESC) COAL .70 %S LIME/ALKALINE FLYASH ADL/COMBUSTION EQUIP ASSOCIATE ENERGY CONSUMPTION: ****% STATUS 2 STARTUP 1/84	MONTANA POWER'S COLSTRIP 3 IS A PLANNED LOW SULFUR COAL (0.7% S, 8800 BTU/LB) FIRED UNIT TO BE LOCATED IN COLSTRIP, MONTANA. A CONTRACT HAS BEEN AWARDED TO ADL/COMBUSTION EQUIPMENT ASSOCIATES FOR A LIME/ALKALINE FLYASH FGD SYSTEM ON THIS UNIT. START UP IS SCHEDULED FOR JANUARY, 1984.

SECTION 2
STATUS OF FGD SYSTEMS

UNIT IDENTIFICATION	ABSTRACT
MONTANA POWER COLSTRIP 4 NEW 700.0 MW (GROSS) 700.0 MW (ESC) COAL .70 %S LIME/ALKALINE FLYASH ADL/COMBUSTION EQUIP ASSOCIATE ENERGY CONSUMPTION: ****% STATUS 2 STARTUP 0/84	MONTANA POWER'S COLSTRIP 4 IS A PLANNED LOW SULFUR COAL (0.7% S, 8800 BTU/LB) FIRED UNIT TO BE LOCATED IN COLSTRIP, MONTANA. A CONTRACT HAS BEEN AWARDED TO ADL/COMBUSTION EQUIPMENT ASSOCIATES FOR A LIME/ALKALINE FLYASH FGD SYSTEM ON THIS UNIT. START UP IS SCHEDULED FOR 1984.
MUSCATINE POWER & WATER MUSCATINE 9 NEW 160.0 MW (GROSS) 160.0 MW (ESC) COAL .30 %S BITUMINOUS PROCESS NOT SELECTED VENDOR NOT SELECTED ENERGY CONSUMPTION: 5.0% STATUS 5 STARTUP 9/82	MUSCATINE 9 IS A PULVIRIZED BITUMINOUS COAL (3% S, 11,200 BTU/LB) FIRED UNIT PLANNED BY MUSCATINE POWER AND WATER TO BE LOCATED IN MUSCATINE, IOWA. THE UTILITY IS CONSIDERING LIME AND LIMESTONE SLURRY SYSTEMS FOR EMISSION CONTROL. THE FGD SYSTEM WILL FEATURE AN ESP, TWO 100% CAPACITY TOWERS, STEAM COIL REHEAT, A CLOSED WATER LOOP, AND FORCED OXIDATION OF THE SLUDGE BEFORE LANDFILL. THE DESIGN SO2 REMOVAL WILL BE 94%. START UP WILL TAKE PLACE IN 1982.
NEVADA POWER HARRY ALLEN 1 NEW 500.0 MW (GROSS) 500.0 MW (ESC) COAL ***** %S PROCESS NOT SELECTED VENDOR NOT SELECTED ENERGY CONSUMPTION: ****% STATUS 6 STARTUP 6/86	NEVADA POWER'S HARRY ALLEN 1 IS A PLANNED COAL FIRED UNIT TO BE LOCATED IN LAS VEGAS, NEVADA. THE UTILITY IS CONSIDERING A HOT SIDE ESP IN CONJUNCTION WITH AN FGD SYSTEM. SPECIFICATIONS HAVE NOT YET BEEN PREPARED. START UP IS SCHEDULED FOR JUNE, 1986.
NEVADA POWER HARRY ALLEN 2 NEW 500.0 MW (GROSS) 500.0 MW (ESC) COAL ***** %S PROCESS NOT SELECTED VENDOR NOT SELECTED ENERGY CONSUMPTION: ****% STATUS 6 STARTUP 6/87	NEVADA POWER'S HARRY ALLEN 2 IS A PLANNED COAL FIRED UNIT TO BE LOCATED IN LAS VEGAS, NEVADA. THE UTILITY IS CONSIDERING A HOT SIDE ESP IN CONJUNCTION WITH AN FGD SYSTEM. SPECIFICATIONS HAVE NOT YET BEEN PREPARED. START UP IS SCHEDULED FOR JUNE, 1987.
NEVADA POWER HARRY ALLEN 3 NEW 500.0 MW (GROSS) 500.0 MW (ESC) COAL ***** %S PROCESS NOT SELECTED VENDOR NOT SELECTED ENERGY CONSUMPTION: ****% STATUS 6 STARTUP 6/88	NEVADA POWER'S HARRY ALLEN 3 IS A PLANNED COAL FIRED UNIT TO BE LOCATED IN LAS VEGAS, NEVADA. THE UTILITY IS CONSIDERING A HOT SIDE ESP IN CONJUNCTION WITH AN FGD SYSTEM. SPECIFICATIONS HAVE NOT YET BEEN PREPARED. START UP IS SCHEDULED FOR JUNE, 1988.
NEVADA POWER HARRY ALLEN 4 NEW 500.0 MW (GROSS) 500.0 MW (ESC) COAL ***** %S PROCESS NOT SELECTED VENDOR NOT SELECTED ENERGY CONSUMPTION: ****% STATUS 6 STARTUP 6/89	NEVADA POWER'S HARRY ALLEN 4 IS A PLANNED COAL FIRED UNIT TO BE LOCATED IN LAS VEGAS, NEVADA. THE UTILITY IS CONSIDERING A HOT SIDE ESP IN CONJUNCTION WITH AN FGD SYSTEM. SPECIFICATIONS HAVE NOT YET BEEN PREPARED. START UP IS SCHEDULED FOR JUNE, 1989.

SECTION 2
STATUS OF FGD SYSTEMS

UNIT IDENTIFICATION	ABSTRACT
NEVADA POWER REID GARDNER 1 RETROFIT 125.0 MW (GROSS) 125.0 MW (ESC) COAL .50 %S BITUMINOUS SODIUM CARBONATE ADL/COMBUSTION EQUIP ASSOCIATE ENERGY CONSUMPTION: ****% STATUS 1 STARTUP 4/74	REID GARDNER 1 IS A WET BOTTOM LOW SULFUR COAL (0.5% S, 12,450 BTU/LB) FIRED UNIT OWNED BY NEVADA POWER, LOCATED IN MOAPA, NEVADA. A SODIUM CARBONATE-BASED (TRONA) SCRUBBING SYSTEM BY ADL/COMBUSTION EQUIPMENT ASSOCIATES CONSISTS OF ONE MODULE CONTAINING TWIN VARIABLE THROAT VENTURIS FOLLOWED BY A SEPARATOR IN SERIES WITH A SINGLE STAGE PEFORATED PLATE WASH TOWER. PRIMARY PARTICULATE CONTROL IS PROVIDED BY UPSTREAM MULTICLONES. A RADIAL VANE MIST ELIMINATOR PRECEDES AN INDIRECT STEAM HOT AIR REHEATER AND A 200 FOOT STACK. THE SYSTEM OPERATES IN AN OPEN WATER LOOP, AND THE SLUDGE IS DISPOSED IN AN ON-SITE CLAY LINED SOLAR EVAPORATION POND. THE DESIGN SO2 REMOVAL EFFICIENCY IS 90%. THE SYSTEM HAS BEEN OPERATIONAL SINCE APRIL, 1974.
NEVADA POWER REID GARDNER 2 RETROFIT 125.0 MW (GROSS) 125.0 MW (ESC) COAL .50 %S BITUMINOUS SODIUM CARBONATE ADL/COMBUSTION EQUIP ASSOCIATE ENERGY CONSUMPTION: ****% STATUS 1 STARTUP 4/74	REID GARDNER 2 IS A WET BOTTOM LOW SULFUR COAL (0.5% S, 12,450 BTU/LB) FIRED UNIT OWNED BY NEVADA POWER, LOCATED IN MOAPA, NEVADA. A SODIUM CARBONATE-BASED (TRONA) SCRUBBING SYSTEM BY ADL/COMBUSTION EQUIPMENT ASSOCIATES CONSISTS OF ONE MODULE CONTAINING TWIN VARIABLE THROAT VENTURIS FOLLOWED BY A SEPARATOR IN SERIES WITH A SINGLE STAGE PEFORATED PLATE WASH TOWER. PRIMARY PARTICULATE CONTROL IS PROVIDED BY UPSTREAM MULTICLONES. A RADIAL VANE MIST ELIMINATOR PRECEDES AN INDIRECT STEAM HOT AIR REHEATER AND A 200 FOOT STACK. THE SYSTEM OPERATES IN AN OPEN WATER LOOP, AND THE SLUDGE IS DISPOSED IN AN ON-SITE CLAY LINED SOLAR EVAPORATION POND. THE DESIGN SO2 REMOVAL EFFICIENCY IS 90%. THE SYSTEM HAS BEEN OPERATIONAL SINCE APRIL, 1974
NEVADA POWER REID GARDNER 3 NEW 125.0 MW (GROSS) 125.0 MW (ESC) COAL .50 %S BITUMINOUS SODIUM CARBONATE ADL/COMBUSTION EQUIP ASSOCIATE ENERGY CONSUMPTION: ****% STATUS 1 STARTUP 6/76	REID GARDNER 3 IS A WET BOTTOM LOW SULFUR COAL (0.5% S, 12,450 BTU/LB) FIRED UNIT OWNED BY NEVADA POWER, LOCATED IN MOAPA, NEVADA. A SODIUM CARBONATE-BASED (TRONA) SCRUBBING SYSTEM BY ADL/COMBUSTION EQUIPMENT ASSOCIATES CONSISTS OF ONE MODULE CONTAINING TWIN VARIABLE THROAT VENTURIS FOLLOWED BY A SEPARATOR IN SERIES WITH A SINGLE STAGE PEFORATED PLATE WASH TOWER. PRIMARY PARTICULATE CONTROL IS PROVIDED BY UPSTREAM MULTICLONES. A RADIAL VANE MIST ELIMINATOR PRECEDES AN INDIRECT STEAM HOT AIR REHEATER AND A 200 FOOT STACK. THE SYSTEM OPERATES IN AN OPEN WATER LOOP, AND THE SLUDGE IS DISPOSED IN AN ON-SITE CLAY LINED SOLAR EVAPORATION POND. THE DESIGN SO2 REMOVAL EFFICIENCY IS 90%. THE SYSTEM HAS BEEN OPERATIONAL SINCE JUNE, 1976.
NEVADA POWER REID GARDNER 4 NEW 250.0 MW (GROSS) 250.0 MW (ESC) COAL .75 %S PROCESS NOT SELECTED VENDOR NOT SELECTED ENERGY CONSUMPTION: ****% STATUS 6 STARTUP 4/83	REID GARDNER 4 OF NEVADA POWER IS A COAL (0.75% S, 12,450 BTU/LB) FIRED UNIT PLANNED FOR LOCATION IN MOAPA, NEVADA. THE UTILITY IS PREPARING SPECIFICATIONS FOR AN FGD SYSTEM AT THIS TIME. CONSTRUCTION IS EXPECTED TO BEGIN IN 1980, AND START UP IS EXPECTED IN 1983.
NEVADA POWER WARNER VALLEY 1 NEW 250.0 MW (GROSS) 250.0 MW (ESC) COAL ***** %S PROCESS NOT SELECTED VENDOR NOT SELECTED ENERGY CONSUMPTION: ****% STATUS 6 STARTUP 6/85	NEVADA POWER'S WARNER VALLEY 1 IS A PLANNED COAL FIRED UNIT TO BE LOCATED IN ST. GEORGE, UTAH. THE UTILITY IS PRESENTLY PREPARING SPECIFICATIONS FOR A SCRUBBING SYSTEM. NO ANNOUNCEMENTS HAVE YET BEEN MADE CONCERNING THE EMISSION CONTROL STRATEGY FOR THIS UNIT. START UP IS EXPECTED IN JUNE OF 1985.
NEVADA POWER WARNER VALLEY 2 NEW 250.0 MW (GROSS) 250.0 MW (ESC) COAL ***** %S PROCESS NOT SELECTED VENDOR NOT SELECTED ENERGY CONSUMPTION: ****% STATUS 6 STARTUP 6/86	NEVADA POWER'S WARNER VALLEY 2 IS A PLANNED COAL FIRED UNIT TO BE LOCATED IN ST. GEORGE, UTAH. THE UTILITY IS PRESENTLY PREPARING SPECIFICATIONS FOR A SCRUBBING SYSTEM. NO ANNOUNCEMENTS HAVE YET BEEN MADE CONCERNING THE EMISSION CONTROL STRATEGY FOR THIS UNIT. START UP IS EXPECTED IN JUNE OF 1986.

SECTION 2
STATUS OF FGD SYSTEMS

UNIT IDENTIFICATION	ABSTRACT
NEW YORK STATE ELEC & GAS SOMERSET 1 NEW 870.0 MW (GROSS) 870.0 MW (ESC) COAL ***** %S BITUMINOUS LIMESTONE VENDOR NOT SELECTED ENERGY CONSUMPTION: ****% STATUS 6 STARTUP 6/84	THE SOMERSET 1 UNIT OF THE NEW YORK STATE ELECTRIC & GAS CORP. IS A PULVERIZED COAL BOILER LOCATED IN SOMERSET, NEW YORK. THE BOILER GENERATES A FLUE GAS FLOW OF 3,100,000 ACFM AND FIRES A BITUMINOUS COAL WITH AN AVERAGE SULFUR CONTENT OF 2.4% AND AN AVERAGE HEAT CONTENT OF 12,400 BTU/LB. A COLD SIDE ESP WITH A DESIGN EFFICIENCY OF 99.77% WILL PROVIDE THE PRIMARY PARTICULATE REMOVAL. A LIMESTONE ABSORBER WITH A DESIGN REMOVAL EFFICIENCY OF >90% WILL BE USED FOR SO2 REMOVAL. THE SYSTEM WILL OPERATE IN A CLOSED LOOP MODE. THE SLUDGE IS TO BE DEWATERED AND STABILIZED BEFORE BEING LANDFILLED.
NIAGARA MOHAWK POWER COOP CHARLES R. HUNTLEY 66 RETROFIT 100.0 MW (GROSS) 100.0 MW (ESC) COAL 1.80 %S AQUEOUS CARBONATE ROCKWELL INTERNATIONAL ENERGY CONSUMPTION: ****% STATUS 2 STARTUP 4/82	CHARLES R. HUNTLEY 66 OF NIAGARA POWER COOP IS A PULVERIZED COAL (1.8% S, 12,500 BTU/LB) FIRED UNIT LOCATED IN BUFFALO, NEW YORK. A CONTRACT WAS AWARDED TO ATOMICS INTERNATIONAL FOR THE DESIGN AND INSTALLATION OF A 90% EFFICIENT RETROFIT AQUEOUS CARBONATE FGD SYSTEM WHICH WILL PRODUCE ELEMENTAL SULFUR AS AN END PRODUCT. FUNDS ARE BEING PROVIDED BY THE U.S.EPA AND THE EMPIRE STATE ELECTRIC ENERGY RESEARCH CORP. A SPRAY DRYER WILL BE FOLLOWED BY TWO BANKS OF EIGHT CYCLONES AN ESP, AND A 200 FOOT STEEL LINED STACK. THE WATER LOOP WILL BE OPEN. START UP OF THE FGD SYSTEM WILL BE IN 1982.
NORTHERN INDIANA PUB SERVICE DEAN H. MITCHELL 11 RETROFIT 115.0 MW (GROSS) 115.0 MW (ESC) COAL 3.50 %S WELLMAN LORD DAVY POWERGAS ENERGY CONSUMPTION: ****% STATUS 1 STARTUP 7/76	NORTHERN INDIANA PUBLIC SERVICE'S DEAN H. MITCHELL 11 IS A COAL (3.5% S, 11,000 BTU/LB) FIRED UNIT LOCATED IN GARY, INDIANA. A RETROFIT WELLMAN LORD FGD SYSTEM BY DAVY POWERGAS HAS BEEN OPERATING ON THIS UNIT SINCE JULY, 1976. AN ESP IS FOLLOWED BY A VARIABLE THROAT VENTURI SCRUBBER AND A TRAY TOWER ABSORBER (90% DESIGN SO2 REMOVAL EFFICIENCY). A DIRECT COMBUSTION RAISES THE CLEANED GAS TEMPERATURE 50 DEG F BEFORE THE GAS IS DISCHARGED THROUGH A 168 FOOT STAINLESS STEEL AND FRP LINED STACK. ELEMENTAL SULFUR AND SULFATE IS PRODUCED BY THE PROCESS DEVELOPED BY ALLIED CHEMICAL. THE SYSTEM OPERATES IN A CLOSED WATER LOOP MODE.
NORTHERN INDIANA PUB SERVICE SCHAHFER 17 NEW 421.0 MW (GROSS) 421.0 MW (ESC) COAL 3.20 %S BITUMINOUS DUAL ALKALI FMC CORPORATION ENERGY CONSUMPTION: ****% STATUS 4 STARTUP 6/83	SCHAHFER 17 OF NORTHERN INDIANA PUBLIC SERVICE IS A 3.2% SULFUR COAL FIRED UNIT PLANNED FOR CONSTRUCTION IN WHEATFIELD, INDIANA. THE UTILITY HAS SIGNED A LETTER OF INTENT WITH FMC FOR THE INSTALLATION OF A DUAL ALKALI FGD SYSTEM AT THIS UNIT. PARTICULATE MATTER WILL BE COLLECTED BY AN ESP AND THE SYSTEM WILL INCLUDE A REHEATER. START UP OF THIS UNIT IS SCHEDULED FOR JUNE OF 1983.
NORTHERN INDIANA PUB SERVICE SCHAHFER 18 NEW 421.0 MW (GROSS) 421.0 MW (ESC) COAL 3.20 %S BITUMINOUS DUAL ALKALI FMC CORPORATION ENERGY CONSUMPTION: ****% STATUS 4 STARTUP 6/85	SCHAHFER 18 OF NORTHERN INDIANA PUBLIC SERVICE IS A 3.2% SULFUR COAL FIRED UNIT PLANNED FOR CONSTRUCTION IN WHEATFIELD, INDIANA. THE UTILITY HAS SIGNED A LETTER OF INTENT WITH FMC FOR THE INSTALLATION OF A DUAL ALKALI FGD SYSTEM AT THIS UNIT. PARTICULATE MATTER WILL BE COLLECTED BY AN ESP AND THE SYSTEM WILL INCLUDE A REHEATER. START UP OF THIS UNIT IS SCHEDULED FOR JUNE OF 1985.
NORTHERN STATES POWER RIVERSIDE 6,7 RETROFIT 110.0 MW (GROSS) 110.0 MW (ESC) COAL 1.50 %S LIME/SPRAY DRYING JOY MFG/NIRO ATOMIZER ENERGY CONSUMPTION: ****% STATUS 2 STARTUP 7/80	RIVERSIDE 6 AND 7 ARE TWO COAL FIRED BOILERS OWNED BY NORTHERN STATES POWER AND LOCATED IN MINNEAPOLIS, MINNESOTA. EACH BOILER GENERATES A FLUE GAS FLOW OF 320,000 ACFM AT 350 F. CURRENTLY, A DEMONSTRATION LIME/SPRAY DRYING FGD SYSTEM IS UNDER CONSTRUCTION THAT WILL BE CAPABLE OF TREATING THE FLUE GAS FROM BOTH BOILERS. THE SYSTEM IS BEING SUPPLIED BY NIRO ATOMIZER/JOY MANUFACTURING AND WILL CONSIST OF A SPRAY DRYER FOLLOWED BY A BAGHOUSE. THE CLEAN FLUE GAS WILL BE VENTED TO TWO 300 FT CONCRETE STACKS WITH FIRE BRICK LINERS. SPENT ABSORBENT WILL BE DISPOSED OF IN ON AND OFF SITE LANDFILLS. OPERATIONS ARE EXPECTED TO BEGIN ON JUNE 1, 1980.

SECTION 2
STATUS OF FGD SYSTEMS

UNIT IDENTIFICATION	ABSTRACT
NORTHERN STATES POWER SHERBURNE 1 NEW 740.0 MW (GROSS) 740.0 MW (ESC) COAL .80 %S SUBBITUMINOUS LIMESTONE/ALKALINE FLYASH COMBUSTION ENGINEERING ENERGY CONSUMPTION: 2.7% STATUS 1 STARTUP 3/76	NORTHERN STATES POWER'S SHERBURNE 1 IS A BALANCED DRAFT PULVERIZED SUBBITUMINOUS COAL (0.80% S, 8500 BTU/LB) FIRED BOILER IN BECKER, MINNESOTA. A 50% EFFICIENT (DESIGN) LIMESTONE/ALKALINE FLYASH FGD SYSTEM SUPPLIED BY COMBUSTION ENGINEERING HAS BEEN OPERATIONAL ON THIS UNIT SINCE MARCH OF 1976. TWELVE VARIABLE THROAT ROD DECK VENTURI/MARBLE BED ABSORBER TRAINS ARE FOLLOWED BY ONE CHEVRON MIST ELIMINATORS/TRAIN, AN IN-LINE HOT WATER REHEATER, AND A 650 FOOT CORTEM LINED STACK. THE SLUDGE IS FORCIBLY OXIDIZED AND DISPOSED IN A CLAY LINED SETTLING POND. THE WATER LOOP IS OPEN.
NORTHERN STATES POWER SHERBURNE 2 NEW 740.0 MW (GROSS) 740.0 MW (ESC) COAL .80 %S SUBBITUMINOUS LIMESTONE/ALKALINE FLYASH COMBUSTION ENGINEERING ENERGY CONSUMPTION: 2.7% STATUS 1 STARTUP 4/77	NORTHERN STATES POWER'S SHERBURNE 2 IS A BALANCED DRAFT PULVERIZED SUBBITUMINOUS COAL (0.80% S, 8500 BTU/LB) FIRED BOILER IN BECKER, MINNESOTA. A 50% EFFICIENT (DESIGN) LIMESTONE/ALKALINE FLYASH FGD SYSTEM SUPPLIED BY COMBUSTION ENGINEERING HAS BEEN OPERATIONAL ON THIS UNIT SINCE APRIL OF 1977. TWELVE VARIABLE THROAT ROD DECK VENTURI/MARBLE BED ABSORBER TRAINS ARE FOLLOWED BY ONE CHEVRON MIST ELIMINATORS/TRAIN, AN IN-LINE HOT WATER REHEATER, AND A 650 FOOT CORTEM LINED STACK. THE SLUDGE IS FORCIBLY OXIDIZED AND DISPOSED IN A CLAY LINED SETTLING POND. THE WATER LOOP IS OPEN.
NORTHERN STATES POWER SHERBURNE 3 NEW 860.0 MW (GROSS) 860.0 MW (ESC) COAL .80 %S LIMESTONE COMBUSTION ENGINEERING ENERGY CONSUMPTION: ****% STATUS 5 STARTUP 5/84	SHERBURNE 3 IS A PLANNED TANGENTIAL FIRED PULVERIZED SUBBITUMINOUS COAL (0.80% S, 8500 BTU/LB) FIRED UNIT TO BE CONSTRUCTED IN BECKER, MINNESOTA NORTHERN STATES POWER'. DUE TO THE LATEST TECHNOLOGY THAT HAS BEEN DEVELOPED BIDS HAVE AGAIN BEEN OPENED. THE UTILITY IS PRESENTLY EVALUATING THREE DIFFERENT TYPES OF FGD SYSTEMS. MAY, 1984 IS EXPECTED START UP.
OTTER TAIL POWER COYOTE 1 NEW 440.0 MW (GROSS) 440.0 MW (ESC) COAL .87 %S LIGNITE AQUEOUS CARBONATE/SPRAY DRYING WHEELABRATOR-FRYE/R.I. ENERGY CONSUMPTION: 1.1% STATUS 2 STARTUP 3/81	COYOTE 1 IS A CYCLONE FIRED PULVERIZED LIGNITE (0.875% S, 7050 BTU/LB) BOILER UNDER CONSTRUCTION IN BEULAH, NORTH DAKOTA. THIS UNIT IS JOINTLY OWNED BY FIVE UTILITIES, WITH OTTER TAIL POWER BEING THE MAJOR OWNER AND CONSTRUCTOR. AN AQUEOUS CARBONATE DRY FGD SYSTEM DESIGNED TO REMOVE 70% OF THE SO2 IS BEING SUPPLIED BY WHEELABRATOR-FRYE AND ATOMICS INTERNATIONAL. THE SPRAY DRYER/BAGHOUSE SYSTEM IS SCHEDULED TO START UP IN 1981.
PACIFIC GAS & ELECTRIC MONTEZUMA 1 NEW 800.0 MW (GROSS) 800.0 MW (ESC) COAL .80 %S LIMESTONE VENDOR NOT SELECTED ENERGY CONSUMPTION: ****% STATUS 6 STARTUP 6/86	MONTEZUMA 1 OF PACIFIC GAS AND ELECTRIC IS A COAL (0.8% S, 12,000 BTU/LB) FIRED BOILER PLANNED FOR COLLINSVILLE, CALIFORNIA. THE EMISSION CONTROL SYSTEM WILL CONSIST OF A BAGHOUSE AND A LIMESTONE FGD SYSTEM. SLUDGE WILL BE DISPOSED OF IN A LANDFILL. START UP DATE IS JUNE, 1986.
PACIFIC GAS & ELECTRIC MONTEZUMA 2 NEW 800.0 MW (GROSS) 800.0 MW (ESC) COAL .80 %S LIMESTONE VENDOR NOT SELECTED ENERGY CONSUMPTION: ****% STATUS 6 STARTUP 6/87	MONTEZUMA 2 OF PACIFIC GAS AND ELECTRIC IS A COAL (0.8% S, 12,000 BTU/LB) FIRED BOILER PLANNED FOR COLLINSVILLE, CALIFORNIA. THE EMISSION CONTROL SYSTEM WILL CONSIST OF A BAGHOUSE AND A LIMESTONE FGD SYSTEM. SLUDGE WILL BE DISPOSED OF IN A LANDFILL. START UP DATE IS JUNE, 1987.

SECTION 2
STATUS OF FGD SYSTEMS

UNIT IDENTIFICATION	ABSTRACT
PACIFIC POWER & LIGHT JIM BRIDGER 4 NEW 550.0 MW (GROSS) 550.0 MW (ESC) COAL .56 %S SUBBITUMINOUS SODIUM CARBONATE AIR CORRECTION DIVISION, UOP ENERGY CONSUMPTION: .2% STATUS 1 STARTUP 9/79	PACIFIC POWER AND LIGHT'S JIM BRIDGER 4 IS A DRY BOTTOM PULVERIZED SUBBITUMINOUS COAL (0.56% S, 9300 BTU/LB) FIRED BOILER LOCATED IN ROCK SPRINGS, WYOMING. A 91% EFFICIENT SODIUM CARBONATE FGD SYSTEM FOR THIS UNIT WAS SUPPLIED BY THE AIR CORRECTION DIVISION OF UOP. A COLD SIDE ESP TREATS 2,720,000 ACFM OF FLUE GAS, FOLLOWED BY THREE SIEVE TRAY ABSORBERS. THE SYSTEM OPERATES IN A CLOSED WATER LOOP MODE. A SYSTEM CHECK OUT WAS CONDUCTED IN JULY OF 1979, AND OPERATIONS BEGAN IN SEPTEMBER, 1979.
PENNSYLVANIA POWER BRUCE MANSFIELD 1 NEW 917.0 MW (GROSS) 917.0 MW (ESC) COAL 3.00 %S BITUMINOUS LIME CHEMICO ENERGY CONSUMPTION: 6.0% STATUS 1 STARTUP 12/75	BRUCE MANSFIELD 1 OF PENNSYLVANIA POWER IS A SUPERCRITICAL, BALANCED DRAFT BOILER FIRING PULVERIZED COAL (3.0% S, 11,500 BTU/LB) IN SHIPPINGPORT, PENNSYLVANIA. A CHEMICO THIOSORBIC LIME FGD SYSTEM WAS DESIGNED TO REMOVE FLYASH AND SO2 (92.1%) FROM 3,350,000 ACFM OF FLUE GAS. THE FGD SYSTEM CONSISTS OF SIX VARIABLE THROAT VENTURI SCRUBBERS FOLLOWED BY SIX FIXED THROAT VENTURI ABSORBERS, HORIZONTAL MIST ELIMINATORS, TWO DIRECT COMBUSTION REHEATERS, AND A 950 FOOT FLAKEGLASS STACK SHARED BY UNITS 1 AND 2. THE WATER LOOP IS OPEN, AND THE CALCILOX STABILIZED SLUDGE IS DISPOSED IN AN OFF SITE LANDFILL. THIS SYSTEM HAS BEEN OPERATIONAL SINCE DECEMBER, 1975.
PENNSYLVANIA POWER BRUCE MANSFIELD 2 NEW 917.0 MW (GROSS) 917.0 MW (ESC) COAL 3.00 %S BITUMINOUS LIME CHEMICO ENERGY CONSUMPTION: 6.0% STATUS 1 STARTUP 7/77	BRUCE MANSFIELD 2 OF PENNSYLVANIA POWER IS A SUPERCRITICAL, BALANCED DRAFT BOILER FIRING PULVERIZED COAL (3.0% S, 11,500 BTU/LB) IN SHIPPINGPORT, PENNSYLVANIA. A CHEMICO THIOSORBIC LIME FGD SYSTEM WAS DESIGNED TO REMOVE FLYASH AND SO2 (92.1%) FROM 3,350,000 ACFM OF FLUE GAS. THE FGD SYSTEM CONSISTS OF SIX VARIABLE THROAT VENTURI SCRUBBERS FOLLOWED BY SIX FIXED THROAT VENTURI ABSORBERS, HORIZONTAL MIST ELIMINATORS, TWO DIRECT COMBUSTION REHEATERS, AND A 950 FOOT FLAKEGLASS STACK SHARED BY UNITS 1 AND 2. THE WATER LOOP IS OPEN, AND THE CALCILOX STABILIZED SLUDGE IS DISPOSED IN AN OFF SITE LANDFILL. THIS SYSTEM HAS BEEN OPERATIONAL SINCE JULY, 1977.
PENNSYLVANIA POWER BRUCE MANSFIELD 3 NEW 917.0 MW (GROSS) 917.0 MW (ESC) COAL 3.00 %S LIME PULLMAN KELLOGG ENERGY CONSUMPTION: ****% STATUS 2 STARTUP 5/80	BRUCE MANSFIELD 3 OF PENNSYLVANIA POWER IS A SUPERCRITICAL PULVERIZED COAL (3.0% S, 11,500 BTU/LB) FIRED BOILER UNDER CONSTRUCTION IN SHIPPINGPORT, PENNSYLVANIA. FOUR ESP'S WILL TREAT 3,308,000 ACFM OF FLUE GAS, FOLLOWED BY FIVE (ONE SPARE) PULLMAN KELLOGG THIOSORBIC LIME ABSORBERS WHICH WILL REMOVE 92.2% OF THE SO2. THE CLEANED GAS WILL PASS THROUGH CHEVRON MIST ELIMINATORS AND DIRECT COMBUSTION REHEATERS BEFORE DISCHARGE THROUGH A 600 FOOT INCONEL 625 LINED STACK. THE FLYASH STABILIZED SLUDGE WILL BE PIPED TO THE EXISTING OFF SITE LANDFILL PRESENTLY USED BY UNITS ONE AND TWO. START UP IS EXPECTED IN APRIL OF 1980.
PHILADELPHIA ELECTRIC CROMBY RETROFIT 150.0 MW (GROSS) 150.0 MW (ESC) COAL 3.00 %S MAGNESIUM OXIDE UNITED ENGINEERS ENERGY CONSUMPTION: ****% STATUS 3 STARTUP 6/80	PHILADELPHIA ELECTRIC HAS PLANS FOR THE RETROFIT OF AN FGD SYSTEM ON ONE OF THE TWO 3.0% SULFUR COAL FIRED BOILERS AT CROMBY STATION IN PHOENIXVILLE, PENNSYLVANIA. A CONTRACT HAS BEEN AWARDED TO UNITED ENGINEERS FOR A MAGNESIUM OXIDE SYSTEM. THE START UP DATE IS SET FOR JUNE, 1980.
PHILADELPHIA ELECTRIC EDDYSTONE 1A RETROFIT 120.0 MW (GROSS) 120.0 MW (ESC) COAL 2.60 %S BITUMINOUS MAGNESIUM OXIDE UNITED ENGINEERS ENERGY CONSUMPTION: ****% STATUS 1 STARTUP 9/75	UNIT 1 OF PHILADELPHIA ELECTRIC'S EDDYSTONE, PENNSYLVANIA STATION IS A BITUMINOUS COAL (2.6% S, 13,600 BTU/LB) FIRED UNIT WHICH USES ESP'S, MECHANICAL COLLECTORS, AND THREE PARTICULATE SCRUBBERS (TWO VENTRI ROD AND ONE VENTURI) PROVIDE PRIMARY PARTICULATE CONTROL. THE 1A FGD SYSTEM CONSISTS OF A MAG OX ROD DECK SPRAY TOWER FOLLOWING THE VENTURI SCRUBBER. THE 90% EFFICIENT (DESIGN) ABSORBER, A RETROFIT BY UNITED ENGINEERS, LEADS TO A LOUVER TYPE MIST ELIMINATOR, A DIRECT COMBUSTION REHEATER, AND A 249 FOOT STACK. THE SPENT SLURRY IS REGENERATED AT THE ESSEX SULFURIC ACID PLANT IN NEWARK, NEW JERSEY, AND THE MAG-OX IS RETURNED TO EDDYSTONE. THE SYSTEM OPERATES IN AN OPEN WATER LOOP, AND HAS BEEN OPERATIONAL SINCE SEPTEMBER, 1975.

SECTION 2
STATUS OF FGD SYSTEMS

UNIT IDENTIFICATION	ABSTRACT
PHILADELPHIA ELECTRIC EDDYSTONE 1B RETROFIT 240.0 MW (GROSS) 240.0 MW (ESC) COAL 2.60 %S MAGNESIUM OXIDE UNITED ENGINEERS ENERGY CONSUMPTION: ****% STATUS 3 STARTUP 6/80	UNIT 1 OF PHILADELPHIA ELECTRIC'S EDDYSTONE, PENNSYLVANIA STATION IS A BITUMINOUS COAL (2.6% S, 13,600 BTU/LB) FIRED UNIT WHICH USES ESP'S, MECHANICAL COLLECTORS, AND THREE PARTICULATE SCRUBBERS (TWO ROD DECK SPRAY TOWERS AND ONE VENTURI) FOR PRIMARY PARTICULATE CONTROL. THE 1B FGD WILL FOLLOW THE TWO ROD DECK SPRAY TOWERS. A CONTRACT HAS BEEN AWARDED TO UNITED ENGINEERS FOR A MAGNESIUM OXIDE FGD SYSTEM. THE START UP DATE IS SET FOR JUNE, 1980.
PHILADELPHIA ELECTRIC EDDYSTONE 2 RETROFIT 334.0 MW (GROSS) 334.0 MW (ESC) COAL 2.50 %S MAGNESIUM OXIDE UNITED ENGINEERS ENERGY CONSUMPTION: ****% STATUS 3 STARTUP 6/80	EDDYSTONE 2 OF PHILADELPHIA ELECTRIC IS A 2.5% SULFUR COAL FIRED BOILER LOCATED IN EDDYSTONE, PENNSYLVANIA. THE PLANT'S GENERATING CAPACITY IS 334 MW. A CONTRACT HAS BEEN AWARDED TO UNITED ENGINEERS FOR A MAGNESIUM OXIDE FGD SYSTEM. THE START UP DATE IS SET FOR JUNE, 1980
POTOMAC ELECTRIC POWER DICKERSON 4 NEW 850.0 MW (GROSS) 800.0 MW (ESC) COAL 1.90 %S PROCESS NOT SELECTED VENDOR NOT SELECTED ENERGY CONSUMPTION: ****% STATUS 6 STARTUP 0/87	DICKERSON 4 OF POTOMAC ELECTRIC POWER IS A PULVERIZED COAL (2.0% S, 11,000 BTU/LB) FIRED UNIT PLANNED FOR LOCATION IN DICKERSON, MARYLAND. THE UTILITY IS CONSIDERING AN FGD SYSTEM FOR THIS UNIT, BUT THERE ARE NO FIRM PLANS FOR THE INSTALLATION OF AN FGD SYSTEM. START UP OF THE BOILER IS EXPECTED IN 1985. FGD SYSTEM START UP, IF ANY, WILL BE IN 1987.
POWER AUTHORITY OF NEW YORK ARTHUR KILL NEW 700.0 MW (GROSS) 700.0 MW (ESC) COAL 3.00 %S PROCESS NOT SELECTED VENDOR NOT SELECTED ENERGY CONSUMPTION: ****% STATUS 6 STARTUP 11/87	THE POWER AUTHORITY OF NEW YORK PLANS A NEW 3.0% SULFUR COAL FIRED UNIT WHICH WILL BE LOCATED AT THE ARTHUR KILL FACILITY ON STATEN ISLAND. THE UTILITY IS PRESENTLY CONSIDERING FGD SYSTEMS FOR THIS UNIT. PUBLIC SERVICE COMMISSION HEARINGS ARE CURRENTLY IN PROGRESS. START UP IS EXPECTED IN NOVEMBER, 1987.
PUBLIC SERVICE OF INDIANA GIBSON 5 NEW 650.0 MW (GROSS) 650.0 MW (ESC) COAL 3.30 %S LIMESTONE PULLMAN KELLOGG ENERGY CONSUMPTION: ****% STATUS 3 STARTUP 0/82	GIBSON 5 OF PUBLIC SERVICE OF INDIANA IS A 3.3% SULFUR COAL FIRED UNIT PLANNED FOR LOCATION IN PRINCETON, INDIANA. A CONTRACT WAS AWARDED TO PULLMAN KELLOGG FOR A LIMESTONE FGD SYSTEM CONSISTING OF FOUR KELLOGG-WEIR ABSORBER-REACTOR MODULES. SYSTEM START UP IS EXPECTED IN 1982. THE SYSTEM WILL USE KELLOGG'S PROPRIETARY MAGNESIUM-PROMOTED LIMESTONE.
PUBLIC SERVICE OF NEW MEXICO SAN JUAN 1 RETROFIT 361.0 MW (GROSS) 361.0 MW (ESC) COAL .80 %S WELLMAN LORD DAVY POWERGAS ENERGY CONSUMPTION: 4.4% STATUS 1 STARTUP 4/78	SAN JUAN 1 OF PUBLIC SERVICE OF NEW MEXICO IN WATERFLOW, NEW MEXICO IS A COAL (0.8% S, 8100 BTU/LB) FIRED BOILER WHICH SUPPLIES 1,319,000 ACFM OF FLUE GAS TO A RETROFIT WELLMAN LORD FGD SYSTEM BY DAVY POWERGAS. THE EMISSION CONTROL SYSTEM, OPERATIONAL SINCE APRIL OF 1978, CONSISTS OF A HOT SIDE ESP FOLLOWED BY FOUR (ONE SPARE) VENTURI SCRUBBER/SPRAY TOWER ABSORBER TRAINS WHICH WERE DESIGNED TO REMOVE 85% OF THE FLUE GAS SO2. AN INDIRECT HOT AIR REHEATER PRECEDES A BRICK LINED STACK. END PRODUCT ELEMENTAL SULFUR IS PRODUCED BY THE ALLIED CHEMICAL PROCESS. THE WATER LOOP IS CLOSED.

SECTION 2
STATUS OF FGD SYSTEMS

UNIT IDENTIFICATION	ABSTRACT
PUBLIC SERVICE OF NEW MEXICO SAN JUAN 2 RETROFIT 350.0 MW (GROSS) 350.0 MW (ESC) COAL .80 %S WELLMAN LORD DAVY POWERGAS ENERGY CONSUMPTION: 4.6% STATUS 1 STARTUP 8/78	SAN JUAN 2 OF PUBLIC SERVICE OF NEW MEXICO IN WATERFLOW, NEW MEXICO IS A COAL (0.8% S, 8100 BTU/LB) FIRED BOILER WHICH SUPPLIES 1,319,000 ACFM OF FLUE GAS TO A RETROFIT WELLMAN LORD FGD SYSTEM BY DAVY POWERGAS. THE EMISSION CONTROL SYSTEM, OPERATIONAL SINCE AUGUST OF 1978, CONSISTS OF A HOT SIDE ESP FOLLOWED BY FOUR (ONE SPARE) VENTURI SCRUBBER/SPRAY TOWER ABSORBER TRAINS WHICH WERE DESIGNED TO REMOVE 85% OF THE FLUE GAS SO2. AN INDIRECT HOT AIR REHEATER PRECEDES A BRICK LINED STACK. END PRODUCT ELEMENTAL SULFUR IS PRODUCED BY THE ALLIED CHEMICAL PROCESS. THE WATER LOOP IS CLOSED.
PUBLIC SERVICE OF NEW MEXICO SAN JUAN 3 NEW 534.0 MW (GROSS) 534.0 MW (ESC) COAL .80 %S WELLMAN LORD DAVY POWERGAS ENERGY CONSUMPTION: ****% STATUS 1 STARTUP 12/79	SAN JUAN 3 IS A COAL (0.8% S, 8100 BTU/LB) FIRED UNIT OF THE PUBLIC SERVICE OF NEW MEXICO AND IS LOCATED IN WATERFLOW, NEW MEXICO. THE FGD SYSTEM, SUPPLIED BY DAVY POWERGAS IS AN INTEGRATION OF THE WELLMAN LORD SO2 RECOVERY PROCESS AND ALLIED CHEMICAL'S SO2 REDUCTION TO SULFUR PROCESS. FIVE (ONE SPARE) VENTURI SCRUBBER/SPRAY TOWER ABSORBER (90% DESIGN SO2 REMOVAL) TRAINS FOLLOW A HOT SIDE ESP. AN INDIRECT HOT AIR REHEATER BOOSTS THE GAS TEMPERATURE 50 DEG F. THE SYSTEM OPERATES IN A CLOSED WATER LOOP MODE. OPERATIONS COMMENCED IN DECEMBER, 1979.
PUBLIC SERVICE OF NEW MEXICO SAN JUAN 4 NEW 534.0 MW (GROSS) 534.0 MW (ESC) COAL .80 %S WELLMAN LORD DAVY POWERGAS ENERGY CONSUMPTION: ****% STATUS 2 STARTUP 1/82	SAN JUAN 4 IS A COAL (0.8% S, 8100 BTU/LB) FIRED UNIT OF THE PUBLIC SERVICE OF NEW MEXICO UNDER CONSTRUCTION IN WATERFLOW, NEW MEXICO. THE FGD SYSTEM BEING SUPPLIED BY DAVY POWERGAS IS AN INTEGRATION OF THE WELLMAN LORD SO2 RECOVERY PROCESS AND ALLIED CHEMICAL'S SO2 REDUCTION TO SULFUR PROCESS. FIVE (ONE SPARE) VENTURI SCRUBBER/SPRAY TOWER ABSORBER (90% DESIGN SO2 REMOVAL) TRAINS WILL FOLLOW A HOT SIDE ESP. AN INDIRECT HOT AIR REHEATER WILL BOOST THE GAS TEMPERATURE 50 DEG F. THE SYSTEM WILL OPERATE IN A CLOSED WATER LOOP MODE. START UP IS EXPECTED IN JANUARY, 1982
SALT RIVER PROJECT CORONADO 1 NEW 350.0 MW (GROSS) 280.0 MW (ESC) COAL 1.00 %S SUBBITUMINOUS LIMESTONE PULLMAN KELLOGG ENERGY CONSUMPTION: ****% STATUS 1 STARTUP 11/79	SALT RIVER PROJECT'S CORONADO 1 IS A DRY BOTTOM PULVERIZED SUBBITUMINOUS COAL (1.0% S, 8300 BTU/LB) FIRED BOILER LOCATED IN ST. JOHNS, ARIZONA. PULLMAN KELLOGG SUPPLIED THE TWO LIMESTONE HORIZONTAL WEIR SPRAY TOWERS WHICH WILL REMOVE 82.5% OF THE SO2 FROM THE FLUE GAS PASSED THROUGH THEM. VERTICAL HEIL MIST ELIMINATORS PRECEDE A 500 FOOT STACK. A MINIMUM OF 20% BYPASS PROVIDES REHEAT. THE WATER LOOP IS AN OPEN MODE, AND THE UNSTABILIZED SLUDGE IS DISPOSED IN AN UNLINED POND. START UP WAS IN NOVEMBER, 1979.
SALT RIVER PROJECT CORONADO 2 NEW 350.0 MW (GROSS) 280.0 MW (ESC) COAL 1.00 %S SUBBITUMINOUS LIMESTONE PULLMAN KELLOGG ENERGY CONSUMPTION: ****% STATUS 2 STARTUP 10/80	SALT RIVER PROJECT'S CORONADO 2 IS A DRY BOTTOM PULVERIZED SUBBITUMINOUS COAL (1.0% S, 8300 BTU/LB) FIRED BOILER UNDER CONSTRUCTION IN ST. JOHNS, ARIZONA. PULLMAN KELLOGG IS SUPPLYING TWO LIMESTONE HORIZONTAL WEIR SPRAY TOWERS WHICH WILL REMOVE 82.5% OF THE SO2 FROM THE FLUE GAS PASSED THROUGH THEM. VERTICAL HEIL MIST ELIMINATORS PRECEDE A 500 FOOT STACK. A MINIMUM OF 20% BYPASS WILL PROVIDE REHEAT. THE WATER LOOP WILL BE OPEN, AND THE UNSTABILIZED SLUDGE WILL BE DISPOSED IN AN UNLINED POND. START UP IS EXPECTED IN JANUARY, 1980.
SALT RIVER PROJECT CORONADO 3 NEW 350.0 MW (GROSS) 280.0 MW (ESC) COAL 1.00 %S LIMESTONE VENDOR NOT SELECTED ENERGY CONSUMPTION: ****% STATUS 6 STARTUP 0/ 0	CORONADO 3 IS A DRY BOTTOM PULVERIZED SUBBITUMINOUS COAL (1.0% S, 8300 BTU/LB) FIRED UNIT PLANNED BY SALT RIVER PROJECT TO BE LOCATED IN ST. JOHN'S, ARIZONA. THE UTILITY IS PRESENTLY CONSIDERING THE INSTALLATION OF TWO HORIZONTAL SPRAY TOWERS UTILIZING LIMESTONE AS THE ABSORBENT. PLANS FOR AN EMISSION CONTROL SYSTEM HAVE NOT BEEN FINALIZED. THE SYSTEM WILL HAVE A 20% BYPASS REHEAT, AND THE SLUDGE WILL PROBABLY BE PONDED. SCHEDULED OPERATION DATE IS 1984.

SECTION 2
STATUS OF FGD SYSTEMS

UNIT IDENTIFICATION	ABSTRACT
SAN MIGUEL ELECTRIC COOP SAN MIGUEL 1 NEW 400.0 MW (GROSS) 400.0 MW (ESC) COAL 1.70 %S LIGNITE LIMESTONE BABCOCK & WILCOX ENERGY CONSUMPTION: 5.0% STATUS 2 STARTUP 9/80	SAN MIGUEL 1 OF THE SAN MIGUEL ELECTRIC COOP IS A LIGNITE (1.7% S, 5000 BTU/LB) FIRED RADIANT BOILER UNDER CONSTRUCTION IN SAN MIGUEL, TEXAS. THE EMISSION CONTROL SYSTEM ON THIS UNIT WILL CONSIST OF A COLD SIDE ESP FOLLOWED BY FOUR BABCOCK AND WILCOX 86% EFFICIENT LIMESTONE TCA MODULES. CHEVRON MIST ELIMINATORS WILL PRECEDE AN IN-LINE REHEATER AND AN ACID BRICK LINED STACK. THE WATER LOOP WILL BE CLOSED, AND THE DEWATERED SLURRY WILL BE MIXED WITH FLYASH BY RESEARCH COTTRELL AND DISPOSED IN AN OFF SITE LANDFILL.
SEMINOLE ELECTRIC SEMINOLE 1 NEW 620.0 MW (GROSS) 620.0 MW (ESC) COAL 2.75 %S LIMESTONE VENDOR NOT SELECTED ENERGY CONSUMPTION: ****% STATUS 5 STARTUP 6/83	SEMINOLE 1 OF SEMINOLE ELECTRIC IS A COAL (2.75% S, 11,700 BTU/LB) FIRED UNIT PLANNED FOR LOCATION IN PALATKA, FLORIDA. THE EMISSION CONTROL SYSTEM WILL CONSIST OF ESP'S AND A LIMESTONE FGD SYSTEM. THE UTILITY IS CURRENTLY REQUESTING/EVALUATING BIDS FOR THE SYSTEM. START UP IS EXPECTED IN JUNE OF 1983.
SEMINOLE ELECTRIC SEMINOLE 2 NEW 620.0 MW (GROSS) 620.0 MW (ESC) COAL 2.75 %S LIMESTONE VENDOR NOT SELECTED ENERGY CONSUMPTION: ****% STATUS 5 STARTUP 6/85	SEMINOLE 2 OF SEMINOLE ELECTRIC IS A COAL (2.75% S, 11,700 BTU/LB) FIRED UNIT PLANNED FOR LOCATION IN PALATKA, FLORIDA. THE EMISSION CONTROL SYSTEM WILL CONSIST OF ESP'S AND A LIMESTONE FGD SYSTEM. THE UTILITY IS CURRENTLY REQUESTING/EVALUATING BIDS FOR THE SYSTEM. START UP IS EXPECTED IN JUNE OF 1985.
SIKESTON BOARD OF MUNIC. UTIL. SIKESTON 1 NEW 235.0 MW (GROSS) 235.0 MW (ESC) COAL 2.80 %S LIMESTONE BABCOCK & WILCOX ENERGY CONSUMPTION: 1.6% STATUS 2 STARTUP 1/81	THE SIKESTON BOARD OF MUNICIPAL UTILITIES' SIKESTON 1 IS A PULVERIZED COAL (2.8% S, 11,340 BTU/LB) FIRED BOILER UNDER CONSTRCTION IN SIKESTON, MISSOURI. BABCOCK AND WILCOX IS SUPPLYING AN EMISSION CONTROL SYSTEM CONSISTING OF TWO ESP'S AND THREE 50% CAPACITY LIMESTONE VENTURI FGD MODULES. THE CLEANED GAS WILL PASS THROUGH CHEVRON MIST ELIMINATORS BEFORE EXITING A 450 FOOT FRP LINED FLUE (A SECOND CARBON STEEL LINED FLUE, USED FOR EMERGENCY BYPASS, IS ALSO IN THE STACK). THE WATER LOOP WILL BE OPEN, AND THE SLUDGE WILL BE PONDED. START UP IS SLATED FOR JANUARY, 1981.
SOUTH CAROLINA PUBLIC SERVICE WINYAH 2 NEW 280.0 MW (GROSS) 140.0 MW (ESC) COAL 1.70 %S BITUMINOUS LIMESTONE BABCOCK & WILCOX ENERGY CONSUMPTION: 1.1% STATUS 1 STARTUP 7/77	WINYAH 2 OF SOUTH CAROLINA PUBLIC SERVICE IS A PULVERIZED BITUMINOUS COAL (1.70% S, 11,500 BTU/LB) FIRED UNIT LOCATED IN GEORGETOWN, SOUTH CAROLINA. A COLD SIDE ESP AND A BABCOCK AND WILCOX VENTURI SCRUBBER/LIMESTONE TRAY TOWER ABSORBER TRAIN DESIGNED TO REMOVE 69% OF THE SO_2 FROM THE BOILER FLUE GAS MAKE UP THE EMISSION CONTROL SYSTEM ON THIS UNIT. THE SYSTEM OPERATES IN AN OPEN WATER LOOP, AND THE SLUDGE IS DISPOSED IN AN ON-SITE UNLINED POND. THIS SYSTEM HAS BEEN OPERATIONAL SINCE JULY OF 1977.
SOUTH CAROLINA PUBLIC SERVICE WINYAH 3 NEW 280.0 MW (GROSS) 280.0 MW (ESC) COAL 1.70 %S LIMESTONE BABCOCK & WILCOX ENERGY CONSUMPTION: 2.1% STATUS 2 STARTUP 5/80	WINYAH 3 IS A DRY BOTTOM BOILER UNDER CONSTRUCTION BY SOUTH CAROLINA PUBLIC SERVICE WHICH WILL BURN 1.7% SULFUR COAL (11,500 BTU/LB) IN GEORGETOWN, SOUTH CAROLINA. AN ESP WILL PRECEDE A BABCOCK AND WILCOX LIMESTONE FGD SYSTEM AND AN INDIRECT STEAM REHEATER. THE WATER LOOP WILL BE CLOSED. EXPECTED START UP DATE IS MAY, 1980.

SECTION 2
STATUS OF FGD SYSTEMS

UNIT IDENTIFICATION	ABSTRACT
SOUTH CAROLINA PUBLIC SERVICE WINYAH 4 NEW 280.0 MW (GROSS) 280.0 MW (ESC) COAL 1.70 %S BITUMINOUS LIMESTONE AMERICAN AIR FILTER ENERGY CONSUMPTION: 2.1% STATUS 3 STARTUP 7/81	SOUTH CAROLINA PUBLIC SERVICE'S WINYAH 4 IS A PLANNED BITUMINOUS COAL (1.7% S, 11,500 BTU/LB) FIRED UNIT TO BE LOCATED IN GEORGETOWN, SOUTH CAROLINA. TWO AMERICAN AIR FILTER LIMESTONE SLURRY SPRAY TOWERS WILL FOLLOW AN ESP. THE TEMPERATURE OF THE CLEANED GAS WILL BE RAISED BY AN INDIRECT STEAM REHEATER. THE SYSTEM WILL OPERATE IN A CLOSED WATER LOOP MODE. THE CONTRACT FOR THE FGD SYSTEM HAS BEEN AWARDED, AND START UP IS EXPECTED IN MAY, 1981'.
SOUTH MISSISSIPPI ELEC PWR R.D. MORROW 1 NEW 200.0 MW (GROSS) 124.0 MW (ESC) COAL 1.30 %S LIMESTONE RILEY STOKER/ENVIRONEERING ENERGY CONSUMPTION: 5.5% STATUS 1 STARTUP 8/78	R.D. MORROW 1 OF SOUTHERN MISSISSIPPI ELECTRIC IS A PULVERIZED COAL (1.3% S, 12,000 BTU/LB) FIRED UNIT IN HATTISBURG, MISSISSIPPI. THE EMISSION CONTROL SYSTEM FOR THIS UNIT CONSISTS OF A HOT SIDE ESP FOLLOWED BY A LIMESTONE VENTRI-ROD ABSORBER SUPPLIED BY RILEY STOKER/ENVIRONEERING. AFTER THE CLEANED GAS PASSES THROUGH A VERTICAL CHEVRON MIST ELIMINATOR, IT IS JOINED BY A 38% BYPASS REHEAT BEFORE IT IS DISCHARGED THROUGH A 408 FOOT STACK SHARED BY UNITS 1 AND 2 (EACH UNIT HAS ITS OWN ACID BRICK LINED FLUE). THE WATER LOOP IS CLOSED, AND THE FLYASH STABILIZED SLUDGE IS HAULED BY TRUCK TO AN OFF SITE LANDFILL. THE SYSTEM HAS BEEN OPERATIONAL SINCE AUGUST OF 1978.
SOUTH MISSISSIPPI ELEC PWR R.D. MORROW 2 NEW 200.0 MW (GROSS) 124.0 MW (ESC) COAL 1.30 %S LIMESTONE RILEY STOKER/ENVIRONEERING ENERGY CONSUMPTION: 5.5% STATUS 1 STARTUP 6/79	R.D. MORROW 2 OF SOUTHERN MISSISSIPPI ELECTRIC IS A PULVERIZED COAL (1.3% S, 12,000 BTU/LB) FIRED UNIT IN HATTISBURG, MISSISSIPPI. THE EMISSION CONTROL SYSTEM FOR THIS UNIT CONSISTS OF A HOT SIDE ESP FOLLOWED BY A LIMESTONE VENTRI-ROD ABSORBER SUPPLIED BY RILEY STOKER/ENVIRONEERING. AFTER THE CLEANED GAS PASSES THROUGH A VERTICAL CHEVRON MIST ELIMINATOR, IT IS JOINED BY A 38% BYPASS REHEAT BEFORE IT IS DISCHARGED THROUGH A 408 FOOT STACK SHARED BY UNITS 1 AND 2 (EACH UNIT HAS ITS OWN ACID BRICK LINED FLUE). THE WATER LOOP IS CLOSED, AND THE FLYASH STABILIZED SLUDGE IS HAULED BY TRUCK TO AN OFF SITE LANDFILL. THE SYSTEM HAS BEEN OPERATIONAL SINCE JUNE OF 1979.
SOUTHERN ILLINOIS POWER COOP MARION 4 NEW 184.0 MW (GROSS) 184.0 MW (ESC) COAL/REFUS 3.50 %S LIMESTONE BABCOCK & WILCOX ENERGY CONSUMPTION: ****% STATUS 1 STARTUP 5/79	UNIT 4 AT SOUTHERN ILLINOIS POWER COOP'S MARION STATION IN MARION, ILLINOIS IS A CYCLONE FIRED COAL (3.0% S, 9000 BTU/LB) BOILER WHICH IS SERVED BY A 89.4% EFFICIENT (DESIGN) LIMESTONE FGD SYSTEM SUPPLIED BY BABCOCK AND WILCOX. TWO SPRAY TOWERS AND A BRICK LINED STACK ARE DOWNSTREAM OF AN ESP IN THIS SYSTEM. THE WATER LOOP IS OPEN, AND THE FLYASH STABILIZED SLUDGE IS DEWATERED AND LANDFILLED. THE SYSTEM BECAME OPERATIONAL DURING MAY OF 1979.
SOUTHERN ILLINOIS POWER COOP MARION 5 NEW 300.0 MW (GROSS) 300.0 MW (ESC) COAL 3.00 %S PROCESS NOT SELECTED VENDOR NOT SELECTED ENERGY CONSUMPTION: ****% STATUS 6 STARTUP 0/84	MARION 5 IS A COAL (3.0% S, 9000 BTU/LB) FIRED UNIT PLANNED BY SOUTHERN ILLNOIS POWER COOP FOR LOCATION IN MARION, ILLINOIS. THE UTILITY HAS NOT YET DECIDED ON AN FGD PROCESS AS IT IS WAITING FOR THE FINALIZATION OF THE SO2 REGULATIONS THE UNIT WILL HAVE TO MEET. START UP IS EXPECTED IN 1984.
SOUTHERN INDIANA GAS & ELEC A.B. BROWN 1 NEW 265.0 MW (GROSS) 265.0 MW (ESC) COAL 4.50 %S DUAL ALKALI FMC CORPORATION ENERGY CONSUMPTION: .8% STATUS 1 STARTUP 3/79	SOUTHERN INDIANA GAS AND ELECTRIC'S A.B.BROWN 1 IS A DRY BOTTOM PULVERIZED COAL (4.5% S, 13,010 BTU/LB) FIRED UNIT IN WEST FRANKLIN, INDIANA. FMC SUPPLIED A DUAL ALKALI FGD SYSTEM DESIGNED TO REMOVE 85% OF THE FLUE GAS SO2. THE UNIT CONSISTS OF TWO THREE STAGE DISC CONTACTORS. A COLD SIDE ESP PROVIDES PRIMARY PARTICULATE CONTROL, AND ONE CHEVRON MIST ELIMINATOR/MODULE PRECEDES A 498 FOOT ACID BRICK LINED STACK. THE SYSTEM PRODUCES A FILTER LAKE WASTE PRODUCT WHICH IS DISPOSED IN AN ON SITE LANDFILL. THE WATER LOOP CAN BE EITHER OPEN OR CLOSED. THE SYSTEM HAS BEEN OPERATIONAL SINCE MARCH OF 1979.

SECTION 2
STATUS OF FGD SYSTEMS

UNIT IDENTIFICATION	ABSTRACT
SOUTHWESTERN ELECTRIC POWER HENRY W. PERKEY 1 NEW 720.0 MW (GROSS) 720.0 MW (ESC) COAL .80 %S LIGNITE LIMESTONE AIR CORRECTION DIVISION, UOP ENERGY CONSUMPTION: ****% STATUS 3 STARTUP 12/84	HENRY W. PERKEY 1 IS A WET BOTTOM LIGNITE (0.8% S, 6300 BTU/LB) FIRED UNIT PLANNED BY SOUTHWESTERN ELECTRIC POWER FOR LOCATION IN HALLSVILLE, TEXAS. A CONTRACT HAS BEEN AWARDED TO THE AIR CORRECTION DIVISION OF UOP FOR FOUR LIMESTONE SPRAY TOWERS (99+% EFFICIENCY). MIST ELIMINATION WILL BE PROVIDED BY TWO STAGE CHEVRONS, AND THE STACK WILL BE ACID BRICK LINED. NO REHEAT IS PLANNED. THE WATER LOOP WILL BE CLOSED, AND THE SLUDGE WILL BE POZ-O-TEC STABILIZED. START UP IS EXPECTED BY DECEMBER, 1983.
SPRINGFIELD CITY UTILITIES SOUTHWEST 1 NEW 194.0 MW (GROSS) 194.0 MW (ESC) COAL 3.50 %S BITUMINOUS LIMESTONE AIR CORRECTION DIVISION, UOP ENERGY CONSUMPTION: 4.6% STATUS 1 STARTUP 4/77	SPRINGFIELD CITY UTILITIES' SOUTHWEST 1 IS A PULVERIZED BITUMINOUS COAL (3.5% S, 12,500 BTU/LB) FIRED BOILER LOCATED IN SPRINGFIELD, MISSOURI. THE EMISSION CONTROL SYSTEM FOR THIS UNIT CONSISTS OF A COLD SIDE ESP FOLLOWED BY TWO UOP LIMESTONE TCA MODULES WHICH WERE DESIGNED TO REMOVE 80% OF THE FLUE GAS SO2. ONE CHEVRON/MODULE LEADS TO A 384 FOOT CEILCOTE LINED STACK. THE DRY FLYASH STABILIZED SLUDGE IS DEWATERED BY A ROTARY DRUM VACUUM AND TRUCKED TO A LANDFILL. THE SYSTEM HAS BEEN OPERATIONAL SINCE APRIL, 1977.
SPRINGFIELD WATER, LIGHT & PWR DALLMAN 3 NEW 205.0 MW (GROSS) 205.0 MW (ESC) COAL 3.30 %S LIMESTONE RESEARCH COTTRELL ENERGY CONSUMPTION: 5.9% STATUS 2 STARTUP 9/80	DALLMAN 3 OF SPRINGFIELD WATER, LIGHT, AND POWER IS A PULVERIZED COAL (3.3% S, 10,500 BTU/LB) FIRED BOILER UNDER CONSTRUCTION IN SPRINGFIELD, ILLINOIS. RESEARCH COTTRELL IS SUPPLYING A LIMESTONE FGD SYSTEM DESIGNED TO REMOVE 95% OF THE SO2 FROM 850,000 ACFM OF BOILER FLUE GAS. A HOT SIDE ESP WILL PRECEDE TWO PACKED TOWER ABSORBERS, ONE HORIZONTAL CHEVRON PER MODULE, AND A 500 FOOT ACID BRICK LINED STACK. NO REHEAT WILL BE PROVIDED. A SLUDGE DISPOSAL STRATEGY HAS NOT BEEN FINALIZED, BUT THE UTILITY IS CONSIDERING EITHER PONDING OR LANDFILL. FGD OPERATIONS SHOULD BEGIN IN JULY OF 1980.
ST. JOE ZINC G.F. WEATON 1 RETROFIT 60.0 MW (GROSS) 60.0 MW (ESC) COAL 3.00 %S CITRATE BUREAU OF MINES ENERGY CONSUMPTION: ****% STATUS 1 STARTUP 11/79	G.F. WEATON 1, OWNED BY ST. JOE ZINC, IS A COAL (3.0% S, 12,500 BTU/LB) FIRED BOILER LOCATED IN MONACA, PENNSYLVANIA. THE BUREAU OF MINES RETROFITTED A PROTOTYPE CITRATE FGD SYSTEM ON THIS UNIT, WHICH PROVIDES POWER FOR THE LOCAL UTILITY GRID. ONE VENTURI SCRUBBER/ABSORBER TRAIN FOLLOWS A COLD SIDE ESP. TWO CHEVRON MIST ELIMINATORS ARE FOLLOWED BY A COMBINATION OF INDIRECT HOT AIR AND DIRECT COMBUSTION REHEATERS, AND A 102 FOOT FIBERGLASS LINED SCRUBBER STACK. THE SYSTEM SO2 REMOVAL EFFICIENCY WILL BE OVER 90%. THE WATER LOOP IS CLOSED LOOP MODE. THE FGD SYSTEM COMMENCED OPERATION IN NOVEMBER OF 1979.
TAMPA ELECTRIC BIG BEND 4 NEW 475.0 MW (GROSS) 475.0 MW (ESC) COAL 85.03 %S PROCESS NOT SELECTED VENDOR NOT SELECTED ENERGY CONSUMPTION: ****% STATUS 5 STARTUP 3/85	UNIT 4 AT TAMPA ELECTRIC'S BIG BEND STATION IS A PLANNED DRY BOTTOM PULVERIZED COAL (2.5% S, 10,300 BTU/LB) FIRED UNIT TO BE LOCATED IN TAMPA, FLORIDA. THE FGD PROCESS HAS NOT YET BEEN CHOSEN. AN ESP WILL PROVIDE PRIMARY PARTICULATE CONTROL. THE FGD SYSTEM, WHICH WILL REMOVE 90% OF THE FLUE GAS SO2, WILL INCLUDE AN INDIRECT HOT AIR REHEATER LEADING TO A 490 FOOT CONCRETE LINED STACK.
TENNESSEE VALLEY AUTHORITY JOHNSONVILLE 1-10 RETROFIT 1450.0 MW (GROSS) 600.0 MW (ESC) COAL 3.10 %S MAGNESIUM OXIDE TVA/UNITED ENGINEERS ENERGY CONSUMPTION: ****% STATUS 5 STARTUP 12/81	UNITS 1 THROUGH 10 AT JOHNSONVILLE STATION OF TVA ARE COAL (2.6% S, 10,750 BTU/LB) FIRED BOILERS LOCATED IN NEW JOHNSONVILLE, TENNESSEE. UNITED ENGINEERS HAS BEEN AWARDED A CONTRACT TO PROVIDE ENGINEERING ASSISTANCE TO TVA FOR A 90% EFFICIENT MAGNESIUM OXIDE FGD SYSTEM TO BE RETROFITTED ON THESE UNITS. SULFURIC ACID WILL BE PRODUCED AS A BYPRODUCT FROM THIS SYSTEM, WHICH WILL FEATURE FOUR VENTURI SCRUBBER/ABSORBER TRAINS (ONE SPARE), 60% BYPASS REHEAT, AND A 600 FOOT STACK. START UP IS EXPECTED IN 1982.

SECTION 2
STATUS OF FGD SYSTEMS

UNIT IDENTIFICATION	ABSTRACT
TENNESSEE VALLEY AUTHORITY PARADISE 1 RETROFIT 704.0 MW (GROSS) 704.0 MW (ESC) COAL 4.20 %S LIMESTONE CHEMICO ENERGY CONSUMPTION: ****% STATUS 3 STARTUP 6/82	PARADISE 1 OF TVA IS A 4.2% SULFUR COAL FIRED UNIT LOCATED IN PARADISE, KENTUCKY. A CONTRACT HAS BEEN AWARDED TO CHEMICO FOR AN 84.2% EFFICIENT LIMESTONE FGD SYSTEM TO BE RETROFITTED ON THIS BOILER. SIX VENTURI SCRUBBERS AND VENTURI ABSORBER TRAINS WILL FOLLOW AN ESP. INLET FLUE GAS WILL BE USED TO HEAT WATER, WHICH IN TURN WILL BE USED TO REHEAT THE OUTLET FLUE GAS. FORCED OXIDATION WILL BE USED IN ONE MODULE TO CONTROL SCALING THROUGHOUT THE SYSTEM. THE UTILITY EXPECTS TO GET AN 80% SOLIDS LANDFILLABLE GRADE SLUDGE. OPERATIONS SHOULD START IN JUNE, 1982.
TENNESSEE VALLEY AUTHORITY PARADISE 2 RETROFIT 704.0 MW (GROSS) 704.0 MW (ESC) COAL 4.20 %S LIMESTONE CHEMICO ENERGY CONSUMPTION: ****% STATUS 3 STARTUP 3/82	PARADISE 2 OF TVA IS A 4.2% SULFUR COAL FIRED UNIT LOCATED IN PARADISE, KENTUCKY. A CONTRACT HAS BEEN AWARDED TO CHEMICO FOR AN 84.2% EFFICIENT LIMESTONE FGD SYSTEM TO BE RETROFITTED ON THIS BOILER. SIX VENTURI SCRUBBERS AND VENTURI ABSORBER TRAINS WILL FOLLOW AN ESP. INLET FLUE GAS WILL BE USED TO HEAT WATER, WHICH IN TURN WILL BE USED TO REHEAT THE OUTLET FLUE GAS. FORCED OXIDATION WILL BE USED IN ONE MODULE TO CONTROL SCALING THROUGHOUT THE SYSTEM. THE UTILITY EXPECTS TO GET AN 80% SOLIDS LANDFILLABLE GRADE SLUDGE. OPERATIONS SHOULD START IN MARCH, 1982.
TENNESSEE VALLEY AUTHORITY SHAWNEE 10A RETROFIT 10.0 MW (GROSS) 10.0 MW (ESC) COAL 2.90 %S BITUMINOUS LIME/LIMESTONE AIR CORRECTION DIVISION, UOP ENERGY CONSUMPTION: ****% STATUS 1 STARTUP 4/72	SHAWNEE 10 OF TVA IS A 2.9% SULFUR BITUMINOUS COAL FIRED BOILER LOCATED IN PADUCAH, KENTUCKY. MODULE 10A IS A RETROFIT PROTOTYPE LIME/LIMESTONE TCA SYSTEM SUPPLIED BY THE AIR CORRECTION DIVISION, UOP. THE SYSTEM UTILIZES A CHEVRON MIST ELIMINATOR AND A DIRECT COMBUSTION REHEATER, AND OPERATES IN A CLOSED WATER LOOP. THIS TEST PROGRAM IS FUNDED BY THE EPA WITH TVA AS THE CONSTRUCTOR AND FACILITY OPERATOR. THE BECHTEL CORP. OF SAN FRANCISCO IS THE MAJOR CONTRACTOR, TEST DIRECTOR, AND REPORT WRITER. THE SYSTEM HAS BEEN OPERATIONAL SINCE APRIL, 1972.
TENNESSEE VALLEY AUTHORITY SHAWNEE 10B RETROFIT 10.0 MW (GROSS) 10.0 MW (ESC) COAL 2.90 %S BITUMINOUS LIME/LIMESTONE CHEMICO ENERGY CONSUMPTION: ****% STATUS 1 STARTUP 4/72	SHAWNEE 10 OF TVA IS A 2.9% SULFUR BITUMINOUS COAL FIRED BOILER LOCATED IN PADUCAH, KENTUCKY. MODULE 10B IS A RETROFIT PROTOTYPE LIME/LIMESTONE VENTURI SCRUBBER/SPRAY TOWER ABSORBER SUPPLIED BY CHEMICO. THE SYSTEM, OPERATIONAL SINCE APRIL, 1972, INCLUDES A CHEVRON MIST ELIMINATOR AND A DIRECT COMBUSTION REHEATER, AND OPERATES IN A CLOSED WATER LOOP. THIS TEST PROGRAM IS FUNDED BY THE EPA WITH TVA AS THE CONSTRUCTOR AND FACILITY OPERATOR. THE BECHTEL CORP. OF SAN FRANCISCO IS THE MAJOR CONTRACTOR, TEST DIRECTOR, AND REPORT WRITER.
TENNESSEE VALLEY AUTHORITY WIDOWS CREEK 7 RETROFIT 575.0 MW (GROSS) 575.0 MW (ESC) COAL 3.70 %S BITUMINOUS LIMESTONE COMBUSTION ENGINEERING ENERGY CONSUMPTION: ****% STATUS 2 STARTUP 10/80	WIDOWS CREEK 7 IS A PULVERIZED BITUMINOUS COAL (3.7% S, 11,100 BTU/LB) FIRED BOILER OF TVA LOCATED IN BRIDGEPORT, ALABAMA. COMBUSTION ENGINEERING IS PRESENTLY RETROFITTING A LIMESTONE VENTRI ROD SCRUBBER/SPRAY TOWER ABSORBER FGD SYSTEM ON THIS UNIT. AN ESP WILL PRECEDE THE SCRUBBING TRAIN, AND A COMBINATION OF A BULK ENTRAINMENT SEPARATOR, TWO CHEVRON MIST ELIMINATORS AND A FINNED TUBE REHEATER FOLLOW THE SYSTEM. THE SCRUBBER SLUDGE WILL BE DISPOSED IN A SLUDGE POND. CONSTRUCTION BEGAN IN SEPTEMBER, 1978, AND START UP IS EXPECTED IN OCTOBER, 1980.
TENNESSEE VALLEY AUTHORITY WIDOWS CREEK 8 RETROFIT 550.0 MW (GROSS) 550.0 MW (ESC) COAL 3.70 %S LIMESTONE TENNESSEE VALLEY AUTHORITY ENERGY CONSUMPTION: 4.7% STATUS 1 STARTUP 5/77	WIDOWS CREEK 8 OF TVA IS A BALANCED DRAFT, TANGENTIALLY FIRED COAL (4.3% S, 10,000 BTU/LB) BOILER IN BRIDGEPORT, ALABAMA. TVA RETROFITTED THIS UNIT WITH A LIMESTONE FGD SYSTEM (80% DESIGN SO2 REMOVAL EFFICIENCY) WHICH BEGAN OPERATIONS IN MAY, 1977. AN ESP PRECEDES FOUR VARIABLE THROAT VENTURI SCRUBBER/MULTIGRID TOWER ABSORBER TRAINS (ONE OF THE TOWERS IS PACKED). ONE VERTICAL CHEVRON/TRAIN AND AN INDIRECT HOT AIR REHEATER ARE INCLUDED IN THE SYSTEM. SLUDGE FROM THE FGD SYSTEM IS PONDED.

SECTION 2
STATUS OF FGD SYSTEMS

UNIT IDENTIFICATION	ABSTRACT
TEXAS MUNICIPAL POWER AGENCY GIBBONS CREEK 1 NEW 400.0 MW (GROSS) 400.0 MW (ESC) COAL 1.06 %S LIGNITE LIMESTONE COMBUSTION ENGINEERING ENERGY CONSUMPTION: ****% STATUS 3 STARTUP 1/82	GIBBONS CREEK 1 OF THE TEXAS MUNICIPAL POWER AGENCY IS A DRY BOTTOM PULVERIZED LIGNITE (1.06% S, 4860 BTU/LB) FIRED UNIT PLANNED FOR LOCATION IN CARLOS, TEXAS. THE EMISSION CONTROL SYSTEM WILL CONSIST OF A COLD SIDE ESP FOLLOWED BY THREE 50% CAPACITY LIMESTONE SPRAY TOWERS. A CONTRACT HAS BEEN AWARDED TO COMBUSTION ENGINEERING FOR THE FGD SYSTEM, WHICH INCLUDES A CHEVRON MIST ELIMINATOR AND A STEAM COIL REHEATER. CLEANED FLUE GAS WILL BE DISCHARGED THROUGH A 465 FOOT ACID BRICK LINED STACK. THE POZ-O-TEC STABILIZED SLUDGE WILL BE USED AS STRIP MINE LANDFILL. CONSTRUCTION WILL BEGIN IN 1980, AND START UP IS EXPECTED IN JANUARY, 1982.
TEXAS POWER & LIGHT SANDOW 4 NEW 545.0 MW (GROSS) 382.0 MW (ESC) COAL 1.60 %S LIGNITE LIMESTONE COMBUSTION ENGINEERING ENERGY CONSUMPTION: ****% STATUS 2 STARTUP 7/80	SANDOW 4 IS A PULVERIZED 1.6% SULFUR LIGNITE FIRED BOILER OF TEXAS POWER AND LIGHT UNDER CONSTRUCTION IN ROCKDALE, TEXAS. COMBUSTION ENGINEERING IS SUPPLYING THREE LIMESTONE SPRAY TOWERS FOR THIS UNIT. A COLD SIDE ESP WILL PROVIDE PRIMARY PARTICULATE CONTROL. A 30% BYPASS REHEAT WILL BE USED, AND THE OVERALL SO2 REMOVAL EFFICIENCY WILL BE 75%. THE SYSTEM WILL OPERATE IN A CLOSED WATER LOOP, AND THE SLUDGE WILL BE PONDED. START UP IS EXPECTED IN JULY, 1980.
TEXAS POWER & LIGHT TWIN OAKS 1 NEW 750.0 MW (GROSS) 750.0 MW (ESC) COAL .70 %S LIGNITE LIMESTONE CHEMICO ENERGY CONSUMPTION: ****% STATUS 3 STARTUP 8/84	TWIN OAKS 1 IS A 0.75% SULFUR LIGNITE FIRED BOILER PLANNED BY TEXAS POWER AND LIGHT AND ALCOA FOR LOCATION IN BREMOND, TEXAS. A CONTRACT HAS BEEN AWARDED TO CHEMICO FOR A LIMESTONE FGD SYSTEM ON THIS UNIT. START UP IS EXPECTED IN AUGUST OF 1984.
TEXAS POWER & LIGHT TWIN OAKS 2 NEW 750.0 MW (GROSS) 750.0 MW (ESC) COAL .70 %S LIGNITE LIMESTONE CHEMICO ENERGY CONSUMPTION: ****% STATUS 3 STARTUP 8/85	TWIN OAKS 2 IS A 0.75% SULFUR LIGNITE FIRED BOILER PLANNED BY TEXAS POWER AND LIGHT AND ALCOA FOR LOCATION IN BREMOND, TEXAS. A CONTRACT HAS BEEN AWARDED TO CHEMICO FOR A LIMESTONE FGD SYSTEM ON THIS UNIT. START UP IS EXPECTED IN AUGUST OF 1985.
TEXAS UTILITIES FOREST GROVE 1 NEW 750.0 MW (GROSS) 750.0 MW (ESC) COAL .80 %S LIGNITE PROCESS NOT SELECTED VENDOR NOT SELECTED ENERGY CONSUMPTION: ****% STATUS 5 STARTUP 0/81	TEXAS UTILITIES IS PLANNING A LIGNITE (0.8% S, 7000 BTU/LB) FIRED BOILER, FOREST GROVE 1, WHICH WILL BE LOCATED IN ATHENS, TEXAS. THE UTILITY IS PRESENTLY REQUESTING BIDS ON AN FGD SYSTEM FOR THIS UNIT. TWO ESP'S WILL PROVIDE PRIMARY PARTICULATE CONTROL, AND NO STACK GAS REHEAT IS PLANNED. START UP IS EXPECTED IN LATE 1981.
TEXAS UTILITIES MARTIN LAKE 1 NEW 793.0 MW (GROSS) 595.0 MW (ESC) COAL .90 %S LIGNITE LIMESTONE RESEARCH COTTRELL ENERGY CONSUMPTION: 1.3% STATUS 1 STARTUP 4/77	TEXAS UTILITIES' MARTIN LAKE 1 IS A LIGNITE (0.9% S, 7380 BTU/LB) FIRED BOILER IN TATUM, TEXAS. THIS UNIT IS EQUIPPED WITH AN EMISSION CONTROL SYSTEM WHICH INCLUDES A COLD SIDE ESP AND A LIMESTONE FGD SYSTEM, BOTH SUPPLIED BY RESEARCH COTTRELL. THE FGD SYSTEM CONSISTS OF SIX PACKED SPRAY TOWER ABSORBERS WHICH TREAT 75% OF THE TOTAL BOILER FLUE GAS. THE REMAINING FLUE GAS IS BYPASSED FOR REHEAT. THE TOTAL DESIGN SO2 REMOVAL EFFICIENCY IS 70.5%. TWO CHEVRONS/MODULE PROVIDE MIST ELIMINATION. THE FLUE GAS CLEANING WASTES ARE FLYASH STABILIZED AND DISPOSED IN AN ON-SITE LANDFILL. THE SYSTEM OPERATES IN A CLOSED WATER LOOP. INITIAL SYSTEM OPERATIONS TOOK PLACE IN APRIL, 1977.

SECTION 2
STATUS OF FGD SYSTEMS

UNIT IDENTIFICATION	ABSTRACT
TEXAS UTILITIES MARTIN LAKE 2 NEW 793.0 MW (GROSS) 595.0 MW (ESC) COAL .90 %S LIGNITE LIMESTONE RESEARCH COTTRELL ENERGY CONSUMPTION: 1.3% STATUS 1 STARTUP 5/78	TEXAS UTILITIES' MARTIN LAKE 2 IS A LIGNITE (0.9% S, 7380 BTU/LB) FIRED BOILER IN TATUM, TEXAS. THIS UNIT IS EQUIPPED WITH AN EMISSION CONTROL SYSTEM WHICH INCLUDES A COLD SIDE ESP AND A LIMESTONE FGD SYSTEM, BOTH SUPPLIED BY RESEARCH COTTRELL. THE FGD SYSTEM CONSISTS OF SIX PACKED SPRAY TOWER ABSORBERS WHICH TREAT 75% OF THE TOTAL BOILER FLUE GAS. THE REMAINING FLUE GAS IS BYPASSED FOR REHEAT. THE TOTAL DESIGN SO2 REMOVAL EFFICIENCY IS 70.5%. TWO CHEVRONS/MODULE PROVIDE MIST ELIMINATION. THE FLUE GAS CLEANING WASTES ARE FLYASH STABILIZED AND DISPOSED IN AN ON-SITE LANDFILL. THE SYSTEM OPERATES IN A CLOSED WATER LOOP. INITIAL SYSTEM OPERATIONS TOOK PLACE IN MAY, 1978.
TEXAS UTILITIES MARTIN LAKE 3 NEW 793.0 MW (GROSS) 595.0 MW (ESC) COAL .90 %S LIGNITE LIMESTONE RESEARCH COTTRELL ENERGY CONSUMPTION: 1.3% STATUS 1 STARTUP 2/79	TEXAS UTILITIES' MARTIN LAKE 3 IS A LIGNITE (0.9% S, 7380 BTU/LB) FIRED BOILER IN TATUM, TEXAS. THIS UNIT IS EQUIPPED WITH AN EMISSION CONTROL SYSTEM WHICH INCLUDES A COLD SIDE ESP AND A LIMESTONE FGD SYSTEM, BOTH SUPPLIED BY RESEARCH COTTRELL. THE FGD SYSTEM CONSISTS OF SIX PACKED SPRAY TOWER ABSORBERS WHICH TREAT 75% OF THE TOTAL BOILER FLUE GAS. THE REMAINING FLUE GAS IS BYPASSED FOR REHEAT. THE TOTAL DESIGN SO2 REMOVAL EFFICIENCY IS 70.5%. TWO CHEVRONS/MODULE PROVIDE MIST ELIMINATION. THE FLUE GAS CLEANING WASTES ARE FLYASH STABILIZED AND DISPOSED IN AN ON-SITE LANDFILL. THE SYSTEM OPERATES IN A CLOSED WATER LOOP. INITIAL SYSTEM OPERATIONS TOOK PLACE IN FEBRUARY, 1979.
TEXAS UTILITIES MARTIN LAKE 4 NEW 750.0 MW (GROSS) 750.0 MW (ESC) COAL .90 %S LIGNITE LIMESTONE RESEARCH COTTRELL ENERGY CONSUMPTION: ****% STATUS 3 STARTUP 0/85	MARTIN LAKE 4 OF TEXAS UTILITIES IS A LIGNITE (0.9% S, 7380 BTU/LB) FIRED BOILER UNDER CONSTRUCTION IN TATUM, TEXAS. A CONTRACT FOR A LIMESTONE FGD SYSTEM FOR THIS UNIT HAS BEEN AWARDED TO RESEARCH COTTRELL. CONSTRUCTION HAS NOT YET BEGUN ON THE FGD SYSTEM. FGD START UP IS EXPECTED IN 1985 OR 1986.
TEXAS UTILITIES MILL CREEK 1 NEW 750.0 MW (GROSS) 750.0 MW (ESC) COAL ***** %S LIGNITE PROCESS NOT SELECTED VENDOR NOT SELECTED ENERGY CONSUMPTION: ****% STATUS 6 STARTUP 0/85	MILL CREEK 1 OF TEXAS UTILITIES IS A PLANNED LIGNITE FIRED UNIT TO BE LOCATED IN HENDERSON, TEXAS. THE UTILITY WILL INCLUDE AN FGD SYSTEM ON THIS UNIT, BUT NO DECISIONS HAVE BEEN MADE AS TO THE PROCESS TYPE OR VENDOR. ESP'S WILL PROVIDE PRIMARY PARTICULATE CONTROL. START UP IS EXPECTED IN 1985.
TEXAS UTILITIES MILL CREEK 2 NEW 750.0 MW (GROSS) 750.0 MW (ESC) COAL ***** %S LIGNITE PROCESS NOT SELECTED VENDOR NOT SELECTED ENERGY CONSUMPTION: ****% STATUS 6 STARTUP 0/86	MILL CREEK 2 OF TEXAS UTILITIES IS A PLANNED LIGNITE FIRED UNIT TO BE LOCATED IN HENDERSON, TEXAS. THE UTILITY WILL INCLUDE AN FGD SYSTEM ON THIS UNIT, BUT NO DECISIONS HAVE BEEN MADE AS TO THE PROCESS TYPE OR VENDOR. ESP'S WILL PROVIDE PRIMARY PARTICULATE CONTROL. START UP IS EXPECTED IN 1986.
TEXAS UTILITIES MONTICELLO 3 NEW 800.0 MW (GROSS) 800.0 MW (ESC) COAL 1.50 %S LIGNITE LIMESTONE CHEMICO ENERGY CONSUMPTION: ****% STATUS 1 STARTUP 5/78	MONTICELLO 3 OF TEXAS UTILITIES IS A LIGNITE (1.5% S, 7000 BTU/LB) FIRED UNIT IN MT. PLEASANT, TEXAS. THIS UNIT'S EMISSION CONTROL SYSTEM CONSISTS OF TWO COLD SIDE ESP'S FOLLOWED BY THREE CHEMICO LIMESTONE SPRAY TOWERS (74% DESIGN SO2 REMOVAL EFFICIENCY), ONE HORIZONTAL CHEVRON MIST ELIMINATOR/MODULE, AND AN INDIRECT HOT AIR REHEATER. THE WATER LOOP IS CLOSED, AND THE FLYASH STABILIZED SLUDGE IS DISPOSED IN AN ON SITE LANDFILL. THIS SYSTEM HAS BEEN OPERATIONAL SINCE MAY OF 1978.

SECTION 2
STATUS OF FGD SYSTEMS

UNIT IDENTIFICATION	ABSTRACT
TUCSON GAS & ELECTRIC SPRINGERVILLE 1 NEW 370.0 MW (GROSS) 370.0 MW (ESC) COAL ***** %S SUBBITUMINOUS LIME/SPRAY DRYING JOY MFG/NIRO ATOMIZER ENERGY CONSUMPTION: ****% STATUS 3 STARTUP 0/85	TUCSON GAS AND ELECTRIC WILL BE BUILDING TWO NEW UNITS IN SPRINGERVILLE, COLORADO, SPRINGERVILLE 1 AND 2. THE UNITS WILL FIRE PULVERIZED SUBBITUMINOUS COAL (0.53-0.69% S AND 8500-8900 BTU/LB). A CONTRACT HAS BEEN AWARDED TO JOY MANUFACTURING/NIRO ATOMIZER FOR A LIME/SPRAY DRYING FGD SYSTEM TO CONTROL PARTICULATE MATTER AND SO2 EMISSIONS. THE SYSTEM WILL BE DESIGNED TO ACCOMODATE A REHEATER (SHOULD ONE BE REQUIRED) AND WILL OPERATE IN A CLOSED WATER LOOP. CLEANED FLUE GAS WILL EXIT THE SYSTEM VIA A 500 FOOT CONCRETE STACK. OPERATIONS ARE SCHEDULED TO BEGIN IN 1985.
TUCSON GAS & ELECTRIC SPRINGERVILLE 2 NEW 370.0 MW (GROSS) 370.0 MW (ESC) COAL ***** %S SUBBITUMINOUS LIME/SPRAY DRYING JOY MFG/NIRO ATOMIZER ENERGY CONSUMPTION: ****% STATUS 3 STARTUP 0/87	TUCSON GAS AND ELECTRIC WILL BE BUILDING TWO NEW UNITS IN SPRINGERVILLE, COLORADO, SPRINGERVILLE 1 AND 2. THE UNITS WILL FIRE PULVERIZED SUBBITUMINOUS COAL (0.53-0.69% S AND 8500-8900 BTU/LB). A CONTRACT HAS BEEN AWARDED TO JOY MANUFACTURING/NIRO ATOMIZER FOR A LIME/SPRAY DRYING FGD SYSTEM TO CONTROL PARTICULATE MATTER AND SO2 EMISSIONS. THE SYSTEM WILL BE DESIGNED TO ACCOMODATE A REHEATER (SHOULD ONE BE REQUIRED) AND WILL OPERATE IN A CLOSED WATER LOOP. CLEANED FLUE GAS WILL EXIT THE SYSTEM VIA A 500 FOOT CONCRETE STACK. OPERATIONS ARE SCHEDULED TO BEGIN IN 1987.
UTAH POWER & LIGHT HUNTER 1 NEW 400.0 MW (GROSS) 360.0 MW (ESC) COAL .55 %S BITUMINOUS LIME CHEMICO ENERGY CONSUMPTION: ****% STATUS 1 STARTUP 5/79	HUNTER 1 OF UTAH POWER AND LIGHT IS A COAL (0.55% S, 12,500 BTU/LB) FIRED UNIT IN CASTLEDALE, UTAH. CHEMICO SUPPLIED A PEBBLE LIME WET SCRUBBING SYSTEM WHICH BECAME OPERATIONAL IN MAY, 1979. THE SCRUBBING SYSTEM IS DESIGNED TO OPERATE IN AN OPEN WATER LOOP WITH AN SO2 REMOVAL EFFICIENCY OF 80%. PRIMARY PARTICULATE CONTROL IS PROVIDED BY AN UPSTREAM ESP, AND STACK GAS REHEAT IS PROVIDED BY BYPASS. THE SLUDGE IS FLYASH STABILIZED AND DISPOSED ON-SITE.
UTAH POWER & LIGHT HUNTER 2 NEW 400.0 MW (GROSS) 360.0 MW (ESC) COAL .55 %S LIME CHEMICO ENERGY CONSUMPTION: ****% STATUS 2 STARTUP 6/80	UTAH POWER AND LIGHT'S HUNTER 2 IS A COAL (0.55% S, 12,500 BTU/LB) FIRED UNIT UNDER CONSTRUCTION IN CASTLEDALE, UTAH. CHEMICO IS SUPPLYING A PEBBLE LIME WET SCRUBBING SYSTEM DESIGNED TO OPERATE IN AN OPEN WATER LOOP WITH AN SO2 REMOVAL EFFICIENCY OF 80%. AN UPSTREAM ESP PROVIDES PRIMARY PARTICULATE CONTROL, AND A BYPASS SYSTEM PROVIDES STACK GAS REHEAT. THE SLUDGE WILL BE FLYASH STABILIZED AND DISPOSED ON-SITE. START UP OF BOTH THE BOILER AND FGD SYSTEM IS EXPECTED IN JUNE, 1980.
UTAH POWER & LIGHT HUNTER 3 NEW 400.0 MW (GROSS) 400.0 MW (ESC) COAL .55 %S BITUMINOUS LIMESTONE CHEMICO ENERGY CONSUMPTION: ****% STATUS 3 STARTUP 0/83	UTAH POWER AND LIGHT HAS PLANS FOR TWO NEW UNITS, HUNTER 3 AND 4, TO BE CONSTRUCTED IN CASTLEDALE, UTAH. A CONTRACT HAS BEEN AWARDED TO CHEMICO FOR A LIME, NONREGENERABLE FGD UNIT FOR EMISSION CONTROL. THE PULVERIZED COAL FIRED UNITS (0.55% S, 12,500 BTU/LB) ARE TO BEGIN OPERATIONS IN 1983 AND 1985, RESPECTIVELY.
UTAH POWER & LIGHT HUNTER 4 NEW 400.0 MW (GROSS) 400.0 MW (ESC) COAL .55 %S BITUMINOUS LIMESTONE CHEMICO ENERGY CONSUMPTION: ****% STATUS 3 STARTUP 0/85	UTAH POWER AND LIGHT HAS PLANS FOR TWO NEW UNITS, HUNTER 3 AND 4, TO BE CONSTRUCTED IN CASTLEDALE, UTAH. A CONTRACT HAS BEEN AWARDED TO CHEMICO FOR A LIME, NONREGENERABLE FGD UNIT FOR EMISSION CONTROL. THE PULVERIZED COAL FIRED UNITS (0.55% S, 12,500 BTU/LB) ARE TO BEGIN OPERATIONS IN 1983 AND 1985, RESPECTIVELY.

SECTION 2
STATUS OF FGD SYSTEMS

UNIT IDENTIFICATION	ABSTRACT
UTAH POWER & LIGHT HUNTINGTON 1 NEW 430.0 MW (GROSS) 366.0 MW (ESC) COAL .55 %S BITUMINOUS LIME CHEMICO ENERGY CONSUMPTION: 1.6% STATUS 1 STARTUP 5/78	HUNTINGTON 1 OF UTAH POWER IS A TANGENTIALLY FIRED PULVERIZED COAL (0.55% S, 12,500 BTU/LB) BOILER IN PRICE, UTAH. A COLD SIDE ESP TREATS 1,742,000 ACFM OF FLUE GAS AND IS FOLLOWED BY A CHEMICO LIME FGD SYSTEM CONSISTING OF FOUR SPRAY TOWERS (80% DESIGN EFFICIENCY). ONE FOUR PASS CHEVRON/MODULE PROVIDES MIST ELIMINATION, AND A COMBINATION OF A STEAM TUBE AND 10-20% BYPASS REHEATERS BOOST THE GAS TEMPERATURE 45-50 DEG F. THE SYSTEM OPERATES IN A CLOSED WATER LOOP, AND THE FLYASH STABILIZED SLUDGE IS TRUCKED TO AN ON-SITE LANDFILL. THE SYSTEM INCLUDES A 600 FOOT ACID BRICK LINED STACK, AND HAS BEEN OPERATIONAL SINCE MAY OF 1978.
WISCONSIN POWER & LIGHT COLUMBIA 2 RETROFIT 527.0 MW (GROSS) 316.0 MW (ESC) COAL .80 %S LIME/ALKALINE FLYASH CHEMICO ENERGY CONSUMPTION: ****% STATUS 3 STARTUP 1/82	UNIT 2 AT WISCONSIN POWER AND LIGHT'S COLUMBIA STATION IN PORTAGE, WISCONSIN IS A PULVERIZED COAL (0.8% S, 8600 BTU/LB) FIRED BOILER WHICH BEGAN OPERATIONS IN 1978. CHEMICO HAS BEEN AWARDED A CONTRACT FOR A RETROFIT LIME/ALKALINE FLYASH FGD SYSTEM CONSISTING OF TWO SPRAY TOWER ABSORBERS, A HORIZONTAL CHEVRON MIST ELIMINATOR AND 20% BYPASS REHEAT. A HOT SIDE ESP WILL PROVIDE PRIMARY PARTICULATE CONTROL. THE CLEANED GAS WILL BE DISCHARGED THROUGH A 650 FOOT GUNITE COATED CARBON STEEL LINED STACK. THE WATER LOOP WILL BE CLOSED, AND THE LIME AND FLYASH STABILIZED SLUDGE WILL BE LANDFILLED. CONSTRUCTION SHOULD BEGIN AROUND MARCH OF 1980, AND PROJECTED FGD SYSTEM START UP DATE IS JANUARY, 1982.

SECTION 3
DESIGN AND PERFORMANCE DATA FOR OPERATIONAL DOMESTIC FGD SYSTEMS

COMPANY NAME	ALABAMA ELECTRIC COOP	
PLANT NAME	TOMBIGBEE	
UNIT NUMBER	2	
CITY	LEROY	
STATE	ALABAMA	
REGULATORY CLASSIFICATION	B	
PARTICULATE EMISSION LIMITATION - NG/J	******	(****** LB/MMBTU)
SO2 EMISSION LIMITATION - NG/J	516.	(1.200 LB/MMBTU)
NET PLANT GENERATING CAPACITY - MW	525.0	
GROSS UNIT GENERATING CAPACITY - MW	255.0	
NET UNIT GENERATING CAPACITY W/FGD - MW	235.0	
NET UNIT GENERATING CAPACITY WO/FGD - MW	243.0	
EQUIVALENT SCRUBBED CAPACITY - MW	179.0	
** BOILER DATA		
SUPPLIER	RILEY STOKER	
TYPE	PULVERIZED COAL	
SERVICE LOAD	BASE	
COMMERCIAL SERVICE DATE	5/78	
MAXIMUM BOILER FLUE GAS FLOW - CU.M/S	449.72	(953000 ACFM)
FLUE GAS TEMPERATURE - C	143.9	(291 F)
STACK HEIGHT - M	122.	(400 FT)
STACK TOP DIAMETER - M	*******	(***** FT)
** FUEL DATA		
FUEL TYPE	COAL	
FUEL GRADE	BITUMINOUS	
AVERAGE HEAT CONTENT - J/G	26749.	(11500 BTU/LB)
RANGE HEAT CONTENT - BTU/LB		11000-12000
AVERAGE ASH CONTENT - %	14.00	
RANGE ASH CONTENT - %	10-16	
AVERAGE MOISTURE CONTENT - %	7.00	
RANGE MOISTURE CONTENT - %	******	
AVERAGE SULFUR CONTENT - %	1.15	
RANGE SULFUR CONTENT - %	0.8-1.5	
AVERAGE CHLORIDE CONTENT - %	********	
RANGE CHLORIDE CONTENT - %	******	
** ESP		
NUMBER	1	
TYPE	HOT SIDE	
SUPPLIER	RESEARCH COTTRELL	
PARTICULATE DESIGN REMOVAL EFFICIENCY - %	99.3	
FLUE GAS CAPACITY - CU.M/S	449.7	(953000 ACFM)
FLUE GAS TEMPERATURE - C	143.9	(291 F)
** PARTICULATE SCRUBBER		
TYPE	NONE	
** FGD SYSTEM		
SALEABLE PRODUCT/THROWAWAY PRODUCT	THROWAWAY PRODUCT	
GENERAL PROCESS TYPE	WET SCRUBBING	
PROCESS TYPE	LIMESTONE	
PROCESS ADDITIVES	NONE	
SYSTEM SUPPLIER	PEABODY PROCESS SYSTEMS	
A-E FIRM	BURNS & MCDONNELL	
DEVELOPMENT LEVEL	FULL SCALE	
NEW/RETROFIT	NEW	
PARTICULATE DESIGN REMOVAL EFFICIENCY - %	99.30	
SO2 DESIGN REMOVAL EFFICIENCY - %	85.00	
COMMERCIAL DATE	9/78	
INITIAL START-UP	9/78	
CONSTRUCTION INITIATION	12/75	
CONTRACT AWARDED	8/75	
ABSORBER SPARE CAPACITY INDEX - %	.0	
ABSORBER SPARE COMPONENT INDEX	.0	
** ABSORBER		
NUMBER	2	
TYPE	SPRAY TOWER	
INITIAL START UP	9/78	
SUPPLIER	PEABODY PROCESS SYSTEMS	

ALABAMA ELECTRIC COOP: TOMBIGBEE 2 (CONT.)

NUMBER OF STAGES	6	
DIMENSIONS - FT	24 DIA X 90 HIGH	
SHELL MATERIAL	CARBON STEEL	
SHELL LINER MATERIAL	RUBBER LINED	
BOILER LOAD/ABSORBER - %	35.0	
GAS FLOW - CU.M/S	127.41	(270000 ACFM)
GAS TEMPERATURE - C	54.4	(130 F)
LIQUID RECIRCULATION RATE - LITER/S	1259.	(19980 GPM)
L/G RATIO - L/CU.M	9.4	(70.0 GAL/1000ACF)
SO2 DESIGN REMOVAL EFFICIENCY - %	85.0	

** FANS

NUMBER	2	
TYPE	BOILER ID	
CONSTRUCTION MATERIALS	CARBON STEEL	
SERVICE - WET/DRY	DRY	
CAPACITY - CU.M/S	225.10	(477000 ACFM)

** MIST ELIMINATOR

NUMBER	4	
TYPE	CHEVRON	
CONSTRUCTION MATERIAL	PLASTIC	
CONFIGURATION	HORIZONTAL	
NUMBER OF STAGES	2	
NUMBER OF PASSES	3	
PRESSURE DROP - KPA	.0	(.1 IN-H2O)

** MIST ELIMINATOR

NUMBER	2
CONFIGURATION	HORIZONTAL
NUMBER OF STAGES	1

** PUMPS

SERVICE	NUMBER
ABSORBER RECIRCULATION	6
LIMESTONE MILL SLURRY RECIRCULATION	2
LIMESTONE SLURRY FEED	2
MIST ELIMINATOR WASH	2
WASTE SLURRY	2
SUPERNATE RETURN	1

** TANKS

SERVICE	NUMBER
SLURRY RECYCLE	1
LIMESTONE SLURRY	1
WASH WATER	1

** REHEATER

NUMBER	1
TYPE	BYPASS
HEATING MEDIUM	BYPASS GAS
ENERGY REQUIRED	NONE

** THICKENER

NUMBER	1

** WATER LOOP

TYPE	CLOSED	
FRESH MAKEUP WATER ADDITION - LITERS/S	8.8	(140 GPM)

** REAGENT PREPARATION EQUIPMENT

NUMBER OF BALL MILLS	1	
BALL MILL CAPACITY- M T/H	9.1	(10.0 TPH)
REAGENT PRODUCT - % SLURRY SOLIDS	35.0	

** TREATMENT

** DISPOSAL

NATURE	FINAL
TYPE	LINED POND
LOCATION	ON-SITE
TRANSPORTATION	PUMPED
AREA - ACRES	34.8

ALABAMA ELECTRIC COOP: TOMBIGBEE 2 (CONT.)

PERFORMANCE DATA

PERIOD	MODULE	AVAILABILITY	OPERABILITY	RELIABILITY	UTILIZATION	% REMOVAL SO2	% REMOVAL PART.	PER HOURS	BOILER HOURS	FGD HOURS	CAP. FACTOR
9/78	A		81.4		20.7						
	B		63.9		16.3						
	SYSTEM	81.4	81.4	81.4	81.4			720	183	149	

** PROBLEMS/SOLUTIONS/COMMENTS

INITIAL OPERATION OF THE FGD SYSTEM BEGAN ON SEPTEMBER 23.

10/78	A		57.0		45.7						
	B		63.9		46.2						
	SYSTEM	66.3	57.9	57.9	46.4			744	596	345	
11/78	A		82.4		78.2						
	B		49.3		46.8						
	SYSTEM	88.9	88.4	88.4	83.9			720	683	604	

** PROBLEMS/SOLUTIONS/COMMENTS

IN LATE OCTOBER AND EARLY NOVEMBER BREAKS WERE FOUND IN THE FIBERGLASS PIPING LEADING TO AND FROM THE DISPOSAL POND. THE PROBLEMS WERE QUICKLY CORRECTED BY THE ARCHITECT/ENGINEER.

12/78	A		97.6		91.8						
	B		93.1		87.6						
	SYSTEM	97.8	97.6	97.6	91.8			744	700	683	
1/79	A		75.3		75.1						
	B		65.8		65.6						
	SYSTEM	89.2	89.2	89.2	89.0			744	742	662	

** PROBLEMS/SOLUTIONS/COMMENTS

SOME PLUGGING WAS ENCOUNTERED IN THE MIST ELIMINATOR DUE TO AN ESP OUTAGE.

2/79	A		94.9		41.9						
	B		96.3		42.6						
	SYSTEM	98.4	96.2	96.2	42.6			672	297	286	
3/79	A		93.1		92.9						
	B		94.4		93.5						
	SYSTEM	94.5	94.4	94.4	93.5			744	737	696	
4/79	A		100.0		40.6						
	B		100.0		40.6						
	SYSTEM	100.0	100.0	100.0	40.6			720	292	292	

** PROBLEMS/SOLUTIONS/COMMENTS

THE UTILITY HAS REPORTED THAT NO UNUSUAL PROBLEMS HAVE OCCURRED.

5/79	A		48.8		47.6						
	B		58.9		57.4						
	SYSTEM	92.7	92.6	92.6	90.2			744	725	671	
6/79	A		1.8		1.0						
	B										
	SYSTEM	98.3	96.9	96.9	52.6			720	391	379	

** PROBLEMS/SOLUTIONS/COMMENTS

THE UTILITY REPORTED THAT THE FGD SYSTEM OPERATED WELL DURING MAY AND JUNE WITH THE EXCEPTION THAT THE MIST ELIMINATORS HAD TO BE REPLACED. THE MIST ELIMINATORS WERE DEFORMED DURING A TEMPERATURE EXCURSION.

7/79	A		20.9		16.5						
	B		70.9		55.9						
	SYSTEM	93.0	91.1	91.1	71.9			744	587	535	
8/79	A		88.9		67.6						

PERIOD	MODULE	AVAILABILITY	OPERABILITY	RELIABILITY	UTILIZATION	% REMOVAL SO2	% REMOVAL PART.	PER HOURS	BOILER HOURS	FGD HOURS	CAP. FACTOR
	B		24.9		18.9						
	SYSTEM	99.2	92.3	92.3	70.2			744	566	522	

** PROBLEMS/SOLUTIONS/COMMENTS

THE SCRUBBER WAS NOT OPERATED FOR ABOUT 6 HOURS DUE TO A NECESSARY ADJUSTMENT TO THE MODICON CONTROLLER.

THE SCRUBBER WAS BYPASSED FOR ABOUT 37 HOURS DUE TO AN ESP OUTAGE.

9/79	A		83.2		68.3						
	B		21.8		17.9						
	SYSTEM	100.0	92.9	92.9	76.3			720	591	549	

** PROBLEMS/SOLUTIONS/COMMENTS

THE UTILITY REPORTED THAT THE SYSTEM WAS AVAILABLE AT ALL TIMES DURING SEPTEMBER.

10/79	A										
	B										
	SYSTEM	.0	.0		.0			744	0	0	

** PROBLEMS/SOLUTIONS/COMMENTS

THE UNIT NO. 2 GENERATOR WAS DOWN THE ENTIRE MONTH OF OCTOBER.

11/79	A		.0		.0						
	B		.0		.0						
	SYSTEM	100.0	.0		.0			720	0	0	

** PROBLEMS/SOLUTIONS/COMMENTS

THE GENERATOR REMAINED DOWN THROUGH NOVEMBER.

12/79	A		22.6		4.0						
	B		6.0		1.0						
	SYSTEM	96.7	22.6		4.0			744	133	30	

** PROBLEMS/SOLUTIONS/COMMENTS

THE OPERABILITY OF THE FGD UNIT WAS LOW DUE TO THE START-UP OF THE BOILER.

THE FGD SYSTEM WAS NOT AVAILABLE FOR 24 HOURS DUE TO A RUPTURED WASTE SLURRY LINE.

SECTION 3
DESIGN AND PERFORMANCE DATA FOR OPERATIONAL DOMESTIC FGD SYSTEMS

COMPANY NAME	ALABAMA ELECTRIC COOP	
PLANT NAME	TOMBIGBEE	
UNIT NUMBER	3	
CITY	LEROY	
STATE	ALABAMA	
REGULATORY CLASSIFICATION	B	
PARTICULATE EMISSION LIMITATION - NG/J	******	(****** LB/MMBTU)
SO2 EMISSION LIMITATION - NG/J	516.	(1.200 LB/MMBTU)
NET PLANT GENERATING CAPACITY - MW	*******	
GROSS UNIT GENERATING CAPACITY - MW	255.0	
NET UNIT GENERATING CAPACITY W/FGD - MW	235.0	
NET UNIT GENERATING CAPACITY WO/FGD - MW	243.0	
EQUIVALENT SCRUBBED CAPACITY - MW	179.0	
** BOILER DATA		
SUPPLIER	RILEY STOKER	
TYPE	PULVERIZED COAL	
SERVICE LOAD	BASE	
COMMERCIAL SERVICE DATE	6/79	
MAXIMUM BOILER FLUE GAS FLOW - CU.M/S	449.72	(953000 ACFM)
FLUE GAS TEMPERATURE - C	143.9	(291 F)
STACK HEIGHT - M	122.	(400 FT)
STACK TOP DIAMETER - M	*******	(***** FT)
** FUEL DATA		
FUEL TYPE	COAL	
FUEL GRADE	BITUMINOUS	
AVERAGE HEAT CONTENT - J/G	26749.	(11500 BTU/LB)
RANGE HEAT CONTENT - BTU/LB		11000-12000
AVERAGE ASH CONTENT - %	14.00	
RANGE ASH CONTENT - %	10-16	
AVERAGE MOISTURE CONTENT - %	7.00	
RANGE MOISTURE CONTENT - %	******	
AVERAGE SULFUR CONTENT - %	1.15	
RANGE SULFUR CONTENT - %	0.8-1.5	
AVERAGE CHLORIDE CONTENT - %	********	
RANGE CHLORIDE CONTENT - %	******	
** ESP		
NUMBER	1	
TYPE	HOT SIDE	
SUPPLIER	RESEARCH COTTRELL	
PARTICULATE DESIGN REMOVAL EFFICIENCY - %	99.3	
FLUE GAS CAPACITY - CU.M/S	449.7	(953000 ACFM)
FLUE GAS TEMPERATURE - C	143.9	(291 F)
** PARTICULATE SCRUBBER		
TYPE	NONE	
** FGD SYSTEM		
SALEABLE PRODUCT/THROWAWAY PRODUCT	THROWAWAY PRODUCT	
GENERAL PROCESS TYPE	WET SCRUBBING	
PROCESS TYPE	LIMESTONE	
PROCESS ADDITIVES	NONE	
SYSTEM SUPPLIER	PEABODY PROCESS SYSTEMS	
A-E FIRM	BURNS & MCDONNELL	
DEVELOPMENT LEVEL	FULL SCALE	
NEW/RETROFIT	NEW	
PARTICULATE DESIGN REMOVAL EFFICIENCY - %	99.30	
SO2 DESIGN REMOVAL EFFICIENCY - %	85.00	
INITIAL START-UP	6/79	
CONTRACT AWARDED	8/75	
ABSORBER SPARE CAPACITY INDEX - %	.0	
ABSORBER SPARE COMPONENT INDEX	.0	
** ABSORBER		
NUMBER	2	
TYPE	SPRAY TOWER	
INITIAL START UP	6/79	
SUPPLIER	PEABODY PROCESS SYSTEMS	
SHELL MATERIAL	CARBON STEEL	
SHELL LINER MATERIAL	CEILCOTE	

ALABAMA ELECTRIC COOP: TOMBIGBEE 3 (CONT.)

BOILER LOAD/ABSORBER - %	35.0	
GAS FLOW - CU.M/S	158.09	(335000 ACFM)
GAS TEMPERATURE - C	143.9	(291 F)
LIQUID RECIRCULATION RATE - LITER/S	1259.	(19980 GPM)
L/G RATIO - L/CU.M	9.4	(70.0 GAL/1000ACF)
SO2 DESIGN REMOVAL EFFICIENCY - %	85.0	

** FANS

NUMBER	2	
TYPE	BOILER ID (DIRECT COUPLED)	
CONSTRUCTION MATERIALS	CARBON STEEL	
SERVICE - WET/DRY	DRY	
CAPACITY - CU.M/S	225.10	(477000 ACFM)

** MIST ELIMINATOR

NUMBER	2	
TYPE	CHEVRON	
CONFIGURATION	HORIZONTAL	
NUMBER OF STAGES	2	
NUMBER OF PASSES	3	
WASH SYSTEM	TOP AND BOTTOM	
PRESSURE DROP - KPA	.2	(1.0 IN-H2O)

** MIST ELIMINATOR

NUMBER	2
CONFIGURATION	HORIZONTAL
NUMBER OF STAGES	1

** PUMPS

SERVICE	NUMBER
ABSORBER RECIRCULATION	6
MILL RECIRCULATION	2
SLURRY FEED	2
WASH WATER	3
WASTE SLURRY	2
SUPERNATE RETURN	1

** TANKS

SERVICE	NUMBER
RECYCLE	1
LIMESTONE SLURRY	1
WASH WATER	1

** REHEATER

NUMBER	1
TYPE	BYPASS
HEATING MEDIUM	BYPASS GAS
ENERGY REQUIRED	NONE

** THICKENER

NUMBER	1

** WATER LOOP

TYPE	CLOSED	
FRESH MAKEUP WATER ADDITION - LITERS/S	8.8	(140 GPM)

** REAGENT PREPARATION EQUIPMENT

NUMBER OF BALL MILLS	1	
BALL MILL CAPACITY- M T/H	9.1	(10.0 TPH)
REAGENT PRODUCT - % SLURRY SOLIDS	35.0	

** TREATMENT

** DISPOSAL

NATURE	FINAL
TYPE	LINED POND
LOCATION	ON-SITE
TRANSPORTATION	PUMPED
AREA - ACRES	34.8

ALABAMA ELECTRIC COOP: TOMBIGBEE 3 (CONT.)

PERIOD	MODULE	AVAILABILITY	OPERABILITY	RELIABILITY	UTILIZATION	% REMOVAL SO2	% REMOVAL PART.	PER HOURS	BOILER HOURS	FGD HOURS	CAP. FACTOR
			PERFORMANCE DATA								
7/79	A		23.7		9.4						
	B		27.8		11.0						
	SYSTEM	72.7	28.1	28.1	11.2			744	295		83
8/79	A		59.4		39.1						
	B		44.5		29.3						
	SYSTEM	99.7	63.7	63.7	41.9			744	490		312

** PROBLEMS/SOLUTIONS/COMMENTS

AN ADJUSTMENT TO THE MODICON CONTROLLER CAUSED A SCRUBBER OUTAGE OF ABOUT 2 HOURS.

THE SCRUBBER WAS DOWN DURING AN ESP OUTAGE FOR APPROXIMATELY 34 HOURS.

9/79	A		73.0		13.9						
	B		10.9		2.1						
	SYSTEM	100.0	75.2	75.2	14.3			720	137		103

** PROBLEMS/SOLUTIONS/COMMENTS

CONTINUING GENERATOR PROBLEMS CAUSED THE UNIT'S UTILIZATION TO BE LOW DURING SEPTEMBER.

10/79	A		82.7		82.7						
	B		90.9		90.9						
	SYSTEM	99.5	94.5		94.5			744	744		704

** PROBLEMS/SOLUTIONS/COMMENTS

THE FGD UNIT WAS SHUT DOWN FOR 37 HOURS FOR BOILER START-UPS AND PRECIPITATOR TESTS.

PROBLEMS WITH THE LIMESTONE BALL MILL LUBRICATION SYSTEM, WHICH CAUSED A SHORTAGE OF REAGENT SLURRY, KEEP THE FGD SYSTEM OFF LINE FOR 4 HOURS.

11/79	A		78.6		78.6						
	B		89.3		89.3						
	SYSTEM	96.7	91.0		91.0			720	720		655

** PROBLEMS/SOLUTIONS/COMMENTS

DURING NOVEMBER THE FGD UNIT WAS DOWN 23 HOURS BECAUSE THE ESP FLYASH HANDLING SYSTEM JAMMED AND THE ESP WAS SHUT DOWN.

THE WASTE SLURRY LINE RUPTURED, SHUTTING THE UNIT DOWN FOR 24 HOURS.

12/79	A		78.4		68.6						
	B		87.6		76.7						
	SYSTEM	100.0	94.9		83.2			744	652		619

** PROBLEMS/SOLUTIONS/COMMENTS

THE FGD SYSTEM WAS AVAILABLE ALL MONTH.

SECTION 3
DESIGN AND PERFORMANCE DATA FOR OPERATIONAL DOMESTIC FGD SYSTEMS

COMPANY NAME	ALLEGHENY POWER SYSTEM	
PLANT NAME	PLEASANTS	
UNIT NUMBER	1	
CITY	BELMONT	
STATE	WEST VIRGINIA	
REGULATORY CLASSIFICATION	B	
PARTICULATE EMISSION LIMITATION - NG/J	21.	(.050 LB/MMBTU)
SO2 EMISSION LIMITATION - NG/J	516.	(1.200 LB/MMBTU)
NET PLANT GENERATING CAPACITY - MW	1250.0	
GROSS UNIT GENERATING CAPACITY - MW	625.0	
NET UNIT GENERATING CAPACITY W/FGD - MW	625.0	
NET UNIT GENERATING CAPACITY WO/FGD - MW	*******	
EQUIVALENT SCRUBBED CAPACITY - MW	519.0	
** BOILER DATA		
SUPPLIER	******	
TYPE	PULVERIZED COAL	
SERVICE LOAD	BASE	
COMMERCIAL SERVICE DATE	0/79	
MAXIMUM BOILER FLUE GAS FLOW - CU.M/S	1152.85	(2443000 ACFM)
FLUE GAS TEMPERATURE - C	132.2	(270 F)
STACK HEIGHT - M	366.	(1200 FT)
STACK TOP DIAMETER - M	6.1	(20.0 FT)
** FUEL DATA		
FUEL TYPE	COAL	
FUEL GRADE	BITUMINOUS	
AVERAGE HEAT CONTENT - J/G	27912.	(12000 BTU/LB)
RANGE HEAT CONTENT - BTU/LB		11,000-13,300
AVERAGE ASH CONTENT - %	********	
RANGE ASH CONTENT - %	******	
AVERAGE MOISTURE CONTENT - %	15.00	
RANGE MOISTURE CONTENT - %	10-20	
AVERAGE SULFUR CONTENT - %	3.70	
RANGE SULFUR CONTENT - %	2-4.5	
AVERAGE CHLORIDE CONTENT - %	********	
RANGE CHLORIDE CONTENT - %	******	
** ESP		
NUMBER	1	
TYPE	COLD SIDE	
SUPPLIER	AIR CORRECTION DIVISION, UOP	
FLUE GAS CAPACITY - CU.M/S	1152.9	(2443000 ACFM)
FLUE GAS TEMPERATURE - C	132.2	(270 F)
** PARTICULATE SCRUBBER		
TYPE	NONE	
** FGD SYSTEM		
SALEABLE PRODUCT/THROWAWAY PRODUCT	THROWAWAY PRODUCT	
GENERAL PROCESS TYPE	WET SCRUBBING	
PROCESS TYPE	LIME	
PROCESS ADDITIVES	MG/2-6%	
SYSTEM SUPPLIER	BABCOCK & WILCOX	
A-E FIRM	UNITED ENGINEERS & CONSTRUCTORS	
CONSTRUCTION FIRM	UNITED ENGINEERS & CONSTRUCTORS	
DEVELOPMENT LEVEL	FULL SCALE	
NEW/RETROFIT	NEW	
PARTICULATE DESIGN REMOVAL EFFICIENCY - %	99.55	
SO2 DESIGN REMOVAL EFFICIENCY - %	90.00	
INITIAL START-UP	3/79	
** ABSORBER		
NUMBER	4	
TYPE	TRAY TOWER	
INITIAL START UP	3/79	
SUPPLIER	BABCOCK & WILCOX	
NUMBER OF STAGES	1	
SHELL MATERIAL	CARBON STEEL	
SHELL LINER MATERIAL	RUBBER	
INTERNAL MATERIAL	316 AND 316L SS	
BOILER LOAD/ABSORBER - %	21.0	

ALLEGHENY POWER SYSTEM: PLEASANTS 1 (CONT.)

GAS FLOW - CU.M/S	242.10	(513030 ACFM)
GAS TEMPERATURE - C	132.2	(270 F)
L/G RATIO - L/CU.M	7.4	(55.0 GAL/1000ACF)
PRESSURE DROP - KPA	1.2	(5.0 IN-H2O)

** MIST ELIMINATOR

NUMBER	4
TYPE	CHEVRON
CONSTRUCTION MATERIAL	FRP
CONFIGURATION	HORIZONTAL
WASH SYSTEM	1ST STAGE-CONTINUOUS BOTTOM AND INTERMITTENT TOP

** REHEATER

TYPE	BYPASS	
TEMPERATURE BOOST - C	11.1	(20 F)
ENERGY REQUIRED	NONE	

** WATER LOOP

TYPE	CLOSED

PERFORMANCE DATA

PERIOD	MODULE	AVAILABILITY	OPERABILITY	RELIABILITY	UTILIZATION	% REMOVAL SO2	% REMOVAL PART.	PER HOURS	BOILER HOURS	FGD HOURS	CAP. FACTOR
3/79	SYSTEM							744			
4/79	SYSTEM							720			

** PROBLEMS/SOLUTIONS/COMMENTS

THE UNIT STARTED ON MARCH 7 1979. NO HOURS ARE YET AVAILABLE BECAUSE OF THE RECENT OPERATING STATUS.

A-MODULE HAS BEEN REMOVED FROM SERVICE DUE TO WELD FAILURE ON THE ABSORBER DOWNCOMER.

5/79	SYSTEM							744			
6/79	SYSTEM							720			

** PROBLEMS/SOLUTIONS/COMMENTS

THE UTILITY REPORTED THAT THE UNIT WAS TAKEN OUT OF SERVICE ON JUNE 19 DUE TO SEVERE STACK LINER FAILURE. THE UNIT IS PROJECTED TO BE OUT OF SERVICE UNTIL THE MIDDLE OF AUGUST.

7/79	SYSTEM							744		0	
8/79	SYSTEM							744		0	
9/79	SYSTEM							720		0	

** PROBLEMS/SOLUTIONS/COMMENTS

THE UNIT RESTARTED IN LATE SEPT. AFTER COMPLETION OF THE STACK RELINING.

10/79	SYSTEM							744			
11/79	SYSTEM							720			
12/79	SYSTEM							744			

** PROBLEMS/SOLUTIONS/COMMENTS

NO INFORMATION WAS AVAILABLE FOR THIS REPORT PERIOD.

SECTION 3
DESIGN AND PERFORMANCE DATA FOR OPERATIONAL DOMESTIC FGD SYSTEMS

COMPANY NAME	ARIZONA ELECTRIC POWER COOP	
PLANT NAME	APACHE	
UNIT NUMBER	2	
CITY	COCHISE	
STATE	ARIZONA	
REGULATORY CLASSIFICATION	D	
PARTICULATE EMISSION LIMITATION - NG/J	43.	(.100 LB/MMBTU)
SO2 EMISSION LIMITATION - NG/J	344.	(.800 LB/MMBTU)
NET PLANT GENERATING CAPACITY - MW	590.0	
GROSS UNIT GENERATING CAPACITY - MW	195.0	
NET UNIT GENERATING CAPACITY W/FGD - MW	175.0	
NET UNIT GENERATING CAPACITY WO/FGD - MW	183.0	
EQUIVALENT SCRUBBED CAPACITY - MW	195.0	
** BOILER DATA		
SUPPLIER	RILEY STOKER	
TYPE	PULVERIZED COAL	
SERVICE LOAD	BASE	
COMMERCIAL SERVICE DATE	8/78	
MAXIMUM BOILER FLUE GAS FLOW - CU.M/S	346.85	(735000 ACFM)
FLUE GAS TEMPERATURE - C	118.3	(245 F)
STACK HEIGHT - M	122.	(400 FT)
STACK TOP DIAMETER - M	4.9	(16.2 FT)
** FUEL DATA		
FUEL TYPE	COAL	
FUEL GRADE	BITUMINOUS	
AVERAGE HEAT CONTENT - J/G	23260.	(10000 BTU/LB)
RANGE HEAT CONTENT - BTU/LB		10000-11000
AVERAGE ASH CONTENT - %	15.00	
RANGE ASH CONTENT - %	******	
AVERAGE MOISTURE CONTENT - %	9.00	
RANGE MOISTURE CONTENT - %	******	
AVERAGE SULFUR CONTENT - %	.55	
RANGE SULFUR CONTENT - %	0.5-0.8	
AVERAGE CHLORIDE CONTENT - %	********	
RANGE CHLORIDE CONTENT - %	******	
** ESP		
NUMBER	1	
TYPE	HOT SIDE	
SUPPLIER	AIR CORRECTION DIVISION, UOP	
PARTICULATE DESIGN REMOVAL EFFICIENCY - %	99.6	
** PARTICULATE SCRUBBER		
TYPE	NONE	
** FGD SYSTEM		
SALEABLE PRODUCT/THROWAWAY PRODUCT	THROWAWAY PRODUCT	
GENERAL PROCESS TYPE	WET SCRUBBING	
PROCESS TYPE	LIMESTONE	
PROCESS ADDITIVES	NONE	
SYSTEM SUPPLIER	RESEARCH COTTRELL	
A-E FIRM	BURNS & MCDONNELL	
DEVELOPMENT LEVEL	FULL SCALE	
NEW/RETROFIT	NEW	
PARTICULATE DESIGN REMOVAL EFFICIENCY - %	99.50	
SO2 DESIGN REMOVAL EFFICIENCY - %	85.00	
COMMERCIAL DATE	1/79	
INITIAL START-UP	8/78	
CONSTRUCTION COMPLETION	8/78	
CONSTRUCTION INITIATION	7/76	
CONTRACT AWARDED	7/74	
ABSORBER SPARE CAPACITY INDEX - %	.0	
ABSORBER SPARE COMPONENT INDEX	.0	
** ABSORBER		
NUMBER	2	
TYPE	GRID/SPRAY TOWER	
INITIAL START UP	8/78	
SUPPLIER	RESEARCH COTTRELL	
NUMBER OF STAGES	1	

ARIZONA ELECTRIC POWER COOP: APACHE 2 (CONT.)

SHELL MATERIAL	CARBON STEEL	
SHELL LINER MATERIAL	GLAS !-FLEX	
INTERNAL MATERIAL	316 SS SPRAY NOZZLES	
GAS FLOW - CU.M/S	188.76	(400000 ACFM)
GAS TEMPERATURE - C	132.2	(270 F)
LIQUID RECIRCULATION RATE - LITER/S	126C.	(20000 GPM)
PRESSURE DROP - KPA	1.5	(6.0 IN-H20)

** FANS

NUMBER	2	
TYPE	BOILER ID	
CONSTRUCTION MATERIALS	CARBON STEEL	
SERVICE - WET/DRY	DRY	
CAPACITY - CU.M/S	94.38	(200000 ACFM)

** MIST ELIMINATOR

NUMBER	4	
TYPE	CHEVRON	
CONSTRUCTION MATERIAL	POLYPROPYLENE	
CONFIGURATION	HORIZONTAL	
NUMBER OF STAGES	2	
NUMBER OF PASSES	3	

** WATER LOOP

TYPE	OPEN	
RECOVERED WATER RETURN - LITER/S	340.2	(5400 GPM)
FRESH MAKEUP WATER ADDITION - LITERS/S	115.9	(1840 GPM)

** DISPOSAL

NATURE	FINAL	
TYPE	POND	
LOCATION	OFF-SITE	
TRANSPORTATION	PUMPED	
DIMENSIONS	22 ACRES X 18 FT DEEP	
AREA - ACRES	22.0	
CAPACITY - CU.M	484308	(396.0 ACRE-FT)

** DISPOSAL

NATURE	FINAL	
TYPE	POND	
LOCATION	OFF-SITE	
TRANSPORTATION	PUMPED	
DIMENSIONS	64 ACRES X 18 FT DEEP	
AREA - ACRES	64.0	
CAPACITY - CU.M	1408896	(1152.0 ACRE-FT)

PERFORMANCE DATA

PERIOD	MODULE	AVAILABILITY	OPERABILITY	RELIABILITY	UTILIZATION	% REMOVAL SO2	% REMOVAL PART.	PER HOURS	BOILER HOURS	FGD HOURS	CAP. FACTOR
10/78	SYSTEM							744	303		58.1

** PROBLEMS/SOLUTIONS/COMMENTS

THE LIMESTONE CRUSHER WAS UNABLE TO MEET ITS DESIGN CAPACITY.

A COMPLIANCE TEST WAS COMPLETED BUT THE RESULTS ARE NOT YET AVAILABLE. THE ACCEPTANCE IS SCHEDULED FOR THE BEGINNING OF 1979.

11/78	A		25.0		17.0					
	B		44.0		30.0					
	SYSTEM		34.5		23.5			720	488	80.7
12/78										
	SYSTEM							744	512	

** PROBLEMS/SOLUTIONS/COMMENTS

THE FGD SYSTEM WAS NOT IN SERVICE DURING DECEMBER OR JANUARY DUE TO VARIOUS "DEBUGGING" PROBLEMS ESPECIALLY IN MAINTAINING RECYCLE PUMP OPERATION.

RESULTS OF A RECENT COMPLIANCE TEST INDICATED THAT SO2 EMISSIONS WERE BETWEEN 1.2 LB/MM BTU, THE FEDERAL STANDARD, AND 0.8 LB/MM BTU, THE STATE

STANDARD, WITHOUT THE FGD SYSTEM. THE UTILITY IS CURRENTLY BURNING LOW SULFUR COAL (0.6% S). IT IS BELIEVED THAT THE STATE STANDARD COULD BE MET WITHOUT FGD SYSTEM OPERATION WHEN THE FURNACE IS "FINE TUNED".

A 30 HOUR OUTAGE OCCURRED DUE TO A RUPTURED PIPE.

PERIOD	MODULE	AVAILABILITY	OPERABILITY	RELIABILITY	UTILIZATION	% REMOVAL SO2	% REMOVAL PART.	PER HOURS	BOILER HOURS	FGD HOURS	CAP. FACTOR
1/79	SYSTEM							744	662		
2/79	SYSTEM							672			
3/79	SYSTEM							744			
4/79	SYSTEM							720			

** PROBLEMS/SOLUTIONS/COMMENTS

COMPLIANCE TESTS WERE RUN ON THIS UNIT LAST NOVEMBER AND THE UNIT WAS DECLARED COMMERCIAL IN FEBRUARY. THE FGD SYSTEM OPERATES ONLY ABOUT 50 PERCENT OF THE BOILER HOURS BECAUSE THE UNIT OPERATES AT SUCH A LOW RATING 50 PERCENT OF THE TIME THAT THE FGD SYSTEM IS NOT NEEDED.

A BOILER EXPLOSION AT THE BURNER FACE CAUSED THE UNIT TO BE DOWN FROM THE LAST WEEK IN FEBRUARY THROUGH THE MIDDLE OF MARCH.

5/79	SYSTEM							744			
6/79	SYSTEM							720			

** PROBLEMS/SOLUTIONS/COMMENTS

THE UTILITY REPORTED THAT THE UNIT ITSELF RAN WELL BUT WAS EXPERIENCING FAILURE OF THE FRP REAGENT FEED PIPELINE. THE PIPING IS NOW BEING REPLACED WITH CARBON STEEL.

7/79	SYSTEM							744			
8/79	SYSTEM							744			
9/79	SYSTEM							720			

** PROBLEMS/SOLUTIONS/COMMENTS

DURING THE THIRD QUARTER THE UNIT ONLY OPERATED ABOUT 25% OF THE TIME BECAUSE OF CONTINUING PROBLEMS WITH THE REAGENT FEED LINE. THE SECTION FROM THE GRINDER TO THE SCRUBBERS WAS FRP AND IT FAILED. THE LINE WAS REPAIRED AT THE END OF SEPTEMBER.

ON NOVEMBER THIRD THE UNIT WILL GO DOWN FOR A 4-6 WEEK SCHEDULED OUTAGE.

10/79	SYSTEM							744			
11/79	SYSTEM	100.0	100.0	100.0	6.3			720	41	41	

** PROBLEMS/SOLUTIONS/COMMENTS

THE UNIT WAS DOWN FOR THE ANNUAL INSPECTION.

12/79	SYSTEM	100.0	.0	.0	.0			744	130	0	

** PROBLEMS/SOLUTIONS/COMMENTS

DURING DECEMBER THE BOILER OPERATED 130 HOURS FOR WHICH THE SCRUBBER WAS AVAILABLE 100% OF THE TIME.

SECTION 3
DESIGN AND PERFORMANCE DATA FOR OPERATIONAL DOMESTIC FGD SYSTEMS

COMPANY NAME	ARIZONA ELECTRIC POWER COOP	
PLANT NAME	APACHE	
UNIT NUMBER	3	
CITY	COCHISE	
STATE	ARIZONA	
REGULATORY CLASSIFICATION	D	
PARTICULATE EMISSION LIMITATION - NG/J	43.	(.100 LB/MMBTU)
SO2 EMISSION LIMITATION - NG/J	344.	(.800 LB/MMBTU)
NET PLANT GENERATING CAPACITY - MW	590.0	
GROSS UNIT GENERATING CAPACITY - MW	195.0	
NET UNIT GENERATING CAPACITY W/FGD - MW	175.0	
NET UNIT GENERATING CAPACITY WO/FGD - MW	183.0	
EQUIVALENT SCRUBBED CAPACITY - MW	195.0	
** BOILER DATA		
SUPPLIER	RILEY STOKER	
TYPE	PULVERIZED COAL	
SERVICE LOAD	BASE	
COMMERCIAL SERVICE DATE	**/**	
MAXIMUM BOILER FLUE GAS FLOW - CU.M/S	********	(******* ACFM)
FLUE GAS TEMPERATURE - C	*******	(**** F)
STACK HEIGHT - M	122.	(400 FT)
STACK TOP DIAMETER - M	4.9	(16.2 FT)
** FUEL DATA		
FUEL TYPE	COAL	
FUEL GRADE	BITUMINOUS	
AVERAGE HEAT CONTENT - J/G	23260.	(10000 BTU/LB)
RANGE HEAT CONTENT - BTU/LB		10000-11000
AVERAGE ASH CONTENT - %	15.00	
RANGE ASH CONTENT - %	******	
AVERAGE MOISTURE CONTENT - %	9.00	
RANGE MOISTURE CONTENT - %	******	
AVERAGE SULFUR CONTENT - %	.55	
RANGE SULFUR CONTENT - %	0.5-0.8	
AVERAGE CHLORIDE CONTENT - %	********	
RANGE CHLORIDE CONTENT - %	******	
** ESP		
NUMBER	1	
TYPE	HOT SIDE	
SUPPLIER	AIR CORRECTION DIVISION, UOP	
PARTICULATE DESIGN REMOVAL EFFICIENCY - %	99.6	
** PARTICULATE SCRUBBER		
TYPE	NONE	
** FGD SYSTEM		
SALEABLE PRODUCT/THROWAWAY PRODUCT	THROWAWAY PRODUCT	
GENERAL PROCESS TYPE	WET SCRUBBING	
PROCESS TYPE	LIMESTONE	
PROCESS ADDITIVES	NONE	
SYSTEM SUPPLIER	RESEARCH COTTRELL	
A-E FIRM	BURNS & MCDONNELL	
DEVELOPMENT LEVEL	FULL SCALE	
NEW/RETROFIT	NEW	
PARTICULATE DESIGN REMOVAL EFFICIENCY - %	99.50	
SO2 DESIGN REMOVAL EFFICIENCY - %	85.00	
COMMERCIAL DATE	4/79	
INITIAL START-UP	6/79	
CONSTRUCTION COMPLETION	4/79	
ABSORBER SPARE CAPACITY INDEX - %	.0	
ABSORBER SPARE COMPONENT INDEX	.0	
** ABSORBER		
NUMBER	2	
TYPE	GRID/SPRAY TOWER	
INITIAL START UP	4/79	
SUPPLIER	RESEARCH COTTRELL	
NUMBER OF STAGES	1	
SHELL MATERIAL	CARBON STEEL	
SHELL LINER MATERIAL	GLASS-FLEX	

ARIZONA ELECTRIC POWER COOP: APACHE 3 (CONT.)

GAS FLOW - CU.M/S	188.76	(400000 ACFM)
GAS TEMPERATURE - C	132.2	(270 F)
LIQUID RECIRCULATION RATE - LITER/S	1260.	(20000 GPM)
PRESSURE DROP - KPA	1.5	(6.0 IN-H2O)

** MIST ELIMINATOR

NUMBER	4
TYPE	CHEVRON
CONSTRUCTION MATERIAL	POLYPROPYLENE
CONFIGURATION	HORIZONTAL
NUMBER OF STAGES	1
NUMBER OF PASSES	3

** WATER LOOP

TYPE	OPEN	
FRESH MAKEUP WATER ADDITION - LITERS/S	340.2	(5400 GPM)

** DISPOSAL

NATURE	FINAL	
TYPE	POND	
LOCATION	OFF-SITE	
TRANSPORTATION	PUMPED	
DIMENSIONS	22 ACRES X 18 FT DEEP	
AREA - ACRES	22.0	
CAPACITY - CU.M	484308	(396.0 ACRE-FT)

** DISPOSAL

NATURE	FINAL	
TYPE	POND	
LOCATION	OFF-SITE	
TRANSPORTATION	PUMPED	
DIMENSIONS	64 ACRES X 18 FT DEEP	
AREA - ACRES	64.0	
CAPACITY - CU.M	1408896	(1152.0 ACRE-FT)

PERFORMANCE DATA

PERIOD	MODULE	AVAILABILITY	OPERABILITY	RELIABILITY	UTILIZATION	% REMOVAL SO2	% REMOVAL PART.	PER HOURS	BOILER HOURS	FGD HOURS	CAP. FACTOR
6/79	SYSTEM							720			

** PROBLEMS/SOLUTIONS/COMMENTS

UNIT #3 COMMENCED OPERATION DURING JUNE. THE UTILITY REPORTED THAT THE START-UP WAS TYPICAL WITH NUMEROUS MINOR PROBLEMS.

7/79	SYSTEM							744			
8/79	SYSTEM							744			
9/79	SYSTEM							720			

** PROBLEMS/SOLUTIONS/COMMENTS

DURING THE THIRD QUARTER THE UNIT ONLY OPERATED ABOUT 25% OF THE TIME BECAUSE OF CONTINUING PROBLEMS WITH THE REAGENT FEED LINE. THE SECTION FROM THE GRINDER TO THE SCRUBBERS WAS FRP AND IT FAILED. THE LINE WAS REPAIRED AT THE END OF SEPTEMBER.

10/79	SYSTEM							744			
11/79	A										
	B										
	SYSTEM	89.4	90.3	90.3	90.3			720	713		
12/79	SYSTEM	99.5	99.5	99.5	99.5			744	744	741	

** PROBLEMS/SOLUTIONS/COMMENTS

THE OUTAGE TIME DURING DECEMBER WAS CAUSED BY THE FAILURE OF A FLUE DAMPER TO OPERATE PROPERLY.

SECTION 3
DESIGN AND PERFORMANCE DATA FOR OPERATIONAL DOMESTIC FGD SYSTEMS

COMPANY NAME	ARIZONA PUBLIC SERVICE	
PLANT NAME	CHOLLA	
UNIT NUMBER	1	
CITY	JOSEPH CITY	
STATE	ARIZONA	
REGULATORY CLASSIFICATION	C	
PARTICULATE EMISSION LIMITATION - NG/J	85.	(.198 LB/MMBTU)
SO2 EMISSION LIMITATION - NG/J	430.	(1.000 LB/MMBTU)
NET PLANT GENERATING CAPACITY - MW	615.0	
GROSS UNIT GENERATING CAPACITY - MW	119.0	
NET UNIT GENERATING CAPACITY W/FGD - MW	115.0	
NET UNIT GENERATING CAPACITY WO/FGD - MW	119.0	
EQUIVALENT SCRUBBED CAPACITY - MW	119.0	
** BOILER DATA		
SUPPLIER	COMBUSTION ENGINEERING	
TYPE	PULVERIZED COAL	
SERVICE LOAD	BASE	
COMMERCIAL SERVICE DATE	0/62	
MAXIMUM BOILER FLUE GAS FLOW - CU.M/S	245.39	(520000 ACFM)
FLUE GAS TEMPERATURE - C	136.7	(278 F)
STACK HEIGHT - M	78.	(256 FT)
STACK TOP DIAMETER - M	3.7	(12.0 FT)
** FUEL DATA		
FUEL TYPE	COAL	
FUEL GRADE	BITUMINOUS	
AVERAGE HEAT CONTENT - J/G	23609.	(10150 BTU/LB)
RANGE HEAT CONTENT - BTU/LB		9650-10600
AVERAGE ASH CONTENT - %	13.50	
RANGE ASH CONTENT - %	9.7-22.5	
AVERAGE MOISTURE CONTENT - %	15.00	
RANGE MOISTURE CONTENT - %	******	
AVERAGE SULFUR CONTENT - %	.50	
RANGE SULFUR CONTENT - %	0.44-1.0	
AVERAGE CHLORIDE CONTENT - %	.02	
RANGE CHLORIDE CONTENT - %	0.01-0.04	
** MECHANICAL COLLECTOR		
TYPE	CYCLONES	
SUPPLIER	RESEARCH COTTRELL	
PARTICULATE DESIGN REMOVAL EFFICIENCY - %	75.0	
** PARTICULATE SCRUBBER		
NUMBER	2	
TYPE	VENTURI	
SUPPLIER	RESEARCH COTTRELL	
NUMBER OF STAGES	1	
SHELL MATERIAL	316L SS	
LINING MATERIAL	CEILCOTE FLAKEGLASS (LOWER PORTION)	
TYPE OF NOZZLES	TANGENTIAL	
BOILER LOAD/SCRUBBER - %	50.0	
FLUE GAS CAPACITY - CU.M/S	99.1	(210100 ACFM)
FLUE GAS TEMPERATURE - C	136.7	(278 F)
LIQUID RECIRCULATION RATE - LITER/S	136.7	(2170 GPM)
L/G RATIO - LITER/CU.M	1.4	(10.1 GAL/1000ACF)
PRESSURE DROP - KPA	*******	(***** IN-H2O)
PARTICULATE INLET LOAD - G/CU.M	4.6	(2.00 GR/SCF)
PARTICULATE DESIGN REMOVAL EFFICIENCY - %	99.2	
** FGD SYSTEM		
SALEABLE PRODUCT/THROWAWAY PRODUCT	THROWAWAY PRODUCT	
GENERAL PROCESS TYPE	WET SCRUBBING	
PROCESS TYPE	LIMESTONE	
PROCESS ADDITIVES	NONE	
SYSTEM SUPPLIER	RESEARCH COTTRELL	
A-E FIRM	EBASCO	
DEVELOPMENT LEVEL	FULL SCALE	
NEW/RETROFIT	RETROFIT	
PARTICULATE DESIGN REMOVAL EFFICIENCY - %	80.00	
SO2 DESIGN REMOVAL EFFICIENCY - %	92.00	
COMMERCIAL DATE	12/73	

ARIZONA PUBLIC SERVICE: CHOLLA 1 (CONT.)

INITIAL START-UP	10/73
CONSTRUCTION COMPLETION	12/73
CONTRACT AWARDED	7/71
STARTED REQUESTING BIDS	4/71
STARTED PRELIMINAY DESIGN	1/71
ABSORBER SPARE CAPACITY INDEX - %	.0
ABSORBER SPARE COMPONENT INDEX	.0

** ABSORBER

NUMBER	2	
TYPE	GRID/SPRAY TOWER	
INITIAL START UP	10/73	
SUPPLIER	RESEARCH COTTRELL	
NUMBER OF STAGES	1	
DIMENSIONS - FT	22 DIA X 70 HIGH	
SHELL MATERIAL	316L SS	
SHELL LINER MATERIAL	NONE	
INTERNAL MATERIAL	316L SS	
BOILER LOAD/ABSORBER - %	50.0	
GAS FLOW - CU.M/S	113.26	(240000 ACFM)
GAS TEMPERATURE - C	135.6	(276 F)
LIQUID RECIRCULATION RATE - LITER/S	630.	(10000 GPM)
L/G RATIO - L/CU.M	6.5	(48.9 GAL/1000ACF)
PRESSURE DROP - KPA	.1	(.5 IN-H20)
SUPERFICAL GAS VELOCITY - M/SEC	2.1	(6.9 FT/S)
PARTICULATE INLET LOAD - G/CU.M	4.6	(1.995 GR/SCF)
PARTICULATE OUTLET LOAD- G/CU.M	.0	(.001 GR/SCF)
PARTICULATE REMOVAL EFFICIENCY - %	99.7	
SO2 INLET CONCENTRATION - PPM	420	
SO2 OUTLET CONTRATION - PPM	35	
SO2 DESIGN REMOVAL EFFICIENCY - %	92.0	

** ABSORBER

NUMBER	2	
TYPE	SPRAY TOWER	
INITIAL START UP	10/73	
SUPPLIER	RESEARCH COTTRELL	
NUMBER OF STAGES	1	
DIMENSIONS - FT	22 DIA X 70 HIGH	
SHELL MATERIAL	316L SS	
SHELL LINER MATERIAL	NONE	
INTERNAL MATERIAL	316L SS	
NOZZLE TYPE	SPINNER VANE	
BOILER LOAD/ABSORBER - %	50.0	
GAS FLOW - CU.M/S	113.26	(240000 ACFM)
GAS TEMPERATURE - C	135.6	(276 F)
LIQUID RECIRCULATION RATE - LITER/S	630.	(10000 GPM)
L/G RATIO - L/CU.M	6.5	(48.9 GAL/1000ACF)
PRESSURE DROP - KPA	.1	(.5 IN-H20)
SUPERFICAL GAS VELOCITY - M/SEC	2.1	(6.9 FT/S)
PARTICULATE INLET LOAD - G/CU.M	4.6	(1.995 GR/SCF)
PARTICULATE OUTLET LOAD- G/CU.M	.0	(.001 GR/SCF)
SO2 INLET CONCENTRATION - PPM	420	
SO2 OUTLET CONTRATION - PPM	315	
SO2 DESIGN REMOVAL EFFICIENCY - %	25.0	

** FANS

NUMBER	2	
TYPE	SCRUBBER FD	
CONSTRUCTION MATERIALS	CARBON STEEL	
SERVICE - WET/DRY	DRY	
CAPACITY - CU.M/S	113.26	(240000 ACFM)

** MIST ELIMINATOR

NUMBER	4	
TYPE	CHEVRON	
CONSTRUCTION MATERIAL	POLYPROPYLENE	
CONFIGURATION	HORIZONTAL	
NUMBER OF STAGES	2	
NUMBER OF PASSES	2	
FREEBOARD DISTANCE - M	4.11	(13.5 FT)
DEPTH - M	.30	(1.0 FT)
VANE SPACING - CM	3.8	(1.50 IN)
VANE ANGLES	45 DEG.	
WASH SYSTEM	VERTICALLY DOWNWARD	
PRESSURE DROP - KPA	.1	(.5 IN-H20)

ARIZONA PUBLIC SERVICE: CHOLLA 1 (CONT.)

** MIST ELIMINATOR

NUMBER	4	
TYPE	SLAT IMPINGEMENT	
CONSTRUCTION MATERIAL	POLYPROPYLENE	
CONFIGURATION	HORIZONTAL	
NUMBER OF STAGES	2	
NUMBER OF PASSES	4	
FREEBOARD DISTANCE - M	4.11	(13.5 FT)
DEPTH - M	.30	(1.0 FT)
VANE SPACING - CM	18.0	(7.10 IN)
VANE ANGLES	45 DEG.	
WASH SYSTEM	INTERMITTENT OVERSPRAY	
PRESSURE DROP - KPA	.1	(.5 IN-H2O)

** PROCESS CONTROL CHEMISTRY

CONTROL MANNER	MANUAL

** PUMPS

SERVICE	NUMBER
SCRUBBER RECIRCULATION	2
ABSORBER RECIRCULATION	2

** TANKS

SERVICE	NUMBER
SCRUBBER RECYCLE	1
SLUDGE HOLDUP	2
ABSORBER TOWER HOLDUP	1
LIMESTONE SLURRY MAKEUP	2

** REHEATER

NUMBER	2	
TYPE	IN-LINE	
HEATING MEDIUM	STEAM	
TEMPERATURE BOOST - C	22.2	(40 F)
ENERGY REQUIRED	8MM BTU/HR	

** WATER LOOP

TYPE	OPEN	
FRESH MAKEUP WATER ADDITION - LITERS/S	7.6	(120 GPM)

** REAGENT PREPARATION EQUIPMENT

NUMBER OF BALL MILLS	1

** DISPOSAL

NATURE	FINAL	
TYPE	POND	
TRANSPORTATION	PUMPED	
DIMENSIONS	70-100 ACRES X 6 FT DEEP	
AREA - ACRES	85.0	
CAPACITY - CU.M	623730	(510.0 ACRE-FT)

PERFORMANCE DATA

PERIOD	MODULE	AVAILABILITY	OPERABILITY	RELIABILITY	UTILIZATION	% REMOVAL SO2	% REMOVAL PART.	PER HOURS	BOILER HOURS	FGD HOURS	CAP. FACTOR
10/73	SYSTEM							744			
11/73	SYSTEM							720			
12/73	SYSTEM							744			

** PROBLEMS/SOLUTIONS/COMMENTS

BECAUSE OF A DIFFERENCE IN THE SIZE OF THE MAIN DUCT AND REHEATED TRANSITION DUCT, THE GAS FLOW PRODUCES HARMONIC VIBRATIONS IN THE REHEATER. THE VIBRATIONS WERE PARTIALLY DAMPENED BY INSTALLATION OF BAFFLES.

ONE OF THE REHEATER BUNDLES WAS BADLY CORRODED BY ACID THAT CONDENSED IN THE UNINSULATED DUCT UPSTREAM OF THE REHEATERS. THE TUBE BUNDLE WAS REPLACED AND A BAFFLE WAS INSTALLED TO DIVERT CONDENSED ACID FROM REHEATER TUBES.

PERIOD	MODULE	AVAILABILITY	OPERABILITY	RELIABILITY	UTILIZATION	% REMOVAL SO2	% REMOVAL PART.	PER HOURS	BOILER HOURS	FGD HOURS	CAP. FACTOR
				PERFORMANCE DATA							

THE DUCT UPSTREAM OF THE REHEATER WAS INSULATED. THE ACID CONDENSATION OCCURRED ONLY IN THE B-MODULE WHICH CONTAINS NO INTERNAL PACKING AND THEREFORE HAS A LOWER DEGREE OF SULFUR DIOXIDE REMOVAL (25 PERCENT).

SOME LINES PLUGGED, PARTICULARLY WHEN THE SYSTEM OPERATED AT LOW FLOW RATES.

SOLIDS SETTLED OUT IN STANDBY PUMPS, AND EXCESSIVE FAN VIBRATIONS OCCURRED BECAUSE OF ACCUMULATION OF SCALE BUILDUP WHEN THE UNIT WAS IDLE. TO SOLVE THESE PROBLEMS THE PACKING GLAND POSITION WAS REVERSED (INSTALLED UPSIDE DOWN). THE FAN WAS SANDBLASTED. THE PIPING WAS MODIFIED TO ELIMINATE STAGNANT POCKETS, AND PUMPS WERE FLUSHED IMMEDIATELY AFTER REMOVAL FROM SERVICE.

THE UTILITY EXPERIENCED SOLIDS BUILDUP IN THE FDS STUFFING GLAND BOX AND ON TOP OF THE SPRAY DOME.

1/74	A		97.0					
	B		90.0					
	SYSTEM		94.0		744			
2/74	A		100.0					
	B		94.0					
	SYSTEM		97.0		672			
3/74	B		66.0					
	A		100.0					
	SYSTEM		83.0		744			
4/74	A		66.0					
	B		57.0					
	SYSTEM		62.0		720			
5/74	A	98.0						
	B		99.0					
	SYSTEM		99.0		744	744		
6/74	A		100.0					
	B		100.0					
	SYSTEM		100.0		720			
7/74	A	97.5	97.0	97.5				
	B	98.5	92.0	98.5				
	SYSTEM	98.0	95.0	98.0	744	744	729	
8/74	A	94.5	97.0	94.5				
	B	100.0	97.0	100.0				
	SYSTEM	97.3	97.0	97.3	744	744	724	
9/74	B		99.0					
	A		95.0					
	SYSTEM		97.0		720			
10/74	A		83.0					
	B		68.0					
	SYSTEM		76.0		744			

** PROBLEMS/SOLUTIONS/COMMENTS

ANNUAL BOILER AND FGD SYSTEM OVERHAUL.

11/74	A		100.0					
	B		98.0					
	SYSTEM		99.0		720			
12/74	A		100.0					
	B							
	SYSTEM		100.0		744			

ARIZONA PUBLIC SERVICE: CHOLLA 1 (CONT.)

PERIOD	MODULE	AVAILABILITY	OPERABILITY	RELIABILITY	UTILIZATION	% REMOVAL SO2	% REMOVAL PART.	PER HOURS	BOILER HOURS	FGD HOURS	CAP. FACTOR
				PERFORMANCE DATA							
1/75	B			99.0							
	A			98.0							
	SYSTEM							744			

** PROBLEMS/SOLUTIONS/COMMENTS

OPERATION OF THE SYSTEM THROUGHOUT 1975 AND 1976 WAS ACCOMPANIED BY A NUMBER OF MINOR PROBLEM AREAS INCLUDING: SIGNIFICANT CORROSION ATTACK IN THE VESSEL WALLS OF THE VENTURI FLOODED-DISC PARTICULATE SCRUBBER MODULE; ACID CORROSION IN THE B-SIDE REHEATER HOUSING; SCALE BUILDUP IN THE PIPE OUTLET AT THE SLUDGE/FLYASH EVAPORATION POND; PLUGGING IN THE SCRUBBER TOWER PACKING AND MIST ELIMINATOR; EROSION IN THE PUMPS; CORROSION IN THE BOILER EXHAUST ELBOW OF THE DUCTWORK LEADING FROM THE SCRUBBERS TO THE STACK.

2/75	A			96.0							
	B			99.0							
	SYSTEM			98.0				672			
3/75	SYSTEM							744			
4/75	A			88.0							
	B			65.0							
	SYSTEM		76.9	77.0	71.5			720	670	515	
5/75	A			48.0							
	B			40.0							
	SYSTEM		43.7	44.0	43.7			744	744	325	

** PROBLEMS/SOLUTIONS/COMMENTS

BOTH MODULES WERE OFF LINE FOR MOST OF THE MONTH FOR SCHEDULED REPAIRS AND CLEANING.

6/75	A			100.0							
	B			100.0							
	SYSTEM			100.0				720			

** PROBLEMS/SOLUTIONS/COMMENTS

PLUGGING IN THE A-SIDE ABSORBER PACKING WAS OBSERVED.

PLUGGING OCCURRED IN MIST ELIMINATORS.

NO MAJOR PROBLEMS WERE ENCCUNTERED DURING THE PERIOD.

7/75	A			97.0							
	B			98.0							
	SYSTEM			98.0				744			

** PROBLEMS/SOLUTIONS/COMMENTS

MODULES WERE SHUT DOWN TO CLEAN FLOW RESTRICTIONS IN FLOODED-DISC RECIRCULATION LINES.

8/75	A			95.0							
	B			100.0							
	SYSTEM			98.0				744			

** PROBLEMS/SOLUTIONS/COMMENTS

THE A-SIDE WAS SHUT DOWN FOR INSPECTION.

9/75	A		64.5	98.0	64.5						
	B		93.0	97.0	93.0						
	SYSTEM		78.7	98.0	78.7			720	720	566	

PERIOD	MODULE	AVAILABILITY	OPERABILITY	RELIABILITY	UTILIZATION	% REMOVAL SO2	% REMOVAL PART.	PER HOURS	BOILER HOURS	FGD HOURS	CAP. FACTOR
		PERFORMANCE DATA									
	** PROBLEMS/SOLUTIONS/COMMENTS										
		MINOR OUTAGE RESULTED FROM PLUGGED FDS RECIRCULATION LINES									
10/75	A	78.0	84.0	56.4							
	B	24.5	55.0	17.7							
	SYSTEM	51.3	70.0	37.1				744	538	276	
	** PROBLEMS/SOLUTIONS/COMMENTS										
		OUTAGES RESULTED FROM SCHEDULED EQUIPMENT OVERHAULS AND RECOATING OF VESSELS.									
11/75	A	100.0	100.0	100.0							
	B	71.4	80.0	71.4							
	SYSTEM	85.7	90.0	85.7				720	720	617	
	** PROBLEMS/SOLUTIONS/COMMENTS										
		NO MAJOR OUTAGES OR PROBLEMS OCCURRED DURING THE REPORT PERIOD.									
12/75	A	100.0	100.0	100.0							
	B	100.0	100.0	100.0							
	SYSTEM	100.0	100.0	100.0				744	744	744	
	** PROBLEMS/SOLUTIONS/COMMENTS										
		MINOR PROBLEMS ENCOUNTERED REQUIRED RECYCLE PUMP REBUILDING.									
		THE B-SIDE REHEATER COIL MALFUNCTIONED.									
1/76	A	96.0	99.0	96.0							
	B	87.9	99.0	89.9							
	SYSTEM	91.9	99.0	91.9				744	744	684	
	** PROBLEMS/SOLUTIONS/COMMENTS										
		MINOR VALVE PLUGGING OCCURRED.									
		MINOR LINE PLUGGING OCCURRED.									
		MODULE B OPERATING HOURS WERE LOWER BECAUSE OF REDUCED SYSTEM REQUIREMENTS									
2/76	SYSTEM							696			
3/76	SYSTEM							744			
4/76	A		99.0								
	B		97.4								
	SYSTEM		98.2					720			
	** PROBLEMS/SOLUTIONS/COMMENTS										
		THE FGD SYSTEM IS CURRENTLY EXPERIENCEING COATING FAILURES IN THE ELBOW OF THE SCRUBBER EXHAUST DUCT.									
		THE UTILITY PERFORMED SOME MINOR REPAIRS TO THE HOUSING OF THE B-SIDE REHEATER.									
5/76	A		76.0								
	B		100.0								
	SYSTEM		88.0					744			
	** PROBLEMS/SOLUTIONS/COMMENTS										
		CORROSION AND PLUGGING PROBLEMS OCCURRED ON THE A-SIDE REHEATER TUBES.									
		THE UTILITY REPORTED PLUGGING IN FDS LINES.									

ARIZONA PUBLIC SERVICE: CHOLLA 1 (CONT.)

PERIOD	MODULE	AVAILABILITY	OPERABILITY	RELIABILITY	UTILIZATION	% REMOVAL SO2	% REMOVAL PART.	PER HOURS	BOILER HOURS	FGD HOURS	CAP. FACTOR
				PERFORMANCE DATA							

PLUGGING OCCURRED IN THE FDS PACKING.

PLUGGING OCCURRED IN THE MIST ELIMINATORS.

6/76	A			64.0							
	B			39.0							
	SYSTEM			52.0				720			

** PROBLEMS/SOLUTIONS/COMMENTS

LOW RELIABILITY FACTORS FOR THE MONTH OF JUNE RESULTED FROM A SCHEDULED MID-YEAR SCRUBBER SHUTDOWN FOR MAINTENANCE, INSPECTION AND REPAIRS.

SOME SCALING AND CORROSION PROBLEMS WERE UNCOVERED IN THE SYSTEM'S RECYCLE TANKS.

7/76	A			100.0							
	B			98.0							
	SYSTEM			99.0				744			

** PROBLEMS/SOLUTIONS/COMMENTS

REPAIRS TO THE COATING IN THE ELBOW OF THE SCRUBBER EXHAUST DUCT WERE COMPLETED.

A MALFUNCTIONING SOLENOID VALVE IN THE B-SIDE MIST ELIMINATOR WASH SYSTEM PREVENTING ADEQUATE WASHING, RESULTED IN A MINOR SCRUBBER OUTAGE.

8/76	A			100.0							
	B			100.0							
	SYSTEM			100.0				744			
9/76	A		100.0	100.0	100.0						
	B		93.9	100.0	93.9						
	SYSTEM		96.9	100.0	96.9			720	720	698	

** PROBLEMS/SOLUTIONS/COMMENTS

THE BOILER REMAINED OUT OF SERVICE THE ENTIRE MONTH. NO SIGNIFICANT PROBLEMS WERE REPORTED.

10/76	A		55.8	56.0	99.5						
	B		37.2	56.0	66.4						
	SYSTEM		46.5	56.0	82.9			744	417	346	
11/76	A		94.8	96.0	94.8						
	B		77.2	98.0	77.2						
	SYSTEM		86.0	97.0	86.0			720	720	619	

** PROBLEMS/SOLUTIONS/COMMENTS

TWO MINOR FORCED SCRUBBER OUTAGES OCCURRED DURING THE PERIOD.

A REHEATER STEAM LEAK CAUSED A MINOR FORCED OUTAGE.

AN INLET GAS DAMPER ADJUSTMENT PROBLEM IN BOTH THE A-SIDE AND B-SIDE SCRUBBING TRAINS CAUSED A MINOR OUTAGE.

12/76	A		99.8	98.0	99.8						
	B		67.0	100.0	67.0						
	SYSTEM		83.4	99.0	83.4			744	744	620	

** PROBLEMS/SOLUTIONS/COMMENTS

ONE OUTAGE WAS REPORTED. THE OUTAGE WAS THE RESULT OF AN ADDITIONAL ADJUSTMENT TO THE A-SIDE GAS INLET DAMPER.

1/77	A		71.6	72.0	71.6						

PERIOD	MODULE	AVAILABILITY	OPERABILITY	RELIABILITY	UTILIZATION	% REMOVAL SO2	% REMOVAL PART.	PER HOURS	BOILER HOURS	FGD HOURS	CAP. FACTOR
			PERFORMANCE DATA								
	B		91.9	93.0	91.9						
	SYSTEM		81.7	83.0	81.7			744	744	608	

** PROBLEMS/SOLUTIONS/COMMENTS

THE PERFORMANCE INDEX VALUES CONTAINED IN THESE TABLES ARE BASED UPON THE MODULES' ACTUAL SERVICE TIME FOR THE PERIOD VERSUS THE NUMBER OF HOURS THE MODULES ARE CALLED UPON TO OPERATE FOR THE SAME PERIOD. THE MODULES OPERATE ON A DEMAND-ONLY BASIS. FLUE GAS IS BYPASSED AROUND THE MODULES WHEN THEY ARE NOT REQUIRED FOR SERVICE.

2/77	A		96.4	99.0	96.4						
	B		88.0	99.0	88.0						
	SYSTEM		92.2	99.0	92.2			672	672	619	

** PROBLEMS/SOLUTIONS/COMMENTS

THE MUNTERS PACKING IN THE A-SIDE TOWER WAS REPLACED.

MINOR SCRUBBER VESSEL PLUGGING OCCURRED.

MINOR CORROSION OCCURRED IN THE SYSTEM.

SOME PROBLEMS OCCURRED WITH THE LIQUID PIPING.

THERE WERE MECHANICAL DIFFICULTIES WITH THE BY-PASS DAMPERS.

AVERAGE SO2 INLET/OUTLET VALUES DURING THE PERIOD WERE 350 PPM AND 175 PPM

3/77	A		71.6	72.0	71.6						
	B		91.9	93.0	91.9						
	SYSTEM		81.7	83.0	81.7			744	744	608	
4/77	A		99.6	100.0	88.2						
	B		98.6	100.0	87.3						
	SYSTEM		99.1	100.0	87.7			720	638	632	
5/77	A		100.0	87.0	86.3						
	B		100.0	87.0	86.7						
	SYSTEM		100.0	87.0	86.7			744	645	645	

** PROBLEMS/SOLUTIONS/COMMENTS

OUTAGE TIME FOR THE BOILER AND FGD SYSTEM WAS A RESULT OF THE SCHEDULED MID-YEAR SCRUBBER CLEANOUT.

DURING MAY RESEARCH-COTTRELL PERSONNEL CONDUCTED FORCED OXIDATION TESTS BY BLOWING AIR INTO THE FLOODED DISC SCRUBBER AND CONVERTING ALL CASO3 TO CASO4 YIELDING SUPERIOR SLUDGE DEWATERING HANDLING AND SCALE-FREE OPERATION.

6/77	A	100.0	100.0	100.0	100.0						
	B	100.0	100.0	100.0	100.0						
	SYSTEM	100.0	100.0	100.0	100.0			720	720	720	
7/77	A			97.0							
	B			99.0							
	SYSTEM			98.0				744	744		

** PROBLEMS/SOLUTIONS/COMMENTS

A MINOR LEAK OCCURRED IN THE LIMESTONE SLURRY TANK.

A MINOR LEAK OCCURRED IN THE B-SIDE RETURN LINE FROM THE FDS TO THE FDS TANK.

RESEARCH-COTTRELL PERSONNEL ARE STILL ON THE PLANT SITE CONTINUING FORCEDD OXIDATION STUDIES.

8/77	A	97.2	97.2	97.0	97.2						

ARIZONA PUBLIC SERVICE: CHOLLA 1 (CONT.)

PERFORMANCE DATA

PERIOD	MODULE	AVAILABILITY	OPERABILITY	RELIABILITY	UTILIZATION	% REMOVAL SO2	% REMOVAL PART.	PER HOURS	BOILER HOURS	FGD HOURS	CAP. FACTOR
	B	98.6	98.6	99.0	98.6						
	SYSTEM	97.9	97.9	98.0	97.9			744	744	728	
9/77	A	100.0	99.7	100.0	99.7						
	B	100.0	99.7	100.0	99.7						
	SYSTEM	100.0	99.7	100.0	99.7			720	720	718	

** PROBLEMS/SOLUTIONS/COMMENTS

DOWN TIME WAS REQUIRED TO REPAIR LEAKS IN THE SLURRY DISPOSAL TANK AND THE FDS RETURN LINE.

A LEAK OCCURRED AT THE SLURRY DISPOSAL TANK.

10/77	A	99.9	99.9	100.0	99.9						
	B	99.9	99.9	100.0	99.9						
	SYSTEM	99.9	99.9	100.0	99.9			744	744	743	

** PROBLEMS/SOLUTIONS/COMMENTS

NO PROBLEMS WERE REPORTED FOR OCTOBER.

11/77	A	100.0	99.7	100.0	23.3						
	B	97.4	84.3	98.0	19.7						
	SYSTEM	98.7	92.0	99.0	21.5			720	169	155	

** PROBLEMS/SOLUTIONS/COMMENTS

THE B-SIDE OUTAGE WAS DUE TO LEAKS IN THE VENTURI SECTION OF THE SCRUBBER AND AN EXPANSION JOINT FAILURE IN A RECYCLE PUMP.

ATHE B-SIDE OUTAGE WAS DUE TO LEAKS IN THE VENTURI SECTION OF THE SCRUBBER AND AN EXPANSION JOINT FAILURE IN A RECYCLE PUMP.

THE BOILER OPERATED ONLY 168.5 HOURS BECAUSE OF A SHUTDOWN FOR OVERHAUL N IN THE LAST HALF OF NOVEMBER. THE UNIT IS SCHEDULED TO START UP IN MID-DECEMBER.

12/77	A				.0						
	B				.0						
	SYSTEM				.0			744	0	0	

** PROBLEMS/SOLUTIONS/COMMENTS

THE BOILER AND SCRUBBING SYSTEM WERE DOWN AS THE OVERHAUL PERIOD CONTINUED. THIS MAJOR OVERHAUL CONTINUED INTO JANUARY 1978.

1/78	A	97.0	97.0	97.0	17.6						
	B	90.9	90.9	91.0	16.5						
	SYSTEM	94.0	93.9	94.0	17.0			744	135	127	

** PROBLEMS/SOLUTIONS/COMMENTS

THE FLOODED DISC SCRUBBER TANK HEADER FOR THE LIMESTONE SLURRY WAS REPAIRED AFTER BEING DAMAGED DURING THE OVERHAUL. THE BOILER WAS OPERATED ONLY 135 HOURS DURING JANUARY AS THE OVERHAUL HAD EXTENDED INTO THIS MONTH.

2/78	A		99.1	99.0	94.7						
	B		87.9	88.0	84.0						
	SYSTEM		93.5	94.0	89.3			672	642	600	

** PROBLEMS/SOLUTIONS/COMMENTS

SOME MINOR LEAK REPAIRS WERE REQUIRED AFTER THE OVERHAUL/CLEANING TOOK PLACE DURING FEBRUARY.

3/78	A		100.0	74.0	100.0						
	B		98.8	74.0	98.8						
	SYSTEM		99.4	74.0	99.4			744	744	740	

PERIOD	MODULE	AVAILABILITY	OPERABILITY	RELIABILITY	UTILIZATION	% REMOVAL SO2	% REMOVAL PART.	PER HOURS	BOILER HOURS	FGD HOURS	CAP. FACTOR
		PERFORMANCE DATA									

** PROBLEMS/SOLUTIONS/COMMENTS

ONE FORCED SHUTDOWN OCCURRED ON THE A-SIDE.

4/78	A		92.7	100.0	92.7						
	B		100.0	100.0	100.0						
	SYSTEM		96.3	100.0	96.3			720	720	694	

** PROBLEMS/SOLUTIONS/COMMENTS

A MINOR LEAK REPAIR WAS NECESSARY AFTER AN OVERHAUL/CLEANING.

5/78	A		86.7	87.0	86.7						
	B		96.2	98.0	96.2						
	SYSTEM		91.4	93.0	91.4			744	744	680	

** PROBLEMS/SOLUTIONS/COMMENTS

THERE WERE NO SIGNIFICANT PROBLEMS REPORTED. ONLY GENERAL MAINTENANCE WAS PERFORMED ON THE SYSTEM.

6/78	A		100.0	100.0	100.0						
	B		99.2	100.0	99.2						
	SYSTEM		99.6	100.0	99.6			720	720	717	

** PROBLEMS/SOLUTIONS/COMMENTS

NO PROBLEMS WERE REPORTED.

7/78	A		99.4		99.4						
	B		100.0	100.0	100.0						
	SYSTEM		99.7	100.0	99.7			744	744	742	

** PROBLEMS/SOLUTIONS/COMMENTS

ONLY ROUTINE MAINTENANCE WAS REQUIRED.

8/78	A		100.0	100.0	100.0						
	B		95.2	95.1	95.2						
	SYSTEM		97.6	98.0	97.6			744	744	726	

** PROBLEMS/SOLUTIONS/COMMENTS

REPAIRS WERE NECESSARY TO PLUGGED B-SIDE REHEAT COILS.

9/78	B		95.2	100.0	97.8						
	A		100.0	100.0	100.0						
	SYSTEM		98.9	100.0	98.9			720	720	712	

** PROBLEMS/SOLUTIONS/COMMENTS

NO PROBLEMS WERE REPORTED.

10/78	B		95.9	100.0	95.9						
	A		100.0	100.0	100.0						
	SYSTEM		97.9	100.0	97.9			744	434	712	

** PROBLEMS/SOLUTIONS/COMMENTS

ONLY ROUTINE MAINTENANCE WAS REQUIRED.

11/78	A		100.0	100.0	100.0						
	B		91.3	100.0	91.3						
	SYSTEM		95.7	100.0	95.7			720	720	688	

ARIZONA PUBLIC SERVICE: CHOLLA 1 (CONT.)

PERIOD	MODULE	AVAILABILITY	OPERABILITY	RELIABILITY	UTILIZATION	% REMOVAL SO2	% REMOVAL PART.	PER HOURS	BOILER HOURS	FGD HOURS	CAP. FACTOR
		PERFORMANCE DATA									
	** PROBLEMS/SOLUTIONS/COMMENTS										
		NO PROBLEMS WERE REPORTED.									
12/78	A	88.2	88.1	88.2							
	B	85.6	88.3	85.6							
	SYSTEM	86.9	88.2	86.9				744	744	647	
1/79	A	99.2	99.1	99.2							
	B	100.0	100.0	100.0							
	SYSTEM	99.6	99.6	99.6				744	744	741	
	** PROBLEMS/SOLUTIONS/COMMENTS										
		THE UTILITY HAS REPORTED THAT THE FGD SYSTEM EXPERIENCED CONTROL PROBLEMS.									
2/79	A	100.0	100.0	100.0							
	B	100.0	100.0	100.0							
	SYSTEM	100.0	100.0	100.0				672	672	672	
3/79	A	95.3	95.0	95.3							
	B	100.0	100.0	100.0							
	SYSTEM	97.7	97.5	97.7				744	744	727	
	** PROBLEMS/SOLUTIONS/COMMENTS										
		THE UTILITY HAS EXPERIENCED PLUGGED REHEAT TUBES. THE OLD TUBES, IN UNSECTIONALIZED BUNDLES, WERE REPLACED WITH NEW TUBES OF SPLIT COIL CONSTRUCTION AND MADE OF 316L SS. THE NEW TYPE OF TUBES ALONG WITH BETTER MAINTENANCE PROCEDURES HAS ADDED TO THE REHEAT TUBE LIFE AND AVAILABILITY.									
4/79	A	100.0	100.0	100.0							
	B	100.0	100.0	100.0							
	SYSTEM	100.0	100.0	100.0				720	720	720	
5/79	A	99.1	99.4	99.1							
	B	44.1	44.1	44.1							
	SYSTEM	71.6	71.8	71.6				744	744	533	
	** PROBLEMS/SOLUTIONS/COMMENTS										
		CORRODED DUCTWORK ON MODULE B WAS REPLACED DURING MAY.									
6/79	A	78.0	78.0	78.0							
	B	100.0	100.0	100.0							
	SYSTEM	89.0	89.0	89.0				720	720	642	
	** PROBLEMS/SOLUTIONS/COMMENTS										
		THE MUNTERS PACKING WAS REPLACED AND MAINTENANCE WAS PERFORMED ON THE MODULE A DISCHARGE HEADER.									
7/79	SYSTEM							744			
	** PROBLEMS/SOLUTIONS/COMMENTS										
		NO INFORMATION WAS AVAILABLE FOR THE MONTH OF JULY.									
8/79	A	95.7	95.6	95.7							
	B	95.7	95.7	95.7							
	SYSTEM	95.7	95.7	95.7				744	744	712	
	** PROBLEMS/SOLUTIONS/COMMENTS										
		DURING AUGUST SCRUBBER MAINTENANCE WAS PERFORMED ON A FLOODED DISC.									
9/79	SYSTEM							720			

PERIOD	MODULE	AVAILABILITY	OPERABILITY	RELIABILITY	UTILIZATION	% REMOVAL SO2	% REMOVAL PART.	PER HOURS	BOILER HOURS	FGD HOURS	CAP. FACTOR
		PERFORMANCE DATA									
	** PROBLEMS/SOLUTIONS/COMMENTS										
		INFORMATION WAS NOT AVAILABLE FOR THE MONTH OF SEPTEMBER.									
10/79	A	97.7	100.0	45.0							
	B	94.7	98.0	43.3							
	SYSTEM	96.0	99.0	44.0				744	342	328	
	** PROBLEMS/SOLUTIONS/COMMENTS										
		DURING OCTOBER ROUTINE MAINTENANCE WAS PERFORMED.									
11/79	SYSTEM							720			
12/79	SYSTEM							744			
	** PROBLEMS/SOLUTIONS/COMMENTS										
		NO INFORMATION WAS AVAILABLE FOR THE MONTHS OF NOVEMBER AND DECEMBER.									

SECTION 3
DESIGN AND PERFORMANCE DATA FOR OPERATIONAL DOMESTIC FGD SYSTEMS

COMPANY NAME	ARIZONA PUBLIC SERVICE	
PLANT NAME	CHOLLA	
UNIT NUMBER	2	
CITY	JOSEPH CITY	
STATE	ARIZONA	
REGULATORY CLASSIFICATION	C	
PARTICULATE EMISSION LIMITATION - NG/J	72.	(.167 LB/MMBTU)
SO2 EMISSION LIMITATION - NG/J	344.	(.800 LB/MMBTU)
NET PLANT GENERATING CAPACITY - MW	615.0	
GROSS UNIT GENERATING CAPACITY - MW	350.0	
NET UNIT GENERATING CAPACITY W/FGD - MW	250.0	
NET UNIT GENERATING CAPACITY WO/FGD - MW	*******	
EQUIVALENT SCRUBBED CAPACITY - MW	350.0	
** BOILER DATA		
SUPPLIER	COMBUSTION ENGINEERING	
TYPE	PULVERIZED COAL	
SERVICE LOAD	BASE	
COMMERCIAL SERVICE DATE	8/78	
MAXIMUM BOILER FLUE GAS FLOW - CU.M/S	********	(******* ACFM)
FLUE GAS TEMPERATURE - C	*******	(**** F)
STACK HEIGHT - M	168.	(550 FT)
STACK TOP DIAMETER - M	4.5	(14.7 FT)
** FUEL DATA		
FUEL TYPE	COAL	
FUEL GRADE	BITUMINOUS	
AVERAGE HEAT CONTENT - J/G	23609.	(10150 BTU/LB)
RANGE HEAT CONTENT - BTU/LB		965-10,600
AVERAGE ASH CONTENT - %	13.50	
RANGE ASH CONTENT - %	9.7-22.5	
AVERAGE MOISTURE CONTENT - %	15.00	
RANGE MOISTURE CONTENT - %	******	
AVERAGE SULFUR CONTENT - %	.50	
RANGE SULFUR CONTENT - %	0.44-1.0	
AVERAGE CHLORIDE CONTENT - %	.02	
RANGE CHLORIDE CONTENT - %	0.01-0.04	
** MECHANICAL COLLECTOR		
PARTICULATE DESIGN REMOVAL EFFICIENCY - %	75.0	
** PARTICULATE SCRUBBER		
NUMBER	4	
TYPE	VENTURI	
SUPPLIER	RESEARCH COTTRELL	
SHELL MATERIAL	316L	
LINING MATERIAL	CEILCOTE FLAKEGLASS	
FLUE GAS CAPACITY - CU.M/S	185.0	(392000 ACFM)
FLUE GAS TEMPERATURE - C	50.0	(122 F)
L/G RATIO - LITER/CU.M	1.4	(10.1 GAL/1000ACF)
PRESSURE DROP - KPA	*******	(***** IN-H2O)
** FGD SYSTEM		
SALEABLE PRODUCT/THROWAWAY PRODUCT	THROWAWAY PRODUCT	
GENERAL PROCESS TYPE	WET SCRUBBING	
PROCESS TYPE	LIMESTONE	
PROCESS ADDITIVES	NONE	
SYSTEM SUPPLIER	RESEARCH COTTRELL	
A-E FIRM	EBASCO	
DEVELOPMENT LEVEL	FULL SCALE	
NEW/RETROFIT	NEW	
PARTICULATE DESIGN REMOVAL EFFICIENCY - %	99.70	
SO2 DESIGN REMOVAL EFFICIENCY - %	75.00	
INITIAL START-UP	4/78	
CONSTRUCTION INITIATION	7/75	
CONTRACT AWARDED	12/74	
ABSORBER SPARE CAPACITY INDEX - %	33.0	
ABSORBER SPARE COMPONENT INDEX	1.0	
** ABSORBER		
NUMBER	4	
TYPE	GRID/SPRAY TOWER	

ARIZONA PUBLIC SERVICE: CHOLLA 2 (CONT.)

INITIAL START UP	6/78	
SUPPLIER	RESEARCH COTTRELL	
DIMENSIONS - FT	22 (DIA) X 70	
SHELL MATERIAL	316L SS	
SHELL LINER MATERIAL	POPYPROPYLENE PACKING	
INTERNAL MATERIAL	PACKING MATRIX	
BOILER LOAD/ABSORBER - %	21.0	
GAS FLOW - CU.M/S	184.98	(392000 ACFM)
GAS TEMPERATURE - C	50.0	(122 F)
L/G RATIO - L/CU.M	6.5	(48.9 GAL/1000ACF)
PRESSURE DROP - KPA	.1	(.5 IN-H2O)
** MIST ELIMINATOR		
TYPE	CHEVRON	
** REHEATER		
TYPE	IN-LINE	
HEATING MEDIUM	STEAM	
TEMPERATURE BOOST - C	21.2	(40 F)
** WATER LOOP		
TYPE	OPEN	
FRESH MAKEUP WATER ADDITION - LITERS/S	7.6	(120 GPM)
** REAGENT PREPARATION EQUIPMENT		
NUMBER OF BALL MILLS	2	
BALL MILL CAPACITY- M T/H	6.3	(7.0 TPH)
** DISPOSAL		
NATURE	FINAL	
TYPE	POND	

PERFORMANCE DATA

PERIOD	MODULE	AVAILABILITY	OPERABILITY	RELIABILITY	UTILIZATION	% REMOVAL SO2	% REMOVAL PART.	PER HOURS	BOILER HOURS	FGD HOURS	CAP. FACTOR
4/78	SYSTEM							720			

** PROBLEMS/SOLUTIONS/COMMENTS

SOME PROBLEMS HAVE OCCURRED WITH VIBRATIONS THROUGH THE SYSTEM.

THE EPA HAS GRANTED THE UTILITY AN EXTENSION FOR COMPLIANCE.

5/78	SYSTEM							744			
6/78	SYSTEM							720			

** PROBLEMS/SOLUTIONS/COMMENTS

SHAKEDOWN/DEBUGGING OPERATIONS ARE CONTINUING.

THE SLURRY RECYCLE PIPING HAS EXPERIENCED CONTINUAL VIBRATION. THE CONTRACTOR HAS BEEN INJECTING NITROGEN GAS INTO THE LINES TO DAMPEN THE VIBRATIONS (AIR WAS NOT USED BECAUSE THE SULFITE WOULD BE OXIDIZED TO SULFATE AND RESULT IN SCALE FORMATION).

THE CORROSION RESISTANT COATING IN THE DOWNCOMER AREA IN ONE OF THE ABSORBER MODULES HAS BEEN PEELING AWAY.

7/78	SYSTEM							744			
8/78	SYSTEM							744			

** PROBLEMS/SOLUTIONS/COMMENTS

THE SLURRY COMPONENTS ARE STILL EXPERIENCING RESONANT VIBRATIONS.

SHAKEDOWN/DEBUGGING OPERATIONS ARE CONTINUING.

9/78	SYSTEM							720			
10/78	SYSTEM							744			

ARIZONA PUBLIC SERVICE: CHOLLA 2 (CONT.)

PERIOD	MODULE	AVAILABILITY	OPERABILITY	RELIABILITY	UTILIZATION	% REMOVAL SO2	% REMOVAL PART.	PER HOURS	BOILER HOURS	FGD HOURS	CAP. FACTOR
		PERFORMANCE DATA									

** PROBLEMS/SOLUTIONS/COMMENTS

SHAKEDOWN DEBUGGING OPERATIONS ARE CONTINUING. SOME SCRUBBER COMPONENTS ARE STILL MANNED BY BECHTEL STAFF, APS IS OPERATING MOST OF THE SYSTEM AT THIS TIME.

11/78	SYSTEM							720			
12/78	SYSTEM							744			
1/79	SYSTEM							744			
2/79	SYSTEM							672			
3/79	SYSTEM							744			
4/79	SYSTEM							720			
5/79	SYSTEM							744			
6/79	SYSTEM							720			

** PROBLEMS/SOLUTIONS/COMMENTS

OPERATION PARAMATERS ARE STILL UNAVAILABLE FOR THIS UNIT.

7/79	SYSTEM							744			
8/79	SYSTEM							744			
9/79	SYSTEM							720			

** PROBLEMS/SOLUTIONS/COMMENTS

NO INFORMATION WAS AVAILABLE FROM THE UTILITY FOR THIS PERIOD.

10/79	SYSTEM							744			
11/79	SYSTEM							720			
12/79	SYSTEM							744			

** PROBLEMS/SOLUTIONS/COMMENTS

NO INFORMATION WAS AVAILABLE FOR THIS QUARTER.

SECTION 3
DESIGN AND PERFORMANCE DATA FOR OPERATIONAL DOMESTIC FGD SYSTEMS

COMPANY NAME	BIG RIVERS ELECTRIC	
PLANT NAME	GREEN	
UNIT NUMBER	1	
CITY	SEBREE	
STATE	KENTUCKY	
REGULATORY CLASSIFICATION	B	
PARTICULATE EMISSION LIMITATION - NG/J	******	(****** LB/MMBTU)
SO2 EMISSION LIMITATION - NG/J	516.	(1.200 LB/MMBTU)
NET PLANT GENERATING CAPACITY - MW	484.0	
GROSS UNIT GENERATING CAPACITY - MW	242.0	
NET UNIT GENERATING CAPACITY W/FGD - MW	200.0	
NET UNIT GENERATING CAPACITY WO/FGD - MW	*******	
EQUIVALENT SCRUBBED CAPACITY - MW	242.0	
** BOILER DATA		
SUPPLIER	BABCOCK & WILCOX	
TYPE	PULVERIZED COAL	
SERVICE LOAD	BASE	
COMMERCIAL SERVICE DATE	**/**	
MAXIMUM BOILER FLUE GAS FLOW - CU.M/S	471.90	(1000000 ACFM)
FLUE GAS TEMPERATURE - C	148.9	(300 F)
STACK HEIGHT - M	******	(**** FT)
STACK TOP DIAMETER - M	*******	(***** FT)
** FUEL DATA		
FUEL TYPE	COAL	
FUEL GRADE	BITUMINOUS	
AVERAGE HEAT CONTENT - J/G	22678.	(9750 BTU/LB)
RANGE HEAT CONTENT - BTU/LB		9000-10500
AVERAGE ASH CONTENT - %	20.00	
RANGE ASH CONTENT - %	15-25	
AVERAGE MOISTURE CONTENT - %	11.00	
RANGE MOISTURE CONTENT - %	8-14	
AVERAGE SULFUR CONTENT - %	3.75	
RANGE SULFUR CONTENT - %	******	
AVERAGE CHLORIDE CONTENT - %	********	
RANGE CHLORIDE CONTENT - %	******	
** ESP		
TYPE	COLD SIDE	
SUPPLIER	AMERICAN AIR FILTER	
PARTICULATE DESIGN REMOVAL EFFICIENCY - %	99.0	
** PARTICULATE SCRUBBER		
TYPE	NONE	
** FGD SYSTEM		
SALEABLE PRODUCT/THROWAWAY PRODUCT	THROWAWAY PRODUCT	
GENERAL PROCESS TYPE	WET SCRUBBING	
PROCESS TYPE	LIME	
PROCESS ADDITIVES	MG PROMOTED	
SYSTEM SUPPLIER	AMERICAN AIR FILTER	
A-E FIRM	BURNS & ROE	
CONSTRUCTION FIRM	AMERICAN AIR FILTER	
DEVELOPMENT LEVEL	FULL SCALE	
NEW/RETROFIT	NEW	
PARTICULATE DESIGN REMOVAL EFFICIENCY - %	99.00	
SO2 DESIGN REMOVAL EFFICIENCY - %	90.00	
COMMERCIAL DATE	12/79	
INITIAL START-UP	12/79	
** ABSORBER		
NUMBER	2	
TYPE	SPRAY TOWER	
INITIAL START UP	6/79	
SO2 DESIGN REMOVAL EFFICIENCY - %	90.0	
** MIST ELIMINATOR		
NUMBER	2	
TYPE	CHEVRON	

BIG RIVERS ELECTRIC: GREEN 1 (CONT.)

** REHEATER
TYPE — HOT AIR INJECTION
HEATING MEDIUM — STEAM

** WATER LOOP
TYPE — CLOSED

** TREATMENT
TYPE — POZ-O-TEC
SUPPLIER — IUCS

PERFORMANCE DATA

PERIOD	MODULE	AVAILABILITY	OPERABILITY	RELIABILITY	UTILIZATION	% REMOVAL SO2	% REMOVAL PART.	PER HOURS	BOILER HOURS	FGD HOURS	CAP. FACTOR
12/79	SYSTEM							744			

** PROBLEMS/SOLUTIONS/COMMENTS

THE FGD OPERATION COMMENCED IN MID-DECEMBER 1979. THE UNIT IS PRESENTLY IN STARTUP PHASE.

SECTION 3
DESIGN AND PERFORMANCE DATA FOR OPERATIONAL DOMESTIC FGD SYSTEMS

COMPANY NAME	CENTRAL ILLINOIS LIGHT	
PLANT NAME	DUCK CREEK	
UNIT NUMBER	1	
CITY	CANTON	
STATE	ILLINOIS	
REGULATORY CLASSIFICATION	B	
PARTICULATE EMISSION LIMITATION - NG/J	43.	(.100 LB/MMBTU)
SO2 EMISSION LIMITATION - NG/J	516.	(1.200 LB/MMBTU)
NET PLANT GENERATING CAPACITY - MW	378.0	
GROSS UNIT GENERATING CAPACITY - MW	416.0	
NET UNIT GENERATING CAPACITY W/FGD - MW	378.0	
NET UNIT GENERATING CAPACITY WO/FGD - MW	390.0	
EQUIVALENT SCRUBBED CAPACITY - MW	378.0	
** BOILER DATA		
SUPPLIER	RILEY STOKER	
TYPE	PULVERIZED COAL	
SERVICE LOAD	CYCLING	
COMMERCIAL SERVICE DATE	0/76	
MAXIMUM BOILER FLUE GAS FLOW - CU.M/S	667.74	(1415000 ACFM)
FLUE GAS TEMPERATURE - C	135.0	(275 F)
STACK HEIGHT - M	152.	(500 FT)
STACK TOP DIAMETER - M	5.8	(19.0 FT)
** FUEL DATA		
FUEL TYPE	COAL	
FUEL GRADE	BITUMINOUS	
AVERAGE HEAT CONTENT - J/G	24423.	(10500 BTU/LB)
RANGE HEAT CONTENT - BTU/LB		11000
AVERAGE ASH CONTENT - %	9.12	
RANGE ASH CONTENT - %	18.0	
AVERAGE MOISTURE CONTENT - %	18.00	
RANGE MOISTURE CONTENT - %	******	
AVERAGE SULFUR CONTENT - %	3.30	
RANGE SULFUR CONTENT - %	2.4-4.0	
AVERAGE CHLORIDE CONTENT - %	.03	
RANGE CHLORIDE CONTENT - %	******	
** ESP		
NUMBER	2	
TYPE	COLD SIDE	
SUPPLIER	POLLUTION CONTROL-WALTHER	
PARTICULATE DESIGN REMOVAL EFFICIENCY - %	99.8	
FLUE GAS CAPACITY - CU.M/S	358.6	(760000 ACFM)
FLUE GAS TEMPERATURE - C	135.0	(275 F)
PRESSURE DROP - KPA	******	(***** IN-H2O)
PARTICULATE OUTLET LOAD - G/CU.M	.02	(.01 GR/SCF)
** PARTICULATE SCRUBBER		
TYPE	NONE	
** FGD SYSTEM		
SALEABLE PRODUCT/THROWAWAY PRODUCT	THROWAWAY PRODUCT	
GENERAL PROCESS TYPE	WET SCRUBBING	
PROCESS TYPE	LIMESTONE	
PROCESS ADDITIVES	NONE	
SYSTEM SUPPLIER	RILEY STOKER/ENVIRONEERING	
A-E FIRM	GILBERT/COMMONWEALTH ASSOCIATES	
DEVELOPMENT LEVEL	FULL SCALE	
NEW/RETROFIT	NEW	
PARTICULATE DESIGN REMOVAL EFFICIENCY - %	99.80	
SO2 DESIGN REMOVAL EFFICIENCY - %	85.00	
COMMERCIAL DATE	8/78	
INITIAL START-UP	9/76	
CONTRACT AWARDED	8/76	
** ABSORBER		
NUMBER	4	
TYPE	GRID TOWER	
INITIAL START UP	7/78	
SUPPLIER	RILEY STOKER/ENVIRONEERING	
NUMBER OF STAGES	7	

CENTRAL ILLINOIS LIGHT: DUCK CREEK 1 (CONT.)

DIMENSIONS - FT	40 X 5 X 40	
SHELL MATERIAL	316L & HASTALLOY G.	
INTERNAL MATERIAL	316L & HASTALLOY G.	
NUMBER OF NOZZLES	12	
NOZZLE TYPE	OPEN PIPE ARRANGEMENT	
BOILER LOAD/ABSORBER - %	25.0	
GAS FLOW - CU.M/S	167.01	(353900 ACFM)
GAS TEMPERATURE - C	135.0	(275 F)
LIQUID RECIRCULATION RATE - LITER/S	945.	(15000 GPM)
L/G RATIO - L/CU.M	6.7	(50.0 GAL/1000ACF)
PRESSURE DROP - KPA	2.0	(8.0 IN-H2O)
SUPERFICAL GAS VELOCITY - M/SEC	4.0	(13.0 FT/S)
SO2 INLET CONCENTRATION - PPM	3000	
SO2 OUTLET CONTRATION - PPM	252	
SO2 DESIGN REMOVAL EFFICIENCY - %	91.0	
** FANS		
NUMBER	4	
TYPE	BOILER I.D.	
CONSTRUCTION MATERIALS	CARBON STEEL	
SERVICE - WET/DRY	DRY	
CAPACITY - CU.M/S	205.28	(435000 ACFM)
** MIST ELIMINATOR		
NUMBER	4	
TYPE	CHEVRON	
CONSTRUCTION MATERIAL	HASTALLOY G	
CONFIGURATION	VERTICAL	
NUMBER OF STAGES	2	
NUMBER OF PASSES	3	
FREEBOARD DISTANCE - M	3.66	(12.0 FT)
DEPTH - M	.24	(.8 FT)
VANE SPACING - CM	6.3	(2.50 IN)
VANE ANGLES	90 DEG.	
WASH SYSTEM	CONTINUOUS, LOW PRESSURE, FRONT AND BACK OF FIRS	
SUPERFICIAL GAS VELOCITY - M/S	4.0	(13.0 FT/S)
PRESSURE DROP - KPA	.2	(1.0 IN-H2O)
** PROCESS CONTROL CHEMISTRY		
CONTROL VARIABLES	PH, SOLIDS CONTENT OF SLURRY, LEVEL CONTROL	
CONTROL MANNER	AUTOMATIC	
MODE	FEEDBACK	
** PUMPS		
SERVICE	NUMBER	
-------	------	
POND RETURN	2	
WASTE SLURRY	2	
MIST ELIMINATOR WASH	12	
ABSORBER RECIRCULATION	12	
SLURRY TRANSFER	7	
** TANKS		
SERVICE	NUMBER	
-------	------	
RECYCLE	4	
WASTE COLLECTION	1	
LIMESTONE SLURRY	7	
M.E. WASH	4	
** REHEATER		
NUMBER	0	
TYPE	NONE	
** WATER LOOP		
TYPE	CLOSED	
FRESH MAKEUP WATER ADDITION - LITERS/S	37.8	(600 GPM)
** REAGENT PREPARATION EQUIPMENT		
NUMBER OF BALL MILLS	1	
BALL MILL CAPACITY- M T/H	36.3	(40.0 TPH)
** DISPOSAL		
NATURE	FINAL	
TYPE	LINED POND	
LOCATION	ON-SITE	
TRANSPORTATION	PUMPED	

CENTRAL ILLINOIS LIGHT: DUCK CREEK 1 (CONT.)

DIMENSIONS	65 ACRES X 4 FEET DEEP	
AREA - ACRES	65.0	
CAPACITY - CU.M	317980	(260.0 ACRE-FT)

PERFORMANCE DATA

PERIOD	MODULE	AVAILABILITY	OPERABILITY	RELIABILITY	UTILIZATION	% REMOVAL SO2	% REMOVAL PART.	PER HOURS	BOILER HOURS	FGD HOURS	CAP. FACTOR
7/76	SYSTEM				1.1			744		8	

** PROBLEMS/SOLUTIONS/COMMENTS

CONSTRUCTION OF DUCK CREEK 1 BEGAN IN EARLY 1972 AND WAS VIRTUALLY COMPLETED BY SPRING 1976. COMMERCIAL OPERATION WAS INITIATED IN JUNE 1976 WITH THE ESP MODULES IN THE GAS PATH. THE FIRST MODULE OF THE 4-MODULE SCRUBBING SYSTEM WAS INSTALLED BY JUNE 1976 AND START-UP FOR SHAKEDOWN/DEBUGGING PURPOSES OCCURRED IN JULY 1976. THE REMAINING THREE MODULES WILL BE INSTALLED LATER WITH A 4-MODULE START-UP SCHEDULED FOR THE SUMMER OF 1978.

INITIAL OPERATION OF THE FIRST SCRUBBER MODULE FOR SHAKEDOWN AND DEBUGGING PURPOSE OCCURRED DURING THE MONTH. LIMITED SERVICE TIME RESULTED FROM PROBLEMS WITH BAD WELDS, FAULTY PIPE HANGES, AND ABSORBER LEAKS.

8/76	SYSTEM				2.4			744		18	

** PROBLEMS/SOLUTIONS/COMMENTS

LIMITED OPERATIONS CONTINUED THROUGHOUT AUGUST BECAUSE OF THE START-UP AND CONSTRUCTION PROBLEMS MENTIONED FOR JULY, 1976. THE MODULE WAS TAKEN OUT OF THE GAS PATH AT THIS POINT TO CONCENTRATE ON RESOLVING THESE PROBLEM AREAS.

9/76	SYSTEM				50.0			744		360	

** PROBLEMS/SOLUTIONS/COMMENTS

MODULE RESTART OCCURRED ON SEPTEMBER 9. OPERATION CONTINUED THROUGHOUT THE REMAINDER OF THE MONTH ON AN INTERMITTANT BASIS. MAJOR PROBLEMS INCLUDED PIPE BREAKING, PUMP LINER FAILURES, PLUGGING AND SEALING OF MIST ELIMINATORS, AND SOME BOILER-RELATED PROBLEMS. THE MODULE REMAINED IN SERVICE FOR APPROXIMATELY 15 DAYS OF NON-CONTINUOUS OPERATION. THE PCW ESP MODULES HAVE REMAINED IN SERVICE WITHOUT THE OCCURRENCE OF ANY MAJOR PROBLEMS.

10/76	SYSTEM				51.8			744		385	

** PROBLEMS/SOLUTIONS/COMMENTS

TOTAL OPERATION TIME DURING THE MONTH WAS APPROXIMATELY 16 DAYS (NON-CONTINUOUS). THE MAJOR PROBLEM AREA WAS THE CONTINUATION OF MASSIVE SCALE DEVELOPMENT ON THE MIST ELIMINATORS, RESULTING IN PLUGGING OF THE PIPING AND NOZZLES TO THE COMPONENTS SPRAY SYSTEM.

11/76	SYSTEM				3.3			720		24	

** PROBLEMS/SOLUTIONS/COMMENTS

SPORADIC OPERATION RESULTED FROM CONTINUED SCALING PROBLEMS IN THE MIST ELIMINATOR SECTION. RILEY AND CILCO INITIATED MODIFICATIONS TO THE DESIGN OF THE MODULE. SPECIFICALLY, A ROD DECK WAS CHANGED IN THE ABSORBER, PRESSURE DROP ACROSS THE ABSORBER WAS INCREASED, PIPING AND PUMP LINER MATERIALS WERE MODIFIED/REPLACED, AND A FRESH WATER WASH SYSTEM WAS INSTALLED FOR THE MIST ELIMINATOR.

12/76	SYSTEM				.0			744		0	

** PROBLEMS/SOLUTIONS/COMMENTS

THE MODULE REMAINED OUT OF SERVICE THE ENTIRE MONTH. DURING THIS TIME, THE BOILER FIRED LOW SULFUR (0.6%) KENTUCKY COAL.

1/77	SYSTEM				.0			744		0	
2/77	SYSTEM				.0			672		0	

CENTRAL ILLINOIS LIGHT: DUCK CREEK 1 (CONT.)

PERIOD	MODULE	AVAILABILITY	OPERABILITY	RELIABILITY	UTILIZATION	% REMOVAL SO2	% REMOVAL PART.	PER HOURS	BOILER HOURS	FGD HOURS	CAP. FACTOR
		PERFORMANCE DATA									

** PROBLEMS/SOLUTIONS/COMMENTS

THE NO. 1 UNIT WAS DOWN THROUGHOUT THE ENTIRE PERIOD FOR TURBINE/BOILER OVERHAUL. DURING THE UNIT OUTAGE, A NUMBER OF MODIFICATIONS WERE MADE TO THE SCRUBBER.

3/77	SYSTEM				47.0			744		350	

** PROBLEMS/SOLUTIONS/COMMENTS

THE NO. 1 UNIT WAS RETURNED TO SERVICE IN MID-MARCH. THE SCRUBBER WAS PLACED IN SERVICE TO TEST THE MODIFICATIONS MADE DURING THE PRECEDING OUTAGE. THESE MODIFICATIONS INCLUDED:

THE MIST ELIMINATOR SPRAY WASH SYSTEM PIPING WAS CHANGED FROM PVC TO FRP MATERIALS. ALSO, AN ADDITIONAL SPRAY HEADER WAS ADDED.
THE SLURRY CIRCULATION SYSTEM WAS REVAMPED.
NEOPRENE PUMP FILTERS HAVE REPLACED THE ORIGINAL RUBBER LINES.
FLUSH/DRAIN SYSTEMS HAVE BEEN INCLUDED TO MINIMIZE SOLIDS BUILD UP.
PIPING VALVES MOVED CLOSER TO THE RECYCLE TANK.
SLURRY STORAGE TANKS EQUIPPED WITH FLUSH/DRAIN SYSTEMS.
ADDITIONAL MIXERS ADDED FOR GREATER AGITATION TO PROMOTE PROCESS CHEMISTRY.

DURING THE LAST PART OF MARCH THE MODULE REMAINED IN SERVICE ON A CONTINUAL BASIS WITH THE EXCEPTION OF A FEW MINOR BOILER OUTAGES. CILCO INTENDS TO CONTINUE EXPERIMENTAL OPERATIONS THROUGHOUT THE APRIL-MAY PERIOD, TESTING THE MECHANICAL MODIFICATIONS AND THE AUTOMATIC CONTROL LOOPS (SYSTEM CHEMISTRY WILL BE CONTROLLED BY INLET/OUTLET SO2 LOADING, SOLUTION PH, SOLUTION SOLIDS. OPERATION UP TO THIS POINT HAS PROCEEDED IN A MANUAL CONTROL MODE). CONTINUED OPERATION BEYOND THIS TIME FRAME WILL DEPEND UPON THE SUCCESS OF EXPERIMENTAL OPERATIONS. CILCO HAS THE OPTION OF FIRING LOW SULFUR COAL UNTIL THE ENTIRE 4-MODULE SCRUBBER PLANT IS READY FOR SERVICE IN AUGUST 1978.

4/77	SYSTEM				.0			720		0	
5/77	SYSTEM				.0			744		0	
6/77	SYSTEM				.0			720		0	
7/77	SYSTEM				.0			744		0	
8/77	SYSTEM				.0			744		0	
9/77	SYSTEM				.0			720		0	
10/77	SYSTEM				.0			744		0	
11/77	SYSTEM				.0			720		0	
12/77	SYSTEM				.0			744		0	
1/78	SYSTEM				.0			744		0	
2/78	SYSTEM				.0			672		0	
3/78	SYSTEM				.0			744		0	
4/78	SYSTEM				.0			720		0	
5/78	SYSTEM				.0			744		0	
6/78	SYSTEM				.0			720	0	0	

** PROBLEMS/SOLUTIONS/COMMENTS

THE UNIT CONTINUED TO FIRE LOW-SULFUR COLORADO COAL DURING THE REPORT PERIOD. THE RESTART OF SCRUBBER OPERATIONS CONTINUES TO BE SCHEDULED FOR AUGUST 1978.

7/78	SYSTEM	.0	.0	.0	.0			720	0	0	

PERIOD	MODULE	AVAILABILITY	OPERABILITY	RELIABILITY	UTILIZATION	% REMOVAL SO2	% REMOVAL PART.	PER HOURS	BOILER HOURS	FGD HOURS	CAP. FACTOR
		PERFORMANCE DATA									

** PROBLEMS/SOLUTIONS/COMMENTS

ALL FOUR MODULES BECAME OPERATIONAL ON JULY 24.

MODIFICATIONS WERE MADE TO THE UNDER DESIGNED SLURRY TRANSFER TANK.

A PLUGGING PROBLEM CAUSED BY COAL FINES IN THE SLURRY WAS EXPERIENCED. THE FINES RESULTED FROM A COMMON COAL AND LIMESTONE HANDLING SYSTEM.

THE COMMON COAL AND LIMESTONE HANDLING SYSTEM ALLOWED COAL FINES TO PLUG THE FGD SYSTEM.

8/78	SYSTEM	45.0	46.0	46.0	42.0			744	691	315	
9/78	SYSTEM	46.0	46.0	46.0	44.0			720	691	317	

** PROBLEMS/SOLUTIONS/COMMENTS

SCREEN BASKETS WERE USED TO KEEP COAL PARTICLES FROM THE LIMESTONE. THE COAL PARTICLES RESULT FROM COMMON HANDLING SYSTEM.

THE SLURRY TRANSFER SYSTEM PREVENTED PROPER SLURRY FLOW DUE TO UNDER DESIGN. THE OLD SYSTEM WAS REPLACED WITH A NEW PIPING SYSTEM.

PLUGGING OF THE RECYCLE PUMP SHUT-OFF VALVES OCCURED. THE VALVES ARE BEING REPLACED WITH PINCH VALVES.

THE SCRUBBER WASTE WATER SUMP PUMPS HAVE BEEN PLUGGING. NEW PUMPS ARE BEING INVESTIGATED.

10/78	SYSTEM	16.0	26.0	26.0	16.0			744	449	118	

** PROBLEMS/SOLUTIONS/COMMENTS

A LEAKING VALVE RESULTED IN CONTAMINATION OF THE RECYCLE PUMP GLAND SEAL WATER SYSTEM WITH POND RETURN WATER CAUSING SCALING AND PLUGGING FORCING SHUTDOWN OF THE RECYCLE PUMPS. A NEW VALVE SYSTEM WAS INSTALLED AND THE OPERATING PRESSURES WERE CHANGED.

THE RECYCLE PUMPS WERE SHUT DOWN WHEN CONTAMINATION OF THE GLAND SEAL WATER SYSTEM CAUSED BY A FAULTY VALVE OCCURRED.

A FLOW CONTROL VALVE WAS REMOVED BECAUSE IT CAUSED ABRASION AND FAILURE OF THE RECYCLE HEADER. NONE OF THE MODULES NOW UTILIZE FLOW CONTROL VALVES.

THE MIST ELIMINATOR SPRAY NOZZLES PLUGGED BY COAL PARTICLES WERE CLEANED THE COAL PARTICLES RESULT FROM A COMMON COAL/LIMESTONE HANDLING SYSTEM. A LIQUID/SOLID SEPARATOR HAS BEEN INSTALLED IN THE SLURRY SYSTEM TO PREVENT REOCCURRENCE.

EXCESSIVE LIMESTONE CARRYOVER TO THE MIST ELIMINATOR WAS NOTED. THE TOP ROD DECK WAS REMOVED TO IMPROVE GAS FLOW AND ELIMINATE THE CARRYOVER PROBLEM.

BLANK OFF PLATES WERE ADDED TO THE LOWER SEVEN ROD DECKS TO MAINTAIN PRESSURE DROP REQUIREMENTS. THIS HAS BEEN FOUND TO BE AN ACCEPTABLE SOLUTION AT OTHER ENVIRONEERING FGD SYSTEM INSTALLATIONS.

THE COMMON COAL/LIMESTONE HANDLING SYSTEM ALLOWED COAL PARTICLES TO PLUG MIST ELIMINATOR SPRAY NOZZLES. A LIQUID/SOLID SEPARATOR HAS BEEN INSTALLED TO PREVENT FUTURE PLUGGING.

11/78	SYSTEM	8.0	9.0	9.0	8.0			720	661	59	

CENTRAL ILLINOIS LIGHT: DUCK CREEK 1 (CONT.)

PERIOD	MODULE	AVAILABILITY	OPERABILITY	RELIABILITY	UTILIZATION	% REMOVAL SO2	% REMOVAL PART.	PER HOURS	BOILER HOURS	FGD HOURS	CAP. FACTOR
		PERFORMANCE DATA									

** PROBLEMS/SOLUTIONS/COMMENTS

THE B-MODULE SLURRY TANK PUMP LINER EXPERIENCED A FAILURE RESULTING IN SCRUBBER SYSTEM SHUTDOWN. THE SPARE PUMP WAS ALREADY OUT OF SERVICE TO REPLACE ITS ORIGINAL 50-HP MOTOR WITH A 75-HP MOTOR.

A SPARE SLURRY TANK PUMP WAS OUT OF SERVICE TO REPLACE THE ORIGINAL 50-HP MOTOR WITH A 75-HP MOTOR.

THE PINION BEARING ON THE BALL MILL DRIVE FAILED. THE FAILURE IS BEING INVESTIGATED. FGD SYSTEM OPERATION WAS HALTED DUE TO THE FAILURE.

THE LEVEL AND DENSITY INSTRUMENTS ON RECYCLE TANKS ARE BEING MODIFIED.

THE LEEDS & NORTHRUP LEVEL AND DENSITY TRANSMITTERS ARE BEING REPLACED WITH ROSEMOUNT TRANSMITTERS.

12/78	A	23.0	25.0	25.0	23.0						
	B	26.0	28.0	28.0	26.0						
	C	21.0	23.0	23.0	21.0						
	D	10.0	11.0	11.0	10.0						
	SYSTEM	20.0	21.0	21.0	20.0			744	706	151	66.0

** PROBLEMS/SOLUTIONS/COMMENTS

ISOLATION DAMPER FAILURES AND SLURRY RECYCLE DISCHARGE VALVE FAILURES OCCURRED DURING DECEMBER.

LIMESTONE MILL PROBLEMS AND A PLUGGED LIMESTONE FEEDER HAMPERED SCRUBBER OPERATIONS DURING DECEMBER.

FROZEN INSTRUMENT CONTROL LINES WERE A PROBLEM.

1/79	A	.0	.0	.0	.0						
	B	.0	.0	.0	.0						
	C	.0	.0	.0	.0						
	D	.0	.0	.0	.0						
	SYSTEM	.0	.0	.0	.0			744	738	0	

** PROBLEMS/SOLUTIONS/COMMENTS

FROZEN INSTRUMENT CONTROL LINES, RECYCLE TANK SUCTION LINES, MAIN MODULE DRAIN LINES AND MIST ELIMINATOR DRAIN LINES WERE MAJOR PROBLEM AREAS DURING JANUARY.

SLURRY RECYCLE VALVE PLUGGAGE AND SLURRY TRANSFER PUMP FAILURE CONTRIBUTED TO THE SYSTEM OUTAGE TIME.

2/79	A	.0	.0	.0	.0						
	B	.0	.0	.0	.0						
	C	.0	.0	.0	.0						
	D	.0	.0	.0	.0						
	SYSTEM	.0	.0	.0	.0			672	533	0	80.5

** PROBLEMS/SOLUTIONS/COMMENTS

RECYCLE PUMP SUCTION VALVE FAILURES AND A SLURRY TRANSFER PUMP FAILURE CONTRIBUTED TO THE NON-OPERATION OF THE FGD SYSTEM.

FROZEN MIST ELIMINATOR DRAINS, ABSORBER DRAINS AND INSTRUMENT LINES WERE A MAJOR PROBLEM DURING FEBRUARY.

3/79	A	33.7	31.1	31.1	31.1						
	B	6.7	6.7	6.7	6.7						
	C	.0	.0	.0	.0						
	D	.0	.0	.0	.0						
	SYSTEM	10.1	9.4	9.4	9.4			744	744	70	

PERIOD	MODULE	AVAILABILITY	OPERABILITY	RELIABILITY	UTILIZATION	% REMOVAL SO2	% REMOVAL PART.	PER HOURS	BOILER HOURS	FGD HOURS	CAP. FACTOR
		PERFORMANCE DATA									

** PROBLEMS/SOLUTIONS/COMMENTS

FREEZING PROBLEMS CONTINUED TO HAMPER FGD OPERATIONS DURING MARCH.

BROKEN MIST ELIMINATOR SPRAY LINES AND PLUGGED MIST ELIMINATOR NOZZLES WERE PROBLEM AREAS DURING MARCH.

RECYCLE PUMP FAILURES AND WASTE WATER PUMP FAILURES WERE EXPERIENCED DURING MARCH.

PLUGGED SLURRY NOZZLES AND GENERAL INSTRUMENTATION PROBLEMS WERE REPORTED BY THE UTILITY.

4/79	A	100.0	71.9		67.3						
	B	84.3	50.5		47.3						
	C	86.5	81.2		76.0						
	D	21.3	22.7		21.3						
	SYSTEM	73.0	56.4	72.0	53.0			720	674		80

** PROBLEMS/SOLUTIONS/COMMENTS

INLET DAMPER MALFUNCTIONS HINDERED FGD OPERATION DURING APRIL.

PLUGGED MIST ELIMINATOR SPRAY NOZZLES DURING APRIL HINDERED FGD OPERATION.

SLURRY CONTROL VALVE MALFUNCTIONS WERE REPORTED BY THE UTILITY.

RECYCLE TANK MIXER FAILURES WERE EXPERIENCED DURING APRIL.

RECYCLE PUMP BELT AND BEARING FAILURES AND SLURRY SUPPLY LINE FAILURES WERE REPORTED BY THE UTILITY.

5/79	A	95.7	37.4		1.3						
	B	95.7	44.2		11.7						
	C	94.6	41.8		11.1						
	D	1.3	5.0		1.3						
	SYSTEM	71.9	32.1	51.4	8.5			744	197		63

** PROBLEMS/SOLUTIONS/COMMENTS

MIST ELIMINATOR PUMP MALFUNCTIONS WERE REPORTED DURING MAY.

MILL SHAKER BASKET DRIVE MOTOR FAILURES WERE ENCOUNTERED.

6/79	A	70.6	76.9		70.5						
	B	79.9	86.9		79.9						
	C	76.1	83.1		76.3						
	D	82.6	90.0		82.6						
	SYSTEM	87.4	84.2	86.1	77.3			720	661		557

** PROBLEMS/SOLUTIONS/COMMENTS

DURING JUNE SOME PROBLEMS WITH THE MIST ELIMINATOR WERE ENCOUNTERED. THESE PROBLEMS INCLUDED PLUGGING IN THE MIST ELIMINATOR AND THE MIST ELIMINATOR LINES AND A BROKEN MIST ELIMINATOR RETURN LINE.

7/79	A		85.6		59.8						
	B	61.6	88.3		61.6						
	C	61.6	87.9		61.4						
	D	60.3	86.5		60.5						
	SYSTEM	95.0	87.1	95.9	60.9			744	520		453

** PROBLEMS/SOLUTIONS/COMMENTS

IN JULY THE MIST ELIMINATOR PLUGGED CAUSING OPERATIONAL PROBLEMS.

RECYCLE PUMP FAILURES WERE ENCOUNTERED DURING JULY.

8/79	A	3.0	4.2		3.1						

CENTRAL ILLINOIS LIGHT: DUCK CREEK 1 (CONT.)

PERIOD	MODULE	AVAILABILITY	OPERABILITY	RELIABILITY	UTILIZATION	% REMOVAL SO2	% REMOVAL PART.	PER HOURS	BOILER HOURS	FGD HOURS	CAP. FACTOR
		PERFORMANCE DATA									
	B	23.4	31.4		23.4						
	C	13.6	18.4		13.7						
	D	9.5	12.8		9.5						
	SYSTEM	13.0	16.6	22.9	12.3			744	555	92	

** PROBLEMS/SOLUTIONS/COMMENTS

IN AUGUST THE MIST ELIMINATOR AND THE MIST ELIMINATOR DRAIN LINES PLUGGED CAUSING SOME DOWN TIME.

FAILURES WITH THE LIMESTONE SLURRY FORWARDING PUMP AND THE RECYCLE PUMP WERE ENCOUNTERED.

DAMPER MALFUNCTIONS WERE REPORTED BY THE UTILITY.

9/79	A	49.9	54.0		49.9						
	B	44.6	48.4		44.7						
	C	35.9	38.9		35.9						
	D	79.6	86.2		79.6						
	SYSTEM	65.7	56.8	64.8	52.5			720	665	378	

** PROBLEMS/SOLUTIONS/COMMENTS

PLUGGING IN THE MIST ELIMINATOR, MIST ELIMINATOR HEADER AND NOZZLES WERE ENCOUNTERED IN SEPTEMBER.

THE DAMPER FAILED CAUSING A PROBLEM DURING SEPTEMBER.

THE UTILITY REPORTED MIST ELIMINATOR CAVITATION PROBLEMS.

PLUGGED SLURRY NOZZLES AND LIMESTONE CONVEYOR FAILURES CONTRIBUTED TO THE OUTAGES EXPERIENCED.

10/79	A	82.1	82.3	85.7	82.3						
	B	86.2	86.2	93.7	86.2						
	C	75.8	75.8	90.9	75.8						
	D	91.9	91.9	93.8	91.9						
	SYSTEM	90.9	84.0	91.4	84.0			744	744	625	

** PROBLEMS/SOLUTIONS/COMMENTS

DURING THE MONTH OF OCTOBER PROBLEMS WERE ENCOUNTERED WITH THE MIST ELIMINATOR SECTION. THE MIST ELIMINATOR PUMP MALFUNCTIONED, THE LINES PLUGGED AND A HEADER FLANGE GASKET FAILED.

OUTAGE TIME RESULTED FROM THE MODULE ISOLATION DAMPER FAILURE INCLUDING DAMPER MOTOR MALFUNCTION.

THE SLURRY SUPPLY LINE NEEDED REPAIRS.

11/79	A	42.2	52.1	58.7	42.2						
	B	12.4	15.3	42.9	12.4						
	C	18.3	22.6	48.7	18.3						
	D	52.9	61.9	63.7	50.1						
	SYSTEM	32.2	38.0	40.8	30.8			720	583	221	

** PROBLEMS/SOLUTIONS/COMMENTS

MODULE ISOLATION DAMPER PROBLEMS CONTINUED DURING NOVEMBER.

THE MIST ELIMINATOR AND THE MIST ELIMINATOR DRAIN PLUGGED CAUSING DOWN TIME.

REPAIR WAS NEEDED ON THE SUCTION VALVE OF THE RECYCLE PUMP.

SLURRY SUPPLY LINES FAILED AGAIN, DURING NOVEMBER.

12/79	A	53.6	72.6	60.3	53.5						
	B	35.1	47.6	51.5	35.1						

CENTRAL ILLINOIS LIGHT: DUCK CREEK 1 (CONT.)

PERFORMANCE DATA

PERIOD	MODULE	AVAILABILITY	OPERABILITY	RELIABILITY	UTILIZATION	% REMOVAL SO2	% REMOVAL PART.	PER HOURS	BOILER HOURS	FGD HOURS	CAP. FACTOR
	C	43.0	58.4	54.9	43.0						
	D	25.5	34.7	45.6	25.5						
	SYSTEM	39.5	53.3	58.3	39.3			744	548	292	

** PROBLEMS/SOLUTIONS/COMMENTS

THE ISOLATION DAMPER FAILURES CONTINUED.

THE MIST ELIMINATOR PROBLEMS WITH PLUGGING AND HEADER FAILURES OCCURRED DURING DECEMBER.

THE RECYCLE TANK LINERS WERE REPAIRED AND TANK COVERS WERE INSTALLED.

SECTION 3
DESIGN AND PERFORMANCE DATA FOR OPERATIONAL DOMESTIC FGD SYSTEMS

COMPANY NAME	CENTRAL ILLINOIS PUBLIC SERV	
PLANT NAME	NEWTON	
UNIT NUMBER	1	
CITY	NEWTON	
STATE	ILLINOIS	
REGULATORY CLASSIFICATION	B	
PARTICULATE EMISSION LIMITATION - NG/J	43.	(.100 LB/MMBTU)
SO2 EMISSION LIMITATION - NG/J	516.	(1.200 LB/MMBTU)
NET PLANT GENERATING CAPACITY - MW	*******	
GROSS UNIT GENERATING CAPACITY - MW	617.0	
NET UNIT GENERATING CAPACITY W/FGD - MW	575.0	
NET UNIT GENERATING CAPACITY WO/FGD - MW	*******	
EQUIVALENT SCRUBBED CAPACITY - MW	617.0	
** BOILER DATA		
SUPPLIER	COMBUSTION ENGINEERING	
TYPE	PULVERIZED COAL	
SERVICE LOAD	BASE	
COMMERCIAL SERVICE DATE	0/78	
MAXIMUM BOILER FLUE GAS FLOW - CU.M/S	1020.95	(2163480 ACFM)
FLUE GAS TEMPERATURE - C	163.9	(327 F)
STACK HEIGHT - M	162.	(530 FT)
STACK TOP DIAMETER - M	*******	(***** FT)
** FUEL DATA		
FUEL TYPE	COAL	
FUEL GRADE	BITUMINOUS	
AVERAGE HEAT CONTENT - J/G	25343.	(10900 BTU/LB)
RANGE HEAT CONTENT - BTU/LB		******
AVERAGE ASH CONTENT - %	4.00	
RANGE ASH CONTENT - %	******	
AVERAGE MOISTURE CONTENT - %	********	
RANGE MOISTURE CONTENT - %	******	
AVERAGE SULFUR CONTENT - %	4.00	
RANGE SULFUR CONTENT - %	******	
AVERAGE CHLORIDE CONTENT - %	.20	
RANGE CHLORIDE CONTENT - %	******	
** ESP		
NUMBER	1	
TYPE	COLD SIDE	
SUPPLIER	RESEARCH COTTRELL	
PARTICULATE DESIGN REMOVAL EFFICIENCY - %	99.5	
FLUE GAS TEMPERATURE - C	162.8	(325 F)
** PARTICULATE SCRUBBER		
TYPE	NONE	
** FGD SYSTEM		
SALEABLE PRODUCT/THROWAWAY PRODUCT	THROWAWAY PRODUCT	
GENERAL PROCESS TYPE	WET SCRUBBING	
PROCESS TYPE	DUAL ALKALI	
SYSTEM SUPPLIER	BUELL/ENVIROTECH	
A-E FIRM	SARGENT & LUNDY	
DEVELOPMENT LEVEL	FULL SCALE	
NEW/RETROFIT	NEW	
PARTICULATE DESIGN REMOVAL EFFICIENCY - %	99.50	
SO2 DESIGN REMOVAL EFFICIENCY - %	95.00	
COMMERCIAL DATE	12/79	
INITIAL START-UP	9/79	
CONSTRUCTION INITIATION	11/76	
** ABSORBER		
NUMBER	4	
TYPE	MOBILE PACKED/TRAY TOWER	
INITIAL START UP	11/79	
SUPPLIER	BUELL ENVIROTECH	
SHELL LINER MATERIAL	CEILCOTE	
L/G RATIO - L/CU.M	1.3	(10.0 GAL/1000ACF)
SUPERFICAL GAS VELOCITY - M/SEC	2.5	(8.3 FT/S)
SO2 INLET CONCENTRATION - PPM	2590	
SO2 OUTLET CONTRATION - PPM	200	

CENTRAL ILLINOIS PUBLIC SERV: NEWTON 1 (CONT.)

** FANS		
NUMBER	4	
TYPE	BOOSTER	
** VACUUM FILTER		
TYPE	EXTRACTION FILTERS,HORIZONTAL,BELT T	
** MIST ELIMINATOR		
NUMBER	8	
TYPE	CHEVRON	
CONFIGURATION	VERTICAL	
** REHEATER		
NUMBER	1	
TYPE	BYPASS	
** REHEATER		
NUMBER	2	
TYPE	IN-LINE	
TEMPERATURE BOOST - C	13.9	(25 F)
** THICKENER		
NUMBER	2	
CONSTRUCTION MATERIAL	CONCRETE	
DIAMETER - M	30.5	(100 FT)
** THICKENER		
NUMBER	1	
CONSTRUCTION MATERIAL	COATED STEEL	
DIAMETER - M	15.2	(50 FT)
** WATER LOOP		
TYPE	CLOSED	
** TREATMENT		
TYPE	POZ-O-TEC	
CONTRACTOR	IUCS	

PERFORMANCE DATA

PERIOD	MODULE	AVAILABILITY	OPERABILITY	RELIABILITY	UTILIZATION	% REMOVAL SO2	% REMOVAL PART.	PER HOURS	BOILER HOURS	FGD HOURS	CAP. FACTOR
9/79	SYSTEM							720			

** PROBLEMS/SOLUTIONS/COMMENTS

INITIAL OPERATIONS BEGAN AT THIS UNIT ON SEPTEMBER 1 WHEN FLUE GAS WAS PASSED THROUGH THE INDIVIDUAL FGD MODULES FOR TESTING PURPOSES. TESTING OF THE SYSTEM IN AN INTEGRATED MODE IS EXPECTED TO BEGIN IN DECEMBER.

10/79	SYSTEM							744			
11/79	SYSTEM							720			
12/79	SYSTEM							744			

** PROBLEMS/SOLUTIONS/COMMENTS

THE UNIT BEGAN BURNING HIGH SULFUR COAL ON NOVEMBER 18-19 AT WHICH TIME THE FGD SYSTEM BEGAN OPERATIONS IN AN INTEGRATED MODE FOR THE FIRST TIME.

INITIAL START UP PROBLEMS HAVE INCLUDED MIST ELIMINATOR PLUGGAGE.

LINING FAILURES HAVE ALSO BEEN ENCOUNTERED DURING START UP PHASE.

THE UNIT PASSED A COMPLIANCE TEST ON DECEMBER 5, 1979 AT WHICH TIME IT WAS DETERMINED THAT THE UNIT WAS WELL BELOW THE ALLOWABLE EMISSION STANDARD OF 1.2 LB/MMBTU.

SECTION 3
DESIGN AND PERFORMANCE DATA FOR OPERATIONAL DOMESTIC FGD SYSTEMS

COMPANY NAME	COLORADO UTE ELECTRIC ASSN.	
PLANT NAME	CRAIG	
UNIT NUMBER	2	
CITY	CRAIG	
STATE	COLORADO	
REGULATORY CLASSIFICATION	D	
PARTICULATE EMISSION LIMITATION - NG/J	******	(****** LB/MMBTU)
SO2 EMISSION LIMITATION - NG/J	******	(****** LB/MMBTU)
NET PLANT GENERATING CAPACITY - MW	900.0	
GROSS UNIT GENERATING CAPACITY - MW	447.0	
NET UNIT GENERATING CAPACITY W/FGD - MW	400.0	
NET UNIT GENERATING CAPACITY WO/FGD - MW	424.0	
EQUIVALENT SCRUBBED CAPACITY - MW	447.0	
** BOILER DATA		
SUPPLIER	BABCOCK & WILCOX	
TYPE	PULVERIZED COAL	
SERVICE LOAD	BASE	
COMMERCIAL SERVICE DATE	0/79	
MAXIMUM BOILER FLUE GAS FLOW - CU.M/S	********	(******* ACFM)
FLUE GAS TEMPERATURE - C	*******	(**** F)
STACK HEIGHT - M	183.	(600 FT)
STACK TOP DIAMETER - M	10.9	(35.8 FT)
** FUEL DATA		
FUEL TYPE	COAL	
FUEL GRADE	SUBBITUMINOUS	
AVERAGE HEAT CONTENT - J/G	23260.	(10000 BTU/LB)
RANGE HEAT CONTENT - BTU/LB		9100-10300
AVERAGE ASH CONTENT - %	8.00	
RANGE ASH CONTENT - %	10-12	
AVERAGE MOISTURE CONTENT - %	********	
RANGE MOISTURE CONTENT - %	10-12	
AVERAGE SULFUR CONTENT - %	.45	
RANGE SULFUR CONTENT - %	******	
AVERAGE CHLORIDE CONTENT - %	********	
RANGE CHLORIDE CONTENT - %	******	
** ESP		
NUMBER	1	
TYPE	HOT SIDE	
SUPPLIER	BELCO	
** PARTICULATE SCRUBBER		
TYPE	NONE	
** FGD SYSTEM		
SALEABLE PRODUCT/THROWAWAY PRODUCT	THROWAWAY PRODUCT	
GENERAL PROCESS TYPE	WET SCRUBBING	
PROCESS TYPE	LIMESTONE	
PROCESS ADDITIVES	MG PROMOTED	
SYSTEM SUPPLIER	PEABODY PROCESS SYSTEMS	
A-E FIRM	STEARNS-ROGER	
DEVELOPMENT LEVEL	FULL SCALE	
NEW/RETROFIT	NEW	
PARTICULATE DESIGN REMOVAL EFFICIENCY - %	99.80	
SO2 DESIGN REMOVAL EFFICIENCY - %	85.00	
COMMERCIAL DATE	11/79	
INITIAL START-UP	8/79	
** ABSORBER		
NUMBER	4	
TYPE	SPRAY TOWER	
INITIAL START UP	3/79	
SUPPLIER	PEABODY PROCESS SYSTEMS	
SHELL MATERIAL	STEEL	
SHELL LINER MATERIAL	RUBBER	
** CENTRIFUGE		
NUMBER	1	

COLORADO UTE ELECTRIC ASSN.: CRAIG 2 (CONT.)

** MIST ELIMINATOR	
NUMBER	4
TYPE	CHEVRON
** REHEATER	
TYPE	IN-LINE
HEATING MEDIUM	STEAM
** THICKENER	
NUMBER	1
** WATER LOOP	
TYPE	CLOSED
** DISPOSAL	
NATURE	FINAL
TYPE	MINEFILL
LOCATION	OFF-SITE
TRANSPORTATION	TRUCK

PERFORMANCE DATA

PERIOD	MODULE	AVAILABILITY	OPERABILITY	RELIABILITY	UTILIZATION	% REMOVAL SO2	% REMOVAL PART.	PER HOURS	BOILER HOURS	FGD HOURS	CAP. FACTOR
10/79	SYSTEM							744			
11/79	SYSTEM							720			
12/79	SYSTEM							744			

** PROBLEMS/SOLUTIONS/COMMENTS

THE CRAIG 2 UNIT COMMENCED COMMERCIAL OPERATION IN NOVEMBER 1979.

DURING A SCHEDULED OUTAGE FOR MAINTENANCE AND INSPECTION THE FINE SCREEN ON THE THROTTLE VALVE TO THE TURBINE WAS REMOVED AND CLEANED.

SECTION 3
DESIGN AND PERFORMANCE DATA FOR OPERATIONAL DOMESTIC FGD SYSTEMS

COMPANY NAME	COLUMBUS & SOUTHERN OHIO ELEC.	
PLANT NAME	CONESVILLE	
UNIT NUMBER	5	
CITY	CONESVILLE	
STATE	OHIO	
REGULATORY CLASSIFICATION	D	
PARTICULATE EMISSION LIMITATION - NG/J	43.	(.100 LB/MMBTU)
SO2 EMISSION LIMITATION - NG/J	430.	(1.000 LB/MMBTU)
NET PLANT GENERATING CAPACITY - MW	2100.0	
GROSS UNIT GENERATING CAPACITY - MW	411.0	
NET UNIT GENERATING CAPACITY W/FGD - MW	375.0	
NET UNIT GENERATING CAPACITY WO/FGD - MW	391.0	
EQUIVALENT SCRUBBED CAPACITY - MW	411.0	
** BOILER DATA		
SUPPLIER	COMBUSTION ENGINEERING	
TYPE	PULVERIZED COAL	
SERVICE LOAD	BASE	
COMMERCIAL SERVICE DATE	0/76	
MAXIMUM BOILER FLUE GAS FLOW - CU.M/S	657.78	(1393893 ACFM)
FLUE GAS TEMPERATURE - C	146.7	(296 F)
STACK HEIGHT - M	244.	(800 FT)
STACK TOP DIAMETER - M	7.9	(26.0 FT)
** FUEL DATA		
FUEL TYPE	COAL	
FUEL GRADE	BITUMINOUS	
AVERAGE HEAT CONTENT - J/G	25237.	(10850 BTU/LB)
RANGE HEAT CONTENT - BTU/LB		10300-11220
AVERAGE ASH CONTENT - %	15.10	
RANGE ASH CONTENT - %	12-19	
AVERAGE MOISTURE CONTENT - %	7.50	
RANGE MOISTURE CONTENT - %	******	
AVERAGE SULFUR CONTENT - %	4.67	
RANGE SULFUR CONTENT - %	4.2-5.1	
AVERAGE CHLORIDE CONTENT - %	********	
RANGE CHLORIDE CONTENT - %	******	
** ESP		
NUMBER	1	
TYPE	COLD SIDE	
SUPPLIER	RESEARCH COTTRELL	
PARTICULATE DESIGN REMOVAL EFFICIENCY - %	99.6	
FLUE GAS CAPACITY - CU.M/S	657.8	(1393893 ACFM)
FLUE GAS TEMPERATURE - C	146.7	(296 F)
** PARTICULATE SCRUBBER		
TYPE	NONE	
** FGD SYSTEM		
SALEABLE PRODUCT/THROWAWAY PRODUCT	THROWAWAY PRODUCT	
GENERAL PROCESS TYPE	WET SCRUBBING	
PROCESS TYPE	LIME	
PROCESS ADDITIVES	MG (2-6%)	
SYSTEM SUPPLIER	AIR CORRECTION DIVISION, UOP	
A-E FIRM	BLACK & VEATCH	
DEVELOPMENT LEVEL	FULL SCALE	
NEW/RETROFIT	NEW	
PARTICULATE DESIGN REMOVAL EFFICIENCY - %	99.60	
SO2 DESIGN REMOVAL EFFICIENCY - %	89.50	
COMMERCIAL DATE	2/77	
INITIAL START-UP	1/77	
CONSTRUCTION INITIATION	5/75	
CONTRACT AWARDED	10/74	
ABSORBER SPARE CAPACITY INDEX - %	.0	
ABSORBER SPARE COMPONENT INDEX	.0	
** ABSORBER		
NUMBER	1	
TYPE	MOBILE PACKED TOWER	
INITIAL START UP	11/77	
SUPPLIER	AIR CORRECTION DIVISION, UOP	

COLUMBUS & SOUTHERN OHIO ELEC.: CONESVILLE 5 (CONT.)

NUMBER OF STAGES	4	
SHELL MATERIAL	CARBON STEEL (CARPENTER 20 PRESATURATOR	
SHELL LINER MATERIAL	CHLOROBUTYL RUBBER	
INTERNAL MATERIAL	CARPENTER 20 SUPPORT GRIDS	
BOILER LOAD/ABSORBER - %	60.0	
GAS FLOW - CU.M/S	298.44	(632416 ACFM)
GAS TEMPERATURE - C	141.1	(286 F)
LIQUID RECIRCULATION RATE - LITER/S	2394.	(38000 GPM)
L/G RATIO - L/CU.M	6.7	(50.0 GAL/1000ACF)
PRESSURE DROP - KPA	1.8	(7.3 IN-H2O)
SUPERFICAL GAS VELOCITY - M/SEC	3.9	(12.8 FT/S)

** ABSORBER

NUMBER	1	
TYPE	MOBILE PACKED TOWER	
INITIAL START UP	1/77	
SUPPLIER	AIR CORRECTION DIVISION, UOP	
NUMBER OF STAGES	4	
SHELL MATERIAL	CARBON STEEL (CARPENTER 20 PRESATURATOR	
SHELL LINER MATERIAL	CHLOROBUTYL RUBBER	
INTERNAL MATERIAL	CARPENTER 20 SUPPORT GRIDS	
BOILER LOAD/ABSORBER - %	60.0	
GAS FLOW - CU.M/S	298.44	(632416 ACFM)
GAS TEMPERATURE - C	141.1	(286 F)
LIQUID RECIRCULATION RATE - LITER/S	2394.	(38000 GPM)
L/G RATIO - L/CU.M	6.7	(50.0 GAL/1000ACF)
PRESSURE DROP - KPA	1.8	(7.3 IN-H2O)
SUPERFICAL GAS VELOCITY - M/SEC	3.9	(12.8 FT/S)

** FANS

NUMBER	4	
TYPE	BOILER ID	
CONSTRUCTION MATERIALS	CARBON STEEL	
SERVICE - WET/DRY	DRY	
CAPACITY - CU.M/S	401.11	(850000 ACFM)

** VACUUM FILTER

NUMBER	1	
OUTLET SOLIDS - %	73.0	

** MIST ELIMINATOR

NUMBER	4	
TYPE	CHEVRON	
CONSTRUCTION MATERIAL	NORYL PLASTIC	
CONFIGURATION	HORIZONTAL	
NUMBER OF STAGES	1	
NUMBER OF PASSES	3	
FREEBOARD DISTANCE - M	3.05	(10.0 FT)
DEPTH - M	1.37	(4.5 FT)
VANE SPACING - CM	5.1	(2.00 IN)
VANE ANGLES	90 DEGREES	
WASH SYSTEM	CONTINUOUS TOP AND BOTTOM WASH 1ST STAGE; BOTTOM	
SUPERFICIAL GAS VELOCITY - M/S	4.2	(13.7 FT/S)
PRESSURE DROP - KPA	.5	(1.9 IN-H2O)

** MIST ELIMINATOR

NUMBER	2	
TYPE	TRAPOUT TRAY	
CONSTRUCTION MATERIAL	CARPENTER 20	
CONFIGURATION	HORIZONTAL	
NUMBER OF STAGES	1	
SUPERFICIAL GAS VELOCITY - M/S	4.2	(13.7 FT/S)

** PUMPS

SERVICE	NUMBER
ABSORBER RECIRCULATION	11
TRANSFER TANK	1
SLURRY TRANSFER	1
RECYCLE TANK SLUDGE TRANSFER	2
MIST ELIMINATOR WASH	2

** TANKS

SERVICE	NUMBER
RECYCLE	1
RECLAIMED WATER	1

COLUMBUS & SOUTHERN OHIO ELEC.: CONESVILLE 5 (CONT.)

SLURRY TRANSFER TANK	1
SLURRY STORAGE	1
M.E. WASH	1
** REHEATER	
TYPE	BYPASS
** THICKENER	
NUMBER	1
CONSTRUCTION MATERIAL	CARBON STEEL WITH CONCRETE FLOOR
DIAMETER - M	44.2 (145 FT)
OUTLET SOLIDS - %	32.5
** WATER LOOP	
TYPE	OPEN
FRESH MAKEUP WATER ADDITION - LITERS/S	31.5 (500 GPM)
** REAGENT PREPARATION EQUIPMENT	
NUMBER OF BALL MILLS	3
** TREATMENT	
TYPE	POZ-O-TEC
CONTRACTOR	IUCS
PRODUCT CHARACTERISTICS	73% SOLIDS
** DISPOSAL	
NATURE	FINAL
TYPE	LANDFILL
LOCATION	ON-SITE
TRANSPORTATION	PUMPED
AREA - ACRES	5 (.0

PERFORMANCE DATA

PERIOD	MODULE	AVAILABILITY	OPERABILITY	RELIABILITY	UTILIZATION	% REMOVAL SO2	% REMOVAL PART.	PER HOURS	BOILER HOURS	FGD HOURS	CAP. FACTOR
12/76	SYSTEM							744			

** PROBLEMS/SOLUTIONS/COMMENTS

A MAJOR FIRE IN MODULE A DELAYED THE UNIT START-UP. THE FIRE CAUSED $2.1 MILLION DAMAGE. THE UTILITY'S INSURANCE COVERED THE DAMAGE AND A NEW SCRUBBER MODULE WILL BE PURCHASED FROM AND INSTALLED BY UOP.

THE UTILITY IS CURRENTLY CONDUCTING AIR AND WATER TESTS ON MODULE B.

1/77	SYSTEM							744			

** PROBLEMS/SOLUTIONS/COMMENTS

INITIAL START-UP FOR DEBUGGING AND COMMISSIONING PURPOSES OCCURRED IN EARLY JANUARY. COMMERCIAL AVAILABILITY FOR SERVICE OCURRED ON JANUARY 27.

EARLY OPERATIONS WERE MARKED BY COLD WEATHER RELATED PROBLEMS SUCH AS FROZEN LINES AND GEARS, CRACKED FLANGES, A FROZEN LIME BELT CONVEYOR, AND A FROZEN PIPELINE FROM THE THICKENER TO THE IUCS FACILITY.

2/77	B		43.0		43.0						
	A		.0		.0						
	SYSTEM		21.5		21.5			672	668	143	

** PROBLEMS/SOLUTIONS/COMMENTS

COMMERCIAL START-UP OF MODULE B OCCURRED ON FEBRUARY 13, 1977. THE LONGEST PERIOD OF CONTINUOUS OPERATION WAS 132 HOURS.

THE UTILITY REPORTED THAT THE ESP OPERATED SATISFACTORILY.

PRESSURE SURGES OCCURRED IN THE PRESATURATOR PIPING.

THE CONTINUOUS SO2 ANALYZERS OPERATED UNSATISFACTORILY.

MODULE B EXPERIENCED POOR VELOCITY DISTRIBUTION THROUGH THE TCA BEDS.

PERIOD	MODULE	AVAILABILITY	OPERABILITY	RELIABILITY	UTILIZATION	% REMOVAL SO2	% REMOVAL PART.	PER HOURS	BOILER HOURS	FGD HOURS	CAP. FACTOR
		PERFORMANCE DATA									

SCRUBBING LIQUOR WAS CARRYING OVER INTO THE MIST ELIMINATOR SECTION.

3/77	SYSTEM							744			
4/77	A	.0	.0	.0	.0						
	B	40.0	38.0	39.0	36.0						
	SYSTEM	20.0	19.0	19.5	18.0			720	685		130

** PROBLEMS/SOLUTIONS/COMMENTS

A STACK OUTLET TEMPERATURE OF 200 F IS BEING MAINTAINED IN ORDER TO MINIMIZE ACID RAINOUT AND STACK CORROSION PROBLEMS.

THE 316 SS PRESATURATOR AREA HAS EXPERIENCED CORROSION.

THE RUBBER LINER IN THE RECYCLE TANK HAS BEEN PEELING AWAY. THE PROBLEM APPEARED TO BE APPLICATION-RELATED.

SOME PLUGGING HAS OCCURRED IN THE TUBE THICKENERS.

THE QUALITY OF THE LIME SLURRY HAS BEEN A PROBLEM AREA. ROCKS UP TO FIVE INCHES IN DIAMETER HAVE BEEN DETECTED. THIS HAS PROMPTED DRAVO TO INSTALL MECHANICAL SEPARATORS AND METAL DETECTORS AT THE LIME SHIPMENT FACILITY.

5/77	A	.0	.0	.0	.0						
	B	58.0	50.0	51.0	48.0						
	SYSTEM	29.2	25.0	25.5	24.0			744	712		178
6/77	A	.0	.0	.0	.0						
	B	66.0	59.0	60.0	58.0						
	SYSTEM	33.0	29.5	30.0	29.0			720	713		209

** PROBLEMS/SOLUTIONS/COMMENTS

THE B-SIDE MODULE DID NOT OPERATE THE ENTIRE MONTH PENDING COMPLETION OF A NUMBER OF NECESSARY MODIFICATIONS AND REPAIRS.

7/77	A	.0	.0	.0	.0						
	B	.0	.0	.0	.0						
	SYSTEM	.0	.0	.0	.0			744	744		0

** PROBLEMS/SOLUTIONS/COMMENTS

MODIFICATIONS WERE MADE TO THE UNIT PROCESS CONTROL SYSTEM.

MODIFICATIONS WERE MADE TO THE UNIT INSTRUMENTATION SYSTEM.

REPAIRS WERE MADE TO THE ABSORBER LINER.

REPAIRS WERE MADE TO THE PIPING BETWEEN THE THICKENER AND IUCS BUILDING.

THE UTILITY IS CURRENTLY PLANNING TO CONDUCT A PARTICULATE DROP TEST SCHEDULED FOR SEPTEMBER 1977.

THE REPLACEMENT A-SIDE TCA MODULE REPLACING THE ORIGINAL MODULE DESTROYED BY FIRE IN DECEMBER 1976 IS EXPECTED TO BE AVAILABLE FOR COMMERCIAL SERVICE IN JANUARY 1978.

8/77	A	.0	.0	.0	.0						
	B	.0	.0	.0	.0						
	SYSTEM	.0	.0	.0	.0			744			0

** PROBLEMS/SOLUTIONS/COMMENTS

THE SCRUBBER WAS NOT OPERATED THE ENTIRE MONTH. REPAIRS AND MODIFICATIONS CONTINUED UNTIL SEPTEMBER 13. THERE WERE SOME WEATHER-RELATED DELAYS.

9/77	A	.0	.0	.0	.0						

COLUMBUS & SOUTHERN OHIO ELEC.: CONESVILLE 5 (CONT.)

PERIOD	MODULE	AVAILABILITY	OPERABILITY	RELIABILITY	UTILIZATION	% REMOVAL SO2	% REMOVAL PART.	PER HOURS	BOILER HOURS	FGD HOURS	CAP. FACTOR
		PERFORMANCE DATA									
	B	52.9	39.9	46.9	26.0						
	SYSTEM	26.5	20.0	23.5	13.0			720	469	94	

** PROBLEMS/SOLUTIONS/COMMENTS

THE PARTICULATE DROP TEST SCHEDULED FOR SEPTEMBER 1977 WAS PUSHED BACK TO THE WEEK OF OCTOBER 24 1977.

10/77	A	.0	.0	.0	.0						
	B	32.0	24.0	25.0	18.0						
	SYSTEM	16.0	12.0	12.5	9.0			744	559	68	

** PROBLEMS/SOLUTIONS/COMMENTS

THE SCRUBBER WAS DOWN FROM OCTOBER 10 TO NOVEMBER 10.

B-MODULE HAD TO BE RELINED IN SOME AREAS WITH NEOPRENE RUBBER.

11/77	A	10.0	4.0	4.0	4.0						
	B	33.0	33.0	33.0	33.0						
	SYSTEM	21.5	18.5	18.5	18.5			720	715	122	

** PROBLEMS/SOLUTIONS/COMMENTS

MODULE A WENT BACK ON LINE NOVEMBER 21. DURING LOW LOAD PERIODS SOLIDS BUILD UP TENDED TO CAUSE PLUGGING BECAUSE OF LOW FLOW RATES. DURING THE LOW LOAD PERIODS ALL GAS WAS DUCTED THROUGH ONE MODULE WHILE THE OTHER WAS SHUT DOWN.

12/77	A	93.0	64.0	62.0	22.0						
	B	97.0	79.0	76.0	27.0						
	SYSTEM	95.0	71.5	69.0	24.5			744	252	180	

** PROBLEMS/SOLUTIONS/COMMENTS

THE UNIT WENT DOWN DECEMBER 12 FOR A 3-MONTH SCHEDULED OUTAGE. MODULE A BEGAN COMMERCIAL OPERATIONS DECEMBER 3 OPERATING AS MUCH AS POSSIBLE THROUGH DECEMBER 12. MODULE B OPERATED DECEMBER 1 THROUGH 12. DURING THE SHUTDOWN THE UTILITY WILL DECIDE IF THE SYSTEM SUPPLIERS HAVE MET SPECS ON THE BOILER AND TURBINES. THE UNIT IS SCHEDULED TO BE BACK ON LINE IN MID-MARCH BUT THIS MAY BE PUSHED BACK TO APRIL 1.

DURING THE DECEMBER TO MARCH 1978 SHUTDOWN THE CARBON STEEL FLUE WILL BE REPLACED WITH AN ACID-BRICK LINING.

1/78	A										
	B										
	SYSTEM				.0			744	0	0	
2/78	A										
	B										
	SYSTEM				.0			672	0	0	
3/78	A	20.0	19.0	64.0	10.0						
	B	20.0	15.8	54.0	8.0						
	SYSTEM	20.0	17.5	59.0	9.0			744	379	66	

** PROBLEMS/SOLUTIONS/COMMENTS

THE UNIT STARTED UP AGAIN ON MARCH 16.

PH CONTROLS AND SO2 ANALYZERS HAVE EXPERIENCED OPERATIONAL PROBLEMS.

IMPURITIES IN THE LIME HAVE CAUSED PLUGGING PROBLEMS.

4/78	A	67.0	58.0	61.0	58.0						
	B	65.0	59.0	63.0	59.0						
	SYSTEM	66.0	58.5	62.0	58.5			720	716	421	

PERIOD	MODULE	AVAILABILITY	OPERABILITY	RELIABILITY	UTILIZATION	% REMOVAL SO2	% REMOVAL PART.	PER HOURS	BOILER HOURS	FGD HOURS	CAP. FACTOR
		PERFORMANCE DATA									

** PROBLEMS/SOLUTIONS/COMMENTS

THE SYSTEM WAS DOWN DUE TO AN EXCESS OF FLOCCULANT IN THE THICKENER.

EXCESS FLOCCULANT IN THE THICKENER YIELDED A HIGH SOLIDS LEVEL IN THE OVERFLOW AND RESULTED IN PLUGGING PROBLEMS IN THE ABSORBER MODULES.

5/78	A	52.0	45.0	45.0	44.0					
	B	54.0	50.0	51.0	49.0					
	SYSTEM	53.0	47.5	48.0	46.5			744	720	346

** PROBLEMS/SOLUTIONS/COMMENTS

THE SYSTEM WAS TAKEN OUT OF SERVICE BECAUSE OF CONTINUED PROBLEMS WITH THE FLOCCULANT FEED SYSTEM. THE THICKENER WAS EMPTIED TO RESTORE PROPER FLOCCULANT BALANCE.

6/78	A	48.0	37.0	37.0	37.0					
	B	30.0	30.0	30.0	30.0					
	SYSTEM	39.0	33.5	33.5	33.5			720	720	243

** PROBLEMS/SOLUTIONS/COMMENTS

AN FRP PIPING FAILURE IN THE MIST ELIMINATOR WASH SYSTEM OCCURRED.

7/78	A	66.0	66.0	66.0	64.0					
	B	43.0	33.0	33.0	32.0					
	SYSTEM	54.5	49.5	49.5	49.0			744	727	359

** PROBLEMS/SOLUTIONS/COMMENTS

OUTAGE TIME WAS DUE TO PLUGGING IN THE MIST ELIMINATOR AND SCRUBBER BALL REGIONS.

8/78	A	18.0	20.0	20.0	18.0					
	B	18.0	21.0	21.0	18.0					
	SYSTEM	18.0	20.5	20.5	18.0			744	667	135

** PROBLEMS/SOLUTIONS/COMMENTS

THE FORCED OUTAGE TIME WAS DUE, IN PART, TO TIME REQUIRED TO REMOVE SCALE FROM THE MIST ELIMINATOR.

THE FORCED OUTAGE TIME WAS DUE, IN PART, TO TIME REQUIRED TO REPLACE SOME OF THE PING PONG BALLS IN THE MODULES.

THE UTILITY EXPERIENCED BYPASS DAMPER PROBLEMS DURING THE PERIOD.

PROBLEMS OCCURRED RELATED TO BROKEN SLUDGE LINES AND PLUGGING IN THE LIME SLURRY FEED LINES.

9/78	A	61.0	46.0	55.0	45.0					
	B	54.0	44.0	53.0	43.0					
	SYSTEM	57.5	45.0	54.0	44.0			720	707	316
10/78	A	72.0	37.0	38.0	36.0					
	B	82.0	47.0	47.0	45.0					
	SYSTEM	77.0	42.0	42.5	40.5			744	713	301

** PROBLEMS/SOLUTIONS/COMMENTS

DAMPER DRIVE PROBLEMS WERE REPORTED BY THE UTILITY.

MINIMAL RUBBER LINER FAILURE WAS OBSERVED AT THE TOP OF ONE OF THE SCRUBBER MODULES AND JUST AFTER THE PRESATURATOR.

11/78	A	43.0	29.0	29.0	26.0					
	B	84.0	74.0	75.0	66.0					
	SYSTEM	63.5	51.5	52.0	46.0			720	642	331

COLUMBUS & SOUTHERN OHIO ELEC.: CONESVILLE 5 (CONT.)

PERIOD	MODULE	AVAILABILITY	OPERABILITY	RELIABILITY	UTILIZATION	% REMOVAL SO2	% REMOVAL PART.	PER HOURS	BOILER HOURS	FGD HOURS	CAP. FACTOR
		PERFORMANCE DATA									
12/78	A	6.6	.3	.3	.3						
	B	33.1	36.3	36.6	30.0						
	SYSTEM	19.8	18.3	18.4	15.1			744	609	112	

** PROBLEMS/SOLUTIONS/COMMENTS

THE LOW HOURS FOR THIS PERIOD ARE ATTRIBUTED TO FREEZE UPS.

1/79	A	.0	.0	.0	.0						
	B	.0	.0	.0	.0						
	SYSTEM	.0	.0	.0	.0			744	602	0	
2/79	A	.0	.0	.0	.0						
	B	.0	.0	.0	.0						
	SYSTEM	.0	.0	.0	.0			672		0	

** PROBLEMS/SOLUTIONS/COMMENTS

THE SYSTEM DID NOT OPERATE DURING FEBRUARY BECAUSE OF SEVERE WINTER WEATHER

3/79	A	50.0	49.0	50.0	43.0						
	B	.0	.0	.0	.0						
	SYSTEM	25.0	24.5	25.0	21.5			744	652	160	
4/79	A	17.0	58.0	73.0	12.0						
	B	.0	.0	.0	.0						
	SYSTEM	8.5	29.0	36.5	6.0			720	149	43	

** PROBLEMS/SOLUTIONS/COMMENTS

MODULE B DID NOT OPERATE DURING APRIL BECAUSE OF SEVERE CORROSION
AT THE PRESATURATOR INLET DUCT WHICH UOP HAS BEEN REPAIRING SINCE MARCH.

5/79	A	.0	.0	.0	.0						
	B	.0	.0	.0	.0						
	SYSTEM	.0	.0	.0	.0			744	744	0	

** PROBLEMS/SOLUTIONS/COMMENTS

REPAIRS WERE MADE TO THE SEAL BETWEEN THE THICKENER BASE AND SIDEWALL.

THE FGD SYSTEM WAS DOWN DURING MAY FOR AN ANNUAL OUTAGE.

6/79	A	69.0	35.0	36.0	33.0						
	B	50.0	21.0	22.0	20.0						
	SYSTEM	59.5	28.0	29.0	26.5			720	670	191	

** PROBLEMS/SOLUTIONS/COMMENTS

PLUGGED PH LINES WERE A PROBLEM DURING MAY AND JUNE.

FLYASH CONVEYING PROBLEMS RESULTED IN ABOUT 2 DAYS OUTAGE.

OUTLET DAMPER PROBLEMS WERE REPORTED BY THE UTILITY.

7/79	A	75.3	76.3	77.6	69.0						
	B	93.4	89.8	90.8	80.6						
	SYSTEM	84.4	82.8	84.2	74.8			744			
8/79	A	86.6	24.7	25.0	10.1						
	B	85.6	22.7	23.0	9.3						
	SYSTEM	86.1	23.7	24.0	9.7			744			
9/79	A	89.3	52.6	59.5	27.9						
	B	95.9	51.3	58.0	27.2						
	SYSTEM	92.6	51.9	58.8	27.6			720			
10/79	A	53.2	76.3	77.0	45.4						

COLUMBUS & SOUTHERN OHIO ELEC.: CONESVILLE 5 (CONT.)

PERIOD	MODULE	AVAILABILITY	OPERABILITY	RELIABILITY	UTILIZATION	% REMOVAL SO2	% REMOVAL PART.	PER HOURS	BOILER HOURS	FGD HOURS	CAP. FACTOR
		PERFORMANCE DATA									
	B	47.8	77.4	78.1	46.1						
	SYSTEM	50.5	76.9	77.6	45.8			744			
11/79	A	74.0	90.0	91.0	52.0						
	B	70.0	88.0	89.0	51.0						
	SYSTEM	72.0	89.0	90.0	51.2			720			
12/79	A	.0	.0	.0	.0						
	B	.0	.0	.0	.0						
	SYSTEM	.0	.0	.0	.0			744			

** PROBLEMS/SOLUTIONS/COMMENTS

DURING THE LAST HALF OF 1979 THE UNIT EXPERIENCED PROBLEMS WITH THE LIME BLOWER COMPRESSOR MOTOR.

CAVITATION WAS SITED IN THE SLUDGE PUMP.

THE FLYASH CONVEYOR SYSTEM CAUSED PROBLEMS DURING THE LATTER HALF OF THE YEAR.

PLUGGING IN THE REAGENT CIRCULATION SYSTEMS WAS ENCOUNTERED.

THERE WERE PROBLEMS WITH THE GUIDE BARS AND SEALS IN THE INLET DAMPER DURING THE LAST HALF OF 1979.

SECTION 3
DESIGN AND PERFORMANCE DATA FOR OPERATIONAL DOMESTIC FGD SYSTEMS

COMPANY NAME	COLUMBUS & SOUTHERN OHIO ELEC.	
PLANT NAME	CONESVILLE	
UNIT NUMBER	6	
CITY	CONESVILLE	
STATE	OHIO	
REGULATORY CLASSIFICATION	D	
PARTICULATE EMISSION LIMITATION - NG/J	43.	(.100 LB/MMBTU)
SO2 EMISSION LIMITATION - NG/J	430.	(1.000 LB/MMBTU)
NET PLANT GENERATING CAPACITY - MW	2100.0	
GROSS UNIT GENERATING CAPACITY - MW	411.0	
NET UNIT GENERATING CAPACITY W/FGD - MW	375.0	
NET UNIT GENERATING CAPACITY WO/FGD - MW	391.0	
EQUIVALENT SCRUBBED CAPACITY - MW	411.0	
** BOILER DATA		
SUPPLIER	COMBUSTION ENGINEERING	
TYPE	PULVERIZED COAL	
SERVICE LOAD	BASE	
COMMERCIAL SERVICE DATE	0/77	
MAXIMUM BOILER FLUE GAS FLOW - CU.M/S	657.78	(1393893 ACFM)
FLUE GAS TEMPERATURE - C	146.7	(296 F)
STACK HEIGHT - M	244.	(800 FT)
STACK TOP DIAMETER - M	7.9	(26.0 FT)
** FUEL DATA		
FUEL TYPE	COAL	
FUEL GRADE	BITUMINOUS	
AVERAGE HEAT CONTENT - J/G	25237.	(10850 BTU/LB)
RANGE HEAT CONTENT - BTU/LB		10300-11220
AVERAGE ASH CONTENT - %	15.10	
RANGE ASH CONTENT - %	12-19	
AVERAGE MOISTURE CONTENT - %	7.50	
RANGE MOISTURE CONTENT - %	******	
AVERAGE SULFUR CONTENT - %	4.67	
RANGE SULFUR CONTENT - %	4.2-5.1	
AVERAGE CHLORIDE CONTENT - %	********	
RANGE CHLORIDE CONTENT - %	******	
** ESP		
NUMBER	1	
TYPE	COLD SIDE	
SUPPLIER	RESEARCH COTTRELL	
PARTICULATE DESIGN REMOVAL EFFICIENCY - %	99.6	
FLUE GAS CAPACITY - CU.M/S	657.8	(1393893 ACFM)
FLUE GAS TEMPERATURE - C	146.7	(296 F)
** PARTICULATE SCRUBBER		
TYPE	NONE	
** FGD SYSTEM		
SALEABLE PRODUCT/THROWAWAY PRODUCT	THROWAWAY PRODUCT	
GENERAL PROCESS TYPE	WET SCRUBBING	
PROCESS TYPE	LIME	
PROCESS ADDITIVES	MG (2-6%)	
SYSTEM SUPPLIER	AIR CORRECTION DIVISION, UOP	
A-E FIRM	BLACK & VEATCH	
DEVELOPMENT LEVEL	FULL SCALE	
NEW/RETROFIT	NEW	
PARTICULATE DESIGN REMOVAL EFFICIENCY - %	99.60	
SO2 DESIGN REMOVAL EFFICIENCY - %	89.50	
INITIAL START-UP	6/78	
CONSTRUCTION INITIATION	5/75	
CONTRACT AWARDED	10/74	
ABSORBER SPARE CAPACITY INDEX - %	.0	
ABSORBER SPARE COMPONENT INDEX	.0	
** ABSORBER		
NUMBER	2	
TYPE	MOBILE PACKED TOWER	
INITIAL START UP	6/78	
SUPPLIER	AIR CORRECTION DIVISION, UOP	
NUMBER OF STAGES	4	

COLUMBUS & SOUTHERN OHIO ELEC.: CONESVILLE 6 (CONT.)

SHELL MATERIAL	CARBON STEEL (CARPENTER 20 PRESATURATOR)	
SHELL LINER MATERIAL	CHLOROBUTYL RUBBER	
INTERNAL MATERIAL	CARPENTER 20 SUPPORT GRIDS	
BOILER LOAD/ABSORBER - %	63.0	
GAS FLOW - CU.M/S	298.44	(632416 ACFM)
GAS TEMPERATURE - C	141.1	(286 F)
LIQUID RECIRCULATION RATE - LITER/S	2394.	(38000 GPM)
L/G RATIO - L/CU.M	6.7	(50.0 GAL/1000ACF)
PRESSURE DROP - KPA	1.8	(7.3 IN-H2O)
SUPERFICAL GAS VELOCITY - M/SEC	3.9	(12.8 FT/S)
SO2 DESIGN REMOVAL EFFICIENCY - %	89.5	
** FANS		
NUMBER	4	
TYPE	BOILER ID	
CONSTRUCTION MATERIALS	CARBON STEEL	
SERVICE - WET/DRY	DRY	
CAPACITY - CU.M/S	401.11	(850000 ACFM)
** VACUUM FILTER		
NUMBER	1	
** MIST ELIMINATOR		
NUMBER	4	
TYPE	CHEVRON	
CONSTRUCTION MATERIAL	NORYL PLASTIC	
CONFIGURATION	HORIZONTAL	
NUMBER OF STAGES	2	
NUMBER OF PASSES	3	
FREEBOARD DISTANCE - M	3.05	(10.0 FT)
DEPTH - M	1.37	(4.5 FT)
VANE SPACING - CM	5.1	(2.00 IN)
VANE ANGLES	90 DEG.	
WASH SYSTEM	CONTINUOUS TOP AND BOTTOM WASH 1ST STAGE; BOTTOM	
SUPERFICIAL GAS VELOCITY - M/S	4.2	(13.7 FT/S)
** MIST ELIMINATOR		
NUMBER	2	
TYPE	TRAPOUT TRAY	
CONSTRUCTION MATERIAL	CARPENTER 20	
CONFIGURATION	HORIZONTAL	
NUMBER OF STAGES	1	
SUPERFICIAL GAS VELOCITY - M/S	4.2	(13.7 FT/S)
** PUMPS		
SERVICE	NUMBER	
-------	------	
ABSORBER RECIRCULATION	2	
TRANSFER TANK	1	
SLURRY TRANSFER	1	
RECYCLE TANK SLUDGE TRANSFER	2	
MIST ELIMINATOR WASH	2	
** TANKS		
SERVICE	NUMBER	
-------	------	
RECYCLE	1	
RECLAIMED WATER	1	
SLURRY TRANSFER TANK	1	
SLURRY STORAGE	1	
M.E. WASH	1	
** REHEATER		
TYPE	BYPASS	
** THICKENER		
NUMBER	1	
CONSTRUCTION MATERIAL	CARBON STEEL WITH CONCRETE FLOOR	
DIAMETER - M	44.2	(145 FT)
OUTLET SOLIDS - %	32.5	
** WATER LOOP		
TYPE	OPEN	
FRESH MAKEUP WATER ADDITION - LITERS/S	31.5	(500 GPM)

COLUMBUS & SOUTHERN OHIO ELEC.: CONESVILLE 6 (CONT.)

** REAGENT PREPARATION EQUIPMENT
NUMBER OF BALL MILLS 3

** TREATMENT
TYPE POZ-O-TEC
CONTRACTOR IUCS
PRODUCT CHARACTERISTICS 73% SOLIDS

** DISPOSAL
NATURE FINAL
TYPE LANDFILL
LOCATION ON-SITE
TRANSPORTATION PUMPED
AREA - ACRES 50.0

PERFORMANCE DATA

PERIOD	MODULE	AVAILABILITY	OPERABILITY	RELIABILITY	UTILIZATION	% REMOVAL SO2	% REMOVAL PART.	PER HOURS	BOILER HOURS	FGD HOURS	CAP. FACTOR
6/78	A	56.0	49.0	51.0	42.0						
	B	44.0	33.0	34.0	30.0						
	SYSTEM	50.0	41.0	42.5	36.0			720	524	174	

** PROBLEMS/SOLUTIONS/COMMENTS

CONTROL OF THE LOUVERED DAMPER OF THE BYPASS SYSTEM WAS LOST. THE RESULT WAS BACK PRESSURE BUILDUP THAT AUTOMATICALLY SHUT DOWN THE BOILER.

SCRUBBER CONTROLS WERE NOT OPERATING PROPERLY AND NEEDED ADJUSTMENT.

7/78	A	83.0	37.0	63.0	25.0						
	B	70.0	19.0	33.0	13.0						
	SYSTEM	76.5	28.0	48.0	19.0			744	502	141	

** PROBLEMS/SOLUTIONS/COMMENTS

THE LOUVERED DAMPER PROBLEM CONTINUED.

THE FRP TRANSFER LINE FROM THE THICKENER TO THE IUCS SYSTEM RUPTURED AS A RESULT OF WATER HAMMER IN THE LINE AND HAD TO BE REPAIRED.

8/78	A	47.0	50.0	66.0	43.0						
	B	62.0	60.0	81.0	52.0						
	SYSTEM	54.5	55.0	73.5	47.5			744	642	354	

** PROBLEMS/SOLUTIONS/COMMENTS

PROBLEMS WERE ENCOUNTERED WITH THE SLUDGE LINE. THE UTILITY REPORTS THAT THIS IS TYPICALLY A HIGH MAINTENANCE AREA.

PROBLEMS WERE ENCOUNTERED WITH THE BYPASS CONTROL DAMPERS. THE UTILITY REPORTS THAT THIS IS TYPICALLY A HIGH MAINTENANCE AREA.

9/78	A	55.0	50.0	53.0	49.0						
	B	69.0	55.0	57.0	54.0						
	SYSTEM	62.0	52.5	55.0	51.5			720	706	372	

** PROBLEMS/SOLUTIONS/COMMENTS

A PROBLEM AREA WAS THE PLUGGING OF THE LIME SLURRY FEED LINES.

BY-PASS DAMPER CONTROL PROBLEMS CONTINUED THROUGH SEPTEMBER.

10/78	A	98.0	29.0	30.0	24.0						
	B	37.0	35.0	36.0	29.0						
	SYSTEM	67.5	32.0	33.0	26.5			744	603	199	

** PROBLEMS/SOLUTIONS/COMMENTS

PROBLEMS WITH DAMPER SEALS AND GUIDEBARS WERE ENCOUNTERED. THE UTILITY PLANS TO REPLACE THEM DURING THE NEXT BOILER OUTAGE.

11/78	B	26.0	9.0	6.0	8.0						

PERIOD	MODULE	AVAILABILITY	OPERABILITY	RELIABILITY	UTILIZATION	% REMOVAL SO2	% REMOVAL PART.	PER HOURS	BOILER HOURS	FGD HOURS	CAP. FACTOR
		PERFORMANCE DATA									
	SYSTEM	26.0	6.0	4.5	5.0			720	480	32	

** PROBLEMS/SOLUTIONS/COMMENTS

LIME TRANSFER BAGHOUSE SHAKER PROBLEMS WERE EXPERIENCED.

THE THICKENER RAKE MOTOR BURNED OUT AND HAD TO BE REWOUND.

12/78	A	34.8	26.3	26.8	24.2						
	B	26.6	19.0	19.3	17.5						
	SYSTEM	30.7	22.6	23.0	20.8			744	672	155	

** PROBLEMS/SOLUTIONS/COMMENTS

FREEZE UPS WERE A SERIOUS PROBLEM DURING THIS PERIOD.

1/79	A	5.0	2.0	2.0	2.0						
	B	.0	.0	.0	.0						
	SYSTEM	2.5	1.0	1.0	1.0			744	730	8	
2/79	A	.0	.0	.0	.0						
	B	.0	.0	.0	.0						
	SYSTEM	.0	.0	.0	.0			672		0	

** PROBLEMS/SOLUTIONS/COMMENTS

THE FGD SYSTEM DID NOT OPERATE DURING FEBRUARY DUE TO SEVERE WINTER WEATHER

3/79	A	43.0	37.0	39.0	33.0						
	B	32.0	28.0	29.0	25.0						
	SYSTEM	37.5	32.5	34.0	29.0			744	664	216	
4/79	A	82.0	79.0	79.0	78.0						
	B	72.0	59.0	59.0	58.0						
	SYSTEM	77.0	69.0	69.0	68.0			720	711	489	
5/79	A	.0	.0	.0	.0						
	B	.0	.0	.0	.0						
	SYSTEM	.0	.0	.0	.0			744	0	0	

** PROBLEMS/SOLUTIONS/COMMENTS

REPAIRS WERE MADE TO THE SEAL BETWEEN THE THICKENER BASE AND SIDEWALL.

THE BOILER DID NOT OPERATE DURING MAY.

6/79	A	43.0	37.0	39.0	27.0						
	B	49.0	49.0	52.0	31.0						
	SYSTEM	46.0	43.0	45.5	29.0			720	433	186	

** PROBLEMS/SOLUTIONS/COMMENTS

FLYASH CONVEYING PROBLEMS RESULTED IN ABOUT 2 DAYS OUTAGE.

PLUGGED PH LINES WERE A PROBLEM DURING THIS PERIOD.

7/79	A	83.9	29.5	29.7	22.0						
	B	88.7	41.2	41.4	30.8						
	SYSTEM	86.3	35.4	35.6	26.4			744			
8/79	A	76.2	40.8	40.8	40.8						
	B	77.6	42.6	42.6	42.6						
	SYSTEM	76.9	41.7	41.7	41.7			744			
9/79	A	87.6	58.5	57.4	54.4						
	B	86.5	55.5	56.2	53.3						
	SYSTEM	87.0	57.0	56.8	53.9			720			
10/79	A	75.9	66.2	66.5	63.3						

COLUMBUS & SOUTHERN OHIO ELEC.: CONESVILLE 6 (CONT.)

PERFORMANCE DATA

PERIOD	MODULE	AVAILABILITY	OPERABILITY	RELIABILITY	UTILIZATION	% REMOVAL SO2	% REMOVAL PART.	PER HOURS	BOILER HOURS	FGD HOURS	CAP. FACTOR
	B	43.1	23.6	23.7	22.6						
	SYSTEM	59.5	44.9	45.1	43.0			744			
11/79	A	67.0	58.0	58.0	48.0						
	B	52.0	49.0	49.0	41.0						
	SYSTEM	59.5	53.5	53.5	44.5			720			
12/79	A	84.0	76.0	76.0	76.0						
	B	91.0	87.0	87.0	87.0						
	SYSTEM	87.5	81.5	81.5	81.5			744			

** PROBLEMS/SOLUTIONS/COMMENTS

DURING THE LAST HALF OF 1979 THE UNIT EXPERIENCED PROBLEMS WITH THE LIME BLOWER COMPRESSOR MOTOR.

CAVITATION WAS SITED IN THE SLUDGE PUMP.

THE FLYASH CONVEYOR SYSTEM CAUSED PROBLEMS DURING THE LATTER HALF OF THE YEAR.

PLUGGING IN THE REAGENT CIRCULATION SYSTEMS WAS ENCOUNTERED.

THERE WERE PROBLEMS WITH THE GUIDE BARS AND SEALS IN THE INLET DAMPER DURING THE LAST HALF OF 1979.

SECTION 3
DESIGN AND PERFORMANCE DATA FOR OPERATIONAL DOMESTIC FGD SYSTEMS

COMPANY NAME	COOPERATIVE POWER ASSOCIATION	
PLANT NAME	COAL CREEK	
UNIT NUMBER	1	
CITY	UNDERWOOD	
STATE	NORTH DAKOTA	
REGULATORY CLASSIFICATION	B	
PARTICULATE EMISSION LIMITATION - NG/J	43.	(.100 LB/MMBTU)
SO2 EMISSION LIMITATION - NG/J	516.	(1.200 LB/MMBTU)
NET PLANT GENERATING CAPACITY - MW	1100.0	
GROSS UNIT GENERATING CAPACITY - MW	545.0	
NET UNIT GENERATING CAPACITY W/FGD - MW	495.0	
NET UNIT GENERATING CAPACITY WO/FGD - MW	*******	
EQUIVALENT SCRUBBED CAPACITY - MW	327.0	
** BOILER DATA		
SUPPLIER	COMBUSTION ENGINEERING	
TYPE	PULVERIZED LIGNITE	
SERVICE LOAD	BASE	
COMMERCIAL SERVICE DATE	**/**	
MAXIMUM BOILER FLUE GAS FLOW - CU.M/S	********	(******* ACFM)
FLUE GAS TEMPERATURE - C	160.0	(320 F)
STACK HEIGHT - M	198.	(650 FT)
STACK TOP DIAMETER - M	6.7	(22.0 FT)
** FUEL DATA		
FUEL TYPE	COAL	
FUEL GRADE	LIGNITE	
AVERAGE HEAT CONTENT - J/G	14556.	(6258 BTU/LB)
RANGE HEAT CONTENT - BTU/LB		3068-7660
AVERAGE ASH CONTENT - %	7.14	
RANGE ASH CONTENT - %	3.89-15.95	
AVERAGE MOISTURE CONTENT - %	39.83	
RANGE MOISTURE CONTENT - %	27.78-52.55	
AVERAGE SULFUR CONTENT - %	.63	
RANGE SULFUR CONTENT - %	0.18-1.41	
AVERAGE CHLORIDE CONTENT - %	.02	
RANGE CHLORIDE CONTENT - %	0.00-0.08	
** ESP		
NUMBER	1	
TYPE	COLD SIDE	
SUPPLIER	WHEELABRATOR-FRYE	
PARTICULATE DESIGN REMOVAL EFFICIENCY - %	99.5	
FLUE GAS CAPACITY - CU.M/S	1090.1	(2310000 ACFM)
FLUE GAS TEMPERATURE - C	160.6	(321 F)
PARTICULATE OUTLET LOAD - G/CU.M	.02	(.01 GR/SCF)
** PARTICULATE SCRUBBER		
TYPE	NONE	
** FGD SYSTEM		
SALEABLE PRODUCT/THROWAWAY PRODUCT	THROWAWAY PRODUCT	
GENERAL PROCESS TYPE	WET SCRUBBING	
PROCESS TYPE	LIME/ALKALINE FLYASH	
PROCESS ADDITIVES	NONE	
SYSTEM SUPPLIER	COMBUSTION ENGINEERING	
A-E FIRM	BLACK & VEATCH	
DEVELOPMENT LEVEL	FULL SCALE	
NEW/RETROFIT	NEW	
PARTICULATE DESIGN REMOVAL EFFICIENCY - %	99.50	
SO2 DESIGN REMOVAL EFFICIENCY - %	90.00	
INITIAL START-UP	8/79	
CONSTRUCTION INITIATION	8/77	
** ABSORBER		
NUMBER	4	
TYPE	SPRAY TOWER	
INITIAL START UP	8/79	
SUPPLIER	COMBUSTION ENGINEERING	
NUMBER OF STAGES	3	
DIMENSIONS - FT	22 X 22 X 20	
SHELL MATERIAL	316L SS	

COOPERATIVE POWER ASSOCIATION: COAL CREEK 1 (CONT.)

SHELL LINER MATERIAL	NONE
NOZZLE TYPE	PROPRIETARY ATOMIZING
L/G RATIO - L/CU.M	8.0 (60.0 GAL/1000ACF)
SO2 INLET CONCENTRATION - PPM	1000
SO2 OUTLET CONTRATION - PPM	100
SO2 DESIGN REMOVAL EFFICIENCY - %	90.0

** FANS

NUMBER	4
TYPE	I.D.

** MIST ELIMINATOR

NUMBER	1
TYPE	CHEVRON
CONSTRUCTION MATERIAL	FRP
NUMBER OF STAGES	2

** MIST ELIMINATOR

NUMBER	1
TYPE	SLAT IMPINGEMENT
CONSTRUCTION MATERIAL	FRP

** PUMPS

SERVICE	NUMBER
BLEED STREAM	3
SLURRY FEED	****
REACTION TANK TRANSFER	6

** TANKS

SERVICE	NUMBER
REACTION-RECYCLE-THICKENER	2
FLYASH WETTING	****
LIME FEED	****

** REHEATER

TYPE	BYPASS
TEMPERATURE BOOST - C	47.2 (85 F)

** WATER LOOP

TYPE	OPEN

** REAGENT PREPARATION EQUIPMENT

NUMBER OF SLAKERS	1

** TREATMENT

TYPE	FLYASH STABILIZATION

** DISPOSAL

NATURE	FINAL
TYPE	LINED POND
AREA - ACRES	101.0

PERFORMANCE DATA

PERIOD	MODULE	AVAILABILITY	OPERABILITY	RELIABILITY	UTILIZATION	% REMOVAL SO2	% REMOVAL PART.	PER HOURS	BOILER HOURS	FGD HOURS	CAP. FACTOR
8/79	SYSTEM							744			
9/79	SYSTEM							720			

** PROBLEMS/SOLUTIONS/COMMENTS

THIS UNIT STARTED COMMERCIAL OPERATIONS ON AUGUST 1, 1979. SOME MINOR PROBLEMS WERE REPORTED DURING START UP.

10/79	SYSTEM							744	711		
11/79	SYSTEM							720	703		
12/79	SYSTEM							744	719		

EPA UTILITY FGD SURVEY: FOURTH QUARTER 1979

COOPERATIVE POWER ASSOCIATION: COAL CREEK 1 (CONT.)

PERIOD	MODULE	AVAILABILITY	OPERABILITY	RELIABILITY	UTILIZATION	% REMOVAL SO2	% REMOVAL PART.	PER HOURS	BOILER HOURS	FGD HOURS	CAP. FACTOR
				PERFORMANCE DATA							

** PROBLEMS/SOLUTIONS/COMMENTS

SINCE STARTUP THE UNIT HAS EXPERIENCED NUMEROUS SHAKE DOWN PROBLEMS. AFTER THE NEXT SCHEDULED OUTAGE IN APRIL, THEY EXPECT FAIRLY STABLE OPERATIONS.

DURING DECEMBER 2 OF 8 PULVERIZERS WERE OUT DUE TO A PRIMARY AIR DUCT EXPLOSION.

SECTION 3
DESIGN AND PERFORMANCE DATA FOR OPERATIONAL DOMESTIC FGD SYSTEMS

COMPANY NAME	DUQUESNE LIGHT	
PLANT NAME	ELRAMA	
UNIT NUMBER	1-4	
CITY	ELRAMA	
STATE	PENNSYLVANIA	
REGULATORY CLASSIFICATION	D	
PARTICULATE EMISSION LIMITATION - NG/J	43.	(.100 LB/MMBTU)
SO2 EMISSION LIMITATION - NG/J	258.	(.600 LB/MMBTU)
NET PLANT GENERATING CAPACITY - MW	494.0	
GROSS UNIT GENERATING CAPACITY - MW	510.0	
NET UNIT GENERATING CAPACITY W/FGD - MW	475.0	
NET UNIT GENERATING CAPACITY WO/FGD - MW	493.0	
EQUIVALENT SCRUBBED CAPACITY - MW	510.0	
** BOILER DATA		
SUPPLIER	BABCOCK & WILCOX	
TYPE	PULVERIZED COAL	
SERVICE LOAD	BASE	
COMMERCIAL SERVICE DATE	0/52	
MAXIMUM BOILER FLUE GAS FLOW - CU.M/S	********	(******* ACFM)
FLUE GAS TEMPERATURE - C	*******	(**** F)
STACK HEIGHT - M	122.	(400 FT)
STACK TOP DIAMETER - M	*******	(***** FT)
** ESP		
NUMBER	1	
TYPE	COLDSIDE	
SUPPLIER	RESEARCH COTTRELL	
** MECHANICAL COLLECTOR		
SUPPLIER	RESEARCH COTTRELL	
** PARTICULATE SCRUBBER		
TYPE	VENTURI	
** FGD SYSTEM		
SALEABLE PRODUCT/THROWAWAY PRODUCT	THROWAWAY PRODUCT	
GENERAL PROCESS TYPE	WET SCRUBBING	
PROCESS TYPE	LIME	
SYSTEM SUPPLIER	CHEMICO	
A-E FIRM	GIBBS & HILL	
DEVELOPMENT LEVEL	FULL SCALE	
NEW/RETROFIT	RETROFIT	
PARTICULATE DESIGN REMOVAL EFFICIENCY - %	99.00	
SO2 DESIGN REMOVAL EFFICIENCY - %	83.00	
COMMERCIAL DATE	10/75	
INITIAL START-UP	10/75	
CONSTRUCTION INITIATION	12/71	
CONTRACT AWARDED	12/70	
ABSORBER SPARE CAPACITY INDEX - %	35.0	
ABSORBER SPARE COMPONENT INDEX	1.3	
** ABSORBER		
NUMBER	5	
TYPE	VENTURI	
INITIAL START UP	10/75	
SUPPLIER	CHEMICO	
NUMBER OF STAGES	1	
DIMENSIONS - FT	30 DIA. X 60 HIGH	
SHELL MATERIAL	CARBON STEEL	
SHELL LINER MATERIAL	CEILCOTE	
INTERNAL MATERIAL	316L SS AND CEILCOTE	
GAS FLOW - CU.M/S	254.83	(540000 ACFM)
GAS TEMPERATURE - C	150.6	(303 F)
LIQUID RECIRCULATION RATE - LITER/S	1008.	(16000 GPM)
L/G RATIO - L/CU.M	5.3	(40.0 GAL/1000ACF)
PRESSURE DROP - KPA	4.0	(16.0 IN-H2O)
PARTICULATE REMOVAL EFFICIENCY - %	99.0	
** FANS		
NUMBER	5	
TYPE	SCRUBBER ID	

DUQUESNE LIGHT: ELRAMA 1-4 (CONT.)

CONSTRUCTION MATERIALS	CARBON STEEL WITH 0.25 INCH RUBBER LINING IN HOU	
SERVICE - WET/DRY	WET	
** MIST ELIMINATOR		
TYPE	CHEVRON	
CONSTRUCTION MATERIAL	FRP	
CONFIGURATION	HORIZONTAL	
NUMBER OF STAGES	1	
NUMBER OF PASSES	3	
FREEBOARD DISTANCE - M	1.37	(4.5 FT)
VANE SPACING - CM	.1	(.03 IN)
VANE ANGLES	90	
SUPERFICIAL GAS VELOCITY - M/S	.3	(1.0 FT/S)
** MIST ELIMINATOR		
TYPE	CHEVRON	
** PUMPS		
SERVICE	NUMBER	
SCRUBBER/ABSORBER RECIRCULATION	10	
** REHEATER		
TYPE	DIRECT COMBUSTION	
TEMPERATURE BOOST - C	16.7	(30 F)
** THICKENER		
NUMBER	2	
OUTLET SOLIDS - %	32.0	
** WATER LOOP		
TYPE	OPEN	
** TREATMENT		
TYPE	POZ-O-TEC	
CONTRACTOR	IUCS	
PRODUCT CHARACTERISTICS	70% SOLIDS	
** DISPOSAL		
NATURE	FINAL	
TYPE	LANDFILL	
LOCATION	OFF-SITE	
TRANSPORTATION	TRUCK	

PERFORMANCE DATA

PERIOD	MODULE	AVAILABILITY	OPERABILITY	RELIABILITY	UTILIZATION	% REMOVAL SO2	% REMOVAL PART.	PER HOURS	BOILER HOURS	FGD HOURS	CAP. FACTOR
0/75	SYSTEM										

** PROBLEMS/SOLUTIONS/COMMENTS

THE FIRST ELRAMA SCRUBBER WAS PLACED IN SERVICE ON OCTOBER 26, 1975. IT HAD BEEN SCHEDULED FOR AN EARLIER STARTUP DATE BUT BECAUSE OF THE SEVERITY AND NUMBER OF PROBLEMS ENCOUNTERED AT PHILLIPS, STARTUP WAS DELAYED UNTIL MANY OF THE PROBLEMS AT PHILLIPS WERE RESOLVED AND THE MODIFICATIONS COULD BE INCORPORATED AT BOTH STATIONS.

BOILER NO. 2 WAS INITIALLY CONNECTED TO THE FGD SYSTEM ON OCTOBER 26, 1975. THIS BOILER HAS AN EQUIVALENT CAPACITY OF APPROXIMATELY 100 MW AND THE EMISSIONS ARE HANDLED BY ONE SCRUBBER. TO ENSURE RELIABILITY IN THE CASE OF A SCRUBBER MALFUNCTION, TWO SCRUBBERS ARE OPERATED AT PARTIAL LOAD TO PROTECT THE BOILER AND TURBINE GENERATOR AGAINST A TRIP-OFF.

THE BOILER OPERATED CONTINUOUSLY ON THE SCRUBBER SYSTEM THROUGH JANUARY 1976. TWO MINOR OUTAGES OCCURRED. ON FEBRUARY 4, 1976 A SECOND BOILER WAS COUPLED INTO THE SCRUBBER COMPLEX. PRESENTLY, 2 UNITS ARE THE MAXIMUM THAT CAN BE TIED INTO THE SCRUBBER PLANT. TO DATE, THE UTILITY HAS ENCOUNTERED THE USUAL MINOR STARTUP PROBLEMS AND SOME MAJOR PROBLEMS AS WELL. THE MAJOR PROBLEMS HAVE BEEN FROZEN PIPES AND THICKENERS, THE LATTER INVOLVING HARDWARE AND DESIGN ASSOCIATED WITH RECIRCULATION OF THE SLUDGE WITHIN THE THICKENERS TO ATTAIN 30 TO 40% SOLIDS CONCENTRATION.

10/75 101

DUQUESNE LIGHT: ELRAMA 1-4 (CONT.)

PERIOD	MODULE	AVAILABILITY	OPERABILITY	RELIABILITY	UTILIZATION	% REMOVAL SO2	% REMOVAL PART.	PER HOURS	BOILER HOURS	FGD HOURS	CAP. FACTOR
		PERFORMANCE DATA									
	301										
	401										
	501										
	SYSTEM				38.0			2952		1123	

** PROBLEMS/SOLUTIONS/COMMENTS

ONE BOILER WAS CONNECTED TO THE SCRUBBER SYSTEM ON OCTOBER 26, 1975. SECOND BOILER WAS CONNECTED ON FEBRUARY 4, 1976. FOUR OF THE SCRUBBER VESSELS HAVE BEEN IN SERVICE IN VARIOUS COMBINATIONS. THE FIFTH VESSEL HAS NOT BEEN IN SERVICE BECAUSE IT IS BEING REVISED FOR TRIAL INSTALLATION RUBBER-LINED RECYCLE PUMPS.

11/75	SYSTEM							720			
12/75	SYSTEM							744			
0/76	SYSTEM										69.5
1/76	SYSTEM							744			

** PROBLEMS/SOLUTIONS/COMMENTS

DURING JANUARY ONE OUTAGE WAS CAUSED BY A LIME FEEDER BELT FAILURE.

ONE OUTAGE WAS CAUSED BY INOPERATIVE THROAT DAMPERS.

2/76	SYSTEM							696			
3/76	SYSTEM							744			

** PROBLEMS/SOLUTIONS/COMMENTS

THE SYSTEM OPERATED DURING THE REPORT PERIOD WITH TWO BOILERS COUPLED INTO THE SCRUBBING SYSTEM. REVISIONS TO THE FIFTH SCRUBBING VESSEL HAVE BEEN COMPLETED AND OPERATIONS ARE PROCEEDING WITH TWO RUBBER-LINED RECYCLE PUMPS.

4/76	SYSTEM							720			
5/76	SYSTEM							744			

** PROBLEMS/SOLUTIONS/COMMENTS

THE SYSTEM IS STILL OPERATING WITH TWO BOILERS COUPLED INTO THE SCRUBBING SYSTEM. THE IUCS SLUDGE FIXATION SYSTEM IS CONTINUING TO OPERATE AT THIS STATION.

THE FIFTH SCRUBBING VESSEL WAS TAKEN OUT OF SERVICE FOR REPAIRS AND MODIFICATIONS REQUIRED FOR THE RUBBER-LINED RECYCLE PUMPS.

THE UTILITY IS CURRENTLY CONDUCTING A PERFORMANCE TEST ON THE SCRUBBING SYSTEM IN THE TWO BOILER OPERATION MODE.

6/76	SYSTEM							720			
7/76	SYSTEM							744			

** PROBLEMS/SOLUTIONS/COMMENTS

THE FIFTH SCRUBBING VESSEL EMPLOYING TWO RUBBER-LINED RECYCLE PUMPS WAS OPERATIONAL FOR A SHORT PERIOD OF TIME DURING THE REPORTING MONTHS. TWO BOILERS REMAIN COUPLED INTO THE SCRUBBING SYSTEM. THE CONSTRUCTION OF ADDITIONAL LIME STORAGE SILOS AND A THICKENER WILL BE REQUIRED FOR FULL SCALE OPERATION. THE UTILITY HAS SIGNED A LETTER OF INTENT WITH IUCS FOR A LONG TERM SLUDGE FIXATION SYSTEM. HIGH CALCIUM LIME IS STILL BEING EMPLOYED IN THE SCRUBBING SYSTEM.

8/76	SYSTEM							744			
9/76	SYSTEM							720			

PERIOD	MODULE	AVAILABILITY	OPERABILITY	RELIABILITY	UTILIZATION	% REMOVAL SO2	% REMOVAL PART.	PER HOURS	BOILER HOURS	FGD HOURS	CAP. FACTOR
				PERFORMANCE DATA							

** PROBLEMS/SOLUTIONS/COMMENTS

OPERATIONS AT THIS STATION DURING THE REPORT PERIOD PROCEEDED WITH TWO BOILERS COUPLED INTO THE 5-MODULE SCRUBBING SYSTEM. THE 5TH SCRUBBING VESSEL WAS OPERATIONAL DURING THE REPORT PERIOD WITH THE RUBBER-LINED RECYCLE PUMPS IN SERVICE. OPERATIONS ARE STILL PROCEEDING ON AN OPEN WATER-LOOP BASIS. PART OF THE THICKENER OVERFLOW IS STILL BEING DIVERTED TO THE ASH POND AND NOT RECYCLED BACK TO THE PROCESS. BECAUSE BOTH BEAVER VALLEY AND BRUCE MANSFIELD STATIONS ARE FULLY OPERATIONAL, THIS STATION HAS BEEN RELEGATED TO PEAK LOAD OPERATIONS. GENERAL LOAD OPERATIONS ARE FULL CAPACITY IN THE DAYTIME AND 50 TO 60% REDUCTION AT NIGHT.

TESTS WERE CONDUCTED DURING THE PERIOD TO DETERMINE PARTICULATE AND SO2 REMOVAL EFFICIENCIES. SO2 REMOVAL EFFICIENCY WAS 50 PERCENT. PARTICULATE EMISSIONS WERE BEING REDUCED WELL BELOW 0.1 LB/MM BTU STANDARD (ACTUAL RESULTS: 0.04 LB/MM BTU). THESE RESULTS WERE BASED ON TWO BOILERS COUPLED INTO THE 5 SCRUBBING MODULES WHILE BURNING MEDIUM-SULFUR (1.0 TO 2.8%) COAL. THE MECHANICAL COLLECTORS AND ESP'S WERE IN SERVICE DURING THE TESTS.

10/76	SYSTEM							744			
11/76	SYSTEM							720			

** PROBLEMS/SOLUTIONS/COMMENTS

THE SCRUBBER REMAINED IN SERVICE THROUGHOUT THE REPORT PERIOD WITH TWO BOILERS COUPLED INTO THE SCRUBBING SYSTEM. A RECYCLE PUMP EVALUATION IS BEING CONDUCTED BY THE UTILITY AT BOTH PHILLIPS AND ELRAMA STATIONS.

OBSERVATIONS OF THE RUBBER-LINED RECYCLE PUMPS INDICATE SOME SEVERE ABRASION AND GOUGING HAVE OCCURRED AFTER 1000 HOURS OF SERVICE TIME.

12/76	SYSTEM							744			
1/77	SYSTEM							744			

** PROBLEMS/SOLUTIONS/COMMENTS

TESTING ON THIOSORBIC LIME WAS CONDUCTED DURING THE PERIOD.

THE SCRUBBER PLANT CONTINUED OPERATIONS DURING THE REPORT PERIOD WITH TWO BOILERS COUPLED INTO THE SYSTEM. INSTALLATION OF THE ADDITIONAL THICKENER LIME FEEDERS AND SILOS IS STILL IN PROGRESS. FULL COMPLIANCE OPERATION FOR THIS STATION IS SCHEDULED FOR EARLY 1978. THE FULL COMPLIANCE STRATEGY WILL CONSIST OF THE FOLLOWING: 83% SO2 REMOVAL FOR 2% SULFUR COAL UTILIZING THIOSORBIC LIME (6-12% MG), FIXATING THE SCRUBBER SLUDGE WITH THE IUCS POZ-O-TEC STABILIZATION METHOD AND HAULING THIS MATERIAL TO AN OFF-SITE DISPOSAL/LANDFILL AREA. CURRENT SO2 AND PARTICULATE REMOVAL EFFICIENCIES ARE 50 AND 99.-%, RESPECTIVELY. THE INTERIM IUCS UNIT NOW IN SERVICE CONSISTS OF THE OLD MOHAVE PROTOTYPE PLUS A VACUUM FILTER. THE STABILIZATION MATERIAL HAS BEEN UTILIZED IN A PARKING LOT CONSTRUCTION PROJECT. IUCS HAS BEEN AWARDED A 10-YEAR CONTRACT FOR THE CONTINUED USE OF THIS SYSTEM FOR FUTURE PLANT OPERATIONS.

2/77	SYSTEM							672			
3/77	SYSTEM							744			
4/77	SYSTEM							720			

** PROBLEMS/SOLUTIONS/COMMENTS

CONSTRUCTION OF TWO 120-FOOT DIAMETER THICKENERS IS CONTINUING. DUE TO THE GOUGING OF THE RUBBER-LINED RECYCLE PUMPS DURING THEIR TESTING, THEY HAVE BEEN REMOVED. THE UTILITY IS CONSIDERING TRYING ANOTHER SET OF RUBBER-LINED PUMPS. DUQUESNE LIGHT ALSO IS CONTINUING EFFORTS TO OBTAIN ALTERNATE LANDFILL AREAS FOR SLUDGE DISPOSAL.

5/77	SYSTEM							744			

DUQUESNE LIGHT: ELRAMA 1-4 (CONT.)

PERIOD	MODULE	AVAILABILITY	OPERABILITY	RELIABILITY	UTILIZATION	% REMOVAL SO2	% REMOVAL PART.	PER HOURS	BOILER HOURS	FGD HOURS	CAP. FACTOR
		PERFORMANCE DATA									
6/77	SYSTEM							720			

** PROBLEMS/SOLUTIONS/COMMENTS

DUQUESNE LIGHT REPORTED THE FOLLOWING ITEMS FOR THE ELRAMA SCRUBBER PLANT DURING THE REPORT PERIOD:
-TWO BOILERS (200 MW) WERE COUPLED INTO THE SCRUBBER PLANT.
-THE INTERIM IUCS STABILIZATION UNIT (MOHAVE PROTOTYPE) CONTINUED TO FIXATE SCRUBBER WASTES.
-CONSTRUCTION OF THE TWO ADDITIONAL THICKENERS CONTINUED (CONSTRUCTION IS ON SCHEDULE).
-FULL PLANT COMPLIANCE IS PROJECTED FOR FEBRUARY 1978.
-SO2 REMOVAL EFFICIENCY IS APPROXIMATELY 50%.
-ELRAMA IS OPERATING IN A BASE/INTERMEDIATE LOAD MODE (FULL LOAD DAYTIME/HALF LOAD NIGHT-TIME). 1976 CAPACITY FACTOR WAS 69.5%.

7/77	SYSTEM							744			
8/77	SYSTEM							744			

** PROBLEMS/SOLUTIONS/COMMENTS

THE TWO ADDITIONAL THICKENERS WERE COMPLETELY INSTALLED. THE IUCS SYSTEM WAS UPGRADED. END OF CONSTRUCTION IS PROJECTED FOR FEBRUARY 1978. FULL PLANT COMPLIANCE IS PROJECTED FOR APRIL 1978.

9/77	SYSTEM							720			
10/77	SYSTEM							744			

** PROBLEMS/SOLUTIONS/COMMENTS

MODULE 101 WAS UNAVAILABLE OCTOBER 4 DUE TO A BLEED VALVE LEAK AND WAS TAKEN OUT OF SERVICE AT THE END OF THE MONTH FOR CLEANUP.

MODULE 201 WAS AVAILABLE FOR THE ENTIRE MONTH.

MODULE 301 AND 401 HAD OUTAGES IN OCTOBER RESULTING FROM A RUBBER LINING FAILURE ON AN I.D. FAN.

MODULE 501 EXPERIENCED RECYCLE PUMP OUTAGES IN LATE NOVEMBER.

NEW RUBBER LINED WORMEN RECYCLE PUMPS WERE INSTALLED. THE LIME HANDLING SYSTEM INSTALLATION WORK CONTINUED. THE LAST TWO BOILERS ARE EXPECTED TO BE TIED INTO THE FGD SYSTEM BY JANUARY 1978.

TUBE LEAKS FORCED A BOILER OUTAGE IN NOVEMBER.

11/77	101				.0						
	201				11.7						
	301				93.3						
	401				22.5						
	501				59.2						
	SYSTEM				37.3			720		268	

** PROBLEMS/SOLUTIONS/COMMENTS

MODULE 101, 201 AND 401 HAVE LOW OPERATIONAL HOURS BECAUSE ONLY TWO BOILER ARE TIED INTO THE FGD SYSTEM TO DATE.

THE SLUDGE HANDLING SYSTEM IS FUNCTIONING PROPERLY AND IS NOW IN FULL SERVICE.

12/77	SYSTEM							744			

PERIOD	MODULE	AVAILABILITY	OPERABILITY	RELIABILITY	UTILIZATION	% REMOVAL SO2	% REMOVAL PART.	PER HOURS	BOILER HOURS	FGD HOURS	CAP. FACTOR
		PERFORMANCE DATA									

** PROBLEMS/SOLUTIONS/COMMENTS

DURING THE PERIOD A NEW WORMEN RECYCLE PUMP INSTALLED IN NOVEMBER EXPERIENCED JACK SHAFT BEARING PROBLEMS RESULTING IN REMOVAL OF SCRUBBER TRAIN 501 FROM SERVICE.

BOILER NO. 4 WAS CONNECTED, ADDING AN ADDITIONAL 176 MW OF FLUE GAS LOAD THE FGD SYSTEM.

THE IUCS SLUDGE DISPOSAL FACILITY IS IN SERVICE PRODUCING GOOD PRODUCT. LOW LOAD AND A COAL STRIKE HAVE HAMPERED GOOD SCRUBBER OPERATIONS. THERE IS SOME OUTAGE TIME SCHEDULED FOR MARCH.

1/78	101				94.1						
	201				90.5						
	301				5.1						
	401				24.3						
	501				3.5						
	SYSTEM				43.5				744		323
2/78	101				30.4						
	201				41.2						
	301				.0						
	401				15.9						
	501				18.0						
	SYSTEM				21.1				672		141

** PROBLEMS/SOLUTIONS/COMMENTS

THE SYSTEP WAS SHUTDOWN ON FEBRUARY 11 AS A RESULT OF A COAL SHORTAGE. BOILERS 1, 2 AND 4 ARE NOW COMPLETELY CONNECTED TO THE FGD SYSTEM. BOILER 3 IS UNDERGOING AN EXTENSIVE OVERHAUL AND WILL BE CONNECTED TO THE SYSTEM IN LATE AFRIL.

BOILER EXIT DAMPERS WERE LINED WITH 316 SS ON AREAS OF HIGH EROSION CAUSED BY FLYASH IMPINGEMENT.

EXPANSION JOINTS IN THE UPSTREAM DUCTWORK WERE SHIELDED BY METAL PLATES WHICH WERE WELDED AT ONE END. EXPANSION JOINTS IN THE DOWNSTREAM DUCTWORK WERE COMPLETELY REPLACE. THE DOWNSTREAM DUCTWORK WAS RELINED WITH CEILCOTE.

MODULE 401 INTERNALS WERE CLEANED AND SOME HOLES IN THE UPPER CONICAL REGION WERE REPAIRED.

3/78	101				.0						
	201				.0						
	301				.0						
	401				.0						
	501				.0						
	SYSTEM				.0				744	0	0

** PROBLEMS/SOLUTIONS/COMMENTS

DURING THE APRIL-MAY PERIOD BOILER NUMBER 3 WAS STILL BEING OVERHAULED. FGD SYSTEM CONSTRUCTION WAS COMPLETED AND PRELIMINARY TESTING VERIFIED SYSTEM SO2 REMOVAL EFFICIENCY.

4/78	SYSTEM								720	475	
5/78	SYSTEM								744	547	
6/78	SYSTEM								720	492	

** PROBLEMS/SOLUTIONS/COMMENTS

MODULE 301 WAS PULLED OFF FOR A MAJOR CLEANING DURING THE PERIOD.

MIST ELIMINATOR PLUGGING WAS EXPERIENCED AS A RESULT OF LOW PH.

DUQUESNE LIGHT: ELRAMA 1-4 (CONT.)

PERIOD	MODULE	AVAILABILITY	OPERABILITY	RELIABILITY	UTILIZATION	% REMOVAL SO2	% REMOVAL PART.	PER HOURS	BOILER HOURS	FGD HOURS	CAP. FACTOR
					PERFORMANCE DATA						

THE CHRONIC INABILITY TO CONTROL CHEMISTRY (PH) IS DIRECTLY RELATED TO GRIT BUILD-UP IN THE LIME HANDLING AND SLURRY PREPARATION SYSTEM.

THE UTILITY IS CURRENTLY STUDYING WAYS TO TIGHTEN THE WATER BALANCE BY USING THICKENER SUPERNATANT INTERMITTENTLY WITH CLEAR SERVICE WATER FOR THE MIST ELIMINATORS. A COMPLIANCE TEST SHOULD TAKE PLACE DURING THE NEXT REPORT PERIOD.

7/78	101			63.8	59.9						
	201			100.0	100.0						
	301			70.8	66.5						
	401			100.0	99.3						
	501			82.1	77.2						
	SYSTEM			85.7	80.5			744	699	599	
8/78	101			84.4	76.9						
	201			100.0	100.0						
	301			55.6	50.7						
	401			100.0	100.0						
	501			77.9	70.9						
	SYSTEM			87.5	79.7			744	678	593	

** PROBLEMS/SOLUTIONS/COMMENTS

DURING AUGUST, MODULES 301 AND 501 WERE TAKEN OFF LINE FOR CLEANING.

RUBBER LINING ON THREE FAN HOUSINGS WAS REPAIRED.

IT WAS NECESSARY TO SHUT DOWN THE LIME MIXING BASIN IN ORDER TO CLEAN OUT EXCESSIVE GRIT AND SOLIDS BUILD UP.

A COMPLIANCE TEST WAS RUN IN DECEMBER WHICH SHOWED THE UNITS TO BE IN COMPLIANCE.

9/78	101			78.2	72.1						
	201			61.0	56.3						
	301			96.5	89.0						
	401			84.6	78.1						
	501			100.0	93.6						
	SYSTEM			84.3	77.8			720	664	560	
10/78	101			84.9	76.6						
	201			100.0	98.9						
	301			100.0	100.0						
	401			89.3	80.5						
	501			87.2	78.6						
	SYSTEM			96.4	86.9			744	671	647	
11/78	101			100.0	100.0						
	201			94.2	78.4						
	301			100.0	84.2						
	401			100.0	86.8						
	501			75.0	62.5						
	SYSTEM			98.8	82.4			720	600	593	
12/78	101			100.0	94.7						
	201			77.8	72.7						
	301			91.7	85.6						
	401			69.4	64.8						
	501			74.4	69.5						
	SYSTEM			82.8	77.4			744	695	576	

** PROBLEMS/SOLUTIONS/COMMENTS

THE UTILITY HAS STARTED HAULING SLUDGE OFF SITE TO AN AREA ABOUT 10 MILES AWAY.

1/79	101			45.9	39.8						

PERIOD	MODULE	AVAILABILITY	OPERABILITY	RELIABILITY	UTILIZATION	% REMOVAL SO2	% REMOVAL PART.	PER HOURS	BOILER HOURS	FGD HOURS	CAP. FACTOR
			PERFORMANCE DATA								
	201		100.0		95.2						
	301		22.9		60.2						
	401		100.0		100.0						
	501		100.0		100.0						
	SYSTEM		91.2		79.0			744	645	588	
2/79	101		100.0		100.0						
	201		96.3		90.2						
	301		15.1		14.1						
	401		100.0		97.3						
	501		100.0		100.0						
	SYSTEM		85.8		80.4			672	629	540	
3/79	101		100.0		95.4						
	201		100.0		91.0						
	301		97.5		73.8						
	401		51.9		39.2						
	501		87.0		65.9						
	SYSTEM		96.6		73.1			744	563	544	
4/79	101		81.1		61.9						
	201		70.0		53.5						
	301		100.0		99.3						
	401		100.0		89.9						
	501		100.0		90.4						
	SYSTEM		100.0		76.5			720	550	569	
5/79	101		100.0		100.0						
	201		100.0		97.8						
	301		94.5		83.1						
	401		100.0		100.0						
	501		24.3		21.4						
	SYSTEM		91.5		80.5			744	655	599	
6/79	101		100.0		100.0						
	201		63.1		58.5						
	301		43.2		40.0						
	401		100.0		100.0						
	501		100.0		100.0						
	SYSTEM		86.1		79.7			720	667	574	
7/79	101		89.1		81.0						
	201		100.0		94.8						
	301		94.5		86.0						
	401		100.0		99.3						
	501		44.8		40.7						
	SYSTEM		88.3		80.4			744	677	598	
8/79	101		100.0		98.7						
	201		100.0		100.0						
	301		100.0		96.5						
	401		36.7		33.3						
	501		80.3		72.8						
	SYSTEM		88.4		80.2			744	675	597	
9/79	101	44.0	42.6		35.0						
	201	100.0	93.3		93.3						
	301	100.0	100.0		86.6						
	401	90.0	100.0		90.0						
	501	76.9	79.1		70.0						
	SYSTEM	82.2	84.8		75.0			720	637	540	
10/79	101	100.0	100.0		100.0						
	201	100.0	97.6		96.1						
	301	47.8	35.6		34.6						
	401	94.4	87.3		87.3						
	501	84.4	86.0		84.5						
	SYSTEM	85.3	81.7		80.2			744	731	597	
11/79	101	100.0	100.0		100.0						

DUQUESNE LIGHT: ELRAMA 1-4 (CONT.)

PERIOD	MODULE	AVAILABILITY	OPERABILITY	RELIABILITY	UTILIZATION	% REMOVAL SO2	% REMOVAL PART.	PER HOURS	BOILER HOURS	FGD HOURS	CAP. FACTOR
		PERFORMANCE DATA									
	201	15.2	16.9		15.2						
	301	92.4	97.9		92.5						
	401	100.0	100.0		98.3						
	501	95.0	100.0		93.9						
	SYSTEM	80.5	85.5		80.0			720	674	576	
12/79	SYSTEM							744			

** PROBLEMS/SOLUTIONS/COMMENTS

THERE HAVE BEEN NO SCRUBBER-RELATED OUTAGES OVER THE SEPTEMBER THRU DECEMBER PERIOD.

THE SLUDGE IS NOW BEING TRUCKED TO A REMOTE SITE 10 MILES AWAY CAUSING OPERATING COSTS TO INCREASE

THE NEW SO2 MONITOR HAS PLUGGED ONLY ONCE SINCE OCTOBER AND HAS REQUIRED ONLY 4 HOURS OF MAINTENANCE PER WEEK.

SECTION 3
DESIGN AND PERFORMANCE DATA FOR OPERATIONAL DOMESTIC FGD SYSTEMS

COMPANY NAME	DUQUESNE LIGHT	
PLANT NAME	PHILLIPS	
UNIT NUMBER	1-6	
CITY	SOUTH HEIGHT	
STATE	PENNSYLVANIA	
REGULATORY CLASSIFICATION	D	
PARTICULATE EMISSION LIMITATION - NG/J	34.	(.080 LB/MMBTU)
SO2 EMISSION LIMITATION - NG/J	258.	(.600 LB/MMBTU)
NET PLANT GENERATING CAPACITY - MW	387.0	
GROSS UNIT GENERATING CAPACITY - MW	408.0	
NET UNIT GENERATING CAPACITY W/FGD - MW	373.0	
NET UNIT GENERATING CAPACITY WO/FGD - MW	387.0	
EQUIVALENT SCRUBBED CAPACITY - MW	410.0	
** BOILER DATA		
SUPPLIER	FOSTER WHEELER	
TYPE	PULVERIZED COAL	
SERVICE LOAD	BASE	
COMMERCIAL SERVICE DATE	**/**	
MAXIMUM BOILER FLUE GAS FLOW - CU.M/S	873.01	(1850000 ACFM)
FLUE GAS TEMPERATURE - C	182.2	(360 F)
STACK HEIGHT - M	104.	(340 FT)
STACK TOP DIAMETER - M	.9	(2.9 FT)
** FUEL DATA		
FUEL TYPE	COAL	
FUEL GRADE	BITUMINOUS	
AVERAGE HEAT CONTENT - J/G	26830.	(11535 BTU/LB)
RANGE HEAT CONTENT - BTU/LB		******
AVERAGE ASH CONTENT - %	16.27	
RANGE ASH CONTENT - %	******	
AVERAGE MOISTURE CONTENT - %	5.02	
RANGE MOISTURE CONTENT - %	******	
AVERAGE SULFUR CONTENT - %	1.92	
RANGE SULFUR CONTENT - %	1.0-2.8	
AVERAGE CHLORIDE CONTENT - %	********	
RANGE CHLORIDE CONTENT - %	******	
** ESP		
NUMBER	6	
SUPPLIER	RESEARCH COTTRELL	
PARTICULATE DESIGN REMOVAL EFFICIENCY - %	80.0	
** MECHANICAL COLLECTOR		
NUMBER	6	
TYPE	MULTICYCLONES	
SUPPLIER	RESEARCH COTTRELL	
** PARTICULATE SCRUBBER		
TYPE	VENTURI	
** FGD SYSTEM		
SALEABLE PRODUCT/THROWAWAY PRODUCT	THROWAWAY PRODUCT	
GENERAL PROCESS TYPE	WET SCRUBBING	
PROCESS TYPE	LIME	
PROCESS ADDITIVES	NONE	
SYSTEM SUPPLIER	CHEMICO	
A-E FIRM	GIBBS & HILL	
DEVELOPMENT LEVEL	FULL SCALE	
NEW/RETROFIT	RETROFIT	
PARTICULATE DESIGN REMOVAL EFFICIENCY - %	99.00	
SO2 DESIGN REMOVAL EFFICIENCY - %	83.00	
INITIAL START-UP	7/73	
CONSTRUCTION COMPLETION	7/73	
CONSTRUCTION INITIATION	12/71	
CONTRACT AWARDED	7/71	
STARTED REQUESTING BIDS	10/70	
STARTED PRELIMINAY DESIGN	12/69	
ABSORBER SPARE CAPACITY INDEX - %	11.0	
ABSORBER SPARE COMPONENT INDEX	.6	

DUQUESNE LIGHT: PHILLIPS 1-6 (CONT.)

** ABSORBER	
NUMBER	4
TYPE	VENTURI
INITIAL START UP	7/73
SUPPLIER	CHEMICO
NUMBER OF STAGES	1
DIMENSIONS - FT	40 DIA. X 66 HIGH
SHELL MATERIAL	CARBON STEEL
SHELL LINER MATERIAL	CEILCOTE
INTERNAL MATERIAL	316L SS AND CEILCOTE
NOZZLE TYPE	TANGENTIAL, BULL NOZZLE
GAS FLOW - CU.M/S	258.13 (547000 ACFM)
GAS TEMPERATURE - C	171.1 (340 F)
LIQUID RECIRCULATION RATE - LITER/S	520. (8250 GPM)
L/G RATIO - L/CU.M	5.3 (40.0 GAL/1000ACF)
PRESSURE DROP - KPA	4.0 (16.0 IN-H2O)
SUPERFICAL GAS VELOCITY - M/SEC	12.2 (40.0 FT/S)
PARTICULATE OUTLET LOAD- G/CU.M	.1 (.040 GR/SCF)
PARTICULATE REMOVAL EFFICIENCY - %	99.0
SO2 INLET CONCENTRATION - PPM	951
** ABSORBER	
NUMBER	1
TYPE	VENTURI
INITIAL START UP	7/73
SUPPLIER	CHEMICO
NUMBER OF STAGES	1
DIMENSIONS - FT	40 DIA. X 66 HIGH
SHELL MATERIAL	CARBON STEEL
SHELL LINER MATERIAL	CEILCOTE
INTERNAL MATERIAL	316L SS AND CEILCOTE
NOZZLE TYPE	TANGENTIAL, BULL NOZZLE
GAS FLOW - CU.M/S	258.13 (547000 ACFM)
GAS TEMPERATURE - C	171.1 (340 F)
LIQUID RECIRCULATION RATE - LITER/S	208. (3300 GPM)
L/G RATIO - L/CU.M	5.3 (40.0 GAL/1000ACF)
PRESSURE DROP - KPA	4.0 (16.0 IN-H2O)
SUPERFICAL GAS VELOCITY - M/SEC	12.2 (40.0 FT/S)
PARTICULATE OUTLET LOAD- G/CU.M	.1 (.040 GR/SCF)
PARTICULATE REMOVAL EFFICIENCY - %	90.0
SO2 INLET CONCENTRATION - PPM	1400
** FANS	
NUMBER	5
TYPE	SCRUBBER ID
CONSTRUCTION MATERIALS	CARBON STEEL WITH 0.25 INCH RUBBER LINING IN HOU
SERVICE - WET/DRY	WET
CAPACITY - CU.M/S	235.95 (500000 ACFM)
** VACUUM FILTER	
NUMBER	1
CAPACITY - M T/D	544.2 (600 T/D)
** MIST ELIMINATOR	
NUMBER	8
TYPE	CHEVRON
CONSTRUCTION MATERIAL	FRP
CONFIGURATION	HORIZONTAL
NUMBER OF STAGES	1
NUMBER OF PASSES	3
FREEBOARD DISTANCE - M	1.37 (4.5 FT)
VANE ANGLES	90
WASH SYSTEM	INTERMITTENT TOP WASH AND UNDER WASH
SUPERFICIAL GAS VELOCITY - M/S	.3 (1.0 FT/S)
PRESSURE DROP - KPA	1.0 (4.0 IN-H2O)
** MIST ELIMINATOR	
NUMBER	3
TYPE	CHEVRON

** PUMPS

SERVICE	NUMBER
SCRUBBER RECIRCULATION	10
THICKENER OVERFLOW	6
THICKENER UNDERFLOW	1

DUQUESNE LIGHT: PHILLIPS 1-6 (CONT.)

SLURRY FEED	5
MAKE-UP WATER	1
ABSORBER RECIRCULATION	2

** TANKS

SERVICE	NUMBER
RECYCLE	1
SLAKER TRANSFER	1
THICKENER OVERFLOW	1
SLUDGE STABILIZATION MIXING	1

** REHEATER

NUMBER	2
TYPE	DIRECT COMBUSTION
TEMPERATURE BOOST - C	16.7 (30 F)

** THICKENER

NUMBER	2
CONSTRUCTION MATERIAL	MILD STEEL, CEILCOTE LINED
DIAMETER - M	22.9 (75 FT)
OUTLET SOLIDS - %	32.0

** WATER LOOP

TYPE	OPEN

** TREATMENT

TYPE	POZ-O-TEC
CONTRACTOR	IUCS

** DISPOSAL

NATURE	INTERIM
TYPE	LINED POND
LOCATION	ON-SITE
CAPACITY - CU.M	4892 (4.0 ACRE-FT)

** DISPOSAL

NATURE	FINAL
TYPE	LANDFILL
LOCATION	OFF-SITE
TRANSPORTATION	TRUCK

PERFORMANCE DATA

PERIOD	MODULE	AVAILABILITY	OPERABILITY	RELIABILITY	UTILIZATION	% REMOVAL SO2	% REMOVAL PART.	PER HOURS	BOILER HOURS	FGD HOURS	CAP. FACTOR
0/73	SYSTEM										

** PROBLEMS/SOLUTIONS/COMMENTS

DETERMINATION OF THE AVAILABILITY OF THE PHILLIPS SYSTEM HAS BEEN DIFFICULT. UNTIL ALL BOILERS WERE CONNECTED TO THE SCRUBBERS, THERE WAS AT LEAST ONE SPARE TRAIN AND AS MUCH AS 100% SPARE SCRUBBER CAPACITY. THEREFORE HAVING A TRAIN OUT OF SERVICE FOR MAINTENANCE DID NOT REDUCE THE CAPABILITY OF THE SCRUBBER SYSTEM. UNTIL ALL SIX BOILERS WERE CONNECTED, MEANINGFUL AVAILABILITY FACTORS COULD NOT BE COMPUTED. ON MARCH 17, 1975, THE SIXTH BOILER WAS CONNECTED, AND ALL FOUR SCRUBBER TRAINS WERE REQUIRED TO BE IN SERVICE. OPERATION IN THAT MODE CONTINUED UNTIL AUGUST 4, 1975, WHEN THE NO. 6 BOILER WAS REMOVED FROM THE SCRUBBER SYSTEM BECAUSE THE PH LEVEL COULD NOT BE MAINTAINED AND DEPOSITS BECAME UNMANAGEABLE TO THE POINT THAT SCRUBBER OUTAGES WERE REDUCING GENERATING CAPABILITY OF THE STATION.

STARTUP OF A PORTION OF THE PHILLIPS SCRUBBER SYSTEM BEGAN JULY 1973. SEVERAL PROBLEMS THEN DEVELOPED IN THE FORM OF EROSION OF FANS AND THE LIME FEED SYSTEM CAUSING OUTAGES OF THE SCRUBBER SYSTEM. AFTER AN EXTENDED OUTAGE, THE SCRUBBER SYSTEM WAS RETURNED TO SERVICE IN MARCH 1974. THE SYSTEM HAS BEEN OPERATING CONTINUOUSLY SINCE IT RETURNED TO SERVICE WITH VARIOUS NUMBERS OF BOILERS CONNECTED TO THE SCRUBBER SYSTEM AND SCRUBBER TRAINS IN SERVICE.

7/73	SYSTEM			81.0	31.2			744		232	
8/73	SYSTEM							744			

DUQUESNE LIGHT: PHILLIPS 1-6 (CONT.)

PERIOD	MODULE	AVAILABILITY	OPERABILITY	RELIABILITY	UTILIZATION	% REMOVAL SO2	% REMOVAL PART.	PER HOURS	BOILER HOURS	FGD HOURS	CAP. FACTOR
		PERFORMANCE DATA									
9/73	SYSTEM							720			
10/73	SYSTEM							744			
11/73	SYSTEM							720			
12/73	SYSTEM							744			
1/74	SYSTEM							744			
2/74	SYSTEM							672			
3/74	SYSTEM							744			
4/74	SYSTEM							720			
5/74	SYSTEM							744			
6/74	SYSTEM							720			
7/74	SYSTEM							744			
8/74	SYSTEM							744			
9/74	SYSTEM							720			
10/74	SYSTEM							744			
11/74	SYSTEM							720			
12/74	SYSTEM							744			
1/75	SYSTEM							744			
2/75	SYSTEM							672			
3/75	SYSTEM							744			
4/75	SYSTEM							720			
5/75	SYSTEM							744			
6/75	SYSTEM							720			
7/75	101		79.1		53.8						
	201		35.5		24.2						
	301		100.0		71.4						
	401		100.0		97.2						
	SYSTEM		90.5		61.6			744	506	458	

** PROBLEMS/SOLUTIONS/COMMENTS

THE FOURTH FGD TRAIN AND SIXTH BOILER WERE TIED IN ON MARCH 17, 1975. PARTICULATE TESTS IN MAY SHOWED OUTLET LOADINGS OF 0.04 LB/MILLION BTU.

THE 2-STAGE TRAIN HAS BEEN OUT OF SERVICE FROM JUNE 19 FOR GENERAL CLEANING AND REPAIR OF A LEAK IN THE FIRST-STAGE SCRUBBER.

8/75	301		66.1		43.4						
	401		65.2		42.9						
	101		97.8		64.2						
	201		100.0		91.7						
	SYSTEM		92.0		60.5			744	489	450	

** PROBLEMS/SOLUTIONS/COMMENTS

SCRUBBER UNAVAILABILITY FORCED RETURNING BOILER (NO.6) TO THE SCRUBBER BY-PASS PATH IN ORDER TO PREVENT LOSS OF BOILER CAPACITY.

PERFORMANCE DATA

PERIOD	MODULE	AVAILABILITY	OPERABILITY	RELIABILITY	UTILIZATION	% REMOVAL SO2	% REMOVAL PART.	PER HOURS	BOILER HOURS	FGD HOURS	CAP. FACTOR
			PLUGGING AND MAINTENANCE PROBLEMS HAVE BEEN ENCOUNTERED.								
			EVALUATION OF VARIOUS RECYCLE PUMPS IS CONTINUING.								
9/75	101		11.0		7.9						
	201		100.0		77.9						
	301		100.0		95.1						
	401		100.0		74.4						
	SYSTEM		88.6		63.8			720	519	460	
10/75	101		98.1		81.6						
	201		33.4		27.8						
	301		81.6		67.9						
	401		78.7		65.5						
	SYSTEM		72.9		60.7			744	619	451	
	** PROBLEMS/SOLUTIONS/COMMENTS										
			IN OCTOBER 1975, PHILLIPS INITIATED THIOSORBIC LIME SCRUBBING IN THEIR SINGLE-STAGE MODULES ON AN EXPERIMENTAL BASIS. THE PURPOSE IS TO STUDY COMPLIANCE FEASIBILITY, SO2 REMOVAL EFFICIENCY, AND QUALITY OF THE SLUDGE GENERATED BY THE SINGLE-STAGE MODULES.								
11/75	101		100.0		86.9						
	201		100.0		100.0						
	301		.0		.0						
	401		16.0		10.4						
	SYSTEM		75.9		49.3			720	468	355	
12/75	101		77.8		48.4						
	201		100.0		88.8						
	301		39.3		24.5						
	401		83.4		51.9						
	SYSTEM		85.7		53.4			744	463	397	
	** PROBLEMS/SOLUTIONS/COMMENTS										
			THE UTILITY CONCLUDED THE THIOSORBIC LIME TESTING PROGRAM IN MID-DECEMBER. FOUR BOILERS WERE COUPLED TO THE SCRUBBING SYSTEM DURING THE RUN. THE UTILITY IS NOW ANALYZING THE DATA GENERATED DURING THE TEST PROGRAM. THE SCRUBBERS HAVE BEEN PUT BACK ON REGULAR LIME. NO UNUSUAL PROBLEMS WERE EN COUNTERED DURING THE TEST RUN.								
1/76	101		56.2		37.2						
	201		100.0		72.0						
	301		20.5		13.6						
	401		100.0		95.0						
	SYSTEM		82.2		54.4			744	493	405	
	** PROBLEMS/SOLUTIONS/COMMENTS										
			THE 2.5-MONTH TEST PROGRAM WITH THIOSORBIC LIME INCLUDED 1612 HOURS ON ONE TRAIN AND 1309 HOURS ON ANOTHER TRAIN. RESULTS INDICATE THAT THE REQUIRED DEGREE OF SO2 REMOVAL (83 PERCENT) CAN BE OBTAINED WITH AN MGO CONTENT OF 8-10% IN THE LIME WITH SINGLE-STAGE SCRUBBING.								
2/76	101		100.0		94.4						
	201		100.0		95.1						
	301		34.2		23.9						
	401		83.7		58.3						
	SYSTEM		97.3		67.9			696	485	472	
3/76	101				93.4						
	201				47.4						
	301				88.6						
	401				62.0						
	SYSTEM				72.8			744		542	
4/76	SYSTEM							720			

DUQUESNE LIGHT: PHILLIPS 1-6 (CONT.)

PERIOD	MODULE	AVAILABILITY	OPERABILITY	RELIABILITY	UTILIZATION	% REMOVAL SO2	% REMOVAL PART.	PER HOURS	BOILER HOURS	FGD HOURS	CAP. FACTOR
		PERFORMANCE DATA									

** PROBLEMS/SOLUTIONS/COMMENTS

THE UTILITY IS STILL EXPERIENCING PROBLEMS WITH SOLIDS DEPOSITION IN THE VENTURI THROAT OF THE SCRUBBING MODULE, CAUSING MOVEMENT INHIBITION AND GREATER PRESSURE DROPS.

THE SLUDGE STABILIZATION PRACTICES ARE STILL CONTINUING AT THIS FACILITY.

PLANT OPERATION IS PROCEEDING WITH A TOTAL OF FOUR BOILERS COUPLED INTO THE SCRUBBING SYSTEM (EQUALING 336 MW, WHICH IS 87% OF THE TOTAL PLANT. CAPACITY). THE FGD SYSTEM OPERATED ON HIGH CALCIUM LIME DURING THE REPORT PERIOD. THE GENERAL OPERATION MODE AT THIS FACILITY HAS ONE OF THE FOUR SCRUBBING TRAINS OUT CONTINUALLY FOR REPAIRS, CLEANING, AND PREVENTIVE MAINTENANCE. THE FGD SYSTEM AVAILABILITY FOR THE FIRST QUARTER OF 1976 WAS 72%.

5/76 SYSTEM 744

6/76 SYSTEM 720

** PROBLEMS/SOLUTIONS/COMMENTS

REDUCED LOAD OPERATIONS WERE REPORTED BY THE UTILITY FOR THE MAY-JUNE PERIOD BECAUSE OF A SCHEDULED TURBINE OVERHAUL ON UNIT NO. 6.

THE UTILITY IS PROCEEDING WITH THE INSTALLATION OF THREE ADDITIONAL LIME STORAGE SILOS AND A THIRD THICKENER.

THE SCRUBBING SYSTEM WAS SHUT DOWN ON JUNE 27 FOR A SCHEDULED FOUR WEEK REPAIR PERIOD. THE MAJORITY OF THE WORK WILL BE CONCENTRATED ON THE STACK ASSOCIATED DUCTWORK AND BOILER DAMPERS.

7/76 SYSTEM 744

8/76 SYSTEM 744

** PROBLEMS/SOLUTIONS/COMMENTS

THE FOUR-WEEK SYSTEM OVERHAUL WAS COMPLETED JULY 25. THE THREE ADDITIONAL LIME STORAGE SILOS AND THE FOUNDATION FOR THE ADDITIONAL 75-FOOT DIAMETER THICKENER HAVE BEEN INSTALLED. THE UTILITY HAS SIGNED A LETTER OF INTENT WITH IUCS FOR A LONG-TERM SLUDGE TREATMENT SYSTEM.

REPAIRS WERE MADE ON THE TURNING VANES TO THE SCRUBBER MIST ELIMINATOR.

REPAIR WORK WAS NECESSARY ON THE EXPANSION JOINT SEAL WHERE THE DUCTWORK TIES INTO THE MAIN STACK.

THE STEEL BANDS AROUND THE INNER STACK STRUCTURE WERE REPAIRED.

THE I.D. FANS WERE OVERHAULED.

THE BOILER EXIT DAMPERS WERE REPAIRED.

REPAIRS WERE MADE TO STOP LEAKAGE OF THE ACID-BRICK LINING IN THE MAIN STACK.

9/76 SYSTEM 720

** PROBLEMS/SOLUTIONS/COMMENTS

BOILER NUMBERS 2 THROUGH 6 WERE COUPLED INTO THE SCRUBBING SYSTEM. BOILER NO. 1 IS DOWN FOR OVERHAUL AND REPAIRS. THE IUCS INTERIM SLUDGE PROCESSING PLANT IS UNDER CONSTRUCTION AND WILL BE IN SERVICE BY DECEMBER 1976. THE TEMPORARY FACILITIES WILL PROCESS THE THICKENER UNDERFLOW AND PONDED SLUDGE UNTIL THE POND IS DEPLETED OF SLUDGE AND THE PERMANENT FACILITY HAS BEEN INSTALLED. SCRUBBING OPERATIONS ARE STILL PROCEEDING IN AN OPEN WATE LOOP MODE WITH PART OF THE THICKENER OVERFLOW BEING DIVERTED TO THE ASH POND. BECAUSE BOTH THE BEAVER VALLEY AND BRUCE MANSFIELD STATIONS ARE

PERIOD	MODULE	AVAILABILITY	OPERABILITY	RELIABILITY	UTILIZATION	% REMOVAL SO2	% REMOVAL PART.	PER HOURS	BOILER HOURS	FGD HOURS	CAP. FACTOR

FULLY OPERATIONAL, THIS STATION HAS BEEN RELEGATED TO PEAK LOAD OPERATIONS GENERAL LOAD OPERATIONS ARE FULL LOAD CAPACITY IN THE DAYTIME AND 50 TO 67 % LOAD REDUCTION AT NIGHT.

TOTAL SCRUBBER HOURS: 23,274
TOTAL BOILER HOURS: 83,642
TOTAL SCRUBBER OUTAGE TIME: 5,500
TOTAL SCRUBBER AVAILABLE HOURS: 23,274
AVERAGE MW LOAD/SCRUBBER OPERATION HOUR: 243
TOTAL OPERABILITY INDEX: 28%
TOTAL RELIABILITY INDEX: 81%

THE FIGURES AT THE LEFT WERE COMPILED BY THE UTILITY FOR SYSTEM OPERATIONS FOR THE PERIOD FOLLOWING START-UP IN JULY 1973 INCLUSIVE TO OCTOBER 1976. THE TOTAL SCRUBBER HOURS VALUE INCLUD OPERATION TIME WHEN ONE OR MORE OF THE MODULES WERE IN SERVICE. TOTAL BOILER AND UNAVAILABILITY VALUES APPL FOR ALL THE CORRESPONDING UNITS. THE TOTAL SCRUBBER AVAILABILITY INDEX INCLUDES THE TIME WHEN ONE OR MORE MODULES WERE AVAILABLE FOR SERVICE.

UNTIL THE IUCS INTERIM SLUDGE PROCESSING PLANT IS COMPLETE THE TEMPORARY FACILITIES WILL PROCESS THE THICKENER UNDERFLOW AND PONDED SLUDGE UNTIL TH POND IS DEPLETED OF SLUDGE.

10/76 SYSTEM 744

11/76 SYSTEM 720

** PROBLEMS/SOLUTIONS/COMMENTS

THE RECYCLE PUMP EVALUATION IS CONTINUING.

THE UTILITY REPORTED THAT BOILERS TWO THROUGH SIX REMAINED COUPLED INTO THE SCRUBBING SYSTEM DURING THE REPORT PERIOD. THE INTERIM IUCS FIXATION FACILITY WAS INSTALLED AND COMMENCED OPERATIONS IN DECEMBER. THE UTILITY REPORTED THAT THE VENTURI SCRUBBERS ARE STILL DEVELOPING LARGE AMOUNTS OF SCALE ON THE INTERNALS, RESULTING IN TWICE THE NORMAL PRESSURE DROPS. RECYCLE PUMP EVALUATION HAS BEEN IN PROGRESS. APPROXIMATELY 2500 TO 2800 HOURS OF OPERATION TIME HAVE BEEN ACCUMULATED ON THE VARIOUS UNITS WITH NO FAILURES OR APPRECIABLE WEAR OBSERVED. THE ADDITIONAL DEWATERING AND REAGENT PREPARATION EQUIPMENT IS NOW BEING INSTALLED. THE CONTRACT HAS BEEN AWARDED TO DRAVO TO PROVIDE THIOSORBIC LIME FOR THIS SCRUBBING SYSTEM L ALL BOILERS HAVE BEEN HEADERED INTO THE SCRUBBER PLANT. A NUMBER OF THE S UNITS WERE DOWN FOR OVERHAUL AND REPAIR. THE INTERIM IUCS POZ-O-TEC UNITN REMAINED IN SERVICE, FILTERING OUT WATER ONLY. THE RECYCLE PUMP EVALUATION IS CONTINUING. AFTER 4000 HOURS OF OPERATION THE CARBORUNDUM IMPELLERS AND WEAR RINGS STILL LOOK GOOD. SO2 AND PARTICULATE REMOVAL EFFICIENCIES ARE 50 AND 99+% RESPECTIVELY. INSTALLATION OF THE ADDITIONAL SILOS, THICKENER, AND LIME FEEDERS IS STILL IN PROGRESS. FULL COMPLIANCE PLANT OPERATIONS ARE SCHEDULED FOR DECEMBER.

THE VENTURI SCRUBBERS ARE STILL DEVELOPING LARGE AMOUNTS OF SCALE ON THE INTERNALS. THE PRESSURE DROPS HAVE DOUBLED AS A RESULT.

12/76 SYSTEM 744

1/77 301
401
101
201
SYSTEM 744

** PROBLEMS/SOLUTIONS/COMMENTS

1977 FULL COMPLIANCE OPERATIONS WILL INCLUDE 83% SO2 REMOVAL FOR 2% SULFUR COAL UTILIZING THIOSORBIC LIME (6-12% MG) AND FIXATING THE SCRUBBER WASTES WITH THE IUCS POZ-O-TEC METHOD. THE FIXATED MATTER WILL BE HAULED AWAY TO AN OFF-SITE DISPOSAL AND LANDFILL. IUCS HAS BEEN AWARDED A TEN YEAR CONTRACT FOR THE USE OF THIS METHOD. THE CARBORUNDUM IMPELLORS AND WEAR RING CONTINUE TO LOOK GOOD AFTER MORE THAN 5000 HOURS OF OPERATION.

2/77 SYSTEM 672

3/77 SYSTEM 744

DUQUESNE LIGHT: PHILLIPS 1-6 (CONT.)

PERIOD	MODULE	AVAILABILITY	OPERABILITY	RELIABILITY	UTILIZATION	% REMOVAL SO2	% REMOVAL PART.	PER HOURS	BOILER HOURS	FGD HOURS	CAP. FACTOR
		PERFORMANCE DATA									
4/77	SYSTEM							720			

** PROBLEMS/SOLUTIONS/COMMENTS

DAMPER AND MIST ELIMINATOR REPAIRS WILL BE CORRECTED DURING A SCHEDULED OUTAGE. OVERALL SCRUBBER AVAILABILITY IS ABOUT 75%. THE INTERIM SLUDGE DISPOSAL SYSTEM IS STILL OPERATIONAL. THE PERMANENT SLUDGE DISPOSAL FACIL ITY IS ON SCHEDULE FOR THE DECEMBER 1977 COMPLETION DATE.

THIOSORBIC LIME TESTS BEGAN IN LATE MAY BUT LASTED ONLY ABOUT ONE WEEK.

THE SCRUBBER SYSTEM WAS SHUT DOWN FOR THREE TO FOUR DAYS IN MAY DUE TO LEAKING IN THE WET DUCT HEADER THAT LEADS TO THE STACK. WHEN THE LEAK WAS REPAIRED FLUE GAS FROM FOUR BOILERS BEGAN TO BE SCRUBBED.

WHILE FIXING A DUCT LEAK INSPECTION OF OTHER COMPONENTS REVEALED THAT THE BOILER EXIT DAMPERS WERE ERODING.

ONE 201 EXTERNAL MIST ELIMINATOR WAS SEVERLY ERODED AND PLUGGED.

5/77	SYSTEM	75.0						744			
6/77	SYSTEM							720			

** PROBLEMS/SOLUTIONS/COMMENTS

ALL SIX BOILERS ARE COUPLED INTO THE SCRUBBER PLANT. FLUE GAS FROM FIVE O THESE UNITS IS BEING TREATED BY THE SCRUBBERS. ONLY FOUR OF THE SIX BOIL-ERS ARE ACTUALLY OPERATING BECAUSE OF THE CURRENT TURBINE REPAIR OUTAGE. OPERATIONS ARE PROCEEDING WITH ONE SCRUBBING TRAIN BEING SPARED AT ALL TIMES (MAINTENANCE AND CLEANOUT). SO2 REMOVAL EFFICIENCY IS APPROXIMATELY 50%.

BOILER NO. 6 HAS BEEN DOWN FOR AN EXTENDED TURBINE REPAIR OUTAGE.

THE RECYCLE PUMP EVALUATION STUDY CONTINUED DURING THE PERIOD. COMPONENTS BEING EVALUATED INCLUDE: CARBORUNDUM IMPELLERS, CARBORUNDUM WEAR RINGS, I TITANIUM IMPELLERS, 317SS WEAR RINGS (STELLITE TIPPED).

A THIOSORBIC LIME TEST WAS PREMATURELY TERMINATED BECAUSE OF SOME MINOR SLAKER/FEEDER PROBLEMS. HIGH CALCIUM VIRGIN LIME WAS UTILIZED DURING THE MAJORITY OF OPERATIONS THROUGHOUT THE PERIOD.

7/77	SYSTEM							744			
8/77	SYSTEM							744			

** PROBLEMS/SOLUTIONS/COMMENTS

LIME HANDLING AND SOLID WASTE DISPOSAL FACILITIES WERE BEING SCALED UP TO HANDLE FULL CAPACITY AND A THIRD THICKENER WAS INSTALLED AND BROUGHT INTO SERVICE DURING THIS REPORT PERIOD. THE IUCS SYSTEM IS IN THE INTERIM PHASE. WASTE WATER IS BEING MIXED WITH FLYASH AND DISPOSED OF. CURRENT CONSTRUCTION WORK IS EXPECTED TO BE COMPLETED BY THE END OF JANUARY WHEN ALL SIX BOILERS WILL BE BACK ON LINE FOR A TWO MONTH TEST PERIOD. THIO-SORBIC LIME IS STILL BEING TESTED. RESULTS ARE NOT YET AVAILABLE. THE FG SYSTEM WILL BE DOWN FOR THE FIRST WEEKEND OF NOVEMBER. THE SYSTEM WILL ALSO BE CHECKED FOR MAIN DUCT LEAKS AT THIS TIME. THE SCRUBBER AND STACK LININGS AND RECYCLE PUMPS WILL BE THOROUGHLY CHECKED AS WELL. NECESSARY REPLACEMENTS AND REPAIRS WILL BE CARRIED OUT. CURRENT SO2 REMOVAL EFF-ICIENCY IS 50%. BY EARLY APRIL THE SYSTEM IS EXPECTED TO REACH COMPLIANCE WITH AN SO2 REMOVAL EFFICIENCY OF 83%.

9/77	SYSTEM							720			
10/77	101				92.6						
	301				88.3						
	401				87.6						

PERIOD	MODULE	AVAILABILITY	OPERABILITY	RELIABILITY	UTILIZATION	% REMOVAL SO2	% REMOVAL PART.	PER HOURS	BOILER HOURS	FGD HOURS	CAP. FACTOR
		PERFORMANCE DATA									
	201				4.0						
	SYSTEM							744			

** PROBLEMS/SOLUTIONS/COMMENTS

MODULE 101 WAS DOWN A TOTAL OF 113 HOURS IN OCTOBER.

MODULE 201 WAS PUT IN SERVICE ON OCTOBER 26 AFTER EXTENSIVE CLEAN UP AND REPAIRS TO RUBBER LINING AND I.D. FAN.

MODULE 301 WAS DOWN A TOTAL OF 57 HOURS IN OCTOBER.

MODULE 401 WAS DOWN A TOTAL OF 36 HOURS IN OCTOBER FOR REPAIR OF HOLES IN FAN LINING AND TYING IN THE THICKENER BLEED LINE.

11/77	101				92.1						
	201				91.7						
	301				28.1						
	401				56.3						
	SYSTEM				67.0			720		482	

** PROBLEMS/SOLUTIONS/COMMENTS

DURING THE SHUTDOWN OUTLET DUCT LEAKS WERE REPAIRED.

BOILER EXIT DAMPERS WERE REPLACED DUE TO EROSION BY FLYASH.

CORROSION OF STEEL BANDS IN STACK WAS DISCOVERED DURING THE PERIOD.

DEWATERING OPERATIONS ARE NOT WORKING PROPERLY, CAUSING PROBLEMS IN SLUDGE HANDLING.

THE RESULTS FROM THIOSORBIC LIME USE CAN NOT YET BE QUANTIFIED DUE TO LIME FEED SYSTEM PROBLEMS.

LIME FEED SYSTEM PROBLEMS OCCURRED OVER THE PERIOD.

12/77	SYSTEM							744			

** PROBLEMS/SOLUTIONS/COMMENTS

CUMULATIVE HOURS FOR JANUARY 1977 THROUGH 1-8-78 WERE 22391 FOR MODULE 101 22998 FOR MODULE 201, 22229 FOR MODULE 301 AND 22259 FOR MODULE 401.

SCRUBBER TRAIN 301 WAS DOWN FOR AN OVERHAUL FROM NOVEMBER 17 TO MONDAY FEBRUARY 6, 1978 WHEN IT WAS RETURNED TO SERVICE.

SCRUBBER TRAIN 401 WAS REMOVED FROM SERVICE ON THE 6TH OF FEBRUARY.

THE IUCS INTERIM SLUDGE TREATMENT SYSTEM HAS SOME DEWATERING PROBLEMS. DURING DECEMBER PHILLIPS EXPERIENCED POOR SLUDGE REMOVAL. THE IUCS PLANT IS WORKING ON A PART TIME BASIS. FULL OPERATIONS ARE EXPECTED LATE THIS SPRING. THE POOR QUALITY SLUDGE IS SENT TO AN EMERGENCY POND AND THEN RECIRCULATED BACK TO THE THICKENER.

TESTING WITH THIOSORBIC LIME AT 5% MGO HAS SHOWN THAT THE MGO CONCENTRATION IS NOT GREAT ENOUGH TO EFFECT ADEQUATE SO2 REMOVAL ON A SINGLE STAGE SCRUBBER. THEY ARE GOING TO TEST AT A GREATER MGO CONCENTRATION BY STARTING AT 10% AND THEN DROPPING BACK UNTIL THE CONCENTRATION IS SATISFACTORY. THIS TESTING, AS WELL AS SCRUBBER OPERATIONS, HAVE, HOWEVER, BEEN HAMPERED BY LOW LOADS AS A RESULT OF THE COAL STRIKE.

THERE WILL BE AN OUTAGE AT PHILLIPS TO REPLACE THE CARBON STEEL BANDS IN THE STACK WITH STAINLESS STEEL BANDS.

1/78	301				.0						
	401				65.1						
	101				84.3						
	201				77.2						
	SYSTEM				56.6			744		421	

DUQUESNE LIGHT: PHILLIPS 1-6 (CONT.)

PERIOD	MODULE	AVAILABILITY	OPERABILITY	RELIABILITY	UTILIZATION	% REMOVAL SO2	% REMOVAL PART.	PER HOURS	BOILER HOURS	FGD HOURS	CAP. FACTOR
		PERFORMANCE DATA									
2/78	101				31.1						
	201				41.8						
	301				2.7						
	401				22.6						
	SYSTEM				24.6			672		167	

** PROBLEMS/SOLUTIONS/COMMENTS

AN OUTAGE OCCURRED BETWEEN JANUARY 6 AND JANUARY 8 WHEN THE STACK DRAIN LEAKS WERE REPAIRED BY SANDBLASTING THE OUTER WALL AND REPLACING THE CARBON STEEL BANDS WITH STAINLESS STEEL BANDS.

THE SYSTEM WAS SHUTDOWN ON FEBRUARY 11 DUE TO THE COAL SHORTAGE. THE OUTAGE CONTINUED THROUGH MARCH AND THE SYSTEM IS SCHEDULED TO BE ON LINE BY APRIL 15. DURING THE OUTAGE A NUMBER OF REPAIRS AND MODIFICATIONS WERE MADE.

THE BOILER EXIT DAMPERS WERE LINED WITH 316SS ON AREAS OF HIGH EROSION CAUSED BY FLYASH IMPINGEMENT.

EXPANSION JOINTS ON THE INLET DUCTWORK WERE SHIELED BY METAL PLATES WHICH WERE WELDED AT ONE END.

NUMEROUS HOLES IN THE WET GAS DUCT WORK WERE REPAIRED AND THE DUCTS WERE RELINED WITH CEILCOTE.

THE THROAT DAMPERS WERE CLEANED ON ALL THE SCRUBBERS.

INTERNAL MIST ELIMINATORS WERE CLEANED. THE EXTERNAL MIST ELIMINATORS, WHICH ARE BADLY DETERIORATED, MAY BE REPLACED.

THE STACK BRICKLINING WAS INSPECTED AND SOME BRICKS WERE REPLACED AT THE TOP OF THE STACK.

CONSTRUCTION WORK ON ADDITIONAL EQUIPMENT SUCH AS THE THICKENER AND SILOS IS ALMOST COMPLETE. IT WAS NOTED THAT THE CEILCOTE LINER COROLINE 505AR HAS HELD UP WELL OVER THREE YEARS ON THE CONICAL APEX OF MODULE 401.

3/78	SYSTEM							744			
4/78	SYSTEM							720	517		

** PROBLEMS/SOLUTIONS/COMMENTS

THE FGD SYSTEM CAME BACK ON LINE AFTER THE COAL STRIKE IN LATE MARCH. IT IS NOT OPERATING AT FULL LOAD BECAUSE THE NO. 6 BOILER IS STILL OUT AND SHOULD BE BACK ON LINE IN MID-JULY. COMPLIANCE TESTS WILL TAKE PLACE IN JULY, AFTER BOILER 6 IS BACK ON LINE, TO SEE IF THE SYSTEM IS MEETING THE 83% SO2 REMOVAL REQUIREMENT FOR 2% SULFUR COAL. THERE WERE NO HOURS REPORTED FOR THIS PERIOD BECAUSE OF PRELIMINARY TESTING BEING CONDUCTING IN PREPARATION FOR THE COMPLIANCE TESTS. SO FAR, TESTS INDICATE THAT THE SYSTEM WILL COMPLY WITH THE REQUIRED STANDARDS. THE AVAILABILITY FOR ALL FOUR TRAINS WAS BETWEEN 65 AND 75%.

5/78	SYSTEM	70.0						744	531		
6/78	SYSTEM							720	512		

** PROBLEMS/SOLUTIONS/COMMENTS

THE INTERNAL MIST ELIMINATOR ON MODULE 201 WAS REMOVED AND CLEANED OVER THE PERIOD.

THE FGD SYSTEM HAS ACCUMULATED APPROXIMATELY 24000 HOURS OF OPERATION ON ALL FOUR MODULES SINCE START-UP.

WATER BALANCE PROBLEMS HAVE CONTRIBUTED TO THE OCCURRANCE OF LOW PH, RESULTING IN MIST ELIMINATOR PLUGGING.

PERIOD	MODULE	AVAILABILITY	OPERABILITY	RELIABILITY	UTILIZATION	% REMOVAL SO2	% REMOVAL PART.	PER HOURS	BOILER HOURS	FGD HOURS	CAP. FACTOR
				PERFORMANCE DATA							

THE MIST ELIMINATOR PLUGGING IS ALSO RELATED TO LOW PH RESULTING FROM LIME HANDLING AND SLURRY PREPARATION SYSTEM FAILURE.

THE UTILITY IS CURRENTLY STUDYING WAYS TO TIGHTEN THE WATER BALANCE BY USING THICKENER SUPERNATANT INTERMITTENTLY WITH CLEAR SERVICE WATER FOR THE MIST ELIMINATORS. THE COMPLIANCE TEST SHOULD TAKE PLACE DURING THE NEXT REPORT PERIOD.

7/78	101		82.8		48.3						
	201		75.3		43.9						
	301		100.0		78.7						
	401		100.0		76.0						
	SYSTEM		100.0		61.7			744	434	459	
8/78	101		100.0		97.3						
	SYSTEM							744	607		

** PROBLEMS/SOLUTIONS/COMMENTS

THE RUBBER LINING IN MODULE 101 WAS REPAIRED.

HIGH PRESSURE WATER CLEANING WAS PERFORMED ON MODULES 101 AND 401.

9/78	101		91.6		62.4						
	201		100.0		75.5						
	301		99.2		67.5						
	401		81.8		55.7						
	SYSTEM		95.9		65.3			720	490	470	

** PROBLEMS/SOLUTIONS/COMMENTS

DURING THE AUGUST-SEPTEMBER PERIOD MIST ELIMINATOR CLEANING TOOK PLACE IN ORDER TO CORRECT THE PLUGGING PROBLEM.

IN AUGUST THE INTERNAL MIST ELIMINATOR ON MODULE 201 WAS REPLACED.

THE LIME MIXING BASIN HAD TO BE SHUT DOWN OVER A WEEKEND SO THAT EXCESSIVE GRIT AND SOLID PARTICLES THAT HAD BUILT UP COULD BE CLEANED OUT.

HIGH PRESSURE WATER CLEANING WAS PERFORMED ON MODULES 101 AND 401.

THE RUBBER LINING IN MODULE 101 WAS REPAIRED.

A MAJOR PROBLEM AREA DURING THE PERIOD WAS CAUSED BY INSUFFICIENT SUPPLIES OF DRY FLYASH TO MIX WITH THE SLUDGE. AS A RESULT THE SLUDGE HAS BEEN LEAKING OUT OF THE TRANSPORT TRUCKS WHILE IN TRANSIT TO THE FINAL DISPOSAL SITE. APPARENTLY NOT ENOUGH FLYASH IS BEING COLLECTED WITH THE PRESENT SYSTEM.

10/78	101		100.0		96.1						
	201		100.0		87.5						
	301		100.0		87.9						
	401		3.3		2.2						
	SYSTEM		98.5		68.4			744	517	509	
11/78	101		51.5		41.1						
	201		100.0		100.0						
	301		100.0		88.9						
	401		86.4		69.0						
	SYSTEM		93.6		74.7			720	575	538	
12/78	101		100.0		90.9						
	201		100.0		88.0						
	301		38.5		27.8						
	401		100.0		87.5						
	SYSTEM		100.0		73.5			744	537	547	

DUQUESNE LIGHT: PHILLIPS 1-6 (CONT.)

PERIOD	MODULE	AVAILABILITY	OPERABILITY	RELIABILITY	UTILIZATION	% REMOVAL SO2	% REMOVAL PART.	PER HOURS	BOILER HOURS	FGD HOURS	CAP. FACTOR
		PERFORMANCE DATA									
** PROBLEMS/SOLUTIONS/COMMENTS											
DURING THE PERIOD A LACK OF FLYASH FOR MIXING WITH SLUDGE WAS A PROBLEM.											
1/79	101		100.0		86.7						
	201		95.5		69.2						
	301		69.0		50.0						
	401		100.0		83.7						
	SYSTEM		100.0		72.4			744	539	539	
2/79	101		50.3		38.8						
	201		93.4		72.1						
	301		100.0		88.2						
	401		100.0		100.0						
	SYSTEM		96.9		74.8			672	519	503	
3/79	101		.0		.0						
	201		100.0		96.2						
	301		100.0		88.0						
	401		100.0		100.0						
	SYSTEM		96.2		71.1			744	550	529	
4/79	101		100.0		86.8						
	201		9.3		5.8						
	301		100.0		85.0						
	401		100.0		84.9						
	SYSTEM		100.0		65.7			720	453	473	
5/79	101		100.0		100.0						
	201		.0		.0						
	301		100.0		96.6						
	401		100.0		99.1						
	SYSTEM		100.0		73.9			744	543	550	
6/79	101		100.0		70.6						
	201		34.2		22.2						
	301		100.0		83.8						
	401		100.0		77.2						
	SYSTEM		97.6		63.4			720	468	457	
7/79	101		100.0		98.7						
	201		100.0		95.8						
	301		89.8		71.4						
	401		32.1		25.5						
	SYSTEM		91.7		72.8			744	591	542	
8/79	101		100.0		100.0						
	201		100.0		89.5						
	301		100.0		89.2						
	401		.0		.0						
	SYSTEM							744	561		
9/79	101	88.8	100.0		81.8						
	201	94.8	100.0		80.3						
	301	99.6	100.0		85.6						
	401	.0	.0		.0						
	SYSTEM	70.8	100.0		61.9			720	376	446	
10/79	101	99.4	100.0		97.0						
	201	86.5	100.0		86.6						
	301	93.8	100.0		93.0						
	401	.0	.0		.0						
	SYSTEM	69.9	78.5		69.1			744	656	515	
11/79	101	53.0	72.7		50.6						
			72.7								
	201	99.0	100.0		99.0						
	301	83.6	100.0		83.6						

DUQUESNE LIGHT: PHILLIPS 1-6 (CONT.)

PERIOD	MODULE	AVAILABILITY	OPERABILITY	RELIABILITY	UTILIZATION	% REMOVAL SO2	% REMOVAL PART.	PER HOURS	BOILER HOURS	FGD HOURS	CAP. FACTOR
	401	11.5	16.5		11.5						
	SYSTEM	61.8	87.8		61.3			720	502	441	
12/79	SYSTEM							744			

** PROBLEMS/SOLUTIONS/COMMENTS

PRESENTLY THE UTILITY HAS BEEN ADDING SODIUM THIOSULFATE TO THE LIME TO PREVENT SCALE FORMATION. THIS PROCESS HAS IMPROVED SO2 COLLECTION AS WELL.

THE SCRUBBER FAN HOUSING LINERS ARE BEING REPLACED.

THE MECHANICAL COLLECTORS ARE BEING UPGRADED TO IMPROVE THE QUALITY OF WET SLUDGE.

SECTION 3
DESIGN AND PERFORMANCE DATA FOR OPERATIONAL DOMESTIC FGD SYSTEMS

COMPANY NAME	INDIANAPOLIS POWER & LIGHT	
PLANT NAME	PETERSBURG	
UNIT NUMBER	3	
CITY	PETERSBURG	
STATE	INDIANA	
REGULATORY CLASSIFICATION	B	
PARTICULATE EMISSION LIMITATION - NG/J	43.	(.100 LB/MMBTU)
SO2 EMISSION LIMITATION - NG/J	516.	(1.200 LB/MMBTU)
NET PLANT GENERATING CAPACITY - MW	1180.0	
GROSS UNIT GENERATING CAPACITY - MW	532.0	
NET UNIT GENERATING CAPACITY W/FGD - MW	515.0	
NET UNIT GENERATING CAPACITY WO/FGD - MW	528.0	
EQUIVALENT SCRUBBED CAPACITY - MW	532.0	
** BOILER DATA		
SUPPLIER	COMBUSTION ENGINEERING	
TYPE	PULVERIZED COAL	
SERVICE LOAD	BASE	
COMMERCIAL SERVICE DATE	0/77	
MAXIMUM BOILER FLUE GAS FLOW - CU.M/S	********	(******* ACFM)
FLUE GAS TEMPERATURE - C	137.2	(279 F)
STACK HEIGHT - M	188.	(616 FT)
STACK TOP DIAMETER - M	6.1	(20.0 FT)
** FUEL DATA		
FUEL TYPE	COAL	
FUEL GRADE	BITUMINOUS	
AVERAGE HEAT CONTENT - J/G	25004.	(10750 BTU/LB)
RANGE HEAT CONTENT - BTU/LB		******
AVERAGE ASH CONTENT - %	********	
RANGE ASH CONTENT - %	9-10	
AVERAGE MOISTURE CONTENT - %	********	
RANGE MOISTURE CONTENT - %	10.5-16.5	
AVERAGE SULFUR CONTENT - %	3.25	
RANGE SULFUR CONTENT - %	1.5-4.5	
AVERAGE CHLORIDE CONTENT - %	********	
RANGE CHLORIDE CONTENT - %	******	
** ESP		
NUMBER	2	
TYPE	COLD SIDE	
SUPPLIER	RESEARCH COTTRELL	
PARTICULATE DESIGN REMOVAL EFFICIENCY - %	99.3	
** PARTICULATE SCRUBBER		
TYPE	NONE	
** FGD SYSTEM		
SALEABLE PRODUCT/THROWAWAY PRODUCT	THROWAWAY PRODUCT	
GENERAL PROCESS TYPE	WET SCRUBBING	
PROCESS TYPE	LIMESTONE	
PROCESS ADDITIVES	NONE	
SYSTEM SUPPLIER	AIR CORRECTION DIVISION, UOP	
A-E FIRM	GIBBS & HILL	
DEVELOPMENT LEVEL	FULL SCALE	
NEW/RETROFIT	NEW	
PARTICULATE DESIGN REMOVAL EFFICIENCY - %	99.30	
SO2 DESIGN REMOVAL EFFICIENCY - %	85.00	
INITIAL START-UP	12/77	
CONSTRUCTION COMPLETION	8/77	
CONSTRUCTION INITIATION	10/75	
CONTRACT AWARDED	1/75	
** ABSORBER		
NUMBER	4	
TYPE	MOBILE PACKED TOWER	
INITIAL START UP	12/77	
SUPPLIER	AIR CORRECTION DIVISION, UOP	
NUMBER OF STAGES	3	
DIMENSIONS - FT	30 X 30 X 100	
SHELL MATERIAL	CARBON STEEL	
SHELL LINER MATERIAL	NEOPRENE RUBBER	

INDIANAPOLIS POWER & LIGHT: PETERSBURG 3 (CONT.)

INTERNAL MATERIAL	NITRYL FOAM BALLS	
BOILER LOAD/ABSORBER - %	25.0	
GAS FLOW - CU.M/S	176.96	(375000 ACFM)
GAS TEMPERATURE - C	47.8	(118 F)
L/G RATIO - L/CU.M	6.7	(50.0 GAL/1000ACF)
PRESSURE DROP - KPA	1.7	(7.0 IN-H2O)
SUPERFICAL GAS VELOCITY - M/SEC	4.4	(14.5 FT/S)
PARTICULATE INLET LOAD - G/CU.M	.1	(.025 GR/SCF)
SO2 INLET CONCENTRATION - PPM	3400	
SO2 OUTLET CONTRATION - PPM	385	
SO2 DESIGN REMOVAL EFFICIENCY - %	85.0	

** FANS

NUMBER	2	
TYPE	SCRUBBER FD	
CONSTRUCTION MATERIALS	CARBON STEEL	
CAPACITY - CU.M/S	224.15	(475000 ACFM)

** MIST ELIMINATOR

NUMBER	8	
TYPE	CHEVRON	
CONSTRUCTION MATERIAL	PLASTIC	
CONFIGURATION	HORIZONTAL	
NUMBER OF STAGES	2	
NUMBER OF PASSES	7	
FREEBOARD DISTANCE - M	.37	(1.2 FT)
WASH SYSTEM	1ST STAGE, VERTICALLY UPWARD AND DOWNWARD; 2ND S	

** PUMPS

SERVICE	NUMBER
ABSORBER RECIRCULATION	12

** TANKS

SERVICE	NUMBER
LIMESTONE SLURRY	****
WASTE SLURRY	****
RECYCLE	****
THICKENER OVERFLOW	****

** REHEATER

NUMBER	4	
TYPE	HOT AIR INJECTION	
HEATING MEDIUM	STEAM, 365 F AT 187 PSIG	
TEMPERATURE BOOST - C	16.7	(30 F)
ENERGY REQUIRED	249 MM BTU/HR.	

** THICKENER

NUMBER	1	
CONSTRUCTION MATERIAL	RUBBER LINED CARBON STEEL	
DIAMETER - M	50.3	(165 FT)
OUTLET SOLIDS - %	35.0	

** WATER LOOP

TYPE	CLOSED	
FRESH MAKEUP WATER ADDITION - LITERS/S	55.6	(882 GPM)

** REAGENT PREPARATION EQUIPMENT

NUMBER OF BALL MILLS	1	
BALL MILL CAPACITY- M T/H	38.1	(42.0 TPH)

** TREATMENT

TYPE	POZ-O-TEC
CONTRACTOR	IUCS

** DISPOSAL

NATURE	FINAL
TYPE	POND
LOCATION	ON-SITE
TRANSPORTATION	TRUCK

INDIANAPOLIS POWER & LIGHT: PETERSBURG 3 (CONT.)

PERIOD	MODULE	AVAILABILITY	OPERABILITY	RELIABILITY	UTILIZATION	% REMOVAL SO2	% REMOVAL PART.	PER HOURS	BOILER HOURS	FGD HOURS	CAP. FACTOR
		PERFORMANCE DATA									
12/77	SYSTEM							744			

** PROBLEMS/SOLUTIONS/COMMENTS

OPERATION OF ALL FOUR MODULES COMMENCED DURING DECEMBER.

REPAIRS TO THE RECYCLE TANK AGITATOR WERE REQUIRED.

1/78	SYSTEM							744			

** PROBLEMS/SOLUTIONS/COMMENTS

PROBLEMS WERE ENCOUNTERED WITH THE FLYASH HANDLING SYSTEM FORCING FGD SHUTDOWN. THE UNIT WAS RESTATED IN THE MIDDLE OF APRIL.

2/78	SYSTEM							672			

** PROBLEMS/SOLUTIONS/COMMENTS

PIPE FREEZE-UP DAMAGE WAS ENCOUNTERED AND REPAIRED.

3/78	SYSTEM							744			

** PROBLEMS/SOLUTIONS/COMMENTS

INSULATION WAS INSTALLED DURING THE SYSTEM OUTAGE.

A BROKEN PINION GEAR WAS REPAIRED DURING THE SYSTEM OUTAGE.

INSTRUMENTATION MAINTENANCE PERFORMED DURING THE SYSTEM OUTAGE.

4/78	SYSTEM							720			

** PROBLEMS/SOLUTIONS/COMMENTS

ALL CONTROL VALVES WERE RETURNED TO THE FACTORY FOR MODIFICATIONS.

5/78	SYSTEM							744			

** PROBLEMS/SOLUTIONS/COMMENTS

THE MAIN POWER TRANSFORMER FAULTED CAUSING THE SYSTEM TO SHUTDOWN.

6/78	SYSTEM							720			
7/78	SYSTEM							744			
8/78	SYSTEM							744			

** PROBLEMS/SOLUTIONS/COMMENTS

PROBLEMS HAVE BEEN EXPERIENCED WITH CONTROLS.
CRACKING PROBLEMS HAVE BEEN EXPERIENCED WITH FIBERGLASS PIPING. THE PROBLEM WAS SOLVED BY REPLACING SECTIONS WITH RUBBER LINED STEEL PIPING, NEW FRP PIPING, AND PROVIDING ADDITIONAL PIPE SUPPORTS.

9/78	SYSTEM							720			
10/78	SYSTEM							744			

** PROBLEMS/SOLUTIONS/COMMENTS

BYPASS DAMPER PROBLEMS WERE EXPERIENCED.

AN SO2 COMPLIANCE TEST WAS INVALID DUE TO BYPASS DAMPER PROBLEMS.

11/78	SYSTEM							720			

PERIOD	MODULE	AVAILABILITY	OPERABILITY	RELIABILITY	UTILIZATION	% REMOVAL SO2	% REMOVAL PART.	PER HOURS	BOILER HOURS	FGD HOURS	CAP. FACTOR
	** PROBLEMS/SOLUTIONS/COMMENTS										
	FREEZE-UPS IN THE LIME DELIVERY SYSTEM WERE EXPERIENCED.										
	AN INSTRUMENTATION POWER TRANSFORMER FAILURE CAUSED ABOUT 6 DAYS OUTAGE.										
12/78	SYSTEM							744			
	** PROBLEMS/SOLUTIONS/COMMENTS										
	OPERATIONAL HOURS ARE NOT YET AVAILABLE. THE UTILITY REPORTED THAT THE SYSTEM HAS NOT YET BEEN ACCEPTED.										
1/79	SYSTEM							744			
2/79	SYSTEM							672			
	** PROBLEMS/SOLUTIONS/COMMENTS										
	THE UTILIZATION FIGURES GIVEN BELOW ARE FOR THE PERIOD SEPTEMBER-DECEMBER 1978.										
3/79	A				31.2						
	B				30.0						
	C				48.0						
	D				48.0						
	SYSTEM				39.0			744			
	** PROBLEMS/SOLUTIONS/COMMENTS										
	THE FGD SYSTEM WAS DOWN FROM JANUARY 1 TO MARCH 15 DUE TO SEVERE WINTER WEATHER.										
4/79	SYSTEM							722			
	** PROBLEMS/SOLUTIONS/COMMENTS										
	DUE TO THE FORMER STACK LINING PEELING AWAY, THE STEEL SHELL WAS SAND BLASTED AND RIGIFLAKE 4050 APPLIED BY TROWEL.										
	ALL MIST ELIMINATORS WERE CLEANED DUE TO SEVERE SCALING PROBLEMS.										
	EXTENSIVE REPAIRS WERE MADE TO THE INLET DAMPERS, THE OUTLET DUCTS WERE LINED WITH RESISTIFLAKE 1150, AND MAJOR REPAIRS WERE MADE TO BONNETS BECAUSE OF ACID CORROSION.										
	THE SYSTEM HAS BEEN DOWN SINCE MID-MARCH FOR INSPECTION AND MAINTENANCE.										
5/79	SYSTEM							744			
6/79	SYSTEM							720			
	** PROBLEMS/SOLUTIONS/COMMENTS										
	THE UTILITY REPORTED THAT THE SYSTEM RAN ABOUT THREE DAYS TOTAL DURING THIS PERIOD.										
	PROCESS CONTROL HAS BEEN A VERY MAJOR PROBLEM AREA.										
	MIST ELIMINATOR PLUGGING CONTRIBUTED TO THE OUTAGE EXPERIENCED DURING THIS PERIOD.										
7/79	SYSTEM							744			
8/79	SYSTEM							744			
9/79	SYSTEM							720			

INDIANAPOLIS POWER & LIGHT: PETERSBURG 3 (CONT.)

PERIOD	MODULE	AVAILABILITY	OPERABILITY	RELIABILITY	UTILIZATION	% REMOVAL SO2	% REMOVAL PART.	PER HOURS	BOILER HOURS	FGD HOURS	CAP. FACTOR
				PERFORMANCE DATA							

** PROBLEMS/SOLUTIONS/COMMENTS

NO INFORMATION WAS AVAILABLE FROM THE UTILITY FOR THE THIRD QUARTER 1979.

10/79	SYSTEM							744			
11/79	SYSTEM							720			
12/79	SYSTEM							744			

** PROBLEMS/SOLUTIONS/COMMENTS

DURING THE FOURTH QUARTER THE UTILITY REPORTED THAT THERE WERE NO NEW MAJOR PROBLEMS.

SECTION 3
DESIGN AND PERFORMANCE DATA FOR OPERATIONAL DOMESTIC FGD SYSTEMS

COMPANY NAME	KANSAS CITY POWER & LIGHT	
PLANT NAME	HAWTHORN	
UNIT NUMBER	3	
CITY	KANSAS CITY	
STATE	MISSOURI	
REGULATORY CLASSIFICATION	D	
PARTICULATE EMISSION LIMITATION - NG/J	64.	(.150 LB/MMBTU)
SO2 EMISSION LIMITATION - NG/J	******	(****** LB/MMBTU)
NET PLANT GENERATING CAPACITY - MW	836.0	
GROSS UNIT GENERATING CAPACITY - MW	90.0	
NET UNIT GENERATING CAPACITY W/FGD - MW	85.0	
NET UNIT GENERATING CAPACITY WO/FGD - MW	87.0	
EQUIVALENT SCRUBBED CAPACITY - MW	90.0	
** BOILER DATA		
SUPPLIER	COMBUSTION ENGINEERING	
TYPE	PULVERIZED COAL	
SERVICE LOAD	CYCLIC	
COMMERCIAL SERVICE DATE	0/53	
MAXIMUM BOILER FLUE GAS FLOW - CU.M/S	235.95	(500000 ACFM)
FLUE GAS TEMPERATURE - C	148.9	(300 F)
STACK HEIGHT - M	61.	(200 FT)
STACK TOP DIAMETER - M	5.5	(18.0 FT)
** FUEL DATA		
FUEL TYPE	COAL	
FUEL GRADE	BITUMINOUS	
AVERAGE HEAT CONTENT - J/G	22795.	(9800 BTU/LB)
RANGE HEAT CONTENT - BTU/LB		******
AVERAGE ASH CONTENT - %	11.00	
RANGE ASH CONTENT - %	******	
AVERAGE MOISTURE CONTENT - %	********	
RANGE MOISTURE CONTENT - %	******	
AVERAGE SULFUR CONTENT - %	.60	
RANGE SULFUR CONTENT - %	******	
AVERAGE CHLORIDE CONTENT - %	********	
RANGE CHLORIDE CONTENT - %	******	
** FUEL DATA		
FUEL TYPE	COAL	
FUEL GRADE	BITUMINOUS	
AVERAGE HEAT CONTENT - J/G	26516.	(11400 BTU/LB)
RANGE HEAT CONTENT - BTU/LB		******
AVERAGE ASH CONTENT - %	14.00	
RANGE ASH CONTENT - %	******	
AVERAGE MOISTURE CONTENT - %	********	
RANGE MOISTURE CONTENT - %	******	
AVERAGE SULFUR CONTENT - %	3.00	
RANGE SULFUR CONTENT - %	******	
AVERAGE CHLORIDE CONTENT - %	********	
RANGE CHLORIDE CONTENT - %	******	
** FUEL DATA		
FUEL TYPE	******	
FUEL GRADE	******	
AVERAGE HEAT CONTENT - J/G	22715.	(9800 BTU/LB)
RANGE HEAT CONTENT - BTU/LB		******
AVERAGE ASH CONTENT - %	14.00	
RANGE ASH CONTENT - %	******	
AVERAGE MOISTURE CONTENT - %	********	
RANGE MOISTURE CONTENT - %	******	
AVERAGE SULFUR CONTENT - %	.60	
RANGE SULFUR CONTENT - %	******	
AVERAGE CHLORIDE CONTENT - %	********	
RANGE CHLORIDE CONTENT - %	******	
** PARTICULATE SCRUBBER		
TYPE	MOBILE PACKED TOWER	
** FGD SYSTEM		
SALEABLE PRODUCT/THROWAWAY PRODUCT	THROWAWAY PRODUCT	
GENERAL PROCESS TYPE	WET SCRUBBING	

KANSAS CITY POWER & LIGHT: HAWTHORN 3 (CONT.)

PROCESS TYPE	LIME
PROCESS ADDITIVES	NONE
SYSTEM SUPPLIER	COMBUSTION ENGINEERING
A-E FIRM	BLACK & VEATCH
DEVELOPMENT LEVEL	FULL SCALE
NEW/RETROFIT	RETROFIT
PARTICULATE DESIGN REMOVAL EFFICIENCY - %	99.00
SO2 DESIGN REMOVAL EFFICIENCY - %	71.00
INITIAL START-UP	11/72
** ABSORBER	
NUMBER	2
TYPE	MOBILE PACKED TOWER
INITIAL START UP	11/72
SUPPLIER	COMBUSTION ENGINEERING
NUMBER OF STAGES	1
DIMENSIONS - FT	18 X 26 X 56
SHELL MATERIAL	316L SS UP TO BED WITH BALANCE, CARBON STEEL
SHELL LINER MATERIAL	CEILCOTE FLAKEGLASS
INTERNAL MATERIAL	316L SS
NUMBER OF NOZZLES	63
GAS FLOW - CU.M/S	76.45 (162000 ACFM)
L/G RATIO - L/CU.M	3.5 (26.0 GAL/1000ACF)
PRESSURE DROP - KPA	2.7 (11.0 IN-H2O)
SUPERFICAL GAS VELOCITY - M/SEC	3.0 (10.0 FT/S)
** FANS	
NUMBER	2
TYPE	SCRUBBER ID
SERVICE - WET/DRY	DRY
** MIST ELIMINATOR	
NUMBER	2
TYPE	CHEVRON
CONSTRUCTION MATERIAL	FRP
CONFIGURATION	HORIZONTAL
NUMBER OF STAGES	2
NUMBER OF PASSES	2
FREEBOARD DISTANCE - M	3.05 (10.0 FT)
DEPTH - M	1.83 (6.0 FT)
VANE SPACING - CM	7.6 (3.00 IN)
VANE ANGLES	45 DEG.
WASH SYSTEM	EIGHT WASH LANCES; CLARIFIED AND MAKE-UP WATER (
SUPERFICIAL GAS VELOCITY - M/S	3.0 (10.0 FT/S)
PRESSURE DROP - KPA	.3 (1.2 IN-H2O)
** PROCESS CONTROL CHEMISTRY	
CONTROL VARIABLES	PH
CONTROL RANGE	4.5-6.5
** TANKS	
SERVICE	NUMBER
---	---
SO2 SCRUBBER TOWER HOLDUP	****
** REHEATER	
TYPE	IN-LINE
HEATING MEDIUM	HOT WATER 325F, 150 PSIG
TEMPERATURE BOOST - C	27.8 (50 F)
** THICKENER	
NUMBER	1
DIAMETER - M	35.1 (115 FT)
** WATER LOOP	
TYPE	CLOSED
** REAGENT PREPARATION EQUIPMENT	
NUMBER OF SLAKERS	1
SLAKER CAPACITY - M T/H	51.7 (57.0 TPH)
** TREATMENT	
TYPE	FLYASH STABILIZATION
** DISPOSAL	
NATURE	FINAL
TYPE	POND

KANSAS CITY POWER & LIGHT: HAWTHORN 3 (CONT.)

LOCATION	ON-SITE
AREA - ACRES	160.0
CAPACITY - CU.M	3130880 (2560.0 ACRE-FT)

PERFORMANCE DATA

PERIOD	MODULE	AVAILABILITY	OPERABILITY	RELIABILITY	UTILIZATION	% REMOVAL SO2	% REMOVAL PART.	PER HOURS	BOILER HOURS	FGD HOURS	CAP. FACTOR
7/75	3A		.0		.0						
	3B		42.0		33.2						
	SYSTEM		21.0		16.6			744	584	123	

** PROBLEMS/SOLUTIONS/COMMENTS

A-MODULE ENCOUNTERED A LEAK IN THE CITY WATER LINE.

THE DUCT TO THE I.D. FAN BECAME PLUGGED.

AN OUTLET DAMPER IN MODULE A MALFUNCTIONED.

MARBLES WERE LOST FROM THE BED IN MODULE B.

A SPRAY HEADER WAS BROKEN IN MODULE B.

8/75	3A				.0						
	3B				.0						
	SYSTEM				.0			744	0	0	

** PROBLEMS/SOLUTIONS/COMMENTS

THE I.D. FAN FOR HALF THE BOILER WAS LOST.

THE PROBLEMS ENCOUNTERED IN JULY CONTINUED INTO AUGUST.

9/75	3A		69.0		34.3						
	3B		23.0		11.3						
	SYSTEM		46.0		22.8			720	358	164	

** PROBLEMS/SOLUTIONS/COMMENTS

AN OUTAGE DUE TO CLEANING AND MECHANICAL REPAIRS OCCURRED. POTS, COVERS, AND MARBLES IN THE MARBLE BED OF MODULE 3B WERE REPLACED.

10/75	3A		65.0		15.7						
	3B		81.0		19.5						
	SYSTEM		73.0		17.6			744	180	131	

** PROBLEMS/SOLUTIONS/COMMENTS

MODULE 3A OUTAGE WAS DUE LARGELY TO REPLACEMENT OF A RECYCLE PUMP MOTOR.

A SCHEDULED BOILER OVERHAUL REDUCED BOILER OPERATION HOURS.

11/75	3A				.0						
	3B				.0						
	SYSTEM				.0			720	0	0	

** PROBLEMS/SOLUTIONS/COMMENTS

BOILERS AND SCRUBBERS WERE SHUT DOWN FOR A SCHEDULED TURBINE OVERHAUL. THE SYSTEM IS SCHEDULED TO GO BACK ON-LINE IN JANUARY 1976. THE SYSTEM WAS ALL MONTH BECAUSE OF FROZEN EQUIPMENT, LINES AND A MANPOWER SHORTAGE DUE TO A BOILER AND TURBINE OVERHAUL ON ANOTHER UNIT AT THIS STATION.

12/75	3A				.0						
	3B				.0						
	SYSTEM				.0			744	0	0	
1/76	3A				.0						
	3B				.0						
	SYSTEM				.0			744	0	0	
2/76	3A		29.4		21.3						

KANSAS CITY POWER & LIGHT: HAWTHORN 3 (CONT.)

PERIOD	MODULE	AVAILABILITY	OPERABILITY	RELIABILITY	UTILIZATION	% REMOVAL SO2	% REMOVAL PART.	PER HOURS	BOILER HOURS	FGD HOURS	CAP. FACTOR
		PERFORMANCE DATA									
	3B		1.0		1.0						
	SYSTEM		15.2		11.1			696	503	77	

** PROBLEMS/SOLUTIONS/COMMENTS

SCRUBBER OUTAGES RESULTED FROM PLUGGING IN THE SCRUBBER BED, CAUSED BY CONVERSION FROM AN UNDER-BED TO OVER-BED SPRAY SYSTEM.

3/76	3A				.0						
	3B				.0						
	SYSTEM				.0			744	0	0	

** PROBLEMS/SOLUTIONS/COMMENTS

RECONVERSION OF MODULE 3B'S SPRAY SYSTEM TO AN UNDER-BED CONFIGURATION HAS BEEN COMPLETED.

THE BYPASS SYSTEM HAS BEEN MODIFIED AND CHANGED TO A SLIDE-GATE DAMPER ARRANGEMENT.

4/76	3A				.0						
	3B				.0						
	SYSTEM				.0			720	0	0	
5/76	3A				.0						
	3B				.0						
	SYSTEM				.0			744	0	0	

** PROBLEMS/SOLUTIONS/COMMENTS

THE SYSTEM WAS SHUT DOWN DURING THE MONTH DUE TO THE CONTINUATION OF MAN-POWER SHORTAGE PROBLEMS. THE UTILITY DID PERFORM SOME CLEANING AND REPAIRS DURING THE MONTH.

6/76	3A		39.0		27.6						
	3B		44.0		30.4						
	SYSTEM		41.5		29.0			720	505	209	

** PROBLEMS/SOLUTIONS/COMMENTS

THE UTILITY IS IN THE PROCESS OF MODIFYING THE DEMISTER WASH SYSTEM ON BOTH UNITS 3 AND 4. THE WATER LANCES ARE BEING CHANGED FROM FRP TO CARBON STEEL TO ATTEMPT TO PREVENT THE LOSS OF THE NOZZLES AND THE SUBSEQUENT SHATTERING OF THE LANCES.

7/76	SYSTEM							744			

** PROBLEMS/SOLUTIONS/COMMENTS

THE UTILITY IS PRESENTLY CONVERTING THIS SYSTEM FROM LIMESTONE INJECTION AND TAIL END SCRUBBING TO A LIME SLURRY BASED SCRUBBING SYSTEM.

8/76	SYSTEM							744			
9/76	SYSTEM							720			

** PROBLEMS/SOLUTIONS/COMMENTS

THE SYSTEM WAS VIRTUALLY OUT OF SERVICE THE ENTIRE REPORT PERIOD. MANPOWER COMMITMENTS WERE SERIOUSLY HAMPERED BY A MAJOR EXPLOSION WHICH OCCURRED IN THE COAL MILL PULVERIZING AREA OF HAWTHORN NO. 5.

10/76	SYSTEM							744			
11/76	3A										
	3B										
	SYSTEM							720	0	0	

PERIOD	MODULE	AVAILABILITY	OPERABILITY	RELIABILITY	UTILIZATION	% REMOVAL SO2	% REMOVAL PART.	PER HOURS	BOILER HOURS	FGD HOURS	CAP. FACTOR
		PERFORMANCE DATA									

** PROBLEMS/SOLUTIONS/COMMENTS

THE UNIT DID NOT OPERATE BECAUSE OF THE ONGOING MAJOR MODIFICATIONS BEING IMPLEMENTED ON THE SCRUBBING SYSTEM. THE SYSTEM SHOULD BE READY FOR OPERATION FEB 1. THE UNIT MUST UNDERGO A SERIES OF TESTS TO INSURE COMPLIANCE WITH CITY AND FEDERAL REGULATIONS.

12/76	3A										
	3B										
	SYSTEM							744	0	0	
1/77	3A										
	3B										
	SYSTEM							744	0	0	

** PROBLEMS/SOLUTIONS/COMMENTS

UNIT NO. 3 WAS DOWN FOR THE ENTIRE MONTH OF JANUARY FOR THE COMPLETION OF MODIFICATIONS AND REPAIRS ON THE SCRUBBERS AND BOILER. THE UNIT BECAME AVAILABLE FOR SERVICE AND TESTING ON FEB 7. THE UNIT'S MEASURED PARTICULATE EMISSIONS AT THE SCRUBBER OUTLET WAS 0.12 LB/MM BTU (WELL BELOW THE REQUIRED 0.17 LB/MM BTU) BURNING APPROXIMATELY 2.0 % SULFUR COAL. THE CONVERSION FROM LIMESTONE TO LIME HAS GONE SMOOTHLY. SOME INITIAL PROBLEMS WITH PROCESS CHEMISTRY CONTROL HAVE BEEN CORRECTED. OTHER MINOR PROBLEMS INCLUDED PUMP MALFUNCTIONS AND LOSS OF SLAKING WATER PRESSURE. SYSTEM OPERATIONS ARE CONTINUING AT 0% SOLIDS AND 100% BLOWDOWN WITH A FRESH WATER MAKE-UP OF APPROXIMATELY 7.0 GPM/MW.

2/77	3A			78.3		44.6					
	3B			88.0		50.1					
	SYSTEM			83.1		47.3		672	383	318	
3/77	3A			99.0		63.9					
	3B			85.0		55.3					
	SYSTEM			92.0		59.6		744	482	443	
4/77	3A			57.0		56.7					
	3B			57.0		56.7					
	SYSTEM			57.0		56.7		720	720	408	

** PROBLEMS/SOLUTIONS/COMMENTS

THE SYSTEM IS NOW OPERATING AT ABOUT 15-25% BLOWDOWN. THE PH CONTROL SYSTEM OPERATIONS HAVE BEEN EXCELLENT.DURING MAY THE BOILER BURNED GAS FOR 216 HOURS (NOT INCLUDED IN OPERABILITY FIGURES). SO2 REMOVAL EFFICIENCY IS ESTIMATED AT 50-60% FOR BOTH MODULES. ALTHOUGH ACTUAL TESTS HAVE NOT BEEN RUN FOR ABOUT A YEAR AND A HALF. BOTH MODULES ARE CURRENTLY OPERATING SIMULTANEOUSLY.

5/77	3A			41.0		40.6					
	3B			41.0		40.6					
	SYSTEM			41.0		40.6		744	736	302	
6/77	3A			10.0		10.0					
	3B			10.0		10.0					
	SYSTEM			10.0		10.0		720	720	72	

** PROBLEMS/SOLUTIONS/COMMENTS

THE UNIT FIRED NATURAL GAS THROUGHOUT THE MONTH WITH THE EXCEPTION OF A 72-HOUR PERIOD DURING WHICH COAL WAS FIRED AND THE SCRUBBERS WERE OPERATED FOR SCRUBBER PERSONNEL PURPOSES ONLY.

THE UNIT FIRED NATURAL GAS FOR THE ENTIRE PERIOD, MAKING SCRUBBER OPERATION UNNECESSARY.

7/77	SYSTEM			.0		.0		744	744	0	
8/77	3A					.0					

KANSAS CITY POWER & LIGHT: HAWTHORN 3 (CONT.)

PERIOD	MODULE	AVAILABILITY	OPERABILITY	RELIABILITY	UTILIZATION	% REMOVAL SO2	% REMOVAL PART.	PER HOURS	BOILER HOURS	FGD HOURS	CAP. FACTOR
	3B				.0						
	SYSTEM				.0			744		0	
9/77	3A				.0						
	3B				.0						
	SYSTEM				.0			720		0	
10/77	3A				.0						
	3B				.0						
	SYSTEM				.0			744	0	0	

** PROBLEMS/SOLUTIONS/COMMENTS

THE UNIT WAS SHUT DOWN BECAUSE OF A LACK OF NATURAL GAS UNTIL NOVEMBER 3, WHEN IT BEGAN FIRING COAL. (NOTE:THE BOILER AND FGD SYSTEM MUST RUN SIMULTANEOUSLY BECAUSE NO BYPASS IS ALLOWED EXCEPT DURING EMERGENCIES. WHENEVER THE BOILER IS DOWN, THE SCRUBBER IS EFFECTIVELY UNAVAILABLE BECAUSE THE DOWN TIME IS UTILIZED FOR SCRUBBER MAINTENANCE AND REPAIR, MAKING AVAILABILITY AND UTILIZATION FACTORS IDENTICAL FOR THIS SYSTEM.

DURING BOILER DOWN TIME, THE REACTION TANKS AND SPRAY HEADERS WERE REPLACED BY STAINLESS STEEL COMPONENTS; THE INTERCONNECTING PIPING IS RUBBER LINED.

11/77	SYSTEM	57.0	100.0		57.0			720	411	411	
12/77	SYSTEM	73.0	100.0		70.0			744	541	541	

** PROBLEMS/SOLUTIONS/COMMENTS

THE FGD MODULES WERE CLEANED DURING BOILER OUTAGES (THERE WERE NO FGD-RELATED OUTAGES).

SOME LEAKS IN THE FGD PIPING WERE REPAIRED.

1/78	SYSTEM	46.5	100.0		46.5			744	346	346	
2/78	SYSTEM	25.0	100.0		24.9			672	167	167	

** PROBLEMS/SOLUTIONS/COMMENTS

DURING FEBRUARY THE UNIT WAS DOWN FOUR TIMES WITH ECONOMIZER AND WATER WALL LEAKS (504 HOURS TOTAL). WATER WALL LEAK REPAIR AS WELL AS ACID CLEANING OF THE BOILER CAUSED ADDITIONAL OUTAGE TIME DURING THE LAST WEEK OF MARCH.

A TWO WEEK OUTAGE WAS SCHEDULED DURING MARCH FOR SEASONAL MAINTENANCE.

3/78	SYSTEM	56.0	100.0		54.6			744	406	406	
4/78	SYSTEM	76.0	30.5		40.0			720	548	220	

** PROBLEMS/SOLUTIONS/COMMENTS

AN AIR PREHEATER FIRE DISCOVERED ON MAY 12 CAUSED DAMAGES THAT FORCED MODULE A TO BE DOWN THE REST OF THE MONTH.

NO INFORMATION WAS AVAILABLE FOR THE JUNE-JULY REPORT PERIOD DUE TO A PLANT STRIKE.

5/78		29.5									
		54.0									
		41.8	100.0		54.2						
	SYSTEM	41.8	100.0		54.2			744	403	403	
6/78	SYSTEM							720			
7/78	SYSTEM							744			
8/78	SYSTEM							744			

PERIOD	MODULE	AVAILABILITY	OPERABILITY	RELIABILITY	UTILIZATION	% REMOVAL SO2	% REMOVAL PART.	PER HOURS	BOILER HOURS	FGD HOURS	CAP. FACTOR
		PERFORMANCE DATA									
	** PROBLEMS/SOLUTIONS/COMMENTS										
	THE SCRUBBING SYSTEM IS OPERATING EVEN THOUGH THE UTILITY IS STILL IN THE MIDST OF A STRIKE. FGD PERFORMANCE FIGURES ARE NOT AVAILABLE SINCE THE UTILITY IS NOT RECORDING FGD SYSTEM OPERATING HOURS DURING THE STRIKE.										
9/78	SYSTEM							720			
10/78	SYSTEM							744			
	** PROBLEMS/SOLUTIONS/COMMENTS										
	ALTHOUGH THE STRIKE IS OVER NO OPERATIONAL DATA IS AVAILABLE. THE FGD SYSTEM IS IN OPERATION.										
11/78	SYSTEM							720			
12/78	SYSTEM							744			
	** PROBLEMS/SOLUTIONS/COMMENTS										
	HOURS OF OPERATION ARE STILL NOT AVAILABLE. THE FGD SYSTEM IS IN OPERATIO BUT AT PRESENT PERSONNEL ARE BEING REASSIGNED PREVENTING ACCURATE DATA RECORDING.										
1/79	SYSTEM							744			
2/79	SYSTEM							672			
3/79	SYSTEM							744			
	** PROBLEMS/SOLUTIONS/COMMENTS										
	OPERATING INFORMATION IS STILL NOT AVAILABLE FOR UNIT 3.										
4/79	SYSTEM	18.0	100.0			18.1		720	130	130	9.0
	** PROBLEMS/SOLUTIONS/COMMENTS										
	THE BOILER WAS DOWN IN APRIL FOR 543 HOURS FOR TURBINE OVERHAUL.										
5/79	SYSTEM	55.0	100.0			55.0		744	409	409	29.0
	** PROBLEMS/SOLUTIONS/COMMENTS										
	IN MAY THE OUTAGE TIME WAS DUE TO BOILER TUBE LEAKS.										
6/79	SYSTEM	96.0						720	696		
7/79	SYSTEM	100.0						744	744		
8/79	SYSTEM	75.0						744	558		
9/79	SYSTEM	84.0						720	605		
	** PROBLEMS/SOLUTIONS/COMMENTS										
	THE UTILITY BURNED PRIMARILY GAS DURING JUNE, JULY AND AUGUST. THE UNIT RETURNED TO FIRING ALL COAL IN SEPTEMBER. THE SCRUBBER WAS LARGELY AVAILABLE BUT WAS NOT NEEDED FOR MOST OF THE PERIOD. THE UTILITY REPORTED ONLY REGULAR MAINTENANCE TOOK PLACE WITH NO PROBLEMS ENCOUNTERED.										
10/79	SYSTEM							744			
11/79	SYSTEM							720			
12/79	SYSTEM							744			

KANSAS CITY POWER & LIGHT: HAWTHORN 3 (CONT.)

PERIOD	MODULE	AVAILABILITY	OPERABILITY	RELIABILITY	UTILIZATION	% REMOVAL SO2	% REMOVAL PART.	PER HOURS	BOILER HOURS	FGD HOURS	CAP. FACTOR

** PROBLEMS/SOLUTIONS/COMMENTS

NO INFORMATION WAS AVAILABLE FOR THE FOURTH QUARTER 1979.

SECTION 3
DESIGN AND PERFORMANCE DATA FOR OPERATIONAL DOMESTIC FGD SYSTEMS

COMPANY NAME	KANSAS CITY POWER & LIGHT	
PLANT NAME	HAWTHORN	
UNIT NUMBER	4	
CITY	KANSAS CITY	
STATE	MISSOURI	
REGULATORY CLASSIFICATION	D	
PARTICULATE EMISSION LIMITATION - NG/J	64.	(.150 LB/MMBTU)
SO2 EMISSION LIMITATION - NG/J	******	(****** LB/MMBTU)
NET PLANT GENERATING CAPACITY - MW	836.0	
GROSS UNIT GENERATING CAPACITY - MW	91.0	
NET UNIT GENERATING CAPACITY W/FGD - MW	85.0	
NET UNIT GENERATING CAPACITY WO/FGD - MW	87.0	
EQUIVALENT SCRUBBED CAPACITY - MW	90.0	
** BOILER DATA		
SUPPLIER	COMBUSTION ENGINEERING	
TYPE	PULVERIZED COAL	
SERVICE LOAD	CYCLIC	
COMMERCIAL SERVICE DATE	0/55	
MAXIMUM BOILER FLUE GAS FLOW - CU.M/S	235.95	(500000 ACFM)
FLUE GAS TEMPERATURE - C	148.9	(300 F)
STACK HEIGHT - M	61.	(200 FT)
STACK TOP DIAMETER - M	5.5	(18.0 FT)
** FUEL DATA		
FUEL TYPE	COAL	
FUEL GRADE	BITUMINOUS	
AVERAGE HEAT CONTENT - J/G	22795.	(9800 BTU/LB)
RANGE HEAT CONTENT - BTU/LB		******
AVERAGE ASH CONTENT - %	11.00	
RANGE ASH CONTENT - %	******	
AVERAGE MOISTURE CONTENT - %	********	
RANGE MOISTURE CONTENT - %	******	
AVERAGE SULFUR CONTENT - %	.60	
RANGE SULFUR CONTENT - %	******	
AVERAGE CHLORIDE CONTENT - %	********	
RANGE CHLORIDE CONTENT - %	******	
** FUEL DATA		
FUEL TYPE	COAL	
FUEL GRADE	BITUMINOUS	
AVERAGE HEAT CONTENT - J/G	26516.	(11400 BTU/LB)
RANGE HEAT CONTENT - BTU/LB		******
AVERAGE ASH CONTENT - %	14.00	
RANGE ASH CONTENT - %	******	
AVERAGE MOISTURE CONTENT - %	********	
RANGE MOISTURE CONTENT - %	******	
AVERAGE SULFUR CONTENT - %	1.00	
RANGE SULFUR CONTENT - %	******	
AVERAGE CHLORIDE CONTENT - %	********	
RANGE CHLORIDE CONTENT - %	******	
** PARTICULATE SCRUBBER		
TYPE	MOBILE PACKED TOWER	
** FGD SYSTEM		
SALEABLE PRODUCT/THROWAWAY PRODUCT	THROWAWAY PRODUCT	
GENERAL PROCESS TYPE	WET SCRUBBING	
PROCESS TYPE	LIME	
PROCESS ADDITIVES	NONE	
SYSTEM SUPPLIER	COMBUSTION ENGINEERING	
A-E FIRM	BLACK & VEATCH	
DEVELOPMENT LEVEL	FULL SCALE	
NEW/RETROFIT	RETROFIT	
PARTICULATE DESIGN REMOVAL EFFICIENCY - %	99.00	
SO2 DESIGN REMOVAL EFFICIENCY - %	70.00	
INITIAL START-UP	8/72	
** ABSORBER		
NUMBER	2	
TYPE	MOBILE PACKED TOWER	
INITIAL START UP	8/72	

KANSAS CITY POWER & LIGHT: HAWTHORN 4 (CONT.)

SUPPLIER	COMBUSTION ENGINEERING	
DIMENSIONS - FT	18 X 26 X 56	
SHELL MATERIAL	316L SS UP TO BED WITH BALANCE, CARBON STEEL	
SHELL LINER MATERIAL	CEILCOTE FLAKEGLASS	
INTERNAL MATERIAL	316L SS	
NUMBER OF NOZZLES	63	
GAS FLOW - CU.M/S	76.45	(162000 ACFM)
GAS TEMPERATURE - C	148.9	(300 F)
L/G RATIO - L/CU.M	3.5	(26.0 GAL/1000ACF)
PRESSURE DROP - KPA	2.7	(11.0 IN-H2O)
SUPERFICAL GAS VELOCITY - M/SEC	3.0	(10.0 FT/S)
** FANS		
NUMBER	2	
TYPE	SCRUBBER ID	
SERVICE - WET/DRY	DRY	
** MIST ELIMINATOR		
NUMBER	2	
TYPE	CHEVRON	
CONSTRUCTION MATERIAL	FRP	
CONFIGURATION	HORIZONTAL	
NUMBER OF STAGES	2	
NUMBER OF PASSES	2	
FREEBOARD DISTANCE - M	3.05	(10.0 FT)
DEPTH - M	1.83	(6.0 FT)
VANE SPACING - CM	7.6	(3.00 IN)
VANE ANGLES	45 DEG.	
WASH SYSTEM	EIGHT WASH LANCES; CLARIFIED AND MAKE-UP WATER (	
SUPERFICIAL GAS VELOCITY - M/S	3.0	(10.0 FT/S)
PRESSURE DROP - KPA	.3	(1.2 IN-H2O)
** PROCESS CONTROL CHEMISTRY		
CONTROL VARIABLES	PH	
CONTROL RANGE	4.5-6.5	
** TANKS		
SERVICE	NUMBER	
---	---	
SO2 SCRUBBER TOWER HOLDUP	****	
** REHEATER		
TYPE	IN-LINE	
HEATING MEDIUM	HOT WATER 325F, 150 PSIG	
TEMPERATURE BOOST - C	27.8	(50 F)
** THICKENER		
NUMBER	1	
DIAMETER - M	35.1	(115 FT)
** WATER LOOP		
TYPE	CLOSED	
** REAGENT PREPARATION EQUIPMENT		
NUMBER OF SLAKERS	1	
SLAKER CAPACITY - M T/H	51.7	(57.0 TPH)
** TREATMENT		
TYPE	FLYASH STABILIZATION	
** DISPOSAL		
NATURE	FINAL	
TYPE	POND	
LOCATION	ON-SITE	
AREA - ACRES	16[illegible].0	
CAPACITY - CU.M	3130880	(2560.0 ACRE-FT)

PERFORMANCE DATA

PERIOD	MODULE	AVAILABILITY	OPERABILITY	RELIABILITY	UTILIZATION	% REMOVAL SO2	% REMOVAL PART.	PER HOURS	BOILER HOURS	FGD HOURS	CAP. FACTOR
7/75	4A	8.0		5.5							
	4B	25.0		17.2							
	SYSTEM	16.3		11.4				744	518	84	

PERIOD	MODULE	AVAILABILITY	OPERABILITY	RELIABILITY	UTILIZATION	% REMOVAL SO2	% REMOVAL PART.	PER HOURS	BOILER HOURS	FGD HOURS	CAP. FACTOR
		PERFORMANCE DATA									

** PROBLEMS/SOLUTIONS/COMMENTS

BOTH MODULES ENCOUNTERED MARBLE BED PLUGGING AND STRAINER PROBLEMS.

8/75	4A				22.6						
	4B				28.5						
					25.5						
	SYSTEM				25.5			744		190	

** PROBLEMS/SOLUTIONS/COMMENTS

A NEW PROCESS CHEMISTRY IS BEING TRIED- ATTEMPTING TO RUN AT 100% BLOWDOWN AND NEAR ZERO PERCENT SOLIDS WITH PH BEING MAINTAINED AT 5 WITHOUT LIME STONE INJECTION. EMPHASIS IS BEING PLACED ON PARTICULATE CONTROL.

LOST HALF OF BOILER TO I.D. FAN OUTAGE CAUSING BOTH FGD MODULES TO BE SHUT DOWN TO PREVENT LOSS OF THE ENTIRE UNIT.

9/75	4A			52.0		28.6					
	4B			53.0		29.2					
	SYSTEM			52.7		28.9		720	395	208	

** PROBLEMS/SOLUTIONS/COMMENTS

SCRUBBER MODULES WERE RETURNED TO SERVICE ON SEPT. 21 AFTER REPLACEMENT OF THE ORIGINAL I.D. FAN ON MODULE 4B SIDE.

THE MARBLE BED WAS REMOVED FROM MODULE A AND REPLACED WITH A STAINLESS STEEL PERFORATED BED. THE MARBLES WERE REMOVED BECAUSE OF CONTINUING OPERATIONAL DIFFICULTIES. NEW DESIGN RESULTED IN INCREASED AVAILABILITY AND CONTINUED HIGH PARTICULATE EFFICIENCY (97%).

10/75	4A			60.0		51.7					
	4B			91.0		88.2					
	SYSTEM			75.2		72.9		744	721	542	

** PROBLEMS/SOLUTIONS/COMMENTS

THE EXPERIMENT WITH A PROCESS CHEMISTRY OF 100% BLOWDOWN AND 0% SOLIDS IS STILL IN PROGRESS. SO2 REMOVAL EFFICIENCY IS IN THE 50 TO 60% RANGE. KCP&L IS CONCENTRATING ON PARTICULATE CONTROL.

THERE WAS A MINOR BOILER RESTRICTION ON THE A-SIDE BETWEEN THE ECONOMIZER AND THE INLET DRAFT DUCT.

11/75	4A			.0		.0					
	4B			99.0		99.0					
	SYSTEM			49.5		49.5		720	720	356	

** PROBLEMS/SOLUTIONS/COMMENTS

MODULE 4A WAS SHUT DOWN DURING THE REPORT PERIOD DUE TO LOSS OF DRAFT THROUGH THE DUCTWORK FROM THE ECONOMIZER TO THE AIR PREHEATER, RESULTING IN FREQUENT PLUGGING OF THE REHEATER UNTIL THE SYSTEM WAS SHUT DOWN.

12/75	4A			.0		.0					
	4B			16.0		13.8					
	SYSTEM			8.0		6.9		744	640	52	

** PROBLEMS/SOLUTIONS/COMMENTS

THE BOILER OUTAGE OF 5 DAYS WAS DUE TO A SCHEDULED OVERHAUL.

1/76	4A					.0					
	4B					.0					
	SYSTEM					.0		744	0	0	

KANSAS CITY POWER & LIGHT: HAWTHORN 4 (CONT.)

PERIOD	MODULE	AVAILABILITY	OPERABILITY	RELIABILITY	UTILIZATION	% REMOVAL SO2	% REMOVAL PART.	PER HOURS	BOILER HOURS	FGD HOURS	CAP. FACTOR
		PERFORMANCE DATA									

** PROBLEMS/SOLUTIONS/COMMENTS

THE SYSTEM WAS DOWN ALL MONTH DUE TO FROZEN EQUIPMENT AND LINES; MANPOWER WAS ASSIGNED TO A BOILER AND TURBINE OVERHAUL ON ANOTHER UNIT.

2/76	4A	.0	.0				
	4B	78.0	64.7				
	SYSTEM	38.9	32.3	696	579	225	

** PROBLEMS/SOLUTIONS/COMMENTS

MODULE 4A WAS SHUT DOWN THE ENTIRE MONTH BECAUSE OF CONTINUING LOSS OF DRAFT THROUGH THE DUCTWORK FROM THE ECONOMIZER TO THE AIR PREHEATER.

MODULE B EXPERIENCED PLUGGING IN THE MARBLE BED.

A RECYCLE PUMP MALFUNCTIONED ON THE B-SIDE.

3/76	4A	.0	.0				
	4B	3.0	3.2				
	SYSTEM	1.7	1.6	744	706	12	

** PROBLEMS/SOLUTIONS/COMMENTS

THE UNIT'S BYPASS SEALS WERE REPLACED WITH SLIDE-GATE DAMPERS.

4/76	4A	42.0	32.1				
	4B	40.0	30.6				
	SYSTEM	41.0	31.3	720	550	226	
5/76	4A	39.3	26.7				
	4B	43.4	29.5				
	SYSTEM	41.3	28.1	744	506	209	

** PROBLEMS/SOLUTIONS/COMMENTS

ONE OF THE REHEAT TUBE BUNDLES WAS REMOVED TO FACILITATE CLEANING AND MAINTENANCE DUE TO PLUGGING PROBLEMS.

CURRENTLY, THE UTILITY IS IN THE PROCESS OF MODIFYING THE SCRUBBING SYSTEM FROM A LIMESTONE INJECTION AND TAIL-END SCRUBBING BASED SYSTEM TO A LIME SLURRY BASED SYSTEM.

6/76	4A	65.0	40.8				
	4B	5.0	3.2				
	SYSTEM	34.5	22.0	720	460	158	
7/76	SYSTEM			744			
8/76	SYSTEM			744			
9/76	SYSTEM			720			

** PROBLEMS/SOLUTIONS/COMMENTS

THE SYSTEM WAS OUT OF SERVICE VIRTUALLY THE ENTIRE REPORT PERIOD DUE TO A MAJOR EXPLOSION WHICH OCCURRED IN THE COAL MILL PULVERIZING AREA OF UNIT 5 5, WHICH SERIOUSLY HAMPERED OPERATIONS AND MANPOWER COMMITMENTS.

10/76	SYSTEM			744			
11/76	4A	91.0	61.4				
	4B	.0	.0				
	SYSTEM	45.5	30.7	720	486	221	

PERIOD	MODULE	AVAILABILITY	OPERABILITY	RELIABILITY	UTILIZATION	% REMOVAL SO2	% REMOVAL PART.	PER HOURS	BOILER HOURS	FGD HOURS	CAP. FACTOR
		PERFORMANCE DATA									
	** PROBLEMS/SOLUTIONS/COMMENTS										
		THE UTILITY IS IN THE PROCESS OF CONVERTING THE SYSTEM TO A WET LIME SCRUBBING SYSTEM, WHICH WILL COMMENCE OPERATIONS IN THE FIRST PART OF JANUARY.									
12/76	4A				.0						
	4B				.0						
	SYSTEM				.0			744	0		0
1/77	4A		85.0		65.5						
	4B		74.0		57.0						
	SYSTEM		79.7		61.3			744	572		456
	** PROBLEMS/SOLUTIONS/COMMENTS										
		THE UNIT BECAME AVAILABLE FOR SERVICE IN THE LIME SCRUBBING MODE ON JAN. 1, 1977. TESTING FOR COMPLIANCE WITH PARTICULATE CODES OCCURRED DURING THE MONTH. THE UNIT WAS FOUND TO MEET THE EMISSION REGULATION OF 0.17 LB/T MM BTU BURNING 2.0% SULFUR COAL. SYSTEM OPERATIONS ARE STILL CONTINUING SOLIDS AND 100% BLOWDOWN. THE FRESH WATER MAKE-UP REQUIREMENT IS 7.06PM/MW. AT 0% SOLIDS AND 100% BLOWDOWN. THE FRESH WATER MAKE-UP REQUIREMENT IS 770 GPM/MW.									
2/77	4A		80.0		69.6						
	4B		50.0		43.5						
	SYSTEM		65.0		56.5			672	591		380
3/77	4A		82.0		59.1						
	4B		97.0		70.5						
	SYSTEM		89.5		64.8			744	539		482
4/77	4A		43.0		43.2						
	4B		43.0		43.2						
	SYSTEM		43.0		43.2			720	720		311
	** PROBLEMS/SOLUTIONS/COMMENTS										
		THE SYSTEM IS NOW OPERATING WELL AT ABOUT 15-25% BLOWDOWN. THE PH CONTROL SYSTEM OPERATIONS HAVE BEEN EXCELLENT. DURING MAY THE BOILER BURNED GAS FO 408 HOURS (NOT INCLUDED IN THE OPERABILITY VALUES). SO2 REMOVAL EFFICIENCY IS ESTIMATED AT 50-60% FOR BOTH MODULES. ALTHOUGH ACTUAL TESTS HAVE NOT BEEN RUN FOR ONE-AND-A-HALF YEARS. CURRENTLY BOTH MODULES ARE BEING OPERATED SIMULTANEOUSLY.									
5/77	4A		54.0		24.2						
	4B		54.0		24.2						
	SYSTEM		54.0		24.2			744	740		180
6/77	SYSTEM		.0		.0			720	720		0
	** PROBLEMS/SOLUTIONS/COMMENTS										
		UNIT NO. 4 FIRED GAS THROUGHOUT THE MONTH, ALLOWING THE SCRUBBER PLANT TO BE SHUT DOWN FOR MODIFICATIONS DURING THE PERIOD.									
		MODIFICATIONS TO THE SCRUBBER MODULES INCLUDED: REPLACEMENT OF THE UNDER-BED SPRAY HEADERS WITH 316L SS, INSTALLATION OF A NEW REACTION TANK LINER, AND REPLACEMENT OF THE ORIGINAL CARBON STEEL PIPING WITH RUBBER-LINED PIPING (FROM THE RECYCLE PUMPS TO THE SPRAY MANIFOLD).									
7/77	4A		17.2		16.1						
	4B		17.2		16.1						
	SYSTEM		17.2		16.1			744	696		120

KANSAS CITY POWER & LIGHT: HAWTHORN 4 (CONT.)

PERIOD	MODULE	AVAILABILITY	OPERABILITY	RELIABILITY	UTILIZATION	% REMOVAL SO2	% REMOVAL PART.	PER HOURS	BOILER HOURS	FGD HOURS	CAP. FACTOR
				PERFORMANCE DATA							

** PROBLEMS/SOLUTIONS/COMMENTS

THE STAINLESS STEEL MODIFICATIONS WERE COMPLETED BY JULY 25 AND THE UNIT RESUMED COAL FIRING. THE SCRUBBER MODULES WERE IN SERVICE APPROXIMATELY 120 HOURS FOR THE REMAINDER OF THE MONTH. THE SYSTEM SUCCESSFULLY COMPLETE FEDERAL PARTICULATE REMOVAL TESTS (0.15 LB/MM BTU MEASURED) DURING THIS TIME, WHILE BURNING HIGH SULFUR, HIGH ASH (PEABODY-OKLAHOMA) COAL. OPACITY TESTS FOR BOTH UNITS 3 AND 4 WILL BE CONDUCTED IN SEPTEMBER.

DURING THE LATTER PART OF SEPTEMBER THE CALRIFIER BECAME PLUGGED. THE UNIT FIRED NATURAL GAS UNTIL THE CLARIFIER WAS CLEANED.

8/77	4A			100.0		74.0				
	4B			100.0		74.0				
	SYSTEM			100.0		74.0		744	550	550
9/77	4A			88.3		72.2				
	4B			88.3		72.2				
	SYSTEM			88.3		72.2		720	589	520
10/77	SYSTEM	74.0		100.0		73.9		744	550	550
11/77	SYSTEM	69.0		100.0		68.9		720	496	496

** PROBLEMS/SOLUTIONS/COMMENTS

DURING OCTOBER THE BOILER WENT DOWN DUE TO A PROBLEM WITH THE GENERATOR EXCITER.

THE FGD SYSTEM CAUSED OUTAGE TIME DUE TO A PLUGGED HEADER.

AN OUTAGE OCCURRED WHEN THE LIQUID LEVEL IN THE INTERNAL REACTION TANK EXCEEDED CONTROL LEVEL RESULTING IN PROBLEMS TO THE INLET GAS DUCT OF THE SCRUBBER.

DURING NOVEMBER THERE WERE TWO INSTANCES OF PLUGGED UNDER BED NOZZLES ON THE 4A MODULE.

ON NOVEMBER 10 AN EPA OPACITY TEST WAS RUN ON MODULES 3 AND 4. AVERAGE OPACITY WAS 16.76% RUNNING AT OR NEAR FULL LOAD. THE UNITS ARE NOW CERTIFIED FOR PARTICULATE AND OPACITY.

THE BOILER AND FGD SYSTEM MUST RUN SIMULTANEOUSLY BECAUSE NO BY-PASS IS ALLOWED EXCEPT DURING EMERGENCIES. WHENEVER THE BOILER IS DOWN THE SCRUBBER IS EFFECTIVELY UNAVAILABLE BECAUSE THE DOWN TIME IS UTILIZED FOR SCRUBBER MAINTENANCE AND REPAIR. THEREFORE, AVAILABILITY AND UTILIZATION FACTORS ARE IDENTICAL FOR THIS SYSTEM.

12/77	SYSTEM	70.0		100.0		69.9		744	520	520
1/78	SYSTEM	68.0		100.0		68.3		744	508	508

** PROBLEMS/SOLUTIONS/COMMENTS

DURING JANUARY A PROBLEM WITH THE SPRAY NOZZLES PLUGGING WAS ENCOUNTERED. SOME NEW SPRAY NOZZLES WERE INSTALLED.

THE SCRUBBER ON THE RECYCLE PUMP MALFUNCTIONED CAUSING DOWN TIME.

THERE WERE SEVERAL BOILER RELATED OUTAGES IN JANUARY.

2/78	SYSTEM			29.5		29.5		672	672	198

** PROBLEMS/SOLUTIONS/COMMENTS

THE UNIT WAS DOWN THREE TIMES DURING FEBRUARY FOR NON-SCRUBBER RELATED PROBLEMS AND ONCE FOR A FUEL SAFETY TRIP. IN MARCH THERE WERE THREE ECONOMIZER LEAK OUTAGES (APPROX. 231 HOURS).

PERIOD	MODULE	AVAILABILITY	OPERABILITY	RELIABILITY	UTILIZATION	% REMOVAL SO2	% REMOVAL PART.	PER HOURS	BOILER HOURS	FGD HOURS	CAP. FACTOR
			PERFORMANCE DATA								

THE UNIT WAS DOWN ONCE IN FEBRUARY AND AGAIN FOR 32 HOURS IN MARCH FOR GENERAL MAINTENANCE.

3/78	SYSTEM		63.3		63.3			744	744	471	
4/78	SYSTEM		76.0		76.0			720	720	220	

** PROBLEMS/SOLUTIONS/COMMENTS

FGD OUTAGE IN MAY WAS DUE TO CLARIFIER PLUGGING.

APRIL OUTAGE TIME WAS FOR SCHEDULED GENERAL MAINTENANCE AND CLEANING.

5/78	SYSTEM		42.0		42.0			744	744	403	
6/78	SYSTEM							720			

** PROBLEMS/SOLUTIONS/COMMENTS

NO INFORMATION WAS AVAILABLE FOR THE JUNE-JULY PERIOD BECAUSE OF A PLANT STRIKE.

7/78	SYSTEM							744			
8/78	SYSTEM							744			

** PROBLEMS/SOLUTIONS/COMMENTS

THE SCRUBBING SYSTEM IS OPERATING ALTHOUGH THE UTILITY IS STILL IN THE MIDST OF A STRIKE. FGD PERFORMANCE FIGURES ARE NOT AVAILABLE BECAUSE THE UTILITY IS NOT RECORDING FGD OPERATION HOURS DURING THE STRIKE.

9/78	SYSTEM							720			
10/78	SYSTEM							744			

** PROBLEMS/SOLUTIONS/COMMENTS

ALTHOUGH THE STRIKE IS OVER NO OPERATIONAL DATA IS AVAILABLE. THE FGD SYSTEM IS IN OPERATION.

11/78	SYSTEM							720			
12/78	SYSTEM							744			

** PROBLEMS/SOLUTIONS/COMMENTS

HOURS OF OPERATION ARE STILL NOT AVAILABLE. THE FGD SYSTEM IS IN OPERATIO BUT AT PRESENT PERSONNEL ARE BEING REASSIGNED PREVENTING ACCURATE DATA RECORDING.

1/79	SYSTEM							744			
2/79	SYSTEM							672			
3/79	SYSTEM							744			

** PROBLEMS/SOLUTIONS/COMMENTS

OPERATING INFORMATION FOR UNIT 4 IS STILL NOT AVAILABLE.

4/79	SYSTEM	57.0	100.0		57.0			720	410	410	30.0

** PROBLEMS/SOLUTIONS/COMMENTS

AN EXCITER FAILURE ON THE GENERATOR CAUSED THE APRIL OUTAGE TIME.

5/79	SYSTEM	94.0	100.0		94.0			744	699	699	49.0

KANSAS CITY POWER & LIGHT: HAWTHORN 4 (CONT.)

PERIOD	MODULE	AVAILABILITY	OPERABILITY	RELIABILITY	UTILIZATION	% REMOVAL SO2	% REMOVAL PART.	PER HOURS	BOILER HOURS	FGD HOURS	CAP. FACTOR
		PERFORMANCE DATA									

** PROBLEMS/SOLUTIONS/COMMENTS

MAY OUTAGE TIME WAS FOR SCRUBBER CLEANING AND GENERAL MAINTENANCE.

6/79	SYSTEM	14.0						720	101		
7/79	SYSTEM	93.0						744	692		
8/79	SYSTEM	100.0						744	744		
9/79	SYSTEM	69.0						720	497		

** PROBLEMS/SOLUTIONS/COMMENTS

DURING JULY AND AUGUST MOSTLY GAS WAS FIRED. THERE WERE NO MAJOR SCRUBBER PROBLEMS AND HIGH AVAILABILITY RESULTED BECAUSE OF THE LOW DEMAND FOR THE UNIT.

10/79	SYSTEM							744			
11/79	SYSTEM							720			
12/79	SYSTEM							744			

** PROBLEMS/SOLUTIONS/COMMENTS

NO INFORMATION WAS AVAILABLE FOR THE FOURTH QUARTER 1979.

SECTION 3
DESIGN AND PERFORMANCE DATA FOR OPERATIONAL DOMESTIC FGD SYSTEMS

COMPANY NAME	KANSAS CITY POWER & LIGHT	
PLANT NAME	LA CYGNE	
UNIT NUMBER	1	
CITY	LA CYGNE	
STATE	KANSAS	
REGULATORY CLASSIFICATION	E	
PARTICULATE EMISSION LIMITATION - NG/J	55.	(.128 LB/MMBTU)
SO2 EMISSION LIMITATION - NG/J	645.	(1.500 LB/MMBTU)
NET PLANT GENERATING CAPACITY - MW	1450.0	
GROSS UNIT GENERATING CAPACITY - MW	874.0	
NET UNIT GENERATING CAPACITY W/FGD - MW	820.0	
NET UNIT GENERATING CAPACITY WO/FGD - MW	844.0	
EQUIVALENT SCRUBBED CAPACITY - MW	874.0	
** BOILER DATA		
SUPPLIER	BABCOCK & WILCOX	
TYPE	CYCLONE	
SERVICE LOAD	BASE	
COMMERCIAL SERVICE DATE	0/73	
MAXIMUM BOILER FLUE GAS FLOW - CU.M/S	1302.44	(2760000 ACFM)
FLUE GAS TEMPERATURE - C	140.6	(285 F)
STACK HEIGHT - M	213.	(700 FT)
STACK TOP DIAMETER - M	7.0	(23.0 FT)
** FUEL DATA		
FUEL TYPE	COAL	
FUEL GRADE	SUBBITUMINOUS	
AVERAGE HEAT CONTENT - J/G	21913.	(9421 BTU/LB)
RANGE HEAT CONTENT - BTU/LB		9000-9700
AVERAGE ASH CONTENT - %	24.36	
RANGE ASH CONTENT - %	24-25	
AVERAGE MOISTURE CONTENT - %	8.60	
RANGE MOISTURE CONTENT - %	9-10	
AVERAGE SULFUR CONTENT - %	5.39	
RANGE SULFUR CONTENT - %	5-6	
AVERAGE CHLORIDE CONTENT - %	.03	
RANGE CHLORIDE CONTENT - %	0.02-0.03	
** PARTICULATE SCRUBBER		
NUMBER	8	
TYPE	VENTURI	
SUPPLIER	BABCOCK & WILCOX	
NUMBER OF STAGES	1	
SHELL MATERIAL	316L SS	
LINING MATERIAL	KAOCRETE CERAMIC	
INTERNAL MATERIAL	NONE	
NUMBER OF NOZZLES	80	
TYPE OF NOZZLES	SPINNER VANE, COORS CERAMIC	
BOILER LOAD/SCRUBBER - %	12.5	
FLUE GAS CAPACITY - CU.M/S	162.8	(345000 ACFM)
FLUE GAS TEMPERATURE - C	140.6	(285 F)
LIQUID RECIRCULATION RATE - LITER/S	315.0	(5000 GPM)
L/G RATIO - LITER/CU.M	1.6	(12.0 GAL/1000ACF)
PRESSURE DROP - KPA	*******	(***** IN-H2O)
SUPERFICIAL GAS VELOCITY - M/S	39.6	(130.0 FT/S)
PARTICULATE DESIGN REMOVAL EFFICIENCY - %	98.2	
SO2 INLET CONCENTRATION - PPM	4500.000	
** FGD SYSTEM		
SALEABLE PRODUCT/THROWAWAY PRODUCT	THROWAWAY PRODUCT	
GENERAL PROCESS TYPE	WET SCRUBBING	
PROCESS TYPE	LIMESTONE	
PROCESS ADDITIVES	NONE	
SYSTEM SUPPLIER	BABCOCK & WILCOX	
A-E FIRM	BLACK & VEATCH	
DEVELOPMENT LEVEL	FULL SCALE	
NEW/RETROFIT	NEW	
PARTICULATE DESIGN REMOVAL EFFICIENCY - %	99.50	
SO2 DESIGN REMOVAL EFFICIENCY - %	80.00	
COMMERCIAL DATE	6/73	
INITIAL START-UP	2/73	
CONSTRUCTION INITIATION	4/69	

KANSAS CITY POWER & LIGHT: LA CYGNE 1 (CONT.)

** ABSORBER	
NUMBER	8
TYPE	TRAY TOWER
INITIAL START UP	2/73
SUPPLIER	BABCOCK & WILCOX
NUMBER OF STAGES	2
DIMENSIONS - FT	32 X 16 X 65
SHELL MATERIAL	316L SS
SHELL LINER MATERIAL	NONE
INTERNAL MATERIAL	316L SS SIEVE TRAY, CERAMIC NOZZLES
NUMBER OF NOZZLES	16
NOZZLE TYPE	SPINNER-VANE, CERAMIC
BOILER LOAD/ABSORBER - %	12.5
GAS FLOW - CU.M/S	112.55 (238500 ACFM)
GAS TEMPERATURE - C	50.0 (122 F)
LIQUID RECIRCULATION RATE - LITER/S	567. (9000 GPM)
L/G RATIO - L/CU.M	3.5 (26.5 GAL/1000ACF)
PRESSURE DROP - KPA	1.5 (6.0 IN-H2O)
SUPERFICAL GAS VELOCITY - M/SEC	4.6 (15.0 FT/S)
SO2 OUTLET CONTRATION - PPM	1000
** FANS	
NUMBER	6
TYPE	SCRUBBER ID
CONSTRUCTION MATERIALS	CARBON STEEL WITH SS CLAD BLADES; THE HOUSINGS A
SERVICE - WET/DRY	DRY
CAPACITY - CU.M/S	210.09 (445200 ACFM)
** FANS	
NUMBER	3
TYPE	BOILER I.D.
SERVICE - WET/DRY	DRY
** MIST ELIMINATOR	
NUMBER	8
TYPE	SIEVE TRAY
CONSTRUCTION MATERIAL	SS
CONFIGURATION	HORIZONTAL
** MIST ELIMINATOR	
NUMBER	3
TYPE	CHEVRON
CONSTRUCTION MATERIAL	FRP (DURAKANE)
CONFIGURATION	HORIZONTAL
NUMBER OF STAGES	2
NUMBER OF PASSES	3
FREEBOARD DISTANCE - M	3.66 (12.0 FT)
DEPTH - M	.24 (.8 FT)
VANE SPACING - CM	7.6 (3.00 IN)
VANE ANGLES	45 DEG.
WASH SYSTEM	FIRST STAGE,VERTICALLY UPWARD; SECOND STAGE VERT
SUPERFICIAL GAS VELOCITY - M/S	2.6 (8.4 FT/S)
PRESSURE DROP - KPA	.3 (1.4 IN-H2O)
** MIST ELIMINATOR	
NUMBER	5
TYPE	CHEVRON
CONSTRUCTION MATERIAL	FRP (DURAKANE)
CONFIGURATION	HORIZONTAL
NUMBER OF STAGES	1
NUMBER OF PASSES	3
FREEBOARD DISTANCE - M	3.66 (12.0 FT)
DEPTH - M	.24 (.8 FT)
VANE SPACING - CM	7.6 (3.00 IN)
VANE ANGLES	45 DEG.
WASH SYSTEM	FIRST STAGE VERTICALLY UPWARD; SECOND STAGE VERT
SUPERFICIAL GAS VELOCITY - M/S	2.6 (8.4 FT/S)
PRESSURE DROP - KPA	.3 (1.4 IN-H2O)
** PROCESS CONTROL CHEMISTRY	
CONTROL VARIABLES	PH, SOLIDS %
CONTROL RANGE	PH(5.6-5.8)
CONTROL MANNER	AUTOMATIC
SENSOR LOCATION	PH AT VENTURI, SOLIDS AT VENTURI RECIRC. LINE

** PUMPS

SERVICE	NUMBER
POND RETURN	2
SLURRY FEED	1
ABSORBER RECIRCULATION	8
SCRUBBER RECIRCULATION	8

** TANKS

SERVICE	NUMBER
LIMESTONE SLURRY MAKEUP	2
RECYCLE	8

** REHEATER

NUMBER	1	
TYPE	IN-LINE	
HEATING MEDIUM	STEAM	
TEMPERATURE BOOST - C	33.3	(60 F)

** REHEATER

NUMBER	1	
TYPE	HOT AIR INJECTION	
TEMPERATURE BOOST - C	33.3	(60 F)

** WATER LOOP

TYPE	CLOSED	
FRESH MAKEUP WATER ADDITION - LITERS/S	72.3	(1148 GPM)

** REAGENT PREPARATION EQUIPMENT

NUMBER OF BALL MILLS	2
REAGENT PRODUCT - % SLURRY SOLIDS	66.0

** DISPOSAL

NATURE	FINAL	
TYPE	UNLINED POND	
LOCATION	ON-SITE	
TRANSPORTATION	PUMPED	
DIMENSIONS	160 ACRES X 11 FT DEEP	
AREA - ACRES	160.0	
CAPACITY - CU.M	2152480	(1760.0 ACRE-FT)

PERFORMANCE DATA

PERIOD	MODULE	AVAILABILITY	OPERABILITY	RELIABILITY	UTILIZATION	% REMOVAL SO2	% REMOVAL PART.	PER HOURS	BOILER HOURS	FGD HOURS	CAP. FACTOR
12/72	SYSTEM							744			

** PROBLEMS/SOLUTIONS/COMMENTS

THE FIRST TRIAL OPERATION BEGAN ON DECEMBER 26, 1972 AND WAS PLAGUED WITH NUMEROUS PROBLEMS. SOME OF THESE PROBLEMS, SUCH AS VIBRATIONS OF THE INDUCED-DRAFT FANS AND THEIR SENSITIVITY TO INBALANCE, OCCURRED EVEN BEFORE THE BOILER WAS FIRED. AS THESE FABRICATION PROBLEMS WERE CORRECTED AND THE FGD SYSTEM WENT INTO OPERATION TWO OTHER TYPES OF PROBLEMS APPEARED. THE FIRST TYPE ASSOCIATED WITH THE WET LIMESTONE PROCESS, INCLUDED PLUGGING OF THE DEMISTER AND STRAINERS. THE CORROSION ASSOCIATED WITH CONDENSATION OF ACID VAPORS FROM THE GAS ON THE REHEATER TUBE BUNDLES WAS CONTROLLED BY INJECTION OF SLIP STREAMS OF HOT AIR FROM THE BOILER'S COMBUSTION AIR HEATER INTO THE SCRUBBED FLUE GASES AT THE INLET TO THE REHEATER UNITS. THIS PRACTICE WHICH REDUCED THE MAXIMUM GENERATING CAPACITY OF THE BOILER BY LIMITING THE AIR AVAILABLE FOR COAL COMBUSTION, IS NO LONGER NECESSARY BECAUSE OF SYSTEM DESIGN MODIFICATIONS.

0/74 SYSTEM

** PROBLEMS/SOLUTIONS/COMMENTS

THE 1974 FIGURES ARE BASED UPON ACTUAL SYSTEM OPERATION HOURS AS A FUNCTION OF ACTUAL BOILER HOURS

1/74 A 49.0

KANSAS CITY POWER & LIGHT: LA CYGNE 1 (CONT.)

PERIOD	MODULE	AVAILABILITY	OPERABILITY	RELIABILITY	UTILIZATION	% REMOVAL SO2	% REMOVAL PART.	PER HOURS	BOILER HOURS	FGD HOURS	CAP. FACTOR
		PERFORMANCE DATA									
	B	32.0									
	C	44.0									
	D	87.0									
	E	23.0									
	F	37.0									
	G	81.0									
	SYSTEM	50.0						744			
2/74	A	66.0									
	B	68.0									
	C	59.0									
	D	76.0									
	E	52.0									
	F	100.0									
	G	65.0									
	SYSTEM	69.0						672			
3/74	SYSTEM				.0			744	0		0

** PROBLEMS/SOLUTIONS/COMMENTS

THE BOILER WAS SHUTDOWN FOR THE ENTIRE MONTH OF MARCH.

4/74	A	67.0									
	B	70.0									
	C	75.0									
	D	88.0									
	E	74.0									
	F	100.0									
	G	88.0									
	SYSTEM	80.0						720			
5/74	A	69.0									
	B	83.0									
	C	78.0									
	D	85.0									
	E	78.0									
	F	84.0									
	G	80.0									
	SYSTEM	80.0						744			
6/74	A	92.0									
	B	84.0									
	C	83.0									
	D	90.0									
	E	82.0									
	F	83.0									
	G	87.0									
	SYSTEM	86.0						720			
7/74	A	75.0									
	B	80.0									
	C	80.0									
	D	81.0									
	E	85.0									
	F	79.0									
	G	77.0									
	SYSTEM	80.0						744			
8/74	A	90.0									
	B	90.0									
	C	73.0									
	D	81.0									
	E	81.0									
	F	78.0									
	G	99.0									
	SYSTEM	85.0						744			
9/74	A	69.0									

PERIOD	MODULE	AVAILABILITY	OPERABILITY	RELIABILITY	UTILIZATION	% REMOVAL SO2	% REMOVAL PART.	PER HOURS	BOILER HOURS	FGD HOURS	CAP. FACTOR
		PERFORMANCE DATA									
	B	88.0									
	C	73.0									
	D	76.0									
	E	83.0									
	F	89.0									
	G	86.0									
	SYSTEM	81.0						720			
10/74	A	90.0									
	B	71.0									
	C	60.0									
	D	61.0									
	E	84.0									
	F	85.0									
	G	84.0									
	SYSTEM	76.0						744			
11/74	A	90.0									
	B	71.0									
	C	60.0									
	D	61.0									
	E	84.0									
	F	85.0									
	G	84.0									
	SYSTEM	76.0						720			
12/74	SYSTEM				.0			744	0	0	
0/75	SYSTEM										

** PROBLEMS/SOLUTIONS/COMMENTS

THE 1975 FIGURES ARE BASED UPON SYSTEM AVAILABL HOURS AS A FUNCTION OF HOURS IN THE PERIOD.

1/75	SYSTEM				.0			744	0	0	

** PROBLEMS/SOLUTIONS/COMMENTS

THE BOILER WAS SHUTDOWN DURING JANUARY AND FEBRUARY.

2/75	SYSTEM				.0			672	0	0	
3/75	A	82.0									
	B	96.0									
	C	90.0									
	D	76.0									
	E	93.0									
	F	92.0									
	G	96.0									
	SYSTEM	90.0						744	694		

** PROBLEMS/SOLUTIONS/COMMENTS

DURING REDUCED LOAD CONDITIONS SOME OF THE MODULES WERE NOT REQUIRED AND THEREFORE SHUT DOWN ALTHOUGH THEY WERE AVAILABLE. AVAILABILITY WAS THEREFOR HIGHER THAN SOME OF THE POSTED FIGURES INDICATE.

4/75	SYSTEM							720			
5/75	A	95.0									
	B	85.0									
	C	94.0									
	D	90.0									
	E	90.0									
	F	89.0									
	G	83.0									
	SYSTEM	89.0						744	683		
6/75	A	88.0									

KANSAS CITY POWER & LIGHT: LA CYGNE 1 (CONT.)

PERIOD	MODULE	AVAILABILITY	OPERABILITY	RELIABILITY	UTILIZATION	% REMOVAL SO2	% REMOVAL PART.	PER HOURS	BOILER HOURS	FGD HOURS	CAP. FACTOR
	B	85.0									
	C	84.0									
	D	85.0									
	E	84.0									
	F	86.0									
	G	89.0									
	SYSTEM	86.0						720	667		
7/75	A	78.0									
	B	90.0									
	C	90.0									
	D	84.0									
	E	85.0									
	F	87.0									
	G	85.0									
	SYSTEM	86.0						744	590		
8/75	A	75.0									
	B	88.0									
	C	87.0									
	D	78.0									
	E	92.0									
	F	85.0									
	G	83.0									
	SYSTEM	84.0						744	630		

** PROBLEMS/SOLUTIONS/COMMENTS

MODULES A AND D ARE USED FOR RESEARCH TESTS. ONE MODULE IS SHUT DOWN EACH EVENING FOR CLEANING.

9/75	A	78.0									
	B	84.0									
	C	84.0									
	D	85.0									
	E	79.0									
	F	78.0									
	G	74.0									
	SYSTEM	80.0						720	610		
10/75	A	66.0									
	B	77.0									
	C	46.0									
	D	74.0									
	E	72.0									
	F	73.0									
	G	65.0									
	SYSTEM	68.0						744	231		

** PROBLEMS/SOLUTIONS/COMMENTS

THE SYSTEM WAS DOWN OCTOBER 16 TO NOVEMBER 13 OWING TO PROBLEMS WITH THE GENERATOR AND I.D. AIR FAN.

AVAILABILITY FRGURES FOR OCTOBER AND NOVEMBER DO NOT INCLUDE THE OUTAGE TIME FROM OCTOBER 16 TO NOVEMBER 13.

11/75	A	93.0									
	B	90.0									
	C	80.0									
	D	93.0									
	E	96.0									
	F	89.0									
	G	94.0									
	SYSTEM	91.0						720	346		
12/75	A	91.0									
	B	87.0									
	C	81.0									

PERIOD	MODULE	AVAILABILITY	OPERABILITY	RELIABILITY	UTILIZATION	% REMOVAL SO2	% REMOVAL PART.	PER HOURS	BOILER HOURS	FGD HOURS	CAP. FACTOR
	D	85.0									
	E	87.0									
	F	89.0									
	G	84.0									
	SYSTEM	86.0						744	597		

** PROBLEMS/SOLUTIONS/COMMENTS

THREE BOILER OUTAGES OCCURRED DURING DECEMBER.

1/76	A	86.0									
	B	85.0									
	C	91.0									
	D	72.0									
	E	84.0									
	F	52.0									
	G	84.0									
	SYSTEM	83.0						744	618		
2/76	A	94.0									
	B	90.0									
	C	86.0									
	D	91.0									
	E	92.0									
	F	93.0									
	G	95.0									
	SYSTEM	92.0						696	594		
3/76	A	92.0									
	B	90.0									
	C	88.0									
	D	93.0									
	E	94.0									
	F	91.0									
	G	91.0									
	SYSTEM	91.0						744	643		
4/76	SYSTEM							720			

** PROBLEMS/SOLUTIONS/COMMENTS

THE SYSTEM WAS SHUT DOWN ON APRIL 6 FOR A SCHEDULED BOILER, AIR PREHEATER, AND STACK BREECHING OVERHAUL. THE UNIT WAS RESTARTED ON MAY 10.

DURING THE OUTAGE SOME MAINTENANCE WAS PREFORMED ON THE SCRUBBER DUCTWORK, PRIMARILY BECAUSE OF CORROSION PROBLEMS.

5/76	A	96.0									
	B	92.0									
	C	93.0									
	D	96.0									
	E	89.0									
	F	95.0									
	G	96.0									
	SYSTEM	94.0						744	436		

** PROBLEMS/SOLUTIONS/COMMENTS

FROM MAY 10 TO THE END OF THE MONTH FOUR UNIT OUTAGES WERE ENCOUNTERED.

6/76	A	93.0									
	B	94.0									
	C	94.0									
	D	95.0									
	E	93.0									
	F	93.0									
	G	91.0									
	SYSTEM	93.0						720			

KANSAS CITY POWER & LIGHT: LA CYGNE 1 (CONT.)

PERIOD	MODULE	AVAILABILITY	OPERABILITY	RELIABILITY	UTILIZATION	% REMOVAL SO2	% REMOVAL PART.	PER HOURS	BOILER HOURS	FGD HOURS	CAP. FACTOR
				PERFORMANCE DATA							
	** PROBLEMS/SOLUTIONS/COMMENTS										
			FOUR FORCED MINOR SCRUBBER OUTAGES OCCURRED DURING JUNE.								
7/76	A	96.0									
	B	95.0									
	C	92.0									
	D	93.0									
	E	93.0									
	F	94.0									
	G	94.0									
	SYSTEM	94.0						744			
	** PROBLEMS/SOLUTIONS/COMMENTS										
			TWO MINOR SCRUBBER OUTAGES OCCURRED DURING JULY.								
			THE UNIT RECORDED ITS LARGEST MW-HOUR MONTH SINCE INITIATION OF COMMERCIAL OPERATION.								
8/76	A	94.0									
	B	93.0									
	C	92.0									
	D	94.0									
	E	92.0									
	F	90.0									
	G	88.0									
	SYSTEM	92.0						744			
	** PROBLEMS/SOLUTIONS/COMMENTS										
			THE UNIT WAS TAKEN OUT OF SERVICE AUGUST 24 FOR REPAIR OF A TURBINE BLADE. THE UNIT WAS RETURNED TO SERVICE ON OCTOBER 20. OPERATION WAS INTERMITTENT PENDING TURBINE BLADE REBALANCING AND REESTABLISHMENT OF NORMAL OPERATING CONDITIONS.								
			DURING THE TURBINE REPAIR PERIOD THE UTILITY COATED THE STACK INNER STRUCTURE WITH PLASTITE 4005.								
			THE AUGUST AVAILABILITY FIGURES DO NOT INCLUDE THE OUTAGE TIME.								
9/76	SYSTEM				.0			720	0	0	
	** PROBLEMS/SOLUTIONS/COMMENTS										
			THE SYSTEM WAS DOWN DUE TO TURBINE REPAIR.								
10/76	SYSTEM							744			
11/76	A	95.0									
	B	93.0									
	C	94.0									
	D	95.0									
	E	94.0									
	F	93.0									
	G	94.0									
	SYSTEM	94.0						720	627		
12/76	A	87.0									
	B	89.0									
	C	81.0									
	D	94.0									
	E	94.0									
	F	95.0									
	G	91.0									
	SYSTEM	90.0						744	706		

PERIOD	MODULE	AVAILABILITY	OPERABILITY	RELIABILITY	UTILIZATION	% REMOVAL SO2	% REMOVAL PART.	PER HOURS	BOILER HOURS	FGD HOURS	CAP. FACTOR
		PERFORMANCE DATA									
	** PROBLEMS/SOLUTIONS/COMMENTS										
		THE A-MODULE VENTURI RECYCLE PUMP EXPERIENCED SOME PROBLEMS AND WAS REPAIRED.									
		THE C-MODULE'S REHEAT STEAM TUBE BUNDLES WERE INCREASED IN NUMBER FROM FOUR TO EIGHT.									
1/77	A	94.0									
	B	90.0									
	C	95.0									
	D	95.0									
	E	95.0									
	F	92.0									
	G	90.0									
	SYSTEM	93.0						744	714		
2/77	A	93.0									
	B	93.0									
	C	93.0									
	D	94.0									
	E	93.0									
	F	94.0									
	G	88.0									
	SYSTEM	93.0						672	634		
3/77	A	94.0									
	B	92.0									
	C	86.0									
	D	94.0									
	E	91.0									
	F	94.0									
	G	90.0									
	SYSTEM	92.0						744			
	** PROBLEMS/SOLUTIONS/COMMENTS										
		THE EIGTH MODULE HAS BEEN INSTALLED.									
		THE MIST ELIMINATORS IN TWO MODULES HAVE BEEN MODIFIED TO THE POINT WHERE THEY HAVE BEEN OPERATING CONTINUOUSLY CLEAN.									
		ADDITIONAL BANKS OF STEAM TUBE BUNDLES HAVE BEEN INSTALLED IN SOME MODULES 50 F OF REHEAT HAS BEEN DETERMINED AS THE NECESSARY AMOUNT FOR THE LA CYNGE NO. 1 UNIT.									
		THE WATER LOOP IS NOW 95% CLOSED.									
		A NEW SETTLING POND IS BEING INSTALLED AT THE PLANT.									
		THE PLANT IS STILL GENERATING 700-720 MW DURING THE DAY AND 500-570 MW AT NIGHT.									
4/77	A	96.0									
	B	94.0									
	C	97.0									
	D	94.0									
	E	95.0									
	F	96.0									
	G	95.0									
	SYSTEM	95.0						720			
	** PROBLEMS/SOLUTIONS/COMMENTS										
		THE EIGHT MODULE HAS BEEN RUN FOR TWO DAYS.									
5/77	SYSTEM				.0			744	0	0	

KANSAS CITY POWER & LIGHT: LA CYGNE 1 (CONT.)

PERIOD	MODULE	AVAILABILITY	OPERABILITY	RELIABILITY	UTILIZATION	% REMOVAL SO2	% REMOVAL PART.	PER HOURS	BOILER HOURS	FGD HOURS	CAP. FACTOR
		PERFORMANCE DATA									
	** PROBLEMS/SOLUTIONS/COMMENTS										
		THE UNIT WAS SHUT DOWN IN MAY DUE TO TURBINE PROBLEMS. THE UNIT RESTARTED JULY 5, 1977.									
		THE MIST ELIMATOR WASHING CONFIGURATION IS BEING CHANGED TO WORK COUNTERCURRENT TO THE GAS FLOW.									
		ADDITIONAL TUBE BUNDLES ARE BEING ADDED TO INCREASE THE REHEAT AREA.									
		THE NEW SETTLING POND IS STILL BEING DRAWN UP. EXCAVATION HAS NOT BEGUN.									
6/77	SYSTEM				.0			720	0	0	
	** PROBLEMS/SOLUTIONS/COMMENTS										
		MINOR CLEANOUT AND REPAIR WORK WAS DONE ON THE SCRUBBING SYSTEM DURING THE TURBINE OUTAGE.									
7/77	A	95.0									
	B	93.0									
	C	94.0									
	D	95.0									
	E	95.0									
	F	95.0									
	G	95.0									
	H	95.0									
	SYSTEM	95.0						744	528		
	** PROBLEMS/SOLUTIONS/COMMENTS										
		RESUMPTION OF OPERATIONS WAS CONDUCTED WITH EIGHT SCRUBBER MODULES IN THE FLUE GAS PATH, ENABLING THE UNIT TO OPERATE AT A MAXIMUM CONTINUOUS LOAD CAPACITY OF 800-820 MW.									
8/77	A	89.0									
	B	55.0									
	C	93.0									
	D	93.0									
	E	90.0									
	F	93.0									
	G	93.0									
	H	94.0									
	SYSTEM	87.0						744	507		
	** PROBLEMS/SOLUTIONS/COMMENTS										
		PARTICULATE REMOVAL TESTS WERE CONDUCTED IN LATE AUGUST AND UNIT NO.1 HAS PASSED THE COMPLIANCE REQUIREMENTS (0.13 LB/MM BTU).									
		MODULE B HAD LOW AVAILABILITY DUE TO THE BURNING OF THE MOTOR ON THE RECIRCULATING PUMP. IT WAS REMOVED AND STARTED AGAIN AFTER 12 DAYS.									
9/77	A	93.0									
	B	94.0									
	C	89.0									
	D	90.0									
	E	93.0									
	F	95.0									
	G	92.0									
	H	93.0									
	SYSTEM	92.0				72.80		720	524		
10/77	A	91.0									
	B	96.0									
	C	89.0									
	D	94.0									

PERIOD	MODULE	AVAILABILITY	OPERABILITY	RELIABILITY	UTILIZATION	% REMOVAL SO2	% REMOVAL PART.	PER HOURS	BOILER HOURS	FGD HOURS	CAP. FACTOR
		PERFORMANCE DATA									
	E	93.0									
	F	94.0									
	G	89.0									
	H	93.0									
	SYSTEM	92.0						744	456		

** PROBLEMS/SOLUTIONS/COMMENTS

A 12 DAY OUTAGE IN OCTOBER WAS REQUIRED TO DESLAG THE BOILER.

11/77	A	93.0									
	B	96.0									
	C	93.0									
	D	94.0									
	E	92.0									
	F	93.0									
	G	96.0									
	H	95.0									
	SYSTEM	94.0						720	234		

** PROBLEMS/SOLUTIONS/COMMENTS

THE BOILER WAS SHUT DOWN NOVEMBER 15 BECAUSE OF A NECESSARY TURBINE OVERHAUL. THE BOILER WENT BACK ON LINE DECEMBER 25.

12/77	A	98.0									
	B	98.0									
	C	96.0									
	D	96.0									
	E	96.0									
	F	97.0									
	G	98.0									
	H	99.0									
	SYSTEM	97.0						744	300		

** PROBLEMS/SOLUTIONS/COMMENTS

THERE WERE A FEW SMALL BOILER RELATED OUTAGES IN DECEMBER.

1/78	A	90.0									
	B	95.0									
	C	95.0									
	D	95.0									
	E	93.0									
	F	94.0									
	G	94.0									
	H	94.0									
	SYSTEM	94.0						744	300		

** PROBLEMS/SOLUTIONS/COMMENTS

THERE WERE SOME BOILER RELATED OUTAGES IN JANUARY, TOTALING ABOUT 50 HOURS.

THE FGD SYSTEM CONTINUED TO OPERATE WITHOUT ANY PROBLEMS.

2/78	A	92.0									
	B	93.0									
	C	95.0									
	D	94.0									
	E	91.0									
	F	97.0									
	G	96.0									
	H	93.0									
	SYSTEM	94.0						672	578		
3/78	A	95.0									
	B	95.0									
	C	90.0									

KANSAS CITY POWER & LIGHT: LA CYGNE 1 (CONT.)

PERIOD	MODULE	AVAILABILITY	OPERABILITY	RELIABILITY	UTILIZATION	% REMOVAL SO2	% REMOVAL PART.	PER HOURS	BOILER HOURS	FGD HOURS	CAP. FACTOR
		PERFORMANCE DATA									
	D	95.0									
	E	94.0									
	F	95.0									
	G	89.0									
	H	93.0									
	SYSTEM	93.0						744	741		
4/78	A	91.0									
	B	92.0									
	C	93.0									
	D	91.0									
	E	90.0									
	F	92.0									
	G	91.0									
	H	91.0									
	SYSTEM	91.0						720	620		

** PROBLEMS/SOLUTIONS/COMMENTS

THE BOILER WAS DOWN A TOTAL OF 100 HOURS IN APRIL. THIS TIME INCLUDED THREE OUTAGES DUE TO BOILER LEAKS AND LACK OF LOAD REQUIREMENT.

DURING THE BOILER OUTAGES MODIFICATIONS TO THE FGD SYSTEM INCLUDED CHANGING THE REHEAT TUBE BUNDLES.

5/78	A	89.0									
	B	92.0									
	C	92.0									
	D	93.0									
	E	92.0									
	F	91.0									
	G	93.0									
	H	86.0									
	SYSTEM	91.0						744	593		

** PROBLEMS/SOLUTIONS/COMMENTS

IN MAY THE BOILER WAS DOWN TWICE FOR A TOTAL OF 15 HOURS. OUTAGES WERE AGAIN CAUSED BY BOILER LEAKS.

GENERAL MAINTENANCE AND REPAIRS ON THE FGD SYSTEM CONTINUED.

6/78	SYSTEM							720	150		

** PROBLEMS/SOLUTIONS/COMMENTS

THE UNIT WAS UP FOR ONLY 15 HOURS IN JUNE. IN THE FIRST PART OF JUNE THERE WERE BOILER TUBE LEAKS. FROM JUNE 8 TO JUNE 17 A BOILER OUTAGE WAS NECESSARY FOR GENERATOR REPAIR.

7/78	A	88.0									
	B	97.0									
	C	92.0									
	D	94.0									
	E	88.0									
	F	93.0									
	G	93.0									
	H	95.0									
	SYSTEM	93.0						744	341		

** PROBLEMS/SOLUTIONS/COMMENTS

DURING THE JULY-SEPTEMBER FERIOD TWO I.D. FAN ROTERS WERE REPLACED.

8/78	A	92.0									
	B	93.0									
	C	95.0									
	D	96.0									
	E	93.0									

PERFORMANCE DATA

PERIOD	MODULE	AVAILABILITY	OPERABILITY	RELIABILITY	UTILIZATION	% REMOVAL SO2	% REMOVAL PART.	PER HOURS	BOILER HOURS	FGD HOURS	CAP. FACTOR
	F	94.0									
	G	95.0									
	H	95.0									
	SYSTEM	94.0						744	577		

** PROBLEMS/SOLUTIONS/COMMENTS

THERE WERE TWO BOILER OUTAGES IN AUGUST.

THE UTILITY IS EXPERIMENTING WITH A 3-STAGE MIST ELIMINATOR AND SOME DOUBLE STAGE MIST ELIMINATORS. BETTER MIST ELIMINATION AT THE SCRUBBER EXIT WOULD REDUCE THE FREQUENCY OF REHEATER CLEANING.

9/78	A	96.0									
	B	96.0									
	C	96.0									
	D	96.0									
	E	96.0									
	F	96.0									
	G	95.0									
	H	97.0									
	SYSTEM	96.0						720	720		
10/78	A	96.0									
	B	96.0									
	C	98.0									
	D	97.0									
	E	97.0									
	F	98.0									
	G	97.0									
	H	96.0									
	SYSTEM	97.0						744	255		

** PROBLEMS/SOLUTIONS/COMMENTS

THE UTILITY REPORTED THAT NO UNUSUAL OPERATING PROBLEMS WERE ENCOUNTERED.

11/78	A	92.0									
	B	95.0									
	C	94.0									
	D	93.0									
	E	94.0									
	F	93.0									
	G	94.0									
	H	96.0									
	SYSTEM	94.0						720	720		
12/78	A	93.9									
	B	92.9									
	C	94.0									
	D	95.0									
	E	94.7									
	F	90.5									
	G	94.4									
	H	94.7									
	SYSTEM	93.7						744	239		

** PROBLEMS/SOLUTIONS/COMMENTS

DURING THIS PERIOD THE UNIT EXPERIENCED A MULTITUDE OF COILER OUTAGES.

1/79	A	95.6									
	B	96.5									
	C	97.2									
	D	96.3									
	E	90.7									
	F	97.2									
	G	97.2									
	H	95.4									
	SYSTEM	95.7						744	205		

KANSAS CITY POWER & LIGHT: LA CYGNE 1 (CONT.)

PERIOD	MODULE	AVAILABILITY	OPERABILITY	RELIABILITY	UTILIZATION	% REMOVAL SO2	% REMOVAL PART.	PER HOURS	BOILER HOURS	FGD HOURS	CAP. FACTOR
		PERFORMANCE DATA									
2/79	A	95.0									
	B	94.6									
	C	92.6									
	D	93.5									
	E	95.1									
	F	94.3									
	G	94.1									
	H	93.8									
	SYSTEM	94.1						672	342		
3/79	A	96.1									
	B	96.0									
	C	93.2									
	D	95.6									
	E	96.5									
	F	94.8									
	G	95.7									
	H	93.4									
	SYSTEM	95.2						744	314		

** PROBLEMS/SOLUTIONS/COMMENTS

NO MAJOR FGD SYSTEM PROBLEMS WERE REPORTED BY THE UTILITY FOR FEBRUARY OR MARCH.

THE UTILITY HAS REPORTED THAT MANY TUBE LEAKS AND CYCLONE LEAKS WERE EXPERIENCED WITH THE BOILER.

4/79	A	95.5									
	B	95.7									
	C	94.4									
	D	91.4									
	E	95.5									
	F	96.2									
	G	95.9									
	H	95.7									
	SYSTEM	95.0						720	638		
5/79	A	96.5									
	B	96.3									
	C	96.7									
	D	95.3									
	E	95.4									
	F	95.7									
	G	96.3									
	H	95.5									
	SYSTEM	96.0						744	476		

** PROBLEMS/SOLUTIONS/COMMENTS

THE UTILITY REPORTED THAT NO MAJOR FGD PROBLEMS HAD OCCURRED.

6/79	SYSTEM				.0			720	0	0	

** PROBLEMS/SOLUTIONS/COMMENTS

THE UNIT WAS REMOVED FROM SERVICE THE LATTER PART OF MAY FOR SCHEDULED BOILER OVERHAUL AND REMAINED OUT OF SERVICE THROUGH JUNE.

7/79	SYSTEM				.0			744	0	0	

** PROBLEMS/SOLUTIONS/COMMENTS

THE TURBINE WAS OVERHAULED DURING JULY. DURING THE OUTAGE SOME MINOR MAINTENANCE WAS PERFORMED ON THE SCRUBBING SYSTEM.

8/79	A	86.8									
	B	95.9									

PERFORMANCE DATA

PERIOD	MODULE	AVAILABILITY	OPERABILITY	RELIABILITY	UTILIZATION	% REMOVAL SO2	% REMOVAL PART.	PER HOURS	BOILER HOURS	FGD HOURS	CAP. FACTOR
	C	96.3									
	D	96.3									
	E	95.9									
	F	96.2									
	G	88.5									
	H	96.9									
	SYSTEM	94.1						744	231		
9/79	A	96.0									
	B	96.1									
	C	95.6									
	D	94.3									
	E	96.7									
	F	96.1									
	G	96.0									
	H	96.9									
	SYSTEM	96.0						720	618		

** PROBLEMS/SOLUTIONS/COMMENTS

THE FGD UNITS OPERATED WITH NO MAJOR PROBLEMS AND ONLY REGULAR MAINTENANCE WAS PERFORMED DURING AUGUST AND SEPTEMBER.

10/79	A	95.3									
	B	95.8									
	C	94.7									
	D	92.7									
	E	94.4									
	F	94.9									
	G	94.7									
	H	94.5									
	SYSTEM	94.6						744	436		
11/79	A	.0									
	B	.0									
	C	.0									
	D	.0									
	E	.0									
	F	.0									
	G	.0									
	H	.0									
	SYSTEM	.0						720	0		
12/79	A	.0									
	B	.0									
	C	.0									
	D	.0									
	E	.0									
	F	.0									
	G	.0									
	H	.0									
	SYSTEM	.0						744	0		

** PROBLEMS/SOLUTIONS/COMMENTS

THE UNIT WENT DOWN FOR AN OVERHAUL ON OCTOBER 19TH AND WAS OUT OF SERVICE THROUGH DECEMBER.

SECTION 3
DESIGN AND PERFORMANCE DATA FOR OPERATIONAL DOMESTIC FGD SYSTEMS

COMPANY NAME	KANSAS POWER & LIGHT	
PLANT NAME	JEFFREY	
UNIT NUMBER	1	
CITY	WAMEGO	
STATE	KANSAS	
REGULATORY CLASSIFICATION	D	
PARTICULATE EMISSION LIMITATION - NG/J	43.	(.100 LB/MMBTU)
SO2 EMISSION LIMITATION - NG/J	129.	(.300 LB/MMBTU)
NET PLANT GENERATING CAPACITY - MW	2720.0	
GROSS UNIT GENERATING CAPACITY - MW	720.0	
NET UNIT GENERATING CAPACITY W/FGD - MW	680.0	
NET UNIT GENERATING CAPACITY WO/FGD - MW	*******	
EQUIVALENT SCRUBBED CAPACITY - MW	540.0	
** BOILER DATA		
SUPPLIER	COMBUSTION ENGINEERING	
TYPE	PULVERIZED COAL	
SERVICE LOAD	BASE	
COMMERCIAL SERVICE DATE	**/**	
MAXIMUM BOILER FLUE GAS FLOW - CU.M/S	********	(******* ACFM)
FLUE GAS TEMPERATURE - C	135.6	(276 F)
STACK HEIGHT - M	183.	(600 FT)
STACK TOP DIAMETER - M	7.9	(26.0 FT)
** FUEL DATA		
FUEL TYPE	COAL	
FUEL GRADE	******	
AVERAGE HEAT CONTENT - J/G	18859.	(8125 BTU/LB)
RANGE HEAT CONTENT - BTU/LB		******
AVERAGE ASH CONTENT - %	5.80	
RANGE ASH CONTENT - %	******	
AVERAGE MOISTURE CONTENT - %	28.00	
RANGE MOISTURE CONTENT - %	******	
AVERAGE SULFUR CONTENT - %	.32	
RANGE SULFUR CONTENT - %	******	
AVERAGE CHLORIDE CONTENT - %	.01	
RANGE CHLORIDE CONTENT - %	******	
** ESP		
NUMBER	2	
TYPE	COLD SIDE	
SUPPLIER	C.E. WALTHER	
PARTICULATE DESIGN REMOVAL EFFICIENCY - %	98.6	
FLUE GAS CAPACITY - CU.M/S	1327.9	(2814000 ACFM)
FLUE GAS TEMPERATURE - C	139.4	(283 F)
PRESSURE DROP - KPA	*******	(***** IN-H2O)
PARTICULATE OUTLET LOAD - G/CU.M	.07	(.03 GR/SCF)
** PARTICULATE SCRUBBER		
TYPE	NONE	
** FGD SYSTEM		
SALEABLE PRODUCT/THROWAWAY PRODUCT	THROWAWAY PRODUCT	
GENERAL PROCESS TYPE	WET SCRUBBING	
PROCESS TYPE	LIMESTONE	
PROCESS ADDITIVES	NONE	
SYSTEM SUPPLIER	COMBUSTION ENGINEERING	
A-E FIRM	BLACK & VEATCH	
DEVELOPMENT LEVEL	FULL SCALE	
NEW/RETROFIT	NEW	
PARTICULATE DESIGN REMOVAL EFFICIENCY - %	99.00	
SO2 DESIGN REMOVAL EFFICIENCY - %	80.00	
INITIAL START-UP	8/78	
ABSORBER SPARE CAPACITY INDEX - %	20.0	
ABSORBER SPARE COMPONENT INDEX	1.0	
** ABSORBER		
NUMBER	6	
TYPE	SPRAY TOWER	
INITIAL START UP	8/78	
SUPPLIER	COMBUSTION ENGINEERING	
SHELL MATERIAL	316L SS	

KANSAS POWER & LIGHT: JEFFREY 1 (CONT.)

SHELL LINER MATERIAL	NONE	
INTERNAL MATERIAL	316L SS (2 SPRAY HEADERS)	
PRESSURE DROP - KPA	1.0	(4.0 IN-H2O)

** FANS

NUMBER	4	
TYPE	BOILER I.D.	
CONSTRUCTION MATERIALS	CARBON STEEL	
SERVICE - WET/DRY	DRY	

** MIST ELIMINATOR

TYPE	CHEVRON	
CONSTRUCTION MATERIAL	FIBERGLASS	
CONFIGURATION	HORIZONTAL	
NUMBER OF STAGES	2	
NUMBER OF PASSES	1	
FREEBOARD DISTANCE - M	1.22	(4.0 FT)
VANE SPACING - CM	5.1	(2.00 IN)
VANE ANGLES	45 DEG	
WASH SYSTEM	POND WATER, 150 PSIG	
SUPERFICIAL GAS VELOCITY - M/S	.3	(1.0 FT/S)

** PUMPS

SERVICE	NUMBER
ABSORBER RECIRCULATION	6

** TANKS

SERVICE	NUMBER
REACTION	4

** REHEATER

NUMBER	1	
TYPE	BYPASS	

** WATER LOOP

TYPE	CLOSED	
FRESH MAKEUP WATER ADDITION - LITERS/S	35.1	(557 GPM)

** REAGENT PREPARATION EQUIPMENT

NUMBER OF BALL MILLS	1	
BALL MILL CAPACITY- M T/H	10.9	(12.0 TPH)

** TREATMENT

PRODUCT CHARACTERISTICS	MIXED WITH BOTTOM ASH

** DISPOSAL

NATURE	FINAL
TYPE	POND
LOCATION	ON-SITE
TRANSPORTATION	PUMPED

PERFORMANCE DATA

PERIOD	MODULE	AVAILABILITY	OPERABILITY	RELIABILITY	UTILIZATION	% REMOVAL SO2	% REMOVAL PART.	PER HOURS	BOILER HOURS	FGD HOURS	CAP. FACTOR
8/78	SYSTEM							744			

** PROBLEMS/SOLUTIONS/COMMENTS

THE SYSTEM IS IN THE SHAKEDOWN PHASE OF OPERATION. EACH OF THE SIX MODULES OPERATED DURING THIS PERIOD. NO MAJOR PROBLEMS WERE REPORTED. INTEGRATED OPERATION OF THE SYSTEM IS EXPECTED DURING THE FIRST HALF OF OCTOBER.

9/78	SYSTEM							720			
10/78	SYSTEM							744			

KANSAS POWER & LIGHT: JEFFREY 1 (CONT.)

PERFORMANCE DATA

PERIOD	MODULE	AVAILABILITY	OPERABILITY	RELIABILITY	UTILIZATION	% REMOVAL SO2	% REMOVAL PART.	PER HOURS	BOILER HOURS	FGD HOURS	CAP. FACTOR
	** PROBLEMS/SOLUTIONS/COMMENTS										
	INTEGRATED OPERATION FOR THIS UNIT HAS NOT YET BEEN ACHIEVED. A CERTIFICATION TEST WHICH HAD BEEN SCHEDULED HAD TO BE CANCELLED DUE TO A BOILER OUTAGE. AT THIS TIME THE COLD WEATHER HAS FORCED POSTPONMENT OF THE TEST INDEFINITELY. MEANWHILE INTERMITTENT FGD OPERATIONS CONTINUE.										
11/78	SYSTEM							720			
12/78	SYSTEM							744			
	** PROBLEMS/SOLUTIONS/COMMENTS										
	NO PROBLEMS HAVE BEEN REPORTED FOR THIS PERIOD.										
1/79	SYSTEM							744			
2/79	SYSTEM							672			
3/79	SYSTEM							744			
4/79	SYSTEM					.0		720	0	0	.0
5/79	SYSTEM					.0		744	0	0	.0
	** PROBLEMS/SOLUTIONS/COMMENTS										
	THE BOILER WAS SHUT DOWN FOR WARRANTY INSPECTION ON APRIL 1 AND REMAINED OUT OF SERVICE DURING MAY.										
6/79	SYSTEM							720			
	** PROBLEMS/SOLUTIONS/COMMENTS										
	THE UTILITY REPORTED THAT THE UNIT RETURNED TO SERVICE THE FIRST WEEK OF JUNE AND HAS SUFFERED NO OPERATIONAL DIFFICULTIES SINCE RESTART.										
7/79	SYSTEM							744			
8/79	SYSTEM							744			
9/79	SYSTEM							720			
	** PROBLEMS/SOLUTIONS/COMMENTS										
	OPERATIONS WERE NOT UNUSUAL THROUGH JULY AND AUGUST. THE UNIT PASSED THE COMPLIANCE TEST DURING THE JUNE-JULY PERIOD. THE UNIT WILL SHUT DOWN IN MID-SEPTEMBER FOR THE NORMAL 2 WEEK INSPECTION AND MAINTENANCE OUTAGE. THE UNIT IS EXPECTED BACK ON LINE ON OCTOBER 1.										
10/79	SYSTEM							744			
11/79	SYSTEM							720			
12/79	SYSTEM							744			
	** PROBLEMS/SOLUTIONS/COMMENTS										
	THE UTILITY HAS REPORTED THAT THERE HAS BEEN NO MAJOR OPERATING PROBLEMS DURING THIS REPORT PERIOD. SOME HIGH BALL WEAR IN THE LIMESTONE BALL MILL WAS DETECTED.										
	AGITATOR FAILURES IN THE REACTION TANK HAVE OCCURRED.										

SECTION 3
DESIGN AND PERFORMANCE DATA FOR OPERATIONAL DOMESTIC FGD SYSTEMS

COMPANY NAME	KANSAS POWER & LIGHT	
PLANT NAME	LAWRENCE	
UNIT NUMBER	4	
CITY	LAWRENCE	
STATE	KANSAS	
REGULATORY CLASSIFICATION	D	
PARTICULATE EMISSION LIMITATION - NG/J	43.	(.100 LB/MMBTU)
SO2 EMISSION LIMITATION - NG/J	129.	(.300 LB/MMBTU)
NET PLANT GENERATING CAPACITY - MW	576.0	
GROSS UNIT GENERATING CAPACITY - MW	125.0	
NET UNIT GENERATING CAPACITY W/FGD - MW	115.0	
NET UNIT GENERATING CAPACITY WO/FGD - MW	*******	
EQUIVALENT SCRUBBED CAPACITY - MW	125.0	
** BOILER DATA		
SUPPLIER	COMBUSTION ENGINEERING	
TYPE	PULVERIZED COAL	
SERVICE LOAD	CYCLIC	
COMMERCIAL SERVICE DATE	0/5'	
MAXIMUM BOILER FLUE GAS FLOW - CU.M/S	190.18	(403000 ACFM)
FLUE GAS TEMPERATURE - C	137.8	(280 F)
STACK HEIGHT - M	37.	(120 FT)
STACK TOP DIAMETER - M	2.4	(8.0 FT)
** FUEL DATA		
FUEL TYPE	COAL	
FUEL GRADE	******	
AVERAGE HEAT CONTENT - J/G	23260.	(10000 BTU/LB)
RANGE HEAT CONTENT - BTU/LB		******
AVERAGE ASH CONTENT - %	9.80	
RANGE ASH CONTENT - %	******	
AVERAGE MOISTURE CONTENT - %	12.00	
RANGE MOISTURE CONTENT - %	******	
AVERAGE SULFUR CONTENT - %	.55	
RANGE SULFUR CONTENT - %	******	
AVERAGE CHLORIDE CONTENT - %	.03	
RANGE CHLORIDE CONTENT - %	******	
** ESP		
NUMBER	1	
TYPE	COLD SIDE	
PARTICULATE DESIGN REMOVAL EFFICIENCY - %	99.0	
FLUE GAS CAPACITY - CU.M/S	165.2	(350000 ACFM)
FLUE GAS TEMPERATURE - C	147.2	(297 F)
PARTICULATE OUTLET LOAD - G/CU.M	.05	(.02 GR/SCF)
** PARTICULATE SCRUBBER		
NUMBER	2	
TYPE	VENTURI	
SUPPLIER	COMBUSTION ENGINEERING	
NUMBER OF STAGES	1	
SHELL MATERIAL	316L SS	
LINING MATERIAL	NONE	
INTERNAL MATERIAL	RUBBER COATED FIBERGLASS (NORYL) RODS [SPRAY NOZ	
TYPE OF NOZZLES	NON-ATOMIZING, FAN TYPE SPRAY	
BOILER LOAD/SCRUBBER - %	50.0	
FLUE GAS CAPACITY - CU.M/S	95.1	(201500 ACFM)
FLUE GAS TEMPERATURE - C	137.8	(280 F)
LIQUID RECIRCULATION RATE - LITER/S	226.8	(3600 GPM)
L/G RATIO - LITER/CU.M	2.4	(18.0 GAL/1000ACF)
PRESSURE DROP - KPA	*******	(***** IN-H2O)
PARTICULATE INLET LOAD - G/CU.M	6.9	(3.03 GR/SCF)
SO2 INLET CONCENTRATION - PPM	.748	
** FGD SYSTEM		
SALEABLE PRODUCT/THROWAWAY PRODUCT	THROWAWAY PRODUCT	
GENERAL PROCESS TYPE	WET SCRUBBING	
PROCESS TYPE	LIMESTONE	
PROCESS ADDITIVES	NONE	
SYSTEM SUPPLIER	COMBUSTION ENGINEERING	
A-E FIRM	BLACK & VEATCH	
DEVELOPMENT LEVEL	FULL SCALE	

KANSAS POWER & LIGHT: LAWRENCE 4 (CONT.)

NEW/RETROFIT	RETROFIT
PARTICULATE DESIGN REMOVAL EFFICIENCY - %	98.90
SO2 DESIGN REMOVAL EFFICIENCY - %	73.00
INITIAL START-UP	1/76
ABSORBER SPARE CAPACITY INDEX - %	.0
ABSORBER SPARE COMPONENT INDEX	.0
** ABSORBER	
NUMBER	2
TYPE	SPRAY TOWER
INITIAL START UP	1/76
SUPPLIER	COMBUSTION ENGINEERING
NUMBER OF STAGES	2
SHELL MATERIAL	316L SS
SHELL LINER MATERIAL	NONE
INTERNAL MATERIAL	FRP SPRAY HEADERS, CERAMIC NOZZLES, 316L SS SUPP
NUMBER OF NOZZLES	32
BOILER LOAD/ABSORBER - %	50.0
GAS FLOW - CU.M/S	82.35 (174500 ACFM)
GAS TEMPERATURE - C	51.1 (124 F)
LIQUID RECIRCULATION RATE - LITER/S	334. (5300 GPM)
L/G RATIO - L/CU.M	4.0 (30.0 GAL/1000ACF)
PRESSURE DROP - KPA	.6 (2.5 IN-H2O)
PARTICULATE OUTLET LOAD- G/CU.M	.1 (.032 GR/SCF)
PARTICULATE REMOVAL EFFICIENCY - %	98.9
SO2 OUTLET CONTRATION - PPM	200
SO2 DESIGN REMOVAL EFFICIENCY - %	73.0
** FANS	
NUMBER	2
TYPE	BOILER ID
CONSTRUCTION MATERIALS	CARBON STEEL
SERVICE - WET/DRY	DRY
CAPACITY - CU.M/S	80.22 (170000 ACFM)
** MIST ELIMINATOR	
NUMBER	8
TYPE	CHEVRON
CONSTRUCTION MATERIAL	FRP
CONFIGURATION	HORIZONTAL
NUMBER OF STAGES	3
NUMBER OF PASSES	2
FREEBOARD DISTANCE - M	1.07 (3.5 FT)
VANE SPACING - CM	8.9 (3.50 IN)
VANE ANGLES	90 DEG.
WASH SYSTEM	1ST STAGE, VERTICALLY UPWARD AND DOWNWARD; 2ND S
SUPERFICIAL GAS VELOCITY - M/S	1.8 (6.0 FT/S)
** MIST ELIMINATOR	
NUMBER	4
CONSTRUCTION MATERIAL	FRP
CONFIGURATION	HORIZONTAL
NUMBER OF STAGES	1
WASH SYSTEM	INTERMITTENT, HIGH PRESSURE WATER WASH DIRECTED
SUPERFICIAL GAS VELOCITY - M/S	1.8 (6.0 FT/S)
** PROCESS CONTROL CHEMISTRY	
CONTROL VARIABLES	SO2, SLURRY FLOWS, PH, % SOLIDS, PRESSURE DROP
CONTROL RANGE	PH = 5.5-5.7
CONTROL MANNER	AUTOMATIC
MODE	FEEDBACK
SENSOR LOCATION	PH PROBES IN REACTION TANKS
** PUMPS	
SERVICE	NUMBER
---	---
SLURRY FEED	6
MIST ELIMINATOR WASH	****
MILL SLURRY	3
CLASSIFICATION TANK TRANSFER	3
VENTURI RECIRCULATION	2
ABSORBER RECIRCULATION	2

** TANKS	
SERVICE	NUMBER
TOWER RECIRCULATION TANK	2
VENTURI RECYCLE	2
CLARIFICATION AND COLLECTION TANK	1
DILUTION AND STORAGE TANK	1
REACTION TANK BLEED TANK	1
** REHEATER	
NUMBER	1
TYPE	IN-LINE
HEATING MEDIUM	HOT WATER
TEMPERATURE BOOST - C	27.8 (50 F)
ENERGY REQUIRED	1.25% OF BOILER OUTPUT
** THICKENER	
NUMBER	1
** WATER LOOP	
TYPE	CLOSED
** REAGENT PREPARATION EQUIPMENT	
NUMBER OF BALL MILLS	1
POINT OF ADDITION	REACTION TANK
** TREATMENT	
TYPE	FORCED OXIDATION
INLET- KG/S	101.2 (13392 LB/MIN)
INLET SOLIDS - %	32.5
** DISPOSAL	
NATURE	INTERIM
TYPE	POND
LOCATION	ON-SITE
AREA - ACRES	1[illegible].0
** DISPOSAL	
NATURE	FINAL
TYPE	POND
LOCATION	ON-SITE
TRANSPORTATION	OVERFLOW FROM INTERIM SLUDGE POND
AREA - ACRES	4.0
** DISPOSAL	
NATURE	FINAL
TYPE	POND
LOCATION	ON-SITE
TRANSPORTATION	OVERFLOW FROM INTERIM SLUDGE POND
AREA - ACRES	28.0
** DISPOSAL	
NATURE	FINAL
TYPE	POND
LOCATION	ON-SITE
AREA - ACRES	28.0
** DISPOSAL	
NATURE	FINAL
TYPE	POND
LOCATION	ON-SITE
AREA - ACRES	4.0

PERFORMANCE DATA

PERIOD	MODULE	AVAILABILITY	OPERABILITY	RELIABILITY	UTILIZATION	% REMOVAL SO2	% REMOVAL PART.	PER HOURS	BOILER HOURS	FGD HOURS	CAP. FACTOR
0/69	SYSTEM										

KANSAS POWER & LIGHT: LAWRENCE 4 (CONT.)

PERIOD	MODULE	AVAILABILITY	OPERABILITY	RELIABILITY	UTILIZATION	% REMOVAL SO2	% REMOVAL PART.	PER HOURS	BOILER HOURS	FGD HOURS	CAP. FACTOR
PERFORMANCE DATA											

** PROBLEMS/SOLUTIONS/COMMENTS

PROBLEMS WITH THE FGD SYSTEM ON BOILER NO. 4 INCLUDED BUILDUP AND PLUGGING OF THE INLET DUCT WHERE HOT GASES ENTER THE SCRUBBERS, EROSION OF SCRUBBER WALLS, CORROSION OF SCRUBBERS INTERNALS, BUILDUP ON I.D. FAN ROTORS, AND PLUGGING OF DRAIN LINES, MARBLE BEDS, AND DEMISTERS. LOW SO2 REMOVAL WAS CAUSED BY OVERBURNING OF THE LIMESTONE AND DROPOUT OF THE LIME WITH THE ASH IN THE BOTTOM OF THE SCRUBBER.

THE SCRUBBERS WERE MODIFIED IN 1969 BY RAISING THE DEMISTER AND ADDING SOOT BLOWERS IN THE INLET DUCT AND REHEATER TO REDUCE PLUGGING. NEW SPRAY NOZZLES WERE ALSO INSTALLED. REHEATER PLUGGING WAS ELIMINATED BY REPLACIN COPPER REHEAT COILS WITH A CARBON STEEL UNIT HAVING WIDELY SPACED FINS.

0/70 SYSTEM

** PROBLEMS/SOLUTIONS/COMMENTS

MAJOR MODIFICATIONS IN 1970 WERE SANDBLASTING AND COATING OF THE INTERIOR OF THE SCRUBBERS, REPLACEMENT OF ALL INTERNAL STEEL PIPES WITH PLASTIC AND FIBERGLASS, AND REPLACEMENT OF STAINLESS STEEL DEMISTERS WITH FIBERGLASS. SINCE DEMISTER PLUGGING WAS NOT COMPLETELY ELIMINATED, THE UNIT WAS WASHED MANUALLY EVERY NIGHT TO MAINTAIN THE REQUIRED OUTPUT.

0/72 SYSTEM

** PROBLEMS/SOLUTIONS/COMMENTS

THE MODIFICATIONS IN THE SUMMER OF 1972 ON THE TWO FGD MODULES INCLUDED ENLARGEMENT OF THE CRYSTALLIZATION TANK, AND INSTALLATION OF NEW PLASTIC SPRAY NOZZLES, NEW SLURRY PUMPS AND STRAINERS, AND NEW MULTIPLE MIXERS IN THE TANK. PROBLEMS THAT REMAINED INCLUDED CORROSION, INEFFICIENT DAMPERS, EXPANSION JOINT FAILURE, DEMISTER FOULING, RAPID EROSION OF THE SLURRY PUMP, AND VALVE FAILURE.

0/73 SYSTEM

** PROBLEMS/SOLUTIONS/COMMENTS

OPERATION OF THE FGD SYSTEM SINCE THE FALL OF 1973 HAS BEEN THE MOST SUCCESSFUL TO DATE.

0/74 SYSTEM

** PROBLEMS/SOLUTIONS/COMMENTS

IN 1974 THIS UNIT WAS AVAILABLE FOR OPERATION 343 DAYS. FIFTY PERCENT OF THE FUEL CONSUMED WAS COAL, TWO PERCENT FUEL OIL, AND FOURTY-EIGHT PERCENT NATURAL GAS.

0/75 SYSTEM

** PROBLEMS/SOLUTIONS/COMMENTS

DURING 1975 THIS UNIT WAS AVAILABLE FOR OPERATION 333 DAYS. SIXTY-FOUR PERCENT OF THE FUEL CONSUME I WAS COAL, THREE PERCENT FUEL OIL, AND THIRTY-THREE PERCENT NATURAL GAS.

6/75 SYSTEM 720

** PROBLEMS/SOLUTIONS/COMMENTS

STATION LOAD IS REDUCED TO 50 PERCENT EVERYNIGHT. THEREFORE, ONE OF THE MODULES CAN BE TAKEN OFF-LINE NIGHTLY FOR CLEANING OR REPAIR. WYOMING COAL (0.5% SULFUR) IS BEING BURNED IN THE BOILER. SOME NATURAL GAS HAS BEEN BURNED SINCE JUNE 20.

7/75 SYSTEM 744

PERIOD	MODULE	AVAILABILITY	OPERABILITY	RELIABILITY	UTILIZATION	% REMOVAL SO2	% REMOVAL PART.	PER HOURS	BOILER HOURS	FGD HOURS	CAP. FACTOR
		PERFORMANCE DATA									

** PROBLEMS/SOLUTIONS/COMMENTS

EACH MODULE IS SHUT DOWN ONCE PER WEEK FOR INSPECTION AND CLEAN-UP.

8/75	SYSTEM	744
9/75	SYSTEM	720
10/75	SYSTEM	744
11/75	SYSTEM	720
12/75	SYSTEM	744
1/76	SYSTEM	744

** PROBLEMS/SOLUTIONS/COMMENTS

THE UTILITY IS REPLACING THE SCRUBBING SYSTEM WITH A ROD-DECK VENTURI FOLLOWED BY A SPRAY TOWER.

2/76	SYSTEM	696
3/76	SYSTEM	744
4/76	SYSTEM	720
5/76	SYSTEM	744
6/76	SYSTEM	720
7/76	SYSTEM	744
8/76	SYSTEM	744
9/76	SYSTEM	720

** PROBLEMS/SOLUTIONS/COMMENTS

A SCHEDULED UNIT OUTAGE COMMEMCED IN MID-SEPTEMBER FOR A TURBINE OVERHAUL AND RESTARTED IN EARLY JANUARY.

10/76	SYSTEM	744
11/76	SYSTEM	720
12/76	SYSTEM	744

** PROBLEMS/SOLUTIONS/COMMENTS

THE UNIT CONTINUES TO FIRE LOW SULFUR WYOMING COAL.

1/77	SYSTEM	744

** PROBLEMS/SOLUTIONS/COMMENTS

THE NEW LIMESTONE FGD SYSTEM BECAME COMMERCIALLY OPERABLE IN EARLY JANUARY 1977. THE UTILITY REPORTS THAT BOTH PARTICULATE AND SO2 REMOVALS ARE QUITE SATISFACTORY.

MINOR PROLLEMS HAVE BEEN RELATED TO MAINTAINING DESIRED SOLIDS LEVEL IN THE MAKE-UP TANK. MODIFICATIOON PLANS INCLUDE CESSATION OF SLURRY DILUTION, WHICH CURRENTLY PRECEDES THE INTRODUCTION OF THE FRESH LIMESTONE SLURRY INTO THE RECIRCULATION LOOP. THE UTILITY PLANS TO PUMP THE 35% SOLIDS SLURRY DIRECTLY FROM THE SLURRY TANK INTO THE RECIRCULATION LOOP.

CURRENTLY SEVERAL DIFFERENT MAKES OF SLURRY PUMPS ARE BEING USED. ALL ARE FUNCTIONING WELL SO FAR. THE PUMPS HAVE NOT BEEN IN SERVICE LONG ENOUGH FOR COMPARISONS TO BE DRAWN.

KANSAS POWER & LIGHT: LAWRENCE 4 (CONT.)

PERIOD	MODULE	AVAILABILITY	OPERABILITY	RELIABILITY	UTILIZATION	% REMOVAL SO2	% REMOVAL PART.	PER HOURS	BOILER HOURS	FGD HOURS	CAP. FACTOR
		PERFORMANCE DATA									
2/77	SYSTEM							672			
3/77	SYSTEM							744			
4/77	SYSTEM							720			

** PROBLEMS/SOLUTIONS/COMMENTS

THE SCRUBBER WAS NOT REQUIRED FOR SERVICE DURING THE REPORT PERIOD BECAUSE NATURAL GAS WAS FIRED IN THE BOILER.

5/77	SYSTEM							744			
6/77	SYSTEM							720			

** PROBLEMS/SOLUTIONS/COMMENTS

THE NO. 4 BOILER HAS BEEN FIRING 100% NATURAL GAS FOR ALL BUT 8-10 DAYS SINCE THE BEGINNING OF APRIL 1977.

MIST ELIMINATOR CRACKS HAVE BEEN A PROBLEM.

A COMPRESSOR BREAKDOWN IN THE RECYCLE TANK AIR AGITATION SYSTEM AND THE RECYCLE TANK STRAINER SCREEN WASH HAVE BEEN PROBLEM AREAS.

SOOT BLOWER PROBLEMS WERE ENCOUNTERED.

THE DENVER SLURRY PUMPS ARE EXPERIENCING SOME ON-GOING PROBLEMS, WHILE THE ALLEN-SHERMAN-HOFF PUMPS ARE OPERATING SATISFACTORILY.

7/77	SYSTEM							744			
8/77	SYSTEM							744			

** PROBLEMS/SOLUTIONS/COMMENTS

THE BOILER BURNED NATURAL GAS THROUGHOUT AUGUST.

THE MIST ELIMINATOR CRACKS HAVE BEEN REPAIRED.

THE RECYCLE TANK STRAINER PROBLEMS PERSISTED AND THE AIR AGITATION SYSTEM COMPRESSOR WAS MALFUNCTIONING.

THE DENVER SLURRY PUMPS ARE FUNCTIONING ADEQUATELY AT PRESENT. THE PUMP GLAND PACKING ARE BEING REDESIGNED.

9/77	SYSTEM							720			

** PROBLEMS/SOLUTIONS/COMMENTS

AS OF SEPTEMBER 15 THE UNIT BURNED COAL.

10/77	SYSTEM							744			

** PROBLEMS/SOLUTIONS/COMMENTS

THE SYSTEM CAPACITY WAS CUT BACK TO 50 PERCENT IN OCTOBER BECAUSE A NEW COOLING TOWER IS BEING CONSTRUCTED.

11/77	SYSTEM							720			

** PROBLEMS/SOLUTIONS/COMMENTS

ON NOVEMBER 15 A MAJOR FGD SYSTEM OVERHAUL TOOK PLACE WHILE THE TURBINE WAS DOWN FOR INSPECTION AND THE NEW COOLING TOWER WAS BEING CONNECTED.

12/77	SYSTEM							744			

PERIOD	MODULE	AVAILABILITY	OPERABILITY	RELIABILITY	UTILIZATION	% REMOVAL SO2	% REMOVAL PART.	PER HOURS	BOILER HOURS	FGD HOURS	CAP. FACTOR
		PERFORMANCE DATA									

** PROBLEMS/SOLUTIONS/COMMENTS

THE UNIT CAME BACK ON LINE DECEMBER 20 AT FULL CAPACITY.

1/78	SYSTEM							744			

** PROBLEMS/SOLUTIONS/COMMENTS

THE FGD SYSTEM OPERATED WITHOUT ANY PROBLEMS OTHER THAN SOME FREEZING OF THE PIPELINES.

DISCHARGE LINE FREEZING CAUSED CLARIFIER PLUGGING.

2/78	SYSTEM							672			

** PROBLEMS/SOLUTIONS/COMMENTS

THE THICKENER UNDERFLOW LINE IS STILL FROZEN AND TWO 3 INCH DIAMETER FIRE HOSES ARE BEING USED TO PUMP THE UNDERFLOW SOLIDS TO THE POND.

3/78	A	100.0	100.0	100.0							
	B	100.0	100.0	100.0							
	SYSTEM	100.0	100.0	100.0				744	720	720	
4/78	A	100.0	100.0	100.0							
	B	100.0	100.0	100.0							
	SYSTEM	100.0	100.0	100.0				720	744	744	
5/78	SYSTEM							744			
6/78	SYSTEM							720			

** PROBLEMS/SOLUTIONS/COMMENTS

THE BOILER AND FGD SYSTEM BOTH OPERATED THROUGHOUT THE PERIOD WITHOUT ANY FORCED OUTAGES.

7/78	SYSTEM							744			
8/78	SYSTEM							744			

** PROBLEMS/SOLUTIONS/COMMENTS

THE UTILITY REPORTED THAT THE SYSTEM RAN WITH NO FORCED OUTAGES DURING THE PERIOD.

THE SYSTEM RAN CONTINUOUSLY THROUGHOUT THE PERIOD WITH THE EXCEPTION OF A ONE WEEK OUTAGE FOR A BOILER-TURBINE INSPECTION.

9/78	SYSTEM							720			

** PROBLEMS/SOLUTIONS/COMMENTS

THE UNIT WAS DOWN THE LAST WEEK AND A HALF IN SEPTEMBER FOR A SCHEDULED FALL TURBINE/BOILER OUTAGE. ROUTINE MAINTENANCE INCLUDED BOILER AND TURBINE CLEANING AND REPAIR.

10/78	SYSTEM							744			
11/78	SYSTEM							720			
12/78	SYSTEM							744			

** PROBLEMS/SOLUTIONS/COMMENTS

AN EPA SPONSORED CONTINUOUS MONITORING TEST BEGAN AT THIS UNIT AT THE BEGINNING OF DECEMBER AND WILL CONTINUE THROUGH THE END OF JANUARY. THE TEST INVOLVES 24 HOUR MONITORING OF SO2, OPACITY AND NOX.

1/79	SYSTEM							744			

KANSAS POWER & LIGHT: LAWRENCE 4 (CONT.)

PERIOD	MODULE	AVAILABILITY	OPERABILITY	RELIABILITY	UTILIZATION	% REMOVAL SO2	% REMOVAL PART.	PER HOURS	BOILER HOURS	FGD HOURS	CAP. FACTOR
		PERFORMANCE DATA									
2/79	SYSTEM							672			

** PROBLEMS/SOLUTIONS/COMMENTS

ONE MODULE WAS FORCED OUT OF SERVICE FOR 2 DAYS WHEN ITS TANK AGITATOR FAILED.

ONE MODULE WAS FORCED OUT OF SERVICE FOR AN 8 DAY PERIOD DUE TO A FAN MOTOR MALFUNCTION

3/79	SYSTEM							744			

** PROBLEMS/SOLUTIONS/COMMENTS

UNIT 4 EXPERIENCED A MOTOR FAILURE ON AN I.D. FAN DURING THE FEBRUARY-MARCH PERIOD.

4/79	SYSTEM							720			
5/79	SYSTEM							744			
6/79	SYSTEM							720			

** PROBLEMS/SOLUTIONS/COMMENTS

THE UTILITY REPORTED THAT THE SYSTEM RAN WELL. THE ONLY FGD SYSTEM RELATED OUTAGES WERE DUE TOA MIXER FAILURE AND GENERAL MAINTENANCE.

7/79	SYSTEM							744			
8/79	SYSTEM							744			
9/79	SYSTEM							720			

** PROBLEMS/SOLUTIONS/COMMENTS

DURING THE THIRD QUARTER AN OUTAGE WAS CAUSED BY MIXER MOTOR AND OTHER MIXER RELATED PROBLEMS. DURING THE OUTAGE MAINTENANCE WAS DONE ON THE BOILER AND SCRUBBERS AND REPAIR WORK WAS DONE ON THE MIXERS.

THE UNIT WAS OPERATED AT HALF LOAD DURING THE LAST WEEK OF SEPTEMBER AND WAS SHUT DOWN COMPLETELY IN EARLY OCTOBER FOR THE ANNUAL FALL OUTAGE.

10/79	SYSTEM							744			
11/79	SYSTEM							720			
12/79	SYSTEM							744			

** PROBLEMS/SOLUTIONS/COMMENTS

THE UNIT WAS DOWN FOR APPROXIMATELY 10 DAYS OF SCHEDULED OUTAGE FOR FALL MAINTENANCE.

SOME AGITATOR SHAFT FAILURES OCCURRED IN THE REACTION TANK CAUSING MAINTENANCE ATTENTION.

SECTION 3
DESIGN AND PERFORMANCE DATA FOR OPERATIONAL DOMESTIC FGD SYSTEMS

COMPANY NAME	KANSAS POWER & LIGHT	
PLANT NAME	LAWRENCE	
UNIT NUMBER	5	
CITY	LAWRENCE	
STATE	KANSAS	
REGULATORY CLASSIFICATION	D	
PARTICULATE EMISSION LIMITATION - NG/J	43.	(.100 LB/MMBTU)
SO2 EMISSION LIMITATION - NG/J	215.	(.500 LB/MMBTU)
NET PLANT GENERATING CAPACITY - MW	57.6	
GROSS UNIT GENERATING CAPACITY - MW	420.0	
NET UNIT GENERATING CAPACITY W/FGD - MW	400.0	
NET UNIT GENERATING CAPACITY WO/FGD - MW	*******	
EQUIVALENT SCRUBBED CAPACITY - MW	420.0	
** BOILER DATA		
SUPPLIER	COMBUSTION ENGINEERING	
TYPE	PULVERIZED COAL	
SERVICE LOAD	CYCLIC	
COMMERCIAL SERVICE DATE	0/71	
MAXIMUM BOILER FLUE GAS FLOW - CU.M/S	599.78	(1271000 ACFM)
FLUE GAS TEMPERATURE - C	148.9	(300 F)
STACK HEIGHT - M	114.	(375 FT)
STACK TOP DIAMETER - M	4.9	(16.0 FT)
** FUEL DATA		
FUEL TYPE	COAL	
FUEL GRADE	******	
AVERAGE HEAT CONTENT - J/G	23260.	(10000 BTU/LB)
RANGE HEAT CONTENT - BTU/LB		******
AVERAGE ASH CONTENT - %	9.80	
RANGE ASH CONTENT - %	******	
AVERAGE MOISTURE CONTENT - %	12.00	
RANGE MOISTURE CONTENT - %	******	
AVERAGE SULFUR CONTENT - %	.55	
RANGE SULFUR CONTENT - %	******	
AVERAGE CHLORIDE CONTENT - %	.03	
RANGE CHLORIDE CONTENT - %	******	
** PARTICULATE SCRUBBER		
NUMBER	2	
TYPE	VENTURI	
SUPPLIER	COMBUSTION ENGINEERING	
NUMBER OF STAGES	1	
SHELL MATERIAL	316L SS	
LINING MATERIAL	NONE	
INTERNAL MATERIAL	316L SS RODS, 2 LEVELS OF SPRAY NOZZLES	
TYPE OF NOZZLES	NON-ATOMIZING, FAN TYPE SPRAY	
BOILER LOAD/SCRUBBER - %	50.0	
FLUE GAS CAPACITY - CU.M/S	299.7	(635000 ACFM)
FLUE GAS TEMPERATURE - C	148.9	(300 F)
LIQUID RECIRCULATION RATE - LITER/S	655.2	(10400 GPM)
L/G RATIO - LITER/CU.M	2.1	(16.0 GAL/1000ACF)
PRESSURE DROP - KPA	*******	(***** IN-H20)
SO2 INLET CONCENTRATION - PPM	.748	
** FGD SYSTEM		
SALEABLE PRODUCT/THROWAWAY PRODUCT	THROWAWAY PRODUCT	
GENERAL PROCESS TYPE	WET SCRUBBING	
PROCESS TYPE	LIMESTONE	
PROCESS ADDITIVES	NONE	
SYSTEM SUPPLIER	COMBUSTION ENGINEERING	
A-E FIRM	BLACK & VEATCH	
DEVELOPMENT LEVEL	FULL SCALE	
NEW/RETROFIT	RETROFIT	
PARTICULATE DESIGN REMOVAL EFFICIENCY - %	98.90	
SO2 DESIGN REMOVAL EFFICIENCY - %	52.00	
INITIAL START-UP	11/71	
ABSORBER SPARE CAPACITY INDEX - %	.0	
ABSORBER SPARE COMPONENT INDEX	.0	

KANSAS POWER & LIGHT: LAWRENCE 5 (CONT.)

** ABSORBER	
NUMBER	2
TYPE	SPRAY TOWER
INITIAL START UP	4/78
SUPPLIER	COMBUSTION ENGINEERING
NUMBER OF STAGES	1
SHELL MATERIAL	316L SS
SHELL LINER MATERIAL	NONE
INTERNAL MATERIAL	FRP HEADERS, CERAMIC NOZZLES (1 LEVEL)
NUMBER OF NOZZLES	16
BOILER LOAD/ABSORBER - %	50.0
GAS FLOW - CU.M/S	256.71 (544000 ACFM)
GAS TEMPERATURE - C	52.2 (126 F)
LIQUID RECIRCULATION RATE - LITER/S	655. (10400 GPM)
L/G RATIO - L/CU.M	2.5 (19.0 GAL/1000ACF)
PRESSURE DROP - KPA	.6 (2.5 IN-H2O)
PARTICULATE REMOVAL EFFICIENCY - %	98.9
SO2 OUTLET CONTRATION - PPM	359
SO2 DESIGN REMOVAL EFFICIENCY - %	52.0
** FANS	
NUMBER	2
TYPE	BOILER ID
CONSTRUCTION MATERIALS	CARBON STEEL
SERVICE - WET/DRY	DRY
CAPACITY - CU.M/S	283.14 (600000 ACFM)
** MIST ELIMINATOR	
NUMBER	4
TYPE	CHEVRON
CONSTRUCTION MATERIAL	FRP
CONFIGURATION	HORIZONTAL
NUMBER OF STAGES	3
NUMBER OF PASSES	2
FREEBOARD DISTANCE - M	1.07 (3.5 FT)
VANE SPACING - CM	8.9 (3.50 IN)
VANE ANGLES	90 DEG.
WASH SYSTEM	1ST STAGE, VERTICALLY UPWARD AND DOWNWARD; 2ND S
PRESSURE DROP - KPA	.2 (1.0 IN-H2O)
** MIST ELIMINATOR	
NUMBER	2
CONSTRUCTION MATERIAL	FRP
CONFIGURATION	HORIZONTAL
WASH SYSTEM	INTERMITTENT, HIGH PRESSURE WATER WASH DIRECTED
** PROCESS CONTROL CHEMISTRY	
CONTROL VARIABLES	SO2, SLURRY FLOWS, PH, % SOLIDS, PRESSURE CHANGE
CONTROL RANGE	PH=5.5-5.7
CONTROL MANNER	AUTOMATIC
MODE	FEEDBACK
SENSOR LOCATION	PH PROBES IN REACTION TANKS

** PUMPS SERVICE	NUMBER
REACTION/RECYCLE TANK BLEED	****
VENTURI RECIRCULATION	2
SLURRY FEED	3
MIST ELIMINATOR WASH	****
MILL SLURRY	2
CLASSIFICATION TANK TRANSFER	2
ABSORBER RECIRCULATION	2

** TANKS SERVICE	NUMBER
CLARIFICATION AND COLLECTION TANK	1
DILUTION AND STORAGE TANK	1
REACTION/RECYCLE	1

** REHEATER	
NUMBER	1
TYPE	IN-LINE
HEATING MEDIUM	HOT WATER
TEMPERATURE BOOST - C	28.8 (50 F)

KANSAS POWER & LIGHT: LAWRENCE 5 (CONT.)

ENERGY REQUIRED	1.25% OF BOILER OUTPUT
** WATER LOOP	
TYPE	CLOSED
** REAGENT PREPARATION EQUIPMENT	
NUMBER OF BALL MILLS	1
POINT OF ADDITION	REATION TANK
** TREATMENT	
TYPE	FORCED OXIDATION
INLET SOLIDS - %	10.0
** DISPOSAL	
NATURE	INTERIM
TYPE	POND
LOCATION	ON-SITE
AREA - ACRES	16.0
** DISPOSAL	
NATURE	FINAL
TYPE	POND
LOCATION	ON-SITE
TRANSPORTATION	OVERFLOW FROM INTERIM SLUDGE POND
AREA - ACRES	[illegible].0
** DISPOSAL	
NATURE	FINAL
TYPE	POND
LOCATION	ON-SITE
TRANSPORTATION	OVERFLOW FROM INTERIM SLUDGE POND
AREA - ACRES	28.0

PERFORMANCE DATA

PERIOD	MODULE	AVAILABILITY	OPERABILITY	RELIABILITY	UTILIZATION	% REMOVAL SO2	% REMOVAL PART.	PER HOURS	BOILER HOURS	FGD HOURS	CAP. FACTOR
7/75	SYSTEM							744			

** PROBLEMS/SOLUTIONS/COMMENTS

OIL AND GAS WERE FIRED IN JULY AND AUGUST, RESULTING IN NO FGD OPERATION.

8/75	SYSTEM							744			
9/75	SYSTEM							720			

** PROBLEMS/SOLUTIONS/COMMENTS

GAS AND OIL WERE BURNED ON A PART TIME BASIS DURING SEPTEMBER AND OCTOBER. BOILER OUTAGE WAS DUE TO INSPECTION AND TURBINE REPAIR.

ADDITIONAL BOILER OUTAGE WAS DUE TO REPLACEMENT OF THE SLURRY TANK SCREEN.

10/75	SYSTEM							744			
11/75	SYSTEM							720			

** PROBLEMS/SOLUTIONS/COMMENTS

PROJECTIONS BY THE UTILITY FOR THIS UNIT CALL FOR 330 DAYS OF OPERATION ON 1976 WITH FUEL CONSUMPTION BEING 60% COAL, 25% FUEL OIL, AND 15% NATURAL GAS.

LIKE UNIT 4 THIS UNIT MAY BE CONVERTED TO A ROD-DECK VENTURI AND SPRAY TOWER SCRUBBING SYSTEM.

12/75	SYSTEM							744			
1/76	SYSTEM							744			
2/76	SYSTEM							696			

KANSAS POWER & LIGHT: LAWRENCE 5 (CONT.)

PERIOD	MODULE	AVAILABILITY	OPERABILITY	RELIABILITY	UTILIZATION	% REMOVAL SO2	% REMOVAL PART.	PER HOURS	BOILER HOURS	FGD HOURS	CAP. FACTOR
		PERFORMANCE DATA									

** PROBLEMS/SOLUTIONS/COMMENTS

NO INFORMATION WAS REPORTED BY THE UTILITY FOR THE PERIOD.

3/76	SYSTEM	744
4/76	SYSTEM	720
5/76	SYSTEM	744
6/76	SYSTEM	720
7/76	SYSTEM	744
8/76	SYSTEM	744
9/76	SYSTEM	720
10/76	SYSTEM	744

** PROBLEMS/SOLUTIONS/COMMENTS

THE BOILER FIRES NO. 2 FUEL OIL IN ADDITION TO LOW SULFUR WYOMING COAL WHILE THE NEW SCRUBBING FACILITIES ARE BEING INSTALLED. THE ORIGINAL INJECTION AND TAIL-END SCRUBBING SYSTEM IS STILL AVAILABLE FOR SERVICE AND OPERATED WHEN THE UNIT FIRES COAL. THE SYSTEM WILL TREAT FLUE GAS RESULTING FROM THE BURNING OF LOW SULFUR (0.5 PERCENT) WYOMING COAL.

THE UTILITY REPORTS THAT THE INSTALLATION OF THE NEW ROD AND SPRAY TOWER SCRUBBING SYSTEM IS NOW IN PROGEESS. THE SYSTEM WILL CONSIST OF TWO SCRUBBING TRAINS EACH HANDLING 50% OF THE FLUE GAS CAPACITY. FOUNDATION AND STRUCTURAL STEEL ERECTION HAS BEEN COMPLETED, AND SOME OF THE BREECH-NING HAS BEEN INSTALLED. THE UNIT WILL OPERATE IN A FULLY AUTOMATIC MODE.

KP&L REPORTED THAT C-E HAS ENCOUNTERED SOME PROBLEMS WORKING OUT AND FINE TUNING SOME OF THE LOGIC CIRCUITS.

11/76	SYSTEM	720
12/76	SYSTEM	744

** PROBLEMS/SOLUTIONS/COMMENTS

KP&L REPORTED THAT CONSTRUCTION OF THE NEW SCRUBBING SYSTEM IS STILL IN PROGRESS. THE ERECTION OF THE STRUCTURAL STEEL AND BREECHING IS CONTINUING. THE MODULES ARE NOW BEING ERECTED AT THE PLANT SITE, PARALLEL TO THE EXISTING MARBLE-BED SYSTEM.

1/77	SYSTEM	744
2/77	SYSTEM	672
3/77	SYSTEM	744
4/77	SYSTEM	720
5/77	SYSTEM	744
6/77	SYSTEM	720

** PROBLEMS/SOLUTIONS/COMMENTS

OPERATION OF THE EXISTING MARBLE BED SCRUBBERS HAS BEEN QUITE SATISFACTORY AND NEARLY PROBLEM FREEL. THE CONNECTING DUCTWORK IS CURRENTLY BEING INSTALLED LED AS CONSTRUCTION CONTINUES. THE TWO PARALLEL SCRUBBING MODULES EACH DESIGNED TO HANDLE 200 MW OF GENERATING CAPACITY ARE INSTALLED, AS ARE THE REHEATER TUBE BUNDLES. THE EXISTING MARBLE BED SCRUBBERS WILL BE REMOVED WHEN THE NEW SCRUBBING SYSTEM IS READY FOR SO2 REMOVAL OPERATIONS.

7/77	SYSTEM	744

PERIOD	MODULE	AVAILABILITY	OPERABILITY	RELIABILITY	UTILIZATION	% REMOVAL SO2	% REMOVAL PART.	PER HOURS	BOILER HOURS	FGD HOURS	CAP. FACTOR
		PERFORMANCE DATA									
8/77	SYSTEM							744			
9/77	SYSTEM							720			

** PROBLEMS/SOLUTIONS/COMMENTS

THE CONSTRUCTION ON THE NEW SCRUBBER PLANT IS CONTINUING ACCORDING TO SCHEDULE AND IS EXPECTED TO BE COMPLETE BY APRIL 1978. KP&L INDICATED THAT MORE DETAILED INFORMATION WOULD BE AVAILABLE FOR THE NEXT REPORT.

10/77	SYSTEM							744			

** PROBLEMS/SOLUTIONS/COMMENTS

THE SYSTEM OPERATED UNDER NORMAL CONDITIONS THROUGHOUT OCTOBER AND NOVEMBER WITH NO PROBLEMS.

11/77	SYSTEM							720			
12/77	SYSTEM							744			

** PROBLEMS/SOLUTIONS/COMMENTS

THE CONSTRUCTION OF THE ROOF-DECK SCRUBBERS IS NOW COMPLETE. THE INLET DUCTWORK IS BEING INSTALLED, AND THE OUTLET DECTWORK WILL BE INSTALLED ALONG WITH ADDITIONAL CONTROLS DURING THE SCHEDULED OUTAGE IN APRIL 1978. THE PRESENT FGD SYSTEM OPERATED WITHOUT ANY PROBLEMS.

1/78	SYSTEM							744			
2/78	SYSTEM							672			

** PROBLEMS/SOLUTIONS/COMMENTS

THE ORIGINAL FGD SYSTEM WAS PULLED OFF LINE ON MARCH 20 SO THAT THE NEW SCRUBBER-ABSORBER SYSTEM COULD BE TIED INTO THE GAS PATH. THIS NEW SYSTEM CONSISTS OF TWO MODULES EACH WITH A ROD SECTION FOR PARTICULATE REMOVAL AND A SPRAY TOWER FOR SO2 REMOVAL. THE CAPACITY IS 210 MW EACH MODULE. INITAL OPERATION SHOULD BEGIN BY THE FIRST OF MAY.

3/78	SYSTEM							744			
4/78	SYSTEM							720			

** PROBLEMS/SOLUTIONS/COMMENTS

THE NEW UNIT WENT IN SERVICE ON APRIL 14 AND HAS OPERATED WITH NO OUTAGES SINCE START-UP.

5/78	SYSTEM							744			
6/78	SYSTEM							720			

** PROBLEMS/SOLUTIONS/COMMENTS

THE BOILER OPERATED ALL BUT TWO DAYS OF THE JUNE-JULY PERIOD, WHEN A BOILER DRAIN LINE LEAK CAUSED AN OUTAGE.

THE FGD SYSTEM OPERATED THE ENTIRE TIME THE BOILER WAS ON-LINE, WITH NO REPORTED PROBLEMS.

7/78	SYSTEM							744			
8/78	SYSTEM							744			

KANSAS POWER & LIGHT: LAWRENCE 5 (CONT.)

PERIOD	MODULE	AVAILABILITY	OPERABILITY	RELIABILITY	UTILIZATION	% REMOVAL SO2	% REMOVAL PART.	PER HOURS	BOILER HOURS	FGD HOURS	CAP. FACTOR
					PERFORMANCE DATA						

** PROBLEMS/SOLUTIONS/COMMENTS

THE SYSTEM RAN WITH NO FORCED OUTAGES DURING THE AUGUST-SEPTEMBER PERIOD. THE UNIT WAS TAKEN DOWN AT THE END OF SEPTEMBER FOR A SCHEDULED TWO WEEK TURBINE/BOILER OUTAGE. ROUTINE MAINTENANCE IS BEING PERFORMED ON THE BOILER AND TURBINE.

9/78	SYSTEM							720			
10/78	SYSTEM							744			

** PROBLEMS/SOLUTIONS/COMMENTS

THE SYSTEM RAN THROUGHOUT THE PERIOD WITH ONLY ONE OUTAGE FOR AN ANNUAL ONE-WEEK BOILER/TURBINE INSPECTION IN OCTOBER.

11/78	SYSTEM							720			
12/78	SYSTEM							744			

** PROBLEMS/SOLUTIONS/COMMENTS

A 30 HOUR OUTAGE WAS REQUIRED DUE TO A RUPTURED PIPE.

1/79	SYSTEM							744			
2/79	SYSTEM							672			
3/79	SYSTEM							744			
4/79	SYSTEM							720			
5/79	SYSTEM							744			

** PROBLEMS/SOLUTIONS/COMMENTS

THE UNIT WAS BROUGHT DOWN TO 1/2 CAPACITY FOR A SCHEDULED 3 WEEK OUTAGE TO REBUILD AN AIR PREHEATER FAN MOTOR.

6/79	SYSTEM							720			

** PROBLEMS/SOLUTIONS/COMMENTS

THE UTILITY REPORTED THAT THE SYSTEM RAN WELL. THE ONLY FGD SYSTEM RELATED OUTAGES WERE DUE TO MIXER FAILURE AND GENERAL MAINTENANCE.

7/79	SYSTEM							744			
8/79	SYSTEM							744			
9/79	SYSTEM							720			

** PROBLEMS/SOLUTIONS/COMMENTS

THE UNIT OPERATED NORMALLY THROUGHOUT THE THIRD QUARTER. THE UNIT WILL COME DOWN FOR THE ANNUAL FALL OUTAGE ON THE 15TH OF OCTOBER. DURING THE OUTAGE SOME BOILER WORK WILL BE DONE. THE SCRUBBER WILL BE CLEANED AND MAINTENANCE WORK WILL BE PERFORMED ON THE MIXERS. THE OUTAGE IS TO LAST TWO WEEKS.

10/79	SYSTEM							744			
11/79	SYSTEM							720			
12/79	SYSTEM							744			

EPA UTILITY FGD SURVEY: FOURTH QUARTER 1979

KANSAS POWER & LIGHT: LAWRENCE 5 (CONT.)

PERIOD	MODULE	AVAILABILITY	OPERABILITY	RELIABILITY	UTILIZATION	% REMOVAL SO2	% REMOVAL PART.	PER HOURS	BOILER HOURS	FGD HOURS	CAP. FACTOR
				PERFORMANCE DATA							

** PROBLEMS/SOLUTIONS/COMMENTS

THE UNIT WAS DOWN FOR APPROXIMATELY 10 DAYS OF SCHEDULED OUTAGE FOR FALL MAINTENANCE.

SOME AGITATOR SHAFT FAILURES OCCURRED IN THE REACTION TANK CAUSING MAINTENANCE ATTENTION.

SECTION 3
DESIGN AND PERFORMANCE DATA FOR OPERATIONAL DOMESTIC FGD SYSTEMS

COMPANY NAME	KENTUCKY UTILITIES	
PLANT NAME	GREEN RIVER	
UNIT NUMBER	1-3	
CITY	CENTRAL CITY	
STATE	KENTUCKY	
REGULATORY CLASSIFICATION	E	
PARTICULATE EMISSION LIMITATION - NG/J	42.	(.097 LB/MMBTU)
SO2 EMISSION LIMITATION - NG/J	718.	(1.670 LB/MMBTU)
NET PLANT GENERATING CAPACITY - MW	242.0	
GROSS UNIT GENERATING CAPACITY - MW	64.0	
NET UNIT GENERATING CAPACITY W/FGD - MW	60.0	
NET UNIT GENERATING CAPACITY WO/FGD - MW	62.0	
EQUIVALENT SCRUBBED CAPACITY - MW	64.0	
** BOILER DATA		
SUPPLIER	BABCOCK & WILCOX	
TYPE	PULVERIZED COAL	
SERVICE LOAD	PEAKING	
COMMERCIAL SERVICE DATE	0/50	
MAXIMUM BOILER FLUE GAS FLOW - CU.M/S	169.88	(360000 ACFM)
FLUE GAS TEMPERATURE - C	148.9	(300 F)
STACK HEIGHT - M	50.	(165 FT)
STACK TOP DIAMETER - M	4.9	(16.0 FT)
** FUEL DATA		
FUEL TYPE	COAL	
FUEL GRADE	BITUMINOUS	
AVERAGE HEAT CONTENT - J/G	25586.	(11000 BTU/LB)
RANGE HEAT CONTENT - BTU/LB		******
AVERAGE ASH CONTENT - %	13.40	
RANGE ASH CONTENT - %	******	
AVERAGE MOISTURE CONTENT - %	12.10	
RANGE MOISTURE CONTENT - %	******	
AVERAGE SULFUR CONTENT - %	4.00	
RANGE SULFUR CONTENT - %	******	
AVERAGE CHLORIDE CONTENT - %	********	
RANGE CHLORIDE CONTENT - %	******	
** MECHANICAL COLLECTOR		
TYPE	CYCLONES	
SUPPLIER	WESTERN PRECIPITATION	
PARTICULATE DESIGN REMOVAL EFFICIENCY - %	85.0	
FLUE GAS CAPACITY - CU.M/S	49.5	(105000 ACFM)
PRESSURE DROP - KPA	*******	(***** IN-H20)
** PARTICULATE SCRUBBER		
NUMBER	1	
TYPE	VENTURI	
SUPPLIER	AMERICAN AIR FILTER	
NUMBER OF STAGES	1	
SHELL MATERIAL	MILD STEEL	
LINING MATERIAL	ACID PROOF PRECRETE	
INTERNAL MATERIAL	STAINLESS STEEL THROAT	
TYPE OF NOZZLES	SPINNER VANE	
BOILER LOAD/SCRUBBER - %	100.0	
FLUE GAS CAPACITY - CU.M/S	136.0	(288200 ACFM)
FLUE GAS TEMPERATURE - C	52.2	(126 F)
LIQUID RECIRCULATION RATE - LITER/S	85.7	(1360 GPM)
L/G RATIO - LITER/CU.M	4.6	(34.5 GAL/1000ACF)
PRESSURE DROP - KPA	*******	(***** IN-H20)
PARTICULATE INLET LOAD - G/CU.M	5.0	(2.20 GR/SCF)
SO2 INLET CONCENTRATION - PPM	2200.000	
** FGD SYSTEM		
SALEABLE PRODUCT/THROWAWAY PRODUCT	THROWAWAY PRODUCT	
GENERAL PROCESS TYPE	WET SCRUBBING	
PROCESS TYPE	LIME	
PROCESS ADDITIVES	NONE	
SYSTEM SUPPLIER	AMERICAN AIR FILTER	
A-E FIRM	FLUOR - PIONEER	
DEVELOPMENT LEVEL	FULL SCALE	
NEW/RETROFIT	RETROFIT	

KENTUCKY UTILITIES: GREEN RIVER 1-3 (CONT.)

PARTICULATE DESIGN REMOVAL EFFICIENCY - %	99.50
SO2 DESIGN REMOVAL EFFICIENCY - %	81.00
COMMERCIAL DATE	6/76
INITIAL START-UP	9/75
CONSTRUCTION INITIATION	4/74
CONTRACT AWARDED	6/73
ABSORBER SPARE CAPACITY INDEX - %	.0
ABSORBER SPARE COMPONENT INDEX	.0

** ABSORBER

NUMBER	1	
TYPE	MOBILE PACKED TOWER	
INITIAL START UP	9/75	
SUPPLIER	AMERICAN AIR FILTER	
NUMBER OF STAGES	1	
DIMENSIONS - FT	20X20X27.5	
SHELL MATERIAL	CARBON STEEL	
SHELL LINER MATERIAL	.75 IN. ACID PROOF PRECRETE REFRACTORY COATING	
INTERNAL MATERIAL	SOLID POLYURETHANE BALLS, CERAMIC NOZZLES	
BOILER LOAD/ABSORBER - %	100.0	
GAS FLOW - CU.M/S	136.00	(288200 ACFM)
GAS TEMPERATURE - C	52.2	(126 F)
LIQUID RECIRCULATION RATE - LITER/S	614.	(9750 GPM)
L/G RATIO - L/CU.M	4.5	(34.0 GAL/1000ACF)
PRESSURE DROP - KPA	1.0	(4.0 IN-H2O)
SUPERFICAL GAS VELOCITY - M/SEC	4.3	(14.0 FT/S)
PARTICULATE OUTLET LOAD- G/CU.M	.1	(.044 GR/SCF)
SO2 INLET CONCENTRATION - PPM	2200	
SO2 OUTLET CONTRATION - PPM	400	

** FANS

NUMBER	1	
TYPE	SCRUBBER FD	
CONSTRUCTION MATERIALS	CARBON STEEL	
SERVICE - WET/DRY	DRY	
CAPACITY - CU.M/S	169.88	(360000 ACFM)

** MIST ELIMINATOR

NUMBER	1
TYPE	CHEVRON
CONFIGURATION	HORIZONTAL

** PROCESS CONTROL CHEMISTRY

CONTROL VARIABLES	SO2, GAS FLOW PRESSURE DROP, PH, PERCENT SOLIDS
CONTROL RANGE	PH-5 TO 8.5; 10% SOLIDS IN RECYCLE
SENSOR LOCATION	PH-REACTANT TANK; DENSITY METERS-RECYCLE LINE

** PUMPS

SERVICE	NUMBER
SCRUBBER/ABSORBER RECIRCULATION	3
SLURRY TRANSFER	2
POND RETURN	2
BLEED STREAM	2

** TANKS

SERVICE	NUMBER
SLAKED SLURRY DILUTION/HOLDING TANK	****
REACTION/RECYCLE	1
SLAKING TANK	2

** REHEATER

NUMBER	1	
TYPE	HOT AIR INJECTION	
HEATING MEDIUM	STEAM	
TEMPERATURE BOOST - C	22.2	(40 F)

** WATER LOOP

TYPE	CLOSED	
FRESH MAKEUP WATER ADDITION - LITERS/S	4.7	(75 GPM)

** REAGENT PREPARATION EQUIPMENT

POINT OF ADDITION	DRY STORAGE BIN INTO SLAKER

KENTUCKY UTILITIES: GREEN RIVER 1-3 (CONT.)

** DISPOSAL

NATURE	FINAL
TYPE	LINED POND
LOCATION	ON-SITE
TRANSPORTATION	PUMPED
AREA - ACRES	7.4
CAPACITY - CU.M	203629 (166.5 ACRE-FT)

PERFORMANCE DATA

PERIOD	MODULE	AVAILABILITY	OPERABILITY	RELIABILITY	UTILIZATION	% REMOVAL SO2	% REMOVAL PART.	PER HOURS	BOILER HOURS	FGD HOURS	CAP. FACTOR
9/75	SYSTEM							720			

** PROBLEMS/SOLUTIONS/COMMENTS

THE SYSTEM BECAME OPERATIONAL SEPTEMBER 13, 1975 ON A HALF-LOAD BASIS BECAUSE OF TURBINE OVERHAUL. LOGGING OF OPERATING DATA BEGAN DECEMBER 1975.

10/75	SYSTEM							744			
11/75	SYSTEM							720			
12/75	SYSTEM	74.0	65.0	78.0	35.0			744	398	257	
1/76	SYSTEM	42.0	11.0	14.0	9.0			744	572	64	

** PROBLEMS/SOLUTIONS/COMMENTS

A MAJOR PROBLEM WAS FAILURE OF THE RECYCLE PUMPS.

THAWING AND REPAIR OF NUMEROUS FROZEN LINES WAS REQUIRED.

SHUTDOWN OF SUMP PUMPS WAS NECESSARY.

A MAJOR PROBLEM AREA WAS THE FEED TANK AGITATOR.

2/76	SYSTEM	70.0	42.0	42.0	30.0			696	499	211	

** PROBLEMS/SOLUTIONS/COMMENTS

REPAIRS WERE MADE TO THE TANK AGITATORS, SLAKE TANKS AND MIX-HOLD TANKS CONTRIBUTING TO OUTAGE TIME.

REPAIRS AND CLEANOUT OF REACTANT PUMPS CONTRIBUTATED TO OUTAGE TIME.

3/76	SYSTEM	97.0	85.0	95.0	52.0			744	458	386	

** PROBLEMS/SOLUTIONS/COMMENTS

ALL RUBBER-LINED IMPELLERS WERE REPLACED IN THE PUMPS.

4/76	SYSTEM	90.0	100.0	100.0	77.0			720	552	552	
5/76	SYSTEM	81.0	100.0	100.0	61.0			744	456	456	
6/76	SYSTEM	100.0	99.0	99.0	82.0			720	597	589	
7/76	SYSTEM	90.0	98.0	99.0	72.0			744	584	574	
8/76	SYSTEM	97.0	97.0	97.0	97.0			744	744	722	

** PROBLEMS/SOLUTIONS/COMMENTS

VIBRATION IN THE SCRUBBER BOOSTER I.D. FAN NECESSITATED SYSTEM SHUTDOWN AND REPAIR.

9/76	SYSTEM	86.0	100.0	100.0	79.0			720	571	571	

PERIOD	MODULE	AVAILABILITY	OPERABILITY	RELIABILITY	UTILIZATION	% REMOVAL SO2	% REMOVAL PART.	PER HOURS	BOILER HOURS	FGD HOURS	CAP. FACTOR
		PERFORMANCE DATA									

** PROBLEMS/SOLUTIONS/COMMENTS

MINOR FAN PROBLEMS OCCURRED BUT NO FORCED OUTAGE TIME WAS REQUIRED.

HALF-LOAD OPERATIONS WERE CONDUCTED THROUGHOUT THE PERIOD BECAUSE OF BEARING PROBLEMS TO ONE OF THE TWO TURBINE GENERATING UNITS.

10/76	SYSTEM	100.0	100.0	100.0	94.0			744	699	699
11/76	SYSTEM	100.0	100.0	98.0	98.0			720	704	704

** PROBLEMS/SOLUTIONS/COMMENTS

DURING NOVEMBER AND DECEMBER, 1976 SOME FLUE GAS WAS BY-PASSED AROUND THE SYSTEM WHILE THE UTILITY CONDUCTED A CHECKOUT OF THE SCRUBBER INTERNAL AND REPLACED SOME OF THE PACKING SPHERES IN THE MOBILE BED.

12/76	SYSTEM	73.0	97.0	87.0	70.0			744	536	517
1/77	SYSTEM	94.0	94.0	94.0	94.0			744	744	698

** PROBLEMS/SOLUTIONS/COMMENTS

DURING THE MONTH OF JANUARY NO PROBLEMS OCCURRED.

2/77	SYSTEM	36.0	91.0	91.0	36.0			672	266	243

** PROBLEMS/SOLUTIONS/COMMENTS

DURING THE MONTH OF FEBRUARY IT WAS FOUND THAT THE CARBOLINE STACK LINER WAS BADLY DETERIORATED. SCRUBBER AND BOILER OPERATIONS WERE TERMINATED UNTILL THE STACK LINING WAS REPAIRED. THE STACK WAS REPAIRED FIRST BY WELDING A BACKUP METAL PLATE TO THE PORTIONS OF THE STACK WHERE PITTING OCCURRED. THE ENTIRE STACK WAS THEN LINED WITH REFRACTORY COATING CALLED PRECRETE G-8 BY AAF. THE REPAIRS WERE COMPLETED MARCH 7.

THE BOILER IS NOT OPERATED WITHOUT THE SCRUBBER BECAUSE THERE IS NO ESP FOR PARTICULATE CONTROL.

3/77	SYSTEM	.0			.0			744	0	0
4/77	SYSTEM	40.0	98.0	98.0	23.0			720	167	164
5/77	SYSTEM	59.0	98.0	98.0	69.0			744	527	513
6/77	SYSTEM	100.0	100.0	100.0	5.0			720	34	34

** PROBLEMS/SOLUTIONS/COMMENTS

WORK ON THE SCRUBBER MODULE INCLUDED REPAIRS TO THE UNDERBED DAMPER SYSTEM AND LEAKING IN THE VENTURI.

LIME SLAKING OPERATIONS WA! REPAIRED.

7/77	SYSTEM				.0			744	0	0

** PROBLEMS/SOLUTIONS/COMMENTS

A STRIKE BY PLANT OPERATING PERSONNEL RESULTED IN BOILER AND FGD SYSTEM SHUTDOWN.

8/77	SYSTEM				.0			744	0	0
9/77	SYSTEM				.0			720	0	0
10/77	SYSTEM				.0			744	0	0
11/77	SYSTEM	86.0	91.0	91.0	41.0			720	332	301

KENTUCKY UTILITIES: GREEN RIVER 1-3 (CONT.)

PERIOD	MODULE	AVAILABILITY	OPERABILITY	RELIABILITY	UTILIZATION	% REMOVAL SO2	% REMOVAL PART.	PER HOURS	BOILER HOURS	FGD HOURS	CAP. FACTOR
		PERFORMANCE DATA									

** PROBLEMS/SOLUTIONS/COMMENTS

PROBLEMS WERE ENCOUNTERED WITH LEAKS IN RECYCLE PUMP IMPELLER COATINGS AND PUMP FAILURES. TWO PUMPS WERE DOWN AND BEING BYPASSED.

DUE TO THE VERY COLD WEATHER NUMEROUS FREEZE-UPS OCCURED INCLUDING THE SLURRY LINE TO THE POND CAUSING FGD OUTAGE.

SUMP PUMP FAILURES WERE NOTED.

LEAKS IN THE PACKING WERE NOTED.

12/77	SYSTEM	50.0	63.0	91.0	50.0			744	596	375

** PROBLEMS/SOLUTIONS/COMMENTS

THE SYSTEM COULD HAVE BEEN CONSIDERED AVAILABLE THROUGHOUT MOST OF THE PERIOD BUT BECAUSE EMERGENCY CONDITIONS THE UTILITY CHOSE TO CONCENTRATE THEIR MAINTENANCE CREWS ON POWER GENERATION RATHER THAN FGD OPERATION. UNDER NORMAL CONDITIONS THE RELATIVELY MINOR FGD SYSTEM PROBLEMS WOULD HAVE BEEN SOLVED MORE QUICKLY.

1/78	SYSTEM	31.0	32.0	32.0	23.0			744	537	170
2/78	SYSTEM	100.0	.0		.0			672	672	0

** PROBLEMS/SOLUTIONS/COMMENTS

DURING THE FREEZE UP NUMEROUS GASKETS WERE TORN THROUGHOUT THE SYSTEM. THE SYSTEM WAS SHUT DOWN COMPLETELY FOR REPAIR WORK.

3/78	SYSTEM	100.0	.0		.0			744	669	0
4/78	SYSTEM	41.0	99.0	99.0	41.0			720	295	296
5/78	SYSTEM	64.0	100.0	100.0	64.0			744	474	474

** PROBLEMS/SOLUTIONS/COMMENTS

THE SCREENS ON THE SUCTION SIDE OF THE PUMPS THAT PUMP THE SLURRY FROM THE PREP ROOM TO THE NOZZLES EXPERIENCED PLUGGING PROBLEMS. THE SCREENS GET PLUGGED WITH LARGE GRIT IN THE SLURRY AND ARE SUCKED OUT OF POSITION BY THE PUMPS. THE UTILITY REPORTED THAT THIS TENDS TO BE A RE-OCCURRING PROBLEM.

6/78	SYSTEM	73.0	100.0	100.0	73.0			720	525	524

** PROBLEMS/SOLUTIONS/COMMENTS

BOILER AND FGD SYSTEM OUTAGES DURING JUNE AND JULY WERE FOR ROUTINE MAINTENANCE.

7/78	SYSTEM	13.0	96.0	100.0	13.0			744	103	99
8/78	SYSTEM	61.0	99.0	99.0	28.0			744	207	205

** PROBLEMS/SOLUTIONS/COMMENTS

THE UNIT WAS DOWN FROM AUGUST 1 UNTILL AUGUST 12 AS A RESULT OF BLEED PUMP PROBLEMS.

9/78	SYSTEM	76.0	98.0	100.0	41.0			720	303	298

** PROBLEMS/SOLUTIONS/COMMENTS

BECAUSE OF PLUGGING PROBLEMS THE FGD SYSTEM WAS OPERATED AT APPROXIMATELY ONE THIRD OF TOTAL CAPACITY THROUGHOUT SEPTEMBER.

10/78	SYSTEM	30.0	94.0	96.0	30.0			744	236	222

PERIOD	MODULE	AVAILABILITY	OPERABILITY	RELIABILITY	UTILIZATION	% REMOVAL SO2	% REMOVAL PART.	PER HOURS	BOILER HOURS	FGD HOURS	CAP. FACTOR
		PERFORMANCE DATA									
	** PROBLEMS/SOLUTIONS/COMMENTS										
		THE FGD SYSTEM EXPERIENCED RECYCLE TANK SCREEN PLUGGING.									
		THE FGD SYSTEM EXPERIENCED VIBRATING FAN PROBLEMS.									
11/78	SYSTEM	24.0	100.0	74.0	24.0			720	175	175	
	** PROBLEMS/SOLUTIONS/COMMENTS										
		THE UNIT WAS DOWN THE LAST TWO WEEKS OF NOVEMBER DUE TO LOW LOAD DEMAND.									
12/78	SYSTEM	.0			.0			744	0	0	
1/79	SYSTEM	.0	.0	.0	.0			744	1	0	
2/79	SYSTEM	.0			.0			672	0	0	.0
	** PROBLEMS/SOLUTIONS/COMMENTS										
		THE PROBLEMS IN JANUARY AND FEBRUARY WERE A RESULT OF FREEZING WEATHER.									
3/79	SYSTEM	11.2	100.0	100.0	11.2			744	83	83	
	** PROBLEMS/SOLUTIONS/COMMENTS										
		THE LOW OPERATIONAL HOURS FOR MARCH AND APRIL WERE DUE TO RECYCLE PUMP PROBLEMS.									
4/79	SYSTEM	18.2	100.0	100.0	18.2			720	131	131	
5/79	SYSTEM	.0			.0			744	0	0	.0
	** PROBLEMS/SOLUTIONS/COMMENTS										
		THE BOILER WAS TAKEN DOWN IN MAY FOR REPAIRS THAT ARE PROJECTED TO LAST THROUGH THE END OF SEPTEMBER.									
6/79	SYSTEM	100.0			.0			720	0	0	.0
	** PROBLEMS/SOLUTIONS/COMMENTS										
		THE UNIT REMAINED OUT OF SERVICE DURING JUNE FOR BOILER REPAIRS. IT IS NOT EXPECTED TO RETURN TO SERVICE UNTIL OCTOBER OR NOVEMBER.									
7/79	SYSTEM	100.0			.0			744	0	0	
8/79	SYSTEM	100.0			.0			744	0	0	
9/79	SYSTEM	100.0			.0			720	0	0	
	** PROBLEMS/SOLUTIONS/COMMENTS										
		THE BOILER REMAINED OUT OF SERVICE DURING JULY, AUGUST AND SEPTEMBER. THE BOILER TEMPERATURE VALVES AND PIPING BETWEEN THE PRIMARY AND SECONDARY SUPERHEATERS MUST STILL BE REPLACED. THE BOILER IS NOT EXPECTED TO RETURN ON LINE UNTIL THE FIRST OF THE YEAR OR POSSIBLY AS LATE AS MARCH.									
		THE NEW INDIRECT REHEAT SYSTEM IS IN PLACE AND READY FOR OPERATION AS SOON AS THE BOILER RETURNS TO SERVICE.									
10/79	SYSTEM	100.0			.0			744	0	0	
11/79	SYSTEM	100.0			.0			720	0	0	
12/79	SYSTEM	100.0			.0			744	0	0	

KENTUCKY UTILITIES: GREEN RIVER 1-3 (CONT.)

PERIOD	MODULE	AVAILABILITY	OPERABILITY	RELIABILITY	UTILIZATION	% REMOVAL SO2	% REMOVAL PART.	PER HOURS	BOILER HOURS	FGD HOURS	CAP. FACTOR
					PERFORMANCE DATA						

** PROBLEMS/SOLUTIONS/COMMENTS

WORK IS CONTINUING ON THE REPAIRS OF THE OLD BOILER. THE UNIT MAY BE SHUT DOWN INTO MARCH 1980. THE FGD SYSTEM WAS AVAILABLE THROUGHOUT THE PERIOD BUT WAS NOT OPERATED.

SECTION 3
DESIGN AND PERFORMANCE DATA FOR OPERATIONAL DOMESTIC FGD SYSTEMS

COMPANY NAME	LOUISVILLE GAS & ELECTRIC	
PLANT NAME	CANE RUN	
UNIT NUMBER	4	
CITY	LOUISVILLE	
STATE	KENTUCKY	
REGULATORY CLASSIFICATION	D	
PARTICULATE EMISSION LIMITATION - NG/J	50.	(.116 LB/MMBTU)
SO2 EMISSION LIMITATION - NG/J	516.	(1.200 LB/MMBTU)
NET PLANT GENERATING CAPACITY - MW	992.0	
GROSS UNIT GENERATING CAPACITY - MW	188.0	
NET UNIT GENERATING CAPACITY W/FGD - MW	175.0	
NET UNIT GENERATING CAPACITY WO/FGD - MW	178.0	
EQUIVALENT SCRUBBED CAPACITY - MW	188.0	
** BOILER DATA		
SUPPLIER	COMBUSTION ENGINEERING	
TYPE	PULVERIZED COAL	
SERVICE LOAD	BASE	
COMMERCIAL SERVICE DATE	0/62	
MAXIMUM BOILER FLUE GAS FLOW - CU.M/S	346.37	(734000 ACFM)
FLUE GAS TEMPERATURE - C	160.0	(320 F)
STACK HEIGHT - M	76.	(250 FT)
STACK TOP DIAMETER - M	*******	(***** FT)
** FUEL DATA		
FUEL TYPE	COAL	
FUEL GRADE	BITUMINOUS	
AVERAGE HEAT CONTENT - J/G	26749.	(11500 BTU/LB)
RANGE HEAT CONTENT - BTU/LB		10,400-11,900
AVERAGE ASH CONTENT - %	17.10	
RANGE ASH CONTENT - %	15.5-24.5	
AVERAGE MOISTURE CONTENT - %	9.00	
RANGE MOISTURE CONTENT - %	8.0-10.75	
AVERAGE SULFUR CONTENT - %	3.75	
RANGE SULFUR CONTENT - %	3.5-4.0	
AVERAGE CHLORIDE CONTENT - %	.04	
RANGE CHLORIDE CONTENT - %	0.03-0.06	
** ESP		
NUMBER	1	
TYPE	COLD SIDE	
PARTICULATE DESIGN REMOVAL EFFICIENCY - %	99.0	
FLUE GAS CAPACITY - CU.M/S	346.4	(734000 ACFM)
FLUE GAS TEMPERATURE - C	160.0	(320 F)
** PARTICULATE SCRUBBER		
TYPE	NONE	
** FGD SYSTEM		
SALEABLE PRODUCT/THROWAWAY PRODUCT	THROWAWAY PRODUCT	
GENERAL PROCESS TYPE	WET SCRUBBING	
PROCESS TYPE	LIME	
SYSTEM SUPPLIER	AMERICAN AIR FILTER	
A-E FIRM	FLUOR - PIONEER	
DEVELOPMENT LEVEL	FULL SCALE	
NEW/RETROFIT	RETROFIT	
PARTICULATE DESIGN REMOVAL EFFICIENCY - %	99.00	
SO2 DESIGN REMOVAL EFFICIENCY - %	85.00	
COMMERCIAL DATE	9/77	
INITIAL START-UP	8/76	
CONSTRUCTION INITIATION	10/74	
CONTRACT AWARDED	4/74	
ABSORBER SPARE CAPACITY INDEX - %	.0	
ABSORBER SPARE COMPONENT INDEX	.0	
** ABSORBER		
NUMBER	2	
TYPE	MOBILE PACKED TOWER	
INITIAL START UP	8/76	
SUPPLIER	AMERICAN AIR FILTER	
DIMENSIONS - FT	20 X 20 X 27.5	
SHELL MATERIAL	CARBON STEEL	

LOUISVILLE GAS & ELECTRIC: CANE RUN 4 (CONT.)

SHELL LINER MATERIAL	PRECRETE AND PLASITE 4005	
INTERNAL MATERIAL	POLYURETHANE BALLS, CERAMIC NOZZLES	
BOILER LOAD/ABSORBER - %	5.0	
GAS FLOW - CU.M/S	173.52	(367700 ACFM)
GAS TEMPERATURE - C	160.0	(320 F)
L/G RATIO - L/CU.M	8.0	(60.0 GAL/1000ACF)
PRESSURE DROP - KPA	1.0	(4.0 IN-H2O)
SO2 DESIGN REMOVAL EFFICIENCY - %	87.5	

** FANS

NUMBER	2	
TYPE	SCRUBBER FD	
CONSTRUCTION MATERIALS	CARBON STEEL	
SERVICE - WET/DRY	DRY	
CAPACITY - CU.M/S	173.19	(367000 ACFM)

** MIST ELIMINATOR

NUMBER	4	
TYPE	CHEVRON	
CONSTRUCTION MATERIAL	SS, PLASITE 4005 LINING (DUCT AREA)	
CONFIGURATION	HORIZONTAL	
NUMBER OF STAGES	2	
NUMBER OF PASSES	3	
FREEBOARD DISTANCE - M	1.83	(6.0 FT)
VANE ANGLES	1.25	
SUPERFICIAL GAS VELOCITY - M/S	3.0	(10.0 FT/S)
PRESSURE DROP - KPA	.2	(.8 IN-H2O)

** PUMPS

SERVICE	NUMBER
ABSORBER RECIRCULATION	6

** TANKS

SERVICE	NUMBER
REACTION	****

** REHEATER

TYPE	DIRECT COMBUSTION	
TEMPERATURE BOOST - C	27.8	(50 F)

** THICKENER

NUMBER	1	
DIAMETER - M	22.9	(75 FT)

** WATER LOOP

TYPE	OPEN	
FRESH MAKEUP WATER ADDITION - LITERS/S	6.3	(100 GPM)

** TREATMENT

CONTRACTOR: IUCS

** DISPOSAL

NATURE	FINAL
TYPE	LINED POND
LOCATION	ON-SITE

PERFORMANCE DATA

PERIOD	MODULE	AVAILABILITY	OPERABILITY	RELIABILITY	UTILIZATION	% REMOVAL SO2	% REMOVAL PART.	PER HOURS	BOILER HOURS	FGD HOURS	CAP. FACTOR
8/76	SYSTEM		90.0		90.0			744	740	666	

** PROBLEMS/SOLUTIONS/COMMENTS

OUTAGE TIME DURING THE MONTH WAS DUE PRIMARILY TO EQUIPMENT INSPECTIONS, REPAIR/REPLACEMENT OF AUXILIARY MOTOR PARTS, AND DEPLETION OF ABSORBENT SUPPLY BECAUSE OF A LATE BARGE DELIVERY.

THE SCRUBBING SYSTEM HAS BEEN GENERALLY OPERATING AT APPROXIMATELY 50 TO 80% FLUE GAS CAPACITY.

SOME MINOR PROBLEMS HAVE BEEN ENCOUNTERED WITH AUXILIARY EQUIPMENT MOTORS.

PERIOD	MODULE	AVAILABILITY	OPERABILITY	RELIABILITY	UTILIZATION	% REMOVAL SO2	% REMOVAL PART.	PER HOURS	BOILER HOURS	FGD HOURS	CAP. FACTOR
				PERFORMANCE DATA							

SOME MINOR PROBLEMS HAVE BEEN ENCOUNTERED WITH SPRAY NOZZLES IN THE MOBILE BED CONTACTOR. THE SPRAY NOZZLES ARE SPINNER-VANE COMPONENTS ORIGINALLY CONSTRUCTED OF PLASTIC. OPERATING TEMPERATURES AND PRESSURES HAVE CAUSED THE PLASTIC HOUSING TO EXPAND RESULTING IN THE VANES EXTRUDING OUT THE FRONT END, SUBSEQUENTLY CAUSING A BLOCKAGE OF THE SLURRY FEED. THE NOZZLES HAVE BEEN REPLACED WITH CERAMIC CONSTRUCTED COMPONENTS.

9/76	SYSTEM		90.0		90.0			720	720	650	
10/76	SYSTEM		90.0		73.0			744	600	540	

** PROBLEMS/SOLUTIONS/COMMENTS

THE UNIT WAS TAKEN OUT OF SERVICE ON OCTOBER 25, 1976 TO IMPLEMENT ADDITIONAL MODIFICATIONS TO THE SCRUBBING SYSTEM. MAJOR SYSTEM MODIFICATIONS INCLUDE INCREASING PUMP CAPACITY AND DECREASING PRESSURE DROP. THESE TWO PROBLEMS HAVE HINDERED OPERATION OF THE UNIT AT FULL LOAD CAPACITY.

TO DATE, THE MECHANICAL RELIABILITY OF THE SYSTEM AS A FUNCTION OF SERVICE TIME VERSUS OUTAGE TIME, HAS BEEN VERY GOOD.

11/76	SYSTEM		95.0					720			
12/76	SYSTEM		90.0					744			
1/77	SYSTEM				.0			744	0	0	

** PROBLEMS/SOLUTIONS/COMMENTS

DUE TO OHIO RIVER FREEZE UP BARGE DELIVERIES OF LIME CEASED.

2/77	SYSTEM				.0			672	0	0	

** PROBLEMS/SOLUTIONS/COMMENTS

DURING FEBRUARY, THE SCRUBBER WAS ONLY OPERATED FOR TWO 4-HOUR PERIODS TO PREVENT TOTAL FREEZE-UP.

3/77	SYSTEM		83.0		48.1			744	432	358	

** PROBLEMS/SOLUTIONS/COMMENTS

THE SCRUBBER CAME BACK ON-LINE ON MARCH 14, 1977.

DC POWER SUPPLY TO THE BYPASS DAMPER FAILED. THE SCRUBBER SYSTEM WAS BYPASSED WHILE REPAIRS WERE MADE.

4/77	SYSTEM							720			

** PROBLEMS/SOLUTIONS/COMMENTS

THE SCRUBBING SYSTEM WAS DOWN FOR MODIFICATIONS FROM APRIL 18 TO JULY 17, 1977.

A CHEVRON TYPE MIST ELIMINATOR WAS INSTALLED DURING THE OUTAGE

A NEW SPRAY HEADER WAS ADDED TO INCREASE THE L/G RATIO DURING THE OUTAGE.

DIRECT OIL-FIRED REHEAT WAS ADDED DURING THE OUTAGE.

THE LINING IN THE SYSTEM FROM THE MIST ELIMINATOR TO THE STACK WAS REPLACE WITH PLASITE 4005 (THE ORIGINAL LINING WAS BUBBLING, BUT HAD NOT YET FAILED, FAILURE SEEMED IMMINENT WITHIN 4-5 MONTHS). THE NEW LINING WAS INSTALLED BY GENERAL COATINGS.

5/77	SYSTEM				.0			744	0	0	
6/77	SYSTEM				.0			720	0	0	

LOUISVILLE GAS & ELECTRIC: CANE RUN 4 (CONT.)

PERIOD	MODULE	AVAILABILITY	OPERABILITY	RELIABILITY	UTILIZATION	% REMOVAL SO2	% REMOVAL PART.	PER HOURS	BOILER HOURS	FGD HOURS	CAP. FACTOR
		PERFORMANCE DATA									
7/77	SYSTEM		90.0		43.6	80.70		744	360	324	
	** PROBLEMS/SOLUTIONS/COMMENTS										
	THE SYSTEM WAS PLACED BACK IN SERVICE ON JULY 17, 1977 AFTER SYSTEM MODIFICATIONS WERE COMPLETED.										
8/77	SYSTEM		94.0		93.0	83.90		744	657	588	
	** PROBLEMS/SOLUTIONS/COMMENTS										
	COMPLIANCE TESTING OCCURED DURING AUGUST AND SEPTEMBER 1977 BY EPA PERSONNEL AND WAS OFFICIALLY APPROVED TO HAVE ACHIEVED COMPLIANCE.										
9/77	SYSTEM		99.0		99.0			720	529	524	
10/77	SYSTEM	99.0	98.0	99.0	89.0	84.30		744	677	662	
	** PROBLEMS/SOLUTIONS/COMMENTS										
	DURING DECEMBER, "AIRCO", THE LIME SUPPLIER, HAD 1200 FT OF THEIR FEED LINE FREEZE UP.										
11/77	SYSTEM	96.0	94.0	94.0	63.0	83.70		720	483	453	
12/77	SYSTEM	85.0	85.0	100.0	82.0			744	715	608	
1/78	SYSTEM	90.0	67.0	87.0	67.0			744	742	494	
	** PROBLEMS/SOLUTIONS/COMMENTS										
	LINE BECAME UNAVAILABLE FOR A TIME BUT THERE WERE NO SCRUBBER BREAKDOWNS.										
2/78	SYSTEM				.0			672	0	0	
	** PROBLEMS/SOLUTIONS/COMMENTS										
	THE UNIT WAS DOWN THE ENTIRE MONTH OF FEBRUARY DUE TO A COAL SHORTAGE AND A LACK OF AVAILABLE LIME RESULTING FROM THE SEVERE WINTER WEATHER. THE UNIT CAME BACK ON LINE MARCH 21, 1978.										
3/78	SYSTEM	33.5			34.0			744		249	
4/78	SYSTEM	100.0	100.0	100.0	47.0			720	303	303	
	** PROBLEMS/SOLUTIONS/COMMENTS										
	DURING APRIL THE BOILER WAS DOWN FOR REPAIRS.										
5/78	SYSTEM	31.0	35.0	35.0	12.0			744	352	115	
	** PROBLEMS/SOLUTIONS/COMMENTS										
	THE BOILER WAS DOWN AGAIN IN MAY FOR REPAIRS.										
	DURING THE MAY BOILER OUTAGE A NUMBER OF MODIFICATIONS WERE MADE TO THE DAMPERS IN THE FGD SYSTEM.										
6/78	SYSTEM	99.3	99.0	99.3	99.0			720	720	715	
7/78	SYSTEM	98.8	99.0	98.7	91.0			744	687	678	
8/78	SYSTEM		94.0		94.0			744	744	701	
9/78	SYSTEM		100.0		19.0			720	138	138	

PERIOD	MODULE	AVAILABILITY	OPERABILITY	RELIABILITY	UTILIZATION	% REMOVAL SO2	% REMOVAL PART.	PER HOURS	BOILER HOURS	FGD HOURS	CAP. FACTOR
		PERFORMANCE DATA									
	** PROBLEMS/SOLUTIONS/COMMENTS										
		THE BOILER WAS DOWN IN SEPTEMBER TO NOVEMBER 1978 FOR TUBE REPAIRS.									
10/78	SYSTEM				.0			744	0	0	
11/78	SYSTEM			97.0	58.0			720	432	420	
12/78	SYSTEM							744			
	** PROBLEMS/SOLUTIONS/COMMENTS										
		DURING THIS PERIOD A TURBINE BECAME UNOPERATIONAL. THE UNIT IS EXPECTED TO BE OFF LINE UNTIL APRIL.									
1/79	SYSTEM				.0			744	0	0	
2/79	SYSTEM	100.0			.0			672	0	0	.0
3/79	SYSTEM	100.0			.0			744	0	0	.0
4/79	SYSTEM	100.0			.0			720	0	0	.0
	** PROBLEMS/SOLUTIONS/COMMENTS										
		THE UNIT DID NOT OPERATE DURING THESE MONTHS BECAUSE THE BOILER WAS STILL DOWN WITH TUBE LEAKS.									
5/79	SYSTEM	100.0			.0			7906	0	0	.0
6/79	SYSTEM			46.2	17.1			720	266	123	
	** PROBLEMS/SOLUTIONS/COMMENTS										
		THE UNIT REMAINED DOWN DURING MAY FOR CONTINUED REPAIRS AT THE BOILER. THE UNIT WAS PLACED BACK IN SERVICE IN JUNE.									
7/79	SYSTEM			99.0	93.0			744	701	692	
8/79	SYSTEM			89.0	89.0			744	744	664	
9/79	SYSTEM			.0	.0			720	168	0	
	** PROBLEMS/SOLUTIONS/COMMENTS										
		THE ONLY MAJOR PROBLEMS OCCURRED DURING SEPTEMBER. TUBE FAILURES WERE ENCOUNTERED CAUSING THE BOILER OUTAGE AND MECHANICAL FAILURE WITH THE DAMPER GATES CAUSED THE SCRUBBED DOWNTIME.									
10/79	SYSTEM			30.1	12.0			744	296	89	
11/79	SYSTEM			93.9	58.1			720	445	418	
12/79	SYSTEM			38.5	20.2			744	390	150	
	** PROBLEMS/SOLUTIONS/COMMENTS										
		DURING THE FOURTH QUARTER 1979 THERE WERE NO MAJOR PROBLEMS. THE LOW SCRUBBER HOURS WERE A RESULT OF NECESSARY MAINTENANCE.									

SECTION 3
DESIGN AND PERFORMANCE DATA FOR OPERATIONAL DOMESTIC FGD SYSTEMS

COMPANY NAME	LOUISVILLE GAS & ELECTRIC	
PLANT NAME	CANE RUN	
UNIT NUMBER	5	
CITY	LOUISVILLE	
STATE	KENTUCKY	
REGULATORY CLASSIFICATION	D	
PARTICULATE EMISSION LIMITATION - NG/J	50.	(.116 LB/MMBTU)
SO2 EMISSION LIMITATION - NG/J	516.	(1.200 LB/MMBTU)
NET PLANT GENERATING CAPACITY - MW	992.0	
GROSS UNIT GENERATING CAPACITY - MW	200.0	
NET UNIT GENERATING CAPACITY W/FGD - MW	192.0	
NET UNIT GENERATING CAPACITY WO/FGD - MW	195.0	
EQUIVALENT SCRUBBED CAPACITY - MW	200.0	
** BOILER DATA		
SUPPLIER	RILEY STOKER	
TYPE	PULVERIZED COAL	
SERVICE LOAD	BASE	
COMMERCIAL SERVICE DATE	0/66	
MAXIMUM BOILER FLUE GAS FLOW - CU.M/S	306.73	(650000 ACFM)
FLUE GAS TEMPERATURE - C	162.8	(325 F)
STACK HEIGHT - M	76.	(250 FT)
STACK TOP DIAMETER - M	*******	(***** FT)
** FUEL DATA		
FUEL TYPE	COAL	
FUEL GRADE	BITUMINOUS	
AVERAGE HEAT CONTENT - J/G	26749.	(11500 BTU/LB)
RANGE HEAT CONTENT - BTU/LB		10,400-11,900
AVERAGE ASH CONTENT - %	17.10	
RANGE ASH CONTENT - %	15.5-24.5	
AVERAGE MOISTURE CONTENT - %	9.00	
RANGE MOISTURE CONTENT - %	8.0-10.75	
AVERAGE SULFUR CONTENT - %	3.75	
RANGE SULFUR CONTENT - %	3.5-4.0	
AVERAGE CHLORIDE CONTENT - %	.04	
RANGE CHLORIDE CONTENT - %	0.03-0.06	
** ESP		
NUMBER	2	
TYPE	COLD SIDE	
PARTICULATE DESIGN REMOVAL EFFICIENCY - %	99.0	
FLUE GAS CAPACITY - CU.M/S	306.7	(650000 ACFM)
FLUE GAS TEMPERATURE - C	162.8	(325 F)
** PARTICULATE SCRUBBER		
TYPE	NONE	
** FGD SYSTEM		
SALEABLE PRODUCT/THROWAWAY PRODUCT	THROWAWAY PRODUCT	
GENERAL PROCESS TYPE	WET SCRUBBING	
PROCESS TYPE	LIME	
SYSTEM SUPPLIER	COMBUSTION ENGINEERING	
A-E FIRM	FLUOR - PIONEER	
DEVELOPMENT LEVEL	FULL SCALE	
NEW/RETROFIT	RETROFIT	
PARTICULATE DESIGN REMOVAL EFFICIENCY - %	99.00	
SO2 DESIGN REMOVAL EFFICIENCY - %	85.00	
COMMERCIAL DATE	7/78	
INITIAL START-UP	12/77	
CONSTRUCTION INITIATION	10/75	
CONTRACT AWARDED	4/75	
ABSORBER SPARE CAPACITY INDEX - %	.0	
ABSORBER SPARE COMPONENT INDEX	.0	
** ABSORBER		
NUMBER	2	
TYPE	SPRAY TOWER	
INITIAL START UP	12/77	
SUPPLIER	COMBUSTION ENGINEERING	
NUMBER OF STAGES	3	
DIMENSIONS - FT	26 (DIA) X 31	

LOUISVILLE GAS & ELECTRIC: CANE RUN 5 (CONT.)

SHELL MATERIAL	316L STAINLESS STEEL	
SHELL LINER MATERIAL	PRECRETE	
INTERNAL MATERIAL	CERAMIC NOZZLES	
NUMBER OF NOZZLES	84	
NOZZLE TYPE	CERAMIC	
BOILER LOAD/ABSORBER - %	50.0	
GAS FLOW - CU.M/S	153.37	(325000 ACFM)
GAS TEMPERATURE - C	162.8	(325 F)
LIQUID RECIRCULATION RATE - LITER/S	1100.	(17500 GPM)
L/G RATIO - L/CU.M	7.4	(55.0 GAL/1000ACF)
PRESSURE DROP - KPA	.1	(.5 IN-H2O)
SUPERFICAL GAS VELOCITY - M/SEC	2.1	(7.0 FT/S)
SO2 DESIGN REMOVAL EFFICIENCY - %	91.0	

** FANS

NUMBER	2	
TYPE	SCRUBBER FD	
CONSTRUCTION MATERIALS	CARBON STEEL	
SERVICE - WET/DRY	DRY	
CAPACITY - CU.M/S	165.16	(350000 ACFM)

** FANS

NUMBER	2	
TYPE	I.D.	
CONSTRUCTION MATERIALS	CARBON STEEL	

** MIST ELIMINATOR

NUMBER	2	
TYPE	CHEVRON	
CONSTRUCTION MATERIAL	FRP	
CONFIGURATION	HORIZONTAL	
NUMBER OF STAGES	2	
NUMBER OF PASSES	2	
WASH SYSTEM	FRESH MAKE UP ONCE/24 H	
SUPERFICIAL GAS VELOCITY - M/S	2.1	(7.0 FT/S)
PRESSURE DROP - KPA	.1	(.5 IN-H2O)

** MIST ELIMINATOR

NUMBER	2
NUMBER OF STAGES	1

** PROCESS CONTROL CHEMISTRY

CONTROL VARIABLES	PH
CONTROL RANGE	9-10 (RECYCLE SLURRY)
CONTROL MANNER	AUTOMATIC
SENSOR LOCATION	REACTION TANK

** PUMPS

SERVICE	NUMBER
ABSORBER RECIRCULATION	2
SPRAY PUMP	2
LIME FEED	2
THICKENER UNDERFLOW	2
WATER RECYCLE	2
MIST ELIMINATOR WASH	****

** TANKS

SERVICE	NUMBER
RECYCLE	1
REACTION	1
LIME FEED	****

** REHEATER

NUMBER	2	
TYPE	IN-LINE	
HEATING MEDIUM	STEAM	
TEMPERATURE BOOST - C	22.2	(40 F)

** THICKENER

NUMBER	1	
CONSTRUCTION MATERIAL	RUBBER-LINED CARBON STEEL	
DIAMETER - M	33.5	(110 FT)
OUTLET SOLIDS - %	25.0	

LOUISVILLE GAS & ELECTRIC: CANE RUN 5 (CONT.)

** WATER LOOP
TYPE — OPEN

** TREATMENT
TYPE — POZ-O-TEC
CONTRACTOR — IUCS

** DISPOSAL
NATURE — FINAL
TYPE — LINED POND
LOCATION — ON-SITE
TRANSPORTATION — PIPELINE

PERFORMANCE DATA

PERIOD	MODULE	AVAILABILITY	OPERABILITY	RELIABILITY	UTILIZATION	% REMOVAL SO2	% REMOVAL PART.	PER HOURS	BOILER HOURS	FGD HOURS	CAP. FACTOR
12/77	SYSTEM							744			

** PROBLEMS/SOLUTIONS/COMMENTS

OPERATION OF THE FGD SYSTEM BEGAN ON DECEMBER 29, 1977. INITIAL OPERATIONS WERE NOT CONTINUOUS.

1/78	SYSTEM							744			

** PROBLEMS/SOLUTIONS/COMMENTS

SOME OF THE CONTROLS WERE NOT WORKING PORPERLY AND MODIFICATIONS WERE NECESSARY.

2/78	SYSTEM							672			

** PROBLEMS/SOLUTIONS/COMMENTS

THE PLANT REMAINED OFF LINE THROUGHOUT FEBRUARY AND RESTARTED ON MARCH 24.

VARIOUS INITIAL START-UP PROBLEMS WERE STILL BEING ENCOUNTERED CAUSING FGD SYSTEM OUTAGES.

3/78	SYSTEM		50.0		12.2			744	182	94	
4/78	SYSTEM		97.0		90.0			720	669	648	

** PROBLEMS/SOLUTIONS/COMMENTS

FGD SYSTEM MODIFICATIONS WERE MADE DURING THIS TIME IN PREPARATION FOR PERFORMANCE TESTS. HOWEVER, THE EPA TEST METHODS WERE NOT FOLLOWED ACCURATELY.

5/78	SYSTEM		84.0		49.0			744	432	364	
6/78	SYSTEM	86.8	86.0	86.1	82.0			720	685	590	

** PROBLEMS/SOLUTIONS/COMMENTS

THE STEAM REHEAT COIL INSTALLATION HAS BEEN A CHRONIC PROBLEM AREA. WELDS HAVE BEEN FAILING EVER SINCE INITIAL OPERATIONS.

7/78	SYSTEM	83.1	80.0	80.1	68.0			744	632	506	
8/78	SYSTEM		86.0		62.0			744	540	464	

** PROBLEMS/SOLUTIONS/COMMENTS

PROBLEMS CONTINUED WITH THE REHEAT COILS.

9/78	SYSTEM		80.0		67.0			720	609	485	
10/78	SYSTEM		96.0		71.0			744	530	528	

PERIOD	MODULE	AVAILABILITY	OPERABILITY	RELIABILITY	UTILIZATION	% REMOVAL SO2	% REMOVAL PART.	PER HOURS	BOILER HOURS	FGD HOURS	CAP. FACTOR
		PERFORMANCE DATA									

** PROBLEMS/SOLUTIONS/COMMENTS

THE SYSTEM WAS SHUTDOWN FOR REPAIRS TO THE STEAM REHEATER COILS. THE OUTAGE LASTED ABOUT TWO WEEKS.

11/78	SYSTEM		94.0		33.0			720	253	238	
12/78	SYSTEM	54.7	46.2	46.2	40.6			744	654	302	
1/79	SYSTEM	69.6	67.4	67.4	62.8			744	693	467	
2/79	SYSTEM		70.6		50.1			672	477	337	

** PROBLEMS/SOLUTIONS/COMMENTS

DURING FEBRUARY FREEZING CAUSED PROBLEMS WITH LIME DELIVERY.

3/79	SYSTEM		71.8		57.5			744	596	428	
4/79	SYSTEM		99.2		49.6			720	360	357	

** PROBLEMS/SOLUTIONS/COMMENTS

SOME PROBLEMS WERE EXPERIENCED WITH DAMPERS AND THERE WERE PUMP FAILURES.

5/79	SYSTEM		84.3		49.1			744	433	365	
6/79	SYSTEM		77.0		58.2			720	544	419	

** PROBLEMS/SOLUTIONS/COMMENTS

THE ONLY PROBLEMS REPORTED BY THE UTILITY WERE SPRAY PUMP PACKING FAILURES AND WELDING FAILURES ON THE REHEATER.

7/79	SYSTEM		72.0		56.0			744	583	420	
8/79	SYSTEM		88.0		73.0			744	613	540	
9/79	SYSTEM		84.0		54.0			720	469	392	

** PROBLEMS/SOLUTIONS/COMMENTS

THE WELDING PROBLEMS WITH THE REHEATER WERE ENCOUNTERED IN JULY AND SEPTEMBER. THE FAILURES ARE CONTINUING AND ARE EXPECTED TO BE RESOLVED BY THIS WINTER.

10/79	SYSTEM		83.7		65.6			744	583	488	
11/79	SYSTEM		95.2		46.4			720	351	334	
12/79	SYSTEM		82.2		63.4			744	574	472	

** PROBLEMS/SOLUTIONS/COMMENTS

DURING THE FOURTH QUARTER 1979 THE UTILITY REPORTED THAT NO MAJOR PROBLEMS OCCURRED. THE UNIT REQUIRED ONLY NORMAL MAINTENANCE.

SECTION 3
DESIGN AND PERFORMANCE DATA FOR OPERATIONAL DOMESTIC FGD SYSTEMS

COMPANY NAME	LOUISVILLE GAS & ELECTRIC	
PLANT NAME	CANE RUN	
UNIT NUMBER	6	
CITY	LOUISVILLE	
STATE	KENTUCKY	
REGULATORY CLASSIFICATION	D	
PARTICULATE EMISSION LIMITATION - NG/J	50.	(.116 LB/MMBTU)
SO2 EMISSION LIMITATION - NG/J	516.	(1.200 LB/MMBTU)
NET PLANT GENERATING CAPACITY - MW	992.0	
GROSS UNIT GENERATING CAPACITY - MW	288.0	
NET UNIT GENERATING CAPACITY W/FGD - MW	269.0	
NET UNIT GENERATING CAPACITY WO/FGD - MW	272.0	
EQUIVALENT SCRUBBED CAPACITY - MW	288.0	
** BOILER DATA		
SUPPLIER	COMBUSTION ENGINEERING	
TYPE	PULVERIZED COAL	
SERVICE LOAD	BASE	
COMMERCIAL SERVICE DATE	0/69	
MAXIMUM BOILER FLUE GAS FLOW - CU.M/S	502.57	(1065000 ACFM)
FLUE GAS TEMPERATURE - C	148.9	(300 F)
STACK HEIGHT - M	158.	(518 FT)
STACK TOP DIAMETER - M	4.9	(16.0 FT)
** FUEL DATA		
FUEL TYPE	COAL	
FUEL GRADE	BITUMINOUS	
AVERAGE HEAT CONTENT - J/G	25586.	(11000 BTU/LB)
RANGE HEAT CONTENT - BTU/LB		10,400-11,900
AVERAGE ASH CONTENT - %	17.10	
RANGE ASH CONTENT - %	15.5-24.5	
AVERAGE MOISTURE CONTENT - %	9.00	
RANGE MOISTURE CONTENT - %	8.0-10.75	
AVERAGE SULFUR CONTENT - %	4.80	
RANGE SULFUR CONTENT - %	3.5-6.3	
AVERAGE CHLORIDE CONTENT - %	.04	
RANGE CHLORIDE CONTENT - %	0.03-0.06	
** ESP		
NUMBER	1	
TYPE	COLD SIDE	
PARTICULATE DESIGN REMOVAL EFFICIENCY - %	99.4	
FLUE GAS CAPACITY - CU.M/S	502.6	(1065000 ACFM)
FLUE GAS TEMPERATURE - C	148.9	(300 F)
** PARTICULATE SCRUBBER		
TYPE	NONE	
** FGD SYSTEM		
SALEABLE PRODUCT/THROWAWAY PRODUCT	THROWAWAY PRODUCT	
GENERAL PROCESS TYPE	WET SCRUBBING	
PROCESS TYPE	DUAL ALKALI	
SYSTEM SUPPLIER	ADL/COMBUSTION EQUIP ASSOCIATE	
A-E FIRM	FLUOR - PIONEER	
DEVELOPMENT LEVEL	DEMONSTRATION	
NEW/RETROFIT	RETROFIT	
SO2 DESIGN REMOVAL EFFICIENCY - %	95.00	
INITIAL START-UP	4/79	
CONTRACT AWARDED	10/76	
ABSORBER SPARE CAPACITY INDEX - %	20.0	
ABSORBER SPARE COMPONENT INDEX	.3	
** ABSORBER		
NUMBER	2	
TYPE	TRAY TOWER	
INITIAL START UP	12/78	
SUPPLIER	COMBUSTION EQUIP ASSOCIATES	
NUMBER OF STAGES	2	
DIMENSIONS - FT	32 DIA X 45	
SHELL MATERIAL	A283 CARBON STEEL	
SHELL LINER MATERIAL	FLAKE REINFORCED POLYESTER	
INTERNAL MATERIAL	317L SS, 316 SS, FRP PIPING	

LOUISVILLE GAS & ELECTRIC: CANE RUN 6 (CONT.)

BOILER LOAD/ABSORBER - %	60.0	
GAS FLOW - CU.M/S	251.29	(532500 ACFM)
GAS TEMPERATURE - C	80.0	(176 F)
L/G RATIO - L/CU.M	1.3	(10.0 GAL/1000ACF)
PRESSURE DROP - KPA	2.2	(9.0 IN-H20)
SUPERFICAL GAS VELOCITY - M/SEC	2.7	(9.0 FT/S)
SO2 INLET CONCENTRATION - PPM	3471	
SO2 OUTLET CONTRATION - PPM	200	
SO2 DESIGN REMOVAL EFFICIENCY - %	95.0	

** CENTRIFUGE

NUMBER	0

** FANS

NUMBER	2	
TYPE	BOOSTER, CENTRIFUGAL	
CONSTRUCTION MATERIALS	A441 CARBON STEEL	
SERVICE - WET/DRY	DRY	
CAPACITY - CU.M/S	251.52	(533000 ACFM)

** VACUUM FILTER

NUMBER	3	
TYPE	ROTARY-DRUM WITH WATER WASH	
CONSTRUCTION MATERIAL	316 SS [FILTER DRUM], FRP[BELT CLOTH]	
CAPACITY - M T/D	684.8	(755 T/D)
INLET SOLIDS - %	25.0	
OUTLET SOLIDS - %	63.0	

** MIST ELIMINATOR

NUMBER	1	
TYPE	CHEVRON	
CONSTRUCTION MATERIAL	POLYPROPYLENE	
CONFIGURATION	HORIZONTAL	
NUMBER OF STAGES	1	
NUMBER OF PASSES	4	
FREEBOARD DISTANCE - M	1.52	(5.0 FT)
PRESSURE DROP - KPA	.2	(1.0 IN-H20)

** PUMPS

SERVICE	NUMBER
REACTOR TRANSFER	2
ABSORBER RECIRCULATION	4
THICKENER HOLD TANK TRANSFER	2
LIME SLURRY	2
SODA ASH	2
THICKENER UNDERFLOW	2
VACUUM	3

** TANKS

SERVICE	NUMBER
PRIMARY REACTION TANK	2
SECONDARY REACTION TANK	2
FEED FORWARD TANK	****
FILTRATE SUMP	****
THICKENER HOLD TANK	1

** REHEATER

NUMBER	2	
TYPE	DIRECT COMBUSTION	
TEMPERATURE BOOST - C	27.8	(50 F)
ENERGY REQUIRED	2563000 BTU/HR FOR FLUE GAS PLUS 1282000 BTU/HR	

** THICKENER

NUMBER	1	
TYPE	FLAT BOTTOM	
CONSTRUCTION MATERIAL	CONCRETE SHELL, CARBON STEEL INTERIOR, FLAKE REI	
DIAMETER - M	38.1	(125 FT)
OUTLET SOLIDS - %	25.0	

** WATER LOOP

TYPE	CLOSED	
EVAPORATOR WATER LOSS - LITER/S	17.5	(278 GPM)

LOUISVILLE GAS & ELECTRIC: CANE RUN 6 (CONT.)

** TREATMENT
CONTRACTOR: IUCS
PRODUCT CHARACTERISTICS: 2CASO3-H2O [85%],CASO4 [10-15%], CACO3 [5-10%],N

** DISPOSAL
NATURE: FINAL
TYPE: LINED POND
LOCATION: ON-SITE

PERFORMANCE DATA

PERIOD	MODULE	AVAILABILITY	OPERABILITY	RELIABILITY	UTILIZATION	% REMOVAL SO2	% REMOVAL PART.	PER HOURS	BOILER HOURS	FGD HOURS	CAP. FACTOR
4/79	SYSTEM		43.3		37.9			62	475	237	

** PROBLEMS/SOLUTIONS/COMMENTS

THIS UNIT STARTED OPERATING ON APRIL 4, 1979. COMPLIANCE TESTING IS SCHEDULED FOR THE WEEK OF JUNE 3.

5/79	SYSTEM		21.5		14.7			744	506	109	
6/79	SYSTEM		12.3		10.3			720	601	74	

** PROBLEMS/SOLUTIONS/COMMENTS

THE UTILITY REPORTED THAT THE SYSTEM IS STILL CONSIDERED IN START-UP AND THAT NO UNUSUAL PROCESS PROBLEMS HAVE BEEN ENCOUNTERED. HOWEVER THE SYSTEM IS NOW OUT OF SERVICE DUE TO THE COMPLETE FAILURE OF THE MIST ELIMINATORS. IT IS EXPECTED TO BE DOWN FOR A MONTH.

7/79	SYSTEM		.0		.0			744	529	0	

** PROBLEMS/SOLUTIONS/COMMENTS

THE UNIT DID NOT OPERATE IN JULY AS PROCEDURES CONTINUED TO REPLACED THE MIST ELIMINATORS.

8/79	SYSTEM		7.0		7.0			744	683	51	
9/79	SYSTEM		60.0		44.0			720	531	317	

** PROBLEMS/SOLUTIONS/COMMENTS

DURING AUGUST AND SEPTEMBER THE UNIT DOWNTIME WAS DUE TO THE COMPLETE FAILURE OF FIVE PUMPS. THE PUMP PROBLEMS WERE THE LOSS OF THE IMPELLERS OFF OF THE SHAFTS.

10/79	SYSTEM		81.4		28.9			744	246	215	
11/79	SYSTEM		97.7		63.5			720	468	457	
12/79	SYSTEM		94.9		89.7			744	703	667	

** PROBLEMS/SOLUTIONS/COMMENTS

THE UTILITY REPORTED THAT NO MAJOR PROBLEMS OCCURRED DURING THE FOURTH QUARTER 1979. THE UNIT REQUIRED ONLY NORMAL MAINTENANCE.

SECTION 3
DESIGN AND PERFORMANCE DATA FOR OPERATIONAL DOMESTIC FGD SYSTEMS

COMPANY NAME	LOUISVILLE GAS & ELECTRIC	
PLANT NAME	MILL CREEK	
UNIT NUMBER	3	
CITY	LOUISVILLE	
STATE	KENTUCKY	
REGULATORY CLASSIFICATION	D	
PARTICULATE EMISSION LIMITATION - NG/J	43.	(.100 LB/MMBTU)
SO2 EMISSION LIMITATION - NG/J	516.	(1.200 LB/MMBTU)
NET PLANT GENERATING CAPACITY - MW	1079.0	
GROSS UNIT GENERATING CAPACITY - MW	442.0	
NET UNIT GENERATING CAPACITY W/FGD - MW	420.0	
NET UNIT GENERATING CAPACITY WO/FGD - MW	427.0	
EQUIVALENT SCRUBBED CAPACITY - MW	442.0	
** BOILER DATA		
SUPPLIER	BABCOCK & WILCOX	
TYPE	PULVERIZED COAL	
SERVICE LOAD	BASE	
COMMERCIAL SERVICE DATE	0/78	
MAXIMUM BOILER FLUE GAS FLOW - CU.M/S	********	(******* ACFM)
FLUE GAS TEMPERATURE - C	*******	(**** F)
STACK HEIGHT - M	183.	(600 FT)
STACK TOP DIAMETER - M	6.4	(21.0 FT)
** FUEL DATA		
FUEL TYPE	COAL	
FUEL GRADE	BITUMINOUS	
AVERAGE HEAT CONTENT - J/G	26749.	(11500 BTU/LB)
RANGE HEAT CONTENT - BTU/LB		******
AVERAGE ASH CONTENT - %	11.50	
RANGE ASH CONTENT - %	******	
AVERAGE MOISTURE CONTENT - %	********	
RANGE MOISTURE CONTENT - %	******	
AVERAGE SULFUR CONTENT - %	3.75	
RANGE SULFUR CONTENT - %	3.5-4.0	
AVERAGE CHLORIDE CONTENT - %	.04	
RANGE CHLORIDE CONTENT - %	.045	
** ESP		
NUMBER	1	
TYPE	COLD SIDE	
SUPPLIER	AMERICAN AIR FILTER	
** PARTICULATE SCRUBBER		
TYPE	NONE	
** FGD SYSTEM		
SALEABLE PRODUCT/THROWAWAY PRODUCT	THROWAWAY PRODUCT	
GENERAL PROCESS TYPE	WET SCRUBBING	
PROCESS TYPE	LIME	
SYSTEM SUPPLIER	AMERICAN AIR FILTER	
A-E FIRM	FLUOR - PIONEER	
DEVELOPMENT LEVEL	FULL SCALE	
NEW/RETROFIT	NEW	
PARTICULATE DESIGN REMOVAL EFFICIENCY - %	99.00	
SO2 DESIGN REMOVAL EFFICIENCY - %	85.00	
COMMERCIAL DATE	3/79	
INITIAL START-UP	8/78	
** ABSORBER		
NUMBER	4	
TYPE	MOBILE PACKED TOWER	
INITIAL START UP	8/78	
SUPPLIER	AMERICAN AIR FILTER	
SHELL MATERIAL	CARBON STEEL	
SHELL LINER MATERIAL	PRECRETE	
INTERNAL MATERIAL	POLYURETHANE BALLS, CERAMIC NOZZLES	
GAS FLOW - CU.M/S	212.35	(450000 ACFM)
GAS TEMPERATURE - C	148.9	(300 F)
L/G RATIO - L/CU.M	8.7	(65.0 GAL/1000ACF)
PRESSURE DROP - KPA	1.6	(6.5 IN-H2O)

LOUISVILLE GAS & ELECTRIC: MILL CREEK 3 (CONT.)

** FANS
- NUMBER: 4
- TYPE: SCRUBBER FD
- SERVICE - WET/DRY: DRY
- CAPACITY - CU.M/S: 212.35 (450000 ACFM)

** MIST ELIMINATOR
- NUMBER: 4
- TYPE: CHEVRON
- CONSTRUCTION MATERIAL: PLASTIC
- CONFIGURATION: HORIZONTAL
- NUMBER OF STAGES: 2
- NUMBER OF PASSES: 2
- WASH SYSTEM: FRESH MAKE-UP (RIVER)

** MIST ELIMINATOR
- NUMBER: 4
- TYPE: CHEVRON
- CONSTRUCTION MATERIAL: 316SS
- CONFIGURATION: HORIZONTAL

** REHEATER
- TYPE: IN-LINE
- HEATING MEDIUM: STEAM
- TEMPERATURE BOOST - C: 27.8 (50 F)

** WATER LOOP
- TYPE: OPEN
- FRESH MAKEUP WATER ADDITION - LITERS/S: 9.4 (150 GPM)

** TREATMENT
- TYPE: FLYASH/LIME STABILIZATION

** DISPOSAL
- NATURE: FINAL
- TYPE: POND

PERFORMANCE DATA

PERIOD	MODULE	AVAILABILITY	OPERABILITY	RELIABILITY	UTILIZATION	% REMOVAL SO2	% REMOVAL PART.	PER HOURS	BOILER HOURS	FGD HOURS	CAP. FACTOR
8/78	SYSTEM							744			
	** PROBLEMS/SOLUTIONS/COMMENTS										
	OPERATION BEGAN ON AUGUST 13, 1978.										
9/78	SYSTEM		81.0		80.0			720	714	576	
	** PROBLEMS/SOLUTIONS/COMMENTS										
	FRP PIPING PROBLEMS WERE ENCOUNTERED.										
	PUMP PROBLEMS WERE RELATED TO BEARING AND SHAFT FAILURES.										
10/78	SYSTEM		84.0		81.0			744	710	607	
11/78	SYSTEM		85.0		42.0			720	351	299	
	** PROBLEMS/SOLUTIONS/COMMENTS										
	THE UNIT WAS SHUT DOWN NOVEMBER 18, 1978 FOR SCHEDULED INSPECTION. RESTART IS PROJECTED FOR FEBRUARY 1, 1979.										T
12/78	SYSTEM				.0			744	0	0	
	** PROBLEMS/SOLUTIONS/COMMENTS										
	THE UNIT DID NOT OPERATE DURING DECEMBER OR JANUARY.										
1/79	SYSTEM				.0			744	0	0	
2/79	SYSTEM		18.0		17.4			672	651	117	

PERIOD	MODULE	AVAILABILITY	OPERABILITY	RELIABILITY	UTILIZATION	% REMOVAL SO2	% REMOVAL PART.	PER HOURS	BOILER HOURS	FGD HOURS	CAP. FACTOR
		PERFORMANCE DATA									
3/79	SYSTEM		53.1		52.4			744	735	390	

** PROBLEMS/SOLUTIONS/COMMENTS

COMPLIANCE TESTING WAS PERFORMED DURING MARCH AND THE UNIT WAS DECLARED COMMERCIAL.

4/79	SYSTEM		63.6		44.4			720	503	320	

** PROBLEMS/SOLUTIONS/COMMENTS

THE ONLY PROBLEMS REPORTED WERE WITH DAMPERS AND PUMP FAILURES.

5/79	SYSTEM		97.8		64.7			744	492	481	
6/79	SYSTEM		51.9		47.9			720	665	345	

** PROBLEMS/SOLUTIONS/COMMENTS

THE UTILITY REPORTED THAT NO UNUSUAL OPERATING PROBLEMS WERE ENCOUNTERED.

7/79	SYSTEM		60.0		55.0			744	686	411	
8/79	SYSTEM							744	550		
9/79	SYSTEM		90.0		84.0			720	667	604	

** PROBLEMS/SOLUTIONS/COMMENTS

IN JULY AND AUGUST REHEATER PROBLEMS WERE ENCOUNTERED. THE REHEATER WILL HAVE TO BE REPLACED DURING EITHER NOVEMBER OR DECEMBER OF THIS YEAR.

10/79	SYSTEM		82.0		76.1			744	690	566	
11/79	SYSTEM		.0		.0			720	0	0	
12/79	SYSTEM		.0		.0			744	0	0	

** PROBLEMS/SOLUTIONS/COMMENTS

AT THE END OF OCTOBER THE UNIT WENT DOWN FOR A TURBINE OVERHAUL AND IS SCHEDULED TO BE DOWN UNTIL LATE JANUARY OR EARLY FEBRUARY.

DURING THE OVERHAUL GENERAL SCRUBBER MAINTENANCE WAS DONE BUT NO MAJOR MODIFICATIONS WERE MADE.

SECTION 3
DESIGN AND PERFORMANCE DATA FOR OPERATIONAL DOMESTIC FGD SYSTEMS

COMPANY NAME	LOUISVILLE GAS & ELECTRIC	
PLANT NAME	PADDY'S RUN	
UNIT NUMBER	6	
CITY	LOUISVILLE	
STATE	KENTUCKY	
REGULATORY CLASSIFICATION	E	
PARTICULATE EMISSION LIMITATION - NG/J	43.	(.100 LB/MMBTU)
SO2 EMISSION LIMITATION - NG/J	516.	(1.200 LB/MMBTU)
NET PLANT GENERATING CAPACITY - MW	302.0	
GROSS UNIT GENERATING CAPACITY - MW	72.0	
NET UNIT GENERATING CAPACITY W/FGD - MW	67.0	
NET UNIT GENERATING CAPACITY WO/FGD - MW	69.0	
EQUIVALENT SCRUBBED CAPACITY - MW	72.0	
** BOILER DATA		
SUPPLIER	FOSTER WHEELER	
TYPE	PULVERIZED COAL	
SERVICE LOAD	SUMMER PEAKING LOAD	
COMMERCIAL SERVICE DATE	0/52	
MAXIMUM BOILER FLUE GAS FLOW - CU.M/S	188.76	(400000 ACFM)
FLUE GAS TEMPERATURE - C	179.4	(355 F)
STACK HEIGHT - M	76.	(250 FT)
STACK TOP DIAMETER - M	*******	(***** FT)
** FUEL DATA		
FUEL TYPE	COAL	
FUEL GRADE	BITUMINOUS	
AVERAGE HEAT CONTENT - J/G	26749.	(11500 BTU/LB)
RANGE HEAT CONTENT - BTU/LB		11150
AVERAGE ASH CONTENT - %	11.50	
RANGE ASH CONTENT - %	******	
AVERAGE MOISTURE CONTENT - %	********	
RANGE MOISTURE CONTENT - %	******	
AVERAGE SULFUR CONTENT - %	2.50	
RANGE SULFUR CONTENT - %	2.0-3.5	
AVERAGE CHLORIDE CONTENT - %	********	
RANGE CHLORIDE CONTENT - %	******	
** ESP		
NUMBER	1	
SUPPLIER	RESEARCH COTTRELL	
PARTICULATE DESIGN REMOVAL EFFICIENCY - %	99.1	
** PARTICULATE SCRUBBER		
TYPE	NONE	
** FGD SYSTEM		
SALEABLE PRODUCT/THROWAWAY PRODUCT	THROWAWAY PRODUCT	
GENERAL PROCESS TYPE	WET SCRUBBING	
PROCESS TYPE	LIME	
SYSTEM SUPPLIER	COMBUSTION ENGINEERING	
A-E FIRM	FLUOR - PIONEER	
CONSTRUCTION FIRM	PIONEER SERVICES	
DEVELOPMENT LEVEL	FULL SCALE	
NEW/RETROFIT	RETROFIT	
PARTICULATE DESIGN REMOVAL EFFICIENCY - %	99.10	
SO2 DESIGN REMOVAL EFFICIENCY - %	90.00	
INITIAL START-UP	4/73	
CONSTRUCTION COMPLETION	4/73	
CONSTRUCTION INITIATION	6/72	
CONTRACT AWARDED	7/71	
STARTED REQUESTING BIDS	12/70	
STARTED PRELIMINAY DESIGN	0/70	
ABSORBER SPARE CAPACITY INDEX - %	.0	
ABSORBER SPARE COMPONENT INDEX	.0	
** ABSORBER		
NUMBER	2	
TYPE	MOBILE PACKED TOWER	
INITIAL START UP	4/73	
SUPPLIER	COMBUSTION ENGINEERING	
NUMBER OF STAGES	2	

LOUISVILLE GAS & ELECTRIC: PADDY'S RUN 6 (CONT.)

DIMENSIONS - FT	17X18X50 HIGH	
SHELL MATERIAL	CARBON STEEL	
SHELL LINER MATERIAL	2 1/2 INCH THICK FRP	
INTERNAL MATERIAL	316 SS	
GAS FLOW - CU.M/S	82.58	(175000 ACFM)
GAS TEMPERATURE - C	176.7	(350 F)
L/G RATIO - L/CU.M	2.2	(16.5 GAL/1000ACF)
PRESSURE DROP - KPA	2.9	(11.5 IN-H2O)
SUPERFICAL GAS VELOCITY - M/SEC	2.7	(9.0 FT/S)
SO2 INLET CONCENTRATION - PPM	2000	
SO2 DESIGN REMOVAL EFFICIENCY - %	90.0	

** FANS

NUMBER	2	
TYPE	DRY	
SERVICE - WET/DRY	DRY	
CAPACITY - CU.M/S	82.58	(175000 ACFM)

** VACUUM FILTER

NUMBER	2	
TYPE	ROTARY DRUM	
CONSTRUCTION MATERIAL	NYLON BELT	
CAPACITY - M T/D	21[illegible].7	(240 T/D)
INLET SOLIDS - %	22.0	
OUTLET SOLIDS - %	45.0	

** MIST ELIMINATOR

NUMBER	2	
TYPE	CHEVRON	
CONSTRUCTION MATERIAL	FIBERGLASS	
CONFIGURATION	HORIZONTAL	
NUMBER OF STAGES	2	
NUMBER OF PASSES	3	
FREEBOARD DISTANCE - M	1.37	(4.5 FT)
DEPTH - M	1.52	(5.0 FT)
VANE SPACING - CM	4.4	(1.75 IN)
VANE ANGLES	45 DEG.	
WASH SYSTEM	WATER WASH-RIVER 40-65, 10-15 MIN/8 H	
SUPERFICIAL GAS VELOCITY - M/S	3.0	(10.0 FT/S)
PRESSURE DROP - KPA	.4	(1.5 IN-H2O)

** PUMPS

SERVICE	NUMBER
-------	------
******	3

** TANKS

SERVICE	NUMBER
-------	------
REACTION	****
SCRUBBER RECYCLE	****
REACTION SURGE TANK	****
ADDITIVE SLURRY TANK	****

** REHEATER

TYPE	DIRECT COMBUSTION	
TEMPERATURE BOOST - C	21.7	(39 F)

** THICKENER

NUMBER	1	
DIAMETER - M	15.2	(50 FT)
OUTLET SOLIDS - %	22.0	

** WATER LOOP

TYPE	CLOSED	
FRESH MAKEUP WATER ADDITION - LITERS/S	3.1	(50 GPM)

** TREATMENT

TYPE	LIME STABILIZATION

** DISPOSAL

NATURE	FINAL	
TYPE	POND	
TRANSPORTATION	TRUCK	
AREA - ACRES	10.0	
CAPACITY - CU.M	30575	(25.0 ACRE-FT)

LOUISVILLE GAS & ELECTRIC: PADDY'S RUN 6 (CONT.)

PERIOD	MODULE	AVAILABILITY	OPERABILITY	RELIABILITY	UTILIZATION	% REMOVAL SO2	% REMOVAL PART.	PER HOURS	BOILER HOURS	FGD HOURS	CAP. FACTOR
		PERFORMANCE DATA									
4/73	6A		18.0								
	6B		56.0								
	SYSTEM		37.0					720			

** PROBLEMS/SOLUTIONS/COMMENTS

MODULES WERE OPERATED ONE AT A TIME, WITH FREQUENT SHUTDOWNS FOR INSPECTION OF EQUIPMENT AND MINOR REPAIRS.

5/73	6A		11.0								
	6B		65.0								
	SYSTEM		38.0					744			

** PROBLEMS/SOLUTIONS/COMMENTS

SINGLE-MODULE OPERATION CONTINUED THROUGH MAY 19, WHEN THE UNIT WAS SHUT DOWN FOR MODIFICATIONS.

EQUIPMENT WAS INSTALLED FOR INJECTION OF A FLOCCULATING AGENT INTO THE CLARIFIER TANK.

6/73	6A		1.0								
	6B		6.0								
	SYSTEM		3.5					720			

** PROBLEMS/SOLUTIONS/COMMENTS

OPERATION WAS INTERMITTENT FROM JUNE 19 TO JULY 11 BECAUSE OF MECHANICAL PROBLEMS WITH THE SLURRY PUMPS.

7/73	6A		21.0								
	6B		21.0								
	SYSTEM		21.0					744			

** PROBLEMS/SOLUTIONS/COMMENTS

DURING A SCHEDULED OUTAGE FROM JULY 12 TROUGH AUGUST 1, SEVERAL REPAIRS WERE MADE TO THE LIME SLURRY MAKE-UP SYSTEM. A DISINTEGRATOR UNIT WAS INSTALLED TO REDUCE PLUGGING OF STRAINERS AND SLURRY CONTROL VALVES.

8/73	6A		53.0								
	6B		64.0								
	SYSTEM		58.5					744			

** PROBLEMS/SOLUTIONS/COMMENTS

THE OPERATION WAS CONTINUOUS FROM AUGUST 2 TO AUGUST 18 EXCEPT FOR A BRIEF SHUTDOWN DUE TO A BOILER-RELATED PROBLEM.

FROM AUGUST 19 TO SEPTEMBER 5, THE SYSTEM WAS SHUT DOWN TO REPLACE THE CLARIFIER'S UNDERFLOW LINE WITH ONE OF LARGER DIAMETER AND TO INSTALL ADDITIONAL PUMP CAPACITY IN THE CLARIFIERS'S OVERFLOW SYSTEM.

9/73	6A		85.0								
	6B		72.0								
	SYSTEM		78.5					720			

** PROBLEMS/SOLUTIONS/COMMENTS

THE UNIT OPERATED CONTINUOUSLY BETWEEN SEPTEMBER 6 AND 20 EXCEPT FOR A 7-HOUR SHUTDOWN TO REPAIR A MARBLE BED SUPPORT PLATE.

THE UNIT WAS SHUT DOWN FROM SEPTEMBER 20 TO THE END OF THE MONTH.

10/73	6A		49.0								
	6B		94.0								
	SYSTEM		71.5					744			

PERIOD	MODULE	AVAILABILITY	OPERABILITY	RELIABILITY	UTILIZATION	% REMOVAL SO2	% REMOVAL PART.	PER HOURS	BOILER HOURS	FGD HOURS	CAP. FACTOR
		PERFORMANCE DATA									
	** PROBLEMS/SOLUTIONS/COMMENTS										
		THE FGD SYSTEM WAS OPERATED UNTIL DECEMBER 20 AFTER WHICH THE BOILER AND THE SCRUBBER MODULES WERE SHUT DOWN BECAUSE OF NO DEMAND (THIS IS A PEAKING-LOAD BOILER).									
11/73	6A		35.0								
	6B		100.0								
	SYSTEM		67.5					720			
12/73	6A		44.0								
	6B		78.0								
	SYSTEM		61.0					744			
1/74	SYSTEM				.0			744	0		0
	** PROBLEMS/SOLUTIONS/COMMENTS										
		THE BOILER WAS SHUT DOWN BECAUSE OF NO DEMAND.									
2/74	SYSTEM				.0			672	0		0
3/74	SYSTEM				.0			744	0		0
4/74	SYSTEM				.0			720	0		0
5/74	SYSTEM				.0			744	0		0
6/74	SYSTEM				.0			720	0		0
7/74	SYSTEM				.0			744	0		0
8/74	6A		50.0								
	6B		77.0								
	SYSTEM		63.5					744			
	** PROBLEMS/SOLUTIONS/COMMENTS										
		UNIT HAS BEEN ON AND OFF FREQUENTLY DUE TO FLUCTUATION IN POWER DEMAND.									
9/74	SYSTEM				.0			720	0		0
	** PROBLEMS/SOLUTIONS/COMMENTS										
		THE BOILER WAS SHUT DOWN BECAUSE OF NO DEMAND.									
10/74	6A		100.0								
	6B		100.0								
	SYSTEM		100.0					744			
	** PROBLEMS/SOLUTIONS/COMMENTS										
		BOILER WAS TURNED ON TO PERFORM LIMESTONE TESTS ON THE FGD SYSTEM.									
11/74	SYSTEM				.0			720	0		0
	** PROBLEMS/SOLUTIONS/COMMENTS										
		THE BOILER WAS SHUT DOWN BECAUSE OF NO DEMAND.									
12/74	SYSTEM				.0			744	0		0
1/75	SYSTEM				.0			744	0		0
2/75	SYSTEM				.0			672	0		0
3/75	SYSTEM				.0			744	0		0
4/75	SYSTEM				.0			720	0		0

LOUISVILLE GAS & ELECTRIC: PADDY'S RUN 6 (CONT.)

PERIOD	MODULE	AVAILABILITY	OPERABILITY	RELIABILITY	UTILIZATION	% REMOVAL SO2	% REMOVAL PART.	PER HOURS	BOILER HOURS	FGD HOURS	CAP. FACTOR
		PERFORMANCE DATA									
5/75	SYSTEM				.0			744	0	0	
6/75	SYSTEM				.0			720	0	0	
7/75	SYSTEM				.0			744	0	0	
8/75	SYSTEM				.0			744	0	0	
9/75	6A		100.0								
	6B		100.0								
	SYSTEM		100.0					720			

** PROBLEMS/SOLUTIONS/COMMENTS

THE BOILER AND FGD SYSTEM WERE OPERATIONAL ALL OF SEPTEMBER AND THE FIRST TWO WEEKS IN OCTOBER. OPERABILITY FOR BOTH MODULES DURING THE OPERATIONAL PERIOD WAS 100% (BASED UPON LG&E'S PEAK LOAD DETERMINATION). SO2 REMOVAL WAS REPORTED TO BE OVER 98%.

SYSTEM OUTAGE IN THE LAST TWO WEEKS OF OCTOBER WAS DUE PRIMARILY TO BREECHING IN THE BOILER SECTION.

10/75	6A		100.0								
	6B		100.0								
	SYSTEM		100.0					744			
11/75	6A		100.0								
	6B		100.0								
	SYSTEM		100.0					720			

** PROBLEMS/SOLUTIONS/COMMENTS

THE BOILER AND SCRUBBER SYSTEM RAN MOST OF THE REPORT PERIOD ON MONDAY-FRIDAY BASIS.

TWO MINOR OUTAGES IN DECEMBER WERE DUE TO MALFUNCTION AND REPAIR OF THE DUAL STRAINER SWITCH SHAFT IN THE BOTTOM OF THE SCRUBBER MODULE.

12/75	6A		90.0								
	6B		90.0								
	SYSTEM		90.0					744			
1/76	6A		100.0								
	6B		100.0								
			100.0								
	SYSTEM				100.0			744			

** PROBLEMS/SOLUTIONS/COMMENTS

SO2 REMOVAL EFFICIENCY WAS REPORTED TO BE 99% DURING JANUARY.

2/76	SYSTEM							696			

** PROBLEMS/SOLUTIONS/COMMENTS

EXTENSIVE SLUDGE STUDY: FIXATION, LEACHATES, SEASONAL VARIATIONS. SCRUBBER/SLUDGE STUDY SCHEDULED FOR JUNE OR JULY. THE SCRUBBER WILL NOT BE OPERATED UNTIL THE START OF THE STUDY PROGRAM UNLESS THE BOILER IS REQUIRED FOR PEAKING POWER DEMANDS. HIGHLIGHTS OF THE SCRUBBER/SLUDGE STUDY PROGRAM ARE AS FOLLOWS.

6 MONTHS DURATION.
ONE SCHEDULED SHUTDOWN FOR TEST MODIFICATIONS.
DELIBERATE HIGH CHLORIDE CONCENTRATION OPERATION.
MGO INNOCULATION.

3/76	SYSTEM				.0			744	0	0	

PERIOD	MODULE	AVAILABILITY	OPERABILITY	RELIABILITY	UTILIZATION	% REMOVAL SO2	% REMOVAL PART.	PER HOURS	BOILER HOURS	FGD HOURS	CAP. FACTOR
		PERFORMANCE DATA									
	** PROBLEMS/SOLUTIONS/COMMENTS										
		THE UNIT DID NOT OPERATE DURING THE REPORT PERIOD IN ANTICIPATION OF THE EPA SCRUBBER/SLUDGE STUDY. THE UTILITY IS NOW COMPLETING SYSTEM MODIFICATIONS FOR THE OPERATION OF THE TEST PROGRAM.									
4/76	SYSTEM				.0			720	0	0	
5/76	6A		100.0								
	6B		100.0								
	SYSTEM		100.0	100.0				744			
	** PROBLEMS/SOLUTIONS/COMMENTS										
		THIS PEAK LOAD UNIT WAS OPERATED PART OF THE TIME DURING THE REPORT PERIOD (APPROXIMATELY 2 WEEKS IN MAY AND TWO WEEKS IN JUNE). THE SCRUBBER WAS AVAILABLE TO THE BOILER 100% OF THE TIME AND SO2 REMOVAL EFFICIENCY WAS 98 TO 99% DURING THIS OPERATING SEGMENT.									
6/76	SYSTEM		100.0	100.0				720			
7/76	6A		100.0								
	6B		100.0								
	SYSTEM		100.0	100.0				744			
	** PROBLEMS/SOLUTIONS/COMMENTS										
		THIS UNIT WAS OPERATIONAL PART OF THE TIME DURING THE JULY-AUGUST PERIOD. THE SCRUBBING SYSTEM WAS AVAILABLE TO THE BOILER ON A 100% BASIS. NO MAJOR SCRUBBER-RELATED PROBLEMS WERE ENCOUNTERED.									
8/76	6A		100.0								
	6B		100.0								
	SYSTEM		100.0	100.0				744			
9/76	SYSTEM				.0			720	0	0	
	** PROBLEMS/SOLUTIONS/COMMENTS										
		THE UNIT DID NOT OPERATE THROUGHOUT SEPTEMBER AND THE FIRST 3 WEEKS IN OCTOBER. THE EPA-FUNDED SCRUBBER/SLUDGE STUDY PROGRAM COMMENCED OCTOBER 25. THE INITIAL PHASE OF THE PROGRAM CALLS FOR OPERATIONS TO PROCEED FOR A 20-30 DAY PERIOD WITH CARBIDE LIME SCRUBBING ABSORBENT. FOLLOWING COMPLETION OF THIS RUN, THE UNIT WILL BE SHUT DOWN AND MODIFICATIONS WILL BE INCORPORATED INTO THE SYSTEM FOR OPERATION WITH COMMERCIAL GRADE (HIGH CALCIUM) LIME.									
10/76	SYSTEM							744			
11/76	6A		99.0								
	6B		99.0								
	SYSTEM		99.0					720			
	** PROBLEMS/SOLUTIONS/COMMENTS										
		THE UNIT WAS IN SERVICE DURING THE REPORT PERIOD. THE SCRUBBING SYSTEM OPERATED 99.5% OF THE TIME THAT THE BOILER WAS IN SERVICE. CARBIDE LIME WAS EMPLOYED AS THE SO2 ABSORBENT. THE HIGH CALCIUM (VIRGIN) LIME RUN, SCHEDULED AS PART OF THE SCRUBBER/SLUDGE STUDY, WILL COMMENCE ON MARCH 1, 1977.									
12/76	6A		99.0								
	6B		99.0								
	SYSTEM		99.0					744			
1/77	SYSTEM				.0			744	0	0	

LOUISVILLE GAS & ELECTRIC: PADDY'S RUN 6 (CONT.)

PERIOD	MODULE	AVAILABILITY	OPERABILITY	RELIABILITY	UTILIZATION	% REMOVAL SO2	% REMOVAL PART.	PER HOURS	BOILER HOURS	FGD HOURS	CAP. FACTOR
		PERFORMANCE DATA									

** PROBLEMS/SOLUTIONS/COMMENTS

BECAUSE OF SEVERE WEATHER CONDITIONS THERE WERE NO BOILER OPERATIONS AND NO SCRUBBER OPERATIONS UNTIL MARCH 15, 1977.

2/77	SYSTEM				.0			672	0	0	
3/77	SYSTEM							744			
4/77	SYSTEM							720			
5/77	SYSTEM				.0			744		0	

** PROBLEMS/SOLUTIONS/COMMENTS

IN MID MARCH LG&E BEGAN TESTS FOR EPA WITH REGULAR LIME SINCE ONE OF THE OBJECTIVES OF THE TEST WAS TO DETERMINE WHETHER THERE WERE APPRECIABLE DIFFERENCES BETWEEN REGULAR LIME AND CARBIDE LIME AT THIS FACILITY. DURING OPERATION WITH REGULAR LIME, SCALING PROBLEMS OCCURRED, INDICATING THAT TH SCALING RESULTED FROM INCREASED OXIDATION LEVELS. AVAILABLE OPTIONS FOR CONTROLLING SCALING WERE LIMITED BY THE FIXED DESIGN FEATURES OF THE SCRUB BER HARDWARE. THE OPTION SELECTED WAS ADDITION OF MGO TO THE SCRUBBING MEDIUM. WHEN MGO WAS ADDED, THE SCALING PROBLEM WAS ELIMINATED, ALLOWING COMPLETION OF THE TEST PROGRAM.

6/77	SYSTEM							720			

** PROBLEMS/SOLUTIONS/COMMENTS

THE SCRUBBER/SLUDGE EVALUATION STUDY CONTINUED DURING THE PERIOD. THE SCRUBBER PLANT (ONE MODULE IS BEING UTILIZED FOR THIS EXPERIMENTAL PROGRAM WAS IN SERVICE ON A VIRTUALLY CONTINUOUS BASIS FROM JUNE 18 TO AUGUST 8 OPERATING ON MAGNESIUM INNOCULATED COMMERCIAL LIME. SYSTEM OPERABILITY DURING THIS PERIOD WAS APPROXIMATELY 96%. SO2 REMOVAL EFFICIENCY WAS MEASURED IN EXCESS OF 99.5%. THE SYSTEM WAS SHUT DOWN AT THIS POINT TO PERFORM A NUMBER OF SCHEDULED MODIFICATIONS TO THE SYSTEM FOR TEST PURPOSES. SPECIFICALLY, MODIFICATIONS ARE BEING IMPLEMENTED TO THE SYSTEM IN ORDER TO BYPASS THE REACTION TANK SO A SHORT TERM RETENTION TIME TEST COULD BE CONDUCTED. THE TESTING WAS COMPLETED IN AUGUST 1977 AFTER THE MODIFICATIONS WERE MADE.

7/77	SYSTEM							744			
8/77	SYSTEM							744			
9/77	SYSTEM				.0			720	0		

** PROBLEMS/SOLUTIONS/COMMENTS

THE UNIT IS CURRENTLY NOT OPERATING DUE TO THE LACK OF POWER REQUIREMENT.

10/77	SYSTEM				.0			744	0		
11/77	SYSTEM				.0			720	0		
12/77	SYSTEM				.0			744	0		
1/78	SYSTEM				.0			744	0		
2/78	SYSTEM				.0			672	0		
3/78	SYSTEM				.0			744	0		
4/78	SYSTEM							720			

PERIOD	MODULE	AVAILABILITY	OPERABILITY	RELIABILITY	UTILIZATION	% REMOVAL SO2	% REMOVAL PART.	PER HOURS	BOILER HOURS	FGD HOURS	CAP. FACTOR
		PERFORMANCE DATA									

** PROBLEMS/SOLUTIONS/COMMENTS

PADDY'S RUN WAS ON LINE ONLY A FEW HOURS DURING THIS PERIOD. NO OPERATIONAL PROBLEMS WERE REPORTED BY THE UTILITY.

5/78	SYSTEM							744			
6/78	SYSTEM							720			

** PROBLEMS/SOLUTIONS/COMMENTS

THE UNIT RAN INTERMITTENTLY FOR ABOUT EIGHT TO TEN DAYS OVER THIS PERIOD.

7/78	SYSTEM							744			
8/78	SYSTEM							744			

** PROBLEMS/SOLUTIONS/COMMENTS

THIS UNIT WAS OPERATED FOR TWO WEEKS IN SEPTEMBER SO THAT TESTING OF A NEW FLOCCULANT COULD BE CARRIED OUT. THE RESULTS OF THESE TESTS WILL DETERMINE THE TYPE OF FLOCCULANT THAT WILL BE USED IN THE FUTURE AT THE OTHER LG&E UNITS.

9/78	SYSTEM							720			
10/78	SYSTEM				.0			744	0	0	

** PROBLEMS/SOLUTIONS/COMMENTS

THE BOILER WAS NOT OPERATED DURING OCTOBER OR NOVEMBER.

11/78	SYSTEM				.0			720	0	0	
12/78	SYSTEM				.0			744	0	0	

** PROBLEMS/SOLUTIONS/COMMENTS

THE UNIT WAS NOT OPERATED DURING DECEMBER OR JANUARY.

1/79	SYSTEM				.0			744	0	0	
2/79	SYSTEM	100.0			.0			672	0	0	.0
3/79	SYSTEM	100.0			.0			744	0	0	.0
4/79	SYSTEM	100.0			.0			720	0	0	.0

** PROBLEMS/SOLUTIONS/COMMENTS

THE UNIT WAS NOT OPERATED DURING THESE MONTHS BECAUSE OF LACK OF DEMAND.

5/79	SYSTEM	100.0			.0			744	0	0	.0
6/79	SYSTEM	100.0			.0			720	0	0	.0

** PROBLEMS/SOLUTIONS/COMMENTS

THE UTILITY REPORTED THAT THE UNIT DID NOT OPERATE DURING MAY OR JUNE DUE TO INSUFFICIENT DEMAND.

7/79	SYSTEM			.0		.0		744	19	0	
8/79	SYSTEM			45.0		13.0		744	218	99	
9/79	SYSTEM			.0		.0		720	36	0	

LOUISVILLE GAS & ELECTRIC: PADDY'S RUN 6 (CONT.)

PERIOD	MODULE	AVAILABILITY	OPERABILITY	RELIABILITY	UTILIZATION	% REMOVAL SO2	% REMOVAL PART.	PER HOURS	BOILER HOURS	FGD HOURS	CAP. FACTOR
		PERFORMANCE DATA									

** PROBLEMS/SOLUTIONS/COMMENTS

NO PROBLEMS WERE REPORTED WITH RESPECT TO OPERATION AT THIS UNIT DURING THE THIRD QUARTER 1979.

10/79	SYSTEM							744			
11/79	SYSTEM							720			
12/79	SYSTEM							744			

** PROBLEMS/SOLUTIONS/COMMENTS

NO INFORMATION WAS AVAILABLE FOR THE FOURTH QUARTER 1979.

SECTION 3
DESIGN AND PERFORMANCE DATA FOR OPERATIONAL DOMESTIC FGD SYSTEMS

COMPANY NAME	MINNKOTA POWER COOPERATIVE	
PLANT NAME	MILTON R. YOUNG	
UNIT NUMBER	2	
CITY	CENTER	
STATE	NORTH DAKOTA	
REGULATORY CLASSIFICATION	D	
PARTICULATE EMISSION LIMITATION - NG/J	******	(****** LB/MMBTU)
SO2 EMISSION LIMITATION - NG/J	516.	(1.200 LB/MMBTU)
NET PLANT GENERATING CAPACITY - MW	690.0	
GROSS UNIT GENERATING CAPACITY - MW	440.0	
NET UNIT GENERATING CAPACITY W/FGD - MW	402.0	
NET UNIT GENERATING CAPACITY WO/FGD - MW	409.0	
EQUIVALENT SCRUBBED CAPACITY - MW	405.0	
** BOILER DATA		
SUPPLIER	BABCOCK & WILCOX	
TYPE	CYCLONE	
SERVICE LOAD	BASE	
COMMERCIAL SERVICE DATE	0/77	
MAXIMUM BOILER FLUE GAS FLOW - CU.M/S	953.90	(2021400 ACFM)
FLUE GAS TEMPERATURE - C	179.4	(355 F)
STACK HEIGHT - M	168.	(550 FT)
STACK TOP DIAMETER - M	*******	(***** FT)
** FUEL DATA		
FUEL TYPE	COAL	
FUEL GRADE	LIGNITE	
AVERAGE HEAT CONTENT - J/G	15119.	(6500 BTU/LB)
RANGE HEAT CONTENT - BTU/LB		******
AVERAGE ASH CONTENT - %	6.50	
RANGE ASH CONTENT - %	5-8	
AVERAGE MOISTURE CONTENT - %	38.00	
RANGE MOISTURE CONTENT - %	******	
AVERAGE SULFUR CONTENT - %	.70	
RANGE SULFUR CONTENT - %	******	
AVERAGE CHLORIDE CONTENT - %	********	
RANGE CHLORIDE CONTENT - %	******	
** ESP		
NUMBER	2	
SUPPLIER	WHEELABRATOR-FRYE	
PARTICULATE DESIGN REMOVAL EFFICIENCY - %	99.6	
** PARTICULATE SCRUBBER		
TYPE	NONE	
** FGD SYSTEM		
SALEABLE PRODUCT/THROWAWAY PRODUCT	THROWAWAY PRODUCT	
GENERAL PROCESS TYPE	WET SCRUBBING	
PROCESS TYPE	LIME/ALKALINE FLYASH	
PROCESS ADDITIVES	NONE	
SYSTEM SUPPLIER	ADL/COMBUSTION EQUIP ASSOCIATE	
A-E FIRM	SANDERSON & PORTER	
DEVELOPMENT LEVEL	FULL SCALE	
NEW/RETROFIT	NEW	
PARTICULATE DESIGN REMOVAL EFFICIENCY - %	99.60	
SO2 DESIGN REMOVAL EFFICIENCY - %	85.00	
COMMERCIAL DATE	6/78	
INITIAL START-UP	9/77	
CONSTRUCTION INITIATION	9/75	
CONTRACT AWARDED	4/75	
ABSORBER SPARE CAPACITY INDEX - %	.0	
ABSORBER SPARE COMPONENT INDEX	.0	
** ABSORBER		
NUMBER	2	
TYPE	SPRAY TOWER	
INITIAL START UP	9/77	
SUPPLIER	ADL/COMBUSTION EQUIP ASSOCIATES	
NUMBER OF STAGES	6	
DIMENSIONS - FT	40 DIA X 120	
SHELL MATERIAL	CARBON STEEL	

MINNKOTA POWER COOPERATIVE: MILTON R. YOUNG 2 (CONT.)

SHELL LINER MATERIAL	FLAKEGLASS	
INTERNAL MATERIAL	316L SS TRAY	
BOILER LOAD/ABSORBER - %	60.0	
GAS FLOW - CU.M/S	405.36	(859000 ACFM)
GAS TEMPERATURE - C	168.3	(335 F)
L/G RATIO - L/CU.M	10.7	(80.0 GAL/1000ACF)
PRESSURE DROP - KPA	2.0	(8.0 IN-H2O)
PARTICULATE INLET LOAD - G/CU.M	.0	(.005 GR/SCF)
SO2 INLET CONCENTRATION - PPM	1900	
SO2 OUTLET CONTRATION - PPM	475	
SO2 DESIGN REMOVAL EFFICIENCY - %	75.0	
** CENTRIFUGE		
NUMBER	2	
** FANS		
NUMBER	2	
TYPE	BOILER I.D.	
CONSTRUCTION MATERIALS	CARBON STEEL, RUBBER LINED	
SERVICE - WET/DRY	DRY	
CAPACITY - CU.M/S	330.33	(700000 ACFM)
** VACUUM FILTER		
NUMBER	2	
TYPE	ROTARY DRUM	
CAPACITY - M T/D	45.3	(50 T/D)
OUTLET SOLIDS - %	60.0	
** MIST ELIMINATOR		
NUMBER	2	
TYPE	CHEVRON	
CONSTRUCTION MATERIAL	FLAKELINED 316L SS	
NUMBER OF STAGES	1	
NUMBER OF PASSES	4	
WASH SYSTEM	UNDERSPRAY	
PRESSURE DROP - KPA	.2	(1.0 IN-H2O)
** PUMPS		
SERVICE	NUMBER	
ABSORBER RECIRCULATION	****	
** TANKS		
SERVICE	NUMBER	
REACTION/RECYCLE	2	
MIX TANK	****	
** REHEATER		
TYPE	BYPASS	
TEMPERATURE BOOST - C	13.9	(25 F)
** THICKENER		
NUMBER	1	
CONSTRUCTION MATERIAL	CONCRETE WITH POLYETHYLENE COATING	
OUTLET SOLIDS - %	40.0	
** WATER LOOP		
TYPE	OPEN	
FRESH MAKEUP WATER ADDITION - LITERS/S	44.1	(700 GPM)
** DISPOSAL		
NATURE	FINAL	
TYPE	MINEFILL	
LOCATION	OFF-SITE	
TRANSPORTATION	TRUCK	

PERFORMANCE DATA

PERIOD	MODULE	AVAILABILITY	OPERABILITY	RELIABILITY	UTILIZATION	% REMOVAL SO2	% REMOVAL PART.	PER HOURS	BOILER HOURS	FGD HOURS	CAP. FACTOR
9/77	SYSTEM							720			

PERIOD	MODULE	AVAILABILITY	OPERABILITY	RELIABILITY	UTILIZATION	% REMOVAL SO2	% REMOVAL PART.	PER HOURS	BOILER HOURS	FGD HOURS	CAP. FACTOR
		PERFORMANCE DATA									

** PROBLEMS/SOLUTIONS/COMMENTS

THE UTILITY REPORTED INTERMITTENT OPERATION SINCE INITIAL START-UP.

MAJOR OPERATIONAL PROBLEMS HAVE OCCURRED AS A RESULT OF SEVERE WINTER WEATHER CONDITIONS, PARTICULARLY NUMEROUS INSTANCES OF FROZEN AND RUPTURED LINES. THE SYSTEM WAS SHUT DOWN DURING THE FIRST PART OF THE MONTH OF DECEMBER TO INSTALL HEAT TRACING IN THE LIQUID CIRCUIT.

SOME MINOR PROBLEMS HAVE OCCURRED WITH THE FLOW METERS (ROTAMETERS).

SOME MINOR PROBLEMS HAVE BEEN REPORTED WITH THE SYSTEM'S GUILLOTINE GAS DAMPERS.

10/77	SYSTEM							744			

** PROBLEMS/SOLUTIONS/COMMENTS

WORK CONTINUED ON INSTALLATION OF ELECTRICAL HEAT TRACING ON SLURRY LINES AND WATER PIPING.

11/77	SYSTEM							720			
12/77	SYSTEM							744			

** PROBLEMS/SOLUTIONS/COMMENTS

THERE WAS AN EMERGENCY SHUTDOWN ON DECEMBER 5 AS A RESULT OF BEARING DAMAGE WITHIN THE TURBINES.

A COMPLIANCE TEST ORIGINALLY SCHEDULED TO BE WITHIN THIS PERIOD HAS BEEN TENTATIVELY RESCHEDULED WITH THE EPA FOR THE END OF MARCH. THE UNIT IS TO HAVE THE SYSTEMS IN EQUILIBRIUM (WATER BALANCE).

0/78	A	92.3	28.0		22.2						
	B	28.5	25.9		20.4						
	SYSTEM	23.0	28.2	27.0	22.3			8760	6926	1950	66.7
1/78	SYSTEM							744			
2/78	SYSTEM							672			

** PROBLEMS/SOLUTIONS/COMMENTS

BOTH THE BOILER AND FGD SYSTEM CAME BACK ON LINE FEBRUARY 21 AFTER COMPLETION OF THE TURBINE REPAIRS. THE COMPLIANCE TEST HAS AGAIN BEEN RESCHEDULED WITH EPA FOR THE END OF MAY.

ONE FORCED-DRAFT FAN (UPSTREAM OF THE FGD SYSTEM) HAD AN OIL LEAK AND A SHAFT ALIGNMENT PROBLEM. THE FAN WAS TAKEN OFF LINE AND SHIPPED TO BUFFALO FORGE FOR REPAIRS. THE AFFECTED MODULE WAS DOWN FROM FEBRUARY 23 THROUGH APRIL 10, WHEN THE REPAIRED UNIT WAS RE-INSTALLED.

THE VACUUM FILTER MALFUNCTIONED, ALLOWING LARGER SIZE PARTICLES TO ESCAPE THE FILTER. THIS CAUSED THE RUBBER LINING DOWN STREAM TO PEEL WHICH, IN TURN, CREATED A PLUGGING PROBLEM. EIMCO ENGINEERS ARE PRESENTLY STUDYING THE PROBLEM AND HOPE TO INCORPORATE MODIFICATIONS TO IMPROVE THE PERFORMANCE OF THE FILTERS.

3/78	SYSTEM							744			
4/78	SYSTEM							720			

** PROBLEMS/SOLUTIONS/COMMENTS

COMPLIANCE TESTING TOOK PLACE DURING THE WEEK OF JUNE 5. THE REPORT SHOULD BE AVAILABLE TO THE UTILITY BY THE END OF JUNE.

THE UNIT WAS DOWN WITH DAMPER PROBLEMS (DOWN ON THE 24TH OF JUNE). AP-

MINNKOTA POWER COOPERATIVE: MILTON R. YOUNG 2 (CONT.)

PERIOD	MODULE	AVAILABILITY	OPERABILITY	RELIABILITY	UTILIZATION	% REMOVAL SO2	% REMOVAL PART.	PER HOURS	BOILER HOURS	FGD HOURS	CAP. FACTOR
		PERFORMANCE DATA									

PARENTLY THE CHAINS THAT PULL THE GUILLOTINE DAMPERS WERE UNDERDESIGNED AND HAVE BEEN REPLACED.

5/78	SYSTEM							744			
6/78	SYSTEM							720			
7/78	SYSTEM							744			
8/78	SYSTEM							744			

** PROBLEMS/SOLUTIONS/COMMENTS

OFFICIAL RESULTS OF THE COMPLIANCE TEST PERFORMED ON JUNE 6 ARE STILL NOT AVAILABLE. BECAUSE OF INTERMITTENT OPERATION, HOURS ARE NOT AVAILABLE.

THE THICKENER HAS BEEN A MAJOR PROBLEM AREA. THE POLYETHYLENE LINER WAS ACCIDENTLY PIERCED DURING REPAIRS AND HAD TO BE PATCHED.

9/78	SYSTEM							720			
10/78	SYSTEM							744			

** PROBLEMS/SOLUTIONS/COMMENTS

THE UTILITY HAS REPORTED OPERATIONAL PARAMETERS FOR THE ENTIRE YEAR OF 1978. NO INDIVIDUAL MONTHLY FIGURES WERE AVAILABLE.

THE UTILITY REPORTED THAT OPERATION OF THE BOILER AND FGD SYSTEM CONTINUED ON AN INTERMITTENT BASIS THROUGHOUT THE PERIOD.

THICKENER LINING PROBLEMS WERE ENCOUNTERED.

EROSION IN THE SPRAY TOWERS WAS SEVERE ENOUGH TO CAUSE HOLES IN THEM.

F.D. FAN PROBLEMS HAVE BEEN ENCOUNTER AND ARE A MAJOR CONCERN.

11/78	SYSTEM							720			
12/78	A		4.6		5.1		4.6				
	B		37.7		28.4		25.7				
	SYSTEM		21.1		16.8		15.1	1488	1345		225
1/79	SYSTEM							744			

** PROBLEMS/SOLUTIONS/COMMENTS

THE ABOVE FIGURES ARE FOR THE PERIOD DECEMBER THROUGH JANUARY.

THE UTILITY REPORTED THAT THE A-TOWER WAS OUT OF SERVICE FOR A PERIOD IN JANUARY DUE TO BROKEN INLET ISOLATION DAMPER CHAINS.

A-TOWER WAS OUT OF SERVICE TO REPAIR A BOOSTER FAN SERVO MECHANISM.

THE B-TOWER WAS OUT OF SERVICE DURING DECEMBER DUE TO PLUGGING OF THE THICKINER UNDERFLOW BY RUBBER LINING. THE THICKENER WAS PUMPED OUT AND REPAIRED.

THE B-TOWER WAS OUT OF SERVICE THROUGH JANUARY DUE TO A FAN MOTOR.

2/79	SYSTEM		25.8		35.2		25.8	1416	1036		365
3/79	A										
	B										
	SYSTEM							744	1034		

PERIOD	MODULE	AVAILABILITY	OPERABILITY	RELIABILITY	UTILIZATION	% REMOVAL SO2	% REMOVAL PART.	PER HOURS	BOILER HOURS	FGD HOURS	CAP. FACTOR
		PERFORMANCE DATA									
	** PROBLEMS/SOLUTIONS/COMMENTS										
		THE ABOVE FIGURES ARE FOR THE PERIOD FEBRUARY THROUGH MARCH.									
		A BOOSTER FAN MOTOR FIRE WAS EXPERIENCED.									
		HOLES IN THE ABSORBER TOWER WERE REPAIRED.									
4/79	A	3.0	3.2		3.0						
	B	57.1	61.6		57.1						
	SYSTEM	30.0	32.4		30.0			1464	1358	440	
5/79	SYSTEM							744			
	** PROBLEMS/SOLUTIONS/COMMENTS										
		THE ABOVE FIGURES ARE FOR THE PERIOD APRIL THROUGH MAY.									
6/79	A	17.2	17.2		17.2						
	B	36.3	36.3		36.3						
	SYSTEM	26.7	26.7		26.7			720	720	192	
	** PROBLEMS/SOLUTIONS/COMMENTS										
		THE A-TOWER WAS DOWN FOR REPAIR TO THE FLAKE LINING.									
		A-TOWER TRAY RECYCLE DISTRIBUTION HEADER WAS CLEANED.									
		THE SYSTEM WAS FORCED OUT OF SERVICE WHEN BOILER PROBLEMS CAUSED AN EXCESSIVE AMOUNT OF HEAVY PARTICLES TO ENTER THE FGD SYSTEM RESULTING IN THE PLUGGING OF SEVERAL LINES AND STOPPING THE THICKENER RAKE.									
		THE A-TOWER WAS OUT OF SERVICE DUE TO PROBLEMS WITH THE WATER BALANCE AND THE VACUUM FILTERS AS WELL AS TO UNPLUG THE ABSORBER BLEED LINE. LIME WAS USED FOR SEVERAL DAYS TO EASE THE HIGH SOLIDS PROBLEM.									
7/79	A	44.5	44.5		44.5						
	B	.0	.0		.0						
	SYSTEM	44.0	44.0	44.0	44.0			744	744	331	
	** PROBLEMS/SOLUTIONS/COMMENTS										
		THE UTILITY HAS REPORTED THAT THE TRAY RECYCLE VALVE AND THE ABSORBER TRAIN VALVE FAILED DURING SEPTEMBER.									
		THE UTILITY REPORTED PROBLEMS WITH PLUGGING IN THE MIST ELIMINATORS, THE THICKENER AND IN THE ABSORBER FEED LINE.									
		THE UNIT EXPERIENCED A BOOSTER FAN TRIP.									
		PROBLEMS WITH THE VACUUM FILTERS AND THE SEAL WATER PUMP WERE ENCOUNTERED.									
		THE ABSORBER AGITATOR WAS REPLACED DURING THE THIRD QUARTER.									
8/79	A	28.8	28.8		28.8						
	B	10.6	10.6		10.6						
	SYSTEM	39.0	39.0	39.0	39.0			744	744	293	
	** PROBLEMS/SOLUTIONS/COMMENTS										
		DURING AUGUST HIGH VIBRATIONS AND BEARING TEMPERATURE IN THE BOOSTER FAN WERE ENCOUNTERED CAUSING SOME DOWN TIME.									
		THE INABILITY TO ADD ALKALI, FLYASH OR LIME TO THE SYSTEM CAUSED SOME OPERATIONAL PROBLEMS.									
		DURING AUGUST THE THICKENER RAKE WAS BURIED IN THE SLUDGE AND ALL OF THE SLUDGE HAD TO BE REMOVED BY MINING IT FROM THE TOP.									

MINNKOTA POWER COOPERATIVE: MILTON R. YOUNG 2 (CONT.)

PERIOD	MODULE	AVAILABILITY	OPERABILITY	RELIABILITY	UTILIZATION	% REMOVAL SO2	% REMOVAL PART.	PER HOURS	BOILER HOURS	FGD HOURS	CAP. FACTOR
		PERFORMANCE DATA									

PLUGGING OF THE FLYASH TANK AND THE LIME SLURRY FEED LINE CAUSED SOME OUTAGE TIME DURING AUGUST.

DUE TO A LACK OF LIME THE SYSTEM HAD TO GO OFF LINE.

THE HOLES IN THE SIDES OF THE ABSORBER TOWER HAD TO BE REPAIRED CAUSING AN OUTAGE.

9/79	A	21.4	21.4		21.4						
	B	1.2	1.2		1.2						
	SYSTEM	23.0	23.0	23.0	23.0			720	717		163

** PROBLEMS/SOLUTIONS/COMMENTS

DURING SEPTEMBER THE A-SIDE WAS DOWN DUE TO HEAVY SOLIDS IN THE THICKENER AND CLARIFIER. HIGH VIBRATIONS WERE EXPERIENCED WITH THE BOOSTER FAN.

THE B-SIDE REMAINED OUT OF SERVICE DUE TO PROBLEMS WITH THE THICKENER AND CLARIFIER.

10/79	A	.0	.0		.0						
	B	31.3	31.3		31.3						
	SYSTEM	31.3	31.4	31.4	31.3			744	743		233

** PROBLEMS/SOLUTIONS/COMMENTS

THE CLARIFIER WAS CLEANED DURING OCTOBER.

THE CLARIFIER MECHANISM GEAR FAILED CAUSING DOWN TIME FOR REPAIR.

THE BLEED LINE TO THE THICKENER PLUGGED AND NEEDED MAINTENANCE.

THE GEAR HOUSING FAILED ON THE THICKENER LIFT MECHANISM CAUSING OUTAGE TIME FOR REPAIR.

11/79	A	.7	.7		.7						
	B	15.4	16.8		15.4						
	SYSTEM	16.0	17.4	17.4	16.0			720	661		115

** PROBLEMS/SOLUTIONS/COMMENTS

AN EXCESS OF SOLIDS IS CAUSING PLUGGING IN THE THICKENER AND THE CLARIFIER.

12/79	A	26.6	31.5		26.6						
	B	9.7	11.5		9.7						
	SYSTEM	36.3	43.0	43.0	36.3			744	628		270

** PROBLEMS/SOLUTIONS/COMMENTS

SEAL WATER PLUGGING CAUSED SOME OUTAGE TIME DURING DECEMBER.

PROBLEMS WERE ENCOUNTERED WITH THE BOOSTER FAN ON MODULE B DUE TO HIGH VIBRATION.

A HOLE IN A BLOCKING VALVE CAUSED SOME PROBLEMS.

THE GEAR HOUSING FAILED ON THE THICKENER LIFT MECHANISM.

SECTION 3
DESIGN AND PERFORMANCE DATA FOR OPERATIONAL DOMESTIC FGD SYSTEMS

COMPANY NAME	MONTANA POWER	
PLANT NAME	COLSTRIP	
UNIT NUMBER	1	
CITY	COLSTRIP	
STATE	MONTANA	
REGULATORY CLASSIFICATION	B	
PARTICULATE EMISSION LIMITATION - NG/J	43.	(.100 LB/MMBTU)
SO2 EMISSION LIMITATION - NG/J	516.	(1.200 LB/MMBTU)
NET PLANT GENERATING CAPACITY - MW	664.0	
GROSS UNIT GENERATING CAPACITY - MW	360.0	
NET UNIT GENERATING CAPACITY W/FGD - MW	332.0	
NET UNIT GENERATING CAPACITY WO/FGD - MW	344.0	
EQUIVALENT SCRUBBED CAPACITY - MW	360.0	
** BOILER DATA		
SUPPLIER	COMBUSTION ENGINEERING	
TYPE	PULVERIZED COAL	
SERVICE LOAD	BASE	
COMMERCIAL SERVICE DATE	11/75	
MAXIMUM BOILER FLUE GAS FLOW - CU.M/S	674.82	(1430000 ACFM)
FLUE GAS TEMPERATURE - C	143.9	(291 F)
STACK HEIGHT - M	152.	(500 FT)
STACK TOP DIAMETER - M	5.0	(16.5 FT)
** FUEL DATA		
FUEL TYPE	COAL	
FUEL GRADE	SUBBITUMINOUS	
AVERAGE HEAT CONTENT - J/G	20569.	(8843 BTU/LB)
RANGE HEAT CONTENT - BTU/LB		8,162-8,8967
AVERAGE ASH CONTENT - %	8.60	
RANGE ASH CONTENT - %	6.1-12.6	
AVERAGE MOISTURE CONTENT - %	23.90	
RANGE MOISTURE CONTENT - %	21.6-28.8	
AVERAGE SULFUR CONTENT - %	.77	
RANGE SULFUR CONTENT - %	0.4-1.0	
AVERAGE CHLORIDE CONTENT - %	.01	
RANGE CHLORIDE CONTENT - %	******	
** PARTICULATE SCRUBBER		
NUMBER	3	
TYPE	VENTURI	
SUPPLIER	COMBUSTION EQUIPMENT ASSOCIATES	
NUMBER OF STAGES	1	
SHELL MATERIAL	CARBON STEEL	
LINING MATERIAL	ACID BRICK	
INTERNAL MATERIAL	316 SS PLUMB BOB, CERAMIC NOZZLES	
NUMBER OF NOZZLES	12	
TYPE OF NOZZLES	OPEN PIPE	
BOILER LOAD/SCRUBBER - %	40.0	
FLUE GAS CAPACITY - CU.M/S	224.9	(476667 ACFM)
FLUE GAS TEMPERATURE - C	143.9	(291 F)
LIQUID RECIRCULATION RATE - LITER/S	415.8	(6600 GPM)
L/G RATIO - LITER/CU.M	2.0	(15.0 GAL/1000ACF)
PRESSURE DROP - KPA	*******	(***** IN-H2O)
SUPERFICIAL GAS VELOCITY - M/S	61.0	(200.0 FT/S)
PARTICULATE INLET LOAD - NG/J	3452.	(8.030 LB/MMBTU)
PARTICULATE OUTLET LOAD - NG/J	26.	(.060 LB/MMBTU)
PARTICULATE DESIGN REMOVAL EFFICIENCY - %	99.5	
SO2 INLET CONCENTRATION - NG/J	989.	(2.300 LB/MMBTU)
** FGD SYSTEM		
SALEABLE PRODUCT/THROWAWAY PRODUCT	THROWAWAY PRODUCT	
GENERAL PROCESS TYPE	WET SCRUBBING	
PROCESS TYPE	LIME/ALKALINE FLYASH	
PROCESS ADDITIVES	NONE	
SYSTEM SUPPLIER	ADL/COMBUSTION EQUIP ASSOCIATE	
A-E FIRM	BECHTEL	
CONSTRUCTION FIRM	BECHTEL	
DEVELOPMENT LEVEL	FULL SCALE	
NEW/RETROFIT	NEW	
PARTICULATE DESIGN REMOVAL EFFICIENCY - %	99.50	
SO2 DESIGN REMOVAL EFFICIENCY - %	60.00	
COMMERCIAL DATE	11/75	

MONTANA POWER: COLSTRIP 1 (CONT.)

INITIAL START-UP	9/75
CONSTRUCTION COMPLETION	8/75
CONSTRUCTION INITIATION	6/73
CONTRACT AWARDED	10/72
ABSORBER SPARE CAPACITY INDEX - %	20.0
ABSORBER SPARE COMPONENT INDEX	.5

** ABSORBER

NUMBER	3
TYPE	SPRAY TOWER
INITIAL START UP	9/75
SUPPLIER	COMBUSTION EQUIP ASSOCIATES
NUMBER OF STAGES	1
DIMENSIONS - FT	70.5 X 35 DIA.
SHELL MATERIAL	CARBON STEEL
SHELL LINER MATERIAL	FLAKEGLASS POLYESTER, (PLASITE IN ONE MODULE)
INTERNAL MATERIAL	316L SS TRAY
NUMBER OF NOZZLES	12
NOZZLE TYPE	REFRACTORY FULL CONE [CERAMIC]
BOILER LOAD/ABSORBER - %	40.0
GAS FLOW - CU.M/S	201.31 (426600 ACFM)
GAS TEMPERATURE - C	48.9 (120 F)
LIQUID RECIRCULATION RATE - LITER/S	479. (7600 GPM)
L/G RATIO - L/CU.M	2.4 (18.0 GAL/1000ACF)
PRESSURE DROP - KPA	.1 (.5 IN-H2O)
SUPERFICAL GAS VELOCITY - M/SEC	2.7 (8.7 FT/S)
PARTICULATE OUTLET LOAD- G/CU.M	.0 (.018 GR/SCF)
PARTICULATE OUTLET LOAD - NG/J	26. (.060 LB/MMBTU)
PARTICULATE REMOVAL EFFICIENCY - %	99.5
SO2 OUTLET CONTRATION - PPM	425
SO2 OUTLET CONCENTRATION- NG/J	(***** LB/MMBTU)
SO2 OUTLET CONCENTRATION- NG/J	(***** LB/MMBTU)
SO2 DESIGN REMOVAL EFFICIENCY - %	60.0

** FANS

NUMBER	6
TYPE	SCRUBBER ID
CONSTRUCTION MATERIALS	CARBON STEEL IMPELLER, RUBBER-LINED HOUSING
SERVICE - WET/DRY	DRY
CAPACITY - CU.M/S	223.21 (473000 ACFM)

** MIST ELIMINATOR

NUMBER	1
TYPE	CHEVRON
CONSTRUCTION MATERIAL	NORYL PLASTIC
CONFIGURATION	HORIZONTAL
NUMBER OF STAGES	1
NUMBER OF PASSES	4
FREEBOARD DISTANCE - M	3.96 (13.0 FT)
DEPTH - M	.30 (1.0 FT)
VANE SPACING - CM	2.5 (1.00 IN)
VANE ANGLES	120 DEGREES
WASH SYSTEM	CONTINUOUS UNDERWASH (POND OVERFLOW AND RIVER WA
SUPERFICIAL GAS VELOCITY - M/S	2.7 (8.7 FT/S)
PRESSURE DROP - KPA	.6 (2.3 IN-H2O)

** MIST ELIMINATOR

NUMBER	1
TYPE	MESH PAD
CONSTRUCTION MATERIAL	NORYL PLASTIC
CONFIGURATION	HORIZONTAL
NUMBER OF STAGES	1
WASH SYSTEM	INTERMITTENT WASH
SUPERFICIAL GAS VELOCITY - M/S	2.7 (8.7 FT/S)

** MIST ELIMINATOR

NUMBER	1
TYPE	VALVE TRAY
CONSTRUCTION MATERIAL	316L SS
CONFIGURATION	HORIZONTAL
NUMBER OF STAGES	1
WASH SYSTEM	UNDERWASH
SUPERFICIAL GAS VELOCITY - M/S	2.7 (8.7 FT/S)

** PROCESS CONTROL CHEMISTRY

CONTROL VARIABLES	PH
CONTROL RANGE	4.0 TO 5.0
CONTROL MANNER	MANUAL

MONTANA POWER: COLSTRIP 1 (CONT.)

MODE	FEEDBACK
SENSOR LOCATION	RECIRCULATION TANK

** PUMPS

SERVICE	NUMBER
VENTURI RECIRCULATION	6
ABSORBER RECIRCULATION	6

** TANKS

SERVICE	NUMBER
VENTURI/ABSORBER RECYCLE TANK	3

** REHEATER

NUMBER	3
TYPE	IN-LINE
HEATING MEDIUM	STEAM [150 PSIG, 350 F]
TEMPERATURE BOOST - C	27.8 (50 F)
ENERGY REQUIRED	2.75% OF BOILER INPUT

** THICKENER

NUMBER	0

** WATER LOOP

TYPE	CLOSED	
EVAPORATOR WATER LOSS - LITER/S	18.9	(300 GPM)
SLUDGE WATER LOSS - LITER/S	4.4	(70 GPM)
PURGE WATER LOSS - LITER/S	.0	(0 GPM)
OTHER WATER LOSSES - LITER/S	.0	(0 GPM)
FRESH MAKEUP WATER ADDITION - LITERS/S	23.3	(370 GPM)

** DISPOSAL

NATURE	INTERIM	
TYPE	DIKED LINED POND	
LOCATION	ON-SITE	
TRANSPORTATION	PUMPED	
DIMENSIONS	20 FT. DEEP	
AREA - ACRES	26.0	
CAPACITY - CU.M	635960	(520.0 ACRE-FT)

** DISPOSAL

NATURE	INTERIM	
TYPE	DIKED LINED POND	
LOCATION	ON-SITE	
TRANSPORTATION	PUMPED	
DIMENSIONS	20 FT. DEEP	
AREA - ACRES	26.0	
CAPACITY - CU.M	635960	(520.0 ACRE-FT)

** DISPOSAL

NATURE	FINAL	
TYPE	POND	
LOCATION	OFF-SITE	
TRANSPORTATION	PUMPED	
DIMENSIONS	20 FT. DEEP	
AREA - ACRES	112.0	
CAPACITY - CU.M	2590314	(2118.0 ACRE-FT)

PERFORMANCE DATA

PERIOD	MODULE	AVAILABILITY	OPERABILITY	RELIABILITY	UTILIZATION	% REMOVAL SO2	% REMOVAL PART.	PER HOURS	BOILER HOURS	FGD HOURS	CAP. FACTOR
9/75	SYSTEM							720	72		1.0
10/75	SYSTEM							744	456		19.0
11/75	SYSTEM							720	576		42.0
12/75	SYSTEM							744	720		60.0
1/76	SYSTEM	90.0						744	672		64.0
2/76	SYSTEM	98.0						696	624		65.0

MONTANA POWER: COLSTRIP 1 (CONT.)

PERIOD	MODULE	AVAILABILITY	OPERABILITY	RELIABILITY	UTILIZATION	% REMOVAL SO2	% REMOVAL PART.	PER HOURS	BOILER HOURS	FGD HOURS	CAP. FACTOR
		PERFORMANCE DATA									
3/76	SYSTEM	98.0						744	576		57.0
4/76	SYSTEM	74.0						720	672		50.0
5/76	SYSTEM	97.0						744	336		26.0
6/76	SYSTEM	.0			.0			720	0	0	
7/76	SYSTEM	93.0						744	480		28.0
8/76	SYSTEM	95.0						744	552		38.0
9/76	SYSTEM	89.0						720	720		65.0
10/76	SYSTEM	80.0						744	720		73.0

** PROBLEMS/SOLUTIONS/COMMENTS

A TEMPERATURE EXCURSION RESULTED IN DAMAGE TO SYSTEM COMPONENTS CAUSING SYSTEM DOWNTIME.

THE EMERGENCY SCRUBBER QUENCH WATER SUPPLY SYSTEM FAILED TO OPERATE DURING A TEMPERATURE EXCURSION.

THE LININGS WERE DAMAGED DURING A TEMPERATURE EXCURSION.

MIST ELIMINATOR DAMAGE OCCURRED AS THE RESULT OF A TEMPERATURE EXCURSION IN OCTOBER.

11/76	SYSTEM	63.0						720	720		56.0

** PROBLEMS/SOLUTIONS/COMMENTS

A FAILURE OF AN ID FAN MOTOR OCCURRED.

12/76	SYSTEM	74.0						744	744		67.0
1/77	SYSTEM	93.0						744	744		73.0
2/77	SYSTEM	95.0						672	480		3.0
3/77	SYSTEM				.0			744	0	0	
4/77	SYSTEM	83.0						720	600		50.0
5/77	SYSTEM	85.0						744	624		64.0
6/77	SYSTEM	87.0						720	672		69.0
7/77	SYSTEM	85.0						744	696		72.0
8/77	SYSTEM	93.0						744			
9/77	SYSTEM	93.0						720			
10/77	SYSTEM	96.0						744			
11/77	SYSTEM	96.0						720			
12/77	SYSTEM	98.0						744			
1/78	SYSTEM	96.0						744			
2/78	SYSTEM	100.0						672			
3/78	SYSTEM	92.0						744			
4/78	SYSTEM	100.0						720			
5/78	SYSTEM	66.0						744			

PERIOD	MODULE	AVAILABILITY	OPERABILITY	RELIABILITY	UTILIZATION	% REMOVAL SO2	% REMOVAL PART.	PER HOURS	BOILER HOURS	FGD HOURS	CAP. FACTOR
				PERFORMANCE DATA							
** PROBLEMS/SOLUTIONS/COMMENTS											
		THE UNIT WAS RESTARTED AFTER ITS ANNUAL OVERHAUL DURING MAY.									
		THE I.D. FAN MOTOR WAS NOT AVAILABLE DURING UNIT RESTART.									
6/78	SYSTEM	76.0						720			
7/78	SYSTEM	96.0						744			
8/78	SYSTEM	97.0						744			
9/78	SYSTEM	96.0						720			
10/78	SYSTEM	95.0						744			
11/78	SYSTEM	91.0						720			
12/78	SYSTEM	96.7						744			
1/79	SYSTEM	97.6						744			
2/79	SYSTEM	90.3						672			
3/79	SYSTEM	97.3						744			
4/79	SYSTEM	98.9	88.4		80.2			720		597	
5/79	SYSTEM	89.7						744			
6/79	SYSTEM	95.2						720			
** PROBLEMS/SOLUTIONS/COMMENTS											
		DURING MAY AND JUNE THE UNIT WAS BEING OVERHAULED. THE AVAILABILITY FOR THESE PERIODS IS BASED UPON OPERATIONS BEFORE AND AFTER OVERHAUL.									
7/79	SYSTEM	98.0						744			
8/79	SYSTEM	97.3						744			
9/79	SYSTEM	95.2						720			
10/79	SYSTEM	92.9						744			
11/79	SYSTEM	97.5						720			
** PROBLEMS/SOLUTIONS/COMMENTS											
		THE ROUTINE MAINTENANCE CAN BE RERFORMED WHILE THE MODULES ARE ON LINE SO THE AVAILABILITY REMAINS HIGH.									

SECTION 3
DESIGN AND PERFORMANCE DATA FOR OPERATIONAL DOMESTIC FGD SYSTEMS

COMPANY NAME	MONTANA POWER	
PLANT NAME	COLSTRIP	
UNIT NUMBER	2	
CITY	COLSTRIP	
STATE	MONTANA	
REGULATORY CLASSIFICATION	B	
PARTICULATE EMISSION LIMITATION - NG/J	43.	(.100 LB/MMBTU)
SO2 EMISSION LIMITATION - NG/J	516.	(1.200 LB/MMBTU)
NET PLANT GENERATING CAPACITY - MW	664.0	
GROSS UNIT GENERATING CAPACITY - MW	360.0	
NET UNIT GENERATING CAPACITY W/FGD - MW	332.0	
NET UNIT GENERATING CAPACITY WO/FGD - MW	344.0	
EQUIVALENT SCRUBBED CAPACITY - MW	360.0	
** BOILER DATA		
SUPPLIER	COMBUSTION ENGINEERING	
TYPE	PULVERIZED COAL	
SERVICE LOAD	BASE	
COMMERCIAL SERVICE DATE	11/75	
MAXIMUM BOILER FLUE GAS FLOW - CU.M/S	674.82	(1430000 ACFM)
FLUE GAS TEMPERATURE - C	143.9	(291 F)
STACK HEIGHT - M	152.	(500 FT)
STACK TOP DIAMETER - M	5.0	(16.5 FT)
** FUEL DATA		
FUEL TYPE	COAL	
FUEL GRADE	SUBBITUMINOUS	
AVERAGE HEAT CONTENT - J/G	20569.	(8843 BTU/LB)
RANGE HEAT CONTENT - BTU/LB		8.162-8.8967
AVERAGE ASH CONTENT - %	8.60	
RANGE ASH CONTENT - %	6.1-12.6	
AVERAGE MOISTURE CONTENT - %	23.90	
RANGE MOISTURE CONTENT - %	21.6-28.8	
AVERAGE SULFUR CONTENT - %	.77	
RANGE SULFUR CONTENT - %	0.4-1.0	
AVERAGE CHLORIDE CONTENT - %	.01	
RANGE CHLORIDE CONTENT - %	******	
** PARTICULATE SCRUBBER		
NUMBER	3	
TYPE	VENTURI	
SUPPLIER	COMBUSTION EQUIPMENT ASSOCIATES	
NUMBER OF STAGES		
SHELL MATERIAL	CARBON STEEL RESISTANT	
LINING MATERIAL	ACID BRICK	
INTERNAL MATERIAL	316 SS PLUMB BOB, CERAMIC NOZZLES	
NUMBER OF NOZZLES	12	
TYPE OF NOZZLES	OPEN PIPE	
BOILER LOAD/SCRUBBER - %	40.0	
FLUE GAS CAPACITY - CU.M/S	224.9	(476667 ACFM)
FLUE GAS TEMPERATURE - C	143.9	(291 F)
LIQUID RECIRCULATION RATE - LITER/S	415.8	(6600 GPM)
L/G RATIO - LITER/CU.M	2.0	(15.0 GAL/1000ACF)
PRESSURE DROP - KPA	*******	(***** IN-H2O)
SUPERFICIAL GAS VELOCITY - M/S	61.0	(200.0 FT/S)
PARTICULATE INLET LOAD - NG/J	3452.	(8.030 LB/MMBTU)
PARTICULATE OUTLET LOAD - NG/J	26.	(.060 LB/MMBTU)
PARTICULATE DESIGN REMOVAL EFFICIENCY - %	99.5	
SO2 INLET CONCENTRATION - NG/J	989.	(2.300 LB/MMBTU)
** FGD SYSTEM		
SALEABLE PRODUCT/THROWAWAY PRODUCT	THROWAWAY PRODUCT	
GENERAL PROCESS TYPE	WET SCRUBBING	
PROCESS TYPE	LIME/ALKALINE FLYASH	
PROCESS ADDITIVES	NONE	
SYSTEM SUPPLIER	ADL/COMBUSTION EQUIP ASSOCIATE	
A-E FIRM	BECHTEL	
CONSTRUCTION FIRM	BECHTEL	
DEVELOPMENT LEVEL	FULL SCALE	
NEW/RETROFIT	NEW	
PARTICULATE DESIGN REMOVAL EFFICIENCY - %	99.50	
SO2 DESIGN REMOVAL EFFICIENCY - %	60.00	
COMMERCIAL DATE	10/76	

MONTANA POWER: COLSTRIP 2 (CONT.)

INITIAL START-UP	5/76
CONSTRUCTION COMPLETION	8/75
CONSTRUCTION INITIATION	6/73
CONTRACT AWARDED	10/72
ABSORBER SPARE CAPACITY INDEX - %	20.0
ABSORBER SPARE COMPONENT INDEX	.5
** ABSORBER	
NUMBER	3
TYPE	SPRAY TOWER
INITIAL START UP	5/76
SUPPLIER	COMBUSTION EQUIP ASSOCIATES
NUMBER OF STAGES	1
DIMENSIONS - FT	70.5 X 35 DIA.
SHELL MATERIAL	CARBON STEEL
SHELL LINER MATERIAL	FLAKEGLASS POLYESTER, (PLASITE IN ONE MODULE)
INTERNAL MATERIAL	316L SS TRAY
NUMBER OF NOZZLES	12
NOZZLE TYPE	REFRACTORY FULL CONE [CERAMIC]
BOILER LOAD/ABSORBER - %	40.0
GAS FLOW - CU.M/S	201.31 (426600 ACFM)
GAS TEMPERATURE - C	48.9 (120 F)
LIQUID RECIRCULATION RATE - LITER/S	479. (7600 GPM)
L/G RATIO - L/CU.M	2.4 (18.0 GAL/1000ACF)
PRESSURE DROP - KPA	.1 (.5 IN-H20)
SUPERFICAL GAS VELOCITY - M/SEC	2.7 (8.7 FT/S)
PARTICULATE OUTLET LOAD- G/CU.M	.0 (.018 GR/SCF)
PARTICULATE OUTLET LOAD - NG/J	26. (.060 LB/MMBTU)
PARTICULATE REMOVAL EFFICIENCY - %	99.5
SO2 OUTLET CONTRATION - PPM	425
SO2 OUTLET CONCENTRATION- NG/J	(***** LB/MMBTU)
SO2 OUTLET CONCENTRATION- NG/J	(***** LB/MMBTU)
SO2 DESIGN REMOVAL EFFICIENCY - %	60.0
** FANS	
NUMBER	6
TYPE	SCRUBBER ID
CONSTRUCTION MATERIALS	CARBON STEEL IMPELLER, RUBBER-LINED HOUSING
SERVICE - WET/DRY	DRY
CAPACITY - CU.M/S	223.21 (473000 ACFM)
** MIST ELIMINATOR	
NUMBER	1
TYPE	CHEVRON
CONSTRUCTION MATERIAL	NORYL PLASTIC
CONFIGURATION	HORIZONTAL
NUMBER OF STAGES	1
NUMBER OF PASSES	4
FREEBOARD DISTANCE - M	3.96 (13.0 FT)
DEPTH - M	.30 (1.0 FT)
VANE SPACING - CM	2.5 (1.00 IN)
VANE ANGLES	120 DEGREES
WASH SYSTEM	CONTINUOUS UNDERWASH (POND OVERFLOW AND RIVER WA
SUPERFICIAL GAS VELOCITY - M/S	2.7 (8.7 FT/S)
PRESSURE DROP - KPA	.6 (2.3 IN-H20)
** MIST ELIMINATOR	
NUMBER	1
TYPE	VALVE TRAY
CONSTRUCTION MATERIAL	316L SS
CONFIGURATION	HORIZONTAL
NUMBER OF STAGES	1
WASH SYSTEM	UNDERWASH
SUPERFICIAL GAS VELOCITY - M/S	2.7 (8.7 FT/S)
** PROCESS CONTROL CHEMISTRY	
CONTROL VARIABLES	PH
CONTROL RANGE	4.0 TO 5.0
CONTROL MANNER	MANUAL
MODE	FEEDBACK
SENSOR LOCATION	RECIRCULATION TANK
** PUMPS	
SERVICE	NUMBER
---	---
VENTURI RECIRCULATION	6
ABSORBER RECIRCULATION	6

MONTANA POWER: COLSTRIP 2 (CONT.)

** TANKS

SERVICE	NUMBER
VENTURI/ABSORBER RECYCLE TANK	3

** REHEATER

NUMBER	3
TYPE	IN-LINE
HEATING MEDIUM	STEAM [150 PSIG, 350 F]
TEMPERATURE BOOST - C	27.8 (50 F)
ENERGY REQUIRED	2.75% OF BOILER INPUT

** THICKENER

NUMBER	0

** WATER LOOP

TYPE	CLOSED	
EVAPORATOR WATER LOSS - LITER/S	18.9	(300 GPM)
SLUDGE WATER LOSS - LITER/S	4.4	(70 GPM)
PURGE WATER LOSS - LITER/S	.0	(0 GPM)
OTHER WATER LOSSES - LITER/S	.0	(0 GPM)
FRESH MAKEUP WATER ADDITION - LITERS/S	23.3	(370 GPM)

** DISPOSAL

NATURE	INTERIM	
TYPE	DIKED LINED POND	
LOCATION	ON-SITE	
TRANSPORTATION	PUMPED	
DIMENSIONS	20 FT. DEEP	
AREA - ACRES	26.0	
CAPACITY - CU.M	635960	(520.0 ACRE-FT)

** DISPOSAL

NATURE	INTERIM	
TYPE	DIKED LINED POND	
LOCATION	ON-SITE	
TRANSPORTATION	PUMPED	
DIMENSIONS	20 FT. DEEP	
AREA - ACRES	26.0	
CAPACITY - CU.M	635960	(520.0 ACRE-FT)

** DISPOSAL

NATURE	FINAL	
TYPE	POND	
LOCATION	OFF-SITE	
TRANSPORTATION	PUMPED	
DIMENSIONS	20 FT. DEEP	
AREA - ACRES	112.0	
CAPACITY - CU.M	2590314	(2118.0 ACRE-FT)

PERFORMANCE DATA

PERIOD	MODULE	AVAILABILITY	OPERABILITY	RELIABILITY	UTILIZATION	% REMOVAL SO2	% REMOVAL PART.	PER HOURS	BOILER HOURS	FGD HOURS	CAP. FACTOR
5/76	SYSTEM	100.0						744	72		1.0
6/76	SYSTEM	100.0						720	384		23.0
7/76	SYSTEM	99.0						744	312		20.0
8/76	SYSTEM	96.0						744	240		13.0
9/76	SYSTEM	98.0						720	720		65.0
10/76	SYSTEM	90.0						744	744		77.0
11/76	SYSTEM	94.0						720	720		80.0
12/76	SYSTEM	93.0						744	744		82.0
1/77	SYSTEM	83.0						744	720		68.0
2/77	SYSTEM	94.0						672	648		75.0

PERIOD	MODULE	AVAILABILITY	OPERABILITY	RELIABILITY	UTILIZATION	% REMOVAL SO2	% REMOVAL PART.	PER HOURS	BOILER HOURS	FGD HOURS	CAP. FACTOR
		PERFORMANCE DATA									
3/77	SYSTEM	97.0						744	672		71.0
4/77	SYSTEM	85.0						720	696		68.0
5/77	SYSTEM	63.0						744	312		23.0
6/77	SYSTEM	88.0						720	672		61.0
7/77	SYSTEM	91.0						744	672		58.0
8/77	SYSTEM	81.0						744			
9/77	SYSTEM	90.0						720			
10/77	SYSTEM	98.0						744			
11/77	SYSTEM	98.0						720			
12/77	SYSTEM	98.0						744			
1/78	SYSTEM	97.0						744			
2/78	SYSTEM	95.0						672			
3/78	SYSTEM	89.0						744			
	** PROBLEMS/SOLUTIONS/COMMENTS										
	THE BOILER WAS SHUT DOWN FOR ANNUAL OVERHAUL.										
4/78	SYSTEM	87.0						720			
5/78	SYSTEM	99.0						744			
6/78	SYSTEM	97.0						720			
7/78	SYSTEM	96.0						744			
8/78	SYSTEM	99.0				.0		744	0	0	
9/78	SYSTEM	94.0				.0		720	0	0	
10/78	SYSTEM	99.0				.0		744	0	0	
11/78	SYSTEM	99.0				.0		720	0	0	
12/78	SYSTEM	91.2						744			
1/79	SYSTEM	94.3						744			
2/79	SYSTEM	98.3						672			
3/79	SYSTEM	94.3						744			
4/79	SYSTEM	100.0						720			
	** PROBLEMS/SOLUTIONS/COMMENTS										
	DURING APRIL THE UNIT WAS BEING OVERHAULED. THE AVAILABILITY FOR THIS TIME IS BASED UPON OPERATIONS BEFORE AND AFTER THE OVERHAUL.										
5/79	SYSTEM	94.4						744			
6/79	SYSTEM	98.4						720			
7/79	SYSTEM	96.4						744			
8/79	SYSTEM	99.3						744			
9/79	SYSTEM	92.3						720			

MONTANA POWER: COLSTRIP 2 (CONT.)

PERIOD	MODULE	AVAILABILITY	OPERABILITY	RELIABILITY	UTILIZATION	% REMOVAL SO2	% REMOVAL PART.	PER HOURS	BOILER HOURS	FGD HOURS	CAP. FACTOR
		PERFORMANCE DATA									
10/79	SYSTEM	92.9						744			
11/79	SYSTEM	98.4						720			

** PROBLEMS/SOLUTIONS/COMMENTS

THE ROUTINE MAINTENANCE CAN BE PERFORMED WHILE THE MODULES ARE ON LINE SO THE AVAILABILITY REMAINS HIGH.

SECTION 3
DESIGN AND PERFORMANCE DATA FOR OPERATIONAL DOMESTIC FGD SYSTEMS

COMPANY NAME	NEVADA POWER	
PLANT NAME	REID GARDNER	
UNIT NUMBER	1	
CITY	MOAPA	
STATE	NEVADA	
REGULATORY CLASSIFICATION	B	
PARTICULATE EMISSION LIMITATION - NG/J	43.	(.100 LB/MMBTU)
SO2 EMISSION LIMITATION - NG/J	516.	(1.200 LB/MMBTU)
NET PLANT GENERATING CAPACITY - MW	*******	
GROSS UNIT GENERATING CAPACITY - MW	125.0	
NET UNIT GENERATING CAPACITY W/FGD - MW	110.0	
NET UNIT GENERATING CAPACITY WO/FGD - MW	*******	
EQUIVALENT SCRUBBED CAPACITY - MW	125.0	
** BOILER DATA		
SUPPLIER	FOSTER WHEELER	
TYPE	PULVERIZED COAL	
SERVICE LOAD	BASE	
COMMERCIAL SERVICE DATE	0/65	
MAXIMUM BOILER FLUE GAS FLOW - CU.M/S	223.21	(473000 ACFM)
FLUE GAS TEMPERATURE - C	176.7	(350 F)
STACK HEIGHT - M	61.	(200 FT)
STACK TOP DIAMETER - M	*******	(***** FT)
** FUEL DATA		
FUEL TYPE	COAL	
FUEL GRADE	BITUMINOUS	
AVERAGE HEAT CONTENT - J/G	28949.	(12450 BTU/LB)
RANGE HEAT CONTENT - BTU/LB		******
AVERAGE ASH CONTENT - %	8.00	
RANGE ASH CONTENT - %	9.	
AVERAGE MOISTURE CONTENT - %	5.50	
RANGE MOISTURE CONTENT - %	5.5	
AVERAGE SULFUR CONTENT - %	.50	
RANGE SULFUR CONTENT - %	0.5-1.0	
AVERAGE CHLORIDE CONTENT - %	.05	
RANGE CHLORIDE CONTENT - %	******	
** MECHANICAL COLLECTOR		
TYPE	MULTICLONES	
SUPPLIER	RESEARCH COTTRELL	
PARTICULATE DESIGN REMOVAL EFFICIENCY - %	75.0	
** PARTICULATE SCRUBBER		
NUMBER	1	
TYPE	VENTURI	
SUPPLIER	ADL/COMBUSTION EQUIPMENT ASSOCIATES	
NUMBER OF STAGES	1	
SHELL MATERIAL	INCOLOY 825 AT THROAT	
LINING MATERIAL	RUBBER (AREAS OTHER THAN THROAT)	
INTERNAL MATERIAL	TWIN VARIABLE THROATS	
TYPE OF NOZZLES	TANGENTIAL	
BOILER LOAD/SCRUBBER - %	50.0	
FLUE GAS CAPACITY - CU.M/S	223.2	(473000 ACFM)
FLUE GAS TEMPERATURE - C	176.7	(350 F)
LIQUID RECIRCULATION RATE - LITER/S	157.5	(2500 GPM)
L/G RATIO - LITER/CU.M	1.3	(10.0 GAL/1000ACF)
PRESSURE DROP - KPA	*******	(***** IN-H20)
SUPERFICIAL GAS VELOCITY - M/S	50.3	(165.0 FT/S)
PARTICULATE INLET LOAD - G/CU.M	1.4	(.60 GR/SCF)
PARTICULATE DESIGN REMOVAL EFFICIENCY - %	97.0	
SO2 INLET CONCENTRATION - PPM	375.000	
** FGD SYSTEM		
SALEABLE PRODUCT/THROWAWAY PRODUCT	THROWAWAY PRODUCT	
GENERAL PROCESS TYPE	WET SCRUBBING	
PROCESS TYPE	SODIUM CARBONATE	
PROCESS ADDITIVES	NONE	
SYSTEM SUPPLIER	ADL/COMBUSTION EQUIP ASSOCIATE	
A-E FIRM	BECHTEL	
DEVELOPMENT LEVEL	FULL SCALE	
NEW/RETROFIT	RETROFIT	

NEVADA POWER: REID GARDNER 1 (CONT.)

PARTICULATE DESIGN REMOVAL EFFICIENCY - %	97.00
SO2 DESIGN REMOVAL EFFICIENCY - %	90.00
INITIAL START-UP	4/74
CONSTRUCTION INITIATION	12/72
CONTRACT AWARDED	7/71
ABSORBER SPARE CAPACITY INDEX - %	.0
ABSORBER SPARE COMPONENT INDEX	.0

** ABSORBER

NUMBER	1	
TYPE	TRAY TOWER	
INITIAL START UP	4/74	
SUPPLIER	ADL/COMBUSTION EQUIPMENT ASSOCIATES	
NUMBER OF STAGES	1	
DIMENSIONS - FT	30 DIA.	
SHELL MATERIAL	CARBON STEEL	
SHELL LINER MATERIAL	RUBBER	
INTERNAL MATERIAL	316L SS (WASH TRAY)	
BOILER LOAD/ABSORBER - %	100.0	
LIQUID RECIRCULATION RATE - LITER/S	38.	(600 GPM)
L/G RATIO - L/CU.M	.2	(1.6 GAL/1000ACF)
PRESSURE DROP - KPA	.7	(3.0 IN-H2O)
SUPERFICAL GAS VELOCITY - M/SEC	3.4	(11.0 FT/S)
SO2 OUTLET CONTRATION - PPM	17	

** FANS

NUMBER	1	
TYPE	SCRUBBER FD	
CONSTRUCTION MATERIALS	CARBON STEEL	
SERVICE - WET/DRY	DRY	
CAPACITY - CU.M/S	223.21	(473000 ACFM)

** MIST ELIMINATOR

NUMBER	1	
TYPE	RADIAL VANE	
CONSTRUCTION MATERIAL	316L SS (BOTH ME AND WASH TRAY)	
CONFIGURATION	HORIZONTAL	
NUMBER OF STAGES	1	
NUMBER OF PASSES	1	
WASH SYSTEM	NONE	
PRESSURE DROP - KPA	.1	(.5 IN-H2O)

** PUMPS

SERVICE	NUMBER
SCRUBBER RECIRCULATION	3
ABSORBER RECIRCULATION	3

** TANKS

SERVICE	NUMBER
VENTURI RECYCLE	****

** REHEATER

TYPE	HOT AIR INJECTION	
HEATING MEDIUM	STEAM	
TEMPERATURE BOOST - C	27.8	(50 F)
ENERGY REQUIRED	15.2 MM BTU/HR; 4 MW	

** THICKENER

NUMBER	0

** WATER LOOP

TYPE	CLOSED	
FRESH MAKEUP WATER ADDITION - LITERS/S	9.8	(155 GPM)

** DISPOSAL

NATURE	INTERIM
TYPE	LINED POND
LOCATION	ON-SITE
AREA - ACRES	6.0

** DISPOSAL

NATURE	FINAL
TYPE	LINED POND
LOCATION	ON-SITE
TRANSPORTATION	GRAVITY FLOW FROM INTERIM SLUDGE POND

NEVADA POWER: REID GARDNER 1 (CONT.)

AREA - ACRES 45.0

PERFORMANCE DATA

PERIOD	MODULE	AVAILABILITY	OPERABILITY	RELIABILITY	UTILIZATION	% REMOVAL SO2	% REMOVAL PART.	PER HOURS	BOILER HOURS	FGD HOURS	CAP. FACTOR
4/74	SYSTEM							720			

** PROBLEMS/SOLUTIONS/COMMENTS

THE SYSTEM WAS FIRST PLACED IN SERVICE IN APRIL 1974. THE SCRUBBING UNITE DESIGN WAS BASED ON INFORMATION AND DATA OBTAINED FROM AN 8000-ACFM PILOT PLANT PROGRAM CONDUCTED AT REID GARDNER STATION IN 1971 AND 1972.

1/75	SYSTEM							744			
2/75	SYSTEM							672			

** PROBLEMS/SOLUTIONS/COMMENTS

FROZEN SODIUM CARBONATE FEED LINES ACCOUNTED FOR OUTAGE TIME.

A 2-DAY LACK OF CHEMICALS RESULTED IN OUTAGE TIME.

3/75	SYSTEM							744			
4/75	SYSTEM							720			

** PROBLEMS/SOLUTIONS/COMMENTS

THE BOILER WAS SHUT DOWN APRIL 13 FOR ROUTINE MAINTENANCE AND PLACED BACK ON LINE MAY 12.

5/75	SYSTEM							744			

** PROBLEMS/SOLUTIONS/COMMENTS

A HIGH ASH CONTENT OF UP TO 20% BY WEIGHT OF THE COAL BURNED RECENTLY HAD NO EFFECT ON EMISSIONS.

6/75	SYSTEM							720			

** PROBLEMS/SOLUTIONS/COMMENTS

ROUTINE MECHANICAL PROBLEMS WERE REPORTED.

ROUTINE INSTRUMENTAL PROBLEMS WERE REPORTED.

ABRASION OF RUBBER LINED PIPES WAS A PROBLEM.

THE UTILITY HAS REPORTED THAT A SECOND PERFORMANCE TEST WAS RECENTLY COMPLETED AND PASSED.

7/75	SYSTEM							744			

** PROBLEMS/SOLUTIONS/COMMENTS

ONE OUTAGE, UNRELATED TO THE FGD SYSTEM, WAS REPORTED FROM JULY THROUGH SEPTEMBER.

OUTAGES DURING JULY THROUGH SEPTEMBER WERE CAUSED BY SCRUBBER MALFUNCTIONS.

8/75	SYSTEM							744			
9/75	SYSTEM			78.0			78.0	720	716	559	
10/75	SYSTEM			60.0			14.0	744	303	106	

** PROBLEMS/SOLUTIONS/COMMENTS

LOW OPERATING TIME DURING OCTOBER WAS DUE TO SCHEDULED BOILER MAINTENANCE.

ONE OUTAGE WAS DUE TO THE MALFUNCTION OF A SODA ASH BLOWER.

11/75	SYSTEM			60.0			55.0	720	654	394	

NEVADA POWER: REID GARDNER 1 (CONT.)

PERIOD	MODULE	AVAILABILITY	OPERABILITY	RELIABILITY	UTILIZATION	% REMOVAL SO2	% REMOVAL PART.	PER HOURS	BOILER HOURS	FGD HOURS	CAP. FACTOR
		PERFORMANCE DATA									

** PROBLEMS/SOLUTIONS/COMMENTS

OPERABILITY WAS LOW FOR THE MONTH OF NOVEMBER BECAUSE OF DELAYS IN DELIVERY OF REPAIR MATERIALS.

THE COLLAPSE OF A VENTURI STRAINER RESULTED IN FGD SYSTEM OUTAGE DURING NOVEMBER.

REHEATER STEAM LEAKS CAUSED AN OUTAGE DURING NOVEMBER.

THE SYSTEM WAS SHUT DOWN FOR 16 DAYS FOR COMPLETION OF PIPING CONVERSION. THIS OUTAGE WAS NOT DUE TO SCRUBBER MALFUNCTION.

A FROZEN CARBONATE LINE RESULTED IN AN FGD SYSTEM OUTAGE DURING NOVEMBER.

12/75	SYSTEM							744			
1/76	SYSTEM	81.0	29.0	57.0	27.0			744	647	186	
2/76	SYSTEM	91.0	76.0	89.0	75.0			696	664	520	

** PROBLEMS/SOLUTIONS/COMMENTS

A DEPLETION OF CHEMICALS DURING FEBRUARY WAS REPORTED.

FIVE SCRUBBER INOPERATIVE PERIODS WERE REPORTED DURING FEBRUARY. THREE OF THESE OUTAGES WERE NOT RELATED TO THE FGD SYSTEM.

SEAL WATER PROBLEMS WERE REPORTED DURING FEBRUARY.

CHEMICAL LINE PLUGGING PROBLEMS WERE NOTED DURING FEBRUARY.

3/76	SYSTEM	99.0	72.0	99.0	39.0			744	398	287	

** PROBLEMS/SOLUTIONS/COMMENTS

ONE FORCED SCRUBBER OUTAGE WAS CAUSED BY A VENTURI LEAK.

4/76	SYSTEM	15.0	91.0	100.0	13.0			720	106	97	

** PROBLEMS/SOLUTIONS/COMMENTS

THE BOILER WAS TAKEN OUT OF SERVICE IN APRIL FOR INSPECTION OF VALVES AND COAL CONDUITS.

5/76	SYSTEM				.0			744	0	0	

** PROBLEMS/SOLUTIONS/COMMENTS

THE UNIT WAS SHUT DOWN FOR A SCHEDULED TURBINE OVERHAUL AND BURNER LINE CONDUIT REPLACEMENT.

6/76	SYSTEM				.0			720	0	0	
7/76	SYSTEM				.0			744	0	0	
8/76	SYSTEM	97.0	75.0	94.0	49.0			744	479	360	

** PROBLEMS/SOLUTIONS/COMMENTS

PLUGGING IN THE THICKENER CAUSED AN OUTAGE DURING AUGUST.

PLUGGING IN THE TRAY RECYCLE TANK DURING AUGUST RESULTED IN A FGD OUTAGE.

9/76	SYSTEM	95.0	97.0	95.0	89.0			720	656	639	

PERIOD	MODULE	AVAILABILITY	OPERABILITY	RELIABILITY	UTILIZATION	% REMOVAL SO2	% REMOVAL PART.	PER HOURS	BOILER HOURS	FGD HOURS	CAP. FACTOR
		PERFORMANCE DATA									

** PROBLEMS/SOLUTIONS/COMMENTS

PLUGGING IN THE VENTURI SPRAY HEADERS CAUSED A SCRUBBER OUTAGE.

AN ID FAN MALFUNCTION RESULTED IN SCRUBBER OUTAGE DURING SEPTEMBER.

10/76	SYSTEM	98.0	96.0	98.0	87.0			744	678	648	

** PROBLEMS/SOLUTIONS/COMMENTS

SCRUBBER OUTAGE TIME WAS REQUIRED FOR INSTALLATION OF A NEW CARBONATE FEED LINE.

A MINOR SCRUBBER TRIP WAS CAUSED BY PLUGGING IN THE SCRUBBER EFFLUENT SUCTION LINE.

11/76	SYSTEM	87.0	81.0	84.0	71.0			720	631	508	

** PROBLEMS/SOLUTIONS/COMMENTS

ONE FORCED SCRUBBER OUTAGE OCCURRED BECAUSE OF A SCREW CONVEYOR FAILURE, RESULTING IN AN INABILITY TO MIX THE CHEMICAL ABSORBENT.

12/76	SYSTEM	93.0	88.0	92.0	80.0			744	677	599	

** PROBLEMS/SOLUTIONS/COMMENTS

A FORCED FGD OUTAGE RESULTED FROM CHEMICAL DEPLETION.

A PLUGGED SENSING LINE FORCED AN FGD OUTAGE DURING DECEMBER.

1/77	SYSTEM	72.0	67.0	87.0	59.0			744	645	437	

** PROBLEMS/SOLUTIONS/COMMENTS

RUBBER LINING REPAIRS WERE INITIATED IN THE SEPARATOR SECTION OF THE SCRUBBING MODULE ON JANUARY 22. THE LINING WAS DAMAGED BY A HIGH TEMPERATURE EXCURSION RESULTING FROM A MALFUNCTION IN THE UNIT'S AIR PREHEATER.

2/77	SYSTEM		.0		.0			672	599	0	
3/77	SYSTEM		.0		.0			744	669	0	
4/77	SYSTEM		.0		.0			720	400	0	
5/77	SYSTEM		.0		.0			744	705	0	
6/77	SYSTEM	47.0	45.0	44.0	44.0			720	701	315	

** PROBLEMS/SOLUTIONS/COMMENTS

REPAIRS ON THE DAMAGED RUBBER LINING WERE COMPLETED BY MID-JUNE AND THE SYSTEM REMAINED IN SERVICE THROUGHOUT THE MAJORITY OF THE MONTH.

A MINOR FORCED OUTAGE RESULTED FROM A HIGH-LOW PRESSURE TRIP CAUSED BY A PLUGGED SENSING LINE.

7/77	SYSTEM	100.0	100.0	100.0	100.0			744	744		

** PROBLEMS/SOLUTIONS/COMMENTS

THE SYSTEM WAS TAKEN OUT OF THE GAS PATH ONLY ONCE DURING THE MONTH BECAUSE OF A SCHEDULED INSPECTION OF THE NEWLY REPLACED RUBBER LINER IN THE SEPARATOR SECTION.

8/77	SYSTEM	19.0	21.0	19.0	19.0			744	662	138	

NEVADA POWER: REID GARDNER 1 (CONT.)

PERIOD	MODULE	AVAILABILITY	OPERABILITY	RELIABILITY	UTILIZATION	% REMOVAL SO2	% REMOVAL PART.	PER HOURS	BOILER HOURS	FGD HOURS	CAP. FACTOR
		PERFORMANCE DATA									

** PROBLEMS/SOLUTIONS/COMMENTS

ID FAN RELAYS WERE INSTALLED BECAUSE OF HIGH FAN VIBRATIONS.

9/77	SYSTEM	84.0	73.0	69.0	35.0			720	343	252	

** PROBLEMS/SOLUTIONS/COMMENTS

THE BOILER WAS OUT OF SERVICE FOR MOST OF THE MONTH.

THE SCRUBBER HAD LIMIT SWITCH PROBLEMS WITH 14 A & B GULLOTINE DAMPERS.

10/77	SYSTEM	99.0	99.0	99.0	84.7			744	635	630	

** PROBLEMS/SOLUTIONS/COMMENTS

THE UNIT WAS DOWN FOR 5 HOURS DURING OCTOBER TO REPAIR AN ID FAN LEAK.

11/77	SYSTEM	78.7	81.5	78.6	78.1			720	690	562	

** PROBLEMS/SOLUTIONS/COMMENTS

SCREEN PLUGGING IN THE RECYCLE TANK WAS A PROBLEM DURING NOVEMBER.

SCRUBBER INSTRUMENTATION DIFFICULTY WAS EXPERIENCED DURING NOVEMBER.

THE SYSTEM WAS DOWN FOR THE INSTALLATION OF AN OUTLET NOZZLE IN THE BOOSTER TANK.

12/77	SYSTEM	85.0	82.0	83.0	71.0			744	631	522	

** PROBLEMS/SOLUTIONS/COMMENTS

THE SCRUBBER WAS OFF-LINE FOR APPROXIMATELY 109 HOURS DUE TO HIGH TRAY DIFFERENTIAL PRESSURE AND SOME PLUGGING IN THE ID FAN SENSING LINE.

THE BOILER WAS DOWN ABOUT 113 HOURS IN DECEMBER.

1/78	SYSTEM	56.0	68.0	69.0	56.0			744	616	416	

** PROBLEMS/SOLUTIONS/COMMENTS

TWO OUTAGES WERE CAUSED BY HIGH TRAY DIFFERENTIAL PRESSURE.

ELECTRICAL PROBLEMS IN THE 1A FORCED DRAFT FAN CAUSED AN FGD SYSTEM OUTAGE.

2/78	SYSTEM	97.0	75.0	94.0	43.0			672	389	292	

** PROBLEMS/SOLUTIONS/COMMENTS

A DUCT HI-LO PRESSURE TRIP CONTRIBUTED TO THE FEBRUARY OUTAGE TIME.

THE BOILER WENT OUT OF SERVICE ON FEBRUARY 17 FOR A THREE WEEK OUTAGE.

PLUGGED SENSING LINES CONTRIBUTED TO THE OUTAGE TIME DURING FEBRUARY.

3/78	SYSTEM	28.0	58.0	58.0	28.0			744	355	207	

** PROBLEMS/SOLUTIONS/COMMENTS

THE BOILER WAS OFF LINE UNTIL MARCH 16.

A PROBLEM WAS ENCOUNTERED WITH THE REHEAT STEAM REGULATOR DURING MARCH

PROBLEMS WITH THE GUILLOTINE SWITCHES DELAYED START-UP OF THE FGD SYSTEM UNTIL MARCH 22.

4/78	SYSTEM	100.0	97.0	100.0	75.0			720	560	541	

PERIOD	MODULE	AVAILABILITY	OPERABILITY	RELIABILITY	UTILIZATION	% REMOVAL SO2	% REMOVAL PART.	PER HOURS	BOILER HOURS	FGD HOURS	CAP. FACTOR
		PERFORMANCE DATA									

** PROBLEMS/SOLUTIONS/COMMENTS

THERE WERE NO FGD SYSTEM FORCED OUTAGES. ALL DOWNTIME WAS BOILER RELATED.

5/78	SYSTEM	97.0	92.0	96.0	78.0			744	630	582	

** PROBLEMS/SOLUTIONS/COMMENTS

THE REPAIRS TO THE CONDENSER AND PRODUCTION CONTROL CONTRIBUTED TO THE BOILER OUTAGES.

HIGH TEMPERATURE ON AN ID FAN BEARING CAUSED AN OUTAGE.

6/78	SYSTEM	89.0	89.0	100.0	89.0			720	720	644	

** PROBLEMS/SOLUTIONS/COMMENTS

THERE WAS ONE SCHEDULED FGD OUTAGE TO REPAIR A LEAK ON THE VENTURI WATER BOX.

7/78	SYSTEM	100.0	99.0	100.0	99.0			744	744	736	

** PROBLEMS/SOLUTIONS/COMMENTS

A SCHEDULED FGD OUTAGE WAS REQUIRED TO RECTIFY A HIGH TRAY DIFFERENTIAL PRESSURE PROBLEM. THE TRAY WAS CLEANED OUT DURING THE OUTAGE.

8/78	SYSTEM	94.0	94.0	93.0	89.0			744	706	661	

** PROBLEMS/SOLUTIONS/COMMENTS

THE SCRUBBER WAS FORCED OFF LINE ON AUGUST 5 BECAUSE OF A LOSS OF THE ASH PANEL CONTROL POWER. THIS LEFT THE UNIT WITHOUT EMERGENCY SPRAY TO THE SCRUBBERS.

A FORCED OUTAGE OCCURRED ON AUGUST 20 WHEN THERE WAS A SCRUBBER VENTURI HIGH TEMPERATURE ALARM. THE EXACT CAUSE WAS NOT KNOWN BUT A BOILER TUBE LEAK WAS SUSPECTED.

THERE WAS ONE SCHEDULED OUTAGE DURING THE MONTH TO CLEAN THE TRAY.

9/78	SYSTEM	99.0	97.0	99.0	87.0			720	644	626	

** PROBLEMS/SOLUTIONS/COMMENTS

THERE WERE THREE BOILER RELATED OUTAGES DURING SEPTEMBER. A BOILER TUBE LEAK AND BOILER BURNER WERE REPAIRED.

DURING THE MONTH A BOILER TRIP OCCURRED WHICH WAS CAUSED BY SCRUBBER HIGH DUCT PRESSURE.

10/78	SYSTEM	100.0	100.0	100.0	90.0			744	667	667	

** PROBLEMS/SOLUTIONS/COMMENTS

THE BOILER WAS OFF LINE FOR ABOUT 77 HOURS FOR REMOVAL OF AN ASH CLINKER.

11/78	SYSTEM	100.0	100.0	100.0	90.0			720	598	598	

** PROBLEMS/SOLUTIONS/COMMENTS

THE FGD SYSTEM WAS DOWN FOR SCRUBBER OUTLET TEMPERATURE PROBE REPAIRS.

OUTAGE TIME RESULTED WHEN BOILER PROBLEMS CAUSED THE VENTURI OUTLET GAS TEMPERATURE TO BECOME TO HIGH (TEMPERATURE ALARM HIGH TRIP).

12/78	SYSTEM	95.6	92.8	92.9	92.0			744	737	684	

NEVADA POWER: REID GARDNER 1 (CONT.)

PERIOD	MODULE	AVAILABILITY	OPERABILITY	RELIABILITY	UTILIZATION	% REMOVAL SO2	% REMOVAL PART.	PER HOURS	BOILER HOURS	FGD HOURS	CAP. FACTOR
		PERFORMANCE DATA									

** PROBLEMS/SOLUTIONS/COMMENTS

THE SCRUBBING SYSTEM WAS OUT OF SERVICE TO REPAIR A LEAK IN A VENTURI LINE.

THE FGD SYSTEM WAS DOWN TO CLEAN THE VENTURI RACE TRACK AND CLEAN PRESSURE SENSING LINES.

THE BOILER WAS OFF LINE APPROXIMATELY 1 DAY FOR PULVERIZER REPAIRS.

1/79	SYSTEM	83.9	73.7	73.7	67.0			744	681	502	

** PROBLEMS/SOLUTIONS/COMMENTS

THE BOILER WAS DOWN ABOUT 5 DAYS TO REMOVE A CLINKER FROM THE BOTTOM HOPPER.

A FORCED OUTAGE WAS CAUSED WHEN THE 2C LOAD CENTER TRIPPED RESULTING IN LOSS OF POWER TO TRAY SPRAY PUMP. REPAIRS WERE MADE ON THE TRAY AND SPRAY SYSTEMS.

THE FGD SYSTEM WAS DOWN FOR A SHORT PERIOD TO INSPECT THE BEARING ON THE ID FAN.

THE FGD SYSTEM WAS DOWN TO REPAIR A LEAK IN THE VENTURI LINE.

2/79	SYSTEM	85.6	85.9	85.9	85.6			672	670	575	

** PROBLEMS/SOLUTIONS/COMMENTS

THE FGD SYSTEM WAS DOWN TO CLEAN THE VENTURI RACE TRACK NOZZLES, CLEAN THE EFFLUENT LINE AND REPAIR A LEAK IN THE VENTURI LINE.

A BREAK IN THE ASH CIRCULATING WATER LINE RESULTING IN LOSS OF EMERGENCY COOLING WATER FORCED THE FGD SYSTEM OFF LINE.

3/79	SYSTEM	97.9	96.5	96.5	78.3			744	603	582	

** PROBLEMS/SOLUTIONS/COMMENTS

THE FGD SYSTEM WAS OFF TO UNPLUG VENTURI NOZZLES AND TO CLEAN SENSING LINES. THE DOWNTIME WAS ABOUT 15 HOURS.

THE FGD SYSTEM WAS OFF FOR ABOUT 146 HOURS FOR REPAIR OF BOILER TUBE LEAKS.

4/79	SYSTEM	100.0	98.7	98.6	25.7			720	188	185	

** PROBLEMS/SOLUTIONS/COMMENTS

THE BOILER AND FGD SYSTEM WERE OFF FOR APPROXIMATELY 533 HOURS FOR SCHEDULED MAINTENANCE.

5/79	SYSTEM	99.8	74.4	74.4	27.5			744	275	204	

** PROBLEMS/SOLUTIONS/COMMENTS

THE BOILER AND SCRUBBER WERE RETURNED TO SERVICE ON THE 22ND AFTER MAINTENANCE.

THE BOILER WAS FORCED OUT OF SERVICE TO REPAIR A COAL LEAK ON THE #8 BURNER LINE.

6/79	SYSTEM	97.7	95.1	95.2	84.7			720	641	610	

PERIOD	MODULE	AVAILABILITY	OPERABILITY	RELIABILITY	UTILIZATION	% REMOVAL SO2	% REMOVAL PART.	PER HOURS	BOILER HOURS	FGD HOURS	CAP. FACTOR
		PERFORMANCE DATA									

** PROBLEMS/SOLUTIONS/COMMENTS

A FEW DAYS OUTAGE TIME WAS REQUIRED TO REPAIR A BOILER TUBE LEAK.

OUTAGE TIME WAS REQUIRED TO UNPLUG A VENTURI LINE.

TRAY SPRAY VALVES WERE REPLACED DURING JUNE.

7/79	SYSTEM	81.2	80.5	80.5	80.3			744	742	598	

** PROBLEMS/SOLUTIONS/COMMENTS

THE BOILER AND FGD SYSTEM WAS TRIPPED OFF FOR TURBINE OVERSPEED GOVERNOR TEST. THE DOWNTIME WAS ABOUT 7 HOURS.

THE SCRUBBER WAS OFF ABOUT 67 HOURS TO CLEAN THE SCRUBBER TRAYS.

LOST INSTRUMENT AIR TO THE SCRUBBER CONTROLS CAUSED A LOSS OF POWER TO THE SCRUBBER AIR COMPRESSOR. THE SCRUBBER WAS OFF-LINE FOR ABOUT 74 HOURS.

8/79	SYSTEM	96.8	96.8	96.8	96.8			744	744	721	

** PROBLEMS/SOLUTIONS/COMMENTS

THE SCRUBBER WAS REMOVED FROM SERVICE TO CLEAN THE SCRUBBER PRESSURE SENSING LINES. THE SCRUBBER WAS DOWN FOR ABOUT 11 HOURS.

THE SCRUBBER WAS DOWN AT THE END OF THE MONTH TO CLEAN THE PRESSURE SENSING LINE ON THE SCRUBBER. THE SCRUBBER WAS OFF-LINE FOR ABOUT 4 HOURS.

9/79	SYSTEM	100.0	100.0	100.0	53.2			720	383	383	

** PROBLEMS/SOLUTIONS/COMMENTS

IN SEPTEMBER THE SCRUBBER WENT OFF WITH THE BOILER AND TURBINE FOR SCHEDULED MAINTENANCE.

10/79	SYSTEM	45.4	61.7	62.1	45.2			744	545	337	

** PROBLEMS/SOLUTIONS/COMMENTS

THE SCRUBBER WAS OFF LINE WITH THE BOILER AND TURBINE FOR SCHEDULED MAINTENANCE DURING THE BEGINNING OF OCTOBER.

PLUGGING OF THE VENTURI AND EFFLUENT LINE CAUSED THREE OUTAGES DURING THE MONTH.

THE SCRUBBER WENT OFF LINE SO WORK COULD BE DONE ON THE ID FAN DAMPER.

THE SCRUBBER WAS TAKEN OFF LINE WITH THE BOILER DUE TO A TURBINE TRIP.

11/79	SYSTEM	99.4	96.7	99.4	88.1			720	656	635	

** PROBLEMS/SOLUTIONS/COMMENTS

THE SCRUBBER WENT OFF-LINE WITH THE BOILER TO REPAIR A GN-1 SWITCH AND THE EMERGENCY GOVERNING TEST SWITCH ON THE TURBINE.

TWO OUTAGES DURING NOVEMBER WERE CAUSED BY A BOILER TUBE LEAK.

THE VENTURI RACE TRACK NOZZLES NEEDED CLEANING CAUSING THE SCRUBBER TO GO OFF-LINE.

TWICE DURING THE MONTH THE TURBINE TRIPPED CAUSING THE SECTION 1B BREAKER TO BE LOST. ON THE SECOND TRIP THE 1B COOLING TOWER FAN MOTOR SHORTED TO GROUND.

12/79	SYSTEM	98.5	98.5	98.5	98.5			744	744	733	

NEVADA POWER: REID GARDNER 1 (CONT.)

PERIOD	MODULE	AVAILABILITY	OPERABILITY	RELIABILITY	UTILIZATION	% REMOVAL SO2	% REMOVAL PART.	PER HOURS	BOILER HOURS	FGD HOURS	CAP. FACTOR
				PERFORMANCE DATA							

** PROBLEMS/SOLUTIONS/COMMENTS

DURING DECEMBER THE SCRUBBER WENT OFF LINE DUE TO A MALFUNCTIONING VALVE ON THE EMERGENCY SPRAY SYSTEM.

SECTION 3
DESIGN AND PERFORMANCE DATA FOR OPERATIONAL DOMESTIC FGD SYSTEMS

COMPANY NAME	NEVADA POWER	
PLANT NAME	REID GARDNER	
UNIT NUMBER	2	
CITY	MOAPA	
STATE	NEVADA	
REGULATORY CLASSIFICATION	B	
PARTICULATE EMISSION LIMITATION - NG/J	43.	(.100 LB/MMBTU)
SO2 EMISSION LIMITATION - NG/J	516.	(1.200 LB/MMBTU)
NET PLANT GENERATING CAPACITY - MW	*******	
GROSS UNIT GENERATING CAPACITY - MW	125.0	
NET UNIT GENERATING CAPACITY W/FGD - MW	110.0	
NET UNIT GENERATING CAPACITY WO/FGD - MW	*******	
EQUIVALENT SCRUBBED CAPACITY - MW	12[illegible].0	
** BOILER DATA		
SUPPLIER	FOSTER WHEELER	
TYPE	PULVERIZED COAL	
SERVICE LOAD	BASE	
COMMERCIAL SERVICE DATE	0/68	
MAXIMUM BOILER FLUE GAS FLOW - CU.M/S	223.21	(473000 ACFM)
FLUE GAS TEMPERATURE - C	176.7	(350 F)
STACK HEIGHT - M	61.	(200 FT)
STACK TOP DIAMETER - M	*******	(***** FT)
** FUEL DATA		
FUEL TYPE	COAL	
FUEL GRADE	BITUMINOUS	
AVERAGE HEAT CONTENT - J/G	28959.	(12450 BTU/LB)
RANGE HEAT CONTENT - BTU/LB		******
AVERAGE ASH CONTENT - %	8.00	
RANGE ASH CONTENT - %	8.-10.	
AVERAGE MOISTURE CONTENT - %	5.50	
RANGE MOISTURE CONTENT - %	5-6	
AVERAGE SULFUR CONTENT - %	.50	
RANGE SULFUR CONTENT - %	0.5-1.0	
AVERAGE CHLORIDE CONTENT - %	.05	
RANGE CHLORIDE CONTENT - %	******	
** MECHANICAL COLLECTOR		
TYPE	MULTICLONES	
SUPPLIER	RESEARCH COTTRELL	
PARTICULATE DESIGN REMOVAL EFFICIENCY - %	75.0	
** PARTICULATE SCRUBBER		
NUMBER	1	
TYPE	VENTURI	
SUPPLIER	ADL/COMBUSTION EQUIP ASSOCIATES	
NUMBER OF STAGES	1	
SHELL MATERIAL	INCOLOY 825 AT THROAT	
LINING MATERIAL	RUBBER (AREAS OTHER THAN THROAT)	
INTERNAL MATERIAL	TWIN VARIABLE THROATS	
TYPE OF NOZZLES	TANGENTIAL	
BOILER LOAD/SCRUBBER - %	50.0	
FLUE GAS CAPACITY - CU.M/S	223.2	(473000 ACFM)
FLUE GAS TEMPERATURE - C	176.7	(350 F)
LIQUID RECIRCULATION RATE - LITER/S	157.5	(2500 GPM)
L/G RATIO - LITER/CU.M	1.3	(10.0 GAL/1000ACF)
PRESSURE DROP - KPA	*******	(***** IN-H2O)
SUPERFICIAL GAS VELOCITY - M/S	50.3	(165.0 FT/S)
PARTICULATE INLET LOAD - G/CU.M	1.4	(.60 GR/SCF)
PARTICULATE DESIGN REMOVAL EFFICIENCY - %	97.0	
SO2 INLET CONCENTRATION - PPM	375.000	
** FGD SYSTEM		
SALEABLE PRODUCT/THROWAWAY PRODUCT	THROWAWAY PRODUCT	
GENERAL PROCESS TYPE	WET SCRUBBING	
PROCESS TYPE	SODIUM CARBONATE	
PROCESS ADDITIVES	NONE	
SYSTEM SUPPLIER	ADL/COMBUSTION EQUIP ASSOCIATE	
A-E FIRM	BECHTEL	
DEVELOPMENT LEVEL	FULL SCALE	
NEW/RETROFIT	RETROFIT	

NEVADA POWER: REID GARDNER 2 (CONT.)

PARTICULATE DESIGN REMOVAL EFFICIENCY - %	97.00
SO2 DESIGN REMOVAL EFFICIENCY - %	90.00
INITIAL START-UP	4/74
ABSORBER SPARE CAPACITY INDEX - %	.0
ABSORBER SPARE COMPONENT INDEX	.0

** ABSORBER

NUMBER	1	
TYPE	TRAY TOWER	
INITIAL START UP	4/74	
SUPPLIER	ADL/COMBUSTION EQUIPMENT ASSOCIATES	
NUMBER OF STAGES		
DIMENSIONS - FT	30 DIA.	
SHELL MATERIAL	CARBON STEEL	
SHELL LINER MATERIAL	RUBBER	
INTERNAL MATERIAL	316L SS (WASH TRAY)	
BOILER LOAD/ABSORBER - %	100.0	
LIQUID RECIRCULATION RATE - LITER/S	38.	(600 GPM)
L/G RATIO - L/CU.M	.2	(1.6 GAL/1000ACF)
PRESSURE DROP - KPA	.7	(3.0 IN-H2O)
SUPERFICAL GAS VELOCITY - M/SEC	3.4	(11.0 FT/S)
SO2 OUTLET CONTRATION - PPM	17	
SO2 DESIGN REMOVAL EFFICIENCY - %	91.2	

** FANS

NUMBER	1	
TYPE	SCRUBBER FD	
CONSTRUCTION MATERIALS	CARBON STEEL	
SERVICE - WET/DRY	DRY	
CAPACITY - CU.M/S	223.21	(473000 ACFM)

** MIST ELIMINATOR

NUMBER	1	
TYPE	RADIAL VANE	
CONSTRUCTION MATERIAL	316L SS (BOTH ME AND WASH TRAY)	
CONFIGURATION	HORIZONTAL	
NUMBER OF STAGES	1	
NUMBER OF PASSES	1	
WASH SYSTEM	NONE	
PRESSURE DROP - KPA	.1	(.5 IN-H2O)

** PUMPS

SERVICE	NUMBER
SCRUBBER RECIRCULATION	3
ABSORBER RECIRCULATION	3

** TANKS

SERVICE	NUMBER
VENTURI RECYCLE	****

** REHEATER

TYPE	HOT AIR INJECTION	
HEATING MEDIUM	STEAM	
TEMPERATURE BOOST - C	27.8	(50 F)
ENERGY REQUIRED	15.2 MM BTU/H (RATING), 4 MW	

** THICKENER

NUMBER	0

** WATER LOOP

TYPE	CLOSED	
FRESH MAKEUP WATER ADDITION - LITERS/S	9.8	(155 GPM)

** DISPOSAL

NATURE	FINAL
TYPE	LINED POND
LOCATION	ON-SITE
TRANSPORTATION	GRAVITY FLOW FROM INTERIM SLUDGE POND
AREA - ACRES	45.0

** DISPOSAL

NATURE	INTERIM
TYPE	LINED POND
LOCATION	ON-SITE
AREA - ACRES	5.0

PERIOD	MODULE	AVAILABILITY	OPERABILITY	RELIABILITY	UTILIZATION	% REMOVAL SO2	% REMOVAL PART.	PER HOURS	BOILER HOURS	FGD HOURS	CAP. FACTOR
		PERFORMANCE DATA									
4/74	SYSTEM							720			

** PROBLEMS/SOLUTIONS/COMMENTS

THE FGD SYSTEM WAS PLACED IN SERVICE IN APRIL 1974. THE SCRUBBING SYSTEM DESIGN WAS BASED ON INFORMATION AND DATA OBTAINED FROM AN 8000-ACFM PILOT PLANT PROGRAM CONDUCTED AT REID GARDNER IN 1971 AND 1972.

2/75	SYSTEM		90.0					672			

** PROBLEMS/SOLUTIONS/COMMENTS

ROUTINE MECHANICAL PROBLEMS WERE ENCOUNTERED DURING FEBRUARY.

ROUTINE INSTRUMENTAL PROBLEMS WERE EXPERIENCED.

ABRASION OF RUBBER-LINED PIPES WERE A PROBLEM.

A SECOND PERFORMANCE TEST WAS PASSED.

THE UNIT WAS RESTARTED AFTER SHUTDOWN FOR 5-YEAR TURBINE OVERHAUL.

SEAL WATER FILTERS WERE A PROBLEM.

BOILER CONTROLS WERE A PROBLEM.

A PLUGGED RECYCLE LINE STRAINER WAS A PROBLEM.

3/75	SYSTEM							744			
4/75	SYSTEM							720			
5/75	SYSTEM							744			
6/75	SYSTEM							720			
7/75	SYSTEM		85.0					744			
8/75	SYSTEM							744			

** PROBLEMS/SOLUTIONS/COMMENTS

A BROKEN BUCKET ELEVATOR CAUSED A FORCED FGD OUTAGE.

WORN RECIRCULATION PIPING CONTRIBUTED TO FORCED FGD OUTAGE.

A FORCED FGD OUTAGE WAS CAUSED BY A RUBBER LINER LEAKAGE.

STRAINER PLUGGING CONTRIBUTED TO FORCED FGD OUTAGE TIME.

THREE FORCED OUTAGES OCCURRED DURING AUGUST AND SEPTEMBER.

9/75	SYSTEM		77.0		69.0			720	645	496	
10/75	SYSTEM		87.0		62.0			744	531	464	

** PROBLEMS/SOLUTIONS/COMMENTS

PUMP REPAIR NECESSITATED AN FGD OUTAGE.

INSTRUMENT PLUGGING CAUSED AN FGD OUTAGE.

REPAIR OF PIPING LEAKAGE NECESSITATED AN FGD OUTAGE.

11/75	SYSTEM		99.0		83.0			720	603	596	
12/75	SYSTEM							744			

NEVADA POWER: REID GARDNER 2 (CONT.)

PERIOD	MODULE	AVAILABILITY	OPERABILITY	RELIABILITY	UTILIZATION	% REMOVAL SO2	% REMOVAL PART.	PER HOURS	BOILER HOURS	FGD HOURS	CAP. FACTOR
		PERFORMANCE DATA									

** PROBLEMS/SOLUTIONS/COMMENTS

FROZEN CARBONATE LINES CONTRIBUTED TO FGD OUTAGE TIME.

A FGD OUTAGE WAS CAUSED BY A PLUGGED PRESSURE-SENSING LINES.

DUCT PRESSURE TRIPS CONTRIBUTED TO FGD OUTAGE TIME.

AN OVERHAUL OF A TRAY RECYCLE PUMP WAS NECESSARY DURING DECEMBER.

1/76	SYSTEM	72.0	66.0	66.0	62.0			744	691	458
2/76	SYSTEM	84.0	86.0	86.0	83.0			696	675	578

** PROBLEMS/SOLUTIONS/COMMENTS

A VENTURI PUMP HAD TO BE UNPLUGGED CONTRIBUTING TO DOWN TIME.

CHEMICAL DEPLETION CONTRIBUTED TO FGD OUTAGE TIME.

SEAL WATER PROBLEMS HAVE BEEN ENCOUNTERED DURING FEBRUARY.

THE UTILITY REPORTED FOUR SCRUBBER INACTIVE PERIODS DURING FEBRUARY, THREE OF WHICH WERE SCRUBBER-RELATED OUTAGES.

3/76	SYSTEM	67.0	60.0	62.0	53.0			744	660	395

** PROBLEMS/SOLUTIONS/COMMENTS

TWO FGD FORCED OUTAGES OCCURRED DURING MARCH.

AN ELECTRICAL FAILURE RESULTED IN AN FGD SYSTEM OUTAGE.

PLUGGING IN THE TRAY SYSTEM RESULTED IN A SUBSEQUENT OVERHAUL OF THE TRAY CYCLE PUMPS.

4/76	SYSTEM	85.0	77.0	83.0	68.0			720	629	488

** PROBLEMS/SOLUTIONS/COMMENTS

PLUGGED SENSING LINES RESULTED IN FGD OUTAGE TIME.

A REHEATER LEAK DURING APRIL CAUSED DOWN TIME FOR REPAIRS.

VENTURI SPOOL RECYCLE REPLACEMENT REQUIRED FGD OUTAGE TIME.

A TANK NEEDED PATCHING DURING THE MONTH.

FOUR FORCED SCRUBBER OUTAGES WERE REPORTED BY THE UTILITY FOR APRIL.

5/76	SYSTEM	99.0	83.0	98.0	79.0			744		

** PROBLEMS/SOLUTIONS/COMMENTS

PLUGGED VENTURI LINES WERE A PROBLEM DURING MAY.

A PROBLEM WITH A PLUGGED SENSING LINE WAS EXPERIENCED.

TOTAL SCRUBBER OPERATION TIME TO DATE IS 9488 HOURS.

6/76	SYSTEM	99.1	83.3	98.9	78.8			720	682	568
7/76	SYSTEM	91.0	81.0	96.0	57.0			744	518	421

** PROBLEMS/SOLUTIONS/COMMENTS

A PROBLEM WITH A HIGH SOLIDS CONCENTRATION IN THE VENTURI SCRUBBING CYCLE CONTRIBUTED TO FGD OUTAGE TIME.

PERIOD	MODULE	AVAILABILITY	OPERABILITY	RELIABILITY	UTILIZATION	% REMOVAL SO2	% REMOVAL PART.	PER HOURS	BOILER HOURS	FGD HOURS	CAP. FACTOR
				PERFORMANCE DATA							

THE REPLACEMENT OF A RUBBER-LINED PIPE IN THE VENTURI SCRUBBER WAS NECESSARY DURING JULY. D

8/76	SYSTEM	95.0	75.0	94.0	71.0			744	709	530	

** PROBLEMS/SOLUTIONS/COMMENTS

DEPLETION OF CHEMICAL ABSORBENT (TRONA) CONTRIBUTED TO FGD OUTAGE TIME.

BOILER TRIPS WERE ENCOUNTERED DURING AUGUST.

LEAKAGE IN THE VENTURI RECYCLE LINE WAS A PROBLEM.

THE THICKENER PLUGGED CAUSING FGD DOWN TIME.

FORCED OUTAGE TIME TOTALED 34.5 HOURS FOR THE FGD SYSTEM.

9/76	SYSTEM	94.0	96.0	94.0	91.0			720	681	653	

** PROBLEMS/SOLUTIONS/COMMENTS

MINOR TRIPS WERE CAUSED BY PLUGGING IN THE I.D. FAN REFERENCE LINES.

A MINOR SYSTEM TRIP WAS CAUSED BY A FALSE HIGH TEMPERATURE READING IN THE VENTURI DUE TO WATER IN THE INSTRUMENT.

10/76	SYSTEM	95.0	95.0	95.0	88.0			744	694	656	

** PROBLEMS/SOLUTIONS/COMMENTS

SCRUBBER TRIPS WERE CAUSED BY VENTURI GAS DAMPER PROBLEMS.

REPLACEMENT OF THE CARBONATE FEED LINE CAUSED AN FGD OUTAGE.

PLUGGING IN THE SCRUBBER EFFLUENT LINE CONTRIBUTED TO FGD DOWN TIME.

SCRUBBER OUTAGE TIME DUE TO BOILER TRIPS AMOUNTED TO APPROXIMATELY 65 HOURS.

11/76	SYSTEM	52.0	58.0	51.0	50.0			720	621	363	
12/76	SYSTEM		.0		.0			744	275	0	

** PROBLEMS/SOLUTIONS/COMMENTS

THE BOILER WAS DOWN FOR REPAIR OF A CONDENSER TUBE LEAK AND BOTTOM ASH NOZZLE.

DURING THE BOILER OUTAGE THE SCRUBBER'S GUILLOTINE DAMPERS WERE BADLY DAMAGED. THE SCRUBBER REMAINED OUT OF SERVICE DURING THE MONTH OF DECEMBER.

1/77	SYSTEM				.0			744	0	0	

** PROBLEMS/SOLUTIONS/COMMENTS

THE BOILER WAS OFF LINE DURING JANUARY FOR MAINTENANCE.

2/77	SYSTEM	93.0	75.0	88.0	56.0			672	516	387	

** PROBLEMS/SOLUTIONS/COMMENTS

A MINOR SCRUBBER OUTAGE RESULTED FROM A VENTURI PIPING LEAK.

AT THE END OF FEBRUARY THERE WERE SOME ELECTRICAL PROBLEMS.

A MINOR SCRUBBER OUTAGE WAS REQUIRED TO CLEAN THE WASH TRAY RECYCLE TANK.

3/77	SYSTEM	92.0	86.0	97.0	76.0			744	659	567	

NEVADA POWER: REID GARDNER 2 (CONT.)

PERIOD	MODULE	AVAILABILITY	OPERABILITY	RELIABILITY	UTILIZATION	% REMOVAL SO2	% REMOVAL PART.	PER HOURS	BOILER HOURS	FGD HOURS	CAP. FACTOR
		PERFORMANCE DATA									

** PROBLEMS/SOLUTIONS/COMMENTS

A PLUGGED SPRAY TRAY CONTRIBUTED TO FGD OUTAGE TIME.

ELECTRICAL PROBLEMS WERE EXPERIENCED DURING MARCH.

HIGH-LOW DUCT PRESSURE CAUSED FGD DOWN TIME.

DUE TO AN I.D. FAN SWING THE FGD SYSTEM WENT OFF LINE.

4/77	SYSTEM	95.0	95.0	95.0	95.0			720	720	685	

** PROBLEMS/SOLUTIONS/COMMENTS

FORCED FGD OUTAGE TIME RESULTED FROM A LEAK IN THE VENTURI DISCHARGE LINE.

5/77	SYSTEM	99.0	85.0	98.0	60.0			744	524	445	

** PROBLEMS/SOLUTIONS/COMMENTS

ONE BOILER OUTAGE OCCURRED DURING MAY.

THE ASH SERVICE PUMPS WERE OUT OF SERVICE FOR APPROXIMATELY 10 HOURS RESULTING IN NO EMERGENCY SPRAY THUS FORCING THE FGD SYSTEM OUT OF SERVICE

6/77	SYSTEM	94.0	93.0	94.0	83.0			720	639	596	

** PROBLEMS/SOLUTIONS/COMMENTS

THREE FORCED SCRUBBER OUTAGES WERE REPORTED IN JUNE.

ONE FORCED OUTAGE WAS DUE TO PLUGGING OF THE I.D. FAN SENSING LINE.

A BREAKER TRIP RESULTED IN A LOSS OF CONTROL POWER CAUSING DOWN TIME.

THE SPRAY NOZZLES IN THE VENTURI PLUGGED CAUSING AN FGD OUTAGE.

7/77	SYSTEM	40.0	41.0	40.0	40.0			744	733	298	

** PROBLEMS/SOLUTIONS/COMMENTS

SEVEN FORCED FGD OUTAGES WERE DUE TO A HIGH/LOW TRIP IN THE SCRUBBER DUCT DURING JULY.

ONE TWO HOUR OUTAGE WAS REQUIRED TO CORRECT A PLUGGING PROBLEM IN THE VENTURI SPRAY NOZZLES DURING JULY.

8/77	SYSTEM	87.0	91.0	87.0	79.0			744	629	590	

** PROBLEMS/SOLUTIONS/COMMENTS

A LEAK IN THE VENTURI RECYCLE HEADER RESULTED IN AN FGD OUTAGE.

A SCRUBBER DUCT HIGH/LOW BOILER TRIP PROBLEM RESULTED IN OUTAGE TIME.

THERE WAS ONE BOILER RELATED OUTAGE DURING AUGUST.

9/77	SYSTEM	74.0	67.0	71.0	64.0			720	716	462	

** PROBLEMS/SOLUTIONS/COMMENTS

A LEAK IN THE VENTURI RECYCLE LINES RESULTED IN FORCED FGD OUTAGE TIME.

TRAY RECYCLE PUMP REPAIR NECESSITATED FGD OUTAGE TIME.

DUCT PRESSURE HIGH/LOW SENSING LINE PLUGGING OCCURRED DURING SEPTEMBER. E

AN OUTAGE OCCURRED WHEN THE ASH SLUICE SYSTEM WENT OUT OF SERVICE (NO EMERGENCY SPRAYS) DURING SEPTEMBER.

PERIOD	MODULE	AVAILABILITY	OPERABILITY	RELIABILITY	UTILIZATION	% REMOVAL SO2	% REMOVAL PART.	PER HOURS	BOILER HOURS	FGD HOURS	CAP. FACTOR
				PERFORMANCE DATA							

AN OUTAGE OCCURRED WHEN A TRAY PLUGGED.

THE FGD SYSTEM WAS TAKEN OFF-LINE TO ALLOW CLEANING OF A SUCTION SCREEN IN THE TRAY RECYCLE TANK.

10/77	SYSTEM	76.0	80.0	76.0	80.0			744	704	562	

** PROBLEMS/SOLUTIONS/COMMENTS

AFGD OUTAGE TIME WAS NEEDED TO CLEAN A PLUGGED TRAY RECYCLE TANK SCREEN.

A VENTURI TANK SEPARATOR REQUIRED CLEANING CAUSING FGD DOWN TIME.

A HIGH SOLIDS PROBLEM IN THE VENTURI RECYCLE SYSTEM HAD TO BE CORRECTED.

A SCRUBBER DUCT HIGH/LOW PRESSURE BOILER TRIP WAS REPAIRED.

I.D. FAN LEAKS WERE PATCHED DURING OCTOBER.

11/77	SYSTEM	86.0	.0	.0	.0			720	98	0	

** PROBLEMS/SOLUTIONS/COMMENTS

THE BOILER WAS OUT OF SERVICE FROM OCTOBER 31 UNTIL NOVEMBER 26.

THE SCRUBBER WAS OUT OF SERVICE FOR AN I.D. FAN ROTOR REPAIR.

12/77	SYSTEM	.0	.0	.0	.0			744	742	0	

** PROBLEMS/SOLUTIONS/COMMENTS

THE SCRUBBER MODULE WAS OUT OF SERVICE TO INSTALL NEW WEAR PLATES ON AN I.D. FAN ROTOR.

1/78	SYSTEM	67.0	74.0	67.0	67.0			744	675	499	

** PROBLEMS/SOLUTIONS/COMMENTS

THE SCRUBBER WENT BACK ON LINE ON JANUARY 4 AFTER THE INSTALLATION OF WEAR PLATES ON AN I.D. FAN ROTOR.

REPAIRS ON THE THICKENER OVERFLOW PUMP CONTRIBUTED TO FGD OUTAGE TIME.

SOME BUILD UP IN THE VENTURI WAS ENCOUNTERED DURING JANUARY.

2/78	SYSTEM	93.0	92.0	92.0	87.0			672	636	585	

** PROBLEMS/SOLUTIONS/COMMENTS

A DUCT HIGH/LOW PRESSURE TRIP CONTRIBUTED TO OUTAGE TIME.

THE BOILER WAS OUT OF SERVICE FOR 34 HOURS DURING FEBRUARY.

3/78	SYSTEM	98.0	89.0	97.0	80.0			744	672	595	

** PROBLEMS/SOLUTIONS/COMMENTS

THERE WAS ONLY ONE FORCED FGD OUTAGE DURING MARCH WHICH LASTED APPROXIMATELY 18 HOURS.

A SCHDULED BOILER OUTAGE AT THE BEGINNING OF MARCH TO REMOVE ASH BUILDUP WAS CANCELLED.

4/78	SYSTEM	100.0	98.0	100.0	44.0			720	320	317	

NEVADA POWER: REID GARDNER 2 (CONT.)

PERIOD	MODULE	AVAILABILITY	OPERABILITY	RELIABILITY	UTILIZATION	% REMOVAL SO2	% REMOVAL PART.	PER HOURS	BOILER HOURS	FGD HOURS	CAP. FACTOR
		PERFORMANCE DATA									

** PROBLEMS/SOLUTIONS/COMMENTS

THERE WAS ONE SCHEDULED BOILER OUTAGE WHICH LASTED ABOUT 403 HOURS.

5/78	SYSTEM	100.0	100.0	100.0	97.0			744	726	724	

** PROBLEMS/SOLUTIONS/COMMENTS

THE BOILER WAS OFF FOR APPROXIMATELY 18 HOURS FOR REPAIRS ON THE MILL SPOKES.

THE 2A SEC. BREAKER TRIPPED AND CAUSED AN OUTAGE OF ABOUT ONE HOUR.

6/78	SYSTEM	100.0	92.0	100.0	92.0			720	720	661	

** PROBLEMS/SOLUTIONS/COMMENTS

THERE WERE TWO SCHEDULED FGD OUTAGES TO UNPLUG THE TRAYS AND TO CHANGE THE OIL ON THE I.D. FAN.

A FORCED FGD OUTAGE OCCURRED WHEN HIGH DUCT PRESSURE CAUSED A BOILER TRIP.

7/78	SYSTEM	80.0	82.0	79.0	74.0			744	676	553	

** PROBLEMS/SOLUTIONS/COMMENTS

THE BOILER WAS OUT OF SERVICE DUE TO A BOILER TUBE LEAK.

HIGH DUCT PRESSURE WAS THE CAUSE OF A BOILER TRIP. THE HIGH DUCT PRESSURE AWAS CAUSED BY A FAULTY POSITIONER ON THE I.D. FAN CONTROLLER.

THE I.D. FAN EXPANSION JOINT ON THE SCRUBBER WAS REPLACED.

AN FGD OUTAGE OCCURRED WHEN A BOLT, WHICH FELL FROM THE FAN, CAUSED VIBRATIONS.

A SECOND BOILER TRIP DURING JULY WAS CAUSED BY AN UNDETERMINED SOURCE.

THE SUCTION LINE FROM THE VENTURI DISCHARGE LINE TO THE EFFLUENT PUMPS HAD TO BE CLEANED BECAUSE OF PLUGGING.

8/78	SYSTEM	81.0	82.0	93.0	81.0			744	733	601	

** PROBLEMS/SOLUTIONS/COMMENTS

TWO SCHEDULED OUTAGES DURING AUGUST WERE NECESSARY TO CLEAN THE SCRUBBER TRAY.

A SCHEDULED OUTAGE WAS NECESSARY TO CLEAN THE NOZZLES ON THE SCRUBBER SPRA RACK. THE STAINLESS STEEL PIPE TO THE TRAY SPRAY NOZZLES WAS ALSO REPLACED.

ON AUGUST 1 THE SCRUBBER EXPERIENCED HIGH DUCT PRESSURE.

ON AUGUST 3 IT WAS NECESSAIY TO TAKE THE SCRUBBER OFF LINE TO REPACK THE VENTURI PUMPS.

A THIRD OUTAGE IN AUGUST WAS CAUSED BY A LOSS OF THE ASH PANEL CONTROL POWER. THIS LEFT THE SCRUBBER WITHOUT EMERGENCY SPRAY.

9/78	SYSTEM	100.0	97.0	100.0	94.0			720	693	675	

** PROBLEMS/SOLUTIONS/COMMENTS

A SCHEDULED SCRUBBER OUTAGE TOOK PLACE DURING SEPTEMBER IN ORDER TO CLEAN THE TRAY RECYCLE TANK AS WELL AS THE TRAY AND SOME OF THE LINES.

THREE BOILER RELATED OUTAGES WERE CAUSED BY PROBLEMS WITH A 10-KW GENERATOR. CONTROL POWER SURGES WERE BEING CAUSED BY OVERVOLTAGE MOTOR

PERIOD	MODULE	AVAILABILITY	OPERABILITY	RELIABILITY	UTILIZATION	% REMOVAL SO2	% REMOVAL PART.	PER HOURS	BOILER HOURS	FGD HOURS	CAP. FACTOR
			PERFORMANCE DATA								

TRIPS.

10/78	SYSTEM	96.0	95.0	99.0	92.0			744	721	685	

** PROBLEMS/SOLUTIONS/COMMENTS

DURING OCTOBER THE SCRUBBER INSTRUMENTS WERE WORKED ON DURING A SCHEDULED OUTAGE.

THE BOILER WAS FORCED OUT OF SERVICE FOR ABOUT 28 HOURS BECAUSE OF BOILER DRUM PROBLEMS.

11/78	SYSTEM	98.0	93.0	93.0	36.0			720	277	258	

** PROBLEMS/SOLUTIONS/COMMENTS

A FORCED FGD OUTAGE OCCURRED DUE TO HIGH DUCT PRESSURE.

WORK WAS DONE ON I.D. FAN CONTROLS DURING NOVEMBER.

THE UNIT WAS SHUT DOWN NOVEMBER 12 FOR SCHEDULED BOILER MAINTENANCE. THE UNIT REMAINED OUT OF SERVICE THE REMAINDER OF THE MONTH.

12/78	SYSTEM	95.9	100.0	100.0	13.3			744	990	990	

** PROBLEMS/SOLUTIONS/COMMENTS

THE SCRUBBER WAS DOWN TO UNPLUG EFFLUENT LINE.

WHILE THE SCRUBBER WAS DOWN THE BOILER WAS ALSO DOWN FOR PULVERIZER REPAIRS.

THE BOILER WAS OFF UNTIL DECEMBER 26 FOR SCHEDULED MAINTENANCE.

1/79	SYSTEM	82.9	81.3	81.3	73.9			744	676	549	

** PROBLEMS/SOLUTIONS/COMMENTS

THE FGD SYSTEM WAS DOWN TO CLEAN A TRAY SCREEN.

THE FGD SYSTEM WAS DOWN TO REPAIR A LEAK IN THE VENTURI RECYCLE LINE.

THE BOILER WAS DOWN TO REPAIR TUBE LEAKS.

REPAIRS WERE MADE ON THE TRAY AND SPRAY PUMP SYSTEMS.

THE VENTURI RECYCLE PUMP LOST POWER.

THE SCRUBBER TRAY PUMP MOTOR WENT TO GROUND. THE 2C LOAD CENTER TRIPPED.

THERE WAS A SCRUBBER TRIP DUE TO HIGH DUCT PRESSURE.

A HIGH DUCT PRESSURE TRIP WAS RESPONSIBLE FOR A SHORT OUTAGE. THE R PRESSURE SENSING LINES WERE ALSO CLEANED.

2/79	SYSTEM	96.5	93.1	93.2	87.9			672	634	591	

** PROBLEMS/SOLUTIONS/COMMENTS

THE FGD SYSTEM WAS DOWN TO REPAIR A LEAK IN THE VENTURI LINE.

THE FGD SYSTEM WAS FORCED OUT OF SERVICE DUE TO A 28 LOAD CENTER POWER LOSS.

THE SCRUBBER WAS FORCED DOWN DUE TO A BREAK IN THE ASH WATER CIRCULATING WATER LINE RESULTING IN LOSS OF EMERGENCY COOLING WATER.

THE FGD SYSTEM WAS DOWN BECAUSE OF A LEAK ON THE VENTURI RACE TRACK AND TO CLEAN THE VENTURI RACE TRACK NOZZLES.

NEVADA POWER: REID GARDNER 2 (CONT.)

PERIOD	MODULE	AVAILABILITY	OPERABILITY	RELIABILITY	UTILIZATION	% REMOVAL SO2	% REMOVAL PART.	PER HOURS	BOILER HOURS	FGD HOURS	CAP. FACTOR
				PERFORMANCE DATA							

THE BOILER WAS DOWN TO REPAIR A TUBE LEAK.

3/79	SYSTEM	97.8	96.6	96.6	89.2			744	688	665	

** PROBLEMS/SOLUTIONS/COMMENTS

THE BOILER AND SCRUBBER WERE OFF FOR ABOUT TWO DAYS FOR REPAIR OF BOILER TUBE LEAKS.

THE BOILER TRIPPED DUE TO HIGH FURNACE PRESSURE. WHILE THE BOILER WAS DOWN SENSING LINES WERE CLEANED ON THE SCRUBBER.

4/79	SYSTEM	88.8	95.9	96.0	88.8			720	666	640	

** PROBLEMS/SOLUTIONS/COMMENTS

A HIGH PRESSURE ALARM ON THE SCRUBBER DUCT TRIPPED THE SCRUBBER OFF LINE. THE SCRUBBER PRESSURE SENSING LINES WERE CLEANED. THIS OCCURRED TWICE DURING THE MONTH OF APRIL.

A CONTROL POWER FAILURE OCCURRED CAUSING A SCRUBBER TRIP WHEN THE 10 KW GENERATOR WAS PUT BACK IN SERVICE.

5/79	SYSTEM	99.8	99.4	99.5	83.9			744	627	624	

** PROBLEMS/SOLUTIONS/COMMENTS

THE BOILER WAS OUT OF SERVICE FOR ABOUT 5 DAYS TO REPAIR TUBE LEAKS.

PRESSURE SENSING LINES ON THE SCRUBBER CONTROLS WERE CLEANED.

6/79	SYSTEM	93.2	86.8	86.9	73.2			720	607	527	

** PROBLEMS/SOLUTIONS/COMMENTS

THE SCRUBBER WAS FORCED OUT OF SERVICE DUE TO VENTURI PUMP POWER LOSS.

SOME OUTAGE TIME WAS REQUIRED TO REPAIR VENTURI PUMP DISCHARGE VALVES.

SOME BOILER OUTAGE WAS REQUIRED DURING JUNE TO REPAIR HIGH PRESSURE HEATER TUBE LEAKS, TO WELD A CAP ON THE HIGH PRESSURE HEATER, TO WORK ON PRIMARY AIR FANS, AND TO REPAIR A BOILER TUBE LEAK.

SCRUBBER OUTAGE TIME WAS REQUIRED TO CLEAN PRESSURE SENSING LINES.

7/79	SYSTEM	86.8	90.6	85.5	78.1			744	642	646	

** PROBLEMS/SOLUTIONS/COMMENTS

THE SCRUBBER WAS OFF AT THE START OF THE MONTH WITH A BAD VENTURI PROBE TEMPERATURE AND A BLOWN BOILER TUBE. THIS OUTAGE LASTED ABOUT 76 HOURS.

THE BOILER AND SCRUBBER WAS OFF TO REPAIR BOILER TUBE LEAK.

SCRUBBER AND BOILER TRIPPED OFF FOR ABOUT 50 HOURS. THIS OUTAGE WAS CAUSED BY LOST CONTROL AIR TO THE SCRUBBER AND POWER LOSS TO SCRUBBER AIR COMPRESSOR.

THE SENSING LINES ON THE SCRUBBER WERE CLEANED TO PREVENT HIGH SCRUBBER DUCT PRESSURE. THE SYSTEM WAS OFF FOR ABOUT 16 HOURS.

8/79	SYSTEM	93.2	98.9	93.2	93.1			744	701	694	

** PROBLEMS/SOLUTIONS/COMMENTS

THE SCRUBBER AND THE BOILER WENT DOWN FOR ABOUT 40 HOURS TO REPAIR A BOILER TUBE LEAK.

THE SCRUBBER WAS OFF TO REPAIR LEAK IN VENTURI PUMP DISCHARGE BODY. THE

PERIOD	MODULE	AVAILABILITY	OPERABILITY	RELIABILITY	UTILIZATION	% REMOVAL SO2	% REMOVAL PART.	PER HOURS	BOILER HOURS	FGD HOURS	CAP. FACTOR
				PERFORMANCE DATA							

REPAIR TOOK ABOUT 9 HOURS.

HIGH PRESSURE IN SCRUBBER DUCT CAUSED THE SCRUBBER TO GO DOWN TO CLEAN THE SCRUBBER PRESSURE SENSING LINES.

9/79	SYSTEM	85.8	83.7	82.3	66.2			720	569	477	

** PROBLEMS/SOLUTIONS/COMMENTS

DURING SEPTEMBER THE SCRUBBER WENT OFF LINE WITH THE BOILER TO REPAIR BOILER TUBE LEAKS. THIS OCCURRED TWICE CAUSING A TOTAL OF 126 HOURS OF DOWN TIME.

SOME OUTAGE TIME WAS REQUIRED TO UNPLUG EFFLUENT AND VENTURI LINES AND TO CLEAN THE VENTURI RACE TRACK.

HIGH PRESSURE WAS ENCOUNTERED TWICE IN THE SCRUBBER DUCT AND ONCE IN THE BOILER FURNACE. THIS CAUSED SOME OUTAGE TIME TO CLEAN THE SCRUBBER PRESSURE SENSING LINES.

THE SCRUBBER WAS DOWN WITH THE BOILER SO REPAIRS TO THE MAIN STEAM DRAIN LINE COULD BE CONDUCTED.

THE SCRUBBER WAS DOWN FOR APPROXIMATELY 7 HOURS TO WORK ON THE CONTROLS.

10/79	SYSTEM	38.5	100.0	100.0	38.5			744	263	286	

** PROBLEMS/SOLUTIONS/COMMENTS

THE SCRUBBER WAS DOWN WITH THE BOILER DUE TO A MASTER FUEL TRIP ON THE BOILER AND ANOTHER TIME TO REPAIR A TUBE LEAK.

DURING A BOILER TRIP ON, HIGH FURNACE PRESSURE CAUSED AN EXPLOSION WHICH BLEW AN EXPANSION JOINT ON THE DISCHARGE OF 2A PRIMARY AIR FAN.

SCHEDULED MAINTENANCE WAS THE CAUSE FOR THE LOW SCRUBBER AVAILABILITY DURING OCTOBER.

11/79	SYSTEM	43.3	96.0	97.4	43.3			720	325	312	

** PROBLEMS/SOLUTIONS/COMMENTS

THE SCRUBBER AND BOILER DID NOT OPERATE AT THE BEGINNING OF NOVEMBER, DUE TO SCHEDULED MAINTENANCE.

THE SCRUBBER WENT DOWN FOR APPROXIMATELY 3 HOURS DUE TO THE VIBRATIONS IN THE REHEATER FAN.

THE SCRUBBER WENT OFF LINE WHEN THE 3C TRAY SPRAY PUMP SHORTED TO GROUND TRIPPING THE 2C LOAD CENTER.

12/79	SYSTEM	97.7	97.7	97.7	97.7			744	744	727	

** PROBLEMS/SOLUTIONS/COMMENTS

THE SCRUBBER AND BOILER TRIPPED DUE TO HIGH OUT PRESSURE. THE SCRUBBER PRESSURE SENSING LINES WERE CLEANED.

THE CONTROL SYSTEM ON THE VENTURI DAMPER NEEDED REPAIR CAUSING APPROXIMATELY 3 HOURS DOWN TIME.

THE EMERGENCY SPRAY AND THE REHEATER FAN BEARING NEEDED REPAIRS CAUSING THE SCRUBBER TO GO OFF LINE.

DURING A MAINTENANCE CHECK FOR D.C. GROUNDING THE BOILER AND SCRUBBER TRIPPED.

SECTION 3
DESIGN AND PERFORMANCE DATA FOR OPERATIONAL DOMESTIC FGD SYSTEMS

COMPANY NAME	NEVADA POWER	
PLANT NAME	REID GARDNER	
UNIT NUMBER	3	
CITY	MOAPA	
STATE	NEVADA	
REGULATORY CLASSIFICATION	B	
PARTICULATE EMISSION LIMITATION - NG/J	43.	(.100 LB/MMBTU)
SO2 EMISSION LIMITATION - NG/J	516.	(1.200 LB/MMBTU)
NET PLANT GENERATING CAPACITY - MW	*******	
GROSS UNIT GENERATING CAPACITY - MW	125.0	
NET UNIT GENERATING CAPACITY W/FGD - MW	110.0	
NET UNIT GENERATING CAPACITY WO/FGD - MW	*******	
EQUIVALENT SCRUBBED CAPACITY - MW	125.0	
** BOILER DATA		
SUPPLIER	FOSTER WHEELER	
TYPE	PULVERIZED COAL	
SERVICE LOAD	BASE	
COMMERCIAL SERVICE DATE	9/76	
MAXIMUM BOILER FLUE GAS FLOW - CU.M/S	223.21	(473000 ACFM)
FLUE GAS TEMPERATURE - C	176.7	(350 F)
STACK HEIGHT - M	61.	(200 FT)
STACK TOP DIAMETER - M	*******	(***** FT)
** FUEL DATA		
FUEL TYPE	COAL	
FUEL GRADE	BITUMINOUS	
AVERAGE HEAT CONTENT - J/G	28959.	(12450 BTU/LB)
RANGE HEAT CONTENT - BTU/LB		******
AVERAGE ASH CONTENT - %	8.00	
RANGE ASH CONTENT - %	8.	
AVERAGE MOISTURE CONTENT - %	9.00	
RANGE MOISTURE CONTENT - %	5.5	
AVERAGE SULFUR CONTENT - %	.50	
RANGE SULFUR CONTENT - %	0.5-1.0	
AVERAGE CHLORIDE CONTENT - %	.05	
RANGE CHLORIDE CONTENT - %	******	
** MECHANICAL COLLECTOR		
TYPE	MULTICLONES	
SUPPLIER	RESEARCH COTTRELL	
PARTICULATE DESIGN REMOVAL EFFICIENCY - %	75.0	
** PARTICULATE SCRUBBER		
NUMBER	1	
TYPE	VENTURI	
SUPPLIER	ADL/COMBUSTION EQUIP ASSOCIATES	
NUMBER OF STAGES	1	
SHELL MATERIAL	INCOLOY 825 AT THROAT	
LINING MATERIAL	RUBBER (AREA OTHER THAN THROAT)	
INTERNAL MATERIAL	TWIN VARIABLE THROATS	
TYPE OF NOZZLES	TANGENTIAL	
BOILER LOAD/SCRUBBER - %	50.0	
FLUE GAS CAPACITY - CU.M/S	223.2	(473000 ACFM)
FLUE GAS TEMPERATURE - C	176.7	(350 F)
LIQUID RECIRCULATION RATE - LITER/S	157.5	(2500 GPM)
L/G RATIO - LITER/CU.M	1.3	(10.0 GAL/1000ACF)
PRESSURE DROP - KPA	*******	(***** IN-H2O)
SUPERFICIAL GAS VELOCITY - M/S	50.3	(165.0 FT/S)
PARTICULATE INLET LOAD - G/CU.M	1.4	(.60 GR/SCF)
PARTICULATE DESIGN REMOVAL EFFICIENCY - %	97.0	
SO2 INLET CONCENTRATION - PPM	375.000	
** FGD SYSTEM		
SALEABLE PRODUCT/THROWAWAY PRODUCT	THROWAWAY PRODUCT	
GENERAL PROCESS TYPE	WET SCRUBBING	
PROCESS TYPE	SODIUM CARBONATE	
PROCESS ADDITIVES	NONE	
SYSTEM SUPPLIER	ADL/COMBUSTION EQUIP ASSOCIATE	
A-E FIRM	BECHTEL	
DEVELOPMENT LEVEL	FULL SCALE	
NEW/RETROFIT	NEW	

NEVADA POWER: REID GARDNER 3 (CONT.)

PARTICULATE DESIGN REMOVAL EFFICIENCY - %	99.00
SO2 DESIGN REMOVAL EFFICIENCY - %	85.00
COMMERCIAL DATE	7/76
INITIAL START-UP	6/76
CONSTRUCTION INITIATION	9/74
CONTRACT AWARDED	9/73
ABSORBER SPARE CAPACITY INDEX - %	.0
ABSORBER SPARE COMPONENT INDEX	.0

** ABSORBER

NUMBER	1	
TYPE	TRAY TOWER	
INITIAL START UP	6/76	
SUPPLIER	ADL/COMBUSTION EQUIP ASSOCIATES	
NUMBER OF STAGES	1	
DIMENSIONS - FT	30 DIA.	
SHELL MATERIAL	CARBON STEEL	
SHELL LINER MATERIAL	RUBBER	
INTERNAL MATERIAL	1.6	
BOILER LOAD/ABSORBER - %	100.0	
LIQUID RECIRCULATION RATE - LITER/S	38.	(600 GPM)
L/G RATIO - L/CU.M	.2	(1.6 GAL/1000ACF)
PRESSURE DROP - KPA	.7	(3.0 IN-H2O)
SUPERFICAL GAS VELOCITY - M/SEC	3.4	(11.0 FT/S)
SO2 OUTLET CONTRATION - PPM	17	
SO2 DESIGN REMOVAL EFFICIENCY - %	91.2	

** FANS

NUMBER	1	
TYPE	SCRUBBER FD	
CONSTRUCTION MATERIALS	CARBON STEEL	
SERVICE - WET/DRY	DRY	
CAPACITY - CU.M/S	223.21	(473000 ACFM)

** MIST ELIMINATOR

NUMBER	1	
TYPE	RADIAL VANE	
CONSTRUCTION MATERIAL	316L SS (BOTH ME AND WASH TRAY)	
CONFIGURATION	HORIZONTAL	
NUMBER OF STAGES	1	
NUMBER OF PASSES	1	
WASH SYSTEM	NONE	
PRESSURE DROP - KPA	.1	(.5 IN-H2O)

** PUMPS

SERVICE	NUMBER
SCRUBBER RECIRCULATION	3
ABSORBER RECIRCULATION	3

** TANKS

SERVICE	NUMBER
VENTURI RECYCLE	****

** REHEATER

TYPE	HOT AIR INJECTION	
HEATING MEDIUM	STEAM	
TEMPERATURE BOOST - C	27.8	(50 F)
ENERGY REQUIRED	15.2 MMBTU/H; 4 MW	

** THICKENER

NUMBER	0

** WATER LOOP

TYPE	CLOSED	
FRESH MAKEUP WATER ADDITION - LITERS/S	9.8	(155 GPM)

** DISPOSAL

NATURE	INTERIM
TYPE	LINED POND
LOCATION	ON-SITE
AREA - ACRES	6.0

** DISPOSAL

NATURE	FINAL
TYPE	LINED POND

NEVADA POWER: REID GARDNER 3 (CONT.)

LOCATION	ON-SITE
TRANSPORTATION	GRAVITY FLOW FROM INTERIM SLUDGE POND
AREA - ACRES	45.0

PERFORMANCE DATA

PERIOD	MODULE	AVAILABILITY	OPERABILITY	RELIABILITY	UTILIZATION	% REMOVAL SO2	% REMOVAL PART.	PER HOURS	BOILER HOURS	FGD HOURS	CAP. FACTOR
7/76	SYSTEM	45.0	46.0	70.0	42.0			744	692	316	

** PROBLEMS/SOLUTIONS/COMMENTS

A HIGH SOLIDS CONCENTRATION IN THE VENTURI SCRUBBING SOLUTION CYCLE WAS A PROBLEM DURING JULY.

FOUR OUTAGES WERE REPORTED FOR THE MONTH, THREE OF WHICH WERE FORCED SCRUBBER OUTAGES.

THE UNIT 3 SYSTEM WAS PLACED IN OPERATION ON JULY 12, 1976. THE SCRUBBING SYSTEM DESIGN WAS BASED ON INFORMATION AND DATA OBTAINED FROM AN 8000-ACFM PILOT PLANT PROGRAM CONDUCTED AT THIS STATION IN 1971 AND 1972.

A BUCKET ELEVATOR MALFUNCTION WAS A PROBLEM DURING JULY.

8/76	SYSTEM	56.0	43.0	50.0	43.0			744	744	323	

** PROBLEMS/SOLUTIONS/COMMENTS

REHEATER MOTOR BURNOUT RESULTED IN FGD OUTAGE TIME.

DISTRUCTION OF THE VENTURI FLOOR WAS A PROBLEM DURING AUGUST.

FORCED SCRUBBER OUTAGE WERE CAUSED BY AN I.D. FAN ELECTRICAL MALFUNCTION AND I.D. FAN INSULATION PROBLEMS.

THICKENER TANK PLUGGING CAUSED FGD DOWN TIME.

9/76	SYSTEM	49.0	46.0	46.0	44.0			720	679	314	

** PROBLEMS/SOLUTIONS/COMMENTS

A VENTURI VIBRATION TRIP RESULTED IN FGD OUTAGE TIME.

THE SYSTEM WAS PLACED BACK IN SERVICE ON SEPTEMBER IN FOLLOWING EXTENSIVE REPAIRS AND MODIFICATIONS FROM THE PRECEEDING MONTH.

TWO REHEATER FAN TRIPS OCCURRED IN SEPTEMBER.

10/76	SYSTEM	22.0	29.0	21.0	21.0			744	548	159	

** PROBLEMS/SOLUTIONS/COMMENTS

HIGH SOLIDS CONTENT IN THE VENTURI RECYCLE SOLUTION RESULTED IN OUTAGE TIME.

A SCRUBBER GAS DAMPER MALFUNCTION CAUSING THE FGD UNIT TO GO DOWN.

VENTURI BOX PROBLEMS WERE ENCOUNTERED DURING OCTOBER.

11/76	SYSTEM	28.0	80.0	29.0	29.0			720	264	212	

** PROBLEMS/SOLUTIONS/COMMENTS

THE SCRUBBER SYSTEM WAS NOT IN OPERATION THE FIRST HALF OF NOVEMBER DUE TO REPAIRS OF LEAKS IN THE VENTURI SCRUBBER BOX. THE SYSTEM WAS RESTARTED NOVEMBER 19.

A SCREW CONVEYOR MALFUNCTION (PREVENTING CHEMICAL MIXING) RESULTING IN SCRUBBER DOWN TIME.

12/76	SYSTEM	99.0	97.0	99.0	97.0			744	744	721	

PERIOD	MODULE	AVAILABILITY	OPERABILITY	RELIABILITY	UTILIZATION	% REMOVAL SO2	% REMOVAL PART.	PER HOURS	BOILER HOURS	FGD HOURS	CAP. FACTOR
		PERFORMANCE DATA									
	** PROBLEMS/SOLUTIONS/COMMENTS										
		ONE MINOR SCRUBBER OUTAGE OCCURRED BECAUSE OF REPAIRS TO THE I.D. FAN EXPANSION JOINT.									
1/77	SYSTEM	98.0	98.0	98.0	91.0			744	690	676	
	** PROBLEMS/SOLUTIONS/COMMENTS										
		A PLUGGED TRAY OCCURRED IN JANUARY RESULTING IN FGD OUTAGE TIME.									
		A REHEATER STEAM LEAK RESULTED IN A MINOR FORCED OUTAGE.									
2/77	SYSTEM	81.0	74.0	72.0	63.0			672	575	422	
	** PROBLEMS/SOLUTIONS/COMMENTS										
		THREE FORCED SCRUBBER OUTAGES WERE CAUSED BY PROBLEMS WITH THE UPPER TRAY.									
		AN OUTAGE RESULTED FOR CLEANING OUT THE SODIUM CARBONATE LINE.									
3/77	SYSTEM	44.0	51.0	52.0	44.0			744	639	324	
	** PROBLEMS/SOLUTIONS/COMMENTS										
		THE RUBBER LINING IN THE SEPARATOR REQUIRED DOWNTIME FOR CURING.									
		THE SCRUBBER FAN EXPANSION JOINT BLEW OUT CAUSING OUTAGE TIME.									
		MINOR OUTAGES WERE CAUSED BY A PLUGGED TRAY.									
		THE D35 LIMIT SWITCH TRIPPED CAUSING PROBLEMS DURING MARCH.									
4/77	SYSTEM	86.0	85.0	85.0	83.0			720	709	600	
	** PROBLEMS/SOLUTIONS/COMMENTS										
		A HIGH TRAY DIFFERENTAL RESULTED IN FGD OUTAGE TIME.									
		A PLUGGED STRAINER IN THE TRAY RECYCLE TANK OCCURRED CAUSING DOWN TIME.									
5/77	SYSTEM	63.0	26.0	21.0	16.0			744	470	124	
	** PROBLEMS/SOLUTIONS/COMMENTS										
		THE MODULE WAS UNAVAILABLE DURING THE FIRST THREE WEEKS OF THE MONTH BECAUSE OF A FORCED OUTAGE REQUIRED FOR THE REPLACEMENT OF THE FRP LINER IN THE MODULE'S SEPARATOR SECTION.									
6/77	SYSTEM	98.0	63.0	64.0	62.0			720	705	443	
	** PROBLEMS/SOLUTIONS/COMMENTS										
		A HIGH TRAY DIFFERENTIAL PRESSURE READING WAS A PROBLEM.									
		A VENTURI RECYCLE LINE THROTTLE VALVE MALFUNCTIONED DURING JANUARY.									
		FOUR SCRUBBER OUTAGES WERE REPORTED, THREE OF WHICH WERE FORCED.									
7/77	SYSTEM	73.0	73.0	73.0	73.0			744	744	542	
	** PROBLEMS/SOLUTIONS/COMMENTS										
		FIVE FORCED SCRUBBER OUTAGES WERE ENCOUNTERED DURING JULY.									
		REPAIRS TO THE VENTURI DISCHARGE VALUE CONTRIBUTED TO FGD OUTAGE TIME.									
8/77	SYSTEM	70.0	63.0	63.0	50.0			744	629	375	

NEVADA POWER: REID GARDNER 3 (CONT.)

PERIOD	MODULE	AVAILABILITY	OPERABILITY	RELIABILITY	UTILIZATION	% REMOVAL SO2	% REMOVAL PART.	PER HOURS	BOILER HOURS	FGD HOURS	CAP. FACTOR
		PERFORMANCE DATA									
	** PROBLEMS/SOLUTIONS/COMMENTS										
		DUE TO A LEAK IN VENTURI RECYCLE LINE THE UNIT WAS OFF LINE PART OF THE MONTH.									
		SCRUBBER FAN VIBRATION PROBLEMS CONTRIBUTED TO FORCED SCRUBBER OUTAGES.									
		A FALSE ALARM DUE TO SCRUBBER OUTLET TEMPERATURE CAUSED SHUTDOWN FOR ABOUT A DAY.									
		THE BOILER WAS OUT OF SERVICE FOR ABOUT A WEEK DURING AUGUST.									
9/77	SYSTEM	90.0	90.0	99.0	90.0			720	720	646	
	** PROBLEMS/SOLUTIONS/COMMENTS										
		HIGH SOLIDS IN THE VENTURI RECYCLE SYSTEM CAUSED SOME OUTAGE TIME IN SEPTEMBER.									
		NEW EFFLUENT AND POST NEUTRALIZATION LINES WERE INSTALLED.									
10/77	SYSTEM	99.0	90.0	99.0	61.0			744	506	455	
	** PROBLEMS/SOLUTIONS/COMMENTS										
		THE SCRUBBER WAS DOWN 284.42 HOURS DURING OCTOBER FOR A SCHEDULED BOILER OUTAGE.									
		4.45 HOURS OUTAGE TIME OCCURRED AS A RESULT OF HIGH VIBRATION PROBLEMS ON A SCRUBBER FAN.									
11/77	SYSTEM	89.0	88.0	89.0	87.0			720	709	624	
	** PROBLEMS/SOLUTIONS/COMMENTS										
		THE SCRUBBER WAS DOWN ROUGHLY 80 HOURS FOR THE INSTALLATION OF AN OUTLET NOZZLE IN THE BOOSTER TANK.									
		THE BOILER WAS OUT OF SERVICE APPROXIMATELY 15 HOURS IN NOVEMBER.									
12/77	SYSTEM	88.0	92.0	96.0	93.0			744	692	635	
	** PROBLEMS/SOLUTIONS/COMMENTS										
		A FAULTY THERMOCOUPLE CAUSED "SEPARATOR HIGH TEMPERATURE" WHICH IN TURN CONTRIBUTED TO FGD OUTAGE TIME.									
		BOILER OUTAGE TIME AMOUNTED TO 51 HOURS IN DECEMBER.									
		THE INSTALLATION OF TRAY SPRAY STRAINER CAUSED DOWN TIME.									
		THE FGD SYSTEM WAS TAKEN OFF LINE TO INSTALL NEW SENSING LINES.									
1/78	SYSTEM	100.0	100.0	100.0	100.0			744	744	740	
	** PROBLEMS/SOLUTIONS/COMMENTS										
		A PLUGGED VENTURI NOZZLE CAUSED THE ONLY FGD OUTAGE DURING JANUARY.									
		THE BOILER OPERATED THE ENTIRE MONTH WITH NO OPERATIONAL PROBLEMS.									
2/78	SYSTEM	96.0	95.0	95.0	88.0			672	619	588	
	** PROBLEMS/SOLUTIONS/COMMENTS										
		AN FGD SYSTEM OUTAGE DUE TO A HIGH VENTURI TEMPERATURE (CAUSED BY FAULTY WIRING) OCCURRED DURING FEBRUARY.									
		A MINOR OUTAGE WAS NECESSARY TO CHECK THE VENTURI TEMPERATURE INDICATOR.									

PERIOD	MODULE	AVAILABILITY	OPERABILITY	RELIABILITY	UTILIZATION	% REMOVAL SO2	% REMOVAL PART.	PER HOURS	BOILER HOURS	FGD HOURS	CAP. FACTOR
				PERFORMANCE DATA							

AN FGD OUTAGE WAS CAUSED BY THE PLUGGING OF THE MIX TANK WHICH MADE IT IMPOSSIBLE TO MIX CHEMICALS.

3/78	SYSTEM	97.0	97.0	97.0	96.0			744	741	718	

** PROBLEMS/SOLUTIONS/COMMENTS

THE MIX TANK PROBLEM CONTINUED INTO MARCH CAUSING THE ONLY FGD DOWNTIME FOR THE MONTH.

A FURNACE HIGH/LOW PRESSURE TRIP CAUSED A BOILER OUTAGE OF 6 HOURS.

4/78	SYSTEM	97.0	89.0	97.0	87.0			720	704	629	

** PROBLEMS/SOLUTIONS/COMMENTS

THE FGD SYSTEM WAS DOWN FOR REPAIRS ON THE VENTURI EMERGENCY SPRAY SYSTEM.

THE BOILER WAS DOWN APPROXIMATELY 70 HOURS DURING APRIL.

5/78	SYSTEM	97.0	77.0	96.0	66.0			744	646	494	

** PROBLEMS/SOLUTIONS/COMMENTS

THERE WAS A SCHEDULED OUTAGE OF 230 HOURS FOR BOILER MAINTENANCE DURING MAY.

AN FGD FORCED OUTAGE RESULTED FROM A FAULTY TEMPERATURE PROBE AT THE VENTURI DURING MAY.

6/78	SYSTEM	100.0	96.0	96.0	95.0			720	715	686	

** PROBLEMS/SOLUTIONS/COMMENTS

A HIGH/LOW FURNACE PRESSURE TRIP RESULTED IN BOILER DOWNTIME.

A SCHEDULED FGD OUTAGE OCCURRED WHEN THE FIRE SPRAY SYSTEM WAS OUT OF SERVICE.

7/78	SYSTEM	100.0	80.0	100.0	78.0			744	726	583	

** PROBLEMS/SOLUTIONS/COMMENTS

LOW VENTURI FLOW CAUSED AN FGD OUTAGE. THIS WAS CORRECTED WHEN THE RACE TRACK WERE CLEANED.

A SCHEDULED OUTAGE TO CLEAN THE TURBINE LUBE OIL COOLERS OCCURRED DURING JULY.

AN OUTAGE WAS REQUIRED FOR INSPECTION OF THE VENTURI TANK AND RACE TRACK. DURING THE OUTAGE THE TANK AND RACE TRACK NOZZLES WERE CLENED AND THE RUBBER LINING ON THE VENTURI SPOOL WAS REPLACED.

AN OUTAGE WAS REQUIRED TO CLEAN THE VENTURIRACE TRACK.

8/78	SYSTEM	98.0	98.0	98.0	97.0			744	736	721	

** PROBLEMS/SOLUTIONS/COMMENTS

ONE FORCED BOILER OUTAGE OCCURRED DUE TO HIGH FURNACE PRESSURE.

THE SCRUBBER WAS FORCED OFF LINE ON AUGUST 28 DUE TO HIGH SCRUBBER FAN OUTLET PRESSURE. THE SCRUBBER PRESSURE SENSING LINE WAS CLEANED.

ON AUGUST 29 THE SCRUBBER EFFLUENT SOLIDS LEVEL WAS HIGH CAUSING AN OUTAGE OF APPROXIMATELY FIVE HOURS. THE SYSTEM WAS FLUSHED TO CORRECT THE PROBLEM.

9/78	SYSTEM	100.0	97.0	100.0	32.0			720	236	228	

NEVADA POWER: REID GARDNER 3 (CONT.)

PERIOD	MODULE	AVAILABILITY	OPERABILITY	RELIABILITY	UTILIZATION	% REMOVAL SO2	% REMOVAL PART.	PER HOURS	BOILER HOURS	FGD HOURS	CAP. FACTOR
		PERFORMANCE DATA									

** PROBLEMS/SOLUTIONS/COMMENTS

THE UNIT WENT DOWN ON SEPTEMBER 10 FOR A TURBINE OVERHAUL WHICH LASTED THROUGH THE END OF THE MONTH.

10/78	SYSTEM	100.0			.0			744	0	0	

** PROBLEMS/SOLUTIONS/COMMENTS

THE UNIT WAS DOWN THE ENTIRE MONTH OF OCTOBER FOR TURBINE OVERHAUL.

11/78	SYSTEM	98.0	91.0	91.0	62.0			720	489	447	

** PROBLEMS/SOLUTIONS/COMMENTS

THE UNIT WAS BROUGHT BACK ON LINE THE 10TH OF NOVEMBER.

THE FGD SYSTEM WAS DOWN ABOUT 2 HOURS FOR REPAIRING VENTURI TEMPERATURE PROBES.

12/78	SYSTEM	100.0	100.0	100.0	100.0			744	744	744	

** PROBLEMS/SOLUTIONS/COMMENTS

NO FGD OUTAGES WERE REPORTED DURING DECEMBER.

1/79	SYSTEM	66.4	67.2	67.2	66.4			744	735	494	

** PROBLEMS/SOLUTIONS/COMMENTS

OUTAGE TIME WAS NECESSARY TO REPAIR A HOLE IN THE VENTURI BOX.

TWO FORCED OUTAGES OCCURRED BECAUSE EFFLUENT SOLIDS WERE HIGH. THE SYSTEM WAS CLEANED.

A MAJOR OUTAGE OCCURRED WHEN THE SCRUBBER REHEATER FAN MOTOR BURNED OUT.

2/79	SYSTEM	40.6	45.7	45.7	40.6			672	660	302	

** PROBLEMS/SOLUTIONS/COMMENTS

A STEAM LEAK IN THE SCRUBBER REHEATER COIL RESULTED IN OUTAGE TIME.

THE FGD SYSTEM WAS OFF FOR A FEW HOURS TO REPAIR A LEAK IN THE VENTURI LINE.

THE SCRUBBER WAS DOWN TO REPAIR LEAKS IN EFFLUENT AND VENTURI LINES.

THE SCRUBBER WAS OFF WITH HIGH FURNACE PRESSURE ON THE BOILER.

THE RACE TRACK NOZZLES WERE CLEANED DURING FEBRUARY.

3/79	SYSTEM	100.0	97.9	100.0	67.7			744	246	241	

** PROBLEMS/SOLUTIONS/COMMENTS

THE BOILER AND FGD SYSTEM WERE OFF FOR ABOUT 2 DAYS TO REPAIR AND BALANCE A BOILER I.D. FAN.

THE BOILER AND FGD SYSTEM WERE OFF FOR ABOUT 19 DAY FOR SCHEDULED MAINTENANCE.

4/79	SYSTEM	100.0	100.0	100.0	100.0			720	719	719	

** PROBLEMS/SOLUTIONS/COMMENTS

NO OUTAGES WERE REPORTED FOR APRIL.

5/79	SYSTEM	98.7	97.7	97.7	97.5			744	742	725	

PERIOD	MODULE	AVAILABILITY	OPERABILITY	RELIABILITY	UTILIZATION	% REMOVAL SO2	% REMOVAL PART.	PER HOURS	BOILER HOURS	FGD HOURS	CAP. FACTOR
		PERFORMANCE DATA									

** PROBLEMS/SOLUTIONS/COMMENTS

THE SCRUBBER WAS INADVERTENTLY REMOVED FROM SERVICE FOR A FEW HOURS.

THE SCRUBBER PRESSURE SENSING LINES WERE CLEANED AFTER A BOILER TRIP ON HIGH FURNACE PRESSURE.

6/79	SYSTEM	100.0	91.3	100.0	83.5			720	659	601	

** PROBLEMS/SOLUTIONS/COMMENTS

SOME BOILER OUTAGE WAS REQUIRED DURING JUNE TO REPAIR A BOILER TUBE LEAK.

THE SCRUBBER WAS OUT OF SERVICE WHILE REPAIRS WERE MADE ON THE FIRE WATER SYSTEM.

7/79	SYSTEM	93.2	93.1	93.2	93.2			744	642	694	

** PROBLEMS/SOLUTIONS/COMMENTS

THE VENTURI RECYCLE PUMP HAD A BAD PUMP CASING LEAK CAUSING ABOUT 50 HOURS OFF TIME.

THE VENTURI PUMP WAS OUT OF SERVICE FOR MAINTENANCE.

8/79	SYSTEM	87.6	92.9	87.6	87.5			744	701	652	

** PROBLEMS/SOLUTIONS/COMMENTS

THE SCRUBBER AND BOILER WERE BOTH DOWN TO REPLACE THE EXPANSION JOINTS ON THE CIRCULATING WATER PUMPS.

THE SCRUBBER WAS OFF TO CLEAN TRAY AND VENTURI RACE TRACK NOZZLES. THE SCRUBBER WAS DOWN FOR ABOUT 31 HOURS.

THE SCRUBBER WAS OFF TO REPAIR BROKEN FIRE LINES SO THE SCRUBBER WILL HAVE EMERGENCY WATER.

9/79	SYSTEM	100.0	98.8	100.0	90.2			720	657	650	

** PROBLEMS/SOLUTIONS/COMMENTS

DURING SEPTEMBER THE SCRUBBER WENT OFF LINE WITH THE BOILER TO REPAIR BOILER TUBE LEAKS.

10/79	SYSTEM	97.2	97.3	97.3	97.3			744	744	724	

** PROBLEMS/SOLUTIONS/COMMENTS

DURING OCTOBER THE SCRUBBER WENT OFF LINE BECAUSE THERE WAS NO EMERGENCY SPRAY TO THE SCRUBBER. THE 2A LOAD CENTER WAS OUT FOR MAINTENANCE; THEREFORE, THERE WAS NO POWER TO OPERATE THE FIRE PUMP.

11/79	SYSTEM	81.5	94.6	100.0	77.0			720	586	555	

** PROBLEMS/SOLUTIONS/COMMENTS

TWO OUTAGES OCCURRED DURING NOVEMBER DUE TO HIGH FURNACE PRESSURE CAUSING A BOILER TRIP.

THE SCRUBBER AND BOILER WERE OFF TOWARDS THE END OF THE MONTH FOR SCHEDULED MAINTENANCE.

12/79	SYSTEM	39.7	72.4	74.7	39.7			744	408	295	

NEVADA POWER: REID GARDNER 3 (CONT.)

PERIOD	MODULE	AVAILABILITY	OPERABILITY	RELIABILITY	UTILIZATION	% REMOVAL SO2	% REMOVAL PART.	PER HOURS	BOILER HOURS	FGD HOURS	CAP. FACTOR
					PERFORMANCE DATA						

** PROBLEMS/SOLUTIONS/COMMENTS

THE UNIT WAS OFF FOR THE FIRST TWO WEEKS OF DECEMBER FOR SCHEDULED MAINTENANCE.

TWO OUTAGES OCCURRED LATER IN THE MONTH DUE TO THE REHEATER BLOWER MOTOR MALFUNCTION.

SECTION 3
DESIGN AND PERFORMANCE DATA FOR OPERATIONAL DOMESTIC FGD SYSTEMS

COMPANY NAME	NORTHERN INDIANA PUB SERVICE	
PLANT NAME	DEAN H. MITCHELL	
UNIT NUMBER	11	
CITY	GARY	
STATE	INDIANA	
REGULATORY CLASSIFICATION	E	
PARTICULATE EMISSION LIMITATION - NG/J	43.	(.100 LB/MMBTU)
SO2 EMISSION LIMITATION - NG/J	******	(****** LB/MMBTU)
NET PLANT GENERATING CAPACITY - MW	115.0	
GROSS UNIT GENERATING CAPACITY - MW	115.0	
NET UNIT GENERATING CAPACITY W/FGD - MW	94.0	
NET UNIT GENERATING CAPACITY WO/FGD - MW	10.8	
EQUIVALENT SCRUBBED CAPACITY - MW	115.0	
** BOILER DATA		
SUPPLIER	******	
TYPE	******	
SERVICE LOAD	BASE	
COMMERCIAL SERVICE DATE	5/70	
MAXIMUM BOILER FLUE GAS FLOW - CU.M/S	198.20	(420000 ACFM)
FLUE GAS TEMPERATURE - C	142.2	(288 F)
STACK HEIGHT - M	51.	(168 FT)
STACK TOP DIAMETER - M	*******	(***** FT)
** FUEL DATA		
FUEL TYPE	COAL	
FUEL GRADE	******	
AVERAGE HEAT CONTENT - J/G	25586.	(11000 BTU/LB)
RANGE HEAT CONTENT - BTU/LB		******
AVERAGE ASH CONTENT - %	********	
RANGE ASH CONTENT - %	10.	
AVERAGE MOISTURE CONTENT - %	11.00	
RANGE MOISTURE CONTENT - %	******	
AVERAGE SULFUR CONTENT - %	3.50	
RANGE SULFUR CONTENT - %	3.2-3.5	
AVERAGE CHLORIDE CONTENT - %	********	
RANGE CHLORIDE CONTENT - %	******	
** ESP		
NUMBER	1	
** PARTICULATE SCRUBBER		
NUMBER	1	
TYPE	VENTURI	
NUMBER OF STAGES	1	
INTERNAL MATERIAL	1 LEVEL OF SPRAYS	
** FGD SYSTEM		
SALEABLE PRODUCT/THROWAWAY PRODUCT	SALEABLE PRODUCT	
GENERAL PROCESS TYPE	WET SCRUBBING	
PROCESS TYPE	WELLMAN LORD	
SYSTEM SUPPLIER	DAVY POWERGAS	
A-E FIRM	DAVY POWERGAS	
CONSTRUCTION FIRM	DAVY POWERGAS	
DEVELOPMENT LEVEL	DEMONSTRATION	
NEW/RETROFIT	RETROFIT	
PARTICULATE DESIGN REMOVAL EFFICIENCY - %	98.50	
SO2 DESIGN REMOVAL EFFICIENCY - %	90.00	
COMMERCIAL DATE	6/77	
INITIAL START-UP	7/76	
CONSTRUCTION COMPLETION	12/75	
CONSTRUCTION INITIATION	8/74	
CONTRACT AWARDED	6/72	
ABSORBER SPARE CAPACITY INDEX - %	.0	
ABSORBER SPARE COMPONENT INDEX	.0	
** ABSORBER		
NUMBER	1	
TYPE	TRAY TOWER	
INITIAL START UP	7/76	
SUPPLIER	DAVY POWERGAS	
NUMBER OF STAGES		

NORTHERN INDIANA PUB SERVICE: DEAN H. MITCHELL 11 (CONT.)

SHELL MATERIAL	CARBON STEEL	
SHELL LINER MATERIAL	ACID BRICK	
INTERNAL MATERIAL	316L SS TRAYS	
BOILER LOAD/ABSORBER - %	100.0	
GAS FLOW - CU.M/S	198.20	(420000 ACFM)
GAS TEMPERATURE - C	142.2	(288 F)
PRESSURE DROP - KPA	3.0	(12.0 IN-H2O)
SO2 INLET CONCENTRATION - PPM	2185	
SO2 OUTLET CONTRATION - PPM	200	
SO2 DESIGN REMOVAL EFFICIENCY - %	91.0	

** CENTRIFUGE

NUMBER	1
TYPE	SODIUM SULFITE CRYSTAL REMOVAL

** FANS

NUMBER	1	
TYPE	SCRUBBER FD	
CONSTRUCTION MATERIALS	INCONEL SHIELDS ON BLADE EDGES	
SERVICE - WET/DRY	DRY	
CAPACITY - CU.M/S	198.20	(420000 ACFM)

** FANS

NUMBER	2
TYPE	BOILER I.D.
SERVICE - WET/DRY	DRY

** PUMPS

SERVICE	NUMBER
DISSOLVING TANK TO ABSORBER FEED TAN	****
FLYASH PURGE TO POND TRANSFER	****
ABSORBER RECIRCULATION	3
EVAPORATOR-CRYSTALLIZER FEED	****
SLURRY FEED	****

** TANKS

SERVICE	NUMBER
ABSORBER FEED	****
ABSORBER SURGE	****
NACO3 MAKEUP, NA2SO3 DISSOLVING	****

** REHEATER

TYPE	DIRECT COMBUSTION	
TEMPERATURE BOOST - C	27.8	(50 F)

** WATER LOOP

TYPE	CLOSED

** REAGENT PREPARATION EQUIPMENT

POINT OF ADDITION	PNEUMATIC CONVEYOR

** BYPRODUCTS

BYPRODUCT NATURE	ELEMENTAL SULFUR
BYPRODUCT QUALITY - %	99.9

PERFORMANCE DATA

PERIOD	MODULE	AVAILABILITY	OPERABILITY	RELIABILITY	UTILIZATION	% REMOVAL SO2	% REMOVAL PART.	PER HOURS	BOILER HOURS	FGD HOURS	CAP. FACTOR
11/76	SYSTEM							720			

** PROBLEMS/SOLUTIONS/COMMENTS

FOLLOWING COMPLETION OF CONSTRUCTION IN MID-1976, START-UP OF THE VARIOUS SUBSYSTEMS AND COMPONENT PARTS WAS INITIATED. DURING THE PERIOD JULY THROUGH NOVEMBER, THREE SUSTAINED RUNS OF THE SO2 ABSORBER AND REGENERATIO SYSTEM UNDER NORMAL OPERATING CONDITIONS WERE ACHIEVED. SO2 REMOVAL EFFICIENCY WAS EQUAL TO OR GREATER THAN THE 90% PERFORMANCE CRITERIA. UNIT 11 BOILER OPERATED 121 FULL DAYS AND 10 PARTIAL DAYS. THE WELLMAN-LORD SO2 RECOVERY UNIT OPERATED 71 FULL DAYS AND 23 PARTIAL DAYS. DURING THIS PERIOD, NUMEROUS MODIFICATIONS AND CORRECTIONS TO THE SYSTEM WERE COMPLETED. THESE INCLUDED MODIFYING THE ABSORBER KOCH VALVE TRAYS TO IMPROVE TURN-

PERIOD	MODULE	AVAILABILITY	OPERABILITY	RELIABILITY	UTILIZATION	% REMOVAL SO2	% REMOVAL PART.	PER HOURS	BOILER HOURS	FGD HOURS	CAP. FACTOR

DOWN, RUBLER LINING THE BOTTOM ABSORBER COLLECTOR TRAY, RELOCATING AND IMPROVING TEMPERATURE CONTROL OF THE LOW PRESSURE STEAM SUPPLY, INSTALLING IMPROVED SO2 SAMPLE PROBES AND SEVERAL REPLACEMENTS AND MODIFICATIONS TO THE PURGE SALT RECOVERY AREA. FULLY INTEGRATED OPERATIONS INCLUDING SO2 REDUCTION AND SULFUR RECOVERY OCCURRED IN NOVEMBER, 1976. JANUARY THROUGH MAY 1977 - UNIT 11 BOILER WAS OUT-OF-SERVICE FOR ABOUT FIVE MONTHS FOLLOWING A BOILER-RELATED MISHAP WHICH OCCURRED ON JANUARY 15, 1977, DURING START-UP AFTER A SCHEDULED MAINTENANCE TURN AROUND.

ON JUNE 13, 1977 FGD OPERATIONS RESUMED FOLLOWING RETURN TO FULL SERVICE O UNIT 11 BOILER. BY JUNE 15 FULLY INTEGRATED OPERATION OF THE ENTIRE FGD PLANT WAS ACHIEVED. THROUGH JUNE AND JULY, SEVERAL HUNDRED HOURS OF TOTAL SYSTEM OPERATION AT BOTH PARTIAL AND FULL LOAD WERE ACCRUED.

12/76	SYSTEM							744			
1/77	SYSTEM							744			
2/77	SYSTEM							672			
3/77	SYSTEM							744			
4/77	SYSTEM							720			
5/77	SYSTEM							744			
6/77	SYSTEM							720			
7/77	SYSTEM							744			
8/77	SYSTEM						89.80	744			

** PROBLEMS/SOLUTIONS/COMMENTS

PERFORMANCE TESTS COMMENCED ON AUGUST 29, 1977 AND WERE SUCCESSFULLY COMPLETED ON SEPTEMBER 14, 1977. THE TEST PERIOD INCLUDED 12 DAYS AT 92 MW FLUE GAS EQUIVALENT AND 3.4 DAYS AT 110 MW FLUE GAS EQUIVALENT. DURING THIS PERIOD, 91% OF THE SO2 WAS REMOVED WHILE BURNING COAL CONTAINING 3% SULFUR AND 204 TONS OF ELEMENTAL SULFUR WERE RECOVERED. ALL PERFORMANCE CRITERIA WERE MET INCLUDING SO2 REMOVAL, PARTICULATE EMISSION, RAW MATERIAL AND UTILITY CONSUMPTIONS AND RECOVERED SULFUR QUALITY. THE FGD UNIT SHUT DOWN SEPTEMBER 19 AND REMAINED IDLE THROUGH SEPTEMBER 30 DUE TO COAL FEED PROBLEMS RESULTING FROM WET COAL ON THE UNIT 11 BOILER.

9/77	SYSTEM							720			
10/77	SYSTEM						91.00	744			

** PROBLEMS/SOLUTIONS/COMMENTS

A DEMONSTRATION PERIOD OF ONE YEAR BEGAN SEPTEMBER 16. IN OCTOBER, THE FGD UNIT OPERATED 132 HOURS. OPERATIONS WERE INTERUPTED WHILE HEAT BALANCE TESTS WERE CONDUCTED ON THE UNIT 11 BOILER BY NIPSCO AND TRW AND WERE INTERRUPTED FURTHER TO MAKE REPAIRS TO THE SO2 REDUCTION SECTION, THE EVAPORATOR, AND THE UNIT 11 BOILER.

11/77	SYSTEM	74.0			72.0	90.0		720		428	

** PROBLEMS/SOLUTIONS/COMMENTS

THE FGD UNIT OPERATED FOR 18 CONSECUTIVE DAYS, AVERAGING 90% SO2 REMOVAL WITH 285 LONG TONS OF SULFUR RECOVERED. FGD OPERATION WAS INTERRUPTED BY UNIT 11 BOILER TUBE LEAK AND RESUMPTION OF FGD OPERATION WAS FURTHER DELAYED BY MAINTENANCE IN THE EVAPORATOR SECTION.

THE FLUE GAS ISOLATION DAMPER NEEDED REPAIRS.

MAINTENANCE WAS PERFORMED ON THE FLUE GAS BOOSTER BLOWER.

THE SO2 REDUCTION SECTION REQUIRED MAINTENANCE DURING NOVEMBER.

NORTHERN INDIANA PUB SERVICE: DEAN H. MITCHELL 11 (CONT.)

PERIOD	MODULE	AVAILABILITY	OPERABILITY	RELIABILITY	UTILIZATION	% REMOVAL SO2	% REMOVAL PART.	PER HOURS	BOILER HOURS	FGD HOURS	CAP. FACTOR
		PERFORMANCE DATA									
12/77	SYSTEM	49.0		.0	.0			744			0

** PROBLEMS/SOLUTIONS/COMMENTS

THE FLUE GAS BOOSTER BLOWER MALFUNCTIONED CAUSING MAINTENANCE ATTENTION.

MAINTENANCE WAS PERFORMED ON THE ABSORBER SOLUTION REGENERATION SECTION.

THE FGD SYSTEM WAS NOT OPERATED DURING THIS PERIOD DUE TO ABNORMAL BOILER OPERATING CONDITIONS RELATED TO HIGH SILICA LEVELS IN THE FEED WATER. THE HIGH SILICA LEVELS RESULTED FROM HIGH MAKE-UP WATER REQUIREMENTS DUE IN PART TO A HIGHER THAN NORMAL FGD PLANT USAGE, AS WELL AS UNIT 11 COAL FEED PROBLEM AND A PRECIPITATION MALFUNCTION.

1/78	SYSTEM	80.0		.0	.0			744			0

** PROBLEMS/SOLUTIONS/COMMENTS

THE FGD SYSTEM REMAINED DOWN THROUGHOUT JANUARY AS HIGH SILICA LEVELS IN THE UNIT 11 BOILER FEED WATER PERSISTED.

MAINTENANCE WAS PERFORMED ON THE UNIT 11 PRECIPITATOR.

PROBLEMS CONTINUED WITH THE FLUE GAS BOOSTER BLOWER.

THE FGD SYSTEM SO2 COMPRESSOR MALFUNCTIONED AND NEEDED MAINTENANCE.

2/78	SYSTEM	47.0		.0	.0			672			0

** PROBLEMS/SOLUTIONS/COMMENTS

THE FGD SYSTEM WAS NOT OPERATED DUE TO ABNORMAL BOILER OPERATING CONDITION RELATED TO HIGH SILICA LEVELS IN THE BOILER FEED WATER, COUPLED WITH UNIT 11 COAL FEED PROBLEMS, STOP VALVE PROBLEMS, PRECIPITATOR MALFUNCTION AND A LEAKING BOILER TUBE AND WORK ON THE FLUE GAS ISOLATION DAMPER.

MAINTENANCE WAS PERFORMED ON THE FLUE GAS BOOSTER BLOWER.

THE FLUE GAS ISOLATION DAMPER WAS REPAIRED DURING FEBRUARY.

THE EVAPORATOR CIRCIRCULATING PUMP NEEDED MAINTENANCE ATTENTION.

THE SO2 SUPERHEATER PIPING REPAIRS WERE PERFORMED DURING THE MONTH.

3/78	SYSTEM	90.0		77.0	30.0			744			215

** PROBLEMS/SOLUTIONS/COMMENTS

THE FGD SYSTEM OPERATED FOR TEN DAYS. OPERATION WAS INTERRUPTED BY A SHUTDOWN OF THE UNIT 11 BOILER FOR REPAIR OF COAL GRINDING MILLS AND PRE-A CIPITATORS. PROPER CONDITIONS COULD NOT BE RE-ESTABLISHED FOR RE-START OF THE FGD OPERATION BECAUSE OF COAL FEED AND GRINDING PROBLEMS CAUSED BYE EXTREMELY POOR QUALITY COAL.

MAINTENANCE WAS PERFORMED ON THE BOOSTER BLOWER.

OPERATING PROBLEMS WERE ENCOUNTERED WITH THE FLUE GAS ISOLATION DAMPER.

4/78	SYSTEM	.0		.0	.0			720			0

** PROBLEMS/SOLUTIONS/COMMENTS

THE FLUE GAS BOOSTER BLOWER WAS OUT OF SERVICE FOR THIS ENTIRE PERIOD FOR REBLADING. THE FGD SYSTEM WAS INOPERABLE.

A FAILURE OF THE FLUE GAS ISOLATION DAMPER OCCURRED.

A NEW SUPPLY OF HIGH SULFUR COAL WAS OBTAINED AND SUCCESSFULLY TESTED ON UNIT 11 BOILER. THIS COAL IS EXPECTED TO ALLEVIATE PAST DIFFICULTIES WITH

PERIOD	MODULE	AVAILABILITY	OPERABILITY	RELIABILITY	UTILIZATION	% REMOVAL SO2	% REMOVAL PART.	PER HOURS	BOILER HOURS	FGD HOURS	CAP. FACTOR
				PERFORMANCE DATA							

THE COAL FEED AND GRINDING SYSTEM.

MAINTENANCE WAS PERFORMED ON THE BOILER I.D. FANS.

MAINTENANCE WAS PERFORMED ON THE BOILER I.D. FANS.

THE FGD ALSORBER REQUIRED MAINTENANCE DURING APRIL.

5/78	SYSTEM								744		

** PROBLEMS/SOLUTIONS/COMMENTS

THE SO2 RECOVERY PORTION OF THE FGD SYSTEM OPERATED FOR 26 DAYS. THE COMPLETED FGD SYSTEM OPERATED FOR 11 DAYS.

FGD OPERATIONS WERE INTERRUPTED BY FAILURE OF THE FLUE GAS ISOLATION DAMPER.

FGD OPERATIONS WERE INTERRUPTED BY PROBLEMS WITH WET COAL WHICH REQUIRED THE UNIT 11 BOILER TO OPERATE ON LOW SULFUR COAL FOR A SHORT PERIOD.

PLUGGING OF AN ENTRAINMENT SEPARATOR IN THE SO2 REDUCTION UNIT CAUSED PROBLEMS DURING MAY.

6/78	SYSTEM	13.0			1.0		.0		720		300

** PROBLEMS/SOLUTIONS/COMMENTS

THE FGD PROCESS FACILITIES, CONSISTING OF THE ABSORBER, EVAPORATOR, SO2 REDUCTION AND PURGE TREATMENT UNITS, WERE AVAILABLE FOR OPERATION FOR ESSENTIALLY THE ENTIRE PERIOD.

OPERATION OF THE FGD SYSTEM WAS LIMITED BY FAILURE OF THE BOOSTER BLOWER DRIVE TURBINE.

OPERATION OF THE FGD SYSTEM WAS LIMITED DUE, IN PART, TO THE INABILITY OF THE ISOLATION DAMPER TO OPERATE

7/78	SYSTEM	6.0			4.0		2.0		744		170

** PROBLEMS/SOLUTIONS/COMMENTS

OPERATION OF THE FGD SYSTEM WAS LIMITED BY IMBALANCE OF THE BOOSTER BLOWER DUE TO INABILITY OF THE ISOLATION DAMPER TO OPERATE. THIS CONDITION COULD NOT BE CORRECTED UNTIL POWER DEMANDS PERMITTED A SHUT DOWN OF UNIT 11 BOILER. FLUE GAS BOOSTER BLOWER PROBLEMS INCLUDED LOW OIL PRESSURE, LEAKING BEARING OIL SEALS AND DRIVE TURBINE GOVERNOR MALFUNCTION.

RECURRING FLUCTUATIONS IN THE PRESSURE OF THE MAIN STEAM SUPPLY TO THE FGD SYSTEM LIMITED FGD OPERATIONS.

THE FGD PROCESS FACILITIES WERE AVAILABLE FOR OPERATION FOR THE ENTIRE PERIOD.

8/78	SYSTEM	98.0		100.0	98.0		98.0		744		707

** PROBLEMS/SOLUTIONS/COMMENTS

THE UNIT 11 BOILER OPERATED CONTINUOUSLY ON HIGH SULFUR COAL THROUGHOUT THE PERIOD. THE FGD SYSTEM ACHIEVED FULL OPERATION ON THE FIRST DAY OF THE PERIOD. AFTER PROBLEMS WITH THE BOOSTER BLOWER WERE CORRECTED, IT REMAINED IN FULL OPERATION FOR THE BALANCE OF THE PERIOD WITH THE EXCEPTION OF ONE TWO-HOUR INTERRUPTION DUE TO AN ELECTRICAL MOTOR MALFUNCTION.

MINOR BOOSTER BLOWER PROBLEMS OCCURRED OVER THE PERIOD.

9/78	SYSTEM	44.0			99.0		44.0		720		319

NORTHERN INDIANA PUB SERVICE: DEAN H. MITCHELL 11 (CONT.)

PERIOD	MODULE	AVAILABILITY	OPERABILITY	RELIABILITY	UTILIZATION	% REMOVAL SO2	% REMOVAL PART.	PER HOURS	BOILER HOURS	FGD HOURS	CAP. FACTOR
		PERFORMANCE DATA									

** PROBLEMS/SOLUTIONS/COMMENTS

THE UNIT 11 BOILER OPERATED ON HIGH SULFUR COAL UNTIL SEPTEMBER 12 WHEN IT WAS SHUT DOWN FOR AN ANNUAL OVERHAUL. THE BOILER REMAINED DOWN THROUGH TH END OF THE PERIOD. THE FGD SYSTEM CONTINUED IN FULL OPERATION UNTIL SEPTEMBER 12, WITH THE EXCEPTION OF ONE TWO-HOUR INTERRUPTION DUE TO A GOVERNOR MALFUNCTION ON THE SO2 COMPRESSOR DRIVE TURBINE, AND WAS THEN SHUT DOW CONCURRENTLY WITH THE UNIT 11 BOILER.

A GOVERNOR MALFUNCTION OCCURRED ON THE SO2 COMPRESSOR DRIVE TURBINE CAUSING A TWO-HOUR OUTAGE ON THE FGD OPERATIONS.

10/78	SYSTEM	44.0		73.0	44.0			744		369	

** PROBLEMS/SOLUTIONS/COMMENTS

THIS PERIOD COVERS SEPTEMBER 29 THROUGH NOVEMBER 2. FOLLOWING THE ANNUAL TURNAROUND, THE UNIT 11 BOILER RESTARTED ON OCTOBER 6. A NEW BASELINE TEST WAS RUN ON THE BOILER OCTOBER 7 THROUGH 12. BALANCING OF THE FLUE GAS BOOSTER BLOWER WAS THEN COMPLETED AFTER WHICH THE FGD SYSTEM WAS STARTED ON OCTOBER 18.

11/78	SYSTEM	99.0		99.0	98.0			720		709	

** PROBLEMS/SOLUTIONS/COMMENTS

PROBLEMS WERE ENCOUNTERED WITH THE SODIUM SULFATE PURGE DRYER WHICH NECESSITATED DISPOSING OF PART OF THE SULFATE PURGE TO THE BOTTOM ASH POND FOR A PORTION OF THE PERIOD.

THE UNIT 11 BOILER OPERATED CONTINUOUSLY ON HIGH SULFUR COAL EXCEPT FOR ONE THREE-HOUR OUTAGE FOR REPAIR OF A STEAM CONTROL VALVE. VARIATIONS IN THE PRESSURE OF THE STEAM SUPPLY TO FGD OCCURRED DUE TO HIGH SILICA IN THE MAKE-UP WATER ON UNIT 11.

12/78	SYSTEM	64.0		72.0	64.0			744		462	

** PROBLEMS/SOLUTIONS/COMMENTS

THE BOILER WAS SHUT DOWN FROM DEC. 14 TO DEC. 17 TO CLEAN THE AIR PREHEATERS.

THE BOILER OPERATED ON HIGH SULFUR COAL DURING DECEMBER.

AN INSTRUMENT MALFUNCTION DUE TO FREEZING RESULTED IN THE PLUGGING OF A HEAT EXCHANGER IN THE SO2 REGENERATION UNIT. THE FGD SYSTEM WAS DOWN FOR THREE DAYS WHILE THE EXCHANGER WAS CLEANED.

1/79	SYSTEM	90.0		90.0	28.0			744		198	

** PROBLEMS/SOLUTIONS/COMMENTS

THE BOILER OPERATED ON HIGH SULFUR COAL FROM JANUARY 2-14 AND LOW SULFUR COAL FROM JANUARY 15-31.

INTIGRATED OPERATION OF THE FGD SYSTEM CONTINUED TO JANUARY 10 WHEN THE SO2 REDUCTION UNIT WAS SHUT DOWN FOR REPAIR OF A SULFUR CONDENSER INCLUDING CORRECTIVE MEASURES TO AVOID FUTURE PROBLEMS WITH THE CONDENSER. THE ABSORPTION AND REGENERATION UNITS CONTINUED IN OPERATION TO JANUARY 29 WITH RECYCLE OF SO2 TO THE ABSORBER INLET. THE FGD SYSTEM REMAINED DOWN THROUGH JANUARY 31.

2/79	SYSTEM	7.0		1.0	1.0			672		5	

** PROBLEMS/SOLUTIONS/COMMENTS

THE BOILER OPERATED ON LOW SULFUR COAL FEBRUARY 1-12 AND HIGH SULFUR COAL FEBRUARY 13-MARCH 2. THE FGD SYSTEM REMAINED DOWN THROUGH FEBRUARY 22 FOR COMPLETION OF SULFUR CONDENSER REPAIRS FOLLOWED BY REPAIR OF EXPANSION

PERIOD	MODULE	AVAILABILITY	OPERABILITY	RELIABILITY	UTILIZATION	% REMOVAL SO2	% REMOVAL PART.	PER HOURS	BOILER HOURS	FGD HOURS	CAP. FACTOR
				PERFORMANCE DATA							

JOINT LEAKS.

A POWER INTERRUPTION ON FEBRUARY 24 RESULTED IN LOSS OF SEAL WATER TO THE EVAPORATOR PUMP AND PACKING FAILURE. THE FGD SYSTEM REMAINED DOWN THROUGH MARCH 2.

3/79	SYSTEM	47.0			44.0				43.0	744	308

** PROBLEMS/SOLUTIONS/COMMENTS

THE BOILER OPERATED ON HIGH SULFUR COAL DURING THE MONTH.

THE FGD SYSTEM WAS SHUT DOWN DUE TO HIGH LEAKAGE IN THE EVAPORATOR CIRCULATING PUMP PACKING GLAND. THE PUMP SHAFT SLEEVE WAS REPLACED AND THE PUMP REALIGNED. THE SYSTEM WAS DOWN FOR ABOUT 16 DAYS.

4/79	SYSTEM	73.0			73.0				73.0	720	527
5/79	SYSTEM	86.0			76.0				69.0	744	499

** PROBLEMS/SOLUTIONS/COMMENTS

FGD OUTAGES IN THE EVAPORATOR SYSTEM RESULTED FROM HIGH VIBRATION IN THE CIRCULATING PUMP, PARTIAL PLUGGING OF THE HEATER TUBES AND A LEAK IN THE SO2 SUPERHEATER. FGD OUTAGES IN THE SO2 REDUCTION SYSTEM RESULTED FROM PLUGGING OF THE TAIL GAS LINE AND MALFUNCTION OF THE INCINERATOR COMBUSTION CONTROLS.

BOILER OUTAGES WERE REQUIRED FOR REPAIR OF A TUBE LEAK AND FOR REPAIR OF A STEAM STOP VALVE.

6/79	SYSTEM	91.0			80.0				63.0	720	455

** PROBLEMS/SOLUTIONS/COMMENTS

THE UNIT 11 BOILER OPERATED PART OF THE PERIOD ON HIGH SULFUR COAL AND PART ON A MIXTURE OF HIGH AND MEDIUM SULFUR COAL.

AN OUTAGE WAS REQUIRED FOR REPAIR OF A REHEAT STOP VALVE AND THE OPERATINGE RATE WAS LIMITED DUE TO AN ID FAN BEARING PROBLEM AND AN FD FAN FAILURE. LOW MAIN STEAM PRESSURE LOW SO2 IN THE FLUE GAS CAUSED FGD OUTAGES. FGD OUTAGES ALSO RESULTED FROM A FLUE LEAK, A PLUGGED WATER VALVE AND REPAIR OF AN EXPANSION JOINT.

7/79	SYSTEM	90.0			82.0				79.0	744	538

** PROBLEMS/SOLUTIONS/COMMENTS

UNIT 11 BOILER OPERATED ON HIGH SULFUR COAL. OUTAGES OCCURRED FOR REPACKING OF THE STEAM PRV VALVE WHICH SUPPLIES FGD AND AN ELECTRICAL GROUND. SPECIAL TESTING OF THE UNIT 11 BOILER - FGD SYSTEM WAS CONDUCTED BY TRW FOR EPA FROM JULY 17-28 WHICH REQUIRED THAT THE UNIT 11 RATE BE VARIED AND THAT THE SO2 REDUCTION UNIT BE DOWN FOR A PORTION OF THE PERIOD. IN ADDITION TO THE FGD OUTAGE REQUIRED BY THE TRW TESTING, FGD OUTAGES RESULTED FROM INSPECTION OF THE BOOSTER BLOWER SPEED REDUCER AND HIGH FLOW RESISTANCE IN THE SO2 REDUCTION UNIT.

8/79	SYSTEM	96.0			80.0				60.0	720	429

** PROBLEMS/SOLUTIONS/COMMENTS

DURING AUGUST UNIT 11 BOILER OPERATED ON HIGH SULFUR COAL. OUTAGES OCCURRED DUE TO FAILURE OF AN ELECTRICAL BUSS BREAKER AND WATER HAMMER IN A TURBINE REHEAT LINE.

THE FGD SYSTEM OUTAGES DURING AUGUST RESULTED FROM LOW OIL PRESSURE IN THE BOOSTER BLOWER LUBE SYSTEM AND HIGH FLOW RESISTANCE IN THE SO2 REDUCTION UNIT.

9/79	SYSTEM	91.0			75.0				73.0	720	523

NORTHERN INDIANA PUB SERVICE: DEAN H. MITCHELL 11 (CONT.)

PERIOD	MODULE	AVAILABILITY	OPERABILITY	RELIABILITY	UTILIZATION	% REMOVAL SO2	% REMOVAL PART.	PER HOURS	BOILER HOURS	FGD HOURS	CAP. FACTOR
		PERFORMANCE DATA									

** PROBLEMS/SOLUTIONS/COMMENTS

DURING THE MONTH OF SEPTEMBER THE UNIT 11 BOILER OPERATED ON HIGH SULFUR COAL. OUTAGES OCCURRED DUE TO AN ELECTRICAL SYSTEM MALFUNCTION AND A STEAM LEAK.

THE FGD OUTAGES DURING SEPTEMBER RESULTED FROM INSTRUMENT AND DRIVE TURBINE GOVERNOR PROBLEMS WITH THE BOOSTER BLOWER, A LEAK IN THE SO2 SUPERHEATER AND AN INTERRUPTION IN THE INSTRUMENT AIR SUPPLY TO THE SYSTEM.

10/79	SYSTEM	81.0			72.0		71.0		744		428

** PROBLEMS/SOLUTIONS/COMMENTS

THE BOILER OPERATED ON HIGH SULFUR COAL UNTIL OCTOBER 22 WHEN THE UNIT SHUTDOWN DUE TO A TURBINE BLADE FAILURE. IT WAS DECIDED TO START THE ANNUAL TURNAROUND AT THAT TIME.

THE FGD SYSTEM OUTAGES WERE REQUIRED FOR REPAIR OF THE BOOSTER BLOWER DRIVE GOVERNOR, AN ORFICE CONTACTOR CONTROL VALVE AND A GAS LEAK IN THE SO2 REDUCTION UNIT.

11/79	SYSTEM	.0			.0		.0		720		0

** PROBLEMS/SOLUTIONS/COMMENTS

THE BOILER AND FGD SYSTEM ANNUAL TURNAROUND WAS IN PROGRESS THROUGHOUT THE PERIOD.

SECTION 3
DESIGN AND PERFORMANCE DATA FOR OPERATIONAL DOMESTIC FGD SYSTEMS

COMPANY NAME	NORTHERN STATES POWER	
PLANT NAME	SHERBURNE	
UNIT NUMBER	1	
CITY	BECKER	
STATE	MINNESOTA	
REGULATORY CLASSIFICATION	D	
PARTICULATE EMISSION LIMITATION - NG/J	37.	(.087 LB/MMBTU)
SO2 EMISSION LIMITATION - NG/J	413.	(.960 LB/MMBTU)
NET PLANT GENERATING CAPACITY - MW	3200.0	
GROSS UNIT GENERATING CAPACITY - MW	740.0	
NET UNIT GENERATING CAPACITY W/FGD - MW	700.0	
NET UNIT GENERATING CAPACITY WO/FGD - MW	720.0	
EQUIVALENT SCRUBBED CAPACITY - MW	740.0	
** BOILER DATA		
SUPPLIER	COMBUSTION ENGINEERING	
TYPE	PULVERIZED COAL	
SERVICE LOAD	BASE	
COMMERCIAL SERVICE DATE	3/76	
MAXIMUM BOILER FLUE GAS FLOW - CU.M/S	1349.16	(2859000 ACFM)
FLUE GAS TEMPERATURE - C	154.4	(310 F)
STACK HEIGHT - M	198.	(650 FT)
STACK TOP DIAMETER - M	9.9	(32.6 FT)
** FUEL DATA		
FUEL TYPE	COAL	
FUEL GRADE	SUBBITUMINOUS	
AVERAGE HEAT CONTENT - J/C	19771.	(8500 BTU/LB)
RANGE HEAT CONTENT - BTU/LB		******
AVERAGE ASH CONTENT - %	9.00	
RANGE ASH CONTENT - %	******	
AVERAGE MOISTURE CONTENT - %	30.00	
RANGE MOISTURE CONTENT - %	******	
AVERAGE SULFUR CONTENT - %	.80	
RANGE SULFUR CONTENT - %	******	
AVERAGE CHLORIDE CONTENT - %	.03	
RANGE CHLORIDE CONTENT - %	******	
** PARTICULATE SCRUBBER		
NUMBER	12	
TYPE	VENTURI	
SUPPLIER	COMBUSTION ENGINEERING	
NUMBER OF STAGES	2	
SHELL MATERIAL	CARBON STEEL INLET, 316L SS SKIRT, 316L VENTURI	
LINING MATERIAL	NONE	
INTERNAL MATERIAL	316L SS RODS (2 ROWS OF 2.5 IN. DIA. RODS), CERA	
NUMBER OF NOZZLES	26	
TYPE OF NOZZLES	CERAMIC	
BOILER LOAD/SCRUBBER - %	9.0	
FLUE GAS CAPACITY - CU.M/S	122.6	(259900 ACFM)
FLUE GAS TEMPERATURE - C	154.4	(310 F)
LIQUID RECIRCULATION RATE - LITER/S	223.0	(3540 GPM)
L/G RATIO - LITER/CU.M	2.3	(17.0 GAL/1000ACF)
PRESSURE DROP - KPA	*******	(***** IN-H20)
SUPERFICIAL GAS VELOCITY - M/S	24.4	(80.0 FT/S)
** FGD SYSTEM		
SALEABLE PRODUCT/THROWAWAY PRODUCT	THROWAWAY PRODUCT	
GENERAL PROCESS TYPE	WET SCRUBBING	
PROCESS TYPE	LIMESTONE/ALKALINE FLYASH	
PROCESS ADDITIVES	NONE	
SYSTEM SUPPLIER	COMBUSTION ENGINEERING	
A-E FIRM	BLACK & VEATCH	
DEVELOPMENT LEVEL	FULL SCALE	
NEW/RETROFIT	NEW	
PARTICULATE DESIGN REMOVAL EFFICIENCY - %	99.00	
SO2 DESIGN REMOVAL EFFICIENCY - %	50.00	
COMMERCIAL DATE	5/76	
INITIAL START-UP	3/76	
ABSORBER SPARE CAPACITY INDEX - %	8.0	
ABSORBER SPARE COMPONENT INDEX	.9	

NORTHERN STATES POWER: SHERBURNE 1 (CONT.)

** ABSORBER	
NUMBER	11
TYPE	MOBILE PACKED TOWER
INITIAL START UP	3/76
SUPPLIER	COMBUSTION ENGINEERING
NUMBER OF STAGES	1
DIMENSIONS - FT	18 X 26.5 X 60
SHELL MATERIAL	CARBON STEEL (1/4 IN)
SHELL LINER MATERIAL	CEILCOTE FLAKEGLASS
INTERNAL MATERIAL	316L SS PERFORATED PLATE, FRP SPRAY HEADERS, GLA
NUMBER OF NOZZLES	54
NOZZLE TYPE	CERAMIC
BOILER LOAD/ABSORBER - %	9.0
GAS FLOW - CU.M/S	94.38 (200000 ACFM)
GAS TEMPERATURE - C	54.4 (130 F)
LIQUID RECIRCULATION RATE - LITER/S	120. (1900 GPM)
L/G RATIO - L/CU.M	1.3 (10.0 GAL/1000ACF)
PRESSURE DROP - KPA	.5 (2.0 IN-H2O)
SUPERFICAL GAS VELOCITY - M/SEC	9.4 (31.0 FT/S)
PARTICULATE INLET LOAD - G/CU.M	6.9 (3.000 GR/SCF)
PARTICULATE OUTLET LOAD- G/CU.M	.1 (.036 GR/SCF)
PARTICULATE REMOVAL EFFICIENCY - %	95.0
SO2 INLET CONCENTRATION - PPM	700
SO2 OUTLET CONTRATION - PPM	325
SO2 DESIGN REMOVAL EFFICIENCY - %	55.0
** ABSORBER	
NUMBER	1
TYPE	SPRAY TOWER
SUPPLIER	COMBUSTION ENGINEERING
DIMENSIONS - FT	26 X 18 X 60
SHELL MATERIAL	CARBON STEEL
INTERNAL MATERIAL	316L SS PLATES, CERAMIC NOZZLES
GAS FLOW - CU.M/S	94.38 (200000 ACFM)
GAS TEMPERATURE - C	54.4 (130 F)
L/G RATIO - L/CU.M	1.3 (10.0 GAL/1000ACF)
PRESSURE DROP - KPA	.5 (2.0 IN-H2O)
** FANS	
NUMBER	4
TYPE	SCRUBBER ID
CONSTRUCTION MATERIALS	CARBON STEEL
SERVICE - WET/DRY	DRY
CAPACITY - CU.M/S	94.38 (200000 ACFM)
** MIST ELIMINATOR	
NUMBER	12
TYPE	CHEVRON
CONSTRUCTION MATERIAL	FRP
CONFIGURATION	HORIZONTAL
NUMBER OF STAGES	2
NUMBER OF PASSES	3
FREEBOARD DISTANCE - M	4.27 (14.0 FT)
VANE SPACING - CM	10.2 (4.00 IN)
WASH SYSTEM	1ST STAGE, VERTICALLY UPWARD 180 DEG. ROTATABLE;
SUPERFICIAL GAS VELOCITY - M/S	9.4 (31.0 FT/S)
PRESSURE DROP - KPA	.1 (.5 IN-H2O)
** PROCESS CONTROL CHEMISTRY	
CONTROL VARIABLES	SLURRY PH, SLURRY SOLIDS, TANK LEVELS, PRESSURE
CONTROL RANGE	PRESSURE DROP 12 IN H2O, 10% SOLIDS, PH=5-5.5
CONTROL MANNER	AUTOMATIC
MODE	FEEDBACK
** PUMPS	
SERVICE	NUMBER
---	---
POND RETURN	1
THICKENER UNDERFLOW	1
MAKE-UP WATER	1
REHEAT WATER	2
ABSORBER RECIRCULATION	2

** TANKS

SERVICE	NUMBER
REACTION	1
MAKE-UP WATER	1
SLURRY MAKE-UP	1

** REHEATER

NUMBER	11
TYPE	IN-LINE
HEATING MEDIUM	280 F HOT WATER
TEMPERATURE BOOST - C	22.2 (40 F)
ENERGY REQUIRED	132 MM BTU/H

** THICKENER

NUMBER	1
TYPE	CENTER RAKE DRIVE
CONSTRUCTION MATERIAL	CONCRETE WITH CARBON STEEL SIDES
DIAMETER - M	48.8 (160 FT)
OUTLET SOLIDS - %	28.0

** WATER LOOP

TYPE	CLOSED

** REAGENT PREPARATION EQUIPMENT

NUMBER OF BALL MILLS	1
BALL MILL CAPACITY- M T/H	21.8 (24.0 TPH)
REAGENT PRODUCT - % SLURRY SOLIDS	60.0

** TREATMENT

TYPE	FORCED OXIDATION

** DISPOSAL

NATURE	FINAL
TYPE	LINED POND
LOCATION	ON-SITE
TRANSPORTATION	PUMPED
AREA - ACRES	500.0
CAPACITY - CU.M	30575000 (25000.0 ACRE-FT)

PERFORMANCE DATA

PERIOD	MODULE	AVAILABILITY	OPERABILITY	RELIABILITY	UTILIZATION	% REMOVAL SO2	% REMOVAL PART.	PER HOURS	BOILER HOURS	FGD HOURS	CAP. FACTOR
4/76	SYSTEM							720			

** PROBLEMS/SOLUTIONS/COMMENTS

A PRELIMINARY SYSTEM CHECKOUT WAS SUCCESFULLY COMPLETED BY PASSING AIR AND WATER THROUGH THE SYSTEM.

5/76	101		62.0								
	102		83.0								
	103		81.0								
	104		59.0								
	105		72.0								
	106		90.0								
	107		57.0								
	108		69.0								
	109		60.0								
	110		75.0								
	111		72.0								
	112		67.0								
	SYSTEM	86.0	100.0		88.3			744	657	657	60.0

** PROBLEMS/SOLUTIONS/COMMENTS

FIRST COMMERCIAL OPERATION COMMENCED MAY 1, 1976. THIS IS AN INTERMEDIATE LOAD UNIT OPERATING NEAR FULL CAPACITY DURING THE DAY AND 35 PERCENT CAPACITY AT NIGHT.

6/76	SYSTEM	84.0	100.0		95.6			720	688	688	73.0

NORTHERN STATES POWER: SHERBURNE 1 (CONT.)

PERIOD	MODULE	AVAILABILITY	OPERABILITY	RELIABILITY	UTILIZATION	% REMOVAL SO2	% REMOVAL PART.	PER HOURS	BOILER HOURS	FGD HOURS	CAP. FACTOR
		PERFORMANCE DATA									
	** PROBLEMS/SOLUTIONS/COMMENTS										
			MODIFICATIONS ARE CONTINUING ON THE SPRAY SYSTEM, SPRAY NOZZLES AND STRAINER SYSTEM.								
7/76	101		80.0								
	102		62.0								
	103		71.0								
	104		81.0								
	105		80.0								
	106		68.0								
	107		81.0								
	108		75.0								
	109		79.0								
	110		63.0								
	111		91.0								
	112		69.0								
	SYSTEM	84.0	100.0		68.8			744	512	512	51.0
	** PROBLEMS/SOLUTIONS/COMMENTS										
			THE SLURRY NOZZLES ARE FREQUENTLY PLUGGED BY PARTICLES ABOVE QUARTER INCH SIZE. STRAINER MODIFICATIONS ARE PLANNED TO ALLEVIATE THIS PROBLEM.								
			HARD SCALE GYPSUM FORMATION ON THE VESSEL WALLS HAS LEVELED OFF. THE CLEANING PROCESS CALLS FOR 3-4 MODULES TO BE TAKEN OUT OF SERVICE EACH NIGHT. THUS, EACH MODULE IS CLEANED ONCE EVERY 3 DAYS.								
			A CREW OF 70 PEOPLE IS REQUIRED TO MAINTAIN SCRUBBER OPERATIONS.								
			ATHE DEPOSITION OF SOFT SOLIDS IS STILL CONTINUING IN THE REHEATERS.								
			SOFT SOLIDS IN THE MIST ELIMINATORS ARE STILL CAUSING PROBLEMS.								
8/76	101		46.0								
	102		93.0								
	103		51.0								
	104		84.0								
	105		83.0								
	106		76.0								
	107		71.0								
	108		84.0								
	109		81.0								
	110		76.0								
	111		87.0								
	112		91.0								
	SYSTEM	94.0	100.0		94.8			744	705	705	80.0
9/76	101		87.0								
	102		90.0								
	103		93.0								
	104		76.0								
	105		76.0								
	106		79.0								
	107		85.0								
	108		79.0								
	109		85.0								
	110		80.0								
	111		92.0								
	112		96.0								
	SYSTEM	95.0	100.0		78.6			720	566	566	68.0
	** PROBLEMS/SOLUTIONS/COMMENTS										
			THE STRAINER SYSTEM IS BEING MODIFIED. THE DUPLEX UNITS ARE TO BE REPLACED BY IN-TANK SCREENS AND SOOT BLOWERS. BOTH ARE LOCATED AT THE SUCTION SIDE OF THE SPRAY WATER PUMP.								
			CARBON STEEL FIN TUBE REHEAT BUNDLES ARE AN AREA OF CONCERN. MULTIPLE								

PERIOD	MODULE	AVAILABILITY	OPERABILITY	RELIABILITY	UTILIZATION	% REMOVAL SO2	% REMOVAL PART.	PER HOURS	BOILER HOURS	FGD HOURS	CAP. FACTOR
			PERFORMANCE DATA								
			FAILURES IN FOUR UNITS HAVE BEEN EXPERIENCED.								
10/76	101		97.0								
	102		84.0								
	103		96.0								
	104		96.0								
	105		95.0								
	106		30.0								
	107		74.0								
	108		76.0								
	109		91.0								
	110		81.0								
	111		100.0								
	112		87.0								
	SYSTEM	92.9	100.0		61.5			744	606	606	
11/76	101		83.0								
	102		80.0								
	103		87.0								
	104		79.0								
	105		92.0								
	106		80.0								
	107		93.0								
	108		89.0								
	109		69.0								
	110		78.0								
	111		73.0								
	112		93.0								
	SYSTEM	93.0	100.0		100.0			720	720	720	92.0

** PROBLEMS/SOLUTIONS/COMMENTS

APPROXIMATELY ONE-THIRD OF THE STRAINER MODIFICATIONS ON MODULE 101 ARE COMPLETED.

THE UNIT IS CURRENTLY HAVING DIFFICULTY COMPLYING WITH THE 20 PERCENT OPACITY REGULATION DUE TO THE EXTREMELY FINE FLY ASH BEING EMITTED (70% LESS THAN 1 MICRON).

12/76	101		88.0								
	102		84.0								
	103		87.0								
	104		80.0								
	105		71.0								
	106		97.0								
	107		91.0								
	108		95.0								
	109		94.0								
	110		88.0								
	111		73.0								
	112		75.0								
	SYSTEM	95.0	100.0		97.0			744	722	722	91.0

** PROBLEMS/SOLUTIONS/COMMENTS

THE UTILITY IS NOW CONDUCTING A FULL-LOAD EVALUATION STUDY, ANALYZING SYSTEM OPERATION ON 10 MODULES VS. THE DESIGNED 11 MODULES.

1/77	101		94.0								
	102		75.0								
	103		99.0								
	104		76.0								
	105		96.0								
	106		77.0								
	107		70.0								
	108		92.0								
	109		81.0								
	110		40.0								
	111		75.0								

NORTHERN STATES POWER: SHERBURNE 1 (CONT.)

PERIOD	MODULE	AVAILABILITY	OPERABILITY	RELIABILITY	UTILIZATION	% REMOVAL SO2	% REMOVAL PART.	PER HOURS	BOILER HOURS	FGD HOURS	CAP. FACTOR
		PERFORMANCE DATA									
	112		95.0								
	SYSTEM	90.0	100.0		81.6			744	607	607	73.0
2/77	101		89.0								
	102		99.0								
	103		64.0								
	104		96.0								
	105		64.0								
	106		99.0								
	107		81.0								
	108		62.0								
	109		98.0								
	110		93.0								
	111		98.0								
	112		61.0								
	SYSTEM	91.0	100.0		90.6			672	609	609	83.0
3/77	101		47.0								
	102		92.0								
	103		95.0								
	104		93.0								
	105		93.0								
	106		95.0								
	107		88.0								
	108		93.0								
	109		95.0								
	110		83.0								
	111		78.0								
	112		72.0								
	SYSTEM	95.0	100.0		99.9			744	743	743	97.0

** PROBLEMS/SOLUTIONS/COMMENTS

ALL MODULES ARE NOW FITTED WITH IN-TANK STRAINERS.

4/77	101		84.0								
	102		65.0								
	103		92.0								
	104		95.0								
	105		96.0								
	106		62.0								
	107		73.0								
	108		91.0								
	109		58.0								
	110		93.0								
	111		90.0								
	112		88.0								
	SYSTEM	95.0	100.0		99.7			720	718	718	90.0
5/77	101		96.0								
	102		48.0								
	103		92.0								
	104		87.0								
	105		95.0								
	106		96.0								
	107		81.0								
	108		98.0								
	109		96.0								
	110		78.0								
	111		35.0								
	112		87.0								
	SYSTEM	92.0	100.0		41.9			744	312	312	37.0

** PROBLEMS/SOLUTIONS/COMMENTS

A SCHEDULED TURBINE OVERHAUL LASTED FROM MAY 14 TO JUNE 18.

6/77	101		76.0								
	102		77.0								

PERIOD	MODULE	AVAILABILITY	OPERABILITY	RELIABILITY	UTILIZATION	% REMOVAL SO2	% REMOVAL PART.	PER HOURS	BOILER HOURS	FGD HOURS	CAP. FACTOR
		PERFORMANCE DATA									
	103		75.0								
	104		75.0								
	105		30.0								
	106		87.0								
	107		58.0								
	108		44.0								
	109		61.0								
	110		80.0								
	111										
	112		83.0								
	SYSTEM	92.0	100.0		34.4			720	248	248	25.0
7/77	101		93.0								
	102		66.0								
	103		92.0								
	104		90.0								
	105		92.0								
	106		94.0								
	107		91.0								
	108		17.0								
	109		94.0								
	110		83.0								
	111		78.0								
	112		83.0								
	SYSTEM	97.0	100.0		98.9			744	736	736	90.0

** PROBLEMS/SOLUTIONS/COMMENTS

SOME STAINLESS STEEL MODIFICATIONS TOOK PLACE.

WHILE THE UNIT WAS OUT IN JUNE THE FGD SYSTEM WAS CLEANED. THIS CLEANING WAS CREDITED FOR ONE OF THE HIGHEST AVAILABILITIES EVER DEMONSTRATED ON THIS UNIT.

8/77	101		85.0								
	102		89.0								
	103		66.0								
	104		55.0								
	105		81.0								
	106		90.0								
	107		83.0								
	108		79.0								
	109		72.0								
	110		85.0								
	111		90.0								
	112		66.0								
	SYSTEM	95.0	100.0		86.0			744	640	640	68.0

** PROBLEMS/SOLUTIONS/COMMENTS

SOME ANGLES WERE INSTALLED ON THE PRIMARY CONTACTOR RODS TO RESIST EROSION.

9/77	101		86.0								
	102		85.0								
	103		88.0								
	104		92.0								
	105		88.0								
	106		62.0								
	107		83.0								
	108		90.0								
	109		86.0								
	110		77.0								
	111		77.0								
	112		82.0								
	SYSTEM	95.0	100.0		95.3			720	686	686	81.0

NORTHERN STATES POWER: SHERBURNE 1 (CONT.)

PERIOD	MODULE	AVAILABILITY	OPERABILITY	RELIABILITY	UTILIZATION	% REMOVAL SO2	% REMOVAL PART.	PER HOURS	BOILER HOURS	FGD HOURS	CAP. FACTOR
		PERFORMANCE DATA									

** PROBLEMS/SOLUTIONS/COMMENTS

TWENTY-FOUR PUMPS ARE BEING COMPLETELY OVERHAULED.

MODULE 106 SPRAY WATER PUMP WAS OVERHAULED IN SEPTEMBER.

10/77	101		70.0								
	102		81.0								
	103		95.0								
	104		97.0								
	105		63.9								
	106		35.0								
	107		87.0								
	108		99.0								
	109		96.0								
	110		39.0								
	111		58.0								
	112		96.0								
	SYSTEM	88.0	100.0		81.9			744	609	609	68.0

** PROBLEMS/SOLUTIONS/COMMENTS

STRAINER/WASHER SCREEN EROSION HAS BEEN A PROBLEM. REPAIR AND REPLACEMENT HAS BEEN CONTINUALLY NECESSARY. 316 SS MATERIAL WILL BE USED IN THE FUTURE.

11/77	101		77.0								
	102		91.0								
	103		42.0								
	104		86.0								
	105		79.0								
	106		82.0								
	107		87.0								
	108		91.0								
	109		89.0								
	110		89.0								
	111		92.0								
	112		52.0								
	SYSTEM	92.0	100.0		97.9			720	705	705	81.0

** PROBLEMS/SOLUTIONS/COMMENTS

THE REPLACEMENT PROGRAM HAS BEGUN ON DECEMBER 21, 1977. IT TAKES 4 TO 6 DAYS FOR WORK ON EACH MODULE TO REPLACE THE STRAINER SYSTEM.
MODULE 107 HAD HIGH MAINTENANCE ALONG WITH THE STRAINERS REPLACEMENT.

12/77	101		97.0								
	102		90.0								
	103		95.0								
	104		94.0								
	105		71.0								
	106		92.0								
	107		26.0								
	108		67.0								
	109		96.0								
	110		98.0								
	111		95.0								
	112		90.0								
	SYSTEM	93.0	100.0		74.9			744	557	557	62.0
1/78	101		83.0								
	102		63.0								
	103		88.0								
	104		73.0								
	105		84.0								
	106		84.0								
	107		92.0								
	108		64.0								

PERIOD	MODULE	AVAILABILITY	OPERABILITY	RELIABILITY	UTILIZATION	% REMOVAL SO2	% REMOVAL PART.	PER HOURS	BOILER HOURS	FGD HOURS	CAP. FACTOR
			PERFORMANCE DATA								
	109		91.0								
	110		80.0								
	111		88.0								
	112		82.0								
	SYSTEM	92.0	100.0		87.1			744	648	648	71.0
2/78	101										
	102		93.0								
	103		92.0								
	104		89.0								
	105		74.0								
	106		85.0								
	107		89.0								
	108		88.0								
	109		76.0								
	110		86.0								
	111		88.0								
	112		87.0								
	SYSTEM	92.0	100.0		94.6			672	676	636	77.0

** PROBLEMS/SOLUTIONS/COMMENTS

MODULES WHICH ARE SHOWING AVAILABILITY OF LESS THAN 80 PERCENT, ARE THOSE IN WHICH THE STRAINER MODIFICATIONS WERE PERFOMED.

A BULK ENTRAINMENT SEPARATOR WAS INSTALLED ALONG WITH A KOCH WASH TRAY.

3/78	101		71.0								
	102		83.0								
	103		64.0								
	104		89.0								
	105		90.0								
	106		83.0								
	107		62.0								
	108		89.0								
	109		97.0								
	110		71.0								
	111		79.0								
	112		90.0								
	SYSTEM	92.0	100.0		90.9			744	676	676	80.0
4/78	101		92.0								
	102		87.0								
	103		87.0								
	104		44.0								
	105		81.0								
	106		85.0								
	107		91.0								
	108		86.0								
	109		92.0								
	110		91.0								
	111		87.0								
	112		52.0								
	SYSTEM	95.0	100.0		99.0			720	713	713	91.0

** PROBLEMS/SOLUTIONS/COMMENTS

STRAINER MODIFICATIONS WERE PERFORMED ON MODULES 104 AND 112.

5/78	101		61.0								
	102		86.0								
	103		80.0								
	104		86.0								
	105		80.0								
	106		64.0								
	107		60.0								
	108		83.0								
	109		80.0								
	110		71.0								

NORTHERN STATES POWER: SHERBURNE 1 (CONT.)

PERIOD	MODULE	AVAILABILITY	OPERABILITY	RELIABILITY	UTILIZATION	% REMOVAL SO2	% REMOVAL PART.	PER HOURS	BOILER HOURS	FGD HOURS	CAP. FACTOR
			PERFORMANCE DATA								
	111		87.0								
	112		79.0								
	SYSTEM	95.0	100.0		85.3			744	635	635	72.0
6/78	101		50.0								
	102		84.0								
	103		85.0								
	104		85.0								
	105		62.0								
	106		78.0								
	107		55.0								
	108		83.0								
	109		88.0								
	110		82.0								
	111		72.0								
	112		95.0								
	SYSTEM	93.0	100.0		99.6			720	717	717	81.0
7/78	101		82.0								
	102		76.0								
	103		71.0								
	104		74.0								
	105		75.0								
	106		52.0								
	107		75.0								
	108		63.0								
	109		62.0								
	110		72.0								
	111		66.0								
	112		73.0								
	SYSTEM	95.0	100.0		93.3			744	694	694	75.0

** PROBLEMS/SOLUTIONS/COMMENTS

THE OCCURRANCE OF PLUGGING PROBLEMS IN THE MIST ELIMINATOR HAS BEEN MORE FREQUENT THAN NORMAL.

THE STRAINER MODIFICATIONS CONTINUED IN JULY.

THE UTILITY IS EVALUATING NEW RUBBER LINED PUMPS (8000 GPM) TO HELP CORRECT THE REHEATER AND MIST ELIMINATOR PLUGGING PROBLEMS.

THE OCCURANCE OF PLUGGING PROBLEMS IN THE REHEATER HAS BEEN MORE FREQUENT THAN NORMAL

THE UTILITY IS PREPARING FOR THE STATE COMPLIANCE DEADLINE ON NOV. 1, 1978. CURRENTLY TESTING HAS BEEN PROCEEDING ON DIFFERENT MODULES IN AN EFFORT TO FINE TUNE THE SYSTEM.

THE FGD SYSTEM HAS BEEN EXPERIENCING PRIMARY CONTACTOR WALL AND MARBLE BED WEAR.

THE UTILITY IS EVALUATING NEW STAINLESS STEEL MIST ELIMINATOR WASH LANCES (TO REPLACE THE ORIGINAL FIBERGLASS LANCES) TO HELP CORRECT THE REHEATER AND MIST ELIMINATOR PLUGGING PROBLEMS.

8/78	101		64.0								
	102		65.0								
	103		73.0								
	104		63.0								
	105		65.0								
	106		80.0								
	107		81.0								
	108		73.0								
	109		63.0								
	110		73.0								
	111		64.0								
	112		83.0								
	SYSTEM	91.0	100.0		99.7			744	742	742	79.0

PERIOD	MODULE	AVAILABILITY	OPERABILITY	RELIABILITY	UTILIZATION	% REMOVAL SO2	% REMOVAL PART.	PER HOURS	BOILER HOURS	FGD HOURS	CAP. FACTOR
		PERFORMANCE DATA									
9/78	101		89.0								
	102		62.0								
	103		77.0								
	104		77.0								
	105		58.0								
	106		82.0								
	107		68.0								
	108		68.0								
	109		80.0								
	110		80.0								
	111		55.0								
	112		75.0								
	SYSTEM	97.0	100.0		49.6			720	357	357	36.0

** PROBLEMS/SOLUTIONS/COMMENTS

DIFFERENT MIST ELIMINATOR SPRAY PATTERNS ARE BEING TESTED AS POSSIBLE SOLUTION TO THE MIST ELIMINATOR PLUGGING PROBLEM REFERRED TO IN JULY.

THE BOILER WAS TAKEN OFF LINE ON SEPTEMBER 15, 1978 FOR A SCHEDULED ANNUAL BOILER AND TURBINE INSPECTION. THE BOILER CAME BACK ON LINE IN THE MIDDLE OF OCTOBER.

THE RUBBER LINED PUMPS THAT THE UTILITY WAS INVESTIGATING IN JULY, 1978 HAVE BEEN ORDERED. FOUR OF THE PUMPS HAVE BEEN RECEIVED AND ONE IS INSTALLED. THE OTHERS WILL BE INSTALLED AS THEY ARE RECEIVED.

10/78	101		95.0								
	102		65.0								
	103		88.0								
	104		81.0								
	105		71.0								
	106		78.0								
	107		77.0								
	108		63.0								
	109		85.0								
	110		61.0								
	111		84.0								
	112		70.0								
	SYSTEM	92.0	100.0		50.4			744	375	375	37.0

** PROBLEMS/SOLUTIONS/COMMENTS

THE 2 IN. DIA. SS RODS IN THE PRIMARY CONTACTOR WERE REPLACED WITH 6(518) DIA. CERAMIC COATED C.S. RODS. THE CERAMIC SLEEVES ARE 9/16 IN. THICK. THE MODULE IS BEING PREPARED FOR FURTHER TESTING.

11/78	101		42.0								
	102		51.0								
	103		88.0								
	104		81.0								
	105		71.0								
	106		78.0								
	107		77.0								
	108		63.0								
	109		85.0								
	110		61.0								
	111		84.0								
	112		70.0								
	SYSTEM	92.0	100.0		99.2			720	714	714	79.0
12/78	101		77.0								
	102		73.0								
	103		77.0								
	104		73.0								
	105		86.0								
	106		87.0								
	107		93.0								

NORTHERN STATES POWER: SHERBURNE 1 (CONT.)

PERIOD	MODULE	AVAILABILITY	OPERABILITY	RELIABILITY	UTILIZATION	% REMOVAL SO2	% REMOVAL PART.	PER HOURS	BOILER HOURS	FGD HOURS	CAP. FACTOR
			PERFORMANCE DATA								
	108		85.0								
	109		93.0								
	110		86.0								
	111		90.0								
	112		89.0								
	SYSTEM	94.0	100.0		98.5			744	733	733	76.5

** PROBLEMS/SOLUTIONS/COMMENTS

THE PROBLEMS ENCOUNTERED WERE MAINLY WEATHER RELATED.

THE TESTING ON MODULE 101 HAS BEEN COMPLETED BUT NO RESULTS ARE YET AVAILABLE.

THERE WERE PROBLEMS WITH THE COAL FEEDER BELTS RESULTING IN MOVING COAL FROM COAL STOCKPILES TO THE BOILER.

1/79	101		72.0								
	102		39.0								
	103		76.0								
	104		95.0								
	105		73.0								
	106		95.0								
	107		81.0								
	108		89.0								
	109		96.0								
	110		92.0								
	111		83.0								
	112		93.0								
	SYSTEM	94.0	100.0		92.5			744	688	688	65.8
2/79	101		78.0		78.0						
	102		73.0		73.0						
	103		70.0		70.0						
	104		76.0		76.0						
	105		50.0		50.0						
	106		91.0		91.0						
	107		92.0		92.0						
	108		92.0		92.0						
	109		75.0		75.0						
	110		77.0		77.0						
	111		66.0		66.0						
	112		93.0		93.0						
	SYSTEM	89.0	100.0		100.0			672	672	672	67.9
3/79	101		61.0		60.1						
	102		88.0		86.8						
	103		45.0		44.4						
	104		86.0		84.8						
	105		94.0		92.7						
	106		71.0		70.0						
	107		91.0		89.8						
	108		73.0		72.0						
	109		91.0		89.8						
	110		80.0		78.9						
	111		89.0		87.8						
	112		80.0		78.9						
	SYSTEM	92.0	100.0		98.7			744	734	734	59.4

** PROBLEMS/SOLUTIONS/COMMENTS

THE ONLY MAJOR PROBLEM REPORTED BY THE UTILITY WAS BOILER RELATED - SPECIFICALLY PROBLEMS WITH WET COAL.

CURRENTLY THE UTILITY IS INCREASING THE RECYCLE PUMP CAPACITY BY INSTALLING 8000 GPM WORTHINGTON RECYCLE PUMPS. DURING THIS PERIOD THEY HAVE BEEN INSTALLED ON MODULES 101,103,104,105,107, AND 110.

4/79	SYSTEM	93.0	100.0		86.4			720	622	622	
5/79	SYSTEM	98.0	100.0		91.1			744	678	678	

PERIOD	MODULE	AVAILABILITY	OPERABILITY	RELIABILITY	UTILIZATION	% REMOVAL SO2	% REMOVAL PART.	PER HOURS	BOILER HOURS	FGD HOURS	CAP. FACTOR
		PERFORMANCE DATA									

** PROBLEMS/SOLUTIONS/COMMENTS

THE UTILITY WILL NOW REPORT THE TOTAL SYSTEM AVAILABILITY ONLY.

THE UTILITY HAD NO OPERATIONAL DIFFICULTIES TO REPORT.

6/79	SYSTEM	93.0	100.0		97.4			720	701	701

** PROBLEMS/SOLUTIONS/COMMENTS

THE UTILITY REPORTED THAT SOME GENERAL PLUGGING WAS EXPERIENCED DURING JUNE BUT IT WAS NOT SERIOUS.

7/79	SYSTEM	93.0	100.0		93.4			744	695	695
8/79	SYSTEM	95.0	100.0		100.0			744	744	744
9/79	SYSTEM	92.0	100.0		23.1			720	166	166

** PROBLEMS/SOLUTIONS/COMMENTS

ON SEPTEMBER 8 THE UNIT WENT DOWN FOR THE ANNUAL BOILER/TURBINE INSPECTION AND IS EXPECTED TO BE OFF LINE UNTIL THE LAST WEEK OF OCTOBER.

10/79	SYSTEM	77.0						744	9	
11/79	SYSTEM	97.0						720	522	
12/79	SYSTEM	95.0						744	744	

** PROBLEMS/SOLUTIONS/COMMENTS

THE UNIT WAS SUPPOSED TO BE BACK ON LINE IN OCTOBER AFTER THE ANNUAL BOILER/TURBINE INSPECTION; BUT, CONTAMINATES IN THE MAIN TURBINE OIL MADE IT NECESSARY TO CONTINUE THE OUTAGE UNTIL THE SECOND WEEK OF NOVEMBER.

PRESENTLY THE UTILITY IS SELECTIVELY REMOVING MARBLE BEDS FROM SERVICE TO TEST THE FEASIBILITY OF CONVERTING THE FGD MODULES TO SPRAY TOWERS.

ALL PIPING HAS BEEN CONVERTED FROM CARBON STEEL TO FIBERGLASS.

SECTION 3
DESIGN AND PERFORMANCE DATA FOR OPERATIONAL DOMESTIC FGD SYSTEMS

COMPANY NAME	NORTHERN STATES POWER	
PLANT NAME	SHERBURNE	
UNIT NUMBER	2	
CITY	BECKER	
STATE	MINNESOTA	
REGULATORY CLASSIFICATION	D	
PARTICULATE EMISSION LIMITATION - NG/J	37.	(.087 LB/MMBTU)
SO2 EMISSION LIMITATION - NG/J	413.	(.960 LB/MMBTU)
NET PLANT GENERATING CAPACITY - MW	3200.0	
GROSS UNIT GENERATING CAPACITY - MW	740.0	
NET UNIT GENERATING CAPACITY W/FGD - MW	700.0	
NET UNIT GENERATING CAPACITY WO/FGD - MW	720.0	
EQUIVALENT SCRUBBED CAPACITY - MW	740.0	
** BOILER DATA		
SUPPLIER	COMBUSTION ENGINEERING	
TYPE	PULVERIZED COAL	
SERVICE LOAD	BASE	
COMMERCIAL SERVICE DATE	0/77	
MAXIMUM BOILER FLUE GAS FLOW - CU.M/S	1349.16	(2859000 ACFM)
FLUE GAS TEMPERATURE - C	154.4	(310 F)
STACK HEIGHT - M	198.	(650 FT)
STACK TOP DIAMETER - M	9.9	(32.6 FT)
** FUEL DATA		
FUEL TYPE	COAL	
FUEL GRADE	SUBBITUMINOUS	
AVERAGE HEAT CONTENT - J/G	19761.	(8500 BTU/LB)
RANGE HEAT CONTENT - BTU/LB		******
AVERAGE ASH CONTENT - %	9.00	
RANGE ASH CONTENT - %	******	
AVERAGE MOISTURE CONTENT - %	25.00	
RANGE MOISTURE CONTENT - %	******	
AVERAGE SULFUR CONTENT - %	.80	
RANGE SULFUR CONTENT - %	******	
AVERAGE CHLORIDE CONTENT - %	.03	
RANGE CHLORIDE CONTENT - %	******	
** PARTICULATE SCRUBBER		
NUMBER	12	
TYPE	VENTURI	
SUPPLIER	COMBUSTION ENGINEERING	
NUMBER OF STAGES	2	
SHELL MATERIAL	CARBON STEEL INLET, 316L SS SKIRT, 316L VENTURI	
LINING MATERIAL	NONE	
INTERNAL MATERIAL	316L SS RODS (2 ROWS OF 2.5 IN. DIA. RODS), CERA	
NUMBER OF NOZZLES	26	
TYPE OF NOZZLES	CERAMIC	
BOILER LOAD/SCRUBBER - %	9.0	
FLUE GAS CAPACITY - CU.M/S	122.6	(259900 ACFM)
FLUE GAS TEMPERATURE - C	154.4	(310 F)
LIQUID RECIRCULATION RATE - LITER/S	223.0	(3540 GPM)
L/G RATIO - LITER/CU.M	2.3	(17.0 GAL/1000ACF)
PRESSURE DROP - KPA	*******	(***** IN-H2O)
SUPERFICIAL GAS VELOCITY - M/S	24.4	(80.0 FT/S)
** FGD SYSTEM		
SALEABLE PRODUCT/THROWAWAY PRODUCT	THROWAWAY PRODUCT	
GENERAL PROCESS TYPE	WET SCRUBBING	
PROCESS TYPE	LIMESTONE/ALKALINE FLYASH	
PROCESS ADDITIVES	NONE	
SYSTEM SUPPLIER	COMBUSTION ENGINEERING	
A-E FIRM	BLACK & VEATCH	
DEVELOPMENT LEVEL	FULL SCALE	
NEW/RETROFIT	NEW	
PARTICULATE DESIGN REMOVAL EFFICIENCY - %	99.00	
SO2 DESIGN REMOVAL EFFICIENCY - %	50.00	
COMMERCIAL DATE	4/77	
INITIAL START-UP	4/77	
ABSORBER SPARE CAPACITY INDEX - %	8.0	
ABSORBER SPARE COMPONENT INDEX	.9	

NORTHERN STATES POWER: SHERBURNE 2 (CONT.)

** ABSORBER		
NUMBER	12	
TYPE	MOBILE PACKED TOWER	
INITIAL START UP	4/77	
SUPPLIER	COMBUSTION ENGINEERING	
NUMBER OF STAGES		
DIMENSIONS - FT	18 X 26.5 X 60	
SHELL MATERIAL	CARBON STEEL (1/4 IN)	
SHELL LINER MATERIAL	CEILCOTE FLAKEGLASS	
INTERNAL MATERIAL	316L SS PERFORATED PLATE, FRP SPRAY HEADERS, GLA	
NUMBER OF NOZZLES	54	
NOZZLE TYPE	CERAMIC	
BOILER LOAD/ABSORBER - %	9.0	
GAS FLOW - CU.M/S	94.38	(200000 ACFM)
GAS TEMPERATURE - C	54.4	(130 F)
LIQUID RECIRCULATION RATE - LITER/S	120.	(1900 GPM)
L/G RATIO - L/CU.M	1.3	(10.0 GAL/1000ACF)
PRESSURE DROP - KPA	.5	(2.0 IN-H20)
SUPERFICAL GAS VELOCITY - M/SEC	9.4	(31.0 FT/S)
PARTICULATE INLET LOAD - G/CU.M	6.9	(3.000 GR/SCF)
PARTICULATE OUTLET LOAD- G/CU.M	.1	(.036 GR/SCF)
PARTICULATE REMOVAL EFFICIENCY - %	99.0	
SO2 INLET CONCENTRATION - PPM	701	
SO2 OUTLET CONTRATION - PPM	325	
SO2 DESIGN REMOVAL EFFICIENCY - %	55.0	
** FANS		
NUMBER	4	
TYPE	SCRUBBER ID	
CONSTRUCTION MATERIALS	CARBON STEEL	
SERVICE - WET/DRY	DRY	
CAPACITY - CU.M/S	94.38	(200000 ACFM)
** MIST ELIMINATOR		
NUMBER	12	
TYPE	CHEVRON	
CONSTRUCTION MATERIAL	FRP	
CONFIGURATION	HORIZONTAL	
NUMBER OF STAGES	2	
NUMBER OF PASSES	3	
FREEBOARD DISTANCE - M	4.27	(14.0 FT)
VANE SPACING - CM	10.2	(4.00 IN)
WASH SYSTEM	1ST STAGE, VERTICALLY UPWARD 180 DEG. ROTATABLE;	
SUPERFICIAL GAS VELOCITY - M/S	9.4	(31.0 FT/S)
PRESSURE DROP - KPA	.1	(.5 IN-H20)
** PROCESS CONTROL CHEMISTRY		
CONTROL VARIABLES	SLURRY PH, SLURRY SOLIDS, TANK LEVELS, PRESSURE	
CONTROL RANGE	PRESSURE DROP 12 IN H20, 10% SOLIDS, PH=5-5.5	
CONTROL MANNER	AUTOMATIC	
MODE	FEEDBACK	
** PUMPS		
SERVICE	NUMBER	
---	---	
POND RETURN	1	
THICKENER UNDERFLOW	1	
MAKE-UP WATER	1	
REHEAT WATER	2	
SCRUBBER RECIRCULATION	2	
ABSORBER RECIRCULATION	12	
** TANKS		
SERVICE	NUMBER	
---	---	
REACTION	1	
MAKE-UP WATER	1	
SLURRY MAKE-UP	1	
** REHEATER		
NUMBER	11	
TYPE	IN-LINE	
HEATING MEDIUM	280 F HOT WATER	
TEMPERATURE BOOST - C	22.2	(40 F)
ENERGY REQUIRED	132 MM BTU/H	

NORTHERN STATES POWER: SHERBURNE 2 (CONT.)

** THICKENER		
NUMBER	1	
TYPE	CENTER RAKE DRIVE	
DIAMETER - M	48.8	(160 FT)
OUTLET SOLIDS - %	28.0	
** WATER LOOP		
TYPE	OPEN	
** REAGENT PREPARATION EQUIPMENT		
NUMBER OF BALL MILLS	1	
BALL MILL CAPACITY- M T/H	21.8	(24.0 TPH)
REAGENT PRODUCT - % SLURRY SOLIDS	60.0	
** TREATMENT		
TYPE	FORCED OXIDATION	
** DISPOSAL		
NATURE	FINAL	
TYPE	LINED POND	
LOCATION	ON-SITE	
TRANSPORTATION	PUMPED	
AREA - ACRES	500.0	
CAPACITY - CU.M	30575000	(25000.0 ACRE-FT)

PERFORMANCE DATA

PERIOD	MODULE	AVAILABILITY	OPERABILITY	RELIABILITY	UTILIZATION	% REMOVAL SO2	% REMOVAL PART.	PER HOURS	BOILER HOURS	FGD HOURS	CAP. FACTOR
4/77	201										
	202		95.0								
	203		93.0								
	204		87.0								
	205		83.0								
	206		84.0								
	207		94.0								
	208		88.0								
	208		74.0								
	209		91.0								
	210		87.0								
	211		85.0								
	212		86.0								
	SYSTEM	92.0	100.0		96.8			720	697	697	78.0
5/77	211		91.0								
	212		98.0								
	209		94.0								
	208		98.0								
	206		100.0								
	203		44.0								
	204		95.0								
	201		33.0								
	202		100.0								
	SYSTEM	91.0	100.0		86.6			744	644	644	75.0
6/77	201		92.0								
	202		76.0								
	203		78.0								
	204		79.0								
	205		89.0								
	206		74.0								
	207		67.0								
	208		88.0								
	209		88.0								
	210		78.0								
	211		45.0								
	212		85.0								
	SYSTEM	96.0	100.0		100.0			720	720	720	83.0

PERIOD	MODULE	AVAILABILITY	OPERABILITY	RELIABILITY	UTILIZATION	% REMOVAL SO2	% REMOVAL PART.	PER HOURS	BOILER HOURS	FGD HOURS	CAP. FACTOR
			PERFORMANCE DATA								

** PROBLEMS/SOLUTIONS/COMMENTS

CRACKING AND BUBBLING OF THE CEILCOTE LINING HAS BEEN OBSERVED ABOVE THE LIQUID LEVEL OF THE INTERNAL RECYCLE TANK.

7/77	201		96.0								
	202		87.0								
	203		86.0								
	204		97.0								
	205		96.0								
	206		88.0								
	207		88.0								
	208		95.0								
	209		57.0								
	210		93.0								
	211		94.0								
	212		87.0								
	SYSTEM	97.0	100.0		80.9			744	602	602	72.0
8/77	201		88.0								
	202		75.0								
	203		67.0								
	204		82.0								
	205		84.0								
	206		35.0								
	207		81.0								
	208		80.0								
	209		56.0								
	210		79.0								
	211		71.0								
	212		33.0								
	SYSTEM	93.0	100.0		90.7			744	675	675	69.0

** PROBLEMS/SOLUTIONS/COMMENTS

THE SPRAY PUMPS WERE OVERHAULED DURING AUGUST.

THE SPRAY NOZZLES REQUIRED EXTENSIVE CLEANING.

9/77	201		89.0								
	202		61.0								
	203		82.0								
	204		90.0								
	205		81.0								
	206		82.0								
	207		52.0								
	209		56.0								
	210		87.0								
	211		73.0								
	212		86.0								
	208		88.0								
	SYSTEM	94.0	100.0		99.6			720	717	717	83.0

** PROBLEMS/SOLUTIONS/COMMENTS

THE STRAINERS IN THE REACTION TANKS HAVE STARTED ERODING. NSP ANTICIPATES REPLACING THEM VERY SOON.

10/77	201		98.0								
	202		89.0								
	203		87.0								
	204		86.0								
	205		62.0								
	207		98.0								
	206		99.0								
	208		93.0								
	209		96.0								
	210		96.0								

NORTHERN STATES POWER: SHERBURNE 2 (CONT.)

PERIOD	MODULE	AVAILABILITY	OPERABILITY	RELIABILITY	UTILIZATION	% REMOVAL SO2	% REMOVAL PART.	PER HOURS	BOILER HOURS	FGD HOURS	CAP. FACTOR
		PERFORMANCE DATA									
	212		81.0								
	211		70.0								
	SYSTEM	95.0	100.0		91.9			744	684	684	85.0

** PROBLEMS/SOLUTIONS/COMMENTS

THE LOW OPERABILITIES ARE DUE TO SPRAY WATER PUMP OVERHAULS. 24 PUMPS ARE BEING OVERHAULED.

STRAINER/WASHER SCREEN EROSION HAS BEEN A PROBLEM. 316 SS MATERIAL WILL BE USED IN THE FUTURE. REPLACEMENT MATERIAL IS EXPECTED TO ARRIVE IN DECEMBER AND WORK IS EXPECTED TO LAST FOR THREE MONTHS.

11/77	201		85.0								
	202		93.0								
	203		62.0								
	204		80.0								
	205		93.0								
	206		73.0								
	207		75.0								
	208		66.0								
	209		94.0								
	210		77.0								
	211		91.0								
	212		65.0								
	SYSTEM	91.0	100.0		99.3			720	715	715	85.0
12/77	201		53.0								
	202		93.0								
	203		94.0								
	204		81.0								
	205		89.0								
	206		95.0								
	207		93.0								
	208		83.0								
	209		62.0								
	210		82.0								
	211		90.0								
	212		92.0								
	SYSTEM	93.0	100.0		98.5			744	733	733	84.0
1/78	201		91.0								
	202		75.0								
	203		64.0								
	204		72.0								
	205		74.0								
	206		67.0								
	207		91.0								
	208		88.0								
	209		77.0								
	210		72.0								
	211		73.0								
	212		84.0								
	SYSTEM	92.0	100.0		91.7			744	682	682	73.0

** PROBLEMS/SOLUTIONS/COMMENTS

THE REPLACEMENT OF STRAINER SCREENS BEGAN ON DECEMBER 21. IT TAKES 4-6 DAYS FOR WORK ON EACH MODULE.

2/78	201		83.0								
	202		85.0								
	203		55.0								
	204		91.0								
	205		89.0								
	206		76.0								
	207		71.0								
	208		89.0								
	209		85.0								

PERIOD	MODULE	AVAILABILITY	OPERABILITY	RELIABILITY	UTILIZATION	% REMOVAL SO2	% REMOVAL PART.	PER HOURS	BOILER HOURS	FGD HOURS	CAP. FACTOR
			PERFORMANCE DATA								
	210		81.0								
	211		97.0								
	212		60.0								
	SYSTEM	92.0	100.0		92.3			672	620	620	77.0

** PROBLEMS/SOLUTIONS/COMMENTS

STRAINER MODIFICATIONS WERE PERFORMED ON MODULES 203 AND 212.

3/78	201		82.0								
	202		92.0								
	203		90.0								
	204		83.0								
	205		78.0								
	206		85.0								
	207		91.0								
	208		62.0								
	209		83.0								
	210		78.0								
	211		88.0								
	212		89.0								
	SYSTEM	97.0	100.0		100.0			744	744	744	92.0

** PROBLEMS/SOLUTIONS/COMMENTS

THE UNIT GENERATED MAXIMUM MEGAWATT-HOURS AND THE FGD SYSTEM TIED THE HIGHEST RECORDED AVAILABILITY OF 97%.

MODULE 201 WAS CONVERTED TO A SPRAY TOWER DURING APRIL.

STRAINER MODIFICATIONS WERE PERFORMED ON MODULES 208 AND 210.

4/78	201		70.0								
	202		82.0								
	203		90.0								
	204		84.0								
	205		91.0								
	206		83.0								
	207		84.0								
	208		86.0								
	209		78.0								
	210		90.0								
	211		67.0								
	212		85.0								
	SYSTEM	92.0	100.0		99.9			720	719	719	85.0

** PROBLEMS/SOLUTIONS/COMMENTS

FROM FULL SCALE STARTUP ON APRIL 1, THE SYSTEM HAS BEEN OPERATING VERY WELL WITH NO MAJOR PROBLEMS ENCOUNTERED. THE UTILITY IS MAINTAINING A SCHEDULE OF NIGHTLY CLEANING ON THE SCRUBBERS. THE CURRENT SCHEME IS SUCH THAT EACH MODULE IS CLEANED AFTER 7-8 DAYS.

5/78	201		97.0								
	202		94.0								
	203		80.0								
	204		90.0								
	205		90.0								
	206		89.0								
	207		90.0								
	208		92.0								
	209		28.0								
	210		91.0								
	211		78.0								
	212		14.0								
	SYSTEM	91.0	100.0		16.1			744	120	120	13.0

NORTHERN STATES POWER: SHERBURNE 2 (CONT.)

PERIOD	MODULE	AVAILABILITY	OPERABILITY	RELIABILITY	UTILIZATION	% REMOVAL SO2	% REMOVAL PART.	PER HOURS	BOILER HOURS	FGD HOURS	CAP. FACTOR
		PERFORMANCE DATA									
	** PROBLEMS/SOLUTIONS/COMMENTS										
		THERE WERE LINER FAILURES (CEILCOTE) IN MOST OF THE MODULES DURING MAY. THE LINERS WERE REPAIRED BY THE CEILCOTE COMPANY AT THEIR OWN EXPENSE.									
		THE UNIT WENT DOWN ON MAY 6 FOR THE FIRST YEAR BOILER AND TURBINE INSPECTION AND WAS DOWN THE REMAINDER OF MAY.									
6/78	201		77.0								
	202		46.0								
	203		41.0								
	204		67.0								
	205		62.0								
	206		62.0								
	208		78.0								
	209		60.0								
	210		62.0								
	211		76.0								
	212		75.0								
	SYSTEM	95.0	100.0		79.4			720	572	572	64.0
7/78	201		87.0								
	202		89.0								
	203		62.0								
	204		93.0								
	205		90.0								
	206		64.0								
	207		86.0								
	208		67.0								
	209		64.0								
	210		81.0								
	211		73.0								
	212		71.0								
	SYSTEM	95.0	100.0		92.3			744	697	687	75.0
	** PROBLEMS/SOLUTIONS/COMMENTS										
		THE UTILITY IS EVALUATING NEW RUBBER LINED PUMPS (8000 GPM) AS POSSIBLE SOLUTIONS TO THE MIST ELIMINATOR AND REHEATER PLUGGING PROBLEMS.									
		THE UTILITY IS EVALUATING NEW STAINLESS STEEL MIST ELIMINATOR WASH LANCES (TO REPLACE ORIGINAL FIBERGLASS LANCES).									
		THE FGD SYSTEM HAS BEEN EXPERIENCING PRIMARY CONTACTOR WALL AND MARBLE BED WEAR.									
		THE UTILITY IS PREPARING FOR THE STATE COMPLIANCE DEADLINE ON NOVEMBER 1. CURRENTLY TESTING HAS BEEN PROCEEDING ON DIFFERENT MODULES IN AN EFFORT TO FINE TUNE THE SYSTEM.									
		PLUGGING PROBLEMS IN THE REHEATER HAVE BEEN MORE FREQUENT THAN NORMAL.									
		THE UTILITY IS IN THE PROCESS OF REPLACING THE ORIGINAL ZURN DUPLEX STRAINERS THEM WITH 316 SS STRAINERS.									
		THE INLET SEAL STRIPS WERE REPAIRED.									
		PLUGGING PROBLEMS IN THE MIST ELIMINATOR HAVE BEEN MORE FREQUENT THAN NORMAL.									
8/78	201		88.0								
	202		100.0								
	203		48.0								
	204		79.0								
	205		81.0								
	206		72.0								
	207		64.0								
	208		87.0								

PERIOD	MODULE	AVAILABILITY	OPERABILITY	RELIABILITY	UTILIZATION	% REMOVAL SO2	% REMOVAL PART.	PER HOURS	BOILER HOURS	FGD HOURS	CAP. FACTOR
		PERFORMANCE DATA									
	209		54.0								
	210		76.0								
	211		80.0								
	212		71.0								
	SYSTEM	93.0	100.0		93.4			744	695	695	73.0

** PROBLEMS/SOLUTIONS/COMMENTS

NO FGD RELATED OUTAGES WERE REPORTED BY THE UTILITY FOR THE AUGUST-SEPTEMBER REPORT PERIOD.

9/79	201		72.0								
	202		83.0								
	203		70.0								
	204		61.0								
	205		74.0								
	206		64.0								
	207		82.0								
	208		72.0								
	209		75.0								
	210		73.0								
	211		82.0								
	212		68.0								
	SYSTEM	96.0	100.0		100.0			720	720	720	78.0

** PROBLEMS/SOLUTIONS/COMMENTS

THE RUBBER LINED PUMPS THAT THE UTILITY WAS INVESTIGATING HAVE BEEN ORDERED. FOUR OF THE PUMPS HAVE BEEN RECEIVED AND ONE IS INSTALLED. THE OTHERS WILL BE INSTALLED AS THEY ARE RECEIVED.

DIFFERENT MIST ELIMINATOR SPRAY PATTERNS ARE BEING TESTED.

10/79	201		90.0								
	202		79.0								
	203		59.0								
	204		73.0								
	205		69.0								
	206		64.0								
	207		78.0								
	208		76.0								
	209		72.0								
	210		69.0								
	211		72.0								
	212		82.0								
	SYSTEM	94.0	100.0		92.5			744	688	688	72.0

** PROBLEMS/SOLUTIONS/COMMENTS

DURING OCTOBER MODULE 203 EXPERIENCED STRAINER PLUGGAGE.

DURING OCTOBER MODULE 203 EXPERIENCED REHEATER PROBLEMS WHICH TOGETHER WITH STRAINER PLUGGING CAUSED A 4 TO 5 DAY OUTAGE.

11/78	201		84.0								
	202		45.0								
	203		82.0								
	204		80.0								
	205		75.0								
	206		58.0								
	207		77.0								
	208		75.0								
	209		83.0								
	210		83.0								
	211		72.0								
	212		47.0								
	SYSTEM	92.0	100.0		65.6			720	472	472	47.0

NORTHERN STATES POWER: SHEREURNE 2 (CONT.)

PERIOD	MODULE	AVAILABILITY	OPERABILITY	RELIABILITY	UTILIZATION	% REMOVAL SO2	% REMOVAL PART.	PER HOURS	BOILER HOURS	FGD HOURS	CAP. FACTOR
		PERFORMANCE DATA									

** PROBLEMS/SOLUTIONS/COMMENTS

THE LOW NOVEMBER BOILER HOURS RESULTED FROM A TURBINE INSPECTION.

NORMAL OVERHAUL MAINTENANCE WAS PERFORMED ON THE SPRAY PUMPS OF MODULES 202 AND 212.

12/79	201		85.0								
	202		92.0								
	203		89.0								
	204		84.0								
	205		84.0								
	206		84.0								
	207		96.0								
	208		88.0								
	209		78.0								
	210		92.0								
	211		81.0								
	212		94.0								
	SYSTEM	94.0	100.0		98.5			744	733	733	77.2

** PROBLEMS/SOLUTIONS/COMMENTS

THE PROBLEMS ENCOUNTERED WERE MAINLY WEATHER RELATED.

THERE WERE PROBLEMS WITH THE COAL FEEDER BELTS RESULTING IN MOVING COAL FROM COAL STOCKPILES TO THE BOILER.

1/79	201		57.0								
	202		89.0								
	203		91.0								
	204		85.0								
	205		92.0								
	206		82.0								
	207		75.0								
	208		97.9								
	209		74.0								
	210		88.0								
	211		100.0								
	212		90.0								
	SYSTEM	94.0	100.0		92.5			744	688	688	69.8
2/79	201		86.0								
	202		84.0								
	204		89.0								
	205		59.0								
	206		76.0								
	207		72.0								
	208		68.0								
	209		80.0								
	210		75.0								
	211		92.0								
	212		65.0								
	SYSTEM	93.0	100.0		99.9			672	671	671	
3/79	201		85.0								
	202		69.0								
	203		78.0								
	204		47.0								
	205		71.0								
	206		76.0								
	207		90.0								
	208		78.0								
	209		50.0								
	210		85.0								
	211		57.0								
	212		86.0								
	SYSTEM	91.0	100.0		100.0			744	744	744	

PERFORMANCE DATA

PERIOD	MODULE	AVAILABILITY	OPERABILITY	RELIABILITY	UTILIZATION	% REMOVAL SO2	% REMOVAL PART.	PER HOURS	BOILER HOURS	FGD HOURS	CAP. FACTOR
** PROBLEMS/SOLUTIONS/COMMENTS											
			THE ONLY REAL PROBLEMS ENCOUNTERED DURING THIS PERIOD WERE PROBLEMS WITH WET COAL.								
			THE RECYCLE PUMPS ARE BEING REPLACED WITH LARGER 8000 GPM WORTHINGTON PUMPS. DURING THIS PERIOD THE PUMPS WERE INSTALLED ON MODULES 204 AND 206.								
4/79	SYSTEM	99.0	100.0		99.6			720	717	717	
5/79	SYSTEM	95.0	100.0		35.3			744	263	263	
** PROBLEMS/SOLUTIONS/COMMENTS											
			THE LOW BOILER HOURS IN MAY WERE DUE TO COMMENCEMENT OF THE ANNUAL BOILER AND TURBINE INSPECTION.								
			ALL PIPING HAS BEEN CHANGED TO FIBERGLASS.								
			THE UTILITY WILL NOW REPORT THE AVAILABILITY OF THE TOTAL SYSTEM ONLY.								
6/79	SYSTEM	90.0	100.0		63.1			720	454	454	
** PROBLEMS/SOLUTIONS/COMMENTS											
			THE ONLY PROBLEM REPORTED BY THE UTILITY WAS THE LOSS OF A BOILER SURGE PUMP AFTER THE UNIT RESTARTED.								
7/79	SYSTEM	95.0	100.0		99.6			744	741	741	
8/79	SYSTEM	96.0	100.0		99.5			744	740	740	
9/79	SYSTEM	95.0	100.0		91.3			720	657	657	
** PROBLEMS/SOLUTIONS/COMMENTS											
			NO MAJOR OPERATIONAL PROBLEMS HAVE BEEN ENCOUNTERED WITH THIS UNIT SINCE IT CAME BACK ON LINE AFTER THE ANNUAL BOILER/TURBINE OVERHAUL.								
10/79	SYSTEM	94.0						744	732		
11/79	SYSTEM	97.0						720	719		
12/79	SYSTEM	97.0						744	662		
** PROBLEMS/SOLUTIONS/COMMENTS											
			NO MAJOR BOILER OR FGD OPERATIONAL PROBLEMS WERE ENCOUNTERED DURING THIS PERIOD.								

SECTION 3
DESIGN AND PERFORMANCE DATA FOR OPERATIONAL DOMESTIC FGD SYSTEMS

COMPANY NAME	PACIFIC POWER & LIGHT	
PLANT NAME	JIM BRIDGER	
UNIT NUMBER	4	
CITY	ROCK SPRINGS	
STATE	WYOMING	
REGULATORY CLASSIFICATION	D	
PARTICULATE EMISSION LIMITATION - NG/J	43.	(.100 LB/MMBTU)
SO2 EMISSION LIMITATION - NG/J	86.	(.200 LB/MMBTU)
NET PLANT GENERATING CAPACITY - MW	2034.4	
GROSS UNIT GENERATING CAPACITY - MW	550.0	
NET UNIT GENERATING CAPACITY W/FGD - MW	507.8	
NET UNIT GENERATING CAPACITY WO/FGD - MW	509.0	
EQUIVALENT SCRUBBED CAPACITY - MW	550.0	
** BOILER DATA		
SUPPLIER	COMBUSTION ENGINEERING	
TYPE	PULVERIZED COAL	
SERVICE LOAD	BASE	
COMMERCIAL SERVICE DATE	**/**	
MAXIMUM BOILER FLUE GAS FLOW - CU.M/S	1283.57	(2720000 ACFM)
FLUE GAS TEMPERATURE - C	*******	(**** F)
STACK HEIGHT - M	152.	(500 FT)
STACK TOP DIAMETER - M	*******	(***** FT)
** FUEL DATA		
FUEL TYPE	COAL	
FUEL GRADE	SUBBITUMINOUS	
AVERAGE HEAT CONTENT - J/G	21632.	(9300 BTU/LB)
RANGE HEAT CONTENT - BTU/LB		******
AVERAGE ASH CONTENT - %	9.00	
RANGE ASH CONTENT - %	******	
AVERAGE MOISTURE CONTENT - %	11.00	
RANGE MOISTURE CONTENT - %	******	
AVERAGE SULFUR CONTENT - %	.56	
RANGE SULFUR CONTENT - %	******	
AVERAGE CHLORIDE CONTENT - %	.01	
RANGE CHLORIDE CONTENT - %	******	
** ESP		
TYPE	COLD SIDE	
SUPPLIER	CARBORUNDUM	
PARTICULATE DESIGN REMOVAL EFFICIENCY - %	99.0	
** PARTICULATE SCRUBBER		
TYPE	NONE	
** FGD SYSTEM		
SALEABLE PRODUCT/THROWAWAY PRODUCT	THROWAWAY PRODUCT	
GENERAL PROCESS TYPE	WET SCRUBBING	
PROCESS TYPE	SODIUM CARBONATE	
SYSTEM SUPPLIER	AIR CORRECTION DIVISION, UOP	
A-E FIRM	BECHTEL	
CONSTRUCTION FIRM	LACKENBY (UOP SUBCONTRACTOR)	
DEVELOPMENT LEVEL	FULL SCALE	
NEW/RETROFIT	NEW	
PARTICULATE DESIGN REMOVAL EFFICIENCY - %	99.00	
SO2 DESIGN REMOVAL EFFICIENCY - %	91.00	
COMMERCIAL DATE	2/80	
INITIAL START-UP	9/79	
CONTRACT AWARDED	10/76	
** ABSORBER		
NUMBER	3	
TYPE	TRAY TOWER	
INITIAL START UP	9/79	
NUMBER OF STAGES	1	
SHELL MATERIAL	CARBON STEEL	
SHELL LINER MATERIAL	RUBBER	
INTERNAL MATERIAL	SIEVE TRAYS 317L SS	

PACIFIC POWER & LIGHT: JIM BRIDGER 4 (CONT.)

** MIST ELIMINATOR
VANE ANGLES — 45 DEG.

** PUMPS

SERVICE	NUMBER
ABSORBER RECIRCULATION	****

** THICKENER
OUTLET SOLIDS - % — 18.0

** WATER LOOP
TYPE — CLOSED

** DISPOSAL
NATURE — FINAL
TYPE — POND
TRANSPORTATION — PUMPED
AREA - ACRES — 80.0

PERFORMANCE DATA

PERIOD	MODULE	AVAILABILITY	OPERABILITY	RELIABILITY	UTILIZATION	% REMOVAL SO2	% REMOVAL PART.	PER HOURS	BOILER HOURS	FGD HOURS	CAP. FACTOR
10/79	SYSTEM							744			
11/79	SYSTEM							720			
12/79	SYSTEM							744			

** PROBLEMS/SOLUTIONS/COMMENTS

THE UNIT STARTED OPERATIONS AS SCHEDULED IN SEPTEMBER 1979. PRESENTLY THEY ARE IN THE START UP PHASE WITH COMMERCIAL OPERATION SCHEDULED FOR FEBRUARY.

SECTION 3
DESIGN AND PERFORMANCE DATA FOR OPERATIONAL DOMESTIC FGD SYSTEMS

COMPANY NAME	PENNSYLVANIA POWER	
PLANT NAME	BRUCE MANSFIELD	
UNIT NUMBER	1	
CITY	SHIPPINGPORT	
STATE	PENNSYLVANIA	
REGULATORY CLASSIFICATION	D	
PARTICULATE EMISSION LIMITATION - NG/J	15.	(.035 LB/MMBTU)
SO2 EMISSION LIMITATION - NG/J	258.	(.600 LB/MMBTU)
NET PLANT GENERATING CAPACITY - MW	2751.0	
GROSS UNIT GENERATING CAPACITY - MW	917.0	
NET UNIT GENERATING CAPACITY W/FGD - MW	825.0	
NET UNIT GENERATING CAPACITY WO/FGD - MW	880.0	
EQUIVALENT SCRUBBED CAPACITY - MW	917.0	
** BOILER DATA		
SUPPLIER	FOSTER WHEELER	
TYPE	PULVERIZED COAL	
SERVICE LOAD	BASE	
COMMERCIAL SERVICE DATE	6/76	
MAXIMUM BOILER FLUE GAS FLOW - CU.M/S	1580.86	(3350000 ACFM)
FLUE GAS TEMPERATURE - C	140.6	(285 F)
STACK HEIGHT - M	290.	(950 FT)
STACK TOP DIAMETER - M	5.8	(19.0 FT)
** FUEL DATA		
FUEL TYPE	COAL	
FUEL GRADE	BITUMINOUS	
AVERAGE HEAT CONTENT - J/G	26749.	(11500 BTU/LB)
RANGE HEAT CONTENT - BTU/LB		11000-11950
AVERAGE ASH CONTENT - %	12.90	
RANGE ASH CONTENT - %	11.5-13.5	
AVERAGE MOISTURE CONTENT - %	7.00	
RANGE MOISTURE CONTENT - %	5.5-8.5	
AVERAGE SULFUR CONTENT - %	3.00	
RANGE SULFUR CONTENT - %	1.75-3.75	
AVERAGE CHLORIDE CONTENT - %	********	
RANGE CHLORIDE CONTENT - %	******	
** PARTICULATE SCRUBBER		
NUMBER	6	
TYPE	VENTURI	
SUPPLIER	CHEMICO	
NUMBER OF STAGES	1	
SHELL MATERIAL	CARBON STEEL	
LINING MATERIAL	POLYESTER FLAKEGLASS	
INTERNAL MATERIAL	PLUMB BOB AND 2 SETS OF SPRAYS, 317 SS AND 316 S	
TYPE OF NOZZLES	TANGENTIAL FEED [1 SET AT THROAT,1 AT BOTTOM]	
BOILER LOAD/SCRUBBER - %	17.0	
FLUE GAS CAPACITY - CU.M/S	263.5	(558333 ACFM)
FLUE GAS TEMPERATURE - C	140.6	(285 F)
LIQUID RECIRCULATION RATE - LITER/S	1386.0	(22000 GPM)
L/G RATIO - LITER/CU.M	5.3	(40.0 GAL/1000ACF)
PRESSURE DROP - KPA	*******	(***** IN-H2O)
SUPERFICIAL GAS VELOCITY - M/S	61.0	(200.0 FT/S)
PARTICULATE INLET LOAD - G/CU.M	17.7	(7.75 GR/SCF)
PARTICULATE OUTLET LOAD - G/CU.M	.0	(.016 GR/SCF)
PARTICULATE DESIGN REMOVAL EFFICIENCY - %	99.8	
SO2 INLET CONCENTRATION - PPM	3090.000	
SO2 OUTLET CONCENTRATION - PPM	930.000	
SO2 DESIGN REMOVAL EFFICIENCY - %	70.0	
** FGD SYSTEM		
SALEABLE PRODUCT/THROWAWAY PRODUCT	THROWAWAY PRODUCT	
GENERAL PROCESS TYPE	WET SCRUBBING	
PROCESS TYPE	LIME	
PROCESS ADDITIVES	MG (2-6%)	
SYSTEM SUPPLIER	CHEMICO	
A-E FIRM	GILBERT/COMMONWEALTH ASSOCIATES	
DEVELOPMENT LEVEL	FULL SCALE	
NEW/RETROFIT	NEW	
PARTICULATE DESIGN REMOVAL EFFICIENCY - %	99.80	
SO2 DESIGN REMOVAL EFFICIENCY - %	92.10	
COMMERCIAL DATE	6/76	

PENNSYLVANIA POWER: BRUCE MANSFIELD 1 (CONT.)

INITIAL START-UP	12/75
ABSORBER SPARE CAPACITY INDEX - %	.0
ABSORBER SPARE COMPONENT INDEX	.0

** ABSORBER

NUMBER	6
TYPE	VENTURI
INITIAL START UP	12/75
SUPPLIER	CHEMICO
NUMBER OF STAGES	
DIMENSIONS - FT	34 DIA X 51.5 HIGH
SHELL MATERIAL	CARBON STEEL
SHELL LINER MATERIAL	POLYESTER FLAKEGLASS
INTERNAL MATERIAL	CARBON STEEL, FLAKEGLSASS LINING (2 SETS OF SPAR
NOZZLE TYPE	TANGENTIAL FEED
BOILER LOAD/ABSORBER - %	17.0
GAS FLOW - CU.M/S	201.31 (426600 ACFM)
GAS TEMPERATURE - C	52.8 (127 F)
LIQUID RECIRCULATION RATE - LITER/S	1222. (19400 GPM)
L/G RATIO - L/CU.M	6.0 (45.0 GAL/1000ACF)
PRESSURE DROP - KPA	2.0 (8.0 IN-H2O)
SUPERFICAL GAS VELOCITY - M/SEC	30.5 (100.0 FT/S)
PARTICULATE OUTLET LOAD- G/CU.M	.0 (.016 GR/SCF)
SO2 INLET CONCENTRATION - PPM	930
SO2 OUTLET CONTRATION - PPM	240
SO2 DESIGN REMOVAL EFFICIENCY - %	92.1

** FANS

NUMBER	12
TYPE	BOILER ID
CONSTRUCTION MATERIALS	INCOLOY 825 ON HOUSINGS; INCONEL 625 SCROLLS AND
SERVICE - WET/DRY	WET
CAPACITY - CU.M/S	263.32 (558000 ACFM)

** MIST ELIMINATOR

NUMBER	6
TYPE	CHEVRON
CONSTRUCTION MATERIAL	FRP
CONFIGURATION	HORIZONTAL
NUMBER OF STAGES	1
NUMBER OF PASSES	4
VANE SPACING - CM	7.6 (3.00 IN)
VANE ANGLES	90 DEG.
WASH SYSTEM	OVERSPRAY (ONCE PER SHIFT), UNDERSPRAY (CONTINUO
SUPERFICIAL GAS VELOCITY - M/S	3.0 (10.0 FT/S)
PRESSURE DROP - KPA	.1 (.6 IN-H2O)

** MIST ELIMINATOR

NUMBER	6
TYPE	CHEVRON
CONSTRUCTION MATERIAL	FRP
CONFIGURATION	HORIZONTAL
NUMBER OF STAGES	1
NUMBER OF PASSES	4
VANE SPACING - CM	7.6 (3.00 IN)
VANE ANGLES	90 DEG.
WASH SYSTEM	OVERSPRAY (ONCE PER SHIFT), UNDERSPRAY (CONTINUO
SUPERFICIAL GAS VELOCITY - M/S	3.0 (10.0 FT/S)
PRESSURE DROP - KPA	.1 (.6 IN-H2O)

** PROCESS CONTROL CHEMISTRY

CONTROL VARIABLES	PH SLURRY SOLIDS, LIQUID LEVEL, LIQUID FLOW
CONTROL RANGE	PH 6.8-7.2
CONTROL MANNER	AUTOMATIC
MODE	FEEDBACK
SENSOR LOCATION	PH-RECIRCULATING LINES AND THICKENER

** PUMPS

SERVICE	NUMBER
VENTURI RECIRCULATION	24
SLURRY FEED	4
LIME SLURRY RECIRCULATION	4
ABSORBER RECIRCULATION	24
THICKENER UNDERFLOW	4
THICKENER TRANSFER	4

PENNSYLVANIA POWER: BRUCE MANSFIELD 1 (CONT.)

** TANKS

SERVICE	NUMBER
THICKENER UNDERFLOW	****
MIXING TANK [CALCILOX & THCKNR UNDRF	2
SLUDGE TRANSFER	****
MIXING TANK [SPENT SLURRY & FLYASH]	****
RECYCLE (SCRUBBER)	6
RECYCLE (ABSORBER)	6

** THICKENER

NUMBER	1	
TYPE	RAKE DRIVE	
CONSTRUCTION MATERIAL	CARBON STEEL	
DIAMETER - M	61.0	(200 FT)
OUTLET SOLIDS - %	30.0	

** WATER LOOP

TYPE	OPEN

** REAGENT PREPARATION EQUIPMENT

NUMBER OF SLAKERS	2	
SLAKER CAPACITY - M T/H	20.0	(22.0 TPH)

** TREATMENT

TYPE	CALCILOX
CONTRACTOR	DRAVO
PRODUCT CHARACTERISTICS	CONSISTENCY OF GRANULAR SOIL

** DISPOSAL

NATURE	FINAL	
TYPE	LANDFILL	
LOCATION	OFF-SITE	
TRANSPORTATION	PUMPED	
AREA - ACRES	1400.0	
CAPACITY - CU.M	59927000	(49000.0 ACRE-FT)

PERFORMANCE DATA

PERIOD	MODULE	AVAILABILITY	OPERABILITY	RELIABILITY	UTILIZATION	% REMOVAL SO2	% REMOVAL PART.	PER HOURS	BOILER HOURS	FGD HOURS	CAP. FACTOR
12/75	A										
	B										
	C										
	D										
	E										
	F										
	SYSTEM							744			

** PROBLEMS/SOLUTIONS/COMMENTS

INITIAL OPERATION (SHAKEDOWN AND DEBUGGING) FOR PART OF THE SYSTEM COMMENCED IN DECEMBER 1975.

0/76 SYSTEM

** PROBLEMS/SOLUTIONS/COMMENTS

SINCE THE UNIT COMMENCED COMMERCIAL OPERATIO IN APRIL 1976, A NUMBER OF PROBLEM AREAS HAVE BEEN ENCOUNTERED. MAJOR AREAS OF CONCERN ARE SPECIFIED BELOW:

1. EXCESSIVE MAINTENANCE PROBLEMS WITH THE WET I.D. FAN HOUSINGS.
2. EXCESSIVE WATER ENTRAINMENT AND CARRY OVER OUT OF THE STACK CAUSING A STACK RAIN PROBLEM.
3. REHEAT BURNER PROBLEMS.
4. STACK FLUE LINER FAILURES.

1/76 SYSTEM 744

PERIOD	MODULE	AVAILABILITY	OPERABILITY	RELIABILITY	UTILIZATION	% REMOVAL SO2	% REMOVAL PART.	PER HOURS	BOILER HOURS	FGD HOURS	CAP. FACTOR
		PERFORMANCE DATA									

** PROBLEMS/SOLUTIONS/COMMENTS

THE UNIT SHUT DOWN FOR ONE WEEK DUE TO PLUGGED MIST ELIMINATORS.

AN I.D. FAN HOUSING VIBRATION CAUSED PART OF THE ONE WEEK OUTAGE, ALONG WITH THE MIST ELIMINATORS.

2/76	SYSTEM							696			

** PROBLEMS/SOLUTIONS/COMMENTS

FIRST ATTEMPTS AT STARTING UP THE REHEAT BURNERS WERE MADE THIS MONTH. SO MANY PROBLEMS WERE ENCOUNTERED THAT THE VENDOR IS GOING TO REDESIGN NEW REHEAT BURNERS.

3/76	SYSTEM							744			
4/76	SYSTEM	100.0	100.0	100.0	70.3			720	506	506	

** PROBLEMS/SOLUTIONS/COMMENTS

TOTAL OPERATING HOURS ACCUMULATED TO DATE ARE AS FOLLOWS: 0, 210, 984, 2147, 2832, AND 2427 FOR MODULES A THROUGH F RESPECTIVELY. THE SCRUBBING SYSTEM IS CURRENTLY HANDLING FLUE GAS AT A TOTAL EQUIVALENT CAPACITY OF APPROXIMATELY 640 MW (GROSS).

5/76	A		35.1		28.1						
	B		100.0		61.3						
	C		99.5		79.6						
	D		82.7		66.1						
	E		100.0		63.6						
	F		62.9		66.3						
	SYSTEM	80.0	100.0	100.0	80.0			744	595	595	

** PROBLEMS/SOLUTIONS/COMMENTS

THE LAST SCRUBBER TRAIN WAS PLACED IN SERVICE DURING THE MONTH. DURING OFF PEAK HOURS ON THE WEEKENDS WHEN THE UNIT IS OPERATING AT REDUCED LOADS, MAINTENANCE IS PERFORMED ON THE SHUT DOWN FGD MODULES SO THAT THEY WILL BE IN OPERATING CONDITION FOR FULL LOAD OPERATION DURING THE HIGH DEMAND HOURS.

6/76	A				99.2						
	B				94.4						
	C				97.4						
	D				93.6						
	E				97.9						
	F				79.6						
	SYSTEM	100.0	100.0	100.0	100.0			720	720	720	

** PROBLEMS/SOLUTIONS/COMMENTS

THE UNIT WAS DECLARED COMMERCIALLY AVAILABLE FOR FULL LOAD OPERATION AT 825 MW (NET) ON JUNE 1, 1976. OVER THE PERIOD A REVISED SCRUBBER BAFFLE SYSTEM WAS INSTALLED IN AN EFFORT TO CORRECT THE SCRUBBER RECYCLE PUMP CAVITATION PROBLEMS.

7/76	A		79.8		72.2						
	B		87.7		99.2						
	C		90.0		81.2						
	D		94.7		85.3						
	E		98.4		68.5						
	F		98.2		88.3						
	SYSTEM	90.0	100.0	100.0	90.0			744	673	673	

PENNSYLVANIA POWER: BRUCE MANSFIELD 1 (CONT.)

PERIOD	MODULE	AVAILABILITY	OPERABILITY	RELIABILITY	UTILIZATION	% REMOVAL SO2	% REMOVAL PART.	PER HOURS	BOILER HOURS	FGD HOURS	CAP. FACTOR
		PERFORMANCE DATA									

** PROBLEMS/SOLUTIONS/COMMENTS

THE SYSTEM SUPPLIER IS STILL TRYING TO SOLVE THE REHEAT BURNER PROBLEMS.

TESTS CONDUCTED THIS MONTH SHOWED THAT THE FGD SYSTEM MIST ELIMINATORS ARE NOT PERFORMING TO DESIGN AND THAT THERE IS EXCESSIVE WATER ENTRAINED IN THE CLEANED FLUE GASSES CAUSING A STACK RAIN PROBLEM. CHEMICO IS WORKING ON THE DESIGN OF ADDITIONAL MIST ELIMINATORS THAT WILL REMOVE THIS EXCESS WATER.

8/76	A		95.3		90.3						
	B		87.9		83.3						
	C		92.6		87.8						
	D		75.9		71.9						
	E		70.9		67.2						
	F		94.8		89.8						
	SYSTEM	95.0	100.0	100.0	95.0			744	705	705	

** PROBLEMS/SOLUTIONS/COMMENTS

SECONDARY VERTICAL MIST ELIMINATORS WERE INSTALLED IN THE ABSORBER DISCHARGE DUCT IN AN ATTEMPT TO REDUCE THE EXCESSIVE ENTRAINED WATER. THEY DID NOT WORK BECAUSE THE FLUE GAS BLEW THEM APART IN A FEW MINUTES OF OPERATION.

9/76	A		98.3		98.3						
	B		85.7		85.7						
	C		96.3		96.3						
	D		96.5		96.5						
	E		82.8		82.8						
	F		64.4		64.4						
	SYSTEM	100.0	100.0	100.0	100.0			720	720	720	
10/76	A		96.1		95.4						
	B		74.3		73.8						
	C		85.4		84.8						
	D		83.8		83.2						
	E		93.5		92.9						
	F		93.5		92.9						
	SYSTEM	99.0	100.0	100.0	99.0			744	739	739	
11/76	A		97.5		37.5						
	B		100.0		38.6						
	C		100.0		39.2						
	D		40.8		15.7						
	E		57.4		22.1						
	F		88.8		34.2						
	SYSTEM	39.0	100.0	100.0	38.0			720	277	277	

** PROBLEMS/SOLUTIONS/COMMENTS

A THREE WEEK OUTAGE OCCURRED DUE TO A FURNACE IMPLOSION.

DURING THE OUTAGE SCALE THROUGHOUT THE FGD SYSTEM WAS REMOVED.

DURING THE THREE WEEK OUTAGE THE UNIT 1 CHIMNEY FLUES WERE INSPECTED. THE A-SIDE FLUE POLYESTER LINING MATERIAL WAS FLAKING OFF AND ACID ATTACK WAS STARTING TO CORRODE THE CARBON STEEL FLUE. THE LINING SUPPLIER IS INVESTIGATING THE PROBLEM.

DURING THE OUTAGE THE PLUGGED MIST ELIMINATORS WERE CLEANED.

12/76	A		80.9		78.5						
	B		100.0		97.5						
	C		94.7		91.9						
	D		60.0		58.2						
	E		86.1		83.6						

PERIOD	MODULE	AVAILABILITY	OPERABILITY	RELIABILITY	UTILIZATION	% REMOVAL SO2	% REMOVAL PART.	PER HOURS	BOILER HOURS	FGD HOURS	CAP. FACTOR
	F		86.7		84.1						
	SYSTEM	100.0	100.0	100.0	97.0			744	722	722	
1/77	A	95.0	98.0		89.0						
	B	92.0	91.0		82.0						
	C	77.0	74.0		68.0						
	D	95.0	98.0		89.0						
	E	92.0	93.0		84.0						
	F	91.0	91.0		83.0						
	SYSTEM	90.3	100.0		90.7			744	675	675	

** PROBLEMS/SOLUTIONS/COMMENTS

SEVERE WINTER WEATHER MADE OPERATION OF THE OUTDOOR FGD SYSTEM VERY DIFFICULT AND AFFECTED THE RELIABILITY OF THE UNIT.

DURING THE FIRST PART OF THE MONTH THE THICKENER RAKE MECHANISM JAMMED AND COULD NOT BE REPAIRED. THE THICKENER WAS OPERATED FOR APPROXIMATELY THREE WEEKS WITH THE RAKE STOPPED UNTIL THE UNIT 2 THICKENER COULD BE PUT INTO EMERGENCY SERVICE.

2/77	A	77.0	81.0		65.0						
	B	69.0	70.0		56.0						
	C	77.0	81.0		65.0						
	D	86.0	96.0		77.0						
	E	92.0	100.0		81.0						
	F	81.0	84.0		67.0						
	SYSTEM	80.3	100.0		80.4			672	540	540	

** PROBLEMS/SOLUTIONS/COMMENTS

A SECOND SET OF VERTICAL SECONDARY MIST ELIMINATORS WAS INSTALLED IN THE ABSORBER DISCHARGE DUCT BUT THE FLUE GAS BLEW THEM OUT BEFORE THEIR EFFICIENCY FOR REMOVING ENTRAINED WATER IN THE FLUE GAS COULD BE TESTED.

3/77	A	99.0	98.0		34.8						
	B	100.0	100.0		35.5						
	C	58.0	59.0		20.4						
	D	95.0	95.0		33.9						
	E	97.0	97.0		34.5						
	F	80.0	77.0		27.2						
	SYSTEM	88.2	100.0		35.5			744	264	264	

** PROBLEMS/SOLUTIONS/COMMENTS

AT 0000 MARCH 12, THE UNIT WAS SHUT DOWN FOR A 10-WEEK TURBINE OVERHAUL OUTAGE.

DURING THE MARCH OUTAGE REPAIRS WERE STARTED ON THE A-SIDE CHIMNEY FLUE WHICH WILL NOT BE COMPLETED UNTIL THE END OF AUGUST. AN INSPECTION OF THE B-SIDE CHIMNEY FLUE SHOWED THE SAME TYPE OF REPAIRS WOULD BE NEEDED, BUT WORK WILL NOT START ON THE B-SIDE UNTIL THE A-SIDE FLUE HAS BEEN REPAIRED. BECAUSE OF THESE REPAIRS THE UNIT WILL BE OPERATING AT APPROXIMATELY HALF LOAD FOR ROUGHLY ONE YEAR.

BECAUSE OF THE EXCESSIVE MAINTENANCE REQUIRED ON THE RUBBER LINED CARBON STEEL I.D. FAN HOUSINGS FROM PIECES OF SCRUBBER SCALE DAMAGING THE LINING AND CORROSION OF THE CARBON STEEL, INCONEL PLATE WILL BE INSTALLED ON THE SCROLL AREA OF EACH OF THE SIX FANS DURING THE OUTAGE.

A NEWLY DESIGNED SECONDARY VERTICAL MIST ELIMINATOR WILL BE INSTALLED IN THE ABSORBER DISCHARGE DUCT OF ONE OF THE SCRUBBER MODULES DURING THE OUTAGE.

DURING THE OUTAGE ALL SCRUBBING VESSELS, DUCTS, PIPING AND MIST ELIMINATOR WILL BE CLEANED AND ALL THE SCALE REMOVED.

DURING OPERATION OF THE FGD SYSTEM THE PH CONTROL COULD NOT BE AUTOMATED BECAUSE OF POOR DESIGN AND OPERATIONAL PROBLEMS WITH THE PROVIDED CONTROL SYSTEM. PH CONTROL WAS MANUALLY SAMPLED AND CONTROLLED OVER APPROXIMATELY

PENNSYLVANIA POWER: BRUCE MANSFIELD 1 (CONT.)

PERIOD	MODULE	AVAILABILITY	OPERABILITY	RELIABILITY	UTILIZATION	% REMOVAL SO2	% REMOVAL PART.	PER HOURS	BOILER HOURS	FGD HOURS	CAP. FACTOR
		PERFORMANCE DATA									

ONE YEAR OF OPERATION. THE PH CONTROL AND MONITORING SYSTEM ARE BEING REVISED BY OPERATING PERSONNEL DURING THE OUTAGE IN AN EFFORT TO IMPROVE THE THE PH CONTROL SYSTEM.

THE LIME ADDITION PIPING IS BEING REVISED IN EACH OF THE SCRUBBER VESSELS DUE TO THE SEVERE SCALING OCCURRING WITH THE CURRENT LIME ADDITION SYSTEM.

THE SYSTEM SUPPLIER IS REDESIGNING THE EXISTING MIST ELIMINATOR SPRAY PIPING IN AN EFFORT TO CORRECT THE EXCESSIVE SCALING AND PLUGGING OF THE MIST ELIMINATORS.

CHANGES IN FLUSH WATER AND SEAL WATER PIPING ARE BEING MADE IN AN EFFORT TO CLOSE THE WATER LOOP.

NEWLY MODIFIED REHEAT BURNERS WILL BE INSTALLED DURING THE OUTAGE AND TESTED ON THE B-SIDE REHEATER WHEN THE UNIT STARTS UP IN MAY.

THE UNIT 1 THICKENER WAS CLEANED OUT AND THE JAMMED RAKE DRIVE MECHANISM WAS REPAIRED DURING THE OUTAGE.

4/77	SYSTEM			.0		720	0	0
5/77	A	.0	.0	.0				
	B	.0	.0	.0				
	C	.0	.0	.0				
	D	100.0	84.0	47.0				
	E	100.0	85.0	48.0				
	F	47.0	41.0	23.0				
	SYSTEM	41.2	100.0	55.9		744	121	121

** PROBLEMS/SOLUTIONS/COMMENTS

THE UNIT WAS STARTED UP ON MAY 23 USING D, E, AND F MODULES DUE TO REPAIRS BEING MADE TO THE A-SIDE CHIMNEY FLUE.

THERE WERE PROBLEMS SLAKING LIME AND GETTING MAGNESIUM LEVELS BUILT UP IN THE SCRUBBER RECYCLE LOOPS AFTER STARTUP.

6/77	A	.0	.0	.0				
	B	.0	.0	.0				
	C	.0	.0	.0				
	D	94.0	100.0	94.0				
	E	95.0	100.0	95.1				
	F	90.0	97.0	90.0				
	SYSTEM		100.0	92.9		720	669	669

** PROBLEMS/SOLUTIONS/COMMENTS

ON AUGUST 16 THE 1A CHIMNEY FLUE LINER REPAIRS WERE COMPLETED AND THE A, B AND C TRAINS WERE STARTED UP.

SEVERAL REPAIRS WERE MADE TO THE ID FAN HOUSING THIS MONTH.

THE AVERAGE SO2 REMOVAL EFFICIENCY FOR THE MONTH WAS 86.7% BASED ON THREE GRAB SAMPLES.

YORK RESEARCH BEGAN SETTING UP EQUIPMENT TO CONTINUOUSLY MONITOR THE SO2 REMOVAL EFFICIENCIES AS PART OF AN EPA RESEARCH PROJECT TO DETERMINE FEASIBLE NSPS FOR FGD.

EXTENSIVE MODIFICATIONS ARE BEING MADE IN THE PH CONTROL SYSTEMS IN AN EFFORT TO DEVISE A WORKABLE PH CONTROL SYSTEM.

7/77	A	.0	.0	.0				
	B	.0	.0	.0				
	C	.0	.0	.0				
	D	99.0	100.0	66.0				
	E	99.0	100.0	66.0				
	F	100.0	100.0	63.0				
	SYSTEM	49.7	100.0	63.6		744	473	473

PERIOD	MODULE	AVAILABILITY	OPERABILITY	RELIABILITY	UTILIZATION	% REMOVAL SO2	% REMOVAL PART.	PER HOURS	BOILER HOURS	FGD HOURS	CAP. FACTOR
		PERFORMANCE DATA									
	** PROBLEMS/SOLUTIONS/COMMENTS										
		UNIT 1 WAS DOWN FROM JULY 1 THROUGH JULY 12 TO MAKE SOME MODIFICATIONS TO THE GENERATOR COOLING SYSTEM. ON JULY 19 AND 20 PENNSYLVANIA'S DEPARTMENT OF ENVIRONMENTAL RESOURCES TESTED THE SO2 AND PARTICULATE EMISSIONS FROM THE UNIT 1 FGD SYSTEM. SO2 EMISSIONS WERE 0.44 LB/MM BTU AND 1.26 LB/MM BTU FOR THE TWO TESTS RESPECTIVELY. FGD SO2 REMOVAL EFFICIENCY VARIED FROM 78% TO 89% FOR THE MONTH.									
8/77	A	58.0	57.0		52.0						
	B	54.0	56.0		50.0						
	C	31.0	31.0		28.0						
	D	96.0	100.0		93.0						
	E	95.0	99.0		93.0						
	F	88.0	95.0		85.0						
	SYSTEM	70.3	100.0		93.0			744	692	692	
	** PROBLEMS/SOLUTIONS/COMMENTS										
		UNIT 1 WAS DOWN FROM AUGUST 13 TO 15 BECAUSE OF BOILER TUBE LEAKS.									
9/77	A	87.0	97.0		75.0						
	B	82.0	95.0		73.0						
	C	81.0	99.0		76.0						
	D	53.0	60.0		46.0						
	E	50.0	56.0		44.0						
	F	43.0	44.0		34.0						
	SYSTEM	66.0	100.0		77.5	81.00		720	558	558	
	** PROBLEMS/SOLUTIONS/COMMENTS										
		FROM SEPTEMBER 17 TO 22 THE UNIT WAS DOWN TO INSTALL RIGGING IN THE 1B CHIMNEY FLUE TO BEGIN FLUE LINER REPAIRS.									
		D, E AND F TRAINS WERE OFF THE REMAINDER OF THE MONTH. THE AVERAGE SO2 REMOVAL EFFICIENCIES FOR THE MONTH WERE 93.2% BASED ON FOUR GRAB SAMPLE TESTS.									
		A BOILER TUBE LEAK CAUSED THE UNIT TO BE DOWN SEPTEMBER 10 TO 12.									
10/77	A	93.0	96.0		93.0						
	B	98.0	100.0		98.0						
	C	87.0	90.0		87.0						
	D	.0	.0		.0						
	E	.0	.0		.0						
	F	.0	.0		.0						
	SYSTEM		100.0		96.8	77.50		744	720	720	
	** PROBLEMS/SOLUTIONS/COMMENTS										
		THE C-MODULE MIST ELIMINATOR SPRAY NOZZLES AND MIST ELIMINATOR ITSELF WERE CLEANED.									
		ABS STACK REPAIRS ON UNIT 2 NECESSITATED TAKING UNIT 1 DOWN FOR 2 DAYS. (A PROTECTIVE CAP HAD TO BE PUT OVER THE 2B FLUE BY HELICOPTER. PREVAILING WINDS NECISSITATED TAKING UNIT 1 OFF IN ORDER TO DO THIS.)									
11/77	A	95.0	95.0		95.0						
	B	99.0	99.0		99.0						
	C	91.0	91.0		91.0						
	D										
	E										
	F										
	SYSTEM		100.0		100.0	85.00		720	720	720	

PENNSYLVANIA POWER: BRUCE MANSFIELD 1 (CONT.)

PERIOD	MODULE	AVAILABILITY	OPERABILITY	RELIABILITY	UTILIZATION	% REMOVAL SO2	% REMOVAL PART.	PER HOURS	BOILER HOURS	FGD HOURS	CAP. FACTOR
		PERFORMANCE DATA									
	** PROBLEMS/SOLUTIONS/COMMENTS										
		REMOVAL OF THE OLD COATING AND PRIMING OF THE FLUE LINING IN FLUE 1B IS PROCEEDING SLOWER THAN ANTICIPATED. IT IS EXPECTED THAT TOTAL WORK ON THE FLUE WILL NOT BE COMPLETED UNTIL FEBRUARY OR MARCH 1978.									
12/77	A	100.0	100.0		91.0						
	B	93.0	94.0		79.0						
	C	99.0	100.0		91.0						
	D										
	E										
	F										
	SYSTEM		100.0		84.1			744	626	626	
	** PROBLEMS/SOLUTIONS/COMMENTS										
		SANDBLASTING OF UNIT 1B FLUE IS NEARING COMPLETION. THE FLUE WILL BE RE-LINED WITH CXL-2000.									
0/78	SYSTEM										
	** PROBLEMS/SOLUTIONS/COMMENTS										
		NOTE: AN ATTEMPT IS ALWAYS MADE TO BEGIN OPERATION OF THE BOILER AND FGD SYSTEM SIMULTANEOUSLY AT BRUCE MANSFIELD. OCCASIONALLY PROBLEMS DELAY BOILER STARTUP MAKING IT POSSIBLE FOR MONTHLY FGD MODULE HOURS TO EXCEED ACTUAL BOILER HOURS.									
1/78	A	100.0	100.0		58.0						
	B										
	C	100.0	100.0		58.0						
	D										
	E										
	F										
	SYSTEM		100.0		44.5			744	331	331	
	** PROBLEMS/SOLUTIONS/COMMENTS										
		THE UNIT TRIPPED SEVERAL TIMES DUE TO DIFFICULTIES IN BURNING WET STOCK-PILE COAL.									
		THERE WERE PROBLEMS WITH THE 1B FAN WHICH NECESSITATED EXTENSIVE REPAIRS. LINING ABRASION AND DISBONDMENT IN FAN CAUSED CORROSION OF UNDERLYING SUP-PORT METAL.									
2/78	A	79.0	100.0		79.0						
	B	61.0	80.0		61.0						
	C	82.0	100.0		82.0						
	D										
	E										
	F										
	SYSTEM		100.0		61.6			672	414	414	
	** PROBLEMS/SOLUTIONS/COMMENTS										
		EXTENSIVE REPAIRS TO THE 1B ID FAN AND THE EMERGENCY NEED FOR LOAD FROM THE PLANT DURING THE COAL STRIKE TEMPORARILY OVERLOADED THE 1A AND 1C TRAINS.									
		EXTENSIVE REPAIRS TO THE 1B ID FAN WERE NECESSARY.									
		THE MIST ELIMINATOR WILL BE REPLACED ON THE 1C TRAIN AS A RESULT OF THE TEMPORARY OVERLOAD THAT OCCURRED ON THE 1A AND 1C TRAIN DURING THE PERIOD.									
		THE 1B FLUE RELINING CONTINUED.									
3/78	A	43.0	47.0		43.0						
	B	91.0	98.0		91.0						

PERIOD	MODULE	AVAILABILITY	OPERABILITY	RELIABILITY	UTILIZATION	% REMOVAL SO2	% REMOVAL PART.	PER HOURS	BOILER HOURS	FGD HOURS	CAP. FACTOR
	C	90.0	97.0		90.0						
	D	65.0	70.0		65.0						
	E	50.0	54.0		50.0						
	F	60.0	65.0		60.0						
	SYSTEM	66.5	100.0		92.6			744	689	689	

** PROBLEMS/SOLUTIONS/COMMENTS

REPLACEMENT OF THE LINING IN THE 1B CHIMNEY WITH CXL 2000 WAS COMPLETED.

REPAIRS WERE MADE ON THE A, B AND C FAN HOUSINGS.

4/78	A	74.0	74.0		74.0						
	B	88.0	88.0		88.0						
	C	49.0	49.0		49.0						
	D	87.0	87.0		87.0						
	E	97.0	97.0		97.0						
	F	94.0	94.0		94.0						
	SYSTEM	81.5	100.0		100.0			720	720	720	

** PROBLEMS/SOLUTIONS/COMMENTS

FAN HOUSINGS HAD LEAK REPAIRS DONE DURING APRIL.

MISCELLANEOUS LEAK REPAIRS WERE MADE TO DUCTS.

5/78	A	98.0	97.0		59.0						
	B										
	C	98.0	97.0		59.0						
	D	91.0	85.0		52.0						
	E	92.0	84.0		52.0						
	F	92.0	86.0		53.0						
	SYSTEM		100.0		61.4			744	457	457	

** PROBLEMS/SOLUTIONS/COMMENTS

THE ANNUAL BOILER INSPECTION OUTAGE BEGAN ON MAY 20.

EXTENSIVE REPAIRS WERE MADE ON THE 1B FAN.

6/78	A										
	B										
	C	100.0									
	D	100.0									
	E	100.0									
	F	100.0									
	SYSTEM							720			

** PROBLEMS/SOLUTIONS/COMMENTS

THE BOILER INSPECTION AND GENERATOR STATOR COOLER REPAIRS REQUIRED SOME OUTAGE TIME.

ALL OUTAGES EXPERIENCED BY THE UNIT THIS MONTH WERE FGD-RELATED.

HORIZONTAL MIST ELIMINATOR PRESSURE DROPS INCREASED TO THE POINT THAT NEW MIST ELIMINATOR MODULES WERE INSTALLED ON D, E AND F SCRUBBERS AND D AND E ABSORBERS.

7/78	SYSTEM							744			
8/78	SYSTEM							744			
9/78	SYSTEM							720			
10/78	SYSTEM	96.3	100.0		90.2			744	671	671	
11/78	SYSTEM							720			
12/78	SYSTEM							744			

PENNSYLVANIA POWER: BRUCE MANSFIELD 1 (CONT.)

PERIOD	MODULE	AVAILABILITY	OPERABILITY	RELIABILITY	UTILIZATION	% REMOVAL SO2	% REMOVAL PART.	PER HOURS	BOILER HOURS	FGD HOURS	CAP. FACTOR
		PERFORMANCE DATA									

** PROBLEMS/SOLUTIONS/COMMENTS

NO INFORMATION WAS AVAILABLE FOR THIS REPORT PERIOD.

1/79	SYSTEM							744			
2/79	SYSTEM							672			
3/79	SYSTEM							744			
4/79	SYSTEM							720			
5/79	SYSTEM							744			

** PROBLEMS/SOLUTIONS/COMMENTS

UNIT 1 IS CURRENTLY DOWN FOR A BOILER OUTAGE.

SIX OF THE TWELVE FAN HOUSINGS HAVE BEEN CHANGED FROM CARBON STEEL TO INCOLLOY 825.

6/79	SYSTEM	92.0						4344			

** PROBLEMS/SOLUTIONS/COMMENTS

THE ABOVE AVAILABILITY IS THE AVAILABILITY FROM JANUARY 1, 1979 THROUGH MAY 31, 1979.

THE UTILITY REPORTED THAT FAN MOTOR FAILURES WERE A MAJOR PROBLEM AREA DURING THE FIRST HALF OF 1979.

7/79	SYSTEM							744			
8/79	SYSTEM							744			
9/79	SYSTEM							720			

** PROBLEMS/SOLUTIONS/COMMENTS

FAN HOUSING WORK (CHANGING FROM LINED CARBON STEEL TO INCOLLOY 825) IS CONTINUING.

NEW PH MONITOR MODIFICATIONS HAVE YIELDED PROMISING RESULTS WITH RESPECT TO MONITOR AVAILABILITY.

THE FGD SYSTEM ATTRIBUTED 17.4% OF THE TOTAL UNIT UNAVAILABILITY FOR 1979 TO DATE. THE BREAKDOWN IS AS FOLLOWS:
- 7.6% SCRUBBER ID FAN WORK/PROBLEMS
- 8.3% GENERAL SCRUBBER PROBLEMS AND MAINTENANCE
- 1.0% REAGENT HANDLING PROBLEMS (LIME SLAKER AND PIPING)
- 0.5% MIST ELIMINATOR PLUGGING

10/79	SYSTEM	96.1						744			
11/79	SYSTEM	90.8						720			
12/79	SYSTEM	99.8						744			

** PROBLEMS/SOLUTIONS/COMMENTS

DURING THE PERIOD AN ADDITIONAL FAN HOUSING WAS REPLACED WITH THE NEW INCOLLOY 825. BY THE END OF 1980 ALL THE FAN HOUSINGS WILL BE REPLACED WITH THE NEW MATERIAL.

WHERE THE NEW PH MONITORS HAVE BEEN INSTALLED, THE PROBE MAINTENANCE HAS BEEN CUT 80%, AND THE MIST ELIMINATORS HAVE BEEN LESS OF A PROBLEM TO MAINTAIN.

THE SLUDGE PUMPS HAVE BEEN A PROBLEM. THE PUMPS REQUIRE AN OVERHAUL

PERIOD	MODULE	AVAILABILITY	OPERABILITY	RELIABILITY	UTILIZATION	% REMOVAL SO2	% REMOVAL PART.	PER HOURS	BOILER HOURS	FGD HOURS	CAP. FACTOR
				PERFORMANCE DATA							

EVERY 1000 HOURS AND HAVE FREQUENT VALVE FAILURES. NEW VALVE MANIFOLDS MAY DRASTICALLY IMPROVE PUMP SERVICE BY ALLOWING ACCESS TO INDIVIDUAL BALL VALVES.

SECTION 3
DESIGN AND PERFORMANCE DATA FOR OPERATIONAL DOMESTIC FGD SYSTEMS

COMPANY NAME	PENNSYLVANIA POWER	
PLANT NAME	BRUCE MANSFIELD	
UNIT NUMBER	2	
CITY	SHIPPINGPORT	
STATE	PENNSYLVANIA	
REGULATORY CLASSIFICATION	D	
PARTICULATE EMISSION LIMITATION - NG/J	15.	(.035 LB/MMBTU)
SO2 EMISSION LIMITATION - NG/J	258.	(.600 LB/MMBTU)
NET PLANT GENERATING CAPACITY - MW	2751.0	
GROSS UNIT GENERATING CAPACITY - MW	917.0	
NET UNIT GENERATING CAPACITY W/FGD - MW	825.0	
NET UNIT GENERATING CAPACITY WO/FGD - MW	880.0	
EQUIVALENT SCRUBBED CAPACITY - MW	917.0	
** BOILER DATA		
SUPPLIER	FOSTER WHEELER	
TYPE	PULVERIZED COAL	
SERVICE LOAD	BASE	
COMMERCIAL SERVICE DATE	0/77	
MAXIMUM BOILER FLUE GAS FLOW - CU.M/S	1580.86	(3350000 ACFM)
FLUE GAS TEMPERATURE - C	140.6	(285 F)
STACK HEIGHT - M	290.	(950 FT)
STACK TOP DIAMETER - M	5.8	(19.0 FT)
** FUEL DATA		
FUEL TYPE	COAL	
FUEL GRADE	BITUMINOUS	
AVERAGE HEAT CONTENT - J/G	26749.	(11500 BTU/LB)
RANGE HEAT CONTENT - BTU/LB		11000-11950
AVERAGE ASH CONTENT - %	12.90	
RANGE ASH CONTENT - %	11.5-13.5	
AVERAGE MOISTURE CONTENT - %	6.00	
RANGE MOISTURE CONTENT - %	5.5-8.5	
AVERAGE SULFUR CONTENT - %	3.00	
RANGE SULFUR CONTENT - %	1.75-3.75	
AVERAGE CHLORIDE CONTENT - %	********	
RANGE CHLORIDE CONTENT - %	******	
** PARTICULATE SCRUBBER		
NUMBER	6	
TYPE	VENTURI	
SUPPLIER	CHEMICO	
NUMBER OF STAGES	2	
SHELL MATERIAL	CARBON STEEL	
LINING MATERIAL	POLYESTER FLAKEGLASS	
INTERNAL MATERIAL	PLUM BOB AND 2 SETS OF SPRAYS, 317 SS AND 316 SS	
TYPE OF NOZZLES	TANGENTIAL FEED (1 SET AT THROAT, 1 SET AT BOTTO	
BOILER LOAD/SCRUBBER - %	100.0	
FLUE GAS CAPACITY - CU.M/S	263.5	(558333 ACFM)
FLUE GAS TEMPERATURE - C	140.6	(285 F)
LIQUID RECIRCULATION RATE - LITER/S	1386.0	(22000 GPM)
L/G RATIO - LITER/CU.M	5.3	(40.0 GAL/1000ACF)
PRESSURE DROP - KPA	*******	(***** IN-H2O)
SUPERFICIAL GAS VELOCITY - M/S	61.0	(200.0 FT/S)
PARTICULATE INLET LOAD - G/CU.M	17.7	(7.75 GR/SCF)
PARTICULATE OUTLET LOAD - G/CU.M	.0	(.016 GR/SCF)
PARTICULATE DESIGN REMOVAL EFFICIENCY - %	99.8	
SO2 INLET CONCENTRATION - PPM	3090.000	
SO2 OUTLET CONCENTRATION - PPM	930.000	
SO2 DESIGN REMOVAL EFFICIENCY - %	70.0	
** FGD SYSTEM		
SALEABLE PRODUCT/THROWAWAY PRODUCT	THROWAWAY PRODUCT	
GENERAL PROCESS TYPE	WET SCRUBBING	
PROCESS TYPE	LIME	
PROCESS ADDITIVES	MG (2-6%)	
SYSTEM SUPPLIER	CHEMICO	
A-E FIRM	GILBERT/COMMONWEALTH ASSOCIATES	
DEVELOPMENT LEVEL	FULL SCALE	
NEW/RETROFIT	NEW	
PARTICULATE DESIGN REMOVAL EFFICIENCY - %	99.80	
SO2 DESIGN REMOVAL EFFICIENCY - %	92.10	

PENNSYLVANIA POWER: BRUCE MANSFIELD 2 (CONT.)

INITIAL START-UP	7/77
ABSORBER SPARE CAPACITY INDEX - %	.0
ABSORBER SPARE COMPONENT INDEX	.0

** ABSORBER

NUMBER	6	
TYPE	VENTURI	
INITIAL START UP	7/77	
SUPPLIER	CHEMICO	
NUMBER OF STAGES	1	
DIMENSIONS - FT	34 DIA X 51.5 HIGH	
SHELL MATERIAL	CARBON STEEL	
SHELL LINER MATERIAL	POLYESTER FLAKEGLASS	
INTERNAL MATERIAL	CARBON STEEL, FLAKEGLASS LINING (2 SETS OF SPRAY	
NOZZLE TYPE	TANGENTIAL FEED	
BOILER LOAD/ABSORBER - %	17.0	
GAS FLOW - CU.M/S	201.31	(426600 ACFM)
GAS TEMPERATURE - C	52.8	(127 F)
LIQUID RECIRCULATION RATE - LITER/S	1222.	(19400 GPM)
L/G RATIO - L/CU.M	6.0	(45.0 GAL/1000ACF)
PRESSURE DROP - KPA	2.0	(8.0 IN-H2O)
SUPERFICAL GAS VELOCITY - M/SEC	30.5	(100.0 FT/S)
PARTICULATE OUTLET LOAD- G/CU.M	.0	(.016 GR/SCF)
SO2 INLET CONCENTRATION - PPM	930	
SO2 OUTLET CONTRATION - PPM	240	
SO2 DESIGN REMOVAL EFFICIENCY - %	92.1	

** FANS

NUMBER	12	
TYPE	BOILER ID	
CONSTRUCTION MATERIALS	INCOLOY 825 ON HOUSINGS; INCONEL 625 SCROLLS AND	
SERVICE - WET/DRY	WET	
CAPACITY - CU.M/S	263.32	(558000 ACFM)

** MIST ELIMINATOR

NUMBER	6	
TYPE	CHEVRON	
CONSTRUCTION MATERIAL	FRP	
CONFIGURATION	HORIZONTAL	
NUMBER OF STAGES	1	
NUMBER OF PASSES	4	
VANE SPACING - CM	7.6	(3.00 IN)
VANE ANGLES	90 DEG.	
WASH SYSTEM	OVERSPRAY (ONCE PER SHIFT), UNDERSPRAY (CONTINUO	
SUPERFICIAL GAS VELOCITY - M/S	3.0	(10.0 FT/S)
PRESSURE DROP - KPA	.1	(.6 IN-H2O)

** MIST ELIMINATOR

NUMBER	6	
TYPE	CHEVRON	
CONSTRUCTION MATERIAL	FRP	
CONFIGURATION	HORIZONTAL	
NUMBER OF STAGES	1	
NUMBER OF PASSES	4	
VANE SPACING - CM	7.6	(3.00 IN)
VANE ANGLES	90 DEG.	
WASH SYSTEM	OVERSPRAY (ONCE PER SHIFT), UNDERSPRAY (CONTINUO	
SUPERFICIAL GAS VELOCITY - M/S	3.0	(10.0 FT/S)
PRESSURE DROP - KPA	.1	(.6 IN-H2O)

** PROCESS CONTROL CHEMISTRY

CONTROL VARIABLES	PH SLURRY SOLIDS, LIQUID LEVEL, LIQUID FLOW
CONTROL RANGE	PH 6.8-7.2
CONTROL MANNER	AUTOMATIC
MODE	FEEDFACK
SENSOR LOCATION	PH-RECIRCULATING LINES AND THICKENER

** PUMPS

SERVICE	NUMBER
VENTURI RECIRCULATION	12
SLURRY FEED	4
LIME SLURRY RECIRCULATION	4
ABSORBER RECIRCULATION	24
THICKENER UNDERFLOW	4
THICKENER TRANSFER	4

PENNSYLVANIA POWER: BRUCE MANSFIELD 2 (CONT.)

** TANKS

SERVICE	NUMBER
THICKENER UNDERFLOW	****
MIXING TANK [CALCILOX & THCKNR UNDRF	2
SLUDGE TRANSFER	****
MIXING TANK [SPENT SLURRY & FLYASH]	****
RECYCLE (SCRUBBER)	6
RECYCLE (ABSORBER)	6

** THICKENER

NUMBER	1	
TYPE	RAKE DRIVE	
CONSTRUCTION MATERIAL	CARBON STEEL	
DIAMETER - M	61.0	(200 FT)
OUTLET SOLIDS - %	30.0	

** WATER LOOP

TYPE	OPEN

** REAGENT PREPARATION EQUIPMENT

NUMBER OF SLAKERS	2	
SLAKER CAPACITY - M T/H	20.0	(22.0 TPH)

** TREATMENT

TYPE	CALCILOX
CONTRACTOR	DRAV.
PRODUCT CHARACTERISTICS	CONSISTENCY OF GRANULAR SOIL

** DISPOSAL

NATURE	FINAL	
TYPE	LANDFILL	
LOCATION	OFF-SITE	
TRANSPORTATION	PUMPED	
AREA - ACRES	1400.0	
CAPACITY - CU.M	599270000	(490000.0 ACRE-FT)

PERFORMANCE DATA

PERIOD	MODULE	AVAILABILITY	OPERABILITY	RELIABILITY	UTILIZATION	% REMOVAL SO2	% REMOVAL PART.	PER HOURS	BOILER HOURS	FGD HOURS	CAP. FACTOR
10/77	2A	94.0	100.0		83.0						
	2B	97.0	100.0		68.0						
	2C	98.0	100.0		67.0						
	2D	63.0	61.0		48.0						
	2E	66.0	59.0		47.0						
	2F	61.0	51.0		41.0						
	SYSTEM	79.3	100.0		80.0			744	595	595	

** PROBLEMS/SOLUTIONS/COMMENTS

UNIT 2 WAS DECLARED AVAILABLE FOR COMMERCIAL OPERATION AT 825 MW ON OCTOBER 1, 1977.

THE SPRAYS IN THE 2F FAN WERE CLEANED.

REPAIRS WERE MADE TO THE 2B FLUE STACK BECAUSE OF THE PREMATURE FAILURE OF SEVERAL TEST PATCHES.

THE UNIT TRIPPED DUE TO FAULTY GENERATOR CONTROL TRANSFORMERS.

11/77	2A	100.0	100.0		83.0						
	2B	96.0	100.0		81.0						
	2C	88.0	92.0		74.0						
	2D	47.0	57.0		46.0						
	2E	55.0	52.0		42.0						
	2F	47.0	42.0		34.0						
	SYSTEM	72.2	100.0		80.7			720	581	581	

PERIOD	MODULE	AVAILABILITY	OPERABILITY	RELIABILITY	UTILIZATION	% REMOVAL SO2	% REMOVAL PART.	PER HOURS	BOILER HOURS	FGD HOURS	CAP. FACTOR
		PERFORMANCE DATA									
	** PROBLEMS/SOLUTIONS/COMMENTS										
		PROBLEMS ASSOCIATED WITH THE STATION POWER TRANSFORMERS CAUSED LIMITATION IN LOAD ON UNIT 2. THREE OF THE SIX STATION POWER TRANSFORMERS FOR UNIT 2 WERE DESTROYED.									
12/77	2A	74.0	77.0		63.0						
	2B	99.0	100.0		66.0						
	2C	96.0	100.0		83.0						
	2D	100.0	100.0		86.0						
	2E	89.0	85.0		69.0						
	2F	99.0	93.0		76.0						
	SYSTEM	93.2	100.0		81.6			744	607	607	
	** PROBLEMS/SOLUTIONS/COMMENTS										
		COLD WEATHER CAUSED SOME PROBLEMS IN PROCESS PIPING.									
1/78	2A	95.0	59.0		31.0						
	2B	100.0	100.0		76.0						
	2C	96.0	56.0		29.0						
	2D	94.0	100.0		70.0						
	2E	99.0	100.0		64.0						
	2F	99.0	96.0		50.0						
	SYSTEM	97.2	100.0		52.6			744	391	391	
	** PROBLEMS/SOLUTIONS/COMMENTS										
		THE UNIT TRIPPED SEVERAL TIMES DUE TO DIFFICULTIES IN BURNING WET STOCK-PILE COAL. WHEN THE UNIT WAS ON LINE DURING THIS MONTH, THE WET COAL ALSO PREVENTED FULL LOAD OPERATION OF COAL MILLS.									
		BOILER CONTROL VALVE ("W" VALVE) PROBLEMS COMPOUNDED START-UP DIFFICULTIES.									
2/78	2A	84.0	46.0		48.0						
	2B	67.0	68.0		68.0						
	2C	89.0	88.0		88.0						
	2D	97.0	71.0		71.0						
	2E	99.0	99.0		99.0						
	2F	78.0	78.0		78.0						
	SYSTEM	89.0	100.0		100.0			672	672	672	
	** PROBLEMS/SOLUTIONS/COMMENTS										
		MANY PROBLEMS OCCURRED WITH I.D. FAN COOLERS DUE TO INCLEMENT WEATHER.									
		A BOILER TUBE LEAK CAUSED SEVERAL DAYS OUTAGE.									
3/78	2A	100.0	100.0		67.0						
	2B	93.0	91.0		60.0						
	2C	13.0	13.0		13.0						
	2D	95.0	100.0		63.0						
	2E	95.0	96.0		64.0						
	2F	97.0	99.0		65.0						
	SYSTEM	82.2	100.0		66.4			744	494	494	
	** PROBLEMS/SOLUTIONS/COMMENTS										
		EXTENSIVE I.D. FAN HOUSING REPAIRS WERE PERFORMED ON THE 2C FAN.									
4/78	2A	100.0	82.0		81.0						
	2B	100.0	82.0		81.0						
	2C	59.0	59.0		59.0						
	2D	15.0	15.0		15.0						
	2E	14.0	14.0		14.0						
	2F	13.0	13.0		13.0						
	SYSTEM	50.2	100.0		99.0			72[illegible]	713	713	

PENNSYLVANIA POWER: BRUCE MANSFIELD 2 (CONT.)

PERIOD	MODULE	AVAILABILITY	OPERABILITY	RELIABILITY	UTILIZATION	% REMOVAL SO2	% REMOVAL PART.	PER HOURS	BOILER HOURS	FGD HOURS	CAP. FACTOR
		PERFORMANCE DATA									

** PROBLEMS/SOLUTIONS/COMMENTS

DURING APRIL THE CHIMNEY FLUE LINING ON 2B NEEDED REPAIRS.

EXTENSIVE REPAIRS WERE MADE ON THE 2C I.D. FAN, CAUSING IT TO BE DOWN FROM MARCH 6 THROUGH APRIL 13.

2B STACK LINING REPAIRS CONTINUED.

5/78	2A	100.0	100.0		37.0					
	2B	100.0	100.0		37.0					
	2C	100.0	100.0		37.0					
	2D									
	2E									
	2F									
	SYSTEM		100.0		37.5			744	270	270

** PROBLEMS/SOLUTIONS/COMMENTS

THE UNIT WAS OFF-LINE FOR 3 WEEKS FOR REPAIRS TO THE 2C I.D. FAN, INCLUDING COVERING THE HOUSING WITH INCOLOY 825.

6/78	2A	70.0	100.0		70.0					
	2B	69.0	100.0		69.0					
	2C	66.0	100.0		66.0					
	2D									
	2E									
	2F									
	SYSTEM		100.0		57.9			720	417	417

** PROBLEMS/SOLUTIONS/COMMENTS

2B STACK LINING REPAIRS CONTINUED.

-NOTE: AN ATTEMPT IS ALWAYS MADE TO BEGIN OPERATION OF THE BOILER AND FGD SYSTEM SIMULTANEOUSLY AT BRUCE MANSFIELD. OCCASIONALLY PROBLEMS DELAY BOILER START-UP, MAKING IT POSSIBLE FOR MONTHLY FGD MODULE HOURS TO EXCEED ACTUAL BOILER HOURS.

7/78	SYSTEM							744		
8/78	SYSTEM							744		
9/78	SYSTEM							720		
10/78	SYSTEM	99.3	100.0		19.4			744	144	144
11/78	SYSTEM							720		
12/78	SYSTEM							744		

** PROBLEMS/SOLUTIONS/COMMENTS

NO INFORMATION WAS AVAILABLE FOR THIS PERIOD.

1/79	SYSTEM							744		
2/79	SYSTEM							672		
3/79	SYSTEM							744		
4/79	SYSTEM							720		

** PROBLEMS/SOLUTIONS/COMMENTS

NO INFORMATION WAS REPORTED FOR THIS PERIOD BY THE UTILITY.

5/79	SYSTEM							744		
6/79	SYSTEM	88.8	100.0					4344		

PERIOD	MODULE	AVAILABILITY	OPERABILITY	RELIABILITY	UTILIZATION	% REMOVAL SO2	% REMOVAL PART.	PER HOURS	BOILER HOURS	FGD HOURS	CAP. FACTOR
				PERFORMANCE DATA							

** PROBLEMS/SOLUTIONS/COMMENTS

THE ABOVE AVAILABILITY IS THE AVAILABILITY FOR JANUARY 1, 1979 THROUGH MAY 31, 1979.

THE UTILITY REPORTED THAT SOME FAN PROBLEMS WERE RECENTLY ENCOUNTERED.

7/79	SYSTEM								744		
8/79	SYSTEM								744		
9/79	SYSTEM								720		

** PROBLEMS/SOLUTIONS/COMMENTS

CHIMNEY LINING WORK (APPLICATION OF CXL 2000) WAS COMPLETED IN EARLY 1979.

FAN HOUSING WORK (CHANGING FROM LINED CARBON STEEL TO INCOLLOY 825) IS CONTINUING.

NEW PH MONITOR MODIFICATIONS HAVE YIELDED PROMISING RESULTS WITH RESPECT TO MONITOR AVAILABILITY.

THE FGD SYSTEM ATTRIBUTED 10.8% OF THE TOTAL UNIT UNAVAILABILITY FOR 1979 TO DATE. THE BREAKDOWN IS AS FOLLOWS:

- 5.0% CHIMNEY (FINISHED CXL 2000 APPLICATION)
- 1.3% GENERAL SCRUBBER PROBLEMS AND MAINTENANCE
- 1.5% ID FAN WORK/PROBLEMS
- 2.0% MIST ELIMINATOR PLUGGING
- 1.0% EMISSION VIOLATION (CUT BACK OF BOILER LOAD BECAUSE OF LOW SO2 REMOVAL EFFICIENCY)

10/79	SYSTEM	97.5							744		
11/79	SYSTEM	100.0							720		
12/79	SYSTEM	96.5							744		

** PROBLEMS/SOLUTIONS/COMMENTS

DURING THE PERIOD AN ADDITIONAL FAN HOUSING WAS REPLACED WITH THE NEW INCOLLOY 825. BY THE END OF 1980 ALL THE FAN HOUSINGS WILL BE REPLACED WITH THE NEW MATERIAL.

WHERE THE NEW PH MONITORS HAVE BEEN INSTALLED, THE PROBE MAINTENANCE HAS BEEN CUT 80%, AND THE MIST ELIMINATORS HAVE BEEN LESS OF A PROBLEM TO MAINTAIN.

THE SLUDGE PUMPS HAVE BEEN A PROBLEM. THE PUMPS REQUIRE AN OVERHAUL EVERY 1000 HOURS AND HAVE FREQUENT VALVE FAILURES. NEW VALVE MANIFOLDS MAY DRASTICALLY IMPROVE PUMP SERVICE BY ALLOWING ACCESS TO INDIVIDUAL BALL VALVES.

SECTION 3
DESIGN AND PERFORMANCE DATA FOR OPERATIONAL DOMESTIC FGD SYSTEMS

COMPANY NAME	PHILADELPHIA ELECTRIC	
PLANT NAME	EDDYSTONE	
UNIT NUMBER	1A	
CITY	EDDYSTONE	
STATE	PENNSYLVANIA	
REGULATORY CLASSIFICATION	D	
PARTICULATE EMISSION LIMITATION - NG/J	******	(****** LB/MMBTU)
SO2 EMISSION LIMITATION - NG/J	******	(****** LB/MMBTU)
NET PLANT GENERATING CAPACITY - MW	1395.0	
GROSS UNIT GENERATING CAPACITY - MW	120.0	
NET UNIT GENERATING CAPACITY W/FGD - MW	120.0	
NET UNIT GENERATING CAPACITY WO/FGD - MW	*******	
EQUIVALENT SCRUBBED CAPACITY - MW	120.0	
** BOILER DATA		
SUPPLIER	COMBUSTION ENGINEERING	
TYPE	******	
SERVICE LOAD	BASE	
COMMERCIAL SERVICE DATE	9/59	
MAXIMUM BOILER FLUE GAS FLOW - CU.M/S	437.45	(927000 ACFM)
FLUE GAS TEMPERATURE - C	157.2	(315 F)
STACK HEIGHT - M	76.	(249 FT)
STACK TOP DIAMETER - M	5.6	(18.5 FT)
** FUEL DATA		
FUEL TYPE	COAL	
FUEL GRADE	BITUMINOUS	
AVERAGE HEAT CONTENT - J/G	31634.	(13600 BTU/LB)
RANGE HEAT CONTENT - BTU/LB		******
AVERAGE ASH CONTENT - %	9.40	
RANGE ASH CONTENT - %	******	
AVERAGE MOISTURE CONTENT - %	5.90	
RANGE MOISTURE CONTENT - %	******	
AVERAGE SULFUR CONTENT - %	2.60	
RANGE SULFUR CONTENT - %	******	
AVERAGE CHLORIDE CONTENT - %	********	
RANGE CHLORIDE CONTENT - %	******	
** ESP		
NUMBER	1	
** MECHANICAL COLLECTOR		
NUMBER	1	
** PARTICULATE SCRUBBER		
NUMBER	2	
TYPE	VENTURI	
SUPPLIER	ENVIRONEERING	
NUMBER OF STAGES	1	
SHELL MATERIAL	316L SS	
BOILER LOAD/SCRUBBER - %	25.0	
FLUE GAS CAPACITY - CU.M/S	145.8	(309000 ACFM)
FLUE GAS TEMPERATURE - C	157.2	(315 F)
L/G RATIO - LITER/CU.M	.6	(4.8 GAL/1000ACF)
PRESSURE DROP - KPA	*******	(***** IN-H20)
** FGD SYSTEM		
SALEABLE PRODUCT/THROWAWAY PRODUCT	SALEABLE PRODUCT	
GENERAL PROCESS TYPE	WET SCRUBBING	
PROCESS TYPE	MAGNESIUM OXIDE	
PROCESS ADDITIVES	NONE	
SYSTEM SUPPLIER	UNITED ENGINEERS	
A-E FIRM	UNITED ENGINEERS & CONSTRUCTORS	
DEVELOPMENT LEVEL	DEMONSTRATION	
NEW/RETROFIT	RETROFIT	
PARTICULATE DESIGN REMOVAL EFFICIENCY - %	99.00	
SO2 DESIGN REMOVAL EFFICIENCY - %	90.00	
COMMERCIAL DATE	9/75	
INITIAL START-UP	9/75	
ABSORBER SPARE CAPACITY INDEX - %	.0	
ABSORBER SPARE COMPONENT INDEX	.0	

** ABSORBER

NUMBER	1	
TYPE	GRID TOWER	
INITIAL START UP	9/75	
SUPPLIER	RILEY STOKER/ENVIRONEERING	
NUMBER OF STAGES	1	
DIMENSIONS - FT	14 X 25 X 53	
SHELL MATERIAL	COR-TEN STEEL	
SHELL LINER MATERIAL	POLYURETHANE	
BOILER LOAD/ABSORBER - %	31.3	
GAS FLOW - CU.M/S	126.47	(268000 ACFM)
GAS TEMPERATURE - C	51.7	(125 F)
LIQUID RECIRCULATION RATE - LITER/S	843.	(13384 GPM)
L/G RATIO - L/CU.M	6.5	(48.5 GAL/1000ACF)
PRESSURE DROP - KPA	2.5	(10.0 IN-H2O)

** CENTRIFUGE

NUMBER	1

** FANS

NUMBER	3	
TYPE	SCRUBBER ID	
CONSTRUCTION MATERIALS	316L SS WITH CARPENTER 20 HUB	
SERVICE - WET/DRY	DRY	
CAPACITY - CU.M/S	126.47	(268000 ACFM)

** MIST ELIMINATOR

TYPE	CHEVRON	
CONSTRUCTION MATERIAL	FIBERGLASS	
CONFIGURATION	VERTICAL	
NUMBER OF STAGES	1	
NUMBER OF PASSES	2	
FREEBOARD DISTANCE - M	2.44	(8.0 FT)
WASH SYSTEM	LOWER M E IS WASHED ONCE PER SHIFT (3 TIMES/DAY)	

** PUMPS

SERVICE	NUMBER
ABSORBER RECIRCULATION	2

** REHEATER

NUMBER	1	
TYPE	DIRECT COMBUSTION	
TEMPERATURE BOOST - C	57.2	(103 F)

** THICKENER

NUMBER	1	
DIAMETER - M	12.2	(40 FT)
OUTLET SOLIDS - %	25.0	

** WATER LOOP

TYPE	OPEN	
FRESH MAKEUP WATER ADDITION - LITERS/S	8.3	(132 GPM)

** BYPRODUCTS

BYPRODUCT NATURE	SULFURIC ACID

PERFORMANCE DATA

PERIOD	MODULE	AVAILABILITY	OPERABILITY	RELIABILITY	UTILIZATION	% REMOVAL SO2	% REMOVAL PART.	PER HOURS	BOILER HOURS	FGD HOURS	CAP. FACTOR
0/74	SYSTEM										

** PROBLEMS/SOLUTIONS/COMMENTS

THE EDDYSTONE STATION OF THE PHILADELPHIA ELECTRIC CO. (PECO) IS LOCATED ON THE DELAWARE RIVER IN EDDYSTONE, PENNSYLVANIA, ABOUT 11 MILES SOUTHWEST OF THE CENTER OF PHILADELPHIA. THE PLANT IS ABOUT 5 MILES WEST OF ONE OF THE MAIN RUNWAYS OF THE PHILADELPHIA INTERNATIONAL AIRPORT.

THE STATION HAS FOUR GENERATORS WITH A TOTAL NET GENERATING CAPACITY OF 1295 MW. UNITS 1 AND 2 BURN COAL WITH AN AVERAGE GROSS HEATING VALUE OF 12,600 BTU/LB AND ASH AND SULFUR CONTENTS OF 9.4% AND 2.6%.

PHILADELPHIA ELECTRIC: EDDYSTONE 1A (CONT.)

PERIOD	MODULE	AVAILABILITY	OPERABILITY	RELIABILITY	UTILIZATION	% REMOVAL SO2	% REMOVAL PART.	PER HOURS	BOILER HOURS	FGD HOURS	CAP. FACTOR

RESPECTIVELY. STEAM CONDITIONS ARE 5,000 PSI AND 1150 F. THESE ARE THE HIGHEST UTILITY PLANT OPERATING PRESSURE AND TEMPERATURE CONDITIONS IN THE UNITED STATES. UNITS 1 AND 2 ARE BASE-LOAD UNITS. UNITS 3 AND 4 ARE PEAK-LOAD GENERATORS WHICH BURN NO. 6 OIL.

THERE ARE TWO FURNACES ON THE NO. 1 BOILER. EACH FURNACE WAS INSTALLED WITH PARTICULATE CONTROLS CONSISTING OF MECHANICAL COLLECTORS AND AN ELECTROSTATIC PRECIPITATOR.

THE MAGNESIUM OXIDE-BASED FLUE GAS DESULFURIZATION (FGD) SYSTEM ON BOILER NO. 1 AT THE EDDYSTONE STATION OF PHILADELPHIA ELECTRIC CO. (PECO) WAS DESIGNED AND INSTALLED BY UNITED ENGINEERS AND CONSTRUCTORS, INC., IN CO-OPERATION WITH PHILADELPHIA ELECTRIC. THE SYSTEM CONSISTS OF THREE FIRST-STAGE SCRUBBER MODULES IN PARALLEL FOR PARTICULATE CONTROL (TWO ENVIRONEERING VENTRI-ROD SYSTEMS AND ONE PEABODY-LURGI VENTURI UNIT) AND A SECOND-STAGE ENVIRONEERING ABSORBER MODULE WITH TWO VENTRI-ROD BEDS FOR SULFUR DIOXIDE REMOVAL.

THE THREE FIRST-STAGE SCRUBBERS ARE SIZED TO HANDLE ALL THE EXHAUST FROM UNIT 1 WHICH HAS A NET GENERATING CAPACITY OF 310 MW. THE SECOND-STAGE ABSORBER IS SIZED TO HANDLE ONE-THIRD OF THE GAS FLOW EQUIVALENT TO APPROXIMATELY 105 MW (NET). THE SYSTEM IS DESIGNED TO REMOVE 90% OF THE SULFUR DIOXIDE FROM BOILER STACK GAS. A GENERAL PROCESS FLOW DIAGRAM OF THE WET SCRUBBING SYSTEM IS PRESENTED IN APPENDIX B.

SCRUBBER OPERATING HISTORY

THERE WAS A BRIEF OPERATING PERIOD ON THE PARTICULATE SCRUBBERS FROM MID-NOVEMBER, 1974 TO MARCH, 1975, THAT UNCOVERED A NUMBER OF PROBLEM AREAS. DUE TO A NUMBER OF EXTENUATING CIRCUMSTANCES, PARTICULATE SCRUBBING WAS NOT RESTARTED UNTIL JULY 23, 1975, WITH ONE PARTICULATE SCRUBBING TRAIN FOLLOWED BY THE OTHER TWO TRAINS, ON AUGUST 15 AND OCTOBER 2, RESPECTIVELY. THE SULFUR DIOXIDE ABSORBER WAS STARTED FOR THE FIRST TIME ON OCTOBER 2, 1975 AND THE MAGNESIUM OXIDE REGENERATION FACILITY FIRST PRODUCED MAGNESIUM SULFITE FROM THE EDDYSTONE SCRUBBER ON OCTOBER 28, 1975.

THE MAGNESIUM OXIDE REGNERATION FACILITY HAS BEEN OPERATED TO PROCESS ALL MAGNESIUM SULFITE DOWNS AT THE EDDYSTONE SCRUBBER.

THE SULFUR DIOXIDE SCRUBBING SYSTEM WAS TEMPORARILY SHUT DOWN DECEMBER 31, 1975, BECAUSE THE ACID PLANT REGENERATION FACILITY AT THE OLIN CHEMICAL SULFURIC ACID PLANT IN PAULSBORO, NEW JERSEY PERMANENTLY CEASED OPERATIONS. THE ACID PLANT REGENERATION FACILITY WAS RELOCATED TO THE ESSEX CHEMICAL PLANT IN NEWARK, NEW JERSEY.

THE PARTICULATE AND SULFUR DIOXIDE SCRUBBING SYSTEM INSTALLED ON THE EDDYSTONE NO. 1 UNIT IS THE FIRST PHASE OF A TWO-PHASE PROJECT. FOLLOWING SUCCESSFUL DEVELOPEMTN OF THIS SYSTEM WITH MORE CONTINUOUS OPERATION, IT WILL BE INCORPORATED INTO THE DESIGN FOR THE COMPLETE SULFUR DIOXIDE REMOVAL ON EDDYSTONE NO. 2 AND ONE OF THE TWO EXISTING UNITS AT THE CROMBY STATION.

ADDITIONAL INFORMATION AND DATA CONCERNING THE OPERATION OF THE PARTICULATE AND SULFUR DIOXIDE SCRUBBERS INSTALLED AT THIS PLANT ARE PROVIDED IN THE PERFORMANCE TABLE THAT FOLLOWS.

11/74 SYSTEM 720

** PROBLEMS/SOLUTIONS/COMMENTS

THE SCRUBBING SYSTEM AT THIS PLANT CONSISTS OF THREE PARALLEL SCRUBBING TRAINS INCORPORATING 3 WET PARTICULATE SCRUBBERS AND ONE SO2 ABSORBER MODULE. THERE WAS A BRIEF OPERATING PERIOD ON THE PARTICULATE SCRUBBERS FROM MID-NOVEMBER 1974 TO MARCH 1975. PROBLEMS ENCOUNTERED CENTERED AROUND THE SCRUBBER BOOSTER FANS AND THE FLUE GAS AND LIQUID CONDITIONS. THE B-SIDE BOOSTER FAN DEVELOPED HIGH SHAFT VIBRATION WHEN STARTED FOR THE FIRST TIME. THIS PROBLEM WAS DESIGN RELATED, INVOLVING AN EXCESSIVE CLEARANCE AREA BETWEEN THE SHAFT AND WHEELHUB. ALSO, EXTENSIVE CORROSION DEVELOPED IN THE C-SIDE PARTICULATE SCRUBBER INTERNALS. THIS WAS CAUSED BY LOW SCRUBBING SOLUTION PH LEVELS AND CHLORIDE LEVELS AS HIGH AS 2000 PPM.

PERIOD	MODULE	AVAILABILITY	OPERABILITY	RELIABILITY	UTILIZATION	% REMOVAL SO2	% REMOVAL PART.	PER HOURS	BOILER HOURS	FGD HOURS	CAP. FACTOR

THESE CONDITIONS COUPLED WITH THE THERMAL SHOCK OF A HOT START PROCEDURE CAUSED THE CORROSION. THIS PROBLEM WAS AMELIORATED BY CAUSTIC ADDITION, HIGHER BLOWDOWN AND EMPLOYING A COLD START PROCEDURE. AT APPROXIMATELY THIS TIME, A CHECKOUT OF SO2 SYSTEM WAS CONDUCTED. BLISTERING AND PEELINGM OF THE POLYURETHANE COATINGS WERE DETECTED AND CORRECTED BY RECOATING WITH FLAKEGLASS.

12/74	SYSTEM							744			
1/75	SYSTEM							744			
2/75	SYSTEM							672			
3/75	SYSTEM							744			
4/75	SYSTEM							720			
5/75	SYSTEM							744			
6/75	SYSTEM							720			
7/75	SYSTEM							744			

** PROBLEMS/SOLUTIONS/COMMENTS

THE C-SIDE PARTICULATE SCRUBBER RESTARTED ON JULY 23, 1975. THE TWO OTHER TRAINS, B-SIDE AND A-SIDE, WERE PUT INTO OPERATION ON AUGUST 15 AND OCTOBER 2, RESPECTIVELY. THE SO2 ABSORBER MODULE IN THE C-SIDE SCRUBBING TRAIN WAS INITIALLY PLACED IN SERVICE OCTOBER 2, 1975. THE OLIN CHEMICAL MGO REGENERATION FACILITY FIRST PROCESSED MAGNESIUM SULFITE FROM THE EDDYSTONE SCRUBBER ON OCTOBER 28, 1975. THE C-SIDE PARTICULATE SCRUBBER OPERATED A TOTAL OF 2831 HOURS THROUGH JANUARY 31, 1976, FOR AN AVAILABILTY OF 70 PERCENT. THE B-SIDE TRAIN HAS OPERATED A TOTAL OF 1933 HOURS THROUGH JANUARY 31, 1976 FOR AN AVAILABILITY OF 55%. THE SIDE TRAIN OPERATED A TOTAL OF 626 HOURS THROUGH JANUARY 31, 1976, FOR AN AVAILABILITY OF 24%. THE C-SIDE SO2 ABSORBER WAS IN SERVICE A TOTAL OF 556 HOURS THROUGH DECEMBER 31, 1975, WITH AN AVAILABILITY OF 33% SINCE START UP. PROBLEMS ENCOUNTERED IN THE OPERATION OF THE THREE SCRUBBING TRAINS INCLUDED: UNDER-DESIGNED RECIRCULATION PUMPS, MALFUNCTION OF THE FLUE GAS BY-PASS DAMPER DRIVE UNITS AND FAILURE OF THE DOUBLE-BRICK REFRACTORY LINING IN THE REHEAT COMBUSTION CHAMBER.

8/75	SYSTEM							744			
9/75	SYSTEM							720			
10/75	SYSTEM							744			
11/75	SYSTEM							720			
12/75	SYSTEM							744			
1/76	SYSTEM							744			
2/76	SYSTEM							696			

** PROBLEMS/SOLUTIONS/COMMENTS

OPERATION OF THE SO2 SCRUBBING SYSTEM AT EDDYSTONE WAS TEMPORARILY HALTED BECAUSE THE ACID PLANT REGENERATION FACILITY AT THE OLIN CHEMICAL SULFURIC ACID PLANT IN PAULSBORO, NEW JERSEY PERMANENTLY CEASED OPERATIONS. THE UTILITY IS NOW INVESTIGATING ALTERNATIVE REGENERATION SITES. A MINIMUM PERIOD OF SIX MONTHS WILL BE REQUIRED FOR RELOCATION ONCE A CHOICE IS PADE. THE UTILITY ANNOUNCED PLANS FOR RELOCATION OF THE REGENERATION FACILITY AT THE ESSEX CHEMICAL PLANT IN NEWARK, NEW JERSEY.

3/76	SYSTEM							744			
4/76	SYSTEM							720			
5/76	SYSTEM							744			

PHILADELPHIA ELECTRIC: EDDYSTONE 1A (CONT.)

PERIOD	MODULE	AVAILABILITY	OPERABILITY	RELIABILITY	UTILIZATION	% REMOVAL SO2	% REMOVAL PART.	PER HOURS	BOILER HOURS	FGD HOURS	CAP. FACTOR
		PERFORMANCE DATA									
6/76	SYSTEM							720			

** PROBLEMS/SOLUTIONS/COMMENTS

RESUMPTION OF SO2 SCRUBBING OPERATIONS IS PRESENTLY SCHEDULED FOR DECEMBER 1976. THE RELOCATION OF THE REGENERATION FACILITY IS NOW IN PROGRESS. THE PARTICULATE SCRUBBERS ARE OPERATIONAL. THE C-SIDE BOOSTER FAN HAS DEVELOPED A MATERIALS FAILURE BETWEEN THE HUB AND SHAFT (IDENTICAL TO THEI B-SIDE UNIT MENTIONED EARLIER).

7/76	SYSTEM							744			
8/76	SYSTEM							744			
9/76	SYSTEM							720			

** PROBLEMS/SOLUTIONS/COMMENTS

ALL THREE BOOSTER FANS HAVE NOW DEVELOPED THE MATERIALS FAILURE BETWEEN THE HUB AND SHAFT (AS IDENTIFIED IN THE ABOVE FOR THE B-SIDE UNIT). THESET UNITS HAVE BEEN RETURNED TO THE MANUFACTURER FOR MODIFICATIONS AND REPAIRS. CURRENTLY, ONE OF THE PARTICULATE SCRUBBERS IS IN THE FLUE GAS STREAM. TO DATE, ALL THREE OF THE WET PARTICULATE SCRUBBERS HAVE NOT SEEN ANY APPRECIABLE SIMULTANEOUS SERVICE TIME.

10/76	SYSTEM							744			
11/76	SYSTEM							720			

** PROBLEMS/SOLUTIONS/COMMENTS

MGO SCRUBBING OPERATIONS ARE NOW SCHEDULED TO RESTART IN MAY 1977. REGEN-R REGENERATION FACILITY RELOCATION IS BEING COMPLETED, AND MODIFICATIONS TOD THE ID BOOSTER FANS CURRENTLY BEING EFFECTED CONSIST OF CONVERSION FROM A SHRINK FIT TO A SLIP FIT. THESE MODIFICATIONS ARE EXPECTED TO ELIMINATE RECURRING VIBRATION PROBLEMS.

12/76	SYSTEM					.0		744	0	0	
1/77	SYSTEM							744			

** PROBLEMS/SOLUTIONS/COMMENTS

THE MGO SCRUBBING SYSTEM AT EDDYSTONE NO. 1A IS STILL SCHEDULED FOR RESTART IN MAY 1977. THE START-UP OF THE NEW MAGNESIUM SULFITE REGENER- ATION FACILITY AT THE ESSEX CHEMICAL PLANT AT NEWARK, N.J. IS ALSO SCHED- ULED FOR MAY 1977. THE THREE PARALLEL VENTURI SCRUBBERS CONTROLLING PAR- C TICULATE EMISSIONS ON EDDYSTONE 1 WENT BACK INTO SERVICE IN MARCH 1977.

2/77	SYSTEM							672			
3/77	SYSTEM							744			
4/77	SYSTEM							720			

** PROBLEMS/SOLUTIONS/COMMENTS

RESUMPTION OF MAGNESIUM OXIDE SCRUBBING OPERATIONS OCCURRED DURING THE REPORT PERIOD. THE UTILITY REPORTED THAT SO2 SCRUBBING OPERATIONS WERE NOT CONTINUOUS THROUGHOUT THE PERIOD. THE ABSORBER WAS IN SERVICE APPROXI- MATELY 20% HOURS DURING MAY. REGENERATION OPERATIONS AT THE ESSEX FACILITY WERE NOT CONDUCTED DURING THE PERIOD. PECO PLANS TO INITIATE SO2 RECOVERY AND MAGOX REGENERATION OPERATIONS DURING THE MONTH OF JUNE. THE SO2 MODULE CONTAINS TWO ABSORBER SECTIONS IN SERIES (EACH SECTION CONSISTING OF AN ADJUSTABLE ROD DECK WITH UNDERSPRAYS). ONLY ONE OF THE ABSORBER SECTIONS IS BEING USED FOR SO2 REMOVAL. SO2 REMOVAL EFFICIENCY HAS NOT BEEN MEASURED. MAGNESIUM OXIDE LOSSES IN THE SYSTEM (ABSORPTION AND REGENERATION) ARE ESTIMATED AT 10%.

5/77	SYSTEM							744			

PERIOD	MODULE	AVAILABILITY	OPERABILITY	RELIABILITY	UTILIZATION	% REMOVAL SO2	% REMOVAL PART.	PER HOURS	BOILER HOURS	FGD HOURS	CAP. FACTOR
6/77	SYSTEM							720			

** PROBLEMS/SOLUTIONS/COMMENTS

FAILURE OF MINOR ANCILLIARY EQUIPMENT CAUSED SOME SHUTDOWNS. LATER, THE BOILER ITSELF WENT DOWN. OVER THIS PERIOD THE ROTARY VALVE ON THE MAG. SULFITE DRIER DISCHARGE PLUGGED REPEATEDLY. ALSO THE BELTS ON THE AGITATOR OF THE MAG-OX PRESLAKER FAILED.

7/77	SYSTEM							744			
8/77	SYSTEM							744			

** PROBLEMS/SOLUTIONS/COMMENTS

THE ROTARY VALVE PROBLEM APPEARS TO BE SOLVED. CUMULATIVE AVAILABILITY SINCE MAY IS ESTIMATED TO BE ROUGHLY 33%. PECO REPORTED 131 HOURS OF CONTINUOUS OPERATION FOR THE SCRUBBER AND THICKENER CENTRIFUGE DRYING LOOP. DURING THE REPORT PERIOD THERE HAVE BEEN CONTINUAL PROBLEMS WITH THE GLAND PACKING ON THE FGD SYSTEM CIRCULATION PUMPS (STUFFING BOX). PECO HAS SINCE CHANGED THE GLAND CONFIGURATION. THERE ALSO WAS A PROBLEM WITH HIGH SOLIDS FORMATION IN THE THICKENER. DURING THE OCTOBER-NOVEMBER PERIOD THERE WAS ONE RUN WHICH LASTED APPROXIMATELY FIVE DAYS. GLAND PACKING PROBLEMS PERSISTED AND MECHANICAL SEALS ARE BEING CONSIDERED AS POSSIBLE ALTERNATIVES. EVEN WITH HEAT TRACING THE SEAL WATER FROZE-UP CAUSING ROTAMETERS TO BURST. HIGH SOLIDS PROBLEM IN THE THICKENER IS STILL A PROBLEM AREA.

9/77	SYSTEM							720			
10/77	SYSTEM							744			
11/77	SYSTEM							720			
12/77	SYSTEM	41.0						744			

** PROBLEMS/SOLUTIONS/COMMENTS

THE UNIT WENT DOWN DECEMBER 22 FOR A TURBINE OVERHAUL. DURING THE OUTAGE MAINTENANCE AND MINOR MODIFICATIONS WILL BE MADE ON THE SCRUBBERS. THE UNI IS EXPECTED TO BE BACK ON LINE THE FIRST WEEK IN MARCH. THE AVAILABILITY FACTOR FOR THE OCT, NOV, AND DEC QUARTER WAS 41%. DURING THIS PERIOD SOME OF THE HEAT TRACING FAILED AND OTHER PROBLEMS OCCURRED WHEN LINES FROZE AT THE ACID PLANT CAUSING THE FACILITY TO BE RUN INTERMITTENTLY. THE GLAND PACKING PROBLEMS HAVE NOT YET BEEN SOLVED AND MECHANICAL SEALS ARE STILL BEING CONSIDERED.

1/78	SYSTEM				.0			744		0	
2/78	SYSTEM				.0			672		0	

** PROBLEMS/SOLUTIONS/COMMENTS

THE TURBINE OVERHAUL CONTINUED DURING THE REPORT PERIOD. DURING THE SHUTDOWN PERIOD IT WAS FOUND THAT SOME HIGH PRESSURE STEAM TUBES WERE CRACKED. SO UNIT MAINTENANCE HAS TAKEN LONGER THAN EXPECTED. SOME MINOR FGD SYSTEM MODIFICATIONS HAVE BEEN INCORPORATED IN THE COURSE OF THE SHUTDOWN PERIOD. START UP IS EXPECTED IN MID-APRIL 1978.

3/78	SYSTEM				.0			744		0	
4/78	SYSTEM							720			

** PROBLEMS/SOLUTIONS/COMMENTS

THE UNIT CAME BACK ON LINE JUNE 1 AFTER AN EXTENSIVE SYSTEM MODIFICATION OUTAGE WHICH BEGAN DECEMBER 22. THE UNIT WAS EXPECTED BACK ON LINE IN MID-APRIL, BUT THERE WAS A PROBLEM WITH A SUPER PRESSURE STEAM TURBINE.

5/78	SYSTEM							744			

PHILADELPHIA ELECTRIC: EDDYSTONE 1A (CONT.)

PERIOD	MODULE	AVAILABILITY	OPERABILITY	RELIABILITY	UTILIZATION	% REMOVAL SO2	% REMOVAL PART.	PER HOURS	BOILER HOURS	FGD HOURS	CAP. FACTOR
		PERFORMANCE DATA									
6/78	SYSTEM	49.0						720			

** PROBLEMS/SOLUTIONS/COMMENTS

DURING JUNE THE FGD SYSTEM ACHIEVED A 49% OPERABILITY. OPERABILITY FOR JULY WAS 51%. PROBLEMS OCCURRED IN LATE JUNE WITH THE MGSO3 SLURRY CIRCULATION PUMP WHEN THE UTILITY DISCOVERED THE RUBBER LINER WAS TORN AWAY. THERE HAVE BEEN SOME PROBLEMS WITH THE MGO SECTION WHERE THE MGO MIXES WITH THE SYSTEM LIQUOR. FIRE BRICK WAS REMOVED FROM THE FLUID BED REACTOR CHAMBER TO REPLACE THE ACID BARRIER PLATES WHICH WERE FAILING. THE FIRE BRICK WAS THEN REPLACED. THE SLOW PIECE BY PIECE PROCEDURE WAS TIME CONSUMING AND ACCOUNTED FOR MOST OF THE REGENERABLE FACILTY DOWN TIME (MOST OF JUNE AND JULY). MAJOR PROBLEMS WERE SOLVED ON THE REGENERATIVE FACILITY OVER THE PERIOD RESULTING IN IMPROVED AVAILABILITY OF THE FACILITY.

7/78	SYSTEM							744			
8/78	SYSTEM		33.0		32.0			744	631	240	

** PROBLEMS/SOLUTIONS/COMMENTS

DURING THE MONTH OF AUGUST SCRUBBER CIRCULATING PIPING PROBLEMS WERE ENCOUNTERED. A BUTTERFLY CONTROL VALVE WAS NOT FULLY OPEN AND A SECTION OF PIPE DOWNSTREAM AT A 90 DEGREE BEND ERODED AWAY. TO CORRECT THE PROBLEM THE BUTTERFLY VALVE WAS TAKEN OUT AND REPLACED WITH A RESTRICTION ORIFACE. THE CIRCULATION PUMPING RATE WAS ALSO REDUCED.

9/78	SYSTEM		78.0		56.0			720	516	402	

** PROBLEMS/SOLUTIONS/COMMENTS

THE UTILITY REPORTED THAT NO MAJOR PROBLEMS WERE ENCOUNTERED DURING THE MONTH OF SEPTEMBER. CERTAIN MECHANICAL PROBLEMS WERE RESOLVED WHICH CAUSED AN IMPROVEMENT IN THE OPERABILITY FIGURE.

10/78	SYSTEM		23.0					744			

** PROBLEMS/SOLUTIONS/COMMENTS

THE FGD SYSTEM WAS SHUT DOWN FOR AN APPRECIABLE TIME DURING THE LAST QUARTER OF 1978 DUE TO MODIFICATIONS TO THE MGO SLAKING EQUIPMENT.

11/78	SYSTEM							720			
12/78	SYSTEM							744			
1/79	SYSTEM							744			
2/79	SYSTEM							672			
3/79	SYSTEM							744			

** PROBLEMS/SOLUTIONS/COMMENTS

NO INFORMATION WAS REPORTED FOR THIS REPORT PERIOD.

4/79	SYSTEM							720			
5/79	SYSTEM							744			
6/79	SYSTEM							720			

** PROBLEMS/SOLUTIONS/COMMENTS

NO INFORMATION IS AVAILABLE FOR THIS PERIOD BUT SHOULD BE FOR THE NEXT REPORT PERIOD.

7/79	SYSTEM							744			

PERFORMANCE DATA

PERIOD	MODULE	AVAILABILITY	OPERABILITY	RELIABILITY	UTILIZATION	% REMOVAL SO2	% REMOVAL PART.	PER HOURS	BOILER HOURS	FGD HOURS	CAP. FACTOR
8/79	SYSTEM							744			
9/79	SYSTEM							720			

** PROBLEMS/SOLUTIONS/COMMENTS

NO DATA WAS AVAILABLE FOR THE UNIT DURING THE THIRD QUARTER 1979.

10/79	SYSTEM							744			
11/79	SYSTEM							720			
12/79	SYSTEM							744			

** PROBLEMS/SOLUTIONS/COMMENTS

NO INFORMATION WAS AVAILABLE FOR THIS PERIOD.

SECTION 3
DESIGN AND PERFORMANCE DATA FOR OPERATIONAL DOMESTIC FGD SYSTEMS

COMPANY NAME	PUBLIC SERVICE OF NEW MEXICO	
PLANT NAME	SAN JUAN	
UNIT NUMBER	1	
CITY	WATERFLOW	
STATE	NEW MEXICO	
REGULATORY CLASSIFICATION	C	
PARTICULATE EMISSION LIMITATION - NG/J	21.	(.050 LB/MMBTU)
SO2 EMISSION LIMITATION - NG/J	146.	(.340 LB/MMBTU)
NET PLANT GENERATING CAPACITY - MW	*******	
GROSS UNIT GENERATING CAPACITY - MW	361.0	
NET UNIT GENERATING CAPACITY W/FGD - MW	314.0	
NET UNIT GENERATING CAPACITY WO/FGD - MW	330.0	
EQUIVALENT SCRUBBED CAPACITY - MW	361.0	
** BOILER DATA		
SUPPLIER	******	
TYPE	PULVERIZED COAL	
SERVICE LOAD	BASE	
COMMERCIAL SERVICE DATE	3/76	
MAXIMUM BOILER FLUE GAS FLOW - CU.M/S	622.44	(1319000 ACFM)
FLUE GAS TEMPERATURE - C	122.8	(253 F)
STACK HEIGHT - M	******	(**** FT)
STACK TOP DIAMETER - M	*******	(***** FT)
** FUEL DATA		
FUEL TYPE	COAL	
FUEL GRADE	******	
AVERAGE HEAT CONTENT - J/G	20934.	(9000 BTU/LB)
RANGE HEAT CONTENT - BTU/LB		8550
AVERAGE ASH CONTENT - %	22.45	
RANGE ASH CONTENT - %	******	
AVERAGE MOISTURE CONTENT - %	14.82	
RANGE MOISTURE CONTENT - %	******	
AVERAGE SULFUR CONTENT - %	.80	
RANGE SULFUR CONTENT - %	******	
AVERAGE CHLORIDE CONTENT - %	********	
RANGE CHLORIDE CONTENT - %	******	
** ESP		
NUMBER	1	
TYPE	HOT SIDE	
PARTICULATE DESIGN REMOVAL EFFICIENCY - %	99.8	
** PARTICULATE SCRUBBER		
NUMBER	4	
TYPE	VENTURI	
SUPPLIER	DAVY POWERGAS	
SHELL MATERIAL	CARBON STEEL	
LINING MATERIAL	ACID BRICK	
FLUE GAS CAPACITY - CU.M/S	257.2	(545000 ACFM)
FLUE GAS TEMPERATURE - C	136.1	(277 F)
LIQUID RECIRCULATION RATE - LITER/S	224.9	(3570 GPM)
PRESSURE DROP - KPA	*******	(***** IN-H2O)
** FGD SYSTEM		
SALEABLE PRODUCT/THROWAWAY PRODUCT	SALEABLE PRODUCT	
GENERAL PROCESS TYPE	WET SCRUBBING	
PROCESS TYPE	WELLMAN LORD	
PROCESS ADDITIVES	NONE	
SYSTEM SUPPLIER	DAVY POWERGAS	
A-E FIRM	STEARNS-ROGER	
CONSTRUCTION FIRM	STEARNS-ROGER	
DEVELOPMENT LEVEL	FULL SCALE	
NEW/RETROFIT	RETROFIT	
PARTICULATE DESIGN REMOVAL EFFICIENCY - %	99.50	
SO2 DESIGN REMOVAL EFFICIENCY - %	85.00	
INITIAL START-UP	4/78	
CONSTRUCTION INITIATION	1/76	
ABSORBER SPARE CAPACITY INDEX - %	33.0	
ABSORBER SPARE COMPONENT INDEX	1.0	

PUBLIC SERVICE OF NEW MEXICO: SAN JUAN 1 (CONT.)

** ABSORBER

NUMBER	4	
TYPE	TRAY TOWER	
INITIAL START UP	4/78	
SUPPLIER	DAVY POWERGAS	
NUMBER OF STAGES	5	
SHELL MATERIAL	CONCRETE AND 316 SS	
SHELL LINER MATERIAL	NONE	
INTERNAL MATERIAL	316L SS TRAYS	
BOILER LOAD/ABSORBER - %	33.0	
GAS FLOW - CU.M/S	207.16	(439000 ACFM)
GAS TEMPERATURE - C	48.9	(120 F)
LIQUID RECIRCULATION RATE - LITER/S	47.	(750 GPM)
PRESSURE DROP - KPA	4.0	(16.0 IN-H2O)
SUPERFICAL GAS VELOCITY - M/SEC	3.3	(10.8 FT/S)
PARTICULATE INLET LOAD - G/CU.M	.1	(.053 GR/SCF)
PARTICULATE REMOVAL EFFICIENCY - %	75.0	
SO2 INLET CONCENTRATION - PPM	700	
SO2 OUTLET CONTRATION - PPM	70	
SO2 DESIGN REMOVAL EFFICIENCY - %	90.0	

** FANS

NUMBER	4	
TYPE	SCRUBBER FD	
SERVICE - WET/DRY	DRY	
CAPACITY - CU.M/S	155.73	(330000 ACFM)

** PUMPS

SERVICE	NUMBER
SLURRY TRANSFER	1
SCRUBBER RECIRCULATION	4
ABSORBER RECIRCULATION	4

** REHEATER

NUMBER	1	
TYPE	HOT AIR INJECTION	
HEATING MEDIUM	STEAM	
TEMPERATURE BOOST - C	28.8	(50 F)

** WATER LOOP

TYPE	CLOSED	
PURGE WATER LOSS - LITER/S	.0	(0 GPM)
FRESH MAKEUP WATER ADDITION - LITERS/S	30.2	(480 GPM)

** BYPRODUCTS

BYPRODUCT NATURE	ELEMENTAL SULFUR	
BYPRODUCT QUANTITY - M T/H	.85	(.94 TPH)
DISPOSITION	MARKETED	

PERFORMANCE DATA

PERIOD	MODULE	AVAILABILITY	OPERABILITY	RELIABILITY	UTILIZATION	% REMOVAL SO2	% REMOVAL PART.	PER HOURS	BOILER HOURS	FGD HOURS	CAP. FACTOR
4/78	SYSTEM							720			

** PROBLEMS/SOLUTIONS/COMMENTS

SO2 ABSORPTION BEGAN ON APRIL 8, 1978 USING TWO OF THE FOUR CELLS. ONE THIRD OF THE FLUE GAS IS BEING BYPASSED.

THE ABSORBERS WERE DOWN FOR 28 HOURS.

5/78	SYSTEM							744			
6/78	SYSTEM							720			

** PROBLEMS/SOLUTIONS/COMMENTS

A HIGH PRESSURE DROP ACROSS THE VENTURIS PREVENTED FULL FLUE GAS THROUGH THE FGD SYSTEM.

7/78	SYSTEM							744			

PUBLIC SERVICE OF NEW MEXICO: SAN JUAN 1 (CONT.)

PERIOD	MODULE	AVAILABILITY	OPERABILITY	RELIABILITY	UTILIZATION	% REMOVAL SO2	% REMOVAL PART.	PER HOURS	BOILER HOURS	FGD HOURS	CAP. FACTOR
		PERFORMANCE DATA									
8/78	SYSTEM							744			
	** PROBLEMS/SOLUTIONS/COMMENTS										
	THE HIGH PRESSURE DROP WAS LOWERED BY ADJUSTING INTERNAL PLUMB BOBS.										
	REPAIRS WERE MADE TO THE MIST ELIMINATORS WHILE THE MODULES WERE DOWN DURING PLUMB BOB ADJUSTMENTS.										
9/78	SYSTEM							720			
	** PROBLEMS/SOLUTIONS/COMMENTS										
	A FIRE IN THE START-UP TRANSFORMER DUCT BANK CAUSED A TWO WEEK BOILER OUTAGE.										
10/78	SYSTEM							744			
	** PROBLEMS/SOLUTIONS/COMMENTS										
	HEAT TRACING FAILURES ALLOWED LINE FREEZING TO OCCUR.										
	SOME SULFUR PRODUCT HAS BEEN PRODUCED.										
11/78	SYSTEM							720			
12/78	SYSTEM							744			
	** PROBLEMS/SOLUTIONS/COMMENTS										
	THE SYSTEM HAS BEEN RUNNINE HOWEVER WEATHER RELATED PROBLEMS LIMITED OPERATIONS TO 2 MODULES.										
1/79	SYSTEM							744			
2/79	SYSTEM							672			
3/79	SYSTEM							744			
4/79	SYSTEM							720			
5/79	SYSTEM							744			
	** PROBLEMS/SOLUTIONS/COMMENTS										
	HOURS ARE NOT YET AVAILABLE BECAUSE THE UTILITY IS CONCENTRATING EFFORTS ON OPERATION OF THIS NEW UNIT. THE UTILITY REPORTED THAT THE SCRUBBING MODULES THEMSELVES ARE OPERATING FINE. ALSO THE CHEMICAL PLANT IS READY AND THERE IS NO SYSTEM PLUGGING WHATSOEVER.										
	THE MAJOR PROBLEM ENCOUNTERED WAS GYRATING FANS.										
7/79	SYSTEM							744			
8/79	SYSTEM							744			
9/79	SYSTEM							720			
	** PROBLEMS/SOLUTIONS/COMMENTS										
	DURING THE THIRD QUARTER THE UNIT OPERATED ON TWO ABSORBERS. ALL FOUR ABSORBERS HAVE BEEN LARGELY AVAILABLE. ONE ABSORBER WAS DOWN DUE TO BOOSTER BLOWER VIBRATION PROBLEMS.										
10/79	SYSTEM							744			
11/79	SYSTEM							720			
12/79	A	94.0	79.0		23.8						

EPA UTILITY FGD SURVEY: FOURTH QUARTER 1979

PUBLIC SERVICE OF NEW MEXICO: SAN JUAN 1 (CONT.)

PERIOD	MODULE	AVAILABILITY	OPERABILITY	RELIABILITY	UTILIZATION	% REMOVAL SO2	% REMOVAL PART.	PER HOURS	BOILER HOURS	FGD HOURS	CAP. FACTOR
		PERFORMANCE DATA									
	B	100.0	67.4		20.3						
	C	.0	.0		.0						
	D	30.0	5.8		1.8						
	SYSTEM	56.0	38.0		11.0			744	224	85	

** PROBLEMS/SOLUTIONS/COMMENTS

A REHEATER PROBLEM HAS LIMITED SCRUBBING OPERATIONS TO 2 OF THE 4 ABSORBER MODULES.

SECTION 3
DESIGN AND PERFORMANCE DATA FOR OPERATIONAL DOMESTIC FGD SYSTEMS

COMPANY NAME	PUBLIC SERVICE OF NEW MEXICO	
PLANT NAME	SAN JUAN	
UNIT NUMBER	2	
CITY	WATERFLOW	
STATE	NEW MEXICO	
REGULATORY CLASSIFICATION	C	
PARTICULATE EMISSION LIMITATION - NG/J	21.	(.050 LB/MMBTU)
SO2 EMISSION LIMITATION - NG/J	146.	(.340 LB/MMBTU)
NET PLANT GENERATING CAPACITY - MW	*******	
GROSS UNIT GENERATING CAPACITY - MW	350.0	
NET UNIT GENERATING CAPACITY W/FGD - MW	306.0	
NET UNIT GENERATING CAPACITY WO/FGD - MW	322.0	
EQUIVALENT SCRUBBED CAPACITY - MW	350.0	
** BOILER DATA		
SUPPLIER	******	
TYPE	PULVERIZED COAL	
SERVICE LOAD	BASE	
COMMERCIAL SERVICE DATE	**/**	
MAXIMUM BOILER FLUE GAS FLOW - CU.M/S	622.44	(1319000 ACFM)
FLUE GAS TEMPERATURE - C	122.8	(253 F)
STACK HEIGHT - M	******	(**** FT)
STACK TOP DIAMETER - M	*******	(***** FT)
** FUEL DATA		
FUEL TYPE	COAL	
FUEL GRADE	******	
AVERAGE HEAT CONTENT - J/G	20934.	(9000 BTU/LB)
RANGE HEAT CONTENT - BTU/LB		8550
AVERAGE ASH CONTENT - %	22.45	
RANGE ASH CONTENT - %	******	
AVERAGE MOISTURE CONTENT - %	14.82	
RANGE MOISTURE CONTENT - %	******	
AVERAGE SULFUR CONTENT - %	.80	
RANGE SULFUR CONTENT - %	******	
AVERAGE CHLORIDE CONTENT - %	********	
RANGE CHLORIDE CONTENT - %	******	
** ESP		
NUMBER	1	
TYPE	HOT SIDE	
SUPPLIER	WESTERN PRECIPITATION	
PARTICULATE DESIGN REMOVAL EFFICIENCY - %	99.5	
** PARTICULATE SCRUBBER		
NUMBER	4	
TYPE	VENTURI	
SUPPLIER	DAVY POWERGAS	
SHELL MATERIAL	CARBON STEEL	
LINING MATERIAL	ACID BRICK	
FLUE GAS CAPACITY - CU.M/S	257.2	(545000 ACFM)
FLUE GAS TEMPERATURE - C	136.1	(277 F)
LIQUID RECIRCULATION RATE - LITER/S	224.9	(3570 GPM)
PRESSURE DROP - KPA	*******	(***** IN-H2O)
** FGD SYSTEM		
SALEABLE PRODUCT/THROWAWAY PRODUCT	SALEABLE PRODUCT	
GENERAL PROCESS TYPE	WET SCRUBBING	
PROCESS TYPE	WELLMAN LORD	
PROCESS ADDITIVES	NONE	
SYSTEM SUPPLIER	DAVY POWERGAS	
A-E FIRM	STEARNS-ROGER	
CONSTRUCTION FIRM	STEARNS-ROGER	
DEVELOPMENT LEVEL	FULL SCALE	
NEW/RETROFIT	RETROFIT	
PARTICULATE DESIGN REMOVAL EFFICIENCY - %	99.50	
SO2 DESIGN REMOVAL EFFICIENCY - %	85.00	
INITIAL START-UP	8/78	
CONSTRUCTION INITIATION	1/76	
ABSORBER SPARE CAPACITY INDEX - %	33.0	
ABSORBER SPARE COMPONENT INDEX	1.0	

PUBLIC SERVICE OF NEW MEXICO: SAN JUAN 2 (CONT.)

** ABSORBER

NUMBER	4	
TYPE	TRAY TOWER	
INITIAL START UP	8/78	
SUPPLIER	DAVY POWERGAS	
NUMBER OF STAGES	5	
SHELL MATERIAL	CONCRETE AND 316 SS	
SHELL LINER MATERIAL	NONE	
INTERNAL MATERIAL	316L SS TRAYS	
BOILER LOAD/ABSORBER - %	33.0	
GAS FLOW - CU.M/S	207.16	(439000 ACFM)
GAS TEMPERATURE - C	48.9	(120 F)
LIQUID RECIRCULATION RATE - LITER/S	47.	(750 GPM)
PRESSURE DROP - KPA	4.0	(16.0 IN-H2O)
SUPERFICAL GAS VELOCITY - M/SEC	3.3	(10.8 FT/S)
PARTICULATE OUTLET LOAD- G/CU.M	.2	(.079 GR/SCF)
SO2 INLET CONCENTRATION - PPM	1200	
SO2 OUTLET CONTRATION - PPM	85	
SO2 DESIGN REMOVAL EFFICIENCY - %	85.0	

** FANS

NUMBER	4	
TYPE	SCRUBBER FD	
SERVICE - WET/DRY	DRY	
CAPACITY - CU.M/S	155.73	(330000 ACFM)

** PUMPS

SERVICE	NUMBER
SLURRY TRANSFER	1
SCRUBBER RECIRCULATION	4
ABSORBER RECIRCULATION	4

** REHEATER

NUMBER	1	
TYPE	HOT AIR INJECTION	
HEATING MEDIUM	STEAM	
TEMPERATURE BOOST - C	28.8	(50 F)

** WATER LOOP

TYPE	CLOSED	
PURGE WATER LOSS - LITER/S	.0	(0 GPM)

** BYPRODUCTS

BYPRODUCT NATURE	ELEMENTAL SULFUR	
BYPRODUCT QUANTITY - M T/H	2.04	(2.25 TPH)
DISPOSITION	MARKETED	

PERFORMANCE DATA

PERIOD	MODULE	AVAILABILITY	OPERABILITY	RELIABILITY	UTILIZATION	% REMOVAL SO2	% REMOVAL PART.	PER HOURS	BOILER HOURS	FGD HOURS	CAP. FACTOR
8/78	SYSTEM							744			

** PROBLEMS/SOLUTIONS/COMMENTS

INITIAL OPERATIONS BEGAN IN LATE AUGUST. ALL THREE MODULES RAN TOGETHER FOR THE FIRST TIME IN EARLY SEPTEMBER.

PROBLEMS WERE ENCOUNTERED WITH THE BOOSTER FAN CONTROL DAMPER.

9/78	SYSTEM							720			

** PROBLEMS/SOLUTIONS/COMMENTS

A TWO WEEK BOILER OUTAGE WAS CAUSED BY A FIRE IN THE START-UP TRANSFORMER DUCT BANK.

10/78	SYSTEM							744			

PUBLIC SERVICE OF NEW MEXICO: SAN JUAN 2 (CONT.)

PERIOD	MODULE	AVAILABILITY	OPERABILITY	RELIABILITY	UTILIZATION	% REMOVAL SO2	% REMOVAL PART.	PER HOURS	BOILER HOURS	FGD HOURS	CAP. FACTOR
		PERFORMANCE DATA									

** PROBLEMS/SOLUTIONS/COMMENTS

HEAT TRACING FAILURES ALLOWED LINE FREEZING TO OCCUR.

A TEMPORARY HIGH FLYASH LOADING WAS THE RESULT OF AN ESP MALFUNCTION.

11/78	SYSTEM							720			
12/78	SYSTEM							744			

** PROBLEMS/SOLUTIONS/COMMENTS

THE SYSTEM HAS BEEN RUNNING, HOWEVER; WEATHER RELATED PROBLEMS LIMITED OPERATIONS TO 2 MODULES.

1/79	SYSTEM							744			
2/79	SYSTEM							672			
3/79	SYSTEM							744			
4/79	SYSTEM							720			
5/79	SYSTEM							744			

** PROBLEMS/SOLUTIONS/COMMENTS

HOURS ARE NOT YET AVAILABLE BECAUSE THE UTILITY IS CONCENTRATING EFFORTS ON OPERATION OF THIS NEW UNIT. THE UTILITY REPORTED THAT THE SCRUBBING MODULES THEMSELVES ARE OPERATING FINE. ALSO THE CHEMICAL PLANT IS READY AND THERE IS NO SYSTEM PLUGGING WHATSOEVER.

THE MAJOR PROBLEM ENCOUNTERED WAS GYRATING FANS.

7/79	SYSTEM							744			
8/79	SYSTEM							744			
9/79	SYSTEM							720			

** PROBLEMS/SOLUTIONS/COMMENTS

DURING THE THIRD QUARTER TWO OF THE FOUR ABSORBERS WERE DOWN DUE TO BOOSTER BLOWER VIBRATION PROBLEMS.

10/79	SYSTEM							744			
11/79	SYSTEM							720			
12/79	E	100.0	80.0	66.9							
	F	100.0	73.3	61.3							
	G	.0		.0							
	H	.0		.0							
	SYSTEM	50.0	38.0	32.0				744	622	239	

** PROBLEMS/SOLUTIONS/COMMENTS

DURING DECEMBER TWO MODULES WERE DOWN COMPLETELY.

CURRENTLY ONE OF THE TWO OPERATING MODULES IS ALSO DOWN AS A RESULT OF A BOILER-RELATED POWER FAILURE. THERE WAS NOT ENOUGH GAS TO CALL FOR TWO MODULES.

SECTION 3
DESIGN AND PERFORMANCE DATA FOR OPERATIONAL DOMESTIC FGD SYSTEMS

COMPANY NAME	PUBLIC SERVICE OF NEW MEXICO	
PLANT NAME	SAN JUAN	
UNIT NUMBER	3	
CITY	WATERFLOW	
STATE	NEW MEXICO	
REGULATORY CLASSIFICATION	C	
PARTICULATE EMISSION LIMITATION - NG/J	21.	(.050 LB/MMBTU)
SO2 EMISSION LIMITATION - NG/J	146.	(.340 LB/MMBTU)
NET PLANT GENERATING CAPACITY - MW	*******	
GROSS UNIT GENERATING CAPACITY - MW	534.0	
NET UNIT GENERATING CAPACITY W/FGD - MW	468.0	
NET UNIT GENERATING CAPACITY WO/FGD - MW	*******	
EQUIVALENT SCRUBBED CAPACITY - MW	534.0	
** BOILER DATA		
SUPPLIER	******	
TYPE	PULVERIZED COAL	
SERVICE LOAD	BASE	
COMMERCIAL SERVICE DATE	**/**	
MAXIMUM BOILER FLUE GAS FLOW - CU.M/S	963.05	(2040800 ACFM)
FLUE GAS TEMPERATURE - C	120.6	(249 F)
STACK HEIGHT - M	******	(**** FT)
STACK TOP DIAMETER - M	*******	(***** FT)
** FUEL DATA		
FUEL TYPE	COAL	
FUEL GRADE	******	
AVERAGE HEAT CONTENT - J/G	18841.	(8100 BTU/LB)
RANGE HEAT CONTENT - BTU/LB		******
AVERAGE ASH CONTENT - %	22.45	
RANGE ASH CONTENT - %	******	
AVERAGE MOISTURE CONTENT - %	********	
RANGE MOISTURE CONTENT - %	******	
AVERAGE SULFUR CONTENT - %	.80	
RANGE SULFUR CONTENT - %	******	
AVERAGE CHLORIDE CONTENT - %	********	
RANGE CHLORIDE CONTENT - %	******	
** PARTICULATE SCRUBBER		
NUMBER	5	
TYPE	VENTURI	
SUPPLIER	DAVY POWERGAS	
BOILER LOAD/SCRUBBER - %	33.0	
FLUE GAS CAPACITY - CU.M/S	257.2	(545000 ACFM)
FLUE GAS TEMPERATURE - C	136.1	(277 F)
PRESSURE DROP - KPA	*******	(***** IN-H2O)
SUPERFICIAL GAS VELOCITY - M/S	3.3	(10.8 FT/S)
PARTICULATE INLET LOAD - G/CU.M	.2	(.09 GR/SCF)
PARTICULATE OUTLET LOAD - G/CU.M	.1	(.056 GR/SCF)
SO2 INLET CONCENTRATION - PPM	700.000	
SO2 OUTLET CONCENTRATION - PPM	700.000	
** FGD SYSTEM		
SALEABLE PRODUCT/THROWAWAY PRODUCT	SALEABLE PRODUCT	
GENERAL PROCESS TYPE	WET SCRUBBING	
PROCESS TYPE	WELLMAN LORD	
SYSTEM SUPPLIER	DAVY POWERGAS	
A-E FIRM	BROWN & ROOT	
DEVELOPMENT LEVEL	FULL SCALE	
NEW/RETROFIT	NEW	
PARTICULATE DESIGN REMOVAL EFFICIENCY - %	99.50	
SO2 DESIGN REMOVAL EFFICIENCY - %	90.00	
INITIAL START-UP	12/79	
CONSTRUCTION INITIATION	1/79	
ABSORBER SPARE CAPACITY INDEX - %	2.5	
ABSORBER SPARE COMPONENT INDEX	1.0	
** ABSORBER		
NUMBER	5	
TYPE	TRAY TOWER	
INITIAL START UP	1/82	
SUPPLIER	DAVY POWERGAS	

PUBLIC SERVICE OF NEW MEXICO: SAN JUAN 3 (CONT.)

GAS FLOW - CU.M/S	240.67	(510000 ACFM)
GAS TEMPERATURE - C	48.9	(120 F)
PRESSURE DROP - KPA	4.2	(17.0 IN-H2O)
SUPERFICAL GAS VELOCITY - M/SEC	3.3	(10.8 FT/S)
PARTICULATE INLET LOAD - G/CU.M	.1	(.056 GR/SCF)
PARTICULATE OUTLET LOAD- G/CU.M	.1	(.056 GR/SCF)
SO2 INLET CONCENTRATION - PPM	700	
SO2 OUTLET CONTRATION - PPM	70	

** FANS

NUMBER	1
TYPE	FD

** MIST ELIMINATOR

** REHEATER

TYPE	HOT AIR INJECTION

** BYPRODUCTS

BYPRODUCT NATURE	SULFURIC ACID

PERFORMANCE DATA

PERIOD	MODULE	AVAILABILITY	OPERABILITY	RELIABILITY	UTILIZATION	% REMOVAL SO2	% REMOVAL PART.	PER HOURS	BOILER HOURS	FGD HOURS	CAP. FACTOR
12/79	SYSTEM							744			

** PROBLEMS/SOLUTIONS/COMMENTS

THE SAN JUAN 3 UNIT BEGAN COMMERCIAL OPERATION IN DECEMBER 1979. HOWEVER, THIS IS FOR ONE MODULE ONLY. THE OTHER THREE MODULES WILL BECOME OPERATIONAL ONE BY ONE UNTIL ALL ARE ON LINE.

12/79	J	100.0	11.2		5.9						
	SYSTEM							744	392		

** PROBLEMS/SOLUTIONS/COMMENTS

ONE MODULE BECAME OPERATIONAL DURING DECEMBER. NO SCRUBBER RELATED PROBLEMS HAVE BEEN REPORTED.

SECTION 3
DESIGN AND PERFORMANCE DATA FOR OPERATIONAL DOMESTIC FGD SYSTEMS

COMPANY NAME	SALT RIVER PROJECT	
PLANT NAME	CORONADO	
UNIT NUMBER	1	
CITY	ST. JOHNS	
STATE	ARIZONA	
REGULATORY CLASSIFICATION	D	
PARTICULATE EMISSION LIMITATION - NG/J	******	(****** LB/MMBTU)
SO2 EMISSION LIMITATION - NG/J	344.	(.800 LB/MMBTU)
NET PLANT GENERATING CAPACITY - MW	*******	
GROSS UNIT GENERATING CAPACITY - MW	350.0	
NET UNIT GENERATING CAPACITY W/FGD - MW	350.0	
NET UNIT GENERATING CAPACITY WO/FGD - MW	*******	
EQUIVALENT SCRUBBED CAPACITY - MW	280.0	
** BOILER DATA		
SUPPLIER	RILEY STOKER	
TYPE	PULVERIZED COAL	
SERVICE LOAD	BASE	
COMMERCIAL SERVICE DATE	1/80	
MAXIMUM BOILER FLUE GAS FLOW - CU.M/S	********	(******* ACFM)
FLUE GAS TEMPERATURE - C	21.1	(70 F)
STACK HEIGHT - M	152.	(500 FT)
STACK TOP DIAMETER - M	5.8	(19.0 FT)
** FUEL DATA		
FUEL TYPE	COAL	
FUEL GRADE	SUBBITUMINOUS	
AVERAGE HEAT CONTENT - J/G	19306.	(8300 BTU/LB)
RANGE HEAT CONTENT - BTU/LB		8,000-11,000
AVERAGE ASH CONTENT - %	********	
RANGE ASH CONTENT - %	******	
AVERAGE MOISTURE CONTENT - %	********	
RANGE MOISTURE CONTENT - %	******	
AVERAGE SULFUR CONTENT - %	1.00	
RANGE SULFUR CONTENT - %	0.4-1.0	
AVERAGE CHLORIDE CONTENT - %	********	
RANGE CHLORIDE CONTENT - %	******	
** ESP		
NUMBER	2	
TYPE	HOT SIDE	
SUPPLIER	WESTERN PRECIPITATION	
FLUE GAS CAPACITY - CU.M/S	1321.3	(2800000 ACFM)
FLUE GAS TEMPERATURE - C	404.4	(760 F)
** PARTICULATE SCRUBBER		
TYPE	NONE	
** FGD SYSTEM		
SALEABLE PRODUCT/THROWAWAY PRODUCT	THROWAWAY PRODUCT	
GENERAL PROCESS TYPE	WET SCRUBBING	
PROCESS TYPE	LIMESTONE	
PROCESS ADDITIVES	NONE	
SYSTEM SUPPLIER	PULLMAN KELLOGG	
A-E FIRM	BECHTEL	
DEVELOPMENT LEVEL	FULL SCALE	
NEW/RETROFIT	NEW	
PARTICULATE DESIGN REMOVAL EFFICIENCY - %	99.70	
SO2 DESIGN REMOVAL EFFICIENCY - %	82.50	
COMMERCIAL DATE	1/80	
INITIAL START-UP	11/79	
CONSTRUCTION INITIATION	5/77	
CONTRACT AWARDED	6/76	
ABSORBER SPARE CAPACITY INDEX - %	.0	
ABSORBER SPARE COMPONENT INDEX	.0	
** ABSORBER		
NUMBER	2	
TYPE	SPRAY TOWER	
INITIAL START UP	1/79	
SUPPLIER	PULLMAN KELLOG	
NUMBER OF STAGES		

SALT RIVER PROJECT: CORONADO 1 (CONT.)

SHELL LINER MATERIAL	RIGIFLAKE, ALUMINOUS CEMENT FOR PRESATURATOR	
NOZZLE TYPE	CERAMIC	
BOILER LOAD/ABSORBER - %	40.0	
LIQUID RECIRCULATION RATE - LITER/S	252.	(4000 GPM)
SUPERFICAL GAS VELOCITY - M/SEC	6.6	(21.6 FT/S)
SO2 INLET CONCENTRATION - PPM	1000	
SO2 OUTLET CONTRATION - PPM	180	

** FANS

NUMBER	2	
TYPE	SCRUBBER FD	
SERVICE - WET/DRY	DRY	
CAPACITY - CU.M/S	304.32	(644880 ACFM)

** MIST ELIMINATOR

NUMBER	2	
TYPE	CHEVRON	
CONFIGURATION	VERTICAL	
NUMBER OF PASSES	[illegible]	
FREEBOARD DISTANCE - M	8.84	(29.0 FT)
SUPERFICIAL GAS VELOCITY - M/S	4.6	(15.0 FT/S)

** PUMPS

SERVICE	NUMBER
SLURRY RECIRCULATION	11
SLUDGE DISPOSAL	4
SLURRY PURGE	4
ALKALI MAKEUP	****
PROCESS WATER	2
SEAL WATER	1
HIGH PRESSURE SEAL WATER	2
MIST ELIMINATOR WASH	2

** TANKS

SERVICE	NUMBER
REACTION MIX TANK	2

** REHEATER

TYPE	BYPASS	
TEMPERATURE BOOST - C	27.8	(50 F)

** THICKENER

NUMBER	1	
CONSTRUCTION MATERIAL	CONCRETE FLOOR AND STEEL WALLS COATED WITH PVC	
DIAMETER - M	32.0	(105 FT)
OUTLET SOLIDS - %	30.0	

** WATER LOOP

TYPE	OPEN

** REAGENT PREPARATION EQUIPMENT

NUMBER OF BALL MILLS	-

** DISPOSAL

NATURE	FINAL
TYPE	LINED POND
TRANSPORTATION	PIPE (8 IN. ABOVE GROUND, EPOXY LINED CEMENT ASB

PERFORMANCE DATA

PERIOD	MODULE	AVAILABILITY	OPERABILITY	RELIABILITY	UTILIZATION	% REMOVAL SO2	% REMOVAL PART.	PER HOURS	BOILER HOURS	FGD HOURS	CAP. FACTOR
11/79	SYSTEM							720			
12/79	SYSTEM							744			

** PROBLEMS/SOLUTIONS/COMMENTS

THE CORONADO UNIT 1 COMMENCED OPERATIONS IN NOVEMBER 1979. THE UNIT HAS PASSED THE EPA PERFORMANCE TESTING.

SECTION 3
DESIGN AND PERFORMANCE DATA FOR OPERATIONAL DOMESTIC FGD SYSTEMS

COMPANY NAME	SOUTH CAROLINA PUBLIC SERVICE	
PLANT NAME	WINYAH	
UNIT NUMBER	2	
CITY	GEORGETOWN	
STATE	SOUTH CAROLINA	
REGULATORY CLASSIFICATION	B	
PARTICULATE EMISSION LIMITATION - NG/J	43.	(.100 LB/MMBTU)
SO2 EMISSION LIMITATION - NG/J	516.	(1.200 LB/MMBTU)
NET PLANT GENERATING CAPACITY - MW	519.0	
GROSS UNIT GENERATING CAPACITY - MW	280.0	
NET UNIT GENERATING CAPACITY W/FGD - MW	255.0	
NET UNIT GENERATING CAPACITY WO/FGD - MW	261.0	
EQUIVALENT SCRUBBED CAPACITY - MW	140.0	
** BOILER DATA		
SUPPLIER	BABCOCK & WILCOX	
TYPE	PULVERIZED COAL	
SERVICE LOAD	BASE	
COMMERCIAL SERVICE DATE	0/77	
MAXIMUM BOILER FLUE GAS FLOW - CU.M/S	384.14	(814030 ACFM)
FLUE GAS TEMPERATURE - C	132.2	(270 F)
STACK HEIGHT - M	122.	(400 FT)
STACK TOP DIAMETER - M	4.9	(16.0 FT)
** FUEL DATA		
FUEL TYPE	COAL	
FUEL GRADE	BITUMINOUS	
AVERAGE HEAT CONTENT - J/G	26749.	(11500 BTU/LB)
RANGE HEAT CONTENT - BTU/LB		******
AVERAGE ASH CONTENT - %	13.50	
RANGE ASH CONTENT - %	******	
AVERAGE MOISTURE CONTENT - %	********	
RANGE MOISTURE CONTENT - %	6.5-7.0	
AVERAGE SULFUR CONTENT - %	1.70	
RANGE SULFUR CONTENT - %	1.0-1.2	
AVERAGE CHLORIDE CONTENT - %	********	
RANGE CHLORIDE CONTENT - %	******	
** ESP		
NUMBER	1	
TYPE	COLD SIDE	
SUPPLIER	RESEARCH COTTRELL	
FLUE GAS CAPACITY - CU.M/S	384.1	(814030 ACFM)
FLUE GAS TEMPERATURE - C	132.2	(270 F)
** PARTICULATE SCRUBBER		
NUMBER	1	
TYPE	VENTURI	
SUPPLIER	BABCOCK & WILCOX	
SHELL MATERIAL	CARBON STEEL	
LINING MATERIAL	RUBBER	
INTERNAL MATERIAL	SPRAY NOZZLES (316 SS)	
BOILER LOAD/SCRUBBER - %	50.0	
FLUE GAS CAPACITY - CU.M/S	192.1	(407015 ACFM)
FLUE GAS TEMPERATURE - C	132.2	(270 F)
L/G RATIO - LITER/CU.M	1.9	(14.4 GAL/1000ACF)
PRESSURE DROP - KPA	*******	(***** IN-H2O)
SUPERFICIAL GAS VELOCITY - M/S	27.4	(90.0 FT/S)
** FGD SYSTEM		
SALEABLE PRODUCT/THROWAWAY PRODUCT	THROWAWAY PRODUCT	
GENERAL PROCESS TYPE	WET SCRUBBING	
PROCESS TYPE	LIMESTONE	
PROCESS ADDITIVES	NONE	
SYSTEM SUPPLIER	BABCOCK & WILCOX	
A-E FIRM	BURNS & ROE	
DEVELOPMENT LEVEL	FULL SCALE	
NEW/RETROFIT	NEW	
PARTICULATE DESIGN REMOVAL EFFICIENCY - %	99.40	
SO2 DESIGN REMOVAL EFFICIENCY - %	69.00	
INITIAL START-UP	7/77	
ABSORBER SPARE CAPACITY INDEX - %	.0	

OUTH CAROLINA PUBLIC SERVICE: WINYAH 2 (CONT.)

ABSORBER SPARE COMPONENT INDEX	.0	

** ABSORBER

NUMBER	1	
TYPE	TRAY TOWER	
INITIAL START UP	7/77	
SUPPLIER	BABCOCK & WILCOX	
SHELL MATERIAL	CARBON STEEL	
SHELL LINER MATERIAL	RUBBER	
INTERNAL MATERIAL	316 SS	
GAS FLOW - CU.M/S	159.50	(338000 ACFM)
GAS TEMPERATURE - C	52.2	(126 F)
L/G RATIO - L/CU.M	6.3	(47.5 GAL/1000ACF)
PRESSURE DROP - KPA	1.1	(4.5 IN-H2O)
SUPERFICAL GAS VELOCITY - M/SEC	3.2	(10.5 FT/S)
SO2 INLET CONCENTRATION - PPM	935	
SO2 OUTLET CONTRATION - PPM	294	
SO2 DESIGN REMOVAL EFFICIENCY - %	69.0	

** FANS

NUMBER	1	
TYPE	SCRUBBER FD	
CONSTRUCTION MATERIALS	CARBON STEEL	
CAPACITY - CU.M/S	192.06	(407000 ACFM)

** MIST ELIMINATOR

NUMBER	1	
TYPE	CHEVRON	
CONSTRUCTION MATERIAL	DERAKANE	
CONFIGURATION	HORIZONTAL	
NUMBER OF STAGES	1	
NUMBER OF PASSES	3	
WASH SYSTEM	OVERSPRAY	
PRESSURE DROP - KPA	.2	(1.0 IN-H2O)

** PUMPS

SERVICE	NUMBER
VENTURI RECIRCULATION	1
ABSORBER RECIRCULATION	1

** REHEATER

TYPE	BYPASS

** THICKENER

NUMBER	1	
DIAMETER - M	15.2	(50 FT)
OUTLET SOLIDS - %	35.0	

** WATER LOOP

TYPE	OPEN	
FRESH MAKEUP WATER ADDITION - LITERS/S	6.3	(100 GPM)

** REAGENT PREPARATION EQUIPMENT

NUMBER OF BALL MILLS	1

** DISPOSAL

NATURE	FINAL
TYPE	POND
LOCATION	ON-SITE
TRANSPORTATION	PUMPED

PERFORMANCE DATA

PERIOD	MODULE	AVAILABILITY	OPERABILITY	RELIABILITY	UTILIZATION	% REMOVAL SO2	% REMOVAL PART.	PER HOURS	BOILER HOURS	FGD HOURS	CAP. FACTOR
1/78	SYSTEM							744			

** PROBLEMS/SOLUTIONS/COMMENTS

IN EARLY JANUARY THE SYSTEM WENT DOWN TO FOR TWO DAYS TO CHECK THE INSTRUMENTATION.

THE SO2 MONITORS HAVE MALFUNCTIONED.

PERIOD	MODULE	AVAILABILITY	OPERABILITY	RELIABILITY	UTILIZATION	% REMOVAL SO2	% REMOVAL PART.	PER HOURS	BOILER HOURS	FGD HOURS	CAP. FACTOR
		PERFORMANCE DATA									

ALL THE SAMPLE LINES HAVE BEEN REPLACED. NEW HEAT TRACINGS HAVE BEEN INSTALLED AROUND THEM.

2/78	SYSTEM							672			

** PROBLEMS/SOLUTIONS/COMMENTS

THE FGD SYSTEM WAS BYPASSED FOR SERVERAL DAYS TO ALLOW SYSTEM CLEANING IN PREPARATION FOR TESTING BY BABCOCK AND WILCOX.

3/78	SYSTEM							744			
4/78	SYSTEM							720			

** PROBLEMS/SOLUTIONS/COMMENTS

SOME MINOR SCALING WAS ENCOUNTERED BUT IT DID NOT CAUSE AN OUTAGE.

5/78	SYSTEM							744			
6/78	SYSTEM		100.0			94.3		720	679	679	
7/78	SYSTEM		100.0			97.0		744	722	722	
8/78	SYSTEM							744			

** PROBLEMS/SOLUTIONS/COMMENTS

THE UTILITY REPORTED NO FORCED FGD OUTAGE.

9/78	SYSTEM							720			

** PROBLEMS/SOLUTIONS/COMMENTS

THE SO2 ANALYZERS PERFORMED WELL DURING A CERTIFICATION TEST.

10/78	SYSTEM							744			
11/78	SYSTEM							720			
12/78	SYSTEM	84.8	82.6	82.6		82.1		744	740	611	

** PROBLEMS/SOLUTIONS/COMMENTS

SO2 MONITOR PROBLEMS CONTINUE.

AN OUTAGE WAS NECESSARY FOR ABSORBER PUMP BELT RENEWAL.

FEED SLURRY FLOWMETER PROBLEMS WERE ENCOUNTERED.

THE OIL PUMP FOR LIMESTONE MILL EXPERIENCED TRIPS.

A MINOR OUTAGE WAS CAUSED BY PLUGGING OF THE SLURRY DELIVERY LINE.

QUENCHER PROBLEMS WERE EXPERIENCED DURING DECEMBER.

1/79	SYSTEM	99.6	99.6	99.6		99.6		744	744	742	
2/79	SYSTEM							672	1361		
3/79	SYSTEM	96.6	96.4	96.4		92.7		1416		1313	

** PROBLEMS/SOLUTIONS/COMMENTS

AN OUTAGE WAS REQUIRED TO RENEW QUENCHER PUMP BELTS AND FOR REPAIRS TO A QUENCHER SUCTION VALVE.

OUTAGES WERE REQUIRED TO REPAIR A HOLE IN THE FEED SLURRY LINE, TO INSPECT THE MODULE FOR PLUGGAGE, AND BECAUSE OF A BOOSTER FAN TRIP.

SOUTH CAROLINA PUBLIC SERVICE: WINYAH 2 (CONT.)

PERIOD	MODULE	AVAILABILITY	OPERABILITY	RELIABILITY	UTILIZATION	% REMOVAL SO2	% REMOVAL PART.	PER HOURS	BOILER HOURS	FGD HOURS	CAP. FACTOR
				PERFORMANCE DATA							

THE OPERATING VALUES SHOWN ARE THE FIGURES FOR FEB. AND MARCH COMBINED.

4/79	SYSTEM	99.4	99.4	99.4	99.4			720	720	716	73.4

** PROBLEMS/SOLUTIONS/COMMENTS

THE UTILITY REPORTED THAT THE SO2 MONITOR HAS PASSED THE STATE CERTIFICATION TEST BUT REQUIRES CONTINUING MAINTENANCE TO KEEP IT OPERATING.

A MALFUNCTION OF THE RECIRCULATION TANK LEVEL INDICATOR RESULTED IN A LOW LIQUID LEVEL WHICH RESULTED IN A FORCED OUTAGE.

5/79	SYSTEM	98.4	98.7	100.0	95.6			744	721	711	82.0

** PROBLEMS/SOLUTIONS/COMMENTS

THE UTILITY REPORTED THAT THE SO2 MONITOR SAMPLE PUMP REQUIRES MAINTENANCE ALMOST EVERY 24 HOURS.

A BOILER OUTAGE ALLOWED TIME FOR CLEANING ABSORBER TRAYS, UNPLUGGING FOUR NOZZLES, CLEANING THE SUMP BOTTOM, AND REPAIRING A SPRAY WASH VALVE.

6/79	SYSTEM	92.4	92.3	92.1	91.6	80.00		720	716	660	86.6

** PROBLEMS/SOLUTIONS/COMMENTS

FOUR OUTAGES IN JUNE WERE DUE TO PLUGGED ABSORBER NOZZLES. THE PRIMARY CAUSE APPEARED TO BE THAT A SCREEN IN THE ABSORBER SIDE OF THE SUMP BOTTOM WAS LEFT OUT DURING THE PREVIOUS OUTAGE.

A HEAVY SCALE BUILD-UP IN THE SUMP BELOW THE VENTURI WAS NOTED.

THE UTILITY REPORTED THAT MGO TESTING HAS BEGUN.

7/79	SYSTEM	98.4	98.4	98.4	97.8	84.00		744	740	732	

** PROBLEMS/SOLUTIONS/COMMENTS

THE ABSORBER WENT OFF-LINE DUE TO QUENCHER PUMP PACKING PROBLEMS.

SOME PLUGGING WAS ENCOUNTERED WITH ONE OF THE ABSORBER NOZZLES.

SOME OUTAGE TIME WAS NEEDED TO INSTALL A QUENCHER WALL WASH NOZZLE.

8/79	SYSTEM	99.4	99.0	99.4	98.1	80.00		744	738	739	

** PROBLEMS/SOLUTIONS/COMMENTS

A 4 HOUR OUTAGE WAS THE RESULT OF BOOSTER FAN CONTROL PROBLEMS.

A NEW PORT FOR THE SCRUBBER OUTLET GAS SAMPLE PROBE HAD TO BE INSTALLED. THIS TOOK 1 HOUR OF SCHEDULED DOWN TIME.

9/79	SYSTEM							720			
10/79	SYSTEM							744			
11/79	SYSTEM							720			
12/79	SYSTEM							744			

** PROBLEMS/SOLUTIONS/COMMENTS

NO INFORMATION WAS AVAILABLE FOR THIS REPORT PERIOD.

SECTION 3
DESIGN AND PERFORMANCE DATA FOR OPERATIONAL DOMESTIC FGD SYSTEMS

COMPANY NAME	SOUTH MISSISSIPPI ELEC PWR	
PLANT NAME	R.D. MORROW	
UNIT NUMBER	1	
CITY	HATTISBURG	
STATE	MISSISSIPPI	
REGULATORY CLASSIFICATION	B	
PARTICULATE EMISSION LIMITATION - NG/J	43.	(.100 LB/MMBTU)
SO2 EMISSION LIMITATION - NG/J	516.	(1.200 LB/MMBTU)
NET PLANT GENERATING CAPACITY - MW	400.0	
GROSS UNIT GENERATING CAPACITY - MW	200.0	
NET UNIT GENERATING CAPACITY W/FGD - MW	180.0	
NET UNIT GENERATING CAPACITY WO/FGD - MW	191.0	
EQUIVALENT SCRUBBED CAPACITY - MW	124.0	
** BOILER DATA		
SUPPLIER	RILEY STOKER	
TYPE	PULVERIZED COAL	
SERVICE LOAD	BASE	
COMMERCIAL SERVICE DATE	0/78	
MAXIMUM BOILER FLUE GAS FLOW - CU.M/S	********	(******* ACFM)
FLUE GAS TEMPERATURE - C	132.2	(270 F)
STACK HEIGHT - M	124.	(408 FT)
STACK TOP DIAMETER - M	*******	(***** FT)
** FUEL DATA		
FUEL TYPE	COAL	
FUEL GRADE	******	
AVERAGE HEAT CONTENT - J/G	27912.	(12000 BTU/LB)
RANGE HEAT CONTENT - BTU/LB		******
AVERAGE ASH CONTENT - %	8.00	
RANGE ASH CONTENT - %	******	
AVERAGE MOISTURE CONTENT - %	6.50	
RANGE MOISTURE CONTENT - %	6 - 7	
AVERAGE SULFUR CONTENT - %	1.30	
RANGE SULFUR CONTENT - %	1 - 1.75	
AVERAGE CHLORIDE CONTENT - %	********	
RANGE CHLORIDE CONTENT - %	******	
** ESP		
NUMBER	1	
TYPE	HOT SIDE	
SUPPLIER	BUELL	
PARTICULATE DESIGN REMOVAL EFFICIENCY - %	99.6	
** PARTICULATE SCRUBBER		
TYPE	NONE	
** FGD SYSTEM		
SALEABLE PRODUCT/THROWAWAY PRODUCT	THROWAWAY PRODUCT	
GENERAL PROCESS TYPE	WET SCRUBBING	
PROCESS TYPE	LIMESTONE	
PROCESS ADDITIVES	NONE	
SYSTEM SUPPLIER	RILEY STOKER/ENVIRONEERING	
A-E FIRM	BURNS & MCDONNELL	
CONSTRUCTION FIRM	RILEY STOKER	
DEVELOPMENT LEVEL	FULL SCALE	
NEW/RETROFIT	NEW	
PARTICULATE DESIGN REMOVAL EFFICIENCY - %	99.60	
SO2 DESIGN REMOVAL EFFICIENCY - %	85.00	
INITIAL START-UP	8/78	
ABSORBER SPARE CAPACITY INDEX - %	.0	
ABSORBER SPARE COMPONENT INDEX	.0	
** ABSORBER		
NUMBER	1	
TYPE	GRID TOWER	
INITIAL START UP	8/78	
SUPPLIER	RILEY STOKER/ENVIRONEERING	
NUMBER OF STAGES	7	
DIMENSIONS - FT	90 X 40 X 10	
SHELL MATERIAL	CARBON STEEL	
SHELL LINER MATERIAL	HASTELLOY G AND CHLOROBUTYL RUBBER	

SOUTH MISSISSIPPI ELEC PWR: R.D. MORROW 1 (CONT.)

INTERNAL MATERIAL	316L SS RODS, HASTELLOY G SUPPORTS
GAS FLOW - CU.M/S	192.03 (406940 ACFM)
GAS TEMPERATURE - C	132.2 (270 F)
PRESSURE DROP - KPA	2.0 (8.0 IN-H2O)

** FANS

TYPE	BOILER I.D.

** VACUUM FILTER

NUMBER	1
OUTLET SOLIDS - %	60.0

** MIST ELIMINATOR

NUMBER	1
TYPE	CHEVRON
CONSTRUCTION MATERIAL	FRP
CONFIGURATION	VERTICAL
NUMBER OF STAGES	3

** PUMPS

SERVICE	NUMBER
ABSORBER RECIRCULATION	3

** REHEATER

TYPE	BYPASS

** THICKENER

NUMBER	1
DIAMETER - M	12.2 (40 FT)

** WATER LOOP

TYPE	CLOSED

** REAGENT PREPARATION EQUIPMENT

** TREATMENT

TYPE	FLYASH STABILIZATION

** DISPOSAL

NATURE	FINAL
TYPE	LANDFILL
LOCATION	OFF-SITE
TRANSPORTATION	TRUCK

PERFORMANCE DATA

PERIOD	MODULE	AVAILABILITY	OPERABILITY	RELIABILITY	UTILIZATION	% REMOVAL SO2	% REMOVAL PART.	PER HOURS	BOILER HOURS	FGD HOURS	CAP. FACTOR
8/78	SYSTEM							744			

** PROBLEMS/SOLUTIONS/COMMENTS

A FORCED BOILER OUTAGE OCCURRED DURING THE PERIOD AS A RESULT OF BOILER TUBE LEAKS.

9/78	SYSTEM							720			
10/78	SYSTEM				.0			744	0		0

** PROBLEMS/SOLUTIONS/COMMENTS

OPERATION OF THE UNIT WAS INTERMITTENT DUE TO CONTINUING BOILER TUBE PROBLEMS. THE BOILER WAS SHUT DOWN NOVEMBER 1 AS A RESULT OF BOILER TUBE PROBLEMS. RESUMPTION OF OPERATION IS SCHEDULED FOR MARCH 1979.

THE FGD SYSTEM WAS BYPASSED ENTIRELY IN OCTOBER DUE TO SERIOUS CONTROL VALVE PLUGGING.

11/78	SYSTEM				.0			720	0		0
12/78	SYSTEM				.0			744	0		0

PERFORMANCE DATA

PERIOD	MODULE	AVAILABILITY	OPERABILITY	RELIABILITY	UTILIZATION	% REMOVAL SO2	% REMOVAL PART.	PER HOURS	BOILER HOURS	FGD HOURS	CAP. FACTOR
	** PROBLEMS/SOLUTIONS/COMMENTS										
	THE UNIT HAS NOT YET BEEN RESTARTED SINCE ITS NOVEMBER SHUTDOWN.										
1/79	SYSTEM				.0			744	0	0	
2/79	SYSTEM							672			
3/79	SYSTEM							744			
4/79	SYSTEM							720	631		
	** PROBLEMS/SOLUTIONS/COMMENTS										
	THE BOILER RETURNED TO SERVICE ON APRIL 1 AFTER COMPLETION OF REPAIRS TO THE BOILER TUBES.										
	NO FGD SYSTEM RELATED PROBLEMS WERE REPORTED BY THE UTILITY FOR APRIL.										
5/79	SYSTEM							744			
6/79	SYSTEM							720			
	** PROBLEMS/SOLUTIONS/COMMENTS										
	THE UTILITY REPORTED THAT THE SYSTEM OPERATED MOST OF MAY AND JUNE WITH NO MAJOR PROBLEMS.										
7/79	SYSTEM							744			
	** PROBLEMS/SOLUTIONS/COMMENTS										
	DURING THE FIRST WEEK OF JULY THE UNIT WAS REMOVED FROM SERVICE DUE TO SEVERE PROBLEMS WITH THE FGD SYSTEM. THE UTILITY NOTED THAT ABOUT HALF OF THE MODULE HEADERS WERE PLUGGED, HOLES WERE NOTED IN THE MODULE SHELL, THE UPPER ROD BANK CORRODED AWAY FROM THE SHELL, AND EXTENSIVE PLUGGING OF THE MIST ELIMINATOR OCCURRED. LINER FAILURE AT THE OUTLET DUCTWORK WAS ALSO EXPERIENCED. THE UTILITY PLANS TO REPLACE THE DUCTWORK WITH HASTALLOY. THE FGD SYSTEM IS EXPECTED TO BE OFF LINE FOR SEVERAL MONTHS FOR REPAIRS TO BE COMPLETED.										
8/79	SYSTEM							744	0		
9/79	SYSTEM							720	0		
	** PROBLEMS/SOLUTIONS/COMMENTS										
	THE UNIT REMAINED OFF LINE DURING THE MONTHS OF AUGUST AND SEPTEMBER AS MAINTENANCE AND REPAIR WORK CONTINUED.										
10/79	SYSTEM	.0	.0	.0	.0	.00	91.00	744	282	0	
11/79	SYSTEM	.0	.0	.0	.0			720		0	
12/79	SYSTEM	.0	.0	.0	.0			744		0	
	** PROBLEMS/SOLUTIONS/COMMENTS										
	THE SCRUBBER HAS REMAINED OFF LINE THROUGH THE REPORT PERIOD DUE TO THE LINING FAILURE. RELINING SHOULD BE COMPLETED AND THE UNIT ON LINE IN MARCH.										

SECTION 3
DESIGN AND PERFORMANCE DATA FOR OPERATIONAL DOMESTIC FGD SYSTEMS

COMPANY NAME	SOUTH MISSISSIPPI ELEC PWR	
PLANT NAME	R.D. MORROW	
UNIT NUMBER	2	
CITY	HATTISBURG	
STATE	MISSISSIPPI	
REGULATORY CLASSIFICATION	B	
PARTICULATE EMISSION LIMITATION - NG/J	******	(****** LB/MMBTU)
SO2 EMISSION LIMITATION - NG/J	******	(****** LB/MMBTU)
NET PLANT GENERATING CAPACITY - MW	40.0	
GROSS UNIT GENERATING CAPACITY - MW	200.0	
NET UNIT GENERATING CAPACITY W/FGD - MW	180.0	
NET UNIT GENERATING CAPACITY WO/FGD - MW	191.0	
EQUIVALENT SCRUBBED CAPACITY - MW	124.0	
** BOILER DATA		
SUPPLIER	RILEY STOKER	
TYPE	PULVERIZED COAL	
SERVICE LOAD	BASE	
COMMERCIAL SERVICE DATE	**/**	
MAXIMUM BOILER FLUE GAS FLOW - CU.M/S	********	(******* ACFM)
FLUE GAS TEMPERATURE - C	132.2	(270 F)
STACK HEIGHT - M	124.	(408 FT)
STACK TOP DIAMETER - M	*******	(***** FT)
** FUEL DATA		
FUEL TYPE	COAL	
FUEL GRADE	******	
AVERAGE HEAT CONTENT - J/G	27912.	(12000 BTU/LB)
RANGE HEAT CONTENT - BTU/LB		******
AVERAGE ASH CONTENT - %	8.00	
RANGE ASH CONTENT - %	******	
AVERAGE MOISTURE CONTENT - %	6.50	
RANGE MOISTURE CONTENT - %	6 - 7	
AVERAGE SULFUR CONTENT - %	1.30	
RANGE SULFUR CONTENT - %	1 - 1.75	
AVERAGE CHLORIDE CONTENT - %	********	
RANGE CHLORIDE CONTENT - %	******	
** ESP		
NUMBER	1	
TYPE	HOT SIDE	
SUPPLIER	BUELL	
PARTICULATE DESIGN REMOVAL EFFICIENCY - %	98.6	
** PARTICULATE SCRUBBER		
TYPE	NONE	
** FGD SYSTEM		
SALEABLE PRODUCT/THROWAWAY PRODUCT	THROWAWAY PRODUCT	
GENERAL PROCESS TYPE	WET SCRUBBING	
PROCESS TYPE	LIMESTONE	
PROCESS ADDITIVES	NONE	
SYSTEM SUPPLIER	RILEY STOKER/ENVIRONEERING	
A-E FIRM	BURNS & MCDONNELL	
CONSTRUCTION FIRM	RILEY STOKER	
DEVELOPMENT LEVEL	FULL SCALE	
NEW/RETROFIT	NEW	
PARTICULATE DESIGN REMOVAL EFFICIENCY - %	99.60	
SO2 DESIGN REMOVAL EFFICIENCY - %	85.00	
INITIAL START-UP	6/79	
** ABSORBER		
NUMBER	1	
TYPE	GRID TOWER	
INITIAL START UP	6/79	
SUPPLIER	RILEY STOKER/ENVIRONEERING	
NUMBER OF STAGES	7	
DIMENSIONS - FT	10 X 40 X 10	
SHELL MATERIAL	CARBON STEEL	
SHELL LINER MATERIAL	HASTELLOY G AND CHLOROBUTYL RUBBER	
INTERNAL MATERIAL	316L SS RODS, HASTELLOY G SUPPORTS	
GAS FLOW - CU.M/S	192.03	(406940 ACFM)

SOUTH MISSISSIPPI ELEC PWR: R.D. MORROW 2 (CONT.)

GAS TEMPERATURE - C	132.2	(270 F)
** FANS		
TYPE	BOILER ID	
** MIST ELIMINATOR		
TYPE	CHEVRON	
CONSTRUCTION MATERIAL	FRP	
CONFIGURATION	VERTICAL	
NUMBER OF STAGES	3	
WASH SYSTEM	CONTINUOUS WASH	
** REHEATER		
TYPE	BYPASS	
** THICKENER		
NUMBER	1	
DIAMETER - M	12.2	(40 FT)
** WATER LOOP		
TYPE	CLOSED	
** TREATMENT		
TYPE	FLYASH STABILIZATION	
** DISPOSAL		
NATURE	FINAL	
TYPE	LANDFILL	
LOCATION	ON-SITE	
TRANSPORTATION	TRUCK	

PERFORMANCE DATA

PERIOD	MODULE	AVAILABILITY	OPERABILITY	RELIABILITY	UTILIZATION	% REMOVAL SO2	% REMOVAL PART.	PER HOURS	BOILER HOURS	FGD HOURS	CAP. FACTOR
6/79	SYSTEM							720			

** PROBLEMS/SOLUTIONS/COMMENTS

R.D. MORROW UNIT #2 BEGAN OPERATION IN THE LATTER PART OF JUNE. OPERATIONAL DATA ARE NOT YET AVAILABLE.

7/79	SYSTEM							744			
8/79	SYSTEM							744			

** PROBLEMS/SOLUTIONS/COMMENTS

NO INFORMATION WAS AVAILABLE FOR THE JULY-AUGUST 1979 PERIOD.

9/79	SYSTEM	4.7	5.0	5.0	4.7			720	34		58

** PROBLEMS/SOLUTIONS/COMMENTS

DURING SEPTEMBER THE UNIT WAS TAKEN OFF LINE DUE TO FAILURE OF LINERS AND PLUGGING IN THE MIST ELIMINATOR SECTIONS.

10/79	SYSTEM	.0	.0	.0	.0	.00	86.00	744	477		0
11/79	SYSTEM	.0	.0	.0	.0			720			0
12/79	SYSTEM	.0	.0	.0	.0			744			0

** PROBLEMS/SOLUTIONS/COMMENTS

THE SCRUBBER HAS REMAINED OFF LINE THROUGH THE REPORT PERIOD DUE TO THE LINING FAILURES. RELINING SHOULD BE COMPLETED AND THE UNIT ON LINE IN MAY.

SECTION 3
DESIGN AND PERFORMANCE DATA FOR OPERATIONAL DOMESTIC FGD SYSTEMS

COMPANY NAME	SOUTHERN ILLINOIS POWER COOP	
PLANT NAME	MARION	
UNIT NUMBER	4	
CITY	MARION	
STATE	ILLINOIS	
REGULATORY CLASSIFICATION	B	
PARTICULATE EMISSION LIMITATION - NG/J	******	(****** LB/MMBTU)
SO2 EMISSION LIMITATION - NG/J	******	(****** LB/MMBTU)
NET PLANT GENERATING CAPACITY - MW	270.0	
GROSS UNIT GENERATING CAPACITY - MW	184.0	
NET UNIT GENERATING CAPACITY W/FGD - MW	160.0	
NET UNIT GENERATING CAPACITY WO/FGD - MW	*******	
EQUIVALENT SCRUBBED CAPACITY - MW	184.0	
** BOILER DATA		
SUPPLIER	BABCOCK & WILCOX	
TYPE	CYCLONE	
SERVICE LOAD	BASE	
COMMERCIAL SERVICE DATE	9/78	
MAXIMUM BOILER FLUE GAS FLOW - CU.M/S	********	(******* ACFM)
FLUE GAS TEMPERATURE - C	*******	(**** F)
STACK HEIGHT - M	******	(**** FT)
STACK TOP DIAMETER - M	*******	(***** FT)
** FUEL DATA		
FUEL TYPE	COAL/REFUSE	
FUEL GRADE	******	
AVERAGE HEAT CONTENT - J/G	20934.	(9000 BTU/LB)
RANGE HEAT CONTENT - BTU/LB		******
AVERAGE ASH CONTENT - %	16.00	
RANGE ASH CONTENT - %	******	
AVERAGE MOISTURE CONTENT - %	10.00	
RANGE MOISTURE CONTENT - %	******	
AVERAGE SULFUR CONTENT - %	3.50	
RANGE SULFUR CONTENT - %	******	
AVERAGE CHLORIDE CONTENT - %	.10	
RANGE CHLORIDE CONTENT - %	******	
** ESP		
NUMBER	1	
SUPPLIER	BABCOCK & WILCOX	
PARTICULATE DESIGN REMOVAL EFFICIENCY - %	99.6	
FLUE GAS CAPACITY - CU.M/S	326.3	(691500 ACFM)
FLUE GAS TEMPERATURE - C	143.3	(290 F)
PRESSURE DROP - KPA	**** ***	(***** IN-H2O)
PARTICULATE OUTLET LOAD - G/CU.M	.00	(.00 GR/SCF)
** PARTICULATE SCRUBBER		
TYPE	NONE	
** FGD SYSTEM		
SALEABLE PRODUCT/THROWAWAY PRODUCT	THROWAWAY PRODUCT	
GENERAL PROCESS TYPE	WET SCRUBBING	
PROCESS TYPE	LIMESTONE	
PROCESS ADDITIVES	NONE	
SYSTEM SUPPLIER	BABCOCK & WILCOX	
A-E FIRM	BURNS & MCDONNELL	
CONSTRUCTION FIRM	BABCOCK & WILCOX	
DEVELOPMENT LEVEL	FULL SCALE	
NEW/RETROFIT	NEW	
PARTICULATE DESIGN REMOVAL EFFICIENCY - %	99.60	
SO2 DESIGN REMOVAL EFFICIENCY - %	89.40	
COMMERCIAL DATE	5/79	
INITIAL START-UP	5/79	
ABSORBER SPARE CAPACITY INDEX - %	*******	
ABSORBER SPARE COMPONENT INDEX	*******	
** ABSORBER		
NUMBER	2	
TYPE	SPRAY TOWER	
INITIAL START UP	10/78	
SUPPLIER	BABCOCK & WILCOX	

SOUTHERN ILLINOIS POWER COOP: MARION 4 (CONT.)

GAS FLOW - CU.M/S	139.68	(296000 ACFM)
GAS TEMPERATURE - C	53.9	(129 F)
PRESSURE DROP - KPA	3.0	(12.2 IN-H2O)
SO2 DESIGN REMOVAL EFFICIENCY - %	89.4	

** CENTRIFUGE

NUMBER	2
TYPE	SOLID BOWL TYPE (22500 LB/H DRY SOLI
CAPACITY - GPM	125

** FANS

NUMBER	2	
TYPE	SCRUBBER FD	
SERVICE - WET/DRY	DRY	
CAPACITY - CU.M/S	165.16	(350000 ACFM)

** MIST ELIMINATOR

** PROCESS CONTROL CHEMISTRY

CONTROL VARIABLES	PH
CONTROL RANGE	5-6

** PUMPS

SERVICE	NUMBER
ABSORBER RECIRCULATION	5
QUENCHER RECIRCULATION	2
MIST ELIMINATOR WASH	2
WASTE SLURRY	2
RECLAIMED WATER	2
MILL PRODUCT	2
LIMESTONE SLURRY TRANSFER	2
SLUDGE TRANSFER	3

** TANKS

SERVICE	NUMBER
MIST ELIMINATOR WASH TANK	1
ABSORBER/QUENCHER RECYCLE	2
RECLAIMED WATER TANK	1
MILL PRODUCT TANK	1
LIMESTONE SLURRY STORAGE	1

** REHEATER

TYPE	NONE

** THICKENER

NUMBER	1	
DIAMETER - M	38.1	(125 FT)

** WATER LOOP

TYPE	OPEN

** TREATMENT

TYPE	FLYASH STABILIZATION
SUPPLIER	SIPC

** DISPOSAL

NATURE	FINAL
TYPE	LANDFILL

PERFORMANCE DATA

PERIOD	MODULE	AVAILABILITY	OPERABILITY	RELIABILITY	UTILIZATION	% REMOVAL SO2	% REMOVAL PART.	PER HOURS	BOILER HOURS	FGD HOURS	CAP. FACTOR
5/79	SYSTEM							744			
6/79	SYSTEM							720			

** PROBLEMS/SOLUTIONS/COMMENTS

THE UTILITY REPORTED THAT THE UNIT BEGAN OPERATION IN MAY. HOWEVER THE UNIT IS NOW DOWN AND SUFFERED TWO PREVIOUS OUTAGES. THE PREVIOUS OUTAGES WERE DUE TO CENTRIFUGE AND THICKENER PROBLEMS. THE PRESENT OUTAGE

SOUTHERN ILLINOIS POWER COOP: MARION 4 (CONT.)

PERIOD	MODULE	AVAILABILITY	OPERABILITY	RELIABILITY	UTILIZATION	% REMOVAL SO2	% REMOVAL PART.	PER HOURS	BOILER HOURS	FGD HOURS	CAP. FACTOR

IS DUE TO BEARING FAILURES IN THE PUG MILL AND IMPROPER FIT OF THE SLUDGE CONVEYING BELT.

7/79	SYSTEM							744			
8/79	SYSTEM							744			
9/79	SYSTEM							720			

** PROBLEMS/SOLUTIONS/COMMENTS

DURING THE THIRD QUARTER A ROUTINE INSPECTION OF THE SCRUBBER INTERNALS SHOWED NO SCALE FORMATION.

THE UTILITY REPORTED THAT THE FGD SYSTEM HAS ACHIEVED A 0.7 LB/MMBTU OF SO2 EMISSION LEVEL. THE UNIT IS SUBJECT TO THE 1.2 LB/MMBTU SO2 EMISSION STANDARD.

THE CONTINUOUS MONITORS HAVE NOT BEEN OPERATING ACCEPTABLY.

A TURBINE OVERHAUL/INSPECTION IS SCHEDULED FOR OCTOBER 1, 1979.

10/79	SYSTEM							744			
11/79	SYSTEM							720			
12/79	SYSTEM							744			

** PROBLEMS/SOLUTIONS/COMMENTS

NO INFORMATION WAS AVAILABLE FOR THE FOURTH QUARTER 1979.

SECTION 3
DESIGN AND PERFORMANCE DATA FOR OPERATIONAL DOMESTIC FGD SYSTEMS

COMPANY NAME	SOUTHERN INDIANA GAS & ELEC	
PLANT NAME	A.B. BROWN	
UNIT NUMBER	1	
CITY	WEST FRANKLIN	
STATE	INDIANA	
REGULATORY CLASSIFICATION	B	
PARTICULATE EMISSION LIMITATION - NG/J	43.	(.100 LB/MMBTU)
SO2 EMISSION LIMITATION - NG/J	516.	(1.200 LB/MMBTU)
NET PLANT GENERATING CAPACITY - MW	250.0	
GROSS UNIT GENERATING CAPACITY - MW	265.0	
NET UNIT GENERATING CAPACITY W/FGD - MW	250.0	
NET UNIT GENERATING CAPACITY WO/FGD - MW	252.0	
EQUIVALENT SCRUBBED CAPACITY - MW	265.0	
** BOILER DATA		
SUPPLIER	BABCOCK & WILCOX	
TYPE	PULVERIZED COAL	
SERVICE LOAD	BASE	
COMMERCIAL SERVICE DATE	0/79	
MAXIMUM BOILER FLUE GAS FLOW - CU.M/S	372.82	(790036 ACFM)
FLUE GAS TEMPERATURE - C	143.3	(290 F)
STACK HEIGHT - M	152.	(498 FT)
STACK TOP DIAMETER - M	4.4	(14.5 FT)
** FUEL DATA		
FUEL TYPE	COAL	
FUEL GRADE	******	
AVERAGE HEAT CONTENT - J/G	30261.	(13010 BTU/LB)
RANGE HEAT CONTENT - BTU/LB		******
AVERAGE ASH CONTENT - %	8.80	
RANGE ASH CONTENT - %	******	
AVERAGE MOISTURE CONTENT - %	11.40	
RANGE MOISTURE CONTENT - %	******	
AVERAGE SULFUR CONTENT - %	4.50	
RANGE SULFUR CONTENT - %	******	
AVERAGE CHLORIDE CONTENT - %	.05	
RANGE CHLORIDE CONTENT - %	******	
** ESP		
NUMBER	1	
TYPE	COLD SIDE	
SUPPLIER	BUELL	
FLUE GAS CAPACITY - CU.M/S	372.8	(790036 ACFM)
FLUE GAS TEMPERATURE - C	145.0	(293 F)
PARTICULATE OUTLET LOAD - G/CU.M	64.29	(28.10 GR/SCF)
** PARTICULATE SCRUBBER		
TYPE	NONE	
** FGD SYSTEM		
SALEABLE PRODUCT/THROWAWAY PRODUCT	THROWAWAY PRODUCT	
GENERAL PROCESS TYPE	WET SCRUBBING	
PROCESS TYPE	DUAL ALKALI	
PROCESS ADDITIVES	NONE	
SYSTEM SUPPLIER	FMC CORPORATION	
A-E FIRM	BROWN & ROOT	
CONSTRUCTION FIRM	MID VALLEY	
DEVELOPMENT LEVEL	FULL SCALE	
NEW/RETROFIT	NEW	
PARTICULATE DESIGN REMOVAL EFFICIENCY - %	99.50	
SO2 DESIGN REMOVAL EFFICIENCY - %	85.00	
INITIAL START-UP	3/79	
CONSTRUCTION COMPLETION	3/79	
CONSTRUCTION INITIATION	10/77	
CONTRACT AWARDED	12/76	
STARTED REQUESTING BIDS	4/76	
ABSORBER SPARE CAPACITY INDEX - %	20.0	
ABSORBER SPARE COMPONENT INDEX	.3	
** ABSORBER		
NUMBER	2	
TYPE	VENTURI	

SOUTHERN INDIANA GAS & ELEC: A.B. BROWN 1 (CONT.)

INITIAL START UP	3/79	
SUPPLIER	FMC CORPORATION	
NUMBER OF STAGES	3	
DIMENSIONS - FT	62 HIGH X 32 DIA.	
SHELL MATERIAL	CARBON STEEL	
SHELL LINER MATERIAL	FLAKEGLASS	
INTERNAL MATERIAL	HASTELLOY	
NUMBER OF NOZZLES	1	
NOZZLE TYPE	SINGLE PIPE	
BOILER LOAD/ABSORBER - %	60.0	
GAS FLOW - CU.M/S	237.84	(504000 ACFM)
GAS TEMPERATURE - C	145.0	(293 F)
SO2 INLET CONCENTRATION - PPM	2810	
SO2 OUTLET CONTRATION - PPM	520	
SO2 DESIGN REMOVAL EFFICIENCY - %	85.0	
** CENTRIFUGE		
TYPE	NONE	
** FANS		
NUMBER	2	
TYPE	SCRUBBER FD	
SERVICE - WET/DRY	DRY	
CAPACITY - CU.M/S	117.97	(250000 ACFM)
** VACUUM FILTER		
NUMBER	3	
TYPE	ROTARY DRUM	
CONSTRUCTION MATERIAL	NYLON BELT	
CAPACITY - M T/D	174.1	(192 T/D)
OUTLET SOLIDS - %	60.0	
** MIST ELIMINATOR		
NUMBER	2	
TYPE	CHEVRON	
CONFIGURATION	HORIZONTAL	
NUMBER OF STAGES	2	
WASH SYSTEM	OCCASIONAL	
** PROCESS CONTROL CHEMISTRY		
** PUMPS		
SERVICE	NUMBER	
-------	------	
ABSORBER RECIRCULATION	4	
THICKENER UNDERFLOW	****	
** TANKS		
SERVICE	NUMBER	
-------	------	
REACTION	****	
SURGE TANK	****	
** REHEATER		
TYPE	NONE	
** THICKENER		
NUMBER	1	
DIAMETER - M	30.5	(100 FT)
** WATER LOOP		
TYPE	CLOSED	
** REAGENT PREPARATION EQUIPMENT		
NUMBER OF SLAKERS	3	
** DISPOSAL		
NATURE	FINAL	
TYPE	LANDFILL	
LOCATION	ON-SITE	
TRANSPORTATION	TRUCK	

PERIOD	MODULE	AVAILABILITY	OPERABILITY	RELIABILITY	UTILIZATION	% REMOVAL SO2	% REMOVAL PART.	PER HOURS	BOILER HOURS	FGD HOURS	CAP. FACTOR
		PERFORMANCE DATA									
3/79	SYSTEM							744			
4/79	SYSTEM							720			

** PROBLEMS/SOLUTIONS/COMMENTS

THE FGD SYSTEM BEGAN OPERATIONS ON MARCH 18, 1979. NO OPERATIONAL DATA ARE YET AVAILABLE.

5/79	SYSTEM							744			
6/79	SYSTEM							720			

** PROBLEMS/SOLUTIONS/COMMENTS

OPERATING HOURS ARE NOT YET AVAILABLE. HOWEVER THE UNIT HAS BEEN RUNNING INTERMITTENTLY AS A RESULT OF PUMP LINER AND FRP PIPING DESIGN PROBLEMS.

7/79	SYSTEM		63.0		55.0			744	650	408	
8/79	SYSTEM		94.0		94.0			744	743	701	

** PROBLEMS/SOLUTIONS/COMMENTS

IN AUGUST THE FGD SYSTEM WAS FORCED OFF LINE FOR 43 HOURS DUE TO PROBLEMS WITH THE RECYCLE PUMP IMPELLERS.

9/79	SYSTEM		75.0		74.0			720	716	534	

** PROBLEMS/SOLUTIONS/COMMENTS

THE ONLY FORCED OUTAGE DURING THE MONTH BEGAN ON SEPTEMBER 28 AND LASTED THROUGH THE END OF THE MONTH. THIS OUTAGE WAS DUE TO PROBLEMS WITH THE VACUUM FILTERS AS WELL AS CHEMICAL PROBLEMS.

IN SEPTEMBER 52 HOURS OF SCHEDULED OUTAGE WERE USED TO INSTALL A WATER FILTER. THE SCRUBBER WAS ALSO TAKEN OFF LINE FOR 72 HOURS FOR PRECIPITATOR TESTING. THE ONLY FORCED OUTAGE DURING THE MONTH BEGAN ON SEPTEMBER 28 AND LASTED THROUGH THE END OF THE MONTH AS A RESULT OF POOR FILTER CAKE QUALITY. THIS HAS RESULTED FROM PROBLEMS WITH THE VACUUM FILTERS AS WELL AS CHEMICAL PROBLEMS.

10/79	A	85.8	96.9		84.5						
	B	88.6	98.6		86.0						
	SYSTEM	100.0	98.0	98.0	85.0			744	649	634	
11/79	A	89.3	97.1		89.4						
	B	86.8	94.4		86.9						
	SYSTEM	97.0	96.0	97.0	88.0			720	663	635	
12/79	A	80.8	80.9		80.8						
	B	81.2	81.3		81.2						
	SYSTEM	81.0	81.0	81.0	81.0			744	743	603	

** PROBLEMS/SOLUTIONS/COMMENTS

DURING THE FOURTH QUARTER PROBLEMS WERE ENCOUNTERED WITH THE LIME SLAKER FEED.

THE THICKENER RAKE FROZE CAUSING 9 DAYS OUTAGE TIME.

THE ISOLATION DAMPER HAS CAUSED SOME PROBLEMS THIS QUARTER. THE UTILITY HAS NOT YET SOLVED THIS PROBLEM.

SECTION 3
DESIGN AND PERFORMANCE DATA FOR OPERATIONAL DOMESTIC FGD SYSTEMS

COMPANY NAME	SPRINGFIELD CITY UTILITIES	
PLANT NAME	SOUTHWEST	
UNIT NUMBER	1	
CITY	SPRINGFIELD	
STATE	MISSOURI	
REGULATORY CLASSIFICATION	B	
PARTICULATE EMISSION LIMITATION - NG/J	43.	(.100 LB/MMBTU)
SO2 EMISSION LIMITATION - NG/J	516.	(1.200 LB/MMBTU)
NET PLANT GENERATING CAPACITY - MW	173.0	
GROSS UNIT GENERATING CAPACITY - MW	194.0	
NET UNIT GENERATING CAPACITY W/FGD - MW	173.0	
NET UNIT GENERATING CAPACITY WO/FGD - MW	182.0	
EQUIVALENT SCRUBBED CAPACITY - MW	194.0	
** BOILER DATA		
SUPPLIER	RILEY STOKER	
TYPE	PULVERIZED COAL	
SERVICE LOAD	BASE	
COMMERCIAL SERVICE DATE	0/76	
MAXIMUM BOILER FLUE GAS FLOW - CU.M/S	********	(******* ACFM)
FLUE GAS TEMPERATURE - C	148.9	(300 F)
STACK HEIGHT - M	117.	(384 FT)
STACK TOP DIAMETER - M	*******	(***** FT)
** FUEL DATA		
FUEL TYPE	COAL	
FUEL GRADE	BITUMINOUS	
AVERAGE HEAT CONTENT - J/G	29075.	(12500 BTU/LB)
RANGE HEAT CONTENT - BTU/LB		******
AVERAGE ASH CONTENT - %	13.00	
RANGE ASH CONTENT - %	******	
AVERAGE MOISTURE CONTENT - %	********	
RANGE MOISTURE CONTENT - %	6-12	
AVERAGE SULFUR CONTENT - %	3.50	
RANGE SULFUR CONTENT - %	2.5 - 4.5	
AVERAGE CHLORIDE CONTENT - %	.30	
RANGE CHLORIDE CONTENT - %	******	
** ESP		
NUMBER	1	
TYPE	COLD SIDE	
SUPPLIER	AIR CORRECTION DIVISION, UOP	
PARTICULATE DESIGN REMOVAL EFFICIENCY - %	99.7	
FLUE GAS TEMPERATURE - C	148.9	(300 F)
** PARTICULATE SCRUBBER		
TYPE	NONE	
** FGD SYSTEM		
SALEABLE PRODUCT/THROWAWAY PRODUCT	THROWAWAY PRODUCT	
GENERAL PROCESS TYPE	WET SCRUBBING	
PROCESS TYPE	LIMESTONE	
SYSTEM SUPPLIER	AIR CORRECTION DIVISION, UOP	
A-E FIRM	BURNS & MCDONNELL	
DEVELOPMENT LEVEL	FULL SCALE	
NEW/RETROFIT	NEW	
PARTICULATE DESIGN REMOVAL EFFICIENCY - %	99.70	
SO2 DESIGN REMOVAL EFFICIENCY - %	80.00	
INITIAL START-UP	4/77	
ABSORBER SPARE CAPACITY INDEX - %	.0	
ABSORBER SPARE COMPONENT INDEX	.0	
** ABSORBER		
NUMBER	2	
TYPE	MOBILE PACKED TOWER	
INITIAL START UP	4/77	
SUPPLIER	AIR CORRECTION DIVISION, UOP	
NUMBER OF STAGES	3	
DIMENSIONS - FT	16 X 30 X 54.5 HIGH	
SHELL MATERIAL	A-36 CARBON STEEL	
SHELL LINER MATERIAL	NEOPRENE RUBBER	
BOILER LOAD/ABSORBER - %	64.0	

SPRINGFIELD CITY UTILITIES: SOUTHWEST 1 (CONT.)

GAS FLOW - CU.M/S	156.91	(332500 ACFM)
GAS TEMPERATURE - C	148.9	(300 F)
LIQUID RECIRCULATION RATE - LITER/S	756.	(12000 GPM)
L/G RATIO - L/CU.M	.5	(4.1 GAL/1000ACF)
PRESSURE DROP - KPA	3.0	(12.0 IN-H2O)
SO2 DESIGN REMOVAL EFFICIENCY - %	91.7	

** FANS

NUMBER	2	
TYPE	BOILER I.D.	
CONSTRUCTION MATERIALS	CARBON STEEL	
CAPACITY - CU.M/S	192.06	(407000 ACFM)

** VACUUM FILTER

NUMBER	1
TYPE	ROTARY DRUM
OUTLET SOLIDS - %	60.0

** MIST ELIMINATOR

NUMBER	2
TYPE	CHEVRON
CONSTRUCTION MATERIAL	FRP
NUMBER OF STAGES	2
WASH SYSTEM	CONTINUOUS ON BOTTOM LEVEL

** PROCESS CONTROL CHEMISTRY

CONTROL VARIABLES	PH, GAS FLOW

** PUMPS

SERVICE	NUMBER
ABSORBER RECIRCULATION	4
MIST ELIMINATOR WASH	2
THICKENER FEED	2
SLURRY FEED	4
SLURRY TRANSFER	2

** TANKS

SERVICE	NUMBER
LIMESTONE SLURRY STORAGE TANK	1
SLURRY HOLD TANK	2
DEMISTER WASH TANK	1
PRESATURATOR SUPPLY TANK	1

** THICKENER

NUMBER	1

** WATER LOOP

TYPE	CLOSED	
EVAPORATOR WATER LOSS - LITER/S	9.9	(157 GPM)
SLUDGE WATER LOSS - LITER/S	1.8	(29 GPM)
FRESH MAKEUP WATER ADDITION - LITERS/S	19.8	(315 GPM)

** REAGENT PREPARATION EQUIPMENT

NUMBER OF BALL MILLS	2

** TREATMENT

PRODUCT CHARACTERISTICS	DRY LIME AND FLYASH STABILIZED

** DISPOSAL

NATURE	FINAL
TYPE	LANDFILL
LOCATION	ON SITE
TRANSPORTATION	TRUCK
AREA - ACRES	10.0

PERFORMANCE DATA

PERIOD	MODULE	AVAILABILITY	OPERABILITY	RELIABILITY	UTILIZATION	% REMOVAL SO2	% REMOVAL PART.	PER HOURS	BOILER HOURS	FGD HOURS	CAP. FACTOR
0/77	SYSTEM										

SPRINGFIELD CITY UTILITIES: SOUTHWEST 1 (CONT.)

PERIOD	MODULE	AVAILABILITY	OPERABILITY	RELIABILITY	UTILIZATION	% REMOVAL SO2	% REMOVAL PART.	PER HOURS	BOILER HOURS	FGD HOURS	CAP. FACTOR
		PERFORMANCE DATA									

** PROBLEMS/SOLUTIONS/COMMENTS

INSTALLATION OF THE LIMESTONE FGD SYSTEM WAS COMPLETED DURING THE FIRST QUARTER OF 1977 (BEHIND SCHEDULE, PRIMARILY BECAUSE OF DELAYS IN ELECTRICAL WORK). FOLLOWING AIR/WATER TESTS AND CHECKOUT OF LIMESTONE PREPARATION FACILITIES, THE FGD PLANT WAS STARTED UP IN EARLY APRIL 1977 FOR MECHANICAL SHAKEDOWN/DEBUGGING OPERATIONS WHICH CONTINUED THROUGHOUT THE SUMMER. COMPLIANCE TESTING AND CERTIFICATION OF COMMERCIAL AVAILABILITY WERE SUCCESSFULLY COMPLETED IN SEPTEMBER, JUST BEFORE A SCHEDULED 3-MONTH FALL SHUTDOWN. OPERATION OF THE SYSTEM HAS BEEN HAMPERED BY A NUMBER OF PROBLEMS: MIST ELIMINATOR PLUGGING (PIPING TO M.E. SPRAY SYSTEM HAS BEEN MODIFIED), CORROSION IN THE PRESATURATOR (WAS RELINED WITH PRECRETE), CORROSION OF THE INLET/OUTLET GAS DAMPERS (REPLACED WITH 316 SS DAMPERS), AND FAILURE OF PRECRETE LINING IN THE SCRUBBER AND CEILCOTE IN THE STACK (BOTH FAILURES IDENTIFIED AS APPLICATION PROBLEMS). THE UTILITY ALSO FOUND IT NECESSARY TO CHANGE THE SYSTEM'S PH CONTROL FROM 5.9 TO 5.6 TO INCREASE LIMESTONE UTILIZATION AND DECREASE PLUGGING WITHIN THE SYSTEM.

4/77	SYSTEM							720			
5/77	SYSTEM							744			
7/77	SYSTEM							744			
8/77	SYSTEM							744			

** PROBLEMS/SOLUTIONS/COMMENTS

THE FGD SYSTEM WAS OPERATED ROUGHLY 60% OF THE AUGUST-SEPTEMBER PERIOD. A NEW SOURCE PERFORMANCE TEST WAS RUN DURING THE SECOND WEEK OF SEPTEMBER. LATER, THE UNIT WAS SHUT DOWN FOR THE FIRST TURBINE INSPECTION.

9/77	SYSTEM							720			
10/77	SYSTEM							744			

** PROBLEMS/SOLUTIONS/COMMENTS

DURING OCTOBER THE OUTLET DAMPERS WERE MODIFIED (REPLACED WITH 316L SS).

A SCHEDULED OCTOBER-NOVEMBER OUTAGE WAS INITIATED. THE UNIT IS SCHEDULED TO START UP AGAIN IN JANUARY.

THE PRESATURATOR WAS RELINED WITH HI-MO (HIGH MOLYBDENUM) STEEL.

OUTLET DUCTWORK WAS RELINED WITH CEILCOTE.

HOLLOW PACKING BALLS WERE REPLACED WITH HEAVIER WALLED PLASTIC BALLS.

LEAKING AROUND OUTLET DAMPERS WAS MINIMIZED BY SEAL-AIR FANS.

11/77	SYSTEM							720			
12/77	SYSTEM							744			

** PROBLEMS/SOLUTIONS/COMMENTS

THE PLANT SHUTDOWN CONTINUED UNTIL JANUARY 28 WHEN THE BOILER RESTARTED. THE FGD SYSTEM WAS EXPECTED TO BE PUT BACK ON LINE IN FEBRUARY 1978. DURING THE OUTAGE ALL REMAINING MODIFICATIONS TO THE FGD SYSTEM WERE COMPLETED.

1/78	SYSTEM							744			
2/78	SYSTEM							672			

PERIOD	MODULE	AVAILABILITY	OPERABILITY	RELIABILITY	UTILIZATION	% REMOVAL SO2	% REMOVAL PART.	PER HOURS	BOILER HOURS	FGD HOURS	CAP. FACTOR
		PERFORMANCE DATA									

** PROBLEMS/SOLUTIONS/COMMENTS

THE ABSORBERS DID NOT OPERATE DUE TO AN EXPANSION JOINT FAILURE BETWEEN THE ID FAN AND THE ABSORBERS.

THE ABSORBERS ARE CURRENTLY BEING BY-PASSED. THE FGD SYSTEM IS EXPECTED TO BE BACK ON LINE BY THE END OF APRIL.

3/78	SYSTEM							744			
4/78	SYSTEM							720			

** PROBLEMS/SOLUTIONS/COMMENTS

ONLY ONE SCRUBBER-ABSORBER MODULE IS CURRENTLY OPERATING. THE EXPANSION JOINT FAILURE MENTIONED PREVIOUSLY WAS DIRECTLY RELATED TO THE DAMPER FAILURE WHICH ALLOWED THE BOILER TO CONTINUE PUMPING GAS TO THE SEALED OFF FGD SYSTEM.

THE UNIT EXPERIENCED AN FRP LINER FAILURE OVER THE PERIOD.

A PUMP FAILURE OCCURRED DURING THE PERIOD.

5/78	SYSTEM							744			
6/78	SYSTEM							720			

** PROBLEMS/SOLUTIONS/COMMENTS

THE A-MODULE RAN STEADILY FOR OVER 11 DAYS. B-MODULE WAS STILL DOWN WITH EXPANSION JOINT PROBLEMS.

DURING THE MONTH THE MIST ELIMINATOR WASH SYSTEM WAS ALTERED FROM A SEPARATE CLOSED LOOP FOR EACH MODULE TO A COMMON SYSTEM FOR BOTH MODULES. THE NEW SYSTEM TAKES SUPERNATANT FROM THE TOP OF THE THICKENER FOR MIST ELIMINATOR SPRAY.

INSTRUMENTATION PROBLEMS WERE ENCOUNTERED DURING THE MONTH. PH PROBES WERE LOST, THE MAG-FLOW METER FOR LIMESTONE SLURRY FAILED, AND THE AUTOMATIC GAS ANALYZERS DID NOT OPERATE PROPERLY.

SOME PIPES PLUGGED DUE TO NEOPRENE PEELING FROM VALVES.

THE SLUDGE SYSTEM EXPERIENCED SOME FILTER BELT PROBLEMS DURING THE MONTH BUT THESE WERE REPAIRED.

7/78	S-1	16.7	16.7	16.7	16.7						
	S-2	.0	.0	.0	.0						
	SYSTEM	8.0	8.0	8.0	8.0			744	744	62	68.0

** PROBLEMS/SOLUTIONS/COMMENTS

PROBLEMS WERE ENCOUNTERED WITH THE MODULE-A TRANSFER PUMPS. NINE DAYS WERE REQUIRED TO TRACE THE ELECTRICAL-RELATED PROBLEM.

A 17-DAY OUTAGE WAS CAUSED BY PROBLEMS WITH THE BALL MILL AIR SUPPLY WHICH RESULTED IN THE UNAVAILABILITY OF SLURRY.

B-MODULE WAS STILL DOWN IN JULY WHILE THE UTILITY WAITED FOR THE REPLACEMENT EXPANSION JOINT.

WORK WAS DONE DURING THE MONTH TO IMPROVE THE INSTRUMENTATION. IT WAS DISCOVERED THAT MANY OF THE PROBLEMS WERE DUE TO SCALE ACCUMULATION ON THE PROBES.

8/78	S-1	59.0	59.0	59.0	59.0						
	S-2	.0	.0	.0	.0						
	SYSTEM	30.0	30.0	30.0	30.0			744	744	220	54.9

SPRINGFIELD CITY UTILITIES: SOUTHWEST 1 (CONT.)

PERIOD	MODULE	AVAILABILITY	OPERABILITY	RELIABILITY	UTILIZATION	% REMOVAL SO2	% REMOVAL PART.	PER HOURS	BOILER HOURS	FGD HOURS	CAP. FACTOR
		PERFORMANCE DATA									

** PROBLEMS/SOLUTIONS/COMMENTS

THE B-MODULE REMAINED DOWN THROUGHOUT AUGUST BECAUSE THE REPLACEMENT EXPANSION JOINT HAD NOT YET ARRIVED. EXPANSION JOINT REPAIR WAS REQUIRED ON THE A-MODULE.

PROBLEMS WITH THE THICKENER AND PLUGGED LINES CAUSED THE A-MODULE OUTAGE TOTALING 211 HOURS.

9/78	S-1	22.1	28.6	28.6	22.1						
	S-2	.0	.0	.0	.0						
	SYSTEM	11.0	14.0	14.0	11.0			720	557	80	47.6

** PROBLEMS/SOLUTIONS/COMMENTS

CONTINUATION OF THE EXPANSION JOINT PROBLEM RESULTED IN THE B-MODULE REMAINING DOWN THROUGHOUT THE MONTH.

A-MODULE DOWN TIME WAS DUE TO PLUGGING OF THE THICKENER SLURRY MAKEUP LINES AND FAILURE OF THE BALLS WITHIN THE MODULE.

A-MODULE BALLS FAILED OVER THE PERIOD. THE HEAVIER-WALLED PING PONG BALLS THAT WERE INSTALLED DURING THE DECEMBER 1977-JANUARY 1978 PERIOD WERE REPLACED WITH 1.25 INCH DIAMETER SOLID RUBBER BALLS DURING SEPTEMBER 1978.

10/78	S-1	.0	.0	.0	.0						
	S-2	.0	.0	.0	.0						
	SYSTEM	.0	.0	.0	.0			744	26	0	

** PROBLEMS/SOLUTIONS/COMMENTS

THE BOILER WAS DOWN FOR A SCHEDULED OUTAGE DURING THE MONTH.

CONSIDERABLE CLEANING OF THE A-MODULE WAS DONE AS THE LOWER TWO LEVELS OF THE MODULE HAD BEGUN TO PLUG WHEN THE BALLS FAILED (SEE SEPTEMBER 1978).

A THOROUGH CLEANING OF THE ENTIRE FGD SYSTEM OCCURRED DURING THIS PERIOD.

A BEARING WAS REPLACED ON THE SLURRY DRAW OFF PUMP.

THE OUTLET DUCT WAS CLEANED AND PLASITE INSTALLED. REPAIR WAS MADE TO THE BYPASS DUCT TOGGLE DUE TO METAL DETERIORATION.

THE RUBBER COATING ON HOLD TANK AGITATORS AND SLURRY STORAGE TANK AGITATORS WERE REPAIRED.

11/78	S-1	75.7	64.7	64.7	64.3						
	S-2	26.3	22.5	22.5	22.4						
	SYSTEM	51.0	43.5	43.6	43.3			720	716	312	50.5

** PROBLEMS/SOLUTIONS/COMMENTS

THE BOILER OUTAGE LASTED INTO THE FIRST PART OF NOVEMBER.

AN FGD OUTAGE WAS CAUSED BY A FAN BEARING FAILURE ON MODULE B.

ALL DAMPERS WERE SERVICED, REPAIRED AND EXERCISED.

12/78	S-1	45.2	32.9	32.9	29.7						
	S-2	81.7	76.2	76.2	68.7						
	SYSTEM	63.4	54.6	54.6	49.2			744	671	366	

** PROBLEMS/SOLUTIONS/COMMENTS

ONCE THE SPRAY NOZZLES WERE REPLACED FROZEN LINES PREVENTED MODULE STARTUP

SEVERAL LINES BROKE OR DEVELOPED LEAKS.

ALL THE MAJOR OUTAGES CAN BE ATTRIBUTED TO THE COLD WEATHER. THE SYSTEM

PERIOD	MODULE	AVAILABILITY	OPERABILITY	RELIABILITY	UTILIZATION	% REMOVAL SO2	% REMOVAL PART.	PER HOURS	BOILER HOURS	FGD HOURS	CAP. FACTOR
				PERFORMANCE DATA							

WAS NOT DESIGNED WITH DUE REGARD TO WEATHER CONDITIONS.

NOZZLE PLUGGAGE AT THE PRESATURATOR CAUSED OUTAGE TIME ON ONE MODULE.

ONE OR TWO NUISANCE TRIPS WERE DUE TO FROZEN INSTRUMENTS.

1/79	S-1	.0	.0		.0						
	S-2	42.6	47.3	47.3	29.0						
	SYSTEM	21.3	24.9	24.9	14.5			744	457	108	

** PROBLEMS/SOLUTIONS/COMMENTS

FROZEN VALVES AND EQUIPMENT CONTRIBUTED TO THE OUTAGES OF A MODULE.

DURING THE FIRST 15 DAYS OF JANUARY THE SECOND BALL MILL WAS UNUSEABLE DUE TO LACK OF AIR. THIS CAUSED PROBLEMS IN KEEPING LIMESTONE SLURRY SUPPLIED TO THE A-MODULE.

2/79	S-1	25.0	.0	.0	.0						
	S-2	24.0	32.0	32.0	24.0						
	SYSTEM	24.5	16.0	16.0	12.1			672	508	81	71.4

** PROBLEMS/SOLUTIONS/COMMENTS

THE S-1 MODULE EXPERIENCED PLUGGING PROBLEMS IN THE FIRST AND SECOND STAGE DURING FEBRUARY AND DID NOT OPERATE. DUE TO FLUE GAS LEAKAGE INTO THE MODULE ACCESS COULD NOT BE OBTAINED TO CLEAN THE MODULE.

EXPANSION JOINT PROBLEMS AND BROKEN LINES WERE REPORTED.

A LACK OF SCRUBBING MEDIUM DURING THE LATTER PART OF FEBRUARY WAS REPORTED BY THE UTILITY.

THE S-2 MODULE PROBLEMS INCLUDED FROZEN VALVES AND LINES.

3/79	S-1	62.0	39.5	39.5	38.7						
	S-2	55.0	14.0	14.0	13.7						
	SYSTEM	58.5	26.8	26.8	26.2			744	730	195	52.8

** PROBLEMS/SOLUTIONS/COMMENTS

THE MAJORITY OF MODULE S-1 DOWNTIME WAS DUE TO A BROKEN SUPERNATE LINE AND MAKEUP CROSS TIE.

THE UTILITY REPORTED THAT THE MODULE WAS UNABLE TO RUN FOR A TIME DUE TO A DESIGN PROBLEM WITH A 500 HP MOTOR.

4/79	S-2	51.6	26.5	45.0	27.0						
	S-1	42.6	30.9	30.9	18.5						
	SYSTEM	47.1	37.9	50.4	22.8			720	432	164	

** PROBLEMS/SOLUTIONS/COMMENTS

MODULE S-1 EXPERIENCED AN EXPANSION JOINT FAILURE ON THE I.D. FAN DISCHARGE.

LOW DENSITY AT THE SLURRY HOLD TANK WAS A MAJOR PROBLEM.

SOME PLUGGING OF THE FIRST STAGE OF THE S-2 MODULE WAS REPORTED BY THE UTILITY.

5/79	S-1	84.1	77.5	77.5	67.0						
	S-2	.0	.0	.0	.0						
	SYSTEM	42.1	38.8	48.5	33.5			744	644	249	

** PROBLEMS/SOLUTIONS/COMMENTS

THE S-2 MODULE WAS NOT OPERATED DURING MAY DUE TO A BROKEN RECYCLE TANK AGITATOR SHAFT. A NEW ONE HAS BEEN ORDERED. RUBBER LINING OF THE SHAFT AND REPAIR OF DAMAGED LINING ON THE IMPELLER WILL BE DONE ON SITE.

SPRINGFIELD CITY UTILITIES: SOUTHWEST 1 (CONT.)

PERIOD	MODULE	AVAILABILITY	OPERABILITY	RELIABILITY	UTILIZATION	% REMOVAL SO2	% REMOVAL PART.	PER HOURS	BOILER HOURS	FGD HOURS	CAP. FACTOR
		PERFORMANCE DATA									
6/79	S-1	55.0	53.0	54.2	52.9						
	S-2	.0	.0	.0	.0						
	SYSTEM	27.5	26.5	27.1	26.5			720	719	191	

** PROBLEMS/SOLUTIONS/COMMENTS

THE BROKEN AGITATOR SHAFT WAS REPLACED AND LINED DURING JUNE.

THE S-2 MODULE WAS OUT OF SERVICE ON THREE OCCASIONS DUE TO PLUGGAGE OF THE FIRST AND SECOND STAGES. THE UTILITY REPORTED THAT WITH THE EXCEPTION OF THE PLUGGING PROBLEM ONLY A FEW MINOR SHORT DURATION TRIPS WERE NOTED.

7/79	S-1	59.2	34.1	34.1	34.1						
	S-2	55.3	47.4	47.4	47.3						
	SYSTEM	57.3	40.8	40.8	40.7			744	743	111	

** PROBLEMS/SOLUTIONS/COMMENTS

THE S-1 MODULE WAS NOT OPERATED DURING THE FIRST PART OF THE PERIOD DUE TO THE PLUGGAGE IN THE FIRST AND SECOND STAGES. TWO OTHER OUTAGES OCCURRED. ONE DUE TO A BROKEN LINE AND THE OTHER TIME IT WAS P.C. TROUBLE.

THE S-2 MODULE WAS NOT OPERATED FOR TWO PERIODS. ONCE WHEN THE TANK WAS BEING REFILLED AFTER AN AGITATOR WAS INSTALLED AND ONCE TO CLEAN THE FIRST AND SECOND STAGES.

8/79	S-1	74.5	53.8		50.7						
	S-2	94.6	70.9		66.8						
	SYSTEM	84.7	62.4	62.4	58.8			744	701	437	

** PROBLEMS/SOLUTIONS/COMMENTS

THE S-1 MODULE WAS DOWN FOR TWO PERIODS DUE TO PLUGGING IN THE ABSORBER SECTION. THE MODULE ALSO TRIPPED OFF DUE TO LOSS OF SUPERNATE PUMPS. APART FROM THIS BOTH MODULES WERE EITHER AVAILABLE OR IN OPERATION.

9/79	S-1	48.6	58.3	58.3	45.8						
	S-2	68.8	60.2	78.8	47.4						
	SYSTEM	71.3	59.3	65.7	46.6			720	566	336	

** PROBLEMS/SOLUTIONS/COMMENTS

THE S-1 MODULE WAS OFF LINE DUE TO PLUGGING IN THE ABSORBER SECTION FOR TWO PERIODS AND IT ALSO TRIPPED DUE TO LOSS OF SUPERNATE PUMPS. APART FROM THIS IT WAS EITHER OPERATING OR AVAILABLE.

THE S-2 MODULE WAS OFF LINE ONCE DUE TO BROKEN SUPERNATE LINE, AND ONCE DUE TO BAD PH PROBES IN SEPTEMBER. IT WAS ALSO OFF LINE FOR SEVERAL SHORT PERIODS DUE TO NUISANCE TRIPS; HOWEVER, IT WAS EITHER ON LINE OR AVAILABLE THE REST OF THE PERIOD.

10/79	SYSTEM							744			
11/79	S-1										
	S-2										
	SYSTEM	20.9	20.6	20.9	20.3			720	708	146	

** PROBLEMS/SOLUTIONS/COMMENTS

FOR THE FIRST WEEK OF NOVEMBER NEITHER MODULE WAS AVAILABLE DUE TO AN OVERRUN ON SCHEDULED OUTAGE CAUSED BY A LACK OF MANPOWER.

THE S-1 MODULE WAS NOT AVAILABLE FOR THE REST OF THE MONTH BECAUSE OF THE LACK OF MANPOWER TO FINISH THE ABSORBER SECTION AND HOLD TANK CLEANOUT.

PROBLEMS WITH THE S-2 MODULE RECYCLE PUMPS WERE ENCOUNTERED. THE MODULE WAS REMOVED FROM SERVICE SO THAT THE REPAIRS COULD BE MADE AND THE S-1 CLEANING COULD BE FINISHED.

PERIOD	MODULE	AVAILABILITY	OPERABILITY	RELIABILITY	UTILIZATION	% REMOVAL SO2	% REMOVAL PART.	PER HOURS	BOILER HOURS	FGD HOURS	CAP. FACTOR
				PERFORMANCE DATA							

SEVERAL ATTEMPTS TO RETURN THE MODULE TO SERVICE WERE ABORTED DUE TO VARIOUS PIPING PROBLEMS.

12/79	S-1										
	S-2										
	SYSTEM	59.3	32.1	32.1	28.7			744	664	213	

** PROBLEMS/SOLUTIONS/COMMENTS

THE S-1 ABSORBER SECTION AND HOLD TANK CLEANOUT WAS COMPLETED DURING DECEMBER. THE MODULE WAS RETURNED TO SERVICE.

THE PRESATURATION NOZZLES CAUSED SOME PROBLEMS AND HAD TO BE REMOVED AND CLEANED.

AT THE END OF THE MONTH THE ID FAN EXPANSION JOINT BROKE AND HAD TO BE REPLACED.

THE DENSITY METER ON THE RECYCLE LINE NEEDED REPAIR.

THE DRAINS ON THE DEMISTER PUMPS HAD TO BE REPLACED.

THE WEIGH FEEDER WEIGH BELT AND CALIBRATED FEEDER WERE REPLACED AND THE CALIBRATION FEEDER WAS CHECKED.

SECTION 3
DESIGN AND PERFORMANCE DATA FOR OPERATIONAL DOMESTIC FGD SYSTEMS

COMPANY NAME	ST. JOE ZINC	
PLANT NAME	G.F. WEATON	
UNIT NUMBER	1	
CITY	MONACA	
STATE	PENNSYLVANIA	
REGULATORY CLASSIFICATION	B	
PARTICULATE EMISSION LIMITATION - NG/J	43.	(.100 LB/MMBTU)
SO2 EMISSION LIMITATION - NG/J	516.	(1.200 LB/MMBTU)
NET PLANT GENERATING CAPACITY - MW	*******	
GROSS UNIT GENERATING CAPACITY - MW	60.0	
NET UNIT GENERATING CAPACITY W/FGD - MW	60.0	
NET UNIT GENERATING CAPACITY WO/FGD - MW	*******	
EQUIVALENT SCRUBBED CAPACITY - MW	60.0	
** BOILER DATA		
SUPPLIER	******	
TYPE	******	
SERVICE LOAD	******	
COMMERCIAL SERVICE DATE	**/**	
MAXIMUM BOILER FLUE GAS FLOW - CU.M/S	********	(******* ACFM)
FLUE GAS TEMPERATURE - C	48.9	(120 F)
STACK HEIGHT - M	31.	(102 FT)
STACK TOP DIAMETER - M	.3	(1.0 FT)
** FUEL DATA		
FUEL TYPE	COAL	
FUEL GRADE	******	
AVERAGE HEAT CONTENT - J/G	29075.	(12500 BTU/LB)
RANGE HEAT CONTENT - BTU/LB		******
AVERAGE ASH CONTENT - %	11.50	
RANGE ASH CONTENT - %	******	
AVERAGE MOISTURE CONTENT - %	********	
RANGE MOISTURE CONTENT - %	******	
AVERAGE SULFUR CONTENT - %	3.00	
RANGE SULFUR CONTENT - %	2.5-4.5	
AVERAGE CHLORIDE CONTENT - %	.20	
RANGE CHLORIDE CONTENT - %	******	
** ESP		
NUMBER	1	
TYPE	COLD SIDE	
PARTICULATE DESIGN REMOVAL EFFICIENCY - %	99.6	
FLUE GAS TEMPERATURE - C	148.9	(300 F)
** PARTICULATE SCRUBBER		
TYPE	NONE	
** FGD SYSTEM		
SALEABLE PRODUCT/THROWAWAY PRODUCT	SALEABLE PRODUCT	
GENERAL PROCESS TYPE	WET SCRUBBING	
PROCESS TYPE	CITRATE	
SYSTEM SUPPLIER	BUREAU OF MINES	
A-E FIRM	MORRISON - KNUDSEN CO.	
DEVELOPMENT LEVEL	PROTOTYPE	
NEW/RETROFIT	RETROFIT	
PARTICULATE DESIGN REMOVAL EFFICIENCY - %	99.60	
SO2 DESIGN REMOVAL EFFICIENCY - %	90.00	
COMMERCIAL DATE	1/80	
INITIAL START-UP	11/79	
ABSORBER SPARE CAPACITY INDEX - %	.0	
ABSORBER SPARE COMPONENT INDEX	.0	
** ABSORBER		
NUMBER	1	
TYPE	VENTURI	
INITIAL START UP	12/78	
NUMBER OF STAGES	1	
DIMENSIONS - FT	ABSORBER: 26 DIA. X 85 HIGH; VENTURI 10 DIA. X 4	
SHELL MATERIAL	VENTURI NOZZLE: INCONEL 625; BODY CARBON STEEL	
SHELL LINER MATERIAL	POLYESTER	
INTERNAL MATERIAL	CARBON STEEL, FLAKEGLASS LINED	
BOILER LOAD/ABSORBER - %	100.0	

ST. JOE ZINC: G.F. WEATON 1 (CONT.)

GAS FLOW - CU.M/S	73.62	(156000 ACFM)
GAS TEMPERATURE - C	48.9	(120 F)
LIQUID RECIRCULATION RATE - LITER/S	283.	(4500 GPM)
SO2 INLET CONCENTRATION - PPM	20000	
SO2 OUTLET CONTRATION - PPM	200	
SO2 DESIGN REMOVAL EFFICIENCY - %	90.0	

** FANS

NUMBER	1
TYPE	FLUE GAS, DOUBLE INLET MECHANICAL DR
CONSTRUCTION MATERIALS	CARBON STEEL

** MIST ELIMINATOR

NUMBER	2
TYPE	CHEVRON
CONSTRUCTION MATERIAL	CHLORINATE PVC

** PUMPS

SERVICE	NUMBER
SULFUR SLURRY	2
LEAN SOLUTION	2
******	1
SULFUR TRANSFER	1
SCRUBBER RECIRCULATION	4
SULFUR LOADING	1
RICH CITRATE SOLUTION	2

** TANKS

SERVICE	NUMBER
SULFUR FLOTATION	1
SULFUR SLURRY	1
CITRATE SOLUTION STORAGE TANK	1
MAKE-UP WATER	1
SULFUR STORAGE	1

** REHEATER

NUMBER	1
TYPE	HOT AIR INJECTION

** REHEATER

NUMBER	1
TYPE	DIRECT COMBUSTION

** WATER LOOP

TYPE	CLOSED

** BYPRODUCTS

BYPRODUCT NATURE	ELEMENTAL SULFUR
BYPRODUCT QUALITY - %	99.5

PERFORMANCE DATA

PERIOD	MODULE	AVAILABILITY	OPERABILITY	RELIABILITY	UTILIZATION	% REMOVAL SO2	% REMOVAL PART.	PER HOURS	BOILER HOURS	FGD HOURS	CAP. FACTOR
11/79	SYSTEM							720			
12/79	SYSTEM							744			

** PROBLEMS/SOLUTIONS/COMMENTS

SINCE START-UP IN NOVEMBER THE UNIT HAS BEEN DOWN FOR A MONTH AND A HALF DUE TO SOME MECHANICAL PROBLEMS.

THE ELECTRIC MOTOR IN THE SCRUBBER LIQUOR RECYCLE UNIT HAS BEEN A PROBLEM SINCE START-UP.

LEAKS HAVE BEEN ENCOUNTERED IN THE PIPING OF THE ABSORBER SOLUTION. SOME OF THE LEAKAGE WAS DUE TO FREEZE UP.

BECAUSE OF THE SMELTER SHUT DOWN AT ST. JOE ZINC, THE UNIT HAS BEEN OPERATING AT 20-30 MW.

ST. JOE ZINC: G.F. WEATON 1 (CONT.)

PERIOD	MODULE	AVAILABILITY	OPERABILITY	RELIABILITY	UTILIZATION	% REMOVAL SO2	% REMOVAL PART.	PER HOURS	BOILER HOURS	FGD HOURS	CAP. FACTOR
				PERFORMANCE DATA							

INITIAL SO2 REMOVAL EFFICIENCY HAS BEEN APPROXIMATELY 80-90%.

SECTION 3
DESIGN AND PERFORMANCE DATA FOR OPERATIONAL DOMESTIC FGD SYSTEMS

COMPANY NAME	TENNESSEE VALLEY AUTHORITY	
PLANT NAME	SHAWNEE	
UNIT NUMBER	10A	
CITY	PADUCAH	
STATE	KENTUCKY	
REGULATORY CLASSIFICATION	E	
PARTICULATE EMISSION LIMITATION - NG/J	43.	(.100 LB/MMBTU)
SO2 EMISSION LIMITATION - NG/J	516.	(1.200 LB/MMBTU)
NET PLANT GENERATING CAPACITY - MW	1750.0	
GROSS UNIT GENERATING CAPACITY - MW	10.0	
NET UNIT GENERATING CAPACITY W/FGD - MW	10.0	
NET UNIT GENERATING CAPACITY WO/FGD - MW	********	
EQUIVALENT SCRUBBED CAPACITY - MW	10.0	
** BOILER DATA		
SUPPLIER	******	
TYPE	******	
SERVICE LOAD	******	
COMMERCIAL SERVICE DATE	**/**	
MAXIMUM BOILER FLUE GAS FLOW - CU.M/S	********	(******* ACFM)
FLUE GAS TEMPERATURE - C	*******	(**** F)
STACK HEIGHT - M	******	(**** FT)
STACK TOP DIAMETER - M	*******	(***** FT)
** FUEL DATA		
FUEL TYPE	COAL	
FUEL GRADE	BITUMINOUS	
AVERAGE HEAT CONTENT - J/G	*******	(****** BTU/LB)
RANGE HEAT CONTENT - BTU/LB		******
AVERAGE ASH CONTENT - %	********	
RANGE ASH CONTENT - %	******	
AVERAGE MOISTURE CONTENT - %	********	
RANGE MOISTURE CONTENT - %	******	
AVERAGE SULFUR CONTENT - %	2.90	
RANGE SULFUR CONTENT - %	******	
AVERAGE CHLORIDE CONTENT - %	********	
RANGE CHLORIDE CONTENT - %	******	
** PARTICULATE SCRUBBER		
TYPE	MOBILE PACKED TOWER	
** FGD SYSTEM		
SALEABLE PRODUCT/THROWAWAY PRODUCT	THROWAWAY PRODUCT	
GENERAL PROCESS TYPE	WET SCRUBBING	
PROCESS TYPE	LIME/LIMESTONE	
PROCESS ADDITIVES	VARIABLE - TEST FACILITY	
SYSTEM SUPPLIER	AIR CORRECTION DIVISION, UOP	
A-E FIRM	BECHTEL	
CONSTRUCTION FIRM	TVA	
DEVELOPMENT LEVEL	PROTOTYPE	
NEW/RETROFIT	RETROFIT	
INITIAL START-UP	4/72	
** ABSORBER		
NUMBER	1	
TYPE	MOBILE PACKED TOWER	
INITIAL START UP	4/72	
SUPPLIER	AIR CORRECTION DIVISION, UOP	
NUMBER OF STAGES	3	
GAS FLOW - CU.M/S	16.52	(35000 ACFM)
GAS TEMPERATURE - C	148.9	(300 F)
PARTICULATE INLET LOAD - G/CU.M	6.9	(3.000 GR/SCF)
SO2 INLET CONCENTRATION - PPM	2900	
** CENTRIFUGE		
NUMBER	1	
TYPE	SOLID BOWL	
** MIST ELIMINATOR		
NUMBER	1	
TYPE	CHEVRON	
WASH SYSTEM	INTERMITTENT WASHING WITH AVAILABLE RAW WATER	

TENNESSEE VALLEY AUTHORITY: SHAWNEE 10A (CONT.)

** TANKS

SERVICE	NUMBER
EFFLUENT HOLD TANK	****

** REHEATER

TYPE: DIRECT COMBUSTION

** THICKENER

NUMBER: 1

TYPE: CLARIFIER

** WATER LOOP

TYPE: CLOSED

PERFORMANCE DATA

PERIOD	MODULE	AVAILABILITY	OPERABILITY	RELIABILITY	UTILIZATION	% REMOVAL SO2	% REMOVAL PART.	PER HOURS	BOILER HOURS	FGD HOURS	CAP. FACTOR
0/79	SYSTEM										

** PROBLEMS/SOLUTIONS/COMMENTS

REFER TO THE PERFORMANCE UPDATE INFORMATION FOR SHAWNEE 10B.

SECTION 3
DESIGN AND PERFORMANCE DATA FOR OPERATIONAL DOMESTIC FGD SYSTEMS

COMPANY NAME	TENNESSEE VALLEY AUTHORITY	
PLANT NAME	SHAWNEE	
UNIT NUMBER	10B	
CITY	PADUCAH	
STATE	KENTUCKY	
REGULATORY CLASSIFICATION	E	
PARTICULATE EMISSION LIMITATION - NG/J	43.	(.100 LB/MMBTU)
SO2 EMISSION LIMITATION - NG/J	516.	(1.200 LB/MMBTU)
NET PLANT GENERATING CAPACITY - MW	1750.0	
GROSS UNIT GENERATING CAPACITY - MW	10.0	
NET UNIT GENERATING CAPACITY W/FGD - MW	10.0	
NET UNIT GENERATING CAPACITY WO/FGD - MW	*******	
EQUIVALENT SCRUBBED CAPACITY - MW	10.0	
** BOILER DATA		
SUPPLIER	******	
TYPE	******	
SERVICE LOAD	******	
COMMERCIAL SERVICE DATE	**/**	
MAXIMUM BOILER FLUE GAS FLOW - CU.M/S	********	(******* ACFM)
FLUE GAS TEMPERATURE - C	*******	(**** F)
STACK HEIGHT - M	******	(**** FT)
STACK TOP DIAMETER - M	*******	(***** FT)
** FUEL DATA		
FUEL TYPE	COAL	
FUEL GRADE	BITUMINOUS	
AVERAGE HEAT CONTENT - J/G	*******	(****** BTU/LB)
RANGE HEAT CONTENT - BTU/LB		******
AVERAGE ASH CONTENT - %	********	
RANGE ASH CONTENT - %	******	
AVERAGE MOISTURE CONTENT - %	********	
RANGE MOISTURE CONTENT - %	******	
AVERAGE SULFUR CONTENT - %	2.90	
RANGE SULFUR CONTENT - %	******	
AVERAGE CHLORIDE CONTENT - %	********	
RANGE CHLORIDE CONTENT - %	******	
** PARTICULATE SCRUBBER		
NUMBER	1	
TYPE	VENTURI	
SUPPLIER	CHEMICO	
FLUE GAS CAPACITY - CU.M/S	1.7	(3500 ACFM)
FLUE GAS TEMPERATURE - C	148.9	(300 F)
** FGD SYSTEM		
SALEABLE PRODUCT/THROWAWAY PRODUCT	THROWAWAY PRODUCT	
GENERAL PROCESS TYPE	WET SCRUBBING	
PROCESS TYPE	LIME/LIMESTONE	
PROCESS ADDITIVES	VARIABLE - TEST FACILITY	
SYSTEM SUPPLIER	CHEMICO	
A-E FIRM	BECHTEL	
CONSTRUCTION FIRM	TVA	
DEVELOPMENT LEVEL	PROTOTYPE	
NEW/RETROFIT	RETROFIT	
INITIAL START-UP	4/72	
** ABSORBER		
NUMBER	1	
TYPE	SPRAY TOWER	
INITIAL START UP	4/72	
SUPPLIER	CHEMICO	
GAS FLOW - CU.M/S	16.52	(35000 ACFM)
GAS TEMPERATURE - C	148.9	(300 F)
** MIST ELIMINATOR		
NUMBER	1	

TENNESSEE VALLEY AUTHORITY: SHAWNEE 10B (CONT.)

** TANKS

SERVICE	NUMBER
SPRAY TOWER EFFLUENT HOLD TANK	****
OXIDATION TANK	****
DESUPERSATURATION TANK	****

** REHEATER

TYPE: DIRECT COMBUSTION

** WATER LOOP

TYPE: CLOSED

PERFORMANCE DATA

PERIOD	MODULE	AVAILABILITY	OPERABILITY	RELIABILITY	UTILIZATION	% REMOVAL SO2	% REMOVAL PART.	PER HOURS	BOILER HOURS	FGD HOURS	CAP. FACTOR
0/72	SYSTEM										

** PROBLEMS/SOLUTIONS/COMMENTS

IN JUNE 1968, THE EPA INITIATED A PROGRAM TO TEST PROTOTYPE LIME AND LIMESTONE SYSTEMS FOR REMOVAL OF SULFUR DIOXIDE AND PARTICULATE FROM COAL-FIRED BOILER FLUE GASES. THE PROGRAM WAS CARRIED OUT IN A TEST FACILITY INCORPORATED INTO THE FLUE GAS DUCTWORK OF UNIT NO. 10, A COAL-FIRED BOILER AT THE TVA SHAWNEE POWER STATION, PADUCAH, KENTUCKY. TVA IS THE CONSTRUCTION AND FACILITY OPERATOR AND BECHTEL CORP. IS CONTRACTOR, TEST DIRECTOR AND REPORT WRITER.

THE TEST FACILITY CONSISTS OF THREE PARALLEL SCRUBBER SYSTEMS OF PROTOTYPE SIZE, TREATING PART OF THE FLUE GAS FROM THE BOILER. EACH SCRUBBER TRAIN IS CAPABLE OF TREATING APPROXIMATELY 30,000 ACFM OR THE EQUIVALENT OF APPROXIMATELY 10 MW OF POWER PLANT GENERATING CAPACITY.

THREE PARALLEL WET SCRUBBER SYSTEMS WERE SELECTED FOR THE TEST PROJECT: 1) A VENTURI WITH A SPRAY TOWER AFTER ABSORBER, 2) A TURBULENT CONTACT ABSORBER (TCA), AND 3) A MARBLE-BED ABSORBER. THE VENTURI SYSTEM, MANUFACTURED BY CHEMICAL CONSTRUCTION CO., CONTAINS AN ADJUSTABLE THROAT THAT PERMITS CONTROL AND VARIATION OF PRESSURE DROP OVER A WIDE RANGE OF FLOW CONDITIONS. THE TCA UNIT, MANUFACTURED BY UNIVERSAL OIL PRODUCTS, INCORPORATES A FLUIDIZED BED OF LOW DENSITY PLASTIC SPHERES THAT ARE FREE TO MOVE BETWEEN RETAINING GRIDS. THE MARBLE BED ABSORBER, SUPPLIED BY COMBUSTION ENGINEERING CO., USES A PACKING OF 3-4-INCH GLASS MARBLE SPHERES AND A TURBULENT LAYER OF LIQUID AND GAS ABOVE THE MARBLE LAYER TO ENHANCE MASS TRANSFER.

IN JUNE 1974, THE EPA BEGAN A 3-YEAR ADVANCED TEST PROGRAM AT THE SHAWNEE FACILITY WITH THESE MAJOR GOALS: (1) CONTINUATION OF LONG-TERM TESTING, WITH EMPHASIS PLACED UPON THE RELIABLE OPERATION OF MIST ELIMINATION SYSTEMS AT INCREASED GAS VELOCITY, (2) INVESTIGATION OF ADVANCED PROCESS AND EQUIPMENT DESIGN VARIATIONS FOR IMPROVING EQUIPMENT RELIABILITY AND PROCESS ECONOMICS, AND (3) LONG-TERM RELIABILITY TESTING ON PROMISING PROCESS AND EQUIPMENT DESIGN VARIATIONS.

THE TWO PARALLEL SCRUBBING SYSTEMS OPERATING DURING THE ADVANCED PROGRAM ARE THE VENTURI/SPRAY TOWER SYSTEM AND THE TCA UNIT. GENERAL PROCESS FLOW DIAGRAMS OF THE TWO PROTOTYPE UNITS ARE PROVIDED IN APPENDIX B. OPERATION OF THE MARBLE-BED ABSORBER UNIT HAS BEEN PERMANENTLY DISCONTINUED.

EACH OF THE SCRUBBING SYSTEMS CONTAINS ITS OWN SLURRY HANDLING FACILITIES AND CAN TREAT APPROXIMATELY 30,000 ACFM OF GAS AT 300 F CONTAINING 1800 TO 4000 PPM OF SULFUR DIOXIDE AND 2 TO 4 GRAINS/SCF OF PARTICULATE. BOILER NO. 1 NORMALLY BURNS A HIGH-SULFUR BITUMINOUS COAL.

FROM JUNE 1974 TO JANUARY 1976, MIST ELIMINATION AND LIMESTONE UTILIZATION TESTS WERE CONDUCTED AT THE SHAWNEE FACILITY. DURING THIS TEST PERIOD THE VENTURI/SPRAY TOWER SYSTEM WAS OPERATED ON BOTH LIME AND LIMESTONE AND THE TCA SYSTEM WITH LIMESTONE. TESTING WAS PERFORMED UNDER A CLOSED-WATER OPERATION MODE. DURING THIS PERIOD THE SLURRY SOLIDS CONTAINED APPROXIMATELY 40 TO 50 PERCENT-BY-WEIGHT FLY ASH BECAUSE OF RELATIVELY HIGH GAS INLET PARTICULATE LOADING. THIS TESTING PROGRAM IS SCHEDULED TO RUN THROUGH TO FEBRUARY 1978.

ADDITIONAL INFORMATION AND DATA CONCERNING THE DETAILS OF THE ADVANCED TEST PROGRAM ARE PRESENTED IN THE PERFORMANCE HISTORY THAT FOLLOWS.

9/75 SYSTEM 720

PERIOD	MODULE	AVAILABILITY	OPERABILITY	RELIABILITY	UTILIZATION	% REMOVAL SO2	% REMOVAL PART.	PER HOURS	BOILER HOURS	FGD HOURS	CAP. FACTOR
				PERFORMANCE DATA							

** PROBLEMS/SOLUTIONS/COMMENTS

THIS EXPERIMENTAL EPA-FUNDED OPERATION IS PROCEEDING WITH THE TEST PROGRAM TWO ABSORBER MODULES ARE CURRENTLY OPERATIONAL (10 MW EACH). THE MARBLE-BE ABSORBER IS STILL INOPERATIVE (SINCE JULY 1973). CURRENT EXPERIMENTS ARE RELATED TO MIST ELIMINATOR SECTION.

10/75	SYSTEM							744			
11/75	SYSTEM							720			

** PROBLEMS/SOLUTIONS/COMMENTS

RECENT TESTING AT SHAWNEE HAS SHOWN THAT THE CHEVRON MIST ELIMINATORS IN BOTH THE SPRAY TOWER AND THE TCA CAN BE KEPT FREE OF SOLIDS BUILDUP AT HIGH ALKALI UTILIZATION (GREATER THAN 90%), USING ONLY INTERMITTANT WASHING WITH AVAILABLE RAW WATER. THIS HIGH UTILIZATION IS NORMALLY ACHIEVED WITH LIME. IT HAS BEEN ACHIEVED WITH LIMESTONE AT REDUCED SCRUBBER INLET SLURRY PH (ABOUT 5.2) AND WITH THREE EFFLUENT TANKS IN SERIES TO SIMULATE A PLUG-FLOW REACTOR. TESTING IS CONTINUING TO DETERMINE THE EFFECTS OF PROCESS VARIABLES ON MIST ELIMINATOR PERFORMANCE AND ON LIMESTONE UTILIZATION. FUTURE PLANS INCLUDE: (1) FACTORIAL TESTING WITH LIME AND LIMESTONE TO DETERMINE THE EFFECTS OF PROCESS VARIABLES ON SO2 REMOVAL AND (2) TESTING THE OXIDATION OF SLUDGE TO GYPSUM IN THE VENTURI/SPRAY TOWER SYSTEM USING AIR SPARGING OF AN ACIDIFIED SLURRY BLEED STREAM

12/75	SYSTEM							744			
1/76	SYSTEM							744			

** PROBLEMS/SOLUTIONS/COMMENTS

THE ADVANCED TEST PROGRAM IS CONTINUING. HIGHLIGHTS OF THE PROGRAM ARE AS FOLLOWS:
EVALUATE SCRUBBER OPERABILITY DURING VARIABLE LOAD OPERATION.
CONTINUE LONG-TERM RELIABILITY TESTING.
INVESTIGATE METHODS FOR IMPROVING WASTE SOLIDS SEPARATION.
CONTINUE SLUDGE OXIDATION AND SLUDGE FIXATION STUDY PROGRAMS.
EVALUATE SYSTEM PERFORMANCE AT REDUCED FLY ASH LOADING.
DETERMINE THE PRACTICAL UPPER LIMITS OF SO2 REMOVAL EFFICIENCY.
EVALUATE ADDITION OF MAGNESIUM ION TO THE SCRUBBING SLURRY.
CHARACTERIZE ALL STACK GAS EMISSION COMPONENTS.
EVALUATE MATERIALS OF CONSTRUCTION OF ALL SCRUBBER AND PLANT-RELATED COMPONENTS.
DEVELOPE A COMPUTER PROGRAM FOR DESIGN AND COST ANALYSIS OF FULL-SCALE LIME/LIMESTONE SYSTEM.

2/76	SYSTEM							696			
3/76	SYSTEM							744			

** PROBLEMS/SOLUTIONS/COMMENTS

BECHTEL REPORTED THAT THE FACTORIAL TEST PROGRAM, EVALUATING THE PERFORMANCE OF THE LIME/LIMESTONE SCRUBBING SYSTEMS WITH AND WITHOUT MAGNESIUM ADDITION HAS BEEN COMPLETED. CURRENTLY TESTING IS PROCEEDING ON THE EVALUATION OF SYSTEM PERFORMANCE AS A FUNCTION OF LOW RESIDENCE TIMES (1.5 TO 5.0) MINUTES) IN THE RECYCLE TANKS. IN ADDITION, A FLY ASH-FREE DUCT IS BEING INSTALLED AT THE TEST FACILITY, THUS ENABLING EVALUATION OF-SYSTEM PERFORMANCE IN THE ABSENCE OF FLY ASH.

4/76	SYSTEM							720			
5/76	SYSTEM							744			

TENNESSEE VALLEY AUTHORITY: SHAWNEE 10B (CONT.)

PERIOD	MODULE	AVAILABILITY	OPERABILITY	RELIABILITY	UTILIZATION	% REMOVAL SO2	% REMOVAL PART.	PER HOURS	BOILER HOURS	FGD HOURS	CAP. FACTOR
					PERFORMANCE DATA						

** PROBLEMS/SOLUTIONS/COMMENTS

THE TEST DIRECTOR, BECHTEL, PROVIDED THE FOLLOWING INPUT CONCERNING THE OPERATION OF THE EXPERIMENTAL SCRUBBING SYSTEMS DURING THE REPORT PERIOD.

THE EFFECT OF MGO ADDITION WAS EXPLORED IN BOTH SCRUBBER SYSTEMS. RESULTS INDICATE MAGNESIUM ION IN THE SCRUBBER SLURRY LIQUOR ENHANCES SO2 REMOVAL AND CAN DEPRESS SULFATE SUPERSATURATION. IT WAS FOUND THAT THE MAGNESIUM ION CONCENTRATION HAD TO EXCEED THE EQUIVALENT CHLORIDE ION CONCENTRATION TO HAVE AN EFFECT ON SO2 REMOVAL.
IN THE TCA UNIT, WITH LIMESTONE SLURRY, SO2 REMOVAL WAS INCREASED FROM 75 TO 95% BY INCREASING THE MAGNESIUM ION CONCENTRATION TO 9,000 PPM IN EXCESS OF EQUIVALENT EQUAL TO 6% BY WEIGHT OF THE LIMESTONE ADDITION RATE. IN THE VENTURI/SPRAY TOWER SYSTEM, WITH LIME SLURRY, SO2 REMOVAL WAS INCREASED FROM 75 TO 90% BY INCREASING THE MAGNESIUM ION CONCENTRATION TO 2,000 PPM IN EXCESS OF EQUIVALENT CHLORIDE ION. THE MAGNESIUM OXIDE ADDITION RATE WAS 2% BY WEIGHT OF THE LIME ADDITION RATE. BOTH SCRUBBING SYSTEMS OPERATED IN THE SUBSATURATED SULFATE MODE WHEN MAGNESIUM OXIDE WAS ADDED. INLET SO2 CONCENTRATIONS DURING THE TESTS AVERAGE APPROXIMATELY 3,000 PPM DURING THESE TESTS.
FOLLOWING THE TEST BLOCKS MENTIONED ABOVE, BOTH SCRUBBERS ARE OPERATING WITH LIME SLURRY SCRUBBING SOLUTIONS, THE TCA SYSTEM ON FLUE GAS CONTAINING FLY ASH AND THE VENTURI/SPRAY TOWER SYSTEM ON FLY ASH-FREE FLUE GAS.

6/76 SYSTEM 720

7/76 SYSTEM 744

** PROBLEMS/SOLUTIONS/COMMENTS

EXPERIMENTAL OPERATION OF THE EPA/TVA ALKALI SCRUBBING TEST FACILITY CONTINUED DURING THE REPORT PERIOD. BECHTEL, THE TEST DIRECTOR, PROVIDED THE FOLLOWING INPUT CONCERNING THE OPERATION OF THE PROTOTYPE TEST UNITS.
VENTURI/SPRAY TOWER SYSTEM: THIS SYSTEM RAN OFF FLY ASH-FREE FLUE GAS USING A LIME SLURRY SCRUBBING SOLUTION. NO SIGNIFICANT DIFFERENCES IN SO2-REMOVAL, GYPSUM SATURATION AND SULFITE OXIDATION WERE DETECTED (VERSUS FLY ASH-LADEN FLUE GAS). ONE DIFFERENCE NOTED WAS THE FILTER CAKE SOLIDS CONTENT WHICH WAS APPROXIMATELY 10% LOWER FOR THE FLY ASH-FREE SLUDGE (40 TO 50% SOLIDS) VERSUS THE FLY ASH-LADEN SLUDGE 50 TO 60% SOLIDS
IN ADDITION OPERATION IN A LOW RESIDENCE TIME MODE (3 MINUTES) WAS EXPLORED. SCALE-FREE OPERATION WAS ACHIEVED IN THIS MODE UNDER THE FOLLOWING CONDITIONS: 8% SOLIDS (NO FLY ASH) IN THE RECIRCULATED SLURRY, PH OF THE SCRUBBER LIQUID INLET WAS 8.0, SUPERFICIAL GAS VELOCITY OF 9.4 FT/SEC., AND A TOTAL LIQUID-TO-GAS RATIO (L-G) OF 7.1 GAL/MCF. SOME SCALE FORMATION OCCURRED WHEN THE SOLIDS CONTENT OF THE RECIRCULATED SLURRY DROPPED BELOW THE 4% LEVEL.
TCA SYSTEM: THIS SYSTEM OPERATED ON FLY ASH-LADEN FLUE GAS USING A LIME SLURRY SCRUBBING SOLUTION INNOCULATED WITH MAGNESIUM OXIDE. GYPSUM SUBSATURATION OPERATION WAS ACHIEVED UNDER THE FOLLOWING CONDITIONS: MAGNESIUM ION CONCENTRATION EXCEEDED THE CHLORIDE ION CONCENTRATION BY 2000 PPM, SUPERFICIAL GAS VELOCITY WAS 12.5 FT/SEC., L/G WAS 50. THE SCRUBBING SOLUTION INLET PH WAS 7.0, AND RESIDENCE TIME WAS 4 MINUTES. THE SO2 REMOVAL EFFICIENCY WAS APPROXIMATELY 90%. WHEN L/G WAS REDUCED TO 37, WHILE ALL OTHER CONDITIONS REMAINED CONSTANT, SEVERE GYPSUM SCALE FORMATION RESULTED. INCREASING THE EFFECTIVE MAGNESIUM CONCENTRATION TO 4000 PPM AND THE SCRUBBER LIQUID INLET PH TO 8.0 DID NOT AMELIORATE THE SCALE PROBLEM. PRESENTLY THE VENTURI/SPRAY TOWER SYSTEM IS OPERATING ON FLY ASH-FREE FLUE GAS WITH MAGNESIUM OXIDE-INNOCULATED LIME SCRUBBING SLURRY.

8/76 SYSTEM 744

9/76 SYSTEM 720

** PROBLEMS/SOLUTIONS/COMMENTS

IN SEPTEMBER AND OCTOBER 1976 THE VENTURI/SPRAY SYSTEM WAS OPERATED WITH FLY ASH-FREE FLUE GAS USING LIME SLURRY WITH ADDED MGO TYPICAL TEST CONDITIONS WERE 9.4 FT/SEC SPRAY TOWER GAS VELOCITY, 21 GAL/MCF VENTURI L/G, 50 GAL/MCF SPRY TOWER L/G, 8% SLURRY SOLIDS (FLY ASH FREE),

PERIOD	MODULE	AVAILABILITY	OPERABILITY	RELIABILITY	UTILIZATION	% REMOVAL SO2	% REMOVAL PART.	PER HOURS	BOILER HOURS	FGD HOURS	CAP. FACTOR

3 MINUTES RESIDENCE TIME, 7.0 SCRUBBER INLET PH, AND 2000 PPM EFFECTIVE MAGNESIUM ION CONCENTRATION (I.E., EXCESS OVER EQUIVALENT CHLORIDE ION). RESULTS WERE NOT CONSISTENT AT THESE CONDITIONS. DURING ONE PERIOD, SCRUBBING INLET LIQUOR GYPSUM SATURATION AVERAGED 85% WITH 80% SO2 REMOVAL WITH SOME GYPSUM SCALE FORMATION. IN A LATER PERIOD, AT SEEMINGLY IDENTICAL TEST CONDITIONS GYPSUM SATURATIONS DROPPED TO 10% WITH 98% SO2 REMOVAL AND THE SCRUBBER DESCALED. A SEVEN-WEEK PROGRAM OF INTENSIVE FLUE GAS CHARACTERIZATION TESTING WAS STARTED IN MID-OCTOBER ON THE VENTURI/SPRAY TOWER SYSTEM. THESE TESTS ARE BEING MADE TO MEASURE SIMULATANEOUS INLET AND OUTLET FLUE GAS PARTICULATE MASS LOADING, PARTICULATE SIZE DISTRIBUTION AND GASEOUS SO3 CONCENTRATION. THE TCA SYSTEM CONTINUED TO OPERATE DURING THIS PERIOD ON FLY ASH-LADEN FLUE GAS USING LIME SLURRY WITH ADDED MGO. THE TEST RESULTS SO FAR INDICATED THAT THE DEGREE OF SULFATE (GYPSUM) SATURATION IS A SENSITIVE FUNCTION OF THE EFFLUENT RESIDENCE TIME CONDITIONS: GAS VELOCITY 12.5 FT/SEC, L/G OF 50, PH OF 7.0, 2000 PPM OF MG ION, AND 8% SOLIDS. AT THESE CONDITIONS GYPSUM SATURATION WERE 95, 50, AND 92%, AT RESIDENCE TIMES OF 3, 4, AND 12 MINUTES, RESPECTIVELY. FURTHER TESTS WERE RUN AT 37 GAL/MCF L/G, AND 8.0 INLET PH WITH OTHER CONDITIONS THE SAME. DURING THESE TESTS GYPSUM SATIONS WERE 95, 95, 50, AND 90% AT 3, 4, 5.4, AND 16 MINUTES RESIDENCE TIMES, RESPECTIVELY.

10/76	SYSTEM							744			
11/76	SYSTEM							720			

** PROBLEMS/SOLUTIONS/COMMENTS

FROM MID-OCTOBER THROUGH EARLY DECEMBER AN INTENSIVE FLUE GAS CHARACTERIZATION TESTING PROGRAM WAS CONDUCTED ON THE VENTURI/SPRAY TOWER SYSTEM WITH LIME SLURRY. OVER THE RANGE TESTED, OUTLET PARTICULATE MASS LOADING WAS FOUND TO BE INDEPENDENT OF SLURRY COMPOSITION (8 TO 15% SUSPENDED SOLIDS, 3,000 TO 16,000 PPM DISSOLVED SOLIDS), GAS FLOW RATE (20,000 TO 35,000, ACFM), SPRAY TOWER LIQUID RATE (0 TO 1,400 GPM) AND VENTURI PRESSURE DROP (3 TO 9 INCHES H2O). WITH 4 TO 6 GR/DSCF PARTICULATE IN THE INLET TYPICAL OUTLET LOADINGS WERE 0.02 TO 0.04 GR/DSCF. WHEN OPERATING WITH FLUE GAS FROM THE ELECTROSTATIC PRECIPITATOR (0.1 TO 0.4 GR/DSCF TO THE SCRUBBER), THE SCRUBBER OUTLET LOADING AVERAGED 0.005 GR/DSCF. THUS, ENTRAINED SLURRY FROM THE M.E. MUST HAVE BEEN LESS THAN 0.005 GR/DSCF. SIZE DISTRIBUTION DATA ARE STILL BEING ANALYZED. SULFURIC ACID MIST VALUES WERE APPROXIMATELY 2 TO 25 PPM AT THE SCRUBBER INLET AND REMOVALS HAVE BEEN ABOUT 50 TO 75%.
THE REMAINDER OF DECEMBER THE VENTURI/SPRAY TOWER SYSTEM WAS DOWN FOR MODIFICATIONS FOR TWO-STAGE OXIDATION TESTING. SEE APPENDIX B FOR A PROCESS FLOW DIAGRAM.
DURING NOVEMBER THE TCA WAS OPERATING WITH FLY ASH-CONTAINING FLUE GAS USING LIME SLURRY WITHOUT ADDED MAGNESIUM OXIDE. OPERATING CONDITIONS WERE 12.5 FT/SEC GAS VELOCITY, 50 GAL/MCF L/G, 8.0 SCRUBBER INLET PH, AND 8 TO 15% SLURRY SOLIDS. AT THESE CONDITIONS THE SO2 REMOVAL WAS ABOUT 80%.
FLY ASH-FREE LIMESTONE TESTS WITHOUT MAGNESIUM OXIDE ADDITION BEGAN ON THE TCA SYSTEM IN LATE NOVEMBER. TYPICAL OPERATING CONDITIONS WERE 12.5 FT/SEC GAS VELOCITY, 50 GAL/MCF L/G, AND 1.1 TO 1.2 STOICHIOMETRIC RATIO. AT THE SAME STOICHIOMETRY, THE PH OF THE FLY ASH-FREE SLURRY WAS 0.2 TO 0.3 UNITS HIGHER THAN OBSERVED IN PREVIOUS RUNS WITH FLY ASH.

12/76	SYSTEM							744			
1/77	SYSTEM							744			

** PROBLEMS/SOLUTIONS/COMMENTS

THE VENTURI/SPRAY TOWER SYSTEM HAS BEEN OPERATED IN A TWO-SERIES-SCRUBBER MODE WITH FORCED OXIDATION SINCE EARLY JANUARY 1977 AFTER SYSTEM MODIFICATIONS TO ALLOW OPERATION OF THE VENTURI AND SPRAY TOWER WITH INDEPENDENT SLURRY RECIRCULATION LOOPS. SULFITE OXIDATION WAS CARRIED OUT IN AN 8 FT DIAMETER VENTURI (PRE-SCRUBBER) EFFLUENT HOLD TANK WHICH HAD AN AIR SPARGER WITH 130-1/8 INCH HOLES IMMERSED IN 18 FT OF SLURRY. THE SPRAY TOWER (AFTER SCRUBBER) FUNCTIONED AS A PRIMARY SO2 ABSORBER.
TYPICAL OPERATION CONDITIONS, USING LIMESTONE SLURRY, WERE 6.7 FT/SEC

TENNESSEE VALLEY AUTHORITY: SHAWNEE 10B (CONT.)

PERIOD	MODULE	AVAILABILITY	OPERABILITY	RELIABILITY	UTILIZATION	% REMOVAL SO2	% REMOVAL PART.	PER HOURS	BOILER HOURS	FGD HOURS	CAP. FACTOR

SPRAY TOWER GAS VELOCITY, 20-30 GAL/MCF VENTURI L/G, 70 GAL/MCF SPRAY TOWER L/G 15% SOLIDS (WITH FLY ASH) IN VENTURI RECIRCULATED SLURRY, 4.5-5 VENTURI INLET (OXIDATION TANK) PH, AND 11.3 MINUTES OXIDATION TANK RESIDENCE TIME (BASED ON 600 GPM SLURRY FLOW TO VENTURI). DURING THESE TESTS, AVERAGE OVERALL SULFITE OXIDATION RANGED FROM 93 TO 99% AT AIR STOICHIOMETRIC RATIO OF 1.0 TO 4.7 LB-ATOMS OXYGEN/LB-MOLE SO2 ABSORBED. CORRESPONDING AVERAGE OXIDATION IN THE SPRAY TOWER RANGED FROM 10 TO 16% AVERAGE OVERALL LIMESTONE UTILIZATION RANGED FROM 83 TO 96%. NO SCALING WAS EXPERIENCED IN EITHER SCRUBBER. AVERAGE FILTER CAKE SOLIDS WERE 79 TO 86% BY WEIGHT COMPARED WITH 55 TO 65% WITHOUT FORCED OXIDATION. SLURRY SOLIDS SETTLING RATE RANGED 0.5 TO 1.4 CM/MIN, 5 TO 10 TIMES FASTER THAN THAT FOR UNOXIDIZED SLURRY. FINAL SETTLED DENSITY RANGED 65 TO 80% SOLIDS COMPARED WITH 45 TO 60% FOR SLURRY WITHOUT FORCED OXIDATION.

FLY ASH-FREE LIMESTONE TESTING ON THE TCA SYSTEM WAS COMPLETED IN EARLY FEBRUARY. THE PH OF THE FLY ASH-FREE SLURRY WAS 0.2 TO 0.3 UNITS HIGHER THAN OBSERVED IN PREVIOUS RUNS WITH FLY ASH. IN ADDITION THE FLY ASH-FREE SLURRY APPEARED TO HAVE INFERIOR SOLIDS DEWATERING CHARACTERISTICS. FOR EXAMPLE THE CENTRIFUGE CAKE SOLIDS AVERAGED ABOUT 50% COMPARED WITH ABOUT 60% FOR SLUDGE CONTAINING FLY ASH.

INTENSIVE FLUE GAS CHARACTERIZATION TESTING WITH LIMESTONE SLURRY ON THE TCA SYSTEM BEGAN IN EARLY FEBRUARY AND ENDED IN EARLY MARCH 1977. PRELIMINARY ANALYSIS OF THE DATA SHOWED AN OUTLET MASS LOADING OF 0.4-0.8 GR/DSCF FLY ASH AND 0.02-0.03 GR/DSCF FOR FLUE GAS WITHDRAWN DOWNSTREAM OF THE ESP. IT WAS ESTIMATED THAT THESE OUTLET MASS LOADINGS CONTAINED ABOUT 0.03 GR/DSCF FLY ASH, 0.02 GR/DSCF REENTRAINED SLURRY SOLIDS AND 0.015 ENTRAINED DISSOLVED SOLIDS (WHEN A CONTINUOUS MIST ELIMINATOR UNDER WASH WAS USED). THESE VALUES VARY DEPENDING ON THE MIST ELIMINATOR WASH SCHEME AND GAS FLOW RATE.

2/77 SYSTEM 672

3/77 SYSTEM 744

** PROBLEMS/SOLUTIONS/COMMENTS

DURING MARCH THE VENTURI/SPRAY TOWER WAS TESTED WITH LIME SLURRY AND FLY ASH LADEN FLUE GAS IN A TWO-STAGE SCRUBBER MODE WITH FORCED OXIDATION. OPERATION WITH LIME WAS SIMILAR TO THE PREVIOUSLY REPORTED LIMESTONE OPERATION WITH GREATER THAN 95% OXIDATION AT AN AIR STOICHIOMETRIC RATIO OF 1.5 LB-ATOMS OXYGEN/LB-MOLE SO2 ABSORBED WITH A SIMPLE AIR SPARGER IN VENTURI HOLD TANK. SLURRY SOLIDS SETTLING RATE VARIED FROM 0.6 TO 1.9 CM/MIN (A 5 TO 10-FOLD ENHANCEMENT OVER UNOXIDIZED SLURRY) AND FILTER CAKE SOLIDS RANGED FROM 74 TO 88% (COMPARED TO 45 TO 60% WITH UNOXIDIZED SLURRY).

TWO MAJOR DIFFERENCES BETWEEN LIME AND LIMESTONE WERE OBSERVED IN A TWO-STAGE FORCED OXIDATION SYSTEM. TO MAINTAIN PH CONTROL IT WAS NECESSARY TO FEED LIME TO BOTH STAGES. WITH LIMESTONE, FEED ONLY TO THE SECOND STAGE WAS ADEQUATE. TO MAINTAIN 80% SO2 REMOVAL, IT WAS NECESSARY TO OPERATE WITH A HIGH SLURRY SOLIDS CONCENTRATION IN THE SPRAY TOWER LOOP WITH LIMESTONE (15%) THAN WITH LIME (6%), RESULTING IN A TIGHTER WATER BALANCE WITH LIMESTONE AND INADEQUATE WATER TO FLUSH THE MIST ELIMINATOR.

PRELIMINARY LIMESTONE TYPE AND GRIND TESTS MADE ON THE TCA SYSTEM DURING MARCH INDICATED THAT SO2 REMOVAL IS IMPROVED BY THE USE OF FINER GROUND LIMESTONE. SO2 REMOVAL WITH EQUIVALENTLY GROUND FREDONIA WHITE AND LONGVIEW, ALABAMA LIMSTONES WAS THE SAME. BLEEDSTREAM FORCED OXIDATION TESTS ARE BEING CONDUCTED WITH A PENBERTHY ELL-3 INJECTOR IN A CLOSED LOOP AROUND A BLEED STREAM HOLD TANK. INITIAL TESTS WERE UNSUCESSFUL DUE TO HIGH PH OF 7 TO 8 IN THE HOLD TANK. BY LOWERING THE HOLD TANK PH TO 5 OR 6, SULFITE OXIDATION UP TO 98% WAS ACHIEVED.

4/77 SYSTEM 720

** PROBLEMS/SOLUTIONS/COMMENTS

UNIT 10 BOILER WAS SHUT DOWN FOR A SCHEDULED TWO-MONTH MAINTENANCE OUTAGE. BECAUSE OF THE BOILER OUTAGE, THE SHAWNEE SCRUBBERS DID NOT OPERATE DURING APRIL AND MAY.

5/77 SYSTEM 744

PERIOD	MODULE	AVAILABILITY	OPERABILITY	RELIABILITY	UTILIZATION	% REMOVAL SO2	% REMOVAL PART.	PER HOURS	BOILER HOURS	FGD HOURS	CAP. FACTOR
		PERFORMANCE DATA									
6/77	SYSTEM							720			

** PROBLEMS/SOLUTIONS/COMMENTS

SCRUBBER OPERATION RESUMED ON JUNE 15 AFTER A 10-WEEK SCHEDULED MAINTENANCE OUTAGE ON THE BOILER.
THE VENTURI/SPRAY TOWER SYSTEM CONTINUED TO OPERATED WITH TWO SCRUBBER STAGES AND FORCED OXIDATION BY MEANS OF AN AIR SPARGING RING IN THE VENTURI HOLD TANK. IN JUNE AND JULY, OPERATION WAS WITH LIME SLURRY AND FLY ASH-FREE FLUE GAS. THE SYSTEM PERFORMED WELL WITH LITTLE DIFFERENCE FROM THE PREVIOUS LIME SLURRY TEST BLOCK WHEN THERE WAS FLY ASH IN THE FLUE GAS. TYPICAL RESULTS WERE ABOUT 97% SULFITE OXIDATION AT AN AIR STOICHOMETRY OF 1.6 LB-ATOMS OXYGEN/LB-MOLE SO2 ABSORBED AN OXIDATION TANK PH OF 5.5. TYPICAL SOLIDS SETTLING RATE WAS ABOUT 2 CM/MIN (AN ORDER OF MAGNITUDE BETTER THAN WITH UNOXIDIZED SLURRY) AND FILTER CAKE SOLIDS AVERAGED ABOUT 80% (COMPARE WITH 45 TO 60% WITH UNOXIDIDED SLURRY).
THE TCA SYSTEM OPERATED WITH FORCED OXIDATION IN THE HOLD TANK ACHIEVED BY CIRCULATING SLURRY THROUGH AN AIR EDUCTOR. IN JUNE AND JULY, OPERATION WAS WITH LIMESTONE SLURRY AND FLY ASH IN THE FLUE GAS. SULFITE OXIDATION WAS POOR IN THE INITIAL TEST (LESS THAN 90%) MAINLY BECAUSE OF INADEQUATE AIR/SLURRY CONTACT IN THE HOLD TANK. BY INCREASING AGITATOR SPEED(TO 68 RPM), HOLD TANK SLURRY LEVEL (TO 12 FT) AND DECREASING PH (TO LESS THAN 5.5) IN THE SLURRY TO THE EDUCTOR, SULFITE OXIDATION OF 90% WAS CONSISTANTLY ACHIEVED AT AN AIR STOICHIOMETRY OF ABOUT 4.5 LB-ATOMS OXYGEN/LB-MOLE SO2 ABSORBED. WASTE SOLIDS PROPERTIES WERE ENHANCED WITH OXIDATION TO ABOUT THE SAME EXTENT AS OBSERVED IN THE VENTURI/SPRAY TOWER SYSTEM. ADDITIONAL TESTING WILL BE DIRECTED TOWARD ACHIEVING 90% OR BETTER SULFITE OXIDATION AT A REDUCED AIR STOICHIOMETRY.

7/77	SYSTEM							744			
8/77	SYSTEM							744			

** PROBLEMS/SOLUTIONS/COMMENTS

THE VENTURI/SPRAY TOWER SYSTEM CONTINUED TO OPERATE WITH TWO SCRUBBER STAGES AND FORCED OXIDATION USING AN AIR SPARGER IN THE VENTURI HOLD TANK. OPERATION DURING AUGUST AND SEPTEMBER WAS WITH LIMESTONE SLURRY AND FLUE GAS WITH LOW FLY ASH LOADING (FLUE GAS FROM DOWNSTREAM OF THE ESP). THE SYSTEM PERFORMED WELL AT 4.5 TO 5.0 OXIDATION PH, WITH LITTLE DIFFERENCE FROM THE PREVIOUS LIMESTONE TESTS WHEN THE FLUE GAS HAD FLY ASH LOADING. (THE PREVIOUS TESTS HAD BEEN MADE ONLY AT OXIDATION PH OF 4.5 AND 5.0). FOR THE AUGUST AND SEPTEMBER TESTS, THE OXIDATION PH WAS FURTHER INCREASED TO 5.5, APPROACHING THE PH IN THE SPRAY TOWER. THIS CAUSED SOME DIFFICULTIES IN THE OXIDATION PH CONTROL AND WIDER FLUCTUATIONS IN VENTURI AND SPRAY TOWER LIMSTONE STOICHIOMETRIC RATIOS. HOWEVER NEAR COMPLETE OXIDATION WAS STILL ACHIEVED AT THE HIGHER PH. TYPICAL RESULTS WERE BETTER THAN 97% SULFITE OXIDATION AT AN AIR STOICHIOMETRY OF 1.7 ATOMS OXYGEN/MOLE SO2 ABSORBED AND AN OXIDATION PH OF 5.5. THE FILTER CAKE SOLIDS CONTENT AVERAGED BETTER THAN 85%. TESTS WERE ALSO CONDUCTED WITHOUT THE DESUPERSATURATION TANK IN THE VENTURI SLURRY LOOP AND WITH THE OXIDATION TANK LEVEL DROPPED FROM 18 TO 14 FT WITHOUT ADVERSE EFFECTS.
DURING AUGUST AND SEPTEMBER THE TCA SYSTEM WAS OPERATED MOSTLY IN A TWO-TANK FORCE OXIDATION MODE USING AN AIR EDUCTOR. THE TCA EFFLUENT (LIMESTONE SLURRY WITH A HIGH FLY ASH LOADING) WAS COLLECTED IN A SMALL LOW-PH SLURRY HOLD TANK WHERE LIMESTONE WAS ADDED THUS TAKING ADVANTAGE OF THE LOW PH SLURRY THROUGH THE AIR EDUCTOR FOR IMPROVED SULFITE OXIDATION AND HIGH PH SLURRY TO TCA FOR BETTER SO2 REMOVAL.
TESTS WERE MADE BOTH WITH THE AIR EDUCTOR MOUNTED ON TOP OF THE EFFLUENT HOLD TANK WITH DOWNWARD SLURRY DISCHARGE TO THE BOTTOM OF THE TANK. AVERAGE SULFITE OXIDATION RANGE FROM 93 TO 98% AT ABOUT 2.5 AIR STOICHIOMETRYY AND 5.2 EDUCTOR INLET PH. DURING TWO OF THE RUNS MADE IN AUGUST WHEN THE ROTARY DRUM FILTER WAS USED THE FILTER CAKE SOLIDS CONTENT AVERAGED 85 AND 88%.
A TEN-DAY RUN WAS MADE IN SEPTEMBER ON THE TCA SYSTEM WITH AUTOMATIC LIMESTONE FEED CONTROL BASED ON STOICHIOMETRY. THE LIMESTONE SLURRY FEED RATE WAS CONTROLLED BY THE FLUE GAS FLOW RATE AND THE INLET SO2 CONCENTRATION. THE CONTROL SYSTEM WORKED WELL ACCORDING TO THE SPECIFICATIONS.

720

TENNESSEE VALLEY AUTHORITY: SHAWNEE 10B (CONT.)

PERIOD	MODULE	AVAILABILITY	OPERABILITY	RELIABILITY	UTILIZATION	% REMOVAL SO2	% REMOVAL PART.	PER HOURS	BOILER HOURS	FGD HOURS	CAP. FACTOR
10/77	SYSTEM							744			

** PROBLEMS/SOLUTIONS/COMMENTS

THE VENTURI/SPRAY TOWER SYSTEM CONTINUED TO OPERATE WITH TWO SCRUBBER STAGES AND FORCED OXIDATION IN THE VENTURI HOLD TANK. IN OCTOBER, THE FOLLOWING IMPROVEMENTS WERE MADE WITH NO SIGNIFICANT DROP IN OXIDATION EFFICIENCY WITH SATISFACTORY SO2 REMOVAL EFFICIENCY.
THE SPRAY TOWER GAS VELOCITY WAS INCREASED FROM 6.7 TO 9.4 FT/SEC.
THE OXIDATION TANK LEVEL WAS DROPPED FROM 18 TO 14 FT.
THE AIR SPARGER RING CONTAINING 40 14-INCH DIAMETER HOLES, WAS REPLACED WITH A SINGLE 3-INCH DIAMETER PIPE DISCHARGING DOWNWARD AT THE CENTER OF THE OXIDATION TANK 3 INCHES FROM THE BOTTOM.
WITH AIR DISCHARGED FROM AN OPEN-ENDED PIPE IT WAS APPARENT THAT THE AIR DISPERSION IN THE OXIDATION TANK WAS ACCOMPLISHED MAINLY BY THE TURBINE AGITATOR RATHER THAN THE STARGER. IN NOVEMBER, A ONE-MONTH RELIABILITY TEST WAS STARTED ON THE VENTURI/SPRAY TOWER SYSTEM USING FORCED OXIDATION WITH TWO SCRUBBER STAGES AND LIMESTONE SLURRY WITH HIGH FLY ASH LOADING. THE FLUE GAS RATE TO THE SCRUBBER SYSTEM WAS VARIED ACCORDING TO THE BOILER LOAD WHICH RANGED BETWEEN 100 AND 155 MW. TEST CONDITIONS WERE SELECTED TO MEET THE EPA NEW SOURCE PERFORMANCE STANDARDS OF 1.2 LBS SO2 AND 0.1 LB PARTICULATE PER MILLION BTU. THIS RUN WAS STILL IN PROGRESS AT THE END OF NOVEMBER. ON THE TCA SYSTEM, FORCED OXIDATION WITH A SINGLE SCRUBBER STAGE USING AN AIR EDUCTOR WAS DISCONTINUED IN EARLY OCTOBER AFTER A HOLE ERODED THROUGH THE EDUCTOR BODY. FORCED OXIDATION TESTING WILL BE RESUMED IN EARLY DECEMBER AFTER AN AIR SPARGER IS INSTALLED.
IN OCTOBER-NOVEMBER, A ONE-MONTH RELIABILITY TEST WITHOUT FORCED OXIDATION WAS CONDUCTED ON THE TCA SYSTEM WITH LIMESTONE SLURRY, FLUE GAS WITH HIGH FLY ASH LOADING, THREE HOLD TANKS IN SERIES, AND 7.5 INCHES STATIC HEIGHT OF NITRILE FOAM SPHERES IN EACH OF 3 BEDS IN THE TCA. GAS RATE TO THE SCRUBBER WAS VARIED WITH BOILER LOAD AND STOICHIOMETRIC RATIO WAS CONTROLLED BY AN AUTOMATIC LIMESTONE FEED SYSTEM. CONDITIONS WERE SELECTED TO MEET THE EPA NEW SOURCE PERFORMANCE STANDARDS AT A LOW STOICHIOMTRIC RATIO OF 1.2 MOLES CA/MOLE SO2 ABSORBED. THE AVERAGE SO2 REMOVAL FOR THE ENTIRE RUN WAS 86% AT 2800 PPM WHICH WAS BETTER THAN THE 83% REQUIRED TO MEET THE EMISSIONS STANDARD. HOWEVER, THE STANDARD WAS FREQUENTLY EXCEEDED FOR PERIODS GREATER THAN THE 3 HOURS ALLOWED BY THE EPA REGULATIONS. AVERAGE OUTLET PARTICULATE MASS LOADING WAS 0.043 GRAIN/SCF DRY WHICH WAS BETTER THAN THE 0.052 GRAIN/SCF DRY (AT 30% EXCESS AIR) REQUIRED TO MEET THE STANDARD. THE RANGE OF THE OUTLET MASS LOADING WAS 0.026 TO 0.069 GRAIN/SCF DRY.

11/77	SYSTEM							720			
12/77	SYSTEM							744			

** PROBLEMS/SOLUTIONS/COMMENTS

A LIMESTONE RELIABILITY TEST ON THE VENTURI/SPRAY TOWER SYSTEM WAS COMPLETED IN MID-DECEMBER, 1977 AFTER 965 OPERATING HOURS. THE TEST WAS CONDUCTED WITH TWO SCRUBBER LOOPS WITH FORCED OXIDATION IN THE FIRST (VENTURI) LOOP. THE FLUE GAS FLOW RATE WAS VARIED ACCORDING TO THE BOILERD LOAD WHICH RANGED BETWEEN 100 AND 155 MW.
TEST CONDITIONS WERE SELECTED TO MEET THE EPA NEW SOURCE PERFORMANCE STANDARDS OF 1.2 LB SO2 AND 0.1 LB PARTICULATE PER MILLION BTU. THE OPERATING RELIABILITY OF THE SYSTEM WAS DEMONSTRATED. HOWEVER, DUE TO WIDE VARIATION IN THE INLET SO2 CONCENTRATION (2500-3400 PPM) AND THE SLOW SYSTEM RESPONSE TIME THE SO2 EMISSION STANDARD WAS FREQUENTLY EXCEEDED FOR PERIODS GREATER THAN THE THREE HOURS ALLOWED BY EPA REGULATIONS. AVERAGE SO2 REMOVAL FOR THE ENTIRE RUN WAS 86% AT 2950 PPM AVERAGE INLET SO2 WHICH WAS HIGHER THAN THE 84% REQUIRED TO MEET THE STANDARD FOR 2800 PPM INLET SO2. THE OUTLET PARTICULATE LOADING RANGED FROM 0.021 TO 0.063 GRAIN/DRY SCF, WITH A RUN AVERAGE OF 0.042 GRAIN/DRY SCF. THESE VALUES COMPARE WITH LOADING OF 0.052 GR/DRY SCF OR LESS REQUIRED TO MEET THE EPA PARTICULATE STANDARD, ASSUMING 30% TOTAL BOILER EXCESS AIR.

ANOTHER RELIABILITY RUN ON THE VENTURI/SPRAY TOWER SYSTEM WAS STARTED IN MID DECEMBER USING LIME SCRUBBING. THE RUN WAS COMPLETED IN JANUARY 1978. WITH THE EXCEPTION OF HIGHER SPRAY TOWER INLET PH AND HIGHER ALKALI UTILI-

PERIOD	MODULE	AVAILABILITY	OPERABILITY	RELIABILITY	UTILIZATION	% REMOVAL SO2	% REMOVAL PART.	PER HOURS	BOILER HOURS	FGD HOURS	CAP. FACTOR

ZATION INHERENT WITH THE LIME SYSTEM, THE OPERATING CONDITIONS AND THE TEST RESULTS WERE SIMILAR TO THOSE OF THE LIMESTONE RELIABILITY RUN.

ON THE TCA SYSTEM, TWO RUNS WERE MADE WITH THE NITRILE FOAM SPHERES REPLACED BY A 46 INCH HEIGHT (23 LAYERS) OF CEILCOTE PACKING SUPPORT PLATES. AT FULL GAS FLOW RATE OF 30,000 ACFM, THE SO2 REMOVAL FOR THE CEILCOTE PLATES WAS SLIGHTLY LESS THAN THAT OF A 3-BED, 4-GRID TCA WITH FIVE INCHES OF STATIC SPHERE HEIGHT PER BED. HOWEVER, AT 18,000 ACFM THE SO2 REMOVAL FOR THE CEILCOTE PLATES WAS A FEW PERCENTAGE POINTS HIGHER THAN THAT EXPERIENCED WITH THE TCA BEDS.

FORCED OXIDATION TESTS WERE CONDUCTED ON THE TCA SYSTEM WITH AN AIR SPARGER USING LIMESTONE SLURRY WITH HIGH FLY ASH LOADING. BOTH ONE-TANK (AIR SPARGING AND LIMESTONE ADDITION IN THE SAME TANK) AND TWO-TANK (AIR SPARGING IN THE FIRST TANK AND LIMESTONE ADDITION IN THE SECOND) CONFIGURATIONS WERE USED. NEAR COMPLETE SULFITE OXIDATION WAS ACHIEVED IN BOTH CONFIGURATIONS AT AN AIR STOICHIOMETRY OF 1.8 ATOMS OXYGEN/MOLE SO2 ABSORBED AND OXIDATION PH OF 5.4-5.7. THE OXIDATION TANK LEVEL WAS 18 FT.

1/78	SYSTEM							744			
2/78	SYSTEM							672			

** PROBLEMS/SOLUTIONS/COMMENTS

MAJOR SYSTEM DOWNTIMES DURING THE PERIOD INCLUDEDD JANUARY 26 THROUGH FEBRUARY 4 FOR THE VENTURI/SPRAY TOWER AND JANUARY 26 THROUGH FEBRUARY 2 FOR THE TCA SYSTEM DUE TO FREEZING WEATHER, AND MARCH 6 THROUGH MARCH 17 FOR BOTH SYSTEMS DUE TO BOILER OUTAGE.
THE EFFECT OF THE SLURRY LEVEL IN THE AIR SPARGED OXIDATION TANK WAS INVESTIGATED IN THE TWO SCRUEBER LOOP VENTURI/SPRAY TOWER SYSTEM WHICH IS OPERATING ON LIME SLURRY WITH HIGH FLY ASH LOADING. NEAR COMPLETE SULFITE OXIDATION (98%) WAS ACHIEVED WITH 14 FT AND 18 FT OXIDATION TANK LEVELS AT AN AIR STOICHIOMETRIC RATIO OF 1.8 ATOMS OXYGEN/MOLE SO2 ABSORBED. AN AIR STOICHIOMETRIC RATIO UP TO ABOUT 3.8 WAS NEEDED TO YIELD NEAR COMPLETE OXIDATION WHEN THE TANK LEVEL WAS DROPPED TO 10 FEET.
A NEW TEST BLOCK WAS STARTED ON MARCH 1 ON THE VENTURI/SPRAY TOWER SYSTEM. MAGNESIUM OXIDE WAS ADDED TO THE SPRAY TOWER SLURRY LOOP IN A TWO SCRUBBER LOOP OPERATION WITH FORCED OXIDATION IN THE VENTURI LOOP. THE SYSTEM WAS OPERATED IN A LIMESTONE SLURRY MODE WITH HIGH FLY ASH LOADING. THE PRIMARY OBJECTIVE OF MAGNESIUM ADDITION IS TO IMPROVE THE SO2 REMOVAL EFFICIENCY. BECAUSE OF THE SHORTAGE OF COAL CAUSED BY THE LOCAL MINERS' STRIKE, COALS FROM DIFFERENT SOURCES WERE BURNED IN THE BOILER. AS A RESULT, INLET SO2 CONCENTRATION FLUCTUATED AS MUCH AS TENFOLD (350-3500 PPM) CAUSING PROBLEMS IN SYSTEM CONTROL.
TCA WAS OPERATED WITH BOTH LIME AND LIMESTONE AND WITH MEGNESIUM OXIDE ADDITION. FLUE GAS WITH HIGH FLY ASH LOADING WAS USED. THESE TESTS WERE CONDUCTED PRIMARILY TO RESOLVE SOME OF THE INCONSISTENT RESULTS OBTAINED DURING EARLIER LIME/MGO AND LIMESTONE/MGO TEST MADE IN APRIL NOVEMBER 1976. AIR LEAKAGE THROUGH THE SCRUBBER DOWNCOMER WAS SUSPECTED IN SOME OF THOSE EARLIER RUNS, RESULTING IN HIGHER-THAN-NORMAL SULFITE OXIDATION AND GYPSUM SATURATION. TEST RESULTS SO FAR WERE INCONCLUSIVE BECAUSE OF THE FLUTUATION IN INLET SO2 AND CONTROL PROBLEMS MENTIONED ABOVE.

3/78	SYSTEM							744			
4/78	SYSTEM							720			

** PROBLEMS/SOLUTIONS/COMMENTS

THE VENTURI/SPRAY TOWER SYSTEM CONTINUED TO OPERATE THROUGH EARLY MAY WITH MGO ADDITION AND WITH TWO SCRUBBER LOOPS. THE SYSTEM WAS OPERATED WITH LIMESTONE SLURRY AND WITH HIGH FLY ASH LOADING. MGO WAS ADDED TO THE SPRAY TOWER SLURRY LOOP TO MAINTAIN AN EFFECTIVE MG++ ION CONCENTRATION OF 5000 PPM (ABOUT 8000 PPM IN THE VENTURI SLURRY LOOP) TO IMPROVE THE SO2 REMOVAL EFFICIENCY IN THE SPRAY TOWER. OXIDATION WAS FORCED IN THE VENTURI SLURRY HOLD TANK. UNDER TYPICAL OPERATING CONDITONS, THE OVERALL SO2 REMOVAL WAS 96% AT 2300 PPM INLET SO2 CONCETRATION, COMPARED TO 86% REMOVAL AT 1600 PPM INLET SO2 WITHOUT MGO ADDITION. SO2 REMOVAL BY VENTURI ALONE WAS 30%, ABOUT THE SAME AS THE CASE WITHOUT MGO ADDITION.

TENNESSEE VALLEY AUTHORITY: SHAWNEE 10B (CONT.)

PERIOD	MODULE	AVAILABILITY	OPERABILITY	RELIABILITY	UTILIZATION	% REMOVAL SO2	% REMOVAL PART.	PER HOURS	BOILER HOURS	FGD HOURS	CAP. FACTOR

NEAR COMPLETE SULFITE OXIDATION COULD BE ACHIEVED AT AN AIR STOICHIOMETRIC RATIO AS LOW AS 1.3 ATOMS OXYGEN/MOLE OF SO2 ABSORBED, IN THE SAME ORDER AS THE CASE WITHOUT MGO ADDITION.
FORCED OXDATION WAS ALSO CONDUCTED ON THE LIMESTONE SLURRY BLEED STREAM FROM THE VENTURI/SPRAY TOWER SYSTEM. A SINGLE EFFLUENT HOLD TANK WAS USED FOR BOTH VENTURI AND SPRAY TOWER. MGO WAS ADDED TO THE EFFLUENT HOLD TANK TO MAINTAIN AN EFFECTIVE MG++ ION CONCENTRATION OF 5000 PPM. A SLURRY STREAM WAS TAKEN FROM THE SCRUBBER DOWNCOMER AND SENT TO AN OXIDATION TANK INTO WHICH AIR WAS SPARGED. A RECYCLE STREAM OF ABOUT 30 GPM WAS SENT BACK FROM THE OXIDATION TANK TO THE EFFLUENT HOLD TANK TO CONTROL PH IN THE OXIDATION TANK AND TO PROVIDE GYPSUM SEEDS IN THE SCRUBBER SLURRY FINAL SYSTEM BLEED WAS WITHDRAWN FROM THE OXIDATION TANK. AT AVERAGE OXIDATION TANK PH OF 6, SULFITE OXIDATION AVERAGED 98%. FILTER CAKE SOLIDS CONTENT WAS 85%, SIMILAR TO THAT OBTAINED WITH TWO SCRUBBER 100% OPERATIONS. HOWEVER, THE SLURRY SOLIDS SETTLING RATE WAS ONLY ABOUT 0.4 CM/MIN, COMPARED TO ABOUT 0.8 CM/MIN FOR THE TWO LOOP OPERATION. SETTLING RATE FOR UNOXIDIZED SLURRY CONTAINING MAGNESIUM ION NORMALLY DID NOT EXCEED 0.1 CM/MIN WITH 50 TO 60% FILTER CAKE SOLIDS.
TCA CONTINUED TO OPERATE WITH MGO ADDITION WITH BOTH LIME AND LIMESTONE SCRUBBING. FLUE GAS WITH HIGH FLY ASH LOADING WAS USED. THE INTENT OF THEE TESTS WAS TO CLARIFY SOME OF THE INCONSISTANT RESULTS OBTAINED DURING EARLIER RUNS MADE IN APRIL-NOVEMBER 1976, DURING WHICH SCRUBBER DOWNCOMER AIR LEAKAGE WAS SUSPECTED IN SOME OF THE TESTS. IN GENERAL, TEST RUNS MADE IN 1976 HAD HIGHER SO2 CONCENTRATION, MOSTLY GREATER THAN 3000 PPM, WHILE THE RECENT RUNS HAD ONLY ABOUT 2500 PPM. AT THE HIGHER INLET SO2 AND THE HIGHER RESULTANT SO2 MAKE-PER-PASS, THE 1976 TESTS OPERATED EITHER UNSATURATED OR SUPERSATURATED WITH RESPECT TO GYPSUM, DEPENDING ON THE SULFITE OXIDATION LEVEL. SEVERE GYPSUM SCALING OCCURRED WHEN THE OPERATION WAS UNDER GYPSUM-SATURATED MODE. IN THE RECENT RUNS, OPERATION WAS MOSTLY UNDER GYPSUM-SATURATED MODE. HOWEVER, BECAUSE OF THE LOWER INLET SO2 AND LOWER SO2 MAKE-PER-PASS, THE GYPSUM SATURATION LEVELS WERE NOT HIGH ENOUGH TO CAUSE ANY SIGNIFICANT SCALING.

5/78	SYSTEM							744			
6/78	SYSTEM							720			

** PROBLEMS/SOLUTIONS/COMMENTS

FORCED OXIDATION FEED STREAM FROM THE VENTURI/SPRAY TOWER SYSTEM CONTINUED THROUGH MID-JUNE. TWO TEST RUNS WERE MADE IN WHICH MGO WAS ADDED TO MAINTAIN AN EFFECTIVE MG++ CONCENTRATION OF 5000 PPM IN THE SCRUBBER SLURRY AND NO RECYCLE STREAM WAS SENT BACK FROM THE OXIDATION TANK (8 FT DIAMTER AND 18 FT TANK LEVEL) TO THE EFFLUENT HOLD TANK. AVERAGE SULFITE OXIDATION WAS 96% OR HIGHER AT AN AIR STOICHIOMETRIC RATIO OF 1.6 ATOMS OXYGEN/MOLE SO2 ABSORBED. THE OXIDATION TANK PH WAS 5.4 TO 5.6 ONLY 0.2 UNITS HIGHER THAN THE EFFLUENT HOLD TANK PH. THE FILTER CAKE SOLIDS WAS 85% AND THE SOLIDS SETTLING RATE WAS 0.4 TO 0.5 CM/MIN.
BOTH SCRUBBER SYSTEMS WERE SHUT DOWN FOR TWO WEEKS FROM JUNE 19 DUE TO A BOILER OUTAGE SCHEDULED FOR RE-ROUTING THE FLUE GAS DUCT FROM THE 800 FT STACK TO THE NO. 11 SMALL STACK.
FOLLOWING THE BOILER OUTAGE BOTH SCRUBBER SYSTEMS STARTED ON NEW LIME AND LIMESTONE TEST BLOCKS IN WHICH ADIPIC ACID, AN ORGANIC PH BUFFER, WAS ADDED TO THE SCRUBBER SLURRY TO IMPROVE SO2 REMOVAL EFFICIENCY.
INITIAL TEST RUNS WERE CONDUCTED WITHOUT ADIPIC ACID ADDITION TO ESTABLISH THE BASE CASE SO2 REMOVAL IN BOTH LIME AND LIMESTONE SCRUBBING FOR BOTH SCRUBBER SYSTEMS. THE VENTURI/SPRAY TOWER SYSTEM WAS OPERATED WITH TWO-SCRUBBER-LOOP CONFIGURATIONS WITH FORCED OXIDATION IN THE FIRST LOOP WHILE THE TCA WAS OPERATED IN A ONE-SCRUBBER-LOOP SCHEME WITHOUT FORCED OXIDATION.
PRELIMINARY RESULTS SHOWED THAT 96 TO 99% SO2 REMOVAL WAS CONSISTANTLY ACHIEVED IN THE VENTUR/SPRAY TOWER SYSTEM OPERATING WITH ABOUT 1600 PPM AND 1400 PPM ADIPIC ACID IN THE VENTURI AND SPRAY TOWER RESPECTIVELY. THESE SO2 REMOVALS COMPARE VERY FAVORABLY WITH THE 66% REMOVAL FOR THE BASE CASE LIME RUN WITHOUT ADIPIC ACID. ON THE TCA SYSTEM, A LIME RUN WITH ABOUT 400 PPM ADIPIC ACID GAVE ABOUT 80% SO2 REMOVAL, COMPARED TO 67% FOR THE BASE CASE RUN.

7/78	SYSTEM							744			
8/78	SYSTEM							744			

PERIOD	MODULE	AVAILABILITY	OPERABILITY	RELIABILITY	UTILIZATION	% REMOVAL SO2	% REMOVAL PART.	PER HOURS	BOILER HOURS	FGD HOURS	CAP. FACTOR
					PERFORMANCE DATA						

** PROBLEMS/SOLUTIONS/COMMENTS

TESTING WITH ADIPIC ACID AS ADDITIVE FOR IMPROVING SO2 REMOVAL EFFICIENCY CONTINUED THROUGH AUGUST AND SEPTEMBER. BOTH VENTURI/SPRAY TOWER AND TCA SYSTEMS WERE OPERATED ON LIMESTONE SLURRY WITH HIGH FLY ASH LOADING DURING THIS PERIOD. THE TCA WAS OPERATED WITHOUT FORCED OXIDATION AND THE VENTURI SPRAY TOWER WITH TWO-SCRUBBER-LOOP FORCED OXIDATION. AS IN THE LIME TESTS WITH ADIPIC ACID ADDITION CONDUCTED IN JULY SIGNIFICANT IMPROVEMENT IN SO2 REMOVAL EFFICIENCY WAS ALSO OBSERVED IN THE LIMSTONE TESTS. UNDER TYPICAL OPERATION, SO2 REMOVAL HIGHER THAN 90% COULD BE ACHIEVED BY THE VENTURI/SPRAY TOWER WITH ABOUT 2100 PPM AND 1500 PPM ADIPIC ACID IN THE VENTURI AND SPRAY TOWER RESPECTIVELY. UNDER THE SHOE OPERATING CONDITONS BUT WITHOUT ADIPIC ACID, THE SO2 REMOVAL WAS ONLY 57%. THE SULFITE OXIDATION EFFICIENCY AND WASTE SLUDGE DEWATERING PROPERTIES DID NOT APPEAR TO BE AFFECTED BY THE PRESENCE OF ADIPIC ACID.
IN THE TCA, HIGHER THAN 90% SO2 REMOVALS WERE OBTAINED WITH 750 TO 1500 PPM ADIPIC ACID COMPARED TO 71% REMOVAL FOR A BASE CASE RUN WITHOUT ADIPIC ACID.
IN BOTH SCRUBBER SYSTEMS THE PH IN THE SCRUBBER SLURRY NEEDS TO BE HIGHERR THAN ABOUT 5.0, THE UPPER PH BUFFER POINT OF ADIPIC ACID, FOR THIS ADDITIVE TO BE FULLY EFFECTIVE.
DETERIORATION OR DECOMPOSITION OF ADIPIC ACID APPARENTLY TAKES PLACE IN THE SCRUBBER. ACTUAL FEED RATES OF ADIPIC ACID WERE 2 TO 3 TIMES HIGHER THAN COULD BE ACCOUNTED FOR IN THE SYSTEM DISCHARGE SLUDGE.

9/78	SYSTEM							720			
10/78	SYSTEM							744			

** PROBLEMS/SOLUTIONS/COMMENTS

A ONE MONTH LONG-TERM RELIABILITY RUN WAS CONDUCTED ON BOTH THE VENTURI/SPRAY TOWER AND TCA SYSTEMS USING LIMESTONE SLURRY WITH ADIPIC ACID AS AN ADDITIVE FOR ENHANCING SO2 REMOVAL EFFICIENCY. STEADY-STATE SO2 REMOVAL IN BOTH RUNS WAS CONSISTANTLY HIGH IN THE RANGE OF 96 TO 99% UNDER TYPICAL OPERATING CONDITIONS. THE VENTURI/SPRAY TOWER SYSTEM WAS OPERATED WITH TWO-SCRUBBER-LOOP FORCED OXIDATION. ADIPIC ACID CONCENTRATIONS WERE 1500 PPM IN THE TCA AND THE SPRAY TOWER, AND 2400 PPM IN THE VENTURI. BOTH SCRUBBER SYSTEMS OPERATED FREE OF SCALING AND PLUGGING.
LONG-TERM TESTS BEGAN IN MID-NOVEMBER TO COMPARE CONVENTIONAL LIME SCRUBBING WITH ADVANCED LIMSTONE SCRUBBING USING CHEMICAL ADDITIVES AND FORCED OXIDATION. EACH TEST WILL LAST ONE MONTH OR LONGER. THE VENTURI/SPRAY TOWER SYSTEM IS BEING OPERATED WITH TWO-SCRUBBER-LOOP FORCED OXIDATION AND LIMESTONE SLURRY AND ADIPIC ACID ADDITION. THE TCA SYSTEM IS BEING OPERATED WITH LIME SLURRY (NO ADDITIVES) AND WITHOUT FORCED OXIDATION. DURING THESE TESTS CONTINUOUS SO2 EMISSIONS MONITORING PROCEDURES WILL BE ASSESSED.

11/78	SYSTEM							720			
12/78	SYSTEM							744			

** PROBLEMS/SOLUTIONS/COMMENTS

LONG-TERM TESTS ON BOTH SCRUBBER SYSTEMS, WHICH BEGAN IN MID-NOVEMBER 1978 WERE COMPLETED NEAR THE END OF JANUARY 1979. THESE TESTS WERE CONDUCTED TO COMPARE CONVENTIONAL LIME SCRUBBING WITH ADVANCED LIMESTONE SCRUBBING USING CHEMICAL ADDITIVES AND FORCED OXIDATION. THE VENTURI/SPRAY TOWER WAS OPERATED WITH TWO-SCRUBBER-LOOP FORCED OXIDATION AND WITH LIMESTONE SLURRY AND ADIPIC ACID ADDITION. THE TCA SYSTEM WAS OPERATED WITH LIME SLURRY (NO ADDITIVE) AND WITHOUT FORCED OXIDATION. DURING THESE TESTS CONTINUOUS SO2 EMISSIONS MONITORING PROCEDURES WERE ASSESSED.

1/79	SYSTEM							744			
2/79	SYSTEM							672			
3/79	SYSTEM							744			

TENNESSEE VALLEY AUTHORITY: SHAWNEE 10B (CONT.)

PERIOD	MODULE AVAILABILITY	OPERABILITY	RELIABILITY	UTILIZATION	% REMOVAL SO2	PART.	PER HOURS	BOILER HOURS	FGD HOURS	CAP. FACTOR
** PROBLEMS/SOLUTIONS/COMMENTS										

ONE TEST RUN WAS CONDUCTED ON EACH OF THE TWO SCRUBBER SYSTEMS IN EARLY FEBRUARY TO PROVIDE SAMPLES FOR LEVEL 1 BIOASSY TESTING BY LITTON BIONETICS CORPORATION UNDER CONTRACT WITH EPA. ACTUAL SAMPLING OF SLURRIES AND CONDENSATES FROM THE SCRUBBER AND OXIDATION TANK OFF-GASES WAS PERFORMED BY BATTELLE COLUMBUS LABORATORY. FOR THIS PURPOSE, THE TCA WAS OPERATED WITH LIMESTONE/FLYASH SLURRY AS A BASE CASE, AND THE VENTURI/SPRAY TOWER WAS OPERATED WITH LIMESTONE/FLYASH SLURRY AND WITH ADIPIC ACID ADDITIVE AND TWO-SCRUBBER-LOOP FORCED OXIDATION.

A SERIES OF TESTS WAS CONDUCTED ON THE VENTURI/SPRAY TOWER SYSTEM FROM MID-FEBRUARY THROUGH THE END OF MARCH TO SIMULATE THE PLANNED TVA WIDOWS CREEK UNIT 8 FULL-SCALE, TWO-SCRUBBER-LOOP FORCED-OXIDATION SCHEME. SPECIAL WIDOWS CREEK LIMESTONE (STONEMAN) AND COAL (PITTSBURGH MIDWAY) WERE USED AT SHAWNEE DURING THESE TESTS. NEAR COMPLETE SULFITE OXIDATION WAS ACHIEVED AT OXIDATION TANK PH UP TO 6.0 AND AN AIR STOICHIOMETRY AS LOW AS 1.5 ATOMS OXYGEN/ MOLE SO2 ABSORBED. EXPECTED SLURRY CARRY-OVER FROM THE FIRST TO THE SECOND SCRUBBER LOOP AT WIDOWS CREEK WAS SIMULATED BY AN ARTIFICIAL BACKMIX STREAM OF UP TO 65 GPM.

A NEW LIME/ADIPIC ACID TEST BLOCK WITH AND WITHOUT FORCED OXIDATION BEGAN IN EARLY FEBRUARY ON THE SINGLE-LOOP TCA SYSTEM USING FLUE GAS WITH HIGH FLYASH LOADINGS. AT TCA INLET PH OF 7.0, 2400 TO 2900 PPM INLET SO2, L/G OF 50 GAL/ MCF, AND 15 INCHES TOTAL STATIC BED HEIGHT OF 1-7/8 INCH NITRILE FOAM SPHERES, SO2 REMOVALS WERE 83, 93, AND 97 PERCENT WITH ZERO, 600, AND 1200 PPM ADIPIC ACID, RESPECTIVELY, WITHOUT FORCED OXIDATION. SO2 REMOVAL REMAINED HIGH AT 91 PERCENT WITH 1200 PPM ADIPIC ACID WHEN L/G WAS REDUCED FROM 50 TO 37 GAL/MCF. WHEN OXIDATION WAS FORCED WITH ABOUT 1.6 AIR STOICHIOMETRY, NEAR COMPLETE SULFITE OXIDATION WAS ACHIEVED AT OXIDATION TANK PH (TCA INLET PH) UP TO ABOUT 5.5, AND 1200 PPM ADIPIC ACID. SO2 REMOVAL ABOVE 90 PERCENT WAS OBTAINED AT TCA INLET PH AS LOW AS 5.0 WITH FORCED OXIDATION.

4/79	SYSTEM							720		
5/79	SYSTEM							744		
** PROBLEMS/SOLUTIONS/COMMENTS										

A SERIES OF BLEED STREAM OXIDATION TESTS USING LIMESTONE AND ADIPIC ACID WAS CONDUCTED ON THE VENTURI/SPRAY TOWER DURING THE MONTH OF APRIL. NEAR COMPLETE SULFITE OXIDATION WAS ACHIEVED UNDER CONDITIONS OF EITHER LOW FLUE GAS THROUGHPUT, WHICH RESULTED IN LOW BLEED RATES AND SUBSEQUENTLY HIGHER RESIDENCE TIMES IN THE OXIDATION TANK, OR RECIRCULATION AT LIWUOR BACK TO THE EFFLUENT HOLD TANK WHICH ARTIFICIALLY MAINTAINED A LOW PH IN THE OXIDATION TANK.

DURING THE MONTH OF APRIL, THE TCA WAS OPERATED WITH LIMESTONE, ADIPIC ACID AND FORCED OXIDATION USING A SINGLE TANK. AT AIR STOICHIOMETRIC RATIOS OF 1.7-2.0 ATOMS OXYGEN/MOLE SO2 ABSORBED, AN UNUSUAL SET OF CONDITIONS WAS ENCOUNTERED DURING WHICH THE LIQUID SULFITE ION LEVEL INCREASED TO A RANGE OF 800 TO 1700 PPM AND THE DEMAND FOR LIMESTONE TO MAINTAIN THE SCRUBBER INLET PH AT 5.1 INCREASED TO A RANGE OF 1.8 TO 4.0 MOLES LIMESTONE/MOLE SO2 ABSORBED. THE CAUSE HAS NOT YET BEEN DETERMINED ALTHOUGH IT WAS FOUND THAT THE SITUATION COULD BE ALLEVIATED BY EITHER INCREASING THE AIR STOICHIOMETRY TO GREATER THAN 2.2, OR BY MOVING THE LIMESTONE FEED TO A SECOND TANK DOWNSTREAM OF THE OXIDATION TANK.

BOILER NO. 10 WENT DOWN ON MAY 5TH FOR A SCHEDULED 6 WEEK BOILER OUTAGE. DURING THIS PERIOD, THE VENTURI/SPRAY TOWER WILL BE DOWN BUT THE TCA IS BEING OPERATED ON FLUE GAS FROM BOILER NO. 9 THROUGH THE NEWLY INSTALLED DUCT. DURING THIS PERIOD, THE TCA WILL COMPLETE A SERIES OF LIMESTONE/ADIPIC ACID FACTORIAL TESTS WITH AND WITHOUT FORCED OXIDATION.

6/79	SYSTEM							720		
7/79	SYSTEM							744		
8/79	SYSTEM							744		
9/79	SYSTEM							720		

PERIOD	MODULE	AVAILABILITY	OPERABILITY	RELIABILITY	UTILIZATION	% REMOVAL SO2	% REMOVAL PART.	PER HOURS	BOILER HOURS	FGD HOURS	CAP. FACTOR
		PERFORMANCE DATA									

** PROBLEMS/SOLUTIONS/COMMENTS

BOILER NO. 10 WAS RESTARTED ON JULY 6, 1979 AFTER NINE WEEKS OF SCHEDULED MAINTENANCE OUTAGE.

LIMESTONE FACTORIAL TESTING WITH ADIPIC ACID ADDITION ON THE VENTURI/SPRAY TOWER SYSTEM CONTINUED THROUGHOUT THE THIRD QUARTER. THESE TESTS WERE MADE WITH TWO-LOOP OPERATION WITH FORCED OXIDATION AND SPRAY TOWER ONLY OPERATION WITHOUT FORCED OXIDATION, BOTH UNDER CLOSED-LOOP CONDITIONS. OPEN-LIQUOR-LOOP TESTS WITH TWO-LOOP OPERATION AND WITHOUT FORCED OXIDATION WERE ALSO CONDUCTED TO COMPARE THE RESULTS WITH "FRESH" ADIPIC ACID AGAINST THOSE WITH "AGED" ACID OBTAINED UNDER CLOSED-LIQUOR-LOOP CONDITIONS.

DURING THE THIRD QUARTER, ADDITIONAL LIMESTONE FACTORIAL TESTS WITH ADIPIC ACID WERE CONDUCTED ON THE TOA SYSTEM TO SUPPLEMENT THOSE MADE IN MAY AND JUNE. IN ADDITION, A SERIES OF LIMESTONE TESTS WITHOUT ADIPIC ACID WERE PERFORMED USING A SINGLE TANK TO INVESTIGATE THE EFFECT OF AIR STOICHIOMETRY AND OXIDATION TANK AGITATOR SPEED ON SULFITE OXIDATION. IN A SIMILAR SERIES OF TESTS CONDUCTED IN APRIL BUT WITH ADIPIC ACID, AN UNUSUAL SET OF CONDITIONS W/S ENCOUNTERED WHICH GAVE HIGH LIQUOR SULFITE CONCENTRATION (800-1700 PPM) AND DEMANDED HIGH LIMESTONE STOICHIOMETRY (1.8-4.0 MOLES CA/MOLE SO2 ABSORBED) TO MAINTAIN A SCRUBBER INLET PH OF 5.1. THESE PHENOMENA WERE ALSO OBSERVED DURING TESTS WITHOUT ADIPIC ACID. INSUFFICIENT SULFITE OXIDATION RATE (CAUSED BY REDUCED AIR STOICHIOMETRY AND/OR REDUCED AGITATION IN THE OXIDATION TANK) AND DECREASED AMOUNT OF SOLID CASO3 SEEDS WERE BELIEVED TO CAUSE HIGH SULFITE SUPERSATURATION (HIGH SULFITE CONCENTRATIONS) AND THE RESULTANT BLINDING OF LIMESTONE BY SULFITE (HIGH LIMESTONE STOICHIOMETRY).

10/79	SYSTEM							744			
11/79	SYSTEM							720			
12/79	SYSTEM							744			

** PROBLEMS/SOLUTIONS/COMMENTS

THE TRAP-OUT FUNNEL, WHICH HAD BEEN INSTALLED EARLIER IN THE SPRAY TOWER TO SEPARATE VENTURI AND SPRAY TOWER SLURRIES FOR TWO-SCRUBBER-LOOP OPERATION, WAS REMOVED IN EARLY OCTOBER.

THE SYSTEM WAS OPERATED THROUGHOUT THE FOURTH QUARTER IN A CONVENTIONAL MODE IN WHICH THE VENTURI AND SPRAY TOWER USED A COMMON HOLD TANK. ADDITIONAL FACTORIAL TESTS WERE CONDUCTED IN THIS MODE OF OPERATION THROUGH MID-DECEMBER USING LIMESTONE/ADIPIC ACID SLURRY WITHOUT FORCED OXIDATION. A NEW TEST BLOCK WAS INITIATED IN MID-DECEMBER TO OPTIMIZE THE LEVELS OF PH AND ADIPIC ACID CONCENTRATION AT A DESIRED DEGREE OF SO2 REMOVAL WITH LIMESTONE SCRUBBING AND WITHOUT FORCED OXIDATION. IT HAS BEEN OBSERVED THAT THE DECOMPOSITION RATE OF ADIPIC ACID IS DECREASED WITH REDUCING PH.

THE TESTING ON THE EFFECTS OF AIR STOICHIOMETRY AND OXIDATION TANK AGITATOR SPEED ON SULFITE OXIDATION WAS CONCLUDED ON THE TCA SYSTEM IN MID-OCTOBER. THE TCA SYSTEM WAS TEMPORARILY TRANSFERRED TO TVA/UOP EPRI IN MID-OCTOBER FOR THE DEMONSTRATION OF THE DOWA BASIC ALUMINUM SULFATE SCRUBBING PROCESS.

SECTION 3
DESIGN AND PERFORMANCE DATA FOR OPERATIONAL DOMESTIC FGD SYSTEMS

COMPANY NAME	TENNESSEE VALLEY AUTHORITY	
PLANT NAME	WIDOWS CREEK	
UNIT NUMBER	8	
CITY	BRIDGEPORT	
STATE	ALABAMA	
REGULATORY CLASSIFICATION	E	
PARTICULATE EMISSION LIMITATION - NG/J	52.	(.120 LB/MMBTU)
SO2 EMISSION LIMITATION - NG/J	516.	(1.200 LB/MMBTU)
NET PLANT GENERATING CAPACITY - MW	*****	
GROSS UNIT GENERATING CAPACITY - MW	550.0	
NET UNIT GENERATING CAPACITY W/FGD - MW	516.0	
NET UNIT GENERATING CAPACITY WO/FGD - MW	542.0	
EQUIVALENT SCRUBBED CAPACITY - MW	550.0	
** BOILER DATA		
SUPPLIER	COMBUSTION ENGINEERING	
TYPE	PULVERIZED COAL	
SERVICE LOAD	BASE	
COMMERCIAL SERVICE DATE	0/63	
MAXIMUM BOILER FLUE GAS FLOW - CU.M/S	755.04	(1600000 ACFM)
FLUE GAS TEMPERATURE - C	137.8	(280 F)
STACK HEIGHT - M	******	(**** FT)
STACK TOP DIAMETER - M	*******	(***** FT)
** FUEL DATA		
FUEL TYPE	COAL	
FUEL GRADE	******	
AVERAGE HEAT CONTENT - J/G	23260.	(10000 BTU/LB)
RANGE HEAT CONTENT - BTU/LB		******
AVERAGE ASH CONTENT - %	25.00	
RANGE ASH CONTENT - %	******	
AVERAGE MOISTURE CONTENT - %	10.00	
RANGE MOISTURE CONTENT - %	******	
AVERAGE SULFUR CONTENT - %	3.70	
RANGE SULFUR CONTENT - %	******	
AVERAGE CHLORIDE CONTENT - %	********	
RANGE CHLORIDE CONTENT - %	******	
** ESP		
NUMBER	1	
SUPPLIER	KOPPERS	
PARTICULATE DESIGN REMOVAL EFFICIENCY - %	50.0	
** PARTICULATE SCRUBBER		
NUMBER	4	
TYPE	VENTURI	
SUPPLIER	TVA/POLYCON	
NUMBER OF STAGES	1	
SHELL MATERIAL	316L SS	
LINING MATERIAL	NONE	
INTERNAL MATERIAL	NONE	
BOILER LOAD/SCRUBBER - %	25.0	
FLUE GAS CAPACITY - CU.M/S	188.8	(400000 ACFM)
FLUE GAS TEMPERATURE - C	137.8	(280 F)
L/G RATIO - LITER/CU.M	1.3	(10.0 GAL/1000ACF)
PRESSURE DROP - KPA	*******	(***** IN-H2O)
PARTICULATE INLET LOAD - G/CU.M	12.6	(5.50 GR/SCF)
PARTICULATE OUTLET LOAD - G/CU.M	.1	(.030 GR/SCF)
PARTICULATE DESIGN REMOVAL EFFICIENCY - %	99.5	
SO2 INLET CONCENTRATION - PPM	3440.000	
SO2 DESIGN REMOVAL EFFICIENCY - %	10.0	
** FGD SYSTEM		
SALEABLE PRODUCT/THROWAWAY PRODUCT	THROWAWAY PRODUCT	
GENERAL PROCESS TYPE	WET SCRUBBING	
PROCESS TYPE	LIMESTONE	
PROCESS ADDITIVES	NONE	
SYSTEM SUPPLIER	TENNESSEE VALLEY AUTHORITY	
A-E FIRM	NONE	
CONSTRUCTION FIRM	TENNESSEE VALLEY AUTHORITY	
DEVELOPMENT LEVEL	FULL SCALE	
NEW/RETROFIT	RETROFIT	

TENNESSEE VALLEY AUTHORITY: WIDOWS CREEK 8 (CONT.)

PARTICULATE DESIGN REMOVAL EFFICIENCY - %	99.50
SO2 DESIGN REMOVAL EFFICIENCY - %	80.00
COMMERCIAL DATE	1/78
INITIAL START-UP	5/77
CONSTRUCTION INITIATION	2/73
CONTRACT AWARDED	2/73
ABSORBER SPARE CAPACITY INDEX - %	.0
ABSORBER SPARE COMPONENT INDEX	.0

** ABSORBER

NUMBER	1	
TYPE	GRID/MOBILE PACKED TOWER	
INITIAL START UP	5/77	
SUPPLIER	POLYCON	
NUMBER OF STAGES	5	
DIMENSIONS - FT	30 WIDE X 16 DEEP X 34 HIGH	
SHELL MATERIAL	CARBON STEEL, 316L SS ON SLOPING SECTION	
SHELL LINER MATERIAL	RUBBER, EXCEPT ON SLOPING SECTION	
INTERNAL MATERIAL	316L SS GRIDS [TOP 2]; FRP [BOTTOM 3]	
BOILER LOAD/ABSORBER - %	25.0	
L/G RATIO - L/CU.M	8.0	(60.0 GAL/1000ACF)
PRESSURE DROP - KPA	.5	(2.0 IN-H2O)
SUPERFICAL GAS VELOCITY - M/SEC	3.7	(12.0 FT/S)
PARTICULATE OUTLET LOAD - NG/J	9.	(.020 LB/MMBTU)
SO2 OUTLET CONTRATION - PPM	650	
SO2 DESIGN REMOVAL EFFICIENCY - %	70.0	

** ABSORBER

NUMBER	3	
TYPE	GRID TOWER	
INITIAL START UP	5/77	
SUPPLIER	POLYCON	
NUMBER OF STAGES	5	
DIMENSIONS - FT	30 WIDE X 16 DEEP X 34 HIGH	
SHELL MATERIAL	CARBON STEEL, 316L SS ON SLOPING SECTION	
SHELL LINER MATERIAL	RUBBER, EXCEPT ON SLOPING SECTION	
INTERNAL MATERIAL	316L SS GRIDS [TOP 2]; FRP [BOTTOM 2]	
BOILER LOAD/ABSORBER - %	25.0	
GAS TEMPERATURE - C	51.7	(125 F)
L/G RATIO - L/CU.M	8.0	(60.0 GAL/1000ACF)
PRESSURE DROP - KPA	.5	(2.0 IN-H2O)
SUPERFICAL GAS VELOCITY - M/SEC	3.7	(12.0 FT/S)
PARTICULATE OUTLET LOAD- G/CU.M	.0	(.020 GR/SCF)
SO2 OUTLET CONTRATION - PPM	650	
SO2 DESIGN REMOVAL EFFICIENCY - %	70.0	

** FANS

NUMBER	4	
TYPE	BOILER I.D.	
CONSTRUCTION MATERIALS	CARBON STEEL	
SERVICE - WET/DRY	DRY	
CAPACITY - CU.M/S	188.76	(400000 ACFM)

** MIST ELIMINATOR

NUMBER	4	
TYPE	CHEVRON	
CONSTRUCTION MATERIAL	316L SS	
CONFIGURATION	VERTICAL	
NUMBER OF STAGES	2	
NUMBER OF PASSES	3	
FREEBOARD DISTANCE - M	4.27	(14.0 FT)
DEPTH - M	.30	(1.0 FT)
VANE SPACING - CM	3.8	(1.50 IN)
WASH SYSTEM	CONTINUOUS	
SUPERFICIAL GAS VELOCITY - M/S	3.8	(12.5 FT/S)
PRESSURE DROP - KPA	.2	(1.0 IN-H2O)

** PROCESS CONTROL CHEMISTRY

CONTROL VARIABLES	PH, PRESSURE CHANGE, OUTLET SO2
SENSOR LOCATION	PH-ABSORBER RECYCLE LINE

** PUMPS

SERVICE	NUMBER
---	---
VENTURI RECIRCULATION	10
POND RETURN	****
RIVER WATER TRANSFER	****

TENNESSEE VALLEY AUTHORITY: WIDOWS CREEK 8 (CONT.)

ABSORBER RECIRCULATION	12

** TANKS

SERVICE	NUMBER
ABSORBER RECYCLE	4
VENTURI RECYCLE	4
LIMESTONE SLURRY	1
RECIRC TNK UNDRFLW SURGE TANK	1

** REHEATER

NUMBER	4	
TYPE	HOT AIR INJECTION	
HEATING MEDIUM	STEAM, 650 F AT 500 PSIG	
TEMPERATURE BOOST - C	27.8	(50 F)

** REAGENT PREPARATION EQUIPMENT

NUMBER OF BALL MILLS	1	
BALL MILL CAPACITY- M T/H	36.3	(40.0 TPH)

** DISPOSAL

NATURE	FINAL
TYPE	POND
DIMENSIONS	110 ACRES X 30 FT DEEP
AREA - ACRES	110.0
CAPACITY - CU.M	4035900 (3300.0 ACRE-FT)

PERFORMANCE DATA

PERIOD	MODULE	AVAILABILITY	OPERABILITY	RELIABILITY	UTILIZATION	% REMOVAL SO2	% REMOVAL PART.	PER HOURS	BOILER HOURS	FGD HOURS	CAP. FACTOR
8/77	8A	20.0	22.7		20.0						
	8B	40.1	45.4		40.1						
	8C	36.7	41.6		36.7						
	8D	8.3	9.4		8.3						
	SYSTEM	26.0	30.0	30.0	26.0			744	657	196	

** PROBLEMS/SOLUTIONS/COMMENTS

TVA HAS HAD EXTENSIVE PROBLEMS WITH START-UP OF ITS SCRUBBER FACILITY.

THERE HAVE BEEN EROSION PROBLEMS WITH THE I.D. FAN BLADES.

THE FAN DRIVE MOTORS HAVE ALSO BEEN TROUBLESOME.

THE GUILLOTINE DAMPERS ARE INOPERABLE DUE TO JAMMED GEAR BOXES.

THE SEALS AROUND THE DAMPERS HAVE CORRODED, CAUSING LEAKAGE OF THE FLUE GAS AND PARTICULATE.

THE RUBBER LINING IN THE ABSORBER SECTION OF ALL FOUR TRAINS HAS DETACHED IN VARIOUS PLACES. THE VENDOR HAS REPAIRED THE DEFECTIVE SECTIONS.

INSTRUMENTATION HAS BEEN A SERIOUS PROBLEM AREA.

THE BALL MILL IS ONLY ABLE TO PRODUCE 35 TPH OF LIMESTONE SLURRY OUT OF IT'S 50 TPH CAPACITY.

9/77	8A	33.3	21.0		17.8						
	8B	72.7	68.3		57.8						
	8C	97.4	97.0		82.1						
	8D	98.4	98.2		83.1						
	SYSTEM	75.0	71.0	71.0	60.0			720	609	433	

** PROBLEMS/SOLUTIONS/COMMENTS

DURING THIS MONTH THE BOILER WAS OPERATED AT A REDUCED LOAD OF ABOUT 300 MW. AT THIS REDUCED LOAD, ONLY 3 TRAINS WERE REQUIRED TO HANDLE ALL OF THE BOILER FLUE GAS.

SOME SCALING WAS DISCOVERED IN THE ABSORBER COLUMN AND ENTRAINMENT SEPARATOR OUTLET OF ONE TRAIN.

SERIOUS EROSION PROBLEMS CONTINUE WITH THE I.D. FAN ROTORS.

PERIOD	MODULE	AVAILABILITY	OPERABILITY	RELIABILITY	UTILIZATION	% REMOVAL SO2	% REMOVAL PART.	PER HOURS	BOILER HOURS	FGD HOURS	CAP. FACTOR
			PERFORMANCE DATA								

THE UNIT WENT OFF LINE SEPTEMBER 30 FOR A SCHEDULED OUTAGE TO REPAIR BOILER TUBES.DURING THE OUTAGE, AN ATTEMPT WILL BE MADE TO CORRECT MANY OF THE MECHANICAL PROBLEMS.

10/77	SYSTEM				.0			744	0		C

** PROBLEMS/SOLUTIONS/COMMENTS

UNIT 8 WAS OFF-LINE FOR THE ENTIRE MONTH DURING SCHEDULED OUTAGE FOR REPAIR OF BOILER TUBES. DURING THIS PERIOD, MANY MECHANICAL AND INSTRUMENTAL SCRUBBER PROBLEMS WERE CORRECTED.

11/77	8A		85.5		49.0						
	8B		89.8		51.5						
	8C		99.8		57.2						
	8D		75.8		43.5						
	SYSTEM	86.0	88.0	88.0	50.0			720	413		362

** PROBLEMS/SOLUTIONS/COMMENTS

THE UNIT WAS BROUGHT BACK IN SERVICE ON NOVEMBER 11 FOLLOWING THE SCHEDULED BOILER OUTAGE (AVAILABILITY WAS CALCUATED FROM NOVEMBER 11 THROUGH NOVEMBER 30).

ALL I.D. FANS HAVE BEEN REBUILT IN AN ATTEMPT TO CORRECT THE CORROSION AND DRIVE MOTOR PROBLEMS.

GAS LEAKAGE FROM THE DAMPERS WAS CORRECTED BY WELDING A COVER PLATE OVER THE SEAL DOORS. THE VENDOR IS CURRENTLY WORKING ON A NEW DESIGN FOR THE DAMPERS.

ALMOST ALL INSTRUMENTATION PROBLEMS CONTINUE TO HAMPER PROPER SCRUBBER OPERATION.

12/77	8A	59.3	98.1		56.2						
	8B	55.9	97.9		56.0						
	8C	58.7	97.2		55.6						
	8D	57.7	95.3		54.6						
	SYSTEM	56.0	97.0	59.0	56.0			744	426		414

** PROBLEMS/SOLUTIONS/COMMENTS

THE UNIT WAS OFF-LINE FROM DECEMBER 20 TO DECEMBER 31 FOR REPAIRS OF A BOILER TUBE LEAK.

DURING THIS OUTAGE, AN INSPECTION WAS MADE OF THE SCRUBBER MODULES.

THE RUBBER LINER WAS FOUND TO BE MISSING IN SEVERAL AREAS OF ALL FOUR MODULES AND WAS REPAIRED DURING THE OUTAGE.

1/78	8A	90.2	99.3		81.9						
	8B	86.7	95.3		78.5						
	8C	84.6	92.7		76.3						
	8D	88.8	97.9		80.6						
	SYSTEM	88.0	96.0	96.0	79.0			744	618		590

** PROBLEMS/SOLUTIONS/COMMENTS

ALL FOUR SCRUBBER MODULES RETURNED TO SERVICE THIS MONTH FOLLOWING REPAIR WORK ON THE RUBBER LINER.

THERE HAVE BEEN MINOR PROBLEMS WITH COOLING LINES FREEZING AND BURSTING.

FEED HOPPERS AT THE LIMESTONE STORAGE AREA HAVE BEEN PLUGGING DUE TO FROZEN GRAVEL.

THE BALL MILL SUMP PUMP LINERS HAVE BEEN WEARING OUT.

SOME PLUGGING OF THE VENTURI SPRAY NOZZLES WAS ENCOUNTERED.

TENNESSEE VALLEY AUTHORITY: WIDOWS CREEK 8 (CONT.)

PERIOD	MODULE	AVAILABILITY	OPERABILITY	RELIABILITY	UTILIZATION	% REMOVAL SO2	% REMOVAL PART.	PER HOURS	BOILER HOURS	FGD HOURS	CAP. FACTOR
			PERFORMANCE DATA								

INSTRUMENTATION CONTINUES TO BE A MAJOR PROBLEM WITH OPERATION OF THE SCRUBBER.

2/79	8B	69.4	68.5		59.7						
	8C	67.8	63.1		55.0						
	8D	56.5	53.6		46.8						
	8A	25.5	29.3		25.5						
	SYSTEM	55.0	54.0	61.0	47.0			672	586	314	

** PROBLEMS/SOLUTIONS/COMMENTS

THE UTILITY COMPANY REPORTED THAT THEY COULD NOT ACCURATELY DETERMINE RELIABILITY BECAUSE OF THEIR INABILITY TO CALCULATE UNIT LOAD DEMAND ON A DAILY BASIS. GENERALLY, IT IS ASSUMED THAT SYSTEM FORCED OUTAGE HOURS PLUS THE HOURS THE FGD SYSTEM WAS OPERATED WILL GIVE ROUGLY THE HOURS THE SYSTEM WAS CALLED UPON TO OPERATE, IN THIS WAY, RELIABILITY CAN BE CALCULATED INDIRECTLY, HOWEVER, IN THIS CASE, TWO TRAINS AT A TIME HAVE BEEN DOWN ONA SCHEDULED OUTAGE FOR NECESSARY MODIFICATIONS. PART OF THIS OUTAGE TIME LIMITED BOILER OPERATION SO THAT THE UNIT COULD NOT RUN AT FULL LOAD WHEN THERE WAS DEMAND FOR A FULL LOAD. FOR THIS CALCULATION IT WAS ASSUMED THAT THERE WAS A DEMAND FOR FULL LOAD DURING THE ENTIRE OUTAGE SO THAT ALL OF THE TRAINS WOULD HAVE BEEN CALLED THE ENTIRE SCHEDULED OUTAGE. THE RESULT WAS A VERY CONSERVATIVE ESTIMATE OF RELIABILITY WHERE HOURS CALLED=SYSTEM FORCED OUTAGE TIME + SYSTEM SCHEDULED OUTAGE TIME + HOURS THE FGD SYSTEM OPERATED.

NOTE - THIS IS A PEDCO ESTIMATE.

THE OUTAGE TIME FOR TRAINS A AND B WAS REQUIRED TO REPLACE THE RUBBER LINERS IN THE DOWNCOMER AREA WITH STAINLESS STEEL. THE OTHER TWO TRAINS WILL RECEIVE SIMILAR TREATMENT.

3/79	8A	81.9	90.8		78.6						
	8B	48.4	53.4		46.2						
	8C	26.8	30.9		26.7						
	8D	81.6	90.5		78.4						
	SYSTEM	60.0	66.0	59.0	58.0			744	644	428	

** PROBLEMS/SOLUTIONS/COMMENTS

TRAIN B WAS OUT OF SERVICE MARCH 1 - MARCH 13 TO INSTALL STAINLESS STEEL IN THE ABSORBER AND VENTURI DOWNCOMER AREAS.

STAINLESS STEEL COVERS WERE INSTALLED AROUND TWO EXPANSION JOINTS ON TRAIN C IN ORDER TO PREVENT FLUE GAS LEAKAGE.

A STAINLESS STEEL PLATE WAS WELDED OVER THE ENTRY DOOR OPENINGS TO TRAIN C OUTLET AND BYPASS GUILLOTINE DAMPERS FOR THE PURPOSE OF ELIMINATING GAS LEAKAGE.

TRAIN C WAS OUT OF SERVICE MARCH 14 - MARCH 29 TO INSTALL STAINLESS STEELE ABSORBER AND VENTURI DOWNCOMER AREAS.

SEVERAL LIFTER BARS ON THE FEED AND DISCHARGE ENDS OF THE BALL MILL WERE IN THE FOUND TO BE BADLY WORN.

THE UTILITY HAS HAD WEAR PROBLEMS WITH THE SLURRY SUMP PUMP LINERS AT THE BALL MILL.

4/79	8A	80.0	88.9		66.6						
	8B	67.7	85.9		64.4						
	8C	90.0	100.0		80.0						
	8D	38.1	50.8		38.1						
	SYSTEM	69.0	83.0	67.0	62.0			720	540	448	

** PROBLEMS/SOLUTIONS/COMMENTS

DURING A BRIEF INSPECTION OF THE SCRUBBING SYSTEM IN EARLY APRIL, SOLIDS DEPOSITION WAS NOTICED IN THE MIST ELIMINATOR SECTION OF ALL TRAINS DUE TO PLUGGING THAT HAD OCCURRED IN SEVERAL OF THE MIST ELIMINATOR SPRAY NOZZLES

PERIOD	MODULE	AVAILABILITY	OPERABILITY	RELIABILITY	UTILIZATION	% REMOVAL SO2	% REMOVAL PART.	PER HOURS	BOILER HOURS	FGD HOURS	CAP. FACTOR
				PERFORMANCE DATA							

TRAIN D WAS NOT IN OPERATION FOR 17 DAYS WHILE THE MIST ELIMINATOR WAS DISASSEMBLED AND CLEANED.

A STAINLESS STEEL LINER WAS INSTALLED ON THE SLOPING SECTIONS OF THE ABSORBER AND VENTURI.

STAINLESS STEEL PLATES WERE INSTALLED OVER THE ENTRY DOOR OPENINGS TO TRAIN D INLET, OUTLET AND BYPASS GUILLOTINE DAMPERS TO REDUCE GAS LEAKAGE

STAINLESS STEEL COVERS WERE INSTALLED AROUND THE FIVE EXPANSION JOINTS ON TRAIN D, TWO EXPANSION JOINTS ON TRAIN A, AND ONE EXPANSION JOINT ON TRAIN B TO REDUCE GAS LEAKAGE.

THERE CONTINUES TO BE A WEAR PROBLEM WITH PUMP LINERS AT THE BALL MILL. NO CAUSE OR SOLUTION OF THE PROBLEM HAS BEEN ASCERTAINED AS YET.

5/78	SYSTEM							744			
6/78	SYSTEM							720			
7/78	SYSTEM							744			
8/78	SYSTEM							744			
9/78	SYSTEM							720			
10/78	SYSTEM							744			

** PROBLEMS/SOLUTIONS/COMMENTS

THE BOILER WENT OFF LINE IN EARLY OCTOBER FOR BOILER OVERHAUL. THE UNIT RESTARTED FOR A FEW DAYS IN DECEMBER UNTIL A TURBINE ROTOR PROBLEM WAS DISCOVERED. THE PROBLEM FORCED THE UNIT OFF LINE THROUGH JANUARY.

11/78	SYSTEM							720	0	0	
12/78	SYSTEM							744			
1/79	SYSTEM							744	0	0	
2/79	SYSTEM							672			
3/79	SYSTEM							744			

** PROBLEMS/SOLUTIONS/COMMENTS

CONSTRUCTION OF THE FORCED OXIDATION TEST WAS COMPLETED AND THE TESTING HAS BEGUN ALTHOUGH NO RESULTS ARE YET AVAILABLE (THIS TESTING IS BEING DONE ON ONE OF THE FOUR MODULES).

THE UNIT OUTAGE WHICH BEGAN IN OCTOBER AND WAS SCHEDULED TO END IN FEBRUARY CONTINUED THROUGH MARCH BECAUSE THERE WERE BOILER AND TURBINE FAILURES AFTER A FEW START UPS.

4/79	SYSTEM							720			
5/79	A	100.0	97.5		83.6						
	B	100.0	59.2		50.5						
	C	100.0	100.0		89.7						
	D	100.0	100.0		87.9						
	SYSTEM	100.0	97.9		78.0	80.20		744	638	580	

** PROBLEMS/SOLUTIONS/COMMENTS

THE VENTURI HEADERS AND NOZZLES HAVE PLUGGED WITH SCALE AND SOLIDS. A NEW VENTURI HEADER HAS BEEN INSTALLED AND IS BEING TESTED ON TRAIN B. THE NEW HEADER CONSISTS OF SIX 5-INCH FULL-CONE NOZZLES WITH A 3-INCH DISCHARGE ORIFICE. THE HEADER IS INSTALLED OVER THE VENTURI THROAT TO PROVIDE GOOD THROAT COVERAGE. IF THE NEW HEADER PROVES SUCCESSFUL, NEW HEADERS WILL BE INSTALLED IN ALL VENTURIS.

TENNESSEE VALLEY AUTHORITY: WIDOWS CREEK 8 (CONT.)

PERIOD	MODULE	AVAILABILITY	OPERABILITY	RELIABILITY	UTILIZATION	% REMOVAL SO2	% REMOVAL PART.	PER HOURS	BOILER HOURS	FGD HOURS	CAP. FACTOR
		PERFORMANCE DATA									
6/79	A	100.0	93.6		75.7						
	B	100.0	89.9		72.6						
	C	100.0	91.1		73.6						
	D	99.6	93.8		75.8						
	SYSTEM	99.9	92.1		74.4	84.20	99.50	720	582	536	

** PROBLEMS/SOLUTIONS/COMMENTS

THE NEW HEADER IN TRAIN B PROVED SATISFACTORY SO NEW HEADERS ARE TO BE INSTALLED ON ALL VENTURIS.

OPTIMIZATION TESTS ON UNIT 8 SCRUBBER HAVE BEGUN AND WILL BE COMPLETED BY THE END OF OCTOBER. THE TESTS WILL INCLUDE TESTING THE ADDITIONAL FIBER-GLASS REINFORCED PLASTIC GRIDS, NEW ABSORBER FULL-CONE SPRAY NOZZLES, POLYPROPYLENE GRID-TYPE PACKING, AND TURBULENT CONTACT ABSORBER SPHERES.

7/79	A	100.0	100.0		44.6						
	B	100.0	100.0		41.8						
	C	100.0	100.0		42.5						
	D	100.0	89.3		34.9						
	SYSTEM	100.0	100.0		41.0	86.40	99.01	744	291	305	

** PROBLEMS/SOLUTIONS/COMMENTS

CORROSION WAS FOUND IN THE REHEAT TUBES IN TRAIN A. THE CORROSION WAS CAUSED BY FLY ASH AND FERROUS CORROSION PRODUCTS. CHLORIDE AND SLURRY SOLIDS WERE ALSO DETECTED. A DETAILED ANALYSIS OF THE TUBE CORROSION IS BEING PERFORMED.

8/79	A	99.2	100.0		74.3						
	B	100.0	100.0		80.6						
	C	96.2	94.9		70.2						
	D	96.1	100.0		74.9						
	SYSTEM	97.9	100.0		75.0	87.90	99.00	744	550	558	

** PROBLEMS/SOLUTIONS/COMMENTS

THE BALL MILL WAS OUT OF SERVICE BECAUSE OF BROKEN BOLTS WHICH SECURE THE INBOARD BEARING JOURNAL TO THE BALL MILL. THE BOLTS WERE REPLACED AND THE DISCHARGE END OF THE MILL WAS CLEANED.

THE SCRUBBER OPTIMIZATION TEST CONTINUED DURING AUGUST.

9/79	A	100.0	100.0		71.7						
	B	100.0	100.0		75.0						
	C	94.4	96.7		65.5						
	D	94.2	100.0		72.8						
	SYSTEM	97.4	100.0		71.3	83.00	99.10	720	488	513	

** PROBLEMS/SOLUTIONS/COMMENTS

THE LIMESTONE BUCKET ELEVATOR, WHICH FEEDS LIMESTONE INTO THE BALL MILL SURGE HOPPER, FAILED ON SEPTEMBER 28. THE FAILURE, WHICH HAS OCCURRED BEFORE, WAS CAUSED BY LIMESTONE PARTICLE BUILDUP ON THE BUCKETS AND IN THE BOTTOM OF THE HOUSING, RESULTING IN THE ELEVATOR JAMMING AND BREAKAGE OF THE BUCKET GUIDE CHAINS. THE ELEVATOR WILL BE REPLACED WITH BELT CONVEYORS IN THE SUMMER OF 1980.

10/79	A	74.2	72.7		51.1						
	B	100.0	95.8		67.3						
	C	100.0	95.2		66.9						
	D	93.4	70.3		100.0						
	SYSTEM	87.9	90.9		63.9			744	523	476	

** PROBLEMS/SOLUTIONS/COMMENTS

THE REPAIR OF THE BUCKET ELEVATOR CONSISTED OF THE REPLACEMENT OF 25 BUCKETS, REPLACEMENT OF 50 FEET OF DRIVE CHAIN ON EACH SIDE OF THE BUCKETS, AND REMOVAL OF LIMESTONE ACCUMULATIONS ON ALL SURFACES WITH HIGH-PRESSURE

PERIOD	MODULE	AVAILABILITY	OPERABILITY	RELIABILITY	UTILIZATION	% REMOVAL SO2	% REMOVAL PART.	PER HOURS	BOILER HOURS	FGD HOURS	CAP. FACTOR
			PERFORMANCE DATA								

WATER. THE BUCKET ELEVATOR WAS RETURNED TO SERVICE ON OCTOBER 6, 1979.

11/79	A										
	B										
	C										
	D										
	SYSTEM	91.8	92.6		67.7			720	526	487	

** PROBLEMS/SOLUTIONS/COMMENTS

CONSTRUCTION OF AN ON-SITE AREA IN WHICH TO STACK GYPSUM WAS COMPLETED DURING EARLY NOVEMBER AND STACKING (LANDFILL) OPERATIONS BEGAN ON NOVEMBER 15. THE TRAIN D SCRUBBER SLUDGE IS OXIDIZED BY AIR SPARGING, DEWATERED, AND TRANSPORTED TO THE SITE IN TRUCKS. THE GYPSUM PILE IS FORMED WITH A BULL-DOZER, AND RUNOFF AND LEACHATE ARE MONITORED FROM LEACHATE WELLS, A LEACHATE POND, AND A RUNOFF POND.

12/79	A	87.6	83.6		87.7						
	B	100.0	100.0		85.6						
	C	100.0	64.0		51.9						
	D	95.8	65.7		53.2						
	SYSTEM	95.9	79.7		64.6			744	603	481	

** PROBLEMS/SOLUTIONS/COMMENTS

ON DECEMBER 29, 1979 OPTIMIZATION TESTS WERE COMPLETED. THE DATA OBTAINED WILL BE ANALYZED TO DETERMINE THE BEST MODIFICATIONS THAT CAN BE INSTALLED TO INCREASE THE SO2 REMOVAL ON THE SCRUBBER.

SECTION 3
DESIGN AND PERFORMANCE DATA FOR OPERATIONAL DOMESTIC FGD SYSTEMS

COMPANY NAME	TEXAS UTILITIES	
PLANT NAME	MARTIN LAKE	
UNIT NUMBER	1	
CITY	TATUM	
STATE	TEXAS	
REGULATORY CLASSIFICATION	B	
PARTICULATE EMISSION LIMITATION - NG/J	43.	(.100 LB/MMBTU)
SO2 EMISSION LIMITATION - NG/J	516.	(1.200 LB/MMBTU)
NET PLANT GENERATING CAPACITY - MW	3000.0	
GROSS UNIT GENERATING CAPACITY - MW	793.0	
NET UNIT GENERATING CAPACITY W/FGD - MW	750.0	
NET UNIT GENERATING CAPACITY WO/FGD - MW	760.0	
EQUIVALENT SCRUBBED CAPACITY - MW	595.0	
** BOILER DATA		
SUPPLIER	COMBUSTION ENGINEERING	
TYPE	PULVERIZED COAL	
SERVICE LOAD	BASE	
COMMERCIAL SERVICE DATE	0/77	
MAXIMUM BOILER FLUE GAS FLOW - CU.M/S	1494.51	(3167000 ACFM)
FLUE GAS TEMPERATURE - C	168.3	(335 F)
STACK HEIGHT - M	******	(**** FT)
STACK TOP DIAMETER - M	********	(***** FT)
** FUEL DATA		
FUEL TYPE	COAL	
FUEL GRADE	LIGNITE	
AVERAGE HEAT CONTENT - J/G	17166.	(7380 BTU/LB)
RANGE HEAT CONTENT - BTU/LB		6972-7894
AVERAGE ASH CONTENT - %	8.00	
RANGE ASH CONTENT - %	5.6-13.2	
AVERAGE MOISTURE CONTENT - %	33.00	
RANGE MOISTURE CONTENT - %	29.0-37.9	
AVERAGE SULFUR CONTENT - %	.90	
RANGE SULFUR CONTENT - %	0.5-1.5	
AVERAGE CHLORIDE CONTENT - %	********	
RANGE CHLORIDE CONTENT - %	******	
** ESP		
NUMBER	1	
TYPE	COLD SIDE	
SUPPLIER	RESEARCH COTTRELL	
PARTICULATE DESIGN REMOVAL EFFICIENCY - %	99.4	
FLUE GAS CAPACITY - CU.M/S	1494.5	(3167000 ACFM)
FLUE GAS TEMPERATURE - C	168.3	(335 F)
PRESSURE DROP - KPA	********	(***** IN-H2O)
** PARTICULATE SCRUBBER		
TYPE	NONE	
** FGD SYSTEM		
SALEABLE PRODUCT/THROWAWAY PRODUCT	THROWAWAY PRODUCT	
GENERAL PROCESS TYPE	WET SCRUBBING	
PROCESS TYPE	LIMESTONE	
PROCESS ADDITIVES	NONE	
SYSTEM SUPPLIER	RESEARCH COTTRELL	
A-E FIRM	C.T. MAIN	
CONSTRUCTION FIRM	C.T. MAIN	
DEVELOPMENT LEVEL	FULL SCALE	
NEW/RETROFIT	NEW	
PARTICULATE DESIGN REMOVAL EFFICIENCY - %	99.40	
SO2 DESIGN REMOVAL EFFICIENCY - %	71.00	
COMMERCIAL DATE	10/78	
INITIAL START-UP	4/77	
ABSORBER SPARE CAPACITY INDEX - %	.0	
ABSORBER SPARE COMPONENT INDEX	.0	
** ABSORBER		
NUMBER	6	
TYPE	GRID/SPRAY TOWER	
INITIAL START UP	4/77	
SUPPLIER	RESEARCH COTTRELL	

TEXAS UTILITIES: MARTIN LAKE 1 (CONT.)

NUMBER OF STAGES	4	
DIMENSIONS - FT	28 DIA. X 100 TALL	
BOILER LOAD/ABSORBER - %	12.5	
GAS FLOW - CU.M/S	177.13	(375350 ACFM)
GAS TEMPERATURE - C	162.8	(325 F)
PRESSURE DROP - KPA	1.1	(4.5 IN-H2O)
SO2 DESIGN REMOVAL EFFICIENCY - %	95.0	

** CENTRIFUGE

NUMBER	3	
INLET SOLIDS - %	35.0	
OUTLET SOLIDS - %	69.0	

** FANS

NUMBER	4	
TYPE	BOILER I.D.	
SERVICE - WET/DRY	DRY	
CAPACITY - CU.M/S	375.48	(795680 ACFM)

** MIST ELIMINATOR

NUMBER	12	
TYPE	CHEVRON	
CONSTRUCTION MATERIAL	POLYPROPYLENE	
CONFIGURATION	HORIZONTAL	
NUMBER OF STAGES	2	
NUMBER OF PASSES	3	
WASH SYSTEM	TOP AND BOTTOM WASH	
SUPERFICIAL GAS VELOCITY - M/S	2.4	(8.0 FT/S)
PRESSURE DROP - KPA	.2	(1.0 IN-H2O)

** PROCESS CONTROL CHEMISTRY

CONTROL VARIABLES	PH, LIQUID LEVEL, LIQUID AND GAS FLOW

** PUMPS

SERVICE	NUMBER
QUENCHER FEED PUMP	****
SLURRY FEED	****
ABSORBER RECIRCULATION	54

** TANKS

SERVICE	NUMBER
ABSORBER FEED	3
QUENCHER SUMP	6

** REHEATER

TYPE	BYPASS	
TEMPERATURE BOOST - C	40.0	(72 F)

** THICKENER

NUMBER	1	
TYPE	GRAVITY	
DIAMETER - M	42.7	(140 FT)
OUTLET SOLIDS - %	35.0	

** WATER LOOP

TYPE	CLOSED	
FRESH MAKEUP WATER ADDITION - LITERS/S	34.6	(550 GPM)

** TREATMENT

TYPE	FLYASH STABILIZATION
PRODUCT CHARACTERISTICS	CENTRIFUGE SOLIDS MIXED WITH FLY ASH

** DISPOSAL

NATURE	FINAL
TYPE	LANDFILL
LOCATION	ON-SITE
TRANSPORTATION	RAIL

TEXAS UTILITIES: MARTIN LAKE 1 (CONT.)

PERIOD	MODULE	AVAILABILITY	OPERABILITY	RELIABILITY	UTILIZATION	% REMOVAL SO2	% REMOVAL PART.	PER HOURS	BOILER HOURS	FGD HOURS	CAP. FACTOR
		PERFORMANCE DATA									
8/77	SYSTEM							744			
9/77	SYSTEM							720			
10/77	SYSTEM							744			

** PROBLEMS/SOLUTIONS/COMMENTS

INSTALLATION OF THE LIMESTONE SCRUBBING SYSTEM AND THE ESP WAS COMPLETED BY OCTOBER 1977. THE INITIAL OPERATING PHASE IS EXPECTED TO CONTINUE THROUGH THE FIRST QUARTER OF 1978. COMPLIANCE TESTING WAS CONDUCTED IN LATE 1977 AND CERTIFICATION OF COMMERCIAL AVAILABILITY IS AWAITED.

THE UTILITY EXPERIENCED SOME DIFFICULTIES IN THE SLURRY HANDLING SYSTEM.

11/77	SYSTEM							720			
12/77	SYSTEM							744			
1/78	SYSTEM							744			
2/78	SYSTEM							672			

** PROBLEMS/SOLUTIONS/COMMENTS

CERTIFICATION WAS RECEIVED FROM THE EPA DURING THE PERIOD. THE BOILER AND FGD SYSTEM OPERATED THROUGHOUT THE PERIOD.

THE UTILITY IS STILL HAVING SOME PROBLEMS WITH THE SLURRY HANDLING SYSTEM. SOME FORCED OUTAGE TIME OCCURRED.

3/78	SYSTEM							744			
4/78	SYSTEM							720			

** PROBLEMS/SOLUTIONS/COMMENTS

THE UNIT WAS TAKEN OFF LINE IN APRIL FOR AN ANNUAL TWO WEEK OUTAGE.

GENERATOR PROBLEMS WERE ENCOUNTERED IN MAY CAUSING THE UNIT TO BE TAKEN OFF LINE THROUGH THE END OF THE MONTH.

5/78	SYSTEM							744			
6/78	SYSTEM							720			

** PROBLEMS/SOLUTIONS/COMMENTS

THE DAMPERS FOR EACH ABSORBER MODULE WERE NOT FUNCTIONING PROPERLY. IT HAS BEEN IMPOSSIBLE TO ISOLATE INDIVIDUAL MODULES FOR REPAIRS (THE ENTIRE SYSTEM WOULD HAVE TO BE SHUT DOWN IF REPAIRS WERE REQUIRED ON ONLY ONE MODULE).

THE UNIT IS OPERATING COMMERCIALLY.

THERE HAVE BEEN PROBLEMS WITH THE PH METERS. THE METERS HAVE NOT OPERATED PROPERLY FOR SOME TIME NOW.

7/78	SYSTEM							744			
8/78	SYSTEM							744			

** PROBLEMS/SOLUTIONS/COMMENTS

ISOLATION DAMPER PROBLEMS CONTINUED.

THE UNIT CONTINUES TO REQUIRE EXCESSIVE MAINTENANCE. FGD SYSTEM ACCEPTANCE TEST WERE PERFORMED BY THE UTILITY DURING AUGUST. RESULTS ARE NOT YET AVAILABLE.

PERIOD	MODULE	AVAILABILITY	OPERABILITY	RELIABILITY	UTILIZATION	% REMOVAL SO2	% REMOVAL PART.	PER HOURS	BOILER HOURS	FGD HOURS	CAP. FACTOR
				PERFORMANCE DATA							

FLOW MEASUREMENT INSTRUMENTATION HAS BEEN FAILING.

OPACITY HAS BEEN HIGHER THAN EXPECTED (20-25%) RESULTING FROM ESP PROBLEMS.

9/78	SYSTEM							720			
10/78	SYSTEM							744			

** PROBLEMS/SOLUTIONS/COMMENTS

NO PROBLEMS HAVE BEEN REPORTED.

11/78	SYSTEM							720			
12/78	SYSTEM							744			

** PROBLEMS/SOLUTIONS/COMMENTS

THE FGD SYSTEM WAS SHUT DOWN WHILE THE BOTTOM ASH POND WAS CLEANED OUT. THE UTILITY HAS BEEN DUMPING SLUDGE INTO THE POND WHICH WAS DESIGNED FOR BOTTOM ASH ONLY. ALSO SLUDGE IS PRODUCED FASTER THAN IT IS REMOVED BY RAIL CAR. THE UTILITY IS NOT GETTING RAIL CARS FAST ENOUGH. THE ACTUAL PROBLEM IS REPORTEDLY IN THE DEWATERING SYSTEM.

SOME MIST ELIMINATOR WASH PROBLEMS WERE ENCOUNTERED.

THE FGD SYSTEM HAS REPORTEDLY RAN WELL DURING DECEMBER AND JANUARY.

COAL HANDLING WAS A SERIOUS PROBLEM DUE TO FREEZING OF THE COAL IN THE HOPPERS. THIS PROBLEM EFFECTED ALL UNITS AT MARTIN LAKE FORCING THE GAS AND OIL UNITS TO CARRY THE LOAD.

THE SCRUBBING SYSTEM WAS SHUT DOWN FOR A TIME DURING THE REPORT PERIOD.

1/79	SYSTEM							744			
2/79	SYSTEM							672			
3/79	SYSTEM							744			
4/79	SYSTEM							720			

** PROBLEMS/SOLUTIONS/COMMENTS

UNIT 1 IS NOW IN FULL OPERATION ALTHOUGH A SLUDGE DISPOSAL PROBLEM STILL EXISTS.

THE UTILITY HAS REPLACED THE LOUVER DAMPERS WITH GUILLOTINE DAMPERS WHICH SEEM TO WORK BETTER. HOWEVER, THEY STILL HAVE PROBLEMS WITH THE GUILLOTINE DAMPERS FAILING TO SEAL WHEN THEY BECOME SCALED.

THERE HAVE BEEN REPORTS OF TOWER LEAKS FROM LINER FAILURE BUT IT DOESN'T SEEM TO BE SERIOUS.

5/79	SYSTEM							744			
6/79	SYSTEM							720			

** PROBLEMS/SOLUTIONS/COMMENTS

THE SLUDGE DISPOSAL SYSTEM IS STILL CAUSING SOME OPERATING PROBLEMS. THE PROBLEMS REPORTED LAST QUARTER WERE CAUSED BY HEAVY RAINS WHICH KNOCKED OUT THE THICKENERS.

7/79	SYSTEM							744			
8/79	SYSTEM							744			
9/79	SYSTEM							720			

TEXAS UTILITIES: MARTIN LAKE 1 (CONT.)

PERIOD	MODULE	AVAILABILITY	OPERABILITY	RELIABILITY	UTILIZATION	% REMOVAL SO2	% REMOVAL PART.	PER HOURS	BOILER HOURS	FGD HOURS	CAP. FACTOR
		PERFORMANCE DATA									

** PROBLEMS/SOLUTIONS/COMMENTS

DURING THE THIRD QUARTER THE UTILITY REPORTED THE SYSTEM IS OPERATING WELL. THE SLUDGE DISPOSAL SYSTEM PROBLEMS PLAGUING THE UNIT HAVE BEEN SOLVED.

10/79	SYSTEM							744			
11/79	SYSTEM							720			
12/79	SYSTEM							744			

** PROBLEMS/SOLUTIONS/COMMENTS

PLUGGING PROBLEMS HAVE BEEN ENCOUNTERED DURING THE FOURTH QUARTER REQUIRING HEAVY MAINTENANCE.

SECTION 3
DESIGN AND PERFORMANCE DATA FOR OPERATIONAL DOMESTIC FGD SYSTEMS

COMPANY NAME	TEXAS UTILITIES	
PLANT NAME	MARTIN LAKE	
UNIT NUMBER	2	
CITY	TATUM	
STATE	TEXAS	
REGULATORY CLASSIFICATION	B	
PARTICULATE EMISSION LIMITATION - NG/J	43.	(.100 LB/MMBTU)
SO2 EMISSION LIMITATION - NG/J	516.	(1.200 LB/MMBTU)
NET PLANT GENERATING CAPACITY - MW	3000.0	
GROSS UNIT GENERATING CAPACITY - MW	793.0	
NET UNIT GENERATING CAPACITY W/FGD - MW	750.0	
NET UNIT GENERATING CAPACITY WO/FGD - MW	760.0	
EQUIVALENT SCRUBBED CAPACITY - MW	595.0	
** BOILER DATA		
SUPPLIER	COMBUSTION ENGINEERING	
TYPE	PULVERIZED COAL	
SERVICE LOAD	BASE	
COMMERCIAL SERVICE DATE	0/78	
MAXIMUM BOILER FLUE GAS FLOW - CU.M/S	1494.51	(3167000 ACFM)
FLUE GAS TEMPERATURE - C	168.3	(335 F)
STACK HEIGHT - M	******	(**** FT)
STACK TOP DIAMETER - M	*******	(***** FT)
** FUEL DATA		
FUEL TYPE	COAL	
FUEL GRADE	LIGNITE	
AVERAGE HEAT CONTENT - J/G	17166.	(7380 BTU/LB)
RANGE HEAT CONTENT - BTU/LB		6972-7894
AVERAGE ASH CONTENT - %	8.00	
RANGE ASH CONTENT - %	5.6-13.2	
AVERAGE MOISTURE CONTENT - %	33.00	
RANGE MOISTURE CONTENT - %	29.0-37.9	
AVERAGE SULFUR CONTENT - %	.90	
RANGE SULFUR CONTENT - %	0.5-1.5	
AVERAGE CHLORIDE CONTENT - %	********	
RANGE CHLORIDE CONTENT - %	******	
** ESP		
NUMBER	1	
TYPE	COLD SIDE	
SUPPLIER	RESEARCH COTTRELL	
PARTICULATE DESIGN REMOVAL EFFICIENCY - %	99.4	
FLUE GAS CAPACITY - CU.M/S	1494.5	(3167000 ACFM)
FLUE GAS TEMPERATURE - C	168.3	(335 F)
PRESSURE DROP - KPA	*******	(***** IN-H2O)
** PARTICULATE SCRUBBER		
TYPE	NONE	
** FGD SYSTEM		
SALEABLE PRODUCT/THROWAWAY PRODUCT	THROWAWAY PRODUCT	
GENERAL PROCESS TYPE	WET SCRUBBING	
PROCESS TYPE	LIMESTONE	
PROCESS ADDITIVES	NONE	
SYSTEM SUPPLIER	RESEARCH COTTRELL	
A-E FIRM	C.T. MAIN	
DEVELOPMENT LEVEL	FULL SCALE	
NEW/RETROFIT	NEW	
PARTICULATE DESIGN REMOVAL EFFICIENCY - %	99.40	
SO2 DESIGN REMOVAL EFFICIENCY - %	71.00	
INITIAL START-UP	5/78	
ABSORBER SPARE CAPACITY INDEX - %	.0	
ABSORBER SPARE COMPONENT INDEX	.0	
** ABSORBER		
NUMBER	6	
TYPE	GRID/SPRAY TOWER	
INITIAL START UP	5/78	
SUPPLIER	RESEARCH COTTRELL	
NUMBER OF STAGES	4	
DIMENSIONS - FT	28 DIA. X 200 TALL	

TEXAS UTILITIES: MARTIN LAKE 2 (CONT.)

BOILER LOAD/ABSORBER - %	12.5	
GAS FLOW - CU.M/S	177.13	(375350 ACFM)
GAS TEMPERATURE - C	162.8	(325 F)
PRESSURE DROP - KPA	1.1	(4.5 IN-H2O)
SO2 DESIGN REMOVAL EFFICIENCY - %	95.0	
** CENTRIFUGE		
NUMBER	3	
INLET SOLIDS - %	35.0	
OUTLET SOLIDS - %	69.0	
** FANS		
NUMBER	4	
TYPE	BOILER I.D.	
SERVICE - WET/DRY	DRY	
CAPACITY - CU.M/S	375.48	(795680 ACFM)
** MIST ELIMINATOR		
NUMBER	12	
TYPE	CHEVRON	
CONSTRUCTION MATERIAL	POLPROPYLENE	
CONFIGURATION	HORIZONTAL	
NUMBER OF STAGES	2	
NUMBER OF PASSES	1	
WASH SYSTEM	TOP AND BOTTOM WASH	
SUPERFICIAL GAS VELOCITY - M/S	2.4	(8.0 FT/S)
PRESSURE DROP - KPA	.2	(1.0 IN-H2O)
** PROCESS CONTROL CHEMISTRY		
CONTROL VARIABLES	PH, LIQUID LEVEL, LIQUID AND GAS FLOW	
** PUMPS		
SERVICE	NUMBER	
---	---	
QUENCHER FEED PUMP	****	
SLURRY FEED	****	
ABSORBER RECIRCULATION	54	
** TANKS		
SERVICE	NUMBER	
---	---	
ABSORBER FEED	3	
QUENCHER SUMP	6	
** REHEATER		
TYPE	BYPASS	
TEMPERATURE BOOST - C	40.0	(72 F)
** THICKENER		
NUMBER	1	
TYPE	GRAVITY	
DIAMETER - M	42.7	(140 FT)
OUTLET SOLIDS - %	35.0	
** WATER LOOP		
TYPE	CLOSED	
FRESH MAKEUP WATER ADDITION - LITERS/S	34.6	(550 GPM)
** TREATMENT		
TYPE	FLYASH STABILIZATION	
PRODUCT CHARACTERISTICS	CENTRIFUGE SOLIDS MIXED WITH FLY ASH	
** DISPOSAL		
NATURE	FINAL	
TYPE	LANDFILL	
LOCATION	ON-SITE	
TRANSPORTATION	RAIL	

PERIOD	MODULE	AVAILABILITY	OPERABILITY	RELIABILITY	UTILIZATION	% REMOVAL SO2	% REMOVAL PART.	PER HOURS	BOILER HOURS	FGD HOURS	CAP. FACTOR
		PERFORMANCE DATA									
5/78	SYSTEM							744			
6/78	SYSTEM							720			

** PROBLEMS/SOLUTIONS/COMMENTS

THE UNIT BEGAN OPERATIONS IN MAY 1978. THE COMPLIANCE TESTING IS SCHEDULED FOR AUGUST.

7/78	SYSTEM							744			
8/78	SYSTEM							744			

** PROBLEMS/SOLUTIONS/COMMENTS

THE FGD SYSTEM WAS TESTED FOR COMPLIANCE WITH ALL SIX MODULES IN THE GAS STREAM DURING THE FIRST PART OF AUGUST. TEST RESULTS HAVE NOT YET BEEN PUBLISHED. NO MAJOR FGD-RELATED PROBLEMS WERE REPORTED.

9/78	SYSTEM							720			
10/78	SYSTEM							744			

** PROBLEMS/SOLUTIONS/COMMENTS

COMPLIANCE TEST RESULTS ARE BEING REVIEWED.

11/78	SYSTEM							720			
12/78	SYSTEM							744			

** PROBLEMS/SOLUTIONS/COMMENTS

COAL HANDLING WAS A SERIOUS PROBLEM DUE TO FREEZING OF THE COAL IN THE HOPPERS. THIS PROBLEM EFFECTED ALL UNITS AT MARTIN LAKE FORCING THE GAS AND OIL UNITS TO CARRY THE LOAD.

THE FGD UNIT REPORTEDLY RAN WELL DURING DECEMBER AND JANUARY.

THE FGD SYSTEM WAS SHUT DOWN WHILE THE BOTTOM ASH POND WAS CLEANED OUT. THE UTILITY HAS BEEN DUMPING SLUDGE INTO THE POND WHICH WAS DESIGNED FOR BOTTOM ASH ONLY. ALSO SLUDGE IS PRODUCED FASTER THAN IT IS REMOVED BY RAI CAR. THE UTILITY IS NOT GETTING RAIL CARS FAST ENOUGH. THE ACTUAL PROBLEM IS REPORTEDLY IN THE DEWATERING SYSTEM.

SOME MIST ELIMINATOR PROBLEMS WERE ENCOUNTERED.

1/79	SYSTEM							744			
2/79	SYSTEM							672			
3/79	SYSTEM							744			
4/79	SYSTEM							720			

** PROBLEMS/SOLUTIONS/COMMENTS

THE UTILITY REPORTS THAT OPERATIONAL PROBLEMS HAVE INCLUDED ABSORBER LINER FAILURES AND TOWER LEAKS.

UNIT 2 IS NOW IN FULL OPERATION ALTHOUGH A SLUDGE DISPOSAL PROBLEM STILL EXISTS.

THE UTILITY HAS REPLACED THE LOUVER DAMPERS WITH GUILLOTINE DAMPERS WHICH SEEM TO WORK BETTER. HOWEVER, THEY STILL HAVE PROBLEMS WITH THE GUILLOTINE DAMPERS FAILING TO SEAL WHEN THEY BECOME SCALED.

5/79	SYSTEM							744			
6/79	SYSTEM							720			

TEXAS UTILITIES: MARTIN LAKE 2 (CONT.)

PERIOD	MODULE	AVAILABILITY	OPERABILITY	RELIABILITY	UTILIZATION	% REMOVAL SO2	% REMOVAL PART.	PER HOURS	BOILER HOURS	FGD HOURS	CAP. FACTOR
		PERFORMANCE DATA									

** PROBLEMS/SOLUTIONS/COMMENTS

THE SLUDGE DISPOSAL SYSTEM IS STILL CAUSING SOME OPERATING PROBLEMS. THE PROBLEMS REPORTED LAST QUARTER WERE CAUSED BY HEAVY RAINS WHICH KNOCKED OUT THE THICKENERS.

7/79	SYSTEM							744			
8/79	SYSTEM							744			
9/79	SYSTEM							720			

** PROBLEMS/SOLUTIONS/COMMENTS

DURING THE THIRD QUARTER THE UTILITY REPORTED THE SYSTEM WAS OPERATING WELL. THE SLUDGE DISPOSAL SYSTEM PROBLEMS PLAGUING THE UNIT WERE SOLVED.

10/79	SYSTEM							744			
11/79	SYSTEM							720			
12/79	SYSTEM							744			

** PROBLEMS/SOLUTIONS/COMMENTS

PLUGGING PROBLEMS HAVE BEEN ENCOUNTERED DURING THE FOURTH QUARTER REQUIRING HEAVY MAINTENANCE.

SECTION 3
DESIGN AND PERFORMANCE DATA FOR OPERATIONAL DOMESTIC FGD SYSTEMS

COMPANY NAME	TEXAS UTILITIES	
PLANT NAME	MARTIN LAKE	
UNIT NUMBER	3	
CITY	TATUM	
STATE	TEXAS	
REGULATORY CLASSIFICATION	B	
PARTICULATE EMISSION LIMITATION - NG/J	43.	(.100 LB/MMBTU)
SO2 EMISSION LIMITATION - NG/J	516.	(1.200 LB/MMBTU)
NET PLANT GENERATING CAPACITY - MW	3000.0	
GROSS UNIT GENERATING CAPACITY - MW	793.0	
NET UNIT GENERATING CAPACITY W/FGD - MW	750.0	
NET UNIT GENERATING CAPACITY WO/FGD - MW	760.0	
EQUIVALENT SCRUBBED CAPACITY - MW	595.0	
** BOILER DATA		
SUPPLIER	COMBUSTION ENGINEERING	
TYPE	PULVERIZED COAL	
SERVICE LOAD	BASE	
COMMERCIAL SERVICE DATE	**/**	
MAXIMUM BOILER FLUE GAS FLOW - CU.M/S	1494.51	(3167000 ACFM)
FLUE GAS TEMPERATURE - C	168.3	(335 F)
STACK HEIGHT - M	******	(**** FT)
STACK TOP DIAMETER - M	*******	(***** FT)
** FUEL DATA		
FUEL TYPE	COAL	
FUEL GRADE	LIGNITE	
AVERAGE HEAT CONTENT - J/G	17166.	(7380 BTU/LB)
RANGE HEAT CONTENT - BTU/LB		6972-7894
AVERAGE ASH CONTENT - %	8.00	
RANGE ASH CONTENT - %	5.6-13.2	
AVERAGE MOISTURE CONTENT - %	33.00	
RANGE MOISTURE CONTENT - %	29.0-37.9	
AVERAGE SULFUR CONTENT - %	.90	
RANGE SULFUR CONTENT - %	0.5-1.5	
AVERAGE CHLORIDE CONTENT - %	****.***	
RANGE CHLORIDE CONTENT - %	******	
** ESP		
NUMBER	1	
TYPE	COLD SIDE	
SUPPLIER	RESEARCH COTTRELL	
PARTICULATE DESIGN REMOVAL EFFICIENCY - %	99.4	
FLUE GAS CAPACITY - CU.M/S	1494.5	(3167000 ACFM)
FLUE GAS TEMPERATURE - C	168.3	(335 F)
PRESSURE DROP - KPA	****.***	(***** IN-H2O)
** PARTICULATE SCRUBBER		
TYPE	NONE	
** FGD SYSTEM		
SALEABLE PRODUCT/THROWAWAY PRODUCT	THROWAWAY PRODUCT	
GENERAL PROCESS TYPE	WET SCRUBBING	
PROCESS TYPE	LIMESTONE	
PROCESS ADDITIVES	NONE	
SYSTEM SUPPLIER	RESEARCH COTTRELL	
A-E FIRM	C.T. MAIN	
CONSTRUCTION FIRM	H.B. ZACHARY	
DEVELOPMENT LEVEL	FULL SCALE	
NEW/RETROFIT	NEW	
PARTICULATE DESIGN REMOVAL EFFICIENCY - %	99.40	
SO2 DESIGN REMOVAL EFFICIENCY - %	71.00	
INITIAL START-UP	2/79	
ABSORBER SPARE CAPACITY INDEX - %	.0	
ABSORBER SPARE COMPONENT INDEX	.0	
** ABSORBER		
NUMBER	6	
TYPE	GRID/SPRAY TOWER	
INITIAL START UP	2/79	
SUPPLIER	RESEARCH COTTRELL	
NUMBER OF STAGES	4	

TEXAS UTILITIES: MARTIN LAKE 3 (CONT.)

BOILER LOAD/ABSORBER - %	12.5	
GAS FLOW - CU.M/S	177.13	(375350 ACFM)
GAS TEMPERATURE - C	162.8	(325 F)
PRESSURE DROP - KPA	1.1	(4.5 IN-H2O)
SO2 DESIGN REMOVAL EFFICIENCY - %	95.0	

** CENTRIFUGE

NUMBER	3
INLET SOLIDS - %	35.0
OUTLET SOLIDS - %	69.0

** FANS

NUMBER	4	
TYPE	BOILER I.D.	
SERVICE - WET/DRY	DRY	
CAPACITY - CU.M/S	375.48	(795680 ACFM)

** MIST ELIMINATOR

NUMBER	12	
TYPE	CHEVRON	
CONSTRUCTION MATERIAL	POLPROPYLENE	
CONFIGURATION	HORIZONTAL	
NUMBER OF STAGES	:	
NUMBER OF PASSES	:	
WASH SYSTEM	TOP AND BOTTOM WASH	
SUPERFICIAL GAS VELOCITY - M/S	2.4	(8.0 FT/S)
PRESSURE DROP - KPA	.2	(1.0 IN-H2O)

** PROCESS CONTROL CHEMISTRY

CONTROL VARIABLES	PH, LIQUID LEVEL, LIQUID AND GAS FLOW

** PUMPS

SERVICE	NUMBER
QUENCHER FEED PUMP	****
SLURRY FEED	****
ABSORBER RECIRCULATION	54

** TANKS

SERVICE	NUMBER
ABSORBER FEED	3
QUENCHER SUMP	6

** REHEATER

TYPE	BYPASS

** THICKENER

NUMBER	1	
TYPE	GRAVITY	
DIAMETER - M	42.7	(140 FT)
OUTLET SOLIDS - %	35.0	

** TREATMENT

TYPE	FLYASH STABILIZATION

** DISPOSAL

NATURE	FINAL
TYPE	LANDFILL
LOCATION	ON-SITE
TRANSPORTATION	RAIL

PERFORMANCE DATA

PERIOD	MODULE	AVAILABILITY	OPERABILITY	RELIABILITY	UTILIZATION	% REMOVAL SO2	% REMOVAL PART.	PER HOURS	BOILER HOURS	FGD HOURS	CAP. FACTOR
3/79	SYSTEM							744			
4/79	SYSTEM							720			

PERIOD	MODULE	AVAILABILITY	OPERABILITY	RELIABILITY	UTILIZATION	% REMOVAL SO2	% REMOVAL PART.	PER HOURS	BOILER HOURS	FGD HOURS	CAP. FACTOR
		PERFORMANCE DATA									

** PROBLEMS/SOLUTIONS/COMMENTS

MARTIN LAKE UNIT 3 BECAME OPERATIONAL DURING MARCH. NO OPERATIONAL DETAILS ARE YET AVAILABLE.

5/79	SYSTEM							744			
6/79	SYSTEM							720			

** PROBLEMS/SOLUTIONS/COMMENTS

THE UNIT WAS IN OPERATION DURING THIS PERIOD ALTHOUGH OPERATIONAL DATA WERE NOT AVAILABLE.

7/79	SYSTEM							744			
8/79	SYSTEM							744			
9/79	SYSTEM							720			

** PROBLEMS/SOLUTIONS/COMMENTS

DURING THE THIRD QUARTER THE UTILITY REPORTED THAT THE FGD SYSTEM RAN WITHOUT ANY MAJOR OPERATIONAL PROBLEMS.

10/79	SYSTEM							744			
11/79	SYSTEM							720			
12/79	SYSTEM							744			

** PROBLEMS/SOLUTIONS/COMMENTS

PLUGGING PROBLEMS HAVE BEEN ENCOUNTERED DURING THE FOURTH QUARTER REQUIRING HEAVY MAINTENANCE.

SECTION 3
DESIGN AND PERFORMANCE DATA FOR OPERATIONAL DOMESTIC FGD SYSTEMS

COMPANY NAME	TEXAS UTILITIES	
PLANT NAME	MONTICELLO	
UNIT NUMBER	3	
CITY	MT. PLEASANT	
STATE	TEXAS	
REGULATORY CLASSIFICATION	B	
PARTICULATE EMISSION LIMITATION - NG/J	43.	(.100 LB/MMBTU)
SO2 EMISSION LIMITATION - NG/J	516.	(1.200 LB/MMBTU)
NET PLANT GENERATING CAPACITY - MW	1900.0	
GROSS UNIT GENERATING CAPACITY - MW	800.0	
NET UNIT GENERATING CAPACITY W/FGD - MW	750.0	
NET UNIT GENERATING CAPACITY WO/FGD - MW	*******	
EQUIVALENT SCRUBBED CAPACITY - MW	800.0	
** BOILER DATA		
SUPPLIER	COMBUSTION ENGINEERING	
TYPE	PULVERIZED COAL	
SERVICE LOAD	BASE	
COMMERCIAL SERVICE DATE	0/78	
MAXIMUM BOILER FLUE GAS FLOW - CU.M/S	1650.71	(3498000 ACFM)
FLUE GAS TEMPERATURE - C	168.3	(335 F)
STACK HEIGHT - M	******	(**** FT)
STACK TOP DIAMETER - M	*******	(***** FT)
** FUEL DATA		
FUEL TYPE	COAL	
FUEL GRADE	LIGNITE	
AVERAGE HEAT CONTENT - J/G	*******	(****** BTU/LB)
RANGE HEAT CONTENT - BTU/LB		6500-7500
AVERAGE ASH CONTENT - %	18.90	
RANGE ASH CONTENT - %	******	
AVERAGE MOISTURE CONTENT - %	31.90	
RANGE MOISTURE CONTENT - %	******	
AVERAGE SULFUR CONTENT - %	1.50	
RANGE SULFUR CONTENT - %	******	
AVERAGE CHLORIDE CONTENT - %	.04	
RANGE CHLORIDE CONTENT - %	******	
** ESP		
NUMBER	2	
TYPE	COLD SIDE	
SUPPLIER	C.E. WALTHER	
PARTICULATE DESIGN REMOVAL EFFICIENCY - %	99.5	
FLUE GAS CAPACITY - CU.M/S	1650.7	(3498000 ACFM)
FLUE GAS TEMPERATURE - C	168.3	(335 F)
PRESSURE DROP - KPA	*******	(***** IN-H2O)
PARTICULATE OUTLET LOAD - G/CU.M	.09	(.04 GR/SCF)
** PARTICULATE SCRUBBER		
TYPE	NONE	
** FGD SYSTEM		
SALEABLE PRODUCT/THROWAWAY PRODUCT	THROWAWAY PRODUCT	
GENERAL PROCESS TYPE	WET SCRUBBING	
PROCESS TYPE	LIMESTONE	
PROCESS ADDITIVES	NONE	
SYSTEM SUPPLIER	CHEMICO	
A-E FIRM	C.T. MAIN	
DEVELOPMENT LEVEL	FULL SCALE	
NEW/RETROFIT	NEW	
PARTICULATE DESIGN REMOVAL EFFICIENCY - %	99.50	
SO2 DESIGN REMOVAL EFFICIENCY - %	74.00	
COMMERCIAL DATE	10/78	
INITIAL START-UP	5/78	
ABSORBER SPARE CAPACITY INDEX - %	.0	
ABSORBER SPARE COMPONENT INDEX	.0	
** ABSORBER		
NUMBER	3	
TYPE	SPRAY TOWER	
INITIAL START UP	5/78	
SUPPLIER	CHEMICO	

TEXAS UTILITIES: MONTICELLO 3 (CONT.)

NUMBER OF STAGES	4	
BOILER LOAD/ABSORBER - %	33.0	
GAS FLOW - CU.M/S	428.01	(907000 ACFM)
GAS TEMPERATURE - C	60.6	(141 F)
LIQUID RECIRCULATION RATE - LITER/S	4000.	(63490 GPM)
L/G RATIO - L/CU.M	9.4	(70.0 GAL/1000ACF)
PRESSURE DROP - KPA	1.2	(5.0 IN-H2O)
PARTICULATE INLET LOAD - G/CU.M	.1	(.050 GR/SCF)
PARTICULATE OUTLET LOAD- G/CU.M	.1	(.050 GR/SCF)
SO2 INLET CONCENTRATION - PPM	1353	
SO2 OUTLET CONTRATION - PPM	496	
SO2 DESIGN REMOVAL EFFICIENCY - %	74.0	

** FANS

NUMBER	3	
TYPE	BOILER I.D.	
SERVICE - WET/DRY	DRY	
CAPACITY - CU.M/S	539.38	(1143000 ACFM)

** MIST ELIMINATOR

NUMBER	3	
TYPE	CHEVRON	
CONSTRUCTION MATERIAL	POLYPROPYLENE	
CONFIGURATION	HORIZONTAL	
NUMBER OF STAGES	1	
NUMBER OF PASSES	4	
WASH SYSTEM	CONTINUOUS VERTICAL UPWARD; INTERMITTENT VERTICA	
SUPERFICIAL GAS VELOCITY - M/S	3.0	(10.0 FT/S)

** PUMPS

SERVICE	NUMBER
ABSORBER RECIRCULATION	3
SLURRY FEED	****

** TANKS

SERVICE	NUMBER
LIMESTONE SLURRY	****
RECYCLE	****

** REHEATER

TYPE	HOT AIR INJECTION	
HEATING MEDIUM	STEAM, 650 F AT 125 PSIG	
TEMPERATURE BOOST - C	10.0	(18 F)

** WATER LOOP

TYPE	CLOSED	
FRESH MAKEUP WATER ADDITION - LITERS/S	34.4	(546 GPM)

** TREATMENT

TYPE: FLYASH STABILIZATION

** DISPOSAL

NATURE	FINAL
TYPE	LANDFILL
LOCATION	ON-SITE

PERFORMANCE DATA

PERIOD	MODULE	AVAILABILITY	OPERABILITY	RELIABILITY	UTILIZATION	% REMOVAL SO2	% REMOVAL PART.	PER HOURS	BOILER HOURS	FGD HOURS	CAP. FACTOR
4/78	SYSTEM							720			

** PROBLEMS/SOLUTIONS/COMMENTS

THE TEXAS AIR CONTROL BOARD REPORTED THAT THE TEXAS UTILITIES 750 MW MONTICELLO UNIT 3 BEGAN FGD OPERATIONS DURING THE REPORT PERIOD. AS OF YET THE UNIT HAS NOT RUN AT FULL LOAD BUT IS EXPECTED TO BY THE END OF AUGUST.

5/78	SYSTEM							744			
6/78	SYSTEM							720			

TEXAS UTILITIES: MONTICELLO 3 (CONT.)

PERIOD	MODULE	AVAILABILITY	OPERABILITY	RELIABILITY	UTILIZATION	% REMOVAL SO2	% REMOVAL PART.	PER HOURS	BOILER HOURS	FGD HOURS	CAP. FACTOR
		PERFORMANCE DATA									

** PROBLEMS/SOLUTIONS/COMMENTS

THE UNIT IS NOT AT FULL LOAD YET. ONE OF THE THREE FGD MODULES IS FULLY OPERATIONAL. ANOTHER ONE IS PARTIALLY OPERATIONAL, WHILE THE THIRD IS NOT OPERATING AT ALL.

7/78	SYSTEM							744			
8/78	SYSTEM							744			

** PROBLEMS/SOLUTIONS/COMMENTS

THE COMPLIANCE TEST HAS NOT YET TAKEN PLACE. THE FGD SYSTEM IS OPERATIONAL. INSTRUMENTATION INDICATES THAT THE UNIT IS IN COMPLIANCE.

9/78	SYSTEM							720			
10/78	SYSTEM							744			

** PROBLEMS/SOLUTIONS/COMMENTS

CONTINUOUS NOX, O2, AND SO2 MONITORS ARE A PROBLEM AREA.

THE SLUDGE IS CURRENTLY NOT FIXATED. IT IS BEING PUMPED DIRECTLY TO THE POND.

11/78	SYSTEM							720			
12/78	SYSTEM							744			

** PROBLEMS/SOLUTIONS/COMMENTS

THE FGD SYSTEM IS FULLY OPERATIONAL. A PRELIMINARY TEST WAS PERFORMED ON DECEMBER 14. RESULTS OF THE TEST ARE NOT YET AVAILABLE.

THE FGD SYSTEM REPORTEDLY HAS BEEN PERFORMING WELL.

THE ESP IS NOT OPERATING WELL. COLLECTION EFFICIENCY IS NOT AS HIGH AS IT SHOULD BE. AMMONIA INJECTION HAS BEEN TRIED TO IMPROVE ITS EFFICIENCY. REPORTEDLY THE PROBLEM IS THE RESULT OF STRUCTURAL DAMAGE.

1/79	SYSTEM							744			
2/79	SYSTEM							672			
3/79	SYSTEM							744			
4/79	SYSTEM							720			

** PROBLEMS/SOLUTIONS/COMMENTS

THE UNIT IS CURRENTLY DOWN FOR A SCHEDULED OVERHAUL. THE TOWERS HAVE BEEN INSPECTED AND NO SCALING WAS FOUND.

SOME MINOR RECYCLE PUMP LINER PROBLEMS HAVE BEEN REPORTED.

DUE TO HIGH ASH LEVELS SOME PLATES IN THE ESP WERE KNOCKED OUT OF ALIGNMENT CAUSING AN OPACITY PROBLEM.

5/79	SYSTEM							744			
6/79	SYSTEM							720			

** PROBLEMS/SOLUTIONS/COMMENTS

THE UNIT WAS IN OPERATION DURING THIS PERIOD ALTHOUGH OPERATIONAL DATA WERE NOT AVAILABLE.

7/79	SYSTEM							744			

PERIOD	MODULE	AVAILABILITY	OPERABILITY	RELIABILITY	UTILIZATION	% REMOVAL SO2	% REMOVAL PART.	PER HOURS	BOILER HOURS	FGD HOURS	CAP. FACTOR
		PERFORMANCE DATA									
8/79	SYSTEM							744			
9/79	SYSTEM							720			

** PROBLEMS/SOLUTIONS/COMMENTS

THE ESP WAS REBUILT AND SINCE THE INITIATION OF GAS CONDITIONING WITH AMMONIA THE OPACITY PROBLEM HAS BEEN MINIMIZED.

DURING THE THIRD QUARTER THE UNIT OPERATED WITHOUT ANY MAJOR PROBLEMS. SOME MINOR ABSORBER RECYCLE PUMP LINER FAILURES HAVE BEEN ENCOUNTERED.

10/79	SYSTEM							744			
11/79	SYSTEM							720			
12/79	SYSTEM							744			

** PROBLEMS/SOLUTIONS/COMMENTS

NO PROBLEMS HAVE BEEN ENCOUNTERED DURING THE FOURTH QUARTER. SINCE GAS CONDITIONING WITH AMMONIA BEGAN, THE OPACITY HAS BEEN ACCEPTABLE.

SECTION 3
DESIGN AND PERFORMANCE DATA FOR OPERATIONAL DOMESTIC FGD SYSTEMS

COMPANY NAME	UTAH POWER & LIGHT	
PLANT NAME	HUNTER	
UNIT NUMBER	1	
CITY	CASTLE DALE	
STATE	UTAH	
REGULATORY CLASSIFICATION	B	
PARTICULATE EMISSION LIMITATION - NG/J	43.	(.100 LB/MMBTU)
SO2 EMISSION LIMITATION - NG/J	516.	(1.200 LB/MMBTU)
NET PLANT GENERATING CAPACITY - MW	*******	
GROSS UNIT GENERATING CAPACITY - MW	400.0	
NET UNIT GENERATING CAPACITY W/FGD - MW	400.0	
NET UNIT GENERATING CAPACITY WO/FGD - MW	*******	
EQUIVALENT SCRUBBED CAPACITY - MW	360.0	
** BOILER DATA		
SUPPLIER	COMBUSTION ENGINEERING	
TYPE	PULVERIZED COAL	
SERVICE LOAD	BASE	
COMMERCIAL SERVICE DATE	**/**	
MAXIMUM BOILER FLUE GAS FLOW - CU.M/S	822.05	(1742000 ACFM)
FLUE GAS TEMPERATURE - C	130.0	(266 F)
STACK HEIGHT - M	183.	(600 FT)
STACK TOP DIAMETER - M	7.3	(24.0 FT)
** FUEL DATA		
FUEL TYPE	COAL	
FUEL GRADE	BITUMINOUS	
AVERAGE HEAT CONTENT - J/G	29075.	(12500 BTU/LB)
RANGE HEAT CONTENT - BTU/LB		12,200 - 12,700
AVERAGE ASH CONTENT - %	10.00	
RANGE ASH CONTENT - %	9 - 12	
AVERAGE MOISTURE CONTENT - %	6.50	
RANGE MOISTURE CONTENT - %	******	
AVERAGE SULFUR CONTENT - %	.55	
RANGE SULFUR CONTENT - %	******	
AVERAGE CHLORIDE CONTENT - %	********	
RANGE CHLORIDE CONTENT - %	******	
** ESP		
NUMBER	1	
SUPPLIER	BUELL	
** PARTICULATE SCRUBBER		
TYPE	NONE	
** FGD SYSTEM		
SALEABLE PRODUCT/THROWAWAY PRODUCT	THROWAWAY PRODUCT	
GENERAL PROCESS TYPE	WET SCRUBBING	
PROCESS TYPE	LIME	
PROCESS ADDITIVES	NONE	
SYSTEM SUPPLIER	CHEMICO	
A-E FIRM	STEARNS-ROGER	
DEVELOPMENT LEVEL	FULL SCALE	
NEW/RETROFIT	NEW	
PARTICULATE DESIGN REMOVAL EFFICIENCY - %	99.50	
SO2 DESIGN REMOVAL EFFICIENCY - %	80.00	
INITIAL START-UP	5/79	
** ABSORBER		
NUMBER	4	
TYPE	SPRAY TOWER	
INITIAL START UP	5/79	
SUPPLIER	CHEMICO	
NUMBER OF STAGES	4	
SHELL MATERIAL	CARBON STEEL	
SHELL LINER MATERIAL	POLYESTER FLAKEGLASS	
GAS FLOW - CU.M/S	205.51	(435500 ACFM)
GAS TEMPERATURE - C	130.0	(266 F)
L/G RATIO - L/CU.M	5.7	(43.0 GAL/1000ACF)
PRESSURE DROP - KPA	.6	(2.5 IN-H2O)

UTAH POWER & LIGHT: HUNTER 1 (CONT.)

** FANS		
NUMBER	2	
TYPE	SCRUBBER FD	
CONSTRUCTION MATERIALS	CARBON STEEL	
SERVICE - WET/DRY	DRY	
CAPACITY - CU.M/S	411.02	(871000 ACFM)
** MIST ELIMINATOR		
NUMBER	4	
TYPE	CHEVRON	
CONSTRUCTION MATERIAL	POLYPROPYLENE	
CONFIGURATION	HORIZONTAL	
NUMBER OF STAGES	1	
NUMBER OF PASSES	4	
FREEBOARD DISTANCE - M	3.66	(12.0 FT)
WASH SYSTEM	CONTINUOUS SPRAY OPERATED ON EACH OF THE 12 SECT	
SUPERFICIAL GAS VELOCITY - M/S	.3	(1.0 FT/S)
** PUMPS		
SERVICE	NUMBER	
ABSORBER RECIRCULATION	16	
** REHEATER		
TYPE	HOT AIR INJECTION	
HEATING MEDIUM	STEAM	
TEMPERATURE BOOST - C	26.7	(48 F)
** REHEATER		
TYPE	BYPASS	
TEMPERATURE BOOST - C	26.7	(48 F)
** WATER LOOP		
TYPE	OPEN	
** TREATMENT		
TYPE	FLYASH STABILIZATION	
** DISPOSAL		
NATURE	FINAL	
TYPE	POND	
LOCATION	ON-SITE	

PERFORMANCE DATA

PERIOD	MODULE	AVAILABILITY	OPERABILITY	RELIABILITY	UTILIZATION	% REMOVAL SO2	% REMOVAL PART.	PER HOURS	BOILER HOURS	FGD HOURS	CAP. FACTOR
5/79	SYSTEM	78.6			32.8			744	311	244	
6/79	SYSTEM	97.9			96.9			720	713	698	
7/79	SYSTEM	100.0			99.2			744	738	738	
8/79	SYSTEM	100.0			100.0			744	744	744	
9/79	SYSTEM	100.0			100.0			720	720	720	

** PROBLEMS/SOLUTIONS/COMMENTS

NO MAJOR OPERATIONAL PROBLEMS WERE REPORTED BY THE UTILITY FOR THIS UNIT DURING THE THIRD QUARTER 1979.

10/79	SYSTEM	744
11/79	SYSTEM	720
12/79	SYSTEM	744

** PROBLEMS/SOLUTIONS/COMMENTS

NO INFORMATION WAS AVAILABLE FOR THE FOURTH QUARTER 1979.

SECTION 3
DESIGN AND PERFORMANCE DATA FOR OPERATIONAL DOMESTIC FGD SYSTEMS

COMPANY NAME	UTAH POWER & LIGHT	
PLANT NAME	HUNTINGTON	
UNIT NUMBER	1	
CITY	PRICE	
STATE	UTAH	
REGULATORY CLASSIFICATION	B	
PARTICULATE EMISSION LIMITATION - NG/J	43.	(.100 LB/MMBTU)
SO2 EMISSION LIMITATION - NG/J	516.	(1.200 LB/MMBTU)
NET PLANT GENERATING CAPACITY - MW	810.0	
GROSS UNIT GENERATING CAPACITY - MW	430.0	
NET UNIT GENERATING CAPACITY W/FGD - MW	400.0	
NET UNIT GENERATING CAPACITY WO/FGD - MW	407.0	
EQUIVALENT SCRUBBED CAPACITY - MW	361.0	
** BOILER DATA		
SUPPLIER	COMBUSTION ENGINEERING	
TYPE	PULVERIZED COAL	
SERVICE LOAD	BASE	
COMMERCIAL SERVICE DATE	0/78	
MAXIMUM BOILER FLUE GAS FLOW - CU.M/S	822.05	(1742000 ACFM)
FLUE GAS TEMPERATURE - C	130.0	(266 F)
STACK HEIGHT - M	183.	(600 FT)
STACK TOP DIAMETER - M	7.3	(24.0 FT)
** FUEL DATA		
FUEL TYPE	COAL	
FUEL GRADE	BITUMINOUS	
AVERAGE HEAT CONTENT - J/G	29075.	(12500 BTU/LB)
RANGE HEAT CONTENT - BTU/LB		12200-12700
AVERAGE ASH CONTENT - %	10.00	
RANGE ASH CONTENT - %	9-12	
AVERAGE MOISTURE CONTENT - %	6.50	
RANGE MOISTURE CONTENT - %	******	
AVERAGE SULFUR CONTENT - %	.55	
RANGE SULFUR CONTENT - %	******	
AVERAGE CHLORIDE CONTENT - %	********	
RANGE CHLORIDE CONTENT - %	******	
** ESP		
NUMBER	1	
TYPE	COLD SIDE	
SUPPLIER	BUELL	
** PARTICULATE SCRUBBER		
TYPE	NONE	
** FGD SYSTEM		
SALEABLE PRODUCT/THROWAWAY PRODUCT	THROWAWAY PRODUCT	
GENERAL PROCESS TYPE	WET SCRUBBING	
PROCESS TYPE	LIME	
PROCESS ADDITIVES	NONE	
SYSTEM SUPPLIER	CHEMICO	
A-E FIRM	STEARNS-ROGER	
DEVELOPMENT LEVEL	FULL SCALE	
NEW/RETROFIT	NEW	
PARTICULATE DESIGN REMOVAL EFFICIENCY - %	99.50	
SO2 DESIGN REMOVAL EFFICIENCY - %	80.00	
INITIAL START-UP	5/78	
ABSORBER SPARE CAPACITY INDEX - %	2.5	
ABSORBER SPARE COMPONENT INDEX	.0	
** ABSORBER		
NUMBER	4	
TYPE	SPRAY TOWER	
INITIAL START UP	5/78	
SUPPLIER	CHEMICO	
NUMBER OF STAGES	4	
SHELL MATERIAL	CARBON STEEL	
SHELL LINER MATERIAL	POLYESTER FLAKEGLASS	
GAS FLOW - CU.M/S	205.51	(435500 ACFM)
GAS TEMPERATURE - C	130.0	(266 F)
L/G RATIO - L/CU.M	5.7	(43.0 GAL/1000ACF)

UTAH POWER & LIGHT: HUNTINGTON 1 (CONT.)

PRESSURE DROP - KPA	.6	(2.5 IN-H2O)
** FANS		
NUMBER	2	
TYPE	SCRUBBER FD	
CONSTRUCTION MATERIALS	CARBON STEEL	
SERVICE - WET/DRY	DRY	
CAPACITY - CU.M/S	411.02	(871000 ACFM)
** VACUUM FILTER		
NUMBER	1	
OUTLET SOLIDS - %	60.0	
** MIST ELIMINATOR		
NUMBER	4	
TYPE	CHEVRON	
CONSTRUCTION MATERIAL	POLYPROPYLENE	
CONFIGURATION	HORIZONTAL	
NUMBER OF STAGES	1	
NUMBER OF PASSES	4	
FREEBOARD DISTANCE - M	3.66	(12.0 FT)
WASH SYSTEM	CONTINUOUS SPRAY OPERATES ON EACH OF THE 12 SECT	
SUPERFICIAL GAS VELOCITY - M/S	.3	(1.0 FT/S)
** PUMPS		
SERVICE	NUMBER	
ABSORBER RECIRCULATION	16	
** TANKS		
SERVICE	NUMBER	
RECYCLE	4	
** REHEATER		
TYPE	HOT AIR INJECTION	
HEATING MEDIUM	STEAM	
TEMPERATURE BOOST - C	26.7	(48 F)
** REHEATER		
TYPE	BYPASS	
TEMPERATURE BOOST - C	26.7	(48 F)
** THICKENER		
NUMBER	1	
TYPE	CYLINDRICAL WITH DORR OLIVER RAKE	
CONSTRUCTION MATERIAL	CARBON STEEL WITH FLAKEGLASS LINING	
DIAMETER - M	18.3	(60 FT)
OUTLET SOLIDS - %	27.5	
** WATER LOOP		
TYPE	CLOSED	
FRESH MAKEUP WATER ADDITION - LITERS/S	18.9	(300 GPM)
** TREATMENT		
TYPE	FLYASH STABILIZATION	
** DISPOSAL		
NATURE	FINAL	
TYPE	LANDFILL	
LOCATION	ON-SITE	
TRANSPORTATION	TRUCK	

PERFORMANCE DATA

PERIOD	MODULE	AVAILABILITY	OPERABILITY	RELIABILITY	UTILIZATION	% REMOVAL SO2	% REMOVAL PART.	PER HOURS	BOILER HOURS	FGD HOURS	CAP. FACTOR
5/78	SYSTEM							744			

** PROBLEMS/SOLUTIONS/COMMENTS

INITIAL OPERATIONS BEGAN ON MAY 10, 1978.

6/78	SYSTEM		65.3		65.3			720	720	470	

UTAH POWER & LIGHT: HUNTINGTON 1 (CONT.)

PERIOD	MODULE	AVAILABILITY	OPERABILITY	RELIABILITY	UTILIZATION	% REMOVAL SO2	% REMOVAL PART.	PER HOURS	BOILER HOURS	FGD HOURS	CAP. FACTOR
		PERFORMANCE DATA									
	** PROBLEMS/SOLUTIONS/COMMENTS										
		THE UTILITY REPORTED THAT 10-20% OF THE FLUE GAS WAS BYPASSED.									
7/78	SYSTEM	97.7		95.9				744	731	714	
8/78	SYSTEM	100.0		73.1				744	544	544	
	** PROBLEMS/SOLUTIONS/COMMENTS										
		AN EXPLOSION CAUSED A THREE WEEK BOILER OUTAGE.									
		THE UTILITY REPORTED THAT THERE WERE NO FORCED FGD OUTAGES.									
9/78	SYSTEM	100.0		68.9				720	496	496	
10/78	SYSTEM	100.0		100.0				744	744	744	
11/78	SYSTEM	62.4		62.4				720	720	449	
	** PROBLEMS/SOLUTIONS/COMMENTS										
		THE THICKENER HAD SOLIDS BUILDUP THE LAST OF NOVEMBER AND THE FIRST PART OF DECEMBER FORCING SYSTEM SHUTDOWN TO ALLOW MANUAL REMOVAL OF THE SOLIDS.									
12/78	SYSTEM	34.0		32.7				744	715	243	
	** PROBLEMS/SOLUTIONS/COMMENTS										
		FREEZE-UP PROBLEMS CAUSED OUTAGES OF A FEW WEEKS DURATION.									
1/79	SYSTEM	76.2		65.7				744	642	489	
2/79	SYSTEM	90.1		58.2				672	434	391	
3/79	SYSTEM	100.0		86.5				744	644	644	
4/79	SYSTEM	100.0		76.8				720	553	553	
	** PROBLEMS/SOLUTIONS/COMMENTS										
		THE UTILITY REPORTED THAT THE PROBLEMS ENCOUNTERED DURING FEBRUARY-APRIL INCLUDED LINING FAILURE, PUMP PROBLEMS AND DAMPER PROBLEMS.									
		PROBLEMS HAVE BEEN EXPERIENCED WITH DAMPER MECHANISMS CLOGGING.									
5/79	SYSTEM	100.0		92.6				744	689	689	
6/79	SYSTEM	62.5		54.9				720	632	395	
7/79	SYSTEM	79.7		79.5				744	742	591	
8/79	SYSTEM	30.0		27.0				744	669	201	
9/79	SYSTEM	54.9		54.3				720	712	391	
	** PROBLEMS/SOLUTIONS/COMMENTS										
		THE PROBLEMS ENCOUNTERED DURING THE THIRD QUARTER 1979 INCLUDED FAILURE OF CONTROL VALVES AND SOME AGITATOR PROBLEMS.									
10/79	SYSTEM							744			
11/79	SYSTEM							720			
12/79	SYSTEM							744			

EPA UTILITY FGD SURVEY: FOURTH QUARTER 1979

UTAH POWER & LIGHT: HUNTINGTON 1 (CONT.)

PERIOD	MODULE	AVAILABILITY	OPERABILITY	RELIABILITY	UTILIZATION	% REMOVAL SO2	% REMOVAL PART.	PER HOURS	BOILER HOURS	FGD HOURS	CAP. FACTOR
				PERFORMANCE DATA							

** PROBLEMS/SOLUTIONS/COMMENTS

MULTIPLE PROBLEMS OCCURRED DURING THE PERIOD CAUSING THE UNIT TO SHUT DOWN TO GET THE SYSTEM UNDER CONTROL.

SECTION 4
SUMMARY OF FGD SYSTEMS BY COMPANY

COMPANY NAME	TOTAL		STATUS: OPERATIONAL		CONSTRUCTION		CONTRACT AWARDED		PLANNED	
	NO.	MW	NO.	MW	NO.	MW	NO.	MW	NO.	MW
ALABAMA ELECTRIC COOP	2	358.	2	358.	0	0.	0	0.	0	0.
ALLEGHENY POWER SYSTEM	3	1338.	1	519.	1	519.	1	300.	0	0.
ARIZONA ELECTRIC POWER COOP	2	390.	2	390.	0	0.	0	0.	0	0.
ARIZONA PUBLIC SERVICE	8	2684.	2	469.	4	705.	2	1510.	0	0.
ASSOCIATED ELECTRIC COOP	1	670.	0	0.	1	670.	0	0.	0	0.
BASIN ELECTRIC POWER COOP	5	2680.	0	0.	3	1640.	1	600.	1	440.
BIG RIVERS ELECTRIC	4	1364.	1	242.	1	242.	0	0.	2	880.
CENTRAL ILLINOIS LIGHT	2	794.	1	378.	0	0.	0	0.	1	416.
CENTRAL ILLINOIS PUBLIC SERV	1	617.	1	617.	0	0.	0	0.	0	0.
CENTRAL MAINE POWER	1	600.	0	0.	0	0.	0	0.	1	600.
CINCINNATI GAS & ELECTRIC	1	650.	0	0.	1	650.	0	0.	0	0.
COLORADO UTE ELECTRIC ASSN.	3	1341.	1	447.	1	447.	0	0.	1	447.
COLUMBUS & SOUTHERN OHIO ELEC.	4	1572.	2	822.	0	0.	0	0.	2	750.
COMMONWEALTH EDISON	1	450.	0	0.	1	450.	0	0.	0	0.
COOPERATIVE POWER ASSOCIATION	2	654.	1	327.	1	327.	0	0.	0	0.
DELMARVA POWER & LIGHT	2	730.	0	0.	1	180.	0	0.	1	550.
DUQUESNE LIGHT	2	920.	2	920.	0	0.	0	0.	0	0.
EAST KENTUCKY POWER COOP	3	1800.	0	0.	1	500.	0	0.	2	1300.
GENERAL PUBLIC UTILITIES	5	3475.	0	0.	0	0.	0	0.	5	3475.
HOOSIER ENERGY	2	882.	0	0.	1	441.	1	441.	0	0.
HOUSTON LIGHTING & POWER CO.	1	512.	0	0.	0	0.	1	512.	0	0.
INDIANAPOLIS POWER & LIGHT	5	3012.	1	532.	1	530.	0	0.	3	1950.
KANSAS CITY POWER & LIGHT	3	1054.	3	1054.	0	0.	0	0.	0	0.
KANSAS POWER & LIGHT	4	1575.	3	1085.	1	490.	0	0.	0	0.
KENTUCKY UTILITIES	1	64.	1	64.	0	0.	0	0.	0	0.
LAKELAND UTILITIES	1	364.	0	0.	1	364.	0	0.	0	0.
LOUISVILLE GAS & ELECTRIC	10	3543.	5	1190.	3	1203.	0	0.	2	1150.
MIDDLE SOUTH UTILITIES	6	5340.	0	0.	0	0.	0	0.	6	5340.
MINNESOTA POWER & LIGHT	1	475.	0	0.	1	475.	0	0.	0	0.
MINNKOTA POWER COOPERATIVE	1	405.	1	405.	0	0.	0	0.	0	0.
MONTANA POWER	4	2120.	2	720.	2	1400.	0	0.	0	0.
MUSCATINE POWER & WATER	1	160.	0	0.	0	0.	0	0.	1	160.
NEVADA POWER	10	3125.	3	375.	0	0.	0	0.	7	2750.
NEW YORK STATE ELEC & GAS	1	870.	0	0.	0	0.	0	0.	1	870.
NIAGARA MOHAWK POWER COOP	1	100.	0	0.	1	100.	0	0.	0	0.
NORTHERN INDIANA PUB SERVICE	3	957.	1	115.	0	0.	0	0.	2	842.
NORTHERN STATES POWER	4	2450.	2	1480.	1	110.	0	0.	1	860.
OTTER TAIL POWER	1	440.	0	0.	1	440.	0	0.	0	0.
PACIFIC GAS & ELECTRIC	2	1600.	0	0.	0	0.	0	0.	2	1600.
PACIFIC POWER & LIGHT	1	550.	1	550.	0	0.	0	0.	0	0.
PENNSYLVANIA POWER	3	2751.	2	1834.	1	917.	0	0.	0	0.
PHILADELPHIA ELECTRIC	4	844.	1	120.	0	0.	3	724.	0	0.
POTOMAC ELECTRIC POWER	1	800.	0	0.	0	0.	0	0.	1	800.
POWER AUTHORITY OF NEW YORK	1	700.	0	0.	0	0.	0	0.	1	700.
PUBLIC SERVICE OF INDIANA	1	650.	0	0.	0	0.	1	650.	0	0.
PUBLIC SERVICE OF NEW MEXICO	4	1779.	3	1245.	1	534.	0	0.	0	0.
SALT RIVER PROJECT	3	840.	1	280.	1	280.	0	0.	1	280.
SAN MIGUEL ELECTRIC COOP	1	400.	0	0.	1	400.	0	0.	0	0.
SEMINOLE ELECTRIC	2	1240.	0	0.	0	0.	0	0.	2	1240.
SIKESTON BOARD OF MUNIC. UTIL.	1	235.	0	0.	1	235.	0	0.	0	0.
SOUTH CAROLINA PUBLIC SERVICE	3	700.	1	140.	1	280.	1	280.	0	0.
SOUTH MISSISSIPPI ELEC PWR	2	248.	2	248.	0	0.	0	0.	0	0.
SOUTHERN ILLINOIS POWER COOP	2	484.	1	184.	0	0.	0	0.	1	300.
SOUTHERN INDIANA GAS & ELEC	1	265.	1	265.	0	0.	0	0.	0	0.
SOUTHWESTERN ELECTRIC POWER	1	720.	0	0.	0	0.	1	720.	0	0.
SPRINGFIELD CITY UTILITIES	1	194.	1	194.	0	0.	0	0.	0	0.
SPRINGFIELD WATER, LIGHT & PWR	1	205.	0	0.	1	205.	0	0.	0	0.
ST. JOE ZINC	1	60.	1	60.	0	0.	0	0.	0	0.
TAMPA ELECTRIC	1	475.	0	0.	0	0.	0	0.	1	475.
TENNESSEE VALLEY AUTHORITY	7	3153.	3	570.	1	575.	2	1408.	1	600.
TEXAS MUNICIPAL POWER AGENCY	1	400.	0	0.	0	0.	1	400.	0	0.
TEXAS POWER & LIGHT	3	1882.	0	0.	1	382.	2	1500.	0	0.
TEXAS UTILITIES	8	5585.	4	2585.	0	0.	1	750.	3	2250.
TUCSON GAS & ELECTRIC	2	740.	0	0.	0	0.	2	740.	0	0.
UTAH POWER & LIGHT	5	1886.	2	726.	1	360.	2	800.	0	0.

NOTE - PLANNED STATUS INCLUDES LETTER OF INTENT SIGNED, REQUESTING/EVALUTING BIDS, AND CONSIDERING ONLY FGD SYSTEMS

SECTION 4
SUMMARY OF FGD SYSTEMS BY COMPANY

	TOTAL		STATUS: OPERATIONAL		STATUS: CONSTRUCTION		STATUS: CONTRACT AWARDED		STATUS: PLANNED	
COMPANY NAME	NO.	MW	NO.	MW	NO.	MW	NO.	MW	NO.	MW
WISCONSIN POWER & LIGHT	1	316.	0	0.	0	0.	1	316.	0	0.
TOTALS	176	80237.	62	21510.	39	16051.	23	11651.	52	31025.

NOTE - PLANNED STATUS INCLUDES LETTER OF INTENT SIG NED, REQUESTING/EVALUTING BIDS, AND CONSIDERING ONLY FGD SYSTEMS

SECTION 5
SUMMARY OF FGD SYSTEMS BY SYSTEM SUPPLIER

SYSTEM SUPPLIER/PROCESS	TOTAL NO.	TOTAL MW	OPERATIONAL NO.	OPERATIONAL MW	CONSTRUCTION NO.	CONSTRUCTION MW	CONTRACT AWARDED NO.	CONTRACT AWARDED MW
ADL/COMBUSTION EQUIP ASSOCIATE								
DUAL ALKALI	1	288.	1	288.	0	0.	0	0.
LIME	1	500.	0	0.	1	500.	0	0.
LIME/ALKALINE FLYASH	5	2525.	3	1125.	2	1400.	0	0.
SODIUM CARBONATE	3	375.	3	375.	0	0.	0	0.
TOTAL -	10	3688.	7	1788.	3	1900.	0	0.
AIR CORRECTION DIVISION, UOP								
LIME	2	822.	2	822.	0	0.	0	0.
LIMESTONE	4	1896.	2	726.	1	450.	1	720.
LIME/LIMESTONE	1	10.	1	10.	0	0.	0	0.
SODIUM CARBONATE	1	550.	1	550.	0	0.	0	0.
TOTAL -	8	3278.	6	2108.	1	450.	1	720.
AMERICAN AIR FILTER								
LIME	6	1673.	4	936.	2	737.	0	0.
LIMESTONE	1	280.	0	0.	0	0.	1	280.
TOTAL -	7	1953.	4	936.	2	737.	1	280.
BABCOCK & WILCOX								
LIME	3	1688.	1	519.	2	1169.	0	0.
LIMESTONE	7	2477.	3	1198.	4	1279.	0	0.
LIME/SPRAY DRYING	1	600.	0	0.	0	0.	1	600.
TOTAL -	11	4765.	4	1717.	6	2448.	1	600.
BUELL/ENVIROTECH								
DUAL ALKALI	1	617.	1	617.	0	0.	0	0.
TOTAL -	1	617.	1	617.	0	0.	0	0.
BUREAU OF MINES								
CITRATE	1	60.	1	60.	0	0.	0	0.
TOTAL -	1	60.	1	60.	0	0.	0	0.
CHEMICO								
LIME	8	4140.	6	3480.	1	360.	1	300.
LIMESTONE	7	4508.	1	800.	0	0.	6	3708.
LIME/ALKALINE FLYASH	4	895.	0	0.	3	579.	1	316.
LIME/LIMESTONE	1	10.	1	10.	0	0.	0	0.
TOTAL -	20	9553.	8	4290.	4	939.	8	4324.
COMBUSTION ENGINEERING								
LIME	4	452.	4	452.	0	0.	0	0.
LIMESTONE	7	2932.	3	1085.	3	1447.	1	400.
LIMESTONE/ALKALINE FLYASH	2	1480.	2	1480.	0	0.	0	0.
LIME/ALKALINE FLYASH	2	654.	1	327.	1	327.	0	0.
LIME/LIMESTONE	2	708.	0	0.	2	708.	0	0.
TOTAL -	17	6226.	10	3344.	6	2482.	1	400.
DAVY POWERGAS								
WELLMAN LORD	6	2074.	4	1360.	2	714.	0	0.
TOTAL -	6	2074.	4	1360.	2	714.	0	0.
FMC CORPORATION								
DUAL ALKALI	1	265.	1	265.	0	0.	0	0.
TOTAL -	1	265.	1	265.	0	0.	0	0.
JOY MFG/NIRO ATOMIZER								
LIME/SPRAY DRYING	4	1290.	0	0.	2	550.	2	740.
TOTAL -	4	1290.	0	0.	2	550.	2	740.
MITSUBISHI HEAVY INDUSTRIES								
LIMESTONE	2	882.	0	0.	1	441.	1	441.
TOTAL -	2	882.	0	0.	1	441.	1	441.

SECTION 5
SUMMARY OF FGD SYSTEMS BY SYSTEM SUPPLIER

SYSTEM SUPPLIER/PROCESS	TOTAL		STATUS: OPERATIONAL		STATUS: CONSTRUCTION		STATUS: CONTRACT AWARDED	
	NO.	MW	NO.	MW	NO.	MW	NO.	MW
PEABODY PROCESS SYSTEMS								
LIMESTONE	4	1252.	3	805.	1	447.	0	0.
LIME/ALKALINE FLYASH	1	475.	0	0.	1	475.	0	0.
TOTAL -	5	1727.	3	805.	2	922.	0	0.
PULLMAN KELLOGG								
LIME	1	917.	0	0.	1	917.	0	0.
LIMESTONE	4	1880.	1	280.	2	950.	1	650.
TOTAL -	5	2797.	1	280.	3	1867.	1	650.
RESEARCH COTTRELL								
LIMESTONE	13	5455.	7	2644.	5	2061.	1	750.
TOTAL -	13	5455.	7	2644.	5	2061.	1	750.
RILEY STOKER/ENVIRONEERING								
LIMESTONE	3	626.	3	626.	0	0.	0	0.
TOTAL -	3	626.	3	626.	0	0.	0	0.
ROCKWELL INTERNATIONAL								
AQUEOUS CARBONATE	1	100.	0	0.	1	100.	0	0.
TOTAL -	1	100.	0	0.	1	100.	0	0.
TENNESSEE VALLEY AUTHORITY								
LIMESTONE	1	550.	1	550.	0	0.	0	0.
TOTAL -	1	550.	1	550.	0	0.	0	0.
UNITED ENGINEERS								
LIME	2	1510.	0	0.	0	0.	2	1510.
MAGNESIUM OXIDE	4	844.	1	120.	0	0.	3	724.
TOTAL -	6	2354.	1	120.	0	0.	5	2234.
VENDOR NOT SELECTED								
LIMESTONE	1	512.	0	0.	0	0.	1	512.
TOTAL -	1	512.	0	0.	0	0.	1	512.
WHEELABRATOR-FRYE/R.I.								
AQUEOUS CARBONATE/SPRAY DRYING	1	440.	0	0.	1	440.	0	0.
TOTAL -	1	440.	0	0.	1	440.	0	0.
TOTAL -	124	49212.	62	21510.	39	16051.	23	11651.

SECTION C
SUMMARY OF FGD SYSTEMS BY PROCESS

	TOTAL		STATUS: OPERATIONAL		CONSTRUCTION		CONTRACT AWARDED		PLANNED	
PROCESS	NO.	MW	NO.	MW	NO.	MW	NO.	MW	NO.	MW
AQUEOUS CARBONATE	1	100.	0	0.	1	100.	0	0.	0	0.
CITRATE	1	60.	1	60.	0	0.	0	0.	0	0.
MAGNESIUM OXIDE	5	1444.	1	120.	0	0.	3	724.	1	600.
WELLMAN LORD	6	2074.	4	1360.	2	714.	0	0.	0	0.
SUBTOTAL - SALEABLE PRODUCT	13	3678.	6	1540.	3	814.	3	724.	1	600.
AQUEOUS CARBONATE/SPRAY DRYING	1	440.	0	0.	1	440.	0	0.	0	0.
DUAL ALKALI	5	2012.	3	1170.	0	0.	0	0.	2	842.
LIME	27	11702.	17	6209.	7	3683.	3	1810.	0	0.
LIMESTONE	66	31016.	24	8714.	17	7075.	13	7461.	12	7766.
LIMESTONE/ALKALINE FLYASH	2	1480.	2	1480.	0	0.	0	0.	0	0.
LIME/ALKALINE FLYASH	12	4549.	4	1452.	7	2781.	1	316.	0	0.
LIME/LIMESTONE	5	1328.	2	20.	2	708.	0	0.	1	600.
LIME/SPRAY DRYING	6	2337.	0	0.	2	550.	3	1340.	1	447.
PROCESS NOT SELECTED	35	20770.	0	0.	0	0.	0	0.	35	20770.
SODIUM CARBONATE	4	925.	4	925.	0	0.	0	0.	0	0.
SUBTOTAL - THROWAWAY PRODUCT	163	76559.	56	19970.	36	15237.	20	10927.	51	30425.
TOTALS	176	80237.	62	21510.	39	16051.	23	11651.	52	31025.
SALEABLE % OF TOTAL MW		5		7		5		6		2

SECTION 7
SUMMARY OF OPERATIONAL FGD SYSTEMS BY PROCESS AND UNIT

PROCESS/ UNIT NAME	UNIT NO.	CAPACITY MW	INITIAL STARTUP	COMMERCIAL STARTUP
CITRATE				
G.F. WEATON	1	60.	11/79	1/80
		60.		
DUAL ALKALI				
A.B. BROWN	1	265.	3/79	0/ 0
CANE RUN	6	288.	4/79	0/ 0
NEWTON	1	617.	9/79	12/79
		1170.		
LIME				
BRUCE MANSFIELD	1	917.	12/75	6/76
BRUCE MANSFIELD	2	917.	7/77	0/ 0
CANE RUN	4	188.	8/76	9/77
CANE RUN	5	200.	12/77	7/78
CONESVILLE	5	411.	1/77	2/77
CONESVILLE	6	411.	6/78	0/ 0
ELRAMA	1-4	510.	10/75	10/75
GREEN	1	242.	12/79	12/79
GREEN RIVER	1-3	64.	9/75	6/76
HAWTHORN	3	90.	11/72	0/ 0
HAWTHORN	4	90.	8/72	0/ 0
HUNTER	1	360.	5/79	0/ 0
HUNTINGTON	1	366.	5/78	0/ 0
MILL CREEK	3	442.	8/78	3/79
PADDY'S RUN	6	72.	4/73	0/ 0
PHILLIPS	1-6	410.	7/73	0/ 0
PLEASANTS	1	519.	3/79	0/ 0
		6209.		
LIMESTONE				
APACHE	2	195.	8/78	1/79
APACHE	3	195.	6/79	4/79
CHOLLA	1	119.	10/73	12/73
CHOLLA	2	350.	4/78	0/ 0
CORONADO	1	280.	11/79	1/80
CRAIG	2	447.	8/79	11/79
DUCK CREEK	1	378.	9/76	8/78
JEFFREY	1	540.	8/78	0/ 0
LA CYGNE	1	874.	2/73	6/73
LAWRENCE	4	125.	1/76	0/ 0
LAWRENCE	5	420.	11/71	0/ 0
MARION	4	184.	5/79	5/79
MARTIN LAKE	1	595.	4/77	10/78
MARTIN LAKE	2	595.	5/78	0/ 0
MARTIN LAKE	3	595.	2/79	0/ 0
MONTICELLO	3	800.	5/78	10/78
PETERSBURG	3	532.	12/77	0/ 0
R.D. MORROW	1	124.	8/78	0/ 0
R.D. MORROW	2	124.	6/79	0/ 0
SOUTHWEST	1	194.	4/77	0/ 0
TOMBIGBEE	2	179.	9/78	9/78
TOMBIGBEE	3	179.	6/79	0/ 0
WIDOWS CREEK	8	550.	5/77	1/78
WINYAH	2	140.	7/77	0/ 0
		8714.		
LIMESTONE/ALKALINE FLYASH				
SHERBURNE	1	740.	3/76	5/76
SHERBURNE	2	740.	4/77	4/77
		1480.		

SECTION 7
SUMMARY OF OPERATIONAL FGD SYSTEMS BY PROCESS AND UNIT

PROCESS/ UNIT NAME	UNIT NO.	CAPACITY MW	INITIAL STARTUP	COMMERCIAL STARTUP
LIME/ALKALINE FLYASH				
COAL CREEK	1	327.	8/79	0/ 0
COLSTRIP	1	360.	9/75	11/75
COLSTRIP	2	360.	5/76	10/76
MILTON R. YOUNG	2	405.	9/77	6/78
		1452.		
LIME/LIMESTONE				
SHAWNEE	10A	10.	4/72	0/ 0
SHAWNEE	10B	10.	4/72	0/ 0
		20.		
MAGNESIUM OXIDE				
EDDYSTONE	1A	120.	9/75	9/75
		120.		
SODIUM CARBONATE				
JIM BRIDGER	4	550.	9/79	2/80
REID GARDNER	1	125.	4/74	0/ 0
REID GARDNER	2	125.	4/74	0/ 0
REID GARDNER	3	125.	6/76	7/76
		925.		
WELLMAN LORD				
DEAN H. MITCHELL	11	115.	7/76	6/77
SAN JUAN	1	361.	4/78	0/ 0
SAN JUAN	2	350.	8/78	0/ 0
SAN JUAN	3	534.	12/79	0/ 0
		1360.		
TOTAL		21510.		

SECTION 8
SUMMARY OF END-PRODUCT DISPOSAL PRACTICES FOR OPERATIONAL FGD SYSTEMS

PROCESS/ UNIT NAME	UNIT NO	THROWAWAY STABILIZED	THROWAWAY UNSTABILIZED	BYPRODUCT TYPE	BYPRODUCT DISPOSITION
CITRATE					
G.F. WEATON	1			ELEMENTAL SULFUR	
DUAL ALKALI					
A.B. BROWN	1		LANDFILL		
CANE RUN	6	LINED POND			
NEWTON	1				
LIME					
BRUCE MANSFIELD	1	LANDFILL			
BRUCE MANSFIELD	2	LANDFILL			
CANE RUN	4	LINED POND			
CANE RUN	5	LINED POND			
CONESVILLE	5	LANDFILL			
CONESVILLE	6	LANDFILL			
ELRAMA	1-4	LANDFILL			
GREEN	1				
GREEN RIVER	1-3		LINED POND		
HAWTHORN	3	POND			
HAWTHORN	4	POND			
HUNTER	1	POND			
HUNTINGTON	1	LANDFILL			
MILL CREEK	3	POND			
PADDY'S RUN	6	POND			
PHILLIPS	1-6	LANDFILL			
PLEASANTS	1				
LIMESTONE					
APACHE	2		POND		
APACHE	3		POND		
CHOLLA	1		POND		
CHOLLA	2		POND		
CORONADO	1		LINED POND		
CRAIG	2		MINEFILL		
DUCK CREEK	1		LINED POND		
JEFFREY	1	POND			
LA CYGNE	1		UNLINED POND		
LAWRENCE	4	POND			
LAWRENCE	5	POND			
MARION	4	LANDFILL			
MARTIN LAKE	1	LANDFILL			
MARTIN LAKE	2	LANDFILL			
MARTIN LAKE	3	LANDFILL			
MONTICELLO	3	LANDFILL			
PETERSBURG	3	POND			
R.D. MORROW	1	LANDFILL			
R.D. MORROW	2	LANDFILL			
SOUTHWEST	1	LANDFILL			
TOMBIGBEE	2	LINED POND			
TOMBIGBEE	3	LINED POND			
WIDOWS CREEK	8		POND		
WINYAH	2		POND		
LIMESTONE/ALKALINE FLYASH					
SHERBURNE	1	LINED POND			
SHERBURNE	2	LINED POND			
LIME/ALKALINE FLYASH					
COAL CREEK	1	LINED POND			
COLSTRIP	1		POND		
COLSTRIP	2		POND		
MILTON R. YOUNG	2		MINEFILL		

SECTION I
SUMMARY OF END-PRODUCT DISPOSAL PRACTICES FOR OPERATIONAL FGD SYSTEMS

PROCESS/ UNIT NAME	UNIT NO	THROWAWAY STABILIZED	THROWAWAY UNSTABILIZED	BYPRODUCT TYPE	BYPRODUCT DISPOSITION
LIME/LIMESTONE					
SHAWNEE	10A				
SHAWNEE	10B				
MAGNESIUM OXIDE					
EDDYSTONE	1A			SULFURIC ACID	
SODIUM CARBONATE					
JIM BRIDGER	4		POND		
REID GARDNER	1		LINED POND		
REID GARDNER	2		LINED POND		
REID GARDNER	3		LINED POND		
WELLMAN LORD					
DEAN H. MITCHELL	11			ELEMENTAL SULFUR	
SAN JUAN	1			ELEMENTAL SULFUR	MARKETED
SAN JUAN	2			ELEMENTAL SULFUR	MARKETED
SAN JUAN	3			SULFURIC ACID	

SECTION 9
SUMMARY OF FGD SYSTEMS IN OPERATION

COMPANY NAME/ UNIT NAME	UNIT NO.	NEW OR RETROFIT	CAPACITY MW	PROCESS/ SYSTEM SUPPLIER	START-UP DATE
ALABAMA ELECTRIC COOP TOMBIGBEE	2	NEW	179.0	LIMESTONE PEABODY PROCESS SYSTEMS	9/78
ALABAMA ELECTRIC COOP TOMBIGBEE	3	NEW	179.0	LIMESTONE PEABODY PROCESS SYSTEMS	6/79
ALLEGHENY POWER SYSTEM PLEASANTS	1	NEW	519.0	LIME BABCOCK & WILCOX	3/79
ARIZONA ELECTRIC POWER COOP APACHE	2	NEW	195.0	LIMESTONE RESEARCH COTTRELL	8/78
ARIZONA ELECTRIC POWER COOP APACHE	3	NEW	195.0	LIMESTONE RESEARCH COTTRELL	6/79
ARIZONA PUBLIC SERVICE CHOLLA	1	RETROFIT	119.0	LIMESTONE RESEARCH COTTRELL	10/73
ARIZONA PUBLIC SERVICE CHOLLA	2	NEW	350.0	LIMESTONE RESEARCH COTTRELL	4/78
BIG RIVERS ELECTRIC GREEN	1	NEW	242.0	LIME AMERICAN AIR FILTER	12/79
CENTRAL ILLINOIS LIGHT DUCK CREEK	1	NEW	378.0	LIMESTONE RILEY STOKER/ENVIRONEERING	9/76
CENTRAL ILLINOIS PUBLIC SERV NEWTON	1	NEW	617.0	DUAL ALKALI BUELL/ENVIROTECH	9/79
COLORADO UTE ELECTRIC ASSN. CRAIG	2	NEW	447.0	LIMESTONE PEABODY PROCESS SYSTEMS	8/79
COLUMBUS & SOUTHERN OHIO ELEC. CONESVILLE	5	NEW	411.0	LIME AIR CORRECTION DIVISION, UOP	1/77
COLUMBUS & SOUTHERN OHIO ELEC. CONESVILLE	6	NEW	411.0	LIME AIR CORRECTION DIVISION, UOP	6/78
COOPERATIVE POWER ASSOCIATION COAL CREEK	1	NEW	327.0	LIME/ALKALINE FLYASH COMBUSTION ENGINEERING	8/79
DUQUESNE LIGHT ELRAMA	1-4	RETROFIT	510.0	LIME CHEMICO	10/75
DUQUESNE LIGHT PHILLIPS	1-6	RETROFIT	410.0	LIME CHEMICO	7/73
INDIANAPOLIS POWER & LIGHT PETERSBURG	3	NEW	532.0	LIMESTONE AIR CORRECTION DIVISION, UOP	12/77
KANSAS CITY POWER & LIGHT HAWTHORN	3	RETROFIT	90.0	LIME COMBUSTION ENGINEERING	11/72
KANSAS CITY POWER & LIGHT HAWTHORN	4	RETROFIT	90.0	LIME COMBUSTION ENGINEERING	8/72
KANSAS CITY POWER & LIGHT LA CYGNE	1	NEW	874.0	LIMESTONE BABCOCK & WILCOX	2/73
KANSAS POWER & LIGHT JEFFREY	1	NEW	540.0	LIMESTONE COMBUSTION ENGINEERING	8/78
KANSAS POWER & LIGHT LAWRENCE	4	RETROFIT	125.0	LIMESTONE COMBUSTION ENGINEERING	1/76
KANSAS POWER & LIGHT LAWRENCE	5	RETROFIT	420.0	LIMESTONE COMBUSTION ENGINEERING	11/71
KENTUCKY UTILITIES GREEN RIVER	1-3	RETROFIT	64.0	LIME AMERICAN AIR FILTER	9/75

SECTION 9
SUMMARY OF FGD SYSTEMS IN OPERATION

COMPANY NAME/ UNIT NAME	UNIT NO.	NEW OR RETROFIT	CAPACITY MW	PROCESS/ SYSTEM SUPPLIER	START-UP DATE
LOUISVILLE GAS & ELECTRIC CANE RUN	4	RETROFIT	188.0	LIME AMERICAN AIR FILTER	8/76
LOUISVILLE GAS & ELECTRIC CANE RUN	5	RETROFIT	200.0	LIME COMBUSTION ENGINEERING	12/77
LOUISVILLE GAS & ELECTRIC CANE RUN	6	RETROFIT	288.0	DUAL ALKALI ADL/COMBUSTION EQUIP ASSOCIATE	4/79
LOUISVILLE GAS & ELECTRIC MILL CREEK	3	NEW	442.0	LIME AMERICAN AIR FILTER	8/78
LOUISVILLE GAS & ELECTRIC PADDY'S RUN	6	RETROFIT	72.0	LIME COMBUSTION ENGINEERING	4/73
MINNKOTA POWER COOPERATIVE MILTON R. YOUNG	2	NEW	405.0	LIME/ALKALINE FLYASH ADL/COMBUSTION EQUIP ASSOCIATE	9/77
MONTANA POWER COLSTRIP	1	NEW	360.0	LIME/ALKALINE FLYASH ADL/COMBUSTION EQUIP ASSOCIATE	9/75
MONTANA POWER COLSTRIP	2	NEW	360.0	LIME/ALKALINE FLYASH ADL/COMBUSTION EQUIP ASSOCIATE	5/76
NEVADA POWER REID GARDNER	1	RETROFIT	125.0	SODIUM CARBONATE ADL/COMBUSTION EQUIP ASSOCIATE	4/74
NEVADA POWER REID GARDNER	2	RETROFIT	125.0	SODIUM CARBONATE ADL/COMBUSTION EQUIP ASSOCIATE	4/74
NEVADA POWER REID GARDNER	3	NEW	125.0	SODIUM CARBONATE ADL/COMBUSTION EQUIP ASSOCIATE	6/76
NORTHERN INDIANA PUB SERVICE DEAN H. MITCHELL	11	RETROFIT	115.0	WELLMAN LORD DAVY POWERGAS	7/76
NORTHERN STATES POWER SHERBURNE	1	NEW	740.0	LIMESTONE/ALKALINE FLYASH COMBUSTION ENGINEERING	3/76
NORTHERN STATES POWER SHERBURNE	2	NEW	740.0	LIMESTONE/ALKALINE FLYASH COMBUSTION ENGINEERING	4/77
PACIFIC POWER & LIGHT JIM BRIDGER	4	NEW	550.0	SODIUM CARBONATE AIR CORRECTION DIVISION, UOP	9/79
PENNSYLVANIA POWER BRUCE MANSFIELD	1	NEW	917.0	LIME CHEMICO	12/75
PENNSYLVANIA POWER BRUCE MANSFIELD	2	NEW	917.0	LIME CHEMICO	7/77
PHILADELPHIA ELECTRIC EDDYSTONE	1A	RETROFIT	120.0	MAGNESIUM OXIDE UNITED ENGINEERS	9/75
PUBLIC SERVICE OF NEW MEXICO SAN JUAN	1	RETROFIT	361.0	WELLMAN LORD DAVY POWERGAS	4/78
PUBLIC SERVICE OF NEW MEXICO SAN JUAN	2	RETROFIT	350.0	WELLMAN LORD DAVY POWERGAS	8/78
PUBLIC SERVICE OF NEW MEXICO SAN JUAN	3	NEW	534.0	WELLMAN LORD DAVY POWERGAS	12/79
SALT RIVER PROJECT CORONADO	1	NEW	280.0	LIMESTONE PULLMAN KELLOGG	11/79
SOUTH CAROLINA PUBLIC SERVICE WINYAH	2	NEW	140.0	LIMESTONE BABCOCK & WILCOX	7/77
SOUTH MISSISSIPPI ELEC PWR R.D. MORROW	1	NEW	124.0	LIMESTONE RILEY STOKER/ENVIRONEERING	8/78

SECTION 9
SUMMARY OF FGD SYSTEMS IN OPERATION

COMPANY NAME/ UNIT NAME	UNIT NO.	NEW OR RETROFIT	CAPACITY MW	PROCESS/ SYSTEM SUPPLIER	START-UP DATE
SOUTH MISSISSIPPI ELEC PWR R.D. MORROW	2	NEW	124.0	LIMESTONE RILEY STOKER/ENVIRONEERING	6/79
SOUTHERN ILLINOIS POWER COOP MARION	4	NEW	184.0	LIMESTONE BABCOCK & WILCOX	5/79
SOUTHERN INDIANA GAS & ELEC A.B. BROWN	1	NEW	265.0	DUAL ALKALI FMC CORPORATION	3/79
SPRINGFIELD CITY UTILITIES SOUTHWEST	1	NEW	194.0	LIMESTONE AIR CORRECTION DIVISION, UOP	4/77
ST. JOE ZINC G.F. WEATON	1	RETROFIT	60.0	CITRATE BUREAU OF MINES	11/79
TENNESSEE VALLEY AUTHORITY SHAWNEE	10A	RETROFIT	10.0	LIME/LIMESTONE AIR CORRECTION DIVISION, UOP	4/72
TENNESSEE VALLEY AUTHORITY SHAWNEE	10B	RETROFIT	10.0	LIME/LIMESTONE CHEMICO	4/72
TENNESSEE VALLEY AUTHORITY WIDOWS CREEK	8	RETROFIT	550.0	LIMESTONE TENNESSEE VALLEY AUTHORITY	5/77
TEXAS UTILITIES MARTIN LAKE	1	NEW	595.0	LIMESTONE RESEARCH COTTRELL	4/77
TEXAS UTILITIES MARTIN LAKE	2	NEW	595.0	LIMESTONE RESEARCH COTTRELL	5/78
TEXAS UTILITIES MARTIN LAKE	3	NEW	595.0	LIMESTONE RESEARCH COTTRELL	2/79
TEXAS UTILITIES MONTICELLO	3	NEW	800.0	LIMESTONE CHEMICO	5/78
UTAH POWER & LIGHT HUNTER	1	NEW	360.0	LIME CHEMICO	5/79
UTAH POWER & LIGHT HUNTINGTON	1	NEW	366.0	LIME CHEMICO	5/78

SECTION 10
SUMMARY OF FGD SYSTEMS UNDER CONSTRUCTION

COMPANY NAME/ UNIT NAME	UNIT NO.	NEW OR RETROFIT	CAPACITY MW	PROCESS/ SYSTEM SUPPLIER	START-UP DATE
ALLEGHENY POWER SYSTEM PLEASANTS	2	NEW	519.0	LIME BABCOCK & WILCOX	9/80
ARIZONA PUBLIC SERVICE CHOLLA	4	NEW	126.0	LIMESTONE RESEARCH COTTRELL	6/80
ARIZONA PUBLIC SERVICE FOUR CORNERS	1	RETROFIT	175.0	LIME/ALKALINE FLYASH CHEMICO	11/79
ARIZONA PUBLIC SERVICE FOUR CORNERS	2	RETROFIT	175.0	LIME/ALKALINE FLYASH CHEMICO	11/79
ARIZONA PUBLIC SERVICE FOUR CORNERS	3	RETROFIT	229.0	LIME/ALKALINE FLYASH CHEMICO	11/79
ASSOCIATED ELECTRIC COOP THOMAS HILL	3	NEW	670.0	LIMESTONE PULLMAN KELLOGG	1/82
BASIN ELECTRIC POWER COOP ANTELOPE VALLEY	1	NEW	440.0	LIME/SPRAY DRYING JOY MFG/NIRO ATOMIZER	11/81
BASIN ELECTRIC POWER COOP LARAMIE RIVER	1	NEW	600.0	LIMESTONE RESEARCH COTTRELL	4/80
BASIN ELECTRIC POWER COOP LARAMIE RIVER	2	NEW	600.0	LIMESTONE RESEARCH COTTRELL	10/80
BIG RIVERS ELECTRIC GREEN	2	NEW	242.0	LIME AMERICAN AIR FILTER	11/80
CINCINNATI GAS & ELECTRIC EAST BEND	2	NEW	650.0	LIME BABCOCK & WILCOX	9/80
COLORADO UTE ELECTRIC ASSN. CRAIG	1	NEW	447.0	LIMESTONE PEABODY PROCESS SYSTEMS	4/80
COMMONWEALTH EDISON POWERTON	51	RETROFIT	450.0	LIMESTONE AIR CORRECTION DIVISION, UOP	4/80
COOPERATIVE POWER ASSOCIATION COAL CREEK	2	NEW	327.0	LIME/ALKALINE FLYASH COMBUSTION ENGINEERING	10/80
DELMARVA POWER & LIGHT DELAWARE CITY	1-3	RETROFIT	180.0	WELLMAN LORD DAVY POWERGAS	4/80
EAST KENTUCKY POWER COOP SPURLOCK	2	NEW	500.0	LIME ADL/COMBUSTION EQUIP ASSOCIATE	10/80
HOOSIER ENERGY MEROM	2	NEW	441.0	LIMESTONE MITSUBISHI HEAVY INDUSTRIES	7/81
INDIANAPOLIS POWER & LIGHT PETERSBURG	4	NEW	530.0	LIMESTONE RESEARCH COTTRELL	10/83
KANSAS POWER & LIGHT JEFFREY	2	NEW	490.0	LIMESTONE COMBUSTION ENGINEERING	6/80
LAKELAND UTILITIES MCINTOSH	3	NEW	364.0	LIMESTONE BABCOCK & WILCOX	10/81
LOUISVILLE GAS & ELECTRIC MILL CREEK	1	RETROFIT	358.0	LIME/LIMESTONE COMBUSTION ENGINEERING	4/81
LOUISVILLE GAS & ELECTRIC MILL CREEK	2	RETROFIT	350.0	LIME/LIMESTONE COMBUSTION ENGINEERING	4/82
LOUISVILLE GAS & ELECTRIC MILL CREEK	4	NEW	495.0	LIME AMERICAN AIR FILTER	7/81
MINNESOTA POWER & LIGHT CLAY BOSWELL	4	NEW	475.0	LIME/ALKALINE FLYASH PEABODY PROCESS SYSTEMS	2/80

SECTION 10
SUMMARY OF FGD SYSTEMS UNDER CONSTRUCTION

COMPANY NAME/ UNIT NAME	UNIT NO.	NEW OR RETROFIT	CAPACITY MW	PROCESS/ SYSTEM SUPPLIER	START-UP DATE
MONTANA POWER COLSTRIP	3	NEW	700.0	LIME/ALKALINE FLYASH ADL/COMBUSTION EQUIP ASSOCIATE	1/84
MONTANA POWER COLSTRIP	4	NEW	700.0	LIME/ALKALINE FLYASH ADL/COMBUSTION EQUIP ASSOCIATE	0/84
NIAGARA MOHAWK POWER COOP CHARLES R. HUNTLEY	66	RETROFIT	100.0	AQUEOUS CARBONATE ROCKWELL INTERNATIONAL	4/82
NORTHERN STATES POWER RIVERSIDE	6,7	RETROFIT	110.0	LIME/SPRAY DRYING JOY MFG/NIRO ATOMIZER	7/80
OTTER TAIL POWER COYOTE	1	NEW	440.0	AQUEOUS CARBONATE/SPRAY DRYING WHEELABRATOR-FRYE/R.I.	3/81
PENNSYLVANIA POWER BRUCE MANSFIELD	3	NEW	917.0	LIME PULLMAN KELLOGG	5/80
PUBLIC SERVICE OF NEW MEXICO SAN JUAN	4	NEW	534.0	WELLMAN LORD DAVY POWERGAS	1/82
SALT RIVER PROJECT CORONADO	2	NEW	280.0	LIMESTONE PULLMAN KELLOGG	10/80
SAN MIGUEL ELECTRIC COOP SAN MIGUEL	1	NEW	400.0	LIMESTONE BABCOCK & WILCOX	9/80
SIKESTON BOARD OF MUNIC. UTIL. SIKESTON	1	NEW	235.0	LIMESTONE BABCOCK & WILCOX	1/81
SOUTH CAROLINA PUBLIC SERVICE WINYAH	3	NEW	280.0	LIMESTONE BABCOCK & WILCOX	5/80
SPRINGFIELD WATER, LIGHT & PWR DALLMAN	3	NEW	205.0	LIMESTONE RESEARCH COTTRELL	9/80
TENNESSEE VALLEY AUTHORITY WIDOWS CREEK	7	RETROFIT	575.0	LIMESTONE COMBUSTION ENGINEERING	10/80
TEXAS POWER & LIGHT SANDOW	4	NEW	382.0	LIMESTONE COMBUSTION ENGINEERING	7/80
UTAH POWER & LIGHT HUNTER	2	NEW	360.0	LIME CHEMICO	6/80

SECTION 11
SUMMARY OF CONTRACT AWARDED FGD SYSTEMS

COMPANY NAME/ UNIT NAME	UNIT NO.	NEW OR RETROFIT	CAPACITY MW	PROCESS/ SYSTEM SUPPLIER	START-UP DATE
ALLEGHENY POWER SYSTEM MITCHELL	33	RETROFIT	300.0	LIME CHEMICO	9/82
ARIZONA PUBLIC SERVICE FOUR CORNERS	4	RETROFIT	755.0	LIME UNITED ENGINEERS	0/82
ARIZONA PUBLIC SERVICE FOUR CORNERS	5	RETROFIT	755.0	LIME UNITED ENGINEERS	0/82
BASIN ELECTRIC POWER COOP LARAMIE RIVER	3	NEW	600.0	LIME/SPRAY DRYING BABCOCK & WILCOX	7/81
HOOSIER ENERGY MEROM	1	NEW	441.0	LIMESTONE MITSUBISHI HEAVY INDUSTRIES	5/83
HOUSTON LIGHTING & POWER CO. W.A. PARISH	8	NEW	512.0	LIMESTONE VENDOR NOT SELECTED	11/82
PHILADELPHIA ELECTRIC CROMBY		RETROFIT	150.0	MAGNESIUM OXIDE UNITED ENGINEERS	6/80
PHILADELPHIA ELECTRIC EDDYSTONE	1B	RETROFIT	240.0	MAGNESIUM OXIDE UNITED ENGINEERS	6/80
PHILADELPHIA ELECTRIC EDDYSTONE	2	RETROFIT	334.0	MAGNESIUM OXIDE UNITED ENGINEERS	6/80
PUBLIC SERVICE OF INDIANA GIBSON	5	NEW	650.0	LIMESTONE PULLMAN KELLOGG	0/82
SOUTH CAROLINA PUBLIC SERVICE WINYAH	4	NEW	280.0	LIMESTONE AMERICAN AIR FILTER	7/81
SOUTHWESTERN ELECTRIC POWER HENRY W. PERKEY	1	NEW	720.0	LIMESTONE AIR CORRECTION DIVISION, UOP	12/84
TENNESSEE VALLEY AUTHORITY PARADISE	1	RETROFIT	704.0	LIMESTONE CHEMICO	6/82
TENNESSEE VALLEY AUTHORITY PARADISE	2	RETROFIT	704.0	LIMESTONE CHEMICO	3/82
TEXAS MUNICIPAL POWER AGENCY GIBBONS CREEK	1	NEW	400.0	LIMESTONE COMBUSTION ENGINEERING	1/82
TEXAS POWER & LIGHT TWIN OAKS	1	NEW	750.0	LIMESTONE CHEMICO	8/84
TEXAS POWER & LIGHT TWIN OAKS	2	NEW	750.0	LIMESTONE CHEMICO	8/85
TEXAS UTILITIES MARTIN LAKE	4	NEW	750.0	LIMESTONE RESEARCH COTTRELL	0/85
TUCSON GAS & ELECTRIC SPRINGERVILLE	1	NEW	370.0	LIME/SPRAY DRYING JOY MFG/NIRO ATOMIZER	0/85
TUCSON GAS & ELECTRIC SPRINGERVILLE	2	NEW	370.0	LIME/SPRAY DRYING JOY MFG/NIRO ATOMIZER	0/87
UTAH POWER & LIGHT HUNTER	3	NEW	400.0	LIMESTONE CHEMICO	0/83
UTAH POWER & LIGHT HUNTER	4	NEW	400.0	LIMESTONE CHEMICO	0/85
WISCONSIN POWER & LIGHT COLUMBIA	2	RETROFIT	316.0	LIME/ALKALINE FLYASH CHEMICO	1/82

SECTION 12
SUMMARY OF PLANNED FGD SYSTEMS

COMPANY NAME/ UNIT NAME	UNIT NO.	NEW OR RETROFIT	CAPACITY MW	PROCESS/ SYSTEM SUPPLIER	START-UP DATE
LETTER OF INTENT SIGNED					
NORTHERN INDIANA PUB SERVICE SCHAHFER	17	NEW	421.0	DUAL ALKALI FMC CORPORATION	6/83
NORTHERN INDIANA PUB SERVICE SCHAHFER	18	NEW	421.0	DUAL ALKALI FMC CORPORATION	6/85
REQUESTING/EVALUATING BIDS					
BASIN ELECTRIC POWER COOP ANTELOPE VALLEY	2	NEW	440.0	PROCESS NOT SELECTED VENDOR NOT SELECTED	11/83
CENTRAL ILLINOIS LIGHT DUCK CREEK	2	NEW	416.0	LIMESTONE VENDOR NOT SELECTED	1/86
MIDDLE SOUTH UTILITIES ARKANSAS COAL	5	NEW	890.0	PROCESS NOT SELECTED VENDOR NOT SELECTED	1/86
MIDDLE SOUTH UTILITIES ARKANSAS COAL	6	NEW	890.0	PROCESS NOT SELECTED VENDOR NOT SELECTED	1/88
MIDDLE SOUTH UTILITIES LOUISIANA COAL	1	NEW	890.0	PROCESS NOT SELECTED VENDOR NOT SELECTED	0/86
MIDDLE SOUTH UTILITIES LOUISIANA COAL	2	NEW	890.0	PROCESS NOT SELECTED VENDOR NOT SELECTED	0/88
MIDDLE SOUTH UTILITIES MISSISSIPPI COAL	1	NEW	890.0	PROCESS NOT SELECTED VENDOR NOT SELECTED	0/85
MIDDLE SOUTH UTILITIES MISSISSIPPI COAL	2	NEW	890.0	PROCESS NOT SELECTED VENDOR NOT SELECTED	0/87
MUSCATINE POWER & WATER MUSCATINE	9	NEW	160.0	PROCESS NOT SELECTED VENDOR NOT SELECTED	9/82
NORTHERN STATES POWER SHERBURNE	3	NEW	860.0	LIMESTONE COMBUSTION ENGINEERING	5/84
SEMINOLE ELECTRIC SEMINOLE	1	NEW	620.0	LIMESTONE VENDOR NOT SELECTED	6/83
SEMINOLE ELECTRIC SEMINOLE	2	NEW	620.0	LIMESTONE VENDOR NOT SELECTED	6/85
TAMPA ELECTRIC BIG BEND	4	NEW	475.0	PROCESS NOT SELECTED VENDOR NOT SELECTED	3/85
TENNESSEE VALLEY AUTHORITY JOHNSONVILLE	1-10	RETROFIT	600.0	MAGNESIUM OXIDE TVA/UNITED ENGINEERS	12/81
TEXAS UTILITIES FOREST GROVE	1	NEW	750.0	PROCESS NOT SELECTED VENDOR NOT SELECTED	0/81
CONSIDERING FGD SYSTEMS					
BIG RIVERS ELECTRIC D. B. WILSON	1	NEW	440.0	PROCESS NOT SELECTED VENDOR NOT SELECTED	0/84
BIG RIVERS ELECTRIC D. B. WILSON	2	NEW	440.0	PROCESS NOT SELECTED VENDOR NOT SELECTED	0/85
CENTRAL MAINE POWER SEARS ISLAND	1	NEW	600.0	LIME/LIMESTONE VENDOR NOT SELECTED	11/87
COLORADO UTE ELECTRIC ASSN. CRAIG	3	NEW	447.0	LIME/SPRAY DRYING VENDOR NOT SELECTED	0/82
COLUMBUS & SOUTHERN OHIO ELEC. POSTON	5	NEW	375.0	PROCESS NOT SELECTED VENDOR NOT SELECTED	0/83

SECTION 12
SUMMARY OF PLANNED FGD SYSTEMS

COMPANY NAME/ UNIT NAME	UNIT NO.	NEW OR RETROFIT	CAPACITY MW	PROCESS/ SYSTEM SUPPLIER	START-UP DATE
COLUMBUS & SOUTHERN OHIO ELEC. POSTON	6	NEW	375.0	PROCESS NOT SELECTED VENDOR NOT SELECTED	0/81
DELMARVA POWER & LIGHT VIENNA MARYLAND	9	NEW	550.0	LIMESTONE VENDOR NOT SELECTED	0/87
EAST KENTUCKY POWER COOP J. K. SMITH	1	NEW	650.0	PROCESS NOT SELECTED VENDOR NOT SELECTED	1/85
EAST KENTUCKY POWER COOP J. K. SMITH	2	NEW	650.0	PROCESS NOT SELECTED VENDOR NOT SELECTED	1/86
GENERAL PUBLIC UTILITIES COHO	1	NEW	800.0	PROCESS NOT SELECTED VENDOR NOT SELECTED	12/86
GENERAL PUBLIC UTILITIES GILBERT	1	NEW	625.0	PROCESS NOT SELECTED VENDOR NOT SELECTEDD	0/90
GENERAL PUBLIC UTILITIES SCOTTSVILLE	1	NEW	625.0	PROCESS NOT SELECTED VENDOR NOT SELECTEDD	0/91
GENERAL PUBLIC UTILITIES SEWARD	7	NEW	800.0	PROCESS NOT SELECTED VENDOR NOT SELECTED	12/97
GENERAL PUBLIC UTILITIES WEHRUM	1	NEW	625.0	PROCESS NOT SELECTED VENDOR NOT SELECTEDD	0/95
INDIANAPOLIS POWER & LIGHT PATRIOT	1	NEW	650.0	LIMESTONE VENDOR NOT SELECTED	0/87
INDIANAPOLIS POWER & LIGHT PATRIOT	2	NEW	650.0	LIMESTONE VENDOR NOT SELECTED	0/87
INDIANAPOLIS POWER & LIGHT PATRIOT	3	NEW	650.0	LIMESTONE VENDOR NOT SELECTED	0/87
LOUISVILLE GAS & ELECTRIC TRIMBLE COUNTY	1	NEW	575.0	PROCESS NOT SELECTED VENDOR NOT SELECTED	7/84
LOUISVILLE GAS & ELECTRIC TRIMBLE COUNTY	2	NEW	575.0	PROCESS NOT SELECTED VENDOR NOT SELECTED	7/86
NEVADA POWER HARRY ALLEN	1	NEW	500.0	PROCESS NOT SELECTED VENDOR NOT SELECTED	6/86
NEVADA POWER HARRY ALLEN	2	NEW	500.0	PROCESS NOT SELECTED VENDOR NOT SELECTED	6/87
NEVADA POWER HARRY ALLEN	3	NEW	500.0	PROCESS NOT SELECTED VENDOR NOT SELECTED	6/88
NEVADA POWER HARRY ALLEN	4	NEW	500.0	PROCESS NOT SELECTED VENDOR NOT SELECTED	6/89
NEVADA POWER REID GARDNER	4	NEW	250.0	PROCESS NOT SELECTED VENDOR NOT SELECTED	4/83
NEVADA POWER WARNER VALLEY	1	NEW	250.0	PROCESS NOT SELECTED VENDOR NOT SELECTED	6/85
NEVADA POWER WARNER VALLEY	2	NEW	250.0	PROCESS NOT SELECTED VENDOR NOT SELECTED	6/86
NEW YORK STATE ELEC & GAS SOMERSET	1	NEW	870.0	LIMESTONE VENDOR NOT SELECTED	6/84
PACIFIC GAS & ELECTRIC MONTEZUMA	1	NEW	800.0	LIMESTONE VENDOR NOT SELECTED	6/86
PACIFIC GAS & ELECTRIC MONTEZUMA	2	NEW	800.0	LIMESTONE VENDOR NOT SELECTED	6/87

SECTION 12
SUMMARY OF PLANNED FGD SYSTEMS

COMPANY NAME/ UNIT NAME	UNIT NO.	NEW OR RETROFIT	CAPACITY MW	PROCESS/ SYSTEM SUPPLIER	START-UP DATE
POTOMAC ELECTRIC POWER DICKERSON	4	NEW	800.C	PROCESS NOT SELECTED VENDOR NOT SELECTED	0/87
POWER AUTHORITY OF NEW YORK ARTHUR KILL		NEW	700.C	PROCESS NOT SELECTED VENDOR NOT SELECTED	11/87
SALT RIVER PROJECT CORONADO	3	NEW	280.0	LIMESTONE VENDOR NOT SELECTED	0/ 0
SOUTHERN ILLINOIS POWER COOP MARION	5	NEW	300.0	PROCESS NOT SELECTED VENDOR NOT SELECTED	0/84
TEXAS UTILITIES MILL CREEK	1	NEW	750.0	PROCESS NOT SELECTED VENDOR NOT SELECTED	0/85
TEXAS UTILITIES MILL CREEK	2	NEW	750.0	PROCESS NOT SELECTED VENDOR NOT SELECTED	0/86

SECTION 13
TOTAL FGD UNITS AND CAPACITY (MW) INSTALLED BY YEAR

YEAR	NEW ON LINE NO.	NEW ON LINE MW	TERMINATED NO.	TERMINATED MW	TOTAL ON LINE NO.	TOTAL ON LINE MW
1968	1	140.	0	0.	1	140.
1969	0	0.	1	140.	0	0.
1971	4	702.	0	0.	4	702.
1972	8	518.	0	0.	12	1220.
1973	8	1938.	1	175.	19	2983.
1974	3	606.	3	340.	19	3250.
1975	6	2018.	3	1637.	22	3631.
1976	8	2786.	3	850.	27	5567.
1977	11	4684.	1	47.	37	10204.
1978	13	4736.	0	0.	50	14940.
1979	20	6345.	1	23.	69	21262.
1980	25	9839.	0	0.	94	31101.
1981	11	5003.	0	0.	105	36104.
1982	16	7798.	0	0.	121	43902.
1983	7	3036.	0	0.	128	46938.
1984	9	5915.	0	0.	137	52853.
1985	12	6766.	0	0.	149	59619.
1986	9	5721.	0	0.	158	65340.
1987	12	7960.	0	0.	170	73300.
1988	4	3080.	0	0.	174	76380.
1989	2	875.	0	0.	176	77255.
1990	1	625.	0	0.	177	77880.
1991	1	625.	0	0.	178	78505.
1995	1	625.	0	0.	179	79130.
UNDEFINED	12	2242.				

SECTION 14
DESIGN AND PERFORMANCE DATA FOR OPERATIONAL PARTICLE SCRUBBERS

COMPANY NAME	COMMONWEALTH EDISON	
PLANT NAME	WILL COUNTY	
UNIT NUMBER	1	
CITY	ROMEOVILLE	
STATE	ILLINOIS	
REGULATORY CLASSIFICATION	*****	
PARTICULATE EMISSION LIMITATION - NG/J	86.	(.200 LB/MMBTU)
SO2 EMISSION LIMITATION - NG/J	774.	(1.800 LB/MMBTU)
NET PLANT GENERATING CAPACITY - MW	1147.0	
GROSS UNIT GENERATING CAPACITY - MW	167.0	
NET UNIT GENERATING CAPACITY W/FGD - MW	137.0	
NET UNIT GENERATING CAPACITY WO/FGD - MW	*******	
EQUIVALENT SCRUBBED CAPACITY - MW	*******	
** BOILER DATA		
SUPPLIER	BABCOCK & WILCOX	
TYPE	CYCLONE	
SERVICE LOAD	CYCLIC	
COMMERCIAL SERVICE DATE	0/51	
MAXIMUM BOILER FLUE GAS FLOW - CU.M/S	363.36	(770000 ACFM)
FLUE GAS TEMPERATURE - C	179.4	(355 F)
STACK HEIGHT - M	107.	(350 FT)
STACK TOP DIAMETER - M	3.8	(12.4 FT)
** FUEL DATA		
FUEL TYPE	COAL	
FUEL GRADE	******	
AVERAGE HEAT CONTENT - J/G	22260.	(9570 BTU/LB)
RANGE HEAT CONTENT - BTU/LB		9,100 - 10,500
AVERAGE ASH CONTENT - %	7.40	
RANGE ASH CONTENT - %	3 - 16	
AVERAGE MOISTURE CONTENT - %	********	
RANGE MOISTURE CONTENT - %	******	
AVERAGE SULFUR CONTENT - %	1.50	
RANGE SULFUR CONTENT - %	0.3 - 4.5	
AVERAGE CHLORIDE CONTENT - %	********	
RANGE CHLORIDE CONTENT - %	******	
** ESP		
NUMBER	1	
TYPE	COLD SIDE	
SUPPLIER	WESTERN PRECIPITATION	
PARTICULATE DESIGN REMOVAL EFFICIENCY - %	79.0	
FLUE GAS TEMPERATURE - C	179.4	(355 F)
** PARTICULATE SCRUBBER		
NUMBER	2	
TYPE	VENTURI	
SUPPLIER	BABCOCK & WILCOX	
SHELL MATERIAL	CARBON STEEL	
LINING MATERIAL	PLASITE AND KAOCRETE	
TYPE OF NOZZLES	STAINLESS STEEL	
FLUE GAS CAPACITY - CU.M/S	181.7	(385000 ACFM)
FLUE GAS TEMPERATURE - C	179.4	(355 F)
LIQUID RECIRCULATION RATE - LITER/S	365.4	(5800 GPM)
L/G RATIO - LITER/CU.M	2.4	(18.0 GAL/1000ACF)
PRESSURE DROP - KPA	*******	(***** IN-H2O)
SUPERFICIAL GAS VELOCITY - M/S	36.6	(120.0 FT/S)
PARTICULATE INLET LOAD - G/CU.M	.4	(.16 GR/SCF)
PARTICULATE DESIGN REMOVAL EFFICIENCY - %	98.0	

PERFORMANCE DATA

PERIOD	MODULE	AVAILABILITY	OPERABILITY	RELIABILITY	UTILIZATION	% REMOVAL SO2	% REMOVAL PART.	PER HOURS	BOILER HOURS	FGD HOURS	CAP. FACTOR
3/75	A	94.0	99.2		81.2						
	B	.0	.0		.0						
	SYSTEM							744	609		

COMMONWEALTH EDISON: WILL COUNTY 1 (CONT.)

PERIOD	MODULE	AVAILABILITY	OPERABILITY	RELIABILITY	UTILIZATION	% REMOVAL SO2	% REMOVAL PART.	PER HOURS	BOILER HOURS	FGD HOURS	CAP. FACTOR
		PERFORMANCE DATA									

** PROBLEMS/SOLUTIONS/COMMENTS
A VENTURI HOSE LEAK FORCED MODULE A OUT ONCE.
MODULE B WAS OUT OF SERVICE TWICE FOR NO DEMAND AND ONCE AS A RESULT OF AN ACCIDENTAL 50 MINUTE TRIP.
COAL BURNED THIS MONTH AVERAGED LESS THAN ONE PERCENT SULFUR.

4/75	A	37.0	39.5		35.0					
	B	.0	.0		.0					
	SYSTEM							720	638	

** PROBLEMS/SOLUTIONS/COMMENTS
CHICAGO FLY ASH IS TREATING MATERIAL FROM THE SCRUBBER WITH LIME AND FLY ASH AND DUMPING IT INTO THE HOLDING BASIN.
A BOILER OUTAGE FORCED MODULE A OUT OF SERVICE ONCE THIS MONTH (MODULE B WAS ALREADY OUT OF SERVICE).
COAL BURNED THIS MONTH WAS RECLAIM COAL AND VARIED IN SULFUR CONTENT.

5/75	A	84.5	84.5		84.5					
	B	37.1	37.1		37.1					
	SYSTEM							744	744	

** PROBLEMS/SOLUTIONS/COMMENTS
MODULE B WAS IN SERVICE ON MAY 20 FOR THE FIRST TIME SINCE APRIL 13, 1973.
RECIRCULATION TANK MIXERS.
MODULE A (WHICH WAS THE ONLY ONE OPERATING) WAS FORCED OUT TWICE IN APRIL TO AVOID POND OVERBOARDING INTO THE DES PLAINES RIVER. THE SECOND OUTAGE LASTED UNTIL MAY 5. DURING THE PAST SEVERAL MONTHS OF GENERALLY CONTINUOUS OPERATION OF MODULE A. IT HAS BECOME APPARENT THAT THE PRESENT LIQUID CIRCULATING SYSTEM CANNOT BE OPERATED IN A CONTINUOUSLY CLOSED CYCLE. THE WATER IMBALANCE POSES A HIGH RISK OF OVERBOARDING FROM THE SLUDGE POND DURING LONG PERIODS OF SUSTAINED OPERATON. THE FOLLOWING REVISIONS HAVE BEEN MADE TO REDUCE THE WATER IMBALANCE:
1. THE PUMP GLAND WATER FLOWS HAVE BEEN CUT FROM 10 GPM TO 5 GPM.
2. THE SCRUBBER HOUSE SERVICE WATER FILTER BACKWASH HAS BEEN ROUTED OUT OF THE SYSTEM.
3. THE CONTINUOUS UNDERSPRAY HAS BEEN CHANGED TO AN INTERMITTENT SPRAY 5 MINUTES ON, 5 MINUTES OFF.

THE THICKENER HAS BEEN DOWN SINCE APRIL 21 DUE TO A BROKEN GEAR AND A STUCK SWEEP ARM. THE THICKENER HAS BEEN BYPASSED AND THE SLUDGE IS GOING TO THE POND.
DURING MAY, MODULE A WAS OUT FOR 45 MINUTES DUE TO A DAMPER TRIP.
MODULE A WAS OUT ONCE FOR SPRAY NOZZLE CLEANING.
MODULE B WAS OUT TWICE AFTER START UP, ONCE FOR A VENTURI PUMP TRIP AND ONCE FOR A RECIRCULATION TANK LEVEL TRIP.
CHICAGO FLY ASH IS TREATING THE MATERIAL FROM THE SCRUBBER WITH LIME AND FLY ASH AND DUMPING IT INTO THE HOLDING BASIN. A MIXER HAS BEEN INSTALLED AT THE THICKENER, WHICH ENABLES THEM TO SUBSTITUTE SEALED DUMP TRUCKS FOR THE CEMENT TRUCKS WHICH WERE USED IN THE PAST FOR MIXING AND TRANSPORTING THE WASTE MATERIAL TO THE HOLDING BASIN.
COAL BURNED THIS MONTH VARIED GREATLY IN SULFUR CONTENT, RANGING FROM LOW SULFUR WESTERN COAL TO HIGH SULFUR ILLINOIS COAL.

6/75	A	34.1	60.6		54.1					
	B	85.5	84.6		75.4					
	SYSTEM							720	642	

** PROBLEMS/SOLUTIONS/COMMENTS
A REHEATER PLUGGAGE INSPECTION FORCED ONE MODULE A OUTAGE.
A LOW LEVEL TRIP CAUSED A 35 MINUTE OUTAGE, AND NO DEMAND ACCOUNTED FOR TWO MORE MODULE A OUTAGES.
MODULE B WAS OUT FOR 95 HOURS TO CLEAN THE BOOSTER FAN AND DEMISTER.
HIGH BOOSTER FAN VIBRATIONS CAUSED MODULE B TO SHUT DOWN ON JUNE 30.
DURING THIS MONTH HIGH SULFUR COAL WAS BURNED IN A TWO WEEK TEST, AND LOW SULFUR COAL WAS BURNED THE REST OF THE MONTH.

7/75	A	.0	.0		.0					
	B	79.2	79.4		73.5					
	SYSTEM							744	689	

PERFORMANCE DATA

PERIOD	MODULE	AVAILABILITY	OPERABILITY	RELIABILITY	UTILIZATION	% REMOVAL SO2	% REMOVAL PART.	PER HOURS	BOILER HOURS	FGD HOURS	CAP. FACTOR
	** PROBLEMS/SOLUTIONS/COMMENTS										
		CHICAGO FLY ASH IS TREATING THE SCRUBBER WASTE MATERIAL WITH LIME AND FLY ASH AND DUMPING IT INTO THE ON SITE HOLDING BASIN. THE MATERIAL FROM THE HOLDING BASIN IS BEING TRUCKED TO AN OFF SITE DUMP. MODULE B WAS OUT ONCE (30 MINUTES) TO REPAIR A MINOR STEAM HEADER LEAK. MODULE B WAS OUT ONCE DUE TO NO DEMAND. LOW SULFUR COAL WAS BURNED MOST OF THIS MONT, WITH HIGH SULFUR COAL BEING BURNED DURING THE LAST WEEK OF THE MONTH.									
8/75	A	.0	.0		.0						
	B	93.5	100.0		76.4						
	SYSTEM							744	565		
	** PROBLEMS/SOLUTIONS/COMMENTS										
		IN JUNE, MODULE A ENCOUNTERED PLUGGAGE IN THE DEMISTER, WHICH REQUIRED ITS REPLACEMENT. THE WORK WAS COMPLETED IN AUGUST. MODULE A WENT OUT OF SERVICE ON JUNE 20 AND REMAINED OUT THROUGH AUGUST DUE TO MASSIVE REHEATER LEAKS. THERE IS PRESENTLY A HOLD ON THE NEW REHEATER ORDER BECAUSE OF MATERIAL FAILURES EXPERIENCED IN MODULE B'S CARBON STEEL REHEATER. MODULE B SUFFERED TWO OUTAGES IN JULY AND ONE IN AUGUST BECAUSE OF REHEATER TUBE LEAKS. THE FAILURES WERE DUE TO VIBRATION FATIGUE. THE REHEATER, WHICH WAS INSTALLED IN MAY, HAS LOST SIX OF ITS TWELVE TUBE BUNDLES SO FAR. THE LENGTH OF TIME THAT THE TUBES HAVE LASTED WOULD SEEM TO INDICATE THAT THERE IS A DIESIGN RELATED MATERIAL DEFICIENCY. THREE OF THE TUBE BUNDLES WERE REPLACED WITH MARGINAL BUNDLES LEFT OVER FROM MODULE A. A SMALL STEAM HEADER LEAK CAUSED ONE MODULE B OUTAGE. MODULE B WAS OUT FOUR TIMES FOR NO DEMAND AND ONCE FOR A LOW FLOW TRIP. HIGH SULFUR COAL WAS BURNED ALL MONTH, CAUSING AN INCREASE IN SLUDGE PRODUCTION WHICH HAS FORCED A MINIMUM SIX DAY A WEEK, TEN HOUR A DAY SLUDGE DISPOSAL OPERATION. THE SLUDGE IS BEING TREATED WITH LIME AND FLY ASH AND BEING DUMPED INTO THE ON SITE HOLDING POND. STABILIZED MATERIAL IS BEING TRUCKED FROM THE POND TO AN OFF SITE DISPOSAL AREA.									
9/75	A										
	B										
	SYSTEM							720			
10/75	A	.0	.0		.0						
	B	32.3	100.0		26.6						
	SYSTEM							744	194		
	** PROBLEMS/SOLUTIONS/COMMENTS										
		MODULE A WAS OFF THE ENTIRE 11 DAYS THE BOILER OPERATED THIS MONTH, WAITING FOR ITS NEW REHEATER, WHICH HAS NOW BEEN RELEASED FOR MANUFACTURING BY SMED. MODULE B HAD TWO OUTAGES, ONE FOR NO DEMAND AND ONE MINOR 15 MINUTE TRIP. HIGH SULFUR COAL WAS BURNED THIS MONTH WHEN THE SCRUBBER WAS IN SERVICE. THE SLUDGE IS BEING TREATED WITH LIME AND FLY ASH AND HAULED TO AN OFF SITE DISPOSAL AREA.									
11/75	A	.0			.0						
	B	.0			.0						
	SYSTEM							720	0		
12/75	A	.0			.0						
	B	.0			.0						
	SYSTEM							744	0		
1/76	A	.0			.0						
	B	.0			.0						
	SYSTEM							744	0		
2/76	A	.0			.0						
	B	.0			.0						
	SYSTEM							696	0		
3/76	A	30.1	45.2		18.8						

COMMONWEALTH EDISON: WILL COUNTY 1 (CONT.)

PERIOD	MODULE	AVAILABILITY	OPERABILITY	RELIABILITY	UTILIZATION	% REMOVAL SO2	% REMOVAL PART.	PER HOURS	BOILER HOURS	FGD HOURS	CAP. FACTOR
	B	8.8	20.4		8.5						
	SYSTEM							744	309		

** PROBLEMS/SOLUTIONS/COMMENTS

UNIT 1 WAS DOWN FROM OCTOBER 11 THROUGH MARCH 19 FOR ITS BOILER TURBINE AND SCRUBBER OVERHAUL. THE MAJOR ITEMS TO BE ACCOMPLISHED DURING THE OUTAGE WERE:

1. SIMPLIFICATION OF THE MILLING SYSTEM CONTROL.
2. PULLING AND CLEANING OF THE MODULE B REHEATER AND RETURNING IT REPLACED WITH MARGINAL BUNDLES LEFT OVER FROM MODULE A.
3. CLEANING OF THE POND PUMP BAY.
4. REMOVAL OF THE VENTURI AND ABSORBER PUMP CHECK VALVES (ONE OF THEM FAILED LAST SPRING AND DESTROYED A PUMP LINER AND IMPELLER).
5. CLEANING AND REPAIR OF THE VENTURI NOZZLES AND SUPPORTS.
6. REPAIR OF CORRODED REHEATER SUPPORTS.
7. RESETTING AND ADJUSTMENT OF ALL DAMPERS.
8. REVISION OF SCRUBBER CONTROLS BY REMOVING THE CONTROLS NO LONGER USED OR NEEDED.
9. INSPECTION AND CLEANING OF THE ENTIRE SCRUBBER AND RELATED EQUIPMENT.

MODULE A WAS PUT INTO THE GAS PATH ON MARCH 22 AND REMAINED AVAILABLE FOR SERVICE THE REST OF THE MONTH.
MODULE B HAD TO REMAIN OUT OF SERVICE UNTIL MARCH 29 WHILE ITS REPAIRED REHEATER WAS INSTALLED.

PERIOD	MODULE	AVAILABILITY	OPERABILITY	RELIABILITY	UTILIZATION	% REMOVAL SO2	% REMOVAL PART.	PER HOURS	BOILER HOURS	FGD HOURS	CAP. FACTOR
4/76	A	23.0	20.0		19.2						
	B		49.3		47.3						
	SYSTEM							720	691		

** PROBLEMS/SOLUTIONS/COMMENTS

UNIT 1 RETURNED TO SERVICE APRIL 2 AFTER A SHORT TURBINE CONTROL OUTAGE.
BOTH MODULES CAME ON LINE JUST BEFORE THE BOILER.
A FIVE DAY OUTAGE OF MODULE B WAS DUE TO REHEATER TUBE BUNDLE LEAKS.
SEVERAL MODULE B OUTAGES WERE DUE TO PLUGGED ABSORBER TANK SCREENS CAUSED BY MILL AND CLASSIFIER FAILURES WHICH ALLOWED ROCK TO GET INTO THE SYSTEM.
MODULE B WAS THOROUGHLY CLEANED.
ONLY ONE ABSORBER PUMP IS BEING USED IN MODULE B, SINCE THE 1B2 PUMP LINER FAILED AS A RESULT OF A BROKEN DISCHARGE VALVE. A REPLACEMENT LINER IS BEING INSTALLED.
A SCRUBBER TESTING AND EVALUATING PROGRAM WAS STARTED THIS MONTH. MUCH OF THE LATTER TWO WEEKS OF THE MONTH WERE SPENT TRAINING THE TESTING PERSONNEL. THE PROGRAM WILL PROVIDE CHEMISTRY DATA AND OPERATING CHARACTERISTICS

PERIOD	MODULE	AVAILABILITY	OPERABILITY	RELIABILITY	UTILIZATION	% REMOVAL SO2	% REMOVAL PART.	PER HOURS	BOILER HOURS	FGD HOURS	CAP. FACTOR
5/76	A	.0	.0		.0						
	SYSTEM							744	665		

** PROBLEMS/SOLUTIONS/COMMENTS

A VENTRUI HOSE LEAK FORCED MODULE B OFF ONCE THIS MONTH.
MODULE B WAS TAKEN OUT OF SERVICE ONCE BECAUSE OF A PLUGGED ABSORBER TANK SCREEN.
MODULE B WAS OFF ONCE DUE TO A FOULED I.D. FAN.
MODULE B WAS OUT OF THE GAS PATH ONCE DUE TO NO DEMAND.

PERIOD	MODULE	AVAILABILITY	OPERABILITY	RELIABILITY	UTILIZATION	% REMOVAL SO2	% REMOVAL PART.	PER HOURS	BOILER HOURS	FGD HOURS	CAP. FACTOR
6/76	A	52.0	44.2		37.6						
	B	86.2	84.5		71.9						
	SYSTEM							720	612		

** PROBLEMS/SOLUTIONS/COMMENTS

MODULE A SUFFERED VENTURI PUMP LINER FAILURES ON APRIL 78 WHEN AN INLET 16 INCH BUTTERFLY ISOLATION VALVE BROKE APART AND FELL INTO THE VENTURI PUMP. BOTH THE A AND BACKUP AB VENTURI PUMP LINERS WERE DESTROYED. MODULE A REMAINED OUT SERVICE UNITL JUNE 9, WHEN THE LINERS WERE REPLACED.
MODULE A WAS OFF ONCE FOR SHEARED BYPASS DAMPER PINS.
I.D. BOOSTER FAN FOULING FORCED MODULE A OFF ONCE THIS MONTH FOR ABOUT 164 HOURS.
BOTH MODULES WERE OFF TWICE DUE TO NO DEMAND. DURING THESE OUTAGES, THE DEMISTERS WERE WASHED AND ABSORBER TRAY SCALE, IF ANY, WAS KNOCKED OFF.
MODULE B WAS OUT OF THE GAS PATH FOR SEVERAL SHORT VENTURI LOW FLOW TRIP OUTAGES DUE TO A PLUGGED, SCALED VENTURI TANK SCREEN. AT THE END OF THE MONTH, THE MODULE WAS TAKEN OUT TO CLEAN THE SCREEN.

PERIOD	MODULE	AVAILABILITY	OPERABILITY	RELIABILITY	UTILIZATION	% REMOVAL SO2	% REMOVAL PART.	PER HOURS	BOILER HOURS	FGD HOURS	CAP. FACTOR
		PERFORMANCE DATA									

THE MODULE B I.D. BOOSTER FAN REQUIRED CLEANING DURING THE MONTH.
THE REHEATER TUBES ARE SCALING, WHICH RESULTS IN A LOWER HEAT TRANSFER RATE RATE, AND THEREFORE INCREASES I.D. BOOSTER FAN FOULING. THE ONLY WAY TO CLEAN THE REHEATERS EFFECTIVELY IS TO REMOVE THEM, WHICH DEMANDS A SUBSTANTIAL OUTAGE.

7/76	A	19.9		.0		.0					
	B	86.2		90.0		72.3					
	SYSTEM								744	598	

** PROBLEMS/SOLUTIONS/COMMENTS
MODULE A WAS OFF THE FIRST PART OF THE MONTH DURING REPAIRS TO THE ABSORBER
THE LATTER PART OF THE MONTH THE MODULE WAS READY FOR SERVICE BUT WAS NOT OPERATED BECAUSE OF THICKENER-POND SLUDGE OVERLOADING.
MODULE B WAS FORCED OFF ONCE TO BALANCE THE I.D. BOOSTER FAN, AND ONCE TO WASH THE FAN.
MODULE B WAS OUT OF THE GAS PATH TWICE DUE TO NO DEMAND.

8/76	A	98.2		57.6		38.3					
	B	65.4		61.4		40.9					
	SYSTEM								744	495	

** PROBLEMS/SOLUTIONS/COMMENTS
MODULE A WAS OUT OF THE GAS PATH THE FIRST HALF OF THE MONTH T AVOID THICKENER-POND OVERLOADING.
DURING THE LATTER HALF OF THE MONTH, MODULE A WAS USED WITH THREE MINOR FORCED OUTAGES AND ONE FOUR DAY NO DEMAND OUTAGE.
MODULE B WAS OUT OF THE GAS PATH THREE TIMES DUE TO NO DEMAND.
LOSS OF CHEMICAL CONTROL CAUSED TWO MODULE A OUTAGES.
MODULE B WAS OFF FOR NINE DAYS DUE TO FOULING.
SPENT SLURRY VALVE REPAIRS FORCED A MODULE B OUTAGE.
ON AUGUST 12 THE OPERATING PH CONTROL SET POINT WAS REDUCED FROM 5.4 TO 5.1. IT IS BELIEVED THAT THIS LOWER PH IS THE CAUSE OF THE FOULING OUTAGE OF MODULE B ON AUGUST 21. MODULE A WAS ALSO OPERATED FOR THREE DAYS, AND IT, TOO, EXPERIENCED INCREASED SACLE FOULING. THE PH SET POINT WAS THEN INCREASED BACK TO 5.4.

9/76	A	42.3		28.7		22.6					
	B	79.4				59.9					
	SYSTEM								720	566	

** PROBLEMS/SOLUTIONS/COMMENTS
MODULE A WENT OFF ONCE DUE TO A LOW FLOW TRIP.
MODULE A WAS TAKEN OFF ONCE FOR CLEANING OF THE RECIRCULATION TANK AND PUMPS, AND INSPECTION OF PUMP ISOLATION VALVES.
A LINER LEAK IN 1A2 ABOSORBER PUMP ALSO FORCED MODULE A OFF.
MODULE A WAS OUT OF TH GAS PATH TWICE DUE TO NO DEMAND.
MODULE A WAS TAKEN OFF ONCE TO AVOID THICKENER-POND OVERLOADING.
SPENT SLURRY VALVE TROUBLE CAUSED TWO MODULE B OUTAGES.

10/76	A	27.9		28.9		37.9					
	B	76.4		56.2		54.8					
	SYSTEM								744	726	

** PROBLEMS/SOLUTIONS/COMMENTS
HIGH SULFUR ILLINOIS COAL WAS BURNED IN THE BOILER FROM MARCH THROUGH OCTOBER.
THE SCRUBBER WASTE MATERIAL WAS TREATED WITH LIME AND FLY ASH AND HAULED TO AN OFF SITE DISPOSAL AREA.
MODULE A OPERATED ON ONE ABSORBER PUMP, ALLOWING TESTING ON A LOWER ABSORBER FAN.
MODULE A WAS OUT OF THE GAS PATH ONCE FOR AN I.D. BOBOOSTER FAN TRIP.
WORK ON RECIRCULATION TANK LEVEL CONTROLS CAUSED A MODULE A OUTAGE.
MODULE B WAS FORCED OFF ONCE TO REPAIR A REHEATER HEADER LEAK.
ONE MODULE B OUTAGE WAS FOR VENTURI NOZZLE CLEANING.
MODULE B WENT OFF FOR A VENTURI LOW FLOW TRIP.
MODULE B REMAINED OUT OF SERVICE WHILE MODULE A WAS BEING TESTED TO AVOID THICKENER-POND OVERLOADING.
A VACUUM FILTER WAS TIED IN AT THE THICKENER.

COMMONWEALTH EDISON: WILL COUNTY 1 (CONT.)

PERIOD	MODULE	AVAILABILITY	OPERABILITY	RELIABILITY	UTILIZATION	% REMOVAL SO2	% REMOVAL PART.	PER HOURS	BOILER HOURS	FGD HOURS	CAP. FACTOR
		PERFORMANCE DATA									
11/76	A	20.1	25.6		20.1						
	B	72.2	69.6		4.7						
	SYSTEM							720	566		

** PROBLEMS/SOLUTIONS/COMMENTS
MODULE A OPERATED ON ONE ABSORBER PUMP DURING MODULE B OUTAGE.
MODULE B WAS FORCED OUT OF THE GAS PATH ONCE FOR A MILLING SYSTEM FAILURE.
MODULE B ENCOUNTERED A VENTURI HEADER LEAK.
THE VENTURI NOZZLES REQUIRED CLEANING DURING THE MONTH.
REPLACEMENT OF THE SPENT SLURRY VALVE NECESSITATED A MODULE OUTAGE.
MODULE B WAS OFF ONCE DUE TO A CHEMICAL SYSTEM UPSET.
MODULE B WAS OUT OF THE GAS PATH TWICE DUE TO NO DEMAND (MODULE A WAS NOT IN SERVICE AT THE TIME OF THE OUTAGE).

12/76	A	44.9	48.3		44.9						
	B	53.4	51.7		48.0						
	SYSTEM							744	692		

** PROBLEMS/SOLUTIONS/COMMENTS
DURING THE LAST WEEK OF NOVEMBER, THE 1A2 ABSORBER PUMP WAS TAKEN OUT OF SERVICE FOR OVERHAUL. THE REPAIRS WERE COMPLETED ON DECEMBER 6, WHEN THE MODULE ASSUMED A ONE ABSORBER PUMP STANDBY CAPABILITY UNTIL THE 1A1 ABSORBER PUMP CAN BE REPAIRED.
DURING THE LAST HALF OF THE MONTH, MODUELE A OPERATED WHILE MODULE B WAS BEING REPAIRED.
MODULE B PERFORMED SATISFACTIORILY DURING THE FIRST HALF OF THE MONTH, EXPERIENCING ONLY ONE NO DEMAND OUTAGE. ON THE 17TH, HOWEVER, THE SPENT SLURRY VALVE FAILED AND THE MODULE HAS REMAINED OUT OF SERVICE.

1/77	A	98.2	98.7		95.8						
	B	13.5	1.1		1.1						
	SYSTEM							744	722		

** PROBLEMS/SOLUTIONS/COMMENTS
THE 1A1 ABSORBER PUMP WENT OUT IN LATE SEPTEMBER WITH BURNED OUT BEARINGS AND REMAINED OUT THROUGH JANUARY WAITING FOR PARTS.
LOW SULFUR COAL WAS BURNED IN THE BOILER FROM NOVEMBER THROUGH JANUARY.
DUE TO THE LOW VOLUME OF SLUDGE PRODUCED WHILE BURNING LOW SULFUR COAL, MUCH OF THE SLUDGE HANDLING TIME WAS SPENT DIGGING OUT THE ACCUMULATED SLUDGE IN THE RECIRCULATION PONDS. THIS MATERIAL, ALONG WITH SCRUBBER WASTE MATERIAL, WAS TREATED WITH LIME AND FLYASH AND HAULED TO AN OFF SITE DISPOSAL AREA.
MODULE A WAS FORCED OUT ONCE BY A FAILED SPENT SLURRY VALVE.
PLUGGED DEMISTER UNDERSPRAYS CAUSED ANOTHER MODULE A OUTAGE.
MODULE A WENT OUT ONCE BECAUSE OF NO DEMAND AND ONCE DUE TO A BOILER OUTAGE (MODULE B WAS ALREADY OUT OF SERVICE FOR REPAIRS).
MODULE B BECAME AVAILABLE FOR SERVICE ON JANUARY 27, AFTER REPAIRS TO THE SPENT SLURRY VALVE WERE COMPLETED. DUE TO SEVERE WEATHER CONDITIONS, THE MODULE WAS PLACED IN THE GAS PATH JANUARY 31.

2/77	A	38.8	42.6		38.8						
	B	72.0	45.7		41.7						
	SYSTEM							672	613		

** PROBLEMS/SOLUTIONS/COMMENTS
THERE WAS VERY LITTLE DIGGING IN THE RECIRCULATION PONDS. CHICAGO FLYASH SPENT MOST OF THEIR TIME ON CLEANING AND MAINTENANCE.

3/77	A	96.9	66.7		64.2						
	B	80.9	75.5		73.9						
	SYSTEM							744	728		

** PROBLEMS/SOLUTIONS/COMMENTS
AN ERT SO2 ANALYZER WAS INSTALLED ON THE DISCHARGE SIDE OF MODULE B I.D. BOOSTER FAN. THIS IS AN "IN SITU" ON-DISPERSIVE ANALYZER THAT CONTINUALLY MEASURES AND READS OUT CONCENTRATIONS OF SO2, CO, CO2, AND NO.
AN ABSORBER SUCTION HEADER LEAK FORCED MODULE B FROM THE GAS PATH.
MODULE B WAS FORCED OUT DUE TO A SLURRY VALVE GASKET LEAK.

PERIOD	MODULE	AVAILABILITY	OPERABILITY	RELIABILITY	UTILIZATION	% REMOVAL SO2	% REMOVAL PART.	PER HOURS	BOILER HOURS	FGD HOURS	CAP. FACTOR
			PERFORMANCE DATA								

A PLUGGED FEED SLURRY RECIRCULATION LINE WAS ENCOUNTERED IN MODULE B.
HIGH SULFUR COAL WAS BURNED FOR SEVEN DAYS THIS MONTH TO PROVIDE HIGH SULFUR SLUDGE FOR THE UOP SLUDGE TEST.
CHICAGO FLYASH SPENT 75% OF THEIR TIME DIGGING IN THE POND. THE REST WAS SPENT ON THE THICKENER AND VACUUM FILTER OPERATION. THE SCRUBBER WASTE MATERIAL WAS TREATED WITH LIME FLYASH AND HAULED OFF SITE.
DISPOSAL AREA.

4/77	A	86.1	67.7		61.2						
	B	45.5	30.2		27.3						
	SYSTEM								720	650	

** PROBLEMS/SOLUTIONS/COMMENTS

THE PERFORMANCE OF THE ERT SO2 ANALYZER TO DATE HAS BEEN, AT BEST, UNRELIABLE AND INCONSISTENT. THE ERT TECHNICIANS ARE OUT TO SERVICE THE ANALYZER ALMOST EVERY OTHER DAY. THE PROBLEM, ACCORDING TO ERT TECHNICIANS, IS OF A "THERMAL NATURE". WHEN THE ANALYZER REACHES A CERTAIN TEMPERATURE, A CHIP SHORTS OUT. THEY HAVE NOT BEEN ABLE TO LOCATE THE FAULTY INTEGRATED CIRCUIT YET.
A BOILER TUBE LEAK REPAIR FORCED MODULE A OUT OF THE GAS PATH ONCE THIS MONTH (MODULE B WAS ALREADY DOWN FOR REPAIRS).
MODULE B WAS FORCED OUT OF THE GAS PATH TWICE FOR AN ABSORBER SUCTION HEADER LEAK REPAIR.
MODULE B WAS OUT OF SERVICE ONCE TO WASH THE I. D. BOOSTER FAN.
CHICAGO ADMIXTURES SPENT MOST OF THEIR TIME DIGGING IN THE SMALL POND, GETTING READY FOR THE MGO ADDITION AND FORCED OXIDATION TEST. THE SCRUBBER WASTE MATERIAL WAS TREATED WITH LIME AND FLYASH AND HAULED TO AN OFF SITE DISPOSAL AREA.

5/77	A	89.4	2.2		2.0						
	B	98.0	50.9		47.3						
	SYSTEM								744	691	

** PROBLEMS/SOLUTIONS/COMMENTS

THE ERT SO2 ANALYZER HAS BEEN REMOVED FROM SERVICE DUE TO A POOR PERFORMANCE RECORD OVER THE LAST THREE MONTHS. ERT IS IN THE PROCESS OF RE-ENGINEERING THEIR ANALYZER.
THE MGO ADDITION TEST WENT WELL. ALTHOUGH THE MGO INCREASED SO2 REMOVAL EFFICIENCY ABOUT 10%, IT DID PRACTICALLY NOTHING FOR THE TWO MORE SERIOUS PROBLEMS, SINCE THICKENER AND SLUDGE PRODUCTION AND LIMESTONE CONSUMPTION RATE WERE ABOUT THE SAME.
MODULE A WAS FORCED OUT OF THE GAS PATH ONCE THIS MONTH WHEN THE INLET VALVE ON 1A2 ABSORBER PUMP FAILED.
MODULE B WAS TAKEN OFF TO CLEAN AND INSPECT THE REHEATER TUBES.
BOTH MODULES WERE FORCED OFF FOR THE FIRST FIFTEEN DAYS OF THE MONTH DUE TO A FAILED 120V CONTROL TRANSFORMER FOR THE POND RETURN PUMPS. THE TRANSFORMER HAD TO BE ORDERED FROM WESTINGHOUSE.
HIGH SULFUR COAL HAS BURNED FOR ELEVEN DAYS DURING THE MONTH.

6/77	A	31.8	13.3		10.5						
	B	93.2	93.4		73.5						
	SYSTEM								720	566	

** PROBLEMS/SOLUTIONS/COMMENTS

THE 1A1 ABSORBER PUMP IS STILL OUT OF SERVICE WAITING FOR PARTS 1A2 ABSORBER PUMP'S ISOLATION VALVES FORCED MODULE A OFF FOR MOST OF THE MONTH.
MODULE A HAD ONE NO DEMAND AND ONE BOILER OUTAGE THIS MONTH.
MODULE B WAS ALSO FORCED OFF TO CLEAN THE I.D. BOOSTER FAN.
NO HIGH SULFUR COAL WAS BURNED THIS MONTH.

7/77	B	70.3	41.4		21.0						
	SYSTEM								744	377	

** PROBLEMS/SOLUTIONS/COMMENTS

HIGH SULFUR COAL HAS BURNED FOR EIGHT DAYS THIS MONTH. LIMESTONE OPERATION WAS NORMAL FOR HIGH SULFUR OPERATION.
MODULE B WAS FORCED OUT OF THE GAS PATH ONCE TO REMOVE A PLUGGED DIFFUSER.
THE FINAL TEST, FORCED OXIDATION SEEMED TO BE THE MOST SUCCESSFUL OF ALL. USING LIQUID OXYGEN, UP TO 12,000 CFM OF GASEOUS O2 WAS FED INTO EACH VENTURI DOWNCOMER, OXIDATION OF SULFITE TO SULFATE WAS INCREASED FROM

COMMONWEALTH EDISON: WILL COUNTY 1 (CONT.)

PERIOD	MODULE	AVAILABILITY	OPERABILITY	RELIABILITY	UTILIZATION	% REMOVAL SO2	% REMOVAL PART.	PER HOURS	BOILER HOURS	FGD HOURS	CAP. FACTOR
			PERFORMANCE DATA								
		35 TO 90 %									
		MODULE B WAS ALSO FORCED OFF DUE TO A LOW LEVEL IN THE SLURRY STORAGE TANK.									
		MODULE B WAS ALSO FORCED OFF DUE TO REHEATER TUBE BUNDLE LEAKS.									
8/77	A	99.8	99.6		80.8						
	B	9.7	12.0		9.7						
	SYSTEM							744	604		
	** PROBLEMS/SOLUTIONS/COMMENTS										
		MODULE A WAS AVAILABLE THE ENTIRE MONTH WITH JUST THE VENTURI PUMP OPERATING.									
9/77	A	61.0	77.8		54.0						
	B	62.3	75.4		52.3						
	SYSTEM							720	499		
	** PROBLEMS/SOLUTIONS/COMMENTS										
		MODULE B ENCOUNTERED HIGH VIBERATIONS IN ITS BOOSTER FAN DURING THE FIRST WEEK OF THE MONTH. AFTER THE FAN WAS BALANCED, THE MODULE OPERATED INTIL THE UNIT OUTAGE ON SEPTEMBER 21.									
10/77	A	.0			.0						
	B	.0			.0						
	SYSTEM							744	0		
11/77	A	.0			.0						
	B	8.8	50.1		8.8						
	SYSTEM							720	126		
	** PROBLEMS/SOLUTIONS/COMMENTS										
		UNIT ONE CAME UP ON NOVEMBER 25 AFTER A SIXTY-THREE DAY OUTAGE. MODULE B IS IN THE GAS PATH FATER EXPERIENCING SOME DIFICULTY IN BALANCING ITS BOOSTER FAN.									
12/77	A	62.5	42.5	47.8	42.5						
	B	84.1	84.1	94.6	84.1						
	SYSTEM							744	661		
	** PROBLEMS/SOLUTIONS/COMMENTS										
		PLUGGAGE WAS ENCOUNTERED IN TH EMODULE B REHEATER. BECAUSE NO SPARE REHRAT COILS WERE AVAILABLE, THE UTILITY TRIED TAKING SOME COILS FROM MODULE A MODULE B APPEARED TO BE MORE ORE SEVERELY PLUGGED THAN ORIGINALLY THOUGHT. MODULE A WAS DOWN HALF THE MONTH BECAUSE OF A MAIN STEAM LEAK WHICH COULD NOT BE ISOLATED. MODULE A OPERATED UNTIL SEPTEMBER 19, WH E A COMBINATION OF MUD AND SCALE BUILD-UP ON THE SUMP FLOOR STRUCTURALLY DAMAGED THE MODULE. REPAIRS PUT THE MODULE OUT OF SERVICE UNTIL MID DECEMBER.									
1/78	A	69.0	89.9		66.3						
	B	22.0	29.8		22.0						
	SYSTEM							744	549		
	** PROBLEMS/SOLUTIONS/COMMENTS										
		ON JANUARY 7, THE MODULE B I.D. BOOSTER FAN DISCHARGE DUCT STARTED VIBRATING WILDLY. THIS FORCED THE BOILER OFF WHILE THE SHOP MADE REPAIRS TO THE DUCTWORK AND BALANCED THE FAN WITH AN I.R.D. MACHINE. WHEN THE UTILITY ATTEMPTED TO PUT MODULE B BACK IN THE GAS PATH, A LEAK IN THE SLURRY LINE FORCED IT BACK OFF. A PLUGGED VENTURI PUMP FORCED MODULE B OFF THE REST OF THE MONTH. DURING THE OUTAGE, THE REHEATER COILS WERE CLEANED WITH A HIGH PRESSURE (5000 LB) SPRAYER. MODULE A WAS FORCED OFF WHEN A STEAM REGULATING VALVE BLEW ITS PACKING. ON THE 23RD, BOTH MODULES WERE TAKEN OFF AND DRAINED TO ALLOW THE SHOP TO INSTALL NEW ISOLATION VALVES IN THE ABSORBER AND VENTURI PUMPS. TOWARD THE END OF THE MONTH, SOME PROBLEMS WERE ENCOUNTERED WITH THE POND RETURN PUMPS FREEZING.									
2/78	A	60.9	56.5		34.4						
	B	69.5	92.9		56.5						
	SYSTEM							672	409		

PERIOD	MODULE	AVAILABILITY	OPERABILITY	RELIABILITY	UTILIZATION	% REMOVAL SO2	% REMOVAL PART.	PER HOURS	BOILER HOURS	FGD HOURS	CAP. FACTOR
		PERFORMANCE DATA									

** PROBLEMS/SOLUTIONS/COMMENTS
MODULE A RAN INTO DIFFICULT OPERATIONG CONDITIONS THIS MONTH DUE TO RAPID PLUGGING OF THE REHEAT COILS.
INSPECTION AND SUBSEQUENT CLEANING OF MODULE A UNCOVERED PLUGGED SPRAY NOZZLES AND DEMISTER TRAYS DUE TO NOZZLE INEFFICIENCY.
MODULE B OPERATED VERY WELL AND AN INSPECTION SHOWED THE MODULE TO BE VERY CLEAN.

3/78	A	93.5	100.0	90.6							
	B	88.5	84.7	76.0	26.2						
	SYSTEM							744	230		

** PROBLEMS/SOLUTIONS/COMMENTS
THIS MONTH, DUE TO COAL CONSERVATION, UNIT 1 WAS ON THE SYSTEM VERY LITTLE.
MODULE B HAD DIFFICULTY FOR SEVERAL DAYS BECAUSE OF A CRACKED SHEAVE ON THE VENTURI PUMP.
HIGH PRESSURE CLEANING ON BOTH MODULES DURING THE COAL CONSERVATION ALONG WITH REMOVING THE VENTURI THROAT RESTRICTOR BLOCKS PROVED BENEFICIAL IN MAINTAINING BETTER CONTROL OF THE DRAFT CONDITIONS IN THE SCRUBBER.

4/78	A	99.9	99.7		92.0						
	B	100.0	99.9		92.2						
	SYSTEM							720	665		

** PROBLEMS/SOLUTIONS/COMMENTS
THE PRESSURE DIFFERENTIAL ACROSS THE VENTURIS HAS BEEN REDUCED BY APPROXIMATELY 40% AT 140 MW BY REMOVING THE VENTURI RESTRICTOR BLOCKS. PARTICULATE REMOVAL AND SOLIDS CARRYOVER COULD BE ADVERSELY AFFECTED BY THIS ACTION. SINCE PARTICULATE REMOVAL AT THE VENTURI IS A FUNCTION OF WATER DROPLET SIZE, WHICH IN TURN IS A FUNCTION OF PRESSURE DROP. INCREASED SOLIDS CARRYOVER COULD POSSIBLY COMPOUND REHEATER PLUGGING PROBLEMS. THE UTILITY IS KEEPING A CLOSE WATCH FOR PLUGGING, BUT HAS NOT YET FOUND ANYTHING UNUSUAL.
MODULE A WAS FORCED OUT OF THE GAS PATH ONCE THIS MONTH FOR A VENTURI PIPE LEAK.

5/78	A	9.5	99.4		55.2						
	B	89.2	100.0		56.1						
	SYSTEM							744	413		

** PROBLEMS/SOLUTIONS/COMMENTS
DURING THE LAST PART OF THE MONTH BOTH MODULES WERE FORCED OUT OF THE GAS PATH DUE TO REHEATER LEAKS. IT REQUIRED A TWO DAY OUTAGE TO REMOVE THE LEAKING REHEATER BUNDLES. ADDITIONAL REHATERS ARE ON ORDER AND ARE EXPECTED TO ARRIVE IN JUNE.

6/78	A	87.1	94.5		23.7						
	B	85.6	100.0		25.1						
	SYSTEM							720	181		

** PROBLEMS/SOLUTIONS/COMMENTS
DURING A SCRUBBER INSPECTION, 25% DIEMISTER AND 75% ABSORBER SPRAY PLUGGAGE WAS DISCOVERED IN MODULE A. MODULE B WAS NOT AS BAD.
HIGH VIBRATION WAS ENCOUNTERED IN THE TURBINE BEARINGS DURING BOILER START UP, CAUSING THE BOILER TO SHUT BACK DOWN.
THE PUG MILL FOR CHICAGO ADMIXTURES HAS BEEN APPROVED, AND THE NEW SLUDGE TREATMENT SYSTEM SHOULD BE OPERATING BY FALL.
THE SCRUBBER WAS FORCED OUT OF THE GAS PATH ONCE THIS MONTH WHEN THE 1B1 ABSORBER DISCHARGE VALVE FAILED TO OPEN.
THE BOILER WAS FORCED OFF THE LAST FOUR DAYS OF THE MONTH FOR CYCLONE LEAKS. DURING THIS OUTAGE, THE A AND B MODULE SPENT SLURRY VALVES WERE REPLACED.

7/78	A	97.0	100.0		11.6						
	B	99.2	100.0		11.6						
	SYSTEM							744	77		

COMMONWEALTH EDISON: WILL COUNTY 1 (CONT.)

PERIOD	MODULE	AVAILABILITY	OPERABILITY	RELIABILITY	UTILIZATION	% REMOVAL SO2	% REMOVAL PART.	PER HOURS	BOILER HOURS	FGD HOURS	CAP. FACTOR
		PERFORMANCE DATA									

** PROBLEMS/SOLUTIONS/COMMENTS

THE BOILER WAS PLAGUED ALL MONTH BY CYCLONE CASING LEAKS. BECAUSE OF THE CYCLONE PROBLEMS AND THE COAL CONSERVATION PROGRAM, THE BOILER WAS ONLY OPERATED SEVENTY-SEVEN HOURS FOR THE MONTH.
THE BOILER DOWN TIME WAS USED FOR PREVENTATIVE MAINTENANCE ON THE SCRUBBER. SIX NEW REHEATERS WERE INSTALLED AND A DRAIN VALVE ON THE SPENT SLURRY LINE WAS REPAIRED.
A VALVE FAILURE ON THE 1A1 ABSORBER PUMP FORCED THE SCRUBBER FROM THE GAS PATH ONCE DURING THE MONTH.
MODULE B EXPERIENCED A LEAKING VENTURI HEADER.

8/78	A	97.8	100.0		59.1						
	B	99.6	100.0		59.1						
	SYSTEM								744	440	

** PROBLEMS/SOLUTIONS/COMMENTS

CHICAGO ADMIXTURES SPENT MOST OF THEIR TIME OPERATING OUT OF THE THICKENER. THE SCRUBBER WASTE MATERIAL WAS TREATED WITH LIME AND FLY ASH AND HAULED OFF TO AN OFF SITE DISPOSAL AREA.
REPAIRS TO THE VENTURI EMERGENCY SPRAY VALVE CAUSED ONE BOILER OUTAGE DURING THE MONTH.
A REHEATER FLANGE LEAK WAS RESPONSIBLE FOR FORCING THE UNIT OFF.
MODULE A WAS FORCED OFF ONCE DUE TO HIGH VIBRATION OF THE I.D. BOOSTER FAN. THE PROBLEM WAS CORRECTED BY REPACKING THE COUPLING ON THE FAN.

9/78	A	77.7	95.9		55.4						
	B	77.7	96.0		55.5						
	SYSTEM								720	416	

** PROBLEMS/SOLUTIONS/COMMENTS

CHICAGO ADMIXTURES SPENT MOST OF THEIR TIME OPERATING OUT OF THE THICKENER. THE SCRUBBER WASTE MATERIAL WAS TREATED WITH LIME AND FLY ASH AND HAULED TO AN OFF SITE DISPOSAL AREA.
REHEATER TUBE LEAKS, ONE IN MODULE A AND FOUR IN MODULE B, CAUSED ONE BOILER OUTAGE AND CAUSED THE FGD SYSTEM TO BE UNAVAILABLE FOR A TOTAL OF NINETY HOURS. SAMPLES OF THE TUBES HAVE BEEN SUBMITTED TO O.A.D. FOR METALLURGICAL EXAMINATION.
A RUPTURED AIR LINE ON A VENTURI PUMP ISOLATION VALVE WOULD NOT ALLOW THE E VALVE TO GO COMPLETELY CLOSED.
WHEN THE A VENTURI PUMP WAS STARTED, A VENTURI SPRAY HOSE RUPTURED.
IT WAS DISCOVERED THAT THE MODULE A VENTURI TANK LEVEL PRESSURE SWITCH WAS NOT WORKING PROPERLY.
THE PUGMILL ORDERED FOR CHICAGO ADMIXTURES HAS ARRIVED ON SITE. IN OCTOBER, THEY WILL FINISH THE CONVERSION, WHICH WILL ALLOW THE MATERIAL SERVICE MIXER TRUCKS TO BE ELIMINATED.
IN OCTOBER, THE THICKENER WILL HAVE TO BE BYPASSED WHILE THE UTILITY DOES MAINTENANCE ON THE RAKE AND REPLACES SOME LEAKING VALVES.

10/78	A	100.0	100.0		35.0						
	B	100.0	100.0		35.0						
	SYSTEM								744	261	

** PROBLEMS/SOLUTIONS/COMMENTS

LOW BOILER HOURS WERE DUE TO FOUR OUTAGES CAUSED BY HIGH BEARING METAL TEMPERATURES AND EXCESSIVE VIBRATION IN THE 1-B FORCED DRAFT FAN.
THE BOILER DOWN TIME WAS UTILIZED FOR CLEANING AND REPAIR OF THE VENTURI THROAT, SUMP AND SUMP SCREENS, AND INLET BLOCK DAMPERS OF MODULE A, AS WELL AS THE VENTURI AND ABSORBER TANKS AND SCREENS AND ALL ABSORBER SPRAY NOZZLES OF BOTH MODULES.
ON INSPECTION, IT WAS DISCOVERED THAT THE B MODULE ABSORBER DEPARTMENTAL DAMPER HAD SLIPPED 50% CLOSED. THE DAMPERS WERE JACKED OPEN AND WELDED IN PLACE.
TO CORRECT A HIGH PRESSURE DROP ACROSS THE MODULE B REHEATER, A NEW METHOD WAS EMPLOYED WHEREBY ONLY THE MIDDLE TUBES WERE REMOVED, ALLOWING THE TOP AND BOTTOM TUBES TO BE SEEN AND CLEANED, ELIMINATING THE REMOVAL OF ALL THE TUBES. THIS PROCEDURE CUT OUTAGE TIME FROM ONE OR TWO WEEKS TO TWO DAYS.

11/78	A	96.2	100.0		48.3						

PERIOD	MODULE	AVAILABILITY	OPERABILITY	RELIABILITY	UTILIZATION	% REMOVAL SO2	% REMOVAL PART.	PER HOURS	BOILER HOURS	FGD HOURS	CAP. FACTOR
			PERFORMANCE DATA								
	B	85.2	100.0		48.3						
	SYSTEM							720	348		
	** PROBLEMS/SOLUTIONS/COMMENTS THE UNIT WAS DOWN THREE TIMES THIS MONTH DUE TO A VENTURI PUMP AND TWO BOOSTER FAN OUTAGES.										
12/78	A	65.3	100.0		64.5						
	B	64.5	100.0		64.5						
	SYSTEM							744	480		
	** PROBLEMS/SOLUTIONS/COMMENTS REHEATER TUBE LEAKS CAUSED TWO OUTAGES. THE MODULE B SPENT SLURRY DRAIN WAS REPAIRED.										
1/79	A	83.5	100.0		61.3						
	B	62.2	87.1		53.4						
	SYSTEM							744	456		
	** PROBLEMS/SOLUTIONS/COMMENTS THE SO2 PLANT WAS FORCED OFF TWICE THIS MONTH DUE TO REHEATER TUBE LEAKS. TWO TUBES ON MODULE A AND FOUR TUBES ON MODULE B WERE REPLACED. THE I.D. BOOSTER FAN ON MODULE B WAS FOULED AND HAD TO BE REPLACED. TWO SPECIAL SECTIONS OF VENTURI PIPING, A SIXTEEN TO EIGHT INCH ECCENTRIC REDUCER AND AN OFFSET TEE WERE PREPARED BY LOCKPORT FABRICATING AND INSTALLED THIS MONTH. THE ORIGINAL REDUCER AND TEE HAD BEEN PATCHED AND WELDED SO MANY TIMES THAT THEY WERE BEYOND REPAIR.										
2/79	A	93.0	91.3		54.2						
	B	93.0	91.3		54.2						
	SYSTEM							672	399		
	** PROBLEMS/SOLUTIONS/COMMENTS THE UNIT WAS FORCED OFF ONCE FOR A MAIN STEAM HEADER LEAK.										
3/79	A	100.0	100.0		46.0						
	B	68.6	100.0		46.0						
	SYSTEM							744	343		
	** PROBLEMS/SOLUTIONS/COMMENTS THE SYSTEM WAS FORCED OUT TWICE IN FEBRUARY AND FOUR TIMES IN MARCH DUE TO A VENTURI HEADER LEAK. A TEN FOOT SECTION OF PIPE WILL HAVE TO BE REPLACED DUE TO EXTENSIVE CORROSION. THE SYSTEM WAS DOWN ONCE FOR A SPRAY HEADER LEAK. MODULE B EXPERIENCED A LEAK IN THE VENTURI DOWNCOMER. A FIVE FOOT SECTION OF THE PIPE WILL HAVE TO BE REPLACED.										
4/79	A										
	SYSTEM							720			
5/79	A				.0						
	B				.0						
	SYSTEM							744	0		
	** PROBLEMS/SOLUTIONS/COMMENTS UNIT 1 WAS OUT OF SERVICE THE ENTIRE MONTH DUE TO A BOILER OVERHAUL. CHICAGO ADMIXTURES WILL STOCKPILE THE FIXED SLUDGE ON STATION PROPERTY.										
6/79	SYSTEM							720	0		
7/79	SYSTEM							744	0		
8/79	SYSTEM							744	0		
	** PROBLEMS/SOLUTIONS/COMMENTS UNIT 1 WAS OUT OF SERVICE TO REPLACE THE AIR HEATER TUBES, TUBE SHEET AND HOPPERS. DURING THIS OUTAGE, THE WORN VENTURI SPRAY NOZZLES AND DEMISTERS WERE REPLACED. WELDING LEAKS AND GENERAL CLEANING OF THE SO2 INTERNALS WAS ALSO DONE AT THIS TIME.										

COMMONWEALTH EDISON: WILL COUNTY 1 (CONT.)

PERIOD	MODULE	AVAILABILITY	OPERABILITY	RELIABILITY	UTILIZATION	% REMOVAL SO2	% REMOVAL PART.	PER HOURS	BOILER HOURS	FGD HOURS	CAP. FACTOR
		PERFORMANCE DATA									
		THE BOILER AND THE SCRUBBER ARE SCHEDULED TO RETURN TO SERVICE OCTOBER 1, 1979.									
9/79	SYSTEM							720	0		
10/79	SYSTEM							744	0		
11/79	A	53.3	100.0		85.4						
	B	53.3	100.0		85.4						
	SYSTEM	53.3	100.0		85.4			720	336	336	

** PROBLEMS/SOLUTIONS/COMMENTS

ON NOVEMBER 5, UNIT 1 RETURNED TO SERVICE AFTER A SIX MONTH OUTAGE TO REPLACE THE AIR HEATER TUBES, TUBE SHEET AND HOPPERS.
DURING THE OUTAGE, SEVERAL LENGTHS OF VENTURI PIPING HAD TO BE REPLACED WITH NEW RUBBER LINED PIPE.
THE SO2 UNIT DID NOT FORCE THE BOILER OFF AT ANY TIME DURING NOVEMBER.

SECTION 14
DESIGN AND PERFORMANCE DATA FOR OPERATIONAL PARTICLE SCRUBBERS

COMPANY NAME	DETROIT EDISON	
PLANT NAME	ST. CLAIR	
UNIT NUMBER	6	
CITY	BELLE RIVER	
STATE	MICHIGAN	
REGULATORY CLASSIFICATION	C	
PARTICULATE EMISSION LIMITATION - NG/J	******	(****** LB/MMBTU)
SO2 EMISSION LIMITATION - NG/J	1376.	(3.200 LB/MMBTU)
NET PLANT GENERATING CAPACITY - MW	1773.0	
GROSS UNIT GENERATING CAPACITY - MW	260.0	
NET UNIT GENERATING CAPACITY W/FGD - MW	*******	
NET UNIT GENERATING CAPACITY WO/FGD - MW	*******	
EQUIVALENT SCRUBBED CAPACITY - MW	*******	
** BOILER DATA		
SUPPLIER	COMBUSTION ENGINEERING	
TYPE	******	
SERVICE LOAD	BASE	
COMMERCIAL SERVICE DATE	0/61	
MAXIMUM BOILER FLUE GAS FLOW - CU.M/S	465.77	(987000 ACFM)
FLUE GAS TEMPERATURE - C	132.2	(270 F)
STACK HEIGHT - M	******	(**** FT)
STACK TOP DIAMETER - M	*******	(***** FT)
** FUEL DATA		
FUEL TYPE	COAL	
FUEL GRADE	SUBBITUMINOUS	
AVERAGE HEAT CONTENT - J/G	*******	(****** BTU/LB)
RANGE HEAT CONTENT - BTU/LB		9,500 - 9,600
AVERAGE ASH CONTENT - %	4.00	
RANGE ASH CONTENT - %	******	
AVERAGE MOISTURE CONTENT - %	********	
RANGE MOISTURE CONTENT - %	22 - 24	
AVERAGE SULFUR CONTENT - %	.35	
RANGE SULFUR CONTENT - %	0.3 - 0.4	
AVERAGE CHLORIDE CONTENT - %	********	
RANGE CHLORIDE CONTENT - %	******	
** ESP		
** MECHANICAL COLLECTOR		
** PARTICULATE SCRUBBER		
NUMBER	2	
TYPE	VENTURI	

PERFORMANCE DATA

PERIOD	MODULE	AVAILABILITY	OPERABILITY	RELIABILITY	UTILIZATION	% REMOVAL SO2	% REMOVAL PART.	PER HOURS	BOILER HOURS	FGD HOURS	CAP. FACTOR
11/74	SYSTEM							720			
12/74	SYSTEM							744			
1/75	SYSTEM							744			

** PROBLEMS/SOLUTIONS/COMMENTS
INSTALLATION OF THE FGD SYSTEM WAS ESSENTIALLY COMPLETED BY THE NOVEMBER, 1974 THROUGH JANUARY 1975 PERIOD.
A FAULTY INSTRUMENT PANEL WHICH WAS INCORRECTLY WIRED HAS BEEN RETURNED TO THE MANUFACTURER FOR REPAIR.
TO DATE, THE UTILITY HAS WATER TESTED ALL THE AUXILIARY EQUIPMENT. THE ID FAN HAS BEEN TESTED AND AIR BALANCE HAS BEEN CHECKED.

2/75	SYSTEM							672			
3/75	SYSTEM							744			
4/75	SYSTEM							720			

DETROIT EDISON: ST. CLAIR 6 (CONT.)

PERIOD	MODULE AVAILABILITY	OPERABILITY	RELIABILITY	UTILIZATION	% REMOVAL SO2	% REMOVAL PART.	PER HOURS	BOILER HOURS	FGD HOURS	CAP. FACTOR
	PERFORMANCE DATA									

** PROBLEMS/SOLUTIONS/COMMENTS
A COLD FLUE GAS RUN WAS SUCCESSFULLY CONDUCTED MARCH 22 AND 23. DURING THIS PERIOD THE RUBBER-LINED PUMPS WERE REPAIRED AND THE LIMESTONE PREARATION SYSTEM WAS CALIBRATED.

5/75	SYSTEM						744			
5/75	SYSTEM						720			
7/75	SYSTEM						744			

** PROBLEMS/SOLUTIONS/COMMENTS
THE FIRST HOT FLUE GAS RUN WAS CONDUCTED ON JUNE 22, 1975. THE RUN LASTED FOR A PERIOD OF 22 HOURS. DURING THIS RUN, THE SCRUBBER WAS PURPOSELY TRIPPED OFF AT LOADS OF 40 AND 80 PERCENT. THIS WAS PERFORMED TO OBSERVE IF ANY DETRIMENTAL EFFECTS TO THE STEAM GENERATION OPERATIONS RESULTED. NONE WERE DETECTED. THE SYSTEM WAS TAKEN OUT OF SERVICE FOLLOWING THIS GAS RUN TO CORRECT THE FOLLOWING MAJOR OPERATION AREAS:
GAS CIRCUIT: LUGI THROAT POSITIONAL FAILURE; DETERIORATION OF THE DAMPER SEALS; SEVERE VIBRATIONS; SO2 ANALYZERS INOPERATIVE.
LIQUID CIRCUIT: FAILURE OF PH CONTROL SYSTEM; TARGET FLOW METER TARGETS HAVE BEEN BROKEN OFF; PUMP SEAL WATER LOW FLOW ALARM TRIPS.

8/75	SYSTEM						744			
9/75	SYSTEM						720			

** PROBLEMS/SOLUTIONS/COMMENTS
A SECOND HOT FLUE GAS RUN WAS INITIATED ON AUGUST 6 AND LASTED 27 HOURS. THE RUN WAS TERMINATED BECAUSE OF A REHEATER THERMOCOUPLE FAILURE. A SUBSEQUENT INSPECTION OF THE SCRUBBING SYSTEM REVEALED NO APPARENT ABNORMALITIES OR MALFUNCTIONS.
A THIRD HOT FLUE GAS RUN OF 41 HOURS DURATION WAS COMPLETED OCTOBER 5. THE MAIN OBJECTIVE OF THIS RUN WAS TO EVALUATE VARIOUS COMPONENTS OF THE FRESH WATER SPRAY SYSTEM AND EFFECTS ON SYSTEM OPERATION. THE TEST RUN WAS PREMATURELY TERMINATED BECAUSE OF A BOILER FEED PUMP MALFUNCTION, RESULTING IN A REDUCED BOILER LOAD CAUSING SUBSEQUENT WEEPING OF THE WASH TRAY.

10/75	SYSTEM						744			
11/75	SYSTEM						720			
12/75	SYSTEM						744			

** PROBLEMS/SOLUTIONS/COMMENTS
A FOURTH FLUE GAS RUN OF 23 DAYS DURATION WAS TERMINATED DUE TO EXCESSIVE VIBRATION IN THE I.D. & BOOSTER FAN. ONE OTHER SCRUBBER-RELATED OUTAGE OCCURRED WHEN THE PACKING OF ONE OF THE SCRUBBER RECIRCULATION PUMPS NEEDED MAINTENANCE. SO2 REMOVAL DURING THIS PERIOD WAS 90 PERCENT AND PARTICULATE OUTLET LOADING WAS 0.1 LB/1000 LBS OF FLUE GAS FOR 1-3 PERCENT SULFUR COAL.

1/76	SYSTEM						744			
2/76	SYSTEM						696			
3/76	SYSTEM						744			
4/76	SYSTEM	100.0	100.0				720			

** PROBLEMS/SOLUTIONS/COMMENTS
THE 30-DAY VENDOR QUALIFICATION RUN AND FINAL ACCEPTANCE TEST WERE COMPLETED BY MAY 29. THE QUALIFICATION RUN WAS CONDUCTED ON A "HANDS OFF" BASIS USING PLANT PERSONNEL EXCLUSIVELY. THE SYSTEM WAS IN SERVICE 100 PERCENT OF THE TIME THE BOILER WAS OPERATIONAL. THE FINAL ACCEPTANCE TEST CONSISTED OF SIX 4-HR. TEST RUNS CONDUCTED IN THE SPACE OF ONE WEEK. THE SO2 REMOVAL EFFICIENCY FOR HIGH SULFUR COAL WAS 90.9 PERCENT. PARTICULATE REMOVAL ALSO EXCEEDED DESIGN LEVELS. NO MAJOR CHEMICAL OR MECHANICAL-RELATED PROBLEMS WERE ENCOUNTERED.

5/76	SYSTEM						744			

PERIOD	MODULE	AVAILABILITY	OPERABILITY	RELIABILITY	UTILIZATION	% REMOVAL SO2	% REMOVAL PART.	PER HOURS	BOILER HOURS	FGD HOURS	CAP. FACTOR
		PERFORMANCE DATA									
6/76	SYSTEM							720			
7/76	SYSTEM							744			
8/76	SYSTEM							744			

** PROBLEMS/SOLUTIONS/COMMENTS
THE UTILITY IS NOW PREPARING TO CONDUCT A 2 MONTH MINIMUM INTERNAL SCRUBBER DEMONSTRATION PROGRAM TO ACQUIRE OPERATING DATA AND INFORMATION. FOLLOWING THE COMPLETION OF THIS PROGRAM THE BOILERS WILL FIRE LOW SULFUR DECKER COAL (0.3 TO 4.0 PERCENT) TO MEET SO2 EMISSION REGULATIONS. THE SCRUBBERS WILL CONTINUE TO OPERATE IN THE PARTICULATE REMOVAL MODE.

9/76	SYSTEM							720			
10/76	SYSTEM							744			

** PROBLEMS/SOLUTIONS/COMMENTS
THE INTERNAL SO2 SCRUBBING DEMONSTRATION PROGRAM COMMENCED ON OCTOBER 14. THE SCRUBBERS OPERATED CONTINUOUSLY FOR 10 DAYS.
OPERATION ON THE DEMONSTRATION PROGRAM WAS INTERRUPTED BY A FORCED SCRUBBER OUTAGE RESULTING FROM SCALE AND SOLIDS CARRYOVER FROM THE WASH TRAY AND MIST ELIMINATOR TO THE SCRUBBER I.D. BOOSTER FAN ASSEMBLY, CAUSING VIBRATION AND BALANCE PROBLEMS. IT WAS DECIDED TO SANDBLAST THE FAN TO REMOVE SOLID BUILDUP ON THE FAN ASSEMBLY.
THE UTILITY PLANS TO MODIFY THE COMPONENT'S WASH SYSTEM FOR GREATER FLOW CAPABILITY AFTER COMPLETION OF THE SO2 SCRUBBING PROGRAM. DECO ALSO PLANS TO CONTINUE PARTICULATE SCRUBBING FOLLOWING THE TERMINATION OF THE SO2 PROGRAM BY UNCOUPLING THE SPRAY TOWERS AND MAINTAINING THE PEABODY-LURGI VENTURI SCRUBBERS IN THE FLUE GAS STREAM. SOME LIMESTONE MAY HAVE TO BE ADDED TO THE PARTICULATE SCRUBBING SOLUTION IN ORDER TO PREVENT LOW PH SWINGS AND MINIMIZE THE POSSIBILITY OF ACID CORROSION DAMAGE TO THE INTERNAL COMPONENTS.

11/76	SYSTEM	80.0						720			

** PROBLEMS/SOLUTIONS/COMMENTS
FOLLOWING THE COMPLETION OF SAND BLASTING OPERATIONS TO SCRUBBER'S I.D. BOOSTER FAN FOR REMOVAL OF SOLIDS BUILD UP, OPERATIONS RESUMED ON NOVEMBER 7 AND CONTINUED THROUGHOUT THE MONTH. THE SYSTEM'S AVAILABILITY INDEX FOR THE MONTH WAS 80 PERCENT. THE MAJORITY OF THE OUTAGE TIME WAS CONSUMED PROCURING SAND BLASTING SERVICES. THE OPERATION ITSELF REQUIRED ONLY 8 HOURS.

12/76	SYSTEM	51.0						744			

** PROBLEMS/SOLUTIONS/COMMENTS
THE SO2 DEMONSTRATION PROGRAM CONTINUED THROUGHOUT DECEMBER. THE SYSTEM'SS AVAILABILITY INDEX FOR THE PERIOD WAS 51 PERCENT.
SCRUBBER OUTAGES RESULTED FROM LIMESTONE FEEDER PROBLEMS.
SCRUBBER OUTAGES RESULTED FROM DENSE SLURRY TRAVERSE PUMP PROBLEMS.
SCRUBBER OUTAGES RESULTED FROM DENSE SLURRY TANK AGITATOR MALFUNCTIONS.
PH SAMPLING LINE PLUGGING RESULTED IN SOME OUTAGE TIME.

1/77	SYSTEM	.0						744			
2/77	SYSTEM	.0						672			

** PROBLEMS/SOLUTIONS/COMMENTS
THE SO2 DEMONSTRATION PROGRAM WAS OFFICIALLY TERMINATED ON DEC. 31, 1976. THE SCRUBBER PLANT WAS SHUT DOWN AT THIS POINT AND FLUE GAS WAS BY-PASSED AROUND THE SYSTEM.

3/77	SYSTEM	.0						744			

DETROIT EDISON: ST. CLAIR 6 (CONT.)

PERIOD	MODULE	AVAILABILITY	OPERABILITY	RELIABILITY	UTILIZATION	% REMOVAL SO2	% REMOVAL PART.	PER HOURS	BOILER HOURS	FGD HOURS	CAP. FACTOR
		PERFORMANCE DATA									

** PROBLEMS/SOLUTIONS/COMMENTS

THE BOILER REMAINS IN SERVICE, FIRING LOW SULFUR (0.3%) WESTERN COAL. CURRENT PLANS CALL FOR THE SCRUBBER PLANT TO REMAIN OUT OF SERVICE UNTIL MID-JUNE FOR DESIGN AND OPERATING MODIFICATIONS. RESUMPTION OF SCRUBBER OPERATIONS WILL OCCUR IN THE PRIMARY PARTICULATE-REMOVAL MODE. THE PEABODY-LURGI VENTURI SCRUBBERS AND SPRAY TOWER ABSORBERS WILL REMAIN IN THE GAS STREAM. SOLUTION WILL BE CIRCULATED THROUGH THE VENTURI'S WASH TRAYS, AND MIST ELIMINATORS. NO SOLUTION WILL BE CIRCULATED THROUGH THE SPRAY ZONE OF THE ABSORBER TOWERS. LIMESTONE REAGENT WILL BE ADDED TO THE SCRUBBING SOLUTION IN ORDER TO PREVENT LOW PH SWINGS AND SUBSEQUENT MATERIALS DAMAGE TO THE SCRUBBER'S INTERNALS. SO2 REMOVAL SHOULD RESIDE IN THE 35 TO 50% RANGE IN THIS MODE OF OPERATION BECAUSE OF THE SOLUTION'S ALKALINITY DUE TO THE FLY ASH AND LIMESTONE. ALSO DECO PLANS TO MAINTAIN A HIGHER L/G RATIO IN THE SCRUBBER MODULES. THIS MODE OF OPERATION IS PROJECTED TO CONTINUE FOR A ONE TO THREE YEAR PERIOD FOLLOWING THE MID-JUNE RESTART.

4/77	SYSTEM	.0						720			
5/77	SYSTEM	.0						744			
6/77	SYSTEM	.0						720			
7/77	SYSTEM	.0						744			
8/77	SYSTEM	.0						744			
9/77	SYSTEM	.0						720			
10/77	SYSTEM							744			

** PROBLEMS/SOLUTIONS/COMMENTS

THE UNIT WAS PULLED OFF LINE IN DECEMBER 1976 AND DID NOT RESTART UNTIL OCTOBER 1977. WHILE THE UNIT WAS DOWN THE UTILITY INSTALLED BUILDINGS AROUND PUMPS THAT WERE EXPOSED TO SEVERE WEATHER CONDITIONS.

11/77	SYSTEM							720			
12/77	SYSTEM							744			
1/78	SYSTEM							744			
2/78	SYSTEM	96.0						672			
3/78	SYSTEM	85.6						744			
4/78	SYSTEM	90.0						720			
5/78	SYSTEM	84.6						744			

** PROBLEMS/SOLUTIONS/COMMENTS

THE UNIT EXPERIENCED SPRAY HEADER PROBLEMS IN THE ABSORBER TOWER. SOME BROKEN NOZZLES WERE DISCOVERED.

THERE WERE SOME I.D. BOOSTER FAN PROBLEMS. THE UTILITY MUST SAND BLAST THE FAN EVERY 4 TO 5 WEEKS WHEN THE MAGNITUDE OF VIBRATION OF THE FAN BECOMES EXCESSIVE FROM SCALE FORMATION; HOWEVER, IN THIS INSTANCE THE PROBLEM WAS A RESULT OF A LOW FAN OIL LEVEL.

THE UTILITY NOW OPERATES 3 RECYCLE TANK AGITATORS. PREVIOUSLY ONLY 2 WERE OPERATED. IT WAS FELT THAT PART OF THE TANK PLUGGING WAS A RESULT OF INSUFFICIENT AGITATION.

THE SLURRY SPRAY SURGE TANK ENCOUNTERED CONTINUAL OVERFLOW PROBLEMS WHEN THE ABSORBER SUMP PUMP WAS OPERATING. THIS WAS BELIEVED TO BE A RESULT OF A BROKEN SECTION IN THE SPRAY NOZZLE LINES. SPRAY WAS BEING DIRECTED UPWARD TO THE BOTTOM OF A TRAY INSTEAD OF DOWN, COUNTERCURRENT TO THE GAS FLOW AS INTENDED.

REHEATER PROBLEMS OCCURRED WITH THE FORMATION OF OIL CLINKERS IN THE BURNER AREA. IT WAS DISCOVERED THAT THE AIR SUPPLY TO THE BURNER WAS INSUFFICIENT.

PERIOD	MODULE	AVAILABILITY	OPERABILITY	RELIABILITY	UTILIZATION	% REMOVAL SO2	% REMOVAL PART.	PER HOURS	BOILER HOURS	FGD HOURS	CAP. FACTOR
			PERFORMANCE DATA								

SOME SPRAY HEADER PROBLEMS WERE ENCOUNTERED. THE FRP PIPING WAS RUPTURING. IT WAS SUSPECTED THAT THE RUPTURES WERE A RESULT OF "WATER HAMMER" I.E. THE SURGE THAT OCCURRS IN THE PIPE WITH A SUDDEN FLOW RATE CHANGE. THE SPRAY HEADERS WERE PLUGGING. WHEN THE HEADERS ARE DRAINED (E.G. SYSTEMS SHUTDOWN) SOME SLURRY SETTLES IN THE HEADER LINES ETC. RINSE LINES ARE NOW BEING INSTALLED TO FLUSH OUT HEADERS DURING FUTURE SHUTDOWNS.

6/78	SYSTEM	87.9						720			

** PROBLEMS/SOLUTIONS/COMMENTS

ONE OF THE BLADES CAME LOOSE FROM AN I.D. BOOSTER FAN AND PASSED THROUGH THE HOUSING. REPAIRS WERE MADE WITHOUT SERIOUS COMPLICATIONS.

7/78	SYSTEM	86.0						744			

** PROBLEMS/SOLUTIONS/COMMENTS

THE INSTALLATION OF RINSE LINES HAS NOT YET BEEN COMPLETED. PROBLEMS WITH RUPTURED SPRAY HEADER PIPING CONTINUED. IT HAS BEEN POSSIBLE TO OPERATE THE SCRUBBER WITH THE RUPTURED LINES WITHOUT SERIOUS CONSEQUENCES. IT IS NOT CRUCIAL THAT REPAIRS BE MADE IMMEDIATELY.

8/78	SYSTEM	90.4						744			
9/78	SYSTEM	69.0						720			
10/78	SYSTEM	.0						744			
11/78	SYSTEM	.0						720			
12/78	SYSTEM	.0						744			
1/79	SYSTEM							744			

** PROBLEMS/SOLUTIONS/COMMENTS

DURING THIS PERIOD RECYCLE TANK AGITATORS WERE BREAKING LOOSE AND SIMILAR PROBLEMS WERE ENCOUNTERED WITH THE SLURRY STORAGE TANK AGITATORS. THE SCRUBBING SYSTEM WAS REMOVED FROM SERVICE FROM SEPTEMBER THROUGH JANUARY. STEADY BEARINGS WERE INSTALLED AT THE BOTTOM OF THE RECYCLE TANK SOLVING THE RECYCLE TANK AGITATOR PROBLEM. THE SLURRY STORAGE TANK SYSTEM ALREADY HAD STEADY BEARINGS. THESE WERE REWORKED TO IMPROVE OPERATIONS.

2/79	SYSTEM							672			
3/79	SYSTEM							744			

** PROBLEMS/SOLUTIONS/COMMENTS

SOME REHEATER PROBLEMS OCCURRED.

4/79	SYSTEM							720			
5/79	SYSTEM							744			
6/79	SYSTEM							720			
7/79	SYSTEM							744			
8/79	SYSTEM							744			
9/79	SYSTEM							720			
10/79	SYSTEM							744			

** PROBLEMS/SOLUTIONS/COMMENTS

THE SYSTEM IS CURRENTLY DOWN BUT IS EXPECTED TO BE BACK ON LINE SOON. THE SCRUBBING SYSTEM HAS OPERATED ONLY 1 WEEK SINCE MAY 18, 1979 BECAUSE OF SUMP PROBLEMS.

THE AGITATOR BEARING SYSTEM WAS POORLY DESIGNED. THE BEARING SYSTEM HAS NOW BEEN COMPLETELY REDESIGNED. THE AGITATORS HAVE NOW OPERATED 2000 HOURS ON THE NEW BEARINGS. THE UTILITY WILL PROBABLY DRAIN THE TANK AFTER ABOUT 500 MORE HOURS TO INSPECT AND READJUST THE BEARINGS. THE NEW BEARING

DETROIT EDISON: ST. CLAIR 6 (CONT.)

PERIOD	MODULE	AVAILABILITY	OPERABILITY	RELIABILITY	UTILIZATION	% REMOVAL SO2	% REMOVAL PART.	PER HOURS	BOILER HOURS	FGD HOURS	CAP. FACTOR
			PERFORMANCE DATA								

SYSTEM IS COMPOSED OF STAINLESS STEEL PARTS.
100% OF THE ST. CLAIR FLUE GAS PASSES THROUGH THE ESP. 50% OF THAT FLUE GAS ENTERS THE SCRUBBER. THE UNIT IS REQUIRED TO MEET A 55% OPACITY, HOWEVER, A VARIANCE HAS BEEN GRANTED ALLOWING A 65% OPACITY UNTIL THE SCRUBBER IS AGAIN OPERATIONAL. THE UTILITY IS PREPARING TO INSTALL A NEW ESP WHICH WOULD BE OPERATIONAL IN 2 YEARS. WHEN THE NEW ESP IS INSTALLED THE SCRUBBING SYSTEM AND OLD ESP WILL BE SCRAPPED. THE UNIT WILL THEN BE REQUIRED TO MEET A 20% OPACITY.

11/79	SYSTEM	90.0						720			
12/79	SYSTEM	90.0						744			

** PROBLEMS/SOLUTIONS/COMMENTS

THE UNIT CAME BACK ON LINE AROUND MID-NOVEMBER.
NEW DENVER PUMPS WITH EJECTORS WERE INSTALLED TO ASSIST THE SUMP PUMPS UNTIL THE ESP'S COME ON LINE.
THE ABSORBER PUMPS HAVE BEEN A PROBLEM RESULTING IN A CAPACITY TURNDOWN TO 225 MW (FROM 230 MW).
ONE OF THE COAL MILLS HAS BEEN DOWN CAUSING LIMITED OPERATIONS.

SECTION 14
DESIGN AND PERFORMANCE DATA FOR OPERATIONAL PARTICLE SCRUBBERS

COMPANY NAME	MINNESOTA POWER & LIGHT	
PLANT NAME	AURORA	
UNIT NUMBER	1	
CITY	AURORA	
STATE	MINNESOTA	
REGULATORY CLASSIFICATION	******	
PARTICULATE EMISSION LIMITATION - NG/J	258.	(.600 LB/MMBTU)
SO2 EMISSION LIMITATION - NG/J	******	(****** LB/MMBTU)
NET PLANT GENERATING CAPACITY - MW	116.0	
GROSS UNIT GENERATING CAPACITY - MW	58.0	
NET UNIT GENERATING CAPACITY W/FGD - MW	57.3	
NET UNIT GENERATING CAPACITY WO/FGD - MW	58.0	
EQUIVALENT SCRUBBED CAPACITY - MW	58.0	
** BOILER DATA		
SUPPLIER	COMBUSTION ENGINEERING	
TYPE	PULVERIZED COAL	
SERVICE LOAD	******	
COMMERCIAL SERVICE DATE	0/53	
MAXIMUM BOILER FLUE GAS FLOW - CU.M/S	141.57	(300000 ACFM)
FLUE GAS TEMPERATURE - C	171.1	(340 F)
STACK HEIGHT - M	******	(**** FT)
STACK TOP DIAMETER - M	*******	(***** FT)
** FUEL DATA		
FUEL TYPE	COAL	
FUEL GRADE	SUBBITUMINOUS	
AVERAGE HEAT CONTENT - J/G	20469.	(8800 BTU/LB)
RANGE HEAT CONTENT - BTU/LB		******
AVERAGE ASH CONTENT - %	9.00	
RANGE ASH CONTENT - %	******	
AVERAGE MOISTURE CONTENT - %	26.70	
RANGE MOISTURE CONTENT - %	24.0-26.7	
AVERAGE SULFUR CONTENT - %	1.37	
RANGE SULFUR CONTENT - %	0.8-1.37	
AVERAGE CHLORIDE CONTENT - %	.01	
RANGE CHLORIDE CONTENT - %	0.00-0.07	
** FABRIC FILTER		
NUMBER	0	
TYPE	NONE	
** ESP		
NUMBER	0	
TYPE	NONE	
** MECHANICAL COLLECTOR		
NUMBER	0	
TYPE	NONE	
** PARTICULATE SCRUBBER		
NUMBER	1	
TYPE	SPRAY IMPINGEMENT TOWER	
SUPPLIER	KREBS ENGINEERS	
SHELL MATERIAL	316 ELC SS	
LINING MATERIAL	FLAKE-POLYESTER	
BOILER LOAD/SCRUBBER - %	100.0	
FLUE GAS CAPACITY - CU.M/S	137.4	(291160 ACFM)
FLUE GAS TEMPERATURE - C	171.1	(340 F)
L/G RATIO - LITER/CU.M	1.1	(8.3 GAL/1000ACF)
PRESSURE DROP - KPA	*******	(***** IN-H2O)
SUPERFICIAL GAS VELOCITY - M/S	2.1	(7.0 FT/S)
PARTICULATE INLET LOAD - G/CU.M	4.7	(2.06 GR/SCF)
PARTICULATE OUTLET LOAD - NG/J	34.	(.078 LB/MMBTU)
PARTICULATE DESIGN REMOVAL EFFICIENCY - %	98.0	
SO2 INLET CONCENTRATION - PPM	800.000	
SO2 OUTLET CONCENTRATION - PPM	501.000	
SO2 DESIGN REMOVAL EFFICIENCY - %	37.0	

MINNESOTA POWER & LIGHT: AURORA 1 (CONT.)

PERIOD	MODULE	AVAILABILITY	OPERABILITY	RELIABILITY	UTILIZATION	% REMOVAL SO2	% REMOVAL PART.	PER HOURS	BOILER HOURS	FGD HOURS	CAP. FACTOR
		PERFORMANCE DATA									
10/79	SYSTEM							744			
11/79	SYSTEM							720			
12/79	SYSTEM							744			

** PROBLEMS/SOLUTIONS/COMMENTS
NO INFORMATION WAS AVAILABLE FOR THE FOURTH QUARTER 1979.

SECTION 14
DESIGN AND PERFORMANCE DATA FOR OPERATIONAL PARTICLE SCRUBBERS

COMPANY NAME	MINNESOTA POWER & LIGHT	
PLANT NAME	AURORA	
UNIT NUMBER	2	
CITY	AURORA	
STATE	MINNESOTA	
REGULATORY CLASSIFICATION	******	
PARTICULATE EMISSION LIMITATION - NG/J	258.	(.600 LB/MMBTU)
SO2 EMISSION LIMITATION - NG/J	******	(****** LB/MMBTU)
NET PLANT GENERATING CAPACITY - MW	116.0	
GROSS UNIT GENERATING CAPACITY - MW	58.0	
NET UNIT GENERATING CAPACITY W/FGD - MW	57.3	
NET UNIT GENERATING CAPACITY WO/FGD - MW	58.0	
EQUIVALENT SCRUBBED CAPACITY - MW	58.0	
** BOILER DATA		
SUPPLIER	COMBUSTION ENGINEERING	
TYPE	PULVERIZED COAL	
SERVICE LOAD	******	
COMMERCIAL SERVICE DATE	0/53	
MAXIMUM BOILER FLUE GAS FLOW - CU.M/S	141.57	(300000 ACFM)
FLUE GAS TEMPERATURE - C	171.1	(340 F)
STACK HEIGHT - M	******	(**** FT)
STACK TOP DIAMETER - M	*******	(***** FT)
** FUEL DATA		
FUEL TYPE	COAL	
FUEL GRADE	SUBBITUMINOUS	
AVERAGE HEAT CONTENT - J/G	20469.	(8800 BTU/LB)
RANGE HEAT CONTENT - BTU/LB		******
AVERAGE ASH CONTENT - %	9.00	
RANGE ASH CONTENT - %	******	
AVERAGE MOISTURE CONTENT - %	26.70	
RANGE MOISTURE CONTENT - %	24.0-26.7	
AVERAGE SULFUR CONTENT - %	1.37	
RANGE SULFUR CONTENT - %	0.8-1.37	
AVERAGE CHLORIDE CONTENT - %	.01	
RANGE CHLORIDE CONTENT - %	0.00-0.07	
** FABRIC FILTER		
NUMBER	0	
TYPE	NONE	
** ESP		
NUMBER	0	
TYPE	NONE	
** MECHANICAL COLLECTOR		
NUMBER	0	
TYPE	NONE	
** PARTICULATE SCRUBBER		
NUMBER	1	
TYPE	SPRAY IMPINGEMENT TOWER	
SUPPLIER	KREBS ENGINEERS	
SHELL MATERIAL	316 ELC SS	
LINING MATERIAL	FLAKE-POLYESTER	
BOILER LOAD/SCRUBBER - %	100.0	
FLUE GAS CAPACITY - CU.M/S	137.4	(291160 ACFM)
FLUE GAS TEMPERATURE - C	171.1	(340 F)
L/G RATIO - LITER/CU.M	1.1	(8.3 GAL/1000ACF)
PRESSURE DROP - KPA	*******	(***** IN-H2O)
SUPERFICIAL GAS VELOCITY - M/S	2.1	(7.0 FT/S)
PARTICULATE INLET LOAD - G/CU.M	4.7	(2.06 GR/SCF)
PARTICULATE OUTLET LOAD - NG/J	34.	(.078 LB/MMBTU)
PARTICULATE DESIGN REMOVAL EFFICIENCY - %	98.0	
SO2 INLET CONCENTRATION - PPM	800.000	
SO2 OUTLET CONCENTRATION - PPM	500.000	
SO2 DESIGN REMOVAL EFFICIENCY - %	37.0	

MINNESOTA POWER & LIGHT: AURORA 2 (CONT.)

PERIOD	MODULE	AVAILABILITY	OPERABILITY	RELIABILITY	UTILIZATION	% REMOVAL SO2	% REMOVAL PART.	PER HOURS	BOILER HOURS	FGD HOURS	CAP. FACTOR
		PERFORMANCE DATA									
10/79	SYSTEM							744			
11/79	SYSTEM							720			
12/79	SYSTEM							744			

** PROBLEMS/SOLUTIONS/COMMENTS
NO INFORMATION WAS AVAILABLE FOR THE FOURTH QUARTER 1979.

SECTION 14
DESIGN AND PERFORMANCE DATA FOR OPERATIONAL PARTICLE SCRUBBERS

COMPANY NAME	MINNESOTA POWER & LIGHT	
PLANT NAME	CLAY BOSWELL	
UNIT NUMBER	3	
CITY	COHASSET	
STATE	MINNESOTA	
REGULATORY CLASSIFICATION	******	
PARTICULATE EMISSION LIMITATION - NG/J	******	(****** LB/MMBTU)
SO2 EMISSION LIMITATION - NG/J	******	(****** LB/MMBTU)
NET PLANT GENERATING CAPACITY - MW	**** **	
GROSS UNIT GENERATING CAPACITY - MW	350.0	
NET UNIT GENERATING CAPACITY W/FGD - MW	347.1	
NET UNIT GENERATING CAPACITY WO/FGD - MW	350.0	
EQUIVALENT SCRUBBED CAPACITY - MW	350.0	
** BOILER DATA		
SUPPLIER	COMBUSTION ENGINEERING	
TYPE	PULVERIZED COAL	
SERVICE LOAD	BASE	
COMMERCIAL SERVICE DATE	0/73	
MAXIMUM BOILER FLUE GAS FLOW - CU.M/S	613.47	(1300000 ACFM)
FLUE GAS TEMPERATURE - C	123.3	(254 F)
STACK HEIGHT - M	*******	(**** FT)
STACK TOP DIAMETER - M	*******	(***** FT)
** FUEL DATA		
FUEL TYPE	COAL	
FUEL GRADE	SUBBITUMINOUS	
AVERAGE HEAT CONTENT - J/G	19538.	(8400 BTU/LB)
RANGE HEAT CONTENT - BTU/LB		8400-8800
AVERAGE ASH CONTENT - %	9.00	
RANGE ASH CONTENT - %	******	
AVERAGE MOISTURE CONTENT - %	26.00	
RANGE MOISTURE CONTENT - %	24.0-26.0	
AVERAGE SULFUR CONTENT - %	.92	
RANGE SULFUR CONTENT - %	0.8-0.92	
AVERAGE CHLORIDE CONTENT - %	.01	
RANGE CHLORIDE CONTENT - %	******	
** FABRIC FILTER		
NUMBER	0	
TYPE	NONE	
** ESP		
NUMBER	0	
** MECHANICAL COLLECTOR		
NUMBER	0	
** PARTICULATE SCRUBBER		
NUMBER	1	
TYPE	SPRAY IMPINGEMENT TOWER	
SUPPLIER	KREBS ENGINEERS	
NUMBER OF STAGES	2	
SHELL MATERIAL	316LC SS	
LINING MATERIAL	NONE	
INTERNAL MATERIAL	316L SS	
BOILER LOAD/SCRUBBER - %	110.0	
FLUE GAS CAPACITY - CU.M/S	613.5	(1300000 ACFM)
FLUE GAS TEMPERATURE - C	123.3	(254 F)
LIQUID RECIRCULATION RATE - LITER/S	714.4	(11340 GPM)
L/G RATIO - LITER/CU.M	1.1	(8.3 GAL/1000ACF)
PRESSURE DROP - KPA	*******	(***** IN-H2O)
SUPERFICIAL GAS VELOCITY - M/S	2.4	(8.0 FT/S)
PARTICULATE INLET LOAD - G/CU.M	6.9	(3.00 GR/SCF)
PARTICULATE OUTLET LOAD - NG/J	34.	(.078 LB/MMBTU)
PARTICULATE DESIGN REMOVAL EFFICIENCY - %	99.0	
SO2 INLET CONCENTRATION - PPM	800.000	
SO2 DESIGN REMOVAL EFFICIENCY - %	20.0	

MINNESOTA POWER & LIGHT: CLAY BOSWELL 3 (CONT.)

PERIOD	MODULE	AVAILABILITY	OPERABILITY	RELIABILITY	UTILIZATION	% REMOVAL SO2	% REMOVAL PART.	PER HOURS	BOILER HOURS	FGD HOURS	CAP. FACTOR
		PERFORMANCE DATA									
10/79	SYSTEM							744			
11/79	SYSTEM							720			
12/79	SYSTEM							744			

** PROBLEMS/SOLUTIONS/COMMENTS

NO INFORMATION WAS AVAILABLE FOR THE FOURTH QUARTER 1979.

SECTION 14
DESIGN AND PERFORMANCE DATA FOR OPERATIONAL PARTICLE SCRUBBERS

COMPANY NAME	MONTANA-DAKOTA UTILITIES CO.	
PLANT NAME	LEWIS & CLARK	
UNIT NUMBER	1	
CITY	SIDNEY	
STATE	MONTANA	
REGULATORY CLASSIFICATION	******	
PARTICULATE EMISSION LIMITATION - NG/J	86.	(.200 LB/MMBTU)
SO2 EMISSION LIMITATION - NG/J	430.	(1.000 LB/MMBTU)
NET PLANT GENERATING CAPACITY - MW	50.3	
GROSS UNIT GENERATING CAPACITY - MW	55.1	
NET UNIT GENERATING CAPACITY W/FGD - MW	50.3	
NET UNIT GENERATING CAPACITY WO/FGD - MW	51.5	
EQUIVALENT SCRUBBED CAPACITY - MW	*******	
** BOILER DATA		
SUPPLIER	COMBUSTION ENGINEERING	
TYPE	PULVERIZED COAL	
SERVICE LOAD	BASE	
COMMERCIAL SERVICE DATE	10/58	
MAXIMUM BOILER FLUE GAS FLOW - CU.M/S	153.37	(325000 ACFM)
FLUE GAS TEMPERATURE - C	215.6	(420 F)
STACK HEIGHT - M	76.	(250 FT)
STACK TOP DIAMETER - M	4.4	(14.5 FT)
** FUEL DATA		
FUEL TYPE	COAL	
FUEL GRADE	LIGNITE	
AVERAGE HEAT CONTENT - J/G	15003.	(6450 BTU/LB)
RANGE HEAT CONTENT - BTU/LB		6200-6700
AVERAGE ASH CONTENT - %	7.80	
RANGE ASH CONTENT - %	7.2-9.3	
AVERAGE MOISTURE CONTENT - %	36.20	
RANGE MOISTURE CONTENT - %	34.25-38.16	
AVERAGE SULFUR CONTENT - %	.61	
RANGE SULFUR CONTENT - %	.32-1.43	
AVERAGE CHLORIDE CONTENT - %	.03	
RANGE CHLORIDE CONTENT - %	******	
** MECHANICAL COLLECTOR		
NUMBER	1	
TYPE	MULTICLONE	
SUPPLIER	WESTERN PRECIPITATION	
PARTICULATE DESIGN REMOVAL EFFICIENCY - %	85.7	
FLUE GAS CAPACITY - CU.M/S	106.2	(225000 ACFM)
FLUE GAS TEMPERATURE - C	176.7	(350 F)
PRESSURE DROP - KPA	*******	(***** IN-H2O)
PARTICULATE OUTLET LOAD - G/CU.M	2.93	(1.28 GR/SCF)
** PARTICULATE SCRUBBER		
TYPE	VENTURI	
SUPPLIER	RESEARCH COTTRELL	
NUMBER OF STAGES	1	
SHELL MATERIAL	CARBON STEEL	
LINING MATERIAL	CEILCOTE FLAKELINE 103	
INTERNAL MATERIAL	CARBON STEEL WITH 1" NORTON CA-308	
NUMBER OF NOZZLES	0	
BOILER LOAD/SCRUBBER - %	100.0	
FLUE GAS CAPACITY - CU.M/S	148.0	(313730 ACFM)
FLUE GAS TEMPERATURE - C	215.6	(420 F)
LIQUID RECIRCULATION RATE - LITER/S	212.6	(3374 GPM)
L/G RATIO - LITER/CU.M	1.7	(13.0 GAL/1000ACF)
PRESSURE DROP - KPA	*******	(***** IN-H2O)
PARTICULATE INLET LOAD - G/CU.M	327.2	(143.00 GR/SCF)
PARTICULATE OUTLET LOAD - G/CU.M	.1	(.030 GR/SCF)
SO2 INLET CONCENTRATION - NG/J	88134.	(****** LB/MMBTU)

MONTANA-DAKOTA UTILITIES CO.: LEWIS & CLARK 1 (CONT.)

PERIOD	MODULE	AVAILABILITY	OPERABILITY	RELIABILITY	UTILIZATION	% REMOVAL SO2	% REMOVAL PART.	PER HOURS	BOILER HOURS	FGD HOURS	CAP. FACTOR
		PERFORMANCE DATA									
10/79	SYSTEM							720			

** PROBLEMS/SOLUTIONS/COMMENTS
DURING A SCHEDULED BOILER OUTAGE GENERAL SCRUBBER MAINTENANCE WAS PERFORMED.

11/79	SYSTEM							720			

** PROBLEMS/SOLUTIONS/COMMENTS
DURING NOVEMBER THE SCRUBBER WAS TEMPORARILY BYPASSED TO ALLOW FOR REPAIRS NECESSITATED BY A LEAK IN THE FLOODED DISC SCRUBBER.

12/79	SYSTEM							744			

** PROBLEMS/SOLUTIONS/COMMENTS
THE UTILITY REPORTED THAT THERE WERE NO PROBLEMS DURING THIS MONTH.

SECTION 14
DESIGN AND PERFORMANCE DATA FOR OPERATIONAL PARTICLE SCRUBBERS

COMPANY NAME	PACIFIC POWER & LIGHT	
PLANT NAME	DAVE JOHNSTON	
UNIT NUMBER	4	
CITY	GLENROCK	
STATE	WYOMING	
REGULATORY CLASSIFICATION	******	
PARTICULATE EMISSION LIMITATION - NG/J	90.	(.210 LB/MMBTU)
SO2 EMISSION LIMITATION - NG/J	215.	(.500 LB/MMBTU)
NET PLANT GENERATING CAPACITY - MW	********	
GROSS UNIT GENERATING CAPACITY - MW	330.0	
NET UNIT GENERATING CAPACITY W/FGD - MW	326.5	
NET UNIT GENERATING CAPACITY WO/FGD - MW	330.0	
EQUIVALENT SCRUBBED CAPACITY - MW	33.0	
** BOILER DATA		
SUPPLIER	COMBUSTION ENGINEERING	
TYPE	PULVERIZED COAL	
SERVICE LOAD	******	
COMMERCIAL SERVICE DATE	**/**	
MAXIMUM BOILER FLUE GAS FLOW - CU.M/S	707.85	(1500000 ACFM)
FLUE GAS TEMPERATURE - C	132.2	(270 F)
STACK HEIGHT - M	76.	(250 FT)
STACK TOP DIAMETER - M	*******	(***** FT)
** FUEL DATA		
FUEL TYPE	COAL	
FUEL GRADE	SUBBITUMINOUS	
AVERAGE HEAT CONTENT - J/G	17282.	(7430 BTU/LB)
RANGE HEAT CONTENT - BTU/LB		5,000-9,000
AVERAGE ASH CONTENT - %	12.00	
RANGE ASH CONTENT - %	******	
AVERAGE MOISTURE CONTENT - %	26.00	
RANGE MOISTURE CONTENT - %	******	
AVERAGE SULFUR CONTENT - %	.50	
RANGE SULFUR CONTENT - %	******	
AVERAGE CHLORIDE CONTENT - %	.04	
RANGE CHLORIDE CONTENT - %	******	
** PARTICULATE SCRUBBER		
NUMBER	3	
TYPE	VENTURI	
SUPPLIER	CHEMICO	
SHELL MATERIAL	CARBON STEEL, 3/8" AT VENTURI THROAT	
LINING MATERIAL	POLYESTER-LINED STEEL	
BOILER LOAD/SCRUBBER - %	33.3	
FLUE GAS CAPACITY - CU.M/S	327.5	(694000 ACFM)
FLUE GAS TEMPERATURE - C	135.0	(275 F)
LIQUID RECIRCULATION RATE - LITER/S	409.5	(6500 GPM)
L/G RATIO - LITER/CU.M	1.7	(13.0 GAL/1000ACF)
PRESSURE DROP - KPA	*******	(***** IN-H2O)
PARTICULATE INLET LOAD - G/CU.M	9.2	(4.00 GR/SCF)
PARTICULATE OUTLET LOAD - G/CU.M	.1	(.040 GR/SCF)
PARTICULATE DESIGN REMOVAL EFFICIENCY - %	99.7	
SO2 INLET CONCENTRATION - PPM	500.000	
SO2 DESIGN REMOVAL EFFICIENCY - %	40.0	

PERFORMANCE DATA

PERIOD	MODULE	AVAILABILITY	OPERABILITY	RELIABILITY	UTILIZATION	% REMOVAL SO2	% REMOVAL PART.	PER HOURS	BOILER HOURS	FGD HOURS	CAP. FACTOR
10/79	SYSTEM							744			
11/79	SYSTEM							720			
12/79	SYSTEM							744			

PACIFIC POWER & LIGHT: DAVE JOHNSTON 4 (CONT.)

PERIOD	MODULE	AVAILABILITY	OPERABILITY	RELIABILITY	UTILIZATION	% REMOVAL SO2	% REMOVAL PART.	PER HOURS	BOILER HOURS	FGD HOURS	CAP. FACTOR
					PERFORMANCE DATA						

** PROBLEMS/SOLUTIONS/COMMENTS

NO INFORMATION WAS AVAILABLE FOR THE FOURTH QUARTER 1979.

SECTION 14
DESIGN AND PERFORMANCE DATA FOR OPERATIONAL PARTICLE SCRUBBERS

COMPANY NAME	POTOMAC ELECTRIC POWER	
PLANT NAME	DICKERSON	
UNIT NUMBER	1	
CITY	DICKERSON	
STATE	MARYLAND	
REGULATORY CLASSIFICATION	******	
PARTICULATE EMISSION LIMITATION - NG/J	******	(****** LB/MMBTU)
SO2 EMISSION LIMITATION - NG/J	******	(****** LB/MMBTU)
NET PLANT GENERATING CAPACITY - MW	1348.0	
GROSS UNIT GENERATING CAPACITY - MW	190.0	
NET UNIT GENERATING CAPACITY W/FGD - MW	183.0	
NET UNIT GENERATING CAPACITY WO/FGD - MW	*******	
EQUIVALENT SCRUBBED CAPACITY - MW	*******	
** BOILER DATA		
SUPPLIER	******	
TYPE	PULVERIZED COAL	
SERVICE LOAD	******	
COMMERCIAL SERVICE DATE	**/**	
MAXIMUM BOILER FLUE GAS FLOW - CU.M/S	********	(******* ACFM)
FLUE GAS TEMPERATURE - C	********	(**** F)
STACK HEIGHT - M	******	(**** FT)
STACK TOP DIAMETER - M	*******	(***** FT)
** FUEL DATA		
FUEL TYPE	COAL	
FUEL GRADE	******	
AVERAGE HEAT CONTENT - J/G	27214.	(11700 BTU/LB)
RANGE HEAT CONTENT - BTU/LB		******
AVERAGE ASH CONTENT - %	14.00	
RANGE ASH CONTENT - %	******	
AVERAGE MOISTURE CONTENT - %	********	
RANGE MOISTURE CONTENT - %	******	
AVERAGE SULFUR CONTENT - %	2.00	
RANGE SULFUR CONTENT - %	******	
AVERAGE CHLORIDE CONTENT - %	********	
RANGE CHLORIDE CONTENT - %	******	
** PARTICULATE SCRUBBER		
TYPE	VENTURI	
NUMBER OF STAGES	2	

PERFORMANCE DATA

PERIOD	MODULE	AVAILABILITY	OPERABILITY	RELIABILITY	UTILIZATION	% REMOVAL SO2	% REMOVAL PART.	PER HOURS	BOILER HOURS	FGD HOURS	CAP. FACTOR
10/79	SYSTEM		100.0		83.6			744	622	622	
11/79	SYSTEM		96.0		80.1			720	601	577	
12/79	SYSTEM		100.0		87.4			744	650	650	

** PROBLEMS/SOLUTIONS/COMMENTS
DURING THIS PERIOD ONLY ONE FGD RELATED OUTAGE OCCURRED. THE OUTAGE WAS FOR AN ID FAN INSPECTION WHICH LASTED ONE DAY.

SECTION 14
DESIGN AND PERFORMANCE DATA FOR OPERATIONAL PARTICLE SCRUBBERS

COMPANY NAME	POTOMAC ELECTRIC POWER	
PLANT NAME	DICKERSON	
UNIT NUMBER	2	
CITY	DICKERSON	
STATE	MARYLAND	
REGULATORY CLASSIFICATION	******	
PARTICULATE EMISSION LIMITATION - NG/J	******	(****** LB/MMBTU)
SO2 EMISSION LIMITATION - NG/J	******	(****** LB/MMBTU)
NET PLANT GENERATING CAPACITY - MW	1348.0	
GROSS UNIT GENERATING CAPACITY - MW	191.0	
NET UNIT GENERATING CAPACITY W/FGD - MW	183.0	
NET UNIT GENERATING CAPACITY WO/FGD - MW	*******	
EQUIVALENT SCRUBBED CAPACITY - MW	*******	
** BOILER DATA		
SUPPLIER	******	
TYPE	PULVERIZED COAL	
SERVICE LOAD	******	
COMMERCIAL SERVICE DATE	**/**	
MAXIMUM BOILER FLUE GAS FLOW - CU.M/S	********	(******* ACFM)
FLUE GAS TEMPERATURE - C	*******	(**** F)
STACK HEIGHT - M	******	(**** FT)
STACK TOP DIAMETER - M	*******	(***** FT)
** FUEL DATA		
FUEL TYPE	COAL	
FUEL GRADE	******	
AVERAGE HEAT CONTENT - J/G	27214.	(11700 BTU/LB)
RANGE HEAT CONTENT - BTU/LB		******
AVERAGE ASH CONTENT - %	14.00	
RANGE ASH CONTENT - %	******	
AVERAGE MOISTURE CONTENT - %	********	
RANGE MOISTURE CONTENT - %	******	
AVERAGE SULFUR CONTENT - %	2.00	
RANGE SULFUR CONTENT - %	******	
AVERAGE CHLORIDE CONTENT - %	********	
RANGE CHLORIDE CONTENT - %	******	
** PARTICULATE SCRUBBER		
TYPE	VENTURI	
NUMBER OF STAGES	2	

PERFORMANCE DATA

PERIOD	MODULE	AVAILABILITY	OPERABILITY	RELIABILITY	UTILIZATION	% REMOVAL SO2	% REMOVAL PART.	PER HOURS	BOILER HOURS	FGD HOURS	CAP. FACTOR
10/79	SYSTEM		100.0		97.0			744	722	722	
11/79	SYSTEM		96.4		88.9			720	664	640	
12/79	SYSTEM		100.0		100.0			744	744	744	

** PROBLEMS/SOLUTIONS/COMMENTS
A ONE DAY OUTAGE OCCURRED, DUE TO A FAN LINING PROBLEM. NO OTHER FGD UNIT PROBLEMS WERE ENCOUNTERED DURING THE PERIOD.

SECTION 14
DESIGN AND PERFORMANCE DATA FOR OPERATIONAL PARTICLE SCRUBBERS

COMPANY NAME	POTOMAC ELECTRIC POWER	
PLANT NAME	DICKERSON	
UNIT NUMBER	3	
CITY	DICKERSON	
STATE	MARYLAND	
REGULATORY CLASSIFICATION	******	
PARTICULATE EMISSION LIMITATION - NG/J	******	(****** LB/MMBTU)
SO2 EMISSION LIMITATION - NG/J	688.	(1.600 LB/MMBTU)
NET PLANT GENERATING CAPACITY - MW	548.0	
GROSS UNIT GENERATING CAPACITY - MW	190.0	
NET UNIT GENERATING CAPACITY W/FGD - MW	183.0	
NET UNIT GENERATING CAPACITY WO/FGD - MW	*******	
EQUIVALENT SCRUBBED CAPACITY - MW	*******	
** BOILER DATA		
SUPPLIER	COMBUSTION ENGINEERING	
TYPE	PULVERIZED COAL	
SERVICE LOAD	BASE	
COMMERCIAL SERVICE DATE	0/62	
MAXIMUM BOILER FLUE GAS FLOW - CU.M/S	278.42	(590000 ACFM)
FLUE GAS TEMPERATURE - C	126.1	(259 F)
STACK HEIGHT - M	122.	(400 FT)
STACK TOP DIAMETER - M	*******	(***** FT)
** FUEL DATA		
FUEL TYPE	COAL	
FUEL GRADE	******	
AVERAGE HEAT CONTENT - J/G	27214.	(11700 BTU/LB)
RANGE HEAT CONTENT - BTU/LB		******
AVERAGE ASH CONTENT - %	14.00	
RANGE ASH CONTENT - %	*******	
AVERAGE MOISTURE CONTENT - %	********	
RANGE MOISTURE CONTENT - %	******	
AVERAGE SULFUR CONTENT - %	2.00	
RANGE SULFUR CONTENT - %	******	
AVERAGE CHLORIDE CONTENT - %	********	
RANGE CHLORIDE CONTENT - %	******	
** ESP		
NUMBER	1	
SUPPLIER	RESEARCH COTTRELL	
PARTICULATE DESIGN REMOVAL EFFICIENCY - %	94.0	
** PARTICULATE SCRUBBER		
NUMBER	1	
TYPE	VENTURI	
SUPPLIER	CHEMICO	
BOILER LOAD/SCRUBBER - %	50.0	
FLUE GAS CAPACITY - CU.M/S	139.2	(295000 ACFM)
FLUE GAS TEMPERATURE - C	126.1	(259 F)
L/G RATIO - LITER/CU.M	2.7	(20.0 GAL/1000ACF)
PRESSURE DROP - KPA	*******	(***** IN-H2O)

PERFORMANCE DATA

PERIOD	MODULE	AVAILABILITY	OPERABILITY	RELIABILITY	UTILIZATION	% REMOVAL SO2	% REMOVAL PART.	PER HOURS	BOILER HOURS	FGD HOURS	CAP. FACTOR
9/73	SYSTEM							720			
10/73	SYSTEM							744			
11/73	SYSTEM							720			
12/73	SYSTEM							744			
1/74	SYSTEM							744			

POTOMAC ELECTRIC POWER: DICKERSON 3 (CONT.)

PERIOD	MODULE	AVAILABILITY	OPERABILITY	RELIABILITY	UTILIZATION	% REMOVAL SO2	% REMOVAL PART.	PER HOURS	BOILER HOURS	FGD HOURS	CAP. FACTOR
		PERFORMANCE DATA									

** PROBLEMS/SOLUTIONS/COMMENTS
PROBLEMS DURING THIS PERIOD RANGED FROM CORROSION LEAKS IN EXPANSION JOINTS TO PROBLEMS IN MATERIAL HANDLING EQUIPMENT, FEEDING AND SLAKING OF MGO, PLUGGING IN THE MGO MIX TANK AND SUCTION LINES TO THE MGO MAKE-UP PUMPS.

2/74	SYSTEM							672			
3/74	SYSTEM							744			
4/74	SYSTEM							720			

** PROBLEMS/SOLUTIONS/COMMENTS
MAINTENANCE AND MODIFICATIONS WERE PERFORMED ON THE SYSTEM. THE MAJOR SYSTEM REVISION MADE DURING THIS PERIOD WAS THE ADDITION OF A PRE-MIX TANK IN THE MGO SYSTEM.

4/74	SYSTEM							720			
5/74	SYSTEM							744			
6/74	SYSTEM							720			
7/74	SYSTEM							744			

** PROBLEMS/SOLUTIONS/COMMENTS
LIMITED OPERATION OCCURRED BECAUSE THE UTILITY DID NOT HAVE ACCESS TO THE EPA CALCINING FACILITY AT THE ESSEX CHEMICAL COMPANY SULFURIC ACID PLANT. BY THE END OF JUNE 1974, ALL THE MGO AT DICKERSON HAD BEEN USED AND A SILO PLUS THREE CARS WERE FULL OF MGSO3.

8/74	SYSTEM							744		67	
9/74	SYSTEM							720			
10/74	SYSTEM							744			
11/74	SYSTEM							720			
12/74	SYSTEM							744			

** PROBLEMS/SOLUTIONS/COMMENTS
DURING THIS PERIOD THE SYSTEM GENERALLY OPERATED AT 75 PERCENT OF THE DESIGN GAS FLOW.

1/75	SYSTEM							744			

** PROBLEMS/SOLUTIONS/COMMENTS
PROBLEMS DEVELOPED IN THE BUCKET ELEVATOR TRANSPORTING THE MGSO3 FROM THE DRYER TO THE STORAGE SILO.

2/75	SYSTEM							672			
3/75	SYSTEM							744			
5/75	SYSTEM							744			
6/75	SYSTEM							720			
7/75	SYSTEM							744			

** PROBLEMS/SOLUTIONS/COMMENTS
UNIT NO. 3 WAS TAKEN OUT OF SERVICE FOR AN 8 TO 12 WEEK TURBINE OVERHAUL. THE SCRUBBER WAS INSPECTED, MAINTENANCE AND MODIFICATIONS WERE MADE.

8/75	SYSTEM							744			

PERIOD	MODULE	AVAILABILITY	OPERABILITY	RELIABILITY	UTILIZATION	% REMOVAL SO2	% REMOVAL PART.	PER HOURS	BOILER HOURS	FGD HOURS	CAP. FACTOR
		PERFORMANCE DATA									

** PROBLEMS/SOLUTIONS/COMMENTS

THE FGD SYSTEM CONSISTS OF A SINGLE, TWO-STAGE SCRUBBER/ABSORBER, WHICH INCORPORATES AN ADJUSTABLE-THROAT VENTURI SCRUBBER FOR PARTICULATE REMOVAL AND A SECOND STAGE ABSORBER WITH A FIXED VENTURI TO REMOVE SO2. THE LIQUOR STREAMS FOR BOTH STAGES ARE SEPARATE AND OPERATE IN A CLOSED-LOOP MODE. UNTIL MID-1975 THE MAGNESIUM SULFITE GENERATED WAS TRANSFERRED TO AN EPA FINANCED FACILITY AT THE ESSEX CHEMICAL COMPANY SULFURIC ACID MANUFACTURING PLANT IN RUMFORD, RHODE ISLAND WHERE MAGNESIUM OXIDE WAS REGENERATED AND SO2 FROM THE REGENERATION PROCESS WAS CONVERTED TO SULFURIC ACID. THE RUMFORD FACILITY HAS SINCE BEEN CLOSED DOWN.

CONSTRUCTION WAS COMPLETED IN AUGUST AND THE SYSTEM STARTED UP IN SEPTEMBER 1973. DURING INTERMITTENT OPERATIONS FOR SHAKEDOWN THROUGH JANUARY 1974, THE SYSTEM'S LONGEST CONTINUOUS RUN WAS 271 HOURS. THE SYSTEM HAS RE-STARTED FROM JULY THROUGH DECEMBER 1974, AND AGAIN ON AUGUST 11, 1975, FOR APPROXIMATELY 87 HOURS.

FGD UNIT OUTAGES WERE CAUSED PRIMARILY BY PIPE AND PUMP CORROSION AND MAJOR TURBINE OVERHAUL OF THE BOILER. PARTICULATE AND SO2 REMOVAL EFFICIENCY GUARANTEES WERE CORROBORATED DURING OPERATIONAL PHASES.

THE FGD SYSTEM WAS RESTARTED IN AUGUST. STEAM WAS LOST TO THE MGO MIX TANK, RESULTING IN A VERY MOIST PRODUCT FROM THE CENTRIFUGE. CAKING IN THE DRYER OCCURRED. AT THIS POINT, THE UTILITY DECIDED TO TEST ONLY THE FIRST-STAGE OF THE SCRUBBING SYSTEM, TAKING GAS AHEAD OF THE PRECIPITATOR. FGD OPERATION AT DICKERSON TERMINATED AT THIS POINT.

THE REMAINING SUPPLY OF MAGNESIUM OXIDE, ABOUT 100 TONS (10 DAYS), HAS BEEN DEPLETED, AND THE DICKERSON UNIT HAS BEEN TERMINATED AS A FGD SYSTEM.

9/75	SYSTEM							720			
10/75	SYSTEM							744			
11/75	SYSTEM							720			
12/75	SYSTEM							744			
1/76	SYSTEM							744			
2/76	SYSTEM							696			
3/76	SYSTEM							744			
4/76	SYSTEM							720			
5/76	SYSTEM							744			
6/76	SYSTEM							720			
7/76	SYSTEM							744			
8/76	SYSTEM							744			
9/76	SYSTEM							720			
11/76	SYSTEM							720			
12/76	SYSTEM							744			
1/77	SYSTEM							744			
2/77	SYSTEM							672			
3/77	SYSTEM							744			
4/77	SYSTEM							720			
5/77	SYSTEM							744			
6/77	SYSTEM							720			
7/77	SYSTEM							744			

POTOMAC ELECTRIC POWER: DICKERSON 3 (CONT.)

PERFORMANCE DATA

PERIOD	MODULE	AVAILABILITY	OPERABILITY	RELIABILITY	UTILIZATION	% REMOVAL SO2	% REMOVAL PART.	PER HOURS	BOILER HOURS	FGD HOURS	CAP. FACTOR
8/77	SYSTEM							744			
9/77	SYSTEM							720			
10/77	SYSTEM							744			
11/77	SYSTEM							720			
12/77	SYSTEM							744			
1/78	SYSTEM							744			
2/78	SYSTEM	38.0	38.0		38.0			672	672	252	

** PROBLEMS/SOLUTIONS/COMMENTS
THERE HAVE BEEN MANY MAINTENANCE PROBLEMS AND PROBLEMS WITH LINER FAILURES. SINCE SHIFTING FROM SO2 TO PARTICULATE SCRUBBING ONLY, PLUGGING PROBLEMS HAVE NOT OCCURRED. LOW PH HAS CAUSED CORROSION WHICH WAS AGGRAVATED BY PARTICULATE ERROSION. THE UTILITY WILL PROBABLY RELINE WITH A FLAKE GLASS TYPE LINER. NO CHEMICALS (E.G. LIME) ARE ADDED TO THE CIRCULATING LIQUOR FOR PH BALANCE.
OUTAGE TIME WAS CAUSED BY LEAK REPAIRS IN SLURRY PIPING.

3/78	SYSTEM	21.0	22.0		21.0			744	717	156	

** PROBLEMS/SOLUTIONS/COMMENTS
OUTAGE TIME WAS DUE TO RUBBER LINING FAILURE IN THE RECYCLE PUMP DISCHARGE LINE.

4/78	SYSTEM	80.7	79.8		76.4			720	689	550	

** PROBLEMS/SOLUTIONS/COMMENTS
26 HOURS OF OUTAGE TIME WERE DUE TO SMALL LEAKS IN PIPING.

5/78	SYSTEM	84.5	82.7		74.0			744	666	551	

** PROBLEMS/SOLUTIONS/COMMENTS
A LEAK OCCURRED IN A MIST ELIMINATOR DRAIN.
THERE WAS A LEAK IN A BLEED LINE FOR THE SCRUBBER RECYCLE CIRCUIT.
OUTAGE TIME WAS REQUIRED FOR BLEED LINE REPLACEMENT.

6/78	SYSTEM	100.0	90.1		68.7			720	549	495	
7/78	SYSTEM	100.0	.0		.0			744	16	0	

** PROBLEMS/SOLUTIONS/COMMENTS
THE VENTURI SCRUBBER HAD AN AVAILABILITY OF 100% FOR JUNE AND JULY. THE ONLY VENTURI OUTAGE TIME WAS IN JUNE. THE OUTAGE TIME WAS REQUIRED TO TIE IN EQUIPMENT COMMON TO THE NEW UNIT AND UNIT 3.
THE BOILER WAS DOWN IN JULY FOR AN OVERHAUL.
THE REASON VENTURI HOURS CAN BE LOWER THAN BOILER HOURS WHEN THE VENTURI HAS A 100% AVAILABILITY IS BECAUSE THE VENTURI IS NOT OPERATED UNDER LOW LOAD CONDITIONS.

8/78	SYSTEM							744			
9/78	SYSTEM							720			
10/78	SYSTEM							744			
11/78	SYSTEM							720			
12/78	SYSTEM							744			
1/79	SYSTEM							744			
2/79	SYSTEM							672			
3/79	SYSTEM							744			

PERIOD	MODULE	AVAILABILITY	OPERABILITY	RELIABILITY	UTILIZATION	% REMOVAL SO2	% REMOVAL PART.	PER HOURS	BOILER HOURS	FGD HOURS	CAP. FACTOR
		PERFORMANCE DATA									
4/79	SYSTEM							720			
5/79	SYSTEM							744			

** PROBLEMS/SOLUTIONS/COMMENTS
SCRUBBER OUTAGE HOURS SINCE SEPTEMBER 1978 (I.E. SEPTEMBER 1978 THROUGH MAY 30, 1979) TOTAL 140. THE UTILITY INDICATED THAT IT IS NO LONGER ALLOWABLE TO BYPASS THE SCRUBBER WHEN PROBLEMS OCCUR, CLEANING THE PARTICULATE MATTER SOLELY WITH THE ESP. THE UTILITY MUST DROP THE BOILER LOAD SO THE UNIT REMAINS IN COMPLIANCE.
THERE HAVE BEEN NO PROBLEMS REPORTED FOR THE LAST FEW MONTHS. THE UTILITY IS KEEPING AHEAD OF PROBLEMS WITH A CONSCIENTIOUS INSPECTION AND MAINTENANCE PROGRAM.

6/79	SYSTEM							720			
7/79	SYSTEM							744			
8/79	SYSTEM							744			
9/79	SYSTEM							720			
10/79	SYSTEM		98.6		95.4			744	720	710	

** PROBLEMS/SOLUTIONS/COMMENTS
A TEN HOUR OUTAGE OCCURRED FOR REPAIRS OF A LEAD LINE LEAK.

11/79	SYSTEM		95.2		88.8			720	672	640	

** PROBLEMS/SOLUTIONS/COMMENTS
IN NOVEMBER, 8 HOURS OUTAGE TIME WAS REQUIRED TO REPAIR A LEAK IN A RECYCLE LINE.

12/79	SYSTEM		96.1		93.5			744	724	696	

** PROBLEMS/SOLUTIONS/COMMENTS
AN OUTAGE FOR GENERAL INSPECTION TOOK PLACE DURING DECEMBER.

SECTION 14
DESIGN AND PERFORMANCE DATA FOR OPERATIONAL PARTICLE SCRUBBERS

COMPANY NAME	PUBLIC SERVICE OF COLORADO	
PLANT NAME	ARAPAHOE	
UNIT NUMBER	4	
CITY	DENVER	
STATE	COLORADO	
REGULATORY CLASSIFICATION	******	
PARTICULATE EMISSION LIMITATION - NG/J	43.	(.100 LB/MMBTU)
SO2 EMISSION LIMITATION - NG/J	******	(****** LB/MMBTU)
NET PLANT GENERATING CAPACITY - MW	*******	
GROSS UNIT GENERATING CAPACITY - MW	112.0	
NET UNIT GENERATING CAPACITY W/FGD - MW	109.8	
NET UNIT GENERATING CAPACITY WO/FGD - MW	*******	
EQUIVALENT SCRUBBED CAPACITY - MW	11.2	
** BOILER DATA		
SUPPLIER	******	
TYPE	PULVERIZED COAL	
SERVICE LOAD	******	
COMMERCIAL SERVICE DATE	0/55	
MAXIMUM BOILER FLUE GAS FLOW - CU.M/S	245.39	(520000 ACFM)
FLUE GAS TEMPERATURE - C	148.9	(300 F)
STACK HEIGHT - M	******	(**** FT)
STACK TOP DIAMETER - M	*******	(***** FT)
** FUEL DATA		
FUEL TYPE	COAL	
FUEL GRADE	SUBBITUMINOUS	
AVERAGE HEAT CONTENT - J/G	23725.	(10200 BTU/LB)
RANGE HEAT CONTENT - BTU/LB		******
AVERAGE ASH CONTENT - %	9.30	
RANGE ASH CONTENT - %	******	
AVERAGE MOISTURE CONTENT - %	13.70	
RANGE MOISTURE CONTENT - %	******	
AVERAGE SULFUR CONTENT - %	.95	
RANGE SULFUR CONTENT - %	0.6-0.95	
AVERAGE CHLORIDE CONTENT - %	.01	
RANGE CHLORIDE CONTENT - %	******	
** FUEL DATA		
FUEL TYPE	COAL	
FUEL GRADE	BITUMINOUS	
AVERAGE HEAT CONTENT - J/G	23493.	(10100 BTU/LB)
RANGE HEAT CONTENT - BTU/LB		******
AVERAGE ASH CONTENT - %	12.50	
RANGE ASH CONTENT - %	******	
AVERAGE MOISTURE CONTENT - %	11.20	
RANGE MOISTURE CONTENT - %	******	
AVERAGE SULFUR CONTENT - %	.65	
RANGE SULFUR CONTENT - %	******	
AVERAGE CHLORIDE CONTENT - %	.01	
RANGE CHLORIDE CONTENT - %	******	
** FABRIC FILTER		
NUMBER	0	
TYPE	NONE	
** ESP		
NUMBER	1	
** MECHANICAL COLLECTOR		
NUMBER	1	
** PARTICULATE SCRUBBER		
NUMBER	1	
TYPE	MOBILE PACKED TOWER	
SUPPLIER	AIR CORRECTION DIVISION, UOP	
NUMBER OF STAGES	3	
SHELL MATERIAL	CARBON STEEL	
LINING MATERIAL	RUBBER	
INTERNAL MATERIAL	STAINLESS STEEL GRIDS, PLASTIC SPHERES	
BOILER LOAD/SCRUBBER - %	100.0	
FLUE GAS CAPACITY - CU.M/S	245.4	(520000 ACFM)

PUBLIC SERVICE OF COLORADO: ARAPAHOE 4 (CONT.)

FLUE GAS TEMPERATURE - C	151.7	(305 F)
L/G RATIO - LITER/CU.M	7.5	(56.0 GAL/1000ACF)
PRESSURE DROP - KPA	*******	(***** IN-H2O)
SUPERFICIAL GAS VELOCITY - M/S	3.4	(11.0 FT/S)
PARTICULATE INLET LOAD - G/CU.M	1.8	(.80 GR/SCF)
PARTICULATE OUTLET LOAD - G/CU.M	.0	(.020 GR/SCF)
PARTICULATE DESIGN REMOVAL EFFICIENCY - %	93.0	
SO2 INLET CONCENTRATION - PPM	500.000	
SO2 OUTLET CONCENTRATION - PPM	350.000	
SO2 DESIGN REMOVAL EFFICIENCY - %	30.0	

PERFORMANCE DATA

PERIOD	MODULE	AVAILABILITY	OPERABILITY	RELIABILITY	UTILIZATION	% REMOVAL SO2	% REMOVAL PART.	PER HOURS	BOILER HOURS	FGD HOURS	CAP. FACTOR
10/79	SYSTEM							744			
11/79	SYSTEM							720			
12/79	SYSTEM							744			

** PROBLEMS/SOLUTIONS/COMMENTS

DURING THE FOURTH QUARTER REHEATER FAILURES OCCURRED.
LEAKAGE IN THE INLINE STEAM TUBES HAS BEEN ENCOUNTERED. CORROSION IS KNOWN TO OCCUR AFTER LEAKS ARE EXPERIENCED.
THE PRIMARY PROBLEM WITH THE SYSTEM IS THE INABILITY TO ISOLATE MODULES. IF A PROBLEM OCCURS NO MODULE MAINTENANCE CAN BE PERFORMED UNLESS THE UNIT IS CUT BACK OR SHUT DOWN.

SECTION 14
DESIGN AND PERFORMANCE DATA FOR OPERATIONAL PARTICLE SCRUBBERS

COMPANY NAME	PUBLIC SERVICE OF COLORADO	
PLANT NAME	CHEROKEE	
UNIT NUMBER	1	
CITY	DENVER	
STATE	COLORADO	
REGULATORY CLASSIFICATION	******	
PARTICULATE EMISSION LIMITATION - NG/J	43.	(.100 LB/MMBTU)
SO2 EMISSION LIMITATION - NG/J	******	(****** LB/MMBTU)
NET PLANT GENERATING CAPACITY - MW	710.0	
GROSS UNIT GENERATING CAPACITY - MW	115.0	
NET UNIT GENERATING CAPACITY W/FGD - MW	100.0	
NET UNIT GENERATING CAPACITY WO/FGD - MW	115.0	
EQUIVALENT SCRUBBED CAPACITY - MW	102.2	
** BOILER DATA		
SUPPLIER	BABCOCK & WILCOX	
TYPE	PULVERIZED COAL	
SERVICE LOAD	******	
COMMERCIAL SERVICE DATE	0/57	
MAXIMUM BOILER FLUE GAS FLOW - CU.M/S	245.39	(520000 ACFM)
FLUE GAS TEMPERATURE - C	146.1	(295 F)
STACK HEIGHT - M	******	(**** FT)
STACK TOP DIAMETER - M	********	(***** FT)
** FUEL DATA		
FUEL TYPE	COAL	
FUEL GRADE	BITUMINOUS	
AVERAGE HEAT CONTENT - J/G	23493.	(10100 BTU/LB)
RANGE HEAT CONTENT - BTU/LB		******
AVERAGE ASH CONTENT - %	12.50	
RANGE ASH CONTENT - %	9.4-12.5	
AVERAGE MOISTURE CONTENT - %	11.30	
RANGE MOISTURE CONTENT - %	******	
AVERAGE SULFUR CONTENT - %	.65	
RANGE SULFUR CONTENT - %	******	
AVERAGE CHLORIDE CONTENT - %	.01	
RANGE CHLORIDE CONTENT - %	******	
** FABRIC FILTER		
NUMBER	0	
TYPE	NONE	
** ESP		
NUMBER	1	
** MECHANICAL COLLECTOR		
NUMBER	1	
** PARTICULATE SCRUBBER		
NUMBER	1	
TYPE	MOBILE PACKED TOWER	
SUPPLIER	AIR CORRECTION DIVISION, UOP	
NUMBER OF STAGES	3	
SHELL MATERIAL	CARBON STEEL	
LINING MATERIAL	RUBBER	
INTERNAL MATERIAL	STAINLESS STEEL, 1.5 INCH PLASTIC SPHERES	
BOILER LOAD/SCRUBBER - %	67.0	
FLUE GAS CAPACITY - CU.M/S	164.4	(348400 ACFM)
FLUE GAS TEMPERATURE - C	146.1	(295 F)
L/G RATIO - LITER/CU.M	7.5	(56.0 GAL/1000ACF)
PRESSURE DROP - KPA	*******	(***** IN-H2O)
SUPERFICIAL GAS VELOCITY - M/S	3.4	(11.0 FT/S)
PARTICULATE INLET LOAD - G/CU.M	1.8	(.80 GR/SCF)
PARTICULATE OUTLET LOAD - G/CU.M	.0	(.020 GR/SCF)
PARTICULATE DESIGN REMOVAL EFFICIENCY - %	97.0	
SO2 INLET CONCENTRATION - PPM	500.000	
SO2 OUTLET CONCENTRATION - PPM	420.000	
SO2 DESIGN REMOVAL EFFICIENCY - %	16.0	

EPA UTILITY FGD SURVEY: FOURTH QUARTER 1979

PUBLIC SERVICE OF COLORADO: CHEROKEE 1 (CONT.)

PERIOD	MODULE	AVAILABILITY	OPERABILITY	RELIABILITY	UTILIZATION	% REMOVAL SO2	% REMOVAL PART.	PERFORMANCE DATA PER HOURS	BOILER HOURS	FGD HOURS	CAP. FACTOR
10/79	SYSTEM							744			
11/79	SYSTEM							720			
12/79	SYSTEM							744			

** PROBLEMS/SOLUTIONS/COMMENTS

DURING THE PERIOD ID FAN FAILURES HAVE OCCURRED DUE TO EROSION FROM THE FLYASH.
THE ISOLATION DAMPER HAS BEEN A PROBLEM DUE TO FREEZE UPS MAKING IT INOPERATIVE.
REHEATER FAILURES HAVE OCCURRED DUE TO PLUGGING OF THE HOT AIR INJECTION STEAM COILS.
THE SCRUBBER EXIT DUCTWORK WILL BE REPAIRED TEMPORARILY WITH A SPRAY ON FIBERGLASS LIKE MATERIAL.

SECTION 14
DESIGN AND PERFORMANCE DATA FOR OPERATIONAL PARTICLE SCRUBBERS

COMPANY NAME	PUBLIC SERVICE OF COLORADO	
PLANT NAME	CHEROKEE	
UNIT NUMBER	4	
CITY	DENVER	
STATE	COLORADO	
REGULATORY CLASSIFICATION	******	
PARTICULATE EMISSION LIMITATION - NG/J	43.	(.100 LB/MMBTU)
SO2 EMISSION LIMITATION - NG/J	******	(****** LB/MMBTU)
NET PLANT GENERATING CAPACITY - MW	710.0	
GROSS UNIT GENERATING CAPACITY - MW	375.0	
NET UNIT GENERATING CAPACITY W/FGD - MW	350.0	
NET UNIT GENERATING CAPACITY WO/FGD - MW	375.0	
EQUIVALENT SCRUBBED CAPACITY - MW	356.4	
** BOILER DATA		
SUPPLIER	COMBUSTION ENGINEERING	
TYPE	PULVERIZED COAL	
SERVICE LOAD	******	
COMMERCIAL SERVICE DATE	0/68	
MAXIMUM BOILER FLUE GAS FLOW - CU.M/S	717.29	(1520000 ACFM)
FLUE GAS TEMPERATURE - C	135.0	(275 F)
STACK HEIGHT - M	******	(**** FT)
STACK TOP DIAMETER - M	*******	(***** FT)
** FUEL DATA		
FUEL TYPE	COAL	
FUEL GRADE	BITUMINOUS	
AVERAGE HEAT CONTENT - J/G	23493.	(10100 BTU/LB)
RANGE HEAT CONTENT - BTU/LB		******
AVERAGE ASH CONTENT - %	12.50	
RANGE ASH CONTENT - %	9.4-12.5	
AVERAGE MOISTURE CONTENT - %	11.30	
RANGE MOISTURE CONTENT - %	******	
AVERAGE SULFUR CONTENT - %	.65	
RANGE SULFUR CONTENT - %	******	
AVERAGE CHLORIDE CONTENT - %	.01	
RANGE CHLORIDE CONTENT - %	******	
** FABRIC FILTER		
NUMBER	0	
TYPE	NONE	
** ESP		
NUMBER	1	
** MECHANICAL COLLECTOR		
NUMBER	1	
** PARTICULATE SCRUBBER		
NUMBER	4	
TYPE	MOBILE PACKED TOWER	
SUPPLIER	AIR CORRECTION DIVISION, UOP	
NUMBER OF STAGES	3	
SHELL MATERIAL	CARBON STEEL	
LINING MATERIAL	RUBBER	
INTERNAL MATERIAL	STAINLESS STEEL, 1.5 INCH PLASTIC SPHERES	
L/G RATIO - LITER/CU.M	7.5	(56.0 GAL/1000ACF)
PRESSURE DROP - KPA	*******	(***** IN-H2O)
SUPERFICIAL GAS VELOCITY - M/S	3.4	(11.0 FT/S)
PARTICULATE INLET LOAD - G/CU.M	1.6	(.70 GR/SCF)
PARTICULATE OUTLET LOAD - G/CU.M	.0	(.020 GR/SCF)
PARTICULATE DESIGN REMOVAL EFFICIENCY - %	97.0	
SO2 INLET CONCENTRATION - PPM	50 (.000	
SO2 OUTLET CONCENTRATION - PPM	42 (.000	
SO2 DESIGN REMOVAL EFFICIENCY - %	16.0	

PERIOD	MODULE	AVAILABILITY	OPERABILITY	RELIABILITY	UTILIZATION	% REMOVAL SO2	% REMOVAL PART.	PERFORMANCE DATA PER HOURS	BOILER HOURS	FGD HOURS	CAP. FACTOR
10/79	SYSTEM							744			
11/79	SYSTEM							720			
12/79	SYSTEM							744			

** PROBLEMS/SOLUTIONS/COMMENTS

DURING THE PERIOD ID FAN FAILURES HAVE OCCURRED DUE TO EROSION FROM THE FLYASH.

THE ISOLATION DAMPER HAS BEEN A PROBLEM DUE TO FREEZE UPS MAKING IT INOPERATIVE.

REHEATER FAILURES HAVE OCCURRED DUE TO PLUGGING OF THE HOT AIR INJECTION STEAM COILS.

THE SCRUBBER EXIT DUCTWORK WILL BE REPAIRED TEMPORARILY WITH A SPRAY ON FIBERGLASS LIKE MATERIAL.

SECTION 14
DESIGN AND PERFORMANCE DATA FOR OPERATIONAL PARTICLE SCRUBBERS

COMPANY NAME	PUBLIC SERVICE OF COLORADO	
PLANT NAME	VALMONT	
UNIT NUMBER	5	
CITY	VALMONT	
STATE	COLORADO	
REGULATORY CLASSIFICATION	******	
PARTICULATE EMISSION LIMITATION - NG/J	43.	(.100 LB/MMBTU)
SO2 EMISSION LIMITATION - NG/J	******	(****** LB/MMBTU)
NET PLANT GENERATING CAPACITY - MW	27?.8	
GROSS UNIT GENERATING CAPACITY - MW	166.0	
NET UNIT GENERATING CAPACITY W/FGD - MW	157.0	
NET UNIT GENERATING CAPACITY WO/FGD - MW	163.0	
EQUIVALENT SCRUBBED CAPACITY - MW	166.0	
** BOILER DATA		
SUPPLIER	COMBUSTION ENGINEERING	
TYPE	PULVERIZED COAL	
SERVICE LOAD	BASE	
COMMERCIAL SERVICE DATE	0/64	
MAXIMUM BOILER FLUE GAS FLOW - CU.M/S	436.98	(926000 ACFM)
FLUE GAS TEMPERATURE - C	126.7	(260 F)
STACK HEIGHT - M	******	(**** FT)
STACK TOP DIAMETER - M	*******	(***** FT)
** FUEL DATA		
FUEL TYPE	COAL	
FUEL GRADE	SUBBITUMINOUS	
AVERAGE HEAT CONTENT - J/G	25121.	(10800 BTU/LB)
RANGE HEAT CONTENT - BTU/LB		******
AVERAGE ASH CONTENT - %	6.00	
RANGE ASH CONTENT - %	5.4-7.0	
AVERAGE MOISTURE CONTENT - %	15.00	
RANGE MOISTURE CONTENT - %	12.7-18.3	
AVERAGE SULFUR CONTENT - %	.70	
RANGE SULFUR CONTENT - %	0.68-.73	
AVERAGE CHLORIDE CONTENT - %	********	
RANGE CHLORIDE CONTENT - %	******	
** FABRIC FILTER		
NUMBER	0	
TYPE	NONE	
** ESP		
NUMBER	1	
TYPE	COLD SIDE	
FLUE GAS CAPACITY - CU.M/S	218.5	(463000 ACFM)
** MECHANICAL COLLECTOR		
NUMBER	1	
FLUE GAS CAPACITY - CU.M/S	218.5	(463000 ACFM)
** PARTICULATE SCRUBBER		
NUMBER	2	
TYPE	MOBILE PACKED TOWER	
SUPPLIER	AIR CORRECTION DIVISION, UOP	
NUMBER OF STAGES	3	
SHELL MATERIAL	CARBON STEEL	
LINING MATERIAL	RUBBER	
INTERNAL MATERIAL	STAINLESS STEEL, 1.5 INCH PLASTIC SPHERES	
TYPE OF NOZZLES	25.	
BOILER LOAD/SCRUBBER - %	36.0	
FLUE GAS CAPACITY - CU.M/S	109.2	(231500 ACFM)
FLUE GAS TEMPERATURE - C	132.8	(271 F)
L/G RATIO - LITER/CU.M	7.8	(58.3 GAL/1000ACF)
PRESSURE DROP - KPA	*******	(***** IN-H2O)
SUPERFICIAL GAS VELOCITY - M/S	3.4	(11.0 FT/S)
PARTICULATE INLET LOAD - G/CU.M	1.8	(.80 GR/SCF)
PARTICULATE OUTLET LOAD - G/CU.M	.0	(.020 GR/SCF)
SO2 INLET CONCENTRATION - PPM	500.000	
SO2 DESIGN REMOVAL EFFICIENCY - %	40.0	

PERIOD	MODULE	AVAILABILITY	OPERABILITY	RELIABILITY	UTILIZATION	% REMOVAL SO2	% REMOVAL PART.	PER HOURS	BOILER HOURS	FGD HOURS	CAP. FACTOR
		PERFORMANCE DATA									
10/74	SYSTEM							744			

** PROBLEMS/SOLUTIONS/COMMENTS
THE SCRUBBER WAS ORIGINALLY INSTALLED FOR PARTICULATE REMOVAL SINCE THE PLANT BURNS LOW SULFUR COAL; HOWEVER, 45% OF THE SO2 IS REMOVED AS WELL BECAUSE OF THE ALKALINITY OF THE FLYASH.

11/74	SYSTEM							720			
12/74	SYSTEM							744			
1/75	SYSTEM							744			
2/75	SYSTEM							672			
3/75	SYSTEM							744			
4/75	SYSTEM							720			
5/75	SYSTEM							744			
6/75	SYSTEM							720			
7/75	SYSTEM							744			
8/75	SYSTEM							744			
9/75	SYSTEM							720			
10/75	SYSTEM							744			
11/75	SYSTEM							720			
12/75	SYSTEM							744			

** PROBLEMS/SOLUTIONS/COMMENTS
DURING THE FIRST YEAR OF OPERATION PROBLEMS INCLUDED DIFFICULTIES WITH THE MODULE PACKING GRID SUPPORT; GENERAL VESSEL SCALE FORMATION, FLOW DISTRIBUTION PROBLEMS, BALL BREAKAGE, SCALING IN THE MIST ELIMINATOR SECTION, AND PLUGGING OF THE REHEATER. SCALE FORMATION WAS THE MOST PREDOMINANT CONTINUING MAJOR CAUSE OF DOWNTIME IN THE SCRUBBER. SCALE ACCUMULATION WAS NOTED ON THE WET-DRY INTERFACE IMMEDIATELY DOWNSTREAM OF THE PRESATURATION NOZZLES. SCALE ALSO ACCUMULATED HEAVILY ON THE UNDERSIDE OF THE FIRST LAYER OF GRID BARS.
SCALE ON THE UPPER GRID BARS WAS LESS PREVALENT AS THE ACTION OF THE "PING PONG" BALLS TENDED TO KEEP THE SCALE OFF OF THESE SECTIONS. SCALE ALSO COLLECTED ON THE WALLS OF THE VESSEL AND INTERMITTENTLY SLOUGHED OFF AND FELL INTO THE SUMP IN LARGE PIECES CAUSING BLOCKAGE OF THE RECIRCULATION PUMP SUCTION SCREENS. SCALING OF THE MIST ELIMINATOR ABATED SOMEWHAT WITH THE INTRODUCTION OF A CLEAR RINSE WATER WASH. SCALE FORMATION IN THE REHEAT SECTION SOMETIMES REQUIRED SUPPLEMENTAL CLEANING OF THE REHEATER IN ADDITION TO THE CLEANING OBTAINED BY THE USE OF THE SOOTBLOWERS WHICH WERE INSTALLED AS A PART OF THE REHEATER EQUIPMENT. UNDER NORMAL OPERATION, THE SOOTBLOWERS LOCATED IN THIS REHEAT SECTION WERE FAIRLY SUCCESSFUL IN REMOVING THE ACCUMULATION OF THE SCALE IN THE REHEATER.
ALTHOUGH MANY OF THE INITIAL START-UP PROBLEMS WERE SOLVED OVER A PERIOD OF TIME, THE CALCIUM SULFATE-FLYASH SCALING CONTINUED TO BE A SIGNIFICANT OPERATING PROBLEM AT THE VALMONT INSTALLATION. IN ADDITION TO THESE SCALING RELIABILITY PROBLEMS, A WATER QUALITY CONCERN ALSO SURFACED THAT WAS A DIRECT RESULT OF THE PARTICULATE SCRUBBER OPERATION. THE RELATIVELY HIGH CAO CONCENTRATION IN THE VALMONT FLYASH RESULTED IN FAIRLY HIGH SO2 REMOVAL RATES (45-50 PERCENT) WITHIN THE UNITS. SINCE NO PH CONTROL CAPABILITY FOR EITHER THE RECIRCULATING SLURRY OR THE SYSTEM BLOWDOWN SLURRY WAS DESIGNED INTO THE SYSTEM, AN ACID CONDITION WAS CREATED IN THE SLURRY AND THE BLOWDOWN STREAM. PH LEVELS OF THE BLOWDOWN NORMALLY RANGED BETWEEN 1.7 AND 2.0. ALTHOUGH THE STREAM WAS NEUTRALIZED TO A DEGREE BY ALKALINE FLYASH, PSCC FELT THAT IT WAS IMPORTANT TO INVESTIGATE VARIOUS CONTROL MEASURES WHICH COULD BE APPLIED TO THIS STREAM. THE CALCIUM SULFATE SCALING PROBLEM WAS THOUGHT TO BE THE RESULT OF A SUPER-SATURATED CALCIUM

PUBLIC SERVICE OF COLORADO: VALMONT 5 (CONT.)

PERIOD	MODULE	AVAILABILITY	OPERABILITY	RELIABILITY	UTILIZATION	% REMOVAL SO2	% REMOVAL PART.	PER HOURS	BOILER HOURS	FGD HOURS	CAP. FACTOR
					PERFORMANCE DATA						

SULFATE CONDITION IN THE RECIRCULATING SLURRY. BECAUSE OF THIS IT WAS FELT THAT CONTINUOUS PH CONTROL OF THE RECIRCULATING SLURRY, CONVERSION OF THE SYSTEM TO CLOSED LOOP OPERATION AND ESTABLISHING A HIGHER CONCENTRATION OF SEEDING SOLIDS IN THE RECIRCULATION SLURRY (THEREBY CONTROLLING THE SCALING PROBLEMS WITHOUT CHEMICAL ADDITIVES) WOULD BE NECESSARY MEASURES.
FOR PH CONTROL, LIMESTONE WAS TESTED INITIALLY, THEN LIME WAS UTILIZED FOR THE ALKALI REAGENT. IN THE FIRST TEST, SINCE LIMESTONE UTILIZATION WAS A MAJOR CONCERN, A SPECIAL EFFORT WAS MADE TO REDUCE THE POTENTIAL FOR THE SHORT CIRCUITING OF THE ADDED LIMESTONE AND TO PROVIDE SUFFICIENT RESIDENCE TIME IN THE REACTOR SECTION OF THE SYSTEM. BY UTILIZING FOUR REATION MIX TANKS IN SERIES, PLUG FLOW WAS EXPECTED TO BE MORE CLOSELY SIMULATED. TO MAINTAIN A CLOSED LOOP SYSTEM WHERE THE QUANTITY OF WATER REMOVED FROM THE SYSTEM WAS HELD TO A MINIMUM, FOUR SYSTEM DESIGN FEATURES WERE UTILIZED.

1. UTILIZATION OF A COMBINATION OF POND SUPERNATANT AND MAKE-UP WATER FOR RECYCLE WATER.
2. PRESATURATION OF THE INCOMING FLUE GAS WITH RECIRCULATING SLURRY.
3. INTERMITTENT MIST ELIMINATOR WASH.
4. PROPER SELECTION OF MATERIALS OF CONSTRUCTION TO PROTECT AGAINST ATTACK CAUSED BY HIGH CHLORIDE CONCENTRATIONS.

THE SCRUBBERS R & D FACILITY WAS NOT EQUIPPED WITH A MECHANICAL THICKENER FOR CONTROL OF THE SUSPENDED SOLIDS CONCENTRATION OF THE RECIRCULATING SLURRY (ALL PURGED MATERIAL WAS SENT TO THE SLUDGE POND). WITH A 500 PPM SO2 CONCENTRATION IN THE FLUE GAS, IT IS EXPECTED THAT THE RECIRCULATING SLURRY SOLIDS COULD BE REALLY CONTROLLED IN THE 5 TO 7 PERCENT RANGE. DUE TO THE MIXED FUEL FIRED AT THE UNIT DURING THE TEST PERIOD, HOWEVER, THE SO2 CONCENTRATIONS EMITTED FROM THE BOILER AND HENCE PRESENT IN THE FLUE GAS STREAM VARIED SIGNIFICANTLY AND FINALLY FELL TO SUCH LOW LEVELS (OFTEN 100-200 PPM) THAT SUSPENDED SOLIDS CONCENTRATIONS IN THE SLURRY COULD NOT BE MAINTAINED. IT IS ALMOST CERTAIN THAT A THICKENER, WITH THE SUBSEQUENT RETURN OF SOLIDS TO THE SCRUBBER LIQUOR, COULD HAVE BEEN USED TO GOOD ADVANTAGE DURING THIS TIME PERIOD. GENERALLY SPEAKING, THE SEVERE SCALING CONDITIONS PLAGUING THE TEST MODULE WERE INTENSIFIED DURING THESE PERIODS OF LOW INLET SO2 CONDITION.

1/76	SYSTEM							744			
2/76	SYSTEM							696			
3/76	SYSTEM							744			
4/76	SYSTEM							720			
5/76	SYSTEM										
6/76	SYSTEM							720			
7/76	SYSTEM							744			
8/76	SYSTEM							744			
9/76	SYSTEM							720			
10/76	SYSTEM							744			
11/76	SYSTEM							720			
12/76	SYSTEM							744			
1/77	SYSTEM							744			
2/77	SYSTEM							672			
3/77	SYSTEM							744			
4/77	SYSTEM							720			
5/77	SYSTEM							744			
6/77	SYSTEM							720			
7/77	SYSTEM							744			

PERIOD	MODULE	AVAILABILITY	OPERABILITY	RELIABILITY	UTILIZATION	% REMOVAL SO2	% REMOVAL PART.	PER HOURS	BOILER HOURS	FGD HOURS	CAP. FACTOR
		PERFORMANCE DATA									
8/77	SYSTEM							744			
9/77	SYSTEM							720			
10/77	SYSTEM							744			
11/77	SYSTEM							720			
12/77	SYSTEM							744			
1/78	SYSTEM							744			
2/78	SYSTEM							672			
3/78	SYSTEM							744			

** PROBLEMS/SOLUTIONS/COMMENTS

THERE HAVE BEEN RECURRING PROBLEMS ASSOCIATED WITH BALL MIGRATION IN THE BALL COMPARTMENT AS WELL AS RECIRCULATION PUMP MOTOR BEARING FAILURE, AND WEAR AND FAILURE IN THE BALL COMPARTMENT LINING. THERE HAVE BEEN CONTINUAL PROBLEMS WITH REHEATER PLUGGING. THERE ALSO HAVE BEEN EXPANSION JOINT FAILURES AT BOTH THE INLET AND OUTLET OF THE SCRUBBER.
MORE RECENTLY THERE WAS A PINCH BELT FAILURE.
THE SCRUBBING SYSTEM HAS HAD AN AVAILABILITY RANGE OF 50 TO 78% WITH AN AVERAGE OF 66%.

4/78	SYSTEM							720			
5/78	SYSTEM							744			

** PROBLEMS/SOLUTIONS/COMMENTS

NO SIGNIFICANT PROBLEMS WERE ENCOUNTERED.

6/78	SYSTEM							720			
7/78	SYSTEM							744			
8/78	SYSTEM							744			

** PROBLEMS/SOLUTIONS/COMMENTS

THE UTILITY HAD NO COMMENTS FOR THIS PERIOD.

9/78	SYSTEM							720			
10/78	SYSTEM							744			
11/78	SYSTEM							720			
12/78	SYSTEM							744			
1/79	SYSTEM							744			
2/79	SYSTEM							672			
3/79	SYSTEM							744			
4/79	SYSTEM							720			
5/79	SYSTEM							744			
6/79	SYSTEM							720			

** PROBLEMS/SOLUTIONS/COMMENTS

AVERAGE SCRUBBER AVAILABILITY FROM START UP THROUGH APRIL 1979 WAS 64.42%.
AVERAGE SCRUBBER AVAILABILITY FOR 1978 WAS 66.85%.
AVERAGE SCRUBBER AVAILABILITY FROM JANUARY 1, 1979 THROUGH MAY, 1979 WAS APPROXIMATELY 80%.
BALL MIGRATION, ALTHOUGH NOT SERIOUS, IS A CHRONIC PROBLEM FOR VALMONT 5.

PUBLIC SERVICE OF COLORADO: VALMONT 5 (CONT.)

PERIOD	MODULE	AVAILABILITY	OPERABILITY	RELIABILITY	UTILIZATION	% REMOVAL SO2	% REMOVAL PART.	PER HOURS	BOILER HOURS	FGD HOURS	CAP. FACTOR
				PERFORMANCE DATA							

EROSION AND CORROSION HAVE OCCURRED ON THE SCRUBBER GRID BAR AREA (PACKING SUPPORT).
EROSION/CORROSION IS EVIDENT IN THE MIST ELIMINATOR SECTION.
EROSION/CORROSION OCCURRS IN THE REHEATER AREA AND SOOT BLOWER.
THE UTILITY HAD TO REPLACE INLET AND OUTLET EXPANSION JOINTS.
REHEATER PLUGGING HAS BEEN A PROBLEM.
RECYCLE PUMP BEARING FAILURES OCCURRED.
THE JACK SCREW DRIVE HAS BEEN MALFUNCTIONING ON INLET AND OUTLET ISOLATION DAMPERS.

7/79	SYSTEM							744			
8/79	SYSTEM							744			
9/79	SYSTEM							720			

** PROBLEMS/SOLUTIONS/COMMENTS
DURING THE ANNUAL SHUTDOWN IN SEPTEMBER THE OLD SCRUBBER BALLS WERE REPLACED WITH A NEW BRAND. DUE TO BALL MOTION THE RUBBER LINER ERODED.
IN THE MIST ELIMINATOR SECTION EROSION AND CORROSION OCCURRED.

10/79	SYSTEM	100.0						744			
11/79	SYSTEM	92.3						720			
12/79	SYSTEM	98.1						744			

** PROBLEMS/SOLUTIONS/COMMENTS
ONE OF THE MAJOR FGD SYSTEM PROBLEMS IS THE SCRUBBER WALL WEAR WHICH HAS TO BE PATCHED DURING THE SPRING AND FALL.
REHEATER PLUGGING HAS BEEN A CHRONIC PROBLEM.
THE UTILITY HAS REPORTED THE FOLLOWING ANNUAL AVAILABILITIES FOR THE UNIT.
1972 - 1978: 64.3%
1972 - 1979: 65.9%
1978: 66.8%
1979: 80.5%

SECTION 14
DESIGN AND PERFORMANCE DATA FOR OPERATIONAL PARTICLE SCRUBBERS

COMPANY NAME	SOUTHWESTERN PUBLIC SERVICE	
PLANT NAME	HARRINGTON	
UNIT NUMBER	1	
CITY	AMARILLO	
STATE	TEXAS	
REGULATORY CLASSIFICATION	*****	
PARTICULATE EMISSION LIMITATION - NG/J	43.	(.100 LB/MMBTU)
SO2 EMISSION LIMITATION - NG/J	516.	(1.200 LB/MMBTU)
NET PLANT GENERATING CAPACITY - MW	360.0	
GROSS UNIT GENERATING CAPACITY - MW	360.0	
NET UNIT GENERATING CAPACITY W/FGD - MW	*******	
NET UNIT GENERATING CAPACITY WO/FGD - MW	*******	
EQUIVALENT SCRUBBED CAPACITY - MW	*******	
** BOILER DATA		
SUPPLIER	COMBUSTION ENGINEERING	
TYPE	PULVERIZED COAL	
SERVICE LOAD	BASE	
COMMERCIAL SERVICE DATE	8/7.(	
MAXIMUM BOILER FLUE GAS FLOW - CU.M/S	778.63	(1650000 ACFM)
FLUE GAS TEMPERATURE - C	176.7	(350 F)
STACK HEIGHT - M	76.	(250 FT)
STACK TOP DIAMETER - M	.8	(2.7 FT)
** FUEL DATA		
FUEL TYPE	COAL	
FUEL GRADE	SUBBITUMINOUS	
AVERAGE HEAT CONTENT - J/G	19538.	(8400 BTU/LB)
RANGE HEAT CONTENT - BTU/LB		8000-8900
AVERAGE ASH CONTENT - %	5.00	
RANGE ASH CONTENT - %	4.5-6	
AVERAGE MOISTURE CONTENT - %	27.10	
RANGE MOISTURE CONTENT - %	25-3(	
AVERAGE SULFUR CONTENT - %	.42	
RANGE SULFUR CONTENT - %	.39-.45	
AVERAGE CHLORIDE CONTENT - %	********	
RANGE CHLORIDE CONTENT - %	******	
** ESP		
NUMBER	1	
TYPE	COLD SIDE	
SUPPLIER	RESEARCH COTTRELL	
PARTICULATE DESIGN REMOVAL EFFICIENCY - %	95.0	
FLUE GAS CAPACITY - CU.M/S	778.6	(1650000 ACFM)
FLUE GAS TEMPERATURE - C	168.3	(335 F)
PRESSURE DROP - KPA	*******	(***** IN-H2O)
PARTICULATE OUTLET LOAD - G/CU.M	1.83	(.80 GR/SCF)
** PARTICULATE SCRUBBER		
NUMBER	6	
TYPE	MOBILE PACKED TOWER	
SUPPLIER	COMBUSTION ENGINEERING	
NUMBER OF STAGES	1	
SHELL MATERIAL	CARBON STEEL	
LINING MATERIAL	RIGID LINE POLYESTER	
INTERNAL MATERIAL	316L SS FIBERGLASS ALLOY 20	
NUMBER OF NOZZLES	95	
FLUE GAS CAPACITY - CU.M/S	141.6	(300000 ACFM)
FLUE GAS TEMPERATURE - C	6(.0	(140 F)
LIQUID RECIRCULATION RATE - LITER/S	444.1	(7050 GPM)
L/G RATIO - LITER/CU.M	3.1	(23.0 GAL/1000ACF)
SUPERFICIAL GAS VELOCITY - M/S	2.4	(8.0 FT/S)
PARTICULATE INLET LOAD - NG/J	80.	(.185 LB/MMBTU)
PARTICULATE OUTLET LOAD - NG/J	30.	(.070 LB/MMBTU)
SO2 INLET CONCENTRATION - NG/J	430.	(1.000 LB/MMBTU)
SO2 OUTLET CONCENTRATION - NG/J	215.	(.500 LB/MMBTU)
SO2 DESIGN REMOVAL EFFICIENCY - %	50.0	

SOUTHWESTERN PUBLIC SERVICE: HARRINGTON 1 (CONT.)

PERIOD	MODULE	AVAILABILITY	OPERABILITY	RELIABILITY	UTILIZATION	% REMOVAL SO2	% REMOVAL PART.	PER HOURS	BOILER HOURS	FGD HOURS	CAP. FACTOR
		PERFORMANCE DATA									
10/79	SYSTEM							744			
11/79	SYSTEM							720			
12/79	SYSTEM							744			

** PROBLEMS/SOLUTIONS/COMMENTS

DURING OCTOBER THROUGH DECEMBER, TWO SPRAY PUMP MOTORS FAILED.
THE FRP MATERIAL IN THE FLUSH PIPING HAS FAILED CAUSING SOME LEAKAGE.
PLUGGING IN ONE MARBLE BED WAS ENCOUNTERED WHEN THE CHEMISTRY CONTROL WAS TEMPORARILY LOST.
SOME MARBLE CAPS HAVE LOOSENED ALLOWING SOME MARBLE TO FALL INTO THE RECYCLE TANK. THIS WAS RECTIFIED DURING THE PERIOD.

SECTION 15
DESIGN AND PERFORMANCE DATA FOR OPERATIONAL FOREIGN FGD SYSTEMS

COMPANY NAME	CHUGOKU ELECTRIC	
PLANT NAME	SHIMONOSEKI	
UNIT NUMBER	1	
CITY	******	
STATE	******	
REGULATORY CLASSIFICATION	******	
PARTICULATE EMISSION LIMITATION - NG/J	******	(****** LB/MMBTU)
SO2 EMISSION LIMITATION - NG/J	******	(****** LB/MMBTU)
NET PLANT GENERATING CAPACITY - MW	*******	
GROSS UNIT GENERATING CAPACITY - MW	175.0	
NET UNIT GENERATING CAPACITY W/FGD - MW	*******	
NET UNIT GENERATING CAPACITY WO/FGD - MW	*******	
EQUIVALENT SCRUBBED CAPACITY - MW	*******	
** BOILER DATA		
SUPPLIER	******	
TYPE	******	
SERVICE LOAD	******	
COMMERCIAL SERVICE DATE	**/**	
MAXIMUM BOILER FLUE GAS FLOW - CU.M/S	********	(******* ACFM)
FLUE GAS TEMPERATURE - C	*******	(**** F)
STACK HEIGHT - M	******	(**** FT)
STACK TOP DIAMETER - M	*******	(***** FT)
** FUEL DATA		
FUEL TYPE	COAL	
FUEL GRADE	******	
AVERAGE HEAT CONTENT - J/G	*******	(****** BTU/LB)
RANGE HEAT CONTENT - BTU/LB		******
AVERAGE ASH CONTENT - %	********	
RANGE ASH CONTENT - %	******	
AVERAGE MOISTURE CONTENT - %	********	
RANGE MOISTURE CONTENT - %	******	
AVERAGE SULFUR CONTENT - %	2.00	
RANGE SULFUR CONTENT - %	******	
AVERAGE CHLORIDE CONTENT - %	********	
RANGE CHLORIDE CONTENT - %	******	
** FGD SYSTEM		
SALEABLE PRODUCT/THROWAWAY PRODUCT	SALEABLE PRODUCT	
GENERAL PROCESS TYPE	WET SCRUBBING	
PROCESS TYPE	LIMESTONE	
SYSTEM SUPPLIER	MITSUBISHI HEAVY INDUSTRIES	
DEVELOPMENT LEVEL	FULL SCALE	
NEW/RETROFIT	RETROFIT	
SO2 DESIGN REMOVAL EFFICIENCY - %	96.00	
COMMERCIAL DATE	0/79	
CONSTRUCTION INITIATION	0/78	
** REHEATER		
TYPE	WASTE HEAT RECOVERY	
** BYPRODUCTS		
BYPRODUCT NATURE	GYPSUM	

SECTION 15
DESIGN AND PERFORMANCE DATA FOR OPERATIONAL FOREIGN FGD SYSTEMS

COMPANY NAME	ELECTRIC POWER DEVELOPMENT CO.	
PLANT NAME	ISOGO	
UNIT NUMBER	1	
CITY	YOKOHAMA	
STATE	JAPAN	
REGULATORY CLASSIFICATION	******	
PARTICULATE EMISSION LIMITATION - NG/J	******	(****** LB/MMBTU)
SO2 EMISSION LIMITATION - NG/J	******	(****** LB/MMBTU)
NET PLANT GENERATING CAPACITY - MW	*******	
GROSS UNIT GENERATING CAPACITY - MW	265.0	
NET UNIT GENERATING CAPACITY W/FGD - MW	*******	
NET UNIT GENERATING CAPACITY WO/FGD - MW	*******	
EQUIVALENT SCRUBBED CAPACITY - MW	265.0	
** BOILER DATA		
SUPPLIER	IHI	
TYPE	******	
SERVICE LOAD	BASE	
COMMERCIAL SERVICE DATE	0/67	
MAXIMUM BOILER FLUE GAS FLOW - CU.M/S	405.36	(859000 ACFM)
FLUE GAS TEMPERATURE - C	170.0	(338 F)
STACK HEIGHT - M	122.	(400 FT)
STACK TOP DIAMETER - M	*******	(***** FT)
** FUEL DATA		
FUEL TYPE	COAL	
FUEL GRADE	******	
AVERAGE HEAT CONTENT - J/G	25586.	(11000 BTU/LB)
RANGE HEAT CONTENT - BTU/LB		******
AVERAGE ASH CONTENT - %	16.00	
RANGE ASH CONTENT - %	******	
AVERAGE MOISTURE CONTENT - %	4.20	
RANGE MOISTURE CONTENT - %	******	
AVERAGE SULFUR CONTENT - %	.60	
RANGE SULFUR CONTENT - %	0.2 - 0.6	
AVERAGE CHLORIDE CONTENT - %	*******	
RANGE CHLORIDE CONTENT - %	******	
** ESP		
NUMBER	2	
PARTICULATE OUTLET LOAD - G/CU.M	.59	(.26 GR/SCF)
** PARTICULATE SCRUBBER		
TYPE	VENTURI	
** FGD SYSTEM		
SALEABLE PRODUCT/THROWAWAY PRODUCT	SALEABLE PRODUCT	
GENERAL PROCESS TYPE	WET SCRUBBING	
PROCESS TYPE	LIMESTONE	
SYSTEM SUPPLIER	IHI - CHEMICO	
DEVELOPMENT LEVEL	FULL SCALE	
NEW/RETROFIT	RETROFIT	
PARTICULATE DESIGN REMOVAL EFFICIENCY - %	96.70	
SO2 DESIGN REMOVAL EFFICIENCY - %	90.00	
INITIAL START-UP	3/76	
** ABSORBER		
NUMBER	1	
TYPE	VENTURI	
INITIAL START UP	3/76	
SUPPLIER	IHI - CHEMICO	
NUMBER OF STAGES	1	
SHELL MATERIAL	MILD STEEL	
SHELL LINER MATERIAL	FLAKE	
BOILER LOAD/ABSORBER - %	100.0	
GAS FLOW - CU.M/S	405.36	(859000 ACFM)
GAS TEMPERATURE - C	170.0	(338 F)
L/G RATIO - L/CU.M	5.4	(70.0 GAL/1000ACF)
PRESSURE DROP , KPA	1.5	(5.9 IN-H2O)
SUPERFICAL GAS VELOCITY - M/SEC	3.0	(10.0 FT/S)
PARTICULATE INLET LOAD - G/CU.M	.6	(.262 GR/SCF)
PARTICULATE OUTLET LOAD- G/CU.M	.1	(.022 GR/SCF)

ELECTRIC POWER DEVELOPMENT CO.: ISOGO 1 (CONT.)

SO2 INLET CONCENTRATION - PPM	500	
SO2 OUTLET CONCENTRATION - PPM	160	
SO2 DESIGN REMOVAL EFFICIENCY - %	65.0	

** ABSORBER

NUMBER	1	
TYPE	VENTURI	
INITIAL START UP	3/76	
SUPPLIER	IHI - CHEMICO	
NUMBER OF STAGES	1	
SHELL MATERIAL	MILD STEEL	
SHELL LINER MATERIAL	FLAKE	
BOILER LOAD/ABSORBER - %	100.0	
GAS FLOW - CU.M/S	566.28	(1200000 ACFM)
GAS TEMPERATURE - C	55.0	(131 F)
L/G RATIO - L/CU.M	1.4	(70.0 GAL/1000ACF)
PRESSURE DROP - KPA	1.5	(5.9 IN-H2O)
SUPERFICAL GAS VELOCITY - M/SEC	3.0	(10.0 FT/S)
PARTICULATE INLET LOAD - G/CU.M	.1	(.022 GR/SCF)
PARTICULATE OUTLET LOAD- G/CU.M	.1	(.022 GR/SCF)
PARTICULATE REMOVAL EFFICIENCY - %	96.7	
SO2 INLET CONCENTRATION - PPM	160	
SO2 OUTLET CONCENTRATION - PPM	50	
SO2 DESIGN REMOVAL EFFICIENCY - %	80.0	

** CENTRIFUGE

NUMBER	8	
OUTLET SOLIDS - %	90.0	

** FANS

NUMBER	2	
CAPACITY - CU.M/S	362.14	(767400 ACFM)

** FANS

NUMBER	1	
TYPE	OXIDATION BLOWER	
CAPACITY - CU.M/S	.86	(1830 ACFM)

** MIST ELIMINATOR

TYPE	CHEVRON	
CONSTRUCTION MATERIAL	PLASTIC	
CONFIGURATION	HORIZONTAL	
NUMBER OF STAGES	4	
NUMBER OF PASSES	4	
WASH SYSTEM	INTERMITTENT FRESH WATER WASH	
PRESSURE DROP - KPA	.5	(2.0 IN-H2O)

** PROCESS CONTROL CHEMISTRY

CONTROL VARIABLES	PH

** PUMPS

SERVICE	NUMBER
SLURRY MAKEUP	3
ABSORBER RECIRCULATION	10
OXIDATION TOWER SUPPLY TRANSFER	****
FILTRATE	****

** TANKS

SERVICE	NUMBER
OXIDATION TOWER FEED TANK	****
RECYCLE	****
SLURRY TANK	****
THICKENER OVERFLOW	****
FILTRATE TANK	****
OXIDATION TOWER	****

** REHEATER

TYPE	DIRECT COMBUSTION	
TEMPERATURE BOOST - C	83.9	(151 F)

** THICKENER

NUMBER	1
TYPE	SEDIMENTATION AND CONCENTRATION TYPE

ELECTRIC POWER DEVELOPMENT CO.: ISOGO 1 (CONT.)

** WATER LOOP		
TYPE	OPEN	
PURGE WATER LOSS - LITER/S	2.5	(40 GPM)
FRESH MAKEUP WATER ADDITION - LITERS/S	22.3	(354 GPM)
** BYPRODUCTS		
BYPRODUCT NATURE	GYPSUM	
BYPRODUCT QUANTITY - M T/H	4.53	(5.00 TPH)
DISPOSITION	MARKETED	
** TREATMENT		
TYPE	FORCED OXIDATION	

SECTION 15
DESIGN AND PERFORMANCE DATA FOR OPERATIONAL FOREIGN FGD SYSTEMS

COMPANY NAME	ELECTRIC POWER DEVELOPMENT CO.	
PLANT NAME	ISOGO	
UNIT NUMBER	2	
CITY	YOKOHAMA	
STATE	JAPAN	
REGULATORY CLASSIFICATION	******	
PARTICULATE EMISSION LIMITATION - NG/J	******	(****** LB/MMBTU)
SO2 EMISSION LIMITATION - NG/J	******	(****** LB/MMBTU)
NET PLANT GENERATING CAPACITY - MW	*******	
GROSS UNIT GENERATING CAPACITY - MW	265.0	
NET UNIT GENERATING CAPACITY W/FGD - MW	*******	
NET UNIT GENERATING CAPACITY WO/FGD - MW	*******	
EQUIVALENT SCRUBBED CAPACITY - MW	265.0	
** BOILER DATA		
SUPPLIER	IHI	
TYPE	******	
SERVICE LOAD	BASE	
COMMERCIAL SERVICE DATE	0/69	
MAXIMUM BOILER FLUE GAS FLOW - CU.M/S	405.36	(859000 ACFM)
FLUE GAS TEMPERATURE - C	170.0	(338 F)
STACK HEIGHT - M	140.	(460 FT)
STACK TOP DIAMETER - M	*******	(***** FT)
** FUEL DATA		
FUEL TYPE	COAL	
FUEL GRADE	******	
AVERAGE HEAT CONTENT - J/G	25586.	(11000 BTU/LB)
RANGE HEAT CONTENT - BTU/LB		******
AVERAGE ASH CONTENT - %	16.00	
RANGE ASH CONTENT - %	******	
AVERAGE MOISTURE CONTENT - %	4.20	
RANGE MOISTURE CONTENT - %	******	
AVERAGE SULFUR CONTENT - %	.60	
RANGE SULFUR CONTENT - %	0.2 - 0.6	
AVERAGE CHLORIDE CONTENT - %	********	
RANGE CHLORIDE CONTENT - %	******	
** ESP		
NUMBER	2	
** PARTICULATE SCRUBBER		
TYPE	VENTURI	
** FGD SYSTEM		
SALEABLE PRODUCT/THROWAWAY PRODUCT	SALEABLE PRODUCT	
GENERAL PROCESS TYPE	WET SCRUBBING	
PROCESS TYPE	LIMESTONE	
SYSTEM SUPPLIER	IHI ' CHEMICO	
DEVELOPMENT LEVEL	FULL SCALE	
NEW/RETROFIT	RETROFIT	
PARTICULATE DESIGN REMOVAL EFFICIENCY - %	96.70	
SO2 DESIGN REMOVAL EFFICIENCY - %	90.00	
INITIAL START-UP	5/76	
** ABSORBER		
NUMBER	1	
TYPE	VENTURI	
INITIAL START UP	5/76	
SUPPLIER	IHI - CHEMICO	
NUMBER OF STAGES	1	
SHELL MATERIAL	MILD STEEL	
SHELL LINER MATERIAL	FLAKE	
BOILER LOAD/ABSORBER - %	100.0	
GAS FLOW - CU.M/S	405.36	(859000 ACFM)
GAS TEMPERATURE - C	170.0	(338 F)
L/G RATIO - L/CU.M	9.4	(70.0 GAL/1000ACF)
PRESSURE DROP - KPA	1.5	(5.9 IN-H2O)
SUPERFICAL GAS VELOCITY - M/SEC	3.0	(10.0 FT/S)
PARTICULATE INLET LOAD - G/CU.M	.6	(.262 GR/SCF)
PARTICULATE OUTLET LOAD- G/CU.M	.1	(.022 GR/SCF)
SO2 INLET CONCENTRATION - PPM	500	

ELECTRIC POWER DEVELOPMENT CO.: ISOGO 2 (CONT.)

SO2 OUTLET CONTRATION - PPM	160	
SO2 DESIGN REMOVAL EFFICIENCY - %	65.0	
** ABSORBER		
NUMBER	1	
TYPE	VENTURI	
INITIAL START UP	5/7(	
SUPPLIER	IHI - CHEMICO	
NUMBER OF STAGES	1	
SHELL MATERIAL	MILD STEEL	
SHELL LINER MATERIAL	FLAKE	
BOILER LOAD/ABSORBER - %	100.0	
GAS FLOW - CU.M/S	566.28	(1200000 ACFM)
GAS TEMPERATURE - C	55.0	(131 F)
L/G RATIO - L/CU.M	9.4	(70.0 GAL/1000ACF)
PRESSURE DROP - KPA	1.5	(5.9 IN-H2O)
SUPERFICAL GAS VELOCITY - M/SEC	3.0	(10.0 FT/S)
PARTICULATE INLET LOAD - G/CU.M	.1	(.022 GR/SCF)
PARTICULATE OUTLET LOAD- G/CU.M	.1	(.022 GR/SCF)
PARTICULATE REMOVAL EFFICIENCY - %	96.7	
SO2 INLET CONCENTRATION - PPM	160	
SO2 OUTLET CONTRATION - PPM	50	
SO2 DESIGN REMOVAL EFFICIENCY - %	80.0	
** CENTRIFUGE		
NUMBER	8	
OUTLET SOLIDS - %	90.0	
** FANS		
NUMBER	2	
CAPACITY - CU.M/S	362.14	(767400 ACFM)
** FANS		
NUMBER	1	
TYPE	OXIDATION BLOWER	
CAPACITY - CU.M/S	.86	(1830 ACFM)
** MIST ELIMINATOR		
TYPE	CHEVRON	
CONSTRUCTION MATERIAL	PLASTIC	
CONFIGURATION	HORIZONTAL	
NUMBER OF STAGES	4	
NUMBER OF PASSES	4	
WASH SYSTEM	INTERMITTENT FRESH WATER WASH	
PRESSURE DROP - KPA	.5	(2.0 IN-H2O)
** PROCESS CONTROL CHEMISTRY		
CONTROL VARIABLES	PH	
** PUMPS		
SERVICE	NUMBER	
---	---	
SLURRY MAKEUP	3	
ABSORBER RECIRCULATION	10	
OXIDATION TOWER SUPPLY TRANSFER	****	
FILTRATE	****	
** TANKS		
SERVICE	NUMBER	
---	---	
OXIDATION TOWER FEED TANK	****	
RECYCLE	****	
SLURRY TANK	****	
THICKENER OVERFLOW	****	
FILTRATE TANK	****	
OXIDATION TOWER	****	
** REHEATER		
TYPE	DIRECT COMBUSTION	
TEMPERATURE BOOST - C	83.9	(151 F)
** THICKENER		
NUMBER	1	
TYPE	SEDIMENTATION AND CONCENTRATION TYPE	

ELECTRIC POWER DEVELOPMENT CO.: ISOGO 2 (CONT.)

** WATER LOOP		
TYPE	OPEN	
PURGE WATER LOSS - LITER/S	2.5	(40 GPM)
FRESH MAKEUP WATER ADDITION - LITERS/S	22.3	(354 GPM)
** BYPRODUCTS		
BYPRODUCT NATURE	GYPSUM	
BYPRODUCT QUANTITY - M T/H	4.53	(5.00 TPH)
DISPOSITION	MARKETED	
** TREATMENT		
TYPE	FORCED OXIDATION	

SECTION 19
DESIGN AND PERFORMANCE DATA FOR OPERATIONAL FOREIGN FGD SYSTEMS

COMPANY NAME	ELECTRIC POWER DEVELOPMENT CO.	
PLANT NAME	MATSUSHIMA	
UNIT NUMBER	1	
CITY	******	
STATE	JAPAN	
REGULATORY CLASSIFICATION	******	
PARTICULATE EMISSION LIMITATION - NG/J	******	(****** LB/MMBTU)
SO2 EMISSION LIMITATION - NG/J	******	(****** LB/MMBTU)
NET PLANT GENERATING CAPACITY - MW	*******	
GROSS UNIT GENERATING CAPACITY - MW	500.0	
NET UNIT GENERATING CAPACITY W/FGD - MW	*******	
NET UNIT GENERATING CAPACITY WO/FGD - MW	*******	
EQUIVALENT SCRUBBED CAPACITY - MW	375.0	
** BOILER DATA		
SUPPLIER	******	
TYPE	******	
SERVICE LOAD	******	
COMMERCIAL SERVICE DATE	0/80	
MAXIMUM BOILER FLUE GAS FLOW - CU.M/S	********	(******* ACFM)
FLUE GAS TEMPERATURE - C	*******	(**** F)
STACK HEIGHT - M	******	(**** FT)
STACK TOP DIAMETER - M	******	(***** FT)
** FUEL DATA		
FUEL TYPE	COAL	
FUEL GRADE	******	
AVERAGE HEAT CONTENT - J/G	*******	(****** BTU/LB)
RANGE HEAT CONTENT - BTU/LB		******
AVERAGE ASH CONTENT - %	********	
RANGE ASH CONTENT - %	******	
AVERAGE MOISTURE CONTENT - %	********	
RANGE MOISTURE CONTENT - %	******	
AVERAGE SULFUR CONTENT - %	1.60	
RANGE SULFUR CONTENT - %	******	
AVERAGE CHLORIDE CONTENT - %	********	
RANGE CHLORIDE CONTENT - %	******	
** ESP		
TYPE	HOT SIDE	
PARTICULATE DESIGN REMOVAL EFFICIENCY - %	99.5	
FLUE GAS CAPACITY - CU.M/S	457.7	(970000 ACFM)
FLUE GAS TEMPERATURE - C	85.0	(185 F)
** PARTICULATE SCRUBBER		
TYPE	NONE	
** FGD SYSTEM		
SALEABLE PRODUCT/THROWAWAY PRODUCT	SALEABLE PRODUCT	
GENERAL PROCESS TYPE	WET SCRUBBING	
PROCESS TYPE	LIMESTONE	
SYSTEM SUPPLIER	VENDOR NOT SELECTED	
DEVELOPMENT LEVEL	FULL SCALE	
NEW/RETROFIT	NEW	
SO2 DESIGN REMOVAL EFFICIENCY - %	95.00	
INITIAL START-UP	1/80	
** ABSORBER		
NUMBER	1	
INITIAL START UP	1/80	
SHELL LINER MATERIAL	FLAKEGLASS FILLED PLASTIC	
BOILER LOAD/ABSORBER - %	100.0	
GAS FLOW - CU.M/S	457.74	(970000 ACFM)
GAS TEMPERATURE - C	85.0	(185 F)
PARTICULATE INLET LOAD - G/CU.M	.3	(.130 GR/SCF)
SO2 INLET CONCENTRATION - PPM	1000	
** ABSORBER		
NUMBER	1	
INITIAL START UP	1/80	
SHELL LINER MATERIAL	FLAKEGLASS FILLED PLASTIC	
BOILER LOAD/ABSORBER - %	75.0	

ELECTRIC POWER DEVELOPMENT CO.: MATSUSHIMA 1 (CONT.)

GAS FLOW - CU.M/S	737.11	(1562000 ACFM)
GAS TEMPERATURE - C	55.0	(131 F)
PARTICULATE OUTLET LOAD- G/CU.M	.0	(.013 GR/SCF)
SO2 OUTLET CONTRATION - PPM	50	

** FANS

NUMBER	2
TYPE	BOOSTER

** MIST ELIMINATOR

CONFIGURATION	HORIZONTAL

** PROCESS CONTROL CHEMISTRY

CONTROL VARIABLES	PH BASED CONTROL-TRIMMED BY BOILER LOAD SIGNAL

** PUMPS

SERVICE	NUMBER
---	---
******	****

** REHEATER

TYPE	BYPASS

** REHEATER

TYPE	WASTE HEAT RECOVERY

** WATER LOOP

TYPE	OPEN	
FRESH MAKEUP WATER ADDITION - LITERS/S	30.8	(489 GPM)

** BYPRODUCTS

BYPRODUCT NATURE	GYPSUM

** TREATMENT

TYPE	FORCED OXIDATION

SECTION 15
DESIGN AND PERFORMANCE DATA FOR OPERATIONAL FOREIGN FGD SYSTEMS

COMPANY NAME	ELECTRIC POWER DEVELOPMENT CO.	
PLANT NAME	MATSISHIMA	
UNIT NUMBER	2	
CITY	******	
STATE	JAPAN	
REGULATORY CLASSIFICATION	******	
PARTICULATE EMISSION LIMITATION - NG/J	******	(****** LB/MMBTU)
SO2 EMISSION LIMITATION - NG/J	******	(****** LB/MMBTU)
NET PLANT GENERATING CAPACITY - MW	*******	
GROSS UNIT GENERATING CAPACITY - MW	500.0	
NET UNIT GENERATING CAPACITY W/FGD - MW	*******	
NET UNIT GENERATING CAPACITY WO/FGD - MW	*******	
EQUIVALENT SCRUBBED CAPACITY - MW	375.0	
** BOILER DATA		
SUPPLIER	******	
TYPE	******	
SERVICE LOAD	******	
COMMERCIAL SERVICE DATE	0/80	
MAXIMUM BOILER FLUE GAS FLOW - CU.M/S	********	(******* ACFM)
FLUE GAS TEMPERATURE - C	*******	(**** F)
STACK HEIGHT - M	******	(**** FT)
STACK TOP DIAMETER - M	*******	(***** FT)
** FUEL DATA		
FUEL TYPE	COAL	
FUEL GRADE	******	
AVERAGE HEAT CONTENT - J/G	*******	(****** BTU/LB)
RANGE HEAT CONTENT - BTU/LB		******
AVERAGE ASH CONTENT - %	********	
RANGE ASH CONTENT - %	******	
AVERAGE MOISTURE CONTENT - %	********	
RANGE MOISTURE CONTENT - %	******	
AVERAGE SULFUR CONTENT - %	1.60	
RANGE SULFUR CONTENT - %	******	
AVERAGE CHLORIDE CONTENT - %	********	
RANGE CHLORIDE CONTENT - %	******	
** ESP		
TYPE	HOT SIDE	
PARTICULATE DESIGN REMOVAL EFFICIENCY - %	99.5	
FLUE GAS CAPACITY - CU.M/S	457.7	(970000 ACFM)
FLUE GAS TEMPERATURE - C	85.0	(185 F)
** PARTICULATE SCRUBBER		
TYPE	NONE	
** FGD SYSTEM		
SALEABLE PRODUCT/THROWAWAY PRODUCT	SALEABLE PRODUCT	
GENERAL PROCESS TYPE	WET SCRUBBING	
PROCESS TYPE	LIMESTONE	
SYSTEM SUPPLIER	VENDOR NOT SELECTED	
DEVELOPMENT LEVEL	FULL SCALE	
NEW/RETROFIT	NEW	
SO2 DESIGN REMOVAL EFFICIENCY - %	95.00	
INITIAL START-UP	7/80	
** ABSORBER		
NUMBER	1	
INITIAL START UP	7/80	
SHELL LINER MATERIAL	FLAKEGLASS FILLED PLASTIC	
BOILER LOAD/ABSORBER - %	100.0	
GAS FLOW - CU.M/S	457.74	(970000 ACFM)
GAS TEMPERATURE - C	85.0	(185 F)
PARTICULATE INLET LOAD - G/CU.M	.3	(.130 GR/SCF)
SO2 INLET CONCENTRATION - PPM	1000	
** ABSORBER		
NUMBER	1	
INITIAL START UP	7/80	
SHELL LINER MATERIAL	FLAKEGLASS FILLED PLASTIC	
BOILER LOAD/ABSORBER - %	7[illegible].0	

ELECTRIC POWER DEVELOPMENT CO.: MATSUSHIMA 2 (CONT.)

GAS FLOW - CU.M/S	737.11	(1562000 ACFM)
GAS TEMPERATURE - C	55.0	(131 F)
PARTICULATE OUTLET LOAD- G/CU.M	.0	(.013 GR/SCF)
SO2 OUTLET CONTRATION - PPM	50	

** FANS

NUMBER	2
TYPE	BOOSTER

** MIST ELIMINATOR

CONFIGURATION	HORIZONTAL

** PROCESS CONTROL CHEMISTRY

CONTROL VARIABLES	PH BASED CONTROL-TRIMMED BY BOILER LOAD SIGNAL

** PUMPS

SERVICE	NUMBER
---	---
******	****

** REHEATER

TYPE	BYPASS

** REHEATER

TYPE	WASTE HEAT RECOVERY

** WATER LOOP

TYPE	OPEN	
FRESH MAKEUP WATER ADDITION - LITERS/S	30.8	(489 GPM)

** BYPRODUCTS

BYPRODUCT NATURE	GYPSUM

** TREATMENT

TYPE	FORCED OXIDATION

SECTION 15
DESIGN AND PERFORMANCE DATA FOR OPERATIONAL FOREIGN FGD SYSTEMS

COMPANY NAME	ELECTRIC POWER DEVELOPMENT CO.	
PLANT NAME	TAKASAGO	
UNIT NUMBER	1	
CITY	HIMEJI	
STATE	JAPAN	
REGULATORY CLASSIFICATION	******	
PARTICULATE EMISSION LIMITATION - NG/J	******	(****** LB/MMBTU)
SO2 EMISSION LIMITATION - NG/J	******	(****** LB/MMBTU)
NET PLANT GENERATING CAPACITY - MW	*******	
GROSS UNIT GENERATING CAPACITY - MW	250.0	
NET UNIT GENERATING CAPACITY W/FGD - MW	*******	
NET UNIT GENERATING CAPACITY WO/FGD - MW	*******	
EQUIVALENT SCRUBBED CAPACITY - MW	250.0	
** BOILER DATA		
SUPPLIER	******	
TYPE	******	
SERVICE LOAD	BASE	
COMMERCIAL SERVICE DATE	0/68	
MAXIMUM BOILER FLUE GAS FLOW - CU.M/S	365.25	(774000 ACFM)
FLUE GAS TEMPERATURE - C	154.4	(310 F)
STACK HEIGHT - M	******	(**** FT)
STACK TOP DIAMETER - M	*******	(***** FT)
** FUEL DATA		
FUEL TYPE	COAL	
FUEL GRADE	******	
AVERAGE HEAT CONTENT - J/G	24656.	(10600 BTU/LB)
RANGE HEAT CONTENT - BTU/LB		******
AVERAGE ASH CONTENT - %	********	
RANGE ASH CONTENT - %	******	
AVERAGE MOISTURE CONTENT - %	********	
RANGE MOISTURE CONTENT - %	******	
AVERAGE SULFUR CONTENT - %	1.80	
RANGE SULFUR CONTENT - %	******	
AVERAGE CHLORIDE CONTENT - %	********	
RANGE CHLORIDE CONTENT - %	******	
** ESP		
NUMBER	1	
FLUE GAS TEMPERATURE - C	154.4	(310 F)
** PARTICULATE SCRUBBER		
TYPE	VENTURI	
** FGD SYSTEM		
SALEABLE PRODUCT/THROWAWAY PRODUCT	SALEABLE PRODUCT	
GENERAL PROCESS TYPE	WET SCRUBBING	
PROCESS TYPE	LIMESTONE	
SYSTEM SUPPLIER	MITSUI - CHEMICO	
DEVELOPMENT LEVEL	FULL SCALE	
NEW/RETROFIT	RETROFIT	
INITIAL START-UP	2/75	
** ABSORBER		
NUMBER	1	
TYPE	VENTURI	
INITIAL START UP	2/75	
SUPPLIER	MITSUI - CHEMICO	
NUMBER OF STAGES	1	
BOILER LOAD/ABSORBER - %	75.0	
GAS FLOW - CU.M/S	260.49	(552000 ACFM)
GAS TEMPERATURE - C	154.4	(310 F)
L/G RATIO - L/CU.M	6.5	(48.6 GAL/1000ACF)
PRESSURE DROP - KPA	1.5	(5.9 IN-H2O)
PARTICULATE INLET LOAD - G/CU.M	.1	(.035 GR/SCF)
SO2 INLET CONCENTRATION - PPM	1500	
** ABSORBER		
NUMBER	1	
TYPE	VENTURI	
INITIAL START UP	2/75	

ELECTRIC POWER DEVELOPMENT CO.: TAKASAGO 1 (CONT.)

SUPPLIER	MITSUI - CHEMICO	
NUMBER OF STAGES	1	
BOILER LOAD/ABSORBER - %	100.0	
GAS TEMPERATURE - C	55.0	(131 F)
L/G RATIO - L/CU.M	6.5	(48.6 GAL/1000ACF)
PRESSURE DROP - KPA	1.5	(5.9 IN-H2O)
PARTICULATE OUTLET LOAD- G/CU.M	.0	(.009 GR/SCF)
SO2 OUTLET CONTRATION - PPM	75	
SO2 DESIGN REMOVAL EFFICIENCY - %	93.3	
** ABSORBER		
NUMBER	1	
TYPE	VENTURI	
INITIAL START UP	0/74	
SUPPLIER	MITSUI - CHEMICO	
NUMBER OF STAGES	1	
BOILER LOAD/ABSORBER - %	20.0	
GAS FLOW - CU.M/S	69.37	(147000 ACFM)
GAS TEMPERATURE - C	154.4	(310 F)
PARTICULATE INLET LOAD - G/CU.M	.1	(.035 GR/SCF)
SO2 INLET CONCENTRATION - PPM	1500	
** ABSORBER		
NUMBER	2	
TYPE	SPRAY TOWER	
INITIAL START UP	2/75	
SUPPLIER	MITSUI - CHEMICO	
NUMBER OF STAGES	1	
BOILER LOAD/ABSORBER - %	5.0	
GAS TEMPERATURE - C	154.4	(310 F)
PARTICULATE INLET LOAD - G/CU.M	.1	(.035 GR/SCF)
SO2 INLET CONCENTRATION - PPM	1500	
** CENTRIFUGE		
NUMBER	7	
OUTLET SOLIDS - %	90.0	
** FANS		
TYPE	BOOSTER	
** FANS		
TYPE	OXIDIZER BLOWER	
** MIST ELIMINATOR		
TYPE	CHEVRON	
NUMBER OF STAGES	4	
NUMBER OF PASSES	4	
WASH SYSTEM	SEQUENTIAL WASH-PROCESS LIQUOR & FRESH WATER	
** PROCESS CONTROL CHEMISTRY		
CONTROL VARIABLES	FLUE GAS VOLUME AND SO2 CONCENTRATION	
** TANKS		
SERVICE	NUMBER	
---	---	
RECYCLE	2	
ABSORBENT MAKEUP	****	
OXIDIZER OVERFLOW	****	
MOTHER LIQUOR TANK	****	
ABSORBER FEED	****	
** REHEATER		
TYPE	DIRECT COMBUSTION	
** THICKENER		
OUTLET SOLIDS - %	28.0	
** WATER LOOP		
TYPE	OPEN	
PURGE WATER LOSS - LITER/S	2.5	(40 GPM)
FRESH MAKEUP WATER ADDITION - LITERS/S	13.1	(208 GPM)
** BYPRODUCTS		
BYPRODUCT NATURE	GYPSUM	
BYPRODUCT QUANTITY - M T/H	8.69	(9.58 TPH)

ELECTRIC POWER DEVELOPMENT CO.: TAKASAGO 1 (CONT.)

** TREATMENT TYPE FORCED OXIDATION

PERIOD	MODULE	AVAILABILITY	OPERABILITY	RELIABILITY	UTILIZATION	% REMOVAL SO2	% REMOVAL PART.	PER HOURS	BOILER HOURS	FGD HOURS	CAP. FACTOR
		PERFORMANCE DATA									
2/75	SYSTEM		96.9		88.8			672	616	597	
	** PROBLEMS/SOLUTIONS/COMMENTS										
	THE FGD SYSTEM WAS DOWN ONCE DUE TO A PIPING FLANGE LEAK.										
3/75	SYSTEM		100.0		48.4			744	360	360	
4/75	SYSTEM		100.0		44.1			720	318	318	
	** PROBLEMS/SOLUTIONS/COMMENTS										
	THE BOILER WAS TAKEN OFF-LINE FOR ANNUAL MAINTENANCE DURING MARCH AND APRIL.										
5/75	SYSTEM		100.0		96.4			744	717	717	
6/75	SYSTEM		97.9		97.9			720	720	705	
7/75	SYSTEM		98.0		97.8			744	743	728	
8/75	SYSTEM		98.0		98.0			744	744	729	
9/75	SYSTEM		95.7		91.7			720	690	660	
	** PROBLEMS/SOLUTIONS/COMMENTS										
	SYSTEM DOWN TIME FROM JUNE THROUGH SEPTEMBER WAS DUE TO MIST ELIMINATOR SCALING.										
10/75	SYSTEM		95.2		95.2			744	744	708	
	** PROBLEMS/SOLUTIONS/COMMENTS										
	FAN VIBRATIONS CAUSED A SYSTEM OUTAGE DURING THE MONTH.										
11/75	SYSTEM		98.5		98.5			720	720	709	
	** PROBLEMS/SOLUTIONS/COMMENTS										
	MIST ELIMINATOR SCALING WAS ENCOUNTERED IN NOVEMBER.										
12/75	SYSTEM		95.9		92.2			744	715	686	
1/76	SYSTEM		100.0		100.0			744	744	744	
2/76	SYSTEM		95.2		90.8			696	664	632	
	** PROBLEMS/SOLUTIONS/COMMENTS										
	DURING FEBRUARY, THE SYSTEM AGAIN ENCOUNTERED MIST ELIMINATOR SCALING.										
3/76	SYSTEM		100.0		92.3			744	687	687	
4/76	SYSTEM		100.0		30.4			720	219	219	
5/76	SYSTEM		100.0		100.0			744	744	744	
6/76	SYSTEM		100.0		100.0			720	720	720	
7/76	SYSTEM		100.0		100.0			744	744	744	
8/76	SYSTEM							744	744		
9/76	SYSTEM		100.0		100.0			720	720	720	
10/76	SYSTEM		91.7		91.7			744	744	682	

PERIOD	MODULE	AVAILABILITY	OPERABILITY	RELIABILITY	UTILIZATION	% REMOVAL SO2	% REMOVAL PART.	PER HOURS	BOILER HOURS	FGD HOURS	CAP. FACTOR
		PERFORMANCE DATA									
** PROBLEMS/SOLUTIONS/COMMENTS											
		THE SYSTEM WAS TAKEN OFF-LINE FOR CLEANING OF THE FIRST STAGE SCRUBBER.									
11/76	SYSTEM		99.3		99.3			720	720	715	
** PROBLEMS/SOLUTIONS/COMMENTS											
		REPAIR OF A DUCT FORCED ONE SYSTEM OUTAGE DURING THE MONTH.									
12/76	SYSTEM		98.9		98.9			744	744	736	
** PROBLEMS/SOLUTIONS/COMMENTS											
		THE DECEMBER OUTAGE WAS DUE TO THE REPAIR OF A SPRAY PIPE.									
1/77	SYSTEM		99.3		99.3			744	744	739	
** PROBLEMS/SOLUTIONS/COMMENTS											
		THE SYSTEM WAS TAKEN OFF-LINE ONCE FOR CLEANING OF THE FIRST STAGE SCRUBBER.									
2/77	SYSTEM		100.0		100.0			672	672	672	
3/77	SYSTEM				.0			744	0	0	
** PROBLEMS/SOLUTIONS/COMMENTS											
		THE SYSTEM WAS OFF DURING MARCH FOR ANNUAL BOILER MAINTENANCE.									
4/77	SYSTEM		100.0		71.3			720	513	513	
5/77	SYSTEM		98.7		98.7			744	744	734	
** PROBLEMS/SOLUTIONS/COMMENTS											
		FAN VIBRATIONS CAUSED ONE SYSTEM OUTAGE DURING MAY.									
6/77	SYSTEM		100.0		100.0			720	720	720	
7/77	SYSTEM		100.0		96.4			744	717	717	
** PROBLEMS/SOLUTIONS/COMMENTS											
		THE FIRST STAGE ABSORBER WAS CLEANED DURING JULY.									
8/77	SYSTEM		100.0		100.0			744	744	744	
9/77	SYSTEM		100.0		100.0			720	720	720	
10/77	SYSTEM		94.2		94.2			744	744	701	
** PROBLEMS/SOLUTIONS/COMMENTS											
		THE SYSTEM WAS OFF LINE PART OF THIS MONTH FOR CLEANING OF SCRUBBERS AND REACTORS.									
11/77	SYSTEM		100.0		100.0			720	720	720	
12/77	SYSTEM		100.0		100.0			744	744	744	
1/78	SYSTEM		100.0		100.0			744	744	744	
** PROBLEMS/SOLUTIONS/COMMENTS											
		THE FIRST REACTOR WAS CLEANED THIS MONTH.									

SECTION 15
DESIGN AND PERFORMANCE DATA FOR OPERATIONAL FOREIGN FGD SYSTEMS

COMPANY NAME	ELECTRIC POWER DEVELOPMENT CO.	
PLANT NAME	TAKASAGO	
UNIT NUMBER	2	
CITY	HIMEJI	
STATE	JAPAN	
REGULATORY CLASSIFICATION	******	
PARTICULATE EMISSION LIMITATION - NG/J	******	(****** LB/MMBTU)
SO2 EMISSION LIMITATION - NG/J	******	(****** LB/MMBTU)
NET PLANT GENERATING CAPACITY - MW	*******	
GROSS UNIT GENERATING CAPACITY - MW	250.0	
NET UNIT GENERATING CAPACITY W/FGD - MW	*******	
NET UNIT GENERATING CAPACITY WO/FGD - MW	*******	
EQUIVALENT SCRUBBED CAPACITY - MW	251.0	
** BOILER DATA		
SUPPLIER	******	
TYPE	******	
SERVICE LOAD	BASE	
COMMERCIAL SERVICE DATE	0/69	
MAXIMUM BOILER FLUE GAS FLOW - CU.M/S	365.25	(774000 ACFM)
FLUE GAS TEMPERATURE - C	154.4	(310 F)
STACK HEIGHT - M	******	(**** FT)
STACK TOP DIAMETER - M	*******	(***** FT)
** FUEL DATA		
FUEL TYPE	COAL	
FUEL GRADE	******	
AVERAGE HEAT CONTENT - J/G	24656.	(10600 BTU/LB)
RANGE HEAT CONTENT - BTU/LB		******
AVERAGE ASH CONTENT - %	********	
RANGE ASH CONTENT - %	******	
AVERAGE MOISTURE CONTENT - %	********	
RANGE MOISTURE CONTENT - %	******	
AVERAGE SULFUR CONTENT - %	1.80	
RANGE SULFUR CONTENT - %	******	
AVERAGE CHLORIDE CONTENT - %	********	
RANGE CHLORIDE CONTENT - %	******	
** ESP		
NUMBER	1	
FLUE GAS TEMPERATURE - C	154.4	(310 F)
** PARTICULATE SCRUBBER		
TYPE	VENTURI	
** FGD SYSTEM		
SALEABLE PRODUCT/THROWAWAY PRODUCT	SALEABLE PRODUCT	
GENERAL PROCESS TYPE	WET SCRUBBING	
PROCESS TYPE	LIMESTONE	
SYSTEM SUPPLIER	MITSUI - CHEMICO	
DEVELOPMENT LEVEL	FULL SCALE	
NEW/RETROFIT	RETROFIT	
INITIAL START-UP	3/76	
** ABSORBER		
NUMBER	1	
TYPE	VENTURI	
INITIAL START UP	3/76	
SUPPLIER	MITSUI - CHEMICO	
NUMBER OF STAGES	1	
BOILER LOAD/ABSORBER - %	75.0	
GAS FLOW - CU.M/S	260.49	(552000 ACFM)
GAS TEMPERATURE - C	154.4	(310 F)
L/G RATIO - L/CU.M	6.5	(48.6 GAL/1000ACF)
PRESSURE DROP - KPA	1.5	(5.9 IN-H2O)
PARTICULATE INLET LOAD - G/CU.M	.1	(.035 GR/SCF)
SO2 INLET CONCENTRATION - PPM	1500	
** ABSORBER		
NUMBER	1	
TYPE	VENTURI	
INITIAL START UP	3/76	

ELECTRIC POWER DEVELOPMENT CO.: TAKASAGO 2 (CONT.)

SUPPLIER	MITSUI - CHEMICO	
NUMBER OF STAGES	1	
BOILER LOAD/ABSORBER - %	100.0	
GAS TEMPERATURE - C	55.0	(131 F)
L/G RATIO - L/CU.M	6.5	(48.6 GAL/1000ACF)
PRESSURE DROP - KPA	1.5	(5.9 IN-H2O)
PARTICULATE OUTLET LOAD- G/CU.M	.0	(.009 GR/SCF)
SO2 OUTLET CONTRATION - PPM	75	
SO2 DESIGN REMOVAL EFFICIENCY - %	93.3	
** ABSORBER		
NUMBER	1	
TYPE	VENTURI	
INITIAL START UP	3/76	
SUPPLIER	MITSUI - CHEMICO	
NUMBER OF STAGES	1	
BOILER LOAD/ABSORBER - %	20.0	
GAS FLOW - CU.M/S	61.37	(147000 ACFM)
GAS TEMPERATURE - C	154.4	(310 F)
PARTICULATE INLET LOAD - G/CU.M	.1	(.035 GR/SCF)
SO2 INLET CONCENTRATION - PPM	1500	
** ABSORBER		
NUMBER	1	
TYPE	SPRAY TOWER	
INITIAL START UP	3/76	
SUPPLIER	MITSUI - CHEMICO	
NUMBER OF STAGES	1	
BOILER LOAD/ABSORBER - %	5.0	
GAS TEMPERATURE - C	154.4	(310 F)
PARTICULATE INLET LOAD - G/CU.M	.1	(.035 GR/SCF)
SO2 INLET CONCENTRATION - PPM	1500	
** CENTRIFUGE		
NUMBER	7	
OUTLET SOLIDS - %	90.0	
** FANS		
TYPE	BOOSTER	
** FANS		
TYPE	OXIDIZER BLOWER	
** MIST ELIMINATOR		
TYPE	CHEVRON	
NUMBER OF STAGES	4	
NUMBER OF PASSES	4	
WASH SYSTEM	SEQUENTIAL WASH-PROCESS LIQUOR & FRESH WATER	
** PROCESS CONTROL CHEMISTRY		
CONTROL VARIABLES	FLUE GAS VOLUME AND SO2 CONCENTRATION	
** TANKS		
SERVICE	NUMBER	
---	---	
RECYCLE	2	
ABSORBENT MAKEUP	****	
OXIDIZER OVERFLOW	****	
MOTHER LIQUOR TANK	****	
ABSORBER FEED	****	
** REHEATER		
TYPE	DIRECT COMBUSTION	
** THICKENER		
OUTLET SOLIDS - %	20.0	
** WATER LOOP		
TYPE	OPEN	
PURGE WATER LOSS - LITER/S	2.5	(40 GPM)
FRESH MAKEUP WATER ADDITION - LITERS/S	13.1	(208 GPM)
** BYPRODUCTS		
BYPRODUCT NATURE	GYPSUM	
BYPRODUCT QUANTITY - M T/H	1.69	(9.58 TPH)

ELECTRIC POWER DEVELOPMENT CO.: TAKASAGO 2 (CONT.)

** TREATMENT TYPE FORCED OXIDATION

PERIOD	MODULE	AVAILABILITY	OPERABILITY	RELIABILITY	UTILIZATION	% REMOVAL SO2	% REMOVAL PART.	PER HOURS	BOILER HOURS	FGD HOURS	CAP. FACTOR
		PERFORMANCE DATA									
3/76	SYSTEM		100.0		100.0			744	744	720	
4/76	SYSTEM		100.0		100.0			720	720	720	
5/76	SYSTEM		100.0		29.0			744	216	216	
6/76	SYSTEM		100.0		87.8			720	632	632	

** PROBLEMS/SOLUTIONS/COMMENTS

THE SYSTEM WAS DOWN FOR PART OF MAY AND JUNE FOR ANNUAL BOILER MAINTENANCE.

7/76	SYSTEM		100.0		100.0			744	744	744	
8/76	SYSTEM		100.0		100.0			744	744	744	
9/76	SYSTEM		100.0		100.0			720	720	720	
10/76	SYSTEM		94.2		94.2			744	744	701	

** PROBLEMS/SOLUTIONS/COMMENTS

OUTAGE TIME DURING OCTOBER WAS NECESSARY FOR DUCT CLEANING.

11/76	SYSTEM		100.0		100.0			720	720	720	
12/76	SYSTEM		99.3		99.3			744	744	739	

** PROBLEMS/SOLUTIONS/COMMENTS

THE SYSTEM WAS DOWN BRIEFLY FOR REPAIR OF A GYPSUM CONVEYOR.

1/77	SYSTEM		100.0		100.0			744	744	744	
2/77	SYSTEM		88.2		88.2			672	672	593	
3/77	SYSTEM		98.7		98.7			744	744	734	

** PROBLEMS/SOLUTIONS/COMMENTS

OUTAGE TIME IN FEBRUARY AND MARCH WAS NEEDED FOR CLEANING OF PH CONTROLLER.

4/77	SYSTEM		100.0		100.0			720	720	720	
5/77	SYSTEM		100.0		51.6			744	384	384	
6/77	SYSTEM		100.0		3.3			720	240	240	
7/77	SYSTEM		100.0		100.0			744	744	744	
8/77	SYSTEM		100.0		100.0			744	744	744	
9/77	SYSTEM		100.0		100.0			720	720	720	
10/77	SYSTEM		100.0		100.0			744	744	744	
11/77	SYSTEM		89.2		89.2			720	720	642	

** PROBLEMS/SOLUTIONS/COMMENTS

CLEANING OF THE PH CONTROLLER CAUSED ONE OUTAGE DURING NOVEMBER.

A REACTOR WAS ALSO CLEANED THIS MONTH.

12/77	SYSTEM		100.0		100.0			744	744	744	
1/78	SYSTEM							744	744		

SECTION 15
DESIGN AND PERFORMANCE DATA FOR OPERATIONAL FOREIGN FGD SYSTEMS

COMPANY NAME	ELECTRIC POWER DEVELOPMENT CO.	
PLANT NAME	TAKEHARA	
UNIT NUMBER	1	
CITY	MIHARA	
STATE	JAPAN	
REGULATORY CLASSIFICATION	******	
PARTICULATE EMISSION LIMITATION - NG/J	******	(****** LB/MMBTU)
SO2 EMISSION LIMITATION - NG/J	******	(****** LB/MMBTU)
NET PLANT GENERATING CAPACITY - MW	*******	
GROSS UNIT GENERATING CAPACITY - MW	250.0	
NET UNIT GENERATING CAPACITY W/FGD - MW	*******	
NET UNIT GENERATING CAPACITY WO/FGD - MW	*******	
EQUIVALENT SCRUBBED CAPACITY - MW	250.0	
** BOILER DATA		
SUPPLIER	******	
TYPE	******	
SERVICE LOAD	BASE	
COMMERCIAL SERVICE DATE	0/67	
MAXIMUM BOILER FLUE GAS FLOW - CU.M/S	577.13	(1223000 ACFM)
FLUE GAS TEMPERATURE - C	140.0	(284 F)
STACK HEIGHT - M	201.	(660 FT)
STACK TOP DIAMETER - M	*******	(***** FT)
** FUEL DATA		
FUEL TYPE	COAL	
FUEL GRADE	******	
AVERAGE HEAT CONTENT - J/G	24656.	(10600 BTU/LB)
RANGE HEAT CONTENT - BTU/LB		******
AVERAGE ASH CONTENT - %	23.00	
RANGE ASH CONTENT - %	******	
AVERAGE MOISTURE CONTENT - %	9.40	
RANGE MOISTURE CONTENT - %	******	
AVERAGE SULFUR CONTENT - %	2.00	
RANGE SULFUR CONTENT - %	******	
AVERAGE CHLORIDE CONTENT - %	********	
RANGE CHLORIDE CONTENT - %	******	
** ESP		
PARTICULATE DESIGN REMOVAL EFFICIENCY - %	98.0	
FLUE GAS CAPACITY - CU.M/S	333.2	(706000 ACFM)
FLUE GAS TEMPERATURE - C	140.0	(284 F)
PARTICULATE OUTLET LOAD - G/CU.M	.37	(.16 GR/SCF)
** PARTICULATE SCRUBBER		
TYPE	NONE	
** FGD SYSTEM		
SALEABLE PRODUCT/THROWAWAY PRODUCT	SALEABLE PRODUCT	
GENERAL PROCESS TYPE	WET SCRUBBING	
PROCESS TYPE	LIMESTONE	
SYSTEM SUPPLIER	BABCOCK - HITACHI	
DEVELOPMENT LEVEL	FULL SCALE	
NEW/RETROFIT	RETROFIT	
INITIAL START-UP	2/77	
** ABSORBER		
NUMBER	2	
TYPE	VENTURI	
INITIAL START UP	2/77	
SUPPLIER	BABCOCK - HITACHI	
NUMBER OF STAGES	1	
SHELL MATERIAL	ACID RESISTANT CASTABLE	
SHELL LINER MATERIAL	PLASTIC	
BOILER LOAD/ABSORBER - %	50.0	
GAS FLOW - CU.M/S	168.00	(356000 ACFM)
GAS TEMPERATURE - C	140.0	(284 F)
L/G RATIO - L/CU.M	[illegible].0	(15.0 GAL/1000ACF)
PRESSURE DROP - KPA	2.3	(9.1 IN-H2O)
PARTICULATE INLET LOAD - G/CU.M	.4	(.157 GR/SCF)
SO2 INLET CONCENTRATION - PPM	1600	

ELECTRIC POWER DEVELOPMENT CO.: TAKEHARA 1 (CONT.)

** ABSORBER		
NUMBER	2	
TYPE	TRAY TOWER	
INITIAL START UP	2/77	
SUPPLIER	BABCOCK - HITACHI	
NUMBER OF STAGES	5	
SHELL LINER MATERIAL	PLASTIC	
L/G RATIO - L/E U.M	7.0	(52.4 GAL/1000ACF)
PRESSURE DROP - KPA	3.8	(15.2 IN-H2O)
** CENTRIFUGE		
** FANS		
NUMBER	2	
TYPE	I.D.	
** MIST ELIMINATOR		
NUMBER	2	
TYPE	FINNED TUBE	
CONFIGURATION	HORIZONTAL	
WASH SYSTEM	FRESH WATER WASH	
PRESSURE DROP - KPA	.1	(.4 IN-H2O)
** PROCESS CONTROL CHEMISTRY		
CONTROL VARIABLES	PH, GAS FLOW	
CONTROL RANGE	PH] PRESCRUBBER - 5.0, SCRUBBER- 6.0	
** TANKS		
SERVICE	NUMBER	
---	---	
PRESCRUBBER RECYCLE	****	
SCRUBBER RECYCLE	****	
FILTER LIQUID TANK	****	
SLURRY TANK	****	
OXIDATION TOWER	****	
** REHEATER		
TYPE	DIRECT COMBUSTION	
** THICKENER		
** WATER LOOP		
TYPE	OPEN	
PURGE WATER LOSS - LITER/S	3.8	(60 GPM)
FRESH MAKEUP WATER ADDITION - LITERS/S	14.1	(224 GPM)
** BYPRODUCTS		
BYPRODUCT NATURE	GYPSUM	
BYPRODUCT QUANTITY - M T/H	8.51	(9.38 TPH)
DISPOSITION	MARKETED	
** TREATMENT		
TYPE	FORCED OXIDATION	

APPENDIX A

FGD SYSTEM COST DATA: OPERATIONAL AND NONOPERATIONAL SYSTEMS

INTRODUCTION

The cost of flue gas desulfurization (FGD) systems for the control of sulfur dioxide emissions is an area of intense interest and substantial controversy. As a result, many computer models have recently been developed to estimate capital and annual costs. As part of an effort by the U.S. Environmental Protection Agency to provide meaningful economic data concerning FGD systems, reported economic data have been incorporated into the EPA Utility FGD Survey report. This information has appeared as a separate appendix of the report since October 1976. Until January 1978, this cost appendix consisted entirely of data reported by the utilities with little or no interpretation provided by PEDCo Environmental, Inc. Beginning with the May 1978 report, the format and content of the cost appendix were revised to include reported and adjusted costs for the operational FGD systems.

The rationale for including adjusted as well as reported costs stems primarily from the lack of comparability of the reported costs. Many of the reported cost figures, both capital and operating, are largely site-sensitive values that cannot be accurately compared because they refer to different FGD battery limits and different years in which the expenditures were made. As a result, an analysis of the cost data was made for the operational units since these systems offer the potential of having complete and accurate economic data. The adjustments were made to provide comparable, accurate cost data for the sulfur dioxide portion of the emission control system. This, in effect, will eliminate much of the confusion that exists concerning the reported data, and it will provide a common basis for the reported costs.

In an attempt to promote further comparability of the figures, the adjustment procedure was carried one step further and standardized adjusted figures were developed. This was done by modifying the fixed annual cost rates such that they would be identical for each unit (i.e. cost of depreciation, interim replacement, taxes, insurance and capital costs). The newly adjusted total fixed annual cost rate was applied to the total adjusted capital cost in each case and a standardized adjusted annual cost was obtained.

APPROACH

In March 1978, each utility having at least one operational FGD system was given a cost form containing all available cost information then in the PEDCo files. The utility was asked to verify the data and fill in any missing information called for on the form. A follow-up visit by the PEDCo Environmental staff was arranged to assist in data acquisition and to insure completeness and reliability of information. Results of the cost analysis were forwarded to each participating utility for final review and comment.

The cost data were treated solely to establish the accurate costs for FGD systems, on a common basis, not to critique the design or reasonableness of the costs reported by any utility. Adjustments focused primarily on the following items:

- All capital costs were adjusted to July 1, 1977, dollars using the Chemical Engineering Index. All capital costs, represented in dollars/kilowatt ($/kW), were expressed in terms of gross megawatts (MW). Actual costs were reported by utilities in dollar values for years 1970 to 1980. These values are represented in terms of the year of greatest capital expenditures.

- Gross unit capacity was used to express all FGD capital expenditures because the capital requirement of an FGD system is dependent on actual boiler size before derating for auxiliary and air quality control power requirements.

- Particulate control costs were deducted. Since the purpose of the study was to estimate the incremental cost for sulfur dioxide control, particulate control costs were deducted using either data contained in the cost breakdowns or as a percentage of the total direct cost (capital and annual). The percentage reduction varied depending upon system design and operation.

- The capital costs associated with the modification or installation of equipment not part of the FGD system but needed for its proper functioning, were included (e.g. - stack lining, modification to existing ductwork or fans, etc.).

- Indirect charges were adjusted to provide adequate funds for engineering, field expenses, legal expenses, insurance, interest during construction, allowance for startup, taxes, and contingency.

- All annual costs, represented in mills/kilowatt-hour (mills/kWh), were expressed in terms of net megawatts (MW).

- Net unit capacity was used to express all FGD annual expenditures because the annual cost requirement of an FGD system is dependent on the actual amount of kilowatt-hours (kWh) produced by the unit after derating for auxiliary and air quality control power requirements.

- All annual costs were adjusted to a common capacity factor (65%).

- Replacement power costs were not included since only a few utilities reported such costs and these were presented using a variety of methods.

- Sludge disposal costs were adjusted to reflect the costs of sulfur dioxide waste disposal only (i.e., excluding fly ash disposal) and to provide for disposal over the anticipated lifetime of the FGD system. This latter correction was necessary since several utilities reported costs for sludge disposal capacity that would last only a fraction of the FGD system life. The adjustments were based on a land cost of $2000/acre with a sludge depth of 50 ft in a clay-lined pond (clay is assumed to be available at the site).

- A 30-year life was assumed for all process and economic considerations for all new systems that were installed for the life of the unit. A 20-year life was assumed for all process and economic considerations for retro-

fit systems that were installed for the remaining portion of the life of the unit.*

- Regeneration and by-product recovery facility costs were added for those regenerable systems not reporting such costs.

To the extent possible, all cost adjustments were made using the previous assumptions developed by PEDCo Environmental. When cost data were inadequate, adjustments were made using process design data in conjunction with the previous cost assumptions. In some cases, no adjustments were possible because of insufficient data.

---

* The use of a 30-year service life for new units coincides with the conclusion of the National Power Survey of the Federal Power Commission which recognized this value as reasonable for steam-electric plants. A 20-year service life was assumed for all retrofit units even if the remaining life of the units is less than this value. Thus, two different rates are used and should be noted when making comparisons between new and retrofit systems.

DESCRIPTION OF COST ELEMENTS

Capital costs consist of direct costs, indirect costs, contingency costs, and other capital costs. Direct costs include the "bought-out" cost of the equipment, the cost of installation, and site development. Indirect costs include interest during construction, contractor's fees and expenses, engineering, legal expenses, taxes, insurance, allowance for start-up and shakedown, and spares. Contingency costs include those costs resulting from malfunctions, equipment alterations, and similar unforeseen sources. Other capital costs include the nondepreciable items of land and working capital.

Annual costs consist of direct costs, fixed costs, and overhead costs. Direct costs include the cost of raw materials, utilities, operating labor and supervision, and maintenance and repairs. Fixed costs include those of depreciation, interim replacement, insurance, taxes, and interest on borrowed capital. Overhead costs include those of plant and payroll expenses. The various capital and annual cost components are discussed and defined in greater detail in the following paragraphs.

The direct capital costs include the following elements:

- Equipment required for the FGD system. Table A-1 provides a summary of the major process equipment used in regenerable and nonregenerable systems.

- Installation of equipment, including foundations; steel work for support, buildings, piping and ducting for effluents, slurries, sludge, and make-up water, control panels, instrumentation, insulation of ducting, buildings, piping, and other equipment, painting and piling.

- Site development may include clearing and grading, construction of access roads and walkways, establishment of rail, barge, and/or truck facilities, and parking facilities.

TABLE A-1. MAJOR FGD SYSTEM EQUIPMENT SUMMARY

Category	Description
Material handling-raw materials	Equipment for the handling and transfer of raw materials includes unloading facilities, conveyors, storage areas and silos, vibrators, atmospheric emission control associated with these facilities, and related accessories.
Feed preparation-raw materials	Equipment for the preparation of raw material to produce a feed slurry consists of feed weighers, crushers, grinders, classifiers, ball mills, mixing tanks, pumps, agitators, and related accessories.
Sulfur dioxide absorption	Equipment for treating the flue gas includes absorbers, mist eliminators, hold tanks, agitators, circulating pumps, pond water return pumps, and related accessories.
Flue gas reheat	Equipment required includes air, steam, or hot water heaters, condensate tanks, pumps, soot blowers, fans, fuel storage facilities, gas bypass equipment, and related accessories.
Gas handling	Equipment to handle the boiler flue gas includes booster fans, ductwork, flue gas bypass system, turning vanes, supports, platforms, and related accessories.
Sludge disposal	Nonregenerable FGD systems require solids/water separation equipment such as clarifiers, vacuum filters, centrifuges, sludge fixation equipment, and related accessories.
Utilities	Equipment to supply power and water to the FGD equipment consists of switch-gear, breakers, transformers, piping, and related accessories.
By-product handling	Equipment for processing the by-product of regenerable FGD systems may include a rotary kiln, fluid bed dryer, conveyor, storage silo, vibrator, combustion equipment and oil storage tanks, waste heat boilers, hammer mills, evaporators, crystallizers, strippers, tanks, agitators, pumps, compressors, sulfuric acid absorber and cooling, mist eliminator, pumps, acid coolers, tanks, etc.

(continued)

TABLE A-1. (continued)

Category	Description
Regeneration	Equipment for regeneration of the absorbing medium of an FGD system may consist of reactor vessels, material handling system, storage, weigh feeder, conveyor, rotary kiln, fluid bed calciner, dust collector, storage silo, vibrator, combustion equipment and oil storage tanks, waste heat boiler, hammer mill, evaporators, crystallizers, strippers, tanks, agitators, pumps, compressors, sulfuric acid absorber and cooling, mist eliminator, pumps, acid coolers, tanks, etc.
Purge treatment	Equipment for the removal of purge material (e.g. sodium sulfate) includes refrigeration, pumps, tanks, crystallizer, centrifuge, dryer, dust collector, conveyors, storage, and related equipment.
Auxiliary	Equipment not directly related to the FGD system, but which may require design or modification to accommodate an FGD system may include such items as existing fans, ducts, or stack. If new fans, ducts, or stacks are added to improve boiler performance and accommodate the FGD system, the costs are prorated to the boiler and FGD system.

Indirect capital costs include the following elements:

- Interest accrued on borrowed capital during construction.

- Contractor's fee and expenses, including costs for field labor payroll; field office supervision; personnel; construction offices; temporary roadways; railroad trackage; maintenance and welding shops; parking lot; communications; temporary piping and electrical and sanitary facilities; safety security (fire, material, medical, etc.); construction tools and rental equipment; unloading and storage of materials; travel expenses; permits; licenses; taxes; insurance; overhead; legal liabilities; field testing of equipment; start-up; and labor relations.

- Engineering costs, including administrative, process, project, and general; design and related functions for specifications; bid analysis; special studies; cost analysis; accounting; reports; consultant fees; purchasing; procurement; travel expenses; living expenses; expediting; inspection; safety; communications; modeling; pilot plant studies (if required because of process design or application novelty); royalty payments during construction; training of plant personnel; field engineering; safety engineering; and consultant services.

- Legal expenses, including those for securing permits, rights-of-way, etc.

- Taxes, including sales, and excise taxes.

- Insurance covering liability for equipment in transit and at site; fire, casualty, injury, and death; damage to property; delay; and noncompliance.

- Allowance for start-up and shakedown includes the cost associated with system start-up.

- Spare parts including pumps, valves, controls, special piping and fittings, instruments, spray nozzles, and similar items.

Other capital costs include the following elements:

- Land required for the FGD process, waste disposal, regeneration facility, and storage.

- Working capital, including the total amount of money invested in raw materials and supplies in stock, finished products in stock, and unfinished products

in the process of being manufactured; accounts receivable; cash kept on hand for payment of operating expenses such as salaries, wages, and raw materials purchases; accounts payable; and taxes payable.

Annual cost of an FGD system includes the following direct, fixed and overhead charges:

- Direct Charges

  - Raw materials, including those required by the FGD process for sulfur dioxide control, absorbent regeneration, sludge treatment, sludge fixation, flocculants, etc.

  - Utilities, including water for slurries, cooling and cleaning; electricity for pumps, fans, valves, lighting controls, conveyors, and mixers; fuel for reheating of flue gases; and stream for processing.

  - Operating labor, including supervisory, skilled, and unskilled labor required to operate, monitor and control the FGD process.

  - Maintenance and repairs, consisting of both manpower and materials to keep the unit operating efficiently. The function of maintenance is both preventive and corrective to keep outages to a minimum.

  - Byproduct Sales: credit from the sale of byproducts regenerable FGD processes (e.g. sulfur, sulfuric acid) is a negative charge deducted from the annual direct cost to obtain the net annual direct cost of the FGD system.

- Fixed Charges

  - Depreciation - the annual charge to recover direct and indirect costs of physical assets over the life of the asset.

  - Interim, replacement - costs expended for temporary or provisional replacement of equipment that has failed or malfunctioned prematurely.

  - Insurance, including the costs of protection from loss by a specified contingency, peril, or unforeseen event. Required coverage could include losses due to fire, personal injury or death, property damage, explosion, lightning, or other natural phenomena.

- Taxes, including franchise, excise, and property taxes levied by a city, county, state, or Federal government.

- Interest on borrowed funds.

° Overhead

Plant and administrative overhead is a business expense that is not charged directly to a particular part of a project, but is allocated to it. Overhead costs include administrative, safety, engineering, legal and medical services; payroll; employee benefits; recreation; and public relations.

Table A-2 provides a summary of the means used to determine the missing cost elements if the costs were not reported or insufficient information prevented their actual determination. The assumptions and cost bases for determining the capital and annual costs of FGD systems were developed by the PEDCo staff based upon previous economic studies conducted for the U.S. EPA (Flue Gas Desulfurization Process Cost Assessment, May 1975; Simplified Procedures for Estimating Flue Gas Desulfurization System Costs, June 1976, EPA-600/2-76-150; Particulate and Sulfur Dioxide Emission Control Costs for Large Coal-Fired Boilers, March 1978, EPA-600/7-78-032).

TABLE A-2. COST ELEMENT FACTORS

Category	Value
Indirect capital costs:	
Interest during construction	10% of total direct capital costs
Field overhead	10% of total direct capital costs
Contractor's fee and expenses	5% of total direct capital costs
Engineering	10% of total direct capital costs
Taxes	2% of total direct capital costs
Spares	1% of total direct capital costs
Shakedown allowance	5% of total direct capital costs
Other capital costs:	
Contingency[a]	20% of total direct and indirect capital costs
Direct annual costs:	
Raw materials:	
Fixation chemicals	$2/ton
Lime	$40/ton
Limestone	$10/ton
Magnesium oxide	$150/ton
Sodium carbonate	$80/ton
Salt cake (credit)	$50/ton
Sulfur (credit)	$65/ton
Sulfuric acid (credit)	$25/ton
Utilities:	
Electricity	25 mills/kWh
Water	$0.20/$10^3$ gal
Steam	$0.80/$10^6$ Btu
Operating labor:	
Direct labor	$8.50/man-hour
Supervision	15% of direct labor costs

[a] Contingency costs are used only when the cost data supplied are incomplete (such as equipment costs or direct costs only) and a contingency cost must be factored in to give an accurate estimate of the total capital cost.

(continued)

TABLE A-2. (continued)

Category	Value
Maintenance:	
Labor and materials	4% of total direct capital costs
Supplies	15% of labor and materials costs
Overhead:	
Plant	50% of operation and maintenance costs
Payroll	20% of operating labor costs
Fixed annual costs:	
Depreciation	3.33% or 5% (new or retrofit)
Interim replacement[b]	0.7% or 0.35%
Taxes	4%
Insurance	0.3%
Capital costs	9%

[b] Some system components have life spans less than the expected service life of the system. Interim replacement is an allowance factor used in estimating annual revenue requirements to provide for the replacement of these short-lived items. An average allowance of 0.35% of the total investment is normally provided and used for systems with an expected service life of 20 years or less. A higher allowance of 0.70% of the total investment is provided and used for systems with an expected service life of 30 years or more.

DEFINITION OF COST ELEMENTS

The costs displayed in Appendix A are accompanied by a series of alphabetic characters summarizing data presented for each FGD system. These relate to the cost elements described earlier in this section and identify what has been included and excluded for reported and adjusted capital and annual costs. The alphabetic characters, along with their titles, are briefly described in Table A-3.

TABLE A-3. DESCRIPTION OF COST

Code	Title	Description
A	Particulate control (required for FGD process) included in capital cost.	Particulate precollection device (ESP, fabric filter, venturi) prior to FGD system required for proper operation of SO_2 control system.
B	Particulate control (included in FGD process) included in capital cost.	Particulate collection equipment (venturi scrubber) is included in the FGD system.
C	Total direct capital costs included.	Complete cost of all FGD equipment, the labor and materials required for equipment installation, and interconnecting the system is included in the total capital cost.
D	Partial direct capital costs included.	One or a number of direct cost items, or the cost associated with one or a number of direct cost items, are excluded from the total capital cost.
E	Total indirect capital costs included.	Complete cost of all the indirect cost elements, including interest during construction, contractor's fees, engineering, legal expenses, taxes, insurance, allowance for start-up, and spares, is included in total capital cost.
F	Partial indirect costs included.	One or a number of indirect cost items, or the cost associated with one or a number of indirect cost items, are excluded from the total capital cost.
G	Chemical fixation of sludge included in capital cost.	The cost of a chemical fixation process which stabilizes the flue gas cleaning wastes prior to disposal is included in the total capital cost.
H	Dry sludge disposal included in capital cost.	The cost of a secondary dewatering or treatment method, such as filtration, centrifugation, or forced oxidation, which ultimately produces a dry sludge cake for final disposal, is included in the total capital cost.
I	Off-site landfill area included in capital cost.	The cost of an off-site area used as a landfill for flue gas cleaning wastes is included in the total capital cost.
J	Sludge pond included in capital cost.	The cost of an on-site disposal area for ponding of treated or untreated flue gas cleaning wastes is included in the total capital cost.
K	Additional sludge disposal capacity added for life of system.	The cost of additional SO_2 waste disposal capacity required for FGD system operation over the anticipated service life of the unit is included in the total capital cost.
L	Stack included in capital cost.	The cost of the stack is included in the total capital cost.
M	Modifications to stack, ducts, and/or fans included in capital cost.	Modifications to existing equipment (stack, fans, ducts, etc.) which are required because of inclusion of an FGD system.
N	Total regeneration facility cost included in capital cost.	Complete cost of entire regeneration facility included in total capital cost.
O	Partial regeneration facility cost included in capital cost.	Part of the cost associated with the regeneration facility included in the total capital cost.
P	R & D costs included in capital cost.	Bench scale or pilot plant studies to determine process and design characteristics.

(continued)

TABLE A-3. (continued)

Code	Title	Description
Q	Costs underwritten by system supplier included in capital cost.	Capital expenditures underwritten by the system supplier for system repairs or modifications for optimization of performance or R & D programs.
R	Excess reagent supply costs included in capital cost.	Capital expenditures for reagent supply exceeds the amount required for the period of initial operation.
S	Total direct annual costs included.	Complete cost of all raw materials, utilities, operating labor and maintenance and repairs is included in the total annual cost.
T	Partial direct annual costs included.	One or a number of direct annual cost items, or the cost associated with one or a number of direct annual cost items, are excluded from the total annual cost.
U	Total fixed annual costs included.	Complete cost of all fixed cost elements, including depreciation, interim replacement, insurance, taxes, and interest, is included in the total annual cost.
V	Partial fixed annual costs included.	One or a number of fixed annual cost items, or the cost associated with one or a number of fixed annual cost items, are excluded from the total annual cost.
W	Overhead cost included in total annual cost.	Plant and payroll overhead costs are included in the total annual cost.
X	Particulate control costs included in direct annual cost.	The cost of operating particulate collection equipment included in the FGD system is included in the total annual cost.
Y	Sludge disposal service costs (contract) included in direct annual cost.	The treatment and disposal of flue gas cleaning wastes that are handled by an outside firm.
Z	Replacement energy costs included in total annual costs.	The cost of additional power-generating capacity required to compensate for power used by the FGD system.

RESULTS OF COST ANALYSIS

The results of the operational FGD system survey are summarized in Table A-4 and Section A-1. Table A-4 produces a summary of a categorical analysis of the reported and adjusted capital and annual costs for the operational FGD systems addressed in the survey. Included in this categorical analysis are the ranges, means, and standard deviation for all the various types and categories of FGD systems examined. Section A-1 summarizes the reported and adjusted capital and annual costs for all the operational FGD systems that were addressed in the cost study (Section A-2 summarizes available cost data for nonoperational FGD systems).

TABLE A-4. CATEGORICAL RESULTS OF THE REPORTED AND ADJUSTED CAPITAL AND ANNUAL COSTS FOR OPERATIONAL FGD SYSTEMS

CATEGORY	REPORTED						ADJUSTED					
	CAPITAL, $/KW			ANNUAL, MILLS/KWH			CAPITAL, $/KW			ANNUAL, MILLS/KWH		
	RANGE	AVG	DEV	RANGE	AVG	DEV	RANGE	AVG	DEV	RANGE	AVG	DEV
ALL	29.2-232.5	90.3	52.4	.3- 14.9	5.4	4.7	60.9-233.2	94.2	35.2	2.7- 12.4	5.5	2.4
NEW	31.8-232.5	94.8	58.1	.3- 14.3	4.1	4.5	66.4-117.6	85.5	16.9	2.8- 8.7	5.2	2.0
RETROFIT	29.2-156.9	83.9	41.9	2.1- 14.9	7.3	4.5	60.9-233.2	103.6	45.8	2.7- 12.4	5.8	2.6
THROWAWAY PRODUCT	29.2-232.5	84.3	51.8	.3- 14.3	5.0	4.4	60.9-140.6	87.0	21.2	2.7- 8.7	5.2	1.9
SALEABLE PRODUCT	127.9-156.9	142.3	14.5	14.9- 14.9	14.9	.0	134.8-233.2	184.0	49.2	12.4- 12.4	12.4	.0
LIMESTONE	31.8-232.5	103.7	67.9	1.3- 3.3	2.2	.7	66.4-117.6	93.1	21.9	2.9- 6.6	5.0	1.4
DUAL ALKALI	43.2-189.0	96.7	65.5	3.2- 3.2	3.2	.0	*****- .0	.0	.0	*****- .0	.0	.0
LIME	29.2-120.6	73.6	32.1	5.8- 14.3	9.7	3.4	67.5-140.6	90.8	22.2	2.7- 8.7	6.4	2.0
LIME/ALKALINE FLYASH	77.1- 85.9	80.0	4.1	.3- .3	.3	.0	77.2- 93.0	82.5	7.4	4.1- 5.2	4.5	.5
SODIUM CARBONATE	42.9-113.6	66.5	33.3	2.1- 2.1	2.1	.0	60.9-107.9	76.6	22.2	3.2- 4.4	3.6	.6
WELLMAN LORD	127.9-156.9	137.6	13.7	14.9- 14.9	14.9	.0	134.8-134.8	134.8	.0	12.4- 12.4	12.4	.0
LIMESTONE/ALKALINE FLYASH	47.9- 47.9	47.9	.0	2.0- 2.0	2.0	.0	71.5- 71.5	71.5	.0	2.8- 2.8	2.8	.0
MAGNESIUM OXIDE	156.7-156.7	156.7	.0	*****- .0	.0	.0	233.2-233.2	233.2	.0	*****- .0	.0	.0

SECTION A-1
COSTS FOR OPERATIONAL FGD SYSTEMS

UNIT DESCRIPTION	COST DESCRIPTION	COST REPORTED	COST ADJUSTED	COST STANDARDIZED ADJUSTED
ALABAMA ELECTRIC COOP	CAPACITY FACTOR, %	***	65	65
TOMBIGBEE	TOTAL CAPITAL, $/KW(YEAR)	69.5(1978)	******(0)	******(0)
3	TOTAL ANNUAL, MILLS/KWH(YEAR)	******(0)	******(0)	******(0)
179.0 MW (NET)	COST ELEMENTS	C,E,J		
ARIZONA ELECTRIC POWER COOP	CAPACITY FACTOR, %	44	65	65
APACHE	TOTAL CAPITAL, $/KW(YEAR)	35.9(1977)	******(0)	******(0)
2	TOTAL ANNUAL, MILLS/KWH(YEAR)	2.1(1978)	******(0)	******(0)
195.0 MW (NET)	COST ELEMENTS	C,E,H,J,L,S, U,W,Y,Z		
ARIZONA ELECTRIC POWER COOP	CAPACITY FACTOR, %	44	65	65
APACHE	TOTAL CAPITAL, $/KW(YEAR)	31.8(7700)	******(0)	******(0)
3	TOTAL ANNUAL, MILLS/KWH(YEAR)	2.1(1978)	******(0)	******(0)
195.0 MW (NET)	COST ELEMENTS	C,E,H,J,L,S, U,W,Y,Z		
BIG RIVERS ELECTRIC	CAPACITY FACTOR, %	***	65	65
GREEN	TOTAL CAPITAL, $/KW(YEAR)	43.2(1976)	******(0)	******(0)
1	TOTAL ANNUAL, MILLS/KWH(YEAR)	******(0)	******(0)	******(0)
242.0 MW (NET)	COST ELEMENTS	B,C		
CENTRAL ILLINOIS LIGHT	CAPACITY FACTOR, %	***	65	65
DUCK CREEK	TOTAL CAPITAL, $/KW(YEAR)	93.3(1978)	******(0)	******(0)
1	TOTAL ANNUAL, MILLS/KWH(YEAR)	3.3(1976)	******(0)	******(0)
378.0 MW (NET)	COST ELEMENTS	C,E,J,M		
CENTRAL ILLINOIS PUBLIC SERV	CAPACITY FACTOR, %	***	65	65
NEWTON	TOTAL CAPITAL, $/KW(YEAR)	189.0(1979)	******(0)	******(0)
1	TOTAL ANNUAL, MILLS/KWH(YEAR)	******(0)	******(0)	******(0)
617.0 MW (NET)	COST ELEMENTS	C,E,G		
COLORADO UTE ELECTRIC ASSN.	CAPACITY FACTOR, %	***	65	65
CRAIG	TOTAL CAPITAL, $/KW(YEAR)	73.7(1979)	******(0)	******(0)
2	TOTAL ANNUAL, MILLS/KWH(YEAR)	******(0)	******(0)	******(0)
447.0 MW (NET)	COST ELEMENTS	A,C		
COLUMBUS & SOUTHERN OHIO ELEC.	CAPACITY FACTOR, %	48	65	65
CONESVILLE	TOTAL CAPITAL, $/KW(YEAR)	55.5(1975)	70.7(1977)	70.7(1977)
5	TOTAL ANNUAL, MILLS/KWH(YEAR)	5.8(1978)	7.4(1977)	7.4(1977)
411.0 MW (NET)	COST ELEMENTS	B,C,J,M,S,U, W,X,Y	C,E,J,M,S,U, W,Y	C,E,J,M,S,U, W,Y
COLUMBUS & SOUTHERN OHIO ELEC.	CAPACITY FACTOR, %	48	65	65
CONESVILLE	TOTAL CAPITAL, $/KW(YEAR)	55.5(1978)	70.7(1977)	******(0)
6	TOTAL ANNUAL, MILLS/KWH(YEAR)	5.8(1978)	******(0)	******(0)
411.0 MW (NET)	COST ELEMENTS	B,C,J,M,S,U, W,X,Y	C,E,J,M,S,U, W,Y	
DUQUESNE LIGHT	CAPACITY FACTOR, %	64	65	65
ELRAMA	TOTAL CAPITAL, $/KW(YEAR)	113.4(1976)	127.1(1977)	127.1(1977)
1-4	TOTAL ANNUAL, MILLS/KWH(YEAR)	8.6(1977)	7.8(1977)	7.5(1977)
510.0 MW (NET)	COST ELEMENTS	B,D,F,I,J,M, T,V,X,Y	C,E,I,J,M,S, U,Y	C,E,I,J,M,S, U,Y

****** INDICATES COST FIGURES NOT YET AVAILABLE

SECTION A-1
COSTS FOR OPERATIONAL FGD SYSTEMS

UNIT DESCRIPTION	COST DESCRIPTION	COST REPORTED	COST ADJUSTED	COST STANDARDIZED ADJUSTED
DUQUESNE LIGHT PHILLIPS 1-6 410.0 MW (NET)	CAPACITY FACTOR, % TOTAL CAPITAL, $/KW(YEAR) TOTAL ANNUAL, MILLS/KWH(YEAR) COST ELEMENTS	70 106.9(1972) 7.8(1977) B,D,F,I,J,M,T,V,X,Y	65 140.6(1977) 8.6(1977) C,E,I,J,M,S,U,Y	65 140.6(1977) 8.2(1977) C,E,I,J,M,S,U,Y
INDIANAPOLIS POWER & LIGHT PETERSBURG 3 532.0 MW (NET)	CAPACITY FACTOR, % TOTAL CAPITAL, $/KW(YEAR) TOTAL ANNUAL, MILLS/KWH(YEAR) COST ELEMENTS	*** 99.5(1976) ******(0) C,F,G,J,M	65 100.6(1977) 6.6(1977) C,E,G,J,M,S,U,W,Y	65 100.6(1977) 7.4(1977) C,E,G,J,M,S,U,W,Y
KANSAS CITY POWER & LIGHT HAWTHORN 3 90.0 MW (NET)	CAPACITY FACTOR, % TOTAL CAPITAL, $/KW(YEAR) TOTAL ANNUAL, MILLS/KWH(YEAR) COST ELEMENTS	14 29.2(1972) 8.4(1977) B,D,F,T,X	65 87.2(1977) 4.3(1977) B,C,E,J,K,S,U,W,X	65 87.2(1977) 4.4(1977) B,C,E,J,K,S,U,W,X
KANSAS CITY POWER & LIGHT HAWTHORN 4 90.0 MW (NET)	CAPACITY FACTOR, % TOTAL CAPITAL, $/KW(YEAR) TOTAL ANNUAL, MILLS/KWH(YEAR) COST ELEMENTS	*** 29.2(1972) 8.4(1977) B,D,F,T,X	65 87.2(1977) 4.3(1977) B,C,E,J,K,S,U,W,X	65 87.2(1977) 4.4(1977) B,C,E,J,K,S,U,W,X
KANSAS CITY POWER & LIGHT LA CYGNE 1 874.0 MW (NET)	CAPACITY FACTOR, % TOTAL CAPITAL, $/KW(YEAR) TOTAL ANNUAL, MILLS/KWH(YEAR) COST ELEMENTS	42 53.6(1972) 1.3(1978) T	65 68.0(1977) 3.8(1977) C,E,J,K,S,U	65 68.0(1977) 3.9(1977) C,E,J,K,S,U
KENTUCKY UTILITIES GREEN RIVER 1-3 64.0 MW (NET)	CAPACITY FACTOR, % TOTAL CAPITAL, $/KW(YEAR) TOTAL ANNUAL, MILLS/KWH(YEAR) COST ELEMENTS	16 70.3(1975) 14.3(1977) B,C,E,J,S,U,W	65 77.5(1977) 2.7(1977) C,E,J,S,U,W	65 77.5(1977) 5.2(1977) C,E,J,S,U,W
LOUISVILLE GAS & ELECTRIC CANE RUN 4 188.0 MW (NET)	CAPACITY FACTOR, % TOTAL CAPITAL, $/KW(YEAR) TOTAL ANNUAL, MILLS/KWH(YEAR) COST ELEMENTS	55 66.5(1975) ******(1977) C,E,H,J,Q,T	65 80.6(1977) 5.8(1977) C,E,H,J,K,Q,S,U,W	65 80.6(1977) 6.2(1977) C,E,H,J,K,Q,S,U,W
LOUISVILLE GAS & ELECTRIC CANE RUN 5 200.0 MW (NET)	CAPACITY FACTOR, % TOTAL CAPITAL, $/KW(YEAR) TOTAL ANNUAL, MILLS/KWH(YEAR) COST ELEMENTS	*** 62.4(1977) ******(0) C,E,H,J	65 67.5(1977) 5.6(1977) C,E,H,J,K,S,U,W	65 67.5(1977) 5.6(1977) C,E,H,J,K,S,U,W
LOUISVILLE GAS & ELECTRIC CANE RUN 6 288.0 MW (NET)	CAPACITY FACTOR, % TOTAL CAPITAL, $/KW(YEAR) TOTAL ANNUAL, MILLS/KWH(YEAR) COST ELEMENTS	*** 57.9(1977) 3.2(1979) C,E,H,M,S,V,W	65 ******(0) ******(0)	65 ******(0) ******(0)
LOUISVILLE GAS & ELECTRIC PADDY'S RUN 6 72.0 MW (NET)	CAPACITY FACTOR, % TOTAL CAPITAL, $/KW(YEAR) TOTAL ANNUAL, MILLS/KWH(YEAR) COST ELEMENTS	*** 52.8(1973) ******(0) C,E	65 76.4(1977) 6.5(1977) C,E,S,U,W	65 76.4(1977) 6.4(1977) C,E,S,U,W

****** INDICATES COST FIGURES NOT YET AVAILABLE

SECTION A-1
COSTS FOR OPERATIONAL FGD SYSTEMS

UNIT DESCRIPTION	COST DESCRIPTION	COST REPORTED	COST ADJUSTED	COST STANDARDIZED ADJUSTED
MINNKOTA POWER COOPERATIVE MILTON R. YOUNG 2 405.0 MW (NET)	CAPACITY FACTOR, % TOTAL CAPITAL, $/KW(YEAR) TOTAL ANNUAL, MILLS/KWH(YEAR) COST ELEMENTS	*** 85.9(1976) ******(0) C,E,H,P	65 93.0(1977) 5.2(1977) C,E,H,M,P,S,U,W	65 93.0(1977) 5.2(1977) C,E,H,M,P,S,U,W
MONTANA POWER COLSTRIP 1 360.0 MW (NET)	CAPACITY FACTOR, % TOTAL CAPITAL, $/KW(YEAR) TOTAL ANNUAL, MILLS/KWH(YEAR) COST ELEMENTS	76 77.1(1975) .3(1977) B,C,E,J,P,T	65 77.2(1977) 4.1(1977) C,E,J,K,P,S,U,W	65 77.2(1977) 4.0(1977) C,E,J,K,P,S,U,W
MONTANA POWER COLSTRIP 2 360.0 MW (NET)	CAPACITY FACTOR, % TOTAL CAPITAL, $/KW(YEAR) TOTAL ANNUAL, MILLS/KWH(YEAR) COST ELEMENTS	76 77.1(1975) .3(1977) B,C,E,J,P,T	65 77.2(1977) 4.1(1977) C,E,J,K,P,S,U,W	65 77.2(1977) 4.1(1977) C,E,J,K,P,S,U,W
NEVADA POWER REID GARDNER 1 125.0 MW (NET)	CAPACITY FACTOR, % TOTAL CAPITAL, $/KW(YEAR) TOTAL ANNUAL, MILLS/KWH(YEAR) COST ELEMENTS	67 42.9(1973) 2.1(1977) B,D,E,P,S,U,W,X	65 60.9(1977) 3.2(1977) B,D,E,P,S,U,W,X	65 60.9(1977) 3.4(1977) B,D,E,P,S,U,W,X
NEVADA POWER REID GARDNER 2 125.0 MW (NET)	CAPACITY FACTOR, % TOTAL CAPITAL, $/KW(YEAR) TOTAL ANNUAL, MILLS/KWH(YEAR) COST ELEMENTS	67 42.9(1973) 2.1(1977) B,D,E,P,S,U,W,X	65 60.9(1977) 3.2(1977) B,D,E,P,S,U,W,X	65 60.9(1977) 3.4(1977) B,D,E,P,S,U,W,X
NEVADA POWER REID GARDNER 3 125.0 MW (NET)	CAPACITY FACTOR, % TOTAL CAPITAL, $/KW(YEAR) TOTAL ANNUAL, MILLS/KWH(YEAR) COST ELEMENTS	67 113.6(1975) 2.1(1977) B,C,E,L,S,U,W,X	65 107.9(1977) 4.4(1977) B,C,E,L,S,U,W,X	65 107.9(1977) 5.0(1977) B,C,E,L,S,U,W,X
NORTHERN INDIANA PUB SERVICE DEAN H. MITCHELL 11 115.0 MW (NET)	CAPACITY FACTOR, % TOTAL CAPITAL, $/KW(YEAR) TOTAL ANNUAL, MILLS/KWH(YEAR) COST ELEMENTS	77 156.9(1976) 14.9(1976) B,C,E,L,N,S,U,W,X,Z	65 134.8(1977) 12.4(1977) C,E,L,N,S,U,W,Z	65 134.8(1977) 11.0(1977) C,E,L,N,S,U,W,Z
NORTHERN STATES POWER SHERBURNE 1 740.0 MW (NET)	CAPACITY FACTOR, % TOTAL CAPITAL, $/KW(YEAR) TOTAL ANNUAL, MILLS/KWH(YEAR) COST ELEMENTS	73 47.9(1972) 2.0(1977) B,C,J,S,U,X,Z	65 71.5(1977) 2.8(1977) C,E,J,K,S,U,W	65 71.5(1977) 3.3(1977) C,E,J,K,S,U,W
NORTHERN STATES POWER SHERBURNE 2 740.0 MW (NET)	CAPACITY FACTOR, % TOTAL CAPITAL, $/KW(YEAR) TOTAL ANNUAL, MILLS/KWH(YEAR) COST ELEMENTS	73 47.9(1972) 2.0(1977) B,C,J,S,U,X,Z	65 71.5(1977) 2.8(1977) C,E,J,K,S,U,W	65 71.5(1977) 3.3(1977) C,E,J,K,S,U,W
PACIFIC POWER & LIGHT JIM BRIDGER 4 550.0 MW (NET)	CAPACITY FACTOR, % TOTAL CAPITAL, $/KW(YEAR) TOTAL ANNUAL, MILLS/KWH(YEAR) COST ELEMENTS	*** 120.0(1979) ******(0) C,E,J	65 ******(0) ******(0)	65 ******(0) ******(0)

****** INDICATES COST FIGURES NOT YET AVAILABLE

SECTION #-1
COSTS FOR OPERATIONAL FGD SYSTEMS

UNIT DESCRIPTION	COST DESCRIPTION	COST REPORTED	COST ADJUSTED	COST STANDARDIZED ADJUSTED
PENNSYLVANIA POWER BRUCE MANSFIELD 1 917.0 MW (NET)	CAPACITY FACTOR, % TOTAL CAPITAL, $/KW(YEAR) TOTAL ANNUAL, MILLS/KWH(YEAR) COST ELEMENTS	40 120.6(1975) 14.3(1977) B,C,E,G,I,L,S,U,W,X	65 102.1(1977) 8.7(1977) C,E,G,I,M,S,U,W	65 102.1(1977) 10.8(1977) C,E,G,I,M,S,U,W
PENNSYLVANIA POWER BRUCE MANSFIELD 2 917.0 MW (NET)	CAPACITY FACTOR, % TOTAL CAPITAL, $/KW(YEAR) TOTAL ANNUAL, MILLS/KWH(YEAR) COST ELEMENTS	40 120.6(1975) 14.3(1977) B,C,E,G,I,L,S,U,W,X	65 102.1(1977) 8.7(1977) C,E,G,I,M,S,U,W	65 102.1(1977) 10.8(1977) C,E,G,I,M,S,U,W
PHILADELPHIA ELECTRIC EDDYSTONE 1A 120.0 MW (NET)	CAPACITY FACTOR, % TOTAL CAPITAL, $/KW(YEAR) TOTAL ANNUAL, MILLS/KWH(YEAR) COST ELEMENTS	*** 156.7(1972) ******(1972) D,F,N,P	65 233.2(1977) ******(1977) C,E,N,P	65 233.2(1977) ******(1977) C,E,N,P
PUBLIC SERVICE OF NEW MEXICO SAN JUAN 1 361.0 MW (NET)	CAPACITY FACTOR, % TOTAL CAPITAL, $/KW(YEAR) TOTAL ANNUAL, MILLS/KWH(YEAR) COST ELEMENTS	*** 127.9(1977) ******(0) A,C,E,N	65 ******(0) ******(0)	65 ******(0) ******(0)
PUBLIC SERVICE OF NEW MEXICO SAN JUAN 2 350.0 MW (NET)	CAPACITY FACTOR, % TOTAL CAPITAL, $/KW(YEAR) TOTAL ANNUAL, MILLS/KWH(YEAR) COST ELEMENTS	*** 127.9(1977) ******(0) A,C,E,N	65 ******(0) ******(0)	65 ******(0) ******(0)
SALT RIVER PROJECT CORONADO 1 280.0 MW (NET)	CAPACITY FACTOR, % TOTAL CAPITAL, $/KW(YEAR) TOTAL ANNUAL, MILLS/KWH(YEAR) COST ELEMENTS	*** 74.0(1978) ******(0) C,E	65 ******(0) ******(0)	65 ******(0) ******(0)
SOUTH CAROLINA PUBLIC SERVICE WINYAH 2 140.0 MW (NET)	CAPACITY FACTOR, % TOTAL CAPITAL, $/KW(YEAR) TOTAL ANNUAL, MILLS/KWH(YEAR) COST ELEMENTS	80 47.4(1976) 1.6(0) C,F,J,M,S,V	65 66.4(1977) 2.9(1977) C,E,J,K,M,S,U,W	65 6.4(1977) 3.2(1977) C,E,J,K,M,S,U,W
SOUTH MISSISSIPPI ELEC PWR R.D. MORROW 1 124.0 MW (NET)	CAPACITY FACTOR, % TOTAL CAPITAL, $/KW(YEAR) TOTAL ANNUAL, MILLS/KWH(YEAR) COST ELEMENTS	*** 232.5(1978) ******(0) D	65 ******(0) ******(0)	65 ******(0) ******(0)
SOUTH MISSISSIPPI ELEC PWR R.D. MORROW 2 124.0 MW (NET)	CAPACITY FACTOR, % TOTAL CAPITAL, $/KW(YEAR) TOTAL ANNUAL, MILLS/KWH(YEAR) COST ELEMENTS	*** 232.5(1978) ******(0) D	65 ******(0) ******(0)	65 ******(0) ******(0)
SOUTHERN INDIANA GAS & ELEC A.B. BROWN 1 265.0 MW (NET)	CAPACITY FACTOR, % TOTAL CAPITAL, $/KW(YEAR) TOTAL ANNUAL, MILLS/KWH(YEAR) COST ELEMENTS	*** 43.2(1979) ******(0) C,E,G	65 ******(0) ******(0)	65 ******(0) ******(0)

****** INDICATES COST FIGURES NOT YET AVAILABLE

SECTION A-1
COSTS FOR OPERATIONAL FGD SYSTEMS

UNIT DESCRIPTION	COST DESCRIPTION	COST REPORTED	COST ADJUSTED	COST STANDARDIZED ADJUSTED
SPRINGFIELD CITY UTILITIES	CAPACITY FACTOR, %	***	65	65
SOUTHWEST	TOTAL CAPITAL, $/KW(YEAR)	77.3(1974)	117.6(1977)	117.6(1977)
1	TOTAL ANNUAL, MILLS/KWH(YEAR)	******(0)	6.2(1977)	6.9(1977)
194.0 MW (NET)	COST ELEMENTS	C,F,H,J,P	C,E,H,J,K,P, S,U,W	C,E,H,J,K,P, S,U,W
TENNESSEE VALLEY AUTHORITY	CAPACITY FACTOR, %	60	65	65
WIDOWS CREEK	TOTAL CAPITAL, $/KW(YEAR)	98.1(1976)	113.1(1977)	113.1(1977)
8	TOTAL ANNUAL, MILLS/KWH(YEAR)	3.0(1977)	5.3(1977)	5.1(1977)
550.0 MW (NET)	COST ELEMENTS	B,C,E,P,R,T, U	C,E,J,S,U,W	C,E,J,S,U,W

****** INDICATES COST FIGURES NOT YET AVAILABLE

SECTION A-2
COSTS FOR NON-OPERATIONAL FGD SYSTEMS

UNIT DESCRIPTION	COST DESCRIPTION	COST REPORTED	COST ADJUSTED	COST STANDARDIZED ADJUSTED
BASIN ELECTRIC POWER COOP	CAPACITY FACTOR, %	***	65	65
LARAMIE RIVER	TOTAL CAPITAL, $/KW(YEAR)	56.0(1980)	******(0)	******(0)
1	TOTAL ANNUAL, MILLS/KWH(YEAR)	.9(7800)	******(0)	******(0)
600.0 MW (NET)	COST ELEMENTS	C,E		
BASIN ELECTRIC POWER COOP	CAPACITY FACTOR, %	***	65	65
LARAMIE RIVER	TOTAL CAPITAL, $/KW(YEAR)	56.0(1980)	******(0)	******(0)
2	TOTAL ANNUAL, MILLS/KWH(YEAR)	.9(7800)	******(0)	******(0)
600.0 MW (NET)	COST ELEMENTS	C,E		
BOSTON EDISON	CAPACITY FACTOR, %	***	65	65
MYSTIC	TOTAL CAPITAL, $/KW(YEAR)	63.4(1972)	******(0)	******(0)
6	TOTAL ANNUAL, MILLS/KWH(YEAR)	3.0(1974)	******(0)	******(0)
150.0 MW (NET)	COST ELEMENTS	B,C,E,N,Q		
COLORADO UTE ELECTRIC ASSN.	CAPACITY FACTOR, %	***	65	65
CRAIG	TOTAL CAPITAL, $/KW(YEAR)	86.5(1979)	******(0)	******(0)
1	TOTAL ANNUAL, MILLS/KWH(YEAR)	******(0)	******(0)	******(0)
447.0 MW (NET)	COST ELEMENTS	B,D,E		
COMMONWEALTH EDISON	CAPACITY FACTOR, %	***	65	65
POWERTON	TOTAL CAPITAL, $/KW(YEAR)	125.0(1979)	******(0)	******(0)
51	TOTAL ANNUAL, MILLS/KWH(YEAR)	******(0)	******(0)	******(0)
450.0 MW (NET)	COST ELEMENTS	C,E,H,J		
COMMONWEALTH EDISON	CAPACITY FACTOR, %	49	65	65
WILL COUNTY	TOTAL CAPITAL, $/KW(YEAR)	113.0(1972)	******(0)	******(0)
1	TOTAL ANNUAL, MILLS/KWH(YEAR)	13.1(1975)	******(0)	******(0)
.0 MW (NET)	COST ELEMENTS	B,C,E,G,J,X		
DETROIT EDISON	CAPACITY FACTOR, %	***	65	65
ST. CLAIR	TOTAL CAPITAL, $/KW(YEAR)	80.3(1976)	******(0)	******(0)
6	TOTAL ANNUAL, MILLS/KWH(YEAR)	9.6(1976)	******(0)	******(0)
.0 MW (NET)	COST ELEMENTS	B,C,E,J,M,X		
ILLINOIS POWER COMPANY	CAPACITY FACTOR, %	***	65	65
WOOD RIVER	TOTAL CAPITAL, $/KW(YEAR)	82.5(1972)	******(0)	******(0)
4	TOTAL ANNUAL, MILLS/KWH(YEAR)	******(0)	******(0)	******(0)
110.0 MW (NET)	COST ELEMENTS	A,C,E,M,N		
POTOMAC ELECTRIC POWER	CAPACITY FACTOR, %	***	65	65
DICKERSON	TOTAL CAPITAL, $/KW(YEAR)	68.0(1978)	******(0)	******(0)
3	TOTAL ANNUAL, MILLS/KWH(YEAR)	******(0)	******(0)	******(0)
.0 MW (NET)	COST ELEMENTS	A,C,E,M		
PUBLIC SERVICE OF COLORADO	CAPACITY FACTOR, %	***	65	65
VALMONT	TOTAL CAPITAL, $/KW(YEAR)	87.0(1974)	******(0)	******(0)
5	TOTAL ANNUAL, MILLS/KWH(YEAR)	******(0)	******(0)	******(0)
166.0 MW (NET)	COST ELEMENTS	B,C,E,J		

****** INDICATES COST FIGURES NOT YET AVAILABLE

SECTION A-2
COSTS FOR NON-OPERATIONAL FGD SYSTEMS

UNIT DESCRIPTION	COST DESCRIPTION	COST REPORTED	COST ADJUSTED	COST STANDARDIZED ADJUSTED
SALT RIVER PROJECT	CAPACITY FACTOR, %	***	65	65
CORONADO	TOTAL CAPITAL, $/KW(YEAR)	74.0(1978)	******(0)	******(0)
2	TOTAL ANNUAL, MILLS/KWH(YEAR)	******(0)	******(0)	******(0)
280.0 MW (NET)	COST ELEMENTS	C,E		

****** INDICATES COST FIGURES NOT YET AVAILABLE

APPENDIX B

FGD PROCESS FLOW DIAGRAMS

THIS APPENDIX COMPRISES OPERATING FGD SYSTEMS

ARRANGED ALPHABETICALLY ACCORDING TO UTILITY

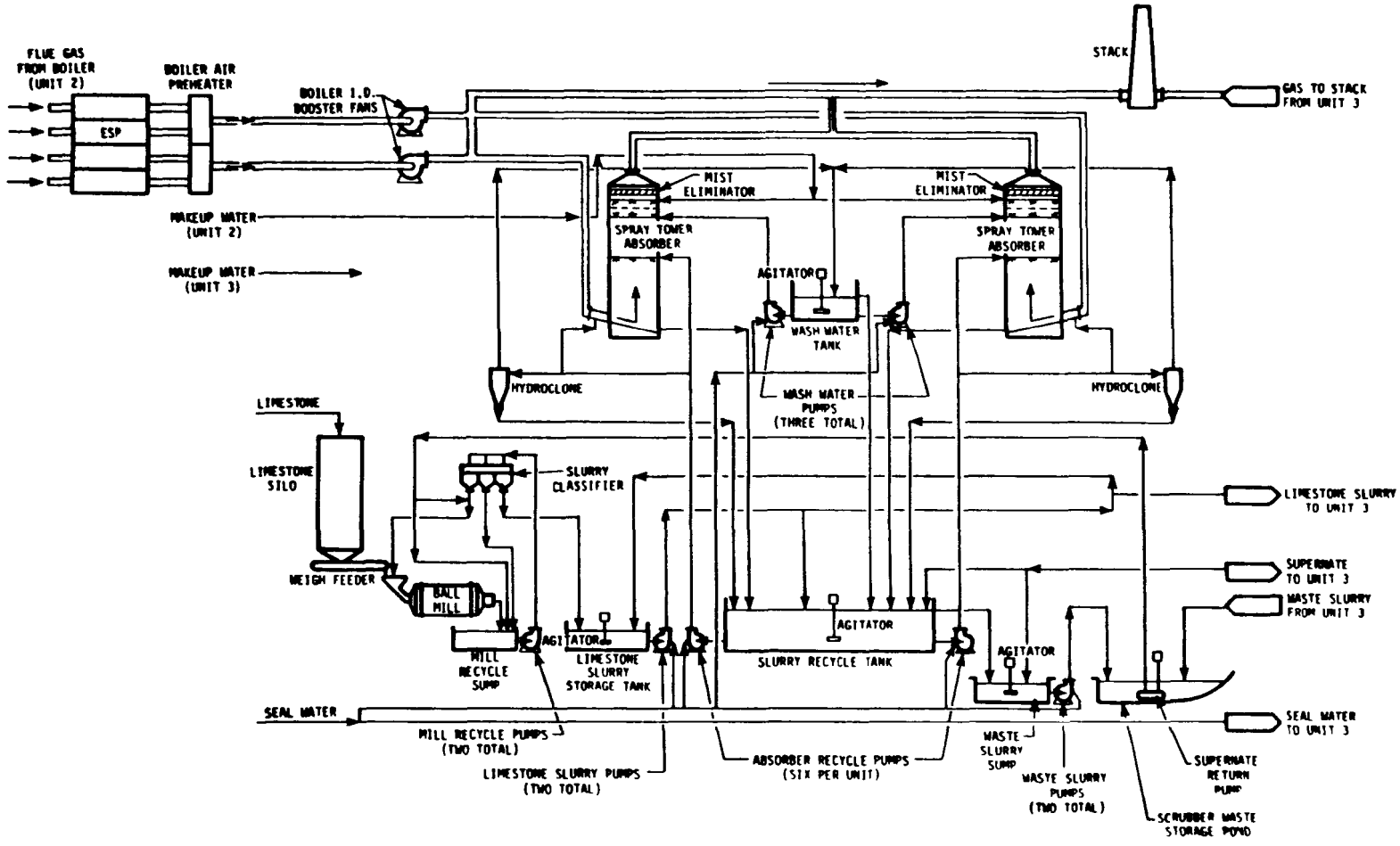

Alabama Electric,
Simplified Process Flow Diagram for Tombigbee 2 and 3

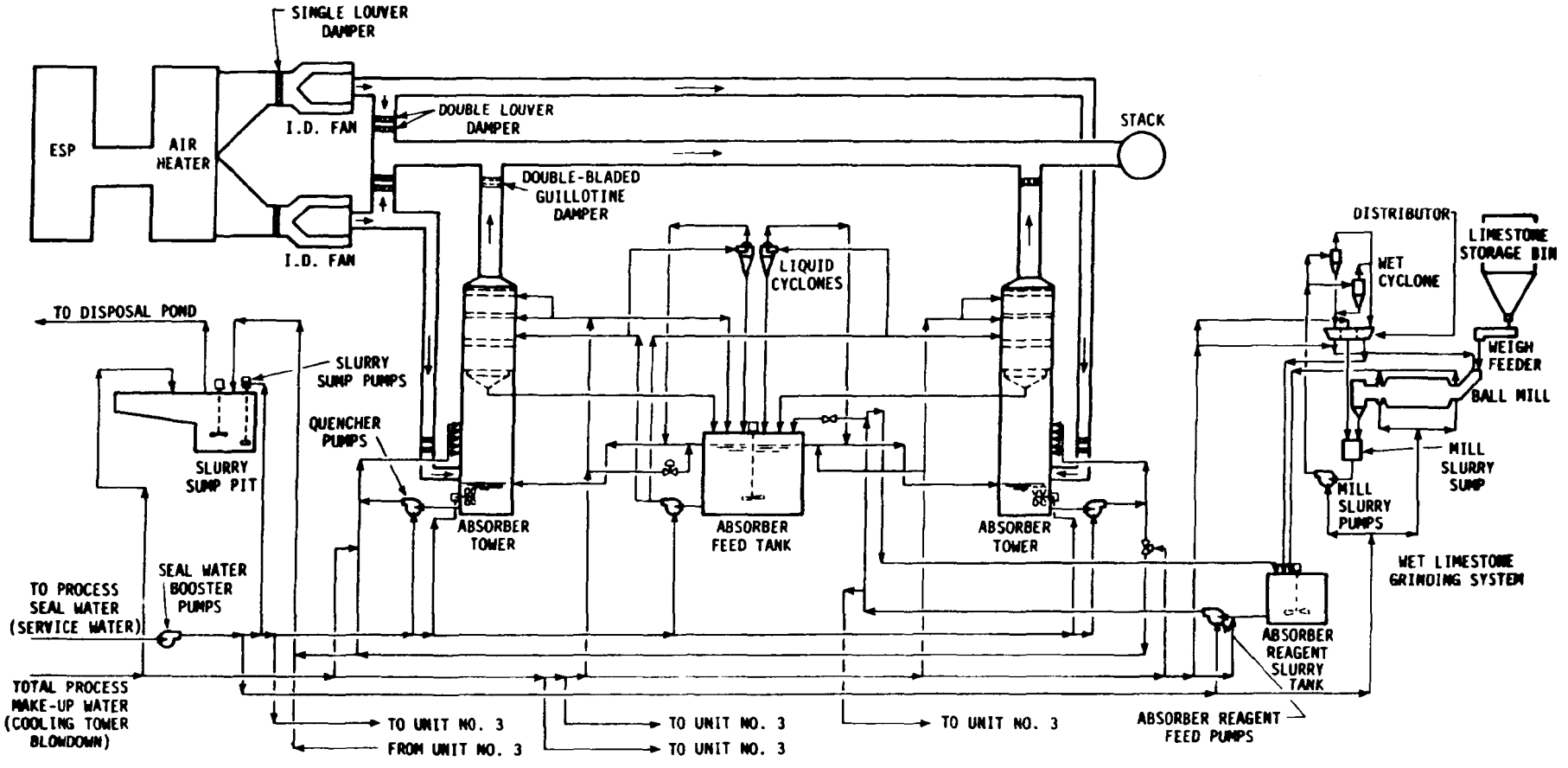

Arizona Electric Power Coop, Apache 2 and 3
Process Flow Diagram

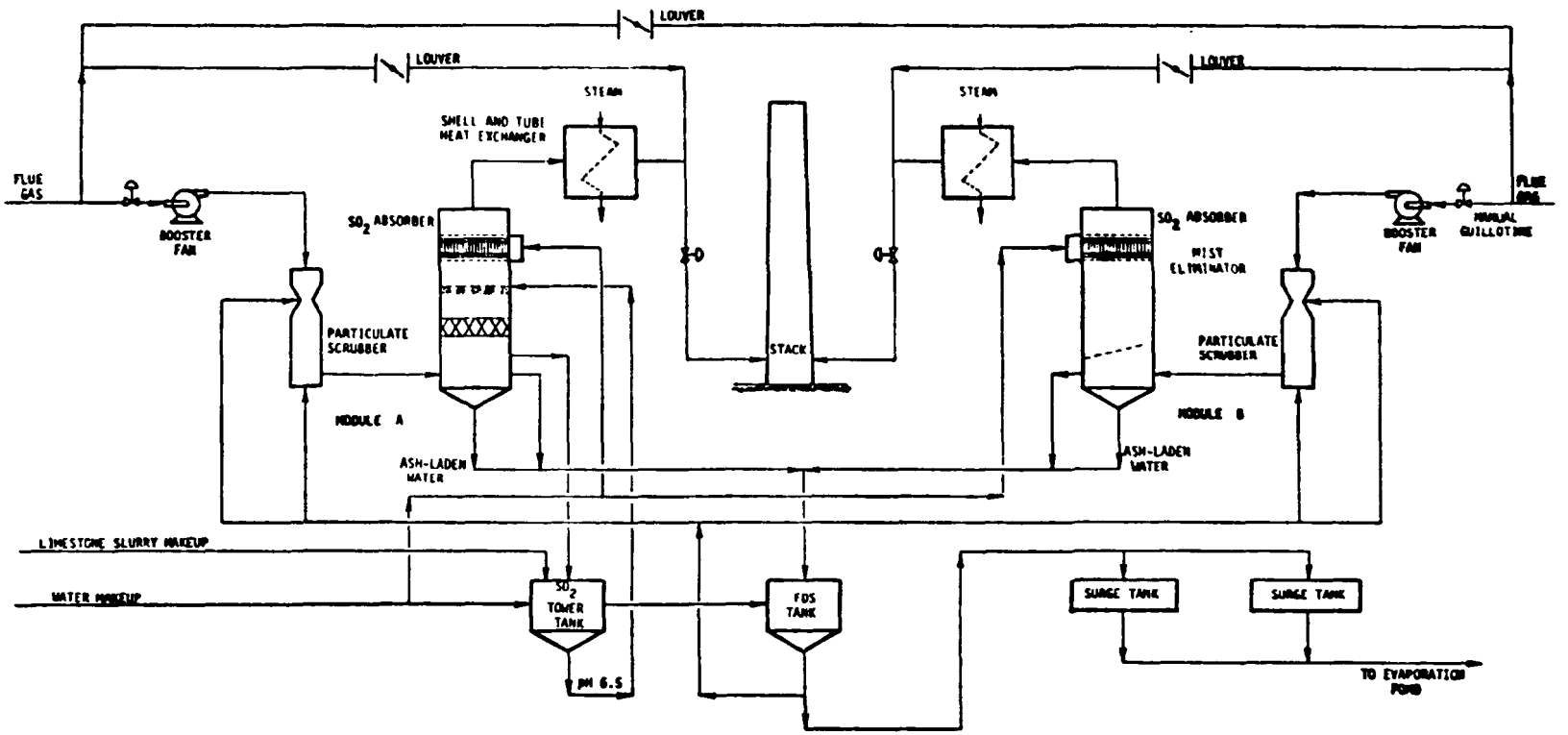

Arizona Public Service, Cholla 1:
Simplified Process Flow Diagram

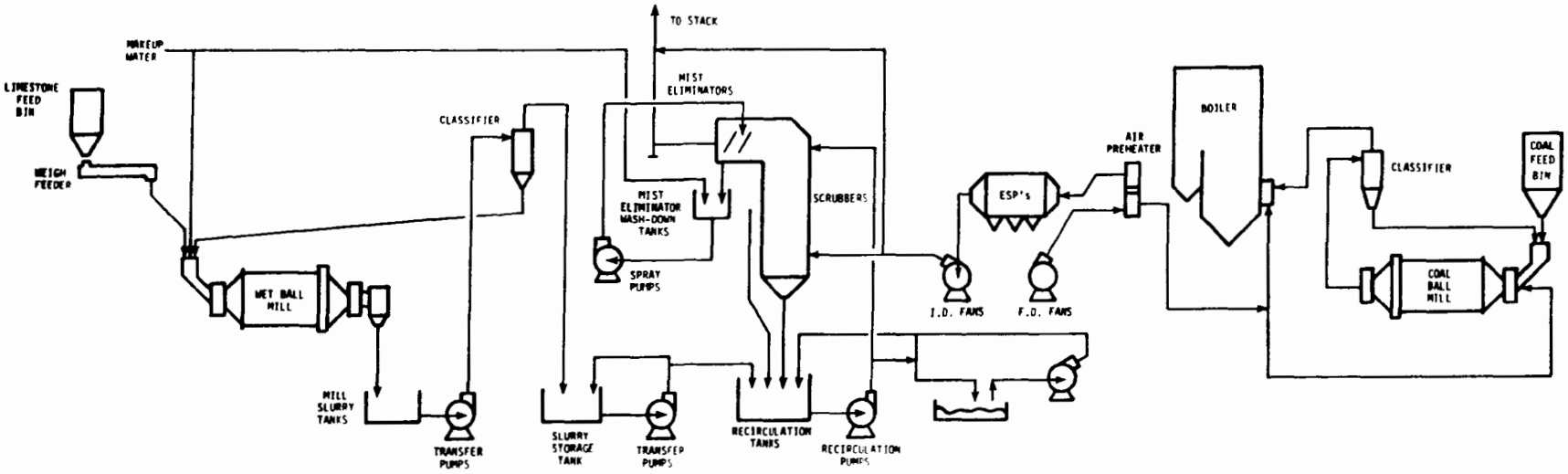

Central Illinois Light,
Simplified Process Flow Diagram of Duck Creek 1
Power Plant and Emission Control System

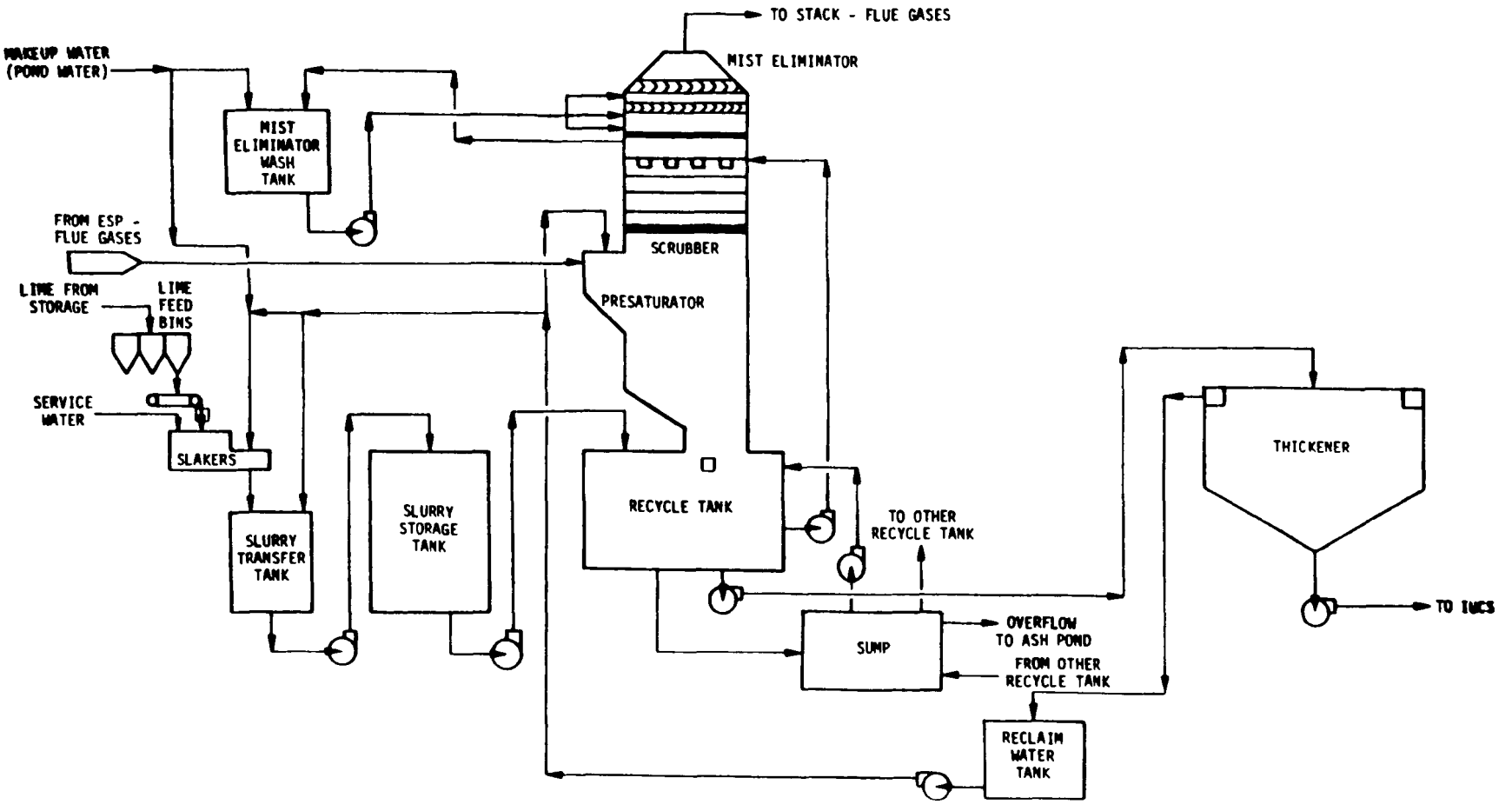

Columbus and Southern Ohio Electric, Conesville 5 and 6:
Simplified Process Flow Diagram for a Given Module

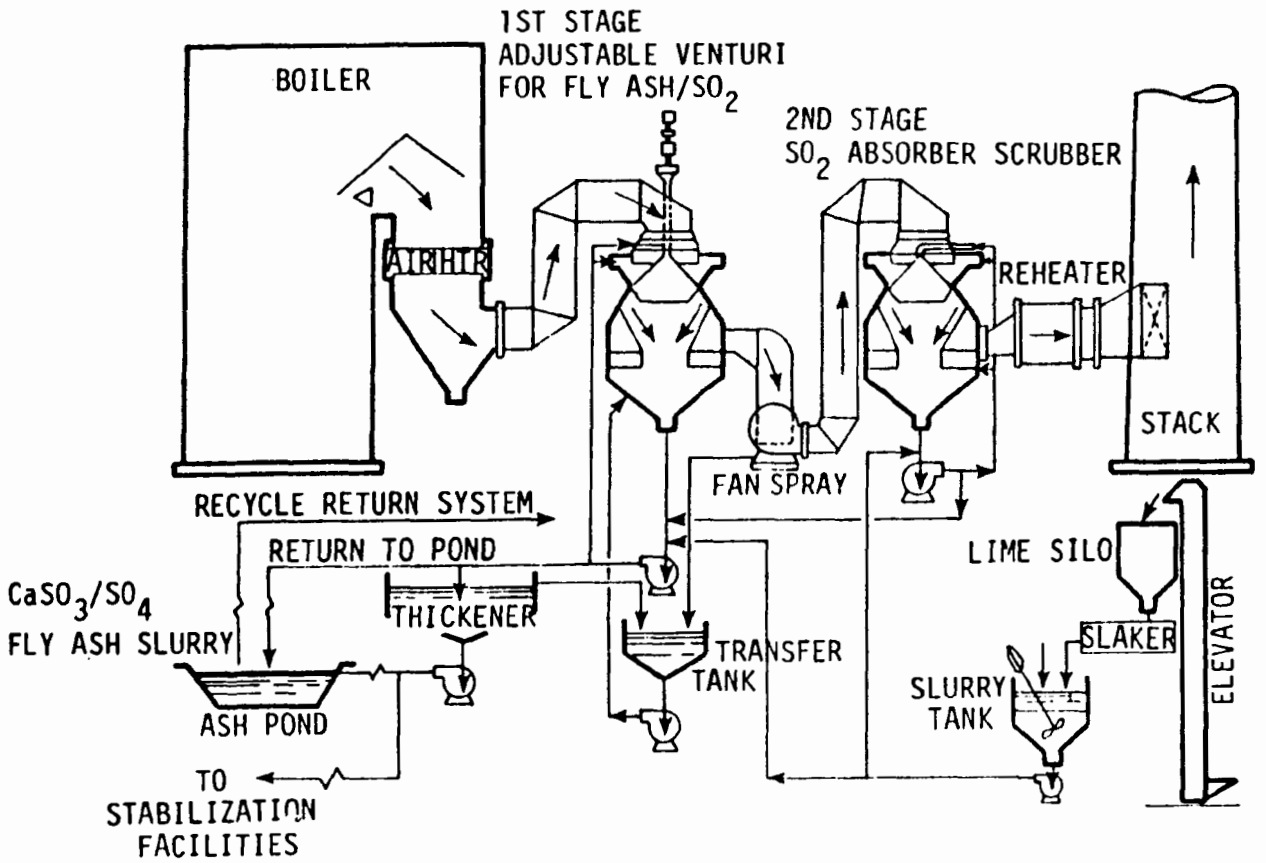

Duquesne Light, F. R. Phillips FGD System:
General Diagram.

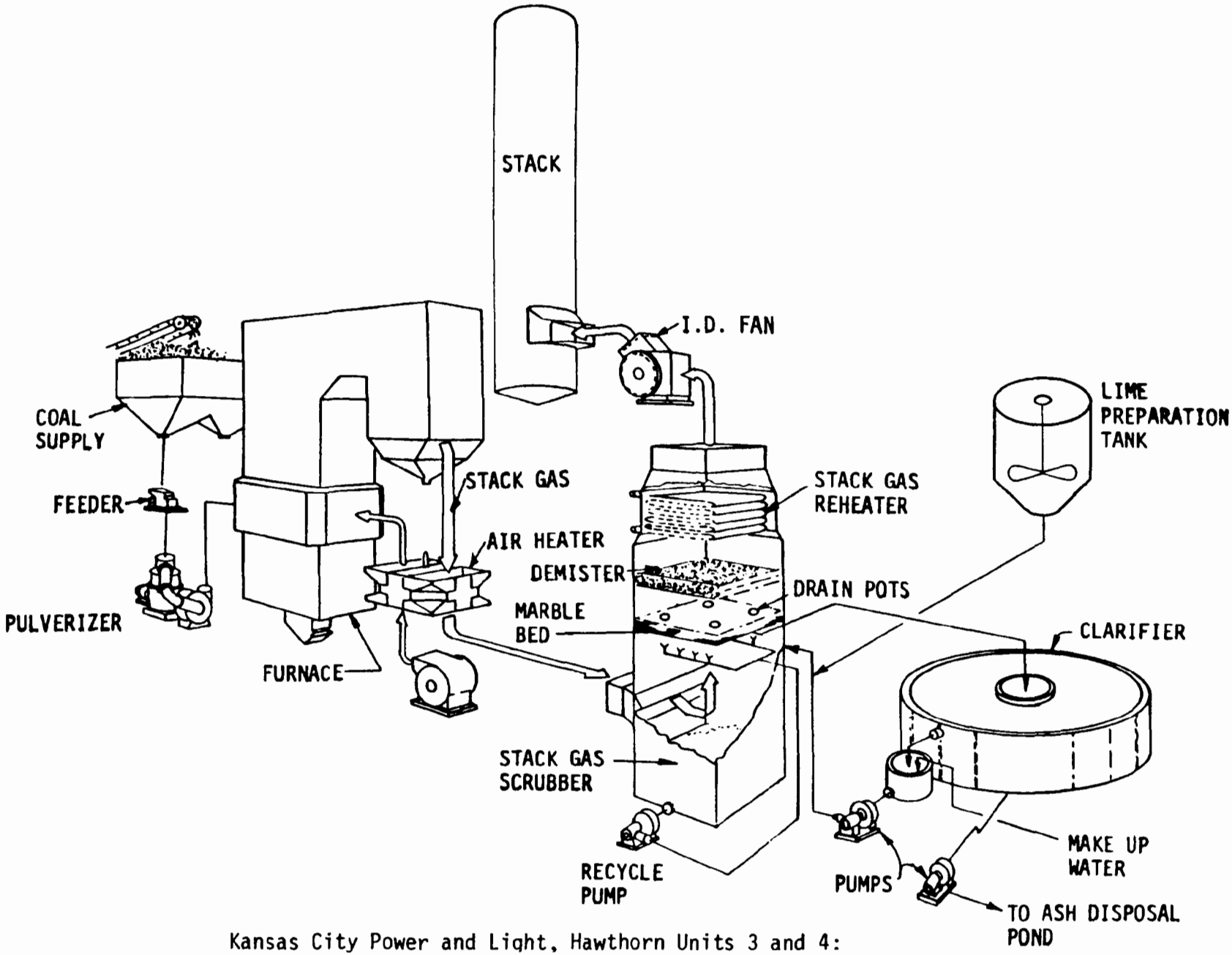

Kansas City Power and Light, Hawthorn Units 3 and 4:
Simplified Process Flow Diagram of the Lime Scrubbing Process

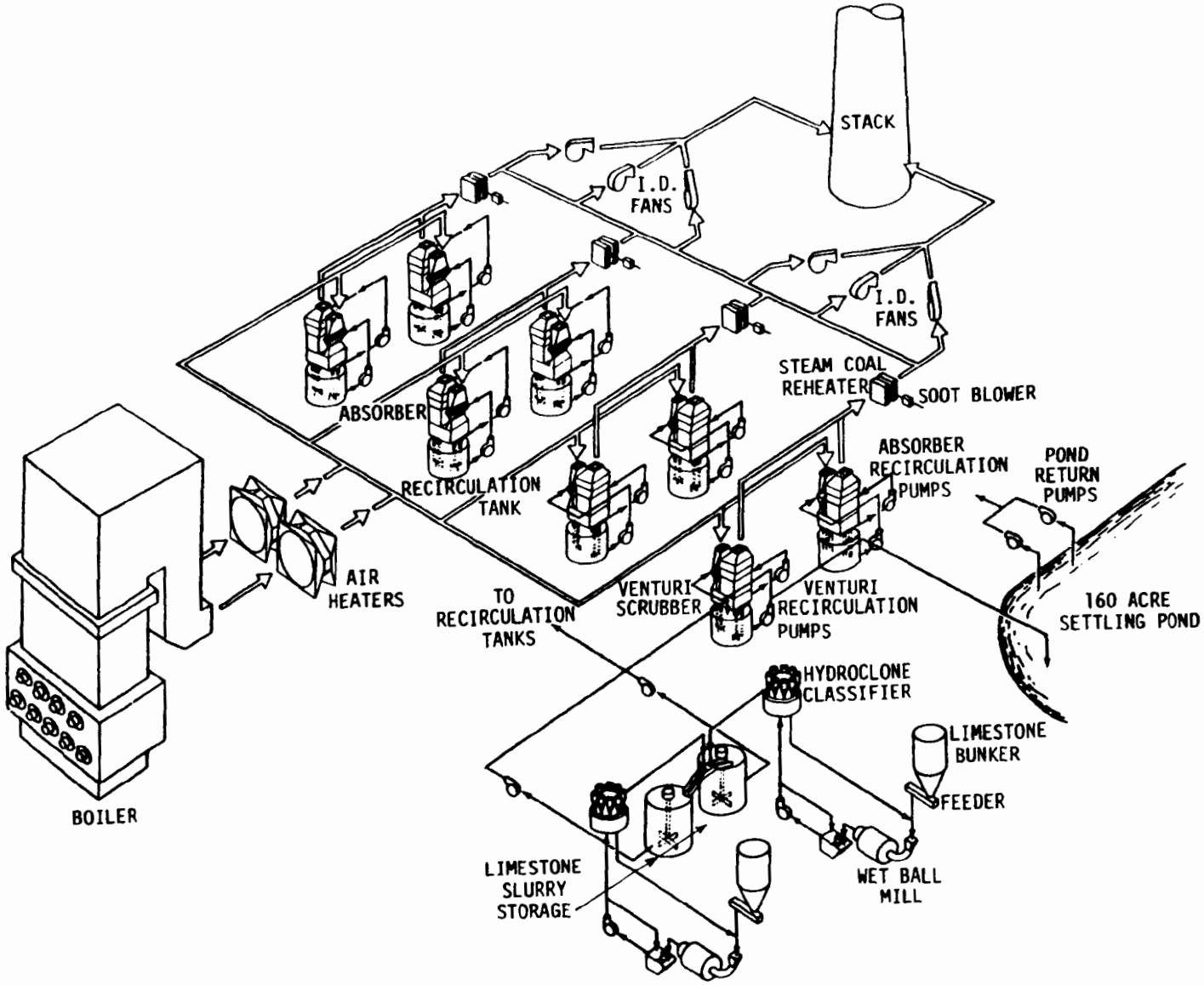

Kansas City Power and Light,
LaCygne 1 FGD System: General Diagram

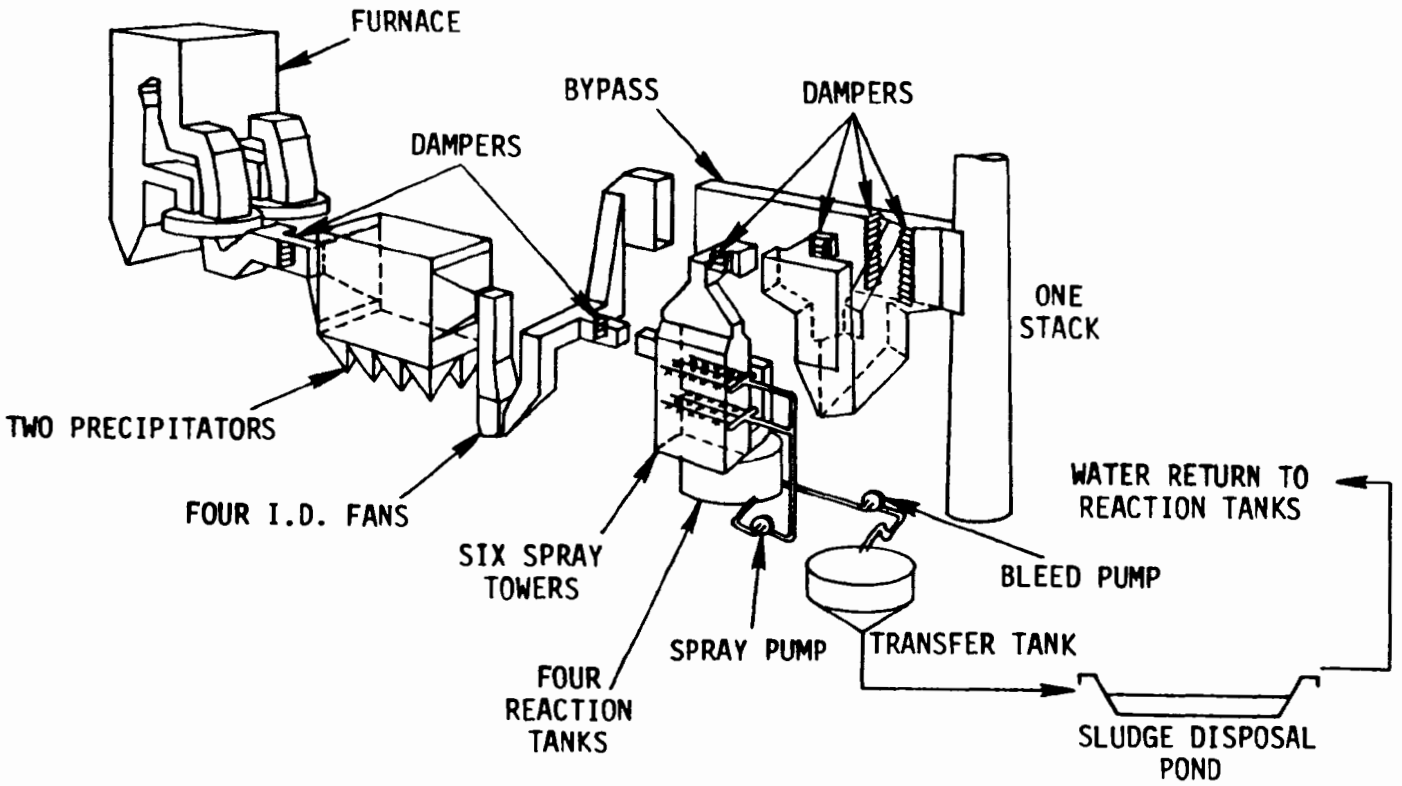

Kansas Power and Light,
Schematic of Jeffrey Steam Generator and Emission Control Equipment

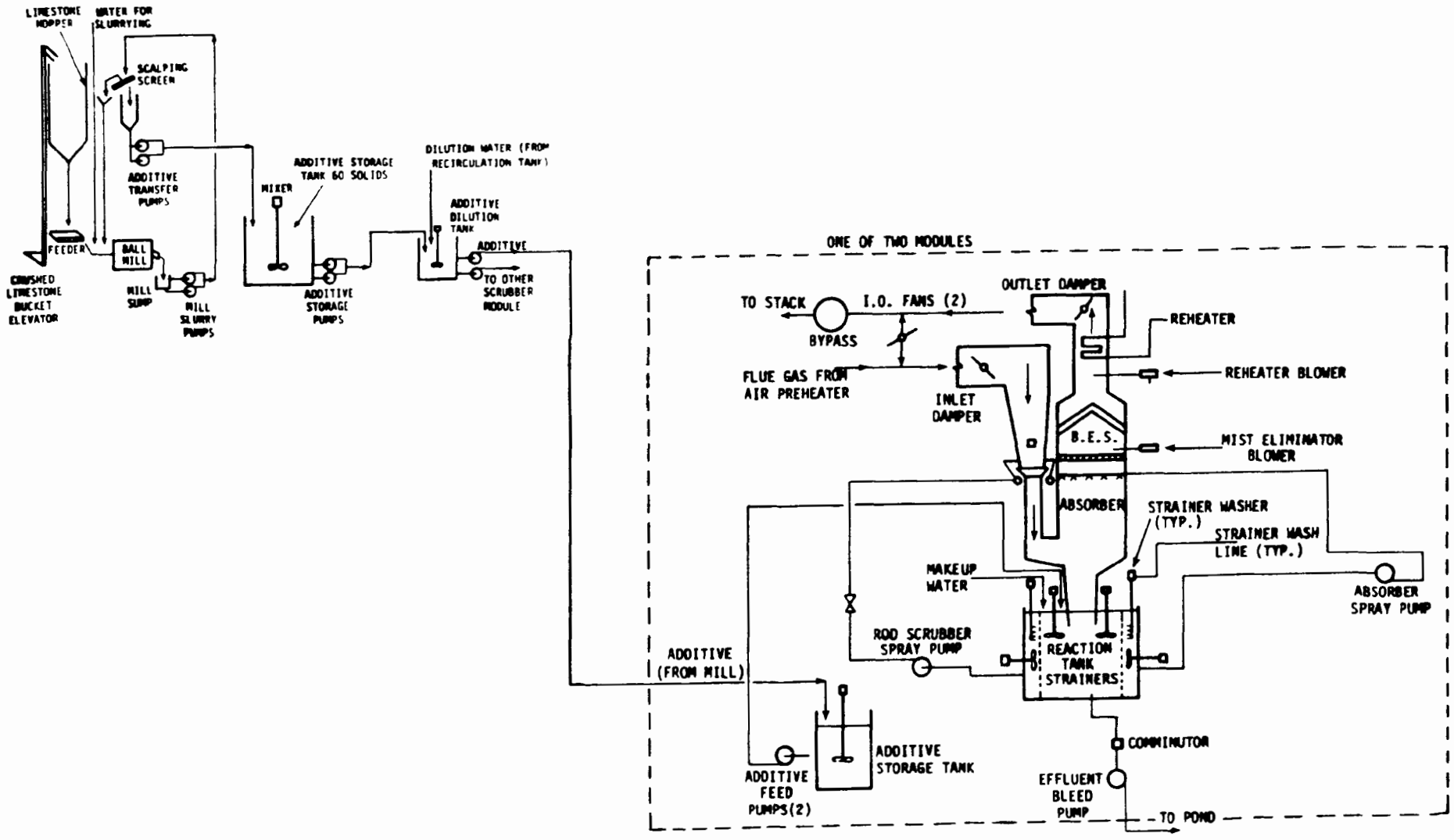

Kansas Power and Light,
Lawrence 4 Operational FGD System:
Simplified Process Flow Diagram

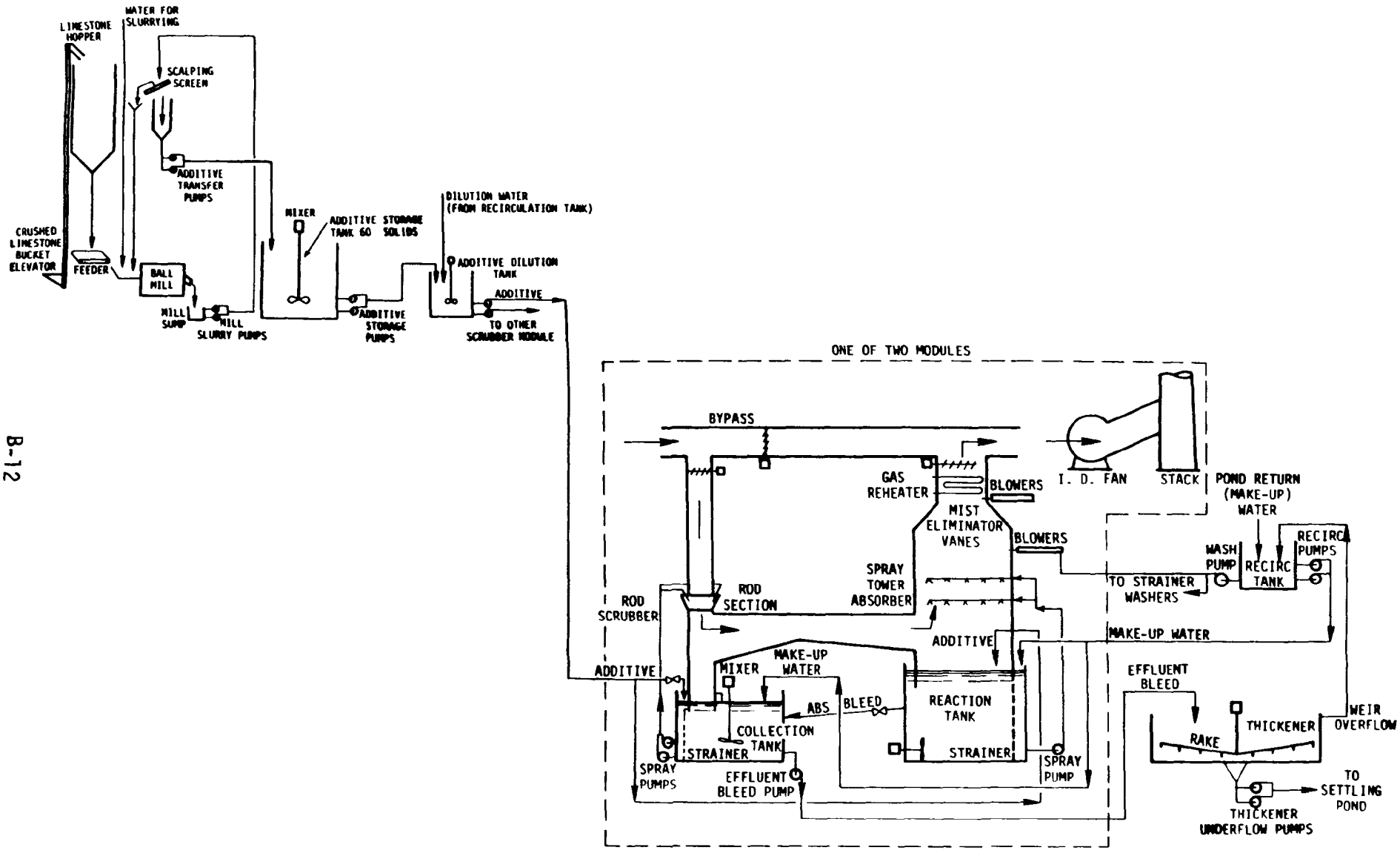

Kansas Power and Light,
Lawrence 5 Operational FGD System:
Simplified Process Flow Diagram

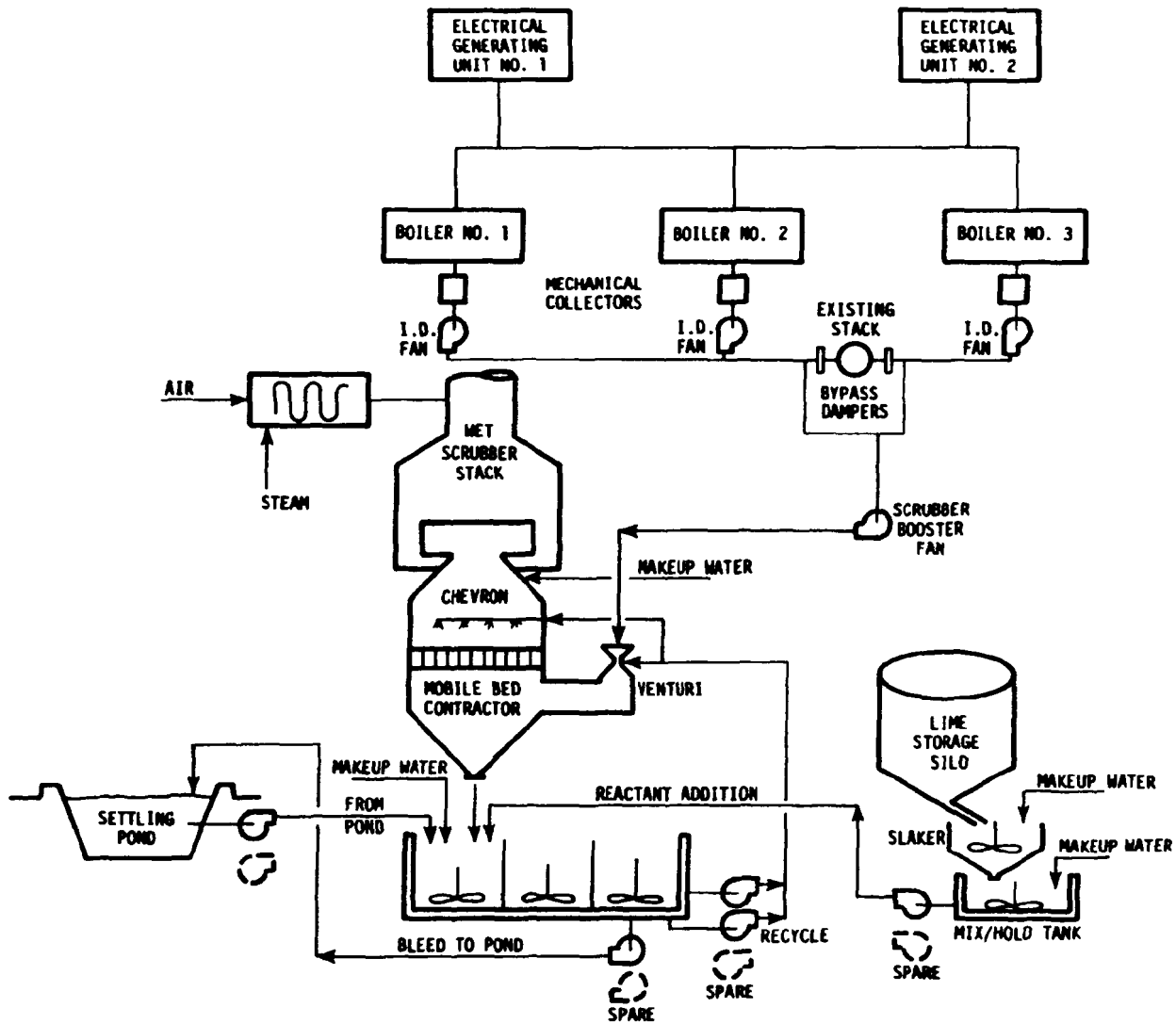

Kentucky Utilities,
Green River FGD System: General Process Diagram

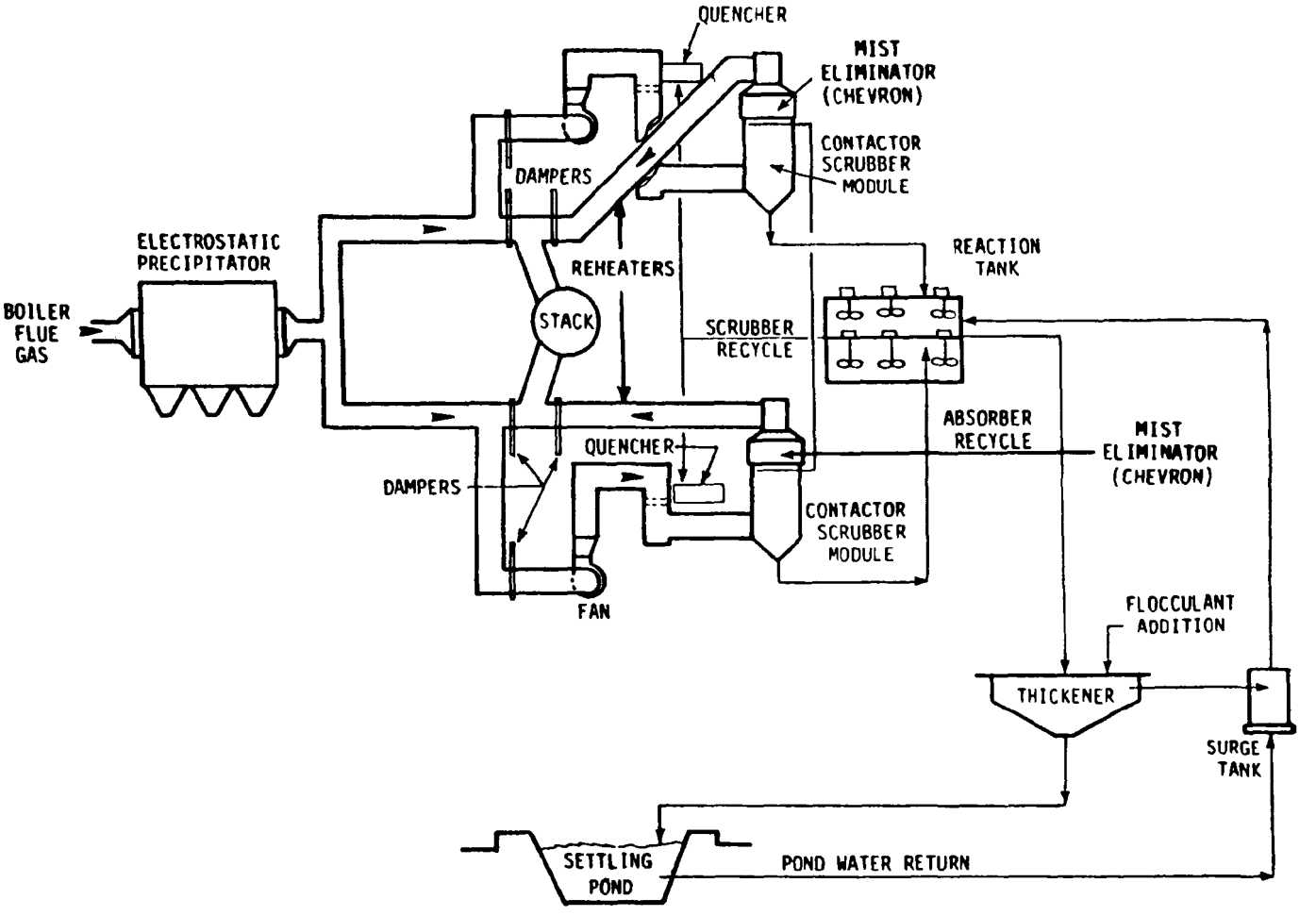

Louisville Gas and Electric, Cane Run 4
FGD System: Simplified Process Flow Diagram

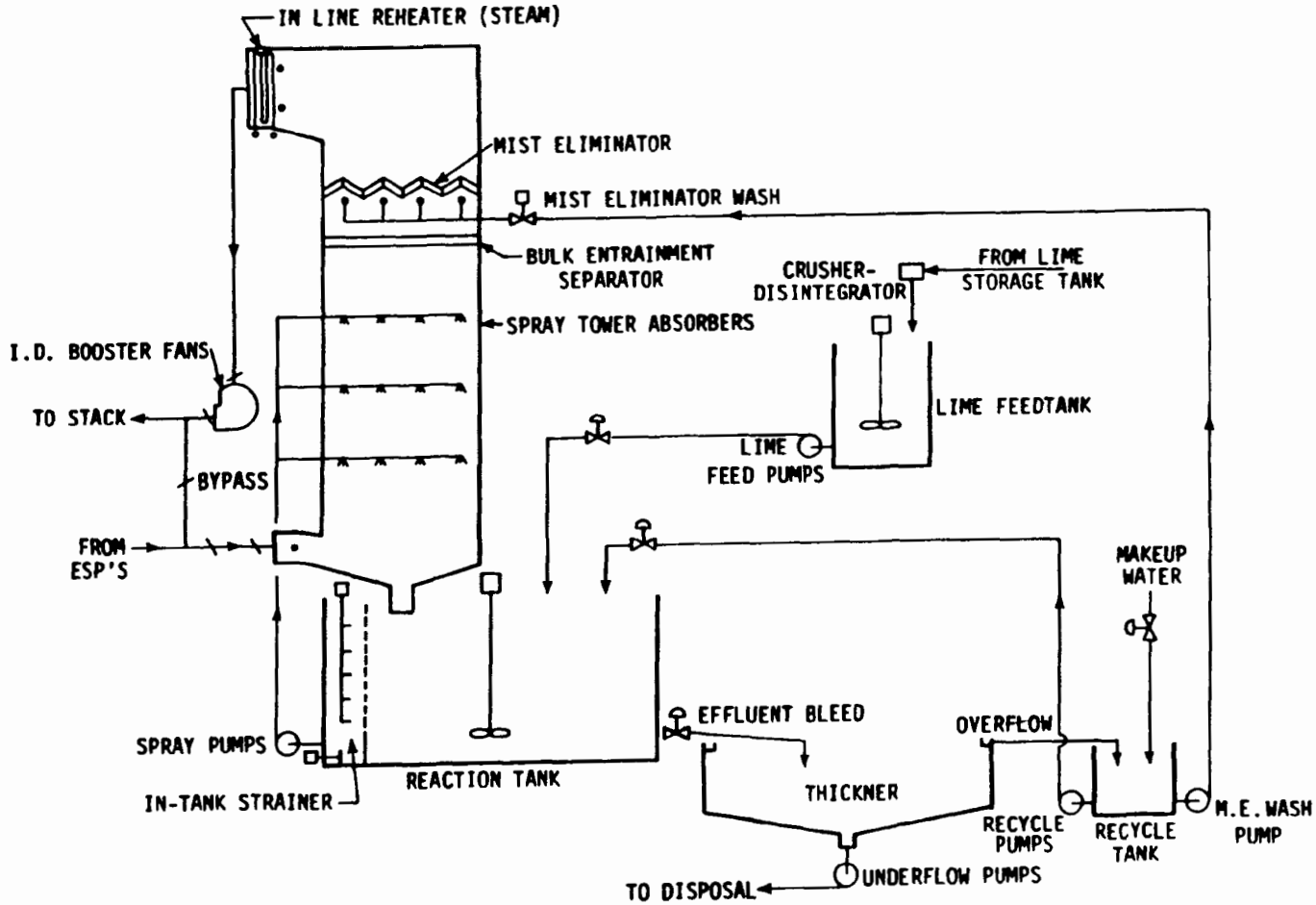

Louisville Gas and Electric, Cane Run 5
FGD System: Simplified Process Flow Diagram

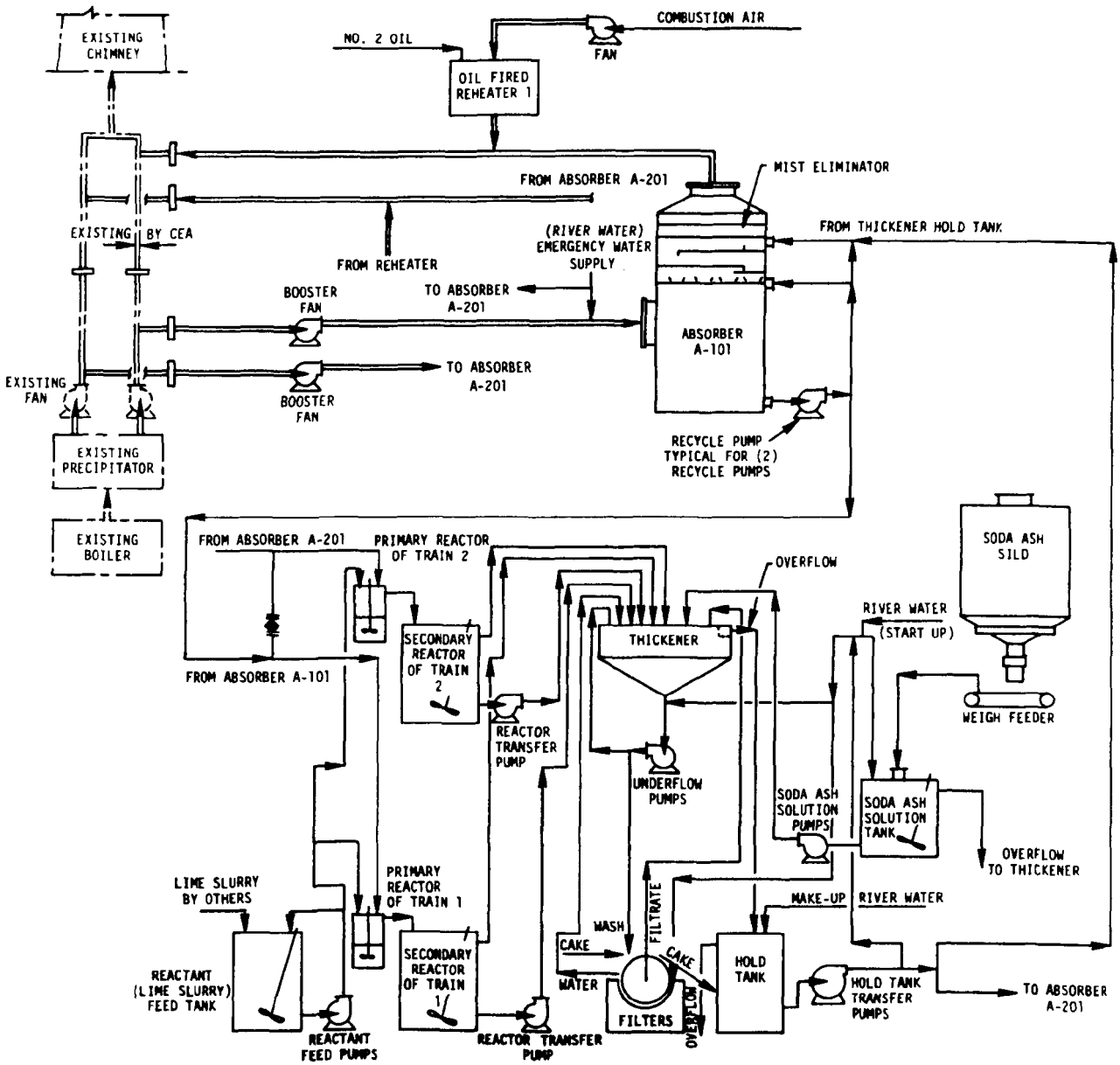

Louisville Gas and Electric, Cane Run 6
Dual Alkali FGD System: Simplified Process Flow Diagram

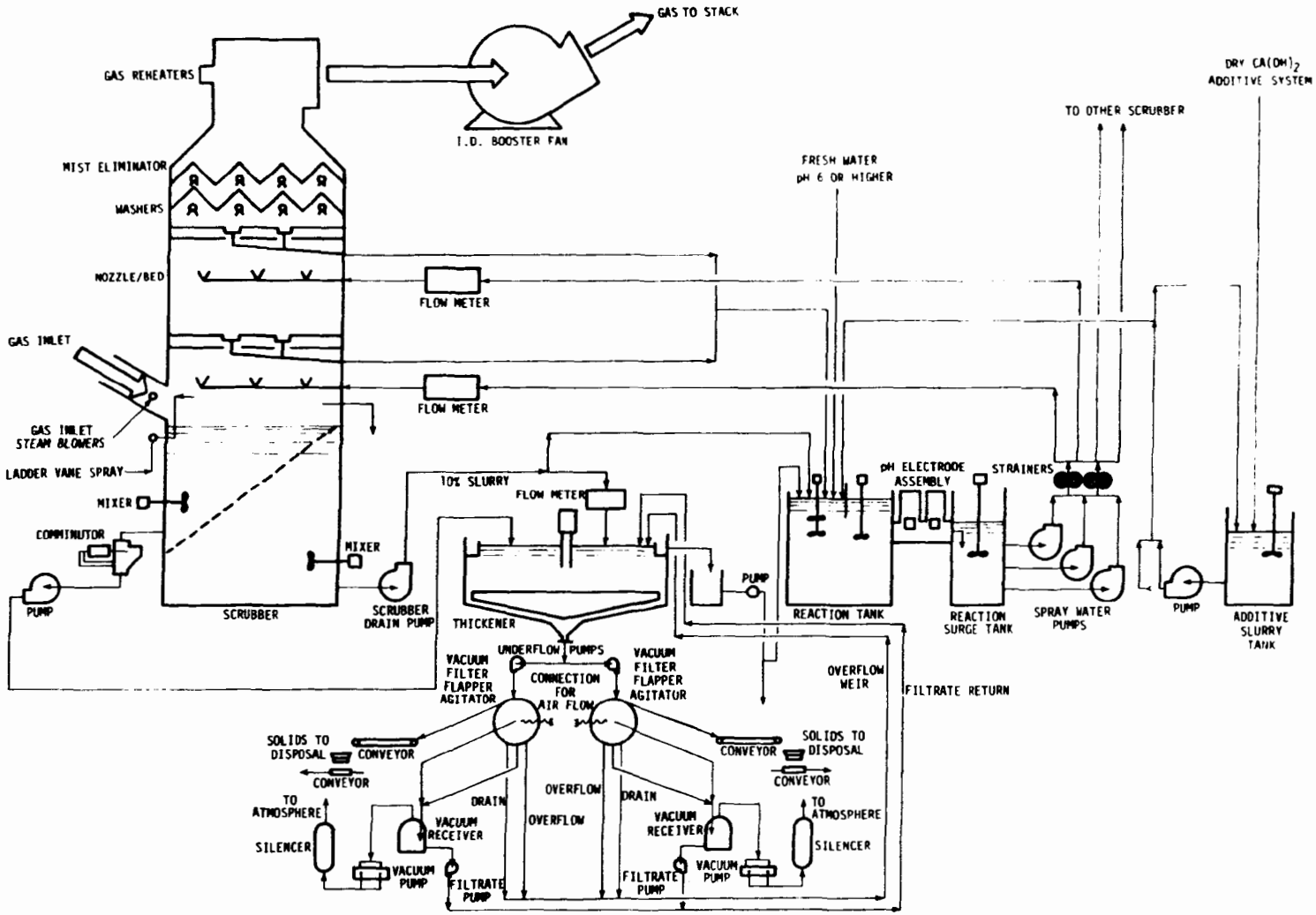

Louisville Gas and Electric,
Paddys Run 6 FGD System:
Simplified Process Flow Diagram

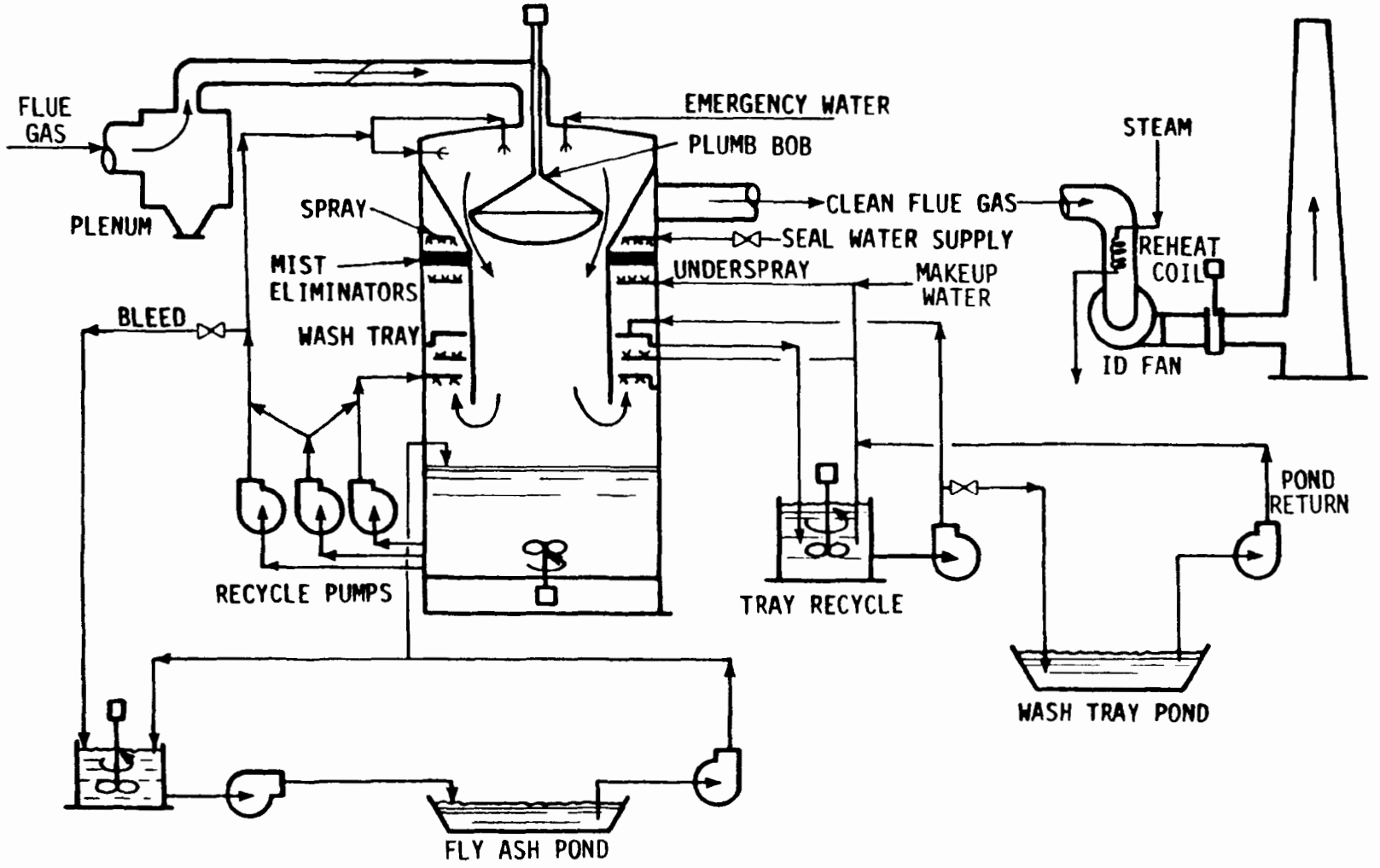

Montana Power, Colstrip 1 and 2:
Process diagram of a given FGD module.

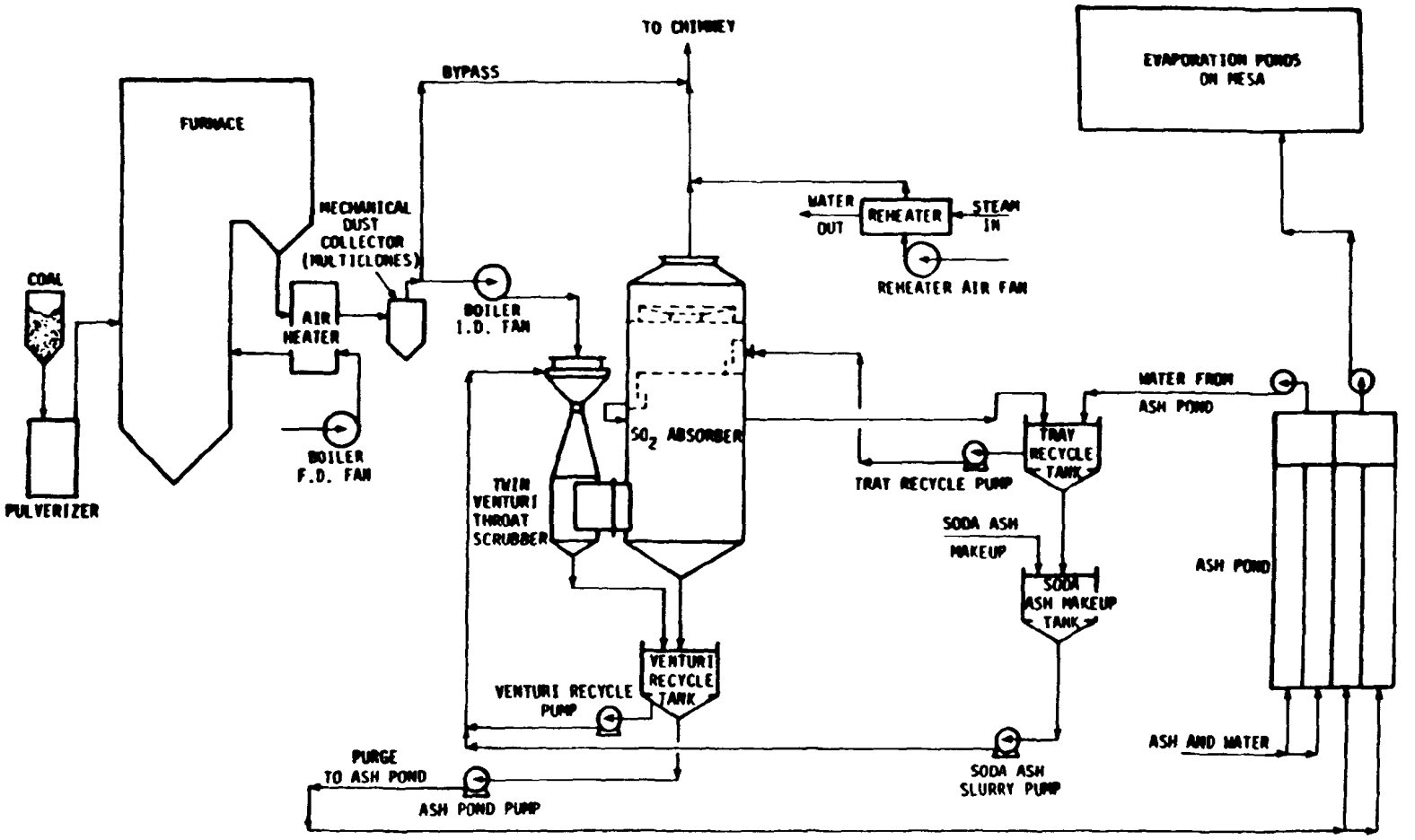

Nevada Power, Reid Gardner 1,2 and 3:
Process diagram of a given FGD system.

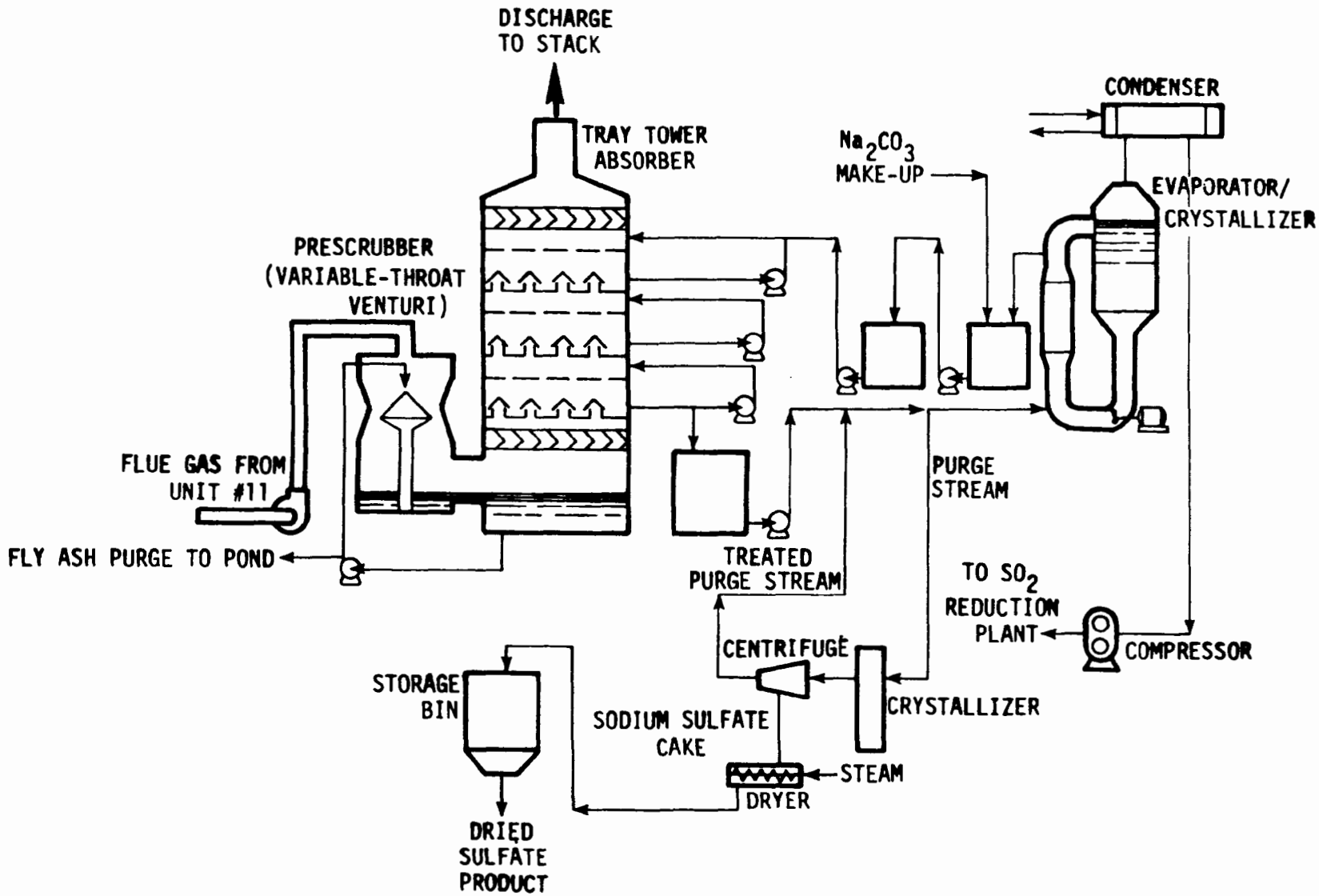

Northern Indiana Public Service,
D. H. Mitchell 11 Wellman Lord/Allied System:
General Process Diagram.

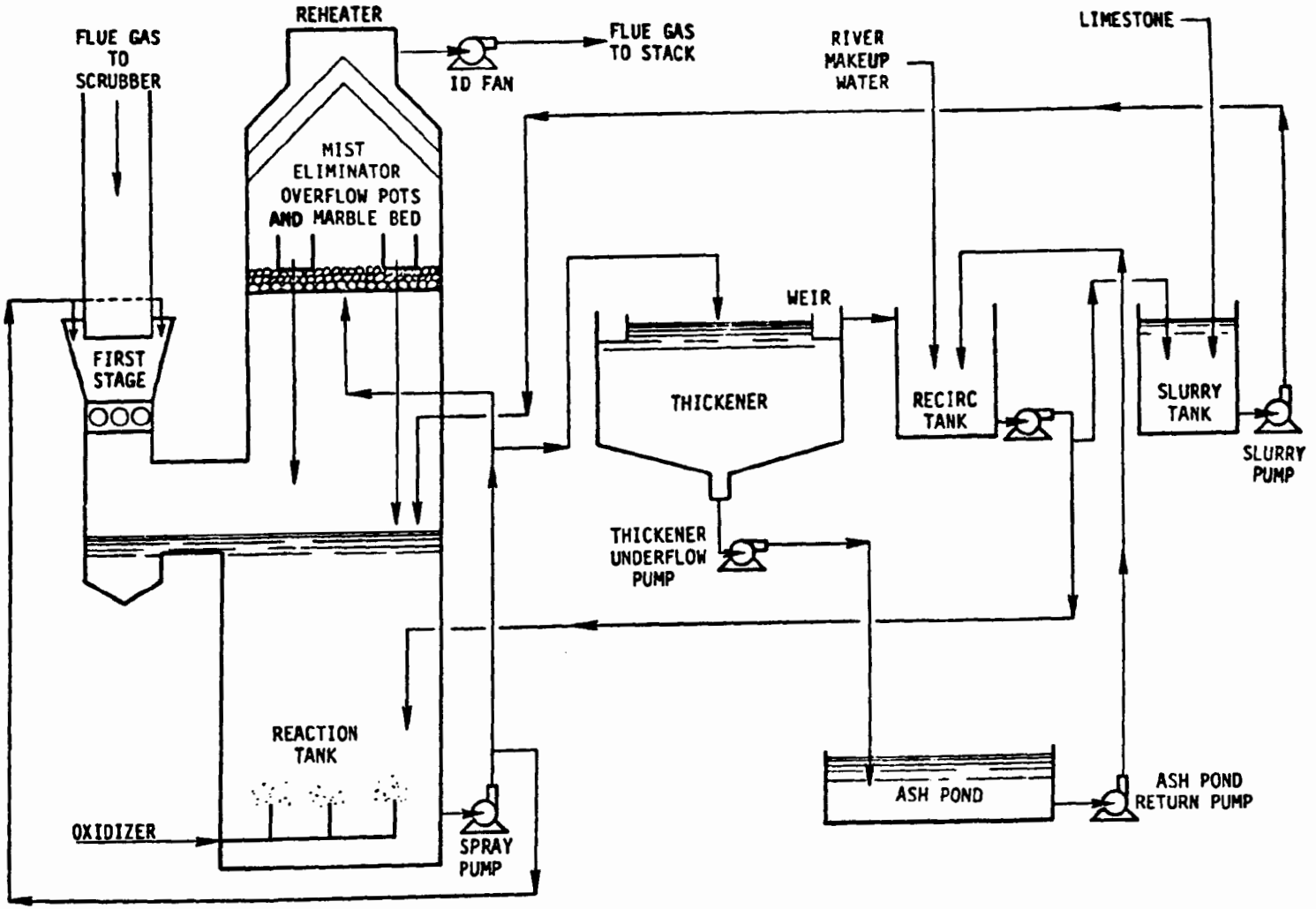

Northern States Power, Sherburne 1 and 2 FGD System:
Simplified Process Flow Diagram

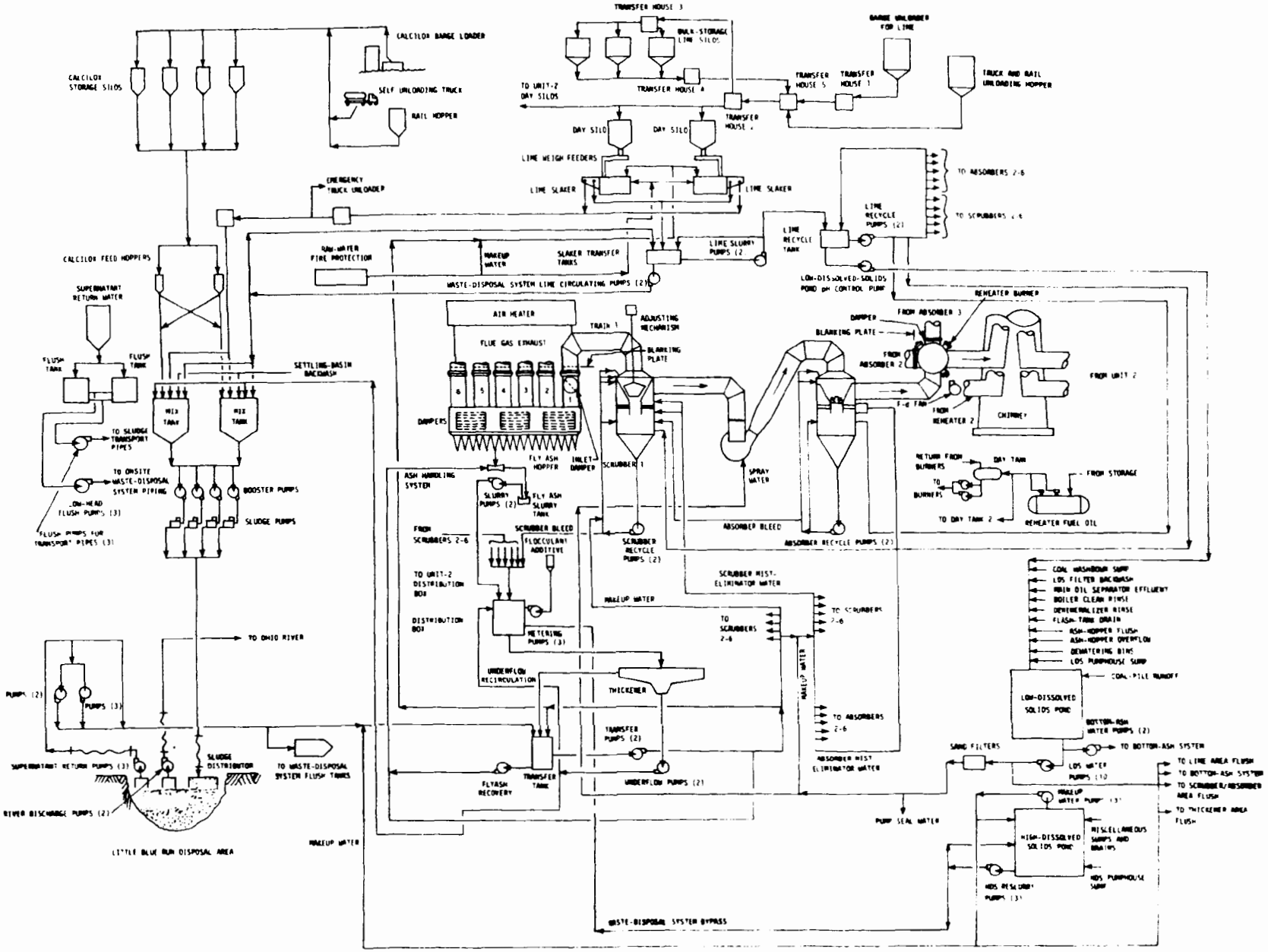

Pennsylvania Power, Bruce Mansfield FGD System:
Process Flow Diagram for Unit 1 or 2

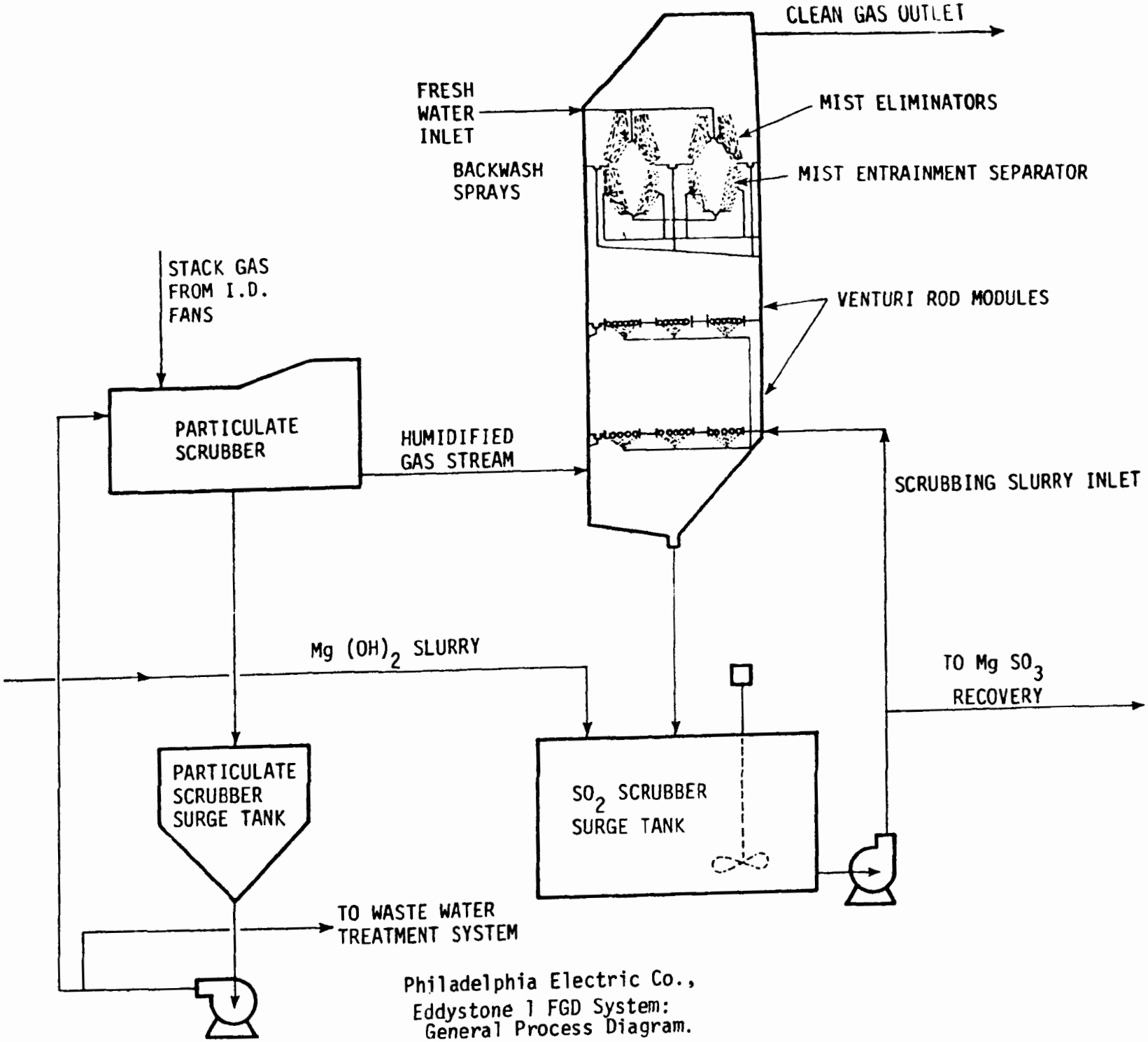

Philadelphia Electric Co.,
Eddystone 1 FGD System:
General Process Diagram.

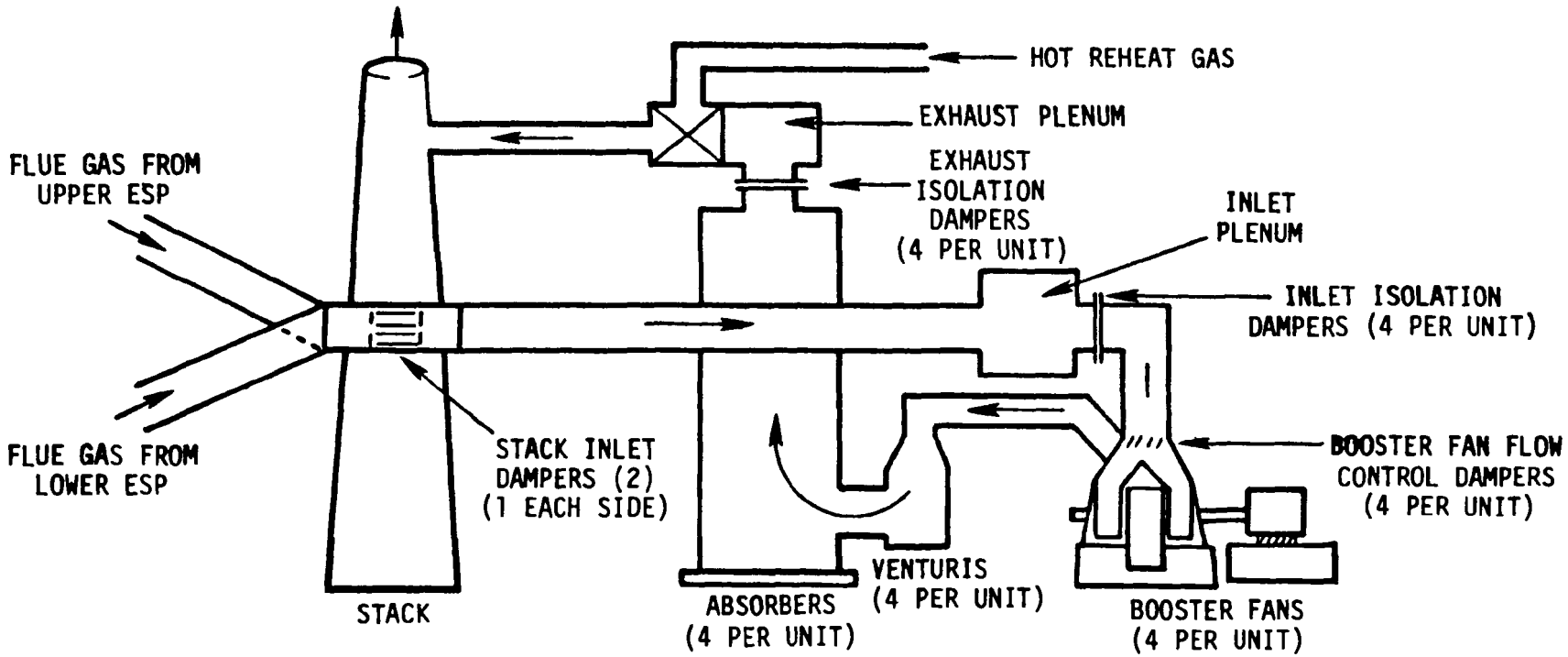

Public Service of New Mexico, San Juan 1, 2, and 3*
FGD System Flue Gas Flow Path

*San Juan 3 is identical except that only one scrubbing train is operational.

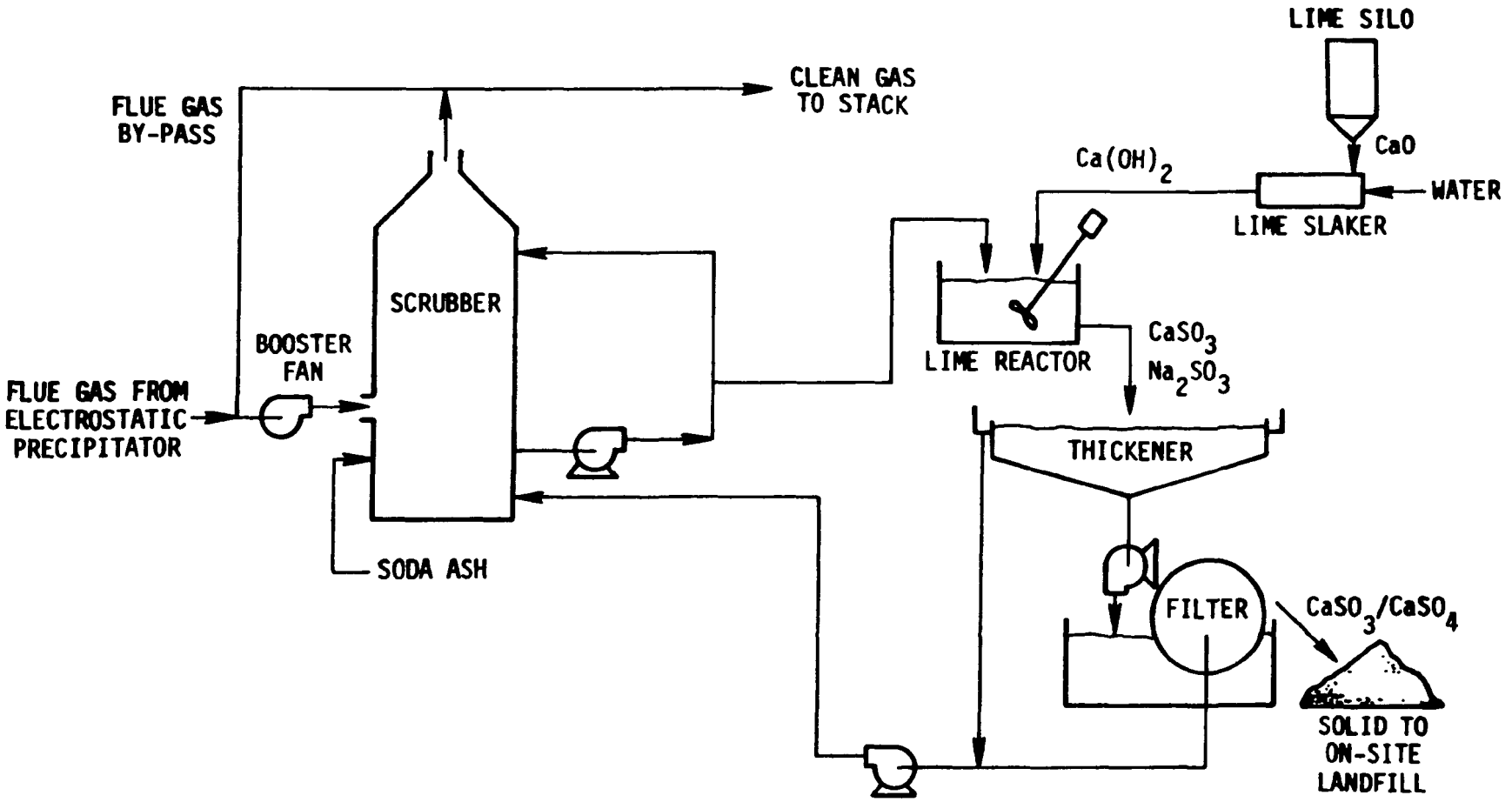

Southern Indiana Gas and Electric, A.B. Brown 1:
Dual Alkali FGD System: Simplified Process Flow Diagram

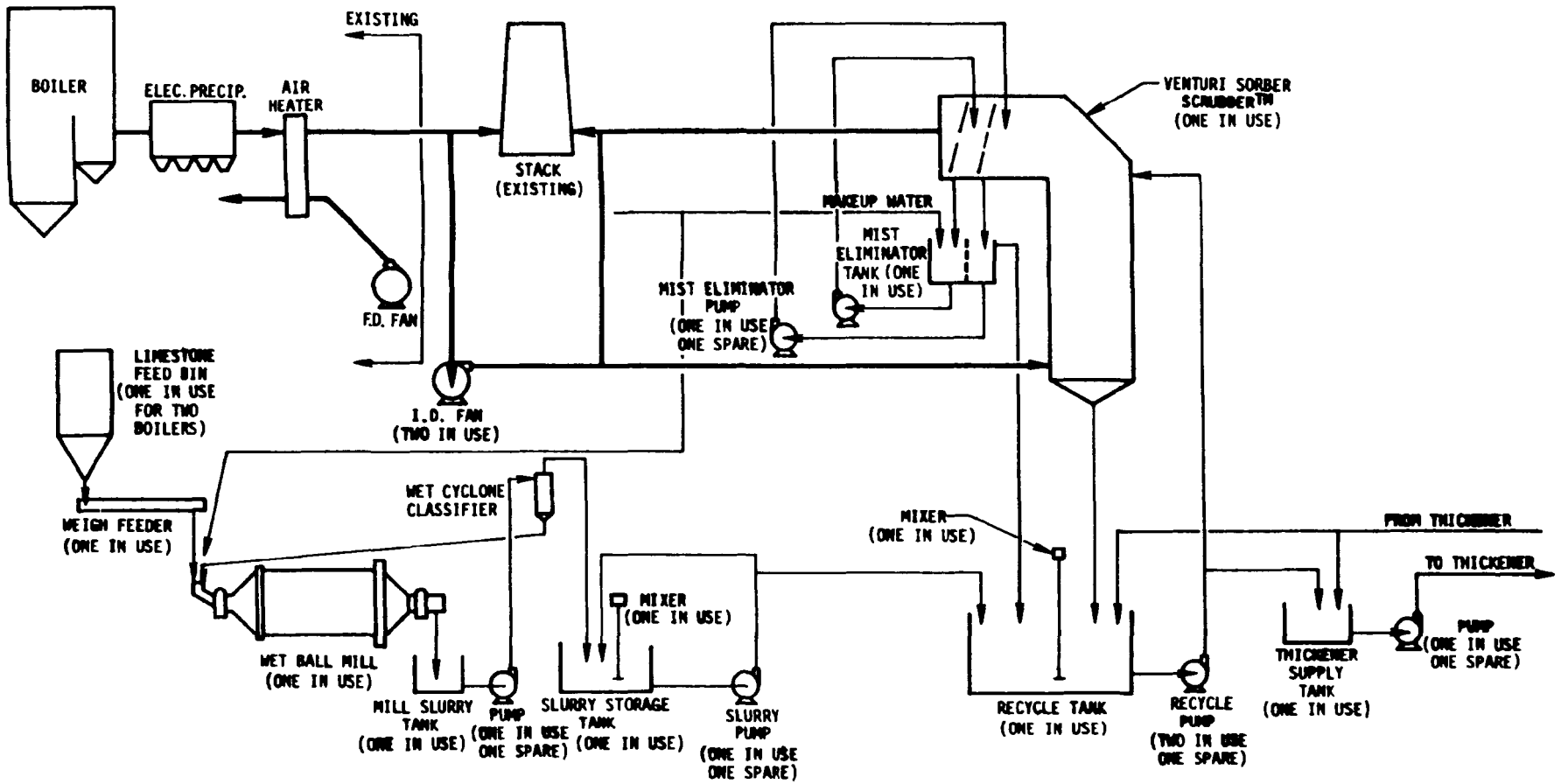

South Mississippi Electric, R.D. Morrow 1 and 2:
Simplified Process Flow Diagram

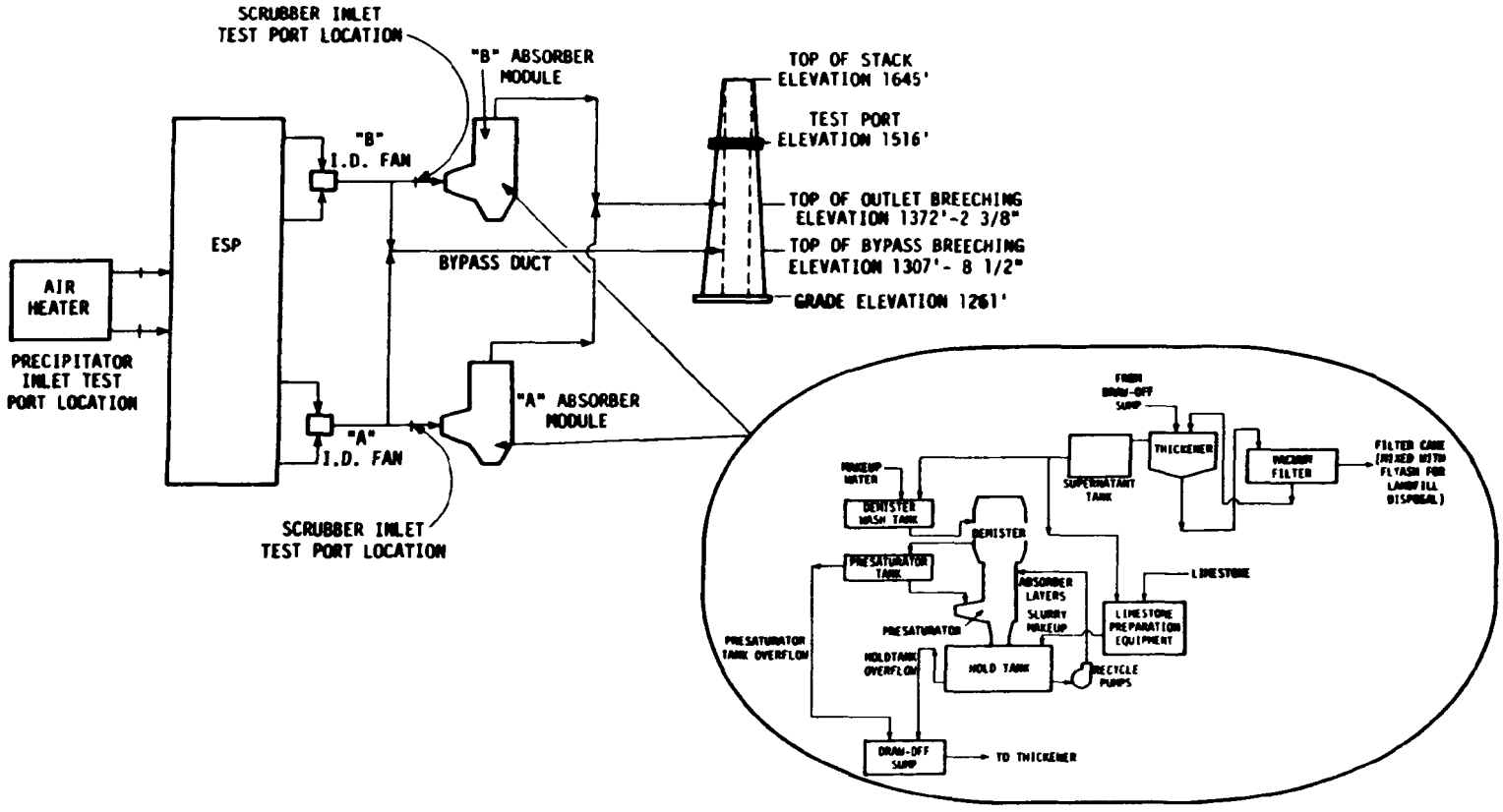

Springfield City Utilities, Southwest 1:
Simplified Process Diagram

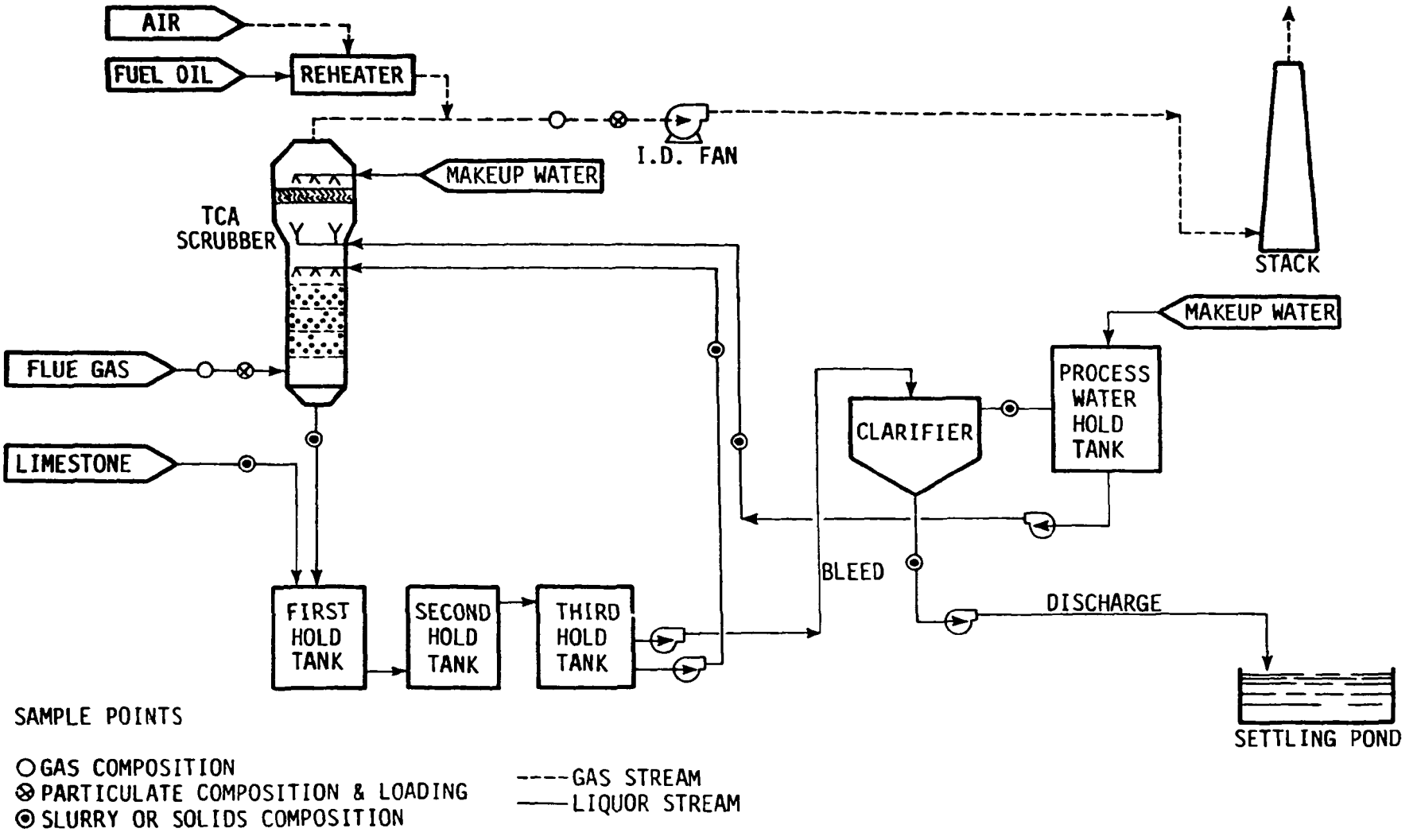

Tennessee Valley Authority,
Shawnee 10A Prototype Test Unit:
General Process Diagram.

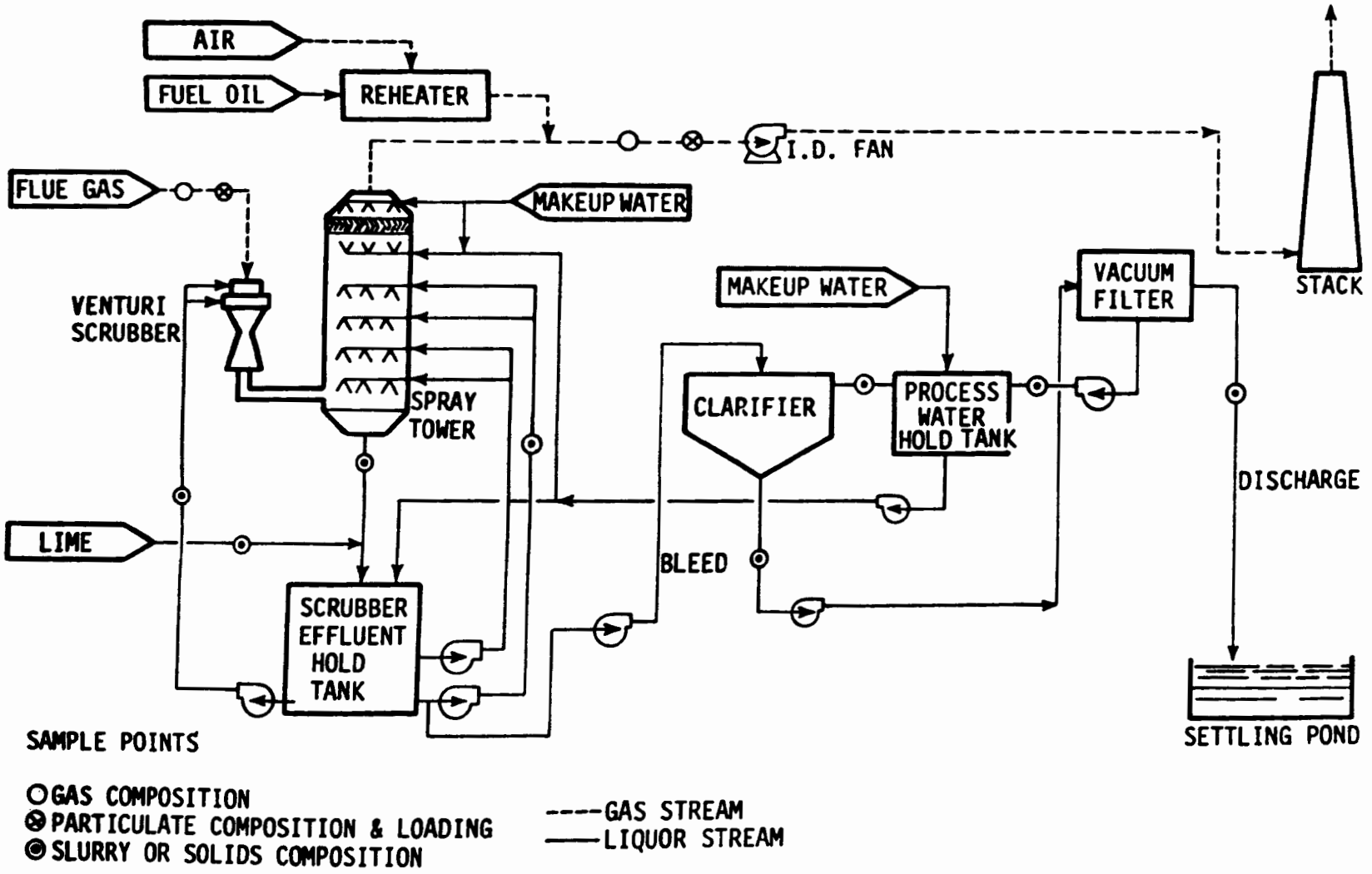

Tennessee Valley Authority, Shawnee 10B Prototype Unit:
General Process Diagram.

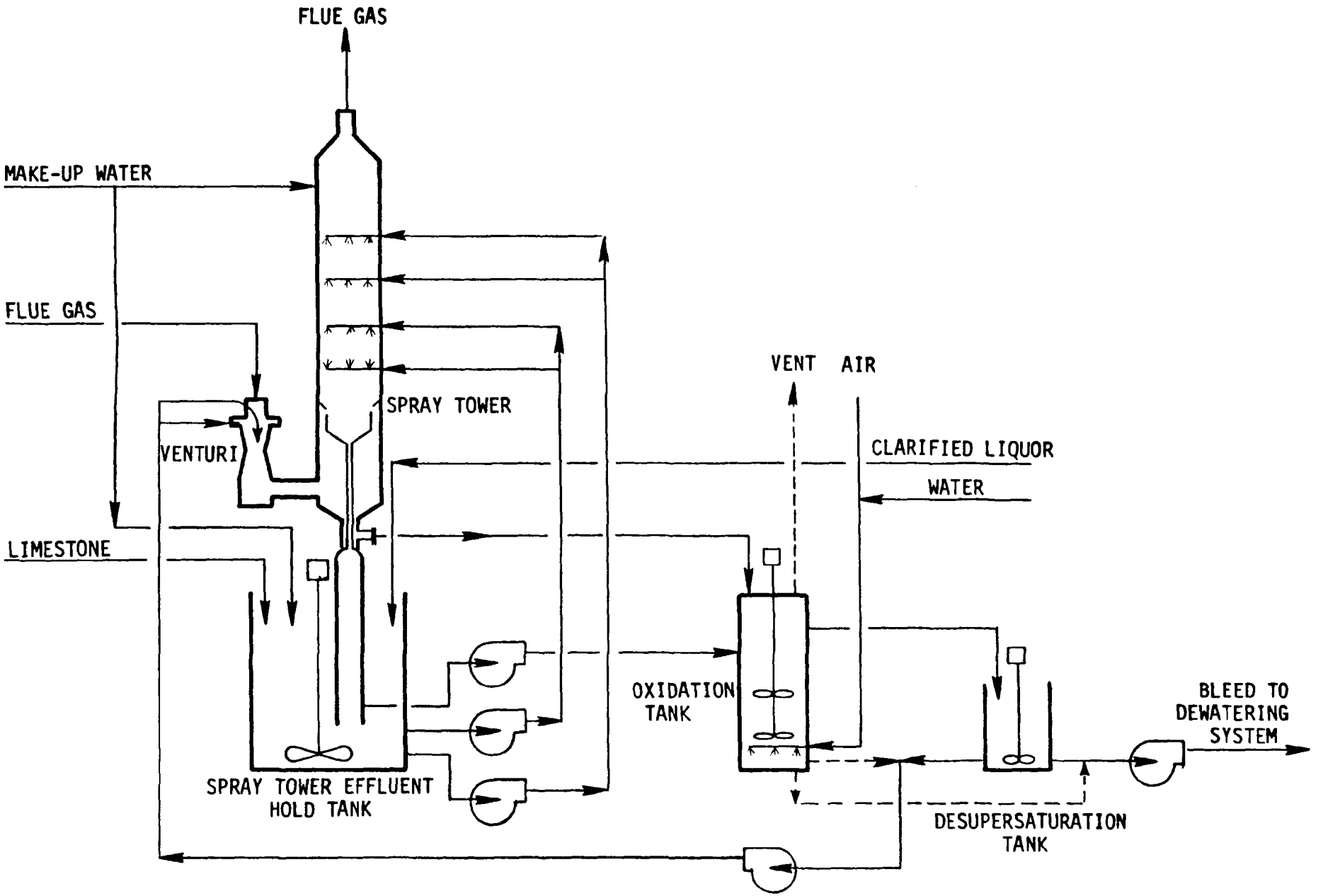

Tennessee Valley Authority, Shawnee 10B Prototype Test Unit:
Modified Venturi/Spray Tower System for 2-Stage Oxidation Testing.

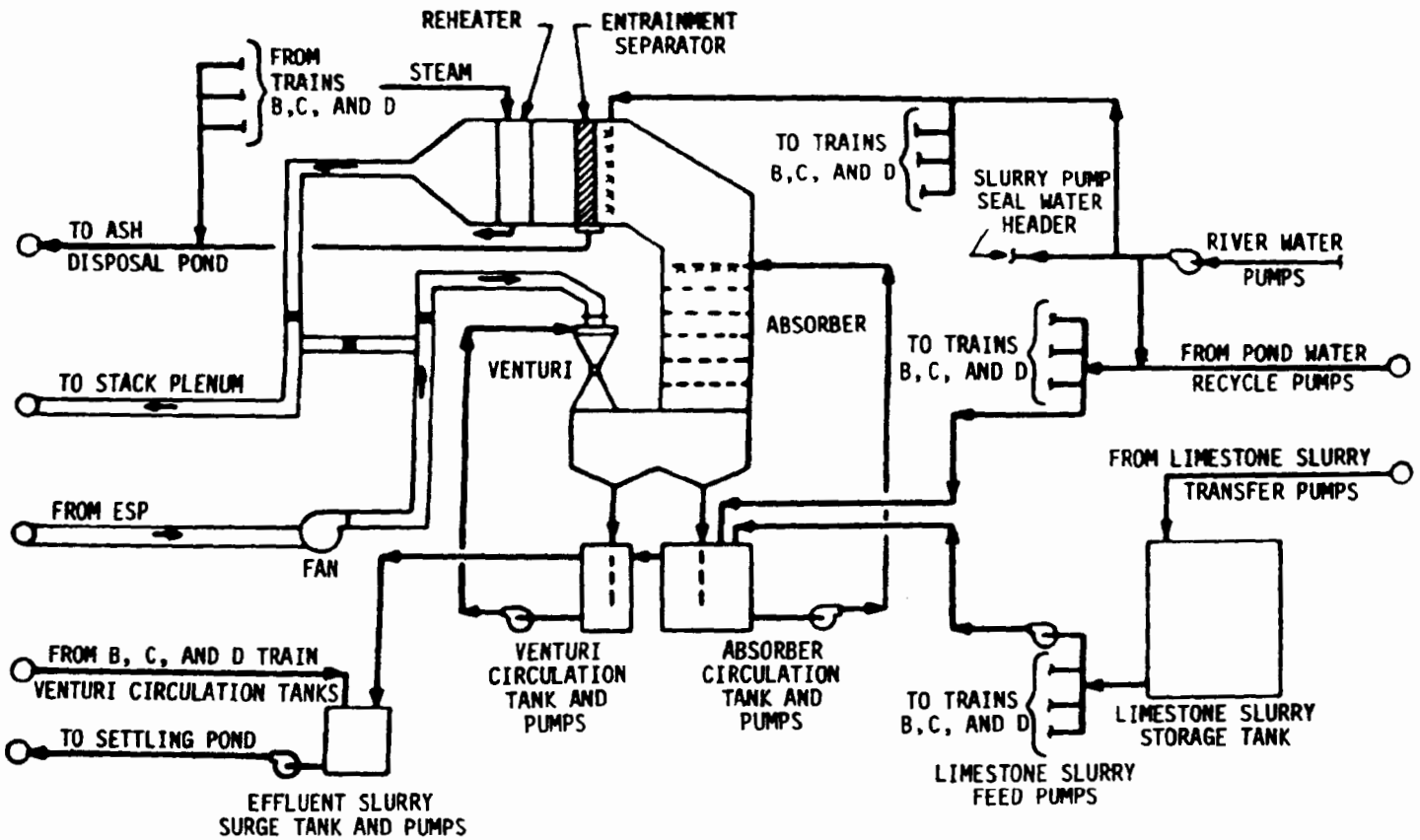

Tennessee Valley Authority, Widows Creek 8 FGD System:
Process Flow Diagram for One of the Four Scrubber Trains

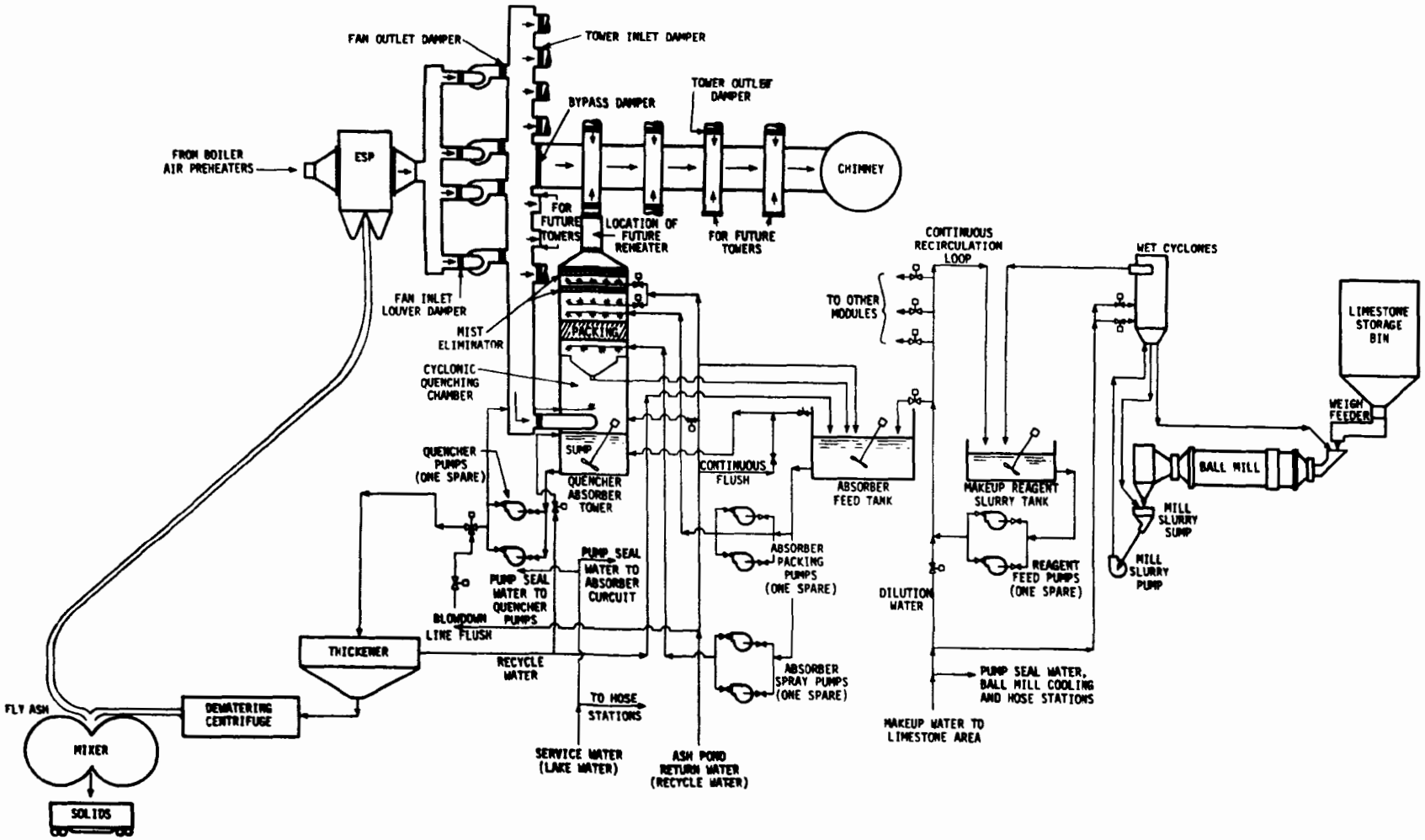

Texas Utilities,
Simplified Process Flow Diagram for One of the Three Identical
Martin Lake FGD Systems

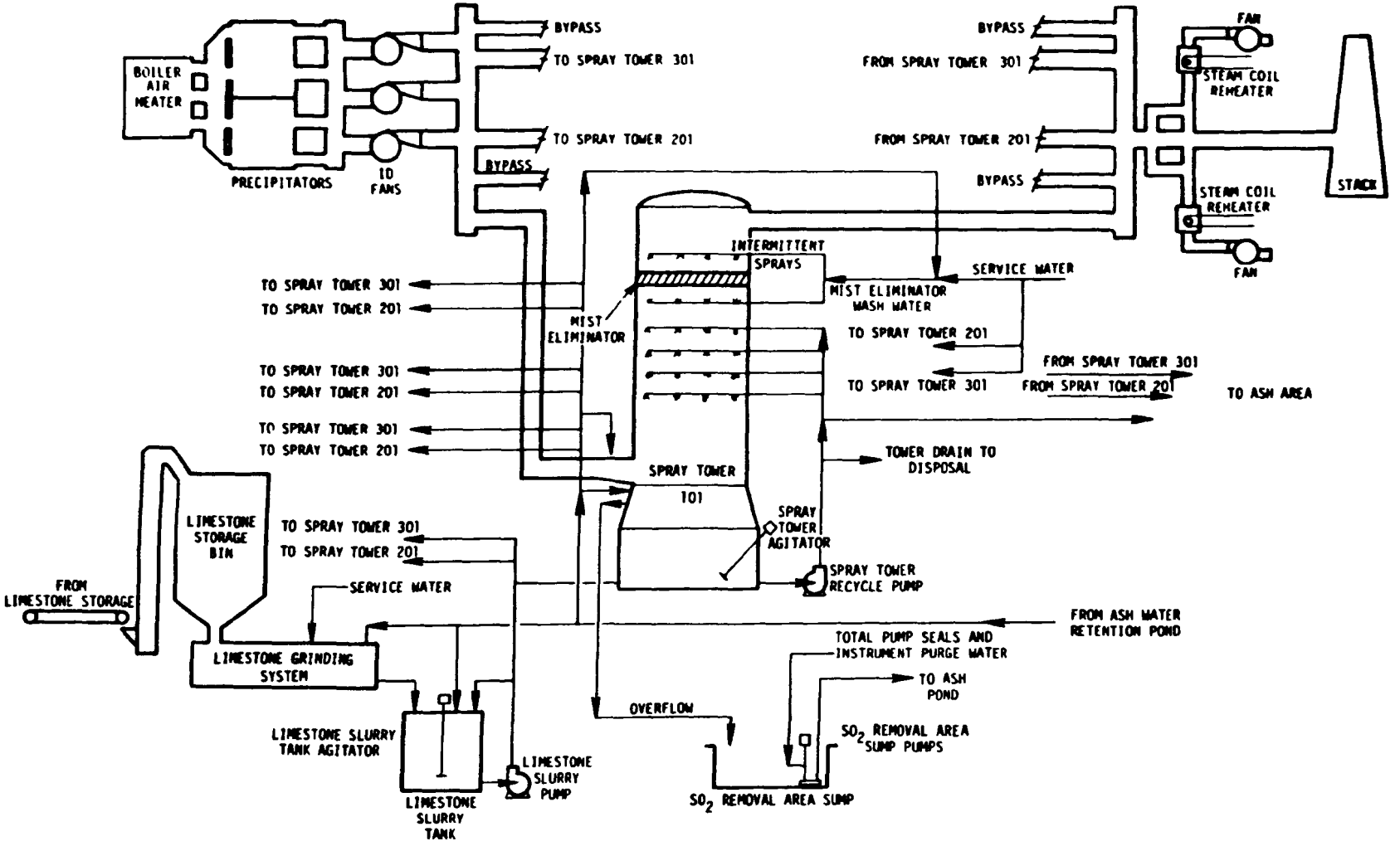

Texas Utilities,
Simplified Process Flow Diagram for Monticello 3

APPENDIX C

DEFINITIONS

DEFINITIONS

Boiler Commercial Service Date	Date when boiler and auxiliary equipment (including FGD system for new boilers) has met initial supplier guarantees and begins to contribute electrical power to the power grid.
Byproduct	The nature (e.g. elemental sulfur, sulfuric acid) and disposition (e.g. stockpile on site, marketed) of the end product by systems that generate a saleable product.
Commercial Service Date (FGD System)	Date when the FGD system successfully completes compliance testing and the utility is satisfied that the system meets supplier contractual guarantees.
Company Name	Name of corporation as it appears in Electrical World - Directory of Electrical Utilities, McGraw-Hill - Current Edition - as space permits.
Disposal	Disposal method for throwaway product systems producing sludge including: stabilized or unstabilized sludge, interim and final disposal sites and disposal type (minefill, landfill, etc.) as well as disposal location.
Efficiency:	
Particulate Matter	The actual percentage of particulate matter removed by the emission control system (mechanical collectors, ESP, or fabric filter and FGD) from the untreated flue gas.
SO_2	The actual percentage of SO_2 removed from the flue gas by the FGD system.

FGD Viability Indexes	Several parameters have been developed to quantify the viability of FGD system technology. Various terms such as "availability," "reliability," "operability," and "utilization" are used to accurately represent the operation of any FGD system during a given period. The above-mentioned parameters are defined below and discussed briefly. The objectives of this discussion are to make the reader aware that several different definitions are being used and to select appropriate parameters that can be used for reporting purposes so that reasonably consistent comparisons can be made.
Availability Index	Hours the FGD system is available for operation (whether operated or not) divided by hours in period, expressed as a percentage. This parameter tends to overestimate the viability of the FGD system because it does not penalize for election not to operate the system when it could have been operated. Boiler downtime may tend to increase the magnitude of the parameter because FGD failures generally cannot occur during such periods.
Reliability Index	Hours the FGD system was operated divided by the hours the FGD system was called upon to operate, expressed as a percentage. This parameter has been developed in order not to penalize the FGD system for elected outages, e.g., periods when the FGD system could have been run but was not run because of chemical shortages, lack of manpower, short duration boiler operations, etc. The main problem in using this

	formula is the concise determination whether or not the system was "called upon to operate" during a given time period. In addition, an undefined value can result when the FGD system is not called upon to operate for a given period (e.g., turbine or boiler outage when FGD system is available).
FGD Operability Index	Hours the FGD system was operated divided by boiler operating hours in period, expressed as a percentage. This parameter indicates the degree to which the FGD system is actually used, relative to boiler operating time. The parameter is penalized when options are exercised not to use the FGD system in periods when the system is operable. In addition, an undefined value can result when the FGD system is not called upon to operate for a given period (e.g., turbine or boiler outage when FGD system is available).
FGD Utilization Index	Hours that the FGD system operated divided by total hours in period. This parameter is a relative stress factor for the FGD system. It is not a complete measure of FGD system viability because the parameter can be strongly influenced by conditions that are external to the FGD system (e.g., infrequent boiler operation will lower the value of the parameter although the FGD system may be highly dependable in its particular application).
End Product	
Saleable	The SO_2 removed from the flue gas is recovered in a usable or marketable form (e.g., sulfur, sulfuric acid, gypsum,

	ammonium sulfate, sodium sulfate).
Throwaway	The SO_2 removed from the flue gas is not recovered in a usable or marketable form and resulting sulfur-bearing waste products must be disposed in an environmentally acceptable fashion.
Energy Consumption, %	The percentage of gross unit electrical generating capacity consumed by the FGD system, as defined by the following equation: [Net MW w/o FGD - Net MW w/FGD]/ Gross unit rating]
Equivalent Scrubbed Capacity (ESC)	The effective scrubbed flue gas in equivalent MW based on the percent of flue gas scrubbed by the FGD system.
FGD Status:	
Category 1	Operational - FGD system is in service removing SO_2.
Category 2	Under construction - ground has been broken for installation of FGD system, but FGD system has not become operational.
Category 3	Planned, Contract Awarded - contract has been signed for purchase of FGD system but ground has not been broken for installation.
Cateogry 4	Planned, Letter of Intent Signed - letter of intent has been signed, but legal contract for purchase has not been awarded.
Category 5	Planned, Requesting/Evaluating Bids - bid requests have been released but no letter of intent or contract has been issued.

Category 6	Considering only FGD Systems - an FGD system is proposed as a means to meet an SO_2 regulation.
Category 7	Considering an FGD system as well as alternative methods.
Category 8	Nonoperational - FGD system has been operated in the past but has been shut down permanently or for an extended indefinite period of time.
Fuel Firing Rate - TPH	Boiler fuel firing rate in terms of tons per hour at maximum continuous load.
General Process Type	The manner in which the SO_2 from the flue gas is collected, e.g., wet scrubbing, spray drying, dry adsorption.
Initial Start-Up (FGD System)	Date when flue gas first passes through any component of the FGD system (or is scheduled to do so).
New	FGD unit and boiler were designed at the same time or space for addition of an FGD unit was reserved when boiler was constructed.
Plant Name	Unit identification as it appears in Electrical World - Directory of Electrical Utilities, McGraw-Hill - Current Edition - or as indicated by utility representative for installations in planning stages.
Process Additives	A chemical compound or element which is added to the process or normally found with the main process reagent in small quantities (e.g., Mg, adipic acid) to promote improved process operation (e.g., scale reduction, increased SO_2 removal efficiency).

Process Type	Company name if process is patented. Generic name if several companies have similar processes (e.g., Lime, Limestone, Wellman Lord, Thoroughbred 121).
Regulatory Class	A. New boiler constructed subject to Federal New Source Performance Standards (NSPS), 8/17/71. B. Existing boiler subject to State Standard that is more stringent than the NSPS, 8/17/71. C. Existing boiler subject to State Standard that is equal to or less stringent than NSPS, 8/17/71. D. Other (unknown, undetermined).
Retrofit	FGD unit will be/was added to an existing boiler not specifically designed to accommodate FGD unit.
Spare Capacity Index - %	The summation of the individual component capacities (%) minus 100%.
Spare Component Index	The equipment spare capacity index (%) divided by the individual component capacity (%).
System Supplier	A firm that fabricates and supplies flue gas desulfurization systems.
Total Controlled Capacity (TCC)	The gross rating (MW) of a unit brought into compliance with FGD, regardless of the percent of flue gas treated at the facility. In the case of prototype and demonstration FGD systems, this figure will be identical to the Equivalent Scrubbed Capacity rather than

	the gross unit rating if the system is not meant to bring the facility into compliance with SO_2 emission standards.
Unit Rating	
Gross	Operational - Maximum continuous gross generation capacity in MW; Preoperational - maximum continuous design generation capacity in MW.
New w/FGD	Gross unit rating less the energy required to operate ancillary station equipment, inclusive of emission control systems.
Net w/o FGD	Gross unit rating less the energy required to operate ancillary station equipment, exclusive of emission control systems.

APPENDIX D

TABLE OF UNIT NOTATION

TABLE OF UNIT NOTATION

Classification	English Unit	Symbol	Survey Report Notation	ASTM/SI Unit	Symbol	Survey Report Notation
Area	Acre	acre	ACRE	Square meter	M^2	SQ.M
	Square foot	ft^2	SQ.FT	Square meter	M^2	SQ.M
Concentration	Grains per standard cubic foot	gr/scf	GR/SCF	Grams per cubic meter	g/m^3	G/CU.M
	Parts per million	ppm	PPM	Parts per million	ppm	PPM
	Pounds per million Btu	$lb/10^6$ Btu	LB/MMBTU	Nanograms per joule	ng/J	NG/J
Flow	Actual cubic feet per minute	ft^3/min (actual)	ACFM	Cubic meters per second	m^3/s	CU.M/S
	Gallons per minute	gal/min	GPM	Liters per second	liter/s	LITER/S
	Pounds per minute	lb/min	LB/MIN	Kilogram per second	kg/s	KG/S
	Ton per day	t/day	TPD	Metric ton per day	M t/d	M T/D
	Ton per hour	t/h	TPH	Metric ton per hour	M t/h	M T/H
Heat Content	Btu per pound	Btu/lb	BTU/LB	Joules per gram	J/g	J/G
Length	Foot	ft	FT	Meter	m	M
	Inch	in	IN	Centimeter	cm	CM
	Mile	mi	MI	Kilometer	km	KM
L/G Ratio	Gallons per thousand actual cubic feet	gal/1000 ft^3 (actual)	GAL/1000ACF	Liters per cubic meter	$liter/m^3$	LITER/CU.M
Mass/Weight	Pound	lb	LB	Kilogram	kg	KG
	Ton	t	T	Megagram	Mg	MG
Pressure	Inches of water	in. H_2O	IN. H_2O	Kilopascal	kPa	KPA
Temperature	Degree Fahrenheit	°F	F	Degree Celsius	°C	C
Volume	Cubic feet	ft^3	CU.F	Cubic meter	m^3	CU.M
	Acre-feet	Acre-ft	ACRE-FT	Cubic meter	m^3	CU.M

TECHNICAL REPORT DATA
(Please read Instructions on the reverse before completing)

1. REPORT NO. EPA-600/7-80-029a	2.	3. RECIPIENT'S ACCESSION NO
4. TITLE AND SUBTITLE EPA Utility FGD Survey: October - December 1979		5. REPORT DATE January 1980
		6. PERFORMING ORGANIZATION CODE
7. AUTHOR(S) M. Smith, M. Melia, N. Gregory		8. PERFORMING ORGANIZATION REPORT NO. PN 3470-1-KK
9. PERFORMING ORGANIZATION NAME AND ADDRESS PEDCo Environmental, Inc. 11499 Chester Road Cincinnati, Ohio 45246		10. PROGRAM ELEMENT NO. EHE624
		11. CONTRACT/GRANT NO. 68-01-4147, Task 113
12. SPONSORING AGENCY NAME AND ADDRESS EPA, Office of Research and Development Industrial Environmental Research Laboratory Research Triangle Park, NC 27711		13. TYPE OF REPORT AND PERIOD COVERED Quarterly; 10/79 - 12/79
		14. SPONSORING AGENCY CODE EPA/600/13

15. SUPPLEMENTARY NOTES EPA Project Officers are N. Kaplan (IERL-RTP, MD-61, 919/541-2556) and J.C. Herlihy (DSSE, 202/755-8137). Related reports are in the EPA-600/7-78-051 and EPA-600/7-79-022 series.

16. ABSTRACT

This report is the first full compilation (not a supplement) since the December 1978 - January 1979 report. Because the next three reports are to be supplements, this issue should be retained for reference throughout the year. The report, which is generated by a computerized data base system, presents a survey of utility flue gas desulfurization (FGD) systems in the U.S. and Japan. It summarizes information contributed by the utility industry, process suppliers, regulatory agencies, and consulting engineering firms. Systems are tabulated alphabetically by development status (operational, under construction, or in planning stages), utility company, process supplier, process and waste disposal practice. It presents data on boiler design, FGD system design, fuel characteristics, and actual performance. It includes unit by unit dependability parameters and discusses problems and solutions associated with the boilers and FGD systems. Process flow diagrams and FGD system economic data are appended to the report.

17. KEY WORDS AND DOCUMENT ANALYSIS

a. DESCRIPTORS		b. IDENTIFIERS/OPEN ENDED TERMS	c. COSATI Field/Group
Pollution	Maintenance	Pollution Control	13B
Flue Gases		Stationary Sources	21B
Desulfurization		Utility Boilers	07A, 07D
Electric Utilities			
Waste Disposal			15E
Boilers			13A

18. DISTRIBUTION STATEMENT Unlimited	19. SECURITY CLASS (This Report) Unclassified	21. NO. OF PAGES 570
	20. SECURITY CLASS (This page) Unclassified	22. PRICE

EPA Form 2220-1 (9-73)