United States
Environmental Protection
Agency

Office of Air Quality
Planning and Standards
Research Triangle Park NC 27711

EMB Report 83-CUS-20
January 1984

Air

EPA

Arsenic Non-Ferrous Smelter

Emission Test Report Arsenic Sampler Comparison Asarco, Incorporated Tacoma, Washington

EMISSION TEST REPORT

ARSENIC SAMPLER COMPARISON

ASARCO, INC.
TACOMA, WASHINGTON

EMB REPORT NO. 83CUS20
ESED PROJECT NO. 83/21

by

PEDCo Environmental, Inc.
11499 Chester Road
P.O. Box 46100
Cincinnati, Ohio 45246-0100

Contract No. 68-02-3849
Work Assignment No. 1
PN 3615-1

Task Manager
Mr. Winton Kelly

U.S. ENVIRONMENTAL PROTECTION AGENCY
EMISSION MEASUREMENT BRANCH, MD-13
EMISSION STANDARDS AND ENGINEERING DIVISION
RESEARCH TRIANGLE PARK, NORTH CAROLINA 27711

February 1984

DISCLAIMER

This report was furnished to the Environmental Protection Agency, Emission Measurement Branch, by PEDCo Environmental, Inc., 11499 Chester Road, P.O. Box 46100, Cincinnati, Ohio 45246-0100, in fulfillment of Contract No. 68-02-3849, Work Assignment No. 1. Mention of company or product names is not to be considered as an endorsement by the Environmental Protection Agency.

CONTENTS

	Page
Figures	v
Tables	vii
Acknowledgment	ix
Quality Assurance Element Finder	x
1. Introduction	1-1
2. Summary and Discussion of Results	2-1
2.1 Test protocol	2-1
2.2 Reverberatory furnace	2-6
2.2.1 Procedural comparison for arsenic	2-6
2.2.2 Arsenic emissions and process operation	2-17
2.2.3 Particulate emission results	2-21
2.2.4 Summary of flue gas conditions	2-24
2.2.5 Process sample analytical results	2-27
2.3 Arsenic plant test results	2-29
2.4 Discussion of test results	2-37
3. Process Description and Operations	3-1
3.1 Process description	3-1
3.2 Process operations	3-10
3.2.1 Reverberatory furnace ESP	3-10
3.2.2 Arsenic plant baghouse	3-13
4. Sampling Locations and Test Procedures	4-1
4.1 Reverberatory furnace ESP outlet	4-1
4.2 Arsenic plant	4-9
4.3 Sample and analytical procedures	4-11
4.3.1 Velocity and gas temperature	4-14
4.3.2 Molecular weight	4-14
4.3.3 Particulate/arsenic	4-15
5. Quality Assurance	5-1

CONTENTS (continued)

		Page
Appendices		
A	Computer Printouts and Sample Calculations	A-1
B	Field Data	B-1
C	Laboratory Data	C-1
D	Sampling and Analytical Procedures	D-1
E	Equipment Calibration Procedures and Results	E-1
F	Process and Control Device Operating Data	F-1
G	Quality Assurance Element	G-1
H	Project Participants and Sample Log	H-1

FIGURES

Number		Page
2-1	Arsenic Emissions Versus Furnace Charge Rate	2-20
2-2	Comparison of Calculated Arsenic Emission Factor and Furnace Charge Rate	2-22
2-3	Arsenic Plant Gas Flow Schematic	2-36
3-1	ASARCO-Tacoma Copper Smelter Process Flow Flow Diagram	3-3
3-2	ASARCO-Tacoma Arsenic Plant Process Flow Diagram	3-4
3-3	Configuration and Electrical Sectionalization of Reverberatory Furnace ESP's	3-7
4-1	No. 1 Esp Outlet Test Location	4-2
4-2	Sediment Profile of the ESP Outlet Duct and Location of Sample Points	4-4
4-3	Simplified ESP Outlet Velocity Profile	4-8
4-4	Arsenic Plant Baghouse Outlet and Arsenic Trioxide Inlet Test Location	4-12
4-5	Metallic Arsenic Plant Inlet Test Location	4-13
4-6	Sample Recovery and Analysis Flow Chart for Particulate/Arsenic	4-17
5-1	Audit Report Dry Gas Meter (FB-1)	5-7
5-2	Audit Report Dry Gas Meter (FB-2)	5-8
5-3	Audit Report Dry Gas Meter (FB-3)	5-9
5-4	Audit Report Dry Gas Meter (FB-4)	5-10
5-5	Audit Report Dry Gas Meter (FB-5)	5-11
5-6	Audit Report Dry Gas Meter (FB-9)	5-12

FIGURES (continued)

Number		Page
5-7	Audit Report Dry Gas Meter (FB-10)	5-13
5-8	Audit Report Dry Gas Meter (FB-11)	5-14
5-9	Thermocouple Digital Indicator Audit Data Sheet (Indicator 125)	5-15
5-10	Thermocouple Digital Indicator Audit Data Sheet (Indicator 126)	5-16
5-11	Thermocouple Digital Indicator Audit Data Sheet (Indicator 207)	5-17
5-12	Thermocouple Digital Indicator Audit Data Sheet (Indicator 262)	5-18
5-13	Example of Field Calculation Form	5-19

TABLES

Number		Page
2-1	Summary of Project Test Activity	2-2
2-2	Summary of ESP Outlet Arsenic Emission Data	2-9
2-3	Summary of ESP Outlet Sample and Flue Gas Data - Traverse Sampling Trains	2-11
2-4	Summary of ESP Outlet Sample and Flue Gas Data - Continuous Single-Point Sampling Train	2-13
2-5	Comparison of Arsenic Emissions Between the Traverse Sampling Train and Continuous Single-Point Sampling Train	2-15
2-6	Comparison of Traverse and Single-Point Sampling Results for Sulfur Dioxide	2-16
2-7	Summary of Reverberatory Furnace Calcine Charge Rates and Arsenic Emission Data	2-18
2-8	Summary of ESP Outlet Sample and Flue Gas Data for Particulate/Arsenic Tests	2-19
2-9	Summary of Particulate Emissions Data at Full Furnace Charge Rate	2-23
2-10	Summary of Particulate Results from the Continuous and Traverse Sampling Trains	2-25
2-11	Comparison of Particulate Emissions Between the Traverse and Single-Point Sampling Trains and the ASARCO Sampler	2-26
2-12	Process Sample Analytical Results, Reverberatory Furnace	2-28
2-13	Estimate of ESP Arsenic Collection Efficiency	2-30

TABLES (continued)

Number		Page
2-14	Summary of Arsenic Plant Baghouse Sample and Flue Gas Data	2-31
2-15	Summary of Arsenic Plant Emissions Data	2-33
2-16	Process Sample Analytical Results, Arsenic Plant	2-38
3-1	Summary of Reverberatory Furnace Production Data	3-12
3-2	Process Sample Analytical Results, Reverberatory Furnace	3-14
3-3	Process Sample Analytical Results, Arsenic Plant	3-16
4-1	Summary of Initial Velocity and Temperature Profile Data	4-6
5-1	Field Equipment Calibration	5-3
5-2	Results of Duplicate Arsenic Tests at ASARCO	5-21
5-3	Statistical Data for Grouped Arsenic Runs at ASARCO	5-22
5-4	Blank Train Analytical Results	5-23
5-5	Linear Regression Data (Flame)	5-24
5-6	Audit Results	5-26
5-7	Arsenic Standard Obtained by Standard Addition Method	5-27
5-8	Field Blanks	5-29
5-9	Reagent Blanks	5-30
5-10	Linear Regression Data--Furnace	5-31
5-11	Least Squares Data (Binominal Equation)--Furnace	5-31
5-12	Comparison of ASARCO's and PEDCo's Analytical Results	5-33

ACKNOWLEDGMENT

Mr. Winton Kelly, EPA Task Manager, provided overall project coordination and guidance. Messrs. Kelly and Frank Clay, also of U.S. EPA, observed the test program. Mr. Alfred Vervaert, EPA Lead Engineer - Industrial Studies Branch, provided project coordination relative to process operation. Messrs. Ed Godsey, Charles Counts, John Richardson, and John Gordon represented ASARCO, Inc., and provided assistance in scheduling, process operation, and test observation. Mr. Charles Bruffey was the PEDCo Project Manager. Principal authors were Messrs. Charles Bruffey, Mark Phillips, David Osterhout, and Thomas Wagner.

QUALITY ASSURANCE ELEMENT FINDER

		Location Section	Location Page
(1)	Title page	-	-
(2)	Table of contents	-	iii
(3)	Project description	1	1-1
(4)	Project organization and responsibilities	Appendix G Appendix H	G-1 H-1
(5)	QA objective for measurement of data in terms of precision, accuracy, completeness, representativeness, and comparability	Section 5 Appendix D Appendix G	5-1 D-1 G-1
(6)	Sampling procedures	Section 4 Appendix D Appendix E	4-1 D-1 E-1
(7)	Sample custody	Appendix C Appendix G	C-1 G-1
(8)	Calibration procedures and frequency	Appendix E Appendix G	E-1 G-1
(9)	Analytical procedures	Appendix D Appendix G	D-1 G-1
(10)	Data reduction, validation, and reporting	Appendix A Appendix G	A-1 G-1
(11)	Internal quality control checks and frequency	Section 5 Appendix G	5-1 G-1
(12)	Performance and system audits and frequency	Section 5 Appendix G	5-1 G-1
(13)	Preventive maintenance procedures and schedules	Appendix G	G-1
(14)	Specific routine procedures used to assess data precision, accuracy, and completeness of specific measurement parameters involved	Section 5 Appendix G	5-1 G-1
(15)	Corrective action	Appendix G	G-1
(16)	Quality assurance reports to management	Appendix G	G-1

SECTION 1

INTRODUCTION

Arsenic is listed as a hazardous air pollutant under Section 112 of the Clean Air Act (National Emission Standards for Hazardous Air Pollutants). To protect public health from unreasonable risks associated with exposure to airborne arsenic, the U.S. Environmental Protection Agency (EPA) is developing standards to decrease arsenic emissions from primary copper smelters that process feed material with an annual average inorganic arsenic content of 0.7 percent by weight or greater. The only existing primary copper smelter in the high-arsenic-throughput category is owned and operated by ASARCO, Incorporated (ASARCO) in Tacoma, Washington.

Source emissions from six major smelter processes (roasters, reverberatory furnaces, converters, anode furnaces, arsenic plant, and sulfuric acid/SO_2 plant) are vented to the atmosphere through a single main stack at the Tacoma smelter. Based on material balance data and historical test results, the EPA has estimated that the reverberatory furnace and the arsenic plant contribute more than 90 percent of the total arsenic emitted from the stack. The No. 1 electrostatic precipitator (ESP) controls emissions from the reverberatory furnace, and a new fabric filter (baghouse) controls emissions from the arsenic plant.

ASARCO measures the dust loss from each process with a high-volume, single-point continuous sampler. During specific time periods, particulate (dust) samples are collected from the gas stream exiting the No. 1 ESP and arsenic plant baghouse. One sample is collected every 24 hours at the ESP outlet, and samples are collected every 4 to 15 days at the outlet of the arsenic plant baghouse. Collected samples are composited and analyzed monthly for arsenic content, and ASARCO uses these data to estimate monthly arsenic emission losses.

To support the standards development process, to provide additional arsenic data for estimating long-term emission rates, and to resolve differences between arsenic results reported by ASARCO and the EPA, PEDCo Environmental, Inc., performed a series of atmospheric emissions tests on the reverberatory furnace and arsenic plant at the Tacoma smelter for determination of concentration and mass emission rates of particulate matter and arsenic. These tests were conducted under contract to EPA's Emission Measurement Branch (EMB) from September 12 to 29, 1983. The primary objectives of the test program were:

1. To obtain representative arsenic and particulate emission data at the outlet of the No. 1 ESP controlling emissions from the No. 2 reverberatory furnace.

2. To obtain representative arsenic emission data at the inlet and outlet of the baghouse controlling emissions from the arsenic plant. Testing was to be conducted so as to provide arsenic removal efficiency data for this source.

3. To obtain data for evaluation of the accuracy of arsenic results obtained with the ASARCO continuous sampler compared with those obtained with the EPA testing and analytical procedures for inorganic arsenic.

4. To approximate the arsenic removal efficiency of the No. 1 ESP.

Objectives 1 and 2 were met, Objective 3 was not, and Objective 4 was partially met. A direct comparison could not be made between the EPA sampling and analytical procedures and the ASARCO sampler because ASARCO could not provide arsenic analyses on a daily sample basis. Objective 4 was only partially met because difficulties were encountered in segregating the dust removed from the No. 1 ESP to the holding silos. Data on recovered dust are available for only 3 of the 6 days of testing.

The sample and analytical procedures used in the determination of arsenic emissions from each source followed those described in proposed EPA Method 108.* Particulate concentration and other pertinent data, including gas flow rates, temperatures, moisture content, and composition [oxygen (O_2), carbon dioxide (CO_2), and carbon monoxide (CO)] were determined where applicable by the procedures described in EPA Reference Methods 1 through 5 of the Federal Register.** Personnel from either the EPA or Pacific Environmental Services Inc. (PES), an EPA contractor, were present to monitor closely the operating conditions of the process and control devices under evaluation. Process samples from the sources being tested were collected during the test period and analyzed for arsenic content.

---

*Draft Method 108. Determination of Particulate and Gaseous Arsenic Emissions from Nonferrous Smelters.

**40 CFR 60, Appendix A, Reference Methods 1 through 5, July 1982.

SECTION 2

SUMMARY AND DISCUSSION OF TEST RESULTS

This section details the results of the field sampling project. For the convenience of the reader, emission results are presented in both metric and English units, and subsections are used to define each phase of the sample effort and the corresponding emission results. Section 3 describes the operation of the source, Section 4 describes the sample locations and test procedures used, and Section 5 addresses project-specific data quality assurance considerations.

Appendix A presents sample calculations and computer printouts for each individual test; Appendices B and C contain the field data sheets and laboratory analytical results, respectively; Appendix D details the sample and analytical procedures used and describes the ASARCO sampler and the techniques used to quantify arsenic loss; Appendix E summarizes equipment calibration procedures and results for equipment used during this project; and Appendix F contains process operating logs and process monitoring information recorded during the performance of the tests.

2.1 TEST PROTOCOL

Table 2-1 presents a summary of the type and number of tests performed during this test program. The sample dates, test

TABLE 2-1. SUMMARY OF PROJECT TEST ACTIVITY

Date (1983)	Test (sample) ID	Pollutant sampled	Comments
		Reverberatory furnace ESP outlet	
9/17	AEOPA-1	Arsenic	Reverberatory furnace at full load
9/19-20	AEOC-1 AEOT-1 AEOT-2 AEOT-3	Arsenic Arsenic Arsenic Arsenic	Test Block No. 1 for 23-hour continuous samples
9/20-21	AEOC-2 AEOT-4 AEOT-5 AEOT-6 AEOT-7	Arsenic Arsenic Arsenic Arsenic Arsenic	Test Block No. 2 for 23-hour continuous samples
9/21-22	AEOC-3 AEOT-8 AEOT-9 AEOT-10 AEOT-11	Arsenic Arsenic Arsenic Arsenic Arsenic	Test Block No. 3 for 23-hour continuous samples
9/24 9/25 9/26	AEOPA-2 AEOPA-3 AEOPA-4	Particulate/arsenic Particulate/arsenic Particulate/arsenic	Reverberatory furnace at full load
9/26-27	AEOC-4 AEOT-12 AEOT-13 AEOT-14 AEOT-15	Particulate/arsenic Arsenic Arsenic Arsenic Arsenic	Test Block No. 4 for 23-hour continuous samples
9/27-28	AEOC-5 AEOT-16 AEOT-17 AEOT-18 AEOT-19	Particulate/arsenic Arsenic Arsenic Arsenic Arsenic	Test Block No. 5 for 23-hour continuous samples
9/28-29	AEOC-6 AEOT-20 AEOT-21 AEOT-22 AEOT-23	Particulate/arsenic Particulate/arsenic Particulate/arsenic Particulate/arsenic Particulate/arsenic	Test Block No. 6 for 23-hour continuous samples

(continued)

TABLE 2-1 (continued)

Date (1983)	Test (sample) ID	Pollutant sampled	Comments
		Arsenic plant	
9/14	ABKI-1 AABO-1	Arsenic Arsenic	As_2O_3 baghouse inlet Baghouse outlet
9/15	ABKI-2 AABO-2	Arsenic Arsenic	As_2O_3 baghouse inlet Baghouse outlet
9/16	ABKI-3 AABO-3	Arsenic Arsenic	As_2O_3 baghouse inlet Baghouse outlet
9/17	ABKI-4 AABO-4	Arsenic Arsenic	As_2O_3 baghouse inlet Baghouse outlet
9/23	ABKI-5 ABMI-1 AABO-5	Arsenic Arsenic Arsenic	As_2O_3 baghouse inlet Metallic plant baghouse inlet Baghouse outlet
9/23	ABKI-6 ABMI-2 AABO-6	Arsenic Arsenic Arsenic	As_2O_3 baghouse inlet Metallic plant baghouse inlet Baghouse outlet
9/24	ABKI-7 ABMI-3 AABO-7	Arsenic Arsenic Arsenic	As_2O_3 baghouse inlet Metallic plant baghouse inlet Baghouse outlet

identification, and type of test are grouped by source for reporting purposes. The actual sequence of test events varied because of reverberatory furnace production curtailments and arsenic plant production schedules.

The sample and analytical procedures described in EPA Reference Methods 1 through 5 and 108* were used to perform a total of 33 emission tests on the off-gases from the No. 2 reverberatory furnace for determination of the concentration and mass emission rates of arsenic and particulate matter. Off-gases from the reverberatory furnace are vented to the No. 1 ESP for particulate removal before they enter the atmosphere via the main stack. Samples were collected in a rectangular brick breeching that connects the ESP outlet to the main stack. ASARCO's continuous sampler is permanently positioned in this breeching. The test protocol was designed so that a Method 108 (arsenic) sampling train could be operated with the sample nozzle positioned at a single point near the ASARCO sampler probe, and four continuous Method 108 cross-sectional traverse samples could be collected during each of six 24-hour sample periods or test blocks. The objective in conducting both single-point and traverse tests for arsenic was to determine if sample results varied between Method 108 and the ASARCO single-point test and if spatial variations would invalidate single-point sample results.

In addition to providing data for procedural comparisons, the design of the sample schedule was such that it generated

---

*40 CFR 60, Appendix A, Reference Methods 1 through 5, July 1982; Method 108 is proposed and in draft form.

arsenic emission data on an almost continuous basis for the characterization of arsenic emissions relative to furnace charge rates.

During each test block, personnel from EPA or PES closely monitored the operating conditions of both the control device and the reverberatory furnace and obtained and/or recorded pertinent operating data. Process samples, including roaster charge material, reverberatory furnace charge (calcine), furnace product (copper matte), and dust samples from the ESP collection hoppers and holding silo, were collected during each 24-hour test block, and collected samples were composited and analyzed for arsenic. These data were used to characterize process operation during each test and to approximate the arsenic collection efficiency of the ESP.

The test objectives for this source were met, except for a comparison of arsenic results by Method 108 and those by the ASARCO sampler. ASARCO's inability to provide daily arsenic emissions data make a procedural comparison impossible.

At the arsenic plant, arsenic concentrations and mass emission rates were determined at the inlet and outlet of a fabric filter (baghouse) controlling emissions from the arsenic trioxide (As_2O_3) and metallic arsenic processes. All tests were made by the sampling and analytical procedures outlined in EPA Reference Methods 1 through 4 and proposed Method 108.*

---

*40 CFR 60, Appendix A, Reference Methods 1 through 4, July 1982; Method 108 is proposed and in draft form.

The baghouse, which was installed in 1982 and started up in 1983 controls emissions from two process gas streams; one transports off-gas from the As_2O_3 plant and metallic arsenic condensers and the other transports off gases from the metallic arsenic process. The gases exiting the baghouse are conveyed to the main stack.

Initially, four Method 108 tests were conducted simultaneously at the As_2O_3 plant inlet and the baghouse outlet while the metallic plant was inoperative. Once the metallic plant came back on line, Method 108 tests were performed at the As_2O_3 and metallic plant inlets and the baghouse outlet. A total of three Method 108 tests were conducted simultaneously at the three test locations (two inlet and one outlet).

These data were used to characterize arsenic emissions to the main stack and to estimate the arsenic collection efficiency of the baghouse. Process operations were closely monitored during each emission test period, and samples of Godfrey roaster charge material and baghouse hopper catch were collected and analyzed for arsenic content.

The following subsections present the results of the test program.

2.2 REVERBERATORY FURNACE

2.2.1 Procedural Comparison for Arsenic Sampling

ASARCO's continuous single-point sampler is permanently positioned in a breeching after the ESP but prior to the main

stack. Detailed information on the sampler is presented in Appendix D. A single-point sample is collected over a 23-hour period; the filter bag is changed between 9:00 and 10:00 a.m. daily.

To establish a basis for comparison of the ASARCO sampler and the EPA sample procedures, sampling was conducted simultaneously with the ASARCO sampler over the same time period (~23 hours). Two distinct sampling systems were employed. The first system was a single Method 108 sampling train operated isokinetically and located at a fixed point in the flue as close as possible to the ASARCO sampler probe without causing interference. This sampling train, designated AEOC (ASARCO ESP Outlet Continuous Train), was operated continuously for at least 98 percent of the 23-hour sampling period. The second system, also a single Method 108 sampling train, was used to perform a multipoint, isokinetic traverse of the cross-sectional area of the ESP outlet breeching. This sampling train, designated AEOT (ASARCO ESP Outlet Traverse), was used to perform four consecutive traverses during the 23-hour test period. Operation of the cumulative sampling train, excluding Test Block No. 1 for the traverse trains, ranged from 80 to 85 percent of the 23-hour test period. Start times for each test block corresponded with the start of the ASARCO sampler. In summary, a total of six 23-hour test blocks representing 6 continuous and 23 traverse sample runs were conducted during the test program.

Table 2-2 summarizes arsenic emission results from the six 23-hour test blocks evaluated, and Tables 2-3 and 2-4 present pertinent sample and flue gas data for each individual test.

Concentrations are reported in milligrams per dry normal cubic meter (mg/dNm^3) and grains per dry standard cubic foot (gr/dscf). Volumetric flow rates are expressed in cubic meters per minute (m^3/min) and actual cubic feet per minute (acfm) at stack conditions. Flow rates corrected to standard conditions [20°C and 760 mmHg (68°F and 29.92 in.Hg) and zero percent moisture] are expressed as dry normal cubic meters per minute (dNm^3/min) and dry standard cubic feet per minute (dscfm). Emission rates are expressed in kilograms per hour (kg/h) and pounds per hour (lb/h). For each test, sample volumes and dry molecular weight data were corrected for the sulfur dioxide (SO_2) content of the gas stream. The SO_2 concentration was determined by performing a sodium hydroxide (NaOH) titration on the hydrogen peroxide (H_2O_2) fraction of the sampling train, as described in Method 108. As reported in Tables 2-3 and 2-4, the SO_2 content typically averaged less than 0.4 percent of the total sample volume.

As defined in Method 108, total arsenic is the summation of arsenic collected in the sampling nozzle and probe, on a heated glass-fiber filter, and in distilled water contained in the first two impingers that follow the heated filter. The sampling probe and filter temperatures were maintained at approximately 121°C (250°F).

TABLE 2-2. SUMMARY OF ESP OUTLET ARSENIC EMISSION DATA

Test No.[a]	Sample ID	Date (1983)	Method 108 traverse results[b] Total arsenic Concentration mg/dNm³	Concentration gr/dscf	Mass emission rate kg/h	Mass emission rate lb/h	Continuous single-point Method 108 results[c] Total arsenic Concentration mg/dNm³	Concentration gr/dscf	Mass emission rate kg/h	Mass emission rate lb/h
1	AEOT-1	9/19	4.42	0.0019	2.4	5.2	-	-	-	-
	AEOT-2	9/19	3.29	0.0014	2.0	4.3	-	-	-	-
	AEOT-3	9/19-20	2.24	0.0010	1.2	2.7	-	-	-	-
1	AEOC-1	9/19-20	-	-	-	-	1.56	0.0007	0.8	1.9
Average			3.32	0.0014	1.8	4.1	1.56	0.0007	0.8	1.9
2	AEOT-4	9/20	2.72	0.0012	1.4	3.0	-	-	-	-
	AEOT-5	9/20	2.71	0.0012	1.5	3.3	-	-	-	-
	AEOT-6	9/20-21	2.06	0.0009	1.1	2.5	-	-	-	-
	AEOT-7	9/21	2.47	0.0011	1.3	2.9	-	-	-	-
2	AEOC-2	9/20-21	-	-	-	-	1.41	0.0006	0.8	1.9
Average			2.49	0.0011	1.3	2.9	1.41	0.0006	0.8	1.9
3	AEOT-8	9/21	2.82	0.0012	1.5	3.3	-	-	-	-
	AEOT-9	9/21	1.10	0.0005	0.6	1.4	-	-	-	-
	AEOT-10	9/21-22	4.23	0.0018	2.0	4.4	-	-	-	-
	AEOT-11	9/22	2.25	0.0010	1.3	2.8	-	-	-	-
3	AEOC-3	9/21-22	-	-	-	-	1.87	0.0008	1.2	2.6
Average			2.60	0.0011	1.4	3.0	1.87	0.0008	1.2	2.6
4	AEOT-12	9/26	8.20	0.0036	4.5	10.0	-	-	-	-
	AEOT-13	9/26	14.0	0.0061	7.4	16.4	-	-	-	-
	AEOT-14	9/26-27	10.4	0.0045	6.1	13.4	-	-	-	-
	AEOT-15	9/27	10.8	0.0047	6.4	14.1	-	-	-	-
4	AEOC-4	9/26-27	-	-	-	-	6.86	0.0030	4.4	9.7
Average			10.8	0.0047	6.1	13.5	6.86	0.0030	4.4	9.7

(continued)

TABLE 2-2 (continued)

Test No.[a]	Sample ID	Date (1983)	Method 108 traverse results[b] Total arsenic Concentration mg/dNm³	Concentration gr/dscf	Mass emission rate kg/h	Mass emission rate lb/h	Continuous single-point Method 108 results[c] Total arsenic Concentration mg/dNm³	Concentration gr/dscf	Mass emission rate kg/h	Mass emission rate lb/h
5	AEOT-16	9/27	3.07	0.0013	1.7	3.8	-	-	-	-
	AEOT-17	9/27	2.23	0.0010	1.2	2.7	-	-	-	-
	AEOT-18	9/27-28	9.29	0.0041	5.4	11.9	-	-	-	-
	AEOT-19	9/28	4.66	0.0020	2.9	6.4	-	-	-	-
5	AEOC-5	9/27-28	-	-	-	-	3.82	0.0017	2.5	5.4
Average			4.82	0.0021	2.8	6.2	3.82	0.0017	2.5	5.4
6	AEOT-20	9/28	1.71	0.0007	1.1	2.3	-	-	-	-
	AEOT-21	9/28	4.17	0.0018	2.3	5.1	-	-	-	-
	AEOT-22	9/28-29	13.3	0.0058	7.8	17.1	-	-	-	-
	AEOT-23	9/29	7.66	0.0033	4.6	10.1	-	-	-	-
6	AEOC-6	9/28-29	-	-	-	-	5.56	0.0024	3.7	8.0
Average			6.71	0.0029	4.0	8.6	5.56	0.0024	3.7	8.0

[a]During each of six 23-hour test blocks (except No. 1), four multipoint traverse samples and one single-point sample were collected.

[b]Total arsenic determined by the sample and analytical procedures described in proposed EPA Method 108. Samples were collected isokinetically by use of a multipoint cross-sectional traverse of the ESP outlet breeching. Concentrations are expressed in milligrams per dry normal cubic meter and grains per dry standard cubic foot. Mass emission rates are expressed in kilograms per hour and pounds per hour.

[c]Total arsenic determined by the procedures described in Proposed EPA Method 108. Samples were collected by single-point, isokinetic sampling techniques.

TABLE 2-3. SUMMARY OF ESP OUTLET SAMPLE AND FLUE GAS DATA
- TRAVERSE SAMPLING TRAINS -

Run No.	Sample source and location	Date (1983)	Sampling period	Sampling time, min	Sample volume[a]		Percent isoki-netic, %	Volumetric flow rate[b]				Temper-ature		Mois-ture, %	Gas composition[c], %			Concentration of SO_2, ppm by volume[d]
								Actual		Standard								
					dNm³	dscf		m³/min	acfm	dNm³/min	dscfm	°C	°F		O_2	CO_2	CO	
Reverberatory Furnace No. 2																		
AEOT-1	ESP outlet	9/19	1015-1621	330	5.387	190.238	96.6	10,800	382,000	8,900	313,400	77	171	3.2	19.0	1.2	0.0	557
AEOT-2	ESP outlet	9/19	1635-2304	330	5.744	202.859	95.1	12,200	431,600	9,900	348,300	84	184	2.7	19.0	1.1	0.0	695
AEOT-3	ESP outlet	9/19 9/20	2347-0602	330	5.606	197.964	97.0	11,500	406,100	9,250	327,000	86	188	2.4	19.0	1.2	0.0	177
AEOT-4	ESP outlet	9/20	0948-1445	302.5	4.633	163.620	97.0	10,600	374,300	8,450	298,400	87	189	1.3	19.2	1.0	0.0	214
AEOT-5	ESP outlet	9/20	1530-2030	302.5	5.166	182.448	98.7	11,800	416,900	9,100	321,800	97	207	3.3	19.0	1.0	0.0	389
AEOT-6	ESP outlet	9/20 9/21	2120-0227	302.5	4.948	174.734	96.9	11,500	405,100	9,100	322,300	85	185	3.1	19.0	0.8	0.0	1614
AEOT-7	ESP outlet	9/21	0312-0805	302.5	4.962	175.225	98.5	11,100	391,100	8,700	309,000	89	192	2.9	19.0	0.9	0.0	1004
AEOT-8	ESP outlet	9/21	0948-1439	302.5	4.872	172.057	96.6	11,300	398,700	8,900	315,100	90	193	2.4	19.0	1.0	0.0	203
AEOT-9	ESP outlet	9/21	1544-2041	302.5	5.458	192.734	100.2	12,000	423,400	9,500	334,000	85	184	3.3	19.0	0.9	0.0	732
AEOT-10	ESP outlet	9/21 9/22	2119-0223	302.5	4.382	154.763	100.2	10,400	366,100	7,800	275,000	101	213	3.7	19.0	0.8	0.0	2281
AEOT-11	ESP outlet	9/22	0310-0814	302.5	5.467	193.077	100.0	12,300	434,300	9,500	335,000	91	196	3.7	19.0	1.0	0.0	1647
AEOT-12	ESP outlet	9/26	0940-1440	302.5	5.238	184.976	100.4	12,200	430,600	9,200	326,000	101	213	3.4	20.0	1.7	0.0	1446
AEOT-13	ESP outlet	9/26	1537-2036	302.5	5.092	179.828	100.3	12,400	437,000	8,800	311,400	110	231	6.7	19.0	1.6	0.0	3336
AEOT-14	ESP outlet	9/26 9/27	2115-0227	302.5	5.380	189.984	99.6	13,500	475,200	9,800	344,200	106	223	6.2	19.0	1.6	0.0	3158
AEOT-15	ESP outlet	9/27	0315-0831	302.5	5.563	196.456	99.8	13,300	469,500	9,900	348,200	102	216	5.4	18.8	1.5	0.0	2673

(continued)

TABLE 2-3 (continued)

Run No.	Sample source and location	Date (1983)	Sampling period	Sampling time, min	Sample volume[a]		Percent isoki-netic, %	Volumetric flow rate[b]				Temper-ature		Mois-ture, %	Gas composition[c], %			Concentration of SO_2, ppm by volume[d]
								Actual		Standard								
					dNm³	dscf		m³/min	acfm	dNm³/min	dscfm	°C	°F		O_2	CO_2	CO	
AEOT-16	ESP outlet	9/27	0947-1459	302.5	5.394	190.498	99.9	12,000	425,000	9,400	331,000	94	201	2.9	18.8	1.7	0.0	556
AEOT-17	ESP outlet	9/27	1534-2031	302.5	5.280	186.445	101.7	11,800	417,000	9,200	324,500	92	198	3.5	19.2	1.5	0.0	1137
AEOT-18	ESP outlet	9/27 9/28	2115-0219	302.5	5.631	198.867	101.2	12,700	449,000	9,700	341,000	98	208	4.2	19.2	1.3	0.0	3374
AEOT-19	ESP outlet	9/28	0306-0836	302.5	5.823	205.621	99.0	13,100	462,000	10,400	367,600	85	184	3.7	19.2	1.7	0.0	1372
AEOT-20	ESP outlet	9/28	0945-1443	302.5	5.854	206.727	98.8	12,600	445,600	10,300	363,400	83	181	1.8	19.0	1.0	0.0	513
AEOT-21	ESP outlet	9/28	1534-2033	302.5	5.329	188.190	101.7	11,800	417,500	9,300	327,500	88	191	3.8	19.0	0.8	0.0	1876
AEOT-22	ESP outlet	9/28 9/29	2115-0216	302.5	5.544	195.792	99.0	13,000	460,000	9,700	343,000	99	210	5.6	19.0	1.7	0.0	2707
AEOT-23	ESP outlet	9/29	0301-0802	302.5	5.765	203.606	100.1	13,000	460,000	10,000	353,000	91	195	5.1	19.0	1.8	0.0	2082

[a]Metered volume corrected for sulfur dioxide (SO_2) content in gas stream and expressed as dry normal cubic meters and dry standard cubic feet. Standard conditions are 760 mmHg and 20°C (29.92 in.Hg and 68°F). The SO_2 content of the gas stream averaged less than 0.3 percent of the total sample volume.

[b]Volumetric flow rate expressed in cubic meters per minute and cubic feet per minute at stack conditions. Flow rates corrected to standard conditions are expressed as dry normal cubic meters per minute and dry standard cubic feet per minute.

[c]Flue gas composition determined by collecting an integrated bag sample and analyzing for oxygen, carbon dioxide, and carbon monoxide with an Orsat Gas Analyzer. Reported carbon dioxide results have been corrected for SO_2 content.

[d]Concentration of sulfur dioxide in parts per million by volume.

TABLE 2-4. SUMMARY OF ESP OUTLET SAMPLE AND FLUE GAS DATA
- CONTINUOUS SINGLE-POINT SAMPLING TRAIN -

Run No.	Sample source and location	Date (1983)	Sampling period	Sampling time, min	Sample volume[a]		Percent isoki-netic, %	Volumetric flow rate[b]				Temper-ature		Mois-ture, %	Gas composition[c], %			Concentration of SO_2, ppm by volume[d]
								Actual		Standard								
					dNm^3	dscf		m^3/min	acfm	dNm^3/min	dscfm	°C	°F		O_2	CO_2	CO	
Reverberatory Furnace No. 2																		
AEOC-1	ESP outlet Port F	9/19 9/20	1013-0831	1280	15.597	550.813	98.8	11,100	393,500	9,100	322,500	80	176	2.6	19.1	1.1	0.0	420
AEOC-2	ESP outlet Port F	9/20 9/21	0945-0837	1360	17.679	624.319	96.8	12,500	441,300	9,900	351,100	88	190	2.9	19.0	0.9	0.0	922
AEOC-3	ESP outlet Port F	9/21 9/22	0948-0840	1360	18.721	661.117	95.2	13,500	477,100	10,700	378,100	88	190	2.6	19.0	1.0	0.0	1259
AEOC-4	ESP outlet Port F	9/26 9/27	0940-0843	1380	19.994	706.100	99.9	14,400	509,000	10,700	379,200	101	215	4.8	18.8	1.7	0.0	2643
AEOC-5	ESP outlet Port F	9/27 9/28	0945-0839	1340	19.095	674.351	98.7	13,700	485,100	10,700	377,600	90	194	4.1	19.2	1.5	0.0	1704
AEOC-6	ESP outlet Port F	9/28 9/29	0945-0830	1360	19.527	689.575	97.2	13,900	489,700	10,900	386,000	87	189	3.8	19.0	1.3	0.0	1968

[a]Metered volume corrected for sulfur dioxide content in gas stream and expressed as dry normal cubic meters and dry standard cubic feet. Standard conditions are 760 mmHg and 20°C (29.92 in.Hg and 68°F). The SO_2 content of the gas stream averaged less than 0.3 percent of the total sample volume.

[b]Volumetric flow rate expressed in cubic meters per minute and cubic feet per minute at stack conditions. Flow rates corrected to standard conditions are expressed as dry normal cubic meters per minute and dry standard cubic feet per minute.

[c]Flue gas composition determined by collecting an integrated bag sample and analyzing for oxygen, carbon dioxide, and carbon monoxide using an Orsat Gas Analyzer. Reported carbon dioxide results have been corrected for SO_2 content.

[d]Concentration of sulfur dioxide in parts per million by volume.

Because ASARCO could not provide daily arsenic emissions data, a procedural comparison between Method 108 and the ASARCO sampler was impossible. Table 2-5, however, presents a direct comparison between Method 108 single-point and traverse test results. Reported values of the traverse sampling runs are averages of individual test results by test block number. The average arsenic concentration of the traverse samples was 5.1 mg/dNm^3 (0.0022 gr/dscf) and the corresponding average emission rate was 2.9 kg/h (6.35 lb/h). The average arsenic concentration during the continuous single-point Method 108 tests was 3.5 mg/dNm^3 (0.0015 gr/dscf), and the average emission rate was 2.2 kg/h (4.9 lb/h). Both the concentration and mass emission rates of the single-point arsenic results ranged from 7 to 55 percent lower than the traverse arsenic results. This trend was consistent for each test block. In contrast, the difference in SO_2 concentration measured by the traverse and single-point train averaged less than 5 percent (see Table 2-6). In addition to the agreement between traverse and single-point SO_2 results, there was a reproducible correlation within each test block between volumetric flow rates, temperature, and moisture contents for the two sampling systems. These findings would suggest that spatial stratification of arsenic may exist in the exit breeching.

Because repetitive multipoint isokinetic traverse sampling techniques tend to minimize the effects of spatial stratification, the Method 108 traverse sampling results are more representative of actual arsenic emissions than the single-point results.

TABLE 2-5. COMPARISON OF ARSENIC EMISSIONS BETWEEN THE TRAVERSE SAMPLING TRAIN AND CONTINUOUS SINGLE-POINT SAMPLING TRAIN

Date (1983)	Test block No.	Test ID	Traverse trains[a]				Continuous single-point train				Percent difference, traverse versus single point[b]
			Concentration		Mass emission rate		Concentration		Mass emission rate		
			mg/dNm³	gr/dscf	kg/h	lb/h	mg/dNm³	gr/dscf	kg/h	lb/h	
9/19-20	1	AEOT-1-3	3.33	0.0014	1.8	4.0	-	-	-	-	55 (52)
		AEOC-1	-	-	-	-	1.56	0.0007	0.8	1.8	
9/20-21	2	AEOT-4-7	2.49	0.0011	1.3	2.9	-	-	-	-	38 (45)
		AEOC-2	-	-	-	-	1.41	0.0006	0.8	1.8	
9/21-22	3	AEOT-8-11	2.60	0.0011	1.6	2.9	-	-	-	-	10 (9.3)
		AEOC-3	-	-	-	-	1.87	0.0008	1.2	2.6	
9/26-27	4	AEOT-12-15	10.8	0.0047	6.1	13.5	-	-	-	-	28 (36)
		AEOC-4	-	-	-	-	6.86	0.0030	4.4	9.7	
9/27-28	5	AEOT-16-19	4.82	0.0021	2.8	6.2	-	-	-	-	13 (19)
		AEOC-5	-	-	-	-	3.82	0.0017	2.5	5.4	
9/28-29	6	AEOT-20-23	6.71	0.0029	4.0	8.6	-	-	-	-	7 (17)
		AEOC-6	-	-	-	-	5.56	0.0024	3.7	8.0	
Average		AEOT	5.13	0.0022	2.9	6.4	-	-	-	-	23 (30)
		AEOC	-	-	-	-	3.51	0.0015	2.2	4.9	

[a]Reported values are averages of the individual test results per test block.

[b]Percent difference calculated based on average emission rate data for each test type. The number in parentheses is the percent difference based on average concentration data for each test type.

TABLE 2-6. COMPARISON OF TRAVERSE AND SINGLE-POINT SAMPLING RESULTS FOR SULFUR DIOXIDE

Date (1983)	Test block No.	Test ID	SO_2 Concentrations		Percent difference
			Traverse train, average ppm by volume	Continuous single-point train, ppm by volume	
9/19-20	1	AEOT-1-3	476	-	+12
		AEOC-1	-	420	
9/20-21	2	AEOT-4-7	806	-	-14
		AEOC-2	-	922	
9/21-22	3	AEOT-8-11	1216	-	-4
		AEOC-3	-	1259	
9/26-27	4	AEOT-12-15	2653	-	+0.4
		AEOC-4	-	2643	
9/27-28	5	AEOT-16-19	1610	-	-6
		AEOC-5	-	1704	
9/28-29	6	AEOT-20-23	1795	-	-10
		AEOC-6	-	1968	
Average		AEOT	1426	-	-4
		AEOC	-	1486	

2.2.2 Arsenic Emissions and Process Operation

Table 2-7 presents a summary of reverberatory furnace charge rates and corresponding arsenic emission data. In addition to data on the 23 traverse runs conducted during the continuous tests blocks, arsenic results for four traverse runs performed at high furnace charge rates (6 to 8 loads per hour) are also presented in this table. These runs are designated as AEOPA (ASARCO ESP Outlet Particulate/Arsenic). Table 2-8 summarizes pertinent sample and flue gas data for these AEOPA test runs.

The EPA project personnel closely monitored the furnace and ESP operations during each individual test. The number of loads charged to the reverberatory furnace were recorded and divided by the specific sampling period to obtain the calcine charge rate in loads per hour. The calcine charge on a mass rate basis was calculated by multiplying the charge weight in loads per hour by the approximate weight per load (~6.3 tons). Emission factors for arsenic on a pounds-per-ton basis were developed for each test based on the calcine mass rate in tons per hour and the corresponding arsenic mass emission rate. Figure 2-1 presents the result of a linear least-squares regression analysis performed on the 27 data points. The arsenic mass emission results in pounds per hour versus the furnace charge rate in loads per hour are plotted. The data show that arsenic emissions are generally proportional to the furnace charge rate, particularly at higher furnace loads. At low furnace charging rates, the emission rates did not decrease in proportion to the reduction in

TABLE 2-7. SUMMARY OF REVERBERATORY FURNACE CALCINE CHARGE RATES AND ARSENIC EMISSION DATA

Date (1983)	Test ID	Sampling period	Calcine charge rate,[a] loads/h	Calcine charge rate,[b] tons/h	Arsenic emission data: Concentration, gr/dscf	Arsenic emission data: Mass emission rate, lb/h	Arsenic emission factor,[c] lb/ton
9/19	AEOT-1	1015-1621	0.34	2.17	0.0019	5.2	2.40
9/19	AEOT-2	1635-2304	0.46	2.92	0.0014	4.3	1.47
9/19-20	AEOT-3	2347-0602	0	0	0.0010	2.8	NA
9/20	AEOT-4	0948-1445	0	0	0.0012	3.0	NA
9/20	AEOT-5	1530-2030	0.50	3.15	0.0012	3.3	1.05
9/20-21	AEOT-6	2120-0227	2.14	13.51	0.0009	2.5	0.19
9/21	AEOT-7	0312-0805	1.64	10.33	0.0011	2.9	0.28
9/21	AEOT-8	0948-1439	0.20	1.27	0.0012	3.3	2.60
9/21	AEOT-9	1544-2041	0.80	5.07	0.0005	1.4	0.28
9/21-22	AEOT-10	2119-0223	4.33	27.28	0.0018	4.2	0.25
9/22	AEOT-11	0310-0814	2.96	18.63	0.0010	2.8	0.15
9/26	AEOT-12	0940-1440	2.56	16.12	0.0036	10.0	0.62
9/26	AEOT-13	1537-2036	7.70	49.14	0.0061	16.4	0.33
9/26-27	AEOT-14	2115-0227	7.60	47.89	0.0045	13.4	0.28
9/27	AEOT-15	0315-0831	4.93	31.08	0.0047	14.1	0.45
9/27	AEOT-16	0947-1459	0.57	3.62	0.0013	3.8	1.05
9/27	AEOT-17	1534-2031	1.61	10.14	0.0010	2.7	0.27
9/27-28	AEOT-18	2115-0219	7.87	49.61	0.0041	11.9	0.24
9/28	AEOT-19	0306-0836	3.04	19.12	0.0020	6.4	0.33
9/28	AEOT-20	0945-1443	0.20	1.26	0.0007	2.3	1.83
9/28	AEOT-21	1534-2033	3.20	20.16	0.0018	5.1	0.25
9/28-29	AEOT-22	2115-0216	7.57	47.69	0.0058	17.1	0.36
9/29	AEOT-23	0301-0802	6.40	40.32	0.0033	10.1	0.25
9/17	AEOPA-1	2021-2339	7.93	49.94	0.0054	15.8	0.32
9/23-24	AEOPA-2	2230-0144	8.36	52.67	0.0058	16.1	0.30
9/24	AEOPA-3	1851-2258	6.09	38.36	0.0042	11.9	0.30
9/25-26	AEOPA-4	2222-0131	7.94	50.02	0.0036	10.7	0.22

[a]Calcine charge rate in loads per hour.

1 calcine load = 6.3 tons calcine

[b]Calcine charge rate in tons per hour.

[c]Arsenic emission factor in pounds of arsenic per ton calcine charged. This factor represents the total mass of arsenic emitted to the main stack per ton of material charged to the No. 2 reverberatory furnace.

Note: All process data provided by U.S. EPA.

TABLE 2-8. SUMMARY OF ESP OUTLET SAMPLE AND FLUE GAS DATA FOR PARTICULATE/ARSENIC TESTS

Run No.	Sample location	Date (1983)	Sampling period	Sampling time, min	Sample volume[a]		Percent isoki-netic, %	Volumetric flow rate				Temperature		Mois-ture, %	Gas composition[b], %			Concentration of SO_2, ppm by volume
								Actual		Standard								
					dNm^3	dscf		m^3/min	acfm	dNm^3/min	dscfm	°C	°F		O_2	CO_2	CO	
AEOPA-1	ESP out-let	9/17	2021-2339	168	3.096	109.321	100.0	13,200	465,500	9,700	342,000	101	214	5.9	17.8	1.6	0.0	2807
AEOPA-2	ESP out-let	9/23 9/24	2230-0144	165	2.833	100.054	101.8	13,000	459,000	9,200	325,300	110	230	7.1	17.8	1.6	0.0	3944
AEOPA-3	ESP out-let	9/24	1951-2258	165	2.960	104.525	104.5	13,000	459,000	9,400	331,000	110	229	6.1	17.8	1.6	0.0	2947
AEOPA-4	ESP out-let	9/25 9/26	2222-0131	165	2.971	104.903	100.2	13,600	479,000	9,800	346,000	105	221	6.8	17.9	1.7	0.0	3738

[a]Metered volume corrected for sulfur dioxide content in gas stream and expressed as dry normal cubic meters and dry standard cubic feet. Standard conditions are 760 mmHg and 20°C (29.92 in.Hg and 68°F). Average SO_2 content of the flue gas stream was less than 0.4 percent of the total sample volume.

[b]Flue gas composition determined by collecting an integrated bag sample and analyzing for oxygen, carbon dioxide, and carbon monoxide with an Orsat Gas Analyzer. Reported carbon dioxide results have been corrected for SO_2 content.

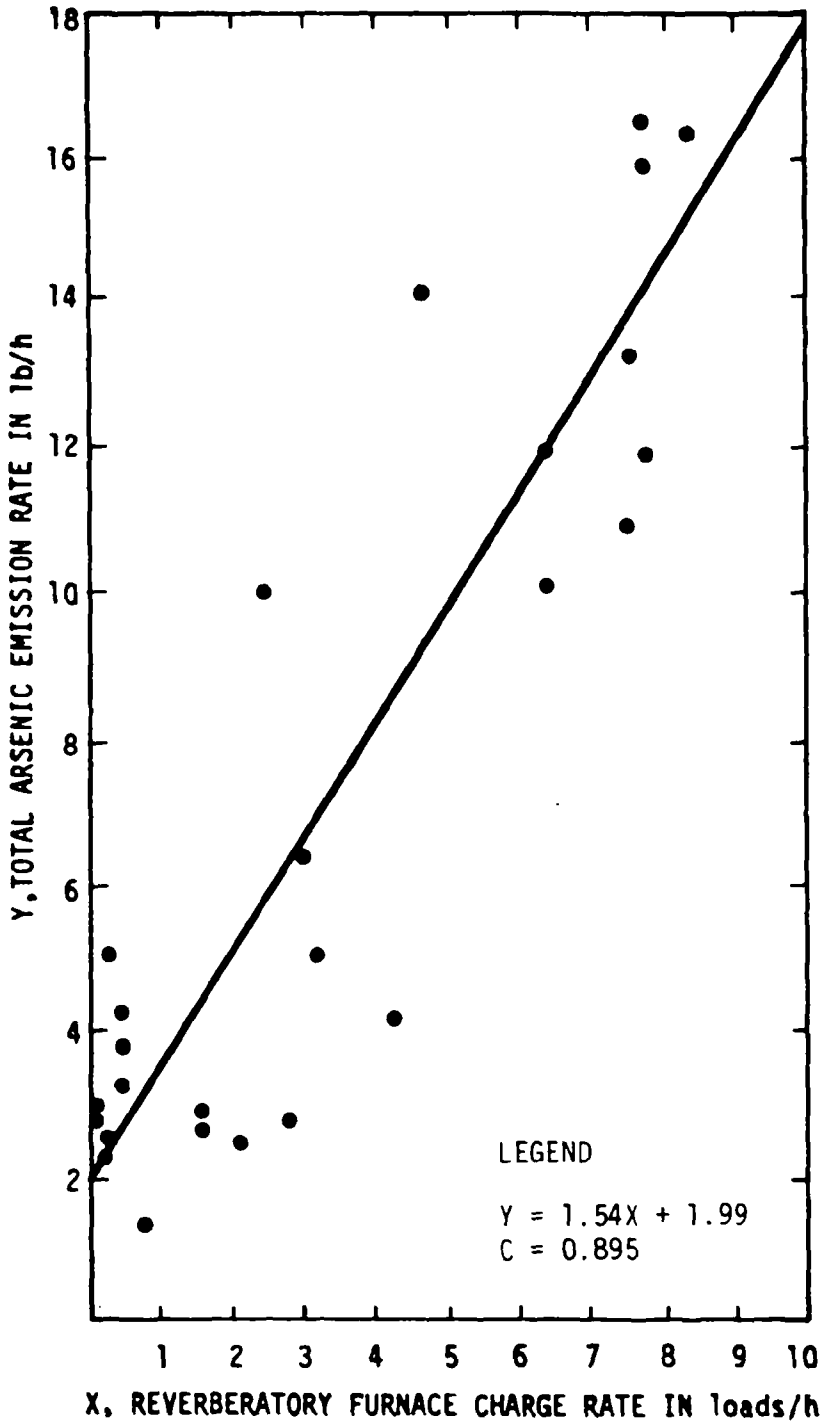

Figure 2-1. Arsenic emissions versus furnace charge rate.

charge, which indicates a residual or base arsenic emission from the material remaining in the furnace.

During AEOT Runs 13, 14, 18, 22, 25, and the four AEOPA runs, furnace charge rates were representative of full smelt conditions. For these nine tests, the calcine charge rate averaged 7.5 loads per hour (47.3 tons/h), and the corresponding average arsenic concentration and mass emission rates were 10.9 mg/dNm^3 (0.0048 gr/dscf) and 6.2 kg/h (13.7 lb/h). Arsenic emissions for these full-smelt tests ranged from 0.22 to 0.36 lb/ton of calcine charged and averaged 0.29 lb/ton. Figure 2-2 presents a plot of the arsenic emission factors calculated as pounds per ton of calcine charged versus furnace charge rate in tons per hour. The plot shows that when the furnace charge rate exceeded about 5 tons/h or one load per hour, the arsenic emission factor was relatively constant. This emission factor ranged from 0.15 to 0.62 lb/ton of calcine charged and averaged 0.30 lb per ton.

2.2.3 Particulate Emission Results

Five test runs for particulate emissions were conducted at full furnace charge rate conditions (6 to 8 loads per hour). These data are summarized in Table 2-9. Calcine charge rates averaged 7.3 loads per hour (45.8 tons/h), and the corresponding particulate concentration and mass emission rate averaged 20.4 mg/dNm^3 (0.0089 gr/dscf) and 11.7 kg/h (25.7 lb/h).

Three of the continuous single-point sampling runs (AEOC) and the traverse (AEOT) sampling runs from Test Block No. 6 were

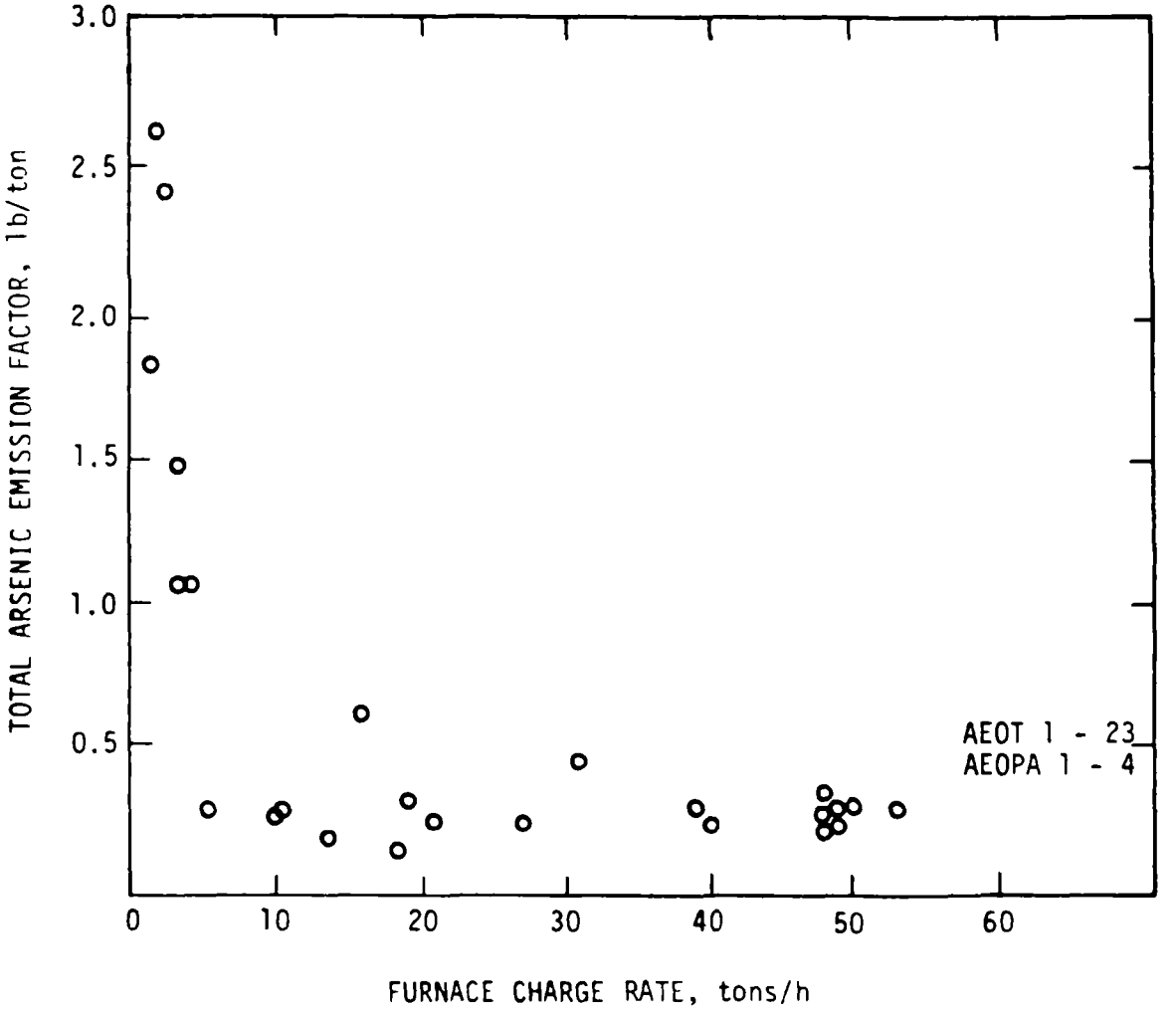

Figure 2-2. Comparison of calculated arsenic emission factor and furnace charge rate.

TABLE 2-9. SUMMARY OF PARTICULATE EMISSION DATA AT FULL FURNACE CHARGE RATE

Date (1983)	Test ID	Charge rate, loads/h[a]	Charge rate, tons/h	Particulate concentration[b]		Particulate mass emission rate	
				mg/dNm³	gr/dscf	kg/h	lb/h
9/23-24	AEOPA-2	8.4	52.67	23.3	0.0102	12.9	28.4
9/24	AEOPA-3	6.1	38.36	26.5	0.0116	14.9	32.9
9/25-26	AEOPA-4	7.9	50.02	16.8	0.0073	9.9	21.7
9/28-29	AEOT-22	7.6	47.69	19.9	0.0087	11.6	25.5
9/29	AEOT-23	6.4	40.32	15.3	0.0067	9.2	20.2
		$\bar{x}$[c] = 7.3	$\bar{x}$ = 45.8	$\bar{x}$ = 20.4	$\bar{x}$ = 0.0089	$\bar{x}$ = 11.7	$\bar{x}$ = 25.7
		σ[d] = 1.0	σ = 6.2	σ = 4.6	σ = 0.0020	σ = 2.3	σ = 5.1
		RSD[e]% = 13.7	RSD% = 13.5	RSD% = 22.6	RSD% = 22.8	RSD% = 19.7	RSD% = 20

[a]Calcine charge rate in loads per hour.

1 caline load = 6.3 tons calcine

[b]Particulate represents material collected in the sample probe and on the sample filter, both of which are heated to approximately 121°C (250°F). Concentrations are expressed in milligrams per dry normal cubic meter (mg/dNm³) and grains per dry standard cubic foot (gr/dscf). Mass emission rates are the product of the concentration and volumetric flow rate and are expressed in kilograms per hour (kg/h) and pounds per hour (lb/h).

[c]Mean.

[d]Standard deviation with (N-1) weighting of data.

[e]Relative standard deviation is the standard deviation expressed as a percent of the mean.

analyzed for particulate matter prior to being analyzed for total arsenic content. Table 2-10 presents the particulate results from Tests AEOC-4 through 6 and AEOT-20 through 23. Although ASARCO could not provide daily arsenic analyses on the dust samples collected by the continuous sampler, particulate (dust) weights were obtained daily and mass emission rates were calculated based on gas flow and temperature data recorded by the continuous sampler measurement system. As a result, a comparison between ASARCO's continuous sampler and the fixed-point Method 108 for particulate results is available for Test Blocks 4 through 6. Additionally, a comparison between the traverse and single-point Method 108 particulate results is available for Test Block No. 6. These data are summarized in Table 2-11. Particulate mass emission rate data from Test Block No. 6 indicate less than a 5 percent difference between the average traverse results and results obtained by the fixed-point sampling train. This would suggest that spatial stratification of particulate matter is minimal at this location. In contrast, the particulate results reported by ASARCO for the continuous sampler ranged from 37 to 75 percent lower than results from the fixed-point continuous sampling train. The data suggest that the ASARCO continuous sampler does not collect as much particulate matter as the EPA type train.

2.2.4 Summary of Flue Gas Conditions

Flue gas volumetric flow rates, temperatures, moisture content, and composition [oxygen (O_2), carbon dioxide (CO_2),

TABLE 2-10. SUMMARY OF PARTICULATE RESULTS FROM THE CONTINUOUS AND TRAVERSE SAMPLING TRAINS

Test block No.	Date (1983)	Sample ID	Calcine charge rate[a] loads/h	Particulate concentration		Particulate mass emission rate	
				mg/dNm³	gr/dscf	kg/h	lb/h
4	9/26-27	AEOC-4	5.70	17.4	0.0076	11.2	24.7
5	9/27-28	AEOC-5	3.3	8.9	0.0039	5.7	12.6
6	9/28-29	AEOC-6	4.3	13.1	0.0057	8.6	19.0
6	9/28	AEOT-20	0.20	6.0	0.0026	3.7	8.1
	9/28	AEOT-21	3.20	21.0	0.0092	11.7	25.8
	9/28-29	AEOT-22	7.57	19.9	0.0087	11.6	25.5
	9/29	AEOT-23	6.40	15.3	0.0067	9.2	20.2

[a]Calcine charge rate in loads per hour. Charge rates for Runs AEOC-4 through 6 represent average values for the 23-hour test block.

TABLE 2-11. COMPARISON OF PARTICULATE EMISSIONS BETWEEN THE TRAVERSE AND SINGLE-POINT SAMPLING TRAINS AND THE ASARCO SAMPLER

Date (1983)	Test block No.[a]	Test ID[a]	Traverse trains				Continuous single-point train				Percent difference between traverse and single-point train	ASARCO continuous sampler particulate mass emission rate, lb/h[b]	Percent difference between single-point train and ASARCO samples
			Concentration		Mass emission rate		Concentration		Mass emission rate				
			mg/dNm³	gr/dscf	kg/h	lb/h	mg/dNm³	gr/dscf	kg/h	lb/h			
9/26-27	4	AEOC-4	-	-	-	-	17.4	0.0076	11.2	24.7	-	6.42	74
9/27-28	5	AEOC-5	-	-	-	-	8.9	0.0039	5.7	12.6	-	7.92	37
9/28-29	6	AEOT-20-23	15.5	0.0068	9.1	19.9	-	-	-	-	4.5	4.83	75
		AEOC-6	-	-	-	-	13.1	0.0057	8.6	19.0			

[a]For Test Blocks 4 through 6, the single-point continuous train was analyzed for particulate and arsenic. During Test Block No. 6, the traverse sampling trains were analyzed for particulate and arsenic.

[b]Data provided by ASARCO, Inc.

carbon monoxide (CO), and sulfur dioxide (SO_2)] were determined for each individual test by applicable EPA test procedures. As presented in Tables 2-3, 2-4, and Table 2-8, the data are reproducible and correlate with changes in process operation. For all tests, volumetric flow rates typically ranged between 8000 and 10,000 dNm^3/min (300,000 and 400,000 dscfm). Temperatures ranged from 77° to 110°C (171° to 230°F), and the moisture content ranged between 2 and 7 percent. The flue gas composition was consistent throughout the test period; oxygen, carbon dioxide, and carbon monoxide contents averaged approximately 19.0, 1.0, and 0.0 percent, respectively. The SO_2 concentrations ranged from 177 to 3944 ppm by volume and were generally proportional to the furnace charge rate.

2.2.5 Process Sample Analytical Results

Table 2-12 summarizes arsenic analytical results from samples collected by EPA and ASARCO personnel during the test project. These data are also presented and discussed in Section 3 of this report. In general, the arsenic content of each sample type compares favorably with historical data from this source and analytical results routinely reported by ASARCO.

An arsenic analysis of the dust collected by the No. 1 ESP combined with an estimate of the mass of dust collected over a 23- to 24-hour period was used to estimate the mass of arsenic entering the ESP. These data and the results of the arsenic mass emission rate tests conducted at the ESP outlet over the same 23- or 24 hour period were then used to estimate the arsenic collection efficiency of the ESP. During the test periods, ASARCO

TABLE 2-12. PROCESS SAMPLE ANALYTICAL RESULTS, REVERBERATORY FURNACE

Sample ID	Date (1983)	Sample description	Arsenic,[a] %
DD687	9/19	Calcine 7:00 a.m. - 3:00 p.m. shift	2.77
DD688	9/19	Calcine 3:00 p.m. - 11:00 p.m. shift	1.57
DD689	9/19	Roaster charge	3.18
DD690	9/20[b]	Matte	0.51
DD692	9/21	Calcine 7:00 a.m. - 3:00 p.m. shift	2.56
DD693	9/21	Calcine 11:00 p.m. - 7:00 a.m. shift	2.94
DD694	9/21	Roaster charge	4.11
DD691	9/21	Matte	0.48
DD696	9/26	Calcine 7:00 a.m. - 3:00 p.m. shift	2.55
DD697	9/26	Calcine 3:00 p.m. - 11:00 p.m. shift	3.00
DD698	9/26	Roaster charge	4.21
DD695	9/26	Matte	0.58
DD700	9/27	Calcine 7:00 a.m. - 3:00 p.m. shift	2.24
DD701	9/27	Calcine 11:00 p.m. - 7:00 a.m. shift	2.49
DD702	9/27	Roaster charge	2.90
DD699	9/27	Matte	0.60
DD704	9/28	Calcine 7:00 a.m. - 3:00 p.m. shift	3.00
DD705	9/28	Calcine 3:00 p.m. - 11:00 p.m. shift	2.77
DD706	9/28	Calcine 11:00 p.m. - 7:00 a.m. shift	3.36
DD707	9/28	Roaster charge	3.86
DD703	9/28	Matte	0.67
DD778	9/20	R&R pipe and plate No. 3 silo	54.8
DD779	9/21	R&R pipe and plate No. 3 silo	54.7
DD780	9/28	R&R pipe and plate No. 3 silo	54.7
DD781	9/29	R&R pipe and plate No. 3 silo	58.0

[a]Percent arsenic (by weight) determined by the sample preparation and analytical techniques described in Proposed EPA Method 108.

[b]No other process samples were received for arsenic analysis on this date.

Note: All samples collected and identified by ASARCO, Inc.

determined arsenic collection rates in the following manner. For the specific test periods, they transferred collected dust from the ESP hoppers to a holding silo and determined the approximate volume by sounding techniques. They analyzed composite samples of the dust for density, moisture, and arsenic content and, based on these data, calculated the mass of arsenic collected on a pound per hour basis. Data were not obtained for all six test periods because of dust conveying problems and operator errors in segregating the dust collected by the No. 1 ESP.

Table 2-13 summarizes the ESP arsenic collection efficiency results for the three days for which complete data are available. The arsenic analytical results reported for each time period represent the arsenic content by weight of a composite sample of ESP hopper dust. The average arsenic removal efficiency of the ESP during the specific test periods was 99.1 percent.

2.3 ARSENIC PLANT TEST RESULTS

Tables 2-14 and 2-15 summarize pertinent sample, flue gas, and analytical data for tests performed at the arsenic plant baghouse.

Initially, four simultaneous tests were conducted at the As_2O_3 (kitchen) inlet and baghouse outlet test locations. During these tests, the metallic arsenic plant was not in operation. For the inlet tests, designated ABKI (ASARCO Baghouse Kitchen Inlet), the volumetric gas flow rate averaged 731 dNm^3/min (26,000 dscfm) with an average gas temperature of 74°C (165°F)

TABLE 2-13. ESTIMATE OF ESP ARSENIC COLLECTION EFFICIENCY

Date[a] (1983)	Test Block No.	Time period[a] (24-h basis)	Arsenic in Cottrell[a] hopper dust, %	Estimated arsenic collected in ESP,[a] lb/h	Average ESP outlet arsenic emission rate,[b] lb/h	Estimated arsenic collection efficiency, %
9/19-20	1	1800-1300 (19 h)	48.7	477	3.4	99.3
9/26-27	4	1400-1400 (24 h)	52.3	1074	11.9	98.9
9/27-28	5	1400-1330 (23.5 h)	47.3	558	5.8	99.0
9/28-29	6	1330-1330 (24 h)	52.1	435	-	-

[a]All data provided by ASARCO, Inc.

[b]Calculated average ESP outlet emission data based on results from the traverse (AEOT) test means for each specific time period:

9/19-20 AEOT-2, 3, and 4
9/26-27 AEOT-13, 14, 15, and 16
9/27-28 AEOT-17, 18, 19, and 20

Note: Estimate of arsenic collection efficiency is not available for Test Blocks 2 and 3 because of a dust conveying problem. Estimate of arsenic efficiency is not available for Test Block 6 because test data are available for only 75 percent of the test period.

TABLE 2-14. SUMMARY OF ARSENIC PLANT BAGHOUSE SAMPLE AND FLUE GAS DATA

Run No.	Sample location	Date (1983)	Sampling period	Sampling time, min	Sample volume[a]		Percent isokinetic, %	Volumetric flow rate[b]				Temperature		Moisture, %	Gas composition[d], %			Concentration of SO_2, ppm by volume[e]
								Actual		Standard								
					dNm^3	dscf		m^3/min	acfm	dNm^3/min	dscfm	°C	°F		O_2	CO_2	CO	
ABKI-1	Kitchen inlet	9/14	1030-1647	342.9	5.75	203.038	102.0	943	33,300	746	26,300	77	170	5.3	19.0	0.6	0.0	3832
AABO-1	Outlet	9/14	1030-1652	360	7.92	279.799	101.4	988	34,900	784	27,700	77	171	5.4	19.3	0.4	0.0	3695
ABKI-2	Kitchen inlet	9/15	1220-1747	176	2.85	100.652	100.1	930	32,800	734	25,900	75	166	5.7[c]	19.2	0.4	0.0	3855
AABO-2	Outlet	9/15	1220-1838	360	7.60	268.350	97.9	975	34,400	779	27,500	74	165	5.6	19.2	0.5	0.0	3421
ABKI-3	Kitchen inlet	9/16	0921-1447	176	2.90	102.340	102.6	944	33,300	728	25,700	78	173	6.7	19.2	0.3	0.0	4826
AABO-3	Outlet	9/16	0921-1540	360	7.50	265.041	98.1	977	34,500	768	27,100	78	172	5.8	19.2	0.4	0.0	4387
ABKI-4	Kitchen inlet	9/17	0908-1435	176	2.80	99.053	101.2	876	30,900	714	25,200	65	149	5.3	19.2	0.5	0.0	2847
AABO-4	Outlet	9/17	0908-1540	360	7.72	272.758	96.6	971	34,300	802	28,300	66	152	4.4	19.2	0.6	0.0	2292
ABKI	Kitchen inlet	Average			-	-	-	923	32,600	731	25,800	74	165	5.8	19.2	0.5	0.0	3861
AABO	Outlet	Average			-	-	-	978	34,500	783	27,600	74	165	5.3	19.2	0.5	0.0	3477

(continued)

TABLE 2-14 (continued)

Run No.	Sample location	Date (1983)	Sampling period	Sampling time, min	Sample volume[a] dNm³	Sample volume[a] dscf	Percent isokinetic, %	Volumetric flow rate[b] Actual m³/min	Volumetric flow rate[b] Actual acfm	Volumetric flow rate[b] Standard dNm³/min	Volumetric flow rate[b] Standard dscfm	Temperature °C	Temperature °F	Moisture, %	Gas composition[d], % O_2	Gas composition[d], % CO_2	Gas composition[d], % CO	Concentration of SO_2, ppm by volume[e]
ABKI-5	Kitchen inlet	9/23	0945-1308	176	1.860	65.676	100.8	554	19,500	476	16,800	48	118	5.2	19.2	0.6	0.0	2525
ABMI-1	Metallic inlet	9/23	0945-1310	180	1.366	48.254	104.6	243	8,600	153	5,400	177	350	3.4	19.0	1.0	0.0	245
AABO-5	Outlet	9/23	0945-1310	180	4.112	145.202	97.8	1072	37,900	841	29,700	79	174	5.3	19.0	0.8	0.0	2481
ABKI-6	Kitchen inlet	9/23	1524-1842	176	1.855	65.507	100.3	569	20,100	477	16,800	55	131	5.5	19.2	0.6	0.0	2261
ABMI-2	Metallic inlet	9/23	1525-1845	180	1.848	65.264	101.2	230	8,100	147	5,200	172	341	3.2	19.0	1.0	0.0	72
AABO-6	Outlet	9/23	1525-1845	180	3.947	139.392	98.2	1044	36,900	807	28,500	86	186	5.0	19.4	0.6	0.0	1749
ABKI-7	Kitchen inlet	9/24	1005-1324	176	1.927	68.037	100.6	567	20,000	494	17,400	44	110	5.5	19.0	0.6	0.0	2262
ABMI-3	Metallic inlet	9/24	1005-1326	180	2.027	71.587	103.3	240	8,500	157	5,600	168	335	2.3	19.2	0.6	0.0	66
AABO-7	Outlet	9/24	0950-1326	180	4.154	146.385	99.0	1040	36,700	840	29,700	74	166	4.5	18.9	0.8	0.0	1811
Inlet Average			Metallic					238	8,400	152	5,400	172	342	3.0	19.0	0.9	0.0	128
Inlet Average			Kitchen					563	19,900	482	17,000	49	120	5.4	19.1	0.6	0.0	2350
Outlet			Average		-	-	-	1052	37,200	829	29,300	80	175	4.9	19.1	0.7	0.0	2014

[a]Metered volume corrected for sulfur dioxide content in gas stream and expressed as dry normal cubic meters and dry standard cubic feet. Standard conditions are 760 mmHg and 20°C (29.92 in.Hg and 68°F). The SO_2 content of the flue gas stream averaged less than 0.4 percent of the total sample volume.

[b]Volumetric flow rate expressed in cubic meters per minute and cubic feet per minute at stack conditions. Flow rates corrected to standard conditions are expressed as dry normal cubic meters per minute and dry standard cubic feet per minute.

[c]For ABKI-2 the measured outlet moisture content was used in calculating the stack gas molecular weight and velocity and is not included in the average moisture value for the inlet tests.

[d]Flue gas composition determined by collecting an integrated bag sample and analyzing for oxygen, carbon dioxide, and carbon monoxide with an Orsat Gas Analyzer. Reported carbon dioxide results have been corrected for SO_2 content.

[e]Concentration of sulfur dioxide in parts per million by volume.

TABLE 2-15. SUMMARY OF ARSENIC PLANT EMISSIONS DATA

Run No.	Date (1983)	Arsenic kitchen inlet				Metallic arsenic inlet				Total inlet				Baghouse outlet				Arsenic removal efficiency[b], %	Arsenic[c] removal efficiency % adjusted
		Total arsenic[a]				Total arsenic				Total arsenic				Total arsenic					
		Concentration		Emission rate		Concentration		Emission rate		Concentration		Emission rate		Concentration		Emission rate			
		mg/dNm³	gr/dscf	kg/h	lb/h	mg/dNm³	gr/dscf	kg/h	lb/h	mg/dNm³	gr/dscf	kg/h	lb/h	mg/dNm³	gr/dscf	kg/h	lb/h		
1	9/14	3376[c]	1.48[c]	151[c]	333[c]	-	-	-	-	3376[c]	1.48[c]	151[c]	333[c]	4.28	0.0019	0.20	0.44	99.8	-
2	9/15	7951	3.46	349	770	-	-	-	-	7951	3.47	349	770	3.59	0.0016	0.17	0.37	99.95	-
3	9/16	8636	3.78	378	833	-	-	-	-	8636	3.78	378	833	2.85	0.0012	0.13	0.29	99.97	-
4	9/17	7089	3.08	303	667	-	-	-	-	7089	3.08	302	667	1.88	0.0008	0.09	0.20	99.97	-
Average		7892	3.44	343	748	-	-	-	-	7892	3.44	343	757	3.15	0.0014	0.15	0.33	99.96	-
5	9/23	694	0.30	20	44	33.3	0.015	0.31	0.67	-	-	20.3	44.7	2.48	0.0011	0.13	0.28	99.4	99.6
6	9/23	1520	0.66	44	96	35.5	0.016	0.31	0.69	-	-	44.3	96.7	5.15	0.0023	0.25	0.55	99.4	99.6
7	9/24	889	0.39	26	58	19.7	0.009	0.19	0.41	-	-	26.2	58.4	1.85	0.0008	0.09	0.21	99.6	99.7
Average		1035	0.45	30	66	29.5	0.013	0.27	0.59	-	-	30.3	66.6	3.16	0.0014	0.15	0.35	99.5	99.6

[a]Total arsenic (filterable and gaseous fractions) determined using sample and analytical procedures described in Proposed EPA Method 108. Concentrations are expressed in milligrams per dry normal cubic meter and grains per dry standard cubic foot. Mass emission rates are expressed in kilograms per hour and pounds per hour.

[b]The arsenic collection efficiency of the baghouse was calculated using inlet and outlet mass emission rate data.

[c]Calculation of the adjusted arsenic collection efficiency of the baghouse was based on the outlet mass emission rate and an adjusted inlet mass rate, assuming that all unmeasured flow was equal in concentration to the kitchen inlet. The adjusted inlet mass rates

Run 5: 64.3 lb/h
Run 6: 133.8 lb/h
Run 7: 80.7 lb/h

[d]Some sample fraction lost during analysis and reported results are biased low. Results from Run 1 (kitchen inlet) are not included in the group average.

and moisture content of 5.8 percent. The flue gas composition was consistent for each test and showed oxygen, carbon dioxide, and carbon monoxide results of 19.2, 0.45, and 0.0 percent, respectively. Concentrations of SO_2 typically averaged less than 3000 ppm or less than 0.3 percent of the total sample volume.

The uncontrolled arsenic concentration from the As_2O_3 plant averaged 7892 mg/dNm³ (3.44 gr/dscf), and the corresponding mass emission rate was 343 kg/h (757 lb/h). Results from Test ABKI-1 are not included in the group average; results of this test are biased low because of a loss of sample during analysis. For the baghouse outlet tests, designated AABO (ASARCO Arsenic Baghouse Outlet), flow rates averaged 783 dNm³/min (27,700 dscfm) with an average gas temperature of 74°C (165°F) and moisture content of 5.3 percent. Average flue gas composition results were identical to those reported for the kitchen inlet tests. Outlet arsenic concentrations and mass emission rates averaged 3.15 mg/dNm³ (0.0014 gr/dscf) and 0.15 kg/h (0.33 lb/h), respectively.

Based on mass emission rate results from this group of tests, the arsenic collection efficiency of the baghouse was greater than 99.9 percent. Volumetric flows, temperatures, moisture contents, and SO_2 concentrations measured at each location were comparable.

When the metallic arsenic plant began operation, this test sequence was repeated and simultaneous tests were conducted at three test locations--the kitchen inlet, the metallic plant inlet, and the baghouse outlet. At the completion of the first

set of simultaneous tests (ABKI-5, ABMI-1, and AABO-5), preliminary calculations showed a flow imbalance between the inlet and outlet test locations. The cumulative inlet volumetric flow was 629 dNm^3/min (22,200 dscfm) compared with an outlet flow of 841 dNm^3/min (29,700 dscfm). The 7000-dscfm flow imbalance was attributed to an open flow control damper located in a bypass duct, which entered the metallic arsenic plant exhaust duct downstream of both the metallic and kitchen inlet test locations (See Figure 2-3). This condition did not exist during the first series of runs because a second flow control damper located in the metallic plant duct downstream at the bypass duct was closed. The flow imbalance occurred when this second damper was opened. The negative pressure associated with the control system served to divert a part of the flow from the kitchen through the bypass duct and into the baghouse, where it was ultimately measured at the outlet test location.

In addition to the flow imbalance, the arsenic concentration and the mass rate measured at the As_2O_3 inlet test location was significantly less than that measured during the first set of tests (0.45 gr/dscf and 66 lb/h versus 3.44 gr/dscf and 748 lb/h). No conclusive explanation can be found to account for the significant difference in As_2O_3 plant loading. (A discussion of the process operation is given in Subsection 3.2). The arsenic concentration and mass emission rates at the baghouse outlet averaged 3.17 mg/dNm^3 (0.0014 gr/dscf) and 0.15 kg/h (0.35 lb/h).

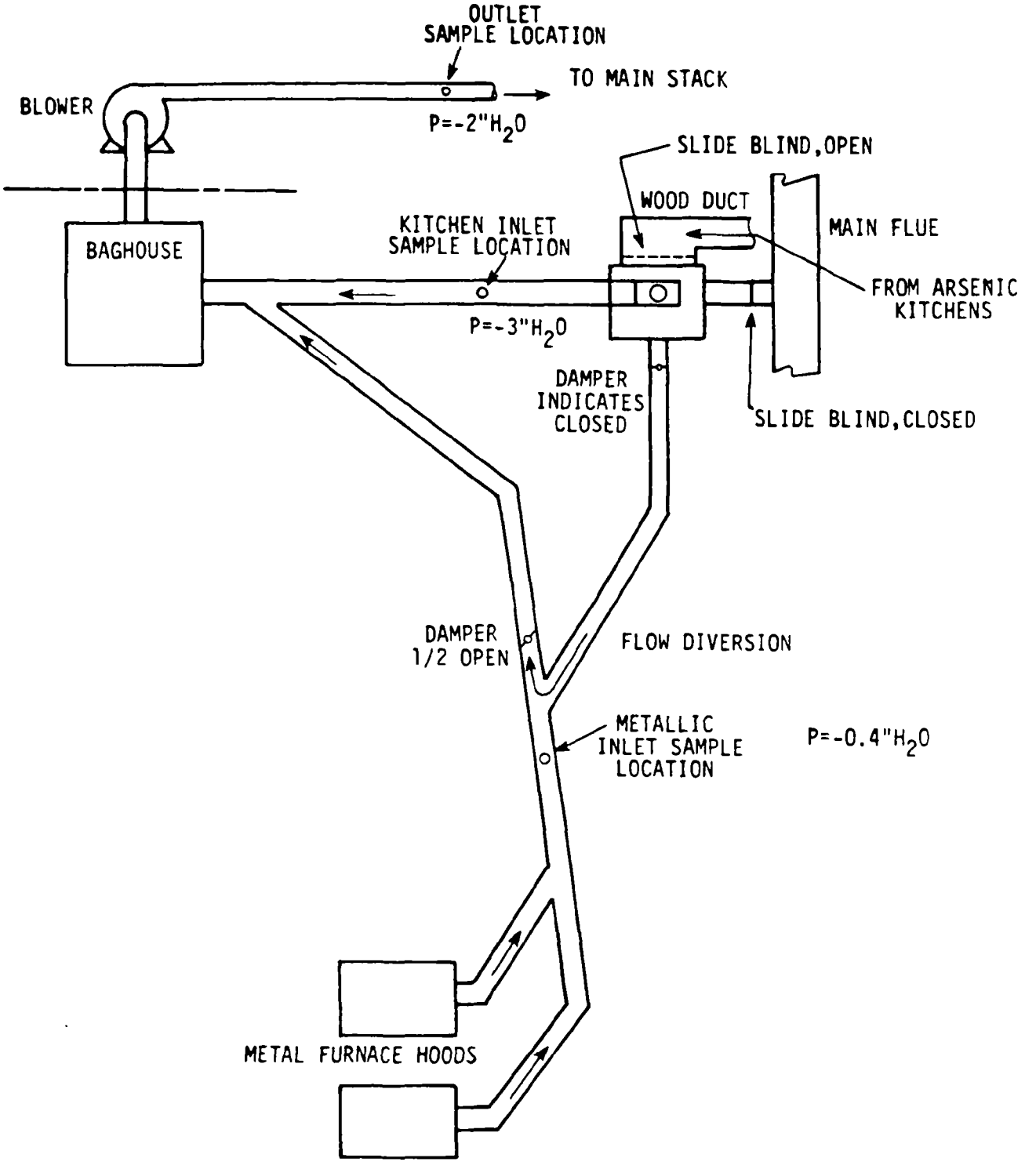

Figure 2-3. Arsenic plant gas flow schematic.

These values are essentially identical to those measured during the first test series, when only the As_2O_3 plant was operated.

Because a malfunctioning flow control damper made the inlet mass emission rates suspect, the arsenic collection efficiency of the baghouse was recalculated with an adjusted arsenic inlet mass rate for each run. Results were adjusted by assuming the flow imbalance was diverted to As_2O_3 gas. The flow difference was assumed to have the same concentration as the kitchen inlet and was added to the total inlet mass rate. The arsenic collection efficiency averaged 99.5 percent with both arsenic processes in operation without a calculation adjustment and 99.6 percent with an adjustment.

Table 2-16 summarizes arsenic analytical results for Godfrey roaster charge and baghouse dust samples collected by ASARCO during each test. (Personnel from EPA monitored process and control equipment operation during each test, and these data are presented in Section 3 and Appendix F of this report.)

2.4 DISCUSSION OF TEST RESULTS

Overall, the test program was conducted as planned, and no major problems were encountered with the sampling or analytical phases of the project. With the exception of a comparison of arsenic results obtained by the ASARCO sampler with those obtained by EPA sample and analytical procedures, all test objectives were met.

TABLE 2-16. PROCESS SAMPLE ANALYTICAL RESULTS, ARSENIC PLANT

Date (1983)	Sample description	Arsenic,[a] %
9/14	Roaster charge	37.2
	Baghouse dust	74.5
9/15	Roaster charge	27.8
	Baghouse dust	73.5
9/16	Roaster charge	25.3
	Baghouse dust	75.2
9/17	Roaster charge	32.2
	Baghouse dust	67.7
9/23	Roaster charge 7:00 a.m. - 3:00 p.m.	33.2
	Baghouse dust 7:00 a.m. - 3:00 p.m.	75.8
9/23	Roaster charge 3:00 p.m. - 11:00 p.m.	61.6
	Baghouse dust 3:00 p.m. - 11:00 p.m.	72.8
9/24	Roaster charge 7:00 a.m. - 3:00 p.m.	47.1
	Baghouse dust 7:00 a.m. - 3:00 p.m.	71.8

[a]Percent arsenic (by weight) determined by the sample preparation and analytical techniques described in proposed EPA Method 108.

Note: All samples collected and identified by ASARCO, Inc.

Results of the comparison of traverse and single-point EPA sampling procedures show that the single-point system consistently measures less total arsenic than the traverse sampling system does. In contrast, data from Test Block No. 6 show that particulate measurements by the two sample systems are comparable. This would suggest spatial stratification of arsenic in the ESP exit breeching and minimal stratification of particulate matter. Cross-sectional traverse sampling techniques would minimize the effect of stratification, and results from these tests are considered more representative of total arsenic emissions than the single-point results are. A comparison of particulate results on a mass-rate basis obtained by the ASARCO sampler and the fixed-point Method 108 sampling train indicate that the ASARCO sampler system measures less particulate over the same approximate period of time.

Results from tests conducted at the ESP outlet showed arsenic emissions to be generally proportional to furnace charge rates, particularly at higher furnace loads. For tests conducted at the full furnace charge rate (6 loads per hour or greater), the total arsenic concentration averaged 10.9 mg/dNm^3 (0.0048 gr/dscf) and the emission rate averaged 6.2 kg/h (13.7 lb/h). Particulate concentrations averaged 20.4 mg/dNm^3 (0.0089 gr/dscf), and the mass emission rate averaged 11.7 kg/h (25.7 lb/h). For tests that yielded both particulate and arsenic results, the total arsenic emission results were approximately 50 percent of the particulate results on both a concentration and

mass-rate basis. This correlates with process analytical data, which showed an arsenic content of approximately 50 percent by weight in dust collected from the ESP collection hoppers and holding silo.

Tests results from the arsenic plant showed an average total arsenic concentration of 3.2 mg/dNm³ (0.0014 gr/dscf) to the main stack and an average mass rate of 0.15 kg/h (0.34 lb/h). Inlet and outlet test results indicated that the arsenic collection efficiency of the baghouse ranged from 99.4 to 99.97 percent, depending on the operating mode. No significant difference was noted in the baghouse outlet emissions between tests conducted with only the As_2O_3 plant in operation and tests conducted when both the As_2O_3 and metallic arsenic plants were in operation.

SECTION 3

PROCESS DESCRIPTION AND OPERATIONS

This section presents a brief description of the smelting processes and facilities operated at the ASARCO primary copper smelter at Tacoma, Washington, and details on the design and operation of the control devices tested during this test program. As noted previously, the latter included the electrostatic precipitators serving the reverberatory smelting furnace and the baghouse for the control of the combined process gases from the arsenic trioxide and arsenic metal plants. Information is also presented on the operating conditions of the process facilities and control devices tested during the test program. Pertinent operating logs and process monitoring data recorded during the tests are included in Appendix F.

3.1 PROCESS DESCRIPTION

The ASARCO smelter at Tacoma, Washington, is a custom smelter that processes copper ore concentrates, precipitates, and smelter byproducts from numerous domestic and foreign sources. The smelter is capable of producing about 320 Mg (353 tons) of anode copper per day and houses the only arsenic production facility in the United States. Inorganic arsenic is recovered as a byproduct of the flue dusts produced during the processing of

high-arsenic copper-bearing feed materials. Smelter operations are subject to a Meteorological Curtailment Program designed to prevent violations of ambient air quality standards for sulfur dioxide. Under the program, smelter activities are curtailed when meteorological conditions and ambient air sulfur dioxide measurements indicate the standards may be exceeded.

Copper smelting facilities include 10 multihearth roasters, two reverberatory smelting furnaces, three Peirce-Smith converters (a fourth Peirce-Smith converter generally serves only as a holding furnace), and two anode furnaces. Arsenic production facilities consist of three Godfrey roasters, three arsenic trioxide settling chambers or kitchens, storage facilities, and a metallic arsenic plant. Process flow diagrams of the copper smelting and arsenic production facilities are presented in Figures 3-1 and 3-2.

The roaster charge, which consists of a blend of copper ore concentrates, precipitates, lead speiss, flue dust, and fluxing materials, typically contains 3 to 5 percent arsenic and 7 to 10 percent moisture. At full smelt, four or five roasters are used. Charging is continuous. The calcine produced is intermittently discharged from hoppers located below the roasters into larry cars that transport the calcine to one of the reverberatory furnaces. Each larry car can transport about 5.9 Mg (6.5 tons) of calcine.

Offgases from the roasters, which average about 3,560 m^3/min (126,000 acfm) at 260°C (500°F), are treated in a baghouse for

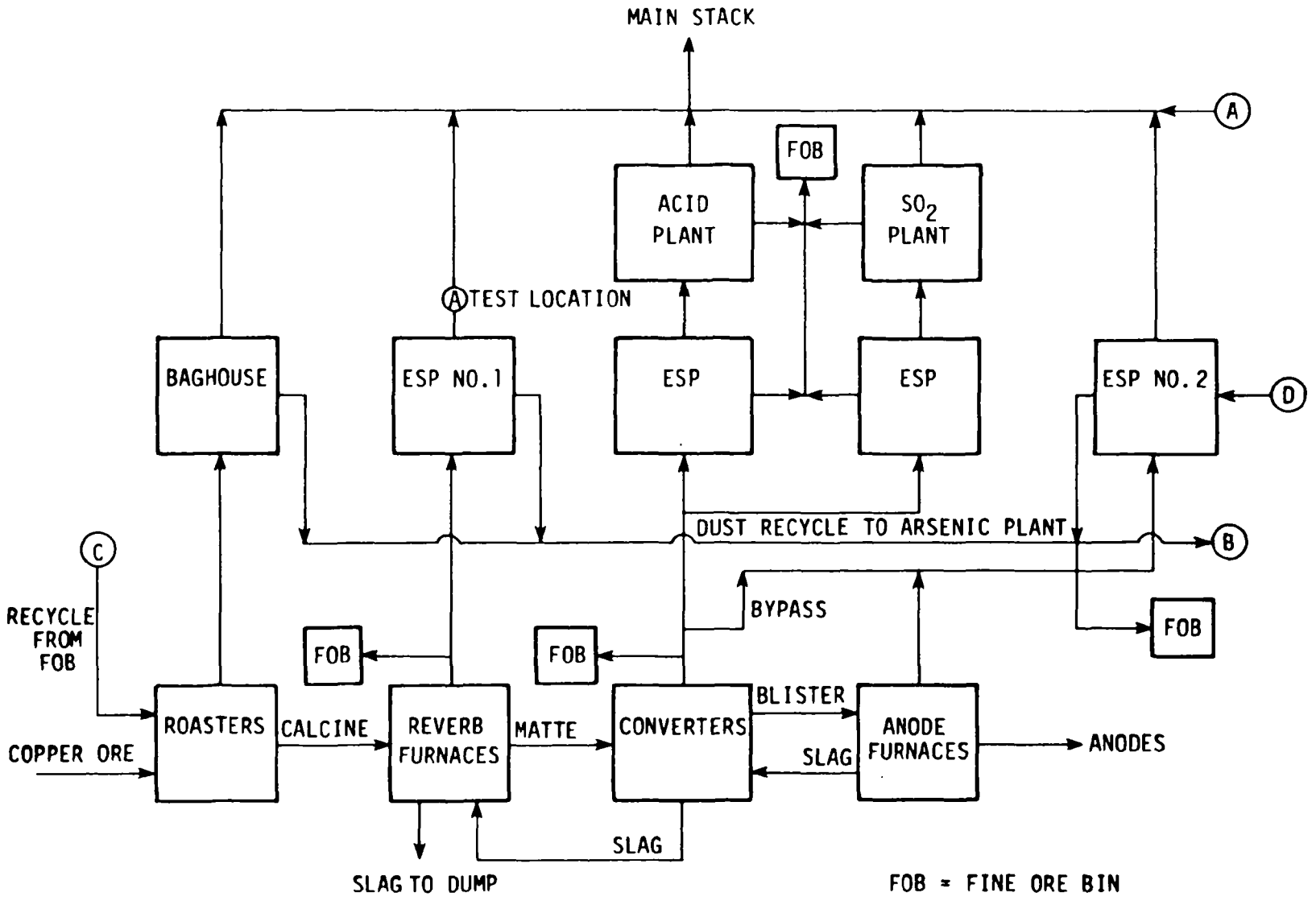

Figure 3-1. ASARCO-Tacoma copper smelter process flow diagram.

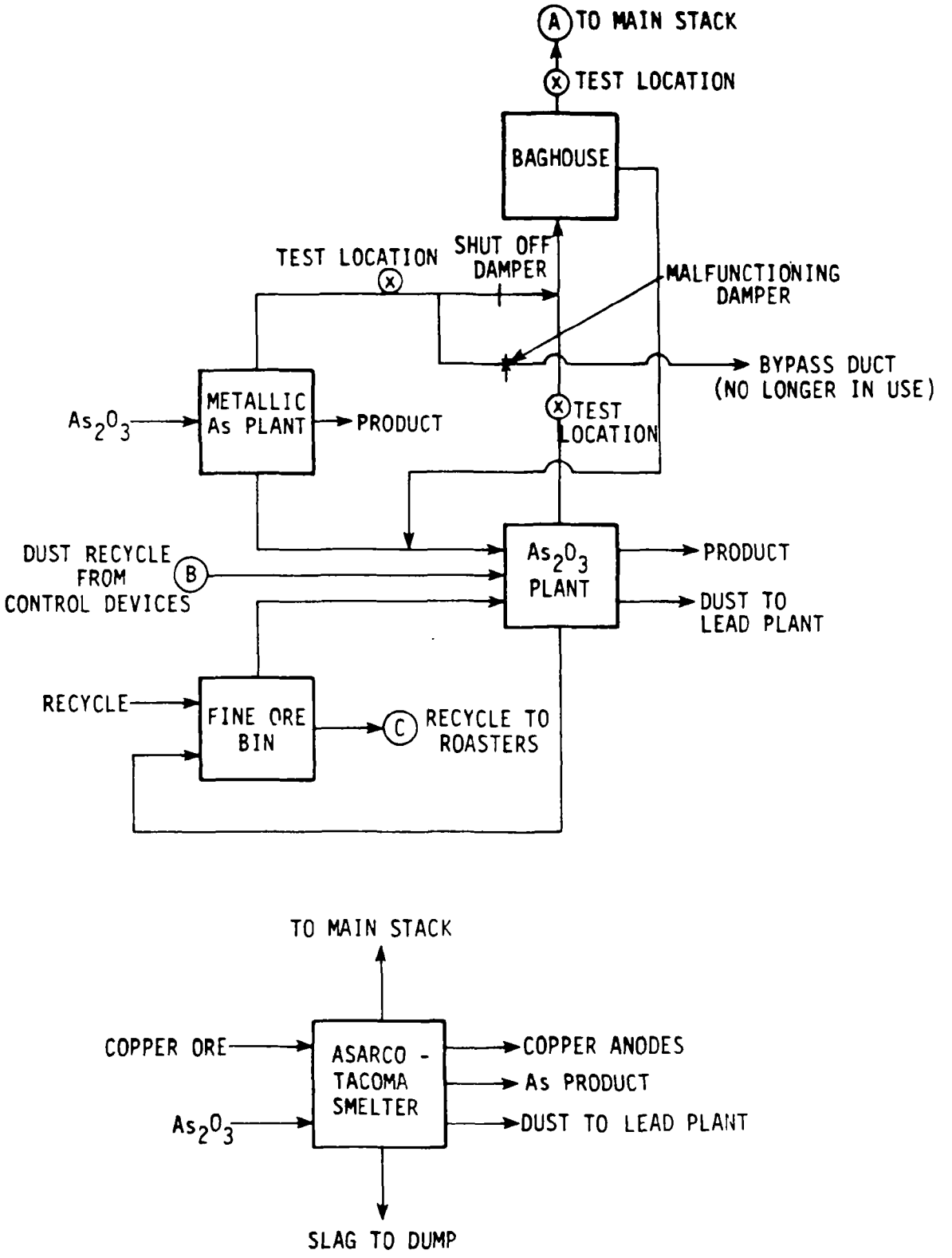

Figure 3-2. ASARCO-Tacoma arsenic plant process flow diagram.

removal of particulate matter. Before the roaster gases enter the baghouse, they are tempered with dilution air to reduce the gas stream temperature to less than 120°C (250°F). The baghouse, a mechanical shaker type, is designed for effective treatment of 5664 m^3min (200,000 acfm) of gas at an air-to-cloth ratio of 0.58 m^3/min per m^2 (1.87 cfm/ft^2) to one. Emission tests that EPA conducted in September 1978 show that the baghouse is 99.7 percent efficient in reducing arsenic emissions. The baghouse exhaust is vented through a flue to the smelter's main stack.

Although the smelter has two reverberatory smelting furnaces, Furnace No. 2 is used almost exclusively. This furnace is 33.5 m (110 ft) long and 9.8 (32 ft) wide, and its smelting capacity is about 1090 Mg (1200 tons) per day. The furnace is usually fired by natural gas. Furnace charging is accomplished by discharging the larry cars through one of four Wagstaff guns located along the furnace sidewalls. Typically, discharge time for one car is about 1 minute. At full smelt, eight cars are charged per hour (two every 15 minutes). Matte from the furnace, which normally contains 43 percent copper, is periodically tapped into a ladle and transferred by an overhead crane to one of three Peirce-Smith converters. Similarly, slag produced in the furnace is periodically tapped and transferred to a 5-pot slag train that transports it to a slag dump.

Process gases from the reverberatory furnace, which average about 1,415 Mn^3 (50,000 scfm), pass through a pair of waste heat boilers, where the gases are cooled to about 400°C (750°F). The

exiting gases then pass through a large rectangular brick flue, (No. 1 flue), where additional cooling and gas stream conditioning take place by air infiltration and the addition of water and sulfuric acid via sprays located in the flue. The resultant gas stream, about 6,100 actual m^3/min (215,000 acfm) at about 110°C (230°F), then enters the first of two electrostatic precipitators in series for particulate removal. The first precipitator is a tube or pipe design and consists of 18 sections with a total collection area of about 6,619 m^2 (71,250 ft^2). Each section contains 84 pipes measuring 30 cm (12 inches) in diameter and 4.6 m (15 feet) in length. The second unit is a plate-type design and consists of 28 sections (7 wide by 4 deep), with a total plate collection area of 7,582 m^2 (81,648 ft^2). Each section is equipped with 16 corrugated steel electrode plates spaced 15.2 cm (6 inches) apart and measuring about 2.3 m (7.5 ft) in length and 3.7 m (12 ft) in height. Power to the precipitators is supplied by 19 transformer/rectifier sets, 9 on the pipe unit and 10 on the plate unit. A diagram showing the configuration and electrical sectionalization of the precipitators is presented in Figure 3-3. Both precipitators are rapped about every 2 hours. Dust collected in the precipitators is pulled 5 days per week.

As noted previously, matte from the reverberatory furnace is transferred to one of three Peirce-Smith converters. Two of the converters measure 4.0 m (13 feet) in diameter by 9.1 m (30 feet) in length, and the third converter is 4 m (13 feet) in diameter and 10.7 m (35 feet) long. In addition to copper matte, smelter

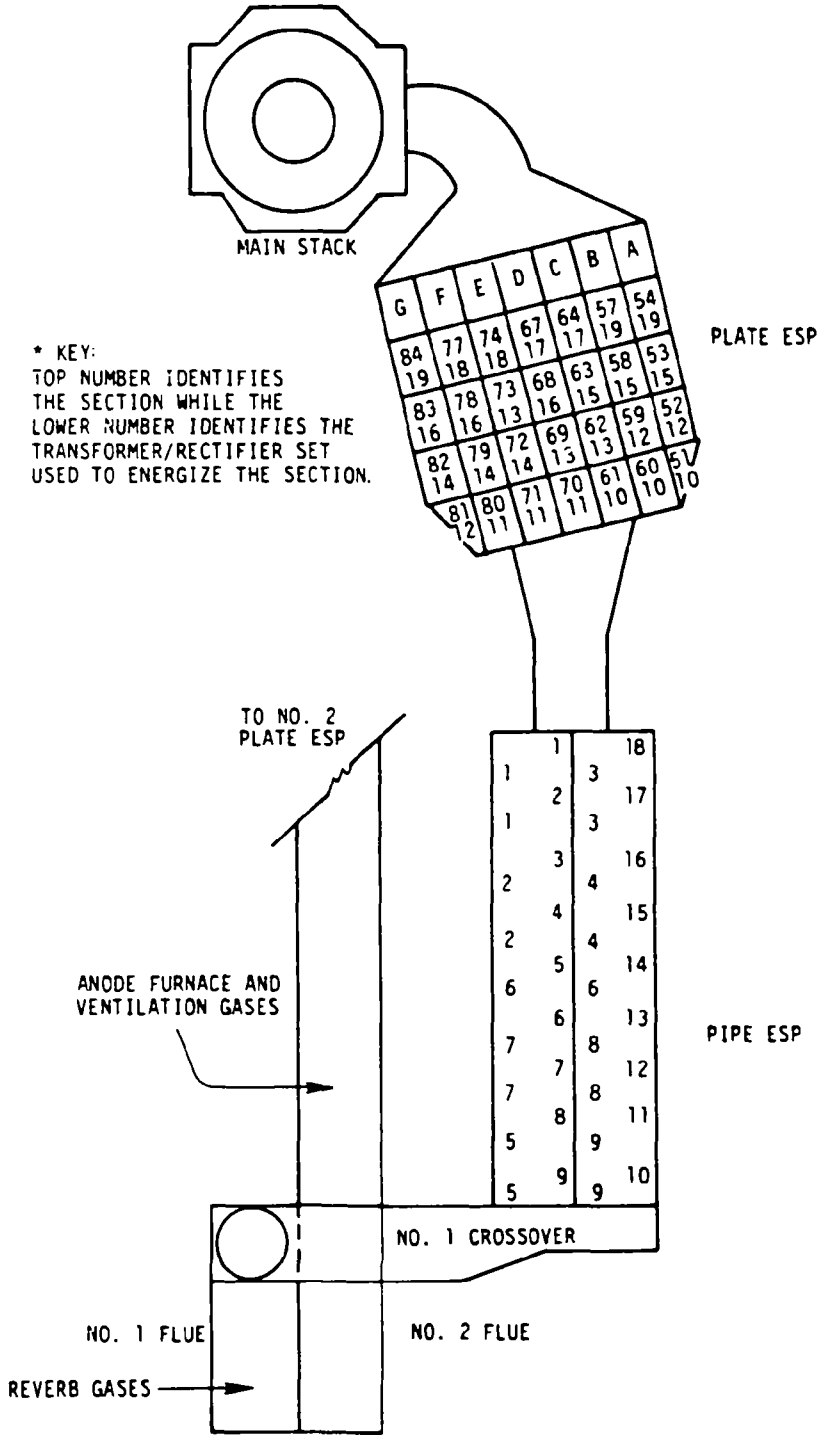

Figure 3-3. Configuration and electrical sectionalization of reverberatory furnace ESP's.

reverts and copper scrap materials are also processed. Typically, only one converter is on blow at any one time, and at no more than two converters are ever operated simultaneously. A converter cycle normally takes from 10 to 12 hours. With dilution air, the off-gas flow per blowing converter is about 1,130 Nm^3 (40,000 scfm) and contains from 3 to 4 percent SO_2. The blister copper produced is transferred to one of two anode furnaces for refining and casting. The slag skimmed from the converters is returned to the reverberatory furnace.

Off-gases from converter blowing operations are captured by water-cooled primary hoods and pass through a series of multiclones and a settling flue for removal of coarse particulates before they enter the gas-cleaning circuits of either a liquid SO_2 plant or single contact sulfuric acid plant. Off-gases from the anode furnaces are treated for particulate removal in a plate type electrostatic precipitator.

Arsenic-laden dust recovered from the particulate control devices servicing the multihearth roasters, the reverberatory furnace, and the converters is transferred to the arsenic recovery plant, where arsenic trioxide is produced. The dust is charged to one of the three Godfrey roasters, where the arsenic trioxide contained in the dust is volatilized. The roaster residue or calcine produced is discharged to an open freight car and subsequently recycled through the copper smelter to recover the copper value.

The arsenic trioxide-laden roaster gases are passed through one of three settling kitchens, where the gases are cooled by

radiative cooling and the arsenic trioxide is condensed. The kitchens are rectangular brick structures containing multiple baffled chambers. Two kitchens are equipped with 15 chambers and one is equipped with 10 chambers. The arsenic trioxide-laden gas enters the first chamber at approximately 205°C (400°F) and exits the final chamber of 100°C (212°F) or less. The condensed arsenic trioxide product (80 to 99 percent pure) is periodically pulled from the kitchens and is either recycled through the Godfrey roasters or placed in storage, depending on its purity. The stored material is shipped as bulk product, either by rail or packed in barrels.

ASARCO-Tacoma also operates a metallic arsenic plant, which produces elemental arsenic from purchased, refined arsenic trioxide. The metallic arsenic plant has two identical furnaces in which arsenic trioxide is volatilized, reduced to elemental arsenic and condensed.

Exhaust gases from the arsenic trioxide kitchens and arsenic metal furnaces are treated in a baghouse before they are vented through a flue to the smelter main stack. The baghouse, which was installed in 1982, is a MikroPul design consisting of five compartments that contain 540 bags each. The bags are made of a Homopolymer acrylic and measure 11.4 cm (4.5 inches) in diameter and 3.0 meters (10 feet) in length. The total baghouse filtering area is 1,400 m^2 (15,075 ft^2). The baghouse was designed to treat 1700 m^3/min (60,000 acfm) of gas at 93°C (200°F) and to

operate at an air-to-cloth ratio of 1.21 m^3/min per m^2 (3.98 cfm/ft^2). Bag cleaning is performed by pulse jet. The cleaning mechanism is automatically activated when the pressure drop across a compartment exceeds 5 inches of water.

3.2 PROCESS OPERATIONS

During the performance of each of the emission tests conducted throughout the test program, personnel from EPA or Pacific Environmental Services, Inc. (an EPA contractor) closely monitored the operating conditions of both the control devices and process facilities tested and obtained and recorded pertinent operating data. The information obtained and the process and control device conditions encountered during each of the various test series conducted are discussed in this subsection. Actual records and process operating data obtained are tabulated in Appendix F.

3.2.1 Reverberatory Furnace ESP

Information recorded during the inorganic arsenic and particulate tests conducted at the outlet of the reverberatory furnace precipitator (pipe and plate in series) included both electrical operating and flue gas data. Based on electrical data included operating values for primary voltage, primary current, spark rate, and secondary current for each of the 19 transformer/rectifier sets used to energize the precipitators. Recorded flue gas data included the temperature and flue draft at the inlet to the pipe unit, the temperature and flue draft at the

inlet of the plate unit, the plate unit outlet temperature, and the opacity of the flue gas stream at the outlet of the plate unit. Values were obtained from meters and chart recorders located in the Cottrell control room, the power house, and at the pipe precipitator inlet and plate precipitator outlet. All readings were recorded hourly. A review of the electrical operating and flue gas data obtained indicates that the precipitators and gas conditioning systems were operating within normal limits throughout the course of the test program.

ASARCO also provided EPA with other pertinent information, such as production data; values for secondary voltage measurements performed by ASARCO prior to the testing on September 11, 1983, and after testing on September 29, 1983; results of daily flue dust analyses for dust acid content; 24-hour particulate losses from the pipe and plate precipitators as measured by ASARCO's continuous sampler; and results of arsenic analyses on the flue dust collected by the precipitators.

Information on the production levels achieved during the various test runs was obtained from production logs maintained in the reverberatory furnace department. A summary of the production achieved during each sample run, in terms of loads of calcine charged to the reverberatory furnace per hour and tons of calcine charged per hour, is presented in Table 3-1. Production levels varied substantially during the AEOT sample runs, ranging from zero to nearly eight loads/hour. This variability in production was due primarily to meteorologically influenced production curtailments to prevent the possible violation of ambient

TABLE 3-1. SUMMARY OF REVERBERATORY FURNACE PRODUCTION DATA

Date (1983)	Corresponding ID	Sampling period (hours)	Calcine loads[a]	Calcine loads, h[b]	Calcine,[c] tons/h
9/19	AEOT-1	1015-1603 (5.80)	2	0.34	2.17
	AEOT-2	1635-2304 (6.48)	3	0.46	2.92
	AEOT-3	2347-0602 (6.25)	0	0	0
9/20	AEOT-4	0948-1445 (4.95)	0	0	0
	AEOT-5	1530-2130 (6.00)	3	0.50	3.15
	AEOT-6	2120-0228 (5.13)	11	2.14	13.51
	AEOT-7	0312-0805 (4.88)	8	1.64	10.33
9/21	AEOT-8	0948-1145 (4.95)	1	0.20	1.27
	AEOT-9	1544-2042 (4.97)	4	0.80	5.07
	AEOT-10	2119-0224 (5.08)	22	4.33	27.28
	AEOT-11	0310-0814 (5.07)	15	2.96	18.63
9/26	AEOT-12	0940-1445 (5.08)	13	2.56	16.12
	AEOT-13	1537-2037 (5.00)	39	7.80	49.14
	AEOT-14	2115-0223 (5.13)	39	7.60	47.89
	AEOT-15	0315-0831 (5.27)	26	4.93	31.08
9/27	AEOT-16	0947-1500 (5.22)	3	0.57	3.62
	AEOT-17	1534-2032 (4.97)	8	1.61	10.14
	AEOT-18	2115-0220 (5.08)	40	7.87	49.61
	AEOT-19	0306-0842 (5.60)	17	3.04	19.12
9/28	AEOT-20	0945-1444 (4.98)	1	0.20	1.26
	AEOT-21	1534-2034 (5.00)	16	3.20	20.16
	AEOT-22	2115-0216 (5.02)	38	7.57	47.69
	AEOT-23	0302-0802 (5.00)	32	6.40	40.32
9/17	AEOPA-1	2021-2339 (3.28)	26	7.93	49.94
9/23-24	AEOPA-2	2230-0144 (3.23)	27	8.42	52.67
9/24	AEOPA-3	1951-2258 (3.12)	19	6.25	38.36
9/25-26	AEOPA-4	2222-0131 (3.15)	25	7.74	50.02

[a]Loads of calcine charged to the reverberatory furnace during the sample period.

[b]Loads charged during the sampling period divided by the duration of the sampling period in hours.

[c]Tons of calcine per hour calculated assuming 6.3 tons of calcine per load.

Note: Process information supplied by ASARCO, Inc., and U.S. EPA.

air quality standards for sulfur dioxide. The AEOPA sample runs were performed only during periods when the reverberatory furnace was charged at its nominal maximum production rate (six to eight loads per hour).

Process material and dust samples were also collected. These included composite samples of the smelter feed (roaster charge), reverberatory furnace charge (calcine), reverberatory furnace matte, and dust collected by the pipe and plate precipitators. The process material samples were collected to determine if the arsenic input to the smelter and the furnace operation were within normal operating limits during the course of the test program.

All samples were collected by ASARCO personnel and submitted to PEDCo for arsenic analysis. The arsenic analytical results are summarized in Table 3-2. The arsenic content of the roaster charge material ranged from 2.9 to 4.2 percent by weight and averaged 3.6 percent, which is well within the 3 to 5 percent operating range for the ASARCO-Tacoma smelter. Arsenic content of the calcine charged to the reverberatory furnace ranged from 1.6 to 3.4 percent for the 11 work shifts for which samples were available. The arsenic content of the matte samples collected ranged from 0.5 to 0.7 percent, which is representative of normal reverberatory furnace operation. Precipitator dust samples averaged 55 percent arsenic.

3.2.2 Arsenic Plant Baghouse

Data recorded during the testing of the arsenic plant baghouse included the baghouse inlet temperature, the temperature

TABLE 3-2 PROCESS SAMPLE ANALYTICAL RESULTS, REVERBERATORY FURNACE

Date (1983)	Sample description	Arsenic,[a] %
9/19	Calcine 7:00 a.m. - 3:00 p.m. shift	2.77
9/19	Calcine 3:00 p.m. - 11:00 p.m. shift	1.57
9/19	Roaster charge	3.18
9/20	Matte	0.51
9/21	Calcine 7:00 a.m. - 3:00 p.m. shift	2.56
9/21	Calcine 11:00 p.m. - 7:00 a.m. shift	2.94
9/21	Roaster charge	4.11
9/21	Matte	0.48
9/26	Calcine 7:00 a.m. - 3:00 p.m. shift	2.55
9/26	Calcine 3:00 p.m. - 11:00 p.m. shift	3.00
9/26	Roaster charge	4.21
9/26	Matte	0.58
9/27	Calcine 7:00 a.m. - 3:00 p.m. shift	2.24
9/27	Calcine 11:00 p.m. - 7:00 a.m. shift	2.49
9/27	Roaster charge	2.90
9/27	Matte	0.60
9/28	Calcine 7:00 a.m. - 3:00 p.m. shift	3.00
9/28	Calcine 3:00 p.m. - 11:00 p.m. shift	2.77
9/28	Calcine 11:00 p.m. - 7:00 a.m. shift	3.36
9/28	Roaster charge	3.86
9/28	Matte	0.67
	ESP Hopper Dust	
9/20	Pipe and plate No. 3 silo	54.8
9/21	Pipe and plate No. 3 silo	54.7
9/28	Pipe and plate No. 3 silo	54.7
9/29	Pipe and plate No. 3 silo	58.0

[a]Percent arsenic (by weight) determined by use of the sample preparation and analytical techniques described in Proposed EPA Method 108.

Note: All samples collected and identified by ASARCO, Inc.

and pressure drop across each of the five baghouse compartments, and information on the process status of the arsenic trioxide and arsenic metal plants. Process status information was limited to a record of the number of Godfrey roasters and metallic arsenic furnaces that were on line at any time. This information was recorded at half-hour intervals. Information on actual production rates achieved during testing was not obtainable.

During each of the seven test runs, only four of the five baghouse compartments were operating. The No. 3 compartment was off line because of a malfunctioning outlet damper. Plant personnel indicated that this condition has existed for several months. The effect of the inoperative compartment is a 20 percent reduction in the baghouse filtering area. On the average, the baghouse treated about 1020 m^3/min (36,000 cfm) of gas at 25°C (77°F) during the tests and operated at an air-to-cloth ratio of 0.91 m^3/min per m^2 (2.98 cfm/ft^2).

Process samples collected during each of the seven sample runs conducted across the baghouse included composite samples of the Godfrey roaster charge and collected baghouse dust. Results of PEDCo's arsenic analyses on these samples are presented in Table 3-3. Feed to the roasters consisted of a blend of materials that included flue dusts from the No. 1 and 2 electrostatic precipitators, flue dusts from the multihearth roaster baghouse, and rerun material from the arsenic kitchens. As shown in Table 3-3, the arsenic content of the Godfrey roaster charge ranged from 25 to 62 percent and averaged 33.5 percent over the course

TABLE 3-3 PROCESS SAMPLE ANALYTICAL RESULTS
ARSENIC PLANT

Date (1983)	Sample description	Arsenic,[a] %
9/14	Roaster charge	37.2
	Baghouse dust	74.5
9/15	Roaster charge	27.8
	Baghouse dust	73.5
9/16	Roaster charge	25.3
	Baghouse dust	75.2
9/17	Roaster charge	32.2
	Baghouse dust	67.7
9/23	Roaster charge 7:00 a.m. - 3:00 p.m.	33.2
	Baghouse dust 7:00 a.m. - 3:00 p.m.	75.8
9/23	Roaster charge 3:00 p.m. - 11:00 p.m.	61.6
	Baghouse dust 3:00 p.m. - 11:00 p.m.	72.8
9/24	Roaster charge 7:00 a.m. - 3:00 p.m.	47.1
	Baghouse dust 7:00 a.m. - 3:00 p.m.	71.8

[a]Percent arsenic (by weight) determined by use of the sample preparation and analytical techniques described in Proposed EPA Method 108.

Note: All samples collected and identified by ASARCO, Inc.

of the seven sample runs. The arsenic content of the collected baghouse dust ranged from 68 to 76 percent and averaged 73 percent. Two Godfrey roasters (Nos. 4 and 6) were operated during each of the seven sample runs. No arsenic metal furnaces were operated during the first four sample runs, whereas two were operated during the fifth and sixth runs and one during the seventh run.

As previously discussed in subsection 2.3, a flow imbalance was discovered across the baghouse during the three sample runs conducted with both the arsenic trioxide and arsenic metal plants in operation. The measured outlet flow was about 30 percent higher than the combined flow measured at the arsenic trioxide plant and arsenic metal plant inlet locations.

Investigations led to the conclusion that the flow imbalance was a result of a malfunctioning damper located in the arsenic metal plant bypass duct. The bypass duct connects the arsenic metal plant baghouse inlet duct to the arsenic trioxide plant exhaust flue. The damper, believed to be in a closed position by ASARCO personnel, was discovered to be stuck in the open position. The effect was to divert a portion of the flow in the arsenic trioxide plant flue through the bypass duct and into the arsenic metal plant baghouse inlet duct. Because the sampling location for the arsenic trioxide plant was downstream of the bypass duct entry and the arsenic metal plant sampling location was upstream of the bypass duct exit, the flow diverted from the arsenic trioxide plant flue could be measured.

In addition to the flow imbalance problem, the arsenic concentration measured at the arsenic trioxide plant inlet test location was substantially lower than that measured during the first series of tests. The arsenic concentration measured during the second test series averaged 1.04 g/m^3 (0.45 gr/dscf) versus 7.89 g/m^3 (3.44 gr/scf) during the first test series.

The EPA and ASARCO were unsuccessful in their attempts to explain this disparity in arsenic loading from the arsenic trioxide plant.

SECTION 4

SAMPLING LOCATIONS AND TEST PROCEDURES

This section describes the sampling sites and the test methods used to characterize arsenic and particulate emissions from the No. 2 reverberatory furnace and the arsenic plant.

4.1 REVERBERATORY FURNACE ESP OUTLET

During the test series, PEDCo conducted of 33 tests at this location to determine particulate and arsenic concentrations and mass emission rates by using procedures described in EPA Methods 1 through 5 and 108.* As described in Sections 2 and 3, most of these tests were performed with multipoint traverse techniques under varying reverberatory furnace process rates. Six continuous, single-point tests were also performed.

The existing sampling ports located on top of the rectangular brick breeching connecting the ESP outlet with the main stack were used in all the tests. Figure 4-1 presents a schematic of the sampling site and the approximate location of the ASARCO sampler. Because of the geometric configuration of the ductwork and the location of the flow control dampers and corresponding

---

*40 CFR 60, Appendix A, Reference Methods 1 through 5, July 1982. Proposed Method 108 is in draft form.

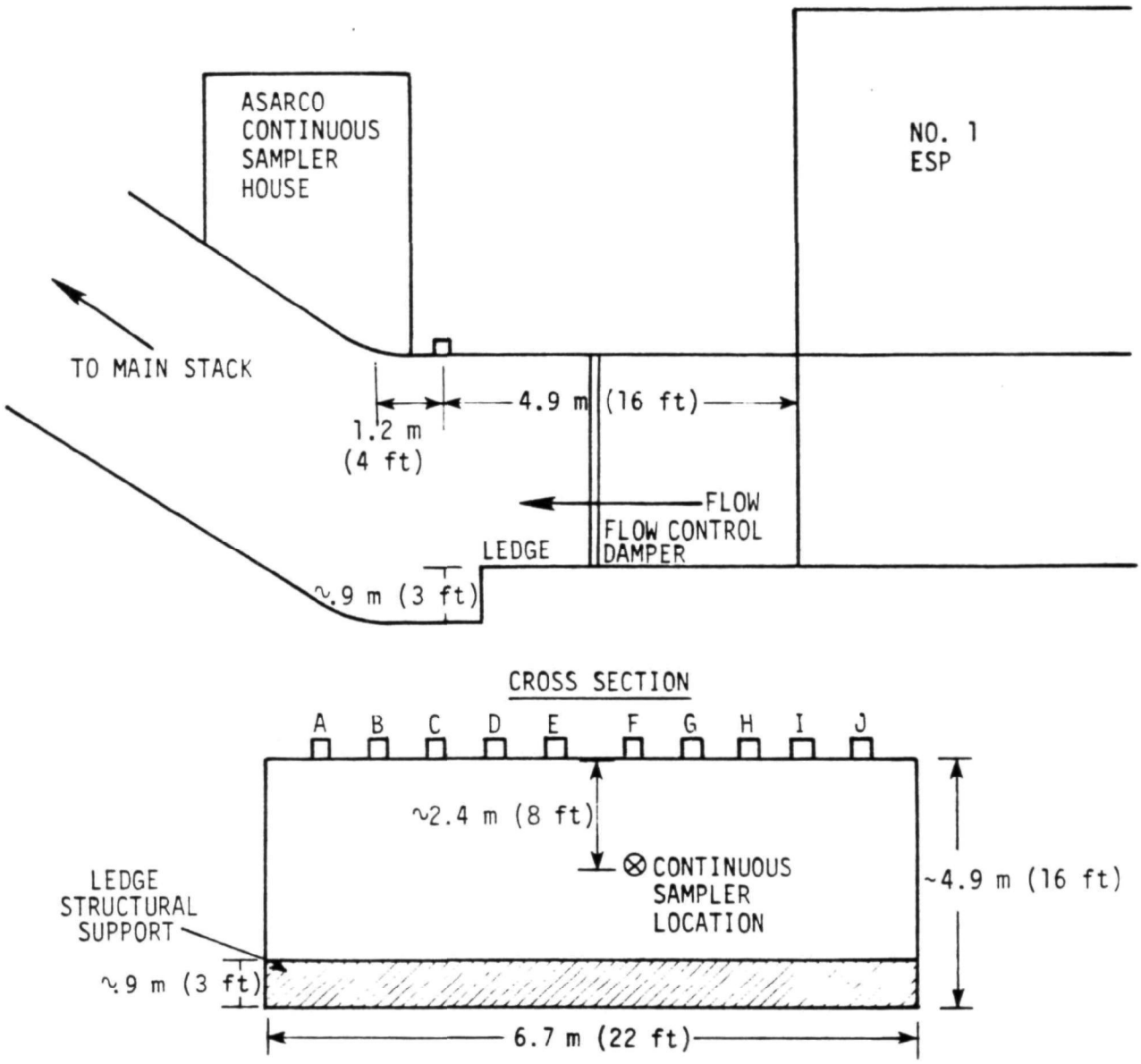

Figure 4-1. No. 1 ESP outlet test location.

structural supports (see Figure 4-1), the sampling site did not meet the minimum requirements specified in EPA Reference Method 1.* This site, however, was the only one available for access to the total cross-sectional area of the ESP outlet breeching.

Ten 6.4 x 9.5 cm (2-1/2 x 3-3/4 in.) sampling ports were located approximately 61 cm (24 in.) off-center in the 6.7 m (22 ft) wide rectangular brick breeching. The depth of each sampling port casing varied within a range of 38 to 43 cm (15 to 17 in.). A nominal depth of 40.6 cm (16 in.) was used for placing the sampling points.

Figure 4-2 presents a schematic of the flue cross section and relative locations of sampling points for the traverse and single-point trains. An uneven deposition of material on the bottom of the flue posed problems in establishing a cross-sectional sampling area and sampling point matrix that would avoid contamination of test samples. Therefore, the sediment depth at each sampling port was determined by first measuring the distance from the top of the sampling port casing to the top layer of sediment and then subtracting the nominal depth of the port casing. These values are recorded in parentheses for each sample port in Figure 4-2.

A velocity and temperature profile was established according to the procedures described in EPA Method 2.* Based on the sediment depth information contained in Figure 4-2, a 150-point

---

*40 CFR 60, Appendix A, Reference Methods 1 and 2, July 1982.

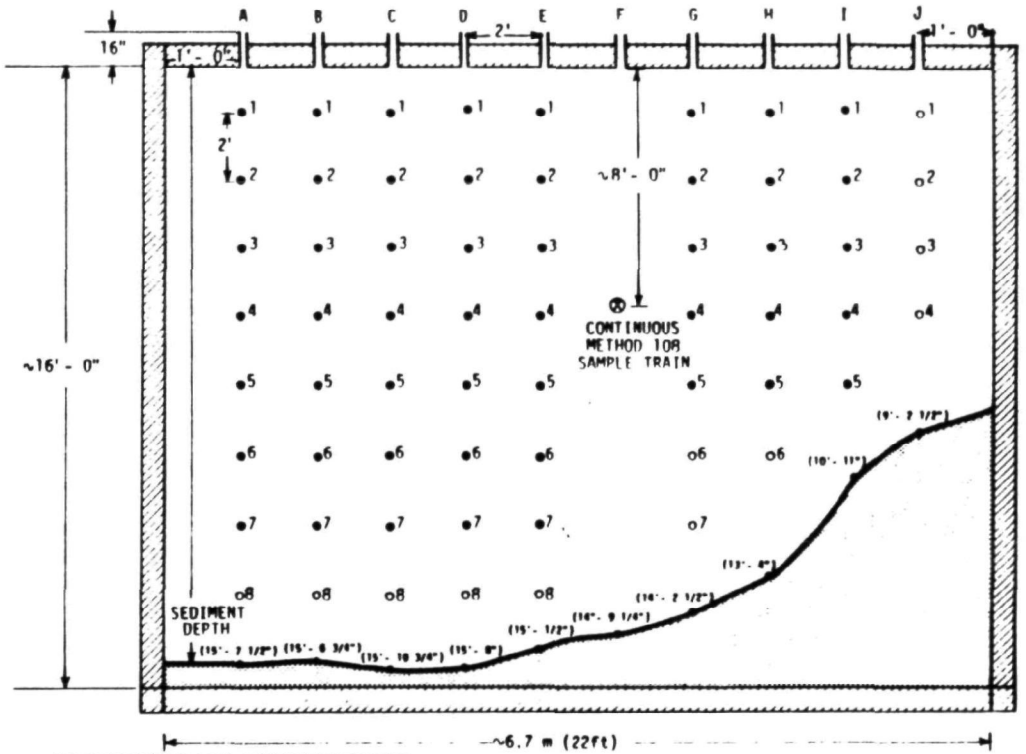

TRAVERSE POINT	DISTANCE FROM TOP OF SAMPLE PORT - cm (in.)
1	71 (28)
2	132 (52)
3	193 (76)
4	254 (100)
5	315 (124)
6	376 (148)
7	437 (172)
8	498 (196)

Figure 4-2. Sediment profile of the ESP outlet duct (cross section) and location of sample points (no scale).

traverse matrix was established in which sampling points were located at 0.3-m (1-ft) increments in each sampling port. Fifteen of the 150 points could not be measured because of the sediment. Table 4-1 summarizes pertinent data from the velocity and temperature profile. Overall, the flow and temperature characteristics were comparable and no excessive turbulent (nonaxial) flow patterns were apparent. This is evidenced by the minimum number of zero and/or negative flow points. An attempt was made to characterize the degree of turbulent flow according to procedures described in EPA Reference Method 2. In this method, the face openings of the Type-S pitot tube are aligned perpendicularly to the duct cross-sectional plume, designated "0-degree reference." Null (zero) pitot readings obtained at 0-degree reference indicate an acceptable flow condition at a given point.

If the pitot reading is not zero at 0-degree reference, a rotation of the pitot (up to 90 degrees ± yaw angle) is made until a null reading is obtained. The value of the rotation angle (yaw) is recorded for each point and averaged across the duct. Method 2 criteria stipulate that average angular rotations greater than ±10 degrees indicate turbulent flow conditions in the duct. Because of the size of the pitot system [>4.6 m (15 ft)] used and the general insensitivity of the Type-S pitot tube in measuring yaw and pitch angles, results from this characterization were inconclusive.

As shown in Table 4-1, only Port J showed an unusual flow pattern characterized by a number of points exhibiting zero flow.

TABLE 4-1. SUMMARY OF INITIAL VELOCITY AND TEMPERATURE PROFILE DATA

Port	Average ΔP,[a] in.H_2O	Average temperature, °F	Average gas[b] velocity, ft/s	Average pressure, in.H_2O
A	0.17	179	25.2	-1.2
B	0.15	175	23.7	-1.25
C	0.14	181	23.1	-1.25
D	0.13	182	20.9	-1.2
E	0.14	176	22.3	-1.2
F	0.20	173	27.1	-1.2
G	0.19	169	26.6	-1.2
H	0.17	170	23.2	-1.2
I	0.195	164	26.6	-1.2
J	0.03	166	9.0	-1.2
Average			22.8	-1.2

[a]Average velocity pressure.

[b]A dry molecular weight of 29.00 and a moisture content of 4.0 percent were used for calculation purposes, based on historical test data.

Based on the depth of sediment at this point, this was as expected.

Gas velocities generally were consistent with maximum velocities near the center of each sampling port. A decrease in gas velocity was noted at points near the bottom of the breeching, which reflects the effect of the flow control damper structural support (see Figure 4-1). Figure 4-3 presents a typical velocity profile for Sample Ports A, D, F, and I. The highest velocity measurements occurred in Sample Port F, which was the port used for the continuous, single-point sampling train. As expected, volumetric flow rates as measured by the single-point train were greater than those measured by the traverse sampling train.

Based on the sediment and velocity profile data, a 9 x 8 sample matrix, excluding Port F, was established (see Figure 4-2). To avoid sample contamination, sampling points located within 40.6 cm (16 in.) of the top layer of sediment were not sampled. Incremental sampling areas established for each port were based on the sediment depth data and the distance between sampling port centerlines. A cross-sectional sample area of 26.1 m^2 (280.5 ft^2) was calculated and used in all volumetric flow and emission rate calculations involving multiplane traverse sampling techniques. For the continuous, single-point sampling train, a cross-sectional sampling area of 24.4 m^2 (262.5 ft^2) was used in calculations of mass flow rates. The sampling area for the fixed point train was determined by excluding the incremental area of Port J 1.7 m^2 (18 ft^2) from the total area to account for the zero flow condition established at this port.

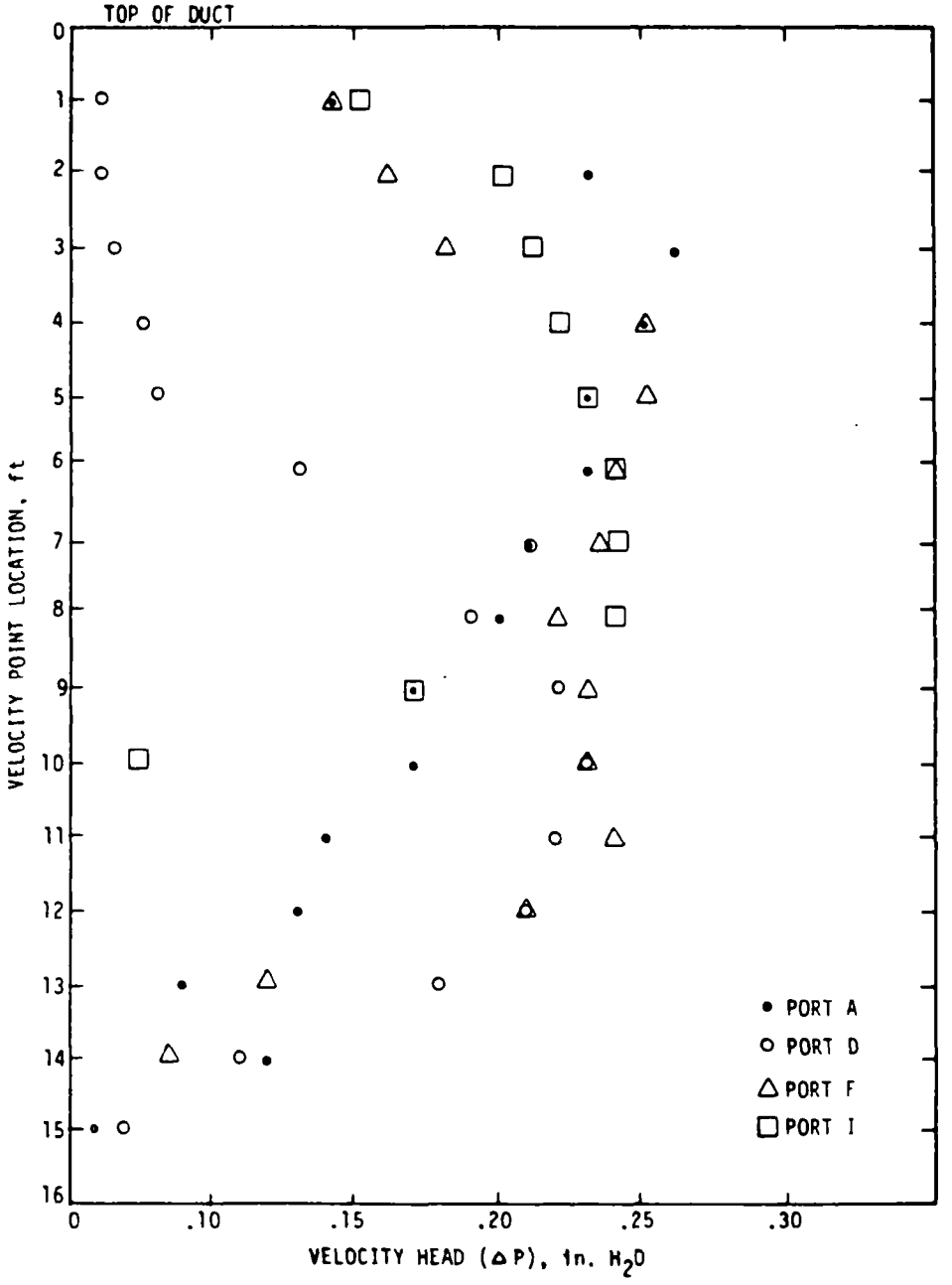

Figure 4-3. Simplified ESP outlet velocity profile.

As shown in Figure 4-2, 55 sampling points were used to perform each isokinetic cross-sectional traverse. Sample times varied with the type of test being conducted. For example, tests to characterize particulate and arsenic emissions at full reverberatory furnace charge rates (designated AEOPA) usually were run for 3 minutes per sampling point, or 165 minutes. Typical times for tests conducted in conjunction with the 23-hour continuous sampling train (designed AEOT) were 5.5 minutes per sampling point, or 302.5 minutes. With the exception of tests performed on September 17, 19, and 20, 1983 (AEOPA-1 and AOET-1 through 3), Sampling Port J was not sampled because of the zero flow characteristics exhibited and the time required to move the sample system around several obstructions, including electrical wiring. These four sample points were included on the field data sheets as zero flow points.

4.2 ARSENIC PLANT

Arsenic concentration and mass emission rates were determined at the inlet to and outlet of the baghouse controlling emissions from the arsenic trioxide (As_2O_3) and metallic arsenic processes.

At the baghouse outlet, existing sample ports were used for testing. Two sampling ports, 90 degrees off-center, were located approximately 6.5 duct diameters upstream and more than 9 duct diameters downstream from the nearest flow disturbances in the 95-cm (37¼-in.) i.d. round duct. The cross-sectional area of the

duct was traversed at 12 sampling points. Tests AABO-1 through 4 were conducted for 6 hours, and Tests AABO-5 through 7 were conducted for 3 hours.

At the As_2O_3 inlet, the two existing sampling ports, 90 degrees off-center, were approximately 1.5 duct diameters downstream and less than 0.5 duct diameter upstream from the nearest flow disturbance in the 68-cm (26-5/8 in.) i.d. round duct. The location of these sampling ports did not meet the minimum requirements specified in EPA Method 1. Because a nonaxial flow at this location could cause a bias in test results, new sampling ports were located downstream from the existing ports. These ports were 4.9 duct diameters downstream and 8.1 duct diameters upstream from flow disturbances. The cross-sectional area of the duct was traversed at 32 sampling points. Because of the heavy dust load encountered at this location during Tests 1 through 4, sampling times were adjusted to control the pressure drop across the sample filter. During Test 1, which lasted nearly 6 hours, a high pressure drop caused two filter frit supports to rupture and a portion of the dust normally captured on the filter was collected in the first impinger. This had no effect on the arsenic measurement because the arsenic content of the first two impingers is included in the total arsenic collected by the sampling system. A portion of the sample was lost when rupture disks in the acid digestion bombs failed during analysis. As noted in Section 2, results from Test ABKI-1 are biased low and are considered to be nonrepresentative of emissions from the As_2O_3 plant

during this test. To maintain simultaneous test conditions at the inlet and outlet and to reduce the inlet sample loading, we started both trains simultaneously. The outlet train ran constantly, whereas the inlet train was only operated for 30 minutes each hour, starting on the hour. This resulted in a cumulative inlet sampling time of 3 hours for runs ABKI-2, 3, and 4. During the second set of tests (ABKI-5, 6, 7; ABMI-1, 2, 3; AABO-5, 6, 7), the sampling time for all tests at the kitchen inlet, the metallic inlet, and the baghouse outlet was 3 hours.

At the metallic plant exit duct, test ports were installed in the 94-cm (37-in.) round duct so that they would be at least 2.5 duct diameters upstream and 6 duct diameters downstream from flow disturbances. The cross-sectional area of the duct was traversed at 24 sampling points. Figure 4-4 depicts the baghouse outlet and As_2O_3 inlet sampling locations, and Figure 4-5 presents the metallic plant inlet test location.

4.3 SAMPLING AND ANALYTICAL PROCEDURES

The sampling and analytical procedures for this test program followed those described, where applicable, in EPA Reference Methods 1 through 5* and proposed Method 108.* The procedures are briefly summarized here. Detailed procedures are presented in Appendix D.

---

*40 CFR 60, Appendix A, Reference Methods 1 through 5, July 1982, and proposed Method 108 is in draft form.

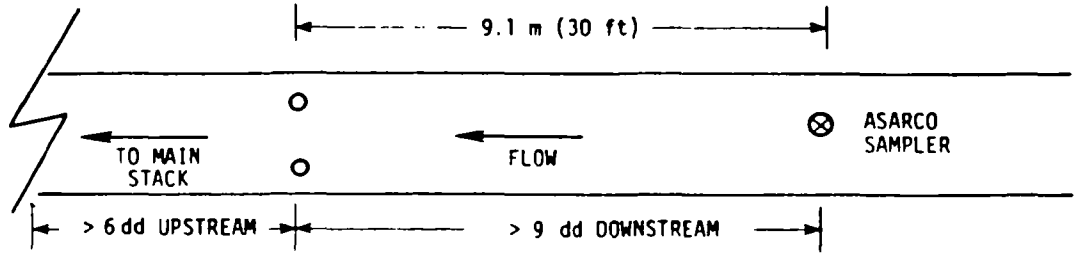

TRAVERSE POINT NO.	DISTANCE FROM OUTSIDE OF NIPPLE (in.)
1	6 1/8
2	10
3	15 1/2
4	30 3/4
5	36 1/4
6	40 1/8

BAGHOUSE OUTLET

CROSS-SECTION

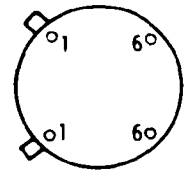

95 cm (37 1/4 in.) i.d.
NIPPLE LENGTH: 11.4 cm (4 1/2 in.)

TRAVERSE POINT NO.	DISTANCE FROM OUTSIDE OF NIPPLE (in.)
1	10 1/2
2	10 3/4
3	11 3/4
4	12 7/8
5	14
6	15 3/8
7	17
8	19 1/2
9	26 1/8
10	28 5/8
11	30 1/4
12	31 5/8
13	32 3/4
14	33 7/8
15	34 7/8
16	35 1/8

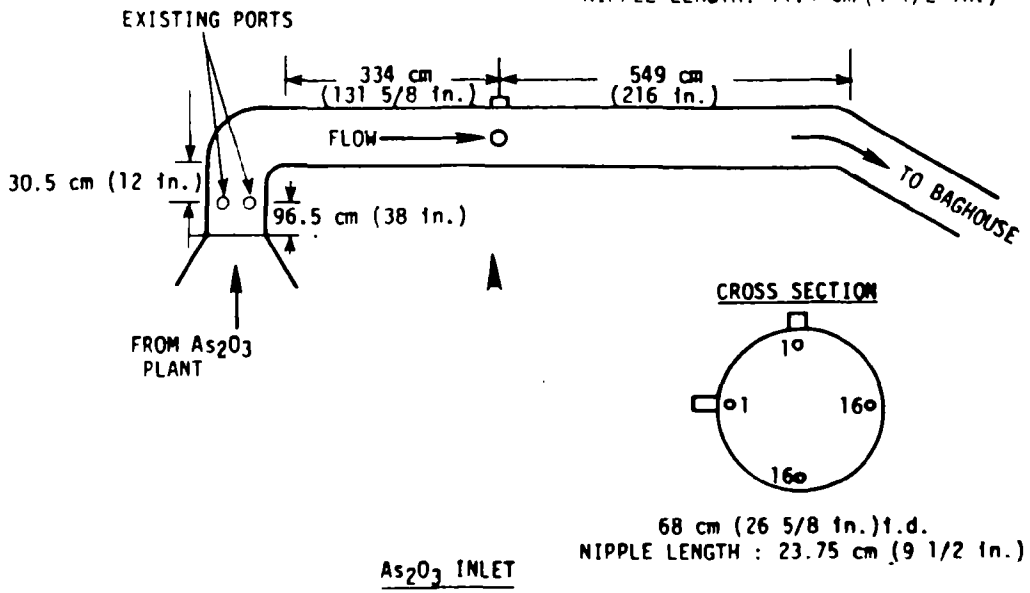

Figure 4-4. Arsenic plant baghouse outlet and arsenic trioxide inlet test locations.

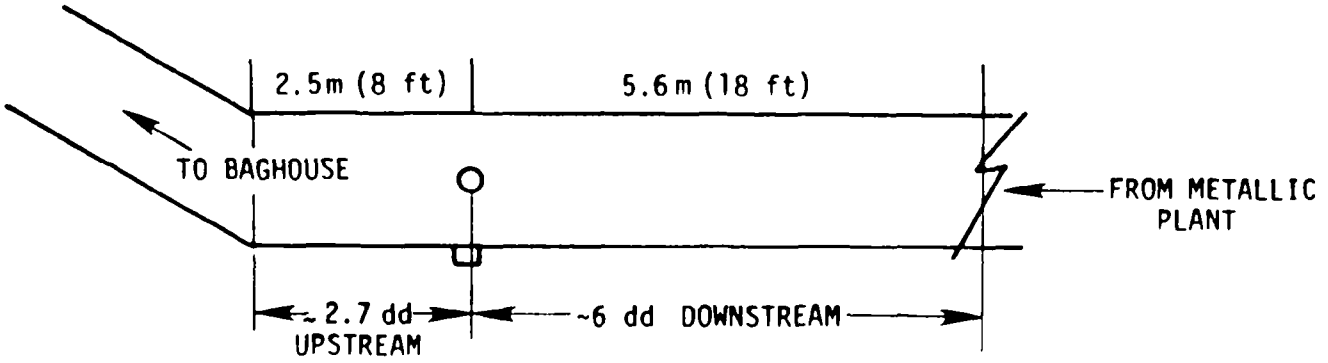

TRAVERSE POINT NO.	DISTANCE FROM OUTSIDE OF NIPPLE (in.)
1	7 1/4
2	8 3/4
3	10 5/8
4	12 3/4
5	15 1/2
6	19 3/8
7	30 1/8
8	34
9	36 3/4
10	38 7/8
11	40 3/4
12	42 1/2

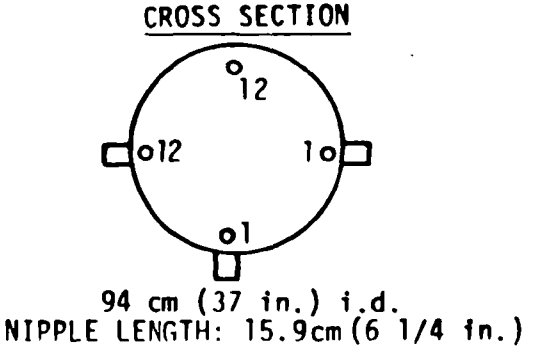

Figure 4-5. Metallic arsenic plant inlet test location.

4.3.1 Velocity and Gas Temperature

A Type-S pitot tube and an induced draft gauge manometer were used to measure the gas velocity pressures at the test sites. Velocity pressures were measured at each sampling point across the duct to determine an average value. Measurements were taken in accordance with procedures outlined in Reference Method 2 of the Federal Register.* The temperature at each sampling point was measured with a thermocouple and digital readout.

4.3.2 Molecular Weight

Flue gas composition was determined in accordance with the basic procedures described in Reference Method 3.* Grab samples were collected prior to the start of any sampling to establish baseline contents of oxygen, carbon dioxide, and carbon monoxide. Bag samples were collected during each test at the arsenic plant and at least twice a day at the ESP outlet during the 23-hour continuous testing. Samples were analyzed using an Orsat gas analyzer. Based on the SO_2 concentration as determined from the Method 108 sample train, carbon dioxide results were corrected for SO_2 since SO_2 would be included in the Orsat-generated CO_2 value causing a high bias in CO_2 results. The percentage of SO_2 in each gas stream sampled typically measured less than 0.4 percent by volume. The gas composition at each test site remained consistent throughout the test series.

---

*40 CFR 60, Appendix A, Reference Methods 2 and 3, July 1982.

4.3.3 Particulate/Arsenic

Methods 5* and 108** were used to measure particulate and arsenic concentrations. All tests were conducted isokinetically by regulating the sample flow rate relative to the gas velocity in the duct (as measured by the pitot tube and thermocouple attached to the sample probe). The basic sampling train consisted of a heated glass- or stainless steel-lined probe, a heated 7.6-cm (3-in.) diameter glass fiber (Whatman Reeve Angel 934AH) filter, a heated Teflon connector, and a series of six Greenburg-Smith impingers followed by a vacuum line, vacuum gauge, leak-free vacuum pump, dry gas meter, thermometers, and a calibrated orifice.

For determination of particulate and arsenic concentrations, the nozzle, probe, and filter holder portions were rinsed with acetone at the end of each applicable test. Upon completion of the acetone rinse, an additional rinse with 0.1 N NaOH was performed. The acetone rinse and particulates caught on the filter media were dried at room temperature, desiccated to a constant weight, and weighed on an analytical balance. Total filterable particulate matter was determined by adding these two values.

Upon completion of the gravimetric analysis, the filter, acetone rinse, and solids contained in the 0.1 N NaOH rinse of the front half of the sampling train were prepped, combined, and

---

*40 CFR 60, Appendix A, Reference Method 5, July 1982.

**Method 108 is a proposed method.

analyzed for arsenic (by atomic absorption). The only differences between the recovery and analysis of particulate/arsenic and arsenic only are the acetone rinse and gravimetric weighing. Tests run to determine arsenic only were rinsed with 0.1 N NaOH, and the filter and NaOH rinse were subsequently prepped and analyzed by atomic adsorption. Figure 4-6 summarizes the sample recovery and analytical procedures used.

The volume of water collected in the impinger section of the sampling train was measured at the end of each sampling run to determine the moisture content of the flue gas. The contents of the first two impingers were transferred to a polyethylene container. The impingers, Teflon connector, and all connecting glassware (including the back half of the filter holder) were rinsed with 0.1 N NaOH, and the rinse was added to the container. The contents of the third, fourth, and fifth impingers were transferred to a polyethylene container. The impingers and all connecting glassware were rinsed with distilled water and added to the container. The contents of the first two impingers and 0.1 N NaOH rinse also were analyzed for arsenic by atomic absorption. The contents of the third, fourth, and fifth impingers and distilled water rinse were titrated on site with NaOH to determine SO_2 concentrations.

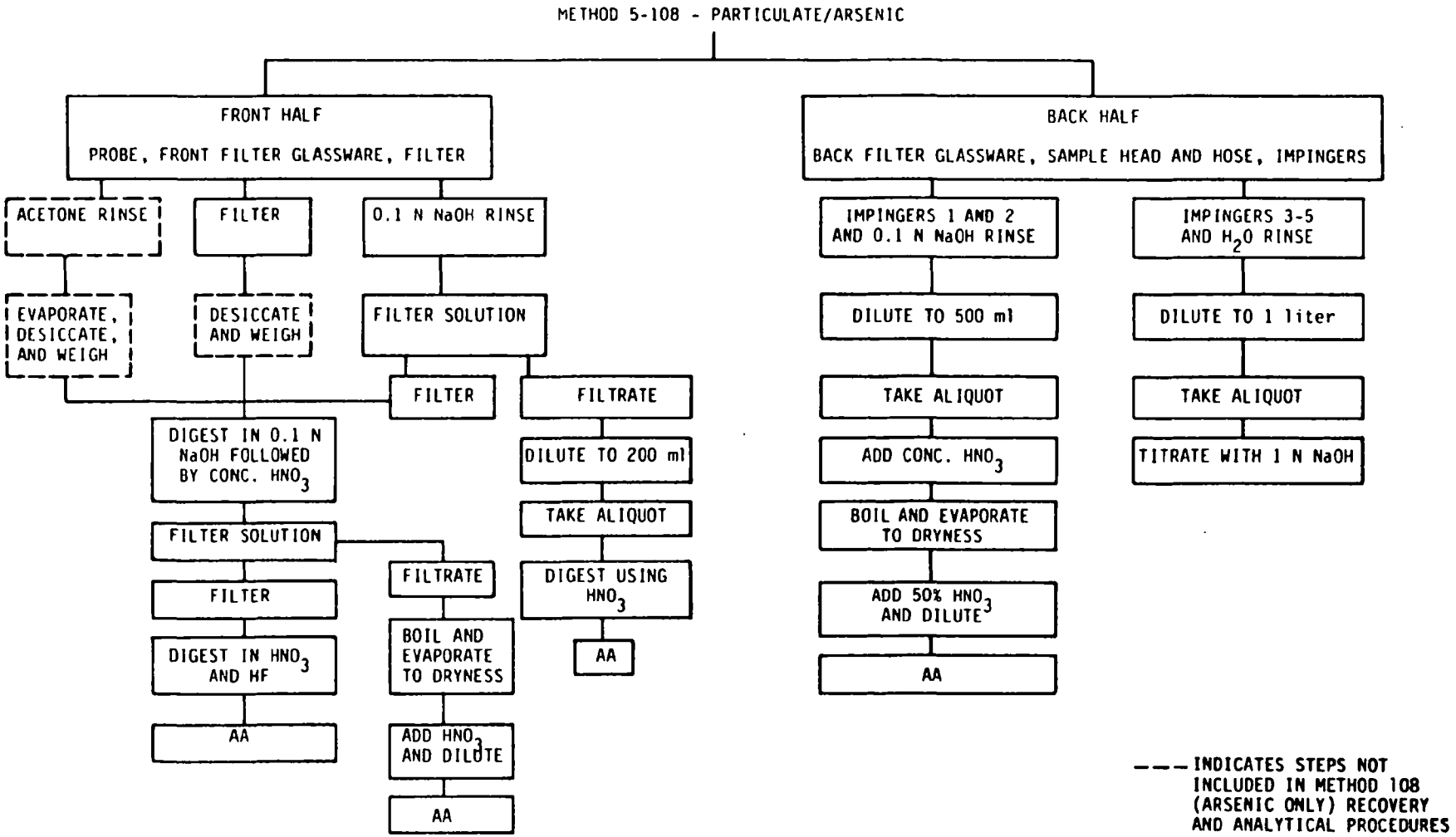

Figure 4-6. Sample recovery and analysis flow chart for particulate/arsenic.

SECTION 5

QUALITY ASSURANCE

Because the desired end product of testing is representative emission results, quality assurance is one of the main facets of stack sampling. Quality assurance guidelines provide the detailed procedures and actions necessary for defining and producing acceptable data. Four such documents were used in this test program to ensure the collection of acceptable data and to provide a definition of unacceptable data. The following documents comprise the source-specific test plan prepared by PEDCo and reviewed by the Emission Measurement Branch: the Quality Assurance Handbook Volume III, EPA-600/4-77-027; the PEDCo Environmental Emission Test Quality Assurance Plan; and the PEDCo Environmental Laboratory Quality Assurance Plan. The last two, which are PEDCo's general guideline manuals, define the company's standard operating procedures and are followed by the emission testing groups and the laboratory groups.

Relative to this specific test program, the following steps were taken to ensure that the testing and analytical procedures produced quality data.

- Calibration of all field sampling equipment.
- Checks on train configuration and calculations.

- Onsite quality assurance checks (i.e., sampling train, pitot tube, and Orsat line leak checks) and quality assurance checks of all test equipment prior to use.
- Use of designated analytical equipment and sampling reagents.
- Internal and external audits to ensure accuracy in sampling and analysis.

Table 5-1 lists the sampling equipment used to perform the particulate and arsenic tests as well as the calibration guidelines and limits. In addition to the pre- and post-test calibrations, a field audit was performed on the metering systems and thermocouple digital indicators used for the particulate and arsenic sample runs. PEDCo-constructed critical orifices were used for dry gas meter audits. Figures 5-1 through 5-8 show example audit runs for each dry gas meter used for particulate and arsenic tests. Figures 5-9 through 5-12 show example audit results for the digital temperature indicators used during testing.

Emission rate calculations were performed on site by EPA and PEDCo personnel. Calculations were performed independently for data validation purposes. Computer programming was used to recheck and validate the data at the end of the test program. The minor discrepancies that exist between the hand calculations and computer printouts are due primarily to round-off error. Figure 5-13 presents an example calculation form used by the EPA during this test program. Computerized example calculations are presented in Appendix A.

TABLE 5-1. FIELD EQUIPMENT CALIBRATION

Equipment	I.D. No.	Calibrated against	Allowable deviation	Actual deviation	Within allowable limits	Comments
Meter box	FB-1	Wet test meter	Y ±0.02 Y	+0.004	X	
			ΔH @ ±0.15	-0.09	X	
			(Y ±0.15 Y post-test)	+0.012	X	
	FB-2			-0.012	X	
				-0.08	X	
				+0.005	X	
	FB-3			+0.016	X	
				+0.05	X	
				-0.003	X	
	FB-4			-0.005	X	
				-0.10	X	
				+0.042	X	
	FB-5			-0.002	X	
				+0.05	X	
				+0.009	X	
	FB-9			-0.006	X	
				-0.09	X	
				-0.003	X	
	FB-10			+0.003	X	
				-0.09	X	
				+0.007	X	

(continued)

TABLE 5-1 (continued)

Equipment	I.D. No.	Calibrated against	Allowable deviation	Actual deviation	Within allowable limits	Comments
Meter box (continued)	FB-11	Wet test meter	Y ±0.02 Y	+0.007	X	
			ΔH @ ±0.15	-0.03	X	
			(Y ±0.15 $\bar{Y}$ post-test)	-0.004	X	
Pitot tube	026	Standard pitot tube	Cp ±0.01	-	X	Visually inspected on site
	028			-	X	
	032			-	X	
	187			-	X	
	284			-	X	
	387			-	X	
Digital indicator	125	Millivolt signals	±0.5%	+0.77%	No	
	126			-0.50%	X	
	207			+0.30%	X	
	220			-0.50%	X	
	262			+0.38%	X	
Thermocouple	130	ASTM-2F	±1.5%	+0.61%	X	
	138		(±2% saturated)	+0.20%	X	
	175			+0.22%	X	
	178			+0.47%	X	
	202			+0.47%	X	
	203			-0.37%	X	
	204			+0.47%	X	
Orsat analyzer	141	Standard gas	±0.5%	-0.3%	X	

(continued)

TABLE 5-1 (continued)

Equipment	I.D. No.	Calibrated against	Allowable deviation	Actual deviation	Within allowable limits	Comments
Impinger thermometer	288	ASTM-2F	±2°F	0°F	X	
	290			0°F	X	
	382			0°F	X	
	384			+1°F	X	
Trip balance	195	Type S weights	±0.5 g	0.0 g	X	
Barometer	229	NBS traceable barometer	±0.10 in.Hg (0.20 in.Hg post-test)	-0.01 in.Hg (-0.11 in.Hg)	X X	
Dry gas thermometer	FB-1	ASTM-2F	±5°F	-4.0°F	X	Inlet
	FB-1			-5.0°F	X	Outlet
	FB-2			-3.5°F	X	Inlet
	FB-2			-2.0°F	X	Outlet
	FB-3			-3.0°F	X	Inlet
	FB-3			-2.7°F	X	Outlet
	FB-4			-3.0°F	X	Inlet
	FB-4			+1.3°F	X	Outlet
	FB-5			+4.0°F	X	Inlet
	FB-5			-2.5°F	X	Outlet
	FB-9			+2.0°F	X	Inlet
	FB-9			-2.0°F	X	Outlet
	FB-10			-2.0°F	X	Inlet
	FB-10			-2.0°F	X	Outlet
	FB-11			-2.0°F	X	Inlet
	FB-11			+2.0°F	X	Outlet

(continued)

TABLE 5-1 (continued)

Equipment	I.D. No.	Calibrated against	Allowable deviation	Actual deviation	Within allowable limits	Comments
Probe nozzle	3-108	Caliper	Dn ± 0.004 in.	0.002 in.	X	
	2-106			0.000 in.	X	
	Setup 1			0.001 in.	X	
	Setup 2			0.003 in.	X	
	5-104			0.002 in.	X	
	5-103			0.001 in.	X	

AUDIT REPORT DRY GAS METER

DATE: 9-12-83 CLIENT: USEPA-EMB

BAROMETRIC PRESSURE (P_{bar}): 30.15 in. Hg METER BOX NO. FB-1

ORIFICE NO. # 1 PRETEST γ: 0.965

ORIFICE K FACTOR: 4.672×10^{-4} AUDITOR: MJ

Orifice manometer reading ΔH in H_2O	Dry gas meter reading V_i/V_f ft^3	Temperatures: Ambient T_{ai}/T_{af} °F	Dry gas meter: Inlet T_{ii}/T_{if} °F	Dry gas meter: Outlet T_{oi}/T_{of} °F	Duration of run $\emptyset$ min
1.60	147.000	70	74	68	15 21.2/60
	158.300	70	75	68	

Dry gas meter volume V_m ft^3	Average temperatures: Ambient T_a °F	Average temperatures: Dry gas meter T_m °F	$V_{m_{std}}$ ft^3	$V_{m_{act}}$ ft^3	Audit γ	γ deviation %
11.300	70	71.25	11.388	11.299	0.994	3.0 %

$V_{m_{std}}$	$V_{m_{act}}$
$\frac{(17.647)(V_m)(P_{bar} + \Delta H/13.6)}{(T_m + 460)}$	$\frac{(1203)(\emptyset)(K)(P_{bar})}{(T_a + 460)^{1/2}}$
11.388	11.299

Audit γ	γ deviation, %
$\frac{V_{m_{act}}}{V_{m_{std}}}$	$\frac{(\gamma \text{ audit} - \gamma \text{ pre-test})(100\%)}{(\gamma \text{ audit})}$
0.994	3.0 %

Audit γ must be in the range, pre-test γ ± 0.05 γ

Figure 5-1. Audit report dry gas meter (FB-1).

AUDIT REPORT DRY GAS METER

DATE: 9/22/83 CLIENT: USEPA

BAROMETRIC PRESSURE (P_{bar}): 29.95 in. Hg METER BOX NO. FB-2

ORIFICE NO. 12 PRETEST γ: 0.989

ORIFICE K FACTOR: 4.775×10^{-4} AUDITOR: Phillips

Orifice manometer reading ΔH in H_2O	Dry gas meter reading V_i/V_f ft^3	Temperatures: Ambient T_{ai}/T_{af} °F	Dry gas meter: Inlet T_{ii}/T_{if} °F	Dry gas meter: Outlet T_{oi}/T_{of} °F	Duration of run Ø min
1.8	133.709	58	58	58	15.0
	145.320	58	60	61	

Dry gas meter volume V_m ft^3	Average temperatures: Ambient T_a °F	Average temperatures: Dry gas meter T_m °F	$V_{m_{std}}$ ft^3	$V_{m_{act}}$ ft^3	Audit γ	γ deviation %
11.611	58	59	11.876	11.339	.989	-3.6

$V_{m_{std}}$	$V_{m_{act}}$
$\frac{(17.647)(V_m)(P_{bar} + \Delta H/13.6)}{(T_m + 460)}$	$\frac{(1203)(\ \emptyset\ )(\ K\ )(P_{bar})}{(T_a + 460)^{1/2}}$
11.876	11.339

Audit γ	γ deviation, %
$\frac{V_{m_{act}}}{V_{m_{std}}}$	$\frac{(\gamma \text{ audit} - \gamma \text{ pre-test})(100\%)}{(\gamma \text{ audit})}$
.955	-3.6

Audit γ must be in the range, pre-test γ ± 0.05 γ

Figure 5-2. Audit report dry gas meter (FB-2).

AUDIT REPORT DRY GAS METER

DATE: 9-19-83 CLIENT: USEPA

BAROMETRIC PRESSURE (P_{bar}): 30.43 in. Hg METER BOX NO. FB-3

ORIFICE NO. 12 PRETEST γ: 1.038

ORIFICE K FACTOR: 4.775×10^{-4} AUDITOR: Buffey

22" Hg Vacuum

Orifice manometer reading ΔH in H_2O	Dry gas meter reading V_i/V_f ft^3	Temperatures: Ambient T_{ai}/T_{af} °F	Dry gas meter: Inlet T_{ii}/T_{if} °F	Dry gas meter: Outlet T_{oi}/T_{of} °F	Duration of run Ø min
2.02	418.20	60	68	59	15.5
	429.30	60	69	60	

Dry gas meter volume V_m ft^3	Average temperatures: Ambient T_a °F	Average temperatures: Dry gas meter T_m °F	$V_{m_{std}}$ ft^3	$V_{m_{act}}$ ft^3	Audit γ	γ deviation %
11.1	60	64	11.665	11.881	1.00	-3.66 ok

$V_{m_{std}}$	$V_{m_{act}}$
$\frac{(17.647)(V_m)(P_{bar} + \Delta H/13.6)}{(T_m + 460)}$	$\frac{(1203)(\ \emptyset\ )(\ K\ )(P_{bar})}{(T_a + 460)^{1/2}}$

Audit γ	γ deviation, %
$\frac{V_{m_{act}}}{V_{m_{std}}}$	$\frac{(\gamma \text{ audit} - \gamma \text{ pre-test})(100\%)}{(\gamma \text{ audit})}$
1.00139	

Audit γ must be in the range, pre-test γ ± 0.05 γ

Figure 5-3. Audit report dry gas meter (FB-3).

AUDIT REPORT DRY GAS METER

DATE: 9/12/83 CLIENT: USEPA

BAROMETRIC PRESSURE (P_{bar}): 30.15 in. Hg METER BOX NO. FB-4

ORIFICE NO. 3 PRETEST γ: 1.030

ORIFICE K FACTOR: 5.544×10^{-4} AUDITOR: Phillips

Orifice manometer reading ΔH in H_2O	Dry gas meter reading V_i/V_f ft^3	Temperatures: Ambient T_{ai}/T_{af} °F	Dry gas meter: Inlet T_{ii}/T_{if} °F	Dry gas meter: Outlet T_{oi}/T_{of} °F	Duration of run Ø min
2.60	674.110	64	76	69	15.0
	686.565	64	76	69	

Dry gas meter volume V_m ft^3	Average temperatures: Ambient T_a °F	Average temperatures: Dry gas meter T_m °F	$V_{m_{std}}$ ft^3	$V_{m_{act}}$ ft^3	Audit γ	γ deviation %
12.455	64	73	12.512	13.177	1.053	2.2

$V_{m_{std}}$	$V_{m_{act}}$
$\frac{(17.647)(V_m)(P_{bar} + \Delta H/13.6)}{(T_m + 460)}$	$\frac{(1203)(\text{Ø})(K)(P_{bar})}{(T_a + 460)^{1/2}}$
12.512	13.177

Audit γ	γ deviation, %
$\frac{V_{m_{act}}}{V_{m_{std}}}$	$\frac{(\gamma \text{ audit} - \gamma \text{ pre-test})(100\%)}{(\gamma \text{ audit})}$
1.053	+ 2.2

Audit γ must be in the range, pre-test γ ± 0.05 γ

Figure 5-4. Audit report dry gas meter (FB-4).

AUDIT REPORT DRY GAS METER

DATE: 7/12/[illegible] CLIENT: U.S. EPA @ ASARCO

BAROMETRIC PRESSURE (P_{bar}): 30.10 in. Hg METER BOX NO. 5

ORIFICE NO. 6 PRETEST γ: 0.983

ORIFICE K FACTOR: 5.412 x 10^-4 AUDITOR: FR / DO

Orifice manometer reading ΔH in H_2O	Dry gas meter reading V_i/V_f ft^3	Temperatures: Ambient T_{ai}/T_{af} °F	Dry gas meter: Inlet T_{ii}/T_{if} °F	Dry gas meter: Outlet T_{oi}/T_{of} °F	Duration of run θ min
2.33	200.200	68	85	80	15.1
	202.200	68	84	80	

13:39:37
13:24:31
0:15:06

Dry gas meter volume V_m ft^3	Average temperatures: Ambient T_a °F	Average temperatures: Dry gas meter T_m °F	$V_{m_{std}}$ ft^3	$V_{m_{act}}$ ft^3	Audit γ	γ deviation %
13.000	68	82.5	12.826	12.878	1.006	2.29

$V_{m_{std}}$	$V_{m_{act}}$
$\frac{(17.647)(V_m)(P_{bar} + \Delta H/13.6)}{(T_m + 460)}$ (13.000, 30.1 + 2.3/13.6, 82.5)	$\frac{(1203)(\theta)(K)(P_{bar})}{(T_a + 460)^{1/2}}$ (15.1, 5.412 x 10^-4, 30.1, 68)
~~12.8048~~ 12.826	12.8780

Audit γ	γ deviation, %
$\frac{V_{m_{act}}}{V_{m_{std}}}$	$\frac{(\gamma \text{ audit} - \gamma \text{ pre-test})(100\%)}{(\gamma \text{ audit})}$
1.006	2.29

Audit γ must be in the range, pre-test γ ± 0.05 γ

Figure 5-5. Audit report dry gas meter (FB-5).

AUDIT REPORT DRY GAS METER

DATE: 9-12-83 CLIENT: USEPA-EMB

BAROMETRIC PRESSURE (P_{bar}): 30.15 in. Hg METER BOX NO. FB-9

ORIFICE NO. #11 PRETEST γ: 0.995

ORIFICE K FACTOR: 4.997×10^{-4} AUDITOR: JJ

Orifice manometer reading ΔH in H_2O	Dry gas meter reading V_i/V_f ft^3	Temperatures: Ambient T_{ai}/T_{af} °F	Dry gas meter: Inlet T_{ii}/T_{if} °F	Dry gas meter: Outlet T_{oi}/T_{of} °F	Duration of run Ø min
2.15	770.500	70	78	70	15 40/60
	782.900	70	79	70	

Dry gas meter volume V_m ft^3	Average temperatures: Ambient T_a °F	Average temperatures: Dry gas meter T_m °F	$V_{m_{std}}$ ft^3	$V_{m_{act}}$ ft^3	Audit γ	γ deviation %
12.400	70	74.25	12.414	12.336	0.994	-0.10

$V_{m_{std}}$	$V_{m_{act}}$
$\frac{(17.647)(V_m)(P_{bar} + \Delta H/13.6)}{(T_m + 460)}$	$\frac{(1203)(\text{Ø})(K)(P_{bar})}{(T_a + 460)^{1/2}}$
12.414	12.336

Audit γ	γ deviation, %
$\frac{V_{m_{act}}}{V_{m_{std}}}$	$\frac{(\gamma \text{ audit} - \gamma \text{ pre-test})(100\%)}{(\gamma \text{ audit})}$
0.994	-0.10

Audit γ must be in the range, pre-test γ ± 0.05 γ

Figure 5-6. Audit report dry gas meter (FB-9).

AUDIT REPORT DRY GAS METER

DATE: 9-12-83 CLIENT: USEPA-EMB

BAROMETRIC PRESSURE (P_{bar}): 30.15 in. Hg METER BOX NO. FB-10

ORIFICE NO. # 10 PRETEST γ: 0.965

ORIFICE K FACTOR: 4.913×10^{-4} AUDITOR: GJ

Orifice manometer reading ΔH in H_2O	Dry gas meter reading V_i/V_f ft^3	Temperatures: Ambient T_{ai}/T_{af} °F	Dry gas meter: Inlet T_{ii}/T_{if} °F	Dry gas meter: Outlet T_{oi}/T_{of} °F	Duration of run Ø min
1.90	527.900	70	77	72	15 49.5/60
	540.500	70	78	73	

Dry gas meter volume V_m ft^3	Average temperatures: Ambient T_a °F	Average temperatures: Dry gas meter T_m °F	$V_{m_{std}}$ ft^3	$V_{m_{act}}$ ft^3	Audit γ	γ deviation %
12.600	70	75.0	12.589	12.245	0.973	0.82

$V_{m_{std}}$	$V_{m_{act}}$
$\frac{(17.647)(V_m)(P_{bar} + \Delta H/13.6)}{(T_m + 460)}$	$\frac{(1203)(\emptyset)(K)(P_{bar})}{(T_a + 460)^{1/2}}$
12.589	12.245

Audit γ	γ deviation, %
$\frac{V_{m_{act}}}{V_{m_{std}}}$	$\frac{(\gamma \text{ audit} - \gamma \text{ pre-test})(100\%)}{(\gamma \text{ audit})}$
0.973	0.82

Audit γ must be in the range, pre-test γ ± 0.05 γ

Figure 5-7. Audit report dry gas meter (FB-10).

AUDIT REPORT DRY GAS METER

DATE: 9-12-83 CLIENT: USEPA-EMB

BAROMETRIC PRESSURE (P_{bar}): 30.15 in. Hg METER BOX NO. FB# 11

ORIFICE NO. #12 PRETEST γ: 0.961

ORIFICE K FACTOR: 4.874×10^{-4} AUDITOR: JJ

Orifice manometer reading ΔH in H_2O	Dry gas meter reading V_i/V_f ft^3	Temperatures: Ambient T_{ai}/T_{af} °F	Dry gas meter: Inlet T_{ii}/T_{if} °F	Dry gas meter: Outlet T_{oi}/T_{of} °F	Duration of run Ø min
1.15	970.500	70	75	68	15 24.3 / 60
	982.800	70	76	71	~~15.24 28~~

Dry gas meter volume V_m ft^3	Average temperatures: Ambient T_a °F	Average temperatures: Dry gas meter T_m °F	$V_{m_{std}}$ ft^3	$V_{m_{act}}$ ft^3	Audit γ	γ deviation %
12.300	70	72.5	12.322	11.826	0.960	-0.10

$V_{m_{std}}$	$V_{m_{act}}$
$\frac{(17.647)(V_m)(P_{bar} + \Delta H/13.6)}{(T_m + 460)}$	$\frac{(1203)(\emptyset)(K)(P_{bar})}{(T_a + 460)^{1/2}}$
12.322	11.826

Audit γ	γ deviation, %
$\frac{V_{m_{act}}}{V_{m_{std}}}$	$\frac{(\gamma \text{ audit} - \gamma \text{ pre-test})(100\%)}{(\gamma \text{ audit})}$
0.960	-0.10

Audit γ must be in the range, pre-test $\gamma \pm 0.05\ \gamma$

Figure 5-8. Audit report dry gas meter (FB-11).

THERMOCOUPLE DIGITAL INDICATOR
AUDIT DATA SHEET

Date 9-12-83 Indicator No. # 125 Operator [illegible]

Test Point No.	Millivolt signal*	Equivalent temperature, °F*	Digital indicator temperature reading, °F	Difference, %
1		32	31.4	0.12
2		200	198.8	0.18
3		540	537.6	0.24
4		1194	1190.0	0.24

Percent difference must be less than or equal to 0.5%.

Percent difference:

$$\frac{(\text{Equivalent temperature °R} - \text{Digital indicator temperature reading °R})(100\%)}{(\text{Equivalent temperature °R})}$$

Where °R = °F + 460°F

* These values are to be obtained from the calibration data sheet for the calibration device.

Figure 5-9. Thermocouple digital indicator audit data sheet (Indicator 125).

THERMOCOUPLE DIGITAL INDICATOR
AUDIT DATA SHEET

Date 9/12/83 Indicator No. ~~125~~ 126 Operator [illegible]/DC

Test Point No.	Millivolt signal*	Equivalent temperature, °F*	Digital indicator temperature reading, °F	Difference, %
1		32	30	0.4
2		200	199	0.15
3		540	535	0.5
4		[illegible]	1187	0.4

Percent difference must be less than or equal to 0.5%.

Percent difference:

$$\frac{(\text{Equivalent temperature °R} - \text{Digital indicator temperature reading °R})(100\%)}{(\text{Equivalent temperature °R})}$$

Where °R = °F + 460°F

* These values are to be obtained from the calibration data sheet for the calibration device.

Figure 5-10. Thermocouple digital indicator audit data sheet (Indicator 126).

THERMOCOUPLE DIGITAL INDICATOR
AUDIT DATA SHEET

Date 9-12-83 Indicator No. #207 Operator [illegible]

Test Point No.	Millivolt signal*	Equivalent temperature, °F*	Digital indicator temperature reading, °F	Difference, %
1		32	34	-0.40
2		200	204	0.61
3		540	540	0.00
4		1194	1192	0.12

Percent difference must be less than or equal to 0.5%.

Percent difference:

$$\frac{(\text{Equivalent temperature °R} - \text{Digital indicator temperature reading °R})(100\%)}{(\text{Equivalent temperature °R})}$$

Where °R = °F + 460°F

* These values are to be obtained from the calibration data sheet for the calibration device.

Figure 5-11. Thermocouple digital indicator audit data sheet (Indicator 207).

THERMOCOUPLE DIGITAL INDICATOR
AUDIT DATA SHEET

Date 9/12/83 Indicator No. 262 Operator Phillips

Test Point No.	Millivolt signal*	Equivalent temperature, °F*	Digital indicator temperature reading, °F	Difference, %
1		32	33	-0.2
2		200	203	-0.5
3		540	539	+0.1
4		1194	1191	+.2

Percent difference must be less than or equal to 0.5%.

Percent difference:

$$\frac{(\text{Equivalent temperature °R} - \text{Digital indicator temperature reading °R})(100\%)}{(\text{Equivalent temperature °R})}$$

Where °R = °F + 460°F

* These values are to be obtained from the calibration data sheet for the calibration device.

Figure 5-12. Thermocouple digital indicator audit data sheet (Indicator 262).

SAMPLING SUMMARY SHEET

PLANT A[illegible]O LOCATION TACOMA, WASHINGTON

SAMPLED SOURCE REVERBERATORY FURNACE ESP OUTLET TRAVERSING RUNS

Run	Date	N_p	(3) Y_m	(4) ΔH	(5) P Bar.	(6) V_m	(7) T_m	(8) V_m Std.	(9) %	(10) P_{st}	17 P_s	(18) T_s	(19) VP	(20) V_w	21 $V_{w_{std}}$	22 %M	23 M_d
AEOT-1	195GPB3	49	.965	1.28	30.43	192.018	65	190.208	.0472	-1.3	30.33	171		132.7	6.25	3.2	.968
AEOT-2	195GPB3	55	.965	1.30	30.34	200.477	68	202.810	.0624	-1.2	30.25	184		119.1	5.61	2.7	.973
AEOT-3	205GPB3	55	.965	1.20	30.36	199.607	63	197.934	.0197	-1.2	30.27	188		105.7	4.98	2.5	.975

Run	(24) CO_2	(25) O_2	26 N_2	(27) CO	(28) SO_2	29 MW_d	30 MW	(31) C_p	(32) $\sqrt{\Delta P_s (T_s + 460)}$	(33) T_t	(34) D_n	35 V_s	(36) D_s	(37) Area	38 ACFM	(39) DSCFM	40 %I
AEOT-1	0.95	19.2	79.8	0.0	.05	28.94	28.59	.84	10.4402	294	.313	25.5		280.5	428 468	351 937	96.6
AEOT-2	0.94	19.2	79.8	0.0	.06	28.94	28.65	.84	10.6828	330	.309	26.1		280.5	438 583	353 792	93.6
AEOT-3	1.18	19.0	79.8	0.0	.02	28.96	28.63	.84	9.9003	330	.312	24.1		280.5	406 035	326 526	97.1

$$V_m \text{ Std.} = V_m \frac{\left(17.64 \times V_m \left(P \text{ Bar.} + \frac{P_m}{13.6}\right)\right)}{(T_m + 460)}$$

$$\%M = \frac{100 \times V_{w_{std}}}{V_m \text{ Std.} + V_{w_{std}}}$$

$$V_{w_{std}} = 0.0471\ V_w$$

$$M_d = \frac{100 - \%M}{100}$$

$$MW_d = \%CO_2 \times .44 + (\%O_2 \times .32) + (\%CO + \%N_2) \times .28 + \left(\%\text{other} \times \frac{\text{Mol. wt.}}{100}\right)$$

$$MW = MW_d \times M_d + 18(1 - M_d)$$

$$V_s = 85.49 \times C_p \sqrt{P_s (T_s + 460)} \left[\frac{1}{P_s + PB}\right]^{1/2}$$

$$P_s = P \text{ Bar.} + \frac{P_{st}}{13.6}$$

$$\%I = \frac{0.09450 \times (T_s + 460) \times V_m \text{ Std.}}{V_s \times T_t \times P_s \times M_d \times D_n}$$

N_p = Total No. of Sampling points

Y_m = Meter Box Correction Factor

ΔH = Average Orifice Pressure Drop, Inches H_2O

P Bar. = Barometric Pressure, Inches Hg, Absolute

V_m = Volume of Dry Gas at Meter Conditions, DCF

T_m = Average Meter Temperature, °F

V_m Std. = Volume of Dry Gas at STP, DSCF[a]

% = Per Cent other gas removed before Dry Gas Meter

P_{st} = Static Pressure of Stack Gas, Inches H_2O

P_s = Stack Gas Pressure, Inches Hg.

T_s = Average Stack Temperature, °F

VP = Vapor Pressure of H_2O At Stack Temperature

V_w = Total H_2O Collected in Impingers and Silica Gel

$V_{w_{std}}$ = Volume of water vapor collected at STP, SCF[b]

%M = Per Cent Moisture by volume

M_d = Mole Fraction of Dry Gas

$\%CO_2$ = Volume % Dry

$\%O_2$ = Volume % Dry

$\%N_2$ = Volume % Dry

%CO = Volume % Dry

MW_d = Molecular Weight of Stack Gas Dry Basis

MW = Molecular Weight of Stack Gas, Wet Basis

C_p = Pitot Tube Coefficient

$\sqrt{\Delta P (T_s + 460)}$ is determined by averaging the square root of the product of the velocity head (ΔP) and the absolute stack temperature from each sampling point.

T_t = Net time of test in minutes

D_n = Sampling Nozzle Diameter, Inches

A_n = Area of Nozzle opening, ft^2.

V_s = Stack Gas Velocity at Stack Conditions, Feet per second.

D_s = Diameter of Stack, Inches

Area = Area of duct in ft^2

ACFM = Actual Cubic Feet per minute

DSCFM = Dry Standard Cubic Feet per minute

%I = Per Cent Isokinetic

[a]Dry Standard Cubic Feet @ 68°F, 29.92 in. Hg.

[b]Standard Conditions @ 68°F, 29.92 in. Hg.

Figure 5-13. Example of field calculation form.

Tables 5-2 and 5-3 summarize results obtained with duplicate train tests performed at the ESP outlet test location. These data were collected to assess the precision and accuracy of EPA Method 108 as applied to this particular source. We conducted seven paired-train tests in a single sampling port and at essentially a single point in the outlet breeching. The duration of each duplicate test ranged from 1 to 2 hours. Collected samples were recovered and shipped to our Cincinnati laboratory for arsenic analysis.

The distribution of arsenic in the sample train [front (probe and filters) versus back (impingers)] is variable and probably a function of the chemical properties of arsenic trioxide (As_2O_3) relative to the sample temperature. As shown in Table 5-2, the relative standard deviation for total arsenic of all paired-runs averaged 12.5 percent, which is considered acceptable based on the complexity of the sample preparation and analytical techniques required and the overall configuration of the sample location (see Section 4).

As an additional check of the reliability of the method used to analyze the samples, a blank train was assembled and transported to the test site. The sampling train was capped off and remained at the test site for about 2 hours. It was then returned to the recovery area, where it was recovered in the same manner as the test samples were recovered. The blank train samples were shipped to the laboratory and analyzed according to

TABLE 5-2. RESULTS OF DUPLICATE ARSENIC TESTS AT ASARCO

AEOD Run No.	Sample volume,[a] dNm^3	Sample weights, mg					Concentration, mg/dNm^3			Iso-kinetic rate, %
		Filter[b]	Probe rinse	Total front half	Back half	Total	Front half	Back half	Total	
1A	1.371	3.88	2.63	6.51	4.93	11.44	4.75	3.60	8.34	108
1B	1.360	4.91	3.06	7.97	2.51	10.48	5.86	1.84	7.70	108
2A	2.332	1.68	2.15	3.83	3.94	7.77	1.64	1.69	3.33	106
2B	2.251	1.73	1.05	2.78	3.58	6.36	1.24	1.59	2.82	103
3A	1.294	4.74	5.81	10.55	9.42	19.97	8.15	7.28	15.43	101
3B	1.250	10.15	5.97	16.12	10.36	26.48	12.89	8.29	21.18	100
4A	1.286	3.82	3.74	7.56	7.65	15.21	5.88	5.95	11.83	101
4B	1.248	4.12	3.11	7.23	8.33	15.56	5.79	6.68	12.47	98
5A	1.262	3.91	4.34	8.25	8.36	16.61	6.54	6.63	13.17	102
5B	1.205	4.40	4.85	9.25	5.20	14.45	7.68	4.32	11.99	99
6A	1.310	4.44	3.53	7.97	2.96	10.93	6.09	2.26	8.35	102
6B	1.271	3.74	2.77	6.51	6.60	13.11	5.12	5.19	10.31	99
7A	1.130	2.53	1.70	4.23	5.52	9.75	3.74	4.88	8.63	103
7B	1.088	5.62	2.06	7.68	5.32	13.00	7.06	4.89	11.95	100

[a] Includes volume of SO_2, which represented less than 0.3 percent of the sample volume.

[b] Includes PARR bomb results, which constituted approximately 5 to 20 percent of the total arsenic on the filter.

TABLE 5-3. STATISTICAL DATA FOR GROUPED ASRSENIC RUNS AT ASARCO

AEOD Run No.	Front-half arsenic				Back-half arsenic				Total arsenic			
	Concentration, mg/dNm³		σ,[a] mg/dNm³	RSD,[b] %	Concentration, mg/dNm³		σ, mg/dNm³	RSD, %	Concentration, mg/dNm³		σ, mg/dNm³	RSD, %
	Run value	Paired mean			Run value	Paired mean			Run value	Paired mean		
1A 1B	4.75 5.86	5.31	0.78	14.7	3.60 1.84	2.72	1.24	45.6	8.34 7.70	8.02	0.45	5.6
2A 2B	1.64 1.24	1.44	0.28	19.4	1.69 1.59	1.64	0.07	4.3	3.33 2.82	3.08	0.36	11.7
3A 3B	8.15 12.89	10.53	3.36	31.9	7.28 8.28	7.78	0.71	9.1	15.43 21.17	18.30	4.06	22.2
4A 4B	5.88 5.79	5.84	0.06	1.0	5.95 6.68	6.32	0.52	8.2	11.83 12.47	13.15	0.45	3.7
5A 5B	6.54 7.68	7.11	0.81	11.4	6.63 4.32	5.48	1.63	29.7	13.17 11.99	12.58	0.83	6.6
6A 6B	6.09 5.12	5.60	0.69	12.3	2.26 5.19	3.72	2.07	55.6	8.35 10.31	9.33	1.39	14.9
7A 7B	3.74 7.06	5.40	2.35	43.5	4.88 4.89	4.88	0.01	0.2	8.63 11.95	10.29	2.35	22.8
Overall means[c]		5.89	1.19	19.2		4.65	0.89	21.8		10.68	1.41	12.5

[a]Standard deviation with N-1 weighting for sample data.

[b]Relative standard deviation is the standard deviation expressed as a percent of the mean concentration.

[c]Simple averages of tabulated data.

the same procedures used for the actual emission samples. Table 5-4 presents the results of the blank sample train analysis. These results are considered reasonable and indicate background arsenic contamination was not a problem in the sample recovery area.

TABLE 5-4. BLANK TRAIN ANALYTICAL RESULTS

Lab No.	Blank train component	Total mg As	Volume, ml
DC577	Filter	0.55	-
DC578	Rinse	0.04	229
DC579	Impinger	0.002	500

The following is a summary of the quality assurance activities performed during the analytical phase of this project. Twenty-two batches of samples were analyzed by flame atomic absorption. Fifty-six sets of standards were analyzed with the 22 batch of samples. The linear regression data for all the standards analyzed with a given batch of samples are presented in Table 5-5. The average correlation coefficient is 0.9985; the range was 0.9997 to 0.9944. The average detection limit is 3.3 ppm. The calculated detection limit was based a value of twice the range of the 0 ppm standard above the Y-intercept. A standard reference solution independently prepared from As_2O_3 with a nominal value of 150 ppm was analyzed (1-2 dilution) with each set of standards. (Standards were prepared from a commercially

TABLE 5-5. LINEAR REGRESSION DATA (FLAME)

Date (1983)	No. of standard curves	Y-intercept	Slope	Correction	Detection limit, ppm
9/13	2	-0.0031	0.00287	0.9995	4.18
9/17	3	-0.0007	0.00265	0.9990	4.53
9/20	3	-0.0058	0.00337	0.9968	4.16
9/21	2	-0.0064	0.00332	0.9995	0.61
9/22	5	+0.0020	0.00298	0.9990	3.34
9/23	4	0.0010	0.00319	0.9985	6.27
9/24	2	-0.0055	0.00276	0.9988	4.36
9/24	2	0.0018	0.00272	0.9976	1.48
9/27	2	0.0020	0.00264	0.9994	1.52
9/28	4	0.0000	0.00344	0.9995	1.16
9/29	2	-0.0008	0.00292	0.9993	5.48
9/30	3	0.0026	0.00448	0.9997	4.03
10/3	2	-0.0005	0.00282	0.9977	4.97
10/4	2	-0.0055	0.00304	0.9990	2.62
10/5	3	0.0016	0.00317	0.9959	5.05
10/7	3	0.0040	0.00290	0.9983	3.44
10/7	1	0.0002	0.00278	0.9993	2.86
10/10	2	0.0004	0.00273	0.9990	1.45
10/11	2	0.0035	0.00291	0.9995	0.69
10/13	3	0.0011	0.00306	0.9944	3.26
10/14	2	0.0010	0.00323	0.9983	1.87
10/14	2	-0.0062	0.00297	0.9984	4.70

available 100-ppm standard solution.) The average value obtained for the 56 analyses of this standard reference solution (SRS) is 157.1 ppm; the standard deviation (SD) was 4.75 ppm [3.02 percent relative standard deviation (RSD)]. Of the 56 determinations made, only two fell outside the range of mean ± 2 SD (one above and one below). No significant historical data are available for this level of arsenic analysis.

These data indicate that the precision and accuracy of the flame atomic absorption analyses are well within acceptable limits. The percent difference of the average measured value of the SRS and its predicted value is 4.7 percent; the RSD of the measured value is 3.0 percent.

The results of the audit samples supplied by EPA and determined by flame atomic absorption are listed in Table 5-6. These results are consistent with the above data. The relatively large difference at 10 ppm is predictable inasmuch as it is only 3 times the detection limit.

Seven samples were checked by the method of standard addition. These results are contained in Table 5-7. These analyses were performed early during the project to ensure that no significant matrix effects were present. The standard addition of Sample DC583 was conducted on September 17, 1983; the others were performed on September 20, 1983. The slopes of all the standard addition analyses are between 0.9 and 1.1 except for the first sample, which is probably due to an error in the spiking solution on the first day. An analysis of the results of the unspiked

TABLE 5-6. AUDIT RESULTS[a]

EPA No.	Lab No.	Volume, ml	EPA values, mg As/liter	As conc. measured, mg/liter	Total As, mg
B-3-I	DC329	500	10	13.6, 12.6	6.82, 6.29
B-4-I	DC330	500	10	10.8, 12.6	5.42, 6.29
G-1-I	DC331	500	100	103, 105	51.3, 52.7
G-3-I	DC332	500	100	107, 106	53.4, 53.1
H-1-I	DC333	500	40	45.4, 46.1	22.7, 23.0
H-2-I	DC334	500	40	45.7, 48.5	22.9, 24.3

[a]Reported to and accepted by EPA on 9/14/83.

TABLE 5-7. ARSENIC RESULTS OBTAINED BY STANDARD ADDITION METHOD

Lab No.	Spike, ppm	Previously determined flame, ppm	Measured, ppm	Linear regression analysis
DC583 impinger	0	17.61	17.51	Slope = 0.783
	10		23.84	Y intercept = 16.97
	20		32.89	Corr. = 0.9979
	30		40.58	X intercept = -21.68
DC581 filter bomb	0	274.7[a]	267.2	Slope = 0.9390
	50		301.5	Y intercept = 261.3
	100		353.7	Corr. = 0.9977
	200		451.6	X intercept = -278.3
DC588 filter extract	0	70.38[a]	76.23	Slope = 0.9145
	20		95.81	Y intercept = 76.36
	40		111.47	Corr. = 0.9994
	80		149.97	X intercept = -83.50
DC588 filter bomb	0	22.9	15.24	Slope = 1.018
	10		26.28	Y intercept = 16.38
	20		39.44	Corr. = 0.9944
	40		55.82	X intercept = -16.09
DC590 impinger	0	12.3	13.46	Slope = 0.9571
	10		24.49	Y intercept = 13.89
	20		32.33	Corr. = 0.9989
	40		52.26	X intercept = -14.51
DC591 filter extract	0	92.62	99.07	Slope = 0.9938
	20		115.39	Y intercept = 99.20
	40		144.76	Corr. = 0.9927
	80		176.73	X intercept = -99.82
DC599 impinger	0	10.07	11.33	Slope = 0.9700
	10		24.85	Y intercept = 13.75
	20		35.88	Corr. = 0.9891
	40		50.83	X intercept = -14.17

samples and the X-intercepts (standard addition values) showed less than a 10 percent difference except for Samples DC583 and DC99. The results for DC583 were expected because of the slope, and the results for DC599 were not unreasonable inasmuch as this value is at the low end of the calibration curve.

The results of field blanks and reagents blanks are listed in Tables 5-8 and 5-9. These results show that contamination was not a problem. Because the results of the blanks are relatively small and vary considerably, no blank corrections were applied to the reported data.

Sixteen batches of samples were analyzed by atomic absorption with graphite furnace techniques. All samples below 30 ppm were analyzed by furnace techniques. Samples between 10 and 30 ppm that did not agree within approximately 20 percent of the flame value were reanalyzed by both flame and furnace techniques. Forty-three sets of standards were analyzed with the 16 batches of samples. Twelve of the data sets were reduced by linear regression analysis (see Table 5-10); the remaining four sets were fit to a second-degree polynomial (see Table 5-11). The average correlation coefficient for the linear regression analysis is 0.9984; the range was 0.9996 to 0.9938. The average correlation coefficient for the polynomial fit is 0.9985; the range was 0.9987 to 0.9983. The average detection limit for the graphite furnace is 0.0031 ppm. The calculated detection limit was based on a value of twice the range of the 0 ppm standard above the Y-intercept.

TABLE 5-8. FIELD BLANKS

Date received	Lab No.	Sample description	Volume,[a] ml	Total arsenic, mg
9/16/83	DC577	Filter	NA[b]	0.55
9/16/83	DC572	Filter	NA	0.33
9/20/83	DC734	Filter	NA	0.81
9/22/83	DC862	Filter	NA	0.43
9/22/83	DC863	Filter	NA	0.34
9/27/83	DD041	Filter	NA	0.13
10/2/83	DD214	Filter	NA	0.07
9/16/83	DC578	Rinse	229	
9/16/83	DC573	Rinse	338	0.015
9/20/83	DC736	Rinse	374	0.094
9/20/83	DC769	Rinse	374	0.12
9/27/83	DD043	Rinse	399	1.73[c]
10/2/83	DD215	Rinse	297	0.018
9/16/83	DC579	Impinger	500	
9/16/83	DC574/DC573	Impinger	625	0.044
9/20/83	DC735/DC736	Impinger	610	0.091
9/20/83	DC768/DC769	Impinger	610	0.12
9/27/83	DD042/DD043	Impinger	719	1.18[c]
10/2/83	DD215/DD216	Impinger	762	0.058

[a]Actual volume or based on the average volumes received for these fractions on the day the blanks were received.

[b]Not applicable.

[c]Laboratory contamination of DD043 suspected.

TABLE 5-9. REAGENT BLANKS

Date	Description	Total arsenic, mg
9/22/83	Filter NaOH extract	0.03
9/22/83	Bomb fraction	1.70[a]
9/22/83	Rinse or impinger solution	0.02
9/27/83	Filter NaOH extract	0.08
9/27/83	Filter NaOH extract	0.57
9/27/83	Bomb fraction	0.05
9/27/83	Bomb fraction	0.02
9/27/83	Rinse or impinger solution	0.001
9/27/83	Rinse or impinger solution	0.003
9/29/83	Filter NaOH extract	0.01
9/29/83	Filter NaOH extract	0.01
9/29/83	Filter NaOH extract	0.01
9/29/83	Bomb fraction	0.01
9/29/83	Bomb fraction	0.01
9/29/83	Bomb fraction	0.01
9/29/83	Rinse or impinger solution	0.007
9/29/83	Rinse or impinger solution	0.001
9/29/83	Rinse or impinger solution	0.005

[a]Laboratory contamination suspected.

TABLE 5-10. LINEAR REGRESSION DATA--FURNACE

Date (1983)	No. of standard curves	Y-intercept	Slope	Correction	Detection limit, ppm
9/20	2	0.0027	2.590	0.9938	0.0008
9/23	4	0.0025	3.547	0.9995	0.0022
9/26	5	0.0026	3.557	0.9979	0.0062
9/29	2	0.0017	3.657	0.9996	0.0006
9/30	3	0.0056	3.707	0.9994	0.0021
10/3	2	-0.0040	3.779	0.9995	0.0037
10/5	3	-0.0062	3.719	0.9988	0.0038
10/7	3	-0.0007	3.616	0.9976	0.0039
10/10	3	0.0025	3.673	0.9983	0.0011
10/11	2	-0.0036	3.733	0.9990	0.0027
10/14	2	0.0017	3.841	0.9994	0.0042
10/17	2	0.0011	3.849	0.9979	0.0036

TABLE 5-11. LEAST SQUARES DATA (BINOMIAL EQUATION)--FURNACE

Date (1983)	No. of standard curves	Y-intercept	1st degree	2nd degree	Correction	Detection limit, ppm
9/21	2	-0.0091	4.088	-4.810	0.9987	0.0025
9/27	2	-0.0124	4.052	-3.570	0.9987	0.0020
9/27	3	-0.0094	4.128	-4.659	0.9983	0.0039
9/28	3	0.0049	3.623	-2.922	0.9984	0.0056

A standard reference solution (SRS), which was independently prepared from As_2O_3 with a nominal value of 0.0750 ppm, was analyzed with each set of standards. (Standards were prepared from a commercially available 1000-ppm standard solution.) The average value of the 43 analyses of this SRS was 0.0759 ppm, with a standard deviation (SD) of 0.0036 (4.7 percent relative standard deviation RSD). All of the 43 determinations were within ±2 SD of the mean. Historically, the mean value for this SRS is 0.0762, with a standard deviation of 0.0027. The values obtained for the SRS solution during this project are in good agreement with these historical data. These data indicate that the precision and accuracy of the furnace atomic absorption analyses are well within acceptable limits. The difference between the average measured value of the SRS and its predicted value is 1.2 percent; the RSD of the measured value is 4.7 percent.

It was not practical to perform a standard addition with the furnace method because of the large dilutions required. Furnace dilutions usually ranged between 1:40 and 1:400.

A final quality check of the data involved splitting the sample extracts with ASARCO, who analyzed all samples above 20 ppm by flame atomic absorption and all samples below 20 ppm by a pyridine-SDDC colorimetric method. The data generated by the two labs are presented in Table 5-12. These data are in good agreement.

TABLE 5-12. COMPARISON OF ASARCO'S AND PEDCo'S ANALYTICAL RESULTS

Run No.	Lab No.	ASARCO, mg	PEDCo, mg
AABO-1	DC581	0.26	0.26
AABO-1	DC581 bomb	13.35	13.83
AABO-1	DC582	1.62	1.52
AABO-1	DC583	13.20	18.3
AEOD-2A	DC594	1.60	1.56
AEOD-2A	DC594 bomb	0.13	0.12
AEOD-2A	DC595	2.10	2.15
AEOD-2A	DC596	4.05	3.94
ABKI-3	DC726 1st	2500	2571
ABKI-3	DC726 2nd	423	430
ABKI-3	DC726 bomb	7000	7963
ABKI-3	DC727 1st	1866	1868
ABKI-3	DC727 2nd	210	188
ABKI-3	DC727 bomb	2025	2144
ABKI-3	DC726/727 solid 1st	a	1199
ABKI-3	DC728	5372	5597
ABKI-3	DC729	3589	2995
ABKI-3	DC729 bomb solids	a	90
AEOD-1A	DC588	3.50	3.52
AEOD-1A	DC588 bomb	0.35	0.36
AEOD-1A	DC589	2.34	2.63
AEOD-1A	DC590	5.25	4.93

[a]ASARCO did not receive these samples.