United States
Environmental Protection
Agency

Industrial Environmental
Research Laboratory
Research Triangle Park,
NC 27711

EPA-600/8-80-031
June 1980

Research and Development

EPA

Environmental Assessment Data Systems

User Guide

Project Profile System

EADS PPS

RESEARCH REPORTING SERIES

Research reports of the Office of Research and Development, U.S. Environmental Protection Agency, have been grouped into nine series. These nine broad categories were established to facilitate further development and application of environmental technology. Elimination of traditional grouping was consciously planned to foster technology transfer and a maximum interface in related fields.
The nine series are:

1. Environmental Health Effects Research
2. Environmental Protection Technology
3. Ecological Research
4. Environmental Monitoring
5. Socioeconomic Environmental Studies
6. Scientific and Technical Assessment Reports (STAR)
7. Interagency Energy-Environment Research and Development
8. "Special" Reports
9. Miscellaneous Reports

This report has been assigned to the INTERAGENCY ENERGY-ENVIRONMENT RESEARCH AND DEVELOPMENT series. Reports in this series result from the effort funded under the 17-agency Federal Energy/Environment Research and Development Program. These studies relate to EPA's mission to protect the public health and welfare from adverse effects of pollutants associated with energy systems. The goal of the Program is to assure the rapid development of domestic energy supplies in an environmentally-compatible manner by providing the necessary environmental data and control technology. Investigations include analyses of the transport of energy-related pollutants and their health and ecological effects; assessments of, and development of, control technologies for energy systems; and integrated assessments of a wide range of energy-related environmental issues.

EPA REVIEW NOTICE

This report has been reviewed by the participating Federal Agencies, and approved for publication. Approval does not signify that the contents necessarily reflect the views and policies of the Government, nor does mention of trade names or commercial products constitute endorsement or recommendation for use.

This document is available to the public through the National Technical Information Service, Springfield, Virginia 22161.

EPA-600/8-80-031
June 1980

ENVIRONMENTAL ASSESSMENT DATA SYSTEMS USER GUIDE: PROJECT PROFILE SYSTEM

J. P. Reider, Editor

Midwest Research Institute
425 Volker Boulevard
Kansas City, Missouri 64110

Prepared for

EPA Project Officer - Gary L. Johnson
U.S. Environmental Protection Agency
Office of Research and Development
Industrial Environmental Research Laboratory
Research Triangle Park, North Carolina 27711

Contract No. 68-02-3177
Work Assignment No. 3

DISCLAIMER

This report has been reviewed by the Industrial Environmental Research Laboratory, U.S. Environmental Protection Agency, and approved for publication. Mention of trade names or commercial products does not constitute endorsement or recommendation for use.

This page contains the publication and revision record of the PPS User Guide. The current revision status is indicated by the Schedule of Document Control. As the guide is revised, the affected pages are dated. Changes and additions to the guide are shown by vertical lines in the margins. A bar near the page number indicates a new pagination rather than change of content. New pages are indicated by a dot near the page number.

SCHEDULE OF DOCUMENT CONTROL

Revision	Description
June 1980	Original issue.

PREFACE

In the course of fulfilling its charter, EPA performs multimedia environmental assessments of stationary sources of pollution and conducts R&D programs to develop and demonstrate feasible control technology. Such programs generate voluminous data, often according to different reporting protocols and sampling and analysis practices. The Environmental Assessment Data Systems (EADS) has been developed to consolidate the results of these programs and others into one comprehensive information system.

The EADS is composed of four waste stream data bases and a number of reference and support data bases. The waste stream data bases include the Fine Particle Emissions Information System (FPEIS), the Gaseous Emissions Data System (GEDS), the Liquid Effluents Data System (LEDS), and the Solid Discharge Data System (SDDS). One of the reference data bases of the EADS is the Project Profile System (PPS). The PPS contains information that describes projects in various R&D program areas. In contrast to the EADS waste stream data bases, the PPS tells "what" was measured, not "how much." The PPS has been developed primarily to support the Conventional Combustion Environmental Assessment (CCEA) program to identify, catalog, and manage information on conventional combustion processes.

This document, the PPS User Guide, gives instructions for the encoding of PPS data sets and defines procedures for submitting and retrieving data. It also describes available software packages for analysis of PPS data.

CONTACTS

EADS Program Manager	Gary L. Johnson (MD-63) Industrial Environmental Research Laboratory U.S. Environmental Protection Agency Research Triangle Park, North Carolina 27711 919-541-2745
EADS Technical Staff	
General PPS Information, Documentation	J. Patrick Reider Midwest Research Institute 425 Volker Boulevard Kansas City, Missouri 64110 816-753-7600
Software	Nick Young Acurex Corporation Route 1, Box 423 Morrisville, North Carolina 27560 919-781-9704 or Richard E. Welch Acurex Corporation Route 1, Box 423 Morrisville, North Carolina 27560 919-781-9704
CCEA Program Manager	
	Wade H. Ponder (MD-62) Industrial Environmental Research Laboratory U.S. Environmental Protection Agency Research Triangle Park, North Carolina 27711 919-541-3997
CCEA-PPS Technical Staff	
Data Base Contents (CCEA)	Mary C. Aldridge Research Triangle Institute P.O. Box 12194 Research Triangle Park, North Carolina 27709 919-541-5886

CONTENTS

		Page
Preface		v
Contacts		vi
Figures		viii
Tables		viii
1	Introduction	1.0-1
2	Data Base Description	2.0-1
	2.0 PPS Structure	2.0-1
	2.1 PPS Organization and Contents	2.1-1
3	Data Acquisition and Organization	3.0-1
	3.0 Introduction	3.0-1
	3.1 How to Build a Profile	3.1-1
	3.2 Data Input Form Structure	3.2-1
4	Encoding Instructions for PPS Input Forms	4.0-1
	4.0 General Rules	4.0-1
	4.1 Labor Saving Feature	4.1-1
	4.2 Encoding Instructions	4.2-1
5	Data Submittal	5.0-1
	5.0 Introduction	5.0-1
	5.1 Data Input Form Processing	5.1-1
	5.2 Submittal Procedures	5.2-1
	5.3 Review and Corrective Action Procedures	5.3-1
	5.4 EDIT/LOAD Programs	5.4-1
6	Data Retrieval	6.0-1
	6.0 Introduction	6.0-1
	6.1 Data Retrieval Using the Program Library	6.1-1
	6.2 Special Data Retrieval Requests	6.2-1
	6.3 Key/Non-Key Data Elements	6.3-1
	6.4 On-Line Request Procedures	6.4-1
	6.5 NCC User Qualifications and Services Registration	6.5-1
	6.6 Interactive Terminal Operation	6.6-1
	6.7 Remote Batch Terminal Operation	6.7-1
	6.8 PPS User Support	6.8-1
7	Program Library	7.0-1
	7.0 Introduction	7.0-1
	7.1 Profile Report	7.1-1
	7.2 Chemical Search Program (CHEM-SEARCH)	7.2-1
	7.3 Profile Summary Information Program (SNAP-SHOT)	7.3-1
	7.4 Profile Abstract Program (ABSTRACT)	7.4-1
Appendix A.1 - List of Error Messages		A.1-1
Appendix A.2 - Data Definitions		A.2-1
Appendix A.3 - PPS Date Base Glossary		A.3-1
Appendix A.4 - PPS Data Encoding Forms		A.4-1
Appendix A.5 - Tables of Standard Nomenclature		A.5-1

FIGURES

Number		Page
2-1	PPS data base organization and structure.	2.0-3
3-1	PPS structure	3.1-2
5-1	Sample data submittal letter.	5.2-2
5-2	Sample data submittal acknowledgement letter.	5.2-3
5-3	QA procedure.	5.3-2
6-1	NCC application	6.5-2
6-2	Request for batch terminal support form	6.7-2

TABLES

Number		Page
3-1	PPS Data Elements and Their Levels.	3.2-2
6-1	List of Key Data Elements	6.3-2
6-2	Remote Interface Control Statements	6.6-3
6-3	NCC Demand Access Telephone Numbers	6.6-6
6-4	NCC Remote Batch Access Telephone Numbers	6.7-3

SECTION 1

INTRODUCTION

The Environmental Assessment Data Systems (EADS) are a group of independent computerized data bases which are interlinked to provide common accessibility to data produced by a variety of EPA projects. One of the reference data base components of the EADS is the Project Profile System (PPS).

The Project Profile System (PPS) is a project management information system that has been developed primarily to support a single program: the Conventional Combustion Environmental Assessment (CCEA). The PPS is not, however, limited to application only to the CCEA, but may be applied to any R&D program area, such as synfuels production, coal cleaning, iron and steel, etc.

The data stored in the PPS are compiled on the basis of projects instead of test sites as is the case of the EADS waste stream data bases. For example, the environmental assessment project for a particular industrial process may involve the sampling of many multimedia test sites, each of which would be reported separately in FPEIS, GEDS, LEDS, or SDDS. In the PPS, however, there would be only one entry for the overall project.

The PPS presently contains data on projects conducted by EPA, DOE, etc., that pertain to the broad category of conventional combustion. These projects are grouped into nine different types as follows:

Fuels
Emissions/Effluents Monitoring
Sampling and Analysis Methods Development
Control Technology
Transport, Transformation, and Fate
Health Effects
Ecological Effects
Socio-economic Factors
Integrated Assessments

For the appropriate project types, much of the same terminology from the EADS waste stream data bases is used. The principal difference is that the PPS does not contain any numerical data; that is, the PPS may identify what pollutant was measured, but it will not report any concentration values. The PPS is used by the CCEA program to identify, catalog, and manage information on conventional combustion processes.

The origin of the PPS is the CCEA program. To understand the utility of the PPS, it is appropriate to examine briefly the CCEA and the rationale for the development of the PPS.

The CCEA program demonstrates a comprehensive approach to identify, acquire, and analyze all information relevant to the environmental assessment of conventional combustion processes. The purpose is to provide to EPA, other federal and state agencies concerned with environmental protection, combustion and control equipment designers and users, and other interested parties, valid, comprehensive information to form the basis for specifying those activities and procedures that will enable operation of such processes in a manner protecting human health and welfare, and the nation's air, water, and land resources.

Because of the fundamental importance and widespread use of combustion devices for energy production, industrial processing, space heating, and many other purposes, identification of potentially harmful substances released from combustion and ancillary equipment and processes is essential. Quantification of amounts released under various operating conditions is equally as important. This identification and quantification requires the application of, and quite often the development of, reliable and accurate techniques for sampling and analysis. The transport of pollutant species, distribution, and possible transformation of such species must be understood and quantified. The acute and chronic effects of pollutants on human health and on the ecosystem must be understood and quantified. Criteria for the quality of the media must be developed and specified as environmental goals set with due regard for human health, ecological integrity, and the realization that a careful balance must be maintained between a thriving, technology-based society and its natural environment.

Comparing these environmental goals with the types and rates of emission of pollutant species from combustion sources burning various fuels provides a measure of the degree of control that must be employed to attain the desired goals. The availability of effective control devices and processes must be ascertained, and the necessary research and development stimulated to produce more effective controls where needed. Among the important outputs of the CCEA program are recommendations for environmental standards. These recommendations are based on the perceived scope of the environmental impact, the types of pollutants involved, and the state-of-the-art of the control technology available with quantification of its cost, energy usage, and effectiveness.

Because of the complexity of the CCEA program and the large amount of information and data that must be assembled and analyzed to direct the program toward its objectives, it was hypothesized that a computer-based management information system could be a cost-effective tool for program management. Accordingly, a pilot-type demonstration using only a few projects to illustrate the method was proposed, authorized, and conducted. The demonstration proved the feasibility of the concept and the development of the PPS ensued.

The PPS provides a guide or "road map" to combustion data stored in the EADS waste stream data bases. While the PPS identifies what work was done, the EADS waste stream data bases contain the actual results. In the context of the CCEA, the PPS will provide important initial information about projects relating to a particular aspect of conventional combustion (e.g., who did the work, were there any reports, what pollutants were measured, etc.). If there are sampling data in the EADS from that particular project, references to the EADS Test Series Number (TSN) will be given in the Project Profile. In this way, the user can obtain the actual data if he wishes.

Of course, not all project types reported in the PPS will be relevant to the EADS waste stream data bases. An attempt has been made, however, to utilize the standard EADS terminology protocol described in the EADS Terminology Reference Manual, EPA-600/8-80-011, February 1980.

The design of the PPS allows its application to industrial source categories other than conventional combustion. For the present, however, the PPS will continue to support only the CCEA.

A uniform protocol for units and terminology has been developed along with standard data input forms, output report formats, and analytical software. Each data element in the system has been defined in detail for clarity. These standards and definitions will allow all data in the system to be stored and retrieved on a common basis.

The PPS has been implemented at the Environmental Protection Agency (EPA) National Computer Center (NCC) at Research Triangle Park, on the UNIVAC 1100 computer, using SYSTEM 2000®. SYSTEM 2000® is a data base management system developed by the Commercial Systems Division of INTEL, Inc. Features of SYSTEM 2000® include sorting, comparing, and retrieving information from the PPS data base in a variety of arrangements and provides users with a virtually unlimited potential for data analysis.

Section 2 through 7 of this document provide detailed information on the PPS. Section 2 describes the structure, organization, and contents of the PPS. Section 3 demonstrates an application of a project to the structure and how data should be organized for an encoding effort. Encoding instructions are given in Section 4. Section 5 describes procedures required after data have been encoded and are being submitted for inclusion in the PPS. Section 6 describes the steps for on- and off-line data retrievals. User output analysis packages are enumerated in Section 7 -- Program Library. Users should become thoroughly familiar with the contents of this document before attempting to encode data.

SECTION 2

DATA BASE DESCRIPTION

2.0 PPS STRUCTURE

The discussion in this section is intended to introduce the new EADS user to the PPS data base. The main objective is to familiarize the user with the fundamental structural components of the data base and how they are assembled to form a structural hierarchy. While the four emissions data bases within EADS are structured in an identical manner, the PPS data base, being a reference data base, has its own unique structure.

The structure of the PPS data base presents and organizes a comprehensive set of data which describes the conduct, techniques, and objectives of R&D projects. Only nonemissions data is contained within this data base. Each variable or bit of data or information concerning the project is defined as a data element. The completeness of information for any given project within the data base is limited only by the completeness of the test report or original data source from which the PPS input was derived.

Before continuing on this section, the user should become familiar with certain terms used throughout the EADS document. Many of the terms will probably be familiar, but others such as "test" may, in the context of PPS, have definitions that are slightly different from the typical definition. In order to maintain the integrity of the data, it is imperative that these definitions are understood and properly used.

media-- Used in reference to an effluent stream from a stationary source. May be either gas, liquid, or solid.

source-- A source may be either an industrial or energy conversion facility. It is an origin of one or more multimedia effluent streams. An oil refinery and a coal-fired power plant would each be examples of a source.

stream-- Any multimedia effluent discharging to the environment from a stationary source.

control device/ treatment process-- A device or process designed to remove or treat a specific pollutant or pollutants in an effluent stream.

control system-- Frequently a discharge stream is controlled by a number of control devices which may be in either a series or parallel arrangement. The total group of control devices on that stream is referred to as the control system.

level-- A data base structural term used to differentiate groupings of data within the data base. The PPS contains five structural levels: the administrative level, the activity level, the test level, the analysis level, and the pollutant level.

test-- A set of various types of samples taken to characterize a source waste stream(s) under one set of source and control device/treatment process operating conditions.

sample-- The measurement or group of measurements taken with a single measurement method or instrument to describe the composition of a stream at a given point in time and at a specific location.

Several data elements or information items are required to adequately describe the groups of information which are contained within the PPS. These groups are discussed in the EADS Systems Overview Manual and in greater detail in this section. Also, the reader may wish to refer to the Data Base Definition (a computer listing of all data elements) and the Data Base Tree (a graphical presentation of the major groups of information contained in the data base) in Figure 2.1. From an organizational standpoint, the various elements are grouped into one of five levels: the administrative level, the activity level, the test level, the analysis level, and the pollutant level. These levels and their relationship within the Data Base Tree are shown in Figure 2-1.

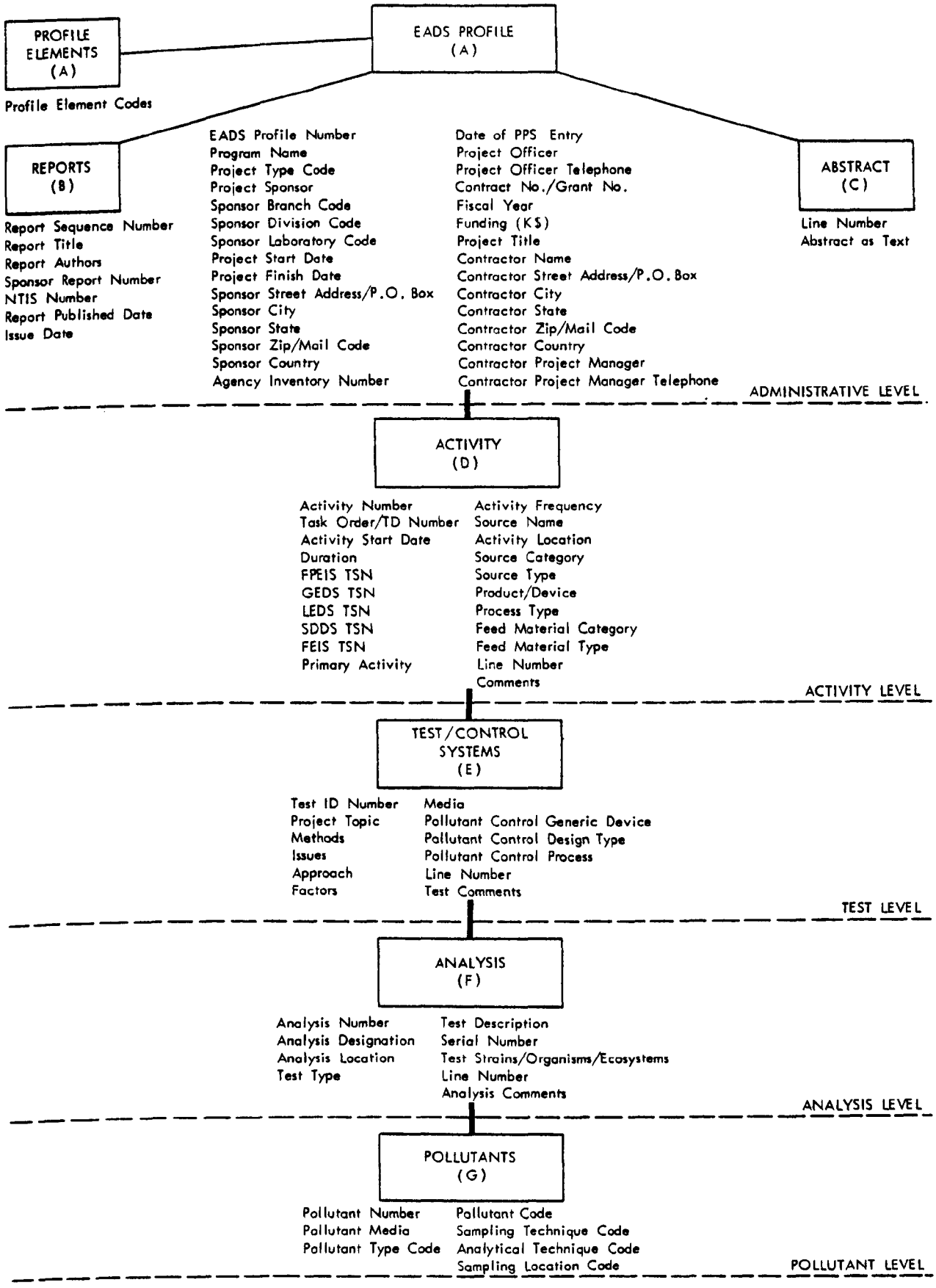

Figure 2-1. PPS data base organization and structure.

2.1 PPS ORGANIZATION AND CONTENTS

The PPS data base structure contains five levels progressing from general information to specific information. These levels are simply an organizational tool--enabling the data to be arranged in a manner which is logical from the user's viewpoint. Each level contains specific types or groups of data. Figure 2-1 shows the relationship between these general groups into the following general categories (levels): (a) general administrative, reference information, and profile abstract (adminstrative level); (b) source description and activity information (activity level); (c) information on specific tests and control systems or techniques (test level); (d) information on various analytical protocols and analysis techniques used (analysis level); and (e) information on specific pollutants assessed (pollutant level).

2.1.1 Administrative Level

This is the uppermost level in the data base structure and contains data elements which should completely profile one project of a given type.

Typical information found at this level includes the project title, sponsor and contractor names and addresses, funding information, important project dates, responsible persons, and a complete project abstract. Information concerning all reports generated by a specific project is also included. All information related to the conduct or administration of the contracted project would be found at this level.

2.1.2 Activity Level

A specific project might include a number of different sampling activities at different locations over a long period of time. All administrative and reference information common to all these activities would be found at the Administrative Level. Information at the activity level would refer to the sampling activities performed at a single site over a specified period of time (usually continuous). It is likely that the results of such activities would have been entered into one or more of the emissions data bases of EADS; therefore, the appropriate cross-reference test series number(s) would be entered as data elements of this level. Other information found at this level includes source type and category, feed material category and type, the process type, product or device, the duration of testing, and the activity location. Basically, all information needed to completely specify the site and source are included at this level.

2.1.3 Test Level

As was noted before, administrative and reference information concerning an entire project would be found at the Administrative Level. Such a project might include sampling activities at many different sites during many different periods. Reference information concerning these activities at any one site on any one source would be found at the activity level. The purpose of the activity identified at the activity level is described at the test level.

Information found at this level include the primary issues considered in the assessment, the general methods or approach used, and the factors analyzed by the project.

For any single source, many different control devices or techniques might be employed. All of the reference information concerning any one of these control devices, systems, or techniques would be found at this level. Information contained at this level include the generic type of control or treatment system or device, an identification of the media being studied, and the design type of the generic device. Any information pertinent to the control system or technique would be found at this level.

2.1.4 Analysis Level

Many different sampling and analysis protocols and techniques might be employed at any particular source. The Analysis Level isolates on one sampling or analysis method and contains all the information pertinent to such an activity. Information found at this level include the type of analysis using an analysis designator and the location of the analytical laboratory. Biological and ecological assay information is also contained at this level with the test type, test description, and the test strains/organisms/ecosystems included. In general, all information concerning a bioassay will be found at this level.

2.1.5 Pollutant Level

The Pollutant level has the narrowest focus of the five levels and is concerned solely with specific pollutants sampled and analyzed. Information included at the Pollutant Level consists of the pollutant type and code, sampling and analytical techniques codes, plus the sampling location code. All information concerning identified pollutants will be found at this level.

SECTION 3

DATA ACQUISITION AND ORGANIZATION

3.0 INTRODUCTION

The purpose of this section is to demonstrate how an encoder would use the structural concept discussed in Section 2 to prepare data for encoding into the PPS. Although peculiar situations and special problems may occur during the encoding process, the general guidelines and techniques given here should greatly facilitate the task. Feel free to call the EADS Program Manager or the EADS Technical Staff listed on page vi if any questions arise during the encoding process.

3.1 HOW TO BUILD A PROFILE

This section describes the techniques and the thought processes that the user should employ when encoding data onto the PPS data input forms. The techniques described here will be of particular benefit to the user who is not familiar with the PPS system and its underlying concepts.

In most cases, the encoder will have either a test report or perhaps project abstracts obtained from the contracting organization. The problem that confronts the user is how to efficiently and accurately transfer the data onto the PPS data input forms. Experience has shown that the most efficient thing to do is organize the information before encoding. The key to the organization of data is the tree structure of the PPS, shown in Figure 3-1. The first step is to determine the project type which describes the project to be profiled. There are nine project types as follows: Fuels; Sampling and Analysis; Emissions/Effluents Monitoring; Controls; Transport, Transformation, and Fate; Health Effects; Ecological Effects; Integrated Assessment; Socioeconomic Factors.

Data are arranged so that general information items, such as the administrative data, reference information, and profile abstract, are located at the top of the tree (Administrative Level). The next level (Activity Level) contains the source description and the sampling activity information. The tree continues by including the tests performed on the source and the control device(s) applied to that source (Test Level). The next to last level in the tree contains data on the analytical results of samples taken during each test (Analysis Level). The final level (Pollutant Level) is where the most specific information is contained in the data base. This level includes the pollutant media, specific pollutants, sampling and analysis techniques, and sampling locations. It is helpful to think of the tree structure as descending from the general or administrative level to the specific or pollutant level.

How then does the user arrange the information into the structure? The user should lay out a structure on paper similiar to that shown in Figure 3-1. There will be one box at the first level to represent the general information. The activity level will contain as many boxes as there are activities performed or sources tested. In a like manner, the test level will contain one box for each test performed on each source or at each activity. Next, at the analysis level, each test will contain as many boxes as there are analytical results reported. And finally, the pollutant level will contain one box for each pollutant identified in the analytical results. The user should then assign appropriate labels, according to the data, to the activity, tests, analyses, and pollutants, and enter those labels in the corresponding boxes of the tree. This approach has two major benefits. One, it forces the user to understand and organize his data, and two, it structures the data in a manner that aids tremendously in encoding and proper ordering of the forms. You will recall that the data forms are organized in a manner similar to the data base itself. They proceed from the general to the specific.

Section 4 contains detailed encoding instructions which, when used in conjunction with the above organization methods, make the encoding task straightforward.

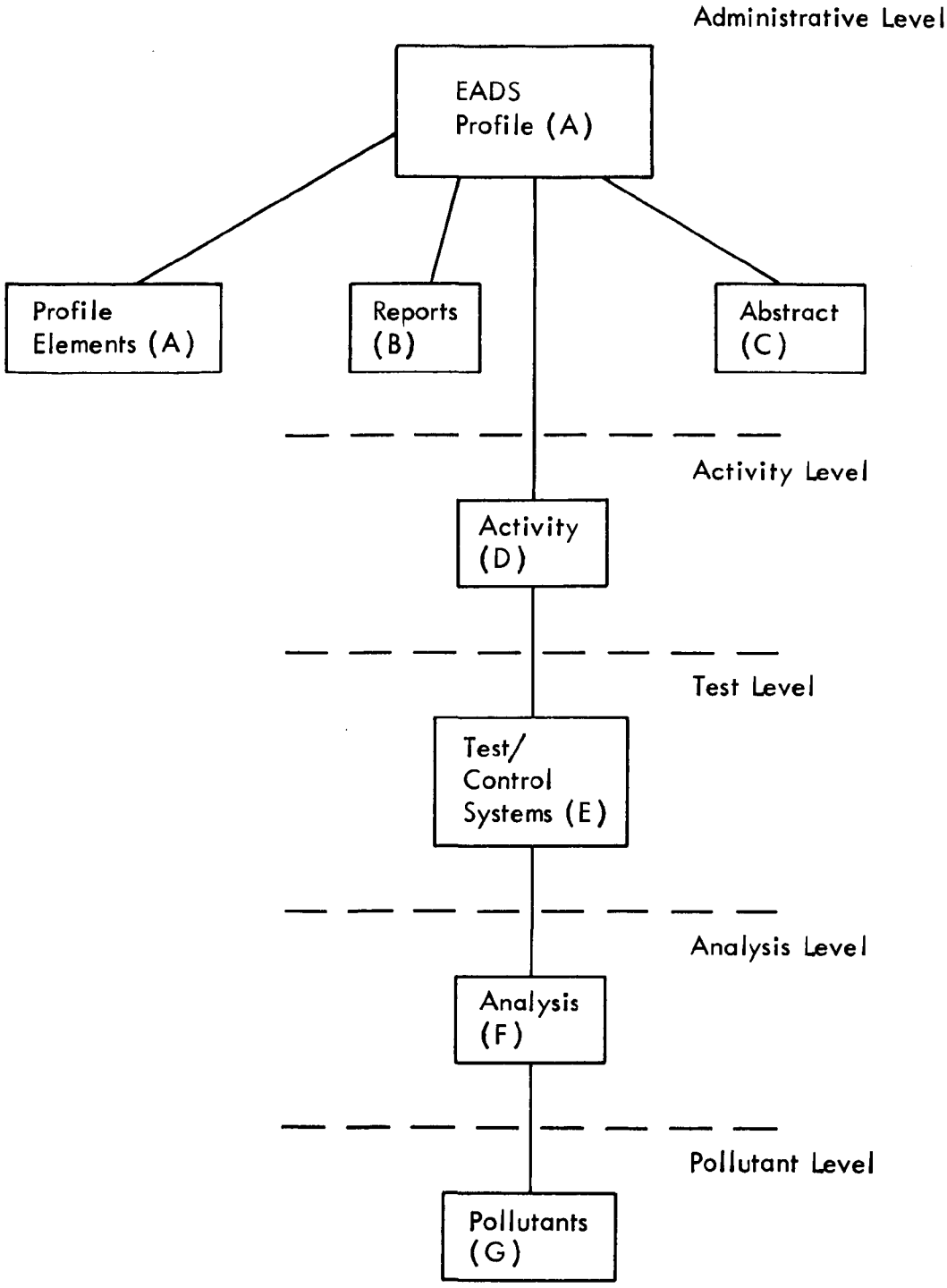

Figure 3.1. PPS structure

3.2 DATA INPUT FORM STRUCTURE

The PPS data elements (see Table 3-1) are entered on seven data input forms. The layout of the seven forms is such that the data elements in any one project profile that are least likely to change, are located on Form 1, and the most likely to change are on Forms 6 and 7. It becomes apparent that the input forms one arranged according to the hierarchial structure of the data base as shown in Figure 2-1.

The administrative data group, which includes detailed information on the project sponsor, contractor organization, project dates, and fiscal information, are contained on Form 1 (see Appendix A.4 for input data forms). The profile element codes are also included at the bottom of Form 1.

The reference information pertaining to reports issued for a project are on Form 2. The data elements for cards B01 through B04 are repeated on the bottom half of Form 2. It is permissible to use as many Form 2's as necessary to list all reports published for a project.

A text abstract of the project is contained on Form 3. The abstract should be complete without being too wordy. Additional forms may be used, if required, to complete the abstract.

The activity level data group, which includes the activity description, source classification, feed material categorization, and the EADS multimedia cross-reference numbers for quantified emission values, are contained on Form 4. The comments section is available for any pertinent information concerning the activity described.

The test data and control system identification data are found on Form 5. The description of the test conducted includes the project topic, sampling/analysis methods used, primary issues considered, and the general approach used in the project. The control system data includes the media classification, and the specific identification of the control device/process. The test comments section is available for any remarks regarding the test conducted.

Form 6 includes analytical information from biological or ecological assays. The test results identify the type of analysis, test description, test type, and the test strains/organisms/ecosystems used. For each F03 card only one test strain/organism/ecosystem may be entered. However, it is permissible to use additional Form 6's, if necessary, in order to list all test strains/organisms/ecosystems reported.

The pollutant(s) identification, sampling technique, analytical technique, and sampling location are contained on Form 7. Because some test plans may be extensive and cover multimedia sampling and analysis, Form 7 is expected to be the most frequently used form.

TABLE 3-1. PPS DATA ELEMENTS AND THEIR LEVELS

Administrative Level

A. Administrative Data
- EADS Profile Number
- Program Name
- Project Type Code
- Project Sponsor
- Sponsor Branch Code
- Sponsor Division Code
- Sponsor Laboratory Code
- Project Start Date
- Project Finish Date
- Sponsor Street Address/P.O. Box
- Sponsor City
- Sponsor State
- Sponsor Zip/Mail Code
- Sponsor Country
- Agency Inventory Number
- Date of PPS Entry
- Project Officer
- Project Officer Telephone
- Contract No./Grant No.
- Fiscal Year
- Funding (K$)
- Project Title
- Contractor Name
- Contractor Street Address/P.O. Box
- Contractor City
- Contractor State
- Contractor Zip/Mail Code
- Contractor Country
- Contractor Project Manager
- Contractor Project Manager Telephone
- Profile Element Codes

B. Reference Information
- Report Sequence Number
- Report Title
- Report Authors
- Sponsor Report Number
- NTIS Number
- Report Published Date
- Issue Date

C. Profile Abstract
- Line Number
- Abstract as Text

Activity Level

D. Activity Information
- Activity Number
- Task Order/TD Number
- Activity Start Date
- Duration
- FPEIS TSN
- GEDS TSN
- LEDS TSN
- SDDS TSN
- FEIS TSN
- Primary Activity
- Activity Frequency
- Source Name
- Activity Location
- Source Category
- Source Type
- Product/Device
- Process Type
- Feed Material Category
- Feed Material Type
- Line Number
- Comments

Test Level

E. Test/Control Systems Data
- Test ID Number
- Project Topic
- Methods
- Issues
- Approach
- Factors
- Media
- Pollutant Control Generic Device
- Pollutant Control Design Type
- Pollutant Control Process
- Line Number
- Test Comments

Analysis Level

F. Analysis Data
- Analysis Number
- Analysis Designation
- Analysis Location
- Test Type
- Test Description
- Serial Number
- Test Strains/Organisms/Ecosystems
- Line Number
- Analysis Comments

Pollutants Level

G. Pollutants
- Pollutant Number
- Pollutant Media
- Pollutant Type Code
- Pollutant Code
- Sampling Technique Code
- Analytical Technique Code

SECTION 4

ENCODING INSTRUCTIONS FOR PPS INPUT FORMS

This section presents detailed, card-by-card, encoding instructions for each PPS data element on the Standard Data Input Forms. The instructions are separated into seven groups (identified by the letters A, B, C, D, E, F, and G) corresponding to the major groupings of PPS data elements. The PPS Data Input Form number (1 through 7) is given for each group. While reading these instructions, it would be beneficial to refer to the blank input forms in Appendix A.4.

4.0 GENERAL RULES

General instructions that apply to data coding include the following:

- The letter "O" is to be encoded "Ø" and zero is encoded "0".

- Zeros are treated as numbers. Blank spaces in a field indicate either a lack of data, or that the pertinent data have been coded for the preceding test conditions or sampling activity. (See the discussion on the repetitive data feature in Section 4.1.) To blank out a data field, or to prevent data from being automatically repeated by the EDIT program, encode 9999... in all columns in the field for numeric fields, and NA in the first two columns of the field for alphanumeric fields.

- <u>All numeric data shall be right-justified and all alphanumeric data shall be left-justified, except where noted otherwise</u>.

- Only specified alphabetical or numerical characters and a few symbols (%, &, #, /. +, -, <, >, and all punctuation marks except the colon) are allowed to be entered in the columns where allowed. No unusual marks are to be made in the spaces. No data field headings are to be changed and only data appropriate to the field are to be entered. This rule prevents unnecessary keypunching errors in processing the forms. <u>No colons are permitted anywhere</u>.

- The small triangle between columns on the forms represents the decimal point. Enter the fractional decimal digits to the right of the triangle.

- Leave all the shaded portions on the forms blank.

The following identification data elements must be entered on the first card of every section (data group) where they appear.

Data element	Card columns	Instructions
EADS profile number	1-5	Enter on all forms.
Activity number	9-11	Enter only on Forms 4 through 7.
Test ID number	12-13	Enter only on Forms 5 through 7.
Analysis number	14-15	Enter only on Forms 6 and 7.
Pollutant number	16-17	Enter only on Form 7.

Note that if encoding instructions are not given for card columns 1 through 8 for any card, the instructions are the same as those for the previous card.

- In several instances, more cards than allotted on the forms may be added by the user if needed to encode all the data. The detailed encoding instructions indicate which data elements have unlimited use.

- Whenever the data exceed the available space on the forms, use the available space completely, then finish the discussion by using the comments section of the appropriate level (i.e., activity, test, or analysis comment sections).

- Whenever there are pertinent data for which no data elements exist, use the comments section of the appropriate level.

- Make the comment text as brief as possible through the use of abbreviations, precise words, and elimination of redundant words. The text should always start at the leftmost column (i.e., left-justified).

- After all the forms are encoded and put in order paginate the forms in the indicated spaces to keep them organized and to prevent loss.

- It is critical to include all cards which start a data group. Specifically, these cards are A01, B01, C01, D01, E01, F01, and G01. These cards initialize indices which are used to load the data into the data base. These indices are the EADS Profile Number, the Activity Number, the Test ID Number, the Analysis Number, and the Pollutant Number, for the above cards, and the asterisked entries below indicate where they first occur.

The information that is REQUIRED on these cards is as follows:

Card A01--	*EADS profile number Program name Project type code Project sponsor
Card B01--	EADS profile number *Report sequence number
Card C01--	EADS profile number *Line number
Card D01--	EADS profile number *Activity number
Card E01--	EADS profile number Activity number *Test ID number
Card F01--	EADS profile number Activity number Test ID number *Analysis number Analysis designator
Card G01--	EADS profile number Activity number Test ID number Analysis number *Pollutant number

These cards and data elements must be included even if no other data are encoded. The initial card must be included whenever any of the indices are reinitialized; that is, whenever the encoder returns to the start of a data group. For example, when a second analysis is reported, the encoder must include another F01 card with a new analysis number.

4.1 LABOR SAVING FEATURE

In developing the data input forms and the data processing programs, a labor saving feature is introduced to reduce time, labor, and cost on the part of the encoder. However, misunderstanding of this feature may result in the entering of erroneous data. If the explanation is not clear, the safe rule to remember is "if in doubt, fill it out."

4.1.1 Repetitive Data Feature

The "Repetitive Data Feature" frees the encoder from having to enter repetitive data. In general, this means that asterisked (*) fields on the data input forms need only be filled out when there is a change in the value of that field from the previous data element value. For example, a testing program may have many data elements which do not change from the first value encoded. Once the data element value has been initialized, the remaining data element values do not have to be encoded (or keypunched) for that particular value. The PPS EDIT program will automatically duplicate that data element value when the test profile is being processed for loading into the data base.

In many instances, a particular data element may not be constant for all its occurrences. It may have one value for its first few occurrences, then change values or not be known for other occurrences. In these situations, the value of the data element must be reinitialized to the new value each time the value changes. If the data is not known, the correct way to reinitialize the value is to enter "NA" in the first two columns of the field for alphanumeric data or "9" in every card column for numeric data.

4.2 ENCODING INSTRUCTIONS

This section presents detailed, card-by-card encoding instructions for each PPS data element. The instructions are separated into the major groupings of the PPS data base.

Specific encoding instructions are outlined for each project type (i.e., 1 through 9). Since some of the project types have similiar data, the encoding instructions have been grouped together for commonality. Project types 1, 3, and 4; 2 and 5; 6 and 7; 8 and 9 have been combined in the following instructions.

Data groups A, B, and C, the Administrative Data, Reference Information, and Profile Abstract, respectively, are general information which will apply to all project types. Specific encoding instructions have been detailed for groups D, E, F, and G which are Activity Level, Control Systems Data, Analysis Level, and Pollutants, respectively, for all project type groups.

Many data elements, identified in the detailed encoding instructions, require standard nomenclature. The user must use data from the tables given in the EADS Terminology Reference Manual or Appendix A.5 of this report to encode these data elements. All standard nomenclature is left-justified.

4.2.1 Detailed Encoding Instructions for All Project Types

GROUP A - ADMINISTRATIVE DATA - FORM 1

Card column	Data element	Encoding instructions
Card A01 - Required Card		
1-5	EADS Profile Number	Enter as a right-justified integer number the permanent project profile number, assigned by the EADS/PPS data base administrator.
6-8	Card Number	Do not change.
9-16	Program Name	Enter as text the name of initials of the overall program in which the specific project profile is included (e.g., CCEA, Synfuels).
17-18	Project Type Code	Enter a two-digit code denoting the project type selected from standard codes in Table A.5.1.
19-48	Project Sponsor	Enter as text the name of the project sponsor.
49-52	Sponsor Branch Code	Enter the code or the abbreviation for the branch of the agency sponsoring the project as text. An example is PRTB for Process Technology Branch.
53-57	Sponsor Division Code	Enter the code or the abbreviation for the division of the agency sponsoring the project as text. An example is UIPD for Utility and Industrial Power Division.
58-66	Sponsor Laboratory Code	Enter the code or abbreviation for the agency laboratory sponsoring the project text. An example is IERL-RTP for Industrial Environmental Research Laboratory at Research Triangle Park.
67-72	Project Start Date	Enter the project starting date as MM-DD-YY.
73-78	Project Finish Date	Enter the project finishing date as MM-DD-YY.
79-80	Blank	Leave blank.

GROUP A (continued)

Card column	Data element	Encoding instructions
Card A02		
9-28	Sponsor Street Address/P.O. Box	Enter the number and name of the sponsor's street address or P.O. Box number as text.
29-48	Sponsor City	Enter the name of the city, township, or area where the sponsor is located.
49-50	Sponsor State	Enter the two-letter code for the state or Canadian Province in which the sponsor is located. Use the standard nomenclature in Table A-3 in the EADS TRM.*
51-56	Sponsor Zip/Mail Code	Enter the sponsor's zip/mail code.
57-63	Sponsor Country	Enter as text a code or an abbreviation for the country in which the sponsor is located. Use standard nomenclature provided in Table A-3 in the EADS TRM.
64-70	Agency Inventory Number	Enter as a right-justified integer number the unique ID number assigned by the agency performing the inventory.
71-76	Date of PPS Entry	Enter the date the information was recorded for entry into the PPS data base, as MM-DD-YY.
77-80	Blank	Leave blank.
Card A03		
9-38	Project Officer	Enter the name of the sponsoring organization's main project officer with a first name, middle name, and last name format.
39-58	Project Officer Telephone Number	Enter as text the entire telephone number of the project officer including area code and extension (e.g., 816-753-7600 Ext. 587). Enter FTS number, if known as FTS-555-9000.

* Larkin, R., B. Ballard, Editors, EADS: Terminology Reference Manual, EPA-600/8-80-001, February 1980.

GROUP A (continued)

Card column	Data element	Encoding instructions
59-80	Contract Number/Grant Number	Enter the number of the sponsoring organization contract as text with the inclusion of blank spaces and hyphens.
Card A04		
9-12, 20-23, 31-34, 42-45, 53-56, and 64-67	Fiscal Year	Enter the fiscal year funds were allocated as FY_ _. A maximum of 6 values may be entered on a single card and additional cards may be used as needed.
13-19, 24-30, 35-41, 46-52, 57-63, and 68-74	Funding (K$)	Enter the level of funding for the fiscal year indicated in the previous data item in thousands of dollars with decimal notation for fractional amounts. Multiple entries may be encoded on a single card as needed.
75-80	Blank	Leave blank.
Cards A05 and A06		
9-80	Project Title	Enter as text the complete title of the project without using any abbreviations. Use both cards when necessary.
Card A07		
9-38	Contractor Name	Enter the name of the contractor organization as text. Standardized abbreviations and symbols are given in Table A.5.2.
39-58	Contractor Street Address/P.O. Box	Enter the number and name of the contractor's street address or P.O. Box as text, or the department or lab, if the contractor is a university.
59-78	Contractor City	Enter the name of the city, township, or area where the contractor is located.
79-80	Contractor State	Enter the two-letter code for the state or Canadian Province in which the contractor is located. Use the standard nomenclature in Table A-3 in the EADS TRM.

GROUP A (concluded)

Card column	Data element	Encoding instructions
Card A08		
9-14	Contractor Zip/Mail Code	Enter the contractor's zip/mail code.
15-21	Contractor Country	Enter as text a code or an abbreviation for the country in which the contractor is located. Use standard nomenclature provided in Table A-3 in the EADS TRM.
22-51	Contractor Project Manager	Enter the name of the contractor's main project manager.
52-71	Contractor Project Manager Telephone Number	Enter as text the telephone number, including area code and extension, of the contractor's project manager (e.g., 215-323-8020 Ext. 112).
72-80	Blank	Leave blank.
Card-A09		
9-12, 13-16, 17-20,...77-80	Profile Element Codes	Enter the code(s) which appropriately identify objectives achieved in the project using Table A.5.3 for standard nomenclature. A maximum of 18 profile codes may be entered on a single card. Additional cards may be used as needed.

GROUP B - REFERENCE INFORMATION - FORM 2

Card column	Data element	Encoding instructions
Card B01 and B02		
9-10	Report Sequence Number	Enter a sequential integer number for each each reference to be encoded.
11-80	Report Title	Enter the complete title of the report (which may be continued on the B02 card) as text with no abbreviations in the title.
Card B03		
11-80	Report Authors	Enter the name(s) of the author(s) of the report. The main author is listed by last name, first name, and middle initial.
Card B04		
11-31	Sponsor Report Number	Enter as test the number, as assigned by the sponsoring organization, of the report in which the data are reported.
32-51	NTIS Number	Enter the National Technical Information Service (NTIS) publication number of the report as text.
52-66	Report Published Date	Enter the publications date printed on the report in text form as month and year (e.g., May 1980).
67-72	Issue Date	Enter the date as MM-DD-YY in which the report was actually issued.
73-80	Blank	Leave blank.

GROUP C - PROFILE ABSTRACT - FORM 3

Card column	Data element	Encoding instructions
Card C01		
9-11	Line Number	Enter a sequential integer number for each line of abstract text recorded.
12-80	Abstract or Text	Enter as text an abstract of the project including any pertinent keywords. Unlimited cards may be added as needed.

Specific Encoding Instructions for Project Types 1, 3, and 4
(Fuels; Emissions/Effluents Monitoring; and Controls)

GROUP D - ACTIVITY LEVEL - FORM 4

Card column	Data element	Encoding instructions
Card D01		
9-11	Activity Number	Enter a sequential, integer number for each sampling activity reported.
12-45	Task Order/T.D. Number	Enter the task order or technical directive number as text.
46-51	Activity Start Date	Enter the sampling project start date as a right-justified integer in the form of MM-DD-YY.
52-55	Duration	Enter the length of testing in months as a decimal number with an implied decimal point indicated for fractional amounts.
56-60	FPEIS TSN	Enter the EADS/FPEIS Test Series Number pertaining to fine particle sampling information which was collected from the same source.
61-65	GEDS TSN	Enter the EADS/GEDS Test Series Number pertaining to gaseous emissions information which was collected from the same source.
66-70	LEDS TSN	Enter the EADS/LEDS Test Series Number pertaining to liquid effluents information which was collected from the same source.
71-75	SDDS TSN	Enter the EADS/SDDS Test Series Number associated with solid discharge sample and analysis from the same source.
76-80	FEIS TSN	(Data elements to be completed at a later date.)

Card D02 - Not Required

GROUP D (continued)

Card column	Data element	Encoding instructions
Card D03		
9-11	Activity Number	Same as Card D01.
12-46	Source Name	Enter the name of the source as text.
47-80	Activity Location	Enter as text the source location of the sampling activity reported.
Card D04		
9-11	Activity Number	Same as Card D01.
12-31	Source Category	Enter the code for the major grouping of generic industries or source classes as from Table A-1 in the EADS TRM. Example: COMBUST-ENERGY.
32-51	Source Type	Enter as text the code for the source type as found in Table A-1 in the TRM. This identifies the kind of source within the source category. Example: INDUSTRIAL.
52-80	Product/Device	Enter the code for the product or device type as text from Table A-1 in the TRM. This identifies the general process or specific product. Example: BOILER.
Card D05		
9-11	Activity Number	Same as Card D01.
12-31	Process Type	Enter the code for the unique process or specific type of boiler or engine being tested as text from Table A-1. Example: FIRETUBE.
32-41	Feed Material Category	Enter as text the code for the general categorization of the process feed material or fuel from Table A-2 in the EADS TRM.
42-51	Feed Material Type	Enter the code for the specific type of feed material or fuel as text using Table A.5.6.
52-80	Blank	Leave blank.

GROUP D (concluded)

Card column	Data element	Encoding instructions
Card D06		
9-11	Activity Number	Same as Card D01.
12-13	Line Number	Enter a sequential, integer number for each line of activity level comments.
14-80	Comments	Enter any pertinent comments on the sampling at the site as text. Additional cards may be used as needed.

GROUP E - CONTROL SYSTEMS DATA - FORM 5

Card column	Data element	Encoding instructions
Card E01		
9-11	Activity Number	Same as Card D01.
12-13	Test ID Number	Enter a sequential, integer number for each test conducted.
14-28	Project Topic	Enter the code as text for the project topic per site, either SAMPLING or ANALYSIS for project type 2. For project type 5, enter TSF for transfer, TSP for transformation, and F for fate, or any combination of these three.
29-80	Methods	Enter as text each sampling/analysis method or name of equipment used in obtaining a sample or analyzed results. Use the standard nomenclature in Table A.5.7.
Card E02		
9-11	Activity Number	Same as Card D01.
12-13	Test ID Number	Same as Card E01.
14-36	Issues	Enter as text the primary issues considered in the assessment. Use Table A.5.8 for standard nomenclature.
37-54	Approach	Enter as text the general method or approach used in the assessment. Use Table A.5.9 for standard nomenclature.
55-80	Factors	Enter as text the factors analyzed in the project using Table A.5.10 for standard nomenclature.
Card E03		
9-11	Activity Number	Same as Card D01.
12-13	Test ID Number	Same as Card E01.
14-18	Media	Enter as text the code for the generalized name of the media in which the sample was extracted. Use the standard nomenclature in Table A.5.11.

GROUP E (concluded)

Card column	Data element	Encoding instructions
19-38	Pollutant Control Generic Device	Enter as text the code for the type of generic pollutant control device. Use the standard nomenclature provided in Table A-4 of the EADS TRM.
39-70	Pollutant Control Design Type	Enter the code for the control device design type as text. Use Table A-4 in the EADS TRM for standard nomenclature.
71-80	Blank	Leave blank.
Card E04		
9-11	Activity Number	Same as Card D01.
12-13	Test ID Number	Same as Card E01.
14-80	Pollutant Control Process	Enter the code for the specific control device or treatment process as text. Use the standard nomenclature provided in Table A-4 of the EADS TRM.
Card E05		
9-11	Activity Number	Same as Card D01.
12-13	Test ID Number	Same as Card E01.
14-15	Line Number	Enter a sequential, integer number for each line of test comments.
16-80	Test Comments	Enter comments as text pertaining specifically to the activity conducted. Additional cards may be used as needed.

GROUP F - ANALYSIS LEVEL - FORM 6

Card column	Data element	Encoding instructions
Card F01		
9-11	Activity Number	Same as Card D01.
12-13	Test ID Number	Same as Card E01.
14-15	Analysis Number	Enter a sequential, integer number for each analysis reported.
16	Analysis Designation	Enter the letter code which designates the type of analysis reported. Enter the letter "B" for biological, "E" for ecological, or "P" for pollutant.
17-51	Analysis Location	Enter the name and location of the laboratory that performed the analysis as text. Use standard nomenclature in Table A.5.2.
52-80	Test Type	Enter as text the name of the broad category of biological or ecological test type used in the analysis. Use Table A.5.12a for biological or Table A.5.12b for ecological standard nomenclature.
Card F02		
9-11	Activity Number	Same as Card D01.
12-13	Test ID Number	Same as Card E01.
14-15	Analysis Number	Same as Card F01.
16-80	Test Description	Enter the code for the description or the name of the biological or ecological test used in the analysis performed. Use Table A.5.13a for biological or Table A.5.13b for ecological standard nomenclature.
Card F03		
9-11	Activity Number	Same as Card D01.
12-13	Test ID Number	Same as Card E01.

GROUP F (concluded)

Card column	Data element	Encoding instructions
14-15	Analysis Number	Same as Card F01.
16-17	Serial Number	Enter a sequential, integer number to identify each biological or ecological test strain, organism, or ecosystem used in the analysis.
18-80	Test Strains/Organisms/Ecosystems	Enter as text the name of the specific test strain, organism, or ecosystem used in the analysis reported. Use Table A.5.14a for biological or Table A.5.14b for ecological standard nomenclature.
Card F04		
9-11	Activity Number	Same as Card D01.
12-13	Test ID Number	Same as Card E01.
14-15	Analysis Number	Same as Card F01.
16-17	Line Number	Enter a sequential, integer number for each line of analytical comments reported.
18-80	Analysis Comments	Enter comments as text pertaining specifically to the analysis reported. Additional cards may be used as needed.

GROUP G - POLLUTANT LEVEL - FORM 7

Card column	Data element	Encoding instructions
Card G01		
9-11	Activity Number	Same as Card D01.
12-13	Test ID Number	Same as Card E01.
14-15	Analysis Number	Same as Card F01.
16-17	Pollutant Number	Enter a sequential, integer number for each pollutant identified.
18-25	Pollutant Media	Enter the name of the media in which sampling or analysis was performed, using the standard nomenclature given in Table A.5.11.
26	Pollutant Code Type*	Enter the pollutant entry code which designates the type of pollutant ID used. Enter the letter "C" for CAS number, "M" for MEG number, "R" for radionuclide, and "T" for a general text value.
27-56	Pollutant Code	Enter the identification code of the pollutant sampled at the site using standard nomenclature provided in Table A.5.15.
57-60	Sampling Technique Code	Enter the appropriate code that describes the sampling technique using the standard nomenclature from Table A.5.16.
61-62	Analytical Techniques Code	Enter the two-character code for the analytical method used in determining the pollutant. Use the standard nomenclature in Table A.5.17.
63-65	Sampling Location Code	Enter the three-character code for identifying the sampling location using standard nomenclature in Table A.5.18.
66-80	Blank	Leave blank.

* Chemical Abstracts Services (CAS) Registration Numbers--Chemical Substance Index, American Chemical Society. Multimedia Environmental Goals (MEG) for Environmental Assessment, EPA 600/7-77-136a, November 1977.

Specific Encoding Instructions for Project Types 2 and 5
(Sampling and Analysis; Transport, Transformation, and Fate)

GROUP D - ACTIVITY LEVEL - FORM 4

Card column	Data element	Encoding instructions
Card D01		
9-11	Activity Number	Enter a sequential, integer number for each sampling activity reported.
12-45	Task Order/T.D. Number	Enter the task order or technical directive number as text.
46-51	Activity Start Date	Enter the sampling project start date as a right-justified integer in the form of MM-DD-YY.
52-55	Duration	Enter the length of testing in months as a decimal number with an implied decimal point indicated for fractional amounts.
56-60	FPEIS TSN	Enter the EADS/FPEIS Test Series Number pertaining to fine particle sampling information which was collected from the same source.
61-65	GEDS TSN	Enter the EADS/GEDS Test Series Number pertaining to gaseous emissions information which was collected from the same source.
66-70	LEDS TSN	Enter the EADS/LEDS Test Series Number pertaining to liquid effluents information which was collected from the same source.
71-75	SDDS TSN	Enter the EADS/SDDS Test Series Number associated with solid discharge sample and analysis from the same source.
76-80	FEIS TSN	(Data elements to be completed at a later date.)
Card D02		
9-11	Activity Number	Same as Card D01.

GROUP D (continued)

Card column	Data element	Encoding instructions
12-46	Primary Activity	Enter the code as text for the primary activity at the site or, in the case of studies or model development, the type of study or model. Use Table A.5.4 for standard nomenclature.
47-80	Activity Frequency	Enter the code for the frequency of the sampling activity as text using standard nomenclature in Table A.5.5.
Card D03		
9-11	Activity Number	Same as Card D01.
12-46	Source Name	Enter the name of the source as text.
47-80	Activity Location	Enter as text the source location of the sampling activity reported.
Card D04		
9-11	Activity Number	Same as Card D01.
12-31	Source Category	Enter the code for the major grouping of generic industries or source classes as from Table A-1 in the EADS TRM. Example: COMBUST-ENERGY.
32-51	Source Type	Enter as text the code for the source type as found in Table A-1 in the TRM. This identifies the kind of source within the source category. Example: INDUSTRIAL.
52-80	Product/Device	Enter the code for the product or device type as text from Table A-1 in the TRM. This identifies the general process or specific product. Example: BOILER.
Card D05		
9-11	Activity Number	Same as Card D01.

GROUP D (concluded)

Card column	Data element	Encoding instructions
12-31	Process Type	Enter the code for the unique process or specific type of boiler or engine being tested as text from Table A-1. Example: FIRETUBE.
32-41	Feed Material Category	Enter as text the code for the general categorization of the process feed material or fuel from Table A-2 in the EADS TRM.
42-51	Feed Material Type	Enter the code for the specific type of feed material or fuel as text using Table A.5.6.
52-80	Blank	Leave blank.
Card D06		
9-11	Activity Number	Same as Card D01.
12-13	Line Number	Enter a sequential, integer number for each line of activity level comments.
14-80	Comments	Enter any pertinent comments on the sampling at the site as text. Additional cards may be used as needed.

GROUP E - CONTROL SYSTEMS DATA - FORM 5

Card column	Data element	Encoding instructions
Card E01		
9-11	Activity Number	Same as Card D01.
12-13	Test ID Number	Enter a sequential, integer number for each test conducted.
14-28	Project Topic	Enter the code as text for the project topic per site, either SAMPLING or ANALYSIS for project type 2. For project type 5, enter TSF for transfer, TSP for transformation, and F for fate, or any combination of these three.
29-80	Methods	Enter as text each sampling/analysis method or name of equipment used in obtaining a sample or analyzed results. Use the standard nomenclature in Table A.5.7.
Card E02 - Not Required		
Card E03 - Not Required		
Card E04 - Not Required		
Card E05		
9-11	Activity Number	Same as Card D01.
12-13	Test ID Number	Same as Card E01.
14-15	Line Number	Enter a sequential, integer number for each line of test comments.
16-80	Test Comments	Enter comments as text pertaining specifically to the testing activity conducted. Additional cards may be used as needed.

GROUP F - ANALYSIS LEVEL - FORM 6

Card column	Data element	Encoding instructions
Card F01		
9-11	Activity Number	Same as Card D01.
12-13	Test ID Number	Same as Card E01.
14-15	Analysis Number	Enter a sequential, integer number for each analysis reported.
16	Analysis Designation	Enter the letter code which designates the type of analysis reported. Enter the letter "B" for biological, "E" for ecological, or "P" for pollutant.
17-51	Analysis Location	Enter the name and location of the laboratory that performed the analysis as text. Use standard nomenclature in Table A.5.2.
52-80	Test Type	Leave blank.
Card F02 - Not Required		
Card F03 - Not Required		
Card F04		
9-11	Activity Number	Same as Card D01.
12-13	Test ID Number	Same as Card E01.
14-15	Analysis Number	Same as Card F01.
16-17	Line Number	Enter a sequential, integer number for each line of analytical comments reported.
18-80	Analysis Comments	Enter comments as text pertaining specifically to the analysis reported. Additional cards may be used as needed.

GROUP G - POLLUTANT LEVEL - FORM 7

Card column	Data element	Encoding instructions
Card G01		
9-11	Activity Number	Same as Card D01.
12-13	Test ID Number	Same as Card E01.
14-15	Analysis Number	Same as Card F01.
16-17	Pollutant Number	Enter a sequential, integer number for each pollutant identified.
18-25	Pollutant Media	Enter the name of the media in which sampling or analysis was performed, using the standard nomenclature given in Table A.5.11.
26	Pollutant Code Type*	Enter the pollutant entry code which designates the type of pollutant ID used. Enter the letter "C" for CAS number, "M" for MEG number, "R" for radionuclide, and "T" for a general text value.
27-56	Pollutant Code	Enter the identification code of the pollutant sampled at the site using standard nomenclature provided in Table A.5.15.
57-60	Sampling Technique Code	Enter the appropriate code that describes the sampling technique using the standard nomenclature from Table A.5.16.
61-62	Analytical Techniques Code	Enter the two-character code for the analytical method used in determining the pollutant. Use the standard nomenclature in Table A.5.17.
63-65	Sampling Location Code	Enter the three-character code for identifying the sampling location using standard nomenclature in Table A.5.18.
66-80	Blank	Leave blank.

* Chemical Abstracts Services (CAS) Registration Numbers--Chemical Substance Index, American Chemical Society. Multimedia Environmental Goals (MEG) for Environmental Assessment, EPA 600/7-77-136a, November 1977.

Specific Encoding Instructions for Project Types 6 and 7
(Health Effects and Ecological Effects)

GROUP D - ACTIVITY LEVEL - FORM 4

Card column	Data element	Encoding instructions
Card D01		
9-11	Activity Number	Enter a sequential, integer number for each sampling activity reported.
12-45	Task Order/T.D. Number	Enter the task order or technical directive number as text.
46-51	Activity Start Date	Enter the sampling project start date as a right-justified integer data in the form of MM-DD-YY.
52-55	Duration	Enter the length of testing in months as a decimal number with an implied decimal point indicated for fractional amounts.
56-60	FPEIS TSN	Enter the EADS/FPEIS Test Series Number pertaining to fine particle sampling information which was collected from the same source.
61-65	GEDS TSN	Enter the EADS/GEDS Test Series Number pertaining to gaseous emissions information which was collected from the same source.
66-70	LEDS TSN	Enter the EADS/LEDS Test Series Number pertaining to liquid effluents information which was collected from the same source.
71-75	SDDS TSN	Enter the EADS/SDDS Test Series Number associated with solid discharge sample and analysis from the same source.
76-80	FEIS TSN	(Data elements to be completed at a later date.)

Card D02 - Not Required

Card D03 - Not Required

GROUP D (continued)

Card column	Data element	Encoding instructions
Card D04		
9-11	Activity Number	Same as Card D01.
12-31	Source Category	Enter the code for the major grouping of generic industries or source classes as from Table A-1 in the EADS TRM. Example: COMBUST-ENERGY.
32-51	Source Type	Enter as text the code for the source type as found in Table A-1 in the TRM. This identifies the kind of source within the source category. Example: INDUSTRIAL.
52-80	Product/Device	Enter the code for the product or device type as text from Table A-1 in the TRM. This identifies the general process or specific product. Example: BOILER.
Card D05		
9-11	Activity Number	Same as Card D01.
12-31	Process Type	Enter the code for the unique process or specific type of boiler or engine being tested as text from Table A-1. Example: FIRETUBE.
32-41	Feed Material Category	Enter as text the code for the general categorization of the process feed material or fuel from Table A-2 in the EADS TRM.
42-51	Feed Material Type	Enter the code for the specific type of feed material or fuel as text using Table A.5.6.
52-80	Blank	Leave blank.
Card D06		
9-11	Activity Number	Same as Card D01.

GROUP D (concluded)

Card column	Data element	Encoding instructions
12-13	Line Number	Enter a sequential, integer number for each line of activity level comments.
14-80	Comments	Enter any pertinent comments on the sampling at the site as text. Additional cards may be used as needed.

GROUP E - CONTROL SYSTEMS DATA - FORM 5

Card column	Data element	Encoding instructions
Card E01		
9-11	Activity Number	Same as Card D01.
12-13	Test ID Number	Enter a sequential, integer number for each test conducted.
14-28	Project Topic	Leave blank.
29-80	Methods	Leave blank.
Card E02 - Not Required		
Card E03 - Not Required		
Card E04 - Not Required		
Card E05		
9-11	Activity Number	Same as Card D01.
12-13	Test ID Number	Same as Card E01.
14-15	Line Number	Enter a sequential, integer number for each line of test comments.
16-80	Test Comments	Enter comments as text pertaining specifically to the testing activity conducted. Additional cards may be used as needed.

GROUP F - ANALYSIS LEVEL - FORM 6

Card column	Data element	Encoding instructions
Card F01		
9-11	Activity Number	Same as Card D01.
12-13	Test ID Number	Same as Card E01.
14-15	Analysis Number	Enter a sequential, integer number for each analysis reported.
16	Analysis Designation	Enter the letter code which designates the type of analysis reported. Enter the letter "B" for biological, "E" for ecological, or "P" for pollutant.
17-51	Analysis Location	Enter the name and location of the laboratory that performed the analysis as text. Use standard nomenclature in Table A.5.2.
52-80	Test Type	Enter as text the name of the broad category of biological or ecological test type used in the analysis. Use Table A.5.12a for biological or Table A.5.12b for ecological standard nomenclature.
Card F02		
9-11	Activity Number	Same as Card D01.
12-13	Test ID Number	Same as Card E01.
14-15	Analysis Number	Same as Card F01.
16-80	Test Description	Enter the code for the description or the name of the biological or ecological test used in the analysis performed. Use Table A.5.13a for biological or Table A.5.13b for ecological standard nomenclature.
Card F03		
9-11	Activity Number	Same as Card D01.

GROUP F (concluded)

Card column	Data element	Encoding instructions
12-13	Test ID Number	Same as Card E01.
14-15	Analysis Number	Same as Card F01.
16-17	Serial Number	Enter a sequential, integer number to identify each biological or ecological test strain, organism, or ecosystem used in the analysis.
18-80	Test Strains/Organisms/Ecosystems	Enter as text the name of the specific test strain, organism, or ecosystem used in the analysis reported. Use Table A.5.14a for biological or Table A.5.14b for ecological standard nomenclature.
Card F04		
9-11	Activity Number	Same as Card D01.
12-13	Test ID Number	Same as Card E01.
14-15	Analysis Number	Same as Card F01.
16-17	Line Number	Enter a sequential, integer number for each line of analytical comments reported.
18-80	Analysis Comments	Enter comments as text pertaining sepcifically to the analysis reported. Additional cards may be used as needed.

GROUP G - POLLUTANT LEVEL - FORM 7

Card column	Data element	Encoding instructions
Card G01		
9-11	Activity Number	Same as Card D01.
12-13	Test ID Number	Same as Card E01.
14-15	Analysis Number	Same as Card F01.
16-17	Pollutant Number	Enter a sequential, integer number for each pollutant identified.
18-25	Pollutant Media	Enter the name of the media in which sampling was performed, using the standard nomenclature given in Table A.5.11.
26	Pollutant Code Type*	Enter the pollutant entry code which designates the type of pollutant ID used. Enter the letter "C" for CAS number, "M" for MEG number, "R" for radionuclide, and "T" for a general text value.
27-56	Pollutant Code	Enter the identification code of the pollutant sampled at the site using standard nomenclature provided in Table A.5.15.
57-60	Sampling Technique Code	Enter the appropriate code that describes the sampling technique using the standard nomenclature from Table A.5.16.
61-62	Analytical Techniques Code	Enter the two-character code for the analytical method used in determining the pollutant. Use the standard nomenclature in Table A.5.17.
63-65	Sampling Location Code	Enter the three-character code for identifying the sampling location using standard nomenclature in Table A.5.18.
66-80	Blank	Leave blank.

* Chemical Abstracts Services (CAS) Registration Numbers--Chemical Substance Index, American Chemical Society. Multimedia Environmental Goals (MEG) for Environmental Assessment, EPA 600/7-77-136a, November 1977.

Specific Encoding Instructions for Project Types 8 and 9
(Integrated Assessment and Socio-Economic Factors)

GROUP D - ACTIVITY LEVEL - FORM 4

Card column	Data element	Encoding instructions
Card D01		
9-11	Activity Number	Enter a sequential, integer number for each sampling activity reported.
12-45	Task Order/T.D. Number	Enter the task order or technical directive number as text.
46-51	Activity Start Date	Enter the sampling project start date as right-justified integer data in the form of MM-DD-YY.
52-55	Duration	Enter the length of testing in months as a decimal number with an implied decimal point indicated for fractional amounts.
56-60	FPEIS TSN	Enter the EADS/FPEIS Test Series Number pertaining to fine particle sampling information which was collected from the same source.
61-65	GEDS TSN	Enter the EADS/GEDS Test Series Number pertaining to gaseous emissions information which was collected from the same source.
66-70	LEDS TSN	Enter the EADS/LEDS Test Series Number pertaining to liquid effluents information which was collected from the same source.
71-75	SDDS TSN	Enter the EADS/SDDS Test Series Number associated with solid discharge sample and analysis from the same source.
76-80	FEIS TSN	(Data elements to be completed at a later date.)

Card D02 - Not Required

Card D03 - Not Required

GROUP D (continued)

Card column	Data element	Encoding instructions
Card D04		
9-11	Activity Number	Same as Card D01.
12-31	Source Category	Enter the code for the major grouping of generic industries or source classes as from Table A-1 in the EADS TRM. Example: COMBUST-ENERGY.
32-51	Source Type	Enter as text the code for the source type as found in Table A-1 in the TRM. This identifies the kind of source within the source category. Example: INDUSTRIAL.
52-80	Product/Device	Enter the code for the product or device type as text from Table A-1 in the TRM. This identifies the general process or specific product. Example: BOILER.
Card D05		
9-11	Activity Number	Same as Card D01.
12-31	Process Type	Enter the code for the unique process or specific type of boiler or engine being tested as text from Table A-1. Example: FIRETUBE.
32-41	Feed Material Category	Enter as text the code for the general categorization of the process feed material or fuel from Table A-2 in the EADS TRM.
42-51	Feed Material Type	Enter the code for the specific type of feed material or fuel as text using Table A.5.6.
52-80	Blank	Leave blank.
Card D06		
9-11	Activity Number	Same as Card D01

GROUP D (concluded)

Card column	Data element	Encoding instructions
12-13	Line Number	Enter a sequential, integer number for each line of activity level comments.
14-80	Comments	Enter any pertinent comments on the sampling at the site as text. Additional cards may be used as needed.

GROUP E - CONTROL SYSTEMS DATA - FORM 5

Card column	Data element	Encoding instructions
Card E01		
9-11	Activity Number	Same as Card D01.
12-13	Test ID Number	Enter a sequential, integer number for each test conducted.
14-28	Project Topic	Leave blank.
29-80	Methods	Leave blank.
Card E02		
9-11	Activity Number	Same as Card D01.
12-13	Test ID Number	Same as Card E01.
14-36	Issues	Enter as text the primary issues considered in the assessment. Use Table A.5.8 for standard nomenclature.
37-54	Approach	Enter as text the general method or approach used in the assessment. Use Table A.5.9 for standard nomenclature.
55-80	Factors	Enter as text the factors analyzed in the project using Table A.5.10 for standard nomenclature.
Card E03 - Not Required		
Card E04 - Not Required		
Card E05		
9-11	Activity Number	Same as Card D01.
12-13	Test ID Number	Same as Card E01.
14-15	Line Number	Enter a sequential, integer number for each line of test comments.
16-80	Test Comments	Enter comments as text pertaining specifically to the testing activity conducted. Additional cards may be used as needed.

GROUP F - ANALYSIS LEVEL - FORM 6

Card column	Data element	Encoding instructions
Card F01		
9-11	Activity Number	Same as Card D01.
12-13	Test ID Number	Same as Card E01.
14-15	Analysis Number	Enter a sequential, integer number for each analysis reported.
16	Analysis Designation	Enter the letter code which designates the type of analysis reported. Enter the letter "B" for biological, "E" for ecological, or "P" for pollutant.
17-51	Analysis Location	Enter the name and location of the laboratory that performed the analysis as text. Use standard nomenclature in Table A.5.2.
52-80	Test Type	Leave blank.
Card F02 - Not Required		
Card F03 - Not Required		
Card F04		
9-11	Activity Number	Same as Card D01.
12-13	Test ID Number	Same as Card E01.
14-15	Analysis Number	Same as Card F01.
16-17	Line Number	Enter a sequential, integer number for each line of analytical comments reported.
18-80	Analysis Comments	Enter comments as text pertaining sepcifically to the analysis reported. Additional cards may be used as needed.

GROUP G - POLLUTANT LEVEL - FORM 7

Card column	Data element	Encoding instructions
Card G01 - Not Required		

SECTION 5

DATA SUBMITTAL

5.0 INTRODUCTION

The purpose of this section is to provide users of the PPS with instructions for submitting new data for entry to the PPS data base and to describe the quality assurance and quality control activities which will be performed on all data submitted. Previous sections in this User Guide have discussed how the project data are to be organized and encoded on the PPS Data Input Forms. This section will provide the protocol for transferring the data from the data sheets to a form that can be read by the computer. Once this step is completed, instructions are given regarding to whom the data should be sent and what documentation should be provided. Next, the review cycle by the EADS Technical Support Staff is described. The function of the EDIT program and LOADER program is discussed, and the output of each program is described and interpreted.

5.1 DATA INPUT FORM PROCESSING

The PPS data input forms are designed to be entered into the computer initially as 80-character records either as computer cards or card images that can be interpreted by the UNIVAC U-1100 computer. It is the responsibility of the submittor to ensure that the data are keypunched and verified. The character set to be used should be compatible with the IBM 029 set.

No project profile should be submitted until it has been assigned a unique Project Profile Number (PPN) by the EADS Program Manager. As described in Section 4, the PPN must be encoded in colums 1-5 on each card submitted. If a permanent PPN has not been assigned, then the encoder should write or call the EADS Program Manager prior to submitting the data.

Cards should be segregated by PPN and should be packaged in boxes (if they are to be mailed). Data may be submitted on magnetic tape; however, before attempting to do so, the user should contact the EADS Program Manager for guidance. The manner in which computer tapes are formatted and read varies widely; thus, each tape submittal must be handled differently. The EADS Technical Support Staff will coordinate information between the user and the National Computer Center staff to ensure that the user's tape will be compatible with the UNIVAC U-1100. Magnetic tapes to be mailed should be packaged properly in specially-designed tape containers for shipment. Such containers are generally available in most data centers.

When the data input forms have been converted into a machine-readable format for the computer, the submittor should retain the data forms for reference until each profile has been loaded into the data base.

5.2 SUBMITTAL PROCEDURES

All data in machine-readable format (usually cards) should be sent to the EADS Program Manager (or his designee) accompanied by a cover letter that describes each profile submitted. A sample cover letter is given in Figure 5-1. The complete address is as follows:

Gary L. Johnson
EADS Program Manager
Industrial Environmental Research Laboratory
U.S. Environmental Protection Agency
Mail Drop 63
Research Triangle Park, North Carolina 27711

Once the data have been received, the encoder will be sent a letter acknowledging receipt of the data and notifying him that EDIT processing of the data has commenced. A sample acknowledgement letter is given in Figure 5-2.

In some cases, EADS users will have the facilities available to directly submit the profile cards to the National Computer Center. This is allowed; however, the submittor should contact the EADS Program Manager for technical guidance prior to doing so.

Gary L. Johnson
EADS Program Manager
Industrial Environmental Research Laboratory
Mail Drop 63
Research Triangle Park, North Carolina 27711

Dear Mr. Johnson:

Enclosed you will find punched cards for Project Profiles 201 through 210. These profiles represent ten environmental contracts currently under way at this laboratory.

Very truly yours,

John A. Doe, Ph.D.
Ozone National Laboratory

Enclosure

Figure 5-1. Sample data submittal letter.

Dr. John A. Doe
Ozone National Laboratory
1234 Anystreet Drive
Hometown, California 99999

Dear Dr. Doe:

This letter is to acknowledge our receipt of source testing data for PPS PPN 201-210.

In a short time, you will be contacted by the EADS Technical Staff regarding any corrections to the data that may be required prior to loading the data into the appropriate media data base.

Thank you very much for your support of the EADS. If you have any questions, please feel free to call me at (919) 541-2745.

Very truly yours,

Gary L. Johnson
EADS Program Manager (MD-63)

Figure 5-2. Sample data submittal ackowledgement letter.

5.3 REVIEW AND CORRECTIVE ACTION PROCEDURES

The responsibility for determining the validity of the data submitted lies with the encoder; however, the EADS Technical Staff will assist the encoder by identifying errors that must be corrected before the data can be loaded into the data base.

Upon receipt of the card deck (or decks) submitted by the encoder, the EADS Program Manager's office will load the cards into a card-image file on the UNIVAC U-1100 computer at Research Triangle Park, North Carolina. The appropriate EADS Technical Staff persons will be notified that a new profile has been received and the quality assurance (QA) activities may begin for that profile.

The PPS QA activities are shown schematically in Figure 5-3. The project profile received will be processed through the PPS EDIT program which will produce a profile report format listing of the input data, a list of all errors detected, and a list of all cards contained in the profile. The EDIT program is described in detail in Section 5.4. Initially, the EADS Technical Staff will review the EDIT report and will identify any obvious errors. These errors will be corrected by the Technical Staff and a new EDIT report will be produced. It should be noted that by "obvious errors" we are referring to errors such as encoding, keypunching, or spelling errors, etc. The Technical Staff cannot and will not attempt to correct any data with respect to accuracy or validity, or otherwise pass engineering judgment on the submitted data, etc. Any errors in descriptive data <u>must</u> be identified and corrected by the encoder of the data.

The corrected EDIT report will be mailed to the encoder for his review. Any changes to the data should be marked legibly on the printout. Telephone interaction with the EADS Technical Staff to answer questions or to clarify data as they are encoded, is encouraged. The marked EDIT report with the corrections should be returned to the Technical Staff promptly. The Technical Staff will implement the recommended changes and will produce another EDIT report. If no errors are detected, the EDIT report will be returned to the encoder for final verification. If the encoder is satisfied that the data are correct (and valid) as submitted, then he should notify the Technical Staff that the data are ready to load into the data base. If any errors remain after reveiw by the encoder, the changes should again be marked on the EDIT report and it should be returned to the Technical Staff. This corrective action QA cycle will be repeated until the submittor okays the data for data base entry. <u>No data will be loaded until encoder approval is obtained</u>.

Once final approval of the data is received from the submittor, the project profile is processed through the LOAD program, which actually loads the sampling activity results into the SYSTEM 2000® data base management structure described in Section 2. The specific details of the LOAD program are given in Section 5.4.

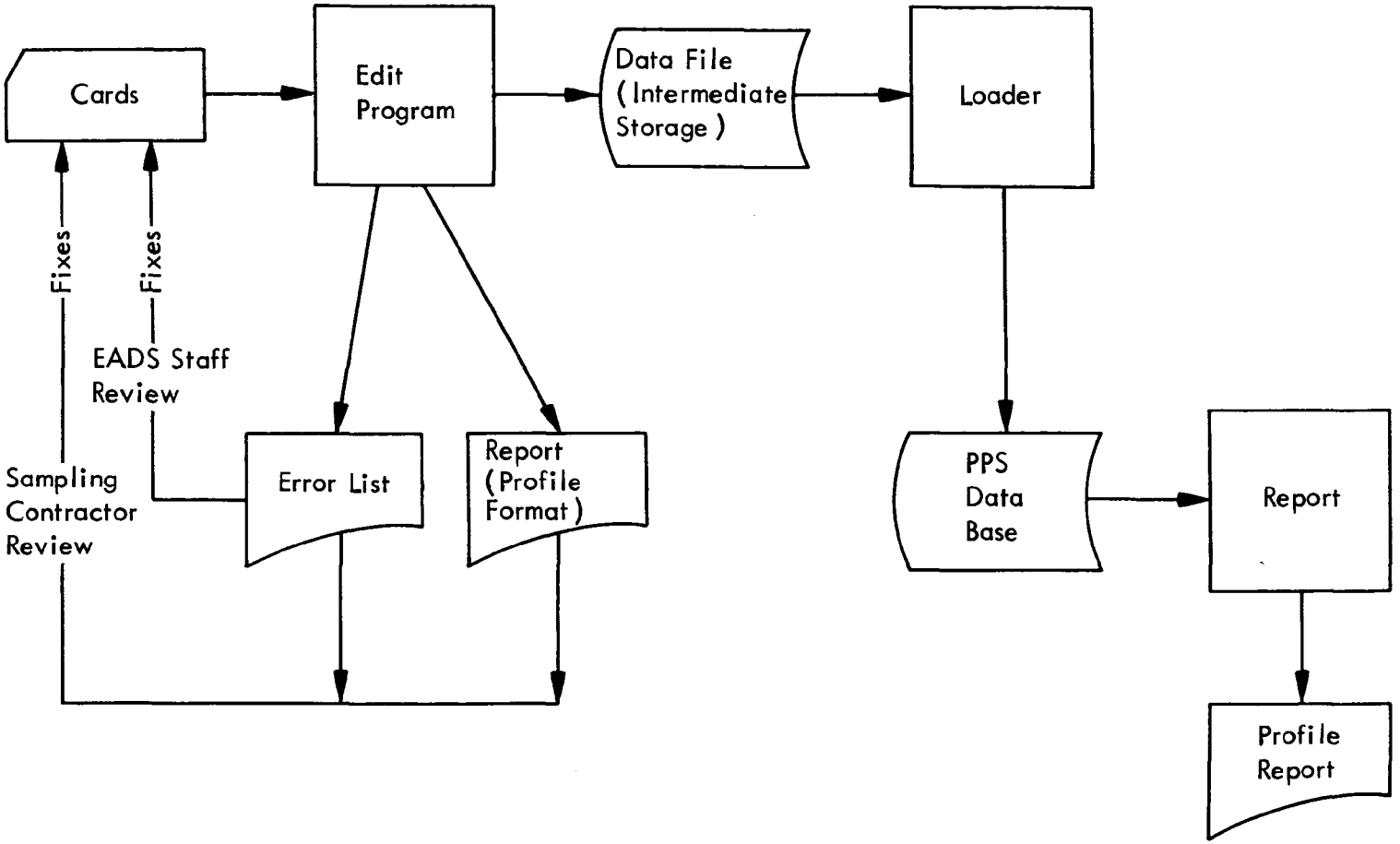

Figure 5.3. QA procedure.

When the test series has been loaded into the data base, a copy of the profile report (see Section 7) will be sent to the submittor to acknowledge the event. At this point, the contents of the project profile are available to be compared with any other data contained in the data base; that is, only now will the profile be available for public access.

5.4 EDIT/LOAD PROGRAMS

5.4.1 EDIT Program

The PPS EDIT program provides three functions on the data being submitted for entry to the EADS data base. First, the program processes and lists all input cards for a project profile, duplicating or filling data fields on cards as instructed by the Repetitive Data Feature protocol (described in Section 4). Second, the EDIT program produces a report that is formatted similarly to the profile report, which allows visual editing to be done in a format familiar to the user. Third, the program performs values and range checks on input data fields, such as those fields that require standard nomenclature, and lists any errors detected. The EDIT program does not replace actual reviewing of the data by the EADS Technical Staff or, more importantly, by the submittor of the data.

Each page in the profile report format has the form number given in the upper right corner that identifies the data input form on which the data were encoded. It should be noted that in the profile report format most analytical codes have been translated into the full description and all chemical ID's have been expanded to report both the MEG ID and the CAS number, the chemical preferred name and any synonyms, and the chemical formula. The EDIT report reflects the data as they are encoded, that is, the format follows the pyramid structure form by form. The PPS user should refer to Section 7 for more details on the profile report.

Following the listing of the input in the profile (EDIT) format, a summary of administrative data is presented on the project profile. The submittor is identified as well as the sponsor, contract number, etc. The principal milestones in the EDIT review cycle are documented.

After the administrative data, all of the input cards are listed and numbered sequentially as received. This provides an easy reference to the card images when errors are found. The EADS Technical Staff will correct any errors in this card image file using the UNIVAC Text Editor, which allows on-line changes to be made.

Following the listing of the input data cards, the ERROR file is printed. The ERROR file contains a list of all of the errors detected by the EDIT program. For each input card on which an error is found, the card number and entire card text are printed, the error number is given, the type of error (F = fatal or W = warning) is given, the data base component number affected is shown, and the error message is listed. The complete list of error messages is given in Appendix A.1. The format for the ERROR file data is shown below:

15	00125A01CCEA 02		
No.	Type	Component	Message
001	F	C110	Project Sponsor Name Missing

The user may refer to the Glossary of Data Elements in Appendix A.3 for a complete description of the component number. It should be noted that the ERROR file will only identify those fields left out or those having standard nomenclature to which comparisons may be made. As stated previously, the ERROR file does not replace visual checking of the data by the Technical Staff or validation of the data by the submittor.

5.4.2 LOAD Program

After the data have been reviewed completely and have been approved for data base entry, the LOAD program is used to enter the project profile into the data base. Loading of the data base is accomplished by the EADS Technical Staff. The LOAD program has no specific output like the EDIT program. Verification of data loading is made by the Technical Staff by checking the data base. Successful completion of the loading process will be acknowledged to the submittor of the data by his receipt of the profile report print-out.

The operation of the LOAD program is basically simple. The expanded EDIT-LOAD file is the input file to the LOAD program. The file is segmented into blocks of data which represent the principal levels of the data base structure. Using the project profile number, activity number, test ID number, analysis number, and pollutant number as indices, the data are loaded into the SYSTEM 2000® structure through a mechanism called Procedure Language Interface (PLI), a major feature of SYSTEM 2000®. The reader is referred to the appropriate SYSTEM® documentation for a complete discussion of the PLI feature.

SECTION 6

DATA RETRIEVAL

6.0 INTRODUCTION

The purpose of this section is to provide users with instructions for submitting new data for entry to the PPS and for retreiving existing data from the PPS. In particular, Section 6 discusses direct interactions with the computer and procedures for those users who do not have direct access to the EPA National Computer Center (NCC) at Research Triangle Park, North Carolina.

It is likely that many users of the PPS will have neither the time nor the inclination to pursue the direct access methods. Since Federal regulations do not permit the sale of computer services by government data centers like the NCC, most users will not be authorized to access the NCC unless they are under EPA contract. For this reason, procedures have been established which will enable those "off-line" users to retrieve information by written or telephone request.

It should be noted that there is no charge for "off-line" data retrieval; however, EPA makes no guarantee regarding the completeness of the data or the promptness of the response. In all likelihood, simple data requests will be processed quickly, but the staff response will depend upon their current workload and on the complexity of the request. Special data requests which require computer program development will take longer. Requesters will be appraised of any expected delays.

6.1 DATA RETRIEVAL USING THE PROGRAM LIBRARY

The simplest method of retrieving data for an off-line user is to request a program from the Program Library. Section 7 presents the programs available which may be utilized to retrieve PPS data in a specified manner. Each program is described separately and has its own requirements for data input or qualification by the user.

Programs may be requested by off-line users by telephone or in writing. The requester should supply all information in accordance with the requirements of the program and send the completed request to the following address:

EADS Program Manager
Special Studies Staff (MD-63)
Industrial Environmental Research Laboratory
U.S. Environmental Protection Agency
Research Triangle Park, North Carolina 27711

Users should send separate requests for different runs even if the same program is being used repeatedly. For example, if a user wishes to interrogate the data base according to a specific access criteria, any change to that criteria must be shown in a separate request. Receipt of the request will be acknowledged to the requester in writing. If there are any errors in the request or some information is missing, the requester will be contacted to clarify the problem. When the request has been processed, the output will be sent to the requester for verification.

6.2 SPECIAL DATA RETRIEVAL REQUESTS

It is recognized at the outset that the Program Library is not likely to be diverse enough to satisfy all user needs for data. For this reason, a special data retrieval request category was established. There is no specific form to be used for special requests; there is merely a set of general guidelines to follow in preparing the request. These guidelines are as follows:

1. Be explicit. Be thoroughly familiar with the PPS data base structure. Identify each data base element to be sorted and/or retrieved by name. Should additional work on the request be required, consultation with the requestor will be initiated, and, upon completion, the printout will be sent to the requestor for verification.

2. Plan the request. Be sure that the access criteria applies to the proper type of data element. Remember that only key values may be retrieved directly and that non-key values must be qualified for data access (see Section 6.3). Specify all needed qualifications and identify all input data for comparative evaluation.

3. Define the output. Determine how you wish the data to be displayed on output. Identify how data elements are to be ordered. Specify column headings. Define any calculations to be performed on the accessed data.

The completed definition of the request should be sent to the EADS Program Manager at IERL-RTP. The user should be sure to include an appropriate telephone number with the request. If there are any problems encountered with the request, the user will be contacted by telephone to resolve the problem.

When the request has been received, a letter of acknowledgement will be sent to the requestor. The letter will include a preliminary estimate of the length of time required to process the request. As emphasized previously, the length of time needed to process a special request will depend upon the complexity of the request.

If no problems are encountered that require consultation with the requestor, the results will be sent to the requestor when the processing is completed. The requestor should review the output to verify that it satisfies the request. If it does not, the printout should be returned with corrections to IERL for reworking. If the printout is satisfactory, the requestor should notify the EADS Program Manager of his acceptance.

6.3 KEY/NON-KEY DATA ELEMENTS

Data elements in a SYSTEM 2000® data base may be either KEY or NON-KEY. This designation determines whether a particular data element may be accessed directly or must be qualified by including additional information. KEY elements may be selected directly; NON-KEY elements require qualification by a KEY element. Table 6-1 lists the key data elements, along with their SYSTEM 2000® component numbers. For example, the data element PROJECT SPONSOR is KEY (as indicated in Table 6-1) and may be used to access the data of interest directly, such as in the following:

```
PRINT PROFILE NUMBER WHERE PROJECT SPONSOR EQ US EPA
```

If, however, the data element is NON-KEY, as in the case of PROJECT OFFICER, then qualification will be required:

```
IF PROJECT OFFICER EQ JOE DOE THEN PRINT PROFILE NUMBER
WHERE CONTRACTOR NAME EQ XYZ LABORATORY:
```

In this case, the KEY element, CONTRACTOR NAME, is used to qualify the request regarding a NON-KEY data element.

TABLE 6-1. LIST OF KEY DATA ELEMENTS

100*	Profile Number
102*	Program Name
110*	Project Sponsor
120*	Contract/Grant Number
130*	Project Start Date
140*	Project Finish Date
150*	Funding
155*	Fiscal Year
180*	Sponsor State
190*	Sponsor Country
210*	Sponsor Branch Code
220*	Sponsor Division Code
230*	Sponsor Lab Code
260*	Date of PPS Entry
265*	Agency Inventory Number
268*	Project Type Code
280*	Contractor Name
310*	Contractor State
320*	Contractor Country
370*	Profile Elements Code
410*	Report Sequence Number
450*	Sponsor Report Number
460*	NTIS Number
470*	Report Published Date
480*	Issue Date
510*	Line Number
610*	Activity Number
615*	Task Order/TD Number
620*	Source Category
630*	Source Type
640*	Product/Device
650*	Process Type
660*	Feed Material Category
670*	Feed Material Type
672*	Activity Start Date
674*	Activity Duration
680*	FPEIS TSN
681*	LEDS TSN
682*	GEDS TSN
683*	SDDS TSN
684*	FEIS TSN
685*	Activity Frequency
686*	Primary Activity
691*	Activity Line Number
710*	Test ID Number
715*	Project Topic
720*	Media
730*	Pollutant Control Generic Device
740*	Pollutant Control Design Type
750*	Pollutant Control Process
760*	Factors
770*	Approach
775*	Issues
780*	Methods
791*	Test Line Number
801*	Analysis Number
802*	Analysis Designator
805*	Analysis Location
810*	Test Type
820*	Test Description
835*	Serial Number
840*	Strains/Organisms/Ecosystems
851*	Analysis Line Number
905*	Pollutant Number
910*	Pollutant Media
920*	Pollutant Code Type
930*	Pollutant Code
940*	Sampling Techniques Code
950*	Analytical Techniques Code
960*	Sampling Location Code

6.4 ON-LINE REQUEST PROCEDURES

The phrase "on-line request" implies that the user intends to establish direct communication with the PPS data base through some type of terminal-to-computer link. The procedure described in this section may be used by a qualified user of EPA's NCC to access the PPS directly through an interactive data communications (demand) terminal or a remote job entry terminal. The specific qualifications for NCC user access are discussed in Section 6.5.

On-line users of the EADS are presumed to have a working knowledge of UNIVAC 1100 series computers and, in some cases, of SYSTEM 2000® natural language. Special data retrieval procedures (see Section 7) have been developed to minimize the data processing knowledge required to use the PPS. Any user unsure of his familiarity with the UNIVAC 1100 or SYSTEM 2000® is urged to request information through the off-line procedures described previously in this section.

On-line users are granted READ-ONLY access to the PPS data base. No updating of data is permitted. New data must be submitted through the EPA project officer. In the READ-ONLY mode, the user may retrieve, for sorting and evaluation, any data stored in the system. The user may take advantage of the wide array of features offered by SYSTEM 2000® for data sorting and retrieval.

6.5 NCC USER QUALIFICATIONS AND SERVICES REGISTRATION

Qualified users are defined as those who have valid accounts with the NCC at Research Triangle Park, North Carolina. In most cases, NCC users are either EPA personnel or contractors who are under EPA contract. The NCC is not available to public subscribers. Federal regulations prohibit the marketing of computer time by government data centers which may be in competition with commercial computer services vendors. Thus, it is not usually possible for PPS users who are not under EPA contract to obtain account numbers in order to access the NCC directly. Exceptions to this may be found with user access through interagency agreements or grants. The qualifications of a potential NCC user are determined by EPA's Management Information and Data Systems Division (MIDSD).

Any questions regarding the qualification of a user should be addressed to:

MIDSD TSSMS Office
U.S. Environmental Protection Agency
National Computer Center (MD-34B)
Research Triangle Park, North Carolina 27711

or by telephone to 919-541-3629 (FTS: 629-3629).

6.5.1 Registration Procedures

All users of the NCC UNIVAC 1100 must be registered for accounting and security purposes. Application for NCC services is made by submitting a completed EPA Form 2800-3 (Figure 6-1) to the appropriate Automated Data Processing (ADP) coordinator for approval and signature. Each EPA office or laboratory which uses the NCC or other computing facilities has a designated person (or persons) who serves as the ADP coordinator. All procedural matters pertaining to the use of the NCC should be directed to the ADP coordinator. The MIDSD Time Sharing Services Management System (TSSMS) Office is located at the National Computer Center. Requests for EPA user account modifications processed through the ADP coordinators to authorize new accounts or add new users to existing accounts, normally submitted using the EPA Form 2800-3, should then be forwarded to the following address:

MIDSD TSSMS Office
U.S. Environmental Protection Agency
National Computer Center (MD-34B)
Research Triangle Park, North Carolina 27711

In instances where a user organization requires immediate access to computer facilities, temporary authorization can be achieved by telephone contact with the TSSMS Office. Requests for temporary authorization should be directed to 919-541-3629 (FTS: 629-3629). Upon receiving temporary authorization, a completed Form 2800-3 must be forwarded to the TSSMS Office. The temporary authorization obtained by telephone is valid for a 2-week period pending receipt

EDP SERVICES REGISTRATION
(Please Print or Type)

MIDSD USE ONLY
DATE RECEIVED

SERVICE (Check one)
☐ TIME SHARING
☐ TECHNICAL ASSISTANCE
☐ OTHER

SUPPLIER (Specify)

SOURCE OF FUNDS
☐ U.S. EPA
☐ REIMBURSIBLE
☐ SPONSORED

PROJECT CODE

ENVIRONMENTAL SYSTEM IDENTIFICATION NUMBER

PROJECT TITLE (Limit: 60 characters, including spaces)

PROJECT DESCRIPTION

ORGANIZATION

ORGANIZATION CODE

PROGRAM ELEMENT TITLE

PROGRAM ELEMENT CODE

DOLLAR AMOUNT | DATE TO BEGIN | DURATION | SYSTEM | ☐ RETRIEVAL ONLY ☐ FULL ACCESS | DAILY STORAGE

PROJECT MANAGER | NAME (Last, First, M.I.) | PHONE (Include area code) | DISTANCE CODE | REFERENCE INITIALS | LOGON

MAIL CODE (or room) | OFFICE OR LOCATION

ADDRESS (Street or P.O. Box) | CITY | STATE | ZIP CODE

MAILING LIST CODE
M ☐ S ☐
P ☐ T ☐
C ☐ U ☐
F ☐ N ☐

USER | NAME (Last, First, M.I.) | PHONE (Include area code) | DISTANCE CODE | REFERENCE INITIALS | LOGON

MAIL CODE (or room) | OFFICE OR LOCATION

ADDRESS (Street or P.O. Box) | CITY | STATE | ZIP CODE

MAILING LIST CODE
M ☐ S ☐
P ☐ T ☐
C ☐ U ☐
F ☐ N ☐

USER | NAME (Last, First, M.I.) | PHONE (Include area Code) | DISTANCE CODE | REFERENCE INITIALS | LOGON

MAIL CODE (or room) | OFFICE OR LOCATION

ADDRESS (Street or P.O. Box) | CITY | STATE | ZIP CODE

MAILING LIST CODE
M ☐ S ☐
P ☐ T ☐
C ☐ U ☐
F ☐ N ☐

TO:
U.S. Environmental Protection Agency
MIDSD TSSMS Office
National Computer Center
MD-34B *(Rm. 111 Michaux Building)*
Research Triangle Park, NC 27711

ORIGINATED BY | DATE
CONCURRENCE (Funding) | DATE
CONCURRENCE (Other) | DATE

MAILING LIST KEY
M — MANAGEMENT PANEL
P — PROPERTY
C — CONTRACTOR
F — FEDERAL NON-EPA
S — STATE OR LOCAL GOVT
T — TERMINAL CONTACT
U — UNIVERSITY
N — SYSTEM NEWS

MIDSD USE ONLY
POSTED | UPDATED | PROOFED

EPA Form 2800-3 (Rev. 6-78) PREVIOUS EDITION IS OBSOLETE *(continued on back)*

Figure 6-1. NCC application.

PLEASE PRINT OR TYPE
(Additional users)

USER NAME (Last, First, M.I.)	PHONE (Include area code)	DISTANCE CODE	REFERENCE INITIALS	LOGON
MAIL CODE (or room) / OFFICE OR LOCATION		MAILING LIST CODE: M ☐ P ☐ C ☐ F ☐ S ☐ T ☐ U ☐ N ☐		
ADDRESS (Street or P.O. Box) / CITY	STATE / ZIP CODE			

USER NAME (Last, First, M.I.)	PHONE (Include area code)	DISTANCE CODE	REFERENCE INITIALS	LOGON
MAIL CODE (or room) / OFFICE OR LOCATION		MAILING LIST CODE: M ☐ P ☐ C ☐ F ☐ S ☐ T ☐ U ☐ N ☐		
ADDRESS (Street or P.O. Box) / CITY	STATE / ZIP CODE			

USER NAME (Last, First, M.I.)	PHONE (Include area code)	DISTANCE CODE	REFERENCE INITIALS	LOGON
MAIL CODE (or room) / OFFICE OR LOCATION		MAILING LIST CODE: M ☐ P ☐ C ☐ F ☐ S ☐ T ☐ U ☐ N ☐		
ADDRESS (Street or P.O. Box) / CITY	STATE / ZIP CODE			

USER NAME (Last, First, M.I.)	PHONE (Include area code)	DISTANCE CODE	REFERENCE INITIALS	LOGON
MAIL CODE (or room) / OFFICE OR LOCATION		MAILING LIST CODE: M ☐ P ☐ C ☐ F ☐ S ☐ T ☐ U ☐ N ☐		
ADDRESS (Street or P.O. Box) / CITY	STATE / ZIP CODE			

USER NAME (Last, First, M.I.)	PHONE (Include area code)	DISTANCE CODE	REFERENCE INITIALS	LOGON
MAIL CODE (or room) / OFFICE OR LOCATION		MAILING LIST CODE: M ☐ P ☐ C ☐ F ☐ S ☐ T ☐ U ☐ N ☐		
ADDRESS (Street or P.O. Box) / CITY	STATE / ZIP CODE			

USER NAME (Last, First, M.I.)	PHONE (Include area code)	DISTANCE CODE	REFERENCE INITIALS	LOGON
MAIL CODE (or room) / OFFICE OR LOCATION		MAILING LIST CODE: M ☐ P ☐ C ☐ F ☐ S ☐ T ☐ U ☐ N ☐		
ADDRESS (Street or P.O. Box) / CITY	STATE / ZIP CODE			

USER NAME (Last, First, M.I.)	PHONE (Include area code)	DISTANCE CODE	REFERENCE INITIALS	LOGON
MAIL CODE (or room) / OFFICE OR LOCATION		MAILING LIST CODE: M ☐ P ☐ C ☐ F ☐ S ☐ T ☐ U ☐ N ☐		
ADDRESS (Street or P.O. Box) / CITY	STATE / ZIP CODE			

USER NAME (Last, First, M.I.)	PHONE (Include area code)	DISTANCE CODE	REFERENCE INITIALS	LOGON
MAIL CODE (or room) / OFFICE OR LOCATION		MAILING LIST CODE: M ☐ P ☐ C ☐ F ☐ S ☐ T ☐ U ☐ N ☐		
ADDRESS (Street or P.O. Box) / CITY	STATE / ZIP CODE			

USER NAME (Last, First, M.I.)	PHONE (Include area code)	DISTANCE CODE	REFERENCE INITIALS	LOGON
MAIL CODE (or room) / OFFICE OR LOCATION		MAILING LIST CODE: M ☐ P ☐ C ☐ F ☐ S ☐ T ☐ U ☐ N ☐		
ADDRESS (Street or P.O. Box) / CITY	STATE / ZIP CODE			

USER NAME (Last, First, M.I.)	PHONE (Include area code)	DISTANCE CODE	REFERENCE INITIALS	LOGON
MAIL CODE (or room) / OFFICE OR LOCATION		MAILING LIST CODE: M ☐ P ☐ C ☐ F ☐ S ☐ T ☐ U ☐ N ☐		
ADDRESS (Street or P.O. Box) / CITY	STATE / ZIP CODE			

USER NAME (Last, First, M.I.)	PHONE (Include area code)	DISTANCE CODE	REFERENCE INITIALS	LOGON
MAIL CODE (or room) / OFFICE OR LOCATION		MAILING LIST CODE: M ☐ P ☐ C ☐ F ☐ S ☐ T ☐ U ☐ N ☐		
ADDRESS (Street or P.O. Box) / CITY	STATE / ZIP CODE			

EPA Form 2800-3 (Rev. 6-78) (Reverse)

Figure 6-1. (concluded)

of the Form 2800-3 for processing permanent authorization. Users must specify an EPA employee as Project Manager who, in all cases, becomes responsible for the utilization of the account. Requests for cancellation of specific users authorized under a given account or changes in user address/telephone numbers will be processed by telephone using the TSSMS telephone number listed above.

Non-EPA users (e.g., contractors, grantees, etc.) should submit all required forms to their EPA project officer, who in turn will forward the information to the ADP coordinator. Account authorizations/modifications for Interagency Agreement User Accounts (non-EPA users) should be forwarded for approval to:

W. G. Allen, Computer Specialist
U.S. Environmental Protection Agency
National Computer Center (MD-34)
Research Triangle Park, North Carolina 27711

Upon approval of Interagency requests, the TSSMS Office will complete implementation of the authorization and notify the respective project manager. Any questions concerning the above should be directed to the TSSMS Office at 919-541-3641 (FTS: 620-3641). Please note that, in regard to EPA Form 2800-3, the organization titles and codes and the EPA DIPS organization titles and codes, and the program element titles and codes are assigned by the Office of Planning and Programming. The account number will be assigned to the user by MIDSD and must appear on all transactions attempted with the NCC UNIVAC 1100.

6.5.2 User ID and Password

The NCC UNIVAC 1100 has a comprehensive, multi-level security system which is designed to prohibit unauthorized use of the computer. A feature of this security system is the TSSMS which requires that all users be identified by a unique USERID and PASSWORD before access to the computer is granted. The USERID/PASSWORD must appear on all demand and batch job requests. This will be discussed in detail later in Sections 6.6 and 6.7, respectively.

The USERID/PASSWORD is assigned to each individual user of the NCC by MIDSD. Requests for a USERID/PASSWORD should be submitted to the appropriate ADP coordinator (through the EPA project officer, if necessary) for approval and signature.

6.6 INTERACTIVE TERMINAL OPERATION

Demand processing or interactive terminal operation, is defined as a mode of operation in which processing is dependent on manual interface with the central processor during processing. Basically, demand processing is a conversational mode of operation requiring a demand and response type of activity. Conversational operation via a remote terminal causes the Executive System, a demand processor, or an active program to immediately react and respond. Demand processing terminals are generally thought of as being remote from the computer site and as having a printer or a cathode-ray tube and keyboard. An example of a demand terminal is the teletype writer keyboard and printer.

The distinction between batch-mode processing and demand processing lies in the frequent interaction with the user that occurs during demand processing. The terminal user is considered to be in conversation with the Executive System, special demand function, user programs, or the batch functions of the Executive System on a unit basis.

Tasks executed by the demand terminal user normally have frequent but short bursts of computation. To process a substantial amount of computation may require a long period of time. Access to computation is a percentage of the total computing facility and is scheduled in small increments of time at frequent intervals to provide immediate responses. This action gives the appearance of total system control to the user and the impression of being the only user currently running. The more a user is required to interact with a demand program the shorter the bursts of computation required to service a given request. The bursts of computation are time-shared within the Executive System to provide an apparent immediate response, with the program placed in a dormant mode during idle periods awaiting response from the user.

While a demand program is in a dormant mode, it may be necessary to swap the program from main storage. Normally, this transfer happens only when main storage is full and another program currently on mass storage has work to do.

The demand has three distinct modes of operation. They are described below:

- Terminal Inactive Mode--The initial mode of the terminal following the sign-on procedure. The terminal will return to this mode at the completion of the other two modes.

- Demand Run Mode--This mode is achieved by submitting a @RUN control statement (see Section 6.6.1) from the primary input device; that is, the keyboard. The terminal operator must wait until the date and time message is displayed at the terminal before submitting the run stream data. In demand mode, the input will be solicitated when input is desired by the Executive System. The terminal is returned to the inactive mode by submitting a @FIN control statement (see Section 6.6.2).

- Batch Mode--The demand terminal may be switched from demand mode to batch mode for input or output. The "B" sub-option on the @RUN control statement (@RUN,/B) will place the terminal in batch input mode. Input will not be solicited as in demand run mode. The terminal will be returned to the terminal inactive mode following a @FIN control statement. Another @RUN control statement will be accepted while in the remote batch run whether it contains a "B" option or not. Output files generated by the batch run, as well as those SYM'd (via @SYM) to the terminal can be displayed at the terminal by entering the statement, @@SEND. The terminal is returned to the inactive mode when the output process of the file is complete.

Interactive (or demand) processing with the NCC UNIVAC 1100 is supported for a variety of low-speed data communications terminals. Generally speaking, most 30 character/second (CPS) terminals which have ASCII character sets will be able to access the NCC. The NCC does not support any terminals which operate at 10 CPS or 15.5 CPS. Also, the NCC doe not support IBM 2741 or similar EBCIDIC code set terminals.

A partial list of terminals supported by the NCC for demand processing include the following:

Anderson-Jacobson Models 630, 840, 830, and 832

UNIVAC UNISCOPE 100

UNIVAC DCT 500 or equivalent

Texas Instruments Silent 700 series

Hazeltine (most models)

LA36 DECwriter II

If you are uncertain about the compatability of a particular terminal with the NCC UNIVAC 1100, you should contact the following:

NCC User Services
919-541-3649
FTS: 629-3649

All UNIVAC supported demand terminals use a common interface (device routines providing the user interface with unit record peripherals) for input and output processing. This provides several controls and features to all demand terminals in a uniform manner. Control of remote symbionts is regulated by control statements prefixed with a double master space (@@). These control statements do not require the input solicitation. They may be entered after an output interrupt (break-key) or any other time the terminal operator finds the need. The control statements are given in Table 6-2.

TABLE 6-2. REMOTE INTERFACE CONTROL STATEMENTS

Statement	Mode	Description
@@X TIOC		The @@X statement directs the Executive System to take action on any or all of the four possible action parameters. The @@X defaults to @@X 0.
	Demand Run	T--terminate the demand run's present execution.
	Demand Run	I--discard all backed-up input.
	Demand Run	O--discard all backed-up output.
	Demand Run	C--generate a "BRK" contingency.
@@SKIP n	Demand Run	Skip n lines of output where n is a value of 0 to 63. The SKIP may be reset by a @@SKIP 0. The @@SKIP n defaults to @@SKIP 0.
@@SEND	Terminal Inactive	Send a queued batch output file to the terminal.
@@RQUE	Remote Batch	Stop the present batch output file and requeue it for a later @@SEND request. Return to terminal inactive mode.
@@CONT	All	Directs the symbiont to continue. Useful after a BRK-KEY when no action is desired.
@@CQUE	Demand Run	Circumvent input solicitation requirement. Allow several input images to be buffered in memory before the terminal is placed in the wait condition.
@@INQ	All	Directs the Executive System to buffer all input to mass storage until the @@END control statement is received. If the @@INQ statement is entered in terminal inactive mode, the next input should be a @RUN statement. All @RUN statements entered while in @@INQ mode will be considered remote batch and not demand.

TABLE 6-2. Concluded

Statement	Mode	Description
@@END	All	Terminates special input mode, i.e., @@CQUE or @@INQ. The @@END returns the terminal to demand run from @@CQUE and will process the mass storage buffered input of @@INQ.
@@ESC	Demand Run	Allows the input to be passed to the requester unaltered from the format of which it was entered; that is, all communication envelope characters are not removed nor is the image translated.
@@TERM	All	Directs the Executive System to terminate the terminal. It is recommended that the remote Operator enter @@TERM only while in the terminal inactive mode. However, if entered while a run is active, the run and terminal will be terminated. @@TERM is equivalent to sign off.
@@TTY W, n	All	Changes the maximum character width of page from the default 80 characters to n characters wide. In most cases, the maximum page width should be set to 132.

For more details on demand processing, the user should refer to the National Computer Center User Reference Manual. This manual may be obtained from NCC User Services at the telephone numbers listed above. The remainder of this section will address demand processing as it applies to the EADS.

6.6.1 Initiating a Demand Processing Session

Communications are established with the NCC UNIVAC 1100 through data communication modems or couplers over voice-grade telephone lines. Users should follow the steps given in the equipment user manual for their terminal in order to establish the data link to the computer. A list of nationwide telephone access numbers for the NCC is given in Table 6-3. Once the data link is established, the following sequence of commands should be entered (for clarity, the information printed by the computer is shown in capital letters; the input required from the user in small letters).

Note that the pound sign (#) denotes a carriage return:

Command	Description
#nccdemd#	This identifies the NCC to the communications network.
READY TO NCC ON 9E	Response indicates that communication is established on Port 9E.
ENTER USERID/PASSWORD >xxx/xxxxxx#	Enter the approved USERID and PASSWORD following the input solicitation symbols (>).
*DESTROY USERID/PASSWORD ENTRY	
*UNIVAC 1100 OPERATING SYSTEM LEV. 36R2B-80-18A	This header mesage is usually followed by several lines of text indicating special news which can be obtained. When the solicitation symbol (>) is received you are ready to enter a valid @RUN card.
>@@tty w, nn#	Where nnn = the maximum width of the page in characters (usually 132). This command may be omitted if terminal is limited to 80 characters.
-@@ COMPLETE	Indicates that the @@TTY command has been executed.

TABLE 6-3. NCC DEMAND ACCESS TELEPHONE NUMBERS

State	City	Telephone
Alabama	Montgomery	205/277-9390
California	San Francisco	415/546-1395
Colorado	Denver	303/837-0843
Connecticut	Wethersfield	203/529-3378
District of Columbia	Washington	202/966-9510
Georgia	Athens	404/549-3882
	Athens	404/873-6431
Illinois	Chicago	312/663-1640
Louisiana	New Orleans	504/566-0041
Massachusetts	Boston	617/742-0420
Michigan	Grosse Ile	313/675-8936
	Lansing	517/485-3220
Minnesota	Minneapolis	612/861-7451
Missouri	Kansas City	816/474-3540
Nevada	Las Vegas	702/736-1988
New York	New York	212/233-1604
North Carolina	Raleigh/Durham	919/541-2000
Ohio	Cincinnati	513/751-5800
Pennsylvania	Philadelphia	215/925-4407
South Carolina	Columbia	803/256-1018
Tennessee	Nashville	615/244-8020
Texas	Dallas	214/651-1723
Washington	Seattle	206/682-6456
All other locations (toll free)		800/424-3690

>@run nnxxx,account number, eads,15#	Where nnxxx = the RUNID. Usually this begins with a number that designates an output receiving bin at the NCC User Reference Manual or call User Services for more information. Account No. = the NCC account number as given. eads = the project code which enables access to the PPS data base and software. No other project code may be used.
DATE: 011580 TIME: 135248 >	This is the system response if a valid @RUN card has been entered, followed by the >. NOTE: If your terminal can print more than 80 characters across the page, you may wish to expand the page width as shown above.

At this point, the computer is ready to receive instruction for accessing the data base or for executing PPS retrieval or analytical software. For users who are knowledgeable in SYSTEM 2000® natural language, Section 6.6.3 describes the acessing procedure.

6.6.2 Terminating a Demand Processing Session

Two commands are required to end a demand processing session--the @FIN and the @@TERM. The @FIN command ends the run and results in the printing of summary usage and accounting data, and places the terminal in the inactive mode. The @@TERM command ends the session by disconnecting the terminal from the computer. A typical sequence is as follows (# denotes carriage return):

```
>@fin#                                          (Enter the @FIN command)

RUNID:     XXXXX          ACCT:     XXXXXXXXXX          PROJECT:  EADS
TIME:                     TOTAL:    00:00:35.510        CBSUPS:   001854139
                          CPU:      00:00:00.177        I/O:      00:00:08.822
                          CC/ER:    00:00:26.509        WAIT:     00:02:36.079
SRUS:      00:01:41.027   COST:     $005.05
IMAGES READ:  78          PAGES:    3
START:     13:52:47       JAN 15, 1980  FIN:  13:57:50  JAN 15, 1980
*TERMINAL INACTIVE*

>@@term#                                        (Enter the @@TERM command)
```

6.6.3 Accessing the PPS

Read-only access to the data base is granted to users of the PPS who use this procedure. Users are cautioned not to attempt to use this procedure unless they are familiar with SYSTEM 2000® natural language. The sequence is as follows (#denotes carriage return):

```
>@add PPS.start#                                    (Enter the @ADD command.)

01/15/80        17:09:07        BEGIN SYSTEM 2000        VERSION 2.80D
---
-556- ASSIGNED...EADS-PPS      12    28443     01/15/80  11:44:14
---
---
>
```

At this point, the system is ready to accept valid SYSTEM 2000® commands. The session may be ended by using the EXIT: command, which produces the trailer banner and returns to control mode with the input solicitation character (>) given.

```
> exit:#
01/15/80        17:14:52        END        SYSTEM 2000        VERSION 2.80D
>
```

The demand processing session may be terminated by using the procedure given in Section 6.6.2.

Any attempts to change or modify the data base in any way will result in the following diagnostic message:

```
-846- COMMAND NOT AVAILABLE IN SHARED MODE-
---
>
```

6.7 REMOTE BATCH TERMINAL OPERATION

Batch processing, whether remote or local submittal, implies that discrete jobs are submitted to the NCC UNIVAC 1100 from cards or some similar form. If local, card decks are submitted to the I/O Control Clerk and then loaded into the computer; if remote, cards are read into the computer through a high-speed remote job entry (RJE) terminal which has been connected to the computer via telephone data link.

Remote batch terminal operation with the NCC UNIVAC 1100 is currently supported under the UNIVAC 1004 and NTR (9000 Remote) terminal protocols. This means that a variety of commercial RJE terminals which are capable of emulating (or looking like) a U-1004 or NTR terminal may be used to access the NCC UNIVAC 1100. A partial list of RJE terminals which satisfy one or more of these conditions includes the following:

DATA 100 Models 74, 76, and 78
COPE RJE Terminals
Harris RJE Terminals
UNIVAC 1004
UNIVAC 9200 NTR

If you are uncertain regarding the compatibility of a particular terminal with the NCC UNIVAC 1100, you should contact the following:

NCC User Services
919-541-3649
FTS: 629-3649

All RJE terminals are identified to the NCC UNIVAC 1100 by a unique SITE ID which is assigned by the MIDSD TSSMS Office at Research Triangle Park, North Carolina. Figure 6-2 gives an example of the form required for batch terminal support. The completed form is submitted to the appropriate ADP coordinator (through the EPA project officer if required) for approval and signature.

The batch SITE ID is of the form DATAXX and must be transmitted to the NCC UNIVAC 1100 at sign-on before any processing can be initiated.

6.7.1 Initiating a Remote Batch Processing Session

Communications are established with the NCC UNIVAC 1100 through data communication modems over voice-grade telephone lines. The NCC UNIVAC 1100 will support RJE processing only at 4800 bits/second (BPS) transmission rate. A list of nationwide RJE telephone access numbers for the NCC is given in Table 6-4.

Batch processing through an RJE terminal essentially means that the terminal-to-computer data link must be established and the computer card deck must be read into the computer in a prescribed manner. Since this procedure varies

Organization: _____

Terminal manufacturer and model number: _____

If programmable, what UNIVAC terminal does the terminal emulate? _____

Hours of operation: From _____ To _____ EDT

Person responsible:

Name _____

Title _____

Mailing Address _____

_____

_____

Telephone: FTS _____ Ext. _____

Commercial _____ Ext. _____

Comments _____

_____

_____

ADP Coordinator _____ Date _____

THE FOLLOWING TO BE COMPLETED BY NCC

SITE-ID _____

_____

Telephone numbers to use:

FTS _____

_____

_____

Commercial _____

_____

_____

Contacts: User Services
FTS 629-3649
919/541-3649

Central Computer Operations:

Day: _____

_____

Night: _____

Mailing Address:

National Computer Center
U.S. EPA
Research Triangle Park
North Carolina 27711

Hours available for operation:

Weekdays: _____ to _____ EDT

Saturday: _____ to _____ EDT

Sunday: _____ to _____ EDT

Holidays: _____ to _____ EDT

Comments: _____

_____

_____

Figure 6-2. Request for batch terminal support form.

TABLE 6-4. NCC REMOTE BATCH ACCESS TELEPHONE NUMBERS

Location	Transmission rate (BPS)	Telephone
Continental U.S. (toll outside RTP)	4800	919/541-2094 (3 lines)
Continental U.S. (except NC) (toll free)	4800	800/334-9761 (8 lines)

NOTE: 4800 BPS transmission requires Bell 208B dataset or equivalent.

dramatically among terminal vendors, the user should refer to his terminal hardware operating manual for the appropriate procedure. If any problems or questions arise, the user should contact NCC User Services.

6.7.2 Terminating a Remote Batch Processing Session

The termination of a remote batch processing session depends upon which UNIVAC RJE terminal is being used (or emulated). The user should consult his terminal hardware operations manual for the correction procedure.

6.8 PPS USER SUPPORT

IERL/RTP is committed to the on-going support of the PPS and its associated software. The administrative functions relative to the PPS are provided by the Special Studies Staff in IERL. Technical development and maintenance is provided by the EADS Technical Support Staff, which is composed of government contractors under the direction of the EADS Program Manager. The EADS Technical Support Staff has the responsibility for conducting the data QA program, updating documentation, developing analytical software specification, conducting information transfer activities, etc. This function is being provided by Acurex Corporation in Mountain View, California, and Midwest Research Institute, Kansas City, Missouri. Data processing activities are also performed by Acurex Corporation in its offices located at Research Triangle Park, North Carolina.

Any questions regarding the EADS should be directed to the EADS Program Manager or the EADS Technical Support Staff. Their names, addresses, and phone numbers are listed on page v.

Problems relating to the operation of the NCC UNIVAC 1100, to data communications, etc., are not the responsibility of the EADS Technical Support Staff. These questions should be addressed to:

User Services
National Computer Center (MD-34B)
U.S. Environmental Protection Agency
Research Triangle Park, North Carolina 27711
FTS: 629-3649
Commercial: 919-541-3649

SECTION 7

PROGRAM LIBRARY

7.0 INTRODUCTION

The usefulness and usability of project description data which have been compiled into a computerized information system are limited if the data cannot be retrieved and utilized to answer questions that a user might have. As discussed previously, the employment of the SYSTEM 2000® data base management system provides a flexible set of commands that can often answer many questions. SYSTEM 2000® Natural Language, as this command language is called, is a powerful tool for the knowledgeable user; that is, the user who is familiar with or has received training in the use of SYSTEM 2000®. The Natural Language commands are limited, however, especially when there is a need to perform calculations using the data or when a special formatted report is required. In addition, most PPS users are not likely to undertake training in the use of SYSTEM 2000® Natural Language, nor should these users be expected to have any particular expertise in the use of computers or computer programs. This means that no user of the PPS should be required to have any special computer-related training in order to use the PPS data base.

In order to provide greater flexibility to the user and to simplify the retrieval of data, an extensive program library is being developed for the PPS. The programs described in the following subsections are applicable to one or more of the waste stream data bases contained in the PPS.

Each entry in the program library is described by a brief abstract which identifies in general terms the input required from the user and the output to be expected. Some programs will be applicable to both demand (interactive) processing and batch processing, and step-by-step instructions for executing the program in both modes are given when appropriate. For demand processing, it is assumed that the user has successfully established communications with the UNIVAC U-1100 computer as described in Section 6 of this user guide. In like manner, batch users are assumed to have established communications with the UNIVAC U-1100 through a remote terminal device or have the capability of submitting run requests locally at the EPA National Computer Center at Research Triangle Park, North Carolina. All input requirements for each program are listed and a sample (or representative) output is provided. Any comments pertaining to the use of the program which may be helpful to the user are also given.

As new user programs are developed and made available to the PPS user community, this section will be expanded.

7.1 PROFILE REPORT

7.1.1 Abstract

The PROFILE Report is the basic report for the EADS Project Profile System (PPS). This report lists all of the data contained in the profile by activity, test ID, analysis, and pollutant. The length of the PROFILE Report will depend upon the quantity of data contained in the project profile.

The format of the PROFILE Report follows the structure of the PPS data base. The first page of the report describes the administrative aspects of the project. This includes identification of the sponsor organization and project officer, contractor organization and project manager, project title, and funding history. The first page also contains the profile elements which have been found to be applicable to this project. The second page in the PROFILE Report lists the references or publications produced by or pertaining to this project, including the author(s), publication number, etc. Page three contains the project abstract, a narrative description of the project, its objectives, and its accomplishments.

The fourth page introduces the activity level data. Succeeding pages will list the data for the test level, analysis level, and pollutant level in order. The data actually printed on each page will depend upon the project type. At the pollutant level, the use of the MEG ID or CAS Number for chemical compounds will result in complete compound identification in the PROFILE Report with the preferred name, synonyms, empirical formula, and molecular weight being printed. Also, the analysis method code will be translated into the descriptive text on output.

The PROFILE Report may be run by inputting the PPN and the Project Type Number. The Report may be initiated only through a "demand" terminal session even though the PROFILE program is only executed as a batch job. The demand session gives complete instructions for using the PROFILE Report program.

7.1.2 User Data Required

- Valid Project Type Code
- Valid Project Profile Number (or range of Project Profile Numbers)

7.1.3 Data Qualification Required

None.

7.1.4 Limitations/Restrictions

The PROFILE Report program user has several printing options available, including the NCC local printers, remote high-speed terminal printers, and low-speed time-sharing (demand) terminals. Because of the length of the PROFILE Report for most of the project profiles, it is recommended that the low-speed terminal option be avoided where possible.

7.1.5 Functional Description

Using the PPS project type code and the Project Profile Number (PPN), the selected profile is retrieved and printed in its entirety. Multiple PROFILE Reports may be initiated during one session.

7.1.6 User Instructions--Demand File Name: EADS.PPS-PROFILE

The PROFILE Report program may be accessed through a "demand," or time-sharing, terminal (see Section 6.6), which can access the U-1100 computer. User access through the demand terminal allows the program to be executed as a batch job. The user should initiate the demand session by following the procedures outlined in Section 6.6.1. When the session is completed, the demand session may be ended by following the instructions given in Section 6.6.2.

(In the following computer-generated instructions, the response by the user is underlined.)

```
>@ADD EADS.PPS-PROFILE              (Enter the file name)

CTS   6R1    16:21:01

THE ASSUMED MODE IS FIELDATA

DO YOU NEED INSTRUCTIONS?>   YES   (Enter YES or NO)

THIS MODULE IS DESIGNED TO RUN THE PROFILE REPORT FOR ANY VALID PROFILE
NUMBER AND PROJECT TYPE ENTERED.  INFORMATION REQUIRED TO RUN THIS ROUTINE
WILL BE ENTERED BY THE USER AS PROMPTED BY THIS MODULE.
```

(If the answer to the preceding question had been NO, the above statements would be skipped.)

```
ENTER YOUR ACCOUNT NUMBER:>         (Enter a valid NCC Account Number)

ENTER THE PROJECT TYPE NUMBER:>     (Enter the Project Type as an integer number.
                                     If no specific type is desired, press return.)

IS THE PROFILE NUMBER IN A RANGE (YES OR NO)?>    YES

YOUR REQUEST IS A CONTINUOUS RANGE

ENTER THE FIRST PROFILE NUMBER:>    (Enter the first PPN)

ENTER THE LAST PROFILE NUMBER:>     (Enter the last PPN)
```

(If the response to the range question is NO, the above statements are skipped. The computer will prompt the user with the following question.)

ENTER THE PROFILE NUMBER:> (Enter the PPN)

ENTER THE NUMBER OF COPIES IF 1, JUST PRESS RETURN:> (Enter the number of copies wanted)

DO YOU REQUEST SPECIAL FORMS?> NO (Enter YES or NO)

(If YES had been entered, the program would request the forms ID. Please consult the NCC User Reference Manual or the EADS Program Manager before attempting to use this feature. The NO response means that standard, one-part computer paper will be used.)

ENTER THE PRINT DESTINATION IF IT IS TO BE OTHER THAN THE MAIN PRINTER:>

(If there is no preference, press the return key. If the output is to be a remote, high-speed terminal, enter the site ID of the terminal. If a user demand terminal is to receive the output, enter the user ID for that terminal user.)

ARE YOU FINISHED (YES OR NO)?> (Enter YES or NO)

(If additional selections are to be made, enter NO and the program will prompt for the project type code selection. If YES, there will be a normal exit.)

Please refer to Section 7.1.8 for sample runs of the demand PROFILE Report program. An example of the PROFILE Report is given in Section 7.1.9.

7.1.7 User Instructions--Batch

Batch (card input) processing of the PROFILE Report program is not available.

7.1.8 Sample Demand Runs

(To be added later.)

7.1.9 Sample PROFILE Report

(To be added later.)

7.2 CHEMICAL SEARCH PROGRAM (CHEM-SEARCH)

7.2.1 Abstract

The Chemical Search Program (CHEM-SEARCH) enables the user to search all or part of the PPS data base to determine the presence of a particular chemical species. The user may identify the chemical species by its Chemical Abstracts Services (CAS) Number, its Multimedia Environmental Goals (MEG) Number, or its empirical formula. If a search is to be made of part of the data base, the range of PPNs must be specified. Both demand and batch versions of the program are available to the user. The demand version provides complete instructions on the use of the program through an interactive interface with the user. A "Help" command is also available to users who encounter problems.

The output from the CHEM-SEARCH program provides additional information on the chemical species selected, including the MEG ID Number, CAS Number, empirical formula, preferred name, molecular weight, other names by which the chemical is known, and whether or not the chemical is designated as a priority pollutant, hazardous pollutant, or both. The Profile Number and Project Type are listed for those priorities in which the chemical of interest is reported. the selection criteria requires only that the chemical species be found once in a given profile even though multiple occurrences of the chemical may be present. It is recommended that the user request the PROFILE Report for each identified in order to get more information.

7.2.2 User Data Required

- Valid Chemical ID Code (MEG ID or CAS Number) or Empirical Formula
- Range of PPNs (optional)

7.2.3 Data Qualification Required

None.

7.2.4 Limitations/Restrictions

The user is cautioned to use care when selecting the empirical formula format option for organic compounds. Since several organic compounds of the same class may have the same formula (e.g., isomers), it would likely be safer to search on the basis of the MEG ID or the CAS Number.

7.2.5 Functional Description

Using the user-supplied data on a particular chemical species, the CHEM-SEARCH program initially checks the EADS Chemical Data Table (CDT) to verify that a valid species has been requested. If so, both the MEG ID and CAS Number are retrieved. The program next scans all of the data bases specified using both the MEG ID and the CAS Number to search for the chemical. If at least one occurrence of the species is found within a project profile, that profile and the project type are listed in the output. If no data are found in the entire data base, this fact is also listed in the output.

7.2.6 User Instructions--Demand File Name: EADS.PPS/CHEM-SEARCH

The CHEM-SEARCH program may be accessed through a "demand," or time-sharing, terminal (see Section 6.6), which can access the U-1100 computer. User access in demand mode enables the program to be run in "real time"; that is, the results are returned directly to the user.

The user shall initiate a demand session by following the procedures outlined in Section 6.6.1. When the session is completed, the session may be ended by following the procedures given in Section 6.6.2.

(In the following computer-generated instructions, the response by the user is underlined.)

```
>@ADD EADS.PPS/CHEM-SEARCH          (Enter the file name)

DO YOU NEED INSTRUCTIONS?           (Enter YES or NO)

>YES

INSTRUCTIONS WILL BE LISTED SEVERAL LINES AT A TIME AND THEN STOP.  TO CON-
TINUE DEPRESS CARRIAGE RETURN.
THIS PROGRAM WILL LIST PROFILE NUMBERS FROM THE PPS DATA BASE WHICH HAVE USER
SPECIFIED CHEMICALS REPORTED.  THE USER MUST IDENTIFY THIS CHEMICAL TO THE
PROGRAM BY USING MEG, CAS ID NUMBERS OR EMPIRICAL FORMULA.

>(CR)

THE FORMAT USED IS:

M/MMMMMM        - FOR THE MEG NUMBER -- OR --

C/CCCCC-CC-C    - FOR THE CAS NUMBER -- OR --

F/XXXXXXX...    - FOR THE EMPIRICAL FORMULA.

>(CR)

THE USER MAY LIMIT THE PROFILE LIST TO SPECIFIC RANGES.  "STOP" AND "HELP"
MAY BE ENTERED AT ANY TIME.  "STOP" WILL EXIT THE PROGRAM.  "HELP" WILL
BRIEFLY LIST THE MAJOR QUERY RESPONSE FORMATS.  (IMPORTANT -- ANY QUERY
LISTED PRIOR TO A "HELP" REQUEST WILL NOT BE SHOWN AGAIN AFTER THE "HELP"
PROGRAM.)

>(CR)
```

(If the reply to the above question is NO, the preceding statements are skipped.)

ENTER THE CODE/CHEMICAL ID (FORMULA) (Use the format described above)

>C/00067-66-3

DO YOU WISH TO SELECT WITHIN A RANGE OF PPS PROFILES (Enter YES or NO)

>YES

ENTER THE MINIMUM NUMBER IN THE RANGE (Enter the PPN)

>01

ENTER THE MAXIMUM NUMBER IN THE RANGE

>10

(If a range is not requested by the user, the last two queries are skipped, and the entire data base is scanned.)

ENTER "END" OR CARRIAGE RETURN IF COMPLETE:

>END

(If a correction or addition is required, enter "YES" and the program will again ask if a range is requested and the ensuing steps are repeated. If END is entered, the program starts to execute. Typical output is as follows.)

```
CHLOROFORM (TRICHLOROMETHANE)
MEG:   02A100     CAS:    00067-66-3     FORMULA:  CHCL3
MOLECULAR WEIGHT:   119.38     PRIORITY POLLUTANT
                               HAZARDOUS POLLUTANT
OTHER NAMES:  METHANE TRICHLORIDE
              TRICHLOROMETHANE

PPS PROFILE          PROJECT TYPE
-----------          ------------
00001                     01
00002                     01
00003                     05
00004                     02
00005                     05
00006                     06
00007                     03
00008                     01
00009                     01
00010                     02

*** NORMAL END ***

>
```

At this point, the terminal is returned to the Control Mode; that is, the program has finished and the user may now enter additional commands.

The CHEM-SEARCH program is very flexible and has a number of options available to users. This flexibility is best seen through the sample demand runs given in Section 7.2.8. Use of the "HELP" option is also shown there.

7.2.9 User Instructions--Batch

The CHEM-SEARCH program may also be executed as a batch job on the UNIVAC U-1100 using punched card input. It is assumed that the user has card input access to the U-1100 computer either through "across the counter" submitted at Research Triangle Park, North Carolina, or through a remote batch terminal.

In order to run the CHEM-SEARCH program in batch mode, the user should submit the following cards:

```
@RUN,R/RS Run ID,Account Number,EADS,5,50/50

@ASG,A EADS.

@XQT,BHZ EADS.PPS-CHEMSRCH

. . . parameter cards . . .

@FIN
```

There are three types of parameter cards defined for CHEM-SEARCH, and they are used to drive the program. The Type 1 Parameter Card identifies the chemical to be requested in terms of its MEG ID Number, CAS Number, or empirical formula. The Type 2 Parameter Card identifies the data base to be selected (PPS) and specifies the range of PPNs to be searched. The Type 3 Parameter Card is the END card which indicates to the program that the input data have been completed.

The formats for the parameter cards are as follows:

	Card Col.	12345678
Type 1:		M/AAAAAA
	or	C/BBBBB-BB-B
	or	F/DDDDD...

where all data begin in column 1 of the card and:

M identifies the MEG Number AAAAAA;

C identifies the CAS Number BBBBB-BB-B; and

F identifies the Empirical Formula DDDD...
1 2

Type 2: Card Col. 12345678901234567890
PPS MINXX-MAXZZ

where PPS is entered in columns 1-3

Leave columns 4-6 blank

MINXX is the starting PPN in the range of PPNs to be specified. The PPN should be entered as a right-justified integer number in card columns 7-11,

- (enter a dash in card column 12)

MAXZZ is the last PPN in the range of PPNs to be specified. The PPN should be entered as a right-justified integer number in card columns 13-17.

NOTE If no range of PPNs is requested (that is, if the entire data base is to be searched), leave card columns 7-17 blank.

Also, if one end of the PPN range is entered, the other is required also. A Type 2 parameter card must be included for each data base requested. The order of the Type 2 cards is not important.

Type 3: Card Col. 123
END

This card signifies the end of the data. It should be the last parameter card included in the card deck.

Caution The parameter cards must be entered into the card deck in the following order:

Type 1
All Type 2
Type 3

Sample print-outs from CHEM-SEARCH are included in Section 7.2.9.

7.2.8 Sample Demand Runs

(1) MEG ID Number Format:

```
>@ADD EADS.PPS/CHEM-SEARCH
DO YOU NEED INSTRUCTIONS?
>NO

ENTER THE CODE/CHEMICAL ID (FORMULA)
>M/02A065
```

```
CHEMICAL DATA NOT FOUND FOR:  M/02A065
WOULD YOU LIKE TO TRY AGAIN?
>YES
>M/02A100

DO YOU WISH TO SELECT WITHIN A RANGE OF PPS PROFILES?
>NO

ENTER "END" OR CARRIAGE RETURN IF COMPLETE:
>END

CHLOROFORM (TRICHLOROMETHANE)
MEG:  02A100   CAS:   00067-66-3   FORMULA:  CHCL3
MOLECULAR WEIGHT:   119.38         PRIORITY POLLUTANT
                                   HAZARDOUS POLLUTANT
OTHER NAMES:   METHANE TRICHLORIDE
               TRICHLOROMETHANE

PPS PROFILE    PROJECT TYPE
-----------    ------------
00001               01
00002               01
00003               01
00004               05
00005               05
00006               04
00007               05
00008               05
00009               06
00010               04
00011               04
00143               01
00144               01
00145               01
00147               02
00148               04
00150               07
00151               09
00152               03
00153               02

*** NORMAL END ***

>
```

(2) Chemical Formula Format:

Caution: Be careful using this format for organic chemicals where isomers may be encountered.

```
>@ADD EADS.PPS/CHEM-SEARCH

DO YOU NEED INSTRUCTIONS?
>NO

ENTER THE CODE/CHEMICAL ID (FORMULA)
>F/CHCL3

DO YOU WISH TO SELECT WITHIN A RANGE OF PPS PROFILES?
>YES
ENTER THE MINIMUM NUMBER IN THE RANGE
>01
ENTER THE MAXIMUM NUMBER IN THE RANGE
>5

ENTER "END" OR CARRIAGE RETURN IF COMPLETE:
>END

CHLOROFORM (TRICHLOROMETHANE)
MEG:   02A100     CAS:   00067-66-3     FORMULA:  CHCL3
MOLECULAR WEIGHT:   119.38              PRIORITY POLLUTANT
                                        HAZARDOUS POLLUTANT
OTHER NAMES:   METHANE TRICHLORIDE
               TRICHLOROMETHANE

PPS PROFILE    PROJECT TYPE
-----------    ------------
00001               05
00002               05
00003               06
00004               06
00005               06

*** NORMAL END ***

>
```

(3) Use of HELP Command:

```
>@ADD EADS.PPS/CHEM-SEARCH

DO YOU NEED INSTRUCTIONS?
>NO
ENTER THE CODE/CHEMICAL ID (FORMULA)
>HELP
"STOP" WILL EXIT PROGRAM
"M/MMM..,C/CCCCC-CC-C,F/XXXXX...
WILL SEARCH BY CHEMICAL
>F/C2CL4
```

```
DO YOU WISH TO SELECT WITHIN A RANGE OF PPS PROFILES?
>YES
ENTER THE MINIMUM NUMBER IN THE RANGE
>1
ENTER THE MAXIMUM NUMBER IN THE RANGE
>5

ENTER "END" OR CARRIAGE RETURN IF COMPLETE:
>END

TETRACHLOROETHENE
MEG:    02B080      CAS:    00127-18-4      FORMULA:    C2CL4
MOLECULAR WEIGHT:    165.83                 PRIORITY POLLUTANT
                                            HAZARDOUS POLLUTANT
OTHER NAMES:    ETHYLENE TETRACHLORIDE
                PERCHLOROETHYLENE
                TETRACHLOROETHYLENE

PPS PROFILE     PROJECT TYPE
-----------     ------------
00005                05
00006                05
00007                06
00008                05
00009                07
00010                02

*** NORMAL END ***

>
```

(4) CAS Number Format:

```
>@ADD EADS.PPS/CHEM-SEARCH

DO YOU NEED INSTRUCTIONS?
>NO
ENTER THE CODE/CHEMICAL ID (FORMULA)
>C/00127-18-4

DO YOU WISH TO SELECT WITHIN A RANGE OF PPS PROFILES?
>YES
ENTER THE MINIMUM NUMBER IN THE RANGE
>29
ENTER THE MAXIMUM NUMBER IN THE RANGE
>39

ENTER "END" OR CARRIAGE RETURN IF COMPLETE:
>END
```

```
TETRACHLOROETHENE
MEG:    02B080      CAS:    00127-18-4      FORMULA:    C2CL4
MOLECULAR WEIGHT:    165.83                 PRIORITY POLLUTANT
                                            HAZARDOUS POLLUTANT
OTHER NAMES:    ETHYLENE TETRACHLORIDE
                PERCHLOROETHYLENE
                TETRACHLOROETHYLENE

NO PPS PROFILES FOUND BETWEEN PROFILES 00029 AND 00039

*** NORMAL END ***

>
```

(5) Example of User Aborted Run:

```
>@ADD EADS.PPS/CHEM-SEARCH

DO YOU NEED INSTRUCTIONS?
>NO

ENTER THE CODE/CHEMICAL ID (FORMULA)
>M/02P101

CHEMICAL DATA NOT FOUND FOR:  M/02P101
WOULD YOU LIKE TO TRY AGAIN?
>NO
```

(6) Invalid Data Format/Data Not Found:

```
>@ADD EADS.PPS/CHEM-SEARCH
DO YOU NEED INSTRUCTIONS?
>NO
ENTER THE CODE/CHEMICAL ID (FORMULA)
>C/01A001
INVALID CAS FORMAT (01A001     )

CHEMICAL DATA NOT FOUND FOR:   C/01A001
WOULD YOU LIKE TO TRY AGAIN?
>YES
ENTER THE CODE/CHEMICAL ID (FORMULA)
>M/001A001

CHEMICAL DATA NOT FOUND FOR:   M/001A001
WOULD YOU LIKE TO TRY AGAIN?
>YES
ENTER THE CODE/CHEMICAL ID (FORMULA)
>M/01A100
```

```
DO YOU WISH TO SELECT WITHIN A RANGE OF PPS PROFILES?
>NO

ENTER "END" OR CARRIAGE RETURN IF COMPLETE:
>END

PENTANES
MEG:    01A100      CAS:                FORMULA:    C5H12
MOLECULAR WEIGHT:    72.15

NO PPS PROFILES FOUND IN ENTIRE DATA BASE

*** NORMAL END ***

>
```

7.2.9 Sample Batch Runs

The sample batch run outputs demonstrate the flexibility of the CHEMSEARCH program in satisfying user needs. The user input cards (which are listed in the output) are underlined.

(1) MEG ID Format:

```
@RUN,D/RS   Run ID,Account Number,EADS,10,20

@ASG,A   EADS.

@XQT,BHZ   EADS.PPS-CHEMSRCH
ENTER THE CODE/CHEMICAL ID
M/48A100

ENTER THE PROFILE RANGE TO BE SELECTED
PPS   00001-00100

ENTER THE PROFILE RANGE TO BE SELECTED
END

ELEMENTAL PHOSPHORUS
MEG:    48A100      CAS:    07723-14-0      FORMULA:    P
MOLECULAR WEIGHT:    30.97                  HAZARDOUS POLLUTANT

OTHER NAMES:    BLACK PHOSPHORUS
                RED PHOSPHORUS
                WHITE PHOSPHORUS
                YELLOW PHOSPHORUS
```

```
PPS PROFILE     PROJECT TYPE
-----------     ------------
00083                04
00089                04
00092                04
00093                04

*** NORMAL END ***

@FIN
```

(2) CAS Number Format:

```
@RUN,R/RS Run ID,Account Number,EADS,8,10

@ASG,A   EADS.
FAC WARNING   040000100000

@XQT EADS.PPS-CHEMSRCH
ENTER THE CODE/CHEMICAL ID (FORMULA)
C/00076-44-8

ENTER THE PROFILE RANGE TO BE SELECTED
PPS

ENTER THE PROFILE RANGE TO BE SELECTED
END

HEPTACHLOR
MEG:   16PN03      CAS:   00076-44-8      FORMULA:   C10H5CL7
MOLECULAR WEIGHT:   373.35                PRIORITY POLLUTANT
                                          HAZARDOUS POLLUTANT
OTHER NAMES:   DRINOX
               HEPTAGRAN
               VELSICOL-104

PPS PROFILE     PROJECT TYPE
-----------     ------------
00058                04
00074                04
00076                04
00082                04
00089                05
00103                01
00113                01
00115                01
00116                01
00134                04
00140                05
```

```
*** NORMAL END ***

@FIN
```

(3) Empirical Formula Format:

```
@RUN,R/RS Run ID,Account Number,EADS,8,10
@ASG,A   EADS.
FAC WARNING   040000100000

@XQT EADS.PPS-CHEMSRCH
ENTER THE CODE/CHEMICAL ID (FORMULA)
F/C10H5CL7

ENTER THE PROFILE RANGE TO BE SELECTED
PPS

ENTER THE PROFILE RANGE TO BE SELECTED
END

HEPTACHLOR
MEG:   16PN03     CAS:   00076-44-8     FORMULA:   C10H5CL7
MOLECULAR WEIGHT:   373.35              PRIORITY POLLUTANT
                                        HAZARDOUS POLLUTANT

OTHER NAMES:   DRINOX
               HEPTAGRAN
               VELSICOL-104

PPS PROFILE    PROJECT TYPE
-----------    ------------
00058               02
00074               01
00076               01
00082               01
00089               01
00103               05
00113               05
00115               04
00116               04
00134               04
00140               06

*** NORMAL END ***

@FIN
```

(4) Invalid Data/Input Error Format:

```
@RUN,R/RS Run ID,Account Number,EADS,8,10
@ASG,A   EADS.

@XQT EADS.PPS-CHEMSRCH
ENTER THE CODE/CHEMICAL ID (FORMULA)
C/00076-44-8

ENTER THE PROFILE RANGE TO BE SELECTED
PPS

ENTER THE PROFILE RANGE TO BE SELECTED
1104A   NO DATA AVAILABLE ON ACCEPT          (Missing END Card)
ERROR ADDR:   015514     BDI:   000013

EXEC8 ERROR:   CONTINGENCY TYPE-12 ERROR TYPE-03 CODE-00 AT PROG
ADD 012165
BDI'S:   M-I=000013    M-D=000012    U-I=000000    U-D=000000
-800-  SYSTEM ERROR CODE  816    x11 = 007255-
**** PLEASE NOTIFY DATA BASE ADMINISTRATOR ****
```

7.3 PROFILE SUMMARY INFORMATION PROGRAM (SNAP-SHOT)

7.3.1 Abstract

The PROFILE Summary Information Program (SNAP-SHOT) is a brief report which summarizes the contents of a PPS project profile. The report gives an indication of "what" is contained in the profile without getting into details. It will provide the user with an overview of the profile in a brief format that would ordinarily require the obtaining of a more detailed and lengthy PROFILE Report (see Section 7.1).

The formation of the SNAP-SHOT Report follows the PROFILE Report very closely; it is as if a "snap-shot" had been made of the PROFILE Report. The first page of the SNAP-SHOT Report is the same as the first page of the PROFILE Report; that is, the project sponsor and contractor are identified, the contract number and funding history are given, and the Profile Element Codes are listed. The second page lists the reports or publications generated by or pertaining to the project. The third page contains the project abstract. This provides the user with the general overview of the project and limits the output to three pages in most cases.

The SNAP-SHOT program may be initiated either through a "demand" (time-sharing) session or through submitting a batch job. The demand version of the program prompts the user with complete instructions for its use.

7.3.2 User Data Required

- Valid Project Type Code (optional)
- Valid Profile Number (or range of profile numbers)

7.3.3 Data Qualification Required

None

7.3.4 Limitations/Restrictions

The SNAP-SHOT program user has several printing options available including the NCC local printers, remot high-speed terminal printers, and low-speed time-sharing (demand) terminals. While the SNAP-SHOT Report itself is not long (usually two to three pages), the volume of output could become voluminous, particularly if the Project Type Option is selected and the subsequent retrieval involves many project profiles. Unless the user is selecting a specific project profile, it is recommended that the low-speed terminal option be avoided where possible.

7.3.5 Functional Description

Using the PPS Project Type Code (if selected) and the PPN(s), the selected Profile(s) is(are) retrieved from the PPS data base and the summary information is printed.

7.3.6 User Instructions -- Demand File name: EAD.PPS/SNAP-SHOT

The SNAP-SHOT program may be accessed through a "demand", or time-sharing, terminal (see Section 6.6), which can access the U-1100 computer. User access through the demand terminal allows the program to be executed as a batch job. The user should initiate the demand session by following the procedures outlined in Section 6.6.1. When the session is completed, the demand session may be ended by following the instructions given in Section 6.6.2.

(In the following computer-generated instructions, the response by the user is underlined.)

```
>@ADD EADS.PPS/SNAP-SHOT                (Enter the file name)

CTS       6R1       16:21:01
THE ASSUME MODE IS FIELDATA
DO YOU NEED INSTRUCTIONS?:>   YES       (Enter YES or NO)

THIS MODULE IS SESIGNED TO RUN THE SNAP-SHOT REPORT FOR ANY VALID PROFILE
NUMBER AND PROJECT TYPE.  INFORMATION REQUIRED TO RUN THIS ROUTINE WILL
BE ENTERED BY THE USER AS PROMPTED BY THIS MODULE.

THE USER MAY ENTER A SINGLE PROJECT PROFILE NUMBER OR A RANGE OF PROJECT
PROFILE NUMBERS.

>(Press carriage return to continue)

(If the answer to the instructions question was NO, the above statements would
be skipped.)

ENTER YOUR ACCOUNT NUMBER:>             (Enter a valid NCC Accound Number)

DO YOU WISH TO SELECT THE PROJECT TYPE OPTION?
>YES                                    (Enter YES or NO)

IF NO DATA TO BE INPUT FOR THIS PARAMETER, PRESS RETURN.

PROJECT TYPE:>      (CR)                (Enter value for the Project Type
                                        Code or press return.)

ENTER THE NUMBER OF COPIES              (Enter the number of copies wanted)
IF 1, JUST PRESS RETURN:>     (CR)

DO YOU REQUIRE SPECIAL FORMS?>     NO   (Enter YES or NO)
```

(If YES has been entered, the program would request the forms ID. Please consult the NCC User Reference Manual or the EADS Program Manger before attempting to use this feature. The NO response means that standard, one-part computer paper will be used.)

```
ENTER THE PRINT DESTINATION IF IT IS TO BE OTHER
THAN THE MAIN PRINTER:>       (CR)
```

(If there is no preference, press the return key. If the output is to be a remote high-speed terminal, enter the site ID of the terminal. If a user demand terminal is to receive the output, enter the user ID for that terminal user.)

ARE YOU FINISHED (YES OR NO)?> (Enter YES or NO)

(If additional selections are to be made, enter NO and the program will prompt for the Project Type selection. If YES, there will be a normal exit.)

Please refer to Section 7.3.8 for sample runs of the demand SNAP-SHOT program. An example of the SNAP-SHOT Report is given in Section 7.3.10.

It should be emphasized that SNAP-SHOT does not actually execute as a demand (time-sharing) job. The demand routine creates a job stream which is processed as a batch job by the U-1100.

7.3.7 User Instructions -- Batch

The SNAP-SHOT program may also be executed as a batch job on the UNIVAC U-1100 using punched card input. It is assumed that the user has card input access to the U-1100 computer either through "across the counter" submitted at Research Triangle Park, NC, or through a remote batch terminal.

In order to run the SNAP-SHOT program in batch mode, the user should submit the following cards:

```
@RUN,R/RS RUN ID,Account Number, EADS,5,50/50, no blank

@ASG,A EADS.

@XQT,BHZ EADS.PPS/SNAPSHOT

. . . parameter cards . . .

@FIN
```

Two types of parameter cards are used to identify the options selected and to drive the program. If the user wishes to print the SNAP-SHOT report for a specific PPN (or range of PPN's), the following Type 1 parameter card is used:

```
                          1         2
Type 1:  Card Col.   12345678901234567890
                     PPSXX MINXX-MAXZZ
```

where XX identifies the Project Type Code beginning in column 4,

MINXX is the starting PPN in the range of PPN's to be specified. The PPN should be entered as a right-justified integer number in card colums 7-11,

(enter a dash in card column 12)

MAXZZ is the last PPN in the range of PPN's to be specified. The PPN should be entered as a right-justified integer number in card columns 13-17.

NOTE If no range of PPN's is requested (that is, if a single Profile Number is selected), leave card columns 12-17 blank.

Following the Type 1 card, the Type 2 card is entered to indicate the end of the data. It should be the last parameter card in the deck before the @FIN card. The card has the following format:

Type 2: Card Col. 123
END

CAUTION The parameter cards must be entered into the card deck in the following order:

Type 1
Type 2

Examples of batch runs of SNAP-SHOT are given in Section 7.3.9.

7.3.8 Sample Demand Runs

(1) SNAP-SHOT for a Specific PPN:

```
>@ADD EADS.PPS/SNAP-SHOT

DO YOU NEED INSTRUCTIONS?
>NO
ENTER YOUR ACCOUNT NUMBER:>          Account Number

DO YOU WISH TO SELECT THE PROJECT TYPE OPTION?
>NO
DO YOU WISH TO SELECT WITHIN A RANGE OF PROFILES?
>NO

ENTER THE PROFILE NUMBER:>  225
ENTER THE NUMBER OF COPIES
IF 1, JUST PRESS RETURN:>   2
DO YOU REQUIRE SPECIAL FORMS?>      NO

ENTER THE PRINT DESTINATION IF IT IS TO BE OTHER THAN THE
MAIN PRINTER:>      (CR)

ARE YOU FINISHED (YES OR NO)?>      YES

*** NORMAL EXIT ***
```

(2) SNAP-SHOT for a Range of PPN's:

```
>@ADD EADS.PPS/SNAP-SHOT

DO YOU NEED INSTRUCTIONS?
>NO
ENTER YOUR ACCOUNT NUMBER:>   Account Number

DO YOU WISH TO SELECT THE PROJECT TYPE OPTION?
>NO
DO YOU WISH TO SELECT WITHIN A RANGE OF PROFILES?
>YES
ENTER THE MINIMUM NUMBER IN THE RANGE
>29
ENTER THE MAXIMUM NUMBER IN THE RANGE
>39

ENTER THE NUMBER OF COPIES
IF 1,JUST PRESS RETURN:>      2
DO YOU REQUIRE SPECIAL FORMS?:>    NO

ENTER THE PRINT DESTINATION IF IT IS TO BE OTHER THAN THE
MAIN PRINTER:>      (CR)

ARE YOU FINISHED (YES OR NO)?>     YES

*** NORMAL EXIT ***
```

7.3.9 Sample Batch Runs

(To be added later.)

7.3.10 Sample Output

(To be added later.)

7.4 PROFILE ABSTRACT PROGRAM (ABSTRACT)

7.4.1 Abstract

The ABSTRACT program is a brief report which identifies the project and prints the project abstract contained in the PPS data base. The information provided includes the project type, profile number, sponsor and contractor identities, and the title. Usually, the abstract will be one page or less, but some project profiles do have abstracts which run to two pages. This report, like SNAP-SHOT, will give the user an overview of the project. If more details are needed, the user should obtain the PROFILE Report.

The ABSTRACT program may be initiated either through a "demand" (time-sharing) session or through submitting a batch job. The demand version of the program prompts the user with complete instructions for its use.

7.4.2 User Data Required

- Valid Project Type Code (optional)
- Valid Project Profile Number (or range of PPN's)

7.4.3 Data Qualification Required

None

7.4.4 Limitations/Restrictions

The ABSTRACT program user has several printing options available including the National Computer Center local printers, remote high-speed terminal printers, and low-speed time-sharing (demand) terminals. While the ABSTRACT Report itself is not long (usually 1-2 pages), the volume of output could become voluminous, particularly if the subsequent retrieval involves many profiles. Unless the user is selecting a specific profile, it is recommended that the low-speed terminal option be avoided where possible.

7.4.5 Functional Description

Using the Project Type Code and the Project Profile Number(s) specified, the ABSTRACT program retrieves the abstract and prints a brief report.

7.4.6 User Instructions - Demand

File name: EADS.PPS/ABSTRACT

The ABSTRACT program may be accessed through a "demand", or time-sharing, terminal (see Section 6.6), which can access the U-1100 computer. User access through the demand terminal allows the program to be executed as a batch job. The user should initiate the demand session by following the procedures outlined in Section 6.6.1. When the session is completed, the demand session may be ended by following the instructions given in Section 6.6.2.

(In the following computer-generated instructions, the response by the user is underlined.)

```
>@ADD EADS.PPS/ABSTRACT                    (Enter the file name)

CTS       6R1       16:21:01

THE ASSUME MODE IS FIELDATA

DO YOU NEED INSTRUCTIONS?:>   YES          (Enter YES or NO)

     THIS MODULE IS DESIGNED TO RUN THE ABSTRACT REPORT FOR ANY VALID PROFILE
     NUMBER AND PROJECT TYPE ENTERED.  INFORMATION REQUIRED TO RUN THIS ROUTINE
     WILL BE ENTERED BY THE USER AS PROMPTED BY THIS MODULE.

     THE PROJECT TYPE OPTION ALLOWS THE USER TO SEARCH THE ENTIRE DATA BASE
     FOR ALL PROFILES WHICH SATISFY THE SELECTION CRITERIA.

>(Press carriage return to continue)

OTHERWISE, THE USER MAY ENTER A SINGLE PROFILE NUMBER OR A RANGE OF PROFILE
NUMBERS.

>(Press carriage return to continue)

     (If the answer to the instructions question had been NO, the above
statements would be skipped.)

ENTER YOUR ACCOUNT NUMBER:>                (Enter a valid NCC Account Number)

DO YOU WISH TO SELECT THE PROJECT TYPE OPTION?
>YES                                       (Enter YES or NO)

ENTER THE VALUE FOR THE PROJECT TYPE AS PROMPTED.

IF NO PROJECT TYPE IS TO BE SPECIFIED, PRESS RETURN.

PROJECT TYPE CODE:>      (CR)              (Enter value as an integer
                                           number or press return.)

ENTER THE NUMBER OF COPIES                 (Enter the number of copies wanted)
IF 1, JUST PRESS RETURN:>     (CR)

DO YOU REQUIRE SPECIAL FORMS?>     NO      (Enter YES or NO)

     (If YES has been entered, the program would request the forms ID. Please
consult the NCC User Reference Manual or the EADS Program Manger before attempt-
ing to use this feature.  The NO response means that standard, one-part computer
paper will be used.)
```

ENTER THE PRING DESTINATION IF IT IS TO BE OTHER THAN THE
MAIN PRINTER:> (CR)

(If there is no preference, press the return key. If the output is to be a remote high-speed terminal, enter the site ID of the terminal. If a user demand terminal is to receive the output, enter the user ID for that terminal user.)

ARE YOU FINISHED (YES OR NO)?> (Enter YES or NO)

(If additional selections are to be made, enter NO and the program will prompt for the project type code. If YES, there will be a normal exit.)

Please refer to Section 7.4.8 for sample runs of the demand ABSTRACT program. An example of the ABSTRACT Report is given in Section 7.4.10.

It should be emphasized the ABSTRACT does not actually execute as a demand (time-sharing) job. The demand routine creates a job stream which is processed as a batch job by the U-1100.

7.4.7 User Instructions - Batch

The ABSTRACT program may also be executed as a batch job on the UNIVAC U-1100 using punched card input. It is assumed that the user has card input access to the U-1100 computer either through "across the counter" submitted at Research Traingle Park, NC, or through a remote batch terminal.

In order to run the ABSTRACT program in batch mode, the user should submit the following cards:

```
@RUN,R/RS RUN ID,Account Number,EADS,5,50/50

@ASG,A EADS.

@XQT,BHZ EADS.PPS-ABSTRACT

. . . parameter cards . . .

@FIN
```

Two types of parameter cards are used to identify the options selected and to drive the program. If the user wishes to print the ABSTRACT report for a specific Profile Number (or range of Profile Numbers), the following Type 1 parameter card is used:

```
                          1         2
Type 1:   Card Col.   12345678901234567890
                      PPSXX MINXX-MAXZZ
```

WHERE XX identifies the project type code beginning in column 4,

MINXX is the starting Profile Number in the range of PPN's to be specified. The Profile Number should be entered as a right-justified integer number in card columns 7-11,

\- (enter a dash in card column 12)

MAXZZ is the last Profile Number in the range of PPN's to be specified. The Profile Number should be entered as a right-justified integer number in card columns 13-17.

NOTE If no range of Profile Numbers is requested (that is, if a single Profile is selected), leave card columns 12-17 blank.

Following the Type 1 card, the Type 2 card is entered to indicate the end of the data. It should be the last parameter card in the deck before the @FIN card. The card has the following format:

Type 2: Card Col. 123
END

CAUTION The parameter cards must be entered into the card deck in the following order:

Type 1
Type 2

Examples of batch runs of ABSTRACT are given in Section 7.4.9.

7.4.8 Sample Demand Runs

(1) ABSTRACT for a specific Profile Number:

```
>@ADD EADS.PPS/ABSTRACT

DO YOU NEED INSTRUCTIONS?
>NO
ENTER YOUR ACCOUNT NUMBER:>          Account Number

DO YOU WISH TO SELECT THE PROJECT TYPE OPTION?
>NO
DO YOU WISH TO SELECT WITHIN A RANGE OF PROFILES?
>NO

ENTER THE PROFILE NUMBER:>     225
ENTER THE NUMBER OF COPIES
IF 1, JUST PRESS RETURN:>          2
DO YOU REQUIRE SPECIAL FORMS:>  NO
```

```
ENTER THE PRINT DESTINATION IF IT IS TO BE OTHER THAN
THE MAIN PRINTER:>        (CR)

ARE YOU FINISHED (YES OR NO)?>     YES

*** NORMAL EXIT ***
```

(2) ABSTRACT for a Range of Profile Numbers:

```
>@ADD EADS.PPS/ABSTRACT

DO YOU NEED INSTRUCTIONS?:
>NO
ENTER YOUR ACCOUNT NUMBER:>        Account Number

DO YOU WISH TO SELECT THE PROJECT TYPE OPTION?
>NO
DO YOU WISH TO SELECT WITHIN A RANGE OF PROFILES?
>YES
ENTER THE MINIMUM NUMBER IN THE RANGE
>29
ENTER THE MAXIMUM NUMBER IN THE RANGE
>39

ENTER THE NUMBER OF COPIES
IF 1, JUST PRESS RETURN:>  2
DO YOU REQUIRE SPECIAL FORMS:>     NO

ENTER THE PRINT DESTINATION IF IT IS TO BE OTHER THAN
THE MAIN PRINTER:>        (CR)

ARE YOU FINISHED (YES OR NO)?>     YES

*** NORMAL EXIT ***
```

7.4.9 Sample Batch Runs

(To be added later.)

7.4.10 Sample Output

(To be added later.)

APPENDIX A.1

LIST OF ERROR MESSAGES

To be added later.

APPENDIX A.2

DATA BASE DEFINITIONS

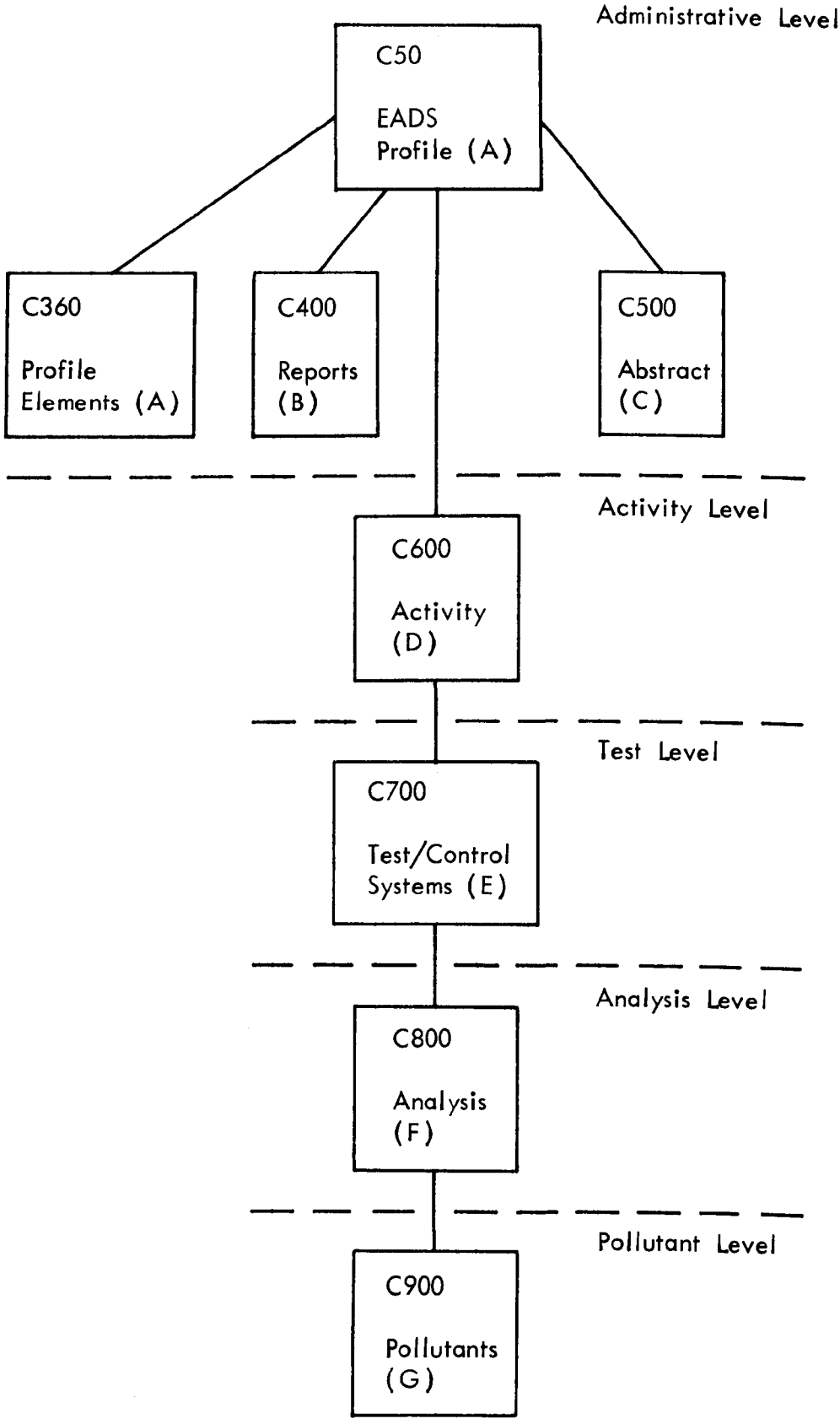

Figure A.2-1. PPS Data Base Tree

DATA BASE NAME IS EADS-PPS

50* PROFILE (RG)
100* PROFILE NUMBER (INTEGER NUMBER 9(5) IN 50)
102* PROGRAM NAME (NAME X(8) IN 50)
268* PROJECT TYPE CODE (INTEGER NUMBER 99 IN 50)
110* PROJECT SPONSOR (NAME X(30) IN 50)
210* SPONSOR BRANCH CODE (NAME XXXX IN 50)
220* SPONSOR DIVISION CODE (NAME X(5) IN 50)
230* SPONSOR LAB CODE (NAME X(9) IN 50)
130* PROJECT START DATE (DATE IN 50)
140* PROJECT FINISH DATE (DATE IN 50)
160* SPONSOR ADDRESS (NON-KEY NAME X(20) IN 50)
170* SPONSOR CITY (NON-KEY NAME X(20) IN 50)
180* SPONSOR STATE (NAME XX IN 50)
200* SPONSOR ZIP/MAIL CODE (NON-KEY INTEGER NUMBER 9(6) IN 50)
190* SPONSOR COUNTRY (NAME X(7) IN 50)
265* AGENCY INVENTORY NUMBER (INTEGER NUMBER 9(7) IN 50)
260* DATE OF PPS ENTRY (DATE IN 50)
240* PROJECT OFFICER (NON-KEY NAME X(30) IN 50)
250* PROJECT OFFICER TELEPHONE (NON-KEY NAME X(20) IN 50)
120* CONTRACT/GRANT NUMBER (NAME X(14) IN 50)
145* FISCAL INFORMATION (RG IN 50)
155* FISCAL YEAR (NAME XXXX IN 145)
150* FUNDING (DECIMAL NUMBER 9(6).9 IN 145)
270* PROJECT TITLE-1 (NON-KEY NAME X(72) IN 50)
271* PROJECT TITLE-2 (NON-KEY NAME X(72) IN 50)
280* CONTRACTOR NAME (NAME X(30) IN 50)
290* CONTRACTOR ADDRESS (NON-KEY NAME X(20) IN 50)
300* CONTRACTOR CITY (NON-KEY NAME X(20) IN 50)
310* CONTRACTOR STATE (NAME XX IN 50)
330* CONTRACTOR ZIP/MAIL CODE (NON-KEY INTEGER NUMBER 99 IN 50)
320* CONTRACTOR COUNTRY (NAME X(7) IN 50)

340* CONTRACTOR PROJECT MGR (NON-KEY NAME X(30) IN 50)
350* CONTRACTOR PROJECT MGR TELEPHONE (NON-KEY NAME X(20) IN 50)
360* PROFILE ELEMENTS (RG IN 50)
370* PROFILE ELEMENTS CODE (NAME XXXX IN 360)
400* REPORTS (RG IN 50)
410* REPORT SEQUENCE NUMBER (INTEGER NUMBER 99 IN 400)
420* REPORT TITLE-1 (NON-KEY NAME X(70) IN 400)
430* REPORT TITLE-2 (NON-KEY NAME X(70) IN 400)
440* REPORT AUTHORS (NON-KEY NAME X(70) IN 400)
450* SPONSOR REPORT NUMBER (NAME X(21) IN 400)
460* NTIS NUMBER (NAME X(21) IN 400)
470* REPORT PUBLISHED DATE (NAME X(15) IN 400)
480* ISSUE DATE (DATE IN 400)
500* ABSTRACT (RG IN 50)
510* LINE NUMBER (INTEGER NUMBER 999 IN 500)
520* ABSTRACT TEXT (NON-KEY TEXT X(69) IN 500)
600* ACTIVITY LEVEL (RG IN 50)
610* ACTIVITY NUMBER (INTEGER NUMBER 999 IN 600)
615* TASK ORDER/TD NUMBER (NAME X(34) IN 600)
672* ACTIVITY START DATE (DATE IN 600)
674* ACTIVITY DURATION (DECIMAL NUMBER 999.9 IN 600)
680* FPEIS TSN (INTEGER NUMBER 9(5) IN 600)
682* GEDS TSN (INTEGER NUMBER 9(5) IN 600)
681* LEDS TSN (INTEGER NUMBER 9(5) IN 600)
683* SDDS TSN (INTEGER NUMBER 9(5) IN 600)
684* FEIS TSN (INTEGER NUMBER 9(5) IN 600)
686* PRIMARY ACTIVITY (NAME X(35) IN 600)
685* ACTIVITY FREQUENCY (NAME X(34) IN 600)
687* SOURCE NAME (NON-KEY NAME X (35) IN 600)
676* ACTIVITY LOCATION (NON-KEY NAME X(34) IN 600)
620* SOURCE CATEGORY (NAME X(20) IN 600)
630* SOURCE TYPE (NAME X(20) IN 600)
640* PRODUCT/DEVICE (NAME X(20) IN 600)
650* PROCESS TYPE (NAME X(20) IN 600)
660* FEED MATERIAL CATEGORY (NAME X(10) IN 600)

670* FEED MATERIAL TYPE (NAME X(10) IN 600)
690* ACTIVITY LEVEL COMMENTS (RG IN 600)
691* ACTIVITY LINE NUMBER (INTEGER NUMBER 99 IN 690)
695* ACTIVITY COMMENTS (NON-KEY TEXT X(67) IN 690)
700* TEST LEVEL (RG IN 600)
710* TEST ID NUMBER (INTEGER NUMBER 99 IN 700)
715* PROJECT TOPIC (NAME X(15) IN 700)
780* METHODS/ISSUES (NAME X(52) IN 700)
775* ISSUES (NAME X (23) IN 700)
770* APPROACH (NAME X(18) IN 700)
760* FACTORS (NAME X(26) IN 700)
720* MEDIA (NAME X(5) IN 700)
730* POLLUTANT CONTROL GENERIC DEVICE (NAME X(20) IN 700)
740* POLLUTANT CONTROL DESIGN TYPE (NAME X(32) IN 700)
750* POLLUTANT CONTROL PROCESS (NAME X(67) IN 700)
790* TEST LEVEL COMMENTS (RG IN 700)
791* TEST LINE NUMBER (INTEGER NUMBER 99 IN 790)
795* TEST COMMENTS (NON-KEY TEXT X(65) IN 790)
800* ANALYSIS LEVEL (RG IN 700)
801* ANALYSIS NUMBER (INTEGER NUMBER 99 IN 800)
802* ANALYSIS DESIGNATOR (NAME X IN 800)
805* ANALYSIS LOCATION (NAME X(35) IN 800)
810* TEST TYPE (NAME X(29) IN 800)
820* TEST DESCRIPTION (NAME X(65) IN 800)
830* TEST STRAINS/ORGANISMS/ECOSYSTEMS (RG IN 800)
835* SERIAL NUMBER (INTEGER NUMBER 99 IN 830)
840* STRAINS/ORGANISMS/ECOSYSTEMS (NAME X(63) IN 830)
850* ANALYSIS LEVEL COMMENTS (RG IN 800)
851* ANALYSIS LINE NUMBER (INTEGER NUMBER 99 IN 850)
855* ANALYSIS COMMENTS (NON-KEY TEXT X(63) IN 850)
900* POLLUTANT LEVEL (RG IN 800)
905* POLLUTANT NUMBER (INTEGER NUMBER 99 IN 900)
910* POLLUTANT MEDIA (NAME X(8) IN 900)
920* POLLUTANT CODE TYPE (NAME X IN 900)
930* POLLUTANT CODE (NAME X(30) IN 900)

940* SAMPLING TECHNIQUES CODE (NAME XXXX IN 900)

950* ANALYTICAL TECHNIQUES CODE (NAME XX IN 900)

960* SAMPLING LOCATION CODE (NAME XXX IN 900)

APPENDIX A.3

PPS DATA BASE GLOSSARY

The following table is a glossary of all the data elements in the PPS/ data bases. The table lists the name of the data element (in the order it appears on the input forms), the data base variable name (as it is defined in the data base definition), the corresponding component number(s) and field size or format (from the data base definition), and a description of the data element. For further clarification on these definitions, refer to Section 4, the detailed encoding instructions.

In the field size or format, X(20) means an alphanumeric field 20 characters long. The format 9(5) means an integer field, five numbers long, and 9(3).9(2) represents a decimel number field with three numbers before the decimal point and two after.

The exponential format requires two data elements, a decimal number for the mantissa, and an integer number for the exponent. In the description of the data element, the exponential format is written nn.nn E ± nn.

FORM 1 - ADMINSTRATIVE DATA

Data Element Name	Data Base Variable Name	Component No. in DB	Field Size/Format	Description
Profile Number	Profile Number	C100	Integer 9(5)	A number identifying the specific project.
Program Name	Program Name	C102	Name X(8)	The name or initials of the overall program in which the specific project profile is included (e.g., CCEA, Synfuels).
Project Type Code	Project Type Code	C268	Integer Number 99	A two-digit code denoting the project type.
Project Sponsor	Project Sponsor	C110	Name X(30)	The name of the organization who sponsored the sampling program (e.g., EPA).
Sponsor Branch Code	Sponsor Branch Code	C210	Name XXXX	The four-character abbreviation for the branch of the sponsoring organization funding the project as text (e.g. PTRB for Process Technological Branch).
Sponsor Division Code	Sponsor Division Code	C220	Name X(5)	The five-character abbreviation for the division of the sponsoring organization funding the project as text. An example is UIPD for Utility and Industrial Power Division.
Sponsor Laboratory Code	Sponsor Lab Code	C230	Name X(9)	The code or abbreviation for the agency laboratory sponsoring the project. An example is IERL/RTP for for Industrial Environmental Research Laboratory at Research Triangle Park.
Project Start Date	Project Start Date	C130	Date	The starting date of the project (MM-DD-YY).
Project Finish Date	Project Finish Date	C140	Date	The finishing date of the project (MM-DD-YY).
Sponsor's Street Address/ P.O. Box	Sponsor's Street Address	C160	Non-Key Name X(20)	The number and name of the sponsoring organization's street address or P.O. box.
Sponsor City	Sponsor City	C170	Non-Key Name X(20)	The name of the city, township, or area in which sponsoring organization is lorated.
Sponsor State	Sponsor State	C180	Name XX	The two-letter code for the state or Canadian province in which sponsoring organization is located.
Sponsor Zip/Mail Code	Sponsor Zip/Mail Code	C200	Non-Key Integer Number 9(6)	The zip/mail code for the address of the sponsoring organization.
Sponsor Country	Sponsor Country	C190	Name X(7)	The abbreviation for the country in which the sponsoring organization is located.

FORM 1 (Continued)

Data Element Name	Data Base Variable Name	Component No. in DB	Field Size/Format	Description
Agency Inventory No.	Agency Inventory No.	C265	Integer Number 9(7)	The unique ID number assigned by the agency performing the inventory.
Date of PPS Entry	Date of PPS Entry	C260	Date	The date the PPS information was recorded, entered as DD/MM/YY.
Project Officer	Project Officer	C240	Non-Key Name X(30)	The name of the sponsoring organization's project officer with a first name, middle name, and last name format.
Project Officer Telephone Number	Project Officer Telephone Number	C250	Non-Key Name X(20)	The telephone number, including area code and extension, of the project officer. Include the FTS number, if known.
Contract No./Grant No.	Contract No./Grant No.	C120	Name X(14)	The number of the sponsoring organization contract, with the inclusion of blank spaces and hyphens.
Fiscal Yr.	Fiscal Yr.	C155	Name XXXX	The fiscal year that the funds were allocated, as FY _ _. A maximum of six values may be entered on a single card and additional cards may be used as needed.
Funding (K$)	Funding (K$)	C150	Decimal Number 9(6).9	The level of funding for the fiscal year indicated in the previous data item in thousands of dollars with decimal notation for fractional amounts. Multiple entries may be encoded on a single card as needed.
Project Title	Project Title	C270 C271	Non-Key Name X(72)	The complete title of the project without abbreviations. Use both cards when necessary.
Contractor Name	Contractor Name	C280	Name X(30)	The name of the contracting organization.
Contractor Street Address/ P.O. Box	Contractor Street Address/ P.O. Box	C290	Non-Key Name X(20)	The number and name of the street address or P.O. Box of the contractor.
Contractor City	Contractor City	C300	Non-Key Name X(20)	The name of the city, township, or area where the contractor is located.
Contractor State	Contractor State	C310	Name XX	The two-letter code for the state or Canadian province in which the contractor is located.
Contractor Zip/Mail Code	Contractor Zip/Mail Code	C330	Non-Key Integer Number 9(6)	The zip/mail code of the contractor.
Contractor Country	Contractor Country	C320	Name X(7)	The abbreviation for the country in which the contractor is located.

FORM 1 (Concluded)

Data Element Name	Data Base Variable Name	Component No. in DB	Field Size/Format	Description
Contractor Project Manager	Contractor Project Manager	C340	Non-Key Name X(30)	The name of the contractor's main project manager.
Contractor Project Manager Telephone Number	Contractor Project Manager Telephone Number	C350	Non-Key Name X(20)	The telephone number, including area code and extension of the contractor's project manager.
Profile Element Code	Profile Element Code	C370	Name XXXX	The code which uniquely identifies objectives achieved in the project.

FORM 2 - REFERENCE INFORMATION

Data Element Name	Data Base Variable Name	Data Base Component Numbers	Field Size/Format	Description
Report Sequence Number	Report Sequence Number	C410	Integer Number 99	The sequential integer number identifying each reference to be encoded.
Report Title	Report Title-1	C420	Non-Key Name X(70)	The complete title of the report in which the data is reported with no abbreviations in the title.
Report Title	Report Title-2	C430	Non-Key Name X(70)	Continuation, if necessary, of the title of the report from which the data are reported.
Report Authors	Report Authors	C440	Non-Key Name X(70)	The names(s) of the author(s) of the report. The main author is listed by last name, first name, and middle initial.
Sponsor Report Number	Sponsor Report Number	C450	Name X(21)	The number, as assigned by the sponsoring organization, of the report in which the data are reported.
NTIS Number	NTIS Number	C460	Name X(21)	The National Technical Information Service (NTIS) number of the report.
Report Published Date	Report Published Date	C470	Name X(15)	The publication date printed on the report, as month and year (e.g., May 1980).
Actual Report Date	Issue Date	C480	Date	The date the report was actually issued, entered as MM-DD-YY.

FORM 3 - ABSTRACT

Data Element Name	Data Base Variable Name	Data Base Component Number	Field Size/Format	Description
Line Number	Line Number	C510	Integer Number 999	The sequential number for each line of abstract text recorded.
Abstract as Text	Abstract Text	C520	Non-Key Text X(69)	An abstract of the project including any pertinent keywords. Unlimited cards may be added as needed.

FORM 4 - SITES/ACTIVITIES

Data Element Name	Data Base Variable Name	Data Base Component Numbers	Field Size/Format	Description
Activity Number	Activity Number	C610	Integer Number 999	The sequential integer code number for each sampling activity reported.
Task Order/T.D. Number	Task Order/TD Number	C615	Name X(34)	The EPA task order or technical directive number.
Activity Start Date	Activity Start Date	C672	Date	The sampling project start date in form MM-DD-YY.
Duration	Duration of Testing	C674	Decimal 999.9	The length of testing, in months, as a decimal number.
FPEIS TSN	FPEIS TSN	C680	Integer 9(5)	The Fine Particle Emissions Information System Test Series Number associated with the fine particulate information, which was collected from the same source and at the same time as the date for the test series being encoded.
GEDS TSN	GEDS TSN	C682	Integer 9(5)	The Gaseous Emissions Data System Test Series Number associated with the gaseous information, which was collected from the same source and at the same time as the data for the test series being encoded.
LEDS TSN	LEDS TSN	C681	Integer 9(5)	The Liquid Effluents Data System Test Series Number associated with the liquid effluent information, which was collected from the same source and at the same time as the date for the test series being encoded.
SDDS TSN	SDDS TSN	C683	Integer 9(5)	The Solid Discharge Data System Test Series Number associated with the solid discharge information, which was collected from the same source and at the same time as the data for the test series being encoded.
FEIS TSN	FEIS TSN	C684	Integer 9(5)	The Fugitive Emissions Information System Test Series Number associated with the fugitive emissions information, which was collected from the same source and at the same time as the data for the test series being encoded.

FORM 4 (Concluded)

Data Element Name	Data Base Variable Name	Data Base Component Numbers	Field Size/Format	Description
Primary Activity	Primary Activity	C686	Name X(35)	The code for the primary activity at the site or in the case of studies or model development, the type of study or model.
Activity Frequency	Activity Frequency	C685	Name X(34)	The code for the frequency of the sampling activity.
Source Name	Source Name	C687	Non-Key Name X(35)	The name of the source.
Activity Location	Activity Location	C676	Non-Key Name X(34)	The location of the sampling activity reported.
Source Category	Source Category	C620	Name X(20)	The grouping of major generic industries or source classes, i.e., the broadest description of a source (e.g., combustion, iron, steel, and food and agricultural products....).
Source Type	Source Type	C630	Name X(20)	The kind of source within a source category (e.g., utility, primary, ferrous, rubber, and wood, etc.).
Product/Device	Product/Device	C640	Name X(20)	The general device or specific product (e.g., boiler, natural rubber, and steel, etc.).
Process Type	Process Type	C650	Name X(20)	The unique process being tested (e.g., tangential, stoker, electric, arc furnace, roasting, and lime kilns, etc.).
Feed Material Category	Feed Material Category	C660	Name X(10)	The general category of the process, feed material or fuel (e.g., coal, oil, gas, wood, solid waste, and metal scrap, etc.).
Feed Material Type	Feed Material Type	C670	Name X(10)	The specific type of feed material or fuel.
Line Number	Line Number	C691	Integer Number 99	A sequential, integer number for each line of activity level comments.
Comments	Comments	C695	Non-Key Text X(67)	The comments on the test series, entered as text.

FORM 5

Data Element Name	Data Base Variable Name	Data Base Component Numbers	Field Size/Format	Description
Test ID Number	Test ID Number	C710	Integer Number 99	The sequential integer number for each test conducted.
Project Topic	Project Topic	C715	Name X(15)	The code for the project topic per site, either sampling or analysis.
Methods	Methods	C780	Name X(52)	Each sampling/analysis method or name of equipment used in obtaining a sample or analyzed results.
Issues	Issues	C775	Name X(23)	The primary issues considered in the assessment.
Approach	Approach	C770	Name X(18)	The general method or approach used in the assessment.
Factors	Factors	C760	Name X(26)	The factors analyzed in the project.
Media	Media	C720	Name X(5)	The generalized name of the media from which the sample was extracted.
Pollutant Control Generic Device	Pollutant Control Generic Device	C730	Non-Key Name X(20)	The type of generic control device or treatment process.
Pollutant Control Design Type	Pollutant Control Design Type	C740	Non-Key Name X(32)	The control device design type.
Pollutant Control Process	Pollutant Control Process	C750	Non-Key Name X(67)	The specific control device or treatment process.
Line Number	Line Number	C791	Integer Number 99	A sequential integer number for each line of comments text.
Test Comments	Test Comments	C795	Non-Key Text X(67)	Any pertinent comments on the testing activity.

FORM 6 - POLLUTANTS

Data Element Name	Data Base Variable Name	Data Base Component Numbers	Field Size/Format	Description
Analysis Number	Analysis Number	C801	Integer Number 99	A sequential, integer number for each analysis reported.
Analysis Designation	Analysis Designation	C802	Name X	The letter code designating the type of analysis reported. The letter "B" for biological, "E" for ecological, or "P" for pollutant.
Analysis Location	Analysis Location	C805	Name X(35)	The name and location of the laboratory that performed the analysis.
Test Type	Test Type	C810	Name X(29)	The name of the broad category of biological or ecological test type used in the analysis.
Test Description	Test Description	C820	Name X(65)	The code for the description name of the biological or ecological test used in the analysis performed.
Serial Number	Serial Number	C835	Integer Number 99	A sequential integer number to identify each biological or ecological test strain, organism, or ecosystem used in the analysis.
Strains/Organisms/Ecosystems	Strains/Organisms/Ecosystems	C840	Name X(63)	The name of the specific test strain, organism, or ecosystem used in the analysis (e.g., TA-1538, TA-98, etc.)
Line Number	Line Number	C851	Integer Number 99	A sequential integer number for each line of comments text.
Analysis Comments	Analysis Comments	C855	Non-Key Text X(63)	Any pertinent comments on the analysis reported.

FORM 7

Data Element Name	Data Base Variable Name	Data Base Component Numbers	Field Size/Format	Description
Pollutant Number	Pollutant Number	C905	Integer Number 99	The sequential integer number uniquely identifying a pollutant.
Pollutant Media	Media Class	C910	Name X(8)	The name of the media in which the sampling was performed.
Pollutant Code Type	Pollutant Code Type	C920	Name X	The pollutant entry code number which designates the type of pollutant used. C for CAS number, M for MEG number, R for radionuclide, and T for general text value.
Pollutant Code	Pollutant Code	C930	Name X(30)	The identification code of the pollutant sampled. The text entries describing the pollutant. If code type C, pollutant code is CAS number. If M, pollutant code is MEG number. If R, pollutant code is a radionuclide, and if T, pollutant code is a general code.
Sampling Technique Code	Sampling Technique Code	C940	Name XXXX	The code identifying the sampling technique used.
Analytical Techniques Code	Analytical Techniques Code	C950	Name XX	The two-character code identifying the analytical method used to determine the specific pollutant.
Sampling Location Code	Sampling Location Code	C960	Name XXX	The three-character code identifying the sampling location.

APPENDIX A.4

PPS DATA ENCODING FORMS

EPA EADS PPS

U.S. ENVIRONMENTAL PROTECTION AGENCY
IERL-RTP Research Triangle Park N.C. 27711

PROJECT PROFILE SYSTEM

DATA INPUT FORMS

FORM 1 9/80

Form Completed by

A - ADMINISTRATIVE DATA

EADS Profile Number	Card No.	Program Name	Project Type Code / Project Sponsor	Sponsor Branch Code	Sponsor Division Code	Sponsor Laboratory Code	Project Start Date Mo Da Yr	Project Finish Date Mo Da Yr
	A 0 1							

Card No.	Sponsor Street Address/P.O. Box	Sponsor City	Sponsor State / Sponsor Zip/Mail Code	Sponsor Country	Agency Inventory Number	Date of PPS Entry Mo Da Yr
A 0 2						

Card No.	Project Officer	Project Officer Telephone	Contract No./Grant No.
A 0 3			

Card No.	Fiscal Year	Funding (K$)	Fiscal Year	Funding (K$)	Fiscal Year	Funding (K$)	Fiscal Year	Funding (K$)	Fiscal Year	Funding (K$)	Fiscal Year	Funding (K$)	Fiscal Year	Funding (K$)
A 0 4														

Card No.	Project Title
A 0 5	
A 0 6	

Card No.	Contractor Name	Contractor Street Address/P.O. Box	Contractor City	Contractor State
A 0 7				

Card No	Contractor Zip/Mail Code	Contractor Country	Contractor Project Manager	Contractor Project Manager Telephone
A 0 8				

Card No.	Profile Element Code
A 0 9	
A 0 9	

NOTE: When encoding data, use a Ø for alpha character and 0 for numeric zero.

Page ____ of ____.

EPA EADS PPS

U.S. ENVIRONMENTAL PROTECTION AGENCY
IERL-RTP Research Triangle Park, N.C. 27711

PROJECT PROFILE SYSTEM

DATA INPUT FORMS

FORM 2 9/80

Form Completed by

B - REFERENCE INFORMATION

EADS Profile Number (1–5)

Card No. (6–8): B01 — Report Sequence Number (9–10); Report Title (11–80)

Card No. (6–8): B02

Card No. (6–8): B03 — Report Sequence Number (9–10); Report Authors (11–80)

Card No. (6–8): B04 — Report Sequence Number (9–10); Sponsor Report Number (11–31); NTIS Number (32–51); Report Published Date (52–66); Issue Date Mo (67–68) Da (69–70) Yr (71–72)

Card No. (6–8): B01 — Report Sequence Number (9–10); Report Title (11–80)

Card No. (6–8): B02

Card No. (6–8): B03 — Report Sequence Number (9–10); Report Authors (11–80)

Card No. (6–8): B04 — Report Sequence Number (9–10); Sponsor Report Number (11–31); NTIS Number (32–51); Report Published Date (52–66); Issue Date Mo (67–68) Da (69–70) Yr (71–72)

NOTE: When encoding data, use a Ø for alpha character and 0 for numeric zero.

Page ____ of ____

EPA EADS PPS

U.S. ENVIRONMENTAL PROTECTION AGENCY
IERL-RTP Research Triangle Park, N.C. 27711

PROJECT PROFILE SYSTEM
DATA INPUT FORMS

FORM 3 12/79

Form Completed by

C - PROFILE ABSTRACT

EADS Profile Number (1–5)	Card No. (6–7)	Line No (8)	Abstract as Text (9–80)
	C0	1	
	C0	1	
	C0	1	

EPA EADS PPS

.S. ENVIRONMENTAL PROTECTION AGENCY
.RL-RTP Research Triangle Park, N.C. 27711

PROJECT PROFILE SYSTEM
DATA INPUT FORMS

FORM 4 9/80

Form Completed by

) - ACTIVITY LEVEL

EADS Profile Number (1–5)	Card No. (6–8)	Activity No. (9–11)	Task Order/T.D. Number (12–45)	Activity Start Date* Mo (46–47) Da (48–49) Yr (50–51)	Dura-tion * (52–55)	FPEIS TSN (56–60)	GEDS TSN (61–65)	LEDS TSN (66–70)	SDDS TSN (71–75)	FEIS TSN (76–80)
	D 0 1									

Card No. (6–8)	Activity No. (9–11)	Primary Activity (12–45)	Activity Frequency (46–55)
D 0 2			

Card No. (6–8)	Activity No. (9–11)	Source Name (12–45)	Activity Location (46–55)
D 0 3			

Card No. (6–8)	Activity No. (9–11)	Source Category* (12–31)	Source Type* (32–45)	Product/Device* (46–55)
D 0 4				

Card No. (6–8)	Activity No. (9–11)	Process Type* (12–31)	Feed Material Category* (32–41)	Feed Material Type* (42–55)
D 0 5				

Card No. (6–8)	Activity No. (9–11)	Line No. (12–13)	Comments (14–80)
D 0 6			
D 0 6			
D 0 6			
D 0 6			
D 0 6			
D 0 6			
D 0 6			
D 0 6			
D 0 6			
D 0 6			

Denotes Repetitive Data Feature

Page ____ of ____

NOTE: When encoding data, use a Ø for alpha character and 0 for numeric zero.

EPA EADS PPS

U.S. ENVIRONMENTAL PROTECTION AGENCY
IERL-RTP Research Triangle Park, N.C. 27711

PROJECT PROFILE SYSTEM

DATA INPUT FORMS

FORM 5 9/80

Form Completed by

E - CONTROL SYSTEMS DATA

EADS Profile Number (1–5)	Card No. (6–8)	Activity Number (9–11)	Test ID No. (12–13)	Project Topic (14–28)	Methods (29–80)
	E 0 1				

Card No. (6–8)	Activity Number (9–11)	Test ID No. (12–13)	Issues (14–28)	Approach (29–36, 37–38, 39–54)	Factors (55–80)
E 0 2					

Card No. (6–8)	Activity Number (9–11)	Test ID No. (12–13)	Media* (14–18)	Pollutant Control Generic Device* (19–28, 29–36, 37–38)	Pollutant Control Design Type* (39–54, 55–70)	(71–80)
E 0 3						

Card No. (6–8)	Activity Number (9–11)	Test ID No. (12–13)	Pollutant Control Process* (14–18, 19–28, 29–36, 37–38, 39–54, 55–70, 71–80)
E 0 4			

Card No. (6–8)	Activity Number (9–11)	Test ID No. (12–13)	Line No. (14–15)	Test Comments (16–18, 19–28, 29–36, 37–38, 39–54, 55–70, 71–80)
E 0 5				
E 0 5				
E 0 5				
E 0 5				
E 0 5				
E 0 5				
E 0 5				
E 0 5				
E 0 5				
E 0 5				
E 0 5				
E 0 5				
E 0 5				
E 0 5				
E 0 5				
E 0 5				

* Denotes Repetitive Data Feature

Page ____ of ____

NOTE: When encoding data, use a Ø for alpha character and 0 for numeric zero.

EPA EADS PPS

U.S. ENVIRONMENTAL PROTECTION AGENCY
IERL-RTP Research Triangle Park, N.C. 27711

PROJECT PROFILE SYSTEM

DATA INPUT FORMS

FORM 6 9/80

Form Completed by

F - ANALYSIS LEVEL

EADS Profile Number (1–5)	Card No. (6–8)	Activity Number (9–11)	Test I.D. No. (12–13)	Analysis No. (14–15)	Analysis Designation* / Analysis Location* (16–17)	Test Type* (52–55)
	F 0 1					

Card No. (6–8)	Activity Number (9–11)	Test I.D. No. (12–13)	Analysis No. (14–15)	Test Description* (16–51)
F 0 2				

Card No. (6–8)	Activity Number (9–11)	Test I.D. No. (12–13)	Analysis No. (14–15)	Serial No. (16–17)	Test Strains/Organisms/Ecosystems* (18–51)
F 0 3					
F 0 3					
F 0 3					
F 0 3					
F 0 3					
F 0 3					
F 0 3					
F 0 3					
F 0 3					

Card No. (6–8)	Activity Number (9–11)	Test I.D. No. (12–13)	Analysis No. (14–15)	Line No. (16–17)	Analysis Comments (18–51)
F 0 4					
F 0 4					
F 0 4					
F 0 4					
F 0 4					
F 0 4					
F 0 4					
F 0 4					
F 0 4					
F 0 4					
F 0 4					

*Denotes Repetitive Data Feature

NOTE: When encoding data, use a Ø for alpha character and 0 for numeric zero.

Page ____ of ____

EPA EADS PPS

U.S. ENVIRONMENTAL PROTECTION AGENCY
IERL-RTP Research Triangle Park, N.C. 27711

PROJECT PROFILE SYSTEM

DATA INPUT FORMS

FORM 7 9/80

Form Completed by

G - POLLUTANT LEVEL

EADS Profile Number (1–5)	Card No. (6–8)	Activity No. (9–11)	Test I.D. No. (12–13)	Analysis No. (14–15)	Pollutant No. (16–17)	Pollutant Media* (18–25)	Pollutant Code Type* (26)	Pollutant Code* (27–56)	Sampling Technique Code* (57–60)	Analytical Technique Code* (61–62)	(63–65)	Sampling Location Code* (66–80)
	G01											
	G01											
	G01											

APPENDIX A.5

TABLES OF STANDARD NOMENCLATURE

TABLE A.5.1 - PROJECT TYPE CODES

ENCODE	PROJECT TYPES
01	FUELS
02	SAMPLING AND ANALYSIS
03	EMISSIONS/EFFLUENTS MONITORING
04	CONTROLS
05	TRANSPORT, TRANSFORMATION, AND FATE
06	HEALTH EFFECTS
07	ECOLOGICAL EFFECTS
08	INTEGRATED ASSESSMENT
09	SOCIOECONOMIC FACTORS

TABLE A.5.2 - STANDARD ABBREVIATIONS AND SYMBOLS

ENCODE	DEFINITION
&	AND
LAB	LABORATORY
FD	FOUNDATION
NATL	NATIONAL
ST	STATE
SW	SOUTHWEST
NW	NORTHWEST
SE	SOUTHEAST
NE	NORTHEAST
MED	MEDICINE
RAD	RADIATION
BIOL	BIOLOGY
ECOL	ECOLOGY
ENV	ENVIRONMENTAL
RES	RESEARCH
POLL	POLLUTION
CORP	CORPORATION
CO	COMPANY
TECH	TECHNOLOGY
SCI	SCIENCE
DEPT	DEPARTMENT
UNIV	UNIVERSITY

TABLE A.5.3 - PROFILE ELEMENT CODES

CODE	DESCRIPTION
A000	COMBUSTION PROCESSES AND EFFLUENT CHARACTERIZATION
A100	COMBUSTION PROCESSES TECHNOLOGY CHARACTERISTICS
A111	UTILITY SECTOR
A112	INDUSTRIAL SECTOR
A113	COMMERCIAL OR INSTITUTIONAL SECTOR
A114	RESIDENTIAL SECTOR
A120	PROCESS STATE-OF-THE-ART OVERVIEW
A130	PROCESS ECONOMICS
A140	PROCESS ENERGY BALANCE
A200	FUELS CHARACTERIZATION
A210	TYPE AND SOURCE OF FUELS
A220	PHYSICAL PROPERTIES OF FUELS
A230	CHEMICAL ANALYSIS OF FUELS
A240	ENERGY CONTENT OF FUELS
A250	PREPARATION AND/OR BENEFICIATION OF FUELS
A260	AVAILABILITY OF FUELS
A300	INPUT-OUTPUT CHARACTERIZATION
A311	MATERIAL BALANCE COMBUSTION PROCESS
A312	MATERIAL BALANCE CONTROL PROCESS
A320	STEADY-STATE POLLUTANT LOADINGS
A330	TRANSIENT OPERATION POLLUTANT LOADINGS
A340	FUGITIVE EMISSION POLLUTANT LOADININGS
A400	FIELD TESTS AND SURVEYS
A410	COMBUSTION PROCESS TESTING
A420	CONTROL SYSTEMS TESTING
A430	WASTE STREAM CHARACTERIZATION
A431	LEVEL 1- SAMPLING AND ANALYSIS
A432	LEVEL 2- SAMPLING AND ANALYSIS
A433	LEVEL 3- SAMPLING AND ANALYSIS
A434	EPA STANDARD PROCEDURES
A435	CONTINUOUS MONITORING
A436	OTHER - SAMPLING AND ANALYSIS (SPECIFY):
A437	MEASUREMENT QUALITY ASSURANCE
A500	DEVELOPMENT OF SAMPLING AND ANALYSIS TECHNIQUES
A510	SAMPLING TECHNIQUES DEVELOPMENT
A520	ANALYTICAL TECHNIQUES DEVELOPMENT
A530	BIOASSAY TECHNIQUES DEVELOPMENT
A540	CONTINUOUS MEASUREMENT DEVELOPMENT
B000	CONTROL TECHNIQUES EVALUATION
B100	CONTROL SYSTEMS EVALUATION
B110	RESEARCH AND DEVELOPMENT
B120	FULL-SCALE DEMONSTRATION
B130	ECONOMICS
B140	ENERGY REQUIREMENTS

TABLE A.5.3 - PROFILE ELEMENT CODES (Continued)

CODE	DESCRIPTION
B150	POLLUTANT REMOVAL EFFICIENCY
B160	AVAILABILITY
B200	CONTROL SYSTEMS ENVIRONMENTAL IMPACT
B210	WASTE DISPOSAL OPTIONS
B220	SECONDARY ENVIRONMENTAL IMPACTS
B230	CROSS-MEDIA IMPACTS
B240	SOURCE ANALYSIS MODELS (SAM)
B300	CONTROL ALTERNATIVES
B310	ADD-ON DEVICES
B320	COMBUSTION MODIFICATION
B330	FUEL SWITCH/MIXING
B400	CONTROL TECHNOLOGY DEVELOPMENT RECOMMENDATIONS
B410	TECHNOLOGY MODIFICATION
B420	QUANTIFIED R&D NEEDS
B430	CRITERIA FOR PRIORITIES
B440	RECOMMEND SCHEDULE FOR DEVELOPMENT
C000	HEALTH AND ECOLOGICAL IMPACTS EVALUATION
C100	ECOLOGICAL IMPACT
C110	AIR, WATER AND LAND QUALITY CRITERIA
C120	QUANTIFIED MEDIA DEGRADATION
C130	LABORATORY FLORA STUDIES
C140	FIELD FLORA STUDIES
C150	LABORATORY FAUNA STUDIES
C160	FIELD FAUNA STUDIES
C200	BIOASSAY EVALUATION
C210	CRITERIA DEVELOPMENT
C220	TECHNIQUES DEVELOPMENT
C230	LABORATORY STUDIES
C300	DOSE-RESPONSE DATA
C310	THRESHOLD LIMIT VALUES (TLV)
C320	CHRONIC EXPOSURE EFFECTS
C330	ACUTE EXPOSURE EFFECTS
C400	EPIDEMIOLOGICAL DATA
C410	INDUSTRY-RELATED HEALTH DATA
C420	MORBIDITY CORRELATION STUDIES
C430	MORTALITY CORRELATION STUDIES
D000	QUANTIFY POLLUTION IMPACTS
D100	TRANSPORT, TRANSFORMATION AND FATE
D110	METEOROLOGICAL AND HYDROLOGICAL DATA
D120	MODEL DEVELOPMENT
D130	TRANSFORMATION CHEMISTRY
D140	EXPOSURE LEVEL CALCULATIONS
D150	AMBIENT POLLUTANT CONCENTRATION MEASUREMENTS
D200	TOTAL POLLUTANT LOAD CALCULATIONS
D210	PROCESS LOADING (STATIONARY)
D220	OTHER SOURCE LOADING (FOR EXAMPLE, MOBILE SOURCES)

TABLE A.5.3 - PROFILE ELEMENT CODES (Concluded)

CODE	DESCRIPTION
D230	NATURAL BACKGROUND
D300	SYNERGISTIC AND MULTIMEDIA IMPACTS
D310	MULTIMEDIA POLLUTANT DISTRIBUTION
D320	ADDITIVE, TRANSFORMATION AND ENHANCEMENT EFFECTS
D400	POLLUTANT PRIORITY RANKING
D410	TOTAL POLLUTANT LOAD
D420	DEGREE OF HAZARD (SEVERITY INDICES)
D500	COMBUSTION PROCESS USE PROJECTIONS
D510	CURRENT MARKET SIZE
D520	FUTURE MARKET PROJECTIONS
D530	FUEL SUPPLY/DEMAND PROJECTIONS
D540	DEMOGRAPHIC AND LAND USE PATTERNS AND TRENDS
E000	ENVIRONMENTAL GOALS AND OBJECTIVES DEVELOPMENT
E100	EXISTING POLLUTANT LEVELS
E200	EMISSION OR AMBIENT LEVEL GOALS
E210	EST OF PERMISSIBLE POLLUTANT CONC (AIR, WATER, OR LAND)
E220	CRITERIA FOR ESTABLISHING PRIORITIES
E230	CONTROL TECHNOLOGY LIMITATIONS
E240	MINIMUM ACUTE TOXICITY EFFLUENT
E300	SOCIAL, ECONOMIC, POLITICAL,
E310	NON-POLLUTANT GOALS
E320	QUANTIFIED NON-POLLUTANT IMPACTS
E330	SITING CRITERIA
E340	CRITICAL MATERIALS IMPACTS
E400	STATUTORY CONTRAINTS
E410	FEDERAL/STATE STANDARDS AND REGULATIONS
E420	RESEARCH DATA BASE FOR STANDARDS
E500	STANDARDS DEVELOPMENT RECOMMENDATIONS
E510	STANDARDS MODIFICATIONS
E520	STANDARDS DEVELOPMENT
E530	CRITERIA FOR PRIORITIES
E540	RECOMMENDED SCHEDULE

TABLE A.5.4 - PRIMARY ACTIVITY NOMENCLATURE

COLLECTION

EVALUATION

QUAL ANALYSIS

QUANT ANALYSIS

STANDARDIZATION

SURVEY REPORT

TECHNIQUE DEV

TABLE A.5.5 - ACTIVITY FREQUENCY NOMENCLATURE

CONTINUOUS

GRAB

INTERMITTENT

TABLE A.5.6 - FEED MATERIAL TYPE NOMENCLATURE

PULVERIZED
CRUSHED
STOKER
LIGNITE
NATURAL
SYNTHETIC
DIESEL
DISTILLATE
RESIDUAL
GASOLINE
KEROSENE
RESIDENT
COAL/MSW
COM/OIL

TABLE A.5.7a - METHODS NOMENCLATURE FOR SAMPLING AND ANALYSIS PROJECT TYPES

AA
AMBIENT AIR MONITORING ANALYZERS
ANODIC STRIPPING VOLTAMETRY
A/D CONVERTER
BACK SCATTER DEPOLARIZATION ANALYSIS
BALLOONS
BAROMETERS, SOLID STATE
BOUNDARY LAYER DILUTION PROBE
CAMERA TUBES
CATHODIC STRIPPING VOLTAMETRY
CHEMILUMINESCENCE TECHNIQUES
COLORIMETRY
CONTACT ELECTRICAL TECHNIQUES
CONTROL TECHNOLOGY EVALUATION
CONTROLLED TEMPERATURE SAMPLER
CONTROLLED CONDENSATION METHODS
CRYOCONDENSATION
DEWPOINT MONITOR
DICHOTOMOUS SAMPLER
DICHOTOMOUS VIRTUAL IMPACTOR
DIFFUSED SCRUBBER
DIFFUSION PROCESSOR
DIFFUSION SAMPLING TECHNIQUES
DIFFUSION TUBE SCRUBBER
DIONEY ION CHROMATOGRAPHY
DIRECT INLET MASS SPECTROSCOPY
DYE LASER TECHNIQUES
ELECTRON CAPTURE GAS CHROMATOGRAPHY
ELECTRON DIFFRACTION TECHNIQUES
ELECTRON MICROPROBE
EPA REFERENCE METHOD 5
ESCA
EXTRACTIVE IMPACTOR
FI
FILTERS
FILTERS, $AgNO_3$ TREATED
FILTERS, LiOH TREATED
FILTERS, MICROSCORBAN
FILTERS, NUCLEOPORE
FILTERS, POLYCARBONATE
FILTERS, TEFLON
FLAME PHOTOMETRIC DETECTOR
FLAMELESS ATOMIC ABSORPTION SPECTROPHOTOMETRY
FLUORESCENCE TECHNIQUES
FT
GAS ANALYZER

TABLE A.5.7a - METHODS NOMENCLATURE FOR SAMPLING AND ANALYSIS PROJECT TYPES (Continued)

GAS PHASE SULFURIC ACID GENERATOR
GC
GC-EC
GC-MS
HIGH RESOLUTION GAS CHROMATOGRAPHY
HIGH RESOLUTION MASS SPECTROSCOPY
HIGH VOLUME CASCADE IMPACTOR
HOLOGRAPHY
HOT WIRE TECHNIQUES
HPLC
HYDRIDE GENERATION-FLAME ATOMIC ABSORPTION SPECTROSCOPY
HYGROMETER, SOLID STATE
IMAGE ANALYSIS TECHNIQUES
IMPACTOR TECHNIQUES
IMPINGERS
INFRARED TECHNIQUES
INORGANIC ANALYSIS
INSTRUMENT SURVEY
ION EXCHANGE CHROMATOGRAPHY
ION MICROPROBE
ION PAIR DETECTION
IR
ISOPROPANOL ABSORPTION METHOD
LASER DOPPLER VELOCIMETER
LASER-RADAR TECHNIQUES
LC-MS
LIDAR
LIGHT AMPLIFIERS
LIGHT SCATTERING SPECTROMETRY
LIQUID CRYSTAL GAS CHROMATOGRAPHY
LITERATURE SURVEY
LONG PATH HIGH RESOLUTION INFRARED SPECTROSCOPY
LOW RESOLUTION MASS SPECTROSCOPY
MACRORETICULAR SORBENT RESINS
MASS EMISSION RATE MONITOR
METABOLIC BALANCE
METEOROLOGY
METHYLTHYMOL BLUE METHOD
MICROCOMPUTER
MICROWAVE RESONANCE SPECTROSCOPY
MICRO-RAMAN SPECTRA
MODELING
MS
MULTIDETECTOR ARRAYS

TABLE A.5.7a - METHODS NOMENCLATURE FOR SAMPLING AND ANALYSIS PROJECT TYPES (Continued)

NEPHELOMETRY
NMR
NONEXTRACTIVE ELECTRO-OPTICAL INSTRUMENT
NUCLEAR GAMMA RAY SPECTROSCOPY
OPTICAL ABSORPTION TECHNIQUES
OPTICAL EMISSION SPECTROSCOPY
OPTICAL INSTRUMENTATION
OPTO-ACOUSTIC TECHNIQUES
ORGANIC ANALYSIS
OXIDATION TECHNIQUES
PARR ACID DIGESTION BOMB PRETREATMENT TECHNIQUE
PARTICULATE SULFUR ANALYZER
PH MONITOR
PHOTOELECTRON SPECTROMETRY
PIEZO-ELECTRIC MICROBALANCE
PLASMA SOURCE EMISSION SPECTROMETRY
PLUME OPACITY INSTRUMENTS
POLARIZED LIGHT MICROSCOPY
PROTON BEAM-PROTON SPECTRA
PROTOTYPE
PULSED FLUORESCENCE MONITOR
RADIONUCLIDE MEASUREMENTS
RAMAN SCATTERING
RAYLEIGH SCATTERING
SAMPLE HANDLING EVALUATION
SAMPLING EVALUATION
SASS LEVEL 1 ANALYSIS
SCANNING COULOMETRY
SCANNING ELECTRON MICROSCOPY
SEDIMENT CORES
SELECTIVE SOLUBILITY
SERIES CYCLONE
SHAPE SENSITIVE AEROSOL PATICLE SIZE SPECTROMETRY
SIMULATION TECHNIQUES
SOLID SORBENTS
SO_3 ANALYSIS
SPECIFIC ION ELECTRODE
SPECTRAL ANALYSIS
SPECTROSCOPY
STANDARD METHODS EVALUATION
SULFURIC ACID MIST MONITOR
SUN PHOTOMETER
TAPERED ELEMENT OSCILLATING MICRO BALANCE
TEC

TABLE A.5.7a - METHODS NOMENCLATURE FOR SAMPLING AND ANALYSIS PROJECT TYPES (Continued)

TECHNICAL MANUAL DEVELOPMENT
TECHNIQUES DEMONSTRATION
TELEPHOTOMETERS
TELEVISION TECHNOLOGY
TETHERSONDE
THIN LAYER CHROMATOGRAPHY
TOC-COD
TRANSMISSION ELECTRON MICROSCOPY
TRANSMISSOMETER
TRANSMISSOMETER, FOUR WAVELENGTHS
TRANSMISSOMETER, TWO WAVELENGTHS
TUNDGREN IMPACTORS
TURBIDIMETRY
UV
VERTICAL IMPACTOR
VOLTAMETRIC METHODS
WIND TUNNEL ANALYSIS
X-RAY ABSORPTION
X-RAY DIFFRACTION
X-RAY EXCITED OPTICAL LUMINESCENCE
X-RAY FLUORESCENCE
X-RAY TECHNIQUES
AIRCRAFT ASSISTED TECHNIQUES
ATMOSPHERIC STUDIES
BALLOON ASSISTED TECHNIQUES
BASELINE DATA
BIOGEOCHEMISTRY
CHEMICAL-METEOROLOGICAL DATA
CLIMATOLOGY
CORING TECHNIQUES
ELECTRON SPECTROSCOPY
FIELD STUDY
GAS PHASE TITRATION
GEOCHEMICAL STUDY
IMPROVED CALIBRATION TECHNIQUES
IN SITU MEASUREMENTS
KINETICS STUDY
LABORATORY ANALYSIS
LITERATURE SURVEY
MASS SPECTROSCOPY
METEOROLOGY
MICROMETEOROLOGY

TABLE A.5.7a - METHODS NOMENCLATURE FOR SAMPLING AND ANALYSIS PROJECT TYPES (Concluded)

MOBILE GROUND UNITS
MODELING
MOMENTUM TRANSFER STUDIES
PHOTOCHEMICAL STUDIES
PHOTOMETER
RADIONUCLIDE MEASUREMENTS
SMOG CHAMBER
STATISTICAL ANALYSIS
TOPOGRAPHY
WET/DRY FALLOUT COLLECTORS
WIND TUNNEL ANALYSIS

TABLE A.5.8a - ISSUES NOMENCLATURE FOR INTEGRATED ASSESSMENT PROJECT TYPES

AESTHETICS
AMBIENT AIR DATA
BIOMEDICAL EFFECTS
COAL TECH ASSESSMENT
COMPARATIVE ASSESSMENT
CONTROL TECHNOLOGY
DEMOGRAPHIC FACTORS
ECOLOGICAL FACTORS
ECONOMIC FACTORS
EMISSIONS DATA
ENERGY USE
ENVIRONMENTAL ASSESS
HUMAN HEALTH
INSTITUTIONAL FACTORS
LAND USE
LEGAL FACTORS
POLITICAL FACTORS
POLLUTANT DISTRIBUTION
RADIOACTIVE WASTES
REGULATORY FACTORS
SOCIAL FACTORS
SOCIOECONOMIC FACTORS
TECHNICAL FACTORS
TRANS TRANSF FATE
WATER USE

TABLE A.5.8b - SOCIOECONOMIC PROJECT TYPES

AESTHETICS
BIOINDICATORS
CULTURAL FACTORS
DEMOGRAPHIC FACTORS
ECOLOGICAL FACTORS
ECONOMIC FACTORS
ENERGY USE
ENVIRONMENTAL ANALYSIS
HUMAN HEALTH
IMPACT ASSESSMENT
INSTITUTIONAL FACTORS
LAND USE
LEGAL FACTORS
POLITICAL FACTORS
RECREATIONAL FACTORS
REGULATION DEV
REGULATORY FACTORS
SOCIAL IMPACT
SOCIOECONOMICS
WATER USE

TABLE A.5.9a - APPROACH NOMENCLATURE FOR INTEGRATED ASSESSMENT PROJECT TYPES

CASE STUDIES
CHEMICAL ANALYSIS
DATA ANALYSIS
DATA BASE ESTAB
DATA BASE MAINT
DATA COLLECTION
EPIDEMIOLOGY
FIELD STUDIES
INFORMATION SYST
LITERATURE SURVEY
MAIL SURVEYS
METHODS DEV
MODEL ANALYSIS
MODEL ADAPTATION
MODEL DEVELOPMENT
QUAL EVALUATION
QUANT EVALUATION
RECORDS SURVEY
REPORT GENERATION
STATISTICAL ANAL
TELEPHONE SURVEYS
TECH ASSESSMENT
WORK PLAN

TABLE A.5.9b - APPROACH NOMENCLATURE FOR SOCIOECONOMIC PROJECT TYPES

CASE STUDIES
COMPUTER GRAPHICS
CONFERENCE
DATA ANALYSIS
DATA BASE ESTAB
DATA BASE MAINT
DATA COLLECTION
ENERGY MODELS
ENGINEERING EVAL
FIELD STUDIES
INFORMATION SYST
INTERVIEWS
LITERATURE SURVEY
METHODS DEV
MODEL ADAPTATION
MODEL ANALYSIS
MODEL DEVELOPMENT
QUAL EVALUATION
QUANT EVALUATION
RECORDS SURVEY
REMOTE SENSING
REPORT GENERATION
SITE VISITS
SLUDGE STUDY
STATISTICAL ANAL
SURVEYS

TABLE A.5.10a - FACTORS NOMENCLATURE FOR INTEGRATED ASSESSMENT PROJECT TYPES

ALTERNATIVE STRATEGY DEV
ENERGY PLANNING
ENERGY POLICY
ENERGY SUPPLY
ENVIRONMENTAL POLICY
ENVIRONMENTAL QUALITY
GOVERNMENT PLANNING
GOVERNMENT COORDINATION
GOVERNMENT POLICY
IMPACT IDENTIFICATION
LOCAL DEVELOPMENT
MANPOWER UTILIZATION
MITIGATION PLANNING
POLLUTION ABATEMENT
R & D POLICY
REGIONAL DEVELOPMENT
REGIONAL POLICY
RESOURCE UTILIZATION
SITE SELECTION
SOCIAL IMPACTS

TABLE A.5.10b - FACTORS NOMENCLATURE FOR SOCIOECONOMIC PROJECT TYPES

AGRICULTURAL IMPACTS
ALTERNATIVE STRATEGY DEV
CULTURAL IMPACTS
ECONOMIC ASSESSMENT
ENERGY SUPPLY
GOVERNMENT COORDINATION
GOVERNMENT POLICY
IMPACT IDENTIFICATION
LOCAL DEVELOPMENT
LOCAL PLANNING
MITIGATION PLANNING
PLANNING
POLICY ALTERNATIVES
PUBLIC ATTITUDES-VALUES
REGIONAL DEVELOPMENT
RESOURCE UTILIZATION
SITE SELECTION
SOCIAL IMPACTS
WASTE DISPOSAL
WASTE UTILIZATION

TABLE A.5.11 - MEDIA NOMENCLATURE

GAS
LIQUID
SOLID

TABLE A.5.12a - TEST TYPE NOMENCLATURE FOR BIOLOGICAL PROJECT TYPES

ACUTE EXPOSURE
ACUTE-CHRON EXPOSURE
ANTIOXIDANT POTENTIAL
BEHAVIOR RESPONSE
BIOASSAY DEVELOPMENT
BIOCHEMISTRY
BIOLOGICAL UPTAKE
BODY BURDEN
CARCINOGENICITY
CHRON EXPOSURE
CHARACTERIZATION STUDY
CO-CARCINOGENICITY
CYTOTOXICITY
DOSE RESPONSE
EPIDEMIOLOGY
GENETIC EFFECTS
HEALTH EFFECTS
IMMUNE RESPONSE
INTERMOLECULAR REACTIONS
IRRITANT POTENTIAL
METABOLIC STUDY
MOLECULAR TOXICOLOGY
MORPHOLOGICAL EFFECTS
MUTAGENICITY
MODELING
NEUROPHYSIOLOGIC RESPONSE
ONCOGENICITY
OXIDATIVE MECHANISM
PHYSIOLOGIC EFFECTS
PRESCREENING ASSAY DEV
SUBACUTE EXPOSURE
SUBLETHAL EXPOSURE
TERATOGENICITY
TOXICITY

TABLE A.5.12b - TEST TYPE NOMENCLATURE FOR ECOLOGICAL PROJECT TYPE

ACUTE-SUBLETHAL EXPOSURE
ACUTE-CHRON EXPOSURE
ACUTE-SUBACUTE EXPOSURE
AMBIENT EXPOSURE
BIOACCUMULATION
BIOLOGICAL IMPACT
BODY BURDEN
CARCINOGENICITY
CHARACTERIZATION STUDY
CHRON EXPOSURE
CHRON-SUBLETHAL EXPOSURE
DOSE RESPONSE
ECOLOGICAL IMPACT
ENERGY-RELATED DEV
ENVIRONMENTAL IMPACT
IMPINGEMENT STUDY
INTERMITTENT EXPOSURE
METABOLIC STUDY
MODELING
MUTAGENICITY
PHYSIOLOGIC EFFECTS
PRODUCTIVITY EVALUATION
RESISTIVITY
SUBACUTE EXPOSURE
TEMPERATURE SHOCK
TERATOGENICITY
THERMAL STRESS
TOXICITY

TABLE A.5.13a - TEST DESCRIPTION NOMENCLATURE FOR BIOLOGICAL PROJECT TYPES

ACUTE CHRONIC EXPOSURE
AEROSOL GENERATION TECHNIQUES
AHH INDUCIBILITY
ALA-PBB ANALYSIS
AMES TEST
ANTIBODY TITRATION
ANTIGEN RESPONSE
ATP CONCENTRATION
AUTORADIOGRAPHY
AUTOPSY
BASELINE DATA DEV
BEHAVIORAL ANALYSIS
BIOCHEMICAL CRITERIA DEV
BIOINDICATOR DEV
BIOLOGICAL MODELS
CARDIOPULMONARY EFFECTS
CELL DIFFERENTIATION
CELLULAR ADAPTATION
CFU TECHNIQUES
CHEMICO-PHYSICAL ANALYSIS
CHEMILUMINESCENCE
CHEMOTACTIC ABILITY
CHROMOSOMAL ABNORMALITIES
CLARK OXYGEN ELECTRODE
COLLAGEN-ELASTIC INDUCTION
COLONY FORMING ABILITY
CONTROLLED RELEASE TECHNIQUES
CORD
CRITICAL ION ANALYSIS
CYTOCHROME P-450 ACTIVITY
CYTOLOGICAL CRITERIA DEV
CYTOPATHOLOGICAL CRITERIA DEV
DEFENCE REACTIONS
DEN RESPONSE
DESENSITIZATION ANALYSIS
DNA POLYMERASE INHIBITION
DOMINANT LETHAL TEST
DOSE-RESPONSE
DOUBLE BLIND STUDY
DROSOPHILA TEST SYSTEM
ELECTRON MICROSCOPY
ELECTRON PROBE MICROANALYSIS
ELECTRON SPIN RESONANCE
ENDOGENOUS TUMOR VIRUS

TABLE A.5.13a - TEST DESCRIPTION NOMENCLATURE FOR BIOLOGICAL PROJECT TYPES (Continued)

ENDONUCLEASE ASSAY DEV
ENZYME ASSAY
ENZYME INDUCTION
ENZYME ACTIVITY
ENZYME/TRACER METHODS
EPITHELIAL SCREENING TEST
EXERCISE EFFICIENCY
FEASIBILITY ANALYSIS
FLOW RESISTANCE MEASUREMENTS
FLUORESCENCE TECHNIQUES
FLUORESCENT ANTIBODY TECHNIQUES
GENE MUTATIONAL ASSAY
GERM CELL LETHALITY
GLUCAGON BINDING
GROWTH HORMONE ANALYSIS
GUT LAVAGE
HEMATOPOIESIS
HERITABLE TRANSLOCATION TEST
HISTOLOGICAL TECHNIQUES
HISTONE KINASE ACTIVITY
HISTOPATHOLOGICAL CRITERIA DEV
HISTOPATHOLOGICAL TEST
HOLLOW FIBER DIALYSIS
HORMONE SYNTHESIS
HOST-PARASITE RESPONSE
HUMORAL RESPONSE
HYPERTENSIVE RESPONSE
IMMUNOCOMPETENCE
IMMUNOGLOBULIN RESPONSE
INDICATOR DEV
INFORMATION SYSTEM
INHALATION CHAMBERS
INTERFERON PRODUCTION
INTRANASAL HOMEOSTASIS
INTRATRACHEAL INJECTION
IN VITRO CELL TRANSFORMATION
KARYOTYPE ANALYSIS
KINETIC MODEL
LATENCY DETERMINATION
LESION FORMATION
LIPID PEROXIDATION
LITERATURE SURVEY
LIVE HUMAN EXPOSURE

TABLE A.5.13a - TEST DESCRIPTION NOMENCLATURE FOR BIOLOGICAL PROJECT TYPES (Continued)

LONGEVITY
MACROMOLECULAR BINDING
MACROPHASE MIGRATION
MAGNETIC RESONANCE
MEMBRANE BINDING
METABOLIC ACTIVATION BIOASSAY
METABOLISM INTERFERENCE
METABOLITE ASSAY
MICROBE MUTATION
MITOGEN RESPONSE
MOBILIZATION STUDY
MODELING
MORBIDITY-MORTALITY
MORPHOMETRIC ANALYSIS
MORTALITY
MULTIGENERATIONAL EXPOSURE
NEFA-INDUCED LESION
NEOPLASTIC CELL TRANS ASSAY
NITROGEN INDUCED TRANSFORMATION
NONINVASIVE TECHNIQUES
NORADRENALINE BINDING
NO-EFFECT LEVEL
NUCLEIC ACID RESPONSE
NUCLEOSIDE REACTIVITY
NUTRIENT ABSORPTION ANALYSIS
OCCUPATIONAL EXPOSURE
OLFACTORY FUNCTION
OXIDANT-ANTIOXIDANT ACTIVITY
PARTICULATE DEPOSITION
PATHOLOGICAL EFFECTS
PATHOPHYSIOLOGICAL ANALYSIS
PHAGOCYTIC ABILITY
PHARM BLOCKING ABILITY
PHOSPHOLIPID BINDING
PHYSIOLOGICAL INDICES
PLETHYSMOGRAPH
PNEUMONECTOMY
POLLUTANT TRANSPORT
PRECURSOR INCORPORATION
PROLIFERATIVE CAPACITY
PROMOTOR ANALYSIS
PROTEIN SULFHYDRYL LEVEL
PROTEIN SYNTHESIS
PROTON INDUCED X-RAY EMISSION

TABLE A.5.13a - TEST DESCRIPTION NOMENCLATURE FOR BIOLOGICAL PROJECT TYPES (Concluded)

PROTOZOAN SCREENING TEST
PSYCHOPHYSIOLOGICAL ANALYSIS
PSYCHOLOGICAL EFFECTS
PULMONARY CLEARANCE MECHANISM
RADIOCHEMICAL ANALYSIS
RADIOIMMUNOASSAY
RADIOLABLE ASSAY DEV
RADIONUCLEI PROBE
RAM
RENIN-ANGIOTENSIN ACTIVITY
REPRODUCTIVE PERFORMANCE
RISK ASSESSMENT
SCANNING ELECTRON MICROSCOPE
SCREENING TEST DEV
SEA URCHIN EMBRYOGENIC ASSAY
SENSITIVITY ANALYSIS
SPIROMETRY
STATISTICAL MODEL
STEROL HYDROPEROXIDE ANALYSIS
STOMATIC EFFECTS
SUBJECTIVE PERCEPTION INDEX
SULFITE OXIDASE ASSAY
SYNAPTOGENESIS
SYNERGISTIC EFFECTS
TERATOGENIC POTENTIAL
THYMIDINE UPTAKE
TIME LAPSE PHOTOGRAPHY
TRANSMITTED MUTATIONS
TRIER ASSAY
TUMORIGENIC ENHANCEMENT
TYROSINCE AMINO TRANSFERENCE
VIABILITY
VIRAL GENOME ANALYSIS
WI-38
X-CHROMOSOME LOSS TEST

TABLE A.5.13b - TEST DESCRIPTION NOMENCLATURE FOR ECOLOGICAL PROJECT TYPES

A Q STANDARDS EVALUATION
ACCUMULATIVE IMPACT
ALTERNATIVES DEV
ANTAGONISM
ANTAGONISM-SYNERGISM
ANTIGEN RESPONSE
APPEARANCE EVALUATION
BASELINE DATA DEV
BEHAVIORAL ANALYSIS
BENEFICIAL EFFECTS
BINDING MECHANISM
BIOCHEMICAL INDICES
BIOINDICATOR DEV
BIOINDICATORS
CATION TRANSPORT MODELS
CHEMICAL INDICES
CLOSED CHAMBER
COMPARATIVE EVALUATION
CRITERIA DEV
CYTOLOGIC INDICES
DATA BASE DEV
DEPOSITION MODEL
DEPOSITION STUDY
DETRITUS FORMATION
ELECTRON SPIN RESONANCE
ENTRAINMENT PERCENTAGES
ENZYME ACTIVITY
EVOLUTIONARY RESPONSE
FIELD-LABORATORY ASSAY
FOLIAR DAMAGE MODEL
FREE RADICAL ACTIVITY
GENETIC EFFECTS
GENETIC SUSCEPTIBILITY
GROWTH-REPRODUCTION
HOSE-PARASITE RESPONSE
IMPACTS EVALUATION
INJURY EVALUATION
INSECT DEFENCE MECHANISM
LATENT MORTALITY
LC50
LEAF PENETRATION TECHNIQUES
LESION FORMATION
LIGAND KINETICS
LITERATURE SURVEY

TABLE A.5.13b - TEST DESCRIPTION NOMENCLATURE FOR ECOLOGICAL PROJECT TYPES (Concluded)

MODELING
METABOLIC ACTIVITY
MONITORING/TECHNIQUES DEV
MORTALITY
NEEDLE DEVELOPMENT
NITRITE METABOLISM
NUTRIENT CYCLE
NUTRITIONAL QUALITY
OPEN TOP CHAMBER
PHENOLOGY
PHOTOSYNTHETIC RESPONSE
PHYSICO-CHEMICAL RESPONSE
PHYSIOLOGICAL INDICES
PLANT SOIL INTERACTIONS
POLLUTANT CYCLING
POPULATION DENSITY
POPULATION DYNAMICS
PREDICTIVE MODELS
PRODUCTIVITY
RADIAL GROWTH ANALYSIS
REPRODUCTION INHIBITION
RESEARCH NEEDS ASSESSMENT
RESISTANCE MECHANISM
ROLE DETERMINATION
ROOT DEVELOPMENT
SCAVAGING CAPACITY
SENSITIVITY ANALYSIS
SOIL-CROP MANAGEMENT DEV
SPECIES COMPOSITION CHANGES
STOCHASTIC MODELS
STRUCTURAL DYNAMICS
SUBLETHAL PARAMETERS
SUCCESSIONAL TRENDS
SURVIVAL
SYNERGISM-ANTAGONISM
SYNERGISTIC EFFECTS
THERMAL LIMITS
THERMOREGULATION MODELS
THRESHOLD MEASUREMENTS
TISSUE DEGENERATION
TISSUE TOXICANT LEVEL
TOLERANCE LIMITS
TROPHIC RELATIONSHIPS
UPTAKE-TRANSLOCATION
VOLATILE ORGANICS PRODUCTION
YIELD MEASUREMENTS
HOUR LC50

TABLE A.5.14a - TEST STRAINS/ORGANISMS NOMENCLATURE FOR BIOLOGICAL PROJECT TYPES

ABDOMINAL FAT/HUMAN
ALVEOLAR EPITHELIAL CELLS/NSD
ALVEOLAR MACROPHASE/NSD
ALVEOLAR MACROPHAGE/RABBIT
ANIMAL
ANIMAL CELLS
ANIMAL POPULATIONS
B LYMPHOCYTES/MAN
BACTERIA
BALB C 3T3
BIOLOGICAL MEMBRANES/MODEL
BIOLOGICAL MEMBRANES/NSD
BIOLOGICAL MEMBRANES/RAT
BLOOD PLASMA/RAT
BRAIN CELLS/NSD
BRAIN MITOCHONDRIA/RAT
BRAIN/RAT
CARDIOPULMONARY SYSTEM/DOG
CARDIOPULMONARY SYSTEM/GUINEA PIG
CARDIOPULMONARY SYSTEM/MAN
CARDIOPULMONARY SYSTEM/RODENT
CATECHOL-O-METHYL TRANSFERASE/RODENT
CELLS/DOG
CELLS/MAMMAL
CELLS/MAN
CELLS/NSD
CELLS/RODENT
CENTRAL NERVOUS SYSTEM/ANIMAL FETUS
CENTRAL NERVOUS SYSTEM/HUMAN
CENTRAL NERVOUS SYSTEM/MAN
CENTRAL NERVOUS SYSTEM/RABBIT
CENTRAL NERVOUS SYSTEM/RODENT
CHICK
CHILDREN
CHLOROPLASTS/PLANTS
CHROMATIN/MAMMAL
CHROMOSOMES/NSD
CHROMOSOMES/SWINE EMBRYO
DNA/MAN
DNA/NSD
DOGS
DROSOPHILA
EMBRYO/ANIMAL MODEL
EMBRYO/HAMSTER
EMBRYO/MAMMAL

TABLE A.5.14a - TEST STRAINS/ORGANISMS NOMENCLATURE FOR BIOLOGICAL PROJECT TYPES (Continued)

EMBRYO/MOUSE
ENZYMES/NSD
EPITHELIAL CELLS/MAN
EPITHELIAL CELLS/MOUSE
EPITHELIAL CELLS/NSD
EPITHELIAL TISSUE/NSD
E. COLI
GLYCEROLIPIDS/NSD
GOAT
GUINEA PIG
HAMSTER
HEART TISSUE/MAN
HEART TISSUE/NSD
HEART TISSUE/RAT
HEART TISSUE/RODENT
HEMATOPOIETIC SYSTEM/MAMMAL
HEPATOMA CELLS/NSD
HISTONE KINASE/ANIMAL
IMMATURE NEPHRON/RABBIT
IMMATURE NEPHRON/RAT
IMMUNOGLOBULIN/RABBIT
INSECTS
KIDNEY MITOCHONDRIA/RAT
KIDNEYS/MAN
KIDNEYS/RODENT
LATENT TUMOR VIRUSES/CHICKEN
LEUKEMIA VIRUS/BIRDS
LIPIDS/NSD
LIPOPROTEIN/NSD
LIVER HEPATOCYTES/RAT
LIVER MICROSOMES/NSD
LIVER MITOCHONDRIA/RAT
LIVER/MAN
LIVER/NSD
LIVER/RAT
LOBSTER
LUNG CELLS/MOUSE
LUNG CELLS/NSD
LUNG FIBROBLASTS/MAN
LUNG MONOCYTES/NSD
LUNGS/ANIMAL
LUNGS/DOG
LUNGS/HAMSTER
LUNGS/MAN
LUNGS/MOUSE

TABLE A.5.14a - TEST STRAINS/ORGANISMS NOMENCLATURE FOR BIOLOGICAL PROJECT TYPES (Continued)

LUNGS/NSD
LUNGS/RABBIT
LUNGS/RAT
LUNGS/RODENT
LYMPH NODES/NSD
LYMPHOCYTES/BABOON
LYMPHOCYTES/NSD
L-2 LUNG CELLS/RAT
MACROPHAGE/BABOON
MACROPHAGE/NSD
MAMMALS
MAN
MICROSOMES/MOUSE
MITOCHONDRIA/NSD
MONKEY
MONOAMINE OXIDASE/RODENT
MOUSE
NASAL MUSCOSA/CHICKEN
NEUTROPHILES/MAN
NORADRENALINE/RODENTS
NUCLEIC ACID/MAMMAL
NUCLEIC ACID/NSD
OVARY CELLS/CHINESE HAMSTER
PANCREAS/MAN
PLASMA MEMBRANE/ALGAE
PLASMA/MAN
PLASMA/PRIMATES
POLYMORPHONUCLEAR LEUKOCYTES/NSD
POSTNATAL ANIMAL MODEL
PRIMATES
PROTOZOAN
PSOAS MUSCLE/MAN
RABBIT
RAT
RED BLOOD CELLS/MAN
RESPIRATORY DEFENCE SYSTEM/RODENT
RESPIRATORY SYSTEM/DONKEY
RESPIRATORY SYSTEM/GUINEA PIG
RESPIRATORY SYSTEM/HAMSTER
RESPIRATORY SYSTEM/MAN
RESPIRATORY SYSTEM/MONKEY
RESPIRATORY SYSTEM/MOUSE
RESPIRATORY SYSTEM/NSD
RESPIRATORY SYSTEM/RAT
RESPIRATORY SYSTEM/RODENT
RESPIRATORY TRACT/MAN

TABLE A.5.14a - TEST STRAINS/ORGANISMS NOMENCLATURE FOR BIOLOGICAL PROJECT TYPES (Concluded)

RNA/E. COLI
RNA/NSD
RODENT
SALMONELLA TYPHIMURIUM
SALMONELLA TYPHIMURIUM TA-1533
SALMONELLA TYPHIMURIUM TA-98
SEA URCHIN
SKIN/MOUSE
SKIN/RAT
SPERM/MAMMAL
SWINE
T LYMPHOCYTES/MAN
TESTES/RAT
TISSUE/ANIMAL
TISSUE/MAN
TRACHEA/NSD
TRACHEA/RAT
URINE/MAN
WHITE BLOOD CELLS/MAN

TABLE A.5.14b - TEST STRAINS/ORGANISMS/ECOSYSTEMS NOMENCLATURE FOR ECOLOGICAL PROJECT TYPES

ACER SACCHARUM
ALFALFA
ALGAE
ALLIGATORS
ANIMALS
AQUATIC ECOSYSTEM
AQUATIC ORGANISMS
ARTHROPODS
ASH
ATMOSPHERE
BACTERIA
BEANS
BENTHIC ALGAE
BIRDS
BLUE GREEN ALGAE
BROADLEAF PLANTS
CARROTS
CONIFEROUS FOREST
CONIFEROUS SEEDLINGS
CONIFERS
COTTON
CRAYFISH
CROP PLANTS
CRYPTOGRAMS
DESERT ECOSYSTEMS
DESERT PLANTS
DETRITUS
DOMESTIC LIVESTOCK
DOUGLAS FIR-DWARF MISTLETOE
ESTUARINE ECOSYSTEM
ESTUARINE ORGANISMS
ESTUARINE SHELLFISH
FATHEAD MINNOWS
FINFISH
FINFISH LARVAE
FISHES
FLOUNDER
FOREST VEGETATION
FRAXINUS PENNSYLVANIA
GRASSES
GRASSLAND
ICHTHYOPLANKTON
INSECTS
INVERTEBRATES
INVERTEBRATES LARVAE

TABLE A.5.14b - TEST STRAINS/ORGANISMS/ECOSYSTEMS NOMENCLATURE FOR ECOLOGICAL PROJECT TYPES (Continued)

KENLAND RED CLOVER
KIDNEY BEAN
LARK BUNTING
LARK SPARROW
LARVAE
LENTIC ECOSYSTEMS
LETTUCE
LICHENS
LOCAL FLORA
LOTIC ECOSYSTEMS
MACROALGAE
MAMMALS
MANGROVE LEAF DETRITUS
MARINE ORGANISMS
MESOPHYTIC TREES
MOUSE
MICRO ALGAE
MINT
MOURNING DOVE
MUMMICHOG
NITRIFYING BACTERIA
NONTARGET ESTUARINE ORGANISM
OAKS
ONIONS
PEAS
PHYTOPLANKTON
PINE BARK BEETLE
PLANKTON
PLANTS
PLATANUS OCCIDENTALIS
PONDEROSA PINE-DWARF MISTLETOE
POPLARS
POSTTHERMAL AQUATIC HABITAT
POTATOES
PUMPKINSEED
QUERCUS ALBA
RADISHES
RAINBOW TROUT
RED ALDER
RED ALDER-DWARF MISTLETOE
RIVULUS
SALMONID FISHES
SHRIMP
SHRUBS
SHRUB-STEPPE ECOSYSTEM
SOIL DECOMPOSERS

TABLE A.5.14b - TEST STRAINS/ORGANISMS/ECOSYSTEMS NOMENCLATURE FOR ECOLOGICAL PROJECT TYPES (Concluded)

SOIL MICROFLORA
SOYBEANS
SUGAR MAPLE
TEAM ALFALFA
TERRESTRIAL ECOSYSTEM
THALASSIA TESTUCINUM
THERMAL AQUATIC HABITATS
TREES
TROUT
TUNDRA ECOSYSTEMS
TURFGRASS
TURTLES
VEGETATION
VESPER SPARROW
WEEDS
WESTERN MEADOWLARK
WESTERN WHEATGRASS
WETLANDS ECOSYSTEM
WILDLIFE
ZIPHOPHORUS
ZOOPLANKTON

TABLE A.5.15 - POLLUTANTS NOMENCLATURE

ACID AEROSOL
ACID RAIN
ACIDITY
ACROLEIN
ADDITIVES
AEROSOLS
AIR POLLUTANTS
ALCOHOLS
ALDEHYDES
ALDEHYDES-NOX
ALKANES-NOX
ALKENES
ALKENES-NOX
ALKYLPEROXY RADICALS
AKLYLATING HYDROCARBONS
ALUMINUM
ALUMINUM SULFATE
AMERICIUM-241
AMINES
AMMONIA
AMMONIUM SULFATE
ANIONS
ANTIMONY
ARGON
AROMATIC ALDEHYDES
AROMATIC HYDROCARBONS
AROMATICS-NOX
ARSENIC
ASBESTOS
BARIUM
BENZ[A]ANTHRACENE
BENZIDINE
BENZO[A]PYRENE
BERYLLIUM
BERYLLIUM-7
BETA-PROPIOLACTONE
BIOCIDES
BISULFITE
BOD
BROMINE
CADMIUM
CALCIUM
CALCIUM CARBONATE
CALCIUM SULFATE
CARBON
CARBON DIOXIDE

TABLE A.5.15 - POLLUTANTS NOMENCLATURE (Continued)

CARBON MONOXIDE
CARBON OXIDES
CARBONATES
CARBONYLS
CARCINOGENS
CESIUM
CHEMICAL EFFLUENTS
CHEMICAL KINETICS
CHLORIDE
CHLORINE
CHLORINE-COMPOUNDS
CHROMIUM
CLO RADICAL
COAL COMBUSTION BY-PRODUCTS
COAL EXTRACTION BY-PRODUCTS
COAL PILE DRAINAGE
COAL PROCESSING BY-PRODUCTS
COBALT
COD
COMBUSTION BY-PRODUCTS
CONDENSATION NUCLEI
COOLING TOWER PLUMES
COOLING WATER
COOLING WATER INTAKES
COPPER
COPPER OXIDES
CORROSIVENESS
CYANIDES
DEUTERIUM
DICHLORODIFLUOROMETHANE
DIBROMODIFLUOROMETHANE
DIEPOXYBUTANT
DIMETHYLBENZANTHRACENE
7,12-DIMETHYLBENZANTHRACENE
DISINFECTANTS
DUST
EPOXIDES
ETHYLENE
FINE PARTICULATES
FLUORIDES
FLUORINE
FLYASH
FORMALDEHYDE
FOSSIL FUEL POLLUTANTS
FREE RADICALS
GALLIUM

TABLE A.5.15 - POLLUTANTS NOMENCLATURE (Continued)

GASEOUS EMISSIONS
GROUND STATE OXYGEN
GUANIDINE
GYMNODINIUM
HALOCARBONS
HALOGENATED ACIDS
HAZARDOUS MATERIALS
HEAT
HEAVY METAL
HUMIDITY
HYDROCARBONS
HYDROCARBON-NOX
HYDROCARBON-NOX-OXIDANT
HYDROCARBON-NOX-SULFUR DIOXIDE
HYDROGEN DISULFIDE
HYDROGEN FLUORIDE
HYDROGEN PEROXIDE
HYDROGEN SULFIDE
HYDROPEROXY RADICALS
HYDROXIDE RADICAL
HYDROXYURETHANE
INDIUM
INERT TRACER
INORGANIC IONS
INORGANIC POLLUTANTS
INSOLUBLE SILICATES
IODINE
IONIZING RADIATION
IRON
IRON OXIDES
IRON SALT-ORGANICS
ISOGUTYLENE
KETONES
KRYPTON
KRYPTON-85
LANTHANUM
LEACHATE
LEAD
LEAD FLUORIDE
LIGHT METALS
LIME
LIMESTONE
LITHIUM
MAGNESIUM
MAGNESIUM OXIDE
MANGANESE
MASS TRANSFER

TABLE A.5.15 - POLLUTANTS NOMENCLATURE (Continued)

MERCURY NITRATE
MERCURY
METAL CATIONS
METAL SULFATES
METALLIC NUCLEI
METALS
METHANE
3-METHYLCHOLANTHRENE
METHYL MERCURY
MOLYBDENUM
MULTI ELEMENTS
MUTAGENS
NICKEL
NICKEL COMPOUND
NICKEL CHLORIDE
NICKEL COBALT
NICKEL SULFIDE
NICKEL [III] SULFIDE
NICKEL SELENIDE
NICKEL [III] SELENIDE
NITRATE AEROSOLS
NITRATES
NITRIC ACID
NITRITES
NITROARMATICS
NITROGEN
NITROGEN DIOXIDE
NITROGEN MONOXIDE
NITROGEN OXIDES
NITROQUINOLINE OXIDE
NITROSOAMINES
NITROUS ACID
NITROUS OXIDE
NMHC
NOISE
NONMETHANE HYDROCARBONS
NO_x-NO_2-NO_3
NUTRIENTS
N_2O_5 RADICAL
OH-OXYGEN-AROMATICS
ONCOGENIC POLLUTANTS
OPACITY
ORGANIC ACIDS
ORGANIC AEROSOLS
ORGANIC COMPOUNDS
ORGANOBROMIDES
ORGANOCADMIUM

TABLE A.5.15 - POLLUTANTS NOMENCLATURE (Continued)

ORGANOCHLORIDES
ORGANOMERCURY
ORGANOMETALLICS
ORGANONITROGEN
ORGANOTIN
OXIDANTS
OXIDIZED SPECIES
OXYGEN
OXYGEN-16
OXYGEN-18
OZONE
PAH
PAN
PARTICLE MASS
PARTICULATE MATTER
PARTICULATE NITRATES
PARTICULATE SIZING
PARTICULATE SULFATE
PB-210
PCB
PCH
PERFLUOROCARBON TRACERS
PEROXYACETYL NITRATE
PH
PHENOLIC COMPOUNDS
PHOSPHATE
PHOSPHORUS
PHOTOCHEMICAL OXIDANTS
PHOTOCHEMICAL REDUCTANTS
PHOTOCHEMICAL SMOG
PHYSICAL PROPERTIES
PLATINUM
PLUME KINETICS
PLUMES
PLUTONIUM
POLLUTANT REMOVAL TECHNIQUES
POLLUTANTS
POM
POTASSIUM
PO-210
PRIMARY POLLUTANTS
PROCESS WATER WITHDRAWAL
PROPYLENE
PROPYLENE SMOG
PU-239

TABLE A.5.15 - POLLUTANTS NOMENCLATURE (Continued)

PU-240
PYRENE
RADIATION
RADIOACTIVE MATERIALS
RA-226
REACTANT HYDROCARBONS
REACTIVE POLLUTANTS
REDUCED SPECIES
RESPIRABLE PARTICULATES
RO_2
RUBIDIUM
SALINITY
SALTS
SECONDARY POLLUTANTS
SELENIUM
SETTLEABLE MATTER
SF_6
SILICA
SILICON
SILVER
SINGLET OXYGEN
SLUDGE
SMOG
SMOKE
SODIUM
SODIUM SULFIDE
SOLUBLE SULFATE
SO_2-NACI AEROSOLS
SO_2-NO_x-METAL ION
STRONTIUM
SULFATE PARTICLES
SULFATE
SULFIDE
SULFITE
SULFUR
SULFUR COMPOUNDS
SULFUR DIOXIDE
SULFUR DIOXIDE-NOX
SULFUR DIOXIDE-SULFATE
SULFUR DIOXIDE-OZONE-OLEFIN
SULFUR OXIDES
SULFUR OXIDES-SULFUR DIOXIDE
SULFUR TRIOXIDE
SULFUR TRIOXIDE-SULFURIC ACID
SULFURIC ACID
TEMPERATURE

TABLE A.5.15 - POLLUTANTS NOMENCLATURE (Concluded)

THALLIUM
THALLIUM-230
THERMAL EFFLUENTS
TIN
TITANIUM
TOC
TOTAL DISSOLVED SOLIDS
TOTAL SUSPENDED SOLIDS
TOXIC SUBSTANCES
TRACE CONTAMINANTS
TRACE ELEMENTS
TRACE ORGANICS
TRANSITION METALS
TRANSURANIC ELEMENTS
ULTRAVIOLET LIGHT
URANIUM
URANIUM-234
URANIUM-238
URETHAN
VANADIUM
VANADIUM OXIDES
VINYL CHLORIDES
VINYL RADICALS
VIRUSES
WASTE TO ENERGY
WATER POLLUTANTS
WATER VAPOR
XENON
ZINC
ZINC AMMONIUM SULFATE
ZINC SULFATE
ZIRCONIUM

TABLE A.5.16 - SAMPLING TECHNIQUES NOMENCLATURE

CW	CONTINUOUS WITHDRAWAL THROUGH NON-REACTIVE LINE
IG	GRAB SAMPLE OF GAS (BAG OF BULB)
ST	SEPARATE WET CHEMICAL TRAIN TO COLLECT GAS, SUCH AS METHOD 6
SASS	SASS TRAIN
GS	GRAB SAMPLE OF SOLID OR LIQUID
MASS	MASS TRAIN FOR PARTICULATE
CASC	CASCADE IMPACTOR TRAIN FOR PARTICLE SIZING
HVSS	HIGH - VOLUME SAMPLING SYSTEM
FAST	FUGITIVES ASSESSMENT SAMPLING TRAIN
OPC	OPTICAL PARTICLE COUNTER
CNDB	CONDENSATION NUCLE: COUNTER/DIFFUSION BATTERY
FRN	FEDERAL REGISTER METHOD WHERE N DENOTES METHOD NUMBER (I.E., FR5 = METHOD 5, FR10 = METHOD 10)
GOKS	GOLSOYR - ROSS
ZZZZ	OTHER - SEE COMMENTS

TABLE A.5.17 - ANALYTICAL METHOD CODES

CODE	ANALYTICAL METHOD
AA	ATOMIC ABSORPTION SPECTROMETRY
AM	AMPEROMETRY
AS	ALPHA-SCAN SPECTROMETRY
BS	BETA-SCAN SPECTROMETRY
CA	CARBON ANALYZER
CD	CONDUCTIMETRY
CL	CHEMILUMINESCENCE
CM	COULOMETRY
CO	COLORIMETRY
DI	DISTILLATION
EX	EXTRACTION
FI	FLAME IONIZATION DETECTOR GC
FT	FOURIER TRANSFORM IR
GA	GAMMA-SCAN SPECTROMETRY
GC	GAS CHROMATOGRAPHY (NON-SPECIFIED DETECTION)
GE	GAS EVOLUTION
GL	ELECTRON-CAPTURE GC
GR	GRAVIMETRIC ANALYSIS
GS	GAS CHROMATOGRAPHY/MASS SPECTROMETRY
GT	THERMAL CONDUCTIVITY CELL GC
HP	HIGH PERFORMANCE LIQUID CHROMATOGRAPHY
IC	ION CHROMATOGRAPHY
IP	INDUCTIVELY COUPLED ARGON PLASMA SPECTROSCOPY
IR	INFRARED SPECTROMETRY
LC	LIQUID CHROMATOGRAPHY
L1	GENERAL LEVEL 1 ANALYSIS
L2	GENERAL LEVEL 2 ANALYSIS
MS	MASS SPECTROMETRY
NA	NEUTRON ACTIVATION ANALYSIS
ND	NONDISPERSIVE INFRARED SPECTROMETRY
NM	NUCLEAR MAGNETIC RESONANCE SPECTROMETRY
NS	NOT SPECIFIED
OA	ORSAT ANALYSIS
OS	OPTICAL EMISSION SPECTROSCOPY
PM	PARAMAGNETIC OXYGEN ANALYSIS
PO	POLAROGRAPHY
RA	RADIOCHEMICAL ANALYSIS
RS	RAMAN SPECTROSCOPY
SE	ION SELECTIVE POTENTIOMETRY
SM	SCANNING ELECTRON MICROSCOPY
SS	SPARK SOURCE MASS SPECTROSCOPY
TA	THERMAL ANALYSIS

TABLE A.5.17 - ANALYTICAL METHOD CODES (Concluded)

CODE	ANALYTICAL METHOD
TI	TITRIMETRY
TL	THIN LAYER CHROMATOGRAPHY
TU	TURBIDIMETRY
UV	ULTRAVIOLET SPECTROMETRY
VO	VOLTAMETRY
WC	WET CHEMICAL ANALYSIS (NOT SPECIFIED)
XD	X-RAY DIFFRACTION

TABLE A.5.18 - SAMPLING LOCATION NOMENCLATURE

FUL	FUEL
SPL	STORAGE PILE LEACHATE
BCS	BEFORE CONTROL SYSTEM
ACS	AFTER CONTROL SYSTEM
STK	STACK
PLM	PLUME
SLG	SLUDGE
APD	ASH POND
WWS	WASTE WATER STREAM
CWS	COOLING WATER STREAM
ECO	ECOLOGICAL SYSTEM
IRM	WORK OR LIVING SPACE
AMB	AMBIENT AIR
TWR	COOLING TOWER
APL	ASH POND LEACHATE
CPR	COAL PILE RUNOFF
NSD	NOT SPECIFIED

TECHNICAL REPORT DATA
(Please read Instructions on the reverse before completing)

1. REPORT NO. EPA-600/8-80-031	2.	3. RECIPIENT'S ACCESSION NO.
4. TITLE AND SUBTITLE Environmental Assessment Data Systems User Guide: Project Profile System		5. REPORT DATE June 1980
		6. PERFORMING ORGANIZATION CODE
7. AUTHOR(S) J. P. Reider, Editor		8. PERFORMING ORGANIZATION REPORT NO.
9. PERFORMING ORGANIZATION NAME AND ADDRESS Midwest Research Institute 425 Volker Boulevard Kansas City, Missouri 64110		10. PROGRAM ELEMENT NO. EHE624A
		11. CONTRACT/GRANT NO. 68-02-3177, Work Assignment No. 3
12. SPONSORING AGENCY NAME AND ADDRESS EPA, Office of Research and Development Industrial Environmental Research Laboratory Research Triangle Park, NC 27711		13. TYPE OF REPORT AND PERIOD COVERED Task Final: 8/79-4/80
		14. SPONSORING AGENCY CODE EPA/600/13

15. SUPPLEMENTARY NOTES IERL-RTP project officer is Gary L. Johnson, Mail Drop 63, 919/541-2745.

16. ABSTRACT The report is a user guide to the Project Profile System (PPS), a computerized data base on projects of various types that pertain to specific industrial categories. PPS is one of five data bases which are components of the Environmental Assessment Data Systems (EADS), designed to aid researchers in environmental assessment, emissions characterization, and control technology development. PPS contains data from nine general projects: source monitoring; integrated assessment; transport, transportation, and fate; socioeconomics; sampling methods development; fuels; control technology; ecological effects; and health effects. Each project described in the PPS is identified by its sponsor, contractor, and other administrative information. The PPS contains an abstract of each project reported in text form and lists pertinent references. The specific data in the PPS depends largely on the type of project being reported; however, sufficient detail is available to report on a particular pollutant being sought or identified during the project. The PPS does not give results (e.g., pollutant concentrations, process data); it tells what the project involved. The guide gives detailed instructions for encoding PPS datasets, defines procedures for submitting and retrieving data, and contains standard nomenclature to facilitate data encoding. The guide also discusses procedures to access PPS.

17. KEY WORDS AND DOCUMENT ANALYSIS

a. DESCRIPTORS		b. IDENTIFIERS/OPEN ENDED TERMS	c. COSATI Field/Group	
Pollution	Fuels	Pollution Control	13B	21D
Assessments	Ecology	Stationary Sources	14B	06F
Information Systems		Environmental Assessment	05B, 09B	
Industries	Environmental Biology		05C	
Monitors		Project Profile System	14G	
Sampling		Socioeconomics		

18. DISTRIBUTION STATEMENT Release to Public	19. SECURITY CLASS *(This Report)* Unclassified	21. NO. OF PAGES
	20. SECURITY CLASS *(This page)* Unclassified	22. PRICE

EPA Form 2220-1 (9-73)