EPA-650/2-74-085-a

SEPTEMBER 1974

Environmental Protection Technology Series

CONTROL OF SULFUR DIOXIDE EMISSIONS FROM COPPER SMELTERS: VOLUME I - STEAM OXIDATION OF PYRITIC COPPER CONCENTRATES

Office of Research and Development
U.S. Environmental Protection Agency
Washington, DC 20460

EPA-650/2-74-085-a

CONTROL OF SULFUR DIOXIDE EMISSIONS FROM COPPER SMELTERS: VOLUME I - STEAM OXIDATION OF PYRITIC COPPER CONCENTRATES

by

C.A. Rohrmann, H.T. Fullam, and F.P. Roberts

Battelle Pacific Northwest Laboratories
Battelle Boulevard,
Richland, Washington 99352

Contract No. 68-02-0025
Program Element No. 1AB013
ROAP No. 21ADC-056

EPA Project Officer: L. Stankus

Control Systems Laboratory
National Environmental Research Center
Research Triangle Park, North Carolina 27711

Prepared for

OFFICE OF RESEARCH AND DEVELOPMENT
U.S. ENVIRONMENTAL PROTECTION AGENCY
WASHINGTON, D.C. 20460

September 1974

This report has been reviewed by the Environmental Protection Agency and approved for publication. Approval does not signify that the contents necessarily reflect the views and policies of the Agency, nor does mention of trade names or commercial products constitute endorsement or recommendation for use.

CONTROL OF SULFUR DIOXIDE EMISSIONS FROM COPPER SMELTERS BY STEAM OXIDATION OF PYRITIC COPPER CONCENTRATES

Prepared for

THE ENVIRONMENTAL PROTECTION AGENCY
CONTROL SYSTEMS LABORATORY
DEVELOPMENT ENGINEERING BRANCH

and

THE PHELPS DODGE CORPORATION

Under Contract Number 68-02-0025

June 1972

BATTELLE
Pacific Northwest Laboratories
Chemical Technology Department
RICHLAND, WASHINGTON 99352

CONTENTS

Page No.

ABSTRACT 1
INTRODUCTION 2
1. Copper-Bearing Minerals and Their Relationship to Study 3
2. Previous Work 4
3. Objective of the Study. 4
PROJECT TASK SUMMARIES 4
Task I - Background Information 4
Task II - Laboratory Investigations. 5
Task III - Economic Assessment of the Process 6
Task IV - Identification of Additional Work 6
SECTION I. 6
Background Information and Evaluation 6
SECTION II 11
Experimental Laboratory Investigations. 11
1. Copper Concentrates. 11
2. Equipment. 12
a. Steam Oxidation 12
b. Desulfurization 18
3. Analytical Methods 19
4. Experimental Results 21
a. Differential Thermal Analysis of Concentrates. 21
b. Labile Sulfur Removal 23
c. Hydrogen Sulfide Yields 27
d. Reaction Kinetics 41
e. Fate of Concentrate Impurities. 46
5. Interpretation of Experimental Results 47
a. Process Limiting Factors. 47
SECTION III. 49
Economic Assessment of the Process Concept. 49
1. Basis. 49
2. Material Balances. 49
3. Major Equipment Sizing 50
4. Capital Cost Comparison 52

CONTENTS (contd)

Page No.

5. Comparison of Fuel and Depreciation Costs. 53
6. Estimate of Lower Limit of Hydrogen Sulfide Concentration in Steam Leaving Oxidizer. 53

SECTION IV 54

Recommendations 54

SECTION V. 55

Identification of Additional Work Required. 55

1. Suggested Additional Work. 56
2. Impact on Conventional Smelting Practices. 57
3. Advantages 58

REFERENCES 60

APPENDIX 63

World Primary Copper Smelters and Smelting Capacity 64

LIST OF FIGURES

Page No.

FIGURE 1. Diagram of Experimental Setup Used in Steam Oxidation Tests 15

FIGURE 2. Steam Oxidation Reactor and Furnace 16

FIGURE 3. Differential Thermal Analysis of Air-Dried Copper Concentrates in Helium 22

FIGURE 4. Differential Thermal Analysis of Air-Dried Concentrates Heated in Air. 24

FIGURE 5. The Iron-Sulfur System (Rosenqvist) 25

FIGURE 6. H_2S Yield as a Function of Reaction Time. 29

FIGURE 7. Effect of Reaction Temperature on the Equilibrium H_2S Yield (Experimental). 30

FIGURE 8. Comparison of Experimental and Calculated (Thermodynamic) H_2S Yield at Various Reaction Temperatures 35

FIGURE 9. Calculated Equilibrium Gas Composition as a Function of Reaction Temperature. 40

FIGURE 10. H_2S Yield as a Function of Reaction Time for a Batch Reactor 43

FIGURE 11. H_2S Yield as a Function of the Pyrrhotite Reacted for Various Water Flow Rates. 44

FIGURE 12. Contact Time Required to Reach the Equilibrium Hydrogen Sulfide Concentration as a Function of the Pyrrhotite Reacted - at 800°C 45

FIGURE 13. Steam Oxidation Process Material Balance Flow-sheet 51

LIST OF TABLES

Page No.

TABLE 1. Description of Copper Concentrates Used in the Steam Oxidation Studies. 13

TABLE 2. Weight Loss of Concentrates on Vacuum Drying at 110°C 13

TABLE 3. Chemical Analyses of Copper Concentrates Used in Steam Oxidation Studies 14

TABLE 4. Equilibrium Hydrogen Sulfide as a Function of Temperature. 32

TABLE 5. Calculated Equilibrium Gas Compositions 34

TABLE 6. Equilibrium Constants as a Function of Reaction Temperatures 39

CONTROL OF SULFUR DIOXIDE EMISSIONS FROM COPPER SMELTERS BY STEAM OXIDATION OF PYRITIC COPPER CONCENTRATES

ABSTRACT

This project to study the chemistry, engineering and economics of steam oxidation as a means for the large-scale, low-cost preparation of hydrogen sulfide for use as an intermediate in the production of elemental sulfur from the gaseous effluents from conventional copper smelters was initiated in June of 1971 by means of a contract between Battelle and the sponsors, the Environmental Protection Agency and the Phelps Dodge Corporation. The laboratory studies showed that hydrogen sulfide was produced in relatively high yield and rapid rate from the iron sulfide obtained in a first step of neutral or non-oxidizing roasting of pyritic copper concentrates. In addition, the copper sulfides were found to be non-reactive with the high temperature (700-800°C) water vapor. However, equilibrium conditions limit the concentration of hydrogen sulfide to less than about 1% in the water vapor. No practical means could be foreseen which would significantly increase this concentration. At such a concentration the energy requirements needed for the supply of high-temperature water vapor assures that the process could not compete economically with a more conventional process. A change in scope of this project to study alternate means of hydrogen sulfide production without need for a reductant is recommended. An aqueous process based on the use of regenerable hydrochloric acid which still maintains the copper in the form of an enriched sulfide concentrate is the preferred route proposed for further study.

INTRODUCTION

The conventional processes for smelting copper sulfide ores and concentrates involve successive steps or combinations of roasting in air to remove part of the sulfur, melting and iron slagging in reverberatory furnaces to yield fused copper-iron sulfides (matte) and reduction of the matte to blister copper in converters. In all of these steps the sulfur in the original ores and concentrates is released as sulfur dioxide gas at various dilution levels from which it is not readily recoverable, particularly at low concentrations. Furthermore, once recovered, usually as sulfuric acid from the waste gases of higher concentration, this low-valued compound has limited use and marketability.

For many years it has been known that water vapor at high temperatures can also oxidize sulfides to yield a large fraction of the sulfur in the form of hydrogen sulfide. However, in contrast with sulfur dioxide, hydrogen sulfide is very readily concentrated and easily converted to elemental sulfur by means of existing, common, large-scale technology. Furthermore, with hydrogen sulfide at hand, it can also be made to react very readily with sulfur dioxide to produce elemental sulfur.

In the past few years Battelle supported preliminary laboratory investigations of the steam oxidation process as it might be applied to a number of mineral sulfides. Its application to representative and typical pyritic copper concentrates appeared to be unique. Although the removal of sulfur via conversion to hydrogen sulfide was not found to be complete, it was sufficiently high to justify further intensive study.

In the conventional (Claus) process for the conversion of hydrogen sulfide to elemental sulfur, about one-third of the hydrogen sulfide is burned to form sulfur dioxide, or the latter may be provided from other sources. These two gases are then reacted catalytically to yield elemental sulfur. The Battelle laboratory work indicated that the steam oxidation reaction was probably complete enough to provide sufficient hydrogen sulfide for reaction with the residual sulfur dioxide which would be expelled in subsequent smelter operations.

In June of 1971 Battelle was awarded a contract to conduct research on the steam oxidation concept for the Environmental Protection Agency, Control Systems Laboratory, Development Engineering Branch. The Phelps Dodge Corporation, the next to the largest producer of copper from domestic sources in the U.S., was a joint sponsor of this project.

Although other means could be considered for the production of the desirable hydrogen sulfide, such processes generally require the use of a reductant such as natural gas, hydrogen or coke for direct reaction with sulfur or with sulfur dioxide. The steam oxidation concept is unique in that hydrogen sulfide may be produced directly from processed concentrates without the need for a reductant. However, the energy requirements for production of the high-temperature water vapor were recognized as the principal unknown which would have an important bearing on the realization of a practical process.

1. Copper-Bearing Minerals and Their Relationship to this Study

Although there are sources of copper existing as so-called oxidized copper in the form of oxides, silicates, carbonates and sulfates, by far the most important copper minerals are the sulfides. Two of the principal copper sulfide mineral resources are chalcopyrite and chalcocite. These are usually recovered as concentrates which are mixtures with varying amounts of pyrite, iron disulfide. However, some of the chalcopyrite concentrates (the most important copper mineral) may be quite low in pyrite (10% or less). There are also a few very important commercial ore bodies that are extremely complex in their copper sulfide mineralization and comprise, in addition to those minerals mentioned above, significant fractions of bornite, enargite, tetrahedrite, covellite, digenite and tennantite. In addition, economically significant amounts of precious metals (gold and silver) and molybdenum are also present in some pyritic copper sulfide concentrates. By way of clarification, the identification "pyritic copper sulfides" is meant to cover all copper sulfide concentrates in which iron sulfide exists in significant amounts. This iron sulfide content would include pyrite as well as any iron sulfide which is bound up in other important sulfide mineral forms such as in calcopyrite and bornite. On the other hand, if a concentrate were pure chalcocite, it could not be classed as a pyritic copper sulfide because

pure chalcocite would contain no iron sulfide. However, most chalcocite concentrates contain rather high levels of pyrite with some of this being in very close mineralogical association. The only exception in the U.S. is the White Pine concentrate of the Copper Range Company which is characteristically very low in pyrite.

To provide reasonably good coverage of the major pyritic copper concentrates and their behavior in the steam oxidation process requires that most of the work be concentrated on representative chalcopyrite and high pyrite chalcocite concentrates. In addition, a few confirmatory tests were conducted on concentrates of more complex mineralization and on concentrates in which precious metals (silver) and molybdenum are significant by-products to be certain that the process will not adversely influence the ultimate recovery of these values.

2. Previous Work

Although extensive previous work on the steam oxidation of pyrite and neutral-roasted pyrite (pyrrhotite) was noted, essentially no such work directed at similar treatment of pyritic copper concentrates was uncovered.

3. Objective of the Study

It was the objective of this project to investigate the chemistry and to appraise the kinetics and engineering and economic feasibility of the steam oxidation process as a means of air pollution abatement for copper smelters.

PROJECT TASK SUMMARIES

Task I - Background Information

1. The concept of oxidation of iron sulfide with high-temperature water vapor is old as evidenced by literature references dating back to as early as 1836. Many expired patent references to processes based on the reaction exist.

2. The references do not provide an adequate basis for assessing the real technical and economic feasibility of a practical application of the reaction, particularly to typical pyritic copper concentrates.

3. The use of hydrogen sulfide to react with sulfur dioxide is a well-known and extensively applied means for the large-scale production of elemental sulfur.

Task II - Laboratory Investigations

1. This study has shown that hydrogen sulfide can be produced from the iron sulfide in copper concentrates by exposure to water vapor, preferably in the range of 700 to 800°C.

2. Essentially all of the iron sulfide can thus be converted to magnetite without attack on the copper sulfide.

3. It was observed, however, from the laboratory studies backed up by thermodynamic considerations that the concentration of hydrogen sulfide in the off-gas will never exceed about 1% by volume. Although slightly higher concentrations would be expected at temperatures higher than 800°C, sintering of the concentrate mixtures is encountered at which time a rapid fall off of reactivity was observed.

4. Although the equilibrium yields would be expected to be similar for any composition involving water and pyrrhotite, significant differences in yields for concentrates from various sources were shown in the results. It is concluded that the reactions are more complex than anticipated. At this time the exact nature of these reactions is not known.

5. On the basis of the present laboratory and thermodynamic studies, no means are apparent to assure the achievement of an improvement in reaction gas concentration required to assure a competitive steam oxidation process.

6. The reaction rate appears to be quite rapid (even after 90% of the pyrrhotite has been reacted, a contact time of only 3 seconds at 800°C is required to achieve the equilibrium H_2S concentration); however, the low equilibrium composition makes it essentially impractical to take advantage of this rapid rate since a reactor of very large cross-sectional area with only a small depth of concentrate would appear to be required.

7. Although some concentrates appear to have too low an iron content to provide sufficient hydrogen sulfide, we do not regard this as a general problem because pyritic copper concentrates are prepared from ores generally high in pyrite. This excess pyrite, over that required for the production of a preferred matte composition, is rejected in the flotation circuit. Most of such pyrite could be retained if there were a need for it--such as to assure sufficient hydrogen sulfide production.

Task III - Economic Assessment of the Process

Preliminary economic studies made on the basis of the laboratory results show that construction and operating costs are not competitive with a conventional natural gas-SO_2 reduction process without about a sixty percent increase in H_2S concentration in the reaction off-gas.

Task IV - Identification of Additional Work

Steam oxidation as studied here appears to hold little or no prospect as the means of economic hydrogen sulfide production on which to base a practical air pollution control process for copper smelters. No additional work on the steam oxidation concept is suggested. However, the study has provided a firm basis on which more attractive alternative concepts for hydrogen sulfide production may be developed. Continuation of the work to achieve adequate hydrogen sulfide production by reaction of neutral-roasted pyritic copper concentrates with a non-oxidizing, regenerable acid such as hydrochloric acid is proposed. The extensive work already done under this study with representative concentrates, the understanding of their primary characteristics and the apparent simplicity and near state-of-the-art technology of most of the process steps to be involved in this alternative concept supports the suggested continuation of the work.

SECTION I

Background Information and Evaluation

The reaction of steam with metallic sulfides has been a subject of chemical as well as industrial interest for many years. Regnault[1] about 135 years ago studied the reaction in a qualitative manner for a number of metal sulfides. In this work Regnault clearly observed the distinctive difference in the reactivity of iron sulfide and copper sulfide with the former being more easily reacted to yield hydrogen sulfide, hydrogen and magnetic iron oxide. No equations, rates of reaction or temperatures other than "red heat" or "white heat" were reported. Gautier[2] 70 years later acknowledged the iron sulfide-water vapor reaction to be as follows after observing that the ratio of hydrogen sulfide to hydrogen was about 3:1

$$3FeS + 4H_2O \rightarrow Fe_3O_4 + 3H_2S + H_2$$

He also observed that copper sulfide was reduced to metal at high temperature with formation of sulfur dioxide rather than hydrogen sulfide. Temperature measurements were not specified.

In the following 40 years (1910-1950) there were some widespread efforts at gaining a better understanding of the steam oxidation reaction; however, a clear realization of the thermodynamics, equilibria, and kinetics suitable for determining whether or not realistic applications were possible does not appear to have resulted from these works. This period was also a time of rather intense patent activity relating to the steam oxidation concept.

Likewise in this period the patents also indicated a great deal of activity aimed at the commercial applications of the steam oxidation reaction with iron sulfides for the production of hydrogen sulfide and as a means for the recovery of elemental sulfur.

In an early patent (U.S. 987,156), McLarty[3] proposed the conversion of nickel sulfide ores to oxides by means of pressurized steam.

The Hall process and patents[4,5,6] almost exclusively related to the techniques and devices to produce hydrogen sulfide and sulfur from pyrite via some combination of what is now called neutral roasting and steam oxidation. The Bacon patents[7] emphasized the advantage in hydrogen sulfide production achievable by the introduction of alkaline material to the ores being oxidized by steam. Bacon also includes the reaction between sulfur dioxide and pyrite. The patent by Leese[8] mentions that at the preferred operating temperature the steam oxidation reaction is complete in a few seconds.

As late as 1958 deJahn was granted a U.S. patent[9] that involved treatment of pyrite with "very hot steam" to yield sulfur and iron oxide.

Among the patent literature there is also frequent reference to the use of steam along with oxidizing, reducing or acidic gases to achieve specific separations or conversions with metal sulfides generally. It was felt that these were not sufficiently relevant to the principal reactions and objectives being studied in this project and thus were not detailed in this review. References of Woltereck,[10] Arnold,[11] Hooten,[12] Perkins,[13] Petersen,[14] Lindemann,[15] Goetz,[16] Horakova,[17] Birkeland,[18] and Millar[19] are representative of these.

The patents by Hall, Bacon, and Leese and others are all of interest and provided a basis for optimism for the realization of a process; however, there does not appear to be any direct commercial application of any of these inventions. Most of these patents are repeated in patents granted in foreign countries. Thus, although the body of patent literature is quite large, there is much repetition with the same inventions covered by patents in more than one country.

After about 1940 there began to appear some fairly detailed theoretical and laboratory studies of the reaction.[20-29] Uno[28] conducted a mathematical study of the equilibria for the reaction:

$$3\ FeS + 4\ H_2O \rightarrow Fe_3O_4 + 3\ H_2S + H_2$$

The results indicated that an H_2S concentration of about 1% would be expected at 800°C. Frey[30] also studied the same reaction from the standpoint of thermodynamics data and calculated that 1.8% of the water as required by the equation would be converted to hydrogen sulfide and hydrogen at equilibrium at a temperature of 800°C.

Much earlier Thompson and Tilling[20] did laboratory work on the desulfurization of pyrite with steam, other gases and mixtures of gases. Although these authors established that the reaction of interest began at 580°C and that it continued at higher temperatures, they also concluded that steam was catalytic in promoting the decomposition of pyrite at lower temperatures. Their results also indicated that the steam - FeS reaction was rapid. Quantitative, and kinetic data were not presented.

The work of Kirillov and Makarov[23] was more extensively experimental. Their data also indicated that maximum yield or conversion of sulfur from the FeS to H_2S required many times the stoichiometric amount of steam. Although their methods of analysis were not reviewed in detail their results indicated favorable practical prospects for the reaction. The H_2S content of the gas was high. The H_2S to SO_2 ratio was also generally high. In fact, most of such data appeared to yield higher concentrations than one would normally expect. The gas analysis data appeared to be reported on a water-free basis which would emphasize these high figures.

Rama Murthi[24] also did experimental work but with limited results reported, such as a one-hour exposure of pyrite to hydrogen mixed with steam

at 600°C yielded a 69% recovery of the sulfur in the form of both H_2S and SO_2.

Inaba and Kono[25,26] did extensive laboratory study and thermodynamic calculations on the reactions involved. They observed that although FeS could be completely desulfurized with water vapor, the thermodynamics were not very favorable. However, it appears that they also anticipated practical applicability, if improvements could be made in equipment and techniques.

No quantitative data on the reaction of steam with copper sulfide minerals have been reported although Park[31] observed very slow reactions taking place between steam and various copper minerals at temperatures in the range of 200-460°C.

Studies of the thermodynamics and kinetics of the reaction of steam with iron sulfides have been made but no equivalent studies for copper sulfide minerals at the temperatures of interest were found.

Diev, et al.,[29] using steam and oxygen in the converting step for copper smelting, released up to about one-third of the total sulfur in the elemental form. They studied the reactions thermodynamically using published data to determine the equilibrium composition of the gases. Since fluid silica slags as well as molten iron and copper sulfides were involved at temperatures far above those where steam oxidation is known to proceed, these results do not appear to have a direct relationship to the steam oxidation concept as being studied under this present project.

In the application of a steam oxidation process for the conversion of pyritic materials to hydrogen sulfide, it is probable that a preliminary step involving simply the thermal decomposition of pyrite to yield elemental sulfur and pyrrhotite (FeS) would be adopted. This step is generally termed "neutral roasting," since it does not involve oxidation of the pyrite or pyrrhotite to yield sulfur dioxide. Also, since it does involve essentially present state-of-the-art technology, no exhaustive effort was made to review the extensive background literature. A few references, however, provide some useful information and contribute to an understanding of this well-known procedure.

Kunda, et al.[32] and Mehta, et al.[33] provide extensive data on the large-scale thermal decomposition and economics of pyrite processing. These

two papers are concerned with the hydrometallurgical approach to the problem of ultimate iron and sulfur recovery from neutral-roasted pyrite.

Graves and Heath[34] also covered the economics of sulfur recovery from the large-scale processing of pyrite including the step of neutral roasting.

It should be noted that all of these latter references were presented at a time of sulfur shortage and high sulfur prices in the U.S. and Canada. This situation has decidedly changed since that time.

Another useful reference is that of Kassila.[35] In this paper the flash smelting process as developed by Finland's Outokumpu Company is described.

Also included is a description of the process as used at the Kokkola plant to produce elemental sulfur via the thermal decomposition of pyrite. This process was used on a large scale for at least about five years in the mid-1960's. Although similar processes have been used and proposed for use throughout the world, this plant probably represents the most recent practical application of the thermal decomposition of pyrite for large-scale elemental sulfur production. Guccione[36] provides additional details on the process used at the Kokkola plant.

Very little of the works cited above are strictly relevant to the present study which is focused on the reaction between steam and the principal copper sulfide material concentrates of the U.S. Most of the previous work deals with reactions of the iron sulfides alone. While it is true that the expected reaction to produce hydrogen sulfide from copper concentrates will be with the pyrite and probably also the copper-iron sulfides present, the composition of the concentrates vary and the effect of the various components on the steam oxidation are unknown.

In prior unpublished work at Battelle-Northwest, tests were carried out to demonstrate the potential of the steam oxidation reaction to produce hydrogen sulfide using representative minerals and copper concentrates. Included in these tests are pyrite, copper sulfide flotation concentrates, zinc sulfide (sphalerite or marmatite), tetrahedrite and galena. The data can be summarized up to the present time on the results of these tests as follows:

1. Pyrite after conversion to pyrrhotite by the usual heating step in the absence of air (neutral roasting) reacted readily with water vapor at atmospheric pressure and at about 850°C. The reaction appears to follow that described by Thompson and Tilling[20] as

$$3FeS + 4H_2O \rightarrow Fe_3O_4 + 3H_2S + H_2.$$

Sulfur and hydrogen sulfide were determined in the off-gas. Hydrogen was not sought. Sulfur dioxide was absent. The pyrrhotite (FeS) was not noticeably magnetic. The solid residue was highly magnetic and was assumed to be mainly magnetite, Fe_3O_4. Weight changes, without resort to chemical analyses, indicated about a 90% conversion. Chemical analysis subsequently obtained showed that 97.5% of the sulfur in the pyrite sample had been removed.

2. Similar results were obtained with the copper concentrate; however, it was concluded that only the iron sulfide fraction reacted. Copper sulfide is not considered to be reactive with steam at the conditions of the tests.

3. Zinc sulfide was unreactive under similar conditions.

In the neutral-roasting step, which would probably be used as a pretreatment step to convert the pyrite to pyrrhotite and thereby also remove volatile contaminants as well as part of the sulfur as elemental sulfur, some rather direct and uncomplicated reactions can be visualized, such as the following for the decomposition of chalcopyrite, the most common copper mineral:

$$2\ CuFeS_2 \rightarrow 2\ FeS + S + Cu_2S$$

However, in view of the complex thermochemical mineralogy of the copper-iron-sulfur system, such a desirable result for chalcopyrite or other copper-iron-sulfur mineral decompositions is probably never obtained.

SECTION II

Experimental Laboratory Investigations

1. Copper Concentrates

The steam oxidation studies were carried out using copper concentrates recovered from pyritic copper deposits. Most of the work was concentrated on representative chalcopyrite and chalcocite-type copper concentrates containing significant amounts of pyrite. In addition, a few confirmatory tests were conducted with concentrates of more complex mineralization and on concentrates containing precious metals to be certain that the steam oxidation process will not adversely affect the ultimate recovery of these

values. Table 1 gives a description of the six concentrates selected for use in this study.

The six selected concentrates were obtained from the various copper producers. About four pounds of each were vacuum dried 24 hours at 100°C. The vacuum drying resulted in weight losses varying from ∿0.5% to over 11% for the different concentrates as shown in Table 2.

The vacuum-dried material was carefully mixed to minimize heterogeneity, sampled and stored in sealed bottles for use in the bench scale experiments.

The samples were analyzed for Cu, S, Fe, insolubles and other metals. The results of these analyses are given in Table 3.

2. Equipment

a. Steam Oxidation

The steam oxidation studies were carried out by passing steam in a helium carrier gas through a heated bed of the copper concentrate and analyzing the reaction products. A schematic diagram of the apparatus used for most of the experiments is shown in Figures 1 and 2.

High-purity helium was used as a carrier gas and was passed over copper metal turnings to remove traces of oxygen.

The steam generator consisted of a Vycor vessel heated by a small furnace to approximately 400°C. Water was injected into the vessel by a syringe pump capable of highly reproducible water flow rates. The pump was calibrated at all of the flow rates used in the experiments by weighing water collected over a measured pumping time interval. In some of the early experiments water vapor was injected into the reactor by bubbling the carrier gas through a series of gas purifier bottles containing water at a constant known temperature and calculating the water content from vapor pressure data. The latter technique was satisfactory only for low steam flow rates. In both methods the lines leading to the reactor were held at ∿200°C by heating tapes.

The reactor consisted of a small Vycor vessel 50 mm I.D. x 50 mm high with a porous quartz frit on the bottom to support the

TABLE 1. Description of Copper Concentrates Used in the Steam Oxidation Studies

Source	Principal Minerals	Comments
1. Pima Mining Co., Arizona, via Phelps Dodge Corporation	Chalcopyrite	Low in pyrite, contains silver
2. Morenci, Arizona, Phelps Dodge Corp.	Pyrite & Chalcocite	Contains Mo
3. Tyrone, New Mexico, Phelps Dodge Corp.	Pyrite & Chalcocite	Contains Mo
4. Lavender Pit-Bisbee, Arizona, Phelps Dodge Corp.	Complex CuFe sulfides (bornite, chalcopyrite) and pyrite	
5. Battle Mountain, Nevada, Duval Corp.	Chalcopyrite, chalcocite, pyrite	High in pyrite and silver
6. Butte, Montana, Anaconda, Co.	Very complex CuFe Sulfide minerals including enargite	Contains As, Zn, Cd, Bi and Pb

TABLE 2. Weight Loss of Concentrates on Vacuum Drying at 110°C

Concentrate Source	Weight Loss, %
Pima	6.7
Morenci	2.6
Tyrone	1.4
Lavender Pit	0.4
Battle Mountain	11.4
Anaconda	0.8

TABLE 3. Chemical Analyses of Copper Concentrates Used in Steam Oxidation Studies

	Weight %											PPM			Troy Oz/Ton	
Source	Cu	S	Fe	Insol	As	Sb	Zn	Pb	Mo	Bi	Cd	Se	Te	Hg	Ag	Au
Pima	27.14	29.6	27.3	10.16	0.06	0.025	0.3	0.04	0.020	0.016	0.002	380	42	280	2.8	00.010
Morenci	20.82	36.2	27.3	9.12	0.06	0.025	1.5	0.04	0.030	0.008	0.001	320	68	280	1.82	0.020
Tyrone	20.31	40.0	30.1	6.48	0.39	0.05	0.3	0.04	0.085	0.012	0.001	280	58	310	1.54	0.01
Lavender Pit	12.65	39.7	32.0	8.88	0.36	0.03	1.8	0.20	0.025	0.024	0.004	360	110	240	1.94	0.07
Battle Mtn.	24.50	31.3	25.0	13.12	0.06	0.063	0.70	0.03	0.018	0.020	0.003	510	64	380	10.79	0.31
Anaconda	26.93	34.7	19.4	6.64	1.86	0.037	6.2	0.05	0.05	0.03	0.12	290	250	240	10.42	0.07

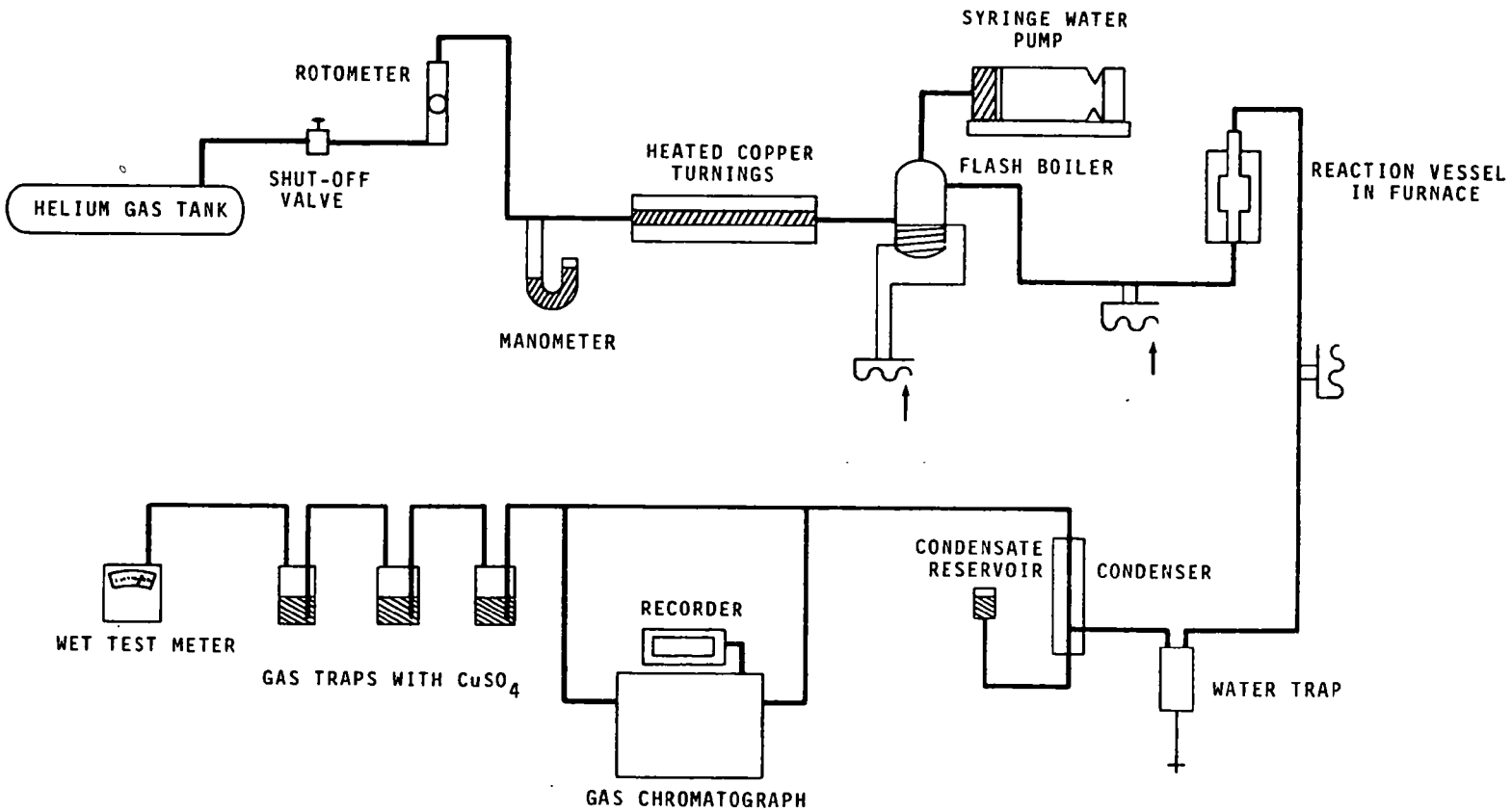

FIGURE 1. Diagram of Experimental Setup Used in Steam Oxidation Tests

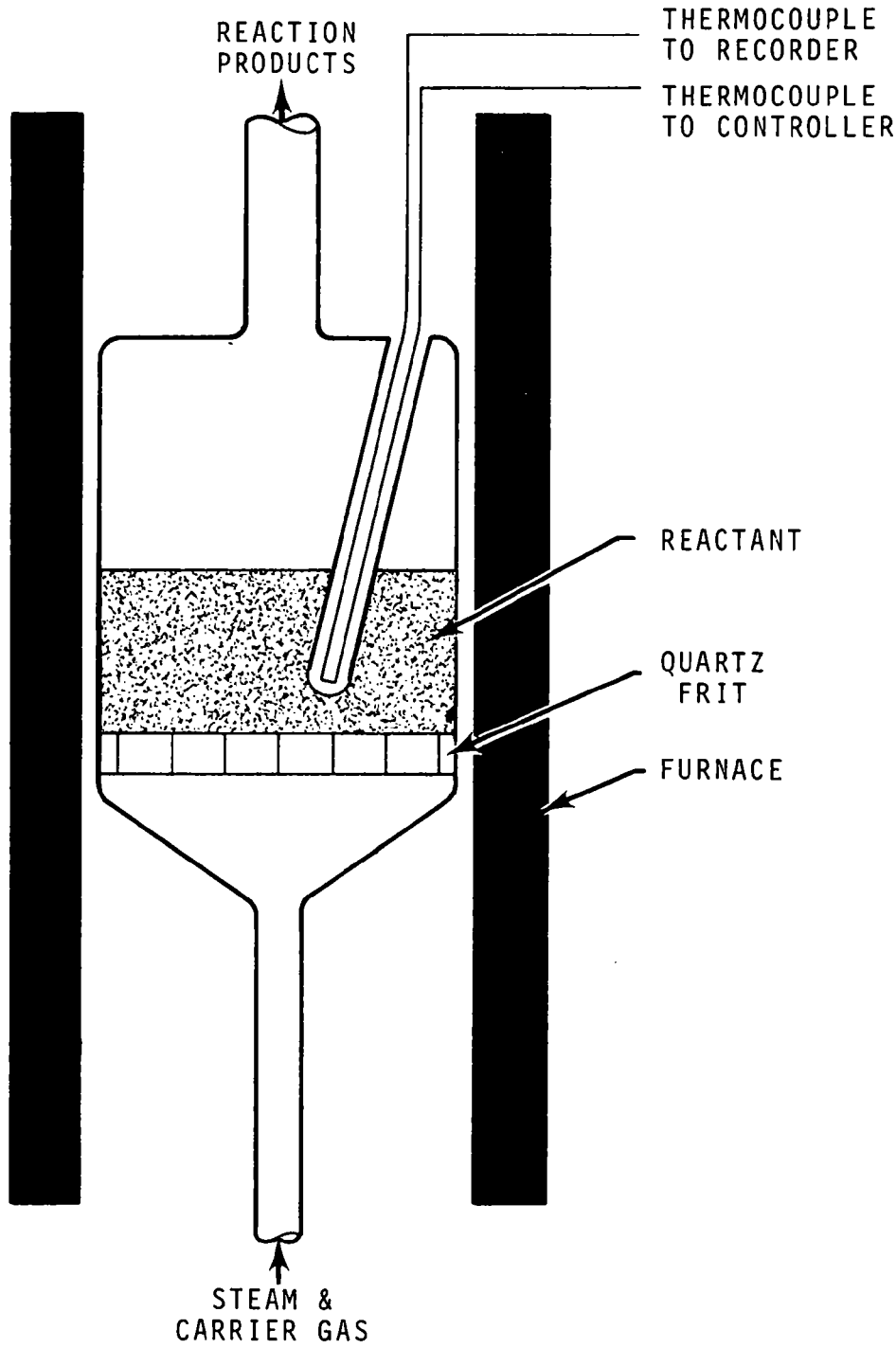

FIGURE 2. Steam Oxidation Reactor and Furnace

reactant bed and disperse the incoming gas. The capacity of the reactor was 100 g of copper concentrate. A thermocouple well was fitted through the top in such a way that the thermocouple junctions were surrounded by the charge. The gas inlet tube was 9 mm I.D. and the outlet tube was 20 mm I.D. The charge was loaded into the reactor through the outlet tube.

The reactor was heated in a 2-1/4 in. diameter by 12 in. long tube furnace. The temperature was monitored and controlled by use of two chromel-alumel thermocouples, a proportioning controller and a strip chart recorder. Temperature control was maintained within $\pm$ 2°C of the set point.

The gas stream leaving the reactor contains helium, hydrogen, water, hydrogen sulfide, sulfur dioxide and sulfur. The sulfur and water were removed by use of a water-cooled condenser. The remaining gases passed through two or three traps containing solutions of copper sulfate-sodium chloride to remove the hydrogen sulfide and sulfur dioxide, and finally through a wet test meter. The sampling valve for the gas chromatograph was between the condenser and the first trap.

The helium used as a carrier gas was controlled by a gas flowmeter and a small needle valve placed at the inlet of the system.

In the normal operating procedure a weighed amount of the copper concentrate was placed in the reactor and spread to give the charge a level surface. The apparatus was assembled and purged with high-purity helium until the gas chromatograph indicated the absence of air. The reactor furnace was turned on, and when the desired temperature was reached, the water flow to the steam generator was started. The exit gas stream was analyzed for hydrogen sulfide and sulfur dioxide at frequent intervals throughout the run. The flow rate of the helium plus any hydrogen was monitored by periodically recording the wet test meter reading. The pressure of the system and the temperature of the hood housing the gas chromatograph and wet test meter were noted.

b. Desulfurization

In any application of the steam oxidation concept it is likely that the pyritic copper concentrates would first be neutral-roasted to remove primarily the labile sulfur from the pyrite and also to remove other major volatile contaminants such as arsenic and antimony. Furthermore, such separation would minimize the significant reaction between water vapor and sulfur which also yields hydrogen sulfide and sulfur dioxide. In addition, since pyrite decomposition takes place at temperatures substantially below that at which the steam oxidation reaction is optimum, the neutral-roasting operation should be conducted separately. Otherwise, the hydrogen sulfide produced concurrently would be evolved with the other volatiles such as sulfur, arsenic, antimony and possibly lead, plus major dilution with the neutral-roasting gases. Additional clean-up of the hydrogen sulfide may then also be required in order to produce high-quality sulfur.

For other minerals in the copper-iron-sulfur system, such as chalcopyrite, decomposition into rather simple components may also be visualized, such as:

$$2\ CuFeS_2 \rightarrow 2\ FeS + Cu_2S + S.$$

However, the complexity of this system suggests that such a direct and desirable result would probably not be achieved. Instead, some mineral forms of lower sulfur content could be expected along with the products as indicated by the above simplified reaction concept. Although the scope of the study did not provide for a detailed study of these possible reactions, it is likely that in the subsequent steam oxidation step, oxidation is sufficiently extensive to assure that all iron-sulfur compounds are converted to iron oxides with the sulfur evolved largely as hydrogen sulfide.

The reactor used for neutral roasting of the copper concentrates consisted of a 2 in. I.D. by 30 in. long Vycor tube closed at one end with a rubber stopper at the open end. A 9 mm I.D. tube inserted through the rubber stopper extending nearly to the closed end served as an inlet for the helium used to maintain a non-oxidizing atmosphere. A second 9 mm Vycor tube closed at one end was used as a thermocouple

well. The exit line was a 20 mm glass tube leading to a 500 cc flask to trap the bulk of the sulfur.

The reactor was heated in a 2-1/4 in. I.D. by 16 in. long tube furnace. The temperature was controlled manually with a variable transformer and monitored with a chromel-alumel thermocouple and a strip chart recorder.

The desulfurization was carried out by placing a weighed amount of the vacuum dried copper concentrate in the reactor tube and the tube placed in the furnace so the charge was centered in the hot zone and the helium flow started. When all the air was purged from the reactor tube, the furnace was adjusted to the desired operating temperature (usually 800°C) and maintained at that temperature for 16 hours. The system was then cooled, the charge removed, pulverized, weighed and stored for future use in capped jars.

3. Analytical Methods

The gas produced in the steam oxidation reaction will contain hydrogen, hydrogen sulfide, sulfur dioxide, sulfur, water and carrier gas (helium in our experiments). As the gases cool, the sulfur and water condense. In the presence of water and a catalytic surface, the following reaction also takes place:

$$2\ H_2S + SO_2 \rightarrow 1.5\ S_2 + 2\ H_2O.$$

Because of this reaction the determination of the composition of the gas leaving the reactor is a difficult analytical problem. From the practical standpoint, it is essential to know only the net hydrogen sulfide and sulfur dioxide resulting from the steam oxidation reaction(s). The net hydrogen sulfide and sulfur dioxide after removal of the condensed water and sulfur were determined by gas chromatography or absorption followed by a chemical method described below. The total sulfur used up in the reactions was determined by measuring the sulfur content of the copper concentrate, both before and after the reactions.

The chromatograph used in all the measurements was an Aerograph Autoprep Model 700 with a thermal conductivity detector. A 1/4 in. O.D. x 5 ft long stainless steel columns of Poropak Q provided excellent

separation of hydrogen sulfide and sulfur dioxide. At a column operating temperature of 100°C the retention time for hydrogen sulfide was 2 min., 45 sec., and for sulfur dioxide 5 min., 20 sec. The chromatograph was equipped with a gas sampling valve which was connected in-line with the gas stream to be monitored. A 2-ml sample of the gas stream could be injected into the chromatograph without interrupting the process flow.

The chromatograph was calibrated for hydrogen sulfide and sulfur dioxide by injecting samples of known hydrogen sulfide or sulfur dioxide concentration using the gas sampling valve to measure the volume. The chromatograms were recorded on a Hewlett-Packard recorder. Calibration curves were obtained by plotting gas concentration versus peak height times peak width at half-maximum. The minimum measurable concentration was 0.1% hydrogen sulfide and 0.25% sulfur dioxide.

In some experiments, the total hydrogen sulfide and the total sulfur dioxide evolved in the steam oxidation run were determined by a method based on the absorption of these gases in a solution containing a known amount of copper sulfate and sodium chloride.(*) In this method hydrogen sulfide is quantitatively precipitated as cupric sulfide and sulfur dioxide is oxidized to sulfur trioxide. In both reactions a stoichiometric amount of hydrogen is released. By measuring the amount of copper precipitated and the amount of hydrogen ion formed after absorption of the gas being analyzed, the hydrogen sulfide and sulfur dioxide can be calculated.

The analyses for copper, iron, gold, silver, molybdenum, cadmium, zinc, arsenic, antimony, and sulfur in the copper concentrates and in the solid reaction products from the steam oxidation process were made by a commercial laboratory using standard wet-chemistry methods. However, for the analysis for the trace constituents such as selenium, tellurium and mercury, an atomic absorption spectrometric method was used by the same commercial laboratory.

(*) Schwartz, Arthur, "Determination of Hydrogen Sulfide, Sulfur Dioxide, Carbonyl Sulfide, Carbon Desulfide and Carbon Dioxide in a Gas Mixture," Anal. Chem. 43, pp. 389-392 (1971).

4. Experimental Results

a. Differential Thermal Analysis of Concentrates

Differential thermal analysis (DTA) was performed on the various copper concentrates. The analyses were made using a du Pont Model 900 DTA unit. Samples of the air-dried concentrates were heated in helium and air at controlled rates to about 1000°C. The samples heated in helium each exhibited an endothermic reaction beginning between 450 and 570°C which is due to the liberation of labile sulfur from the pyrite and chalcopyrite. Figure 3 shows typical DTA scans obtained with Morenci and Lavender Pit concentrates in helium. The temperatures at which sulfur evolution began are as follows for the various concentrates:

Concentrate	T,°C
Morenci	458
Tyrone	459
Lavender Pit	457
Battle Mountain	470
Pima	457
Anaconda	570

The temperature at which the endothermic reaction begins is about 100°C higher for the Anaconda concentrate than for the other concentrates. The reasons for this difference are not known but are probably related to the complex mineralogy of the Anaconda concentrate.

When the concentrate samples, which had been heated in helium, were reheated in air, each exhibited a very large exothermic reaction which began between 310 and 538°C. With each concentrate the reaction occurred over a temperature range of at least 200°C. In each case the exothermic reaction was followed by a strong endothermic reaction which began between 630 and 750°C depending on the concentrate. The exothermic reaction is due to oxidation of the metal sulfides. The endothermic reaction is probably due to (1) the decomposition of any copper sulfate formed during the oxidation reaction, and (2) a change in crystal structure of the metal oxides present. All of the DTA curves obtained with the various concentrates are similar in their general character to those reported in the literature for the sulfides of iron and copper when heated in air.

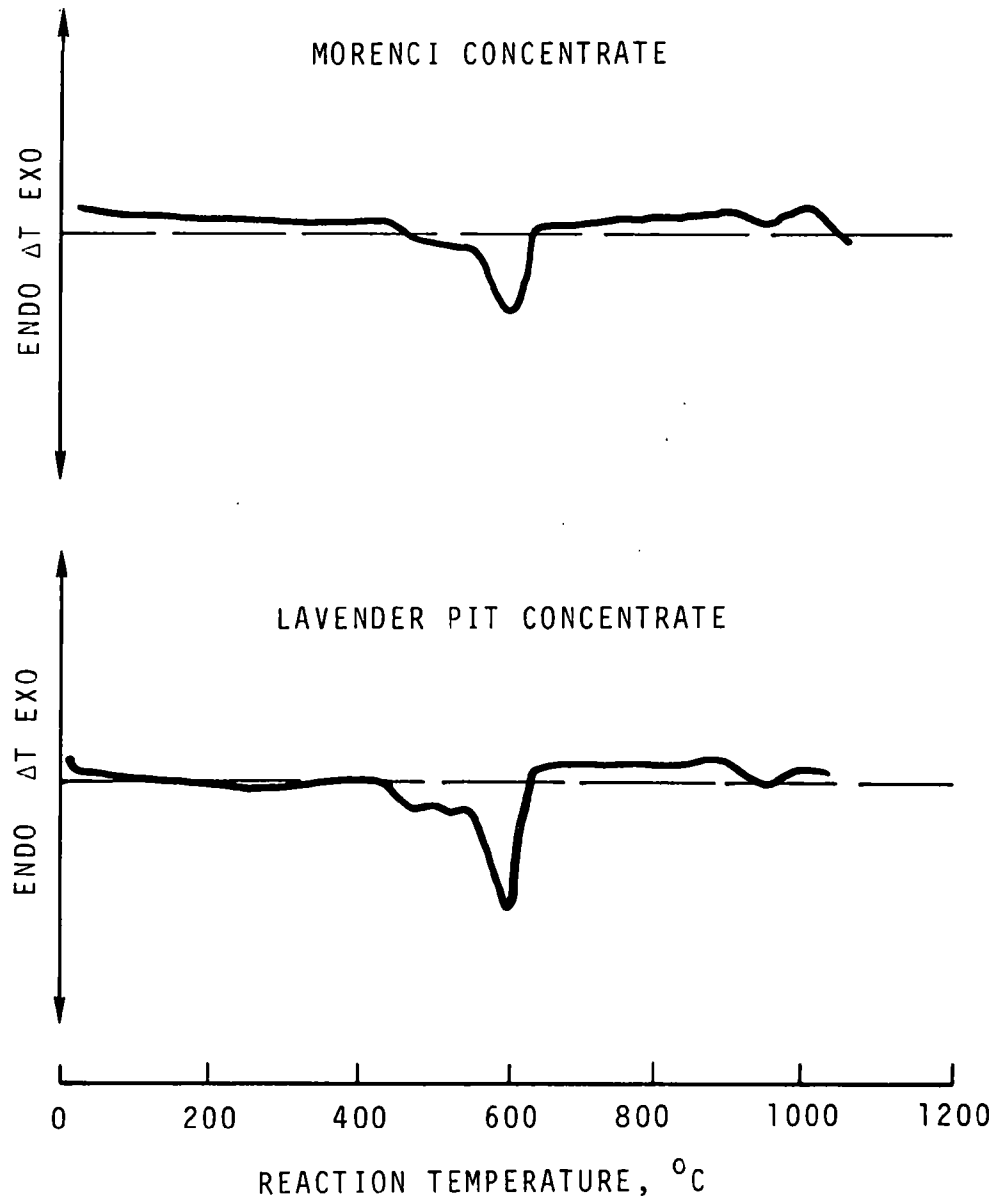

FIGURE 3. Differential Thermal Analysis of Air-Dried Copper Cencentrates in Helium

When air-dried concentrate samples were heated directly in air the DTA scans obtained were very similar to those obtained with samples which were heated in helium, and then air. However, for the samples heated directly in air, the exothermic reaction began at a lower temperature and was of much greater magnitude. Typical DTA traces for copper concentrates heated in air are shown in Figure 4.

b. Labile Sulfur Removal

When copper concentrates containing pyrite or chalcopyrite are heated to an elevated temperature in a vacuum or inert atmosphere the pyrite decomposes with the evolution of sulfur vapor. In a static system the extent of the decomposition is determined by the reaction temperature and the sulfur partial pressure. If the sulfur vapor is removed from the reaction vessel as it forms, the extent of the pyrite decomposition will depend on the reaction temperature and time at temperature. The products of the pyrite decomposition reaction are sulfur vapor and pyrrhotite. The composition of the sulfur vapor will depend on the vapor temperature and pressure, and will contain a mixture of S_2, S_3, S_4, S_5, S_6, S_7, and S_8 molecules. At extremely high temperatures, some dissociation of S_2 molecules to sulfur atoms occurs, but this occurs far above the temperature region of interest in this study.

Both pyrite and pyrrhotite are non-stoichiometric sulfides. They can be approximated by the formulas FeS_2 and FeS. However, the iron-to-sulfur ratio for each compound can vary over a substantial range, depending on the sulfur partial pressure. Figure 5 shows a portion of the iron-sulfur phase diagram,[37] and the range of homogeneity that exists for each compound. For example, the diagram shows the wide range of composition which exists for the so-called beta form of iron sulfide (FeS_{1+x}). Furthermore, this form is stable up to very high temperatures. Thus, one could not expect to obtain constant iron-to-sulfur ratios when thermally decomposing pyrite. The ultimate composition would be determined by the duration of exposure and the partial pressure of sulfur over the material. In a flowing gas system, equilibrium conditions could be reached only after very prolonged periods.

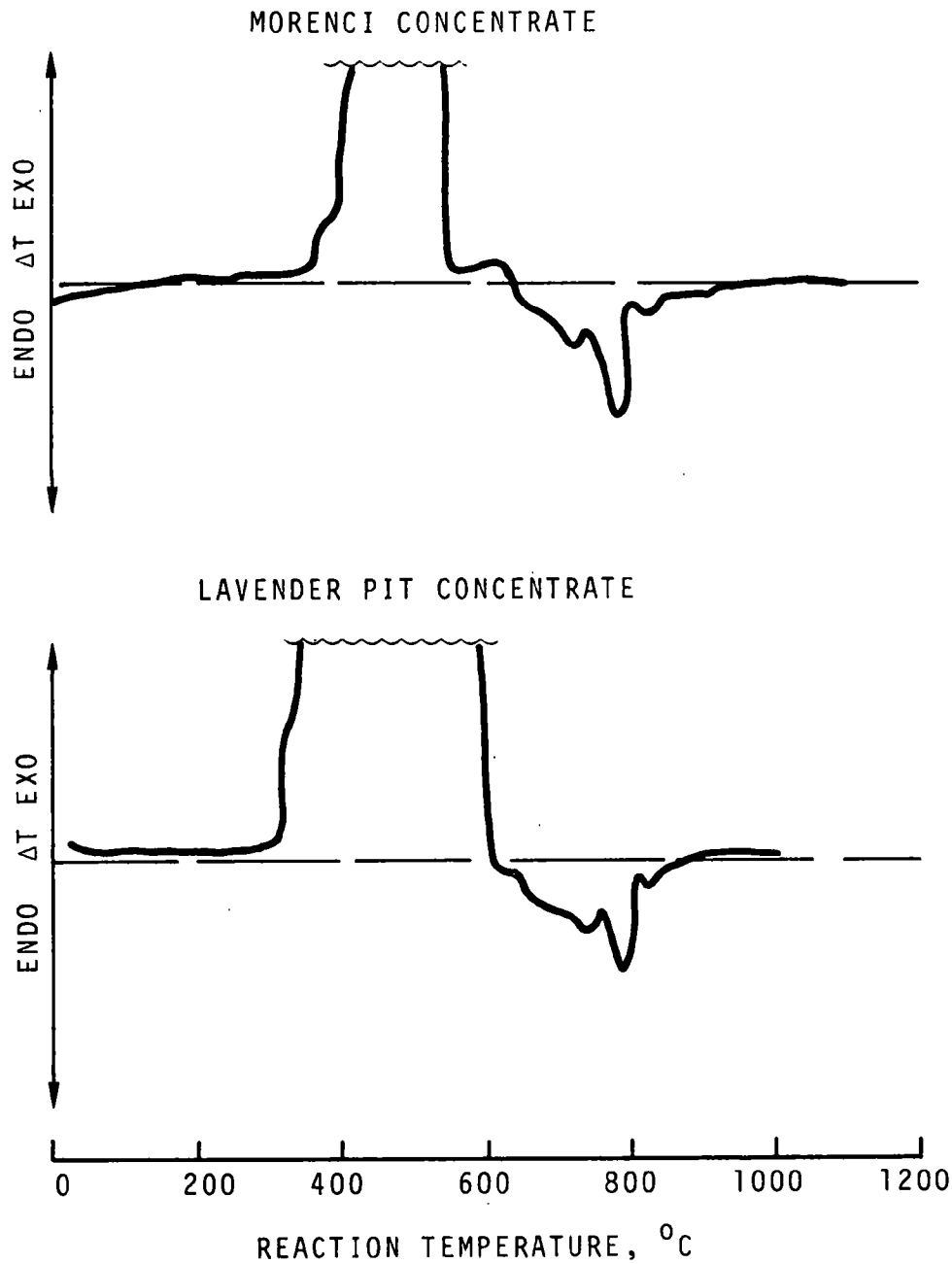

FIGURE 4. Differential Thermal Analysis of Air-Dried Copper Concentrates Heated in Air

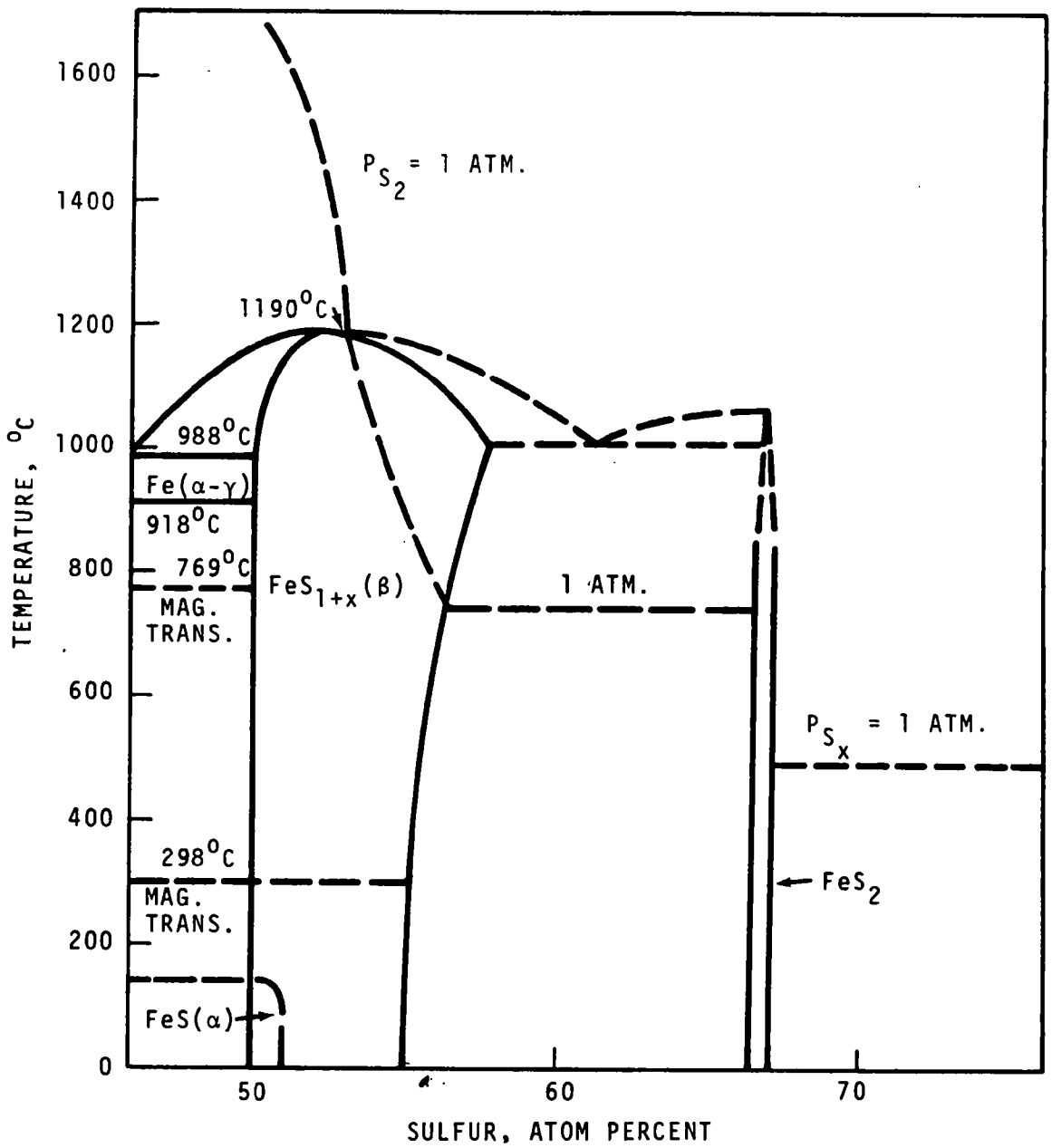

FIGURE 5. The Iron-Sulfur System (Rosenqvist)

If the steam oxidation reaction is carried out with the copper concentrate as received from the producer, the labile sulfur is evolved as the concentrate is heated to the reaction temperature. This sulfur condenses in the downstream sections of the equipment and can interfere with the equipment operation. It was decided, therefore, that the labile sulfur would be removed from the various concentrates, and the desulfurized products would be used for the steam oxidation reactions. The desulfurization reactions were carried out in the equipment discussed in the previous section. The desulfurization temperature, in each case, was 800°C and the concentrate was held at temperature for 16 hours in a stream of flowing, high-purity helium.

A large quantity of each concentrate was desulfurized. A 1-2 kg quantity of each desulfurized concentrate was thoroughly blended and analyzed. In all subsequent experiments involving a specific concentrate, the feed material was taken from the blended and analyzed batch of desulfurized product.

The six concentrates showed the following weight losses due to sulfur evolution.

Concentrate	Initial Sulfur Wt%	Weight Loss, %	Weight Loss as % of Initial Sulfur
Morenci	36.2	16.8	46.4
Tyrone	40.0	19.0	47.5
Pima	29.6	9.6	32.5
Lavender Pit	39.7	18.4	46.4
Battle Mountain	31.3	15.2	48.5
Anaconda	34.7	17.6	50.7

It is impossible to assign a specific formula to the iron sulfide product from the desulfurization reactions. However, if one assumes that the copper is present as Cu_2S and any other metal sulfides (other than iron) are present as the normal sulfides, the iron-sulfur ratios for the various desulfurized concentrates are approximately as follows:

Desulfurized Concentrate	Iron Sulfide Composition
Morenci	$FeS_{1.16}$
Tyrone	$FeS_{1.08}$
Pima	$FeS_{1.10}$
Lavender Pit	$FeS_{1.12}$
Battle Mountain	$FeS_{1.11}$
Anaconda	$FeS_{1.01}$

Except for the desulfurized Anaconda concentrate, the iron sulfide compositions are about what one would predict from thermodynamic considerations.

When the concentrates were desulfurized at 800°C, sintering of the product did not appear to be a problem. Only the Pima concentrate showed a tendency to sinter. The Pima product formed large partially-sintered lumps at 800°C which were easily broken up. The other products formed loosely-bonded agglomerates which were readily broken up by shaking the product in a glass jar. Subsequent experiments showed that only the desulfurized Pima concentrate presented sintering problems during the steam oxidation reaction at temperatures of 800°C or less. Above 800°C all of the concentrates showed a tendency to sinter during steam oxidation, and at 900°C sintering became a severe problem.

When the various concentrates were desulfurized, the off-gas always contained some H_2S and SO_2 in addition to elemental sulfur; however, the amounts produced were quite small. The reactions which result in the H_2S and SO_2 formation are unknown, but could involve bound water which is not removed during the drying step.

c. Hydrogen Sulfide Yields

In the experiments designed to measure the H_2S yield, 80-100 grams of desulfurized concentrate were placed in the vertical reactor tube and the system was purged with high-purity helium. When all oxygen was removed from the system, the concentrate was heated to the desired temperature. When the reaction temperature was reached, the water flow was started while maintaining the helium flow. The

off-gas, after cooling to room temperature to condense most of the water, was analyzed for H_2S and SO_2 by gas chromatography (GC). Then the gas was scrubbed with a copper sulfate-sodium chloride solution to remove the H_2S and SO_2, and the residual gas flow (principally helium and hydrogen) was measured using a wet-test meter. From the gas flow, GC analysis and water flow, the H_2S yield as a function of water fed to the reactor could be calculated.

In most of the experiments very little SO_2 could be detected in the off-gas by gas chromatography. This indicates that if any SO_2 was present in the off-gas leaving the reactor, it reacted with H_2S as the gas cooled, to form elemental sulfur according to the reaction

$$2\ H_2S + SO_2 \rightleftarrows 2\ H_2O + 3\ S \qquad (1)$$

The H_2S content of the gas stream, as determined by gas chromatography, represents, therefore, the net H_2S yield after any SO_2 initially present has reacted.

Figure 6 shows the results of a typical steam oxidation run using desulfurized Morenci concentrate. The H_2S yield is essentially constant for the first portion of the run, and then decreases with time as the sulfur content of the concentrate is depleted. This indicates that the composition of the off-gas leaving the reactor is constant during the first portion of the run. By carrying out similar runs at various water flow rates it was established that, during the initial phase of each run, the off-gas leaving the reactor was in thermodynamic equilibrium with the fresh desulfurized concentrate. The length of time in which the H_2S yield was constant was a function of the water flow and volume of concentrate used.

By carrying out a series of runs at various temperatures with a desulfurized concentrate, it is possible to obtain a measure of the equilibrium H_2S yield as a function of temperature. This was done for each of the six concentrates. Figure 7 shows the results obtained with three of the concentrates: Morenci, Anaconda, and Lavender Pit. The results obtained with the other three concentrates

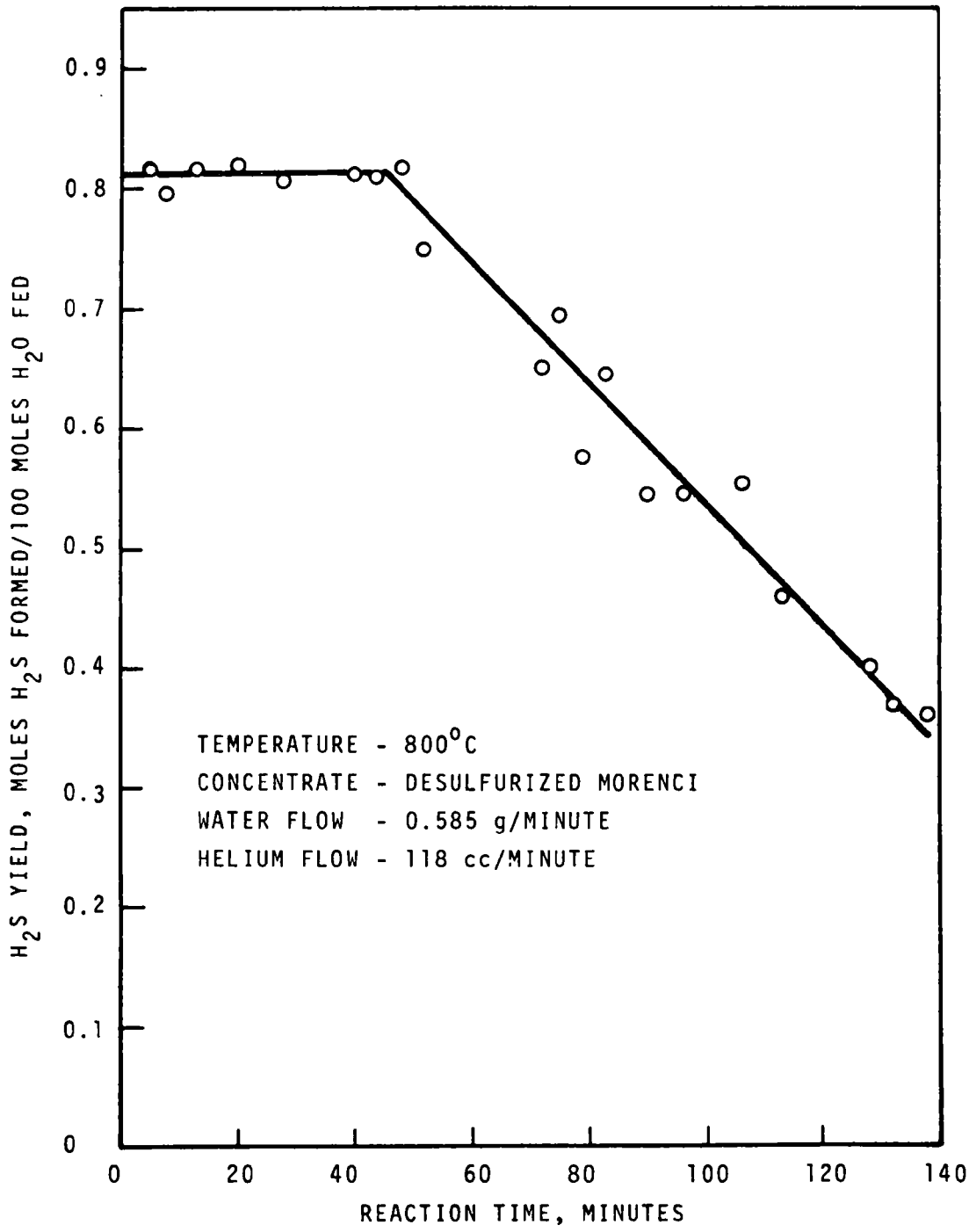

FIGURE 6. H_2S Yield as a Function of Reaction Time

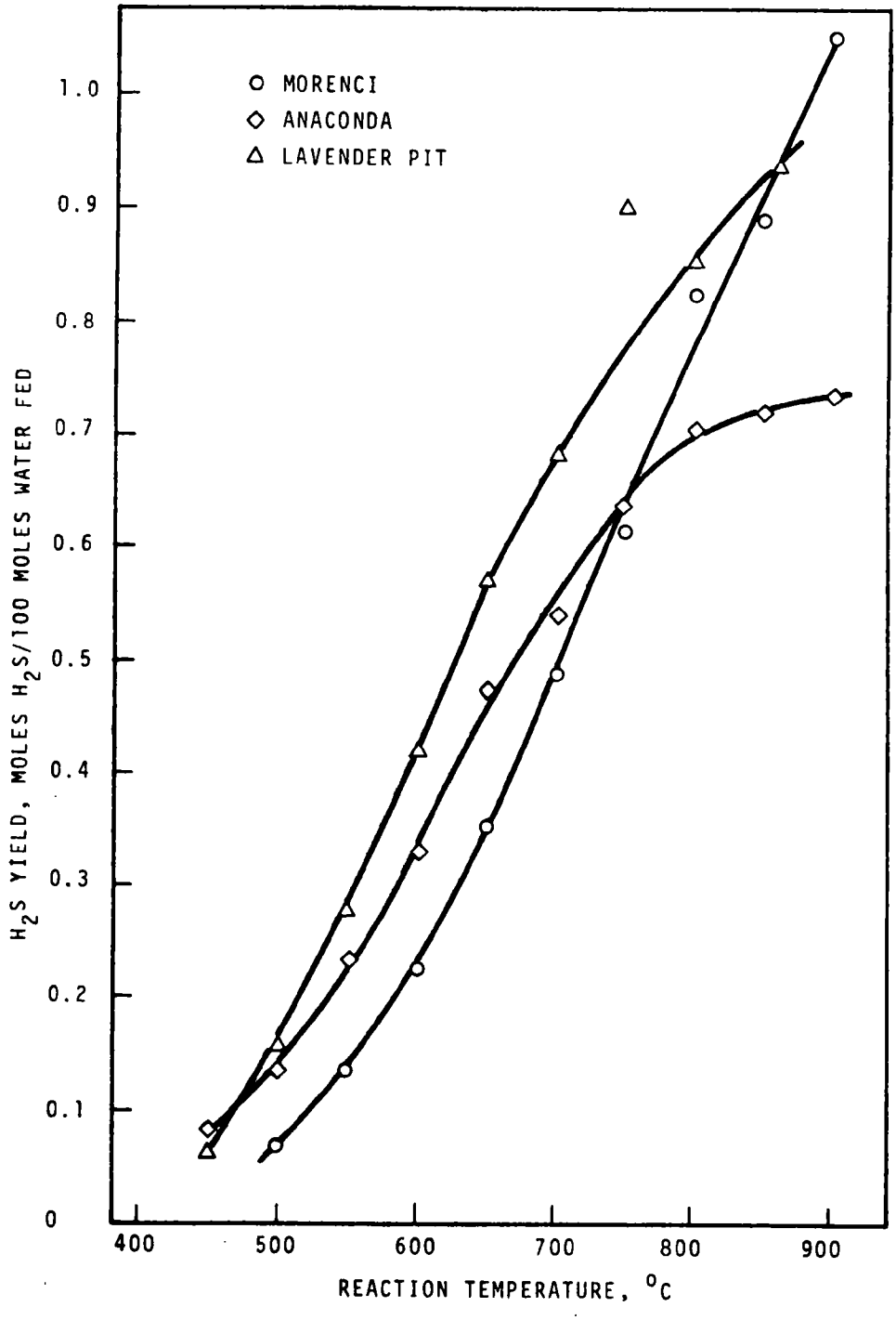

FIGURE 7. Effect of Reaction Temperature on the Equilibrium H_2S Yield (Experimental)

are similar to those obtained with the Morenci concentrates as can be seen by referring to Table 4. It must be remembered that the equilibrium H_2S yields presented in Figure 7 and Table 4 are the net yields after any H_2S and SO_2 in the cooled gas have reacted to form sulfur.

If copper concentrate, which has not been desulfurized, is used in the steam oxidation reaction, the initial H_2S yield is increased. However, the H_2S yield decreases rapidly with time and after about 50 minutes reaction time the H_2S yield approximates that obtained with a desulfurized concentrate. The off-gas from the reaction contains both H_2S and SO_2 and as the gas cools elemental sulfur is formed. The reaction is incomplete however, and the GC analysis shows that cooled off-gas contains both SO_2 and H_2S. The H_2S-SO_2 ratio in the gas is approximately 2:1. It is hypothesized that the SO_2 and the bulk of the H_2S is formed by a reaction between the labile sulfur vapor and water vapor:

$$2\ H_2O + 3/2\ S_2 \rightleftarrows 2\ H_2S + SO_2$$

During the initial stage of the run, the release of labile sulfur is high and the SO_2 and H_2S yields are high. As the release of labile sulfur decreases to zero, the H_2S yield decreases until it equals the H_2S yield from the steam oxidation reaction.

To determine if the sulfur-water reaction could account for the high H_2S yield, experiments were performed in which sulfur vapor and water vapor were heated together at 300-500°C, cooled to room temperature, and the gas stream analyzed by GC. The results show the gas stream contained high concentrations of both SO_2 and H_2S, indicating that the water-sulfur reaction is responsible for the high H_2S yields observed when untreated copper concentrate is steam oxidized.

Reports in the literature[7] indicate that the addition of lime or other alkaline agents to the copper concentrate can increase the yield of H_2S obtained during steam oxidation. However, in a number of tests in which calcium hydroxide (10 wt%) was added to the concentrate, no increase in H_2S yield was observed. This was true using both untreated and desulfurized concentrate. A substantial

TABLE 4. Equilibrium H_2S Yield As A Function Of Temperature

Temperature °C	H_2S Yield, Moles H_2S / 100 Moles of Water Fed					
	Morenci	Tyrone	Pima	Battle Mountain	Lavender Pit	Anaconda
450	-	-	0.02	-	0.07	0.08
500	0.07	0.07	0.07	0.08	0.16	0.14
550	0.14	-	0.12	0.14	0.28	0.23
600	0.23	0.22	0.20	0.23	0.42	0.33
650	0.35	0.35	0.33	0.32	0.57	0.47
700	0.49	0.51	0.51	0.61	0.68	0.54
750	0.62	0.60	0.65	0.85	0.90	0.64
800	0.82	0.77	0.82*	0.90	0.86	0.71
850	0.89	0.81		0.96	0.94	0.72
900	1.05	1.09				0.74

* Concentrate bed partially sintered at 800°C.

amount of SO_2, however, was detected in the off-gas when the lime was added to the desulfurized concentrate.

The steam oxidation of desulfurized copper concentrate is presumed to occur by the reaction

$$3\ FeS + 4\ H_2O \rightleftarrows Fe_3O_4 + 3\ H_2S + H_2 \qquad (2)$$

Magnetite, hydrogen sulfide and hydrogen have been identified as reaction products. There is no experimental evidence to show that the copper sulfides in the concentrate react with the water to any measurable extent. The concentrate residues from the steam oxidation reaction are magnetic, and x-ray diffraction analysis shows they consist principally of cuprous sulfide, magnetite and unreacted pyrrhotite.

If the H_2S is produced by the above reaction (2), and no side reactions occur, it is possible to calculate the equilibrium H_2S yield as a function of reaction temperature. The standard free energy change (ΔF^o_R) for the reaction, at various temperatures, can be calculated from existing free energy data. Assuming ideal gas behavior and that the solid constituents are at unit activity, the equilibrium constant can be calculated at various temperatures from the equation

$$\Delta F^o_R = -RT \ln K^o_p$$

where R = gas constant

T = reaction temperature, ^oK

K^o_p = equilibrium constant

This was done using the free energy data compiled by Rosenqvist,[38] and the results are shown in Table 5. The equilibrium gas compositions were calculated using the equation

$$K^o_p = (P_{H_2S})^3\ (P_{H_2})\ /\ (P_{H_2O})^4$$

and the results are given in Table 5. The calculated H_2S yield, as a function of temperature, is given in Figure 8. The H_2S yields obtained with Morenci and Lavender Pit concentrates are also shown.

TABLE 5. Calculated Equilibrium Gas Compositions*

Basis: $$3FeS_{(s)} + 4H_2O_{(g)} \underset{K_P^\circ}{\overset{\Delta F_R^\circ}{\rightleftharpoons}} Fe_3O_{4(s)} + 3H_2S_{(g)} + H_{2(g)}$$

Temp °C	ΔF_R°, kcal	K_P°	Gas Composition, atm		
			H_2S	H_2	H_2O
400	31.46	6.11×10^{-11}	0.00366	0.00122	0.99512
600	35.96	1.00×10^{-9}	0.00734	0.00245	0.98021
800	40.53	5.578×10^{-9}	0.01121	0.00374	0.98505
1000	45.12	1.779×10^{-8}	0.01495	0.00498	0.98007
1200	49.61	4.370×10^{-8}	0.01856	0.00619	0.97575
1400	54.19	8.355×10^{-8}	0.02173	0.00724	0.97103

* Assuming ideal gas behavior, unit activity of solid constituents, and no side reactions which affect the gas composition.

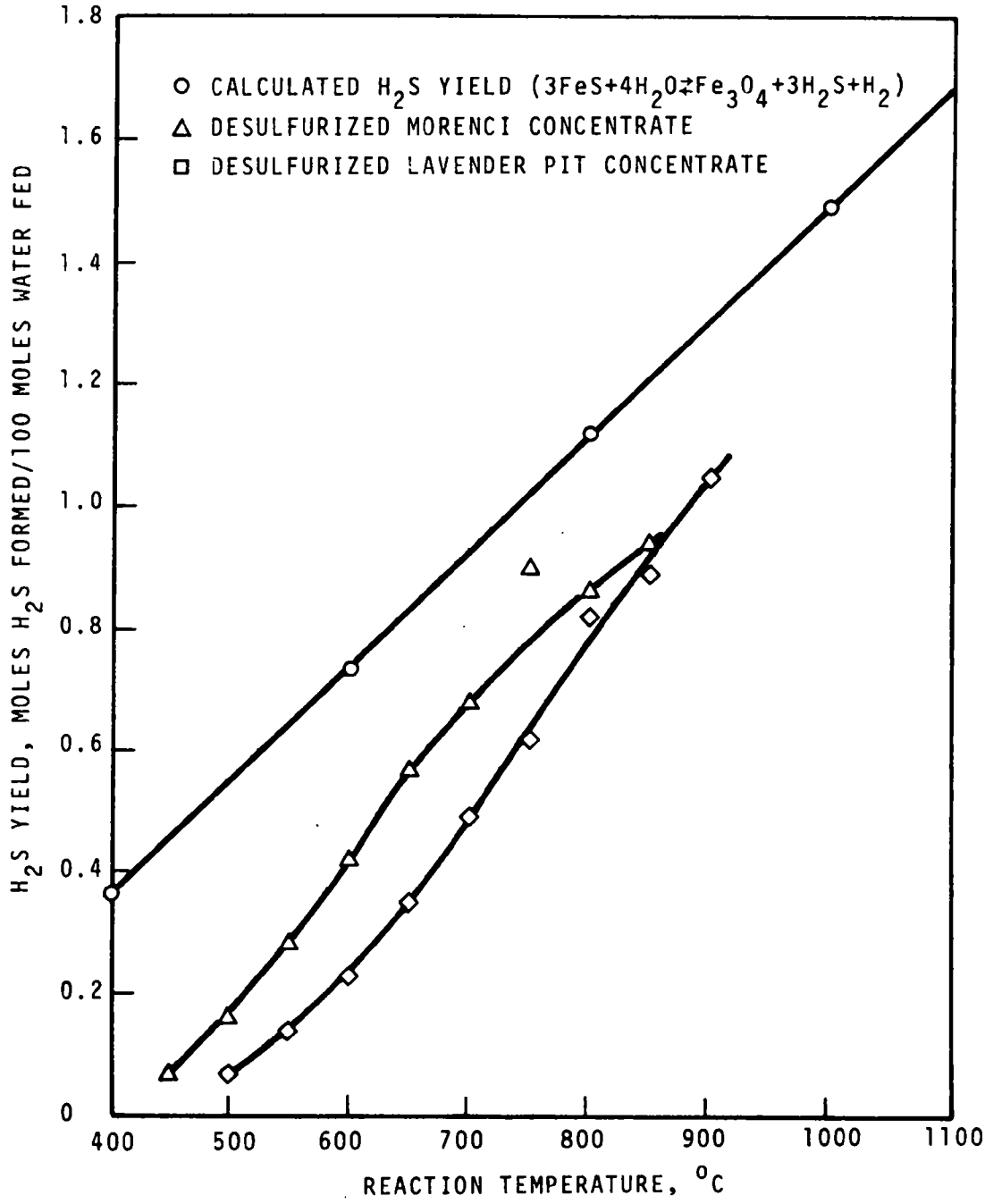

FIGURE 8. Comparison of Experimental and Calculated (Thermodynamic) H_2S Yields at Various Reaction Temperatures

The experimentally measured H_2S yields are much less than the calculated yields. There are several possible explanations for this:

1. Inaccuracies in the free energy data which affect the calculated yields.
2. The calculated equilibrium yield assumes ideal behavior of reactants and products, which may not be the case even at the low pressure ($\sim$ 1 atm) of the reaction system.
3. Thermodynamic equilibrium is not attained in the reaction system due to kinetic limitations.
4. The steam oxidation reaction does not proceed as written.
5. Other reactions occur which affect the H_2S yield.

The compilation of free energy data by Rosenqvist[38] appears to be the best source of data available. Even so, the suggested accuracy of the data is such that the ΔF^{o}_{R} for Reaction (2) could be in error by as much as $\pm$ 14.5 kcal at the various temperatures. An error of this magnitude would have a drastic effect on the calculated H_2S yields. At 800°C, the calculated H_2S yield could vary from 0.207 - 5.745 moles H_2S/100 moles H_2O fed to the reactor, depending on the error in the calculated free energy of reaction.

At the low reaction pressures involved (about one atmosphere absolute), the deviation from ideal gas behavior would be slight. Corrections for non-ideal gas behavior would have only a slight effect on the calculated H_2S yield. Deviations from unit activity for the solid constituents could have a substantial effect on the calculated H_2S yield, but not to the same degree that inaccuracies in the free energy data would have.

The experimental data indicate that the off-gas composition does approach the thermodynamic equilibrium during the initial stages of each run. Since decreasing the water flow to very low levels does not increase the initial H_2S yield, the off-gas from the reactor must be at equilibrium.

All experimental evidence indicates the steam oxidation reaction proceeds as written as shown above (2) and as supported by

the work of Thompson and Tilling.[20] However, to prove or disprove that the reaction proceeds as assumed would require a study beyond the scope of this program.

There are a number of other reactions which could occur in the reaction system and affect the H_2S yield. These include the following:

	ΔF_R^o (kcal)	K_P^o *	
$2\ H_2S \overset{K_3}{\rightleftharpoons} 2\ H_2 + S_2$	17.7	2.534×10^{-4}	(3)
$2\ H_2O + 3/2\ S_2 \overset{K_4}{\rightleftharpoons} 2\ H_2S + SO_2$	4.34	0.1307	(4)
$2\ H_2O + 1/2\ S_2 \overset{K_5}{\rightleftharpoons} SO_2 + 2\ H_2$	22.0	3.31×10^{-5}	(5)
$3\ Fe_3O_4 + FeS \overset{K_6}{\rightleftharpoons} 10\ FeO + SO_2$	36.6	3.51×10^{-8}	(6)
$Fe_3O_4 + FeS \overset{K_7}{\rightleftharpoons} 4\ FeO + 1/2\ S_2$	19.2	1.23×10^{-4}	(7)
$3\ FeS + 2\ SO_2 \overset{K_8}{\rightleftharpoons} Fe_3O_4 + 5/2\ S_2$	22.8	2.27×10^{-5}	(8)
$FeS + H_2O \overset{K_9}{\rightleftharpoons} FeO + H_2S$	12.3	3.13×10^{-3}	(9)
$Fe_3O_4 + H_2 \overset{K_{10}}{\rightleftharpoons} 3\ FeO + H_2O$	-2.3	2.94	(10)
$3\ FeS + 10\ H_2O \overset{K_{11}}{\rightleftharpoons} Fe_3O_4 + 3\ SO_2 + 10\ H_2$	132	1.33×10^{-27}	(11)

*Calculated at 800°C

Similar reactions can be written involving copper. If SiO_2, MgO and CuO are present in the concentrate, the formation of complex oxides must also be considered.

Because of many possible reactions which could be involved in the steam oxidation of desulfurized copper concentrate, a rigorous thermodynamic analysis of the reaction system is impossible. However, it is known that under certain conditions sulfur and SO_2 are reaction products in addition to magnetite, H_2S and H_2; also that some H_2S decomposition could occur at the reaction temperatures involved. Therefore, the equilibrium off-gas compositions were calculated assuming that reactions 2, 3 and 4 occur in the reaction system. The equilibrium constants for the three reactions were determined and the results are given in Table 6. The equilibrium gas composition was calculated as a function of temperature. The calculated gas compositions and H_2S yields are shown in Figure 9.

The calculations show the H_2 and SO_2 concentrations, at equilibrium, increase rapidly with temperature. The sulfur concentration is low at all temperatures, while the H_2S concentration remains relatively constant. Assuming all of the SO_2 formed reacts with H_2S as the gas cools, the net H_2S yield decreases with increasing temperature, and would become zero at about 875°C. This is in complete disagreement with the experimental data which shows the net H_2S yield increases with increasing reaction temperature.

At reaction temperatures above 800°C, the amount of SO_2 formed increases rapidly. At 800°C all of the SO_2 formed reacts with H_2S to form sulfur as the gas cools, and analysis of the cooled off-gas shows no residual SO_2. Above 800°C the cooled off-gas contains H_2S plus some unreacted SO_2. If the residual SO_2 was reacted with H_2S, the net H_2S yield would be lower than shown in Figure 9, and could possibly approach the predicted value. Even so, the discrepancy between the experimental and calculated gas compositions show either the free energy data used for the calculations are in error or the assumed reactions are incorrect. A costly and time-consuming experimental program would be required to determine why the calculated and experimental gas compositions do not agree.

Table 6. Equilibrium Constants* As A Function Of Reaction Temperatures

Reactions Considered

$$3FeS + 4H_2O \overset{K_2}{\rightleftharpoons} Fe_3O_4 + 3H_2S + H_2$$

$$2H_2S \overset{K_3}{\rightleftharpoons} 2H_2 + S_2$$

$$2H_2O + 3/2S_2 \overset{K_4}{\rightleftharpoons} 2H_2S + SO_2$$

$$K_2 = (P_{H_2S})^3(P_{H_2})/(P_{H_2O})^4$$

$$K_3 = (P_{H_2})^2(P_{S_2})/(P_{H_2S})^2$$

$$K_4 = (P_{H_2S})^2(P_{SO_2})/(P_{H_2O})^2(P_{S_2})^{3/2}$$

Temp, °C	K_2	K_3	K_4
400	6.11×10^{-11}	1.393×10^{-9}	3.901×10^{-3}
600	1.003×10^{-9}	2.206×10^{-6}	0.3585
800	5.578×10^{-9}	2.534×10^{-4}	0.1307
1000	1.179×10^{-8}	6.453×10^{-3}	0.05283
1200	4.370×10^{-8}	0.06964	0.02569
1400	8.355×10^{-8}	0.4206	0.01520

* Assuming ideal gases and unit activity of solid constituents.

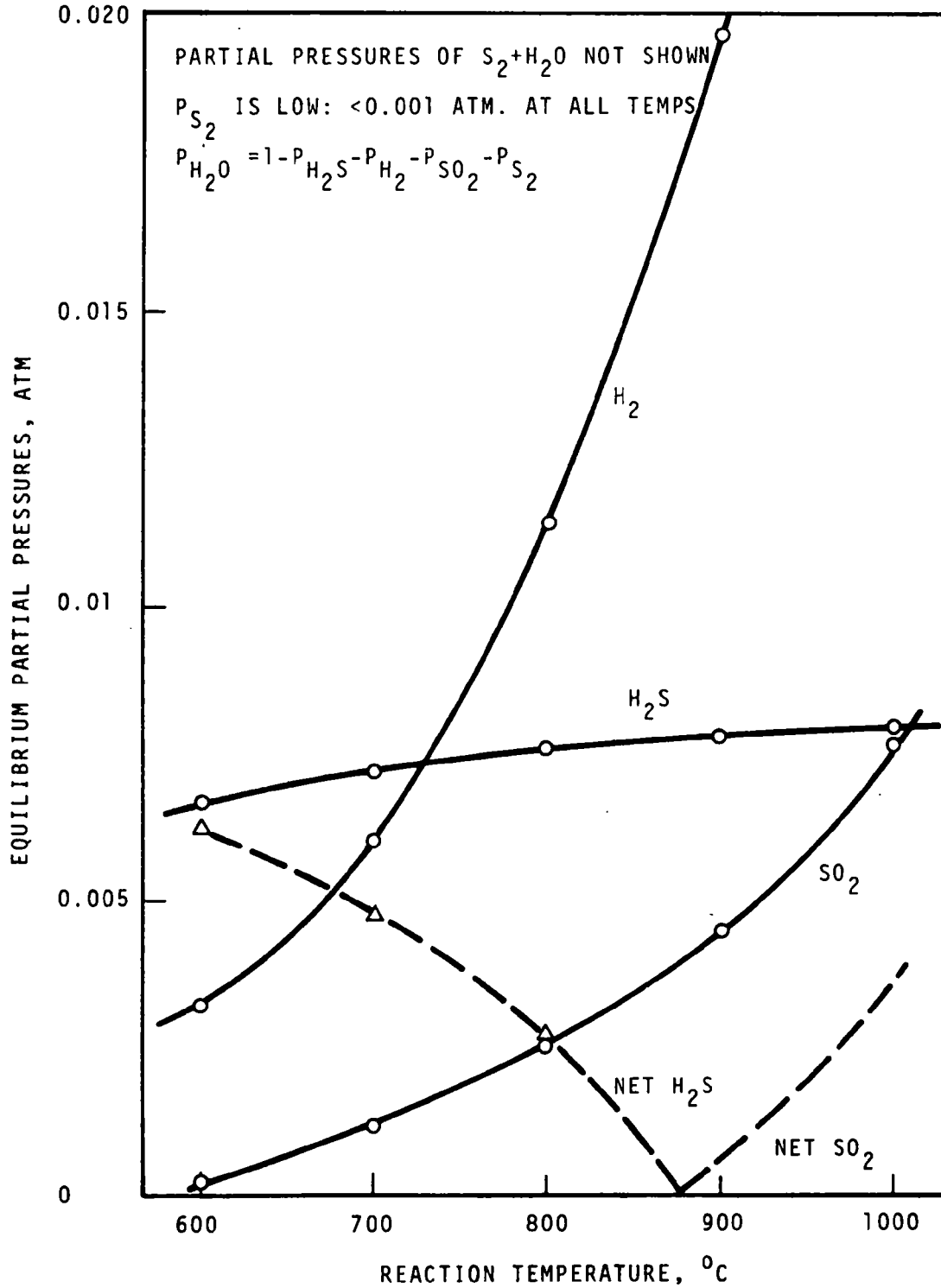

FIGURE 9. Calculated Equilibrium Gas Composition as a Function of Reaction Temperature

d. Reaction Kinetics

The kinetics of the steam oxidation reaction were evaluated using the fixed bed reactor shown in 2. The nature of the reaction system and the uncertainty of the reaction mechanism makes a rigorous analysis of the reaction impractical. Instead it was necessary to make empirical estimates of the steam oxidation reaction kinetics based on the fixed bed data.

If the H_2S is produced by Reaction (2) and the reaction proceeded to completion, one mole of water would yield 0.75 moles of H_2S. However, the thermodynamic equilibrium apparently limits the H_2S yield that can be obtained. At 800°C, about 0.0082 moles of H_2S per mole of water fed is the thermodynamic limit. As the steam oxidation reaction proceeds in the fixed bed reactor, the pyrrhotite concentration in the concentrate bed decreases continuously with time. The reactor system is, therefore, in an unsteady state throughout the course of the reaction. In addition, at any given time the pyrrhotite concentration will vary from the top to the bottom of the concentrate bed.

It can be visualized that for a given concentrate particle, a layer of magnetite builds up on the particle as the pyrrhotite reacts. The H_2S yield from the single particle will decrease with time as magnetite layer builds up and the pyrrhotite concentration (or reactive surface area) decreases. In a fixed bed reactor the off-gas leaving the reactor will approach the equilibrium composition if the gas-solid contact time (residence time) is sufficient. The contact time required will, in turn, depend on the pyrrhotite concentration with the time increasing as the concentration decreases. The contact time is determined by the gas (water) flow rate and the concentrate bed depth. For a given experimental run, in which both the water flow and bed volume are fixed (thus fixing the contact time), the H_2S yield will be constant as long as the gas is in equilibrium with the concentrate. However, a point is reached in time at which the contact time required to maintain the equilibrium exceeds (due to the decrease in the average pyrrhotite concentration) the actual contact time and the H_2S yield drops below the

equilibrium level. The H_2S yield will continue to decrease until all of the pyrrhotite is consumed. For a given experiment, the water flow and concentrate volume will determine the length of time the H_2S yield is constant. Figure 10 shows typical steam oxidation runs at 800°C using desulfurized Morenci concentrate. With a small volume of concentrate and a high water flow, the H_2S yield is below the equilibrium level even at the start of the run. For the three runs shown in Figure 10 the gas flows corresponded to superficial gas velocities of 0.09-0.44 ft/sec at 800°C. With the Morenci concentrate fluidization of the bed began at a superficial gas velocity of about 0.82 ft/sec (at 800°C) which corresponded to a water flow of 6.14 g/min.

From the fixed bed experiments it is possible to calculate the H_2S yield, under various conditions, as a function of the pyrrhotite concentration if one assumes an average pyrrhotite concentration across the bed. This assumption is not completely valid for a fixed bed system, but the error introduced by the assumption should not be excessive. Figure 11 shows the results of such calculations for desulfurized Morenci concentrate which was steam oxidized at 800°C.

By making a number of runs with a given concentrate at various contact times, it is possible to estimate the contact time required to reach the equilibrium H_2S yield as a function of the pyrrhotite concentration (process economics dictate that the H_2S content of the reactor off-gas should be a maximum, and it is necessary to know the contact time required to reach equilibrium in order to estimate production costs). This was done with the desulfurized Morenci concentrate and the results are shown in Figure 12. The estimate assumes the pyrrhotite concentration is uniform throughout the bed. This would be approximately true for a fluidized bed reactor, but not for a fixed or moving bed system. Similar estimates can be made for other reaction temperatures and concentrates, but this was not done in the current study.

An attempt was made to determine the effect of temperature on the kinetics of the steam oxidation reaction. The problem is complicated by the fact that at reaction temperatures above 800°C a

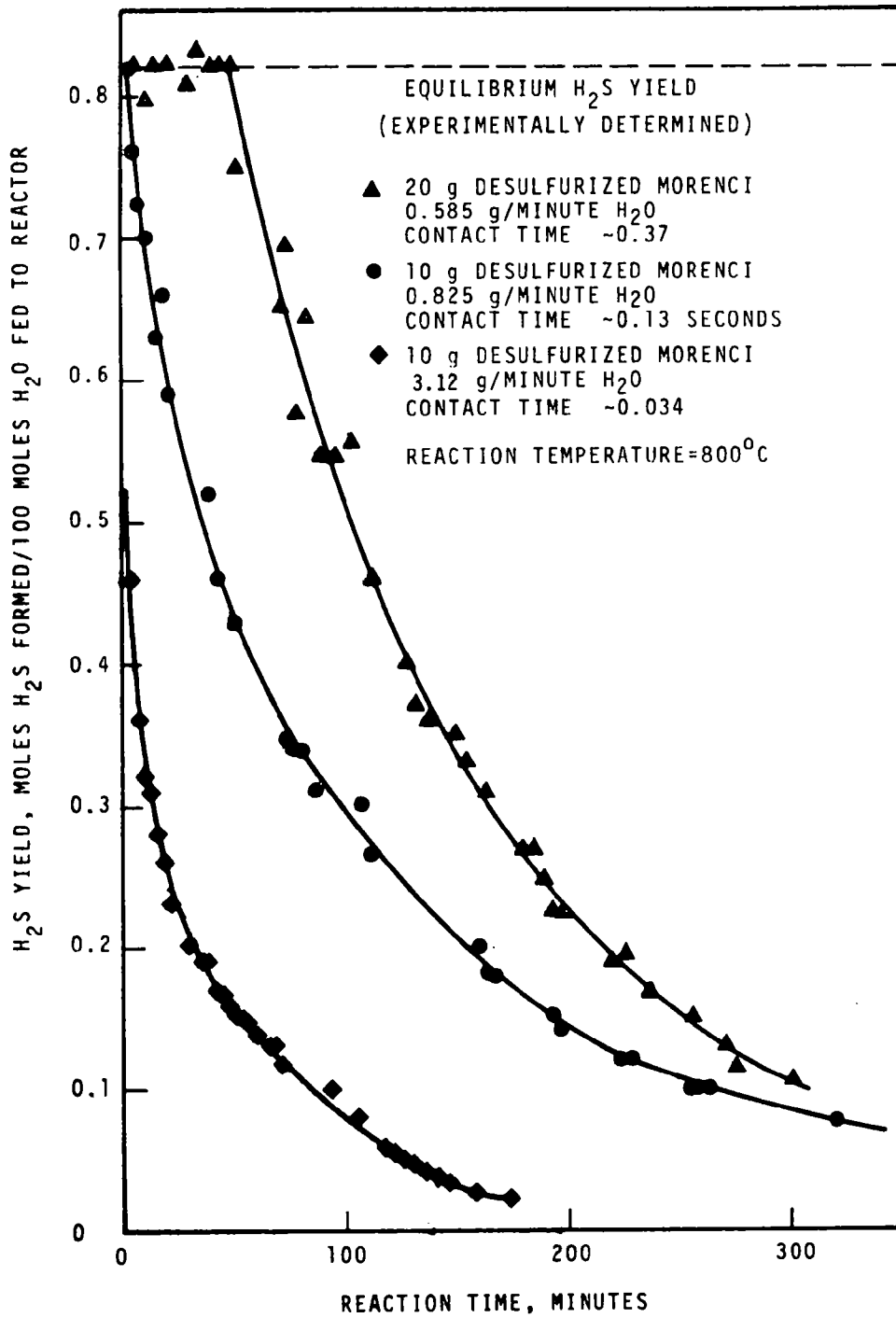

FIGURE 10. H_2S Yield as a Function of Reaction Time for a Batch Reactor

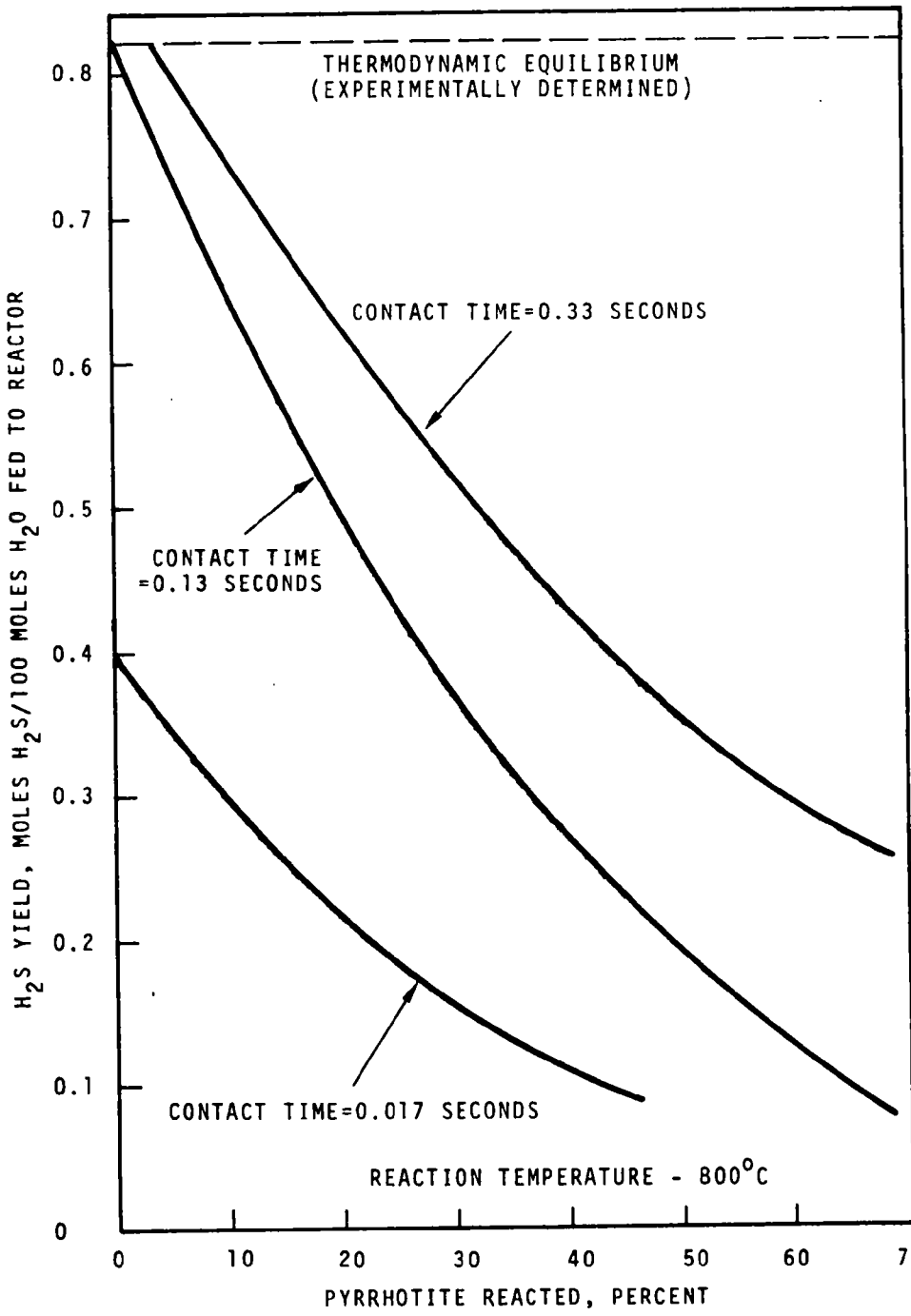

FIGURE 11. H_2S Yield as a Function of the Pyrrhotite Reacted for Various Water Flow Rates

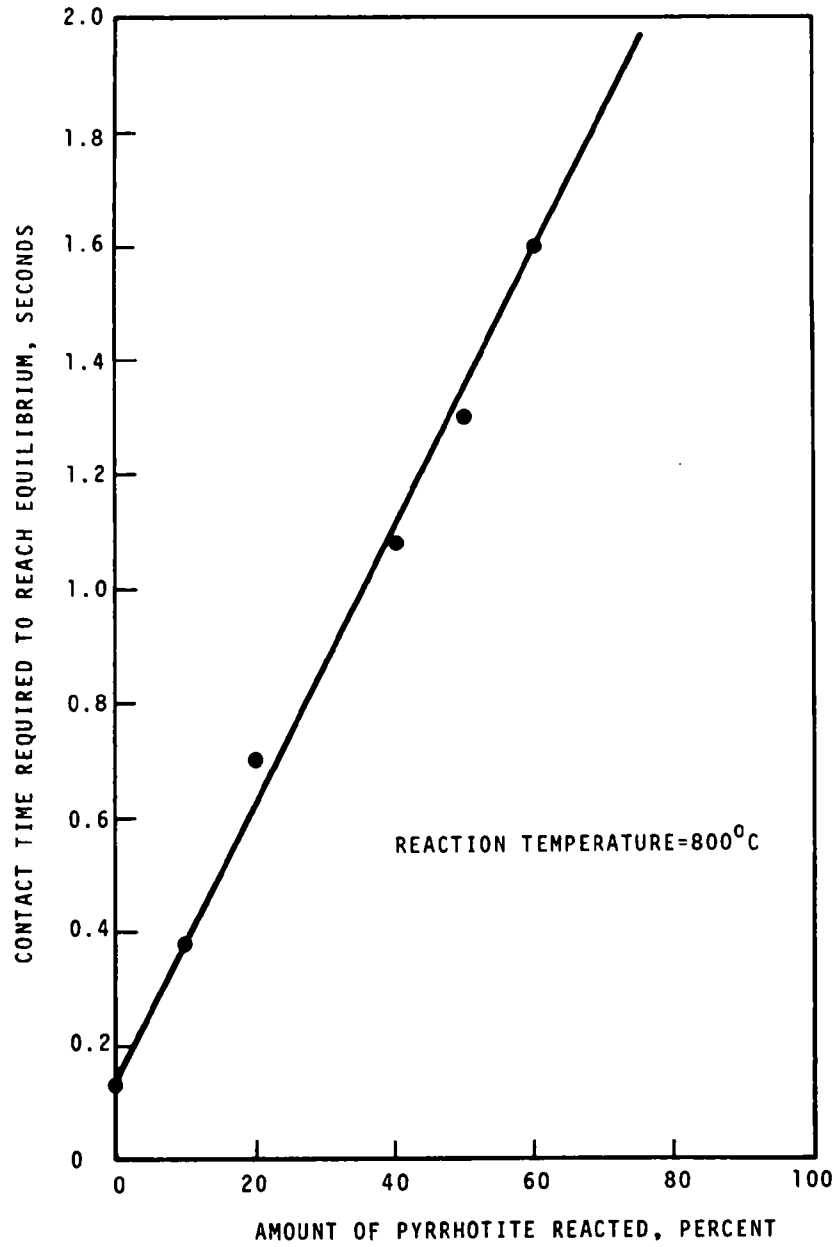

FIGURE 12. Contact Time Required to Reach the Equilibrium H_2S Concentration as a Function of Pyrrhotite Reacted at 800°C

substantial fraction of the pyrrhotite may be consumed in the formation of SO_2 which reduces the net H_2S production. Therefore, while the experimental data show that pyrrhotite reacts more rapidly at 900°C than at lower temperatures, the increased rate is of no benefit because the net yield of H_2S is greatly decreased at the higher reaction temperatures. The optimum reaction temperature for the steam oxidation reaction appears to be in the range of 700-800°C.

e. Fate of Concentrate Impurities

The various concentrates contain certain impurities whose presence must be considered in the steam oxidation process. The impurities of interest are gold and silver (for their economic value) and arsenic and antimony (for their potential health hazards and detrimental effects on the process and resulting by-products such as sulfur and iron oxide).

Arsenic and antimony are present in the concentrates as sulfides. These sulfides are quite volatile, however, and should be eliminated from the concentrates during the desulfurization reaction. Analysis of the various desulfurized concentrates showed only trace levels of arsenic and antimony, indicating the sulfides had volatilized as expected. During the desulfurization of arsenic-antimony containing concentrates, yellow orange solids condensed as thin films in the cold sections of the system. These solids were not analyzed, but were found to be soluble in aqua regia as are the arsenic and antimony sulfides.

The various concentrates studied contained up to about 11 troy ounces of silver per ton and 0.3 oz of gold/ton. Analysis of the desulfurized concentrates and steam oxidation residues indicated that the gold and silver remained with the solid residue throughout the process. This is to be expected since the gold and silver are not volatile at the temperatures under consideration. While exact material balances for the gold and silver were not obtained due to analytical inaccuracies, there was no experimental evidence to show that the gold and silver did not stay with the concentrate residue. These analytical results were as follows:

Supplier of Concentrate	Concentrate Dry Basis	Desulfurized Concentrate	Residue After Steam Oxidation
Battle Mountain (Duval)			
In Troy Ounces - Ag	10.79	12.3	12.8
Per Ton - Au	0.31	0.39	0.56
Anaconda			
Weight % - As	1.86	trace	trace
Sb	0.037	trace	trace

5. Interpretation of Experimental Results

a. Process Limiting Factors

The objective of the steam oxidation concept is to produce H_2S from iron sulfides (pyrrhotite) without need for a specific chemical reductant so that the H_2S can be used to react with SO_2 to produce elemental sulfur. Any source of iron sulfide could be used, but copper concentrates containing pyrite or chalcopyrite were used as the iron source in this study. The commercial value of the steam oxidation process would be determined by the cost of producing the H_2S.

The experimental study has shown that H_2S can be produced from pyritic copper concentrates by the steam oxidation reaction. Essentially all of the iron sulfide in desulfurized concentrate can be converted to H_2S and magnetite by the reaction, while the copper sulfide is unchanged. There are, however, several limitations to the process which reduce its potential value.

The most serious problem concerning the steam oxidation process is the limit placed on the H_2S concentration of the off-gas leaving the reactor by thermodynamic considerations. All of the tests show that the H_2S concentration in the off-gas will never exceed about 1.1%. This corresponds to a consumption of about 1.5% of the water fed to the reactor. The low equilibrium H_2S concentration of the off-gas places severe limitations on the heat economy of the process and on the reactor design. It means that at least 90 moles of water must be fed to the reactor to produce one mole of H_2S. Unless very high waste heat recovery can be accomplished, the heat load required to produce the H_2S will be extremely large.

The tests show the initial H_2S yields increase with increasing temperature. However, at reaction temperatures above 800°C, the rate of SO_2 formation increases and much of the pyrrhotite is consumed in SO_2 production. As a result the optimum temperature for the steam oxidation reaction appears to be between 700 and 800°C. At 800°C the equilibrium H_2S concentration of the off-gas is only about 0.82%, which places even more restrictions on the process.

If the steam oxidation reaction involves only the water and pyrrhotite, the equilibrium H_2S yields should be about the same for all the desulfurized concentrates. Variations in factors such as surface area, crystal modifications, pyrrhotite concentrations, etc., should not affect the equilibrium H_2S yield to any degree. However, the results show that there is a significant difference in the equilibrium H_2S yields for the various concentrates (see Table 4). This would seem to indicate that the reaction(s) which produce the H_2S is more complex than anticipated. This view is further substantiated by the fact that the equilibrium H_2S yields are much different from those calculated on a basis of available thermodynamic data. The one major conclusion that can be drawn from the H_2S yield data is that the mechanism(s) by which H_2S is produced in the steam oxidation process is not known. The apparent complexity of the process indicates that a time-consuming experimental program would be required to define accurately the reaction mechanism; however, such work should yield results useful in understanding the process.

The rate of the steam oxidation reaction(s) appears to be quite rapid at temperatures of 700°C and above. However, the low equilibrium H_2S yield makes it quite difficult to take advantage of the rapid reaction rates. At a temperature of 800°C the contact time required to achieve the equilibrium H_2S concentration is less than 3 seconds even when 90% of the pyrrhotite in the concentrate has been reacted. As a result, any reactor design considered which is to produce substantial quantities of H_2S will require a very large cross-sectional area and only a small depth of concentrate. The cost of building and operating reactors of the required cross-sectional area

will make the cost of producing H_2S by the steam oxidation reaction much higher than desirable. Operation at higher temperatures does not improve the situation due to the formation of SO_2. At reaction temperatures above 800°C a substantial fraction of the pyrrhotite is consumed in the formation of SO_2 which greatly reduces the H_2S yield obtainable.

In summary, the major limitation of the steam oxidation process is the low concentration of H_2S in the reactor off-gas. Since this low concentration is due to thermodynamic limitations, it does not appear possible to increase the H_2S concentration without changing the reaction(s) involved.

SECTION III

Economic Assessment of the Process Concept

In view of the rather unfavorable prospects for achieving the hydrogen sulfide yields and concentrations desired for a likely process involving the steam oxidation concept, it was considered unnecessary to make a detailed economic analysis. Instead a preliminary evaluation based on a comparison with another likely method of achieving elemental sulfur production for which data were at hand was regarded as suitable. The following evaluation compares the steam oxidation concept with the ASARCO process for very large-scale sulfur dioxide reduction as reviewed in the A. G. McKee[42] report.

1. Basis

As the basis for this evaluation, an arbitrary figure of 676 tons of sulfur (about 400 tons of copper per day) in a concentrate of a composition representative of Morenci material was selected (Table 3) which on a weight basis was:

Cu	20.82%
S	36.2 %
Fe	27.3 %
Other, including moisture	6.56%
Inerts	9.12%

2. Material Balances

Assumptions

a. All sulfur was assumed to exist only as chalcocite (Cu_2S) and pyrite (FeS_2).

b. The following principal reactions were assumed for the overall process:

$FeS_2 \rightarrow FeS_{1.1} + 0.9\ S$ (labile sulfur evolution during neutral roasting and pyrrhotite formation)

$3\ FeS_{1.1} + 4\ H_2O \rightarrow Fe_3O_4 + 3.3\ H_2S + 0.7\ H_2$ (the steam oxidation reaction)

$2\ H_2S + SO_2 \rightarrow H_2O + 3\ S$ (the Claus reaction for elemental sulfur)

c. The equilibrium composition of gas leaving the steam oxidation step of the process was assumed to be one mole of H_2S per 99 moles of H_2O.

On the basis of these assumptions, the distribution of the sulfur from 100 tons of concentrate was calculated to be as follows:

Labile sulfur	13.95 tons
Chalcocite sulfur	5.20 tons
Pyrrhotite sulfur	17.05 tons

In order to balance the H_2S and SO_2 input to the Claus reaction for elemental sulfur production, two-thirds of the sulfur remaining in the residue after neutral roasting of the concentrate must be evolved as H_2S in the steam oxidation step. It is assumed that the sulfur remaining in the residue after steam oxidation would be evolved in the converting step as SO_2. Therefore, the residue from the steam oxidizing step would contain about 7.42% sulfur.

The results of the material balance calculations are shown in Figure 13.

3. Major Equipment Sizing

Fluidized Beds

The total cross-sectional area of the fluidized beds needed for the steam oxidation process was estimated to be 28,246 square feet, as follows:

The volumetric flow rate of steam at 800°C and atmospheric pressure would be 28,246 cubic feet per second.

The gas velocity needed for fluidization was taken as 1 foot per second based on laboratory experience. Therefore, the total

BASIS: PROCESSING OF 1867 SHORT TONS PER DAY OF PYRITIC COPPER CONCENTRATE
(QUANTITIES GIVEN ARE TONS/DAY EXCEPT AS NOTED)

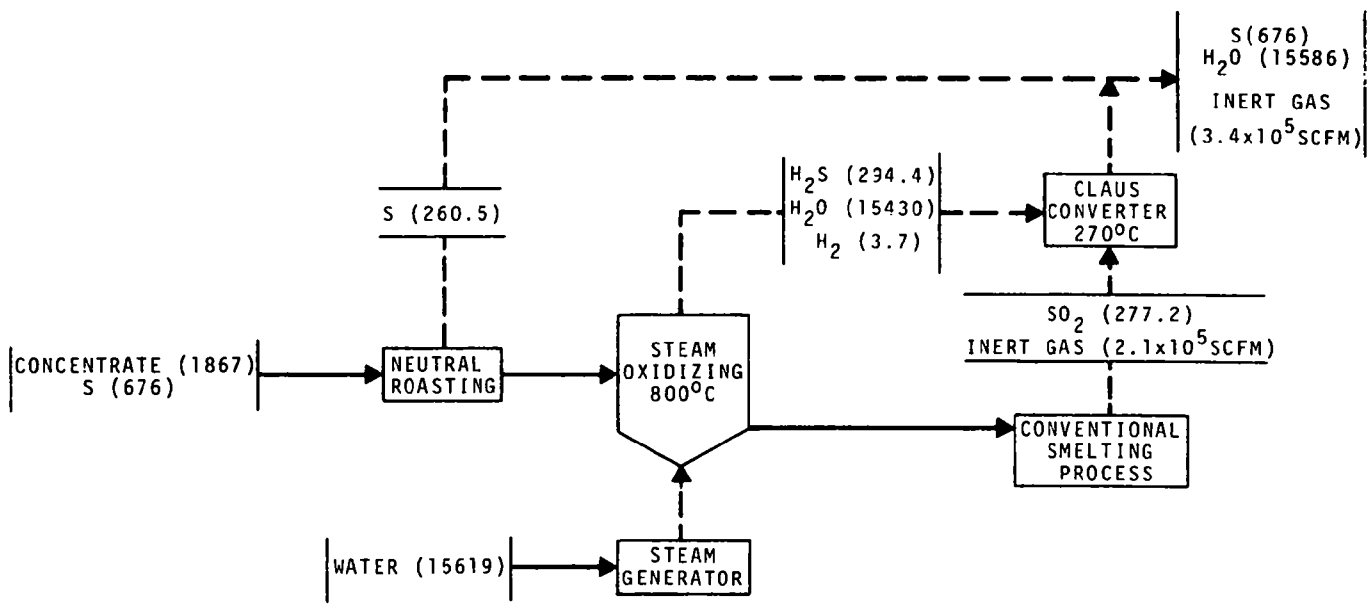

FIGURE 13. Steam Oxidation Process Material Balance Flowsheet

cross-sectional area required would be $\frac{28,246}{1}$ = 28,246 square feet.

The bed depth is estimated to be 2.75 feet based on the following calculations:

The estimated time for conversion of pyrrhotite to magnetite is 900 minutes.

The amount of sulfur needed to be retained as unconverted pyrrhotite per hundred parts of steam oxidation residue would be:

$$7.42-5.20 = 2.22 \text{ parts}$$

The degree of pyrrhotite conversion in the steam oxidation step would then be:

$$\frac{17.05-2.22}{17.05} \times 100 = 87\%$$

Assuming ideal or perfect backmixing in the fluid bed, the required holdup time for conversion of the pyrrhotite in the neutral-roasted residue to 87% is about twice the conversion time or about 1.25 days. This holdup time corresponds to about 2334 tons in the total fluidized beds. Assuming a bulk density of 60 pounds per cubic foot, the total bed volume would be:

$$\frac{2334 \times 2000}{60} = 77,700 \text{ cubic feet}$$

thus the average bed depth would be:

$$\frac{77,700}{28,246} = 2.75 \text{ feet}$$

(The reference for these calculations is the book by Levenspiel (43).)

4. Capital Cost Comparison

The capital cost of the ASARCO process for 676 tons of sulfur per day is estimated to be $49.0 million based on the following calculations:

The capital cost of ASARCO process processing feed gas containing 4 vol% SO_2 at a rate of 116.6 tons of sulfur/day is $12 million (1969). Costs increase on the basis of 0.8 power of capacity.

Therefore, the cost of a plant processing 676 tons of sulfur per day would be $49.0 million (1969).

The minimum capital cost of a steam oxidation plant is $60.3 million based on the following calculations:

Forty 30-ft-diameter fluid-bed units are needed. The 1969 cost of one unit = $\frac{270}{285}$ (230,000) = $285,000. The installed cost of forty units would then be $11.4 million (1969). The heat requirement for the 28,246 cubic feet per second of 800°C steam is 2.27×10^9 Btu/hr.

Steam-generating furnaces are assumed to produce 10^8 Btu/hr each. The estimated cost of each furnace is $\frac{285}{270}$ (360,000) or 380,000. Twenty-three furnaces are required for steam production. The cost of twenty-three furnaces would then be 23(380,000) or $8.7 million (1969). These cost data are adjusted to 1969 using Marshall and Stevens cost indices. The cost data source was a book by Dryden and Furlow.[44]

Thus, the minimum installed equipment cost is $20.1 million and the total minimum plant cost is (3.0) (20.1) or $60.3 million (1969) for the steam oxidation process. The factor (3.0) in the above calculation represents the ratio of total plant cost to equipment cost and is used to arrive at total minimum plant cost.

5. Comparison of Fuel Plus Depreciation Cost of Process

On the basis of plant costs as estimated above and on an estimate of fuel costs, the annual fuel and depreciation costs of the two processes are as follows:

	Millions of Dollars Per Year	
	ASARCO	Steam Oxidation
Depreciation (Linear 15 yr)	3.27	4.02
Fuel Cost/Yr ($0.40/million Btu)	4.12	7.91
Fuel + Depreciation	7.39	11.93

6. Estimate of Lower Limit of H_2S Concentration in Steam Leaving the Oxidizer

The following calculation was made to show the minimum H_2S concentration which would have to be attained to make the steam oxidation

process competitive (or equivalent) in cost with the ASARCO process as estimated above. Since many equipment units in parallel are assumed to be required, the process capital and fuel costs should be proportional to the steam throughput. To reduce the cost of the steam oxidation process to that of the ASARCO process, the steam throughput would have to be reduced by at least a factor of $\frac{7.39}{11.93}$ or 0.62. To maintain the production rate of H_2S, the mole % H_2S in the steam leaving the steam oxidation units would then have to be raised to $\frac{1}{.62}$ or 1.61 mole %. In other words, if the oxidizer can be operated to produce more than 1.61% H_2S in steam, the process may be as economical as the ASARCO process. However, the ASARCO process has not been operated beyond the large pilot-plant scale and is expected to be superceded by improved processes in the future. Thus the comparison is realistically even more unfavorable than indicated here.

SECTION IV

Recommendations

In view of (1) the lack of expectations for the steam oxidation process to provide a competitive means for sulfur dioxide air pollution abatement, (2) the desirability of a means of producing hydrogen sulfide on a large scale and at characteristically low cost for use in sulfur dioxide air pollution abatement, (3) the encouraging possibilities of an alternative process for such production and (4) the full utilization of existing background and experience developed to date in this important facet of air pollution control, the following recommendations are made:

1. Further consideration of the steam oxidation process as a means of air pollution abatement for copper smelters under the present project should be abandoned.

2. The scope and objective of the present study should be broadened to cover the production of hydrogen sulfide from pyritic copper concentrates without the use of a reductant.

3. The area of study recommended for investigation would be on a concept involving the following combination of processes:

   (a) The neutral roasting of pyritic copper concentrates.

(b) The reaction of hydrochloric acid with the neutral roasted concentrates to produce hydrogen sulfide and an enriched concentrate via iron dissolution and removal.

(c) The conversion of the enriched concentrates to blister copper by conventional means thus recovering the precious metals also.

(d) The production of pure elemental sulfur by the reaction of the hydrogen sulfide from step (b) with the sulfur dioxide from step (c).

(e) The regeneration of the hydrochloric acid from the ferrous chloride solution by step (b) and the concurrent recovery of pure iron oxide for sale.

SECTION V

Identification of Additional Required Work

It is reasonably clear from the results of this present study that the steam oxidation process concept does not provide an economical means for sulfur dioxide air pollution abatement at copper smelters and furthermore holds little promise for improvements in the process chemistry to assure a more favorable view. However, this conclusion does not in any way detract from the overall desirable objective of producing hydrogen sulfide from pyritic copper concentrates as an attractive possibility for sulfur dioxide air pollution abatement at copper smelters. This observation gains considerable support when the rather major work being done by others to achieve a similar result is noted. For example, the U.S. Bureau of Mines Citrate process[39] for elemental sulfur production from smelter flue gas involves the reduction of a major fraction of the recovered sulfur by use of natural gas to produce hydrogen sulfide which is essential to operation of the process. This process is scheduled to be demonstrated on a large scale. Similarly, the co-sponsor of this present study, The Phelps Dodge Corporation, is also concurrently engaged in a substantial cooperative effort with others to demonstrate an improved process for sulfur dioxide reduction with natural gas also to yield elemental sulfur.[40] Thus these two efforts which are of considerable magnitude have two common, general features--each is directed at the conversion of smelter waste sulfur dioxide to elemental sulfur. Although each accomplishes this in different ways, the end result is achieved by use of natural gas as the reductant. With increasing concerns about the

efficient use of fuels in general and natural gas in particular, availability and economics may dictate the use of reductants other than natural gas with accompanying complications in the overall reduction process and processing economics.

1. Suggested Additional Work

Continuation of the present study along the lines of an alternative approach which will produce the required amount of hydrogen sulfide but still without need for a chemical reductant is suggested. The work would involve the laboratory study of the chemistry of the less familiar of the following steps which would comprise the overall process:

(a) Neutral roasting of pyritic copper concentrates to remove volatiles including a large portion of the sulfur as elemental sulfur and to convert the iron sulfides to acid-soluble forms.

(b) Acid leaching of the residue from step (1) to yield concentrated hydrogen sulfide gas and to separate the iron in a soluble form.

(c) Regeneration and recovery of the acid for recycle and the concurrent production of a fairly pure iron oxide residue.

(d) Converting of the enriched insoluble copper sulfide residue to blister copper containing the usual level of precious metals.

(e) Reacting of the sulfur dioxide from the converting step with the hydrogen sulfide from the leaching step to yield elemental sulfur.

Only step (b) among the above is regarded as an area which requires substantial laboratory study and development. All of the other steps are regarded as near present state-of-the-art processing requiring only a small amount of laboratory development.

The studies of the neutral roasting step as applied to a variety of representative pyritic copper concentrates as detailed in this present report are directly applicable to the follow-on work proposed here.

Means of copper recovery involving hydrogen sulfide production together with nearly conventional means for blister copper production with or without subsequent electrorefining appears to have been suggested in

the literature,[41] but a detailed presentation of such a process has not been noted. It is this area in which further efforts should be directed. Specifically, the work should comprise a laboratory and preliminary economic study of a process involving the steps as listed above. At this time the preferred acid for hydrogen sulfide production by preferential dissolution of the iron appears to be hydrochloric. Regeneration of this acid from the corresponding ferrous chloride is already practiced on a substantial scale in the steel pickling industry. The principal problems to be studied would be concerned with (a) assuring the effectiveness of both hydrogen sulfide production and preferential dissolution of the iron, (b) development of suitable means of satisfactorily removing or assuring the minimum carryover of copper into the iron chloride solution, (c) establish the fate of the precious metals, (d) investigation of the response to the process of representative concentrates on the basis of their copper mineralization: chalcocite, covellite, chalcopyrite, enargite, tetrahedrite, bornite, etc., (e) determine the preliminary economics of the preferred process.

A few scouting tests have been conducted in the laboratory on the hydrochloric acid dissolution process on desulfurized (neutral roasted) Morenci concentrate. These tests showed that the evolution of hydrogen sulfide is rapid and apparently fairly complete. These tests, in which no effort was made to assure the exclusion of air, also showed that less than 10% of the copper was dissolved with over 90% of the iron being solubilized. A copper sulfide concentrate containing over 50% by weight copper was obtained after removal of this iron by this simple treatment with the hydrochloric acid. The dissolution of some of the copper is attributed to the presence of ferric iron presumably formed by air oxidation. It is believed that essentially all of this dissolved copper can be reprecipitated by contacting the solution with hydrogen sulfide or by cementation with scrap iron.

2. Impact on Conventional Smelting Practices

Assuming a successful outcome from the proposed research, the following impact or significant changes would be required for adoption of the process in place of conventional smelting processes:

(a) Neutral roasting with sulfur recovery instead of oxidative roasting would be required.

(b) Hydrogen sulfide production via the aqueous acid dissolution of the soluble iron sulfides as produced in (a) above, together with

(1) conversion of H_2S to elemental sulfur,

(2) regeneration of the acid and recovery of fairly pure iron oxide which should be marketable and

(3) recovery of potential dissolved copper.

(c) Reverberatory furnaces would be eliminated.

(d) Converters and the converting process would be changed to accommodate the very rich and very low iron content concentrates.

(e) SO_2-containing gases from the converters would be combined with excess H_2S in step (b-1) above to produce marketable elemental sulfur.

3. Advantages

Although firm advantages cannot be claimed without confirmation resulting from further laboratory work, some apparent significant advantages can be visualized on the assumption that hoped-for results of the laboratory work will be realized.

(a) For those concentrates characterized by high pyrite content, a substantial fraction of the total sulfur will be obtained as elemental sulfur from the neutral roasting step.

(b) The hydrogen sulfide obtained in the acid dissolution of the pyrrhotite produced in (a) above would be more than enough to react with the sulfur dioxide obtained from the converting step. If the quantity is marginal, it is probable that more pyrite could be retained with the copper at the concentrator. It is understood that most sulfide concentrators are operated to reject pyrite which exists in the ore.

(c) The essentially iron-free copper concentrate obtained after acid treatment and anticipated to contain over 50% copper, would be unique as a feed to most conventional converters. Although the converting procedure would probably be changed, the changes could result in very high capacity from a converter, with a greatly reduced requirement for slag-forming agents such as silica and limestone. Electro-converting may also be attractive with concurrent production of a rich and low-volume sulfur dioxide off-gas.

(d) No reverberatory furnaces with their high fuel and slag-forming material requirements would be needed. At present the reverberatories comprise the principal source of low-strength, large-volume sulfur dioxide-containing waste gases.

(e) Waste heat from neutral roasters and converters may contribute substantially to the evaporation economy of the acid regeneration step. The net heat (fuel) requirements for this alternative smelting process may even be less than that for a conventional smelter.

(f) The lower total off-gas load and minimum concentration of waste sulfur dioxide in these off-gases may make unnecessary the requirement for the costly very tall stacks at smelters, with their attendant and also costly electrostatic precipitators.

(g) The process should yield high-quality sulfur and iron oxide by-products from which significant sales value should be realized.

REFERENCES

1. Regnault, V., "Research Relative to the Action of Water Vapor on Metals and Metal Sulfides," Annales de Chim. et de Phys., 378-88 (1836).

2. Gautier, M. A., "Effect of Water Vapor at Red Heat on Sulfides, Formation of Native Metal - Application to Volcanic Phenomenon," Comptes rendu, 94, 1465-70 (1906).

3. McLarty, J. A., U.S. Patent 987,156, "Treating Nickel Sulfide Ores With Steam Under Pressure Without Roasting."

4. Hall, W. A., "A New Desulfurization Method, Eng. Mag., 45 876-8 (1913).

5. Wilson, A. W. G., "Hall Process for Desulfurizing Ores," Summary Report. Mines Branch, Canada Dept. Mines, 27-30 (1913).

6. Hall, W. A., U.S. 1,083,247, "Process for the Production of Sulfureted Hydrogen" (1913).

   U.S. 1,083,248, "Process for the Extraction of Sulfur from Metallic Sulfides" (1913).

   U.S. 1,083,249, "Process for the Production of Sulfur" (1913).

   U.S. 1,083,250, "Process for Recovering Sulfur" (1913).

   U.S. 1,083,251, "Process of Obtaining Sulfur from Sulfides" (1913).

   U.S. 1,083,252, "Process of Desulfurizing and Briquetting Ores" (1913).

   U.S. 1,083,253, "Process for Extracting Sulfur" (1913).

7. Bacon, R. F., U.S. 1,235,953, "Production of Hydrogen Sulfide" (1917).

   U.S. 1,731,516, "Recovery of Sulfur from Iron Pyrites" (1929).

   U.S. 1,782,226, "Recovery of Sulfur from Iron Pyrites" (1930).

   U.S. 1,939,033, "Recovery of Sulfur" (1933).

8. Leese, L. F. W., U.S. 1,947,529, "Sulfur Recovery from Sulfides" (1932).

9. deJahn, F. W., U.S. 2,851,349, "Obtaining Iron and Sulfur from Iron Sulfide Ore Without Fusion" (1958).

10. Woltereck, H. C., Ger. 275,503, "A Process of Separating Zinc and Other Metals Oxidizable by Steam."

11. Arnold, F. P. and Wideman, G. F., U.S. 1,104,239 and 1,104,287, "Removing Sulfur and Arsenic with Alkalies and Superheated Steam."

12. Hooten, W. M., Brit. 18,007, "Treatment of Metallic Sulfides with Steam Mixed with Other Gases."

13. Perkins, W. G., U.S. 1,478,295, "Selective Treatment of Ores Containing Fe Pyrite with Steam."

14. Petersen, E. F. and Field, S., Brit. 206,207, "Sulfide Ores are Treated with Steam to Recover H_2S with a Limited Quantity of Air."

15. Lindemann, L., Norw. 53,577, "Freeing Ores and Oxides from Sulfur with Hydrogen and Superheated Steam."

16. Goetz, C., Ger. 636,773 (Also Ger. 589,448) "Treatment of Sulfidic or Arsenical Ores with Steam and a Reducing Gas."

17. Horakova, J. and Rajecky, F., Czech., 90,809, "Separating Elements from Ores by Roasting in Steam and Inert Gases."

18. Birkeland, K., U.S. 1,121,606, "Process for Treating Sulfid Ores and Other Metallic Sulfids" (1914).

19. Millar, W. S., U.S. 1,567,378, "Desulfurizing Sulfide Iron Ores with Sulfur Dioxide."

20. Thompson, F. C. and Tilling, N., "The Desulfurization of Ores," J. Soc. Chem. Ind., 43, 27-46T (1924).

21. Ruhrmann, J., "Elimination of Sulfur from Spathic Iron Ore by Roasting," Stahl u. Eisen, 46, 1118-9 (1926).

22. Grunnert, E., "Desulfurization of Coal," J. Pract. Chem., 122, 1-120 (1929).

23. Kirillov, I. P., and Makarov, M. M., "Preparation of H_2S from Pyrite by the Action of Water Vapor," J. Applied Chem. (USSR) 19, 71-8 (1946).

24. Rama Murthi, R. K., "Decomposition Studies of the Iron Pyrites of Bihar with a View to Their Utilization," J. Indian Inst. Sci., 36, 32-5 (1954).

25. Inaba, T. and Kono, K., "Research on the Reaction of Iron Sulfides," J. Chem. Soc. Japan, 57, 1-21 (1954).

26. Inaba, T., and Kono, K., "Mechanism of Wet Roasting of Pyrrhotite, J. Chem. Soc. Japan, 58, 952-9 (1955).

27. Budon, V. D., "Interaction Between Water Vapor and Metal Sulfides," Bulletin from the Institute of Metallurgy and Enrichment, Academy of Sciences of the Kazhak Socialist Republic, 2, 36-46 (1960).

28. Uno, T., "Equilibrium Between FeS and Mixed Gas of H_2 and H_2O," Mem. Fac. Eng. Hokaido Univ., 9, 84-90 (1952).

29. Diev, N. P., Paduchev, V. V., and Toporova, V. V., "Use of Steam in the Bessemerization of Copper Mattes in Oxygen, Acad of Sci. of the Soviet Union, Reports from Eastern Branch, 6, 79-84 (1957).

30. Frey, W. H., "Production of Hydrogen Sulfide (Thermodynamics)," Chimia, 2, 265-88 (1948).

31. Park, C. F. Jr., "Hydrothermal Experiments with Copper Compounds, Econ. Geol., 26, 857-83 (1931).

32. Kunda, W., Mackiw, V. N. and Rudyk, B., "Iron and Sulfur from Sulfidic Iron Ores," The Canadian Mining and Metallurgical (CIM) Bulletin for July, 1968, pp. 819-835.

33. Mehta, B. R., and O'Kane, P. T.,"Economics of Iron and Sulfur Recovery from Pyrites," ibid pp. 836-845.

34. Graves, J. T., and Heath, T. D., "Sulfur Dioxide and Sulfur from Fluosolids Systems," presented at a meeting of the American Institute of Mining, Metallurgical and Petroleum Engineers in Los Angeles, Calif., Feb. 2, 1967. Technical Preprint No. 7008-P by Dorr-Oliver Incorporated.

35. Kassila, K., "Flash Smelting Process," a paper presented at the "Seminar on Copper Production and Group Study Tour of Copper Plants in the USSR," Tashkent, USSR 1-15 October, 1970, United Nations Industrial Development Organization.

36. Guccione, E., "From Pyrite: Iron Ore and Sulfur Via Flash Smelting," Chemical Engineering, Feb. 14, (1966), pp. 122-24.

37. Rosenqvist, T., J. Iron Steel Inst., 175, pp. 37-56 (1954).

38. Rosenqvist, T., "Thermochemical Data for Metallurgists," Tapir Forlag (1970).

39. Rosenbaum, J. B. et. al., U.S. Bureau of Mines Report of Investigations (RI-7774), "Sulfur Dioxide Emission Control by Hydrogen Sulfide Reaction in Aqueous Solution--the Citrate System," 1973.

40. Henderson, J. M., "Reduction of SO_2 to Sulfur," Mining Congress Journal, March 1973, pages 59-62.

41. Levy, S. I., U.S. Patents 1746313 (1930), "Treatment of Copper-Rich Material," and 1980809 (1934), "Production of Ferric Oxide and Other Metal Values from Pyrites."

42. PB-184885, "Systems Study for Control of Emissions--Primary Non-Ferrous Smelting Industry--Volume II," Arther G. McKee & Co., June 1969.

43. Levenspiel, O., "Chemical Reaction Engineering," John Wiley and Sons, Inc., (1962), page 367.

44. Dryden & Furlow, "Chemical Engineering Costs," (1966).

APPENDIX

WORLD PRIMARY COPPER SMELTERS AND SMELTING CAPACITY

WORLD PRIMARY COPPER SMELTING CAPACITY

COUNTRY	COMPANY	SMELTER	1971 CAPACITY (METRIC TONS)	POTENTIAL CAPACITY (METRIC TONS)*	DATE
EUROPE					
Austria	Montanwerke Brixlegg G.m.b.h.	Brixlegg	12,000	18,000	1975
Belgium	Metallurgie Hoboken	Hoboken	45,000		
	Metallo-Chimique S.A.	Beerse	17,000		
Bulgaria	George Damijanov Copper	----	25,000		
	Medet Copper Works	----	20,000		
Finland	Outokumpu Oy	Harjavalta	50,000		
France	Societe Francais d/Affinage du Cuivre	Poissy	11,000		
Germany F.R.	Norddeutsche Affinerie	Hamburg	75,000	100,000	1972
	Berliner Kupfer-Raffin G.m.b.H.	Berlin-Willmersdorf	15,000		
	Duisburger Kupferhutte	Duisburg	30,000		
	Metallhutte Kall G.m.b.H.	Kall (Eifel)	20,000		
	Huttenwerke Kayser A.G.	Lunen	42,000		
Italy	AMMI	Aussa-Corno	----	60,000	1975
Netherlands	Alcu Metaal N.V.		10,000		
Norway	Orkla Metal Aktieselskap	Thamshamm	4,000		
	A/S Sulitjelma Gruber	Sulitjelma	6,000		
Rumania	Combinatul Chimico	Bor	----	200,000	n.a.
	Metallurgic "Georghin Dej"	Bara Mare	----		
Spain	Rio Tinto Patino S.A.	Huelva	40,000	75,000	1972-73
	Rio Tinto Patino S.A.	Rio Tinto	18,000		
	Electrolysis del Cobre S.A.	Barcelona	15,000		
	Industria Reunidas Minera-Metalurgicas S.A.	Asua	18,000		
Sweden	Boliden Aktiebolag	Ronnskar	65,000		
Yugoslavia	Rudarsko Tapionicarsk Bazen Bor	Bor	105,000	140,000	1974
		TOTAL	643,000		

USSR

		1965 CAPACITY (METRIC TONS)			
Government	Pechenga (Kola Peninsula)	12,000			
	Monchegorsk (Kola Peninsula)	11,000			
	Munusinsk (Central Siberia)	50,000			
	Pitkaryanta (Karelo-Finnish Republic)	10,000			
	Mednogorsk (Urals)	55,000		100,000	?
	Balkhash (Kajakhatan)	125,000			
	Dzezhkazgan-Karsakpai Combine (Kazakhsdan)	200,000		300,000	?
	Almalyk (Uzbekistan)	100,000			
	Norilsk (North Central Siberia)	5,000			
	Srednyevralsk (Urals)	50,000			
	Krasnovralsk (Urals)	45,000			
	Kirovgrad (Urals)	25,000			
	Yuspenskiy (Kazakhstan)	5,000			
	Karabash (Urals)	30,000			
	Blyava (Urals)	50,000			
	Sibay (Urals)	25,000			
	Kadzharan (Azerbaidzhan)	25,000			
	Zangezur (Azerbaidzhan)	10,000			
	Allaverdi (Armenia)	15,000			
	TOTAL	848,000			
		1,085,000**	(1971)	1,389,000**	1977

AFRICA					
Rhodesia	Messina-Rhodesia Smelting & Refining Co., Ltd.	Alaska	23,000		
S. African Rep.	Messina Transvaal Development Co.	Messina	20,000		
	Palabora Mining Co., Ltd.	Palabora	89,500		
	O'OKiep Copper Co., Ltd.	Nababeep	40,000		
S. W. Africa	Tsumeb Corporation, Ltd.	Tsumeb	35,000		
Uganda	Kilembe Mines Ltd.	Jinja	18,000		
Zaire	Gecamines	Likasi-Shituru	185,000	170,000	1972
	Gecamines	Lubumbashi	125,000	155,000	1973
	Gecamines	Liulu	125,000		
Zambia	Roan Consolidated Mines	Mufulira	230,000	247,000	1973
	Roan Consolidated Mines	Luanshya	122,000		
	NCCM (Nchanga Consolidated Copper Mines)	Chingola	420,000	500,000	1974-75
	NCCM	N'Kana			
		TOTAL	1,432,500		
ASIA					
India	Indian Copper Corp.	Moubhander	10,000		
	Hindustan Copper Corp.	Khetri	----	31,000	1974
	Hindustan Copper Corp.	Ingladhal	----	n.a.	n.a.
Iran	Government	Sar Chesmeh	----	n.a.	n.a.
Japan	Mitsubishi Metal Mining (2 plants)	Naoshima	146,000		
	Onahama Smelting & Refining	Onahama	90,000	288,000	n.a.
	Furukawa Mining Co.	Ashio	38,000		
	Dowa Mining Co.	Kosaka	54,000		
	Dowa Mining Co.	Okayama			
	Hibikyodo Smelting Co.	Tawanao	----	84,000	1972
	Mitsui Mining Co.	Hibi	47,000		
	Nippon Mining Co.	Hitachi	60,000	120,000	1972
	Nippon Mining Co.	Saganoseki	120,000	240,000	n.a.
	Sumitomo Metal Mining Co.	Kunitomi	16,000		
	Sumitomo Metal Mining Co.	Besshi	108,000		
	Sumitomo Metal Mining Co.	Toyo	96,000		
	Rasa Industry	Miyaki	24,000		
	Toho Zinc	Onahama	18,000		

Korea S.	Government	Musan	----	15,000	
Philippine Republic	Government	----	----	60-100,000	1974
Turkey	Etibank	Murgul	11,000		
	Etibank	Ergani	19,000		
	Black Sea Copper Mines	Samsun	----	n.a.	n.a.
		TOTAL	857,000		
NORTH/CENTRAL AMERICA					
Canada	Inco	Copper Cliff	170,000	200,000	1974-75
	Inco	Coniston			
	Falconbridge Nickel Mines, Ltd.	Falconbridge (Ont.)	30,000		
	Gaspe Copper Mines, Ltd.	Murdochville (Que.)	63,000		
	Hudson Bay Mining & Smelting Co.,Ltd.	Flin Flon	45,000		
	Noranda Mines, Ltd.	Noranda (Que.)	204,000	254,000	1973-74
Mexico	Asarco Mexicana S.A.	San Luis Potosi	30,000	42,000	n.a.
	Asarco Mexicana S.A.	La Cavidad	----	n.a.	n.a.
	Campania Minera de Cananea S.A.	Cananea	37,000		
	Cia Minera Macocozac S.A.	Conception del Oro	25,000		
	Cia Minera de Santa Rosalia	Santa Rosalia	10,000		
Puerto Rico	Ponce Mining (Kennecott-Arnax)	Ponce	----	n.a.	n.a.
U.S.A.	American Metal Climax, Inc.	Cartaret	40,000		
	Asarco	Tacoma	105,000		
	Asarco	El Paso	77,000		
	Asarco	Hayden	80,000		
	Anaconda	Anaconda	170,000		
	Inspiration Consolidated	Miami	70,000		
	Kennecott Copper Corp.	Garfield (Utah)	300,000		
	Kennecott Copper Corp.	Hurley (Chino)	100,000		
	Kennecott Copper Corp.	McGill (Nev.)	100,000		
	Kennecott Copper Corp.	Hayden (Ray)	100,000		
	Magma	San Manuel	85,000	135,000	1974
	Phelps Dodge	Douglas	140,000		
	Phelps Dodge	Morenci	80,000		
	Phelps Dodge	Ajo	70,000		
	Phelps Dodge	Southern Hidalgo	----	91,000?	1974
	Copper Range	White Pine	81,000		
	Bagdad (electrowinning)	Arizona	6,500		
		TOTAL	2,218,500		

SOUTH AMERICA					
Brazil	Pignatari Group	Caraiba	----	35,000	1973?
	Pignatari Group	Caraiba	----	70,000	1976?
Chile	Andes Copper Mining Co.	Potrerillos	100,000		
	Chile Exploration	Chuquicamata	319,000		
	Sociedad Minera El Teniente S.A.	Caletones	255,000		
	Cia Minera Disputada de las Condes S.A.	Chagres	30,000		
	ENAMI	Las Ventanas	43,000	100,000	n.a.
	ENAMI	Paipote	33,000	n.a.	n.a.
	Mantos Blancos	Mantos Blancos	30,000		
Peru	Southern Peru Copper Corp.	Ilo	160,000		
	Cerro de Pasco Corp.	La Oroya	50,000		
		TOTAL	1,020,000		
AUSTRALIA					
	Mt. Isa Mines, Ltd.	Mt. Isa	100,000	150,000	1974
	Electrolytic Refining & Smelting Co.	Port Kembb	40,000		
	Peko	Tennant Creek	----	25,400	1972
		TOTAL	140,000		
		GRAND TOTAL 1971	7,369,100		
		GRAND TOTAL 1977	8,899,800	(1,530,700 increase) = >21% increase in next 6 yr = 3.5%/yr growth	

* For major increases
** Assumes 4%/yr increase in capacity from 1965 to 1977

Data are obtained from the following sources:

(1) Survey of Free World Increases in Copper Mine, Smelter and Refinery Capacities 1971-1977, International Wrought Copper Council, April 1972.

(2) Nonferrous Metal Works of the World, First Edition 1967, H. G. Cordero, Editor.

(3) A. D. McMahon, Copper--A Materials Survey, U. S. Dept. of the Interior, Bureau of Mines IC-8225, 1965.

(4) Metal Statistics 1971, 64th Annual Edition, The American Metal Market Co.

(5) Yearbook of the American Bureau of Metal Statistics, 50th Annual Issue for the year 1970, Issued June 1971.

TECHNICAL REPORT DATA
(Please read Instructions on the reverse before completing)

1. REPORT NO. EPA-650/2-74-085-a	2.	3. RECIPIENT'S ACCESSION NO.
4. TITLE AND SUBTITLE Control of Sulfur Dioxide Emissions from Copper Smelters; Volume I--Steam Oxidation of Pyritic Copper Concentrates		5. REPORT DATE September 1974
		6. PERFORMING ORGANIZATION CODE
7. AUTHOR(S) C. A. Rohrmann, H. T. Fullam, and F. P. Roberts		8. PERFORMING ORGANIZATION REPORT NO.
9. PERFORMING ORGANIZATION NAME AND ADDRESS Battelle Pacific Northwest Laboratories Battelle Boulevard Richland, Washington 99352		10. PROGRAM ELEMENT NO. 1AB013; ROAP 21ADC-056
		11. CONTRACT/GRANT NO. 68-02-0025
12. SPONSORING AGENCY NAME AND ADDRESS EPA, Office of Research and Development NERC-RTP, Control Systems Laboratory Research Triangle Park, NC 27711		13. TYPE OF REPORT AND PERIOD COVERED Final; 6/71-7/72
		14. SPONSORING AGENCY CODE
15. SUPPLEMENTARY NOTES		

16. ABSTRACT The report presents results of a laboratory study on production of hydrogen sulfide by reaction between water vapor at 700-800°C and iron sulfide contained in neutral-roasted pyritic copper ore concentrate. Hydrogen sulfide thus obtained was to be reacted with sulfur dioxide emitted from copper smelter converters. In this manner sulfur emissions from a smelter could be controlled and recovered in the form of elemental sulfur. It was determined that the above treatment of copper ore concentrate could yield necessary quantities of hydrogen sulfide. The concentration of yielded hydrogen sulfide, however, was limited in the stream to less than 1.0 percent by reaction equilibrium conditions, thus implying excessively high energy requirements and causing this control approach to be significantly more expensive than known conventional processes. Alternative means of hydrogen sulfide production are dealt with in the second volume of the report.

17. KEY WORDS AND DOCUMENT ANALYSIS

a. DESCRIPTORS	b. IDENTIFIERS/OPEN ENDED TERMS	c. COSATI Field/Group
Air Pollution	Air Pollution Control	13B
Sulfur Dioxide	Stationary Sources	07B
Copper Ores	Steam Oxidation	
Smelters	Pyritic Copper	11F
Smelting		13H
Hydrogen Sulfide		

18. DISTRIBUTION STATEMENT Unlimited	19. SECURITY CLASS *(This Report)* Unclassified	21. NO. OF PAGES 74
	20. SECURITY CLASS *(This page)* Unclassified	22. PRICE

EPA Form 2220-1 (9-73)