EPA-650/2-75-042

June 1975

Environmental Protection Technology Series

DEMONSTRATION OF REDUCED HYDROCARBON EMISSIONS FROM GASOLINE LOADING TERMINALS

U.S. Environmental Protection Agency
Office of Research and Development

EPA-650/2-75-042

DEMONSTRATION OF REDUCED HYDROCARBON EMISSIONS FROM GASOLINE LOADING TERMINALS

by

D.C. Walker, H.W Husa,
and I. Ginsburgh

Amoco Oil Company
P. O. Box 400
Naperville, Illinois 60540

Contract No. 68-02-1314
ROAP No. 21AFD-021
Program Element No. 1AB015

EPA Project Officer: William J. Rhodes

Control Systems Laboratory
National Environmental Research Center
Research Triangle Park, North Carolina 27711

Prepared for

U. S. ENVIRONMENTAL PROTECTION AGENCY
OFFICE OF RESEARCH AND DEVELOPMENT
WASHINGTON, D. C. 20460

June 1975

EPA REVIEW NOTICE

This report has been reviewed by the National Environmental Research Center - Research Triangle Park, Office of Research and Development EPA, and approved for publication. Approval does not signify that the contents necessarily reflect the views and policies of the Environmental Protection Agency, nor does mention of trade names or commercial products constitute endorsement or recommendation for use.

RESEARCH REPORTING SERIES

Research reports of the Office of Research and Development, U.S. Environmental Protection Agency, have been grouped into series. These broad categories were established to facilitate further development and application of environmental technology. Elimination of traditional grouping was consciously planned to foster technology transfer and maximum interface in related fields. These series are:

1. ENVIRONMENTAL HEALTH EFFECTS RESEARCH
2. ENVIRONMENTAL PROTECTION TECHNOLOGY
3. ECOLOGICAL RESEARCH
4. ENVIRONMENTAL MONITORING
5. SOCIOECONOMIC ENVIRONMENTAL STUDIES
6. SCIENTIFIC AND TECHNICAL ASSESSMENT REPORTS
9. MISCELLANEOUS

This report has been assigned to the ENVIRONMENTAL PROTECTION TECHNOLOGY series. This series describes research performed to develop and demonstrate instrumentation, equipment and methodology to repair or prevent environmental degradation from point and non-point sources of pollution. This work provides the new or improved technology required for the control and treatment of pollution sources to meet environmental quality standards.

This document is available to the public for sale through the National Technical Information Service, Springfield, Virginia 22161.

Publication No. EPA-650/2-75-042

CONTENTS

	Page No.
Objectives	1
Facility Design	1
Cost Factors	4
Test Program	4
Test Results	8
Comparison to Other Systems	19
Conclusions	19

Figures

Figure 1 - Schematic of Oxidation System	2
Figure 2 - P & T Diagram of System	3
Figure 3 - Flow Schematic	6

Tables

Table I - Special Instrumentation	7
Table II - Reid Vapor Pressures	8
Table III - Gasoline Vapor Concentration	9
Table IVA - Oxidizer Feed Test Results	11
Table IVB - Analysis of Air-Vapor Feed to Oxidizer	12 to 16
Table V - Oxidizer Effluent Test Results	17
Table VI - Oxidizer Operation Test Results	18
Appendix I - Daily Log of Truck Loading	21
Appendix II - Analysis of Vapor Collecting Effectiveness	25
Appendix III - Design Manual	29

OBJECTIVES

This contract involved test work to demonstrate the effectiveness of hydrocarbon oxidation for reducing emissions from a gasoline truck loading terminal located at Philadelphia, Pennsylvania. The program's major objectives were in the areas of control efficiency, operational characteristics, and comparison with other known systems. The control efficiency was measured by determining the emissions from tank truck loadings, by determining the emissions from the high temperature oxidizer, and by estimating emissions from all other sources. Operational characteristics were determined with safety and reliability being of primary importance. Cost effectiveness of this system was compared to other known technology for disposal of hydrocarbon emissions, both for this specific size system and extrapolations to smaller and larger systems, and for the climatic conditions found at this location and other locations in this country.

FACILITY DESIGN

The system installed at the truck loading terminal at Philadelphia is shown diagrammatically in Figure 1. Air displaced from the truck compartments during liquid gasoline fillings is collected at the loading rack. The facility employs either top or bottom loading, thereby permitting the terminal to service all existing types of trucks. The air-gasoline vapor mixture is conducted from the rack to the vapor tank which smooths out the peak flows encountered during loading and provides storage for the gases prior to disposal. The mixed gases in turn are drawn from the vapor tank by a blower, compressed to thirteen inches of water pressure and fed to the oxidizer. Here they are burned in the presence of sufficient air to insure 98% or better conversion to carbon dioxide and water. Burning temperature is maintained at or below 1500°F to limit formation of nitrogen oxides.

Oxidizer operation is controlled by the volume of gas in the vapor tank, starting up at about 30% capacity and shutting down at 10% capacity. The oxidizer is ignited by a propane pilot and includes temperature sensing and flame reading controls to insure that the burn sequence will fail safe. There are also provisions to insure against flashback from the oxidizer into either the vapor tank or to trucks connected at the loading racks.

The oxidizer is a simple, reliable, commercial gas furnace, which turns on and operates as needed. However, if it is necessary to shut down the oxidizer during tank truck loading, and if the vapor tank fills beyond its capacity of 10,000 cubic feet (about 8 truck loads), excess vapors are vented to the air. So far, truck loading rate has not exceeded this capacity.

Details of this process flow, start-up procedure, normal operating procedure, cold-weather procedure, and shutdown procedure are given in the attached Design Manual (Appendix III). Details of the entire system are given in the P & I Diagram (Figure 2).

FIGURE 1

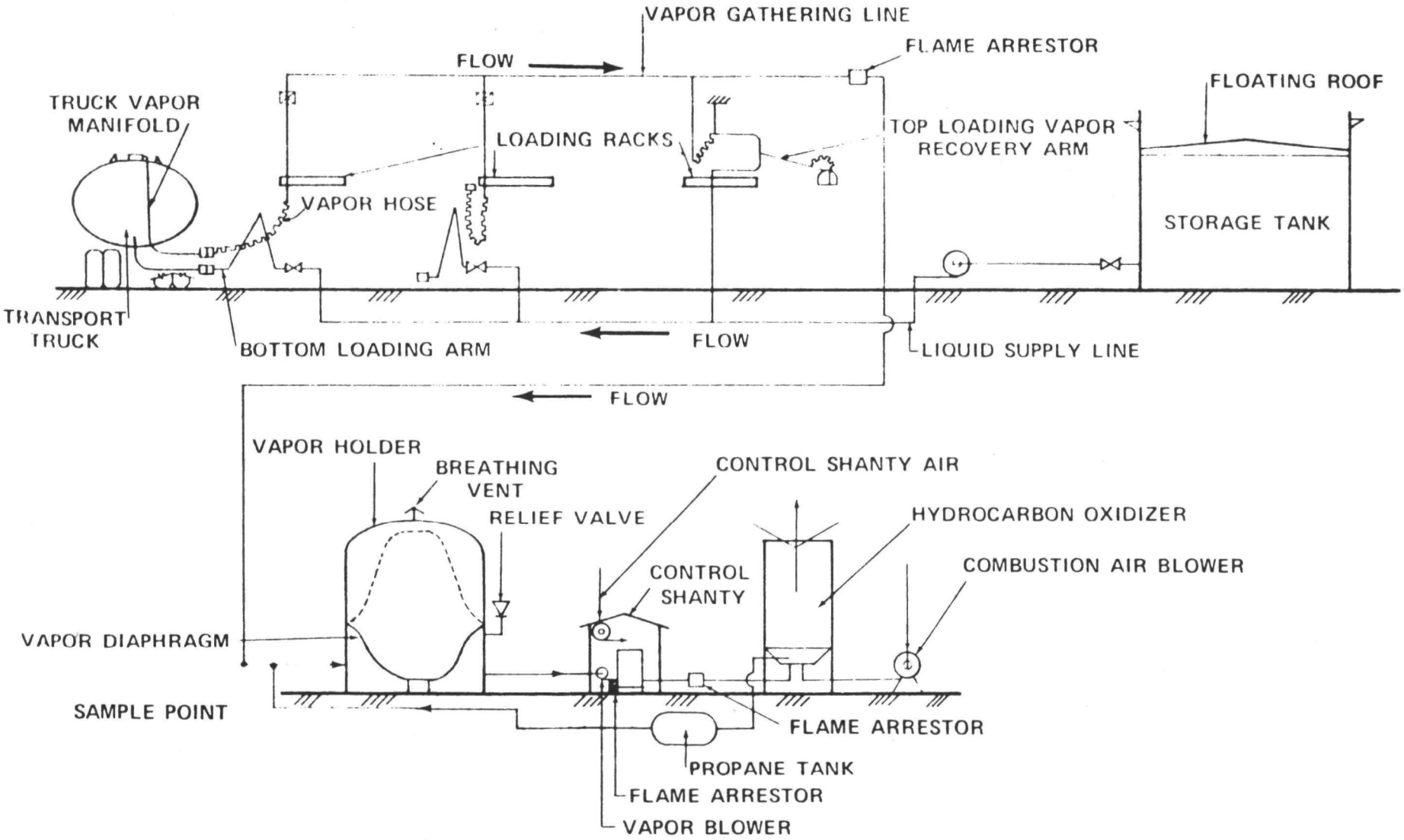

SCHEMATIC-VAPOR GATHERING AND OXIDATION SYSTEM
PT. BREEZE, PA. TERMINAL

Figure 2

P & I Diagram

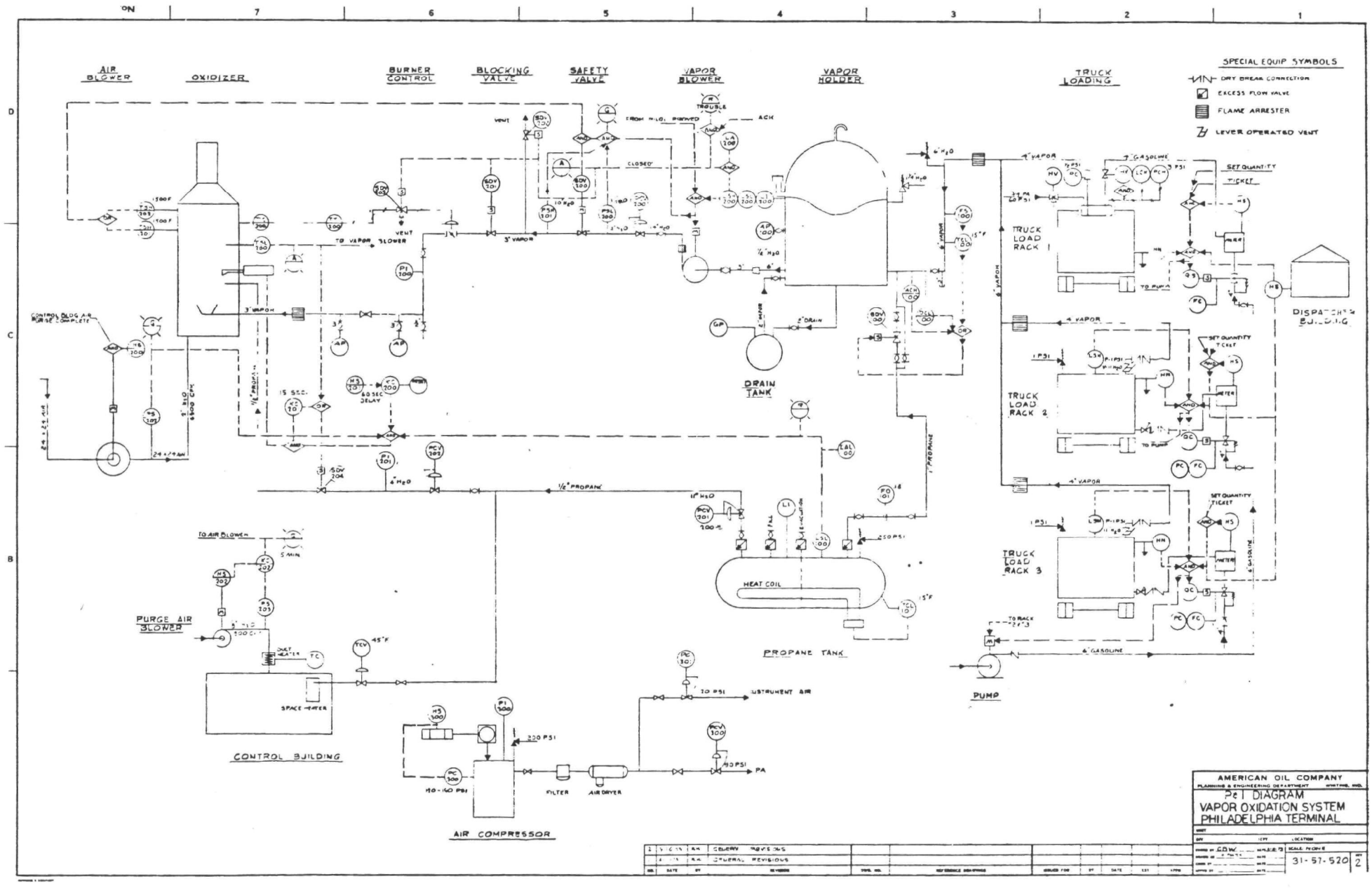

COST FACTORS

The capital costs for the vapor control and oxidation system at the Philadelphia Terminal were as follows:

Item	Cost
Truck Rack Piping, Product	$35,630
Vapor Piping	20,411
Vapor Holder	26,610
Air Control System	4,300
Hydrocarbon Furnace	21,235
Foundation and Yardwork	17,111
Furnace Piping	700
Propane System	3,844
Control House	2,100
Condensate Tank	477
Painting	2,580
Electrical	15,444
Engineering	4,218
Beckman Oxygen Analyzer	5,834
	$160,494 total

The following are the annual oxidizer operating costs experienced by the Philadelphia Terminal:

Propane Consumption	3,600 gals.
Electric Consumption	36,000 KWH
Manpower Routine Checks	300 manhours
Maintenance	$3,000

TEST PROGRAM

The general objective of the test program was to evaluate performance under widely varying conditions of temperature and loading. Seasonal temperatures in the Philadelphia area vary widely, causing wide variations (3-50%) in the hydrocarbon content of the incoming air. The varying number of trucks being loaded at a given time results in substantial variations in the amount of hydrocarbons to be handled. Special attention was given to operation of the propane safety system. Propane is added to maintain all parts of the system above the upper explosive limit, thus eliminating the possibility of an explosion.

A detailed evaluation of performance was done at four different periods during the year to cover spring, summer, fall, and winter operation. The emphasis on seasonal variation was necessary because of changes in temperature and variations in the vapor pressure of the gasoline supplied at different times of the year. As a consequence, the displaced gases from the truck

loading operation can vary both in hydrocarbon content and hydrocarbon distribution. Still another factor affecting the hydrocarbon content of the displaced gases is the method of truck loading either bottom-loading and overhead splash-filling.

The streams involved are shown in Figure 3, a simplified schematic diagram of the oxidation system. Instrument locations are identified by number (also see Table I) and flow streams by letter. In addition to the measurements by the instruments listed in Table I, the normal measurements at the facility were also necessary, e.g., amount of gasoline shipped each day, number of trucks, oxidizer-control instrument readings, etc. Wherever possible, measurements were continuously recorded on a data logger. By careful planning, a maximum of required information was obtained.

There are two main streams (Figure 3) feeding the oxidizer (B and C) and one exhaust stream (D). Stream B comes from the vapor holder and is mixed with air (stream C) in the oxidizer. There, the hydrocarbons are oxidized and the products emitted through the exhaust stack stream D. As a safety precaution, stream A was used when necessary to add propane to raise the hydrocarbon concentration in the vapor holder above the upper flammable limit.

For instrumentation, a Beckman oxygen meter and a Ranarex density balance were used in location 1 to monitor the total hydrocarbon content from the trucks to the vapor holder. A dry gas meter was used at location 5 to measure the amount of propane added to the vapor holder. The propane passing location 6 to the pilot light also was measured (with a dry gas meter) because it contributes to the total input to the oxidizer.

At location 2, the total mass flow was determined with a dry gas meter and the hydrocarbon content with a flame ionization detector (FID). The amount of air in stream B was calculated from the difference between total mass and hydrocarbon mass. At location 3, a pitot tube was used to measure the amount of air to the oxidizer. Temperature and humidity also were determined when appropriate.

Characteristics of the effluent from the oxidizer, stream D, were measured at location 4. The total mass flow was measured to verify the use of measured mass input for calculated mass output. Thereafter, the mass of the effluent was calculated from the various input streams. The total hydrocarbon content of the effluent was obtained with FID while NDIR gave the CO concentration. NO_x concentrations were expected to be low, and periodic wet chemical measurements were sufficient. Periodic determination of the water content of the stream provided additional information, and the temperature of the stream was continuously recorded.

In order to provide adequate correlations for supporting the test objectives, data in addition to the above were recorded and summarized. These were: (1) the number of times propane was added to the vapor holder and the reason, (2) number and type or trucks loaded, (3) total gallonage

Figure 3

FACILITY SCHEMATIC

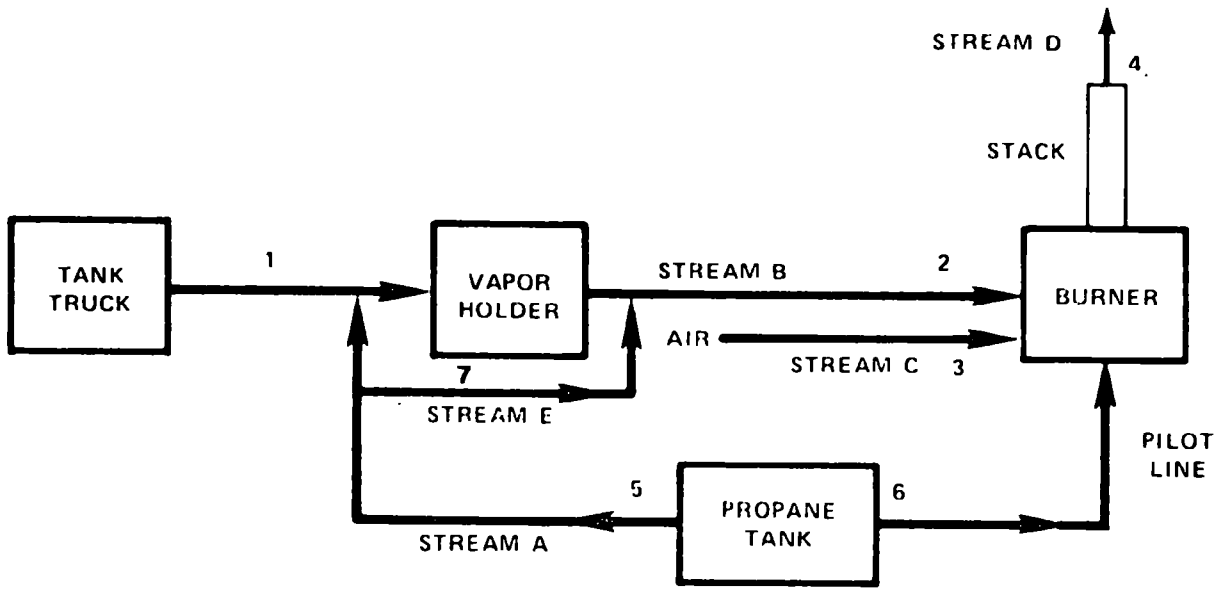

NOS. 1–6 DENOTE LOCATIONS OF INSTRUMENTATION LISTED IN TABLE I

TABLE I

SPECIAL INSTRUMENTATION

Location	Stream	Parameter	Measurement	Recorder No.[a]	Information
1	---		Ranarex density balance	1	
		hydrocarbons	Beckman (O_2 meter)	1	hydrocarbon content
		constituents	Gas chrom.	---	species present (periodic)
5	Fuel A	propane	Dry gas meter	2 (b)	propane mass added from tank
7	Fuel E	propane	Dry gas meter	2 (b)	propane added directly to burner
6	Fuel A	propane	Dry gas meter	1 (b)	propane mass added from tank
2	Fuel B	stream flow	Dry gas meter	1 (b)	total stream mass flow
		hydrocarbons	FID with dilution		total hydrocarbons
		air	---	---	mass of air from difference between total mass and hydrocarbons
		constituents	Gas chrom.	---	species present (periodic)
3	Air C	air	pitot tube		mass air
4	Out Effluent D	steam flow	---	---	total mass from input
		steam flow	pitot tube	---	total mass flow (initially only)
		hydrocarbons	FID	1	total hydrocarbons
		CO	NDIR	2	CO concentration (attempt continuous)
		NO_x	dry chem. (c)	---	NO_x concentration (periodic)
		water	psychrometer	---	water concentration (periodic)
		temperature	temp. probe	2	exit flue gas temperature

(a) If a magnetic tape system is also used, these measurements along with any other appropriate variables will be recorded on tape also.

(b) Optional.

(c) As NO_2; UNICO Model 400 gas detector using Kitagawa tubes.

of gasoline loaded, (4) total vapor collected, (5) total amount of propane used, (6) total air combusted, (7) total emissions, (8) cost of electricity, (9) cost of propane, (10) cost of operating labor (man-hours), (11) cost of repairs, (12) nonoperating time due to pollution control problems, and (13) any other data that proved informative. In addition to collecting data during the normal operating routine of the facility, it also was necessary to periodically alter operations in order to meet the test objectives.

Each seasonal test period lasted about a week. During nontest periods, instrument readings were recorded continuously. In order to eliminate and isolate as many unknown effects as possible, each test period included baseline tests. These baseline tests consisted of several preset propane-air concentrations used as input to the oxidizer. The vapor holder was bypassed and propane was added directly to the burner (stream E), together with air (stream C). During the test periods, operations were planned to give maximum variations in controllable parameters. For example, the vapor holder was filled with vapors obtained from top loading trucks only, and then bottom loading trucks only.

All of these tests and data were appropriately correlated and interpreted to meet the objectives of the program. These objectives fall into three main categories: control efficiency, operability and cost effectiveness. Under control efficiency are the effects of hydrocarbon feed content, ambient temperature, and gasoline vapor pressure (seasonal gasoline variations, flow rates, etc.) on emissions. Operability encompasses the safety and reliability of the propane addition system under varying flow rates, hydrocarbon compositions, temperatures, etc. The cost effectiveness was determined by the initial cost, the maintenance cost, and operating cost in relation to the cost of alternative control systems. Finally, a determination was made as to the applicability of this system to systems of other size and in other climatic and geographical locations.

TEST RESULTS

The following gasoline stocks were loaded at the terminal during the four seasonal test periods:

TABLE II
Reid Vapor Pressures

Stock	Reid Vapor Pressure, psi			
	Fall	Winter	Spring	Summer
Leaded Regular	11.5-12.2	13.4	12.2	10.4
Unleaded Regular	12.5-12.8	13.3	11.4	9.1
Premium	12.4	13.4	13.1	10.4

The gasoline vapor content of the mixed feed gas to the oxidizer during the test periods is shown below:

TABLE III
Gasoline Vapor Concentration

Test Period	% Saturation	Ambient Temperature, °C
Normal Terminal Operation (Top-Loaded and Bottom-Loaded Trucks)		
Fall	78	4.8
Winter	67	4.6
Spring	60	17.2
Summer	93	15.0
Top-Loaded Trucks		
Fall	100	7.2
Winter	100	-7.8
Spring	89	13.4
Summer	94	21.7
Bottom-Loaded Trucks		
Fall	75	4.5
Winter	--	--
Spring	73	10.0
Summer	79	23.9

The gases processed by the oxidizer were at a significantly higher vapor content during the spring and summer tests because of the higher ambient temperature. The vapor content was also higher for top-loaded trucks because splash filling increases evaporation rate of the gasoline.

Appendix I gives the daily log for truck loading at the terminal for the period November 12, 1973 to May 2, 1974. Roughly three-fourths of the gasoline shipped at the terminal was bottom-loaded, with the rest top-loaded about equally between tank wagons and tank trucks. Average shipment was about 291,000 gallons per day.

Five methods of terminal operation were run for each seasonal test period:

1) Pilot operation only: measurements were taken on the oxidizer effluent with only the pilot light of the burner operating.
2) Baseline-propane gas: measurements on oxidizer effluent when propane was burned at about the same rate as gasoline vapor during normal terminal operation.
3) Normal terminal operation: measurements taken during filling of both top- and bottom-loaded trucks.
4) Top-loaded trucks: measurements taken during filling of top-loaded trucks only. This type of loading (splash-filling) usually generates excess vapor.
5) Bottom-loaded trucks: measurements taken during filling of bottom-loaded trucks only. Bottom-loading reduces gasoline agitation and therefore generates less vapor than top-loading.

In addition, two special tests were run during the winter and spring periods to simulate operation of the terminal in extremely cold weather. This was done because the ambient temperature during the winter test was only about -8°C, and data for colder weather were needed. Because hydrocarbon concentration in gasoline vapor (hydrocarbon-air mixture at equilibrium) decreases with temperature, cold-weather operation was simulated by diluting the vapor in the vapor holder with air. This test also determined the lower limit of satisfactory operation of the burner.

Analytical data for the oxidizer feed, vapor composition, oxidizer effluent, and oxidizer operation are shown in Tables IVA, IVB, V, and VI respectively. As shown in Table IVA, the mixed gas feed rate to the oxidizer during truck loading ranged from 2.18 to 3.02 cubic meters per minute and was fairly consistent throughout the four test periods. The hydrocarbon content of the gas was 22.6 to 48.5%, with the highest concentration existing during summer. Average molecular weight of the hydrocarbons ranged from 56 to 65 with over one-hundred different molecular structures identified. For the baseline tests and pilot operation only, in which only propane was burned, the gas hydrocarbon content was slightly lower, with 4-5 components of average molecular weight from 43.0 to 44.1 Detailed composition of the vapor is shown in Table IVB.

Effluent from the oxidizer (Table V) during its operation contained 19 to 35 ppm carbon monoxide, 1 to 45 ppm hydrocarbon (as methane) 1 to 10 ppm nitrogen oxides, and 0.9 to 3.2% (9,000 to 32,000 ppm) carbon dioxide. During the summer test period, hydrocarbon emission was lower and carbon dioxide was higher because of the higher flame temperature in the oxidizer (Table VI). The higher flame temperature also produced slightly more nitrogen oxides.

For pilot operation only, hydrocarbon emission was higher than normal because of inefficiency of combustion of the pilot flame, as shown by the lower percentage of destruction of hydrocarbons (Table VI). For the baseline test, in which only propane was burned, the lower flame temperature produced higher hydrocarbon and lower carbon dioxide emissions than normal. For other than pilot operation, however, destruction of the hydrocarbons reaching the oxidizer was better than 99%.

For the two special tests conducted during the winter and spring periods to simulate terminal operation in extremely cold weather, dilution of the vapor holder gas with air decreased the oxidizer temperature. This resulted in less-efficient combustion as shown by the higher hydrocarbon content and lower carbon dioxide in the effluent. As the hydrocarbon content of the feed gas was reduced by dilution to 3.5 vol. %, the flame pattern changed from full coverage of the manifold ports to stable individual blue flames, one for each hold in the distributor manifold. Further reduction below the 3.5 vol. % hydrocarbon level (spring test) produced flame instability and excessive unburned hydrocarbons. The excess air had a tendency to blow out the individual flames. The 3.5% value corresponds to terminal operation at ambient temperatures estimated from -40 to -46°C. This concentration was easily handled by the oxidizer, flame stability was good, and operation was entirely safe.

TABLE IVA

Oxidizer Feed

Test Period	Test Description	Mixed Gas Feed Rate M^3/min. @ N.T.P.(a)	Measured Fraction(b) Air	Measured Fraction(b) Hydrocarbons	Hydrocarbons: Measured Molecular Weight(c)	Hydrocarbons: Grab Sample: Calculated Molecular Weight	Hydrocarbons: Grab Sample: Number of Components Identified(d)
Fall	pilot operation only	--	--	--	--	44.0	4
Winter	pilot operation only	--	--	--	--	43.6	5
Spring	pilot operation only	--	--	--	--	43.0	4
Summer	pilot operation only	--	--	--	--	--	--
Fall	baseline, propane gas	2.16±0.03	0.8077±0.0026	0.1923±0.0026	45±1	44.0	4
Winter	baseline, propane gas	2.17±0.01	0.8048±0.0038	0.1952±0.0038	44±1	43.6	5
Spring	baseline, propane gas	3.02±0.01	0.7899±0.0053	0.2101±0.0053	43±1	43.0	4
Summer	baseline, propane gas	2.86±0.02	0.7966±0.0239	0.2034±0.0239	44±2	44.1	5
Fall	normal terminal operation	2.78±0.04	0.7622±0.0026	0.2378±0.0026	60±1	63.4	96
Winter	normal terminal operation	2.18±0.03	0.7746±0.0028	0.2254±0.0028	59±1	62.6	75
Spring	normal terminal operation	2.47±0.01	0.7105±0.0251	0.2895±0.0251	62±1	64.3	78
Summer	normal terminal operation	2.41±0.05	0.5856±0.012	0.4144±0.012	56±2	66.3	70
Fall	top-loaded trucks	2.75±0.04	0.6627±0.0026	0.3373±0.0026	60±1	63.2	100
Winter	top-loaded trucks	2.64±0.02	0.7742±0.0028	0.2258±0.0028	56±1	61.2	96
Spring	top-loaded trucks	2.50±0.01	0.6275±0.0028	0.3725±0.0028	61±1	63.3	72
Summer	top-loaded trucks	2.37±0.02	0.5153±0.019	0.4847±0.019	63±2	66.8	70
Fall	bottom-loaded trucks	2.71±0.04	0.7703±0.0026	0.2297±0.0026	62±1	63.5	80
Winter	bottom-loaded trucks	--	--	--	--	--	--
Spring	bottom-loaded trucks	2.542±0.003	0.7228±0.0025	0.2772±0.0025	62±1	64.4	80
Summer	bottom-loaded trucks	2.39±0.016	0.5914±0	0.4086±0	65±0	66.8	69
Winter	special-vapor holder gas diluted with air	2.234±0.008	0.8890±0.0044	0.1110±0.0044	58±1	62.3	89
Spring	specail-vapor holder gas diluted with air	2.97±0.02	0.9646±0.0024	0.0354±0.0024	62±2	64.2	48

a) cubic meters per minute at normal temperature and pressure (60°F and 1 atmos.)
b) by oxygen analyzer
c) by density balance
d) by mass spectrometer

TABLE IVB

Analysis of Air-Vapor Feed to Oxidizer

Item No.	Hydrocarbon Component	Component Volume Fraction, %																
		Fall Tests				Winter Tests				Spring Tests					Summer Tests			
		base-line #13	Loading normal #11	Loading top #12	Loading bot. #10	base-line #17	Loading normal #16	Loading top #14	Loading bot. #18	base-line #21	Loading normal #20	Loading top #24	Loading bot. #22	spec #23	base-line #26	Loading normal #28	Loading top. #29	Loading bot. #27
1	Methane		2.78	2.86	2.32						1.92	1.59	1.13	0.40		0.23	0.47	0.24
2	Ethane	0.59													0.11			
3	Ethane; Ethylene		0.46	0.46	0.29						0.57	0.56	0.30	0.31		0.08	0.16	0.05
4	Methane; Ethane; Ethylene					0.20	3.71	3.27	4.17	0.98								
5	Propylene														2.63	0.06	0.03	0.07
6	Propane	99.10													96.93	4.15	2.68	3.67
7	Item 5 + Item 6		3.69	3.77	3.64	99.37	4.07	7.68	4.17	98.56	3.67	3.68	2.89	2.82				
8	Isobutane	0.27	14.52	14.72	15.12	21.38	19.82	21.44	0.31	17.55	23.95	22.17	24.19	24.19	0.25	19.08	12.23	18.67
9	Isobutylene + 1; Butene		1.14	1.06	1.32		1.65	1.70	1.58		1.24	1.79	1.58	1.61		1.30	0.52	1.50
10	N-Butane	0.04	36.19	36.83	34.90	0.13	28.64		29.14	0.15	29.63	25.37	27.32	27.20	0.08	23.25	27.25	21.39
11	T-2-Butene		1.77	1.67	2.07		2.35		2.14		1.89	2.68	2.47	2.43		2.00	0.84	2.23
12	Item 10 + Item 11							33.42										
13	C-2-Butene		1.17	1.04	1.40		1.77	1.65	1.57		1.28	1.94	1.77	2.28		1.37	0.49	1.57
14	3-Me-1-Butene		0.23	0.21	0.26		0.36	0.29	0.31		0.27	0.36	0.33	0.35		0.20	0.10	0.26
15	Isopentane		17.79	17.65	18.98		19.11	16.02	19.14		21.13	19.77	20.90	21.04		21.27	24.67	21.92
16	1-Pentene		0.50	0.46	0.55		0.61	0.53	0.56		0.54	0.65	0.62	0.61		0.88	0.34	0.69
17	2-Me-1-Butene		0.84	0.77	0.92		1.00	0.88	0.94		0.88	1.11	1.05	1.09		1.25	0.44	0.99
18	2-Me-1, 3-Butadiene			0.01									0.02					
19	N-Pentane		5.78	5.60			4.18		4.24			5.02	4.63	4.44				
20	T-2-Pentene		0.95	0.85			0.94		0.83			0.95	1.03	0.95				
21	Item 19 + Item 20				6.47			5.24			6.85					11.46	16.80	9.91
22	C-2-Pentene		0.59	0.52	0.66		0.66	0.57	0.62		0.66	0.72	0.70	0.78		0.50	0.37	0.64
23	2-Me-2-Butene		1.34	1.21	1.44		1.44	1.31	1.38		1.47	1.72	1.65	1.52		1.13	0.71	1.55
24	2,2-Dimethylbutane		0.24	0.23	0.23		0.14	0.16	0.15		0.23	0.19	0.16	0.14		0.31	0.51	0.26
25	Cyclopentene		0.14	0.13	0.13		0.13	0.11	0.12		0.15	0.17	0.16	0.14		0.11	0.08	0.16
26	3-Me-1-Pentene; 4-Me-1-Pentene		0.08	0.07	0.08		0.08	0.08	0.08		0.09	0.12	0.09	0.06		0.08	0.04	0.10
27	4-Me-C-2-Pentene		0.02	0.02	0.02						0.02						0.01	
28	2,3-Dimethyl-1-Butene		0.04	0.04	0.04		0.07				0.04	0.05	0.05	0.07		0.05	0.02	0.08
29	Item 27 + Item 28							0.06	0.06									
30	4-Me-C-2-Pentene; 2-Me-1, 4 Pentadiene											0.02	0.02					
31	Cyclopentane		0.35	0.33	0.33		0.30	0.27	0.29		0.37	0.30	0.30	0.28		0.61	0.89	0.54
32	4-Me-T-2-Pentene		0.06	0.05	0.06		0.05	0.05	0.04		0.05	0.06	0.05			0.05	0.02	0.07
33	2.3 Dimethylbutane		0.58	0.55	0.61		0.50	0.43	0.49		0.61	0.50	0.55	0.55		0.63	0.70	0.71
34	Item 32 + Item 33																	
35	2-Me-Pentane		1.83	1.75	1.86		0.08	0.07	0.07		0.09	0.08	0.09	0.08		0.08	0.05	0.12

continued next page

TABLE IVB

Analysis of Air-Vapor Feed to Oxidizer (cont'd.)

Item No.	Hydrocarbon Component	Component Volume Fraction, %																
		Fall Tests				Winter Tests				Spring Tests					Summer Tests			
		base-line #13	Loading normal #11	Loading top #12	Loading bot. #10	base-line #17	Loading normal #16	Loading top #14	Loading bot. #18	base-line #21	Loading normal #20	Loading top #24	Loading bot. #22	spec #23	base-line #26	Loading normal #28	Loading top. #29	Loading bot. #27
36	2-Me-1-Pentene		0.09	0.08	0.09		0.08	0.07	0.07		0.09	0.08	0.09	0.08		0.08	0.05	0.12
37	3-Me-Pentane; 1-Hexene; 2-Ethyl-1-Butene		1.12	1.06	1.14		0.93	0.83	0.93		1.16	0.96	1.03	1.01		1.56	1.67	1.79
38	C-3-Hexene		0.04	0.04					0.03		0.04	0.03	0.04					
39	T-3-Hexene		0.05	0.05					0.04		0.05	0.05	0.05					
40	Item 38 + Item 39				0.09		0.08	0.07						0.08		0.07	0.05	0.12
41	3-Me-Cyclopentene										0.10	0.08	0.10					
42	2-Me-2-Pentene										0.14	0.13	0.13					
43	Item 41 + Item 42		0.07	0.08			0.20	0.19	0.07					0.15			0.05	
44	3-Me-T-2-Pentene		0.17	0.14					0.11								0.08	
45	Item 41 + Item 42 + Item 44				0.23											0.18		0.29
46	N-Hexane				0.82													
47	N-Hexane; 4,4-Dimethyl-1-Pentene		0.83	0.80					0.72									
48	T-2-Hexene		0.07	0.07			0.05	0.06	0.06		0.08	0.06	0.06					
49	C-2-Hexene		0.07	0.06														
50	Item 48 + Item 49				0.03													
51	Item 47 + 3-Me-T-2-Pentene						0.72	0.65										
52	Item 51 + Item 48										0.93	0.70	0.76	0.86				
53	Item 47 + Item 48 + Item 49															1.43	1.39	1.74
54	3-Me-C-2 Pentene		0.10	0.10	0.10		0.09	0.08	0.09		0.11	0.09	0.10			0.08	0.06	0.13
55	4,4-Dimethyl-T-2-Pentene							0.01	0.01		0.02		0.01					
56	Item 54 + Item 55													0.11				
57	Me-Cyclopentane; 3,3-Dimethyl-1-Pentene		0.49	0.51	0.49	0.44	0.40	0.43		0.55	0.45	0.51	0.59					
58	2,2-Dimethylpentane				0.05													
{59}	{2,2-Dimethylpentane; 2,3-Dimethyl-2-Butene; 2,3,3-Trimethyl-1-Butene}		0.05	0.09			0.04	0.05	0.04		0.05	0.04	0.05					
60	Item 57 + Item 59															0.55	0.42	0.78
61	2,4 Dimethylpentane		0.12	0.13	0.13		0.10	0.10	0.10		0.11	0.08	0.10	0.09		0.10	0.09	0.14
{62}	{2,4-Dimethyl-2-Pentene; 3-Ethyl-1-Pentene; 3-Me-1-Hexene}													0.11				
63	Benzene		0.15	0.21	0.05		0.07	0.16	0.10		0.17					0.38	0.44	0.42
64	2,2,3-Trimethylbutane										0.02							
65	2,4-Dimethyl-1-Pentene		0.03	0.05							0.03	0.05	0.05			0.09	0.06	0.14
66	Item 64 + Item 65							0.04	0.01									
67	Item 63 + Item 64												0.17					
68	Item 64 + 4,4-Dimethyl-C-2-Pentene		0.02	0.02	0.04							0.11				0.02	0.02	0.03

continued next page

TABLE IVB

Analysis of Air-Vapor Feed to Oxidizer (cont'd.)

Item No.	Hydrocarbon Component	Component Volume Fraction, %																
		Fall Tests				Winter Tests				Spring Tests					Summer Tests			
		base-line #13	Loading normal #11	Loading top #12	Loading bot. #10	base-line #17	Loading normal #16	Loading top #14	Loading bot. #18	base-line #21	Loading normal #20	Loading top #24	Loading bot. #22	spec #23	base-line #26	Loading normal #28	Loading top. #29	Loading bot. #27
69	1-Me-Cyclopentene		0.09						0.07									
70	Item 69 + 2-Me-C-3-Hexene			0.10			0.07	0.07			0.09	0.08	0.10			0.01	0.01	0.04
71	Item 69 + 2,4-Dimethyl-2-Pentene																	
72	Item 70 + 2,4-Dimethyl-2-Pentene																	
{73}	{2,4-Dimethyl-2-Pentene; 3-Ethyl-1-Pentene;} 3-Me-1-Hexene		0.02	0.05	0.10		0.02	0.03	0.02		0.02	0.03	0.03			0.01	0.01	
74	2,3-Dimethyl-1-Pentene; 2-Me-T-3-Hexene		0.02															
{75}	{Item 74 + 5-Me-1-Hexene; T-3,5-Dimethyl-} Cyclopentene; C-3,5-Dimethycyclopentene			0.03	0.02		0.02	0.02	0.02		0.02	0.02	0.02					
76	3,3-Dimethylpentane		0.01	0.01	0.01						0.01	T	0.01			0.03	0.03	0.04
77	Cyclohexane		0.12	0.11	0.10		0.10	0.09										
78	Cyclohexane; 4-Me-C-2-Hexene								0.10			0.08	0.09	0.10		0.08	0.05	0.14
79	2-Me-Hexane; 5-Me-C-2-Hexene			0.22			0.17				0.09							
80	1,1-Dimethylcyclopentane			[illegible]														
81	Item 79 + Item 80		[illegible]								0.22	0.15	0.18	0.20		0.27	0.23	0.40
82	[illegible]																	
83	[illegible]		[illegible]	0.01				0.01	0.01									
84	Cyclohexene		0.01	0.01	0.01			0.01	0.01		0.01	0.01	0.01					
85	2-Me-Hexane; 1,1-Dimethylcyclopentane				0.21			0.15	0.16									
86	2,3-Dimethylpentane			0.13	0.12		0.11	0.10	0.11		0.12	0.08	0.10			0.13	0.11	0.18
87	Item 86 + 3,4-Dimethyl-C-2-Pentene		0.13											0.09				
88	3-M3-Hexane		0.21	0.23	0.20		0.16	0.14	0.15		0.21	0.15	0.17	0.18		0.28	0.24	0.41
{89}	{1-C-3-Dimethylcyclopentane; 2-Me-1-Hexene;} 3,4-Dimethyl-T-2-Pentene		0.07	0.07	0.07		0.06	0.06	0.06		0.07	0.05	0.07	0.05		0.05	0.03	0.09
90	1-T-3-Dimethylcyclopentane		0.06	0.06	0.05		0.05	0.04	0.05		0.05		0.05					
91	Item 90 + 1-Heptene; 2-Ethyl-1-Pentene											0.04		0.04		0.07	0.05	0.11
92	3-Ethyle Pentane; 3-Me-T-2-Hexene															0.04	0.03	0.07
93	1-T-2-Dimethylcyclopentane															0.14	0.13	0.20
94	Item 92 + Item 93		0.06	0.06	0.06		0.05		0.05				0.05	0.05				
95	2,2,4-Trimethylpentane		0.23	0.23	0.25		0.19	0.18			0.26	0.16	0.22	0.20				
96	Item 95 + T-3-Heptene								0.18							0.02	0.01	0.03
97	Item 93 + 3-Ethylpentane							0.05			0.06	0.04						
98	C-3-Heptene; 1,4-Dimethylcyclopentene		0.02	0.02	0.01		0.02		0.01		0.02	0.01	0.01					
99	3-Me-C-3-Hexene; 2-Me-2-Hexene										0.03	0.02						
100	Item 99 + 3-Me-T-3-Hexene		0.03	0.03	0.02				0.02				0.02					

continued next page

TABLE IVB

Analysis of Air-Vapor Feed to Oxidizer (cont'd.)

Item No.	Hydrocarbon Component	Component Volume Fraction, %															
		Fall Tests				Winter Tests				Spring Tests					Summer Tests		
		base-line #13	Loading normal #11	Loading top #12	Loading bot. #10	base-line #17	Loading normal #16	Loading top #14	Loading bot. #18	base-line #21	Loading normal #20	Loading top #24	Loading bot. #22	Loading spec #23	base-line #26	Loading normal #28	Loading top. #29	Loading bot. #27
101	3-Ethyl-2-Pentene		0.017	0.01									T					
102	T-2-Heptene		0.01	0.01	0.01						0.01					0.01		0.01
103	N-Heptane; 3-Me-C-2-Hexene		0.15		0.14				0.10				0.11					
104	Item 103 + 2,3-Dimethyl-2-Pentene													0.11				
105	Item 103 + 2,3-Dimethylcyclopentene			0.17			0.12	0.11			0.14					0.17	0.14	0.27
106	Item 104 + Item 105											0.09						
107	2,3-Dimethyl-2-Pentene				0.01													
108	Item 107 + C-2-Heptene; 3--Ethylcyclopentene		0.01	0.02					0.01		0.02		0.01			0.01	0.01	0.02
109	C-2-Heptene											0.01						
110	Item 109 + 3-Ethylcyclopentene																	
111	1-C-2-Dimethylcyclopentane		0.02	0.02	0.03		0.02	0.02	0.02		0.02		0.02	0.02		0.03	0.02	0.04
112	2,2-Dimethyl Hexane															0.01	T	0.01
113	Item 111 + Item 112											0.02						
114	Me-Cyclohexane; 1,1,3-Trimethylcyclopentane		0.08	0.09	0.08		0.07	0.07	0.07		0.07	0.05	0.06	0.07		0.06	0.04	0.10
115	2,5-Dimethylhexane		0.04	0.04	0.04		0.03	0.02	0.02		0.04	0.02	0.03	0.04		0.02	0.02	0.04
116	Ethylcyclopentane		0.02	0.02	0.01		0.01	0.02	0.01		0.02	0.01	0.01					
117	2,4-Dimethylhexane				0.02		0.02	0.02	0.01		0.02	0.01	0.02					
118	Item 116 + Item 118													0.02		0.04	0.03	0.07
119	2,2,3-Trimethylpentane							0.01	0.01		0.01	0.01	0.01			T	T	
120	Item 117 + Item 119		0.03	0.04														
121	1-T-C-4-Trimethycyclopentane		0.01	0.01	0.01		0.01	0.01	0.01		0.01	0.01	0.01	0.02		0.01	0.01	0.02
122	3,3-Dimethylhexane		0.01	0.01	0.01													
123	Toluene		0.87	0.86	0.83		0.68	0.57	0.57							0.76	0.64	1.07
124	1-T-2-C-3-Trimethylcyclopentane			0.01														
125	Item 122 + Item 123-Item 124										0.98	0.61	0.87	0.52				
126	Ethylbenzene		0.05	0.05	0.04		0.02	0.03	0.02		0.03	0.02	0.04			0.03	0.02	0.06
127	P-Xylene		0.04	0.05	0.02		0.02	0.02	0.01		0.02	0.02	0.03			0.02	0.02	0.04
128	M-Xylene		0.12	0.12	0.11		0.07	0.09	0.05		0.09	0.06	0.10			0.06	0.05	0.10
129	O-Xylene		0.08	0.06	0.08		0.04	0.06	0.04		0.04	0.03	0.06			0.04	0.03	0.06
130	C-8 Saturates and Olefins		0.35	0.45	0.33		0.19	0.22	0.18		0.32	0.19	0.28	0.28		0.22	0.17	0.33
131	Isopropylbenzene		0.01	T	T		0.03	T	0.01				T			0.01	0.01	0.02
132	N-Propylbenzene		0.04	0.01				0.01	0.01		T		0.01			0.01	0.01	0.01

continued next page

TABLE IVB

Analysis of Air-Vapor Feed to Oxidizer (cont'd.)

Item No.	Hydrocarbon Component	Component Volume Fraction, %																
		Fall Tests				Winter Tests				Spring Tests					Summer Tests			
		base-line #13	Loading normal #11	Loading top #12	Loading bot. #10	base-line #17	Loading normal #16	Loading top #14	Loading bot. #18	base-line #21	Loading normal #20	Loading top #24	Loading bot. #22	spec #23	base-line #26	Loading normal #28	Loading top. #29	Loading bot. #27
133	1-Me-3-Ethylbenzene		0.01	0.02	0.02		0.01	0.03	0.01		0.02	0.01	0.03			0.02	0.01	0.02
134	1-Me-4-Ethylbenzene		0.02	0.01	0.01		0.02	0.02	0.01		0.01		0.02				0.01	
135	1-Me-2-Ethylbenzene		0.05	0.01	0.01		0.01	0.01	0.01		0.01		0.01			0.01	T	0.01
136	1,3,5-Trimethylbenzene			0.01	0.01		0.01	0.01	0.01		0.01	0.01	0.02			0.03	0.01	0.01
137	1,2,4-Trimethylbenzene		0.01	0.03	0.03		0.04	0.04	0.02		0.03	0.03	0.06			0.02	0.02	0.03
138	1,2,3-Trimethylbenzene		T	T			0.04						0.01					
139	C-9+ Saturates and Olefins		0.06	0.06			0.02	0.02	0.02		0.04	0.03	0.03			0.01	0.01	0.02
140	1-Me-2-Isopropylbenzene							0.01										
[141]	[1,3-Dimethyl-2-Ethylbenzene;] 1,3-Dimethyl-4-Ethylbenzene							0.02										
142	C-10 Saturates and Olefins										0.02		0.03					
143	C-10 + Aromatics		0.05	0.01									0.04					

TABLE V

Oxidizer Effluent
ppm(volume basis)

Test Period	Test Description	Carbon Monoxide		Hydrocarbon as Methane		Nitrogen Oxides		Water Vapor			Carbon Dioxide		
		Measured	Grab Sample	Measured	Grab Sample	Measured	Grab Sample	Measured(a)	Calculated(b)	Ambient(a)	Orsat	Calculated(c)	Sample
Fall	pilot operation only	3.4±0.5	--	90±6	--	0	--	--	7,100	6,800	--	--	--
Winter	pilot operation only	1.9±0.4	1-2	69±7	68-78	0	0.3	--	6,000	5,700	--	600	500
Spring	pilot operation only	2.1±0.4	10	79±7	108-159	0	0.3	--	13,800	13,500	--	--	0
Summer	pilot operation only	2.7±3.0	0-4	82±2	53-102	--	0	--	13,800	13,500	--	--	0
Fall	baseline, propane gas	21.0±0.7	16	58±8	43	1-5	--	15,700	16,900	6,800	8,000	8,000	--
Winter	baseline, propane gas	20.8±0.6	13-27	44±5	42-43	1-5	0.8	11,200	16,000	5,900	8,000	8,000	2,800
Spring	baseline, propane gas	21±4	20-40	43±2	51-57	1-5	0.4	17,000	20,000	5,500	7,000	11,000	1,500
Summer	baseline, propane gas	19.0±0.1	12-18	42±5	26-42	1-2	2.5	52,000	28,500	15,000	9,000	10,500	2,000
Fall	normal terminal operation	26.0±0.2	19	25±4	22	1-5	--	21,700	23,000	3,200	17,000	16,500	--
Winter	normal terminal operation	25.3±0.5	17-20	33±4	38-39	1-5	0.6	20,600	20,400	5,700	9,000	12,000	2,300
Spring	normal terminal operation	23±3	20-30	21±5	17-33	1-5	1.5	52,000	30,200	8,700	14,500	17,500	3,900
Summer	normal terminal operation	35±1	37-41	5±0.5	17-29	8-10	1.8	45,800	65,800	34,000	28,000	26,300	9,000
Fall	top-loaded trucks	25.4±0.6	16	14±5	13	1-5	--	50,000	32,000	3,800	22,000	22,800	--
Winter	top-loaded trucks	33±6	19-20	45±14	33-39	1-5	1.0	24,000	19,000	2,000	--	14,000	2,800
Spring	top-loaded trucks	24±3	10-20	14±3	9-30	1-5	1-1.6	99,600	32,400	4,500	20,000	23,000	3,900
Summer	top-loaded trucks	28±2	25	1±1	3-7	--	2.0	--	53,700	18,700	32,000	28,500	14,000
Fall	bottom-loaded trucks	25.6±0.2	16	24±4	26	1-5	--	26,300	26,000	6,800	12,000	15,900	--
Winter	bottom-loaded trucks	- -	--	- -	--	--	--	--	--	--	--	--	--
Spring	bottom-loaded trucks	23±1	10-40	20±3	9-36	1-5	1.6	45,900	28,100	6,000	15,500	18,000	2,300
Summer	bottom-loaded trucks	28±1	25	5±1	12-16	2	4.3	--	46,100	14,800	26,000	27,000	7,000
Winter	special-vapor holder gas diluted with air	19±1	20	58±13	58-69	1-5	0.3	12,000	15,100	7,500	7,000	6,400	1,400
Spring	special-vapor holder gas diluted with air	39±2	10-20	226±18	270-420	1-5	0.4-2	--	10,000	5,300	2,000	2,900	400-700

a) by wet and dry bulb thermometry
b) by oxygen balance; includes ambient air water vapor
c) by carbon balance; includes ambient air carbon dioxide

TABLE VI

Oxidizer Operation

Test Period	Test Description	Pilot Fuel (propane) 10^{-2} M^3/min. @ N.T.P.	Combustion Air M^3/min.@ N.T.P.	Temperature Oxidizer °C	Temperature Ambient °C	Destruction of Hydrocarbons %
Fall	pilot operation only	1.367±0.007	170±8	16±8	8.4±0.5	62.6±2.5
Winter	pilot operation only	1.40±0.02	170±8	10	3.3	72.1±4.9
Spring	pilot operation only	1.41±0.01	170±8	25.6	25.6	68.5±4.6
Summer	pilot operation only	1.38±0.02	170±8	28.3	27.8	66.8
Fall	baseline-propane gas	1.367±0.007	170±8	174+2	8.4±0.5	99.2±0.1
Winter	baseline-propane gas	1.37±0.01	170±8	168+2	4.0±0.8	99.4±0.1
Spring	baseline-propane gas	1.40±0.02	170±8	234+5	8.6±0.5	99.6±0.1
Summer	baseline-propane gas	1.33±0.01	170±8	243±3	26.5±0.5	99.6±0.1
Fall	normal terminal operation	1.410±0.006	170±8	321±35	4.8±0.5	99.8±0.1
Winter	normal terminal operation	1.41±0.01	170±8	229+1	4.6±0.5	99.7±0.1
Spring	normal terminal operation	1.31±0.02	170±8	364±46	17.2±0.5	99.9±0.1
Summer	normal terminal operation	1.28±0.01	170±8	565±11	15.0±0.5	99.9±0.1
Fall	top-loaded trucks	1.363±0.009	170±8	434±6	7.2±1.4	99.9±0.1
Winter	top-loaded trucks	1.39±0.03	170±8	238±16	-7.8±1.7	99.7±0.1
Spring	top-loaded trucks	1.34±0.02	170±8	463±10	13.4±0.6	99.9±0.1
Summer	top-loaded trucks	1.26±0.01	170±8	643±3	21.7±0.7	99.9±0.1
Fall	bottom-loaded trucks	1.38±0.01	170±8	300±28	4.5±0.2	99.8±0.1
Winter	bottom-loaded trucks	---	---	---	---	---
Spring	bottom-loaded trucks	1.37±0.01	170±8	360±9	10.0±0.5	99.9±0.1
Summer	bottom-loaded trucks	1.26±0.01	170±8	560±4	23.9±0.8	99.9±0.1
Winter	special-vapor holder gas diluted with air	1.39±0.02	170±8	114±2	1.9+0.5	99.7±0.1
Spring	special-vapor holder gas diluted with air	1.40±0.02	170±8	63.1±1.4	8.7±0.5	91.3±1.8

Although the oxidizer disposed of 99% of the gasoline vapor it received, only about 70% of the air-vapor mixture displaced during truck loading reached the oxidizer during the fall and winter test periods (Appendix II). Unusually high pressures (21" H_2O) produced in the truck during loading were responsible for the vapor loss through maladjusted hatch covers and faulty vacuum-relief valves on the truck. The low vapor transfer and pressure build-up were due to blockage by a column of gasoline in the hose that connects the truck vapor manifold to the vapor collecting system. The hatch cover and valve problems were corrected and modifications made to insure that the connecting vapor hoses would not collect liquid gasoline, as shown by the greatly improved vapor recovery from the truck during the spring and summer test periods (Appendix II). Reliability of the system has been excellent, with only one failure during the year of testing. This failure was caused by ignitor spark plug failure on the oxidizer.

COMPARISON TO OTHER SYSTEMS

In 1972, a study was made comparing systems employing four methods of vapor recovery at terminals; hydrocarbon oxidation, absorption, condensation, and adsorption. At that time, the majority of the systems were still in the development stage and commercial units had been built by only a few companies. Recovery of the vapors could not be justified economically with any of the commercial systems. Selection among the available systems on any rational economic basis could not be made because the net values after capital charges at 10 PI were very similar. Selection was, therefore, made on the basis of recovery efficiency, demonstrated performance, and ability to meet air quality standards through a wide range of ambient conditions. For these reasons, hydrocarbon oxidation was preferred for terminals pumping less than 3 million barrels of gasoline per year (Philadelphia terminal pumps about 2 million). For larger terminals, a recovery system using an activated carbon adsorption unit (to concentrate the vapors and replace the vapor holder) together with a reduced capacity conventional absorption unit downstream might be preferred.

CONCLUSIONS

Tests run at the Philadelphia terminal during each of the four seasons showed that the oxidizer safely and efficiently disposes of 99+% of the vapor collected, even in extremely cold weather when the air-gasoline vapor mixture is in the flammable range. Emissions from the oxidizer are well within acceptable limits because of high efficiency and low flame temperature to limit formation of nitrogen oxides.

Capital costs for the installation were about $160,000, with an annual maintenance of $3,000. Annual operating costs were: propane consumption, 3,600 gals.; electric consumption, 36,000 KWH, and manpower for routine checks, 300 man-hours.

The only serious trouble encountered was at the beginning of the tests when a considerable portion of the vapor from the trucks was not reaching the oxidizer. This blockage was caused primarily by liquid gasoline carryover to the vapor collection system. This and minor instrument problems were corrected, however, and overall disposal efficiency of the entire system now exceeds 90%.

APPENDIX I

TRUCK LOADING AT PHILADELPHIA TERMINAL

DAILY LOG

	Top Loading								Bottom Loading				
	Tank Wagons				Tank Trucks				Tank Trucks				
Date	No.	Total Gal.	Avg. Gal.	% of Total	No.	Total Gal.	Avg. Gal.	% of Total	No.	Total Gal.	Avg. Gal.	% of Total	Total Gallons Shipped
11-12-73	11	44000	4000	14.2	4	29600	7400	9.5	32	237200	7412	76.3	310800
13	7	25700	3671	9.1	8	59000	7375	20.9	26	197200	7585	70.0	281900
14	7	24600	3514	9.4	6	40500	6750	15.4	26	196900	7573	75.2	262000
15	6	21500	3583	7.9	5	36400	7280	13.3	31	215500	6952	78.8	273400
16													
17	17	65100	3829	14.0	5	39700	7940	8.6	49	359700	7341	77.4	464500
18	Sunday												
19	8	29300	3662	10.1	4	26000	6500	8.9	32	236300	7384	81.0	291600
20	7	26000	3714	9.5	5	39900	7980	14.5	28	209100	7468	76.0	275000
21	8	30900	3862	10.4	6	46300	7717	15.7	30	218700	7290	73.9	295900
22	Holiday												
23													
24	17	69900	4112	15.5	5	38100	7620	8.4	47	344000	7319	76.1	452000
25													
26	11	39700	3609	14.6	2	16200	8100	5.9	30	216700	7223	79.5	272600
27	10	36700	3670	12.5	6	46500	7750	15.8	29	211100	7279	71.7	294300
28	8	27800	3475	10.4	3	21400	7133	8.0	30	217900	7263	81.0	267100
29	8	28000	3500	10.1	5	39900	7980	14.4	29	209500	7224	75.5	277400
30	9	33100	3678	14.0	2	14500	7250	6.2	25	188400	7536	79.8	236000
12--1-73													
2	Sunday												
3	15	55900	3727	10.4	10	77200	7720	14.4	54	404300	7487	75.2	537400
4	10	37300	3730	12.9	7	57600	8228	20.0	26	193400	7438	67.1	288300
5	10	37200	3720	12.9	7	57600	8228	20.0	26	193400	7438	67.1	288200
6	9	34000	3778	11.9	7	57600	8228	20.2	26	194200	7469	67.9	285800
7													
8	18	73800	4100	12.1	8	65600	8200	10.8	62	470100	7582	77.1	609500
9	Sunday												
10	8	31000	3875	10.9	3	23700	7900	8.3	28	230300	8225	80.8	285000
11	9	33000	3667	12.2	5	32700	6540	12.1	26	204000	7846	75.7	269700
12	7	23800	3400	8.3	2	15400	7700	5.4	30	245900	8197	86.3	285100
13	9	33000	3667	11.3	5	33700	6740	11.5	28	226400	8086	77.2	293100
14	10	37400	3740	15.2	4	26400	6600	10.7	26	182500	7019	74.1	246300
15	9	33500	3722	13.1	6	34600	5767	13.6	26	187300	7204	73.3	255400
16													
17	6	22100	3683	9.2	2	9100	2550	3.8	26	208500	8019	87.0	239700
18	7	23600	3371	12.3	2	11700	5850	6.1	22	156400	7109	81.6	191700
19	10	32000	3200	11.0	10	75400	7540	26.0	25	182800	7312	63.0	290200

	Top Loading								Bottom Loading				
	Tank Wagons				Tank Trucks				Tank Trucks				
Date	No.	Total Gal.	Avg. Gal.	% of Total	No.	Total Gal.	Avg. Gal.	% of Total	No.	Total Gal.	Avg. Gal.	% of Total	Total Gallons Shipped
12-20-73	6	22100	3683	10.9	4	28000	7000	13.8	22	152800	6945	75.3	202900
21													
22	14	50700	3621	10.5	8	58100	7262	12.1	54	372300	6894	77.4	481100
23													
24	8	31300	3912	12.5	4	28400	7100	11.4	24	189700	7904	76.1	249400
25													
26	9	30200	3356	12.8	5	36100	7220	15.4	23	168700	7335	71.8	235000
27	9	32200	3578	12.1	4	28400	7100		26	206300	7935		266900
28													
29	16	57800	3612	12.9	7	53800	7686	12.0	50	337400	6748	75.1	449000
30													
31	8	25200	3150	10.5	4	27000	6750	11.3	25	187700	7508	78.2	239900
1--1-74													
2													
3	17	72900	4288	11.9	16	120300	9519	19.6	55	421300	7660	68.5	614500
4													
5	20	76200	3810	14.7	3	25300	8433	4.9	55	416800	7578	80.4	518300
6													
7	8	29400	3675	12.5	4	30600	7650	13.0	23	175900	7648	74.5	235900
8	7	26400	3771	10.2	4	31600	7900	12.1	25	202200	8088	79.7	260200
9	8	28000	3500	12.2	3	24800	8267	10.8	23	176000	7652	77.0	228800
10	7	26000	3714	12.3	4	31200	7800	14.7	20	154500	7725	73.0	211700
11													
12	22	84300	3832	21.2	3	20658	6886	5.2	39	292200	7492	73.6	397158
13	Sunday												
14	10	37700	3770	16.2	5	36000	7200	15.4	21	159200	7581	68.4	232900
15	8	28200	3525	11.6	3	22700	7567	9.3	25	192700	7708	79.1	243600
16	8	27800	3475	11.4	4	31700	7925	13.0	24	184100	7671	75.6	243600
17	12	45200	3767	17.5	3	22300	7433	8.6	25	190700	7628	73.9	258200
18													
19	16	61300	3831	13.5	7	54200	7743	12.0	45	338000	7511	74.5	453500
20	Sunday												
21	8	30500	3812	12.5	3	17000	5666	6.9	26	197700	7604	80.6	245200
22	8	28200	3525	15.2	2	16500	8250	8.9	19	140803	7411	75.9	185503
23	9	32100	3567	13.2	7	54900	7843	22.7	20	155300	7765	64.1	242300
24	7	26200	3743	16.5	1	8300	8300	5.2	17	124200	7306	78.3	158700
25													
26	17	65900	3876	14.8	6	51800	8633	11.7	43	326000	7581	73.5	443700
27	Sunday												
28	8	28500	3562	12.0	5	36700	7340	15.4	23	173100	7526	72.6	238300
29	10	39100	3910	18.7	3	25400	8467	12.2	19	144000	7579	69.1	208500
30	8	28800	3600	11.8	4	32800	8200	13.5	24	182200	7592	74.7	243800
31													

	Top Loading								Bottom Loading				
	Tank Wagons				Tank Trucks				Tank Trucks				
Date	No.	Total Gal.	Avg. Gal.	% of Total	No.	Total Gal.	Avg. Gal.	% of Total	No.	Total Gal.	Avg. Gal.	% of Total	Total Gallons Shipped
2--1--74	20	74500	3725	14.1	3	23100	7700	4.4	57	429700	7538	81.5	527300
3	Sunday												
4	6	22400	3733	10.2	4	27400	6850	12.6	23	169100	7352	77.2	218900
5	10	35400	3540	13.8	3	25800	8600	10.0	26	195600	7523	76.2	256800
6	9	31800	3533	11.7	5	41700	8340	15.3	27	199000	7370	73.0	272500
7	7	24500	3500	11.9	4	28000	7000	13.5	20	154200	7710	74.6	206700
8													
9	13	49800	3831	11.3	3	24300	8100	5.5	49	368300	7516	83.2	442400
10	Sunday												
11	11	43700	3973	14.6	7	58000	7286	16.9	28	206300	7368	68.5	301000
12	9	32200	3578	12.8	9	66900	7433	26.7	21	151800	7228	60.5	250900
13	8	24800	3100	9.6	7	51700	7386	20.1	25	180700	7228	70.3	257200
14	9	26300	2922	10.8	6	44800	7467	18.4	24	172900	7204	70.8	244000
2-15-74	4	14800	3700	7.0	5	41100	8220	19.6	22	154500	7023	73.4	210400
16	7	22500	3214	8.9	2	11000	5500	4.4	29	218400	7531	86.7	251900
17	Sunday												
18	Holiday												
19	15	56800	3787	17.9	11	82300	7482	26.0	23	177500	7717	56.1	316600
20	9	27600	3067	11.8	4	31400	7850	13.4	23	175100	7613	74.8	234100
21	13	45900	3531	17.1	5	38500	7700	14.3	24	183900	7662	68.6	268300
22													
23	19	70200	3695	18.9	12	86900	7242	23.4	29	213700	7369	57.7	370800
24	Sunday												
25	9	26000	2956	19.4	3	28100	9367	20.6	11	82000	7454	60.0	136700
26	6	24200	4033	19.8	2	18000	9000	14.7	11	80000	7273	65.5	122200
27	7	34600	4943	22.0	3	23100	7700	14.7	13	99400	7646	63.3	157100
28	11	34100	3100	16.0	4	34700	8675	16.3	19	144400	7600	67.7	213200
3-1-74													
2	16	74900	4681	12.5	11	89300	8118	14.9	57	433800	7610	72.6	598000
3	Sunday												
4	10	32100	3210	10.6	5	40600	8120	13.4	30	229900	7663	76.0	302600
5	6	25300	4217	9.4	2	17500	8750	6.5	30	226100	7537	84.1	268900
6	7	22600	3229	8.8	6	45200	7533	17.6	25	188800	7552	73.6	256600
7	7	25100	3586	13.8	4	31300	7825	17.2	16	126100	7881	69.0	182500
8													
9	13	46400	3569	11.7	7	52400	7486	13.1	39	299900	7690	75.2	398700
10	Sunday												
11	10	32600	3260	15.3	9	67100	7456	31.5	15	113200	7547	53.2	212900
12	6	24800	4133	11.0	4	35800	8950	15.9	23	164400	7148	73.1	225000
13	10	39100	3910	15.4	7	52300	7471	20.6	23	162700	7074	64.0	254100
14	4	16000	4000	6.2	3	20400	6800	8.0	29	219600	7572	85.8	256000
15													
16	17	54900	3229	14.5	4	29900	7475	7.9	39	293700	7531	77.6	378500
17	Sunday												
18	8	28400	3550	12.7	3	21900	7300	9.8	27	172800	6400	77.5	223100
19	10	33300	3330	13.3	2	14200	7100	5.7	30	202400	6747	81.0	249900
20	10	34200	3420	13.1	4	32800	8200	12.6	29	193400	6669	74.3	260400
21	10	35000	3500	14.9	6	43200	7200	18.3	25	157300	6292	66.8	235500
22													
23	15	55700	3713	13.6	7	47100	6728	11.5	40	306600	7665	74.9	409400
24	Sunday												
25	7	24300	3471	10.0	8	52600	6575	21.6	26	166300	6396	68.4	243200
26	10	34200	3420	13.5	4	31200	7800	12.3	28	188500	6732	74.2	253900

	Top Loading								Bottom Loading				
	Tank Wagons				Tank Trucks				Tank Trucks				
Date	No.	Total Gal.	Avg. Gal.	% of Total	No.	Total Gal.	Avg. Gal.	% of Total	No.	Total Gal.	Avg. Gal.	% of Total	Total Gallons Shipped
3-27-74	9	32600	3622	11.9	6	39800	6633	14.6	30	200600	6686	73.5	273000
28	8	27500	3437	13.8	4	26100	6525	13.0	22	146300	6650	73.2	199900
29	9	32400	3600	13.5	5	36500	6500	15.6	26	169900	6534	70.9	239800
30	6	22800	3800	9.2	4	32500	8125	13.1	29	192800	6648	77.7	248100
31	Sunday												
4--1-74													
2	17	55900	3288	12.9	12	95500	7958	21.9	38	284000	7473	65.2	435400
3	10	33800	3380	11.9	10	76200	7620	26.9	23	173400	7539	61.2	283400
4	9	29000	3222	11.4	6	43100	7183	16.9	24	183000	7625	71.7	255100
5													
6	14	48400	3457	10.2	12	85400	7116	18.0	45	341200	7582	71.8	475000
7	Sunday												
8	8	26200	3275	9.6	5	39200	7840	14.3	27	207800	7696	76.1	273200
9	10	34100	3410	15.9	5	32300	6460	15.0	20	148700	7435	69.1	215100
10	8	26800	3350	10.0	7	46800	6685	17.5	26	193900	7457	72.5	267500
11	9	29200	3244	10.0	6	40400	6733	13.9	29	221000	7620	76.1	290600
12	Holiday												
13	10	33200	3320	10.8	5	38400	7680	12.6	31	234400	7561	76.6	306000
14	Sunday												
15	9	31700	3522	11.5	4	26700	6675	9.7	28	216500	7732	78.8	274900
16	7	22400	3200	9.9	5	33900	6780	15.0	23	170300	7404	75.1	226600
17	10	34100	3410	14.9	7	35000	5000	15.3	21	159400	7590	69.8	228500
18	9	30100	3344	12.5	3	23400	7800	9.8	25	186000	7440	77.7	239500
19													
20	17	62000	3647	12.5	11	78700	7154	15.9	47	354800	7549	71.6	495500
21	Sunday												
22	7	25600	3657	9.5	3	23900	7967	8.9	29	220200	7593	81.6	269700
23	6	22900	3817	8.2	11	76000	6909	27.0	24	182100	7588	64.8	281000
24	8	28500	3562	11.5	1	6100	6100	2.4	29	213600	7366	86.1	248200
25	12	44300	3692	17.8	3	19500	6500		25	184400	7376		248200
26													
27	17	62300	3665	11.0	9	64100	7122	11.4	58	438600	7562	77.6	565000
28	Sunday												
29	5	18600	3720	6.2	10	76400	7640	25.3	27	206900	7663	68.5	301900
30	7	24200	3457	9.6	9	68500	7611	27.1	21	160000	7619	63.3	252700
5--1-74	8	26600	3325	9.4	5	32400	6480	11.4	30	225300	7510	79.2	284300
2	8	26600	3325	8.4	9	62800	6978	20.0	30	225300	7510	71.6	314700
												Average	291,157

APPENDIX II

ANALYSIS OF VAPOR COLLECTING EFFECTIVENESS

	Date	Displaced Gases to Oxidizer Ambient T & P Ft^3	Gasoline Shipped Gallons	Collecting Effectiveness Volume Burned ÷ Volume Displaced
	11-12-73	35100	310800	0.84
	13	34000	281900	0.90
	14	16100	262000	0.46
	15	19100	273400	0.52
	16	20300		
	17	17500	464500	0.61
Sunday	18			
	19	36600	291600	0.94
	20	13900	275000	0.38
	21	32700	295900	0.83
Holiday	22			
	23	15000		
	24	23700	452000	0.64
Sunday	25			
	26	28200	272600	0.77
	27	27500	294300	0.70
	28	18300	267100	0.51
	29	25900	277400	0.70
	30		236000	
	12--1-73			
Sunday	2			
	3	70500	537400	0.68
	4	24600	288300	0.64
	5	38600	288200	1.00
	6	19500	285800	0.51
	7	15300		
	8		609500	
Sunday	9			
	10	56400	285000	0.60
	11	24000	269700	0.67
	12-12-73	28600	285100	0.75-20
	13	28700	293100	0.73
	14	25300	246300	0.77
	15		255400	
Sunday	16			
	17	40600	239700	0.61
	18	11600	191700	0.45
	19	19000	290200	0.49
	20	17800	202900	0.66
	21	6600		
	22		481100	
Sunday	23			
	24	33100	249400	0.41

	Date	Displaced Gases to Oxidizer Ambient T & P Ft^3	Gasoline Shipped Gallons	Collecting Effectiveness Volume Burned ÷ Volume Displaced
Holiday	12-25-73			
	26	11700	235000	0.37
	27	15200	266900	0.43
	28	14000		
	29		449000	
Sunday	30			
	31	36400	239900	0.55
Holiday	1--1-74			
	2	27300		
	3	11300	614500	0.47
	4	27100		
	5		518300	
Sunday	6			
	7	36400	235900	0.63
	8	21100	260200	0.61
	9	10900	228800	0.36
	10	7300	211700	0.26
	11	6700		
	12		397158	
Sunday	13			
	14	21900	232900	0.34
	15		243600	
	16	45100	243600	0.69
	17	15500	258200	0.45
	18			
	19	Winter Test Interval		
Sunday	20	System Overhaul		
	21			
	22			
	23	29030	242300	0.90
	24	19490	158700	0.92
	25	17380		
	26		443700	
Sunday	27			
	28	60990	238300	0.86
	29	27360	208500	0.98
	30	31340	243800	0.96
	31	28500	267700	0.80
	2--1-74	31530		
	2		527300	
Sunday	3			
	4	51365	218900	0.83
	5	30765	256800	0.90
	6	32415	272500	0.89
	7	22480	206700	0.81
	8	31215		
	9		442400	
Sunday	10			
	11	52595	301000	0.84
	12	28890	250900	0.86
	13	33095	257200	0.96
	14	26590	244000	0.82

	Date	Displaced Gases to Oxidizer Ambient T & P Ft^3	Gasoline Shipped Gallons	Collecting Effectiveness Volume Burned ÷ Volume Displaced
	2-15-74	20880	210400	0.74
Saturday	16		251900	
Sunday	17			
Holiday	18	43740		
	19	12880	316600	0.74
	20	25355	234100	0.81
	21	29700	268300	0.83
	22	18825		
Saturday	23		370800	
Sunday	24			
	25	25410	136700	0.65
	26	9540	122200	0.58
	27	16000	157100	0.76
	28	19825	213200	0.70
	3--1-74	30475		
Saturday	2		598000	
Sunday	3			
	4	60320	302600	0.75
	5	35300	268900	0.98
	6	30660	256600	0.89
	7	19190	182500	0.79
	8	23130		
Saturday	9		398700	
Sunday	10			
	11	41355	212900	0.79
	12	28525	225000	0.95
	13	23760	254100	0.70
	14	26280	256000	0.77
	15	14455		
Saturday	16		378500	
Sunday	17			
	18	56355	223100	0.88
	19	29225	249900	0.87
	20	32475	260400	0.93
	21	29260	235500	0.93
	22	23305		
Saturday	23		409400	
Sunday	24			
	25		243200	
	26	80445	253900	0.86
	27	32670	273000	0.90
	28	24750	199900	0.93

	Date	Displaced Gases to Oxidizer Ambient T & P Ft^3	Gasoline Shipped Gallons	Collecting Effectiveness Volume Burned - Volume Displaced	
	3-29-74	26200	239800	0.82	
Saturday	30		248100		
Sunday	31				
	4--1-74	50290			
	2	28300	435400	0.86	
	3	36320	283400	0.96	
	4	29990	255100	0.88	
	5	25260			
Saturday	6		475000		
Sunday	7				
	8	41260	273200	0.66	* Vacuum valves omitted on cleaned trucks
	9	21700	215100	0.75	
	10	30615	267500	0.86	
	11	32335	290600	0.83	
	New vacuum-break valves installed on 5 trucks				
Holiday	12				
	13		306000		
Sunday	14				
	15	66430	274900	0.86	
	16	28120	226600	0.93	
	17	2330	228500	0.08	* Power failure, Oxidizer out of service
	18	32280	239500	1.01	
	19	27710			
Saturday	20		495500		
Sunday	21				
	22	66990	269700	0.93	
	23				
	24	Spring Test Interval			
	25				
	26	34210			
	27	31110	565000	0.86	
Sunday	28	14260			
	29	23440	301900	0.93	
	30	30790	252700	0.91	
	5--1-74	36980	284300	0.97	
	2	35870	314700	0.85	

APPENDIX III

DESIGN MANUAL

Philadelphia Terminal
Vapor Recovery and Oxidation System

Index

I General Information

A. Vapor Control Facilities
B. General Description of Process
C. Plot Plan

II Process Flow

A. Vapor Collection
B. Vapor Storage
C. Vapor Enrichment
D. Vapor Oxidation
E. Compressed Air System

III Start-Up Procedure

A. General
B. Initial Start-Up
C. Normal Start-Up

IV Normal Operating Procedure

A. General
B. Checking and Maintaining Critical Equipment

V Cold Weather Procedure

VI Shutdown Procedure

Philadelphia Terminal
Vapor Recovery and Oxidation System

I General Information

A. Vapor Control Facilities

A recent ordinance of the City of Philadelphia requires that all hydrocarbon vapors with a vapor pressure greater than 1.5 psi absolute (such as gasoline) resulting from truck or other loading operation be collected and disposed of in such a manner that no more than 10% would be discharged into the atmosphere. To comply with this ordinance Amoco examined several methods of vapor recovery. Since the cost of vapor recovery was high compared to the small quantity of liquid recovered, it was decided to oxidize the vapors. The products of combustion (primarily water vapor and carbon dioxide)are not air pollutants and are acceptable for discharge into the air. Amoco accordingly designed and built a vapor oxidation plant which converts 98% of the truck loading vapors into harmless components for discharge into the air.

B. General Description of the Process

This vapor control and oxidation plant consists of the following parts:

1. A vapor collection system
2. A vapor holder for storage
3. A vapor enrichment system
4. A vapor disposal or oxidation system

The vapor collection system consists of two sub-systems, namely, the bottom loading system and the top loading system. In the bottom loading collection system the truck vapor spaces are piped via a common header to a dry break connection near the truck manifold. This dry break is mated to one attached to the vapor line at the loading dock thus allowing the vapors expelled by the loading operation to be conveyed to the vapor holder. In top loading an air operated combination loading and vapor arm is inserted in the truck dome. The pressure created by loading forces the vapor through a spring loaded check valve into the vapor section of the arm, where it is conveyed to the vapor gathering system and thus to the vapor holder.

Since the volume of vapor produced varies considerably from hour to hour and the oxidizer consumes at a constant rate, it is necessary to use a vapor holder for storage. The vapor holder consists of a tank with an internal flexible diaphragm giving a variable volume of about 5000 c.f. between lower and upper limits. The diaphragm is attached to an external reading level gauge containing upper and lower limit switches which are used to start and stop the oxidation process.

Gasoline vapors collected from truck loading are normally overrich, that is, they are above the flammability range which is normally about 1½% to 9% of hydrocarbon by volume with air. This normally does not present a problem in warm weather when the gasoline vapor air saturation point is in the neighborhood of 50%; however, in cold weather when the saturation point drops to 25% or less and a new truck is placed in service, an inordinate amount of air is introduced to the system which can drop the vapor to near the flammable range. To avoid this, propane is introduced into the vapor stream to keep the air-vapor ratio at or above the 11% level. Instrumentation is provided to measure both the oxygen level and the density of the vapor and at a critical level to introduce propane into the stream entering the vapor holder. In the event of an instrument failure and to ensure safety, a temperature-flow instrument is installed to introduce propane at any time the temperature fails below 15° F.

The vapor is disposed of by burning it in an oxidizer at a rate of about 100 c.f.m. A vapor blower boosts the pressure of the vapor stream from the ¼ inch of water in the vapor holder to 14 inches of water. An adjustable pressure control valve then reduces the pressure to a proper burning level which is about 4 inches of water. An air blower supplies the oxidizer with a constant 6500 c.f.m. air supply. Since the temperature of the gas leaving the oxidizer cannot exceed 1500°F in order to limit the possibility of excess NO_x, and the composition of the gasoline vapor can vary over a wide range, the vapor flow to the burner is regulated by a temperature control valve which controls the amount of vapor entering the oxidizer so as to maintain a temperature of 1400°F.

C. Plot Plan

A plot plan showing the location of the vapor oxidation facilities at the terminal and the relation of the facilities to the other operating areas is given in the attached drawing 31-57-023 of this appendix.

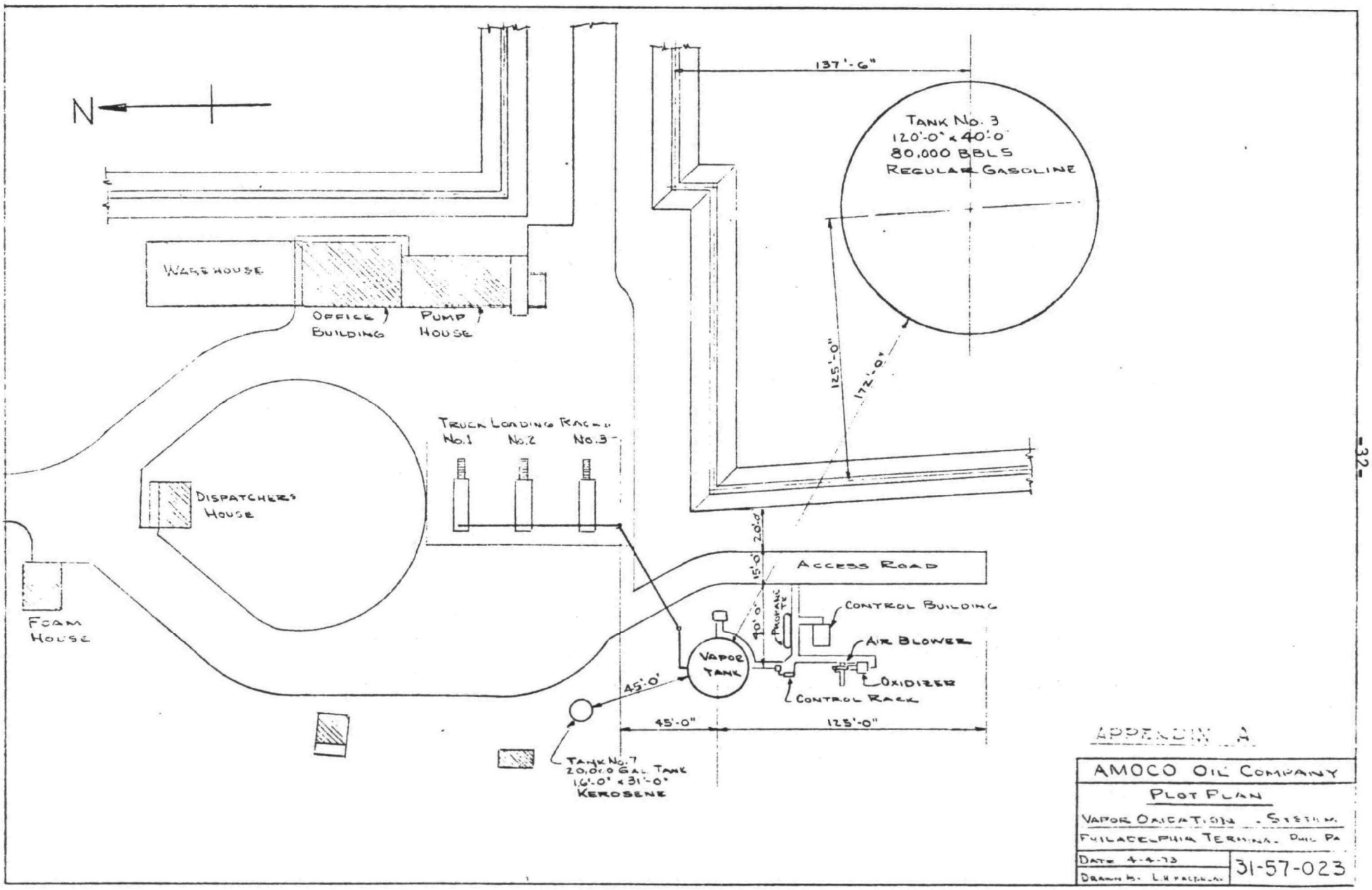
N
WAREHOUSE
OFFICE BUILDING
PUMP HOUSE
TRUCK LOADING RACK
No.1
No.2
No.3
DISPATCHERS HOUSE
FOAM HOUSE
137'-6"
TANK No. 3
120'-0" x 40'-0"
80,000 BBLS
REGULAR GASOLINE
125'-0"
172'-0"
20'-0"
15'-0"
ACCESS ROAD
CONTROL BUILDING
PROPANE TK
90'-0"
AIR BLOWER
VAPOR TANK
OXIDIZER
CONTROL RACK
45'-0"
45'-0"
125'-0"
TANK No. 7
20,000 GAL TANK
16'-0" x 31'-0"
KEROSENE
APPENDIX A
AMOCO OIL COMPANY
PLOT PLAN
VAPOR OXIDATION SYSTEM
PHILADELPHIA TERMINAL PHIL PA
DATE 4-4-73
DRAWN BY L.H. FALDMAN
31-57-023

II Process Flow

Refer to the P & I diagram of the text, drawing 31-520, Figure 2.

A. Vapor Collection

Truck loading is performed at two bottom and one top loading racks. The gasoline loading rates at each rack are:

Amoco Premium	350 gpm
Regular	350 gpm
Amoco	600 gpm

This loading is accomplished through ticket printing set stop meters.

In bottom loading, the truck is loaded through a dry break connection on the truck manifold which mates with a dry break connector on the bottom loading arm. The vapors created by loading are collected from each compartment in a vapor manifold which terminates in a dry break connection near the truck manifold. A three inch dry break coupling is mated to the truck vapor connection and the vapors are conducted through a three inch hose to four inch pipe header and thence via a 6-inch header to the vapor holder. As each compartment is loaded, it is necessary to open the liquid manifold valve to the compartment. It is also necessary to lift the vapor vent valve to the compartment otherwise the loading rate may be restricted since it requires a pressure of one p.s.i. to open this vent.

Flow of product is also controlled by the truck grounding clamp which is intergally wired to the pump and solenoid valve circuit. The bottom loading trucks have high level switches in each compartment to prevent overfilling. If a compartment is overfilled it must be drained down below the high level switch before loading can proceed on the other compartments. There is also a shut down switch in the dispatcher's building which can stop all rack loading.

Top loading is accomplished through an air operated combination, liquid and vapor loading arm which is raised and lowered by an air cylinder using 60 psi air. The head of the loading arm is forced down by the air pressure against the truck dome forming a tight seal. As the head is forced into the dome a collar is raised which actuates a valve that lets air into the liquid shut off valve making it operable. When the liquid line valve and the set stop valve are opened, the liquid flowing into the tank forces open the vapor check valve in the loading head when the pressure reaches one-half p.s.i. The loading head contains a float which when the liquid level is too high

will bleed the air from the loading valve thus closing it. If for any reason the arm comes out of the dome during loading the collar on the head will retract actuating the air valve which will bleed air from the loading valve thus closing it. If the vapor line is blocked, the pressure in the compartment will force the loading head out thus stopping the product flow. Flow is also controlled by the grounding clamp and the switch in the dispatcher's building.

The vapor piping system isolates each truck loading rack by means of a flame arrestor installed in each line to the bottom loading racks. Also the vapor collection piping is isolated from the vapor holder by a flame arrestor in the 6 inch vapor header. These flame arrestors are to prevent the propagation of a flame between truck racks and between the truck racks and the vapor holder.

The pressure in the vapor collection system will vary depending on the truck loading rate and the number of trucks loading simultaneously. It will normally be no more than one p.s.i. at the truck to as little as one-quarter (1/4) inch of water at the vapor holder. Should the hand operated valve at the entrance to the vapor holder be closed there is a relief valve in the six inch vapor line set to open at 6 inches of water pressure.

B. Vapor Storage

If three trucks were simultaneously loading two gasolines each, they would be creating vapor at the rate of 300 c.f.m. By the same token if one truck was loading one product the vapor production would be about 50 c.f.m. Since the oxidizer burns vapor at about 100 c.f.m., and the vapor production is variable, it is necessary to provide storage for the vapor. This vapor storage consists of a tank, or holder, containing a flexible internal diaphragm which rises and falls with the amount of vapor introduced or withdrawn from the tank.

The vapor holder contains about 5000 c.f. of operating vapor space from a gauge reading of 0'-3" to 24'-0". However, since the vapor entering the tank could be greater than the burner can handle the operating limits of the diaphragm are set at 4'-6" and 17'-0" which gives an operating capacity of 3000 c.f.

The operating pressure of the diaphragm is 1/4 inch of water. To protect the diaphragm there is a relief valve set at 1.25 inches of water pressure and 0.865 inches of water vacuum. In the event of any condensation in the vapor holder a 1500 gallon spherical drain tank is provided which is connected to the sump in the center of the holder by a 2" line. Since the holder is under vapor pressure the underground tank has a 2 inch pressure equalizing line to the holder.

C. Vapor Enrichment

The flammability range of gasoline vapor is generally between 1½% and 9% gasoline to air by volume. Normally the vapor in trucks in gasoline service is well above this range especially if they are top loaded. Also, after a truck dumps its load there is enough product clingage left in the compartment to enrich the vapor space during the return trip. However, in the case of a switch load or a gas free compartment, there is a chance that the flammable range could be reached especially in the case of bottom loading.

Temperature is also a factor in the saturation of gasoline vapor. As the temperature drops the heavier molecules (pentanes and hexanes) begin to condense leaving the lighter molecules. Saturations at various temperatures are approximately as follows:

0°F	14%
30°F	25%
50°F	33%
70°F	40%
90°F	55%

When the temperature gets near 0°F the saturation approaches the upper flammable limit.

To protect against the vapor being in the flammable range propane is injected into the vapor pipe at the inlet to the vapor sphere. To control the injection of propane three instruments have been installed in the 6" vapor line, as follows:

1. ACH-100 (Analysis Control High) is a Beckman Oxygen Analyzer which continuously measures the oxygen content in the vapor stream. When the oxygen reaches a level of 18.6% corresponding to a hydrocarbon saturation of 11% it opens the solenoid valve SDV 100 (Figure 2) allowing propane to enter the stream. The propane is metered through an orifice FO-101 at a rate of about 17 c.f.m.

2. DCL-100 (Density Control Low) is a Ranarex density control meter that continually measures the density of the vapor stream. When the density reaches a low level of 1.13 corresponding to a saturation of 11% it opens the solenoid valve SDV 100 allowing propane to enrich the stream.

3. TCL-100 (Temperature Control Low) measures the temperature and when it drops to 15° F, or lower, and the FS-100 (flow switch) indicates vapor flowing in the 6" vapor line it will open the solenoid valve SDV 100 to begin propane injection.

In addition to the three automatic means of injecting propane, a hand valve by-pass of SDV 100 is provided in the event operator sampling indicates the need for additional propane enrichment. An analysis port AP-100 is provided on the vapor holder for sampling the contents.

Since the vapor pressure of propane falls to 23 psi at 0° F there is danger of having insufficient pressure to enrich the vapor. To forestall this difficulty an external heating coil is installed on the propane tank controlled by a thermostat (TCL-101) set to maintain a temperature of 15° F.

In the event the level in the propane tank should fall to 12 inches, or below, a red light will show on the board. An alarm (LAL-100) is connected to this switch to sound at low propane level.

D. Vapor Oxidation

1. Flow To Oxidizer

Provided the air blower and the pilot light in the oxidizer are operating, when the diaphragm in the vapor holder reaches its upper operating limit of 16 feet the ground level reading gauge actuates a built in switch (LSH-200) which starts the vapor blower and the alarm horn (LA-200). The vapor blower takes suction through a three inch line at tank pressure and boosts the pressure to 14 inches of water at 100 c.f.m. Downstream from the vapor blower is an adjustable pressure regulator (PCV-200) which is set to control the vapor pressure to the burner at 4 inches of water.

At the same time the vapor blower starts an electric impulse opens two shutdown valves (SDV-200 and SDV-201). When SDV-200 starts to open, it will shut off the alarm horn (LA-200). This alarm horn will come on again only if SDV-200 closes before it receives a closing signal from low level switch (LSL-200). SDV-200 will open only if the low pressure switch (PSL-200) and the high pressure switch (PSH-201) indicate the correct pressure in the vapor line. PSL-200 is set to shut down SDV-200 if the pressure falls below 2 oz/s.i. (3-1/2 in. water). PSH-201 is set to shut down SDV-200 should the pressure in the line exceed 6 oz/s.i. (10-1/2 in. water).

At the same time SDV-200 and SDV-201 are actuated vent valve (SDV-202) is closed. This valve vents the 3" vapor header between the block valves to prevent pressure build

up during shut down periods that would pass the limit of PSH-201 and not allow SDV-200 to open.

Since the oxidizer operates on the principle of constant air supply with variable fuel supply to obtain proper combustion, the vapor supply reaching the burner is regulated by the Maxon burner control valve. The operation of the valve is controlled by a Barber-Colman 537G temperature indicating controller (TIC-200) which indicates the burning temperature and is normally set to maintain a burning temperature of 1400°F. A thermocouple in the furnace sends an electric signal to TIC-200 which in turn furnishes a signal to the Barber-Colman PO2R current to pneumatic transducer (TY-200). TY-200 is operated on 20 psi instrument air. This instrument converts the electric signal it receives to a pneumatic signal which operates the burner control valve. The pneumatic control line between TY-200 and the burner control valve contains a shutdown valve (SDV-203) that opens to allow air pressure to reach the burner control valve by the signal that opens the safety valve SDV-200. When SDV-200 closes, SDV-203 closes the line to TY-200 and vents the line to the burner control valve to prevent overpressure of the elements.

A pressure indicator (PI-200) is located in the three inch vapor header downstream of the burner control valve. PI-200 indicates the set pressure (4" of water) to the burner. Flame arrestors are located in the 3 inch vapor line, one near the burner and one near the vapor holder. These flame arrestors are to prevent any backflash from the burner reaching the vapor holder.

Two Barber-Colman model 72E high temperature shut downs (TSH 201 and TSH 202) are set to limit the oxidizer temperature at no more than 1500°F. If a temperature of 1500°F is exceeded one or both of these switches will close the main vapor line shut down valve (SDV-200). The closing of SDV-200 will sound the alarm horn (LA-200) and close the blocking valve (SDV-201).

When the vapor holder diaphragm reaches the bottom, a reading of 4 feet-6 inches on the level indicator, the level switch low (LSL-200) will be actuated which will shut down the vapor blower, close valves SDV-200, SDV-201 and SDV-203, and open the vent valve SDV-202. The unit will remain in this shut down status until the level switch high (LSH-200) on the vapor holder again starts the cycle.

2. Oxidizer

The vapor is burned in a hydrocarbon oxidizer which is designed to burn a mixture of butanes and pentanes with a vapor-air saturation of between 7-1/2% and 50%. The oxidizer is fed a constant supply of air at a rate of 6500 cfm with the vapor supply being regulated to maintain an oxidation chamber temperature at or below 1400°F.

The oxidizer consists of a burner chamber and an oxidizing chamber. The burner chamber houses the Maxon Combustifume gas burner system along with the pilot light, spark igniter and flame rod. The burner has a maximum capacity of 10,200,000 BTU/HR. The normal oxidizing rate is about 100 c.f.m. The oxidizing chamber is approximately 10'-6" high with overall outside dimensions of 5'-6" by 5'-6". The top of the chamber is 20'-7" above grade. The chamber is equipped with a stainless steel gravity type rain cap which is opened by the air blower pressure. There is a peep sight for flame viewing.

The constant air supply to the burner is supplied by an air blower that delivers 6500 cfm against a static head of 2 inches of water. The blower is started by a push button on the control board provided the control building air purge has been completed. This fan must operate before the pilot can be lit. A pressure switch (PS-202) is located in the discharge duct of the fan and if the fan stops for any reason it will shut down the pilot and as a result the whole oxidation cycle.

3. Pilot Light

The burner section of the oxidizer has a continuously burning propane pilot. Propane is supplied from the 1000 gallon propane tank used for the vapor enrichment system through an outlet independent of the vapor enrichment system. At the tank outlet there is a pressure reducing valve (PCV-201) which maintains downstream pressure of 11 inches of water. A ½ inch propane pilot line leads to the control rack where an adjustable pressure reducing valve PCV-202 further reduces the pressure to 7" of water. A pressure indicator is mounted on the control rack that indicates the propane pressure to the pilot.

Propane enters the burner through a solenoid shut down valve (SDV-204) which is opened by turning on the burner switch (HS-201) provided the air blower is operating and

there is sufficient propane. When the burner switch (HS-201) is turned on, there is a 60 second delay (KC-200) before SDV-204 will open, then it will only open for 15 seconds (KC-201) while the igniter is operating. If the pilot lights and the flame rod (TSL-200) so indicates, then SDV-204 will remain open to supply propane to the pilot. If TSL-200 indicates a flame before the 15 seconds expire the igniter will be stopped. If TSL-200 is not satisfied the process must be repeated by pressing the reset button.

4. Control Building

The electrical controls are located in the control building which is pressurized by a continuous 300 c.f.m. purge air blower. The building purge air blower must be activated for five minutes before the oxidation system can be started. The purge air blower is started by a push button (HS-202). When the discharge pressure activates the pressure switch (PS-203) in the duct a timer (KC-202) is started and after five minutes the oxidizer air blower can be started. The discharge duct contains an electric heater to maintain 45° F in the building. If the electric heater should fail a propane space heater is provided for back-up.

E. Compressed Air System

Compressed air is provided for the loading arms and the burner control by a Champion VRI-6 air compressor with a 60 gallon storage tank. The compressor is operated by a pressure control switch set to operate between a cut in pressure of 150 psi and a cut out pressure of 180 psi. A Wilkerson model 1137-3FX air filter is used along with a Wilkerson #4103-21-H continuously regenerating air dryer. Pressure reducing valves are used on each branch line to maintain a pressure of 90 psi to the loading arms and a pressure of 20 psi to the burner control (TY-200).

III Start-Up Procedure

A. General

This start-up procedure is written as a guide for the safe start up of the vapor recovery and oxidation system. Since certain hazards are inherent when handling hydrocarbons and their vapors it is necessary that a very rigid and precise procedure be followed when starting the equipment. The procedure no matter how carefully drawn cannot cover all conditions that may exist, and the operator should be on alert for these situations and should institute such additional steps as may be necessary to cope with them.

Since the truck loading is in operation and follows a generally known and understood system it will not be covered in the start-up procedure.

The start-up of the recovery and oxidation system follows the following general pattern:

1. Start control building purge air
2. Place vapor stream analyzers in operation
3. Put propane enrichment system on stream
4. Check contents of vapor holder for flammable limits
5. Put vapor holder on stream
6. Start air blower
7. Start air compressor
8. Put propane pilot light system on stream
9. Light pilot

B. Initial Start-Up

This procedure is used on either original startup or startup after the vapor holder has been taken out of service and gas freed. It precedes the normal start up procedure outlined in the following Section C. The following steps shall be taken:

1. Close both fill and discharge line valves at vapor holder.

2. Check that all vapor holder openings are closed.

3. Remove pallet from tank vent valve to provide an air vent.

4. Open drain valve in drain tank and close vapor equalizing valve. Check tank to be sure it is empty.

5. Purge vapor holder through gauge port of drain tank with 4000 s.c.f. of nitrogen.

6. Close vent by replacing pallet and fill vapor holder with nitrogen (about 6000 s.c.f.).

7. If vapor line to truck rack is vapor free, remove a bottom loading vapor connection at each rack and discharge the vapor holder. Stop flow before the diaphragm reaches its bottom position (4'-6"on the gauge). Otherwise open tank vent.

8. Take readings at the vapor holder sample connection with oxygen analyzer (obtain from Regional Office). Oxygen should be 2% or less. If not, repeat steps 6,7,and 8 until a proper reading is obtained.

9. Proceed with normal start-up procedure outlined in Section C omitting steps 6 and 7.

C. Normal Start-Up Procedure

1. Place all 110V and 440V electrical breakers in control building in "on" position.

2. Turn on console power by closing selector switch.

3. Start building purge air fan. Air pressure from fan will close air pressure switch PS-203 in duct which will energize the purge timer control KC-202. After five (5) minutes the purge timer will energize the circuit to the air blower which will be indicated on the board by a green "purge complete" light.

4. Place vapor stream analyzers in operation. Normally these units remain in operation during periods of shutdown. However, in the event they are down they should be started or if operating they should be checked in the following manner:

   a. Open hand valve at vapor line.

   b. Turn on unit power.

   c. Follow start-up and unit check instructions in Appendix D for Beckman Oxygen analyzer and Appendix E for Ranarex density meter.

5. Place the propane enrichment system on stream being sure to complete the following steps:

   a. Check level of propane in tank and if below 24 inches order replenishment.

   b. Open all four hand valves on propane line. Two at tank and two at vapor line.

   c. Check that bypass valve around solenoid is closed.

6. Check the contents of the vapor holder through the sample port (AP-100) with a combustible gas analyzer. If vapor is in flammable zone (11% or less hydrocarbon-air mixture) open bypass valve around solenoid valve SDV100 on propane feed line. Check vapor holder every ten minutes until vapor is above flammable limit. Close bypass valve. Omit this step if initial start-up procedure was used.

7. Open inlet valve to vapor holder.

8. Open hand operated drain and return vapor valves on underground tank and check to be sure the pump out connection is in place and tight.

9. Open all three hand valves in 3 inch Vapor line between vapor holder and oxidizer.

10. Start air supply blower to oxidizer. This fan cannot be started unless green "purge complete" light is on board. Pressure in the discharge duct will close the pressure switch PS-202 which will energize the burner selector switch and bring on the board a green "supply fan on" light.

11. Start air compressor. Check instrument air supply controller to be sure it is set at 20 p.s.i. Loading arm supply controller should be between 60 and 90 p.s.i.

12. Put propane pilot system on stream by opening hand valve at tank and hand valve in ½" propane line before control valve PCV 202. Check pressure gauge PI 201 which should read 11 inches water (4 inches water when pilot is lit).

13. Light the pilot by turning the burner selector switch (HS-201) to "on". The built-in timer (KC-200) will after a 60 second delay energize the igniter and open the pilot gas valve (SDV-204). Once the pilot is established and detected by the flame rod (TSL-200) the igniter will be de-energized and the pilot gas valve (SDV-204) will remain open. If the pilot is not proved in 15 seconds (KC-201) the igniter stops and

the pilot gas valve closes. To again start the pilot, it is necessary to press the red reset button behind the control board. When the pilot is proved a "pilot on" amber light shows on the board.

The unit is now on stream and programmed to operate automatically.

IV. Normal Operating Procedure

A. General

The unit is programmed to operate automatically when the high vapor level switch turns on the unit and will automatically stop when the low vapor level switch is closed. The air blower and pilot light will operate continuously. Positive action by the operator is not required except to monitor and maintain the equipment and handle emergencies.

In the normal operating sequence when the level of the vapor in the holder reaches 17'-0" on the gauge (LI-200) the level switch high (LSH-200) will close and start the vapor blower along with the alarm horn. The pressure from the vapor blower will close the low pressure switch (PSL-200) and provided the high pressure switch (PSH-201) is satisfied will bring a green light on the board indicating "gas pressure on". The energizing of the vapor blower and the satisfying of the pressure switches (PSL-200 and PSH-201) will open the safety valve (SDV-200) provided the two high temperature switches (TSH-201 and TSH-202) in the oxidizer are satisfied. The opening of the safety valve (SDV-200) will do three things, namely:

1. Stop the alarm horn which will normally have been sounding for about 3 to 5 seconds.

2. Open the blocking solenoid valve (SDV-201) and close the vent valve (SDV-202) thus allowing the vapor stream to reach the burner.

3. Bring an amber light on the board indicating "main gas on".

Each time the vapor saver switch (LSH-200) closes it will sound the alarm horn (LA-200) until the safety valve (SDV-200) begins to open. Opening of this valve will silence the horn. If the safety valve (SDV-200), does not open the horn will continue to sound. If the valve (SDV-200) should close during the burning cycle for some reason other than being closed by the low level switch (LSL-200), the horn will begin to sound, indicating trouble in the unit. Should the horn continue to sound, press the horn off button on the control panel thus bringing on the trouble light, and proceed to find the trouble.

Once the valves (SDV-200 and SDV-201) are opened, the amount of vapor reaching the oxidizer is controlled by the Maxon burner control valve. The operation of this valve is controlled by a

Barber Coleman 537G, board mounted, temperature indicating controller (TIC-200) which measures the temperature in the oxidizer and transmits it to the Barber Coleman PO2R electric pneumatic transducer (TY-200). TY-200 then opens or closes the Maxon burner control valve pneumatically to maintain the set temperature of 1400°F, provided there is sufficient vapor concentration to reach the temperature, otherwise it will operate wide open.

When the vapor holder level reaches 4'-6" on the gauge (LI-200) the level switch (LSL-200) will open thus shutting down the vapor blower, safety valve (SDV-200), and blocking solenoid valve (SDV-201) and opening the vent valve (SDV-202). Also the valve on the air line from the current to pneumatic transducer (TY-200) to the Maxon burner control valve will close. The oxidation cycle thus stopped will remain so until the level switch high (LSH-200) again starts the cycle.

B. Checking and Maintaining Critical Equipment

To comply with the law, it is necessary that we keep the oxidation unit in operation at top efficiency at all times. To keep a plant in continuous operation requires constant checking and preventative maintenance by the operators. It is impossible to set forth a complete list of items to be monitored by the operator. Also it is impossible to provide a complete maintenance list. The check and maintenance lists contained herein are only a guide. The operator should study the unit and the various equipment to determine other areas to be monitored and items on which preventative maintenance can be applied.

1. Daily Check and Maintenance

These items should be checked at the start of each shift:

a. Check control board to be sure unit is ready for operation, that is, purge fan on, air blower on and pilot on. If not ready for operation return to "Start Up Procedure" and bring unit on line.

b. Check Beckman Oxygen Analyzer

c. Check Ranarex Density Meter

d. Record date and time on Brown recorder charts for furnace and system temperature.

e. Check any unusual odor in building.

f. Check air compressor for oil level, power and pressure.

g. Check propane tank for level, pressure and on-stream condition.

h. Check vapor in vapor holder to assure that air vapor mixture is at, or above, 11%.

2. Weekly Check and Maintenance

The following equipment should be checked once a week in accordance with Appendix K:

a. Beckman Oxygen Analyzer
b. Ranarex Density Meter
c. Air Compressor
d. Wilkerson Air Drier
e. Main Gas Pressure PI-200
f. Pilot Gas Pressure PI-201
g. Oxidizer Air Blower
h. Check drain tank level
i. Check space above diaphragm for combustible gas.

3. Quarterly Check and Maintenance List

The following equipment should be inspected and maintained once a quarter unless experience indicates otherwise:

a. Pull flame arrestor banks and clean as necessary.

b. Check pallet in vapor holder relief valve to be sure it is clean and operable.

c. Check pallet in vapor line relief valve to be sure it is clean and operable.

d. Check and clean free vent screens on vapor holder.

e. Check operation of all hand valves.

f. Check operation of all relief valves.

g. Change air compressor crank case oil.

The above list should be added to by the operator as he finds areas that require checking and maintaining.

V. Cold Weather Procedure

When the temperature falls to 0°F the gasoline vapor - air mixture could be in the flammable range especially for mixtures of less than 100% saturation. To assure we are on the safe side we have selected a temperature of 15°F, or below, as being critical and requiring special procedures.

The procedure when the temperature goes below 15° F is to be sure that our propane injection system is operating properly. This can be done by the following steps:

1. When it is expected that the temperature will go below 15°F and the propane tank is half full, or below, have the tank filled.

2. Check the vapor in the vapor holder with the explosimeter on each shift to assure that it is above 11% gasoline vapor air mixture. If below 11% turn off burner selector switch on board, close hand operated vapor holder inlet valve, and open propane enrichment system bypass valve of SDV-100. Check vapor holder until correct reading is obtained. When mixture is at or above the 11% mark close propane bypass valve. Check the propane enrichment system to determine why the mixture was not being enriched. When satisfied the system is working proceed to open vapor holder inlet valve and turn on burner selector switch. Be sure "pilot on" light comes on board.

3. Check the propane tank pressure each shift to determine if it is 35 psi, or above. The tank has a heater set to maintain 15°F in the tank. A pressure of 35 psi corresponds to a product temperature of 15°F.

VI Shutdown Procedure

A. Normal Shutdown

This procedure applies to short periods not longer than over a weekend or holiday.

1. Close the inlet and outlet vapor line valves on the vapor holder.

2. Turn burner selector switch to "off" position.

3. Turn off air supply blower to oxidizer.

4. Close propane supply valve to pilot at propane tank.

5. Shutdown air compressor by turning off electric power switch and closing globe valve at tank outlet.

B. Long Term Shutdown

This procedure applies where the unit is to be shut down either longer than two days or for major equipment repairs.

1. Complete all steps for normal shutdown.

2. Close propane enrichment hand valves at tank and at six inch vapor line.

3. Place locks on both inlet and outlet vapor line valves of vapor holder.

4. Shutdown both Beckman Oxygen Analyzer and Ranarex Density meter by turning off the power to the instruments and closing the gas bottle valves feeding the instruments.

5. Turn off building purge air fan by pressing stop button.

6. Turn console power switch to "off".

7. Open all 110V and 440V circuit switches in control building.

C. Secure Vapor Holder

This procedure applies when it is desired to place the vapor holder in a safe condition for either long term shutdown or work on the holder. After completing long term shutdown procedure, the vapor holder is then inerted by filling with nitrogen through the drain tank connection, after the drain tank has been completely evacuated, and venting through the sample connection as outlined in initial startup procedure. Test with a combustible gas tester using a dilution attachment set at 80% air until a reading

of 50% L.E.L. is obtained. The dilution attachment can be obtained from the Regional Office. The tank is then gas freed with air until safe for entrance.

TECHNICAL REPORT DATA
(Please read Instructions on the reverse before completing)

1. REPORT NO. EPA-650/2-75-042	2.	3. RECIPIENT'S ACCESSION NO.
4. TITLE AND SUBTITLE Demonstration of Reduced Hydrocarbon Emissions from Gasoline Loading Terminals		5. REPORT DATE June 1975
		6. PERFORMING ORGANIZATION CODE
7. AUTHOR(S) D.C. Walker, H.W. Husa, and I. Ginsburgh		8. PERFORMING ORGANIZATION REPORT NO.
9. PERFORMING ORGANIZATION NAME AND ADDRESS Amoco Oil Company, Research and Development Department, P.O. Box 400, Naperville, Illinois 60540		10. PROGRAM ELEMENT NO. 1AB015; ROAP 21AFD-021
		11. CONTRACT/GRANT NO. 68-02-1314
12. SPONSORING AGENCY NAME AND ADDRESS EPA, Office of Research and Development, NERC-RTP, Control Systems Laboratory, Research Triangle Park, NC 27711		13. TYPE OF REPORT AND PERIOD COVERED Final; 6/73 - 9/74
		14. SPONSORING AGENCY CODE
15. SUPPLEMENTARY NOTES		

16. ABSTRACT The report gives results of test work to demonstrate the effectiveness of hydrocarbon oxidation for reducing emissions from a gasoline truck loading terminal in Philadelphia that pumps about 2 million barrels of gasoline per year. Major objectives of the program were to determine control efficiency, to observe operational characteristics, and to compare this installation with other known systems. Tests run during each of the four seasons showed that the oxidizer safely and efficiently disposes of 99+% of the vapor it receives, even in extremely cold weather when the air-gasoline vapor mixture is in the flammable range. Initially, a large portion of the vapor from the trucks was not reaching the oxidizer, primarily because of blockage caused by liquid carryover to the vapor collection system. After this was corrected, collection and disposal of the vapor exceeded 90%. High efficiency and low flame temperatures of the oxidizer limit formation of emissions.

17. KEY WORDS AND DOCUMENT ANALYSIS

a. DESCRIPTORS	b. IDENTIFIERS/OPEN ENDED TERMS	c. COSATI Field/Group
Air Pollution	Air Pollution Control	13B
Hydrocarbons	Stationary Sources	07C
Gasoline	Loading Terminals	21D
Tank Trucks		13F
Materials Handling Equipment		
Oxidation		

18. DISTRIBUTION STATEMENT Unlimited	19. SECURITY CLASS (This Report) Unclassified	21. NO. OF PAGES 51
	20. SECURITY CLASS (This page) Unclassified	22. PRICE

EPA Form 2220-1 (9-73)