EPA-650/4-74-017

September 1974

Environmental Monitoring Series

DESIGN OF THE EPA SEMI-TRAILER MOBILE AIR POLLUTION LABORATORY

Office of Research and Development
U. S. Environmental Protection Agency
Washington, DC 20460

EPA-650/4-74-017

DESIGN OF THE EPA SEMI-TRAILER MOBILE AIR POLLUTION LABORATORY

by

G. J. Sem

Thermo-Systems Inc.
2500 N. Cleveland Avenue
St. Paul, Minnesota 55113

Contract No. 68-02-0654
ROAP No. 21AKB-28
Program Element No. 1A1008

EPA Project Officer: Jack L. Durham

Chemistry and Physics Laboratory
National Environmental Research Center
Research Triangle Park, North Carolina 27711

Prepared for

OFFICE OF RESEARCH AND DEVELOPMENT
U.S. ENVIRONMENTAL PROTECTION AGENCY
WASHINGTON, D.C. 20460

September 1974

This report has been reviewed by the Environmental Protection Agency and approved for publication. Approval does not signify that the contents necessarily reflect the views and policies of the Agency, nor does mention of trade names or commercial products constitute endorsement or recommendation for use.

PREFACE

Simultaneous field measurements of a number of air pollutants using sophisticated state-of-the-art instruments can contribute significantly to the knowledge of air pollution dynamics. Such research measurements are needed not only at several locations within a specific suburban area, but at several locations in each of many cities and in several remote, background areas as well. The cost of state-of-the-art instrument systems and the one-of-a-kind nature of some instruments for this type of research program prohibits the use of many fixed field stations as is often done for the routine monitoring of several pollutants with less sophisticated equipment. Thus, the mobile air pollution research laboratory described below was designed and built.

Many people contributed significantly to the successful design and construction of the mobile laboratory. EPA, principly through Dr. J. L. Durham, Project Officer, and Dr. W. E. Wilson, offered many suggestions which improved the design and layout of the laboratory. Special thanks go to Professor K. T. Whitby for his many helpful suggestions covering every facet of the design. Professor B.Y.H. Liu and Mr. J. Agarwal assisted in the design of the aerosol sampling tubes and the wind shield design. Dr. B. Cantrell assisted in the layout and electrical design, particularly in the area of the data analysis center. Many of the design features are similar to, or improvements upon, the design of the mobile laboratory for the State of California Air Resources Board contract entitled "Characterization of Aerosols in Three Major Regions of California". Thermo-Systems Inc. working through prime contractor Rockwell International Science Center and subcontractor University of Minnesota, designed and constructed the mobile laboratory for the ARB program. The crew which operated the ARB laboratory during 1972 offered several suggestions which resulted in significant improvements. Mr. Robert Odberg and his crew at Fruehauf Division in St. Paul contributed suggestions, good workmanship, and much patience when many minor changes were requested. Finally, a special thanks to Marvin Hudalla who suggested many design improvements, supervised detailed construction of the facility, and kept a watchful eye on the finished appearance, all resulting in a significantly neater and more practical mobile laboratory.

TABLE OF CONTENTS

	Page No.
INTRODUCTION	1
DESIGN PHILOSOPHY	1
DESCRIPTION OF THE LABORATORY	2
Basic Trailer Specifications	2
Exterior Trailer Modifications	4
General Interior Design	7
Air Conditioning Design	7
Interior and Roof Layout	9
Electrical Design	11
Lightning Protection	15
Sampling System	15
SUMMARY	17

LIST OF ILLUSTRATIONS

Illust. No.	
1	Exterior curbside, rear, front, and roof views
2	Exterior roadside view
3	Interior floor plan for the 1973 programs
4	Interior ceiling layout
5	Interior roadside wall
6	Interior curbside wall
7	Interior front wall and work bench
8	View looking rearward at the aerosol island
9	View looking forward at the aerosol island
10	View looking forward at the data analysis island
11	View looking rearward at the gas island
12	View looking forward at the gas island
13	Interior rear wall
14	Feeder pole and cable-and-plug electrical service entrance
15	Circuit layout of the air conditioning service panel
16	Circuit layout of the instrument systems service panel
17	Outlet receptacle locations of each interior circuit
18	Outlet receptacle locations of each exterior circuit
19	Aerosol sampling and transport system
20	Schematic of gas sampling system
21	Schematic of aerosol sampling system which includes Anderson samplers
22	Schematic of aerosol sampling system which excludes Anderson samplers
23	Electrical schematic of isolation-regulation transformers for computer power

LIST OF ILLUSTRATIONS (continued)

Illust. No.	
24	Photograph of exterior curbside
25	Photograph of exterior roadside
26	Photograph of interior aerosol island and front wall
27	Photograph of interior looking rearward at the data analysis island
28	Photograph of aerosol manifolds and flow control panels
29	Closeup photograph of aerosol manifold designed for 4 Anderson samplers
30	Closeup photograph of gas manifold also showing a fused plug connected to the electrical busway
31	Exterior photograph of both aerosol sampling stacks showing windshields
32	Photograph of typical electrical feeder pole showing 2 cables from the laboratory plugged into the feeder pole setup
33	Photograph of a tractor connected to the trailer, nearly ready for transport

LIST OF METRIC EQUIVALENT UNITS

Foot = ' = 30.48 cm

Inch = " = 2.54 cm

Pound = lb = 453.6 gm

Tons = 12,000 BTU/hr = 3,516 watts

$^{o}F = \frac{9}{5}\ ^{o}C + 32$

BTU/hr = 0.293 watts

Ft^3/min = CFM = 28.32 liters per min

Gallons = Gal = 3.785 liters

INTRODUCTION

This report describes the design and construction of the EPA mobile air pollution research laboratory. Included are the design and specifications of the basic semi-trailer, the layout and design of the laboratory within the trailer, the design of exterior laboratory modifications, and the design of the sampling system. Detailed descriptions of instruments and equipment used within the laboratory are not included in this document.

DESIGN PHILOSOPHY

Several criteria have played a major role in shaping the design of the mobile laboratory. Some of these criteria were:

1. The mobile laboratory had to meet the requirements of the experimental program schedule for St. Louis during the summer and fall of 1973. The laboratory had to accommodate the instruments, equipment, and personnel planned for this experiment.

2. The mobile laboratory design must have sufficient flexibility to allow changes, both during the St. Louis program and during any subsequent programs. Future air pollution measurement programs will use new equipment as it becomes available. The laboratory must be capable of accepting new or different equipment with as little effort and as little modification of the laboratory as possible. EPA has suggested a number of instruments which may be added at a later date. Although the addition of all of these instruments simultaneously would result in overcrowding, the laboratory will accommodate any of the suggested instruments individually and will accommodate most of them simultaneously with minor layout changes.

3. The laboratory must be readily moveable to new sampling sites without requiring excessive time and effort. An experienced crew of 3 men must be able to assemble or disassemble the laboratory within a single working day.

4. Although the laboratory is neat and well organized, functional utility has priority over appearance. A beautiful laboratory which has been modified to make it functional is no longer beautiful.

5. Within the limitations imposed by other requirements, the laboratory is built of standard commercial hardware wherever possible. Not only is this less expensive now, but it also results in faster repairs and changes in the future.

6. A similar mobile laboratory was previously designed, constructed, and operated for the California Air Resources Board. The EPA trailer incorporates many significant improvements, but utilizes the same basic design concept.

DESCRIPTION OF THE LABORATORY

EPA's choice of a semi-trailer as the basic vehicle satisfies the above criteria very well. A semi-trailer is the most maneuverable vehicle of its size, an important feature in programs which frequently require moving to different locations, sometimes just across town, sometimes across the entire country. The connection to towing tractors is standardized, simplifying arrangements for transporting the laboratory. Semi-trailer manufacturers have spent many years optimizing the design to make the interior as large as possible, consistent with highway regulations. The rectangular shape and rugged, but thin, construction simplifies flexible and functional laboratory design. Semi-trailers are rugged, proven by billions of miles of rough highway travel. Trailer manufacturers and distributors are familiar with making modifications to meet customer's needs. Such modifications are thus somewhat less expensive and can be made more quickly on a semi-trailer than on a mobile home or converted bus. In addition, the basic cost of a semi-trailer is generally no higher than other similarly-sized vehicles.

Basic Trailer Specifications

The basic semi-trailer is the Model FB8-W1-40 manufactured by Fruehauf Corporation. The length and width are the maximum allowable in many eastern states. The height of the basic vehicle (without catwalk or ports) is 6 inches below the maximum legal limit in most states. The trailer meets all other over-the-highway requirements in nearly every state. The trailer readily connects to most standard semi-tractors. Other specifications of the basic unmodified trailer are as follows:

Length	Overall 40'[1]	Inside 39' 6 3/16"
Height	Overall 13'	Inside 101 3/4"
Width	Overall 96"	Inside 92 1/2"
Bulkhead	10 gauge high strength steel front wall bulkhead 30" high wrapping around 10° radius corner. Swivel mounted glad hands recessed in bulkhead.	
Front Wall	.050" beaded aluminum panels with high strength steel hat shaped posts riveted to bulkhead and panels.	

[1] EPA policy is to express all measurements in Agency documents in metric units. When implementing this practice will result in undue cost or difficulty in clarity, NERC/RTP is providing conversion factors for the particular non-metric units used in the document. For this report these factors are located on page vi.

Upper Coupler & Pick Up Plate	Pick up plate - 1/4" thick with multi-rib box section reinforcing to front crossmember. Upper Coupler - waffle design with 1/4" upper and lower plates. Waffle consisting of 3/8" plates welded to king pin. Exceeds 1,000,000 cycles of vertical bending at 40,000 lb. loads.
Roof Assembly	.040" one-piece aluminum roof bonded to extruded aluminum roof bows on 24" centers with thickness controlled heat cured adhesive. Entire outer roof surface attached to extruded aluminum upper rail with 3/16" aluminum rivets on 1 1/2" centers and covered with extruded aluminum cap. Upper rail extruded aluminum with marker light wiring raceway and recessed area for marker light installation.
Side Wall	Crossmember to lower rail attachment: Lower rail - 13" high extruded aluminum Crossmembers - 4" structural steel I-beams on 15" centers. Each crossmember attached to lower rail with (4) 5/16" diameter aluminum squeeze rivets per side, 2 on either side of I-beam.
Side Skin	.050" pre-painted aluminum panels. Posts are high strength steel hat shaped posts on 12" centers over coupler and support area and on 24" centers for the balance of the trailer. Panels riveted to both sides of hat shaped post (double row). Rivets on 1 1/2" centers at panel laps and on 3" centers in other areas.
Floor	1 3/8" laminated hardwood attached to I-beam crossmembers with (3) 5/16" diameter screws per board per crossmembers. Floor undercoated with petroleum based preservative.
Brake Lines & Light Wires	Run length of trailer over crossmembers incased in 12 gauge galvanized steel hat section level with top of floor.
Electrical System	12 volt system with circuit breakers and moisture proof plugs. Tractor connection: 6 and 7 way plug. Upper clearance lights recessed in aluminum rail for protection from breakage.

Rear Corner Post	One-piece hat rolled, high strength steel corner post with 1/2" steel bumper bar at lower corner running completely across the lower crossmember and up opposite side for door and hardware protection. Door Lock Flange on rear corner post completely locks doors in place when closed. Hinge pins could be removed and doors would remain in place.
Side Wall Rating	25,000 lbs. evenly distributed
Front Wall	40,000 lbs. evenly distributed
Rear Wall	15,000 lbs. evenly distributed
Roof	400 lbs. over a 12" x 12" area
Floor Rating	50,000 lbs. evenly distributed 30,000 lbs. distributed in any 10' area 17,000 lbs. on fork lift axles

Exterior Trailer Modifications

A number of major modifications were made to the exterior of the trailer. Figures 1 and 2 show details of the modified exterior. Some of the dimensions may be inaccurate by an inch or two. The modifications include:

- Air ride tandem axles were installed complete with tires, rims, wheels, air reservoir, and leveling valves. The axles are centered 11 feet ahead of the rear end of the trailer. The air ride suspension cushions nearly any highway bump enough to prevent damage to most instruments and equipment. Dual axles help reduce the chances of tipping, particularly when one side drops into a road depression such as happens when turning too sharply into a driveway with a ditch. The forward location distributes most of the load primarily over the air-suspended axles rather than over the tractor axles allowing the use of a single axle tractor and cushioning most of the trailer even with a non-air-cushion tractor.

- The two front supports are located at the normal position. Two additional individually adjustable supports are installed behind the trailer axles as shown in Figure 1 to stabilize the trailer in gusty winds. All four supports have standard sand pads to reduce the chances of the trailer sinking into soft ground. Each of the four supports is independently adjustable to allow leveling of the trailer. The adjustments are made by separate manual cranks so that no external power, either tractor supplied or electrical, is required. Each crank has 2 gear ratios, one for fast lowering or raising of the unloaded support, and one for lowering or raising the loaded trailer.

- A steel compartment box is installed between the front supports and the tandem axles as shown in Figure 1. The compartment is 96" wide (external), 29" deep (external), and 13' 4" long (external). The compartment has two doors, each about 10' long, one on each side of the trailer. The doors have hinges, locks, and handles. The compartment door on the curbside is located so that it does not interfere with the curbside stairs and landing. Although the compartment doors have a weather stripping seal to reduce the chance of water entering the compartment, the compartment is not intended to be completely water-proof. The compartment is useful for transporting of the stairs and landings, gas cylinders, and other equipment. Vacuum pumps, blowers, voltage regulators, and voltage isolators are mounted and operated in the compartment, reducing the noise level and the amount of equipment within the trailer. The compartment has 2 blowers and vents to cool the pumps and equipment when they must be operated with the compartment locked.

- Another steel compartment box is installed behind the tandem axles as shown in Figure 1. The compartment is 96" wide (exterior), 29" deep (exterior), and 5' 3" long (external). The compartment has two doors, one nearly the full length on the curbside and one about 3' long on the rear compartment wall. The rear door does not interfere with the stairs and landing. The doors have hinges, locks, and handles, and have a weather stripping seal to reduce the chance of water entering the compartment. Most of the rear compartment can be used for transporting and storing equipment similar to the larger forward compartment. A separate compartment within the rear compartment serves as an electrical service entrance junction box. The electrical service entrance cables pass through the rear compartment to the junction box when in operation. The curbside door closes and locks either with the electrical service entrance cables connected to the power source or with the cables coiled in storage within the rear compartment.

- A catwalk covers the entire roof, making the roof a working platform. The catwalk is made of perforated galvanized steel, making the roof corrosion and skid resistant. The catwalk is attached firmly to the roof rails and extends 2" above the standard roofline of the trailer. The perforations in the catwalk simplify the attachment of equipment to the roof. The trailer structure is sufficiently reinforced to carry the additional load of the catwalk and equipment. The catwalk is capable of carrying at least 400 pounds per any square foot and any 8' x 8' area is capable of bearing at least 2000 pounds.

- A personnel door is installed within the original right rear trailer door. The door opening is about 79 1/2" high and 27 1/2" wide. This door is used for routine entrance and exit by people. The original large rear doors of the trailer are used only for loading and unloading large equipment.

- Another personnel door is installed in the curbside wall above the front supports. The door opening is a minimum of 80" high and 32" wide. This door is also used for routine entrance and exit of people. This door meets or surpasses the requirements of the Uniform Building code, the only door required by the UBC. However, the 2 doors do provide emergency exits near each end of the laboratory.

- Stairs, landings, and hand rails are provided for each personnel door. The landing posts are adjustable to allow setup on sloping ground. Each of the two stair landings and rail units disassemble into the following components for storage and transport in an under-compartment: one stairs, one landing, 2 landing posts, and 4 hand rail sections. The stair and landing material is skid-resistant perforated galvanized steel similar to the catwalk material. Each stair step will bear at least 500 pounds and the landing and stair-case will bear at least 1000 pounds. The stairs, landing, and hand rails meet applicable Occupational Safety & Health Act (OSHA) codes.

- Five combination storm-screen windows are installed in the walls. There are two on each side and one in the rear personnel door. Approximate locations are shown in Figures 1 and 2. The windows are nominally 11" high by 18" wide (about 10" x 16" open area). The storm window or screen can be changed from the inside. The outside window cranks open from the inside. The windows are large enough to allow the operators to see the surroundings, but small enough to prevent unauthorized entry. The windows are also useful for fresh air ventilation, for inside-outside communications, and for quick and temporary passage of sampling tubes or electrical cables.

- Seven access ports are installed through the roof. The ports are 10" o.d. aluminum tubes which protrude about 1" above the catwalk and 2" below the ceiling. The ports have flanges and water-tight covers on the outside. The exact locations of the access ports were determined specifically by the layout chosen for the 1973 St. Louis program, but also allow maximum layout flexibility for future programs. Two access ports are located above the aerosol island, one above the front bench area near the aerosol island, one above the gas island, one above each end of the computer area for electrical signal cables, and another above the rear open ex-pansion area.

- Twin air conditioner units are mounted on the exterior front wall as shown in Figures 1 and 2. The top of the units are about level with the original roofline to allow as much tractor clearance as possible. The vertical angle framework is bolted directly to the four vertical frame channels of the trailer. The vertical frame

channels are reinforced with hardwood beams to carry the extra load. The air conditioner units extend about 57 inches ahead of the front wall of the trailer and sufficient bracing is installed to carry the load. The units are mounted flush with the side walls to allow as much working clearance as possible between the units. Placing the units outside the trailer allows additional necessary space on the interior of the laboratory and greatly simplifies the ducting of supply and return air. Units which mount flat against the front exterior wall also protrude about 30" into the interior, limiting the interior layout and complicating the duct layout. Since the flat-mounted units protrude through the front wall, they are also more difficult to mount. Any tractor used to tow this trailer must allow sufficient clearance for the air conditioner units. Either the tractor must have a low roofline with no protrusions above its roofline, or the tractor must have a long wheelbase and enough spacing between the fifth wheel and the rear of the cab. Neither requirement is very restrictive. Many, perhaps most, tractors are suitable. However, tractor clearance must be carefully watched. The specifications of the air conditioning units and the system design are discussed later in this report.

- All modified exterior surfaces are painted to match the prepainted aluminum exterior side panels.

General Interior Design

Figures 3 - 13 show the interior floor layout, ceiling plan, wall plans, and cross-sections of critical areas. The following discussion covers each subject individually.

The interior walls are finished with medium-colored 1/4" wood paneling which is specially treated to meet Underwriters Laboratory (UL) tests for a flame spread factor of 200 or less as required by the Uniform Building Code (UBC) for a laboratory of this type. Logistic rails are installed to allow equipment to be strapped down during transport. The straps, which quick-fasten into the logistic rails, look and operate like auto seat belts. Vinyl asbestos floor tiles, 1/8" thick, cover the Fruehauf hardwood floor. The ceiling is finished with acoustical tile fastened to plywood panels. Wherever possible, the walls, floor, and ceiling are made so that equipment may be mounted, holes may be drilled, or other modifications can be made easily.

Air Conditioning Design

The trailer is insulated with 2" of foam on all walls, floor, and ceiling. The ceiling insulation is installed above the air conditioning duct. Twin air conditioning units are installed near the roofline on the front exterior of the trailer. Two units are preferable to a larger single unit for several reasons: 1) while one is being repaired, the other is fully operable, usually allowing the laboratory to continue operations, 2) during most times of the year, one unit can be switched off saving wear and power, 3) larger units are not available in a single-phase model which would make the electrical supply problem

much more difficult and would greatly limit the possible trailer setup locations, 4) two units are easier to mount than a single larger unit, and 5) each unit can be switched on separately reducing power line voltage surges.

The supply air is ducted through twin sheet metal ducts, each half-trailer width, over the full length of the trailer. The ducts are sealed sufficiently tight to meet the strict California regulations governing commercial coach construction. Four supply registers, Hart & Cooley Model 24 with No. 22 damper (12" x 12"), are installed in the ceiling on each of the two ducts as shown in the ceiling layout (Figure 4). Four Hart & Cooley Model 93VOH registers with adjustable dampers (20" wide x 24" high) with filters are installed as return air registers in the inside front wall above the work bench as shown in Figure 7. As shown in Figure 1, two similar registers, about 20" wide x 12" high, are installed in the exterior front wall as adjustable fresh air supplies. They have hinged covers which close to protect the registers and ducts from water, dirt, and insects during transport.

The twin air conditioning units chosen are both Fedders Model CAC060A3 with 15 KW electric heat kits and low ambient kits. Each of the air cooled units is about 34" high, 46" wide, and 57" long and weighs about 540 pounds. Each is rated at a nominal 5 tons capacity which is equal to the total output of each unit at 85°F outside temperature. At 115°F outside temperature, the total output of each unit is 50,000 BTU/hr. (slightly more than 4 tons each). The blower in each unit puts out 2,200 CFM at 0.10" of H_2O static pressure head and 2,000 CFM at 0.40" of H_2O. The electric heaters are installed within the exhaust ducts of the air conditioners. Each 15 KW unit is made up of three 5 KW elements with staged switching to reduce electric supply line surges. As required by the National Electrical Code (NEC), the electric duct heaters units include both an automatic thermal cutout device and a higher-temperature solder-melt-out thermal interupt. Each air conditioning unit has a separate heating and cooling thermostat located near the front of the trailer (see Figure 6). The separately adjustable return air and fresh air registers allow control of the amount of fresh air entering the system. The individually adjustable supply registers allow the occupants to distribute the conditioned air to the needed locations. The low ambient kits reduce the chance of frost buildup on the air conditioning evaporators when cooling is required with an outdoor temperature of about 50°F.

The air conditioning system is designed to perform as follows:

1. With an outdoor temperature of 120°F and noon-time sun, the system will cool the trailer down to below 70°F with no instrument heat load, but with 6 persons and full lighting.

2. With an outdoor temperature of 120°F and noon-time sun, the system will cool the trailer down to about 80°F with all equipment which is planned for immediate installation in full operation, with 6 people, and with all lights on.

3. With an outdoor temperature of -40°F with a cloudy sky, the system will heat the trailer up to 70°F with the fresh air inlet closed and with no interior heat gain except all lights.

4. The thermostats can be set to allow $\pm$ 2°F control.

A humidifier, the Humid-Aire Vapotron-4000 Infra-Red unit made by Hamilton Humidity, Inc., is supplied for use during cold outdoor weather. This unit is large enough to raise inside relative humidity to about 30% at 0°F outdoor temperature. The maximum output is 2.4 gallons per hour. The 45-pound unit can be installed on a shelf or bench and is 25 1/2" long, 20 1/2" wide, and 10 1/2" high. A humidistat which controls the unit has a range of 20 - 60% ($\pm$ 5%) relative humidity. The infra-red lamps produce nearly pure water vapor, leaving impurities such as minerals in the teflon-coated reservoir. In addition to an improvement in the health of the operators, the humidifier may cause the computer to operate more reliably. However, the operators will not want to humidify the air unless necessary because water must be carried on board. The 2.4 gallon per hour water usage rate means over 50 gallons per day may be necessary under extreme conditions. Since maximum need for the humidifier will occur with the coldest winter weather, a garden hose or temporary water pipe is not feasible. A dozen 5-gallon plastic jerry cans are supplied with the trailer for water transport and storage. Dehumidification by the air conditioner units will reduce inside humidity to about 60% with outside humidity near 100%.

Interior and Roof Layout

The interior floor layout for the equipment installed for the first phase of operations is shown in Figure 3. This layout is different from most mobile laboratories, having an aisle down the curbside with work stations (islands) in the center and on the roadside. The reason for this is to separate the traffic areas from the work places. Nearly all aerosol instruments are located on one island arrangement near the front of the trailer. Additional aerosol instruments are located at the front bench. Gas instruments are located on another island near the rear of the trailer. Instruments on each island face either forward or backward with some at desk-top height and others on a higher shelf (see island views in Figures 8, 9, 11, and 12. The rear of each instrument is easily accessible and no instrument rests on top of another. Repairs and adjustments can thus be made without shutting down everything or interferring with any other equipment. The operators are not in the aisle making traffic flow much smoother. Many instruments can be clustered around the sampling ports with short sampling lines and easy access to all. This is especially important at the aerosol island where the sampling of large particles requires vertical sampling tubes. With the clustering of instruments on the island and with some instruments mounted above other instruments, vertical sampling tubes can be connected to 3, 4, or sometimes 5 instruments simultaneously. The extra bench space on the aerosol island and the front bench can be used for loading filter holders, loading Andersen samplers, writing in the data book, trouble-shooting instruments, or adding new instruments or test equipment. The aerosol island has 2 roof access ports and the front bench has one. Two 6-inch diameter sampling systems with manifolds are supplied for the three aerosol roof access ports. All islands have knee space and desk-height work surfaces allowing their use as a desk. The open knee space is located at the aisle end of every island to make easier the entrance and exit of the computer with its protruding feet and to facilitate the packing of long items, such as sampling tubes, for transport. The knee space will also be useful for temporary storage of miscellaneous items. The gas island

has only one roof access port since vertical sampling is not necessary. However, the adjustable shelves allows short sampling lines for gases such as ozone. The space between the 2 halves of the gas island allows zero and span gases to be piped in from outside. That same space on the aerosol island accommodates plumbing to the pumps and blowers in the undercompartment.

Between the aerosol and gas island is the computer and the data analysis center. The central location minimizes signal cable lengths and the walking distance between sensor and data center. There is enough room provided for 4 relay racks of computer or other electronics against the roadside wall. There is room in front of the computer for a teletype and 2 or 3 chairs. When operating, programming, or trouble-shooting the computer data system, this amount of space is necessary. When it becomes necessary to work behind or alongside the computer system, the unit(s) can be pulled out from the wall and moved around to a convenient location. If it becomes necessary to completely remove the computer units, there is room to roll them either out the curbside door or past the gas island and out the rear door. The two roof access ports, one on either end of the computer area, accommodate signal cables from roof-mounted equipment.

The operators must have a place to store data, manuals, pencils, and other necessary paper and equipment near the computer. The data analysis island provides file cabinets, pencil drawers, a book shelf, and a desk-work table. Although this island, as all other islands and floor-mounted equipment, can be easily moved or removed for future expansion and modification, some desk and work space is a necessity near the computer. The overhang design of the data analysis island allows a maximum of flexibility during use as well as being out of the way for the packing of long objects, such as sampling tubes and towers, for transport. A bookshelf with doors uses excess wall space for needed storage of manuals, reference books, or even small instruments or equipment. A bulletin board and blackboard (chalkless type) is attached to the curbside wall opposite the computer. Every laboratory occupied by humans soon gains a coffee pot with its rather messy group of accessories. The open shelf next to the bookshelf is an attempt to move the pot off working surfaces and yet keep it in a central location convenient to all. The shelf also holds a few accessories such as cups, spoons, unbrewed coffee, sugar, cream, etc.

There is a small, open floor space at the rear of the trailer under an extra sampling port. This undesignated open-space could serve as space for an additional instrument, for a spare teletype, for roof instruments not in use, for boxes of spare teletype paper, for file cabinets, for a refrigerator, or other equipment. The space becomes highly valuable when packing the trailer for transport.

EPA will be continually adding or substituting new and different instruments as they are developed and become available. Therefore, even though we have designed the floor plan specifically for the instruments to be installed within the first few months, the islands and computer are readily movable for future modifications. Each of the islands is bolted to the floor with 16 easily-removeable lag bolts and the adjustable shelf support posts at each island are attached to the ceiling with about 8 screws. Thus, only about two man-days would be required to remove all islands and benches, leaving an empty shell. A new interior

layout could begin with the empty shell and 7 roof access ports. Six of the ports are located roughly equidistant along the length of the trailer. The electrical busway system, described later, allows nearly complete flexibility in the movement of receptacles. We have tried to make the laboratory as flexible as possible, both in its present island layout and looking ahead to future layouts where the islands and/or front bench may have to be moved or removed.

The roof layout is also highly flexible. The sampling tubes (described later) rise to a height of 10 meters above the ground or about 19' above the trailer roof level. They bolt directly to the flanges on the sampling ports. Guy wires hook directly to the catwalk. A meteorological tower is mounted on a hinged plate so that one person may assemble the sensor, mount the sensor to the tower, and raise the tower into place. Guy wires anchor the tower to the catwalk. The sensor can easily be aligned north-and-south by matching a mark on the sensor with a mark on the tower and sighting through diametrically opposing holes in the main tower support pipe. The tower support pipe can be turned by means of a tube-within-a-tube arrangement until the operator sees a pre-chosen northerly target through the sighting holes. All other roof equipment bolts directly to the catwalk by means of "J"-bolts which loop through the catwalk perforations. Since the entire roof surface, except ports, is covered with the perforated catwalk, equipment can be located anywhere on the roof. A heavy-duty, single-section, aluminum ladder provides human access to the roof wherever needed. Standard electrical service entrance caps attach to the two ports above the computer to allow signal cables to feed through the roof to the data system. This type of feed-through is easy to use, easy to make, and is essentially waterproof. All port covers, sampling tubes, and the cable feed-through are interchangable from one port to another. The roof layout is thus perhaps the most flexible part of the trailer design.

A hoist capable of lifting at least 150 pounds mounts onto a swivel pipe at the rear curbside corner of the roof. A block-and-tackle allows one or two men to raise a heavy load. The hoist swings from the area above the rear stair landing to the area above the roof catwalk.

Packing of the laboratory for transport is a very important consideration. The large items, such as the computer, and roof-mounted items, such as the hi-vols, are strapped to the wall using the logistic rails and straps. Small, delicate instruments are stored in drawers or separate boxes. Most instruments such as optical particle counters, gas instruments, etc., are strapped in place on the islands. Long tubes such as the roof-mounted sampling tubes are laid in the aisle or in the island knee space inside the trailer. Items about 39' in length can be transported in the knee space area. Papers and data pack into the file cabinets. Miscellaneous medium-sized boxes and equipment strap to the lower logistic rails. Stairs, gas bottles, boxes, electrical service supply cables, and miscellaneous heavy equipment packs into the two undercompartments. There is room for all the know equipment planned for the trailer during the first several months of operation.

Electrical Design

Many considerations, some conflicting with others, went into the design of the electrical system. The primary design criteria were:

1. Suitable and sufficient electrical power must be supplied to every part of the trailer to allow all equipment, present and future, to operate reliably and continuously.

2. The electrical service connection to the source of line power must be convenient and must meet all applicable code requirements.

The electrical system meets all applicable National Electrical Code (NEC), State of California, and State of Minnesota requirements for the classification of Commercial Coach. The service entrance design also meets State of Colorado and City of Denver requirements. Nearly all states and cities allow this design although specific areas within a city or state may have codes prohibiting the trailer for electrical or other reasons.

All equipment on the trailer, including the air conditioners, uses single-phase, 115 or 230 volt power, the most commonly available power. Triple-phase power is not available everywhere and would needlessly limit the choice of sampling sites.

The trailer uses a cable-and-plug service entrance with twin cables and plugs. The plugs connect directly to mating receptacles mounted on a feeder pole not supplied under this contract. The other end of the outdoor-insulated, 4-conductor cables pass through slots in the bottom of the rear undercompartment (see Figure 1) and into a junction box located in the upper rear curbside corner of the rear undercompartment. From there, wires from the separate cables pass through the trailer floor into separate service panels (circuit breaker boxes). One service panel serves the air conditioning system including the humidifier. The other service panel serves the remainder of the trailer electrical system. Thus, the power to the air conditioning system is connected to the rest of the system only back at the feeder pole, not within the trailer or service entrance cable.

There are several reasons for using the cable-and-plug service entrance, as shown in Figure 14, rather than the overhead mast entrance. Both systems require a separate feeder pole, not attached to the trailer, which has mounted upon it a power company watt meter and a single switch which disconnects power to the entire facility. However, the feeder pole for the cable-and-plug system can be completely wired before the trailer arrives, so that the operators need only connect the plug(s) and throw the switch to have power. The overhead mast would require the reassembly of the mast and the restringing of wires on the roof of the trailer and the stringing of wires from the feeder pole to the trailer by a licensed electrician. Thus, the cable-and-plug system results in fewer costly and time consuming delays in getting the laboratory into operation. The cable-and-plug system has similar advantages at the time of packup. The overhead mast assembly also requires a hand rail to prevent roof top operators from accidently contacting live wires. Thus, the overhead mast system would be bulky, would require excessive operator time to assemble and disassemble for every site, and would result in excessive delays in getting power connected.

There are also several reasons for using 2 cables rather than one. A single cable large enough for 400 amps - 230 volts is heavy, making it difficult to handle during packing. Two smaller cables coil up more neatly and easily into the undercompartment. A single large plug is also more difficult to connect to its receptacle. Another important reason is to separate the air conditioning load from the rest of the system, reducing the power line fluctuations when the air conditioners switch on or off.

The layout of circuits within the air conditioning service panel is shown in Figure 15 and Table 1. Each of the two air conditioning units requires one 60 amp-230 volt circuit for the cooling unit and three 20 amp-230 volt circuits for the heating unit. In addition, the humidifier requires one 40 amp-230 volt circuit. The entire panel is protected by a 200 amp main breaker. As with the entire electrical system, the neutral (white) line is insulated from the ground (green) line. The conduit runs to the 2 air conditioners pass through the interior of the trailer along the curbside ceiling. Each air conditioner circuit has a separate disconnect box mounted on the exterior front wall just below the air conditioners and fresh air registers. The thermostat controls are mounted on the curbside wall near the front of the trailer, near the return air registers. The humidifier has a separate 230 volt outlet near the rear of the interior. All wire and conduit sizes are at least as large as NEC requires and usually are somewhat larger. Some extra space is left for the addition of more circuit breakers in the air conditioner service panel at some time in the future.

The layout of circuits within the instrument systems service panel is shown in Figure 16 and Table 2. Again, the entire panel is protected with 200 amp-230 volt main breakers. Each of twin busway systems is fused with 60 amp-230 volt breakers. Each of the other circuits are fused with breakers as shown in Table 1. The approximate locations of the outlets for each circuit are shown in Figures 17 and 18. Major electrical components and their model numbers are identified on the figures. Conduit runs do not interfere with other features described in this report.

The twin busway system is an excellent way to distribute power throughout a facility such as this and yet retain the flexibility to change the location of major power usage later. Each of the two busway systems consists of an insulated bar, acting as a receptacle, running the length of the trailer. One busway is located about 14" from the roadside wall and the other about 28" from the curbside wall, making both of them convenient to the islands but also making them useful for future layouts. Separately-fused plugs can be inserted into the bar at any point of its run. The plugs are attached to a short extension cord with a standard 115 volt outlet receptacle on the opposite end. Normally, a standard extension cord of appropriate length and with the necessary number of standard 115 volt receptacles is connected to the short extension cord. Each separately fused plug-and-cord unit then becomes a separate circuit. If the circuit is no longer needed at a specific location, it may be unplugged and moved to a needed

location. Additional fused circuits (either 115 volt or 230 volt) may be added so long as there is physical room left on the busway and so long as the total power drawn by all busway circuits does not exceed the rating of the main breaker on the busway. The trailer was delivered with 25 of the 15 amp-115 volt plug-in fused circuits and 4 of the 30 amp-230 volt fusible tap boxes.

The lights are 24 incandescent lamps located approximately as shown in Figure 3. Incandescent lamps produce less electronic noise, which can cause computer or electronic problems, than fluorescent lights. The fixtures are rated for 150-watt lamps, but we supplied heavy duty 100-watt lamps. The fixtures have a heavy duty, shatter-proof diffuser cover which will not break if hit by a .22 caliber bullet. All fixtures and conduits in the lighting system, as with nearly all other conduits, are on the outside of the walls and ceiling, making future changes easier and maintaining the integrity of the walls, ceiling, and structure of the trailer. The lights are arranged in 4 circuits and are laid out so that turning on any one circuit turns on every second fixture, on either the left or right side, from front to rear. Thus, turning only 2 circuits on lights the entire trailer with half as much intensity. All 4 light circuits have switches near the rear door and one has 3-way switches at the rear and side doors.

A separate pair of 20 amp-115 volt circuits run to the computer area. They are isolated for protection from power line voltage spikes and are also regulated to supply constant voltage with fluctuating power line voltage. The isolator and regulators are shock-mounted (for noise reduction) in the front undercompartment. The outlet receptacles are located on the roadside wall about 6.5' above the floor so that the computer may be tied flat against the wall during transport. The model numbers and specifications of the regulators and isolator are as follows:

Topaz 8 LRB115SN (2 supplied)	AC line regulator, 8 KVA, 115 VAC output $\pm$ 3.3% with 105-125 VAC input.
General Electric 9T21B9101G3	60 Hz, 120 VAC output with 240 VAC input, 15 KVA, single-phase isolation transformer.

There are three 20 amp-115 volt circuits on the front exterior of the trailer and three 20 amp-115 volt circuits on the rear exterior. Each has 4 weather-proof outlet receptacles pointing downward to prevent rain from entering them while in use. There are no outlet receptacles on the roof because they cannot be pointed downward as most codes require. Necessary power for the roof is supplied from the front, rear, or undercompartment receptacles by means of extension cords and weather-proof duplex boxes.

The large undercompartment contains four 20 amp-115 volt circuits and four 20 amp-230 volt circuits, each with 4 outlet receptacles. The small undercompartment contains one 20 amp-115 volt and one 20 amp-230 volt circuits, each with 4 outlet receptacles. Vacuum pumps, blowers, and other equipment are powered by these circuits.

Lightning Protection

Since the mobile laboratory will be used in areas where thunder storms often occur, some degree of lightning protection was provided. The direct hit protection system consists of 3 copper grounding conductors extending from the base of the 3 sampling towers to 3 separate copper ground rods which extend 6 - 8 feet into the ground. A bolt connects the copper wire to the sampling tube and a clamp connects the copper wire to the ground rod. The 3 ground rods should be separated by 20 feet, if possible, and should make good electrical contact with the earth around the rod. Keeping the ground around the rods wet helps electrical conduction.

Each of the incoming electrical power lines has a lightning arrestor on the ground line which helps prevent high voltage spikes caused by nearby lightning strikes from entering the trailer through the ground conductor. This will not prevent all such damage, but will reduce the frequency and severity of equipment damage.

The lightning protection problem was investigated in considerable detail before finalizing the above design. It appears that full lightning protection is not possible and anything approaching it is very expensive and is not practical for use on a mobile facility. The next step above the existing system in complexity and protection capability is probably a conducting cable which connects the 3 sampling tubes and extends downward to the ground ahead and behind the trailer. This system was rejected because of the difficulty of installation and disassembly at each sampling site. The system provided was recommended by a consultant and appears to meet the recommendations of the Lightning Protection Code 1968 of the National Fire Protection Association (NFPA No. 78 ANCI C5.1 1969).

The cone-of-protection concept is important in lightning protection. Lightning tends to strike the tallest objects in an area. Objects which are located within a cone defined by a 45° line from the top of the object to the ground will be struck only rarely, particularly if the tall object is a good conductor. If the meteorological tower is located within 5 feet of any of the 3 grounded sampling tubes, all objects provided by this contract are protected by the 45° cone-of-protection. Any future additions to the roof should consider this aspect carefully.

Summarizing, although the system provided will reduce the frequency and severity of lightning strike damage, extensive damage may still occur in the case of either a direct hit or a nearby strike. The mobile laboratory is not a safe place during a thunderstorm.

Sampling System

The accuracy of the measurements made by the instruments in the laboratory depends directly on the representativeness of the pollution sample delivered to the instruments. Since sampling errors is probably the largest single error in most of the measurements, the design of the sampling system is especially important. The system is designed to: 1) remove a representative sample from the air mass above the trailer, and 2) transport that sample into the instrument with a minimum of change.

The major particle sampling problems are:

1. Losses of large particles by inertial and gravitational forces acting on the particles, and

2. Losses of very small particles by the diffusion of particles to sampling system walls.

The design used for this laboratory has strictly vertical sampling tubes leading to any instrument which samples large particles, essentially eliminating gravitational losses. It also has a wind shield at the sampling tube entrance to reduce the velocity of large wind-blown particles so that they are not impacted against the inside wall of the tube at the inlet. Diffusion losses are reduced by using correct flow rates and tube diameters, and by keeping tubing length as short as possible. All sampling tubes pass through the roof access ports located above islands as shown in many of the figures. Figure 19 shows the design for the aerosol sampling and transport system. An access port feed-thru bolts to the access port flange. A 6" diameter vertical sampling tube bolts to the port feed-thru above the roof and extends about 10 meters above ground level. A wind shield attaches to the top of the sampling tube. In addition to reducing wind velocity at the sampling tube inlet, the wind shield openings are covered with wire mesh screen to reduce the chance of sampling insects, leaves, twigs, etc. Guy wires attach to the wind shield and to the catwalk to support the sampling tubes in high winds. Each sampling tube requires only 2 men to raise or lower it.

Inside the trailer, the access port feed-thru extends several inches below the ceiling. A sampling manifold clamps onto the feed-thru. The manifold distributes samples to the various instruments. Instruments which sample large particles (greater than 1 μm diameter) are arranged directly below the manifold with vertical sampling tubes protruding into the manifold. Instruments which sample particles smaller than 1 μm draw their sample from tubes clustered around the manifold wall. Nuclei counters sample through short tubes from within the manifold at a point away from the boundary layer of the manifold wall. A separate outlet near the bottom of the manifold connects to a vacuum blower which maintains proper air flow through the system with any number of instruments in operation. All tubes which remove samples for large-particle samplers are sized to maintain approximately isokinetic sampling from the manifold. A separate tube allows rain water to drain through the bottom of the manifold to the ground below the trailer. The entire manifold is easily removable from the feed-thru if it becomes necessary to move it or if a new one of different design is required. The inside diameter of the system is maintained constant from the inlet at the wind shield up to and including the manifold. The gas sampling tube is 2" inside diameter and the aerosol sampling tubes are 6" inside diameter. Instruments are clustered, in a 3-dimensional layout, on the islands or work benches. The aerosol island has two sampling systems, the gas island has one, and the front bench accommodates one of the aerosol manifolds, if it is necessary.

The complete gas sampling system is shown schematically in Figure 20. The two complete aerosol sampling systems are shown schematically in Figures 21 and 22. Vacuum pumps and blowers are mounted in the undercompartments on shock mounts. Flowmeters and flow control valves for the 3 bypass air systems are mounted on individual panels on the wall near the islands and convenient to the operators.

The specific instrument arrangement for the 1973 St. Louis program was as follows. Two Anderson samplers sampled vertically from the front bench aerosol manifold (Figure 7). A nephelometer, mounted on the front roadside wall, drew a sample from the same manifold. The 0.5 - 5.0 μm optical counter rested on the lower bench top of the aerosol island directly below the roadside aerosol manifold. A Lundgren 8-day sampler and a 47-mm total particle filter rested on the shelf above the optical counter and also sampled vertically downward from the same manifold. The large (>5.0 μm) optical particle counter was located on the roof to reduce particle losses. A condensation nuclei counter rested on the upper shelf near the 47-mm filter holder with an electrical aerosol size analyzer located just below it on the lower bench top. Both drew samples from the roadside aerosol manifold. A second nephelometer, mounted on the roadside wall near the first one, drew a sample from the roadside aerosol manifold. A dew point sensor and a particle mass monitor were located on the other upper shelf of the aerosol island and drew samples from the roadside aerosol manifold. Several other instruments were connected and disconnected from both aerosol manifolds as required.

Gas sampling instruments were clustered around the manifold above the gas island. The Beckman 6800 was on the lower bench top facing the data island. The ozone analyzer was on an upper shelf near the manifold with a short sample line. Other gas analyzers such as a sulfur analyzer and an $NO-NO_x$ analyzer were arranged wherever convenient. Several strip chart recorders connected to specific instruments operated on the gas island also.

This instrument layout is only one of many possible layouts. As other instruments are added or replace present instruments, it will be very easy to rearrange the layout to suit the new requirements.

SUMMARY

The mobile laboratory supplied to EPA specifically met the requirements for the St. Louis program in late 1973. It also has a great deal of flexibility for adaptation to other programs. Even major layout changes can be done quickly and without serious problems. The laboratory is capable of efficient operation for many years to come. Figures 24 - 33 are photographs of the laboratory.

Table 1. Circuit breaker layout in the air conditioning systems control panel

Breaker No.	Voltage	Amps	No. of Receptacles	Identification
1 & 5	230	60	-	Air conditioner, roadside
9 & 13	230	40	-	Heater, 10 KW, roadside
17 & 21	230	20	-	Heater, 5 KW, roadside
2 & 6	230	60	-	Air conditioner, curbside
10 & 14	230	40	-	Heater, 10 KW, curbside
18 & 22	230	20	-	Heater, 5 KW, curbside
26 & 30	230	40	1	Humidifier
25	-	-	-	Open
27	-	-	-	Open
29	-	-	-	Open
31	-	-	-	Open
33 - 40	-	-	-	Open

Table 2. Circuit breaker layout in the instrument systems control panel

Breaker No.	Voltage	Amps	No. of Receptacles	Identification
1 & 5	115/230	60	-	Busway 1
2 & 6	115/230	60	-	Busway 2
9	115	20	4	Forward undercomp., pumps & blowers
10	115	15	9	150W interior lights, 3W switch; undercomp. lights
11	115	20	4	Forward undercomp., pumps & blowers
12	115	15	6	150W interior lights
13	115	20	4	Forward undercomp., pumps & blowers, cooling fans
14	115	15	6	150W interior lights
15 & 17	230	20	4	Forward undercomp., pumps & blowers
16	115	15	6	150W interior lights
18	115	20	4	Weatherproof exterior front, roof & ground equip.
19 & 21	230	20	4	Forward undercomp., pumps & blowers
20	115	20	4	Weatherproof exterior front, roof & ground equip.
22	115	20	4	Weatherproof exterior front, roof & ground equip.
23 & 25	230	20	4	Forward undercomp., pumps & blowers
24	115	20	4	Weatherproof exterior rear, roof & ground equip.
26	115	20	4	Weatherproof exterior rear, roof & ground equip.
27 & 29	230	20	4	Rear undercomp., pumps & blowers
28	115	20	4	Weatherproof exterior rear, roof & ground equip.
30	115	20	4	Regulated & isolated, computer
31	115	20	4	Rear undercomp., pumps & blowers
32	115	20	4	Regulated & isolated, computer
33	-	-	-	Open
34	115	30	4	Rear interior, special equipment
35 - 40	-	-	-	Open

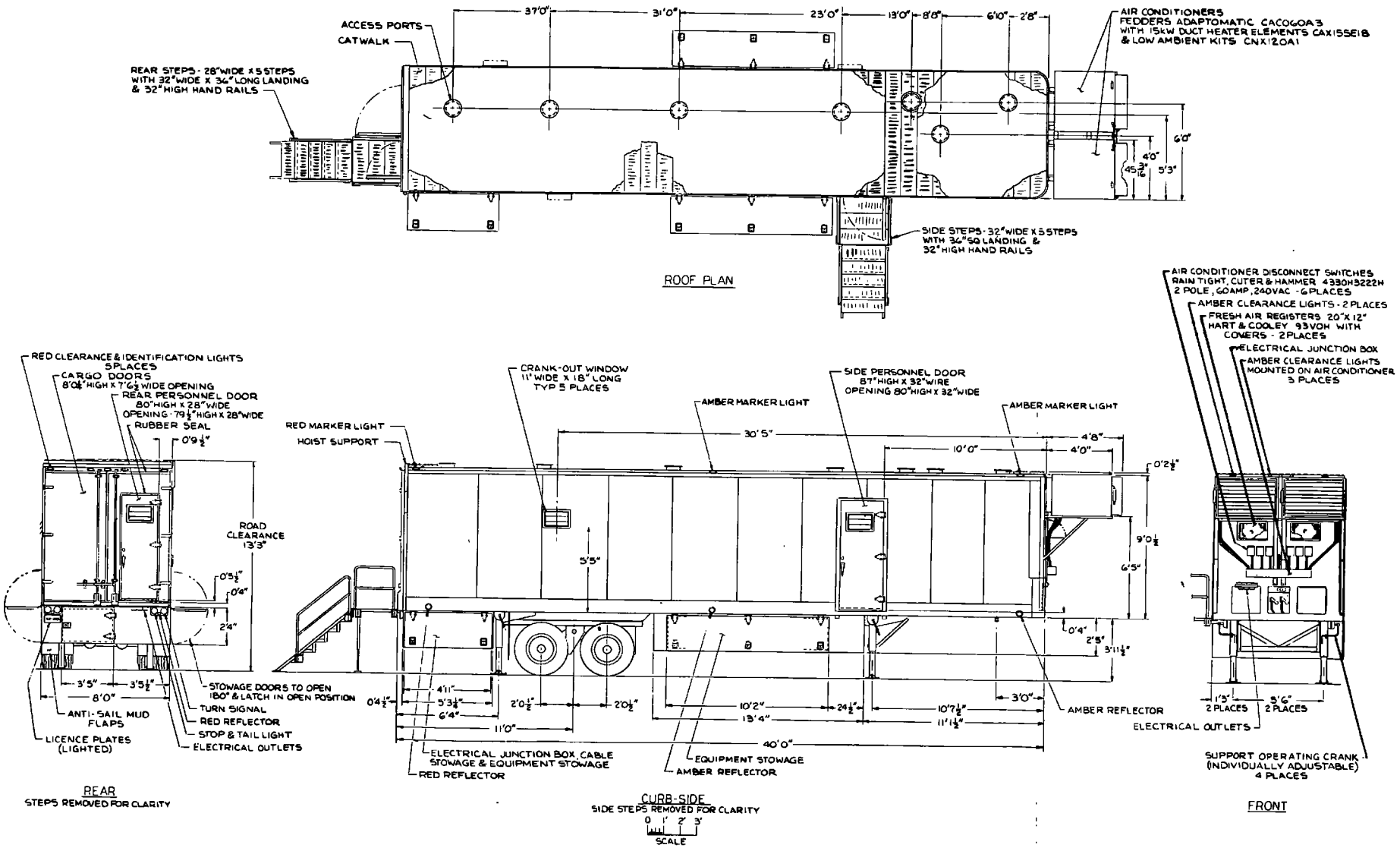

Figure 1. Exterior curbside, rear, front, and roof views

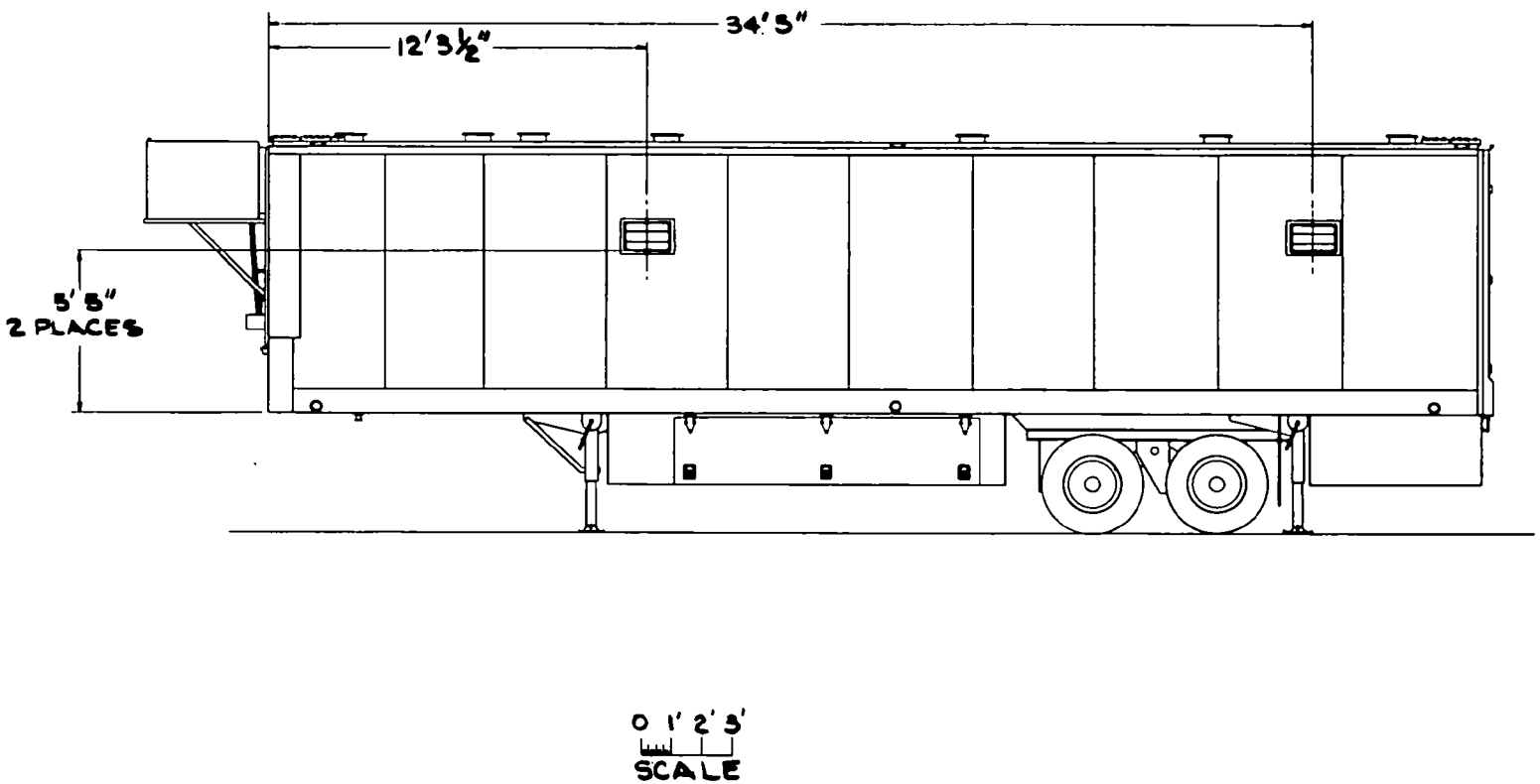

Figure 2: Exterior roadside view

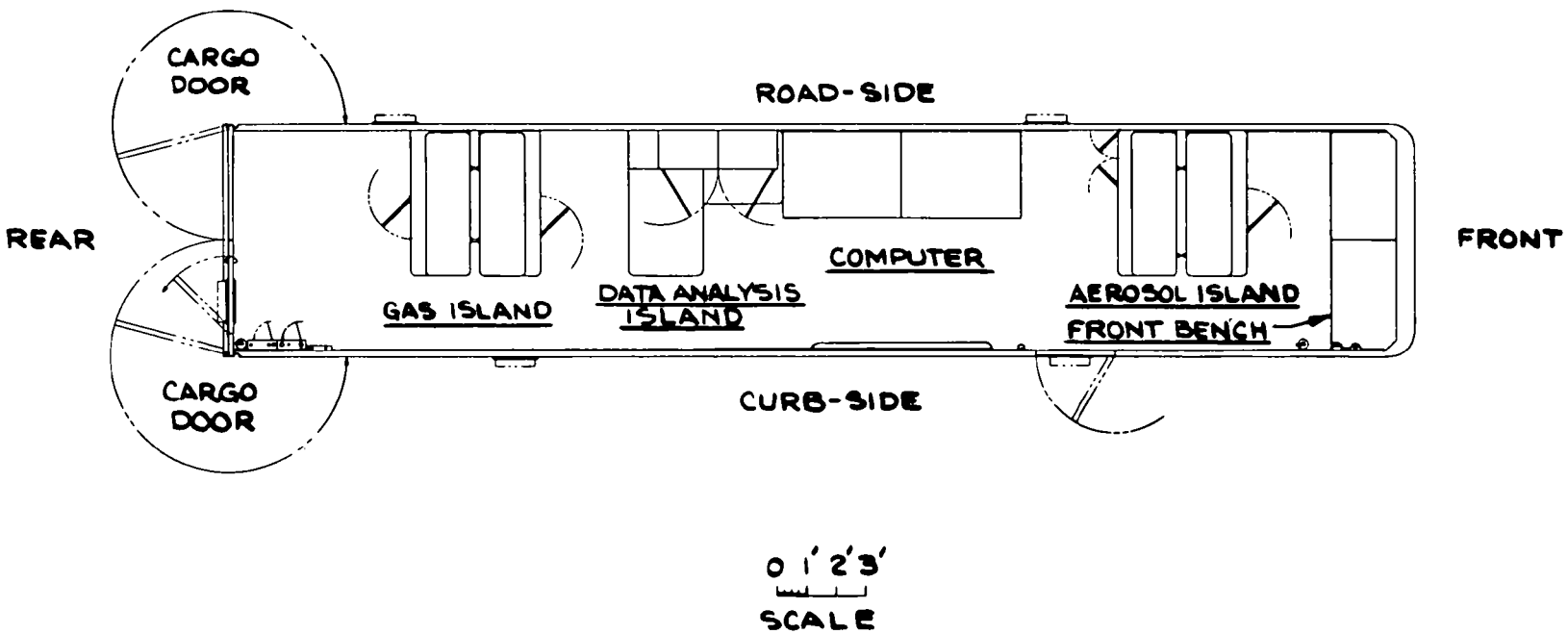

Figure 3: Interior floor plan for the 1973 programs

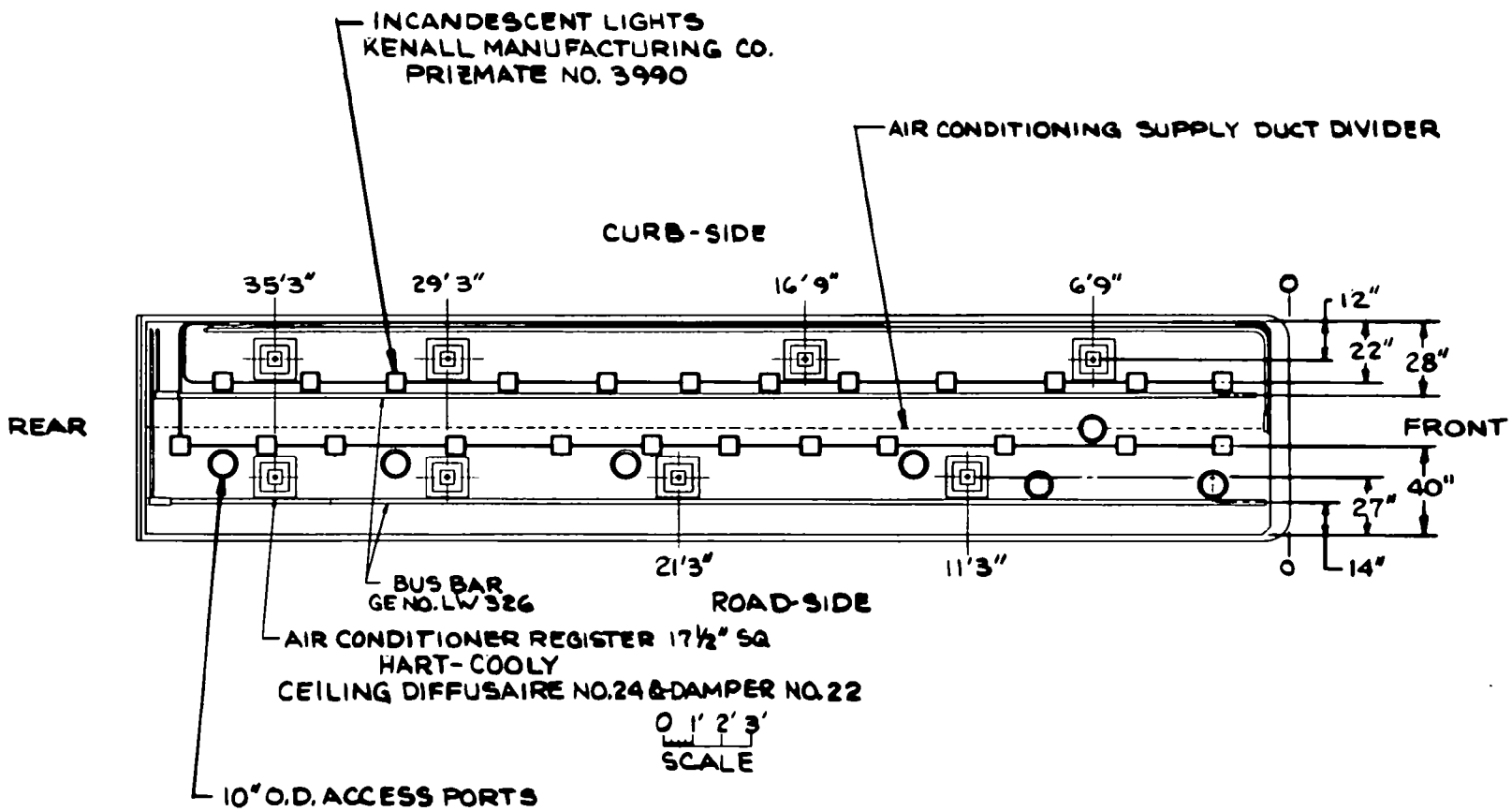

Figure 4: Interior ceiling layout

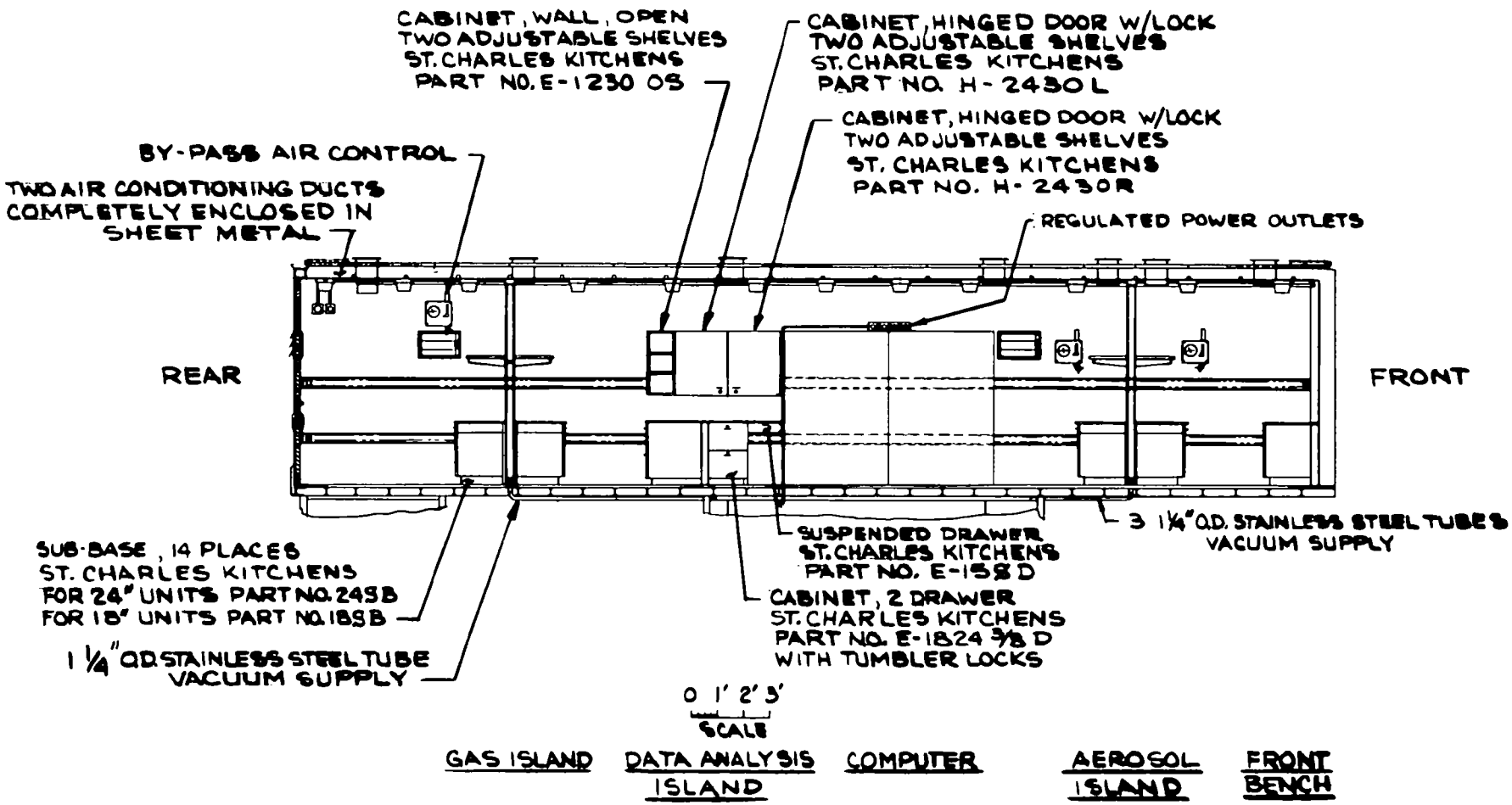

Figure 5: Interior roadside wall

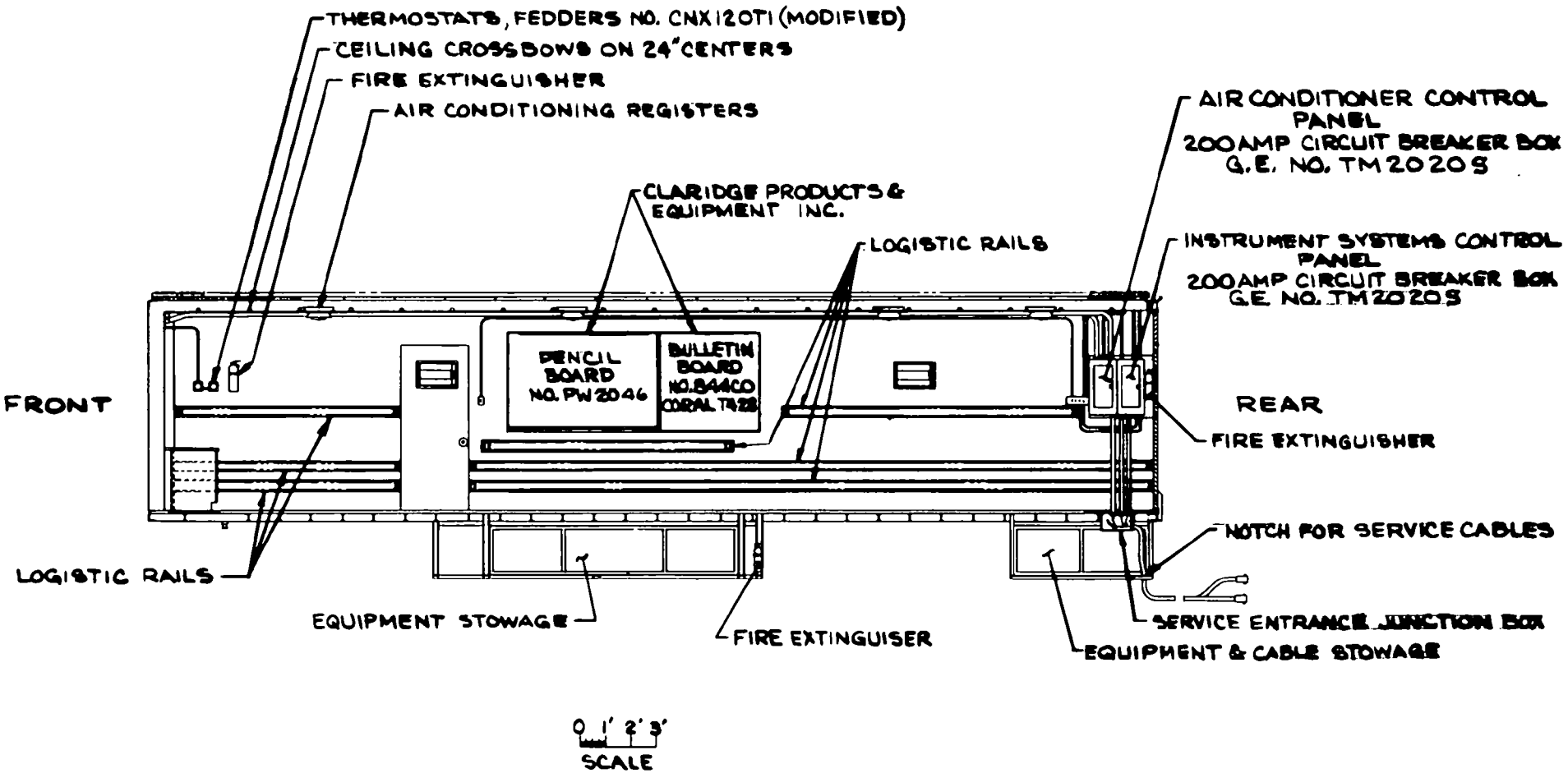

Figure 6: Interior curbside wall

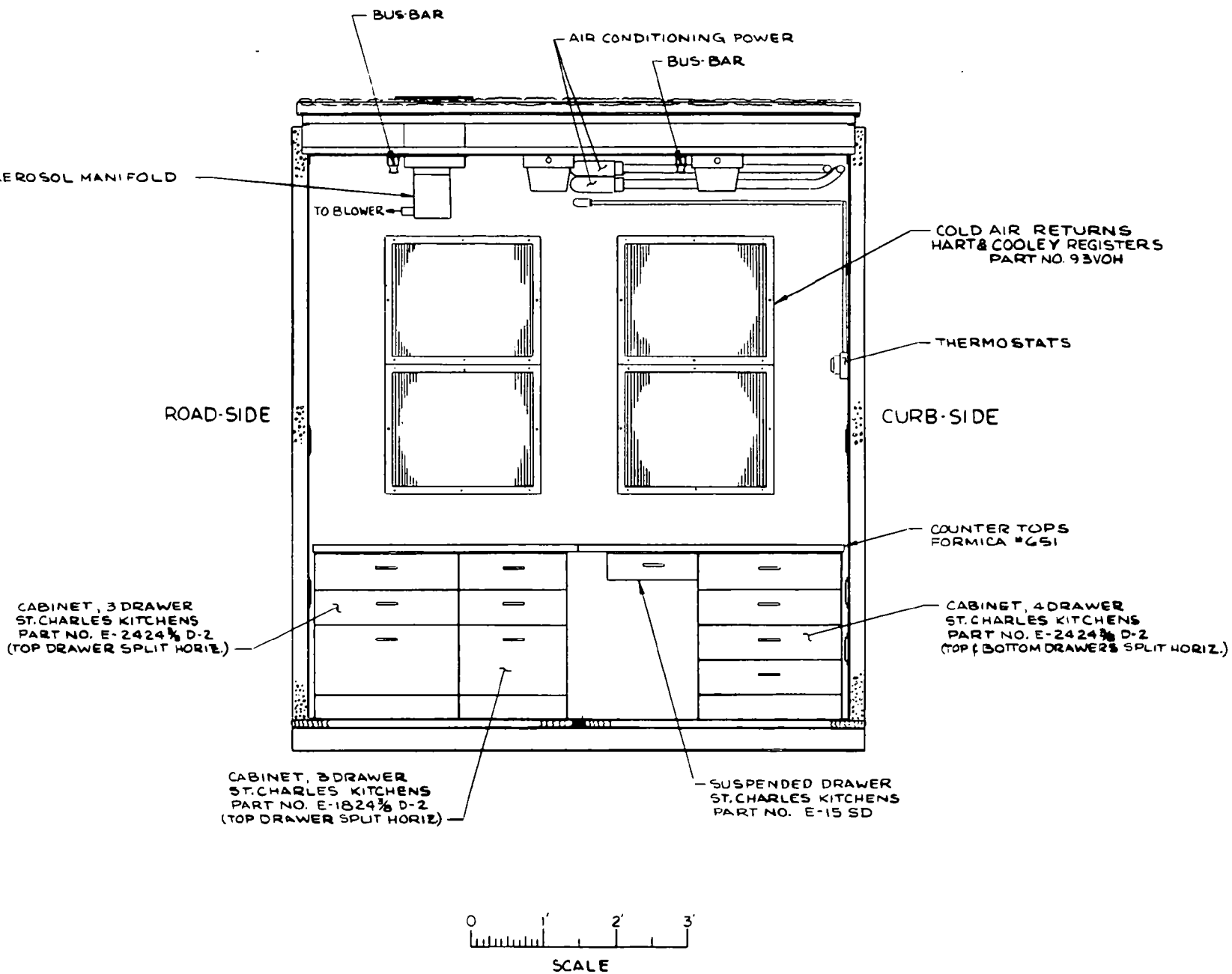

Figure 7: Interior front wall and work bench

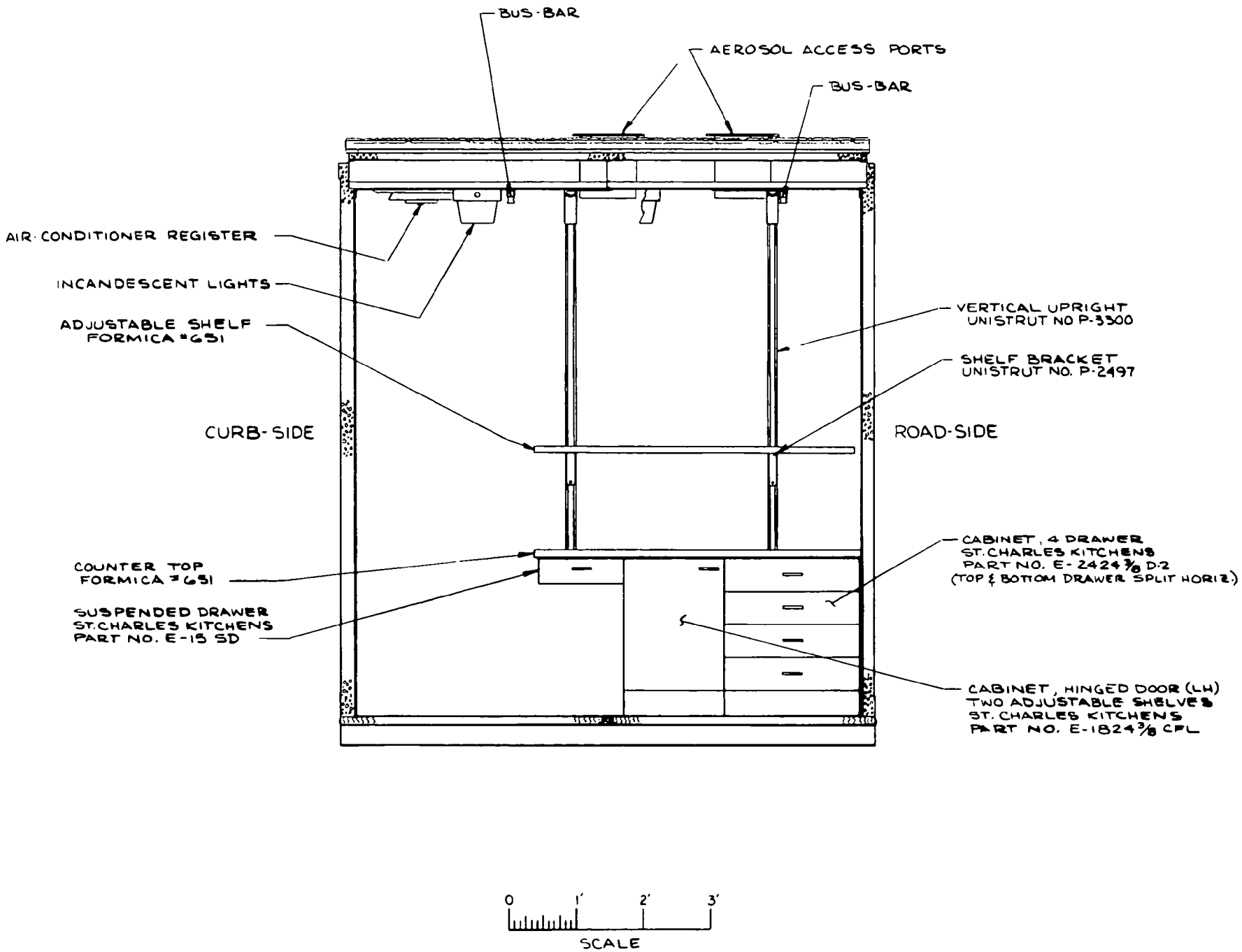

Figure 8: View looking rearward at the aerosol island

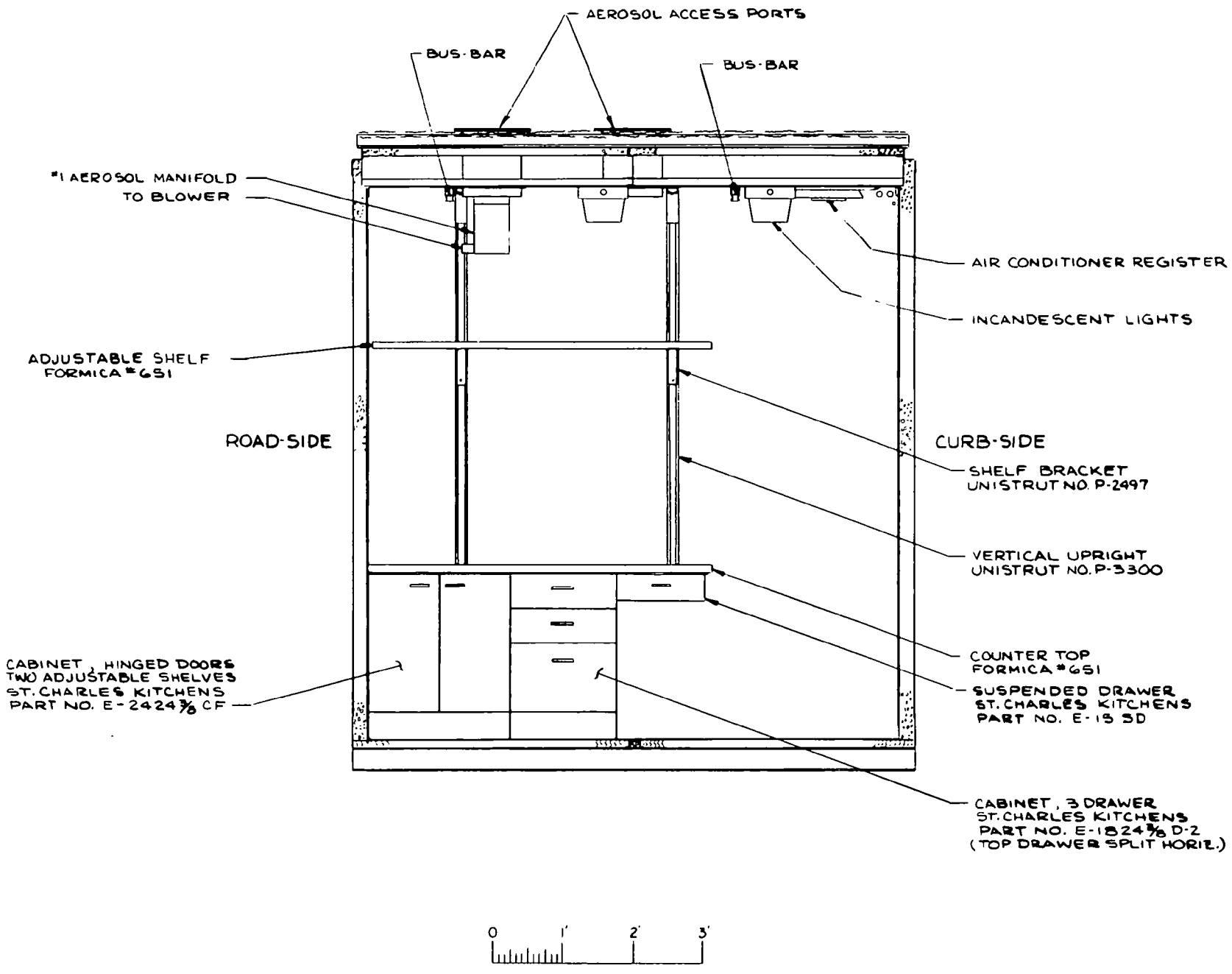

Figure 9: View looking forward at the aerosol island

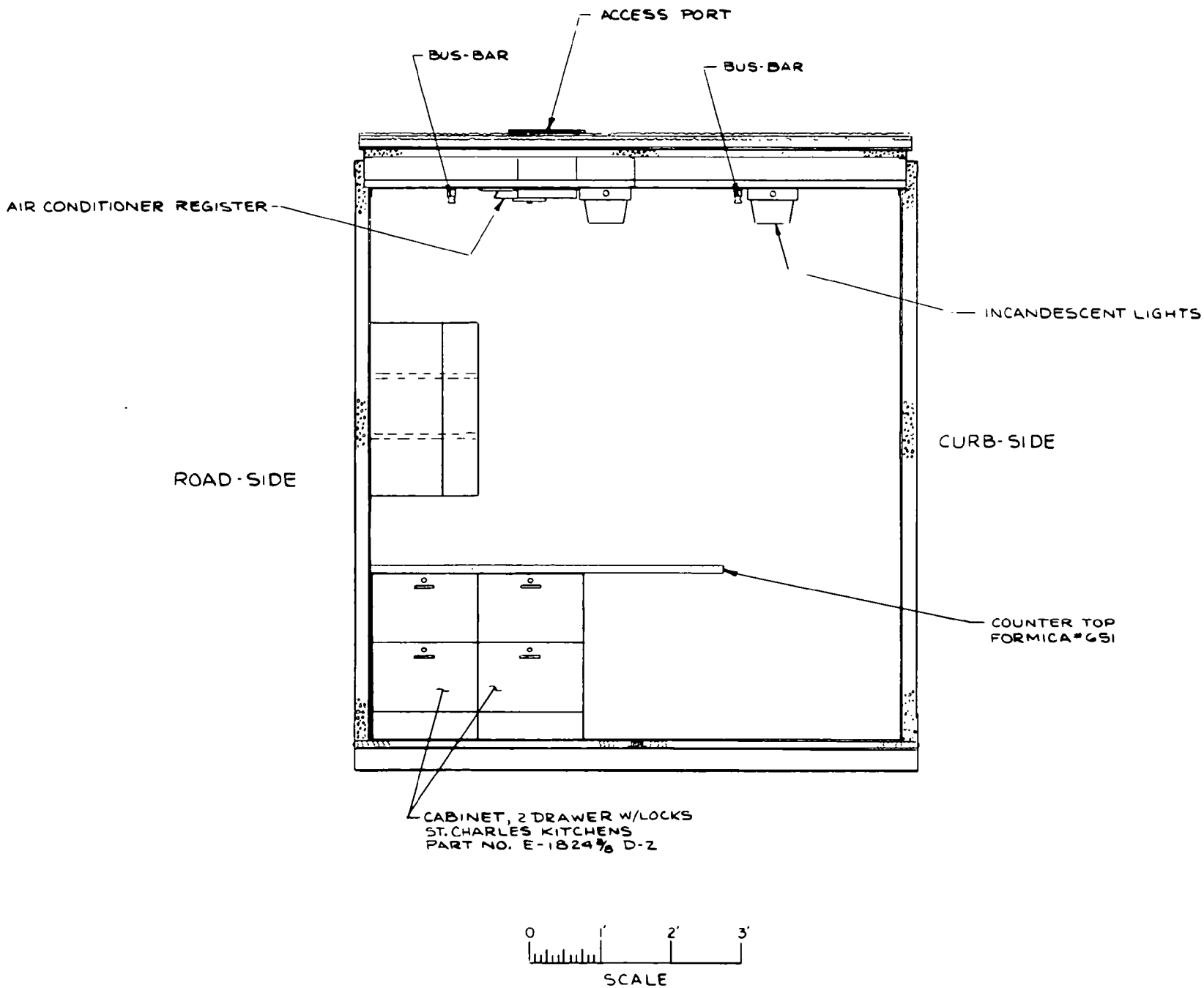

Figure 10: View looking forward at the data analysis island

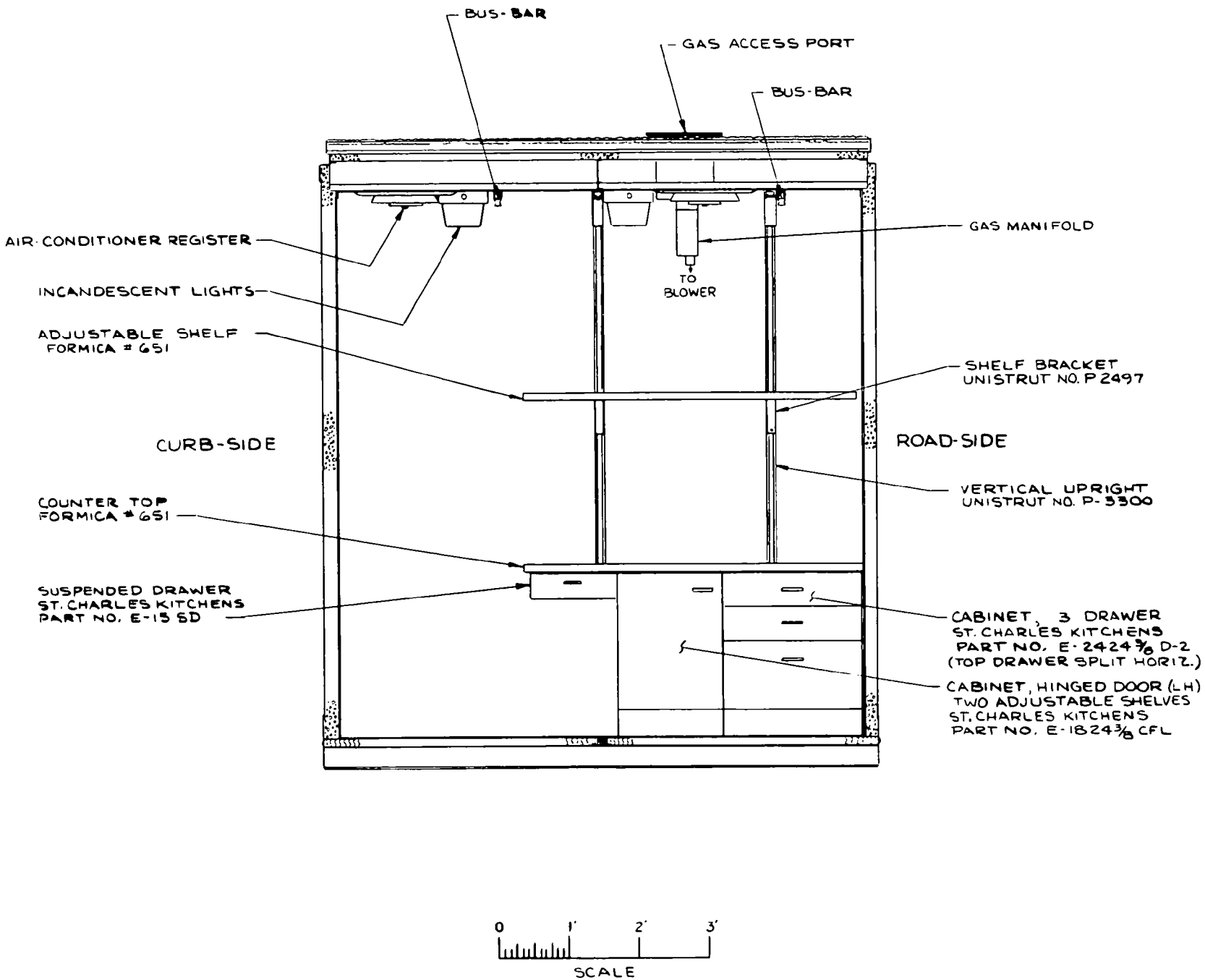

Figure 11: View looking rearward at the gas island

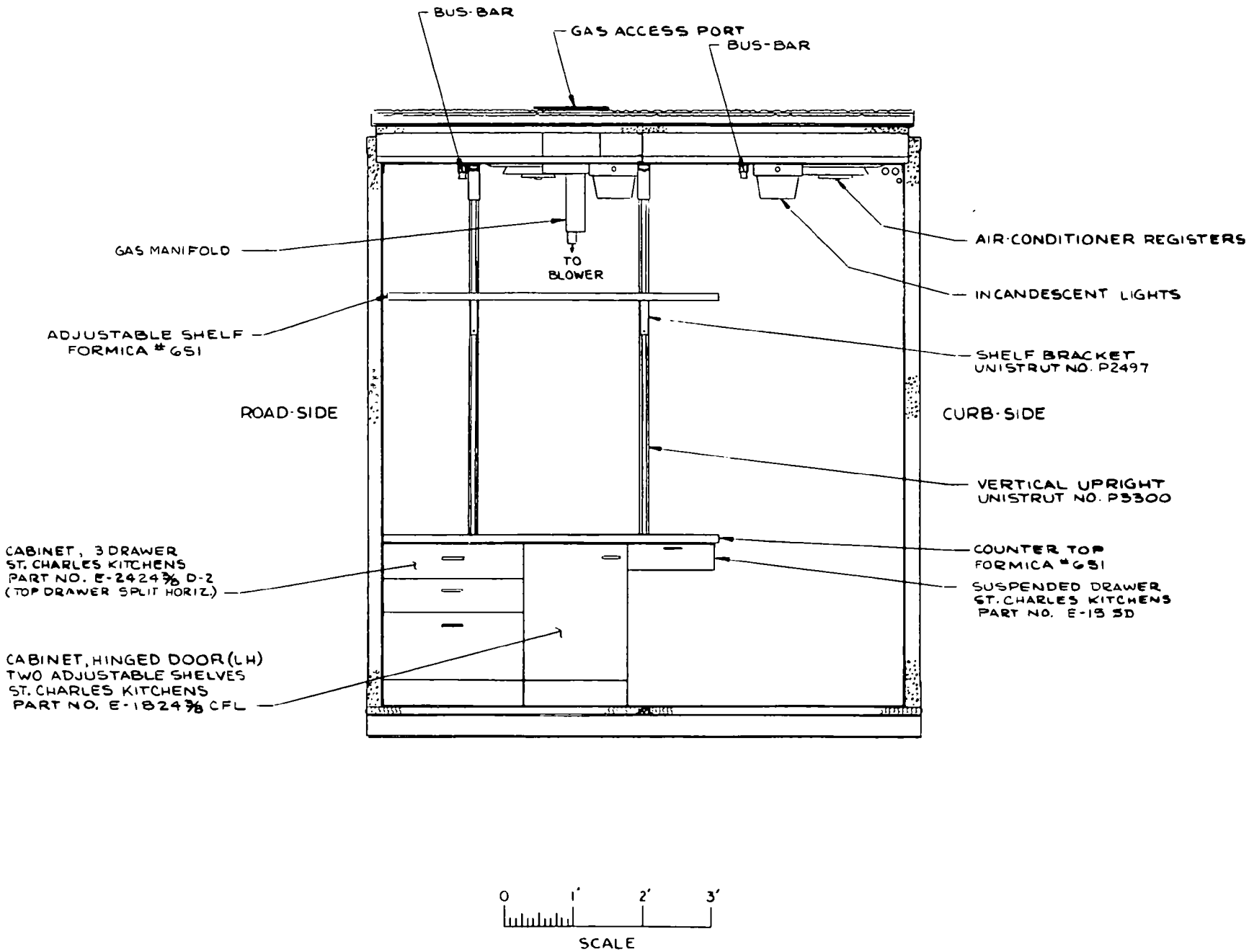

Figure 12: View looking forward at the gas island

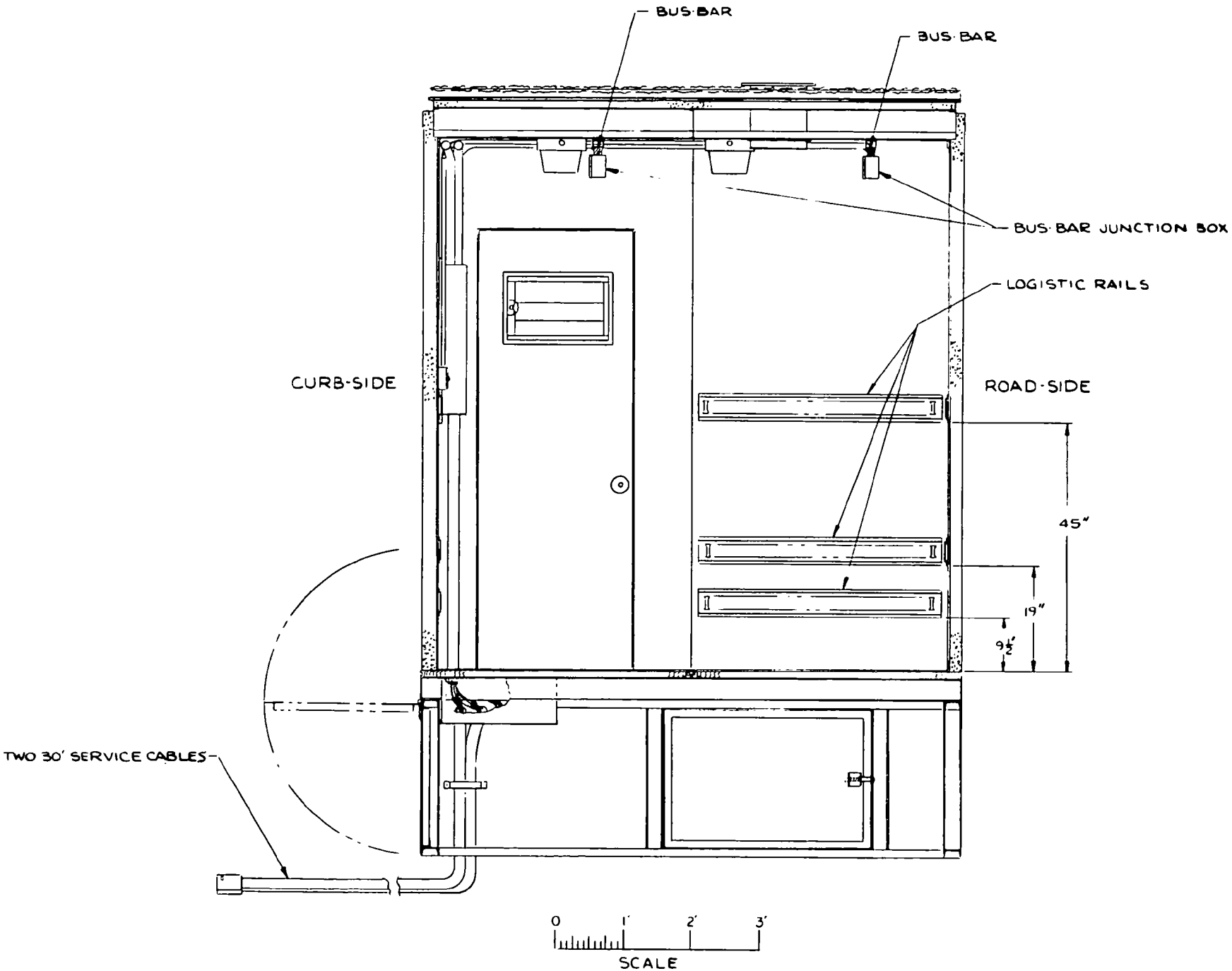

Figure 13: Interior rear wall

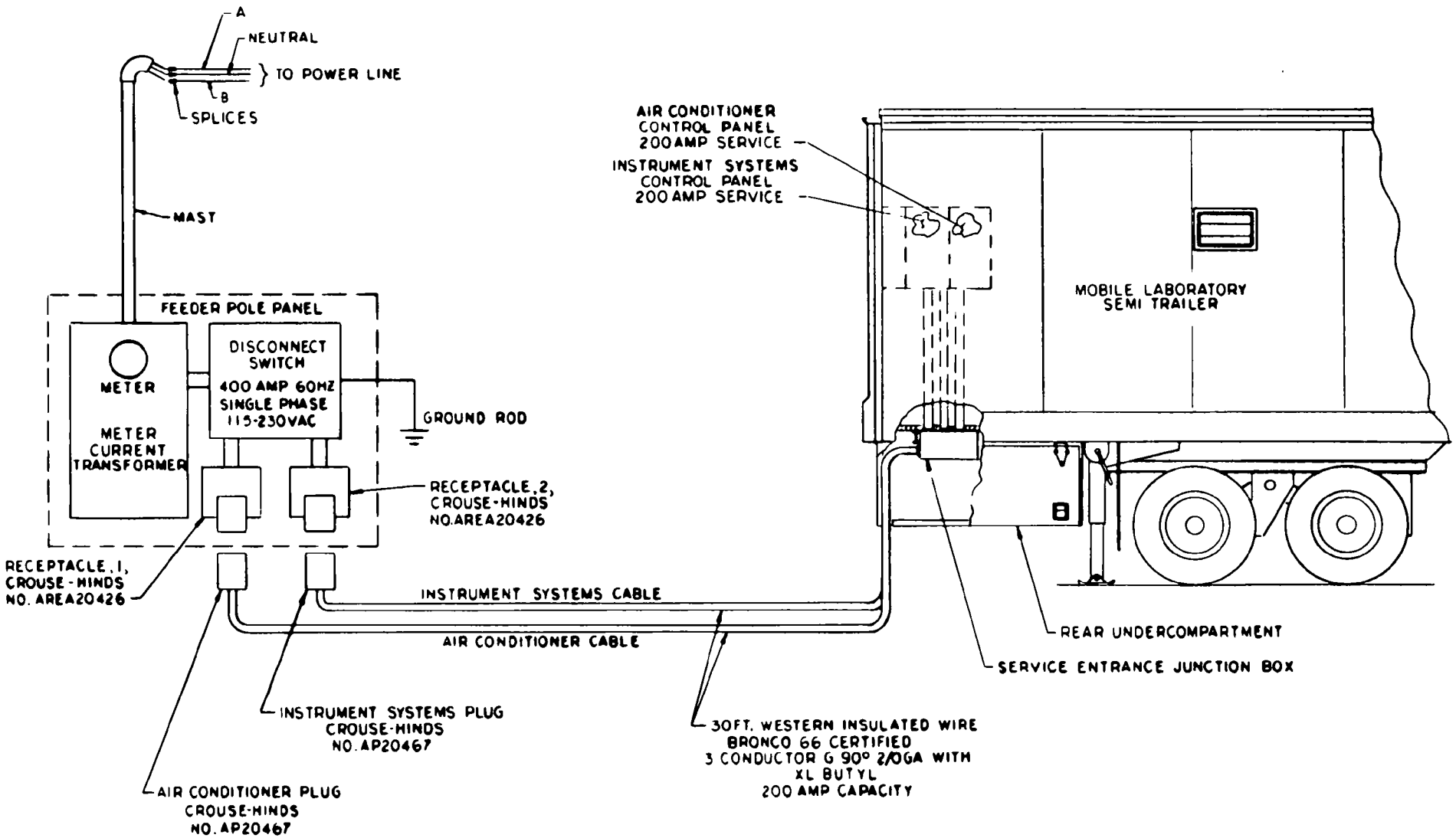

Figure 14: Feeder pole and cable-and-plug electrical service entrance

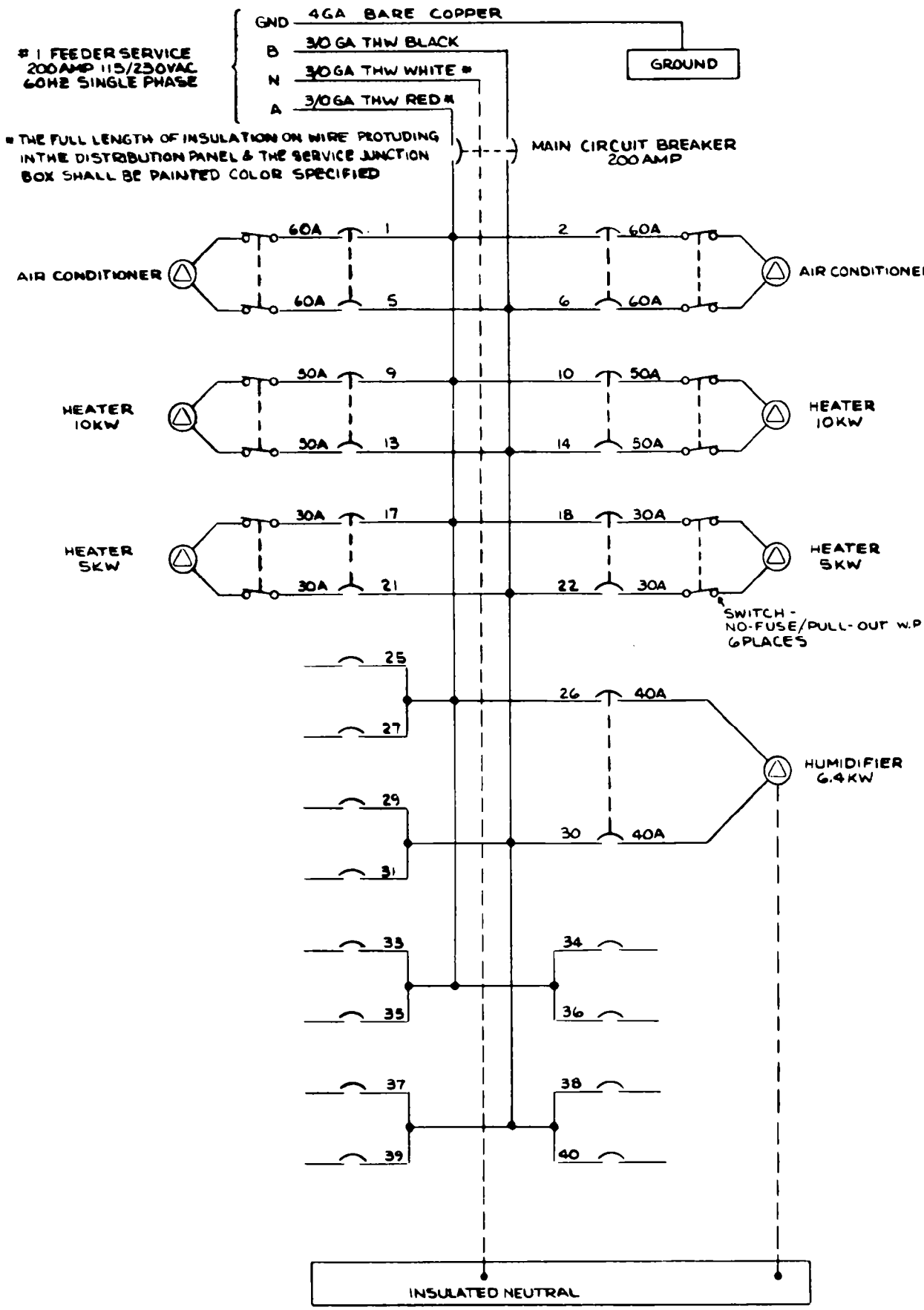

Figure 15: Circuit layout of the air conditioning service panel

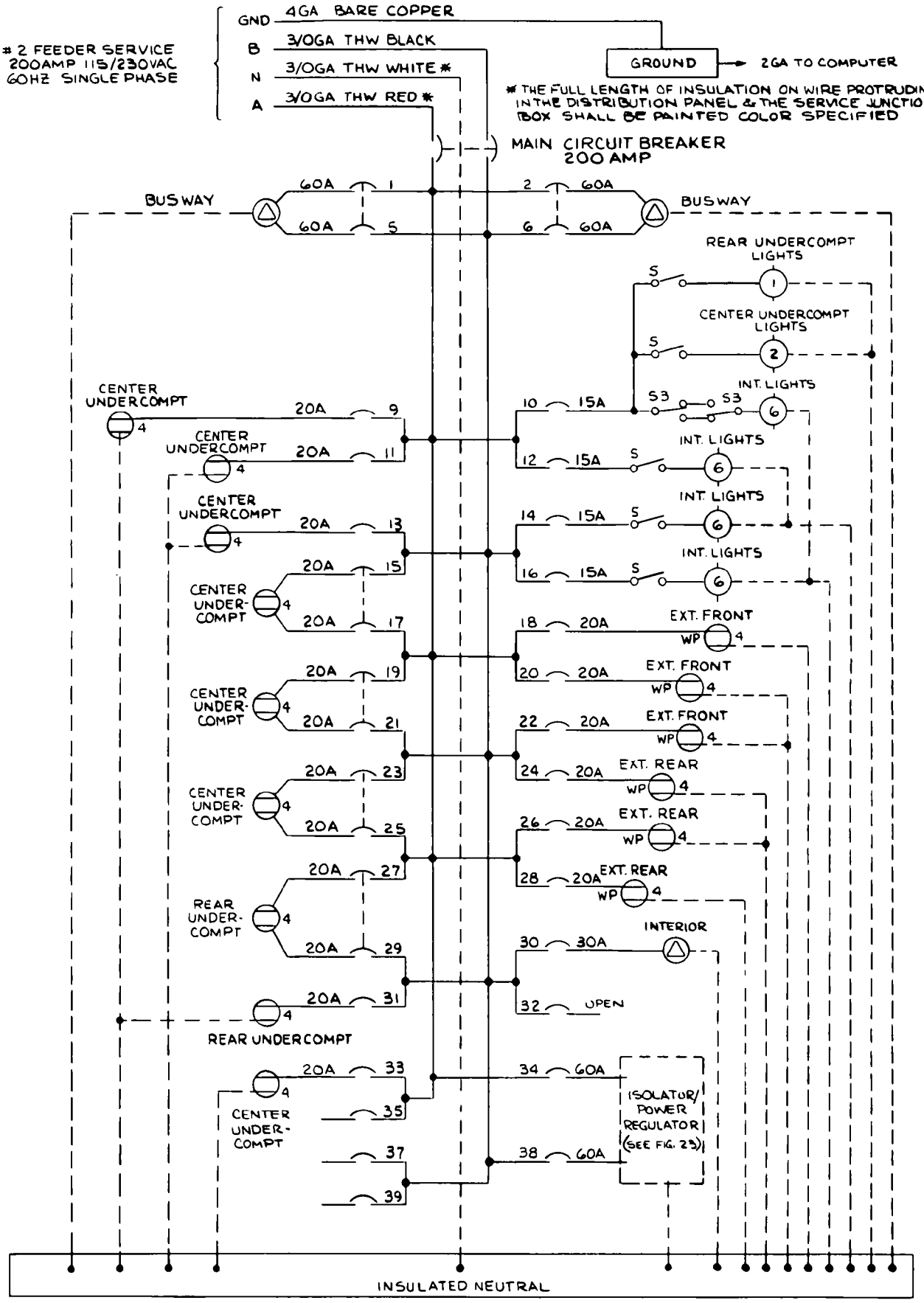

Figure 16: Circuit layout of the instrument systems service panel

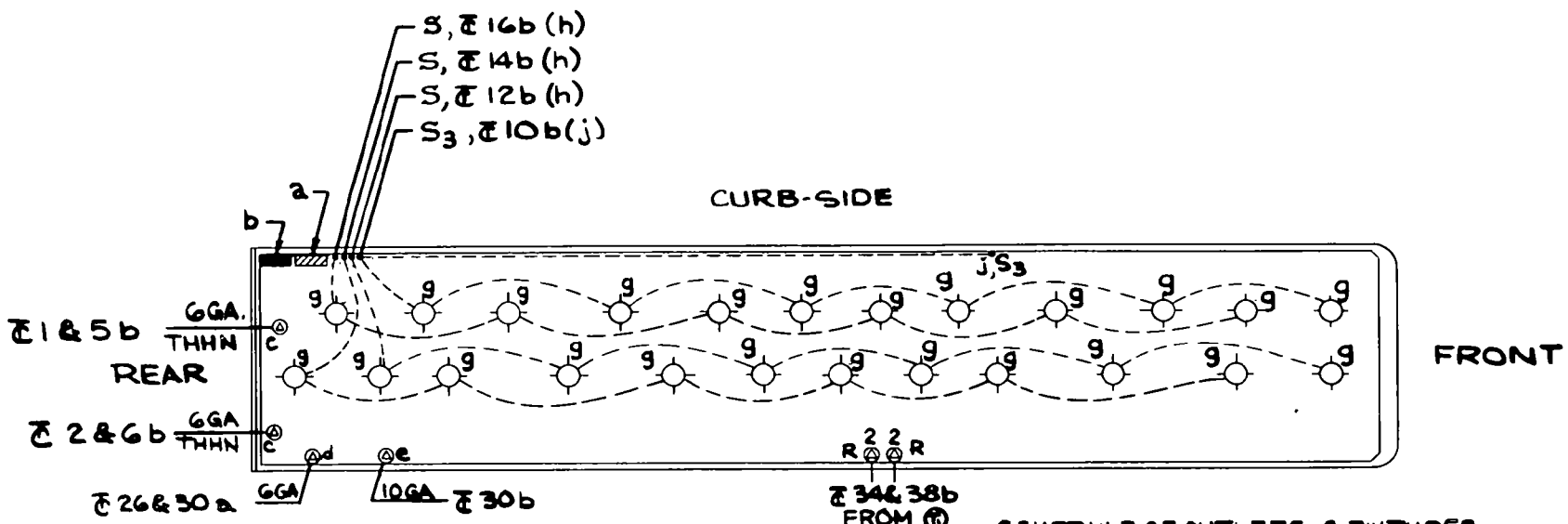

NOTE:

ALL WIRES ARE 12GA. UNLESS OTHERWISE SPECIFIED

GENERAL SYMBOLS:

- ■ DENOTES INSTRUMENT SYSTEMS CONTROL PANEL
- ▨ DENOTES AIR CONDITIONING CONTROL PANEL
- ✧ DENOTES CEILING LAMP HOLDER
- ⊕ DENOTES SPECIAL PURPOSE OUTLET
- S DENOTES SINGLE POLE SWITCH
- S_3 DENOTES 3-WAY SWITCH
- ℄ Xa DENOTES CIRCUIT NO. X IN AIR COND. CONT. PANEL
- ℄ Xb DENOTES CIRCUIT NO. X IN INSTR. SYS. CONT. PANEL
- (m) DENOTES 8KVA LINE VOLTAGE REGULATOR LOCATED IN CENTER UNDERCOMPARTMENT

SCHEDULE OF OUTLETS & FIXTURES

SYM	QTY	DESCRIPTION
a	1	DISTRIBUTION PANEL: GE. TM20205 200AMP 60HZ 3WIRE 115/230VAC SINGLE PHASE
b	1	DISTRIBUTION PANEL: GE. TM20205 200AMP 60HZ 3 WIRE 115/230VAC SINGLE PHASE
c	2	BUSWAY: GE. LW326 3WIRE 60AMP 250VAC, 38'±
d	1	OUTLET: 50AMP 125/250V 4WIRE GROUNDING STRAIGHT BLADE - HUBBELL # 9450
e	1	OUTLET: 30AMP 125/250VAC OR DC 3WIRE GRD STRAIGHT BLADE - HUBBELL # 9308
g	24	LIGHT FIXTURE: KENALL MFG. CO., PRISMATE 3990
h	3	SINGLE POLE SWITCH: 10AMP 125VAC STANDARD GRADE TOGGLE
j	2	3-WAY SWITCH: 10 AMP 125VAC STANDARD GRADE TOGGLE
R	4	OUTLET: 30AMP 125VAC OR DC 3-WIRE GRD TWIST-LOCK - HUBBELL # 3120

Figure 17: Outlet receptacle locations of each interior circuit

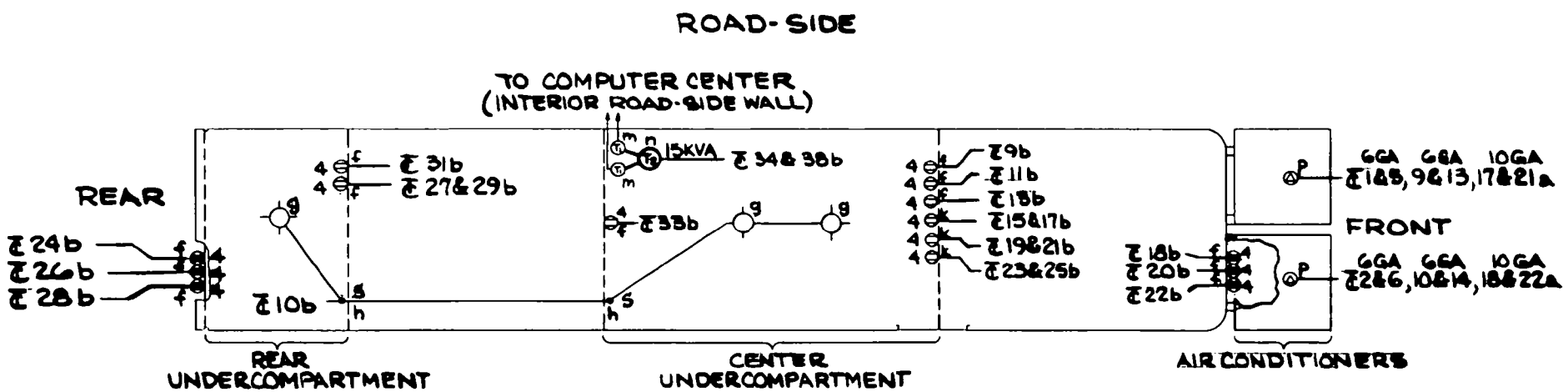

NOTE:

ALL WIRES ARE 12GA UNLESS OTHERWISE SPECIFIED

GENERAL SYMBOLS:

- DENOTES CEILING LAMP HOLDER
- DENOTES DUPLEX OUTLET X = NUMBER OF RECEPTACLES
- X DENOTES WEATHER PROOF DUPLEX OUTLET X = NUMBER OF RECEPTACLES
- S DENOTES SINGLE POLE SWITCH
- DENOTES SPECIAL PURPOSE OUTLET
- DENOTES 8KVA LINE VOLTAGE REGULATOR
- DENOTES ISOLATION TRANSFORMER
- ℄Xa DENOTES CIRCUIT NO. X IN AIR COND. CONT. PANEL
- ℄Xb DENOTES CIRCUIT NO. X IN INSTR. SYS CONT. PANEL

SCHEDULE OF OUTLETS & FIXTURES

SYM	QTY	DESCRIPTION
f	22	DUPLEX: 20AMP 125VAC OR DC 3-WIRE GROUNDING STRAIGHT BLADE
g	3	LIGHTING FIXTURE: KENALL MFG. CO. PRIZEMATE # 3990
h	2	SINGLE POLE SWITCH: 10AMP 125VAC STANDARD GRADE TOGGLE
k	8	DUPLEX: 20AMP 250VAC OR DC 3-WIRE GROUNDING STRAIGHT BLADE
m	2	LINE VOLTAGE REGULATOR: 8KVA
n	1	ISOLATION TRANSFORMER: 15KVA
p	2	AIR CONDITIONER: FEDDERS ADAPTOMATIC # CACO60A3

Figure 18. Outlet receptacle locations of each exterior circuit

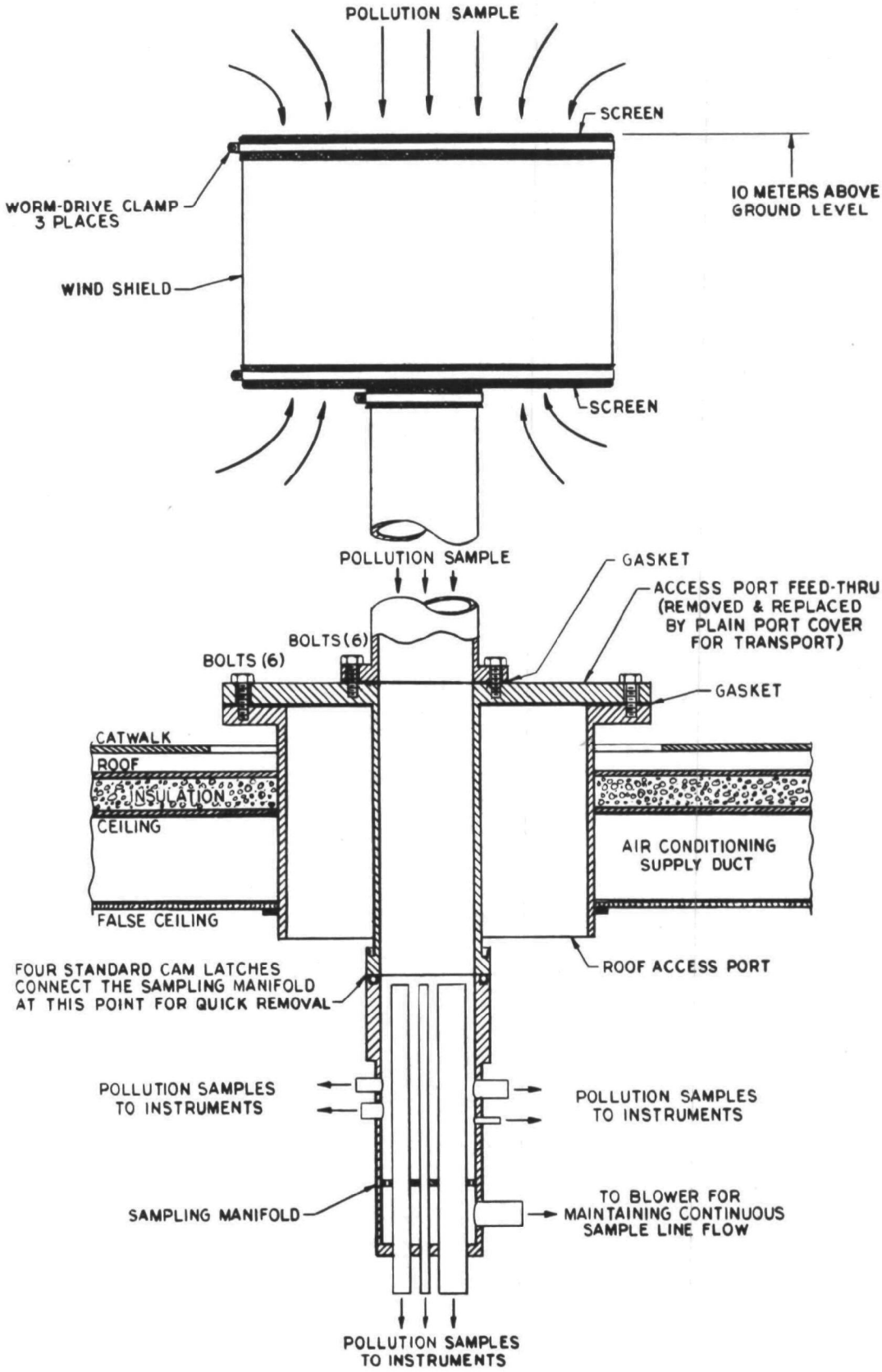

Figure 19: Aerosol sampling and transport system

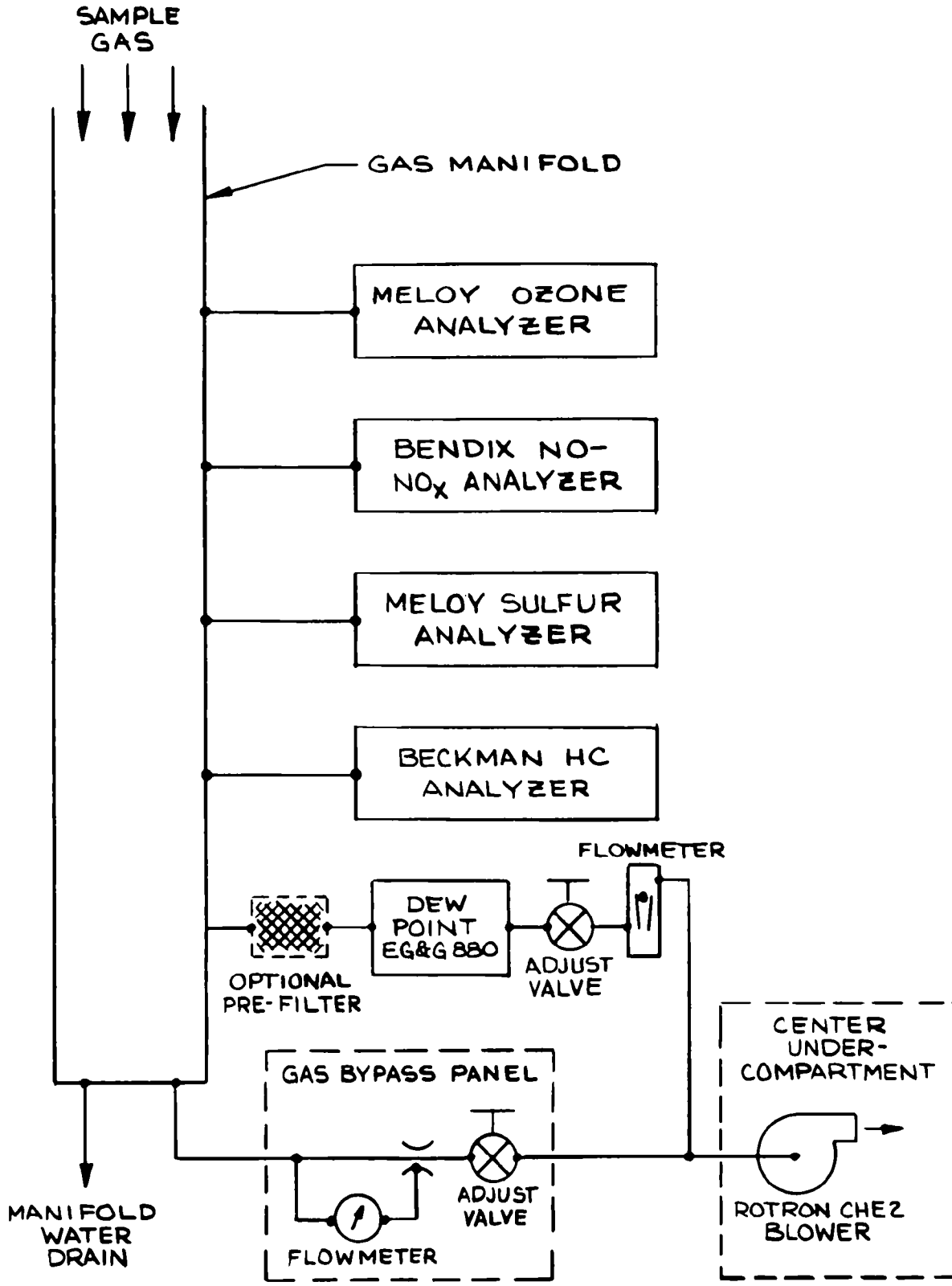

Figure 20: Schematic of gas sampling system

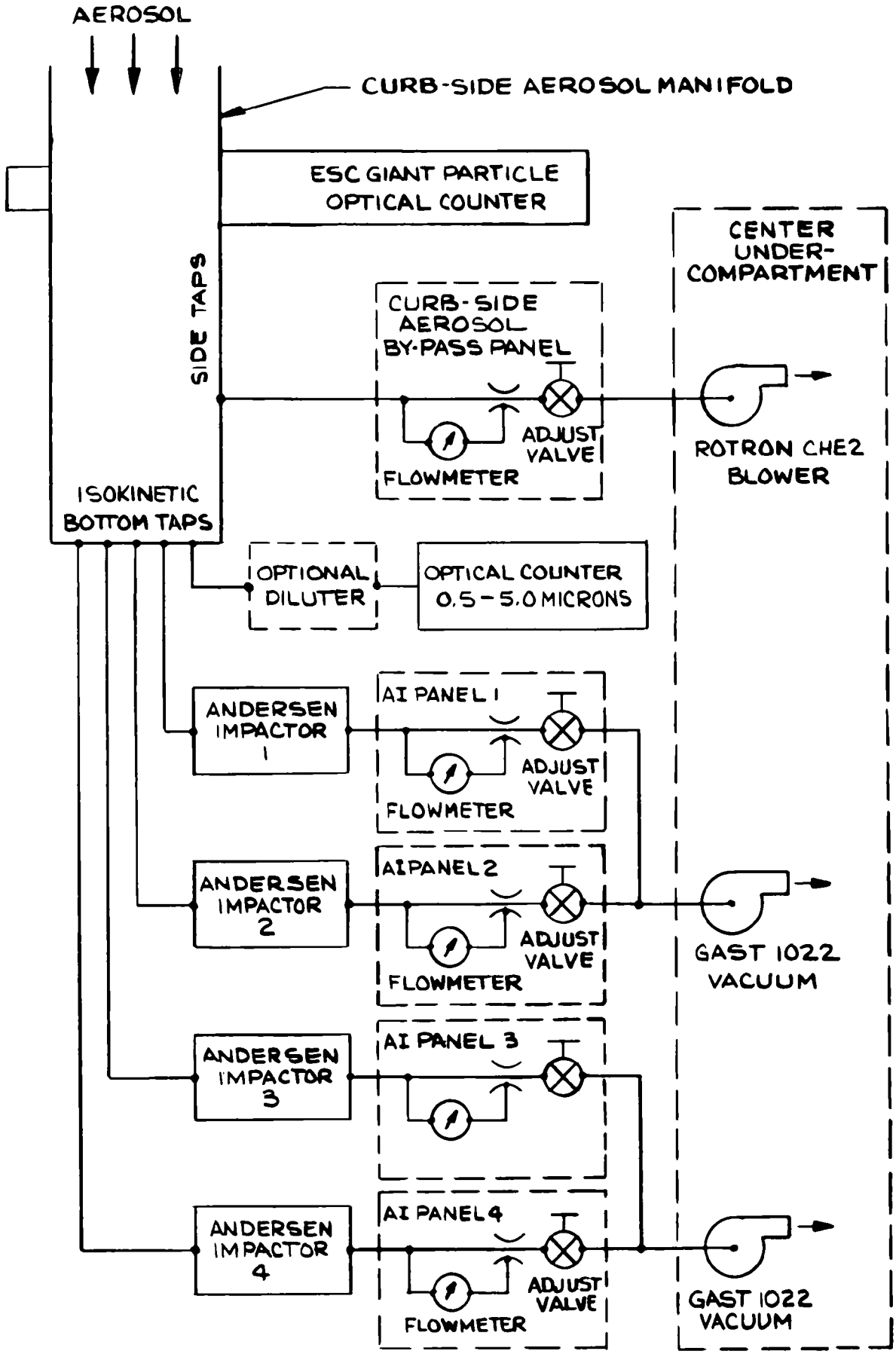

Figure 21: Schematic of aerosol sampling system which includes Anderson samplers

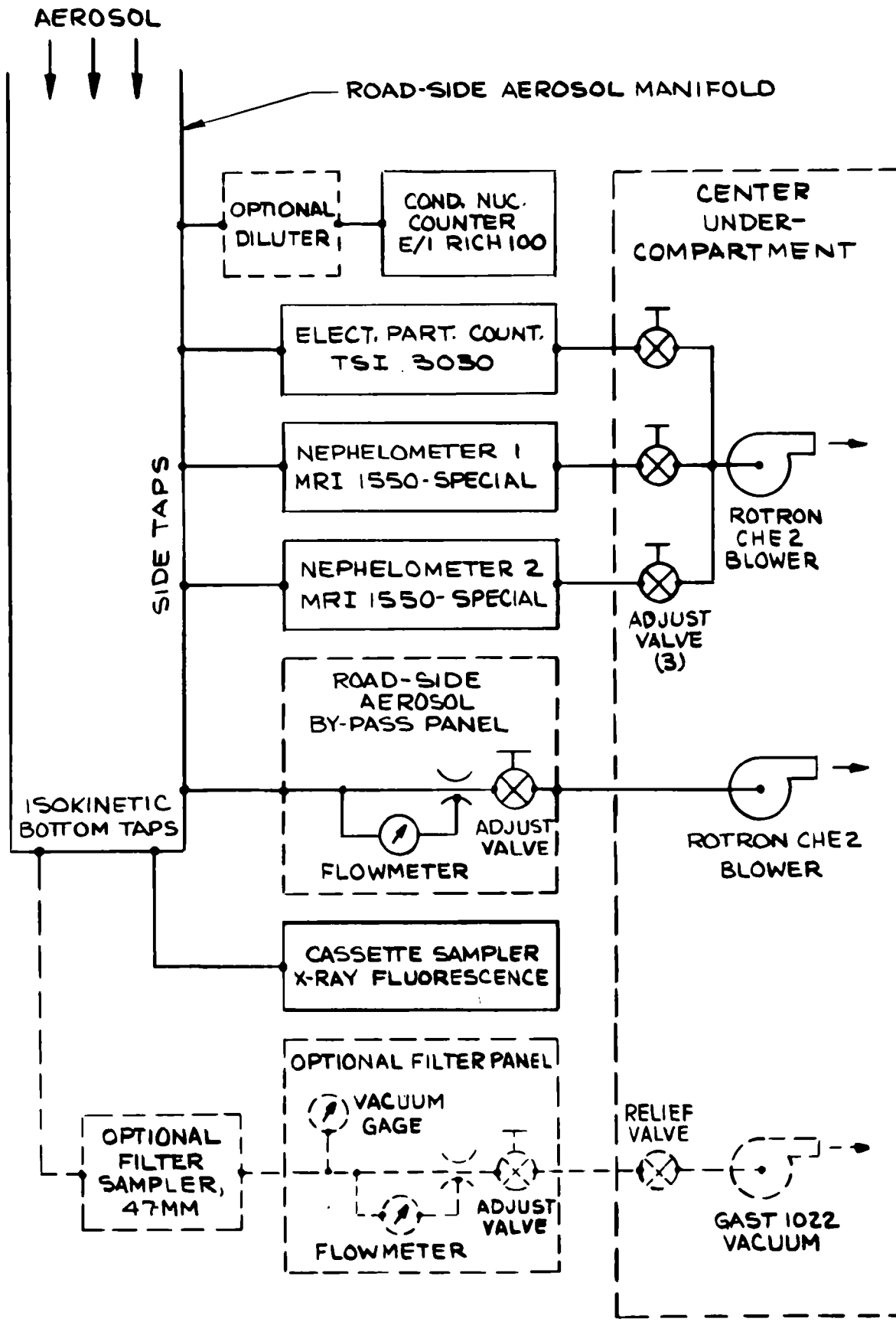

Figure 22: Schematic of aerosol sampling system which excludes Anderson samplers

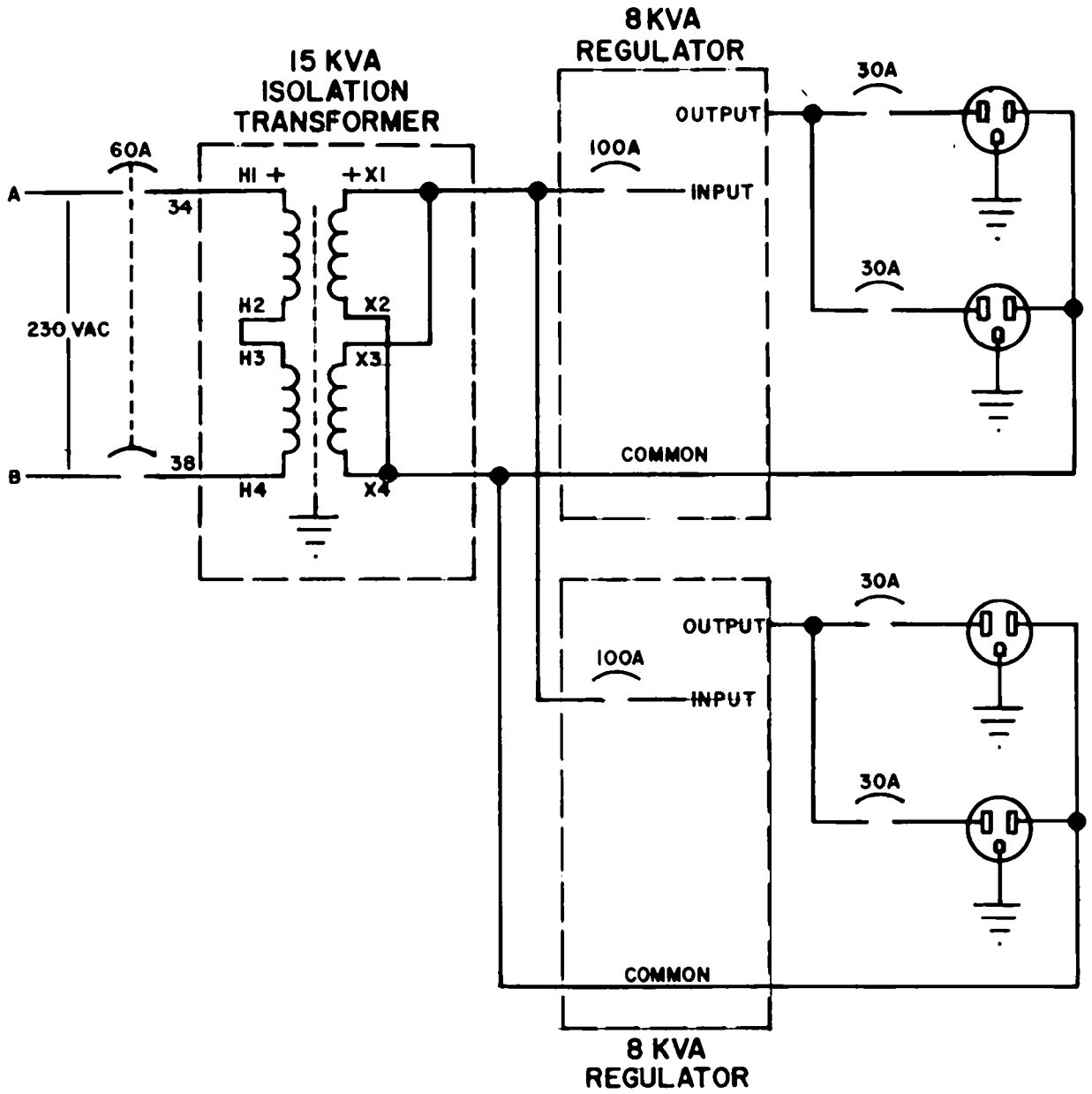

Figure 23. Electrical schematic of isolation-regulation transformers for computer power

Figure 24. Photograph of exterior curbside

Figure 25. Photograph of exterior roadside

Figure 26. Photograph of interior aerosol island and front wall

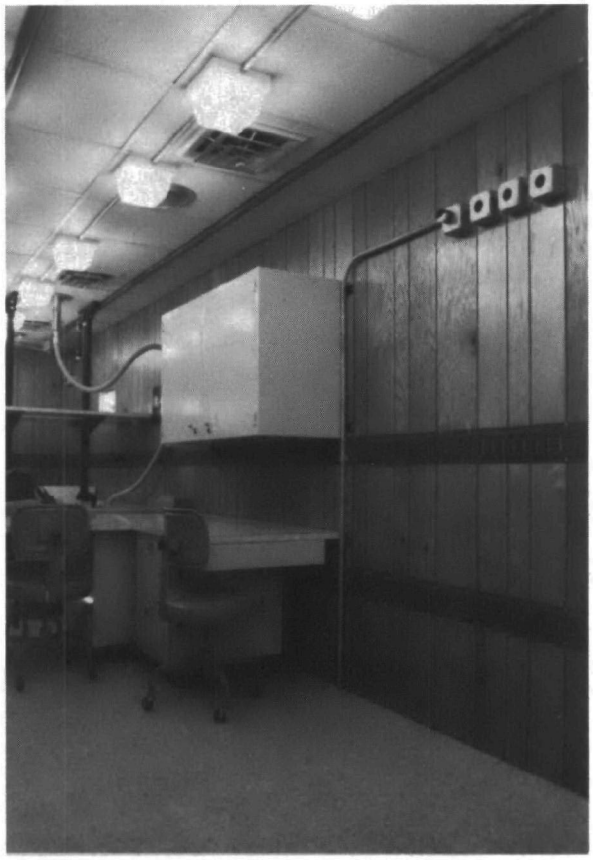

Figure 27. Photograph of interior looking rearward at the data analysis island

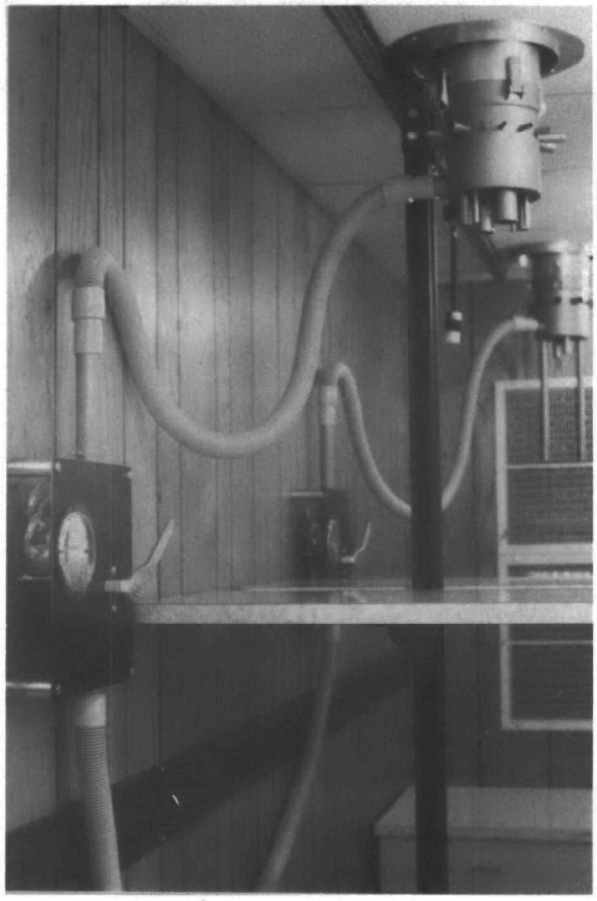

Figure 28. Photograph of aerosol manifolds and flow control panels

Figure 29. Closeup photograph of aerosol manifold designed for 4 Anderson samplers

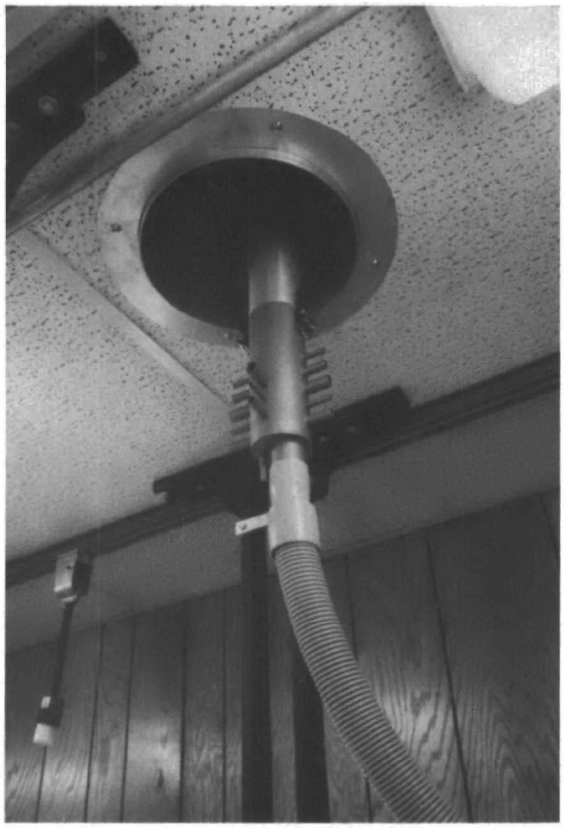

Figure 30. Closeup photograph of gas manifold also showing a fused plug connected to the electrical busway

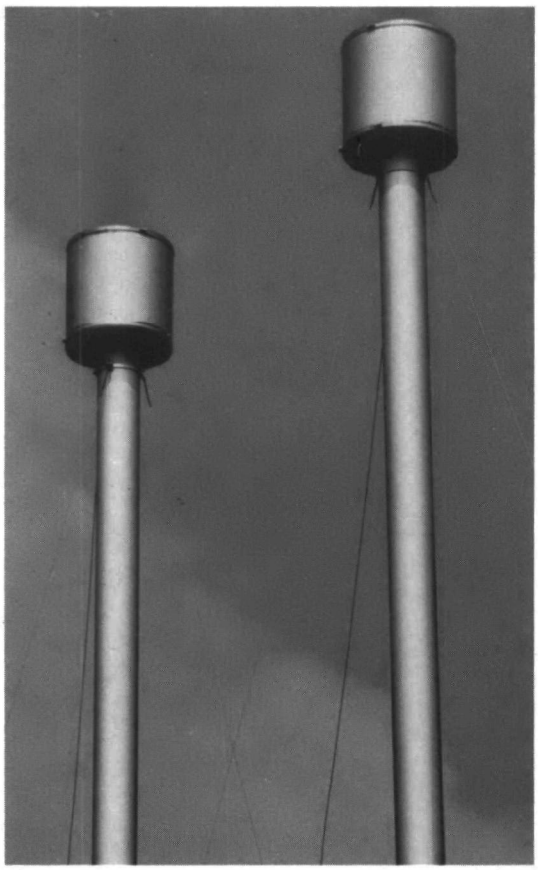

Figure 31. Exterior photograph of both aerosol sampling stacks showing windshields

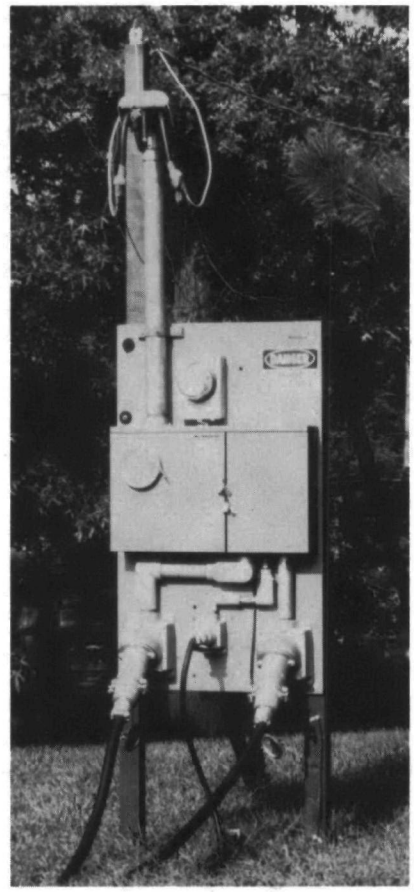

Figure 32. Photograph of typical electrical feeder pole showing 2 cables from the laboratory plugged into the feeder pole setup

Figure 33. Photograph of a tractor connected to the trailer, nearly ready for transport

TECHNICAL REPORT DATA
(Please read Instructions on the reverse before completing)

1. REPORT NO. 650/4-74-017	2.	3. RECIPIENT'S ACCESSION NO.
4. TITLE AND SUBTITLE Design of the EPA Semi-Trailer Mobile Air Pollution Laboratory		5. REPORT DATE December 1973
		6. PERFORMING ORGANIZATION CODE
7. AUTHOR(S) Gilmore J. Sem		8. PERFORMING ORGANIZATION REPORT NO. None
9. PERFORMING ORGANIZATION NAME AND ADDRESS Thermo-Systems Inc. 2500 North Cleveland Ave. St. Paul, Minnesota 55113		10. PROGRAM ELEMENT NO.
		11. CONTRACT/GRANT NO. 68-02-0654
12. SPONSORING AGENCY NAME AND ADDRESS Environmental Protection Agency National Environmental Research Center Research Triangle Park, N. C. 27711		13. TYPE OF REPORT AND PERIOD COVERED Final Report
		14. SPONSORING AGENCY CODE

15. SUPPLEMENTARY NOTES

16. ABSTRACT

A mobile air pollution research laboratory described in this report, has been designed and constructed into a semi-trailer shell. The laboratory will be used by EPA for making simultaneous measurements of many air pollutants using state-of-the-art instrumentation. A semi-trailer with an air suspension system was chosen as the basic vehicle. Air conditioning was provided for extremes of 115°F and -40°F. Electrical service of 400 amperes at 230 volts (half for air conditioning) was installed into the trailer. The 3 work benches for aerosol, gas, and data instruments, were arranged as islands allowing open aisle space and the clustering of sampling instruments for reduction of sampling losses. Sampling systems, carefully designed to reduce sample losses under varying wind conditions, extend 10 meters above ground level. The roof is covered with catwalk material which facilitates the fastening of equipment. Under-compartments contain necessary sampling pumps and blowers and serve as storage compartments. Two personnel doors with collapsible stairs provide access to the laboratory near each end. Individually adjustable supports allow leveling after the tractor leaves. Twin electrical main service cables connect to an external electrical service pole for 115/230 VAC power. Outlet receptacles on the exterior and twin busway systems on the interior offer maximum outlet flexibility.

17. KEY WORDS AND DOCUMENT ANALYSIS

a. DESCRIPTORS	b. IDENTIFIERS/OPEN ENDED TERMS	c. COSATI Field/Group

18. DISTRIBUTION STATEMENT	19. SECURITY CLASS *(This Report)* Unclassified	21. NO. OF PAGES
	20. SECURITY CLASS *(This page)* Unclassified	22. PRICE

EPA Form 2220-1 (9-73)