Environmental Protection Agency
Technology Transfer Program

Upgrading Meat Packing Facilities To Reduce Pollution

Waste Treatment Systems

Industry Seminar For Pollution Control

Chicago, Illinois

June 12 & 13, 1973

Bell, Galyardt and Wells
Architects - Engineers
Rapid City - Omaha

ENVIRONMENTAL PROTECTION AGENCY

TECHNOLOGY TRANSFER PROGRAM

UPGRADING MEAT PACKING FACILITIES TO REDUCE POLLUTION

WASTE TREATMENT SYSTEMS

INDUSTRY SEMINAR FOR POLLUTION CONTROL

CHICAGO, ILLINOIS

JUNE 12 AND 13, 1973

by

BELL-GALYARDT-WELLS

ARCHITECTS-ENGINEERS 5634 SO. 85th STREET RAPID CITY-OMAHA

OMAHA, NEBRASKA

PH. 402-331-0321

JOB. NO. 730402

TABLE OF CONTENTS

SUBJECT		PAGE
SECTION I	THE NEED FOR WASTEWATER TREATMENT	1
SECTION II	MICROORGANISMS AND THEIR ROLE IN WASTE TREATMENT	4
SECTION III	WASTE LOADS FOR THE MEAT PACKING INDUSTRY	6
SECTION IV	PROCEDURES IN THE PLANNING, DESIGN AND CONSTRUCTION OF A WASTEWATER TREATMENT SYSTEM	10
SECTION V	WASTEWATER TREATMENT METHODS FOR THE MEAT PACKING INDUSTRY	16
	A. ANAEROBIC PROCESSES	16
	B. AEROBIC LAGOON SYSTEMS	22
	C. ACTIVATED SLUDGE PROCESS	25
	D. TRICKLING FILTERS	32
	E. ROTATING BIOLOGICAL DISCS	34
	F. IRRIGATION METHODS FOR THE MEAT PACKING INDUSTRY	38
SECTION VI	OPERATION AND MAINTENANCE OF WASTE TREATMENT PLANTS	43
SECTION VII	CASE HISTORIES	48
	A. AMERICAN BEEF PACKERS - COUNCIL BLUFFS, IOWA	48
	B. IOWA BEEF PROCESSORS, INC. - DENISON, IOWA	49
	C. FARMLAND FOODS - DENISON, IOWA	50
	D. IOWA BEEF PROCESSORS, INC. - DAKOTA CITY, NEBRASKA	54
	E. LYKES BROTHERS PACKING PLANT - PLANT CITY INDUSTRIAL PARK, FLORIDA	57
SECTION VIII	SURVEY OF EXISTING WASTE TREATMENT FACILITIES FOR THE MEAT PROCESSING INDUSTRY	60

APPENDIX

TABLE OF CONTENTS

American Beef Packers (Council Bluffs, Iowa)	Page
1. Solids Screening Facility and Hide Processing Settling Tank	A-1
2. Hide Settling Tank	A-2
3. Grease Flotation Tank	A-3
4. Final Clarifier	A-4
5. Aeration Basin	A-5
Iowa Beef Processors, Inc. (Denison, Iowa)	
1. Meat Processing Plant and Lagoon Layout	A-6
2. Anaerobic Lagoon	A-7
3. Aerobic Lagoon	A-8
Farmland Foods (Denison, Iowa)	
1. Anaerobic Lagoon	A-9
2. Pre-Aeration Basin, Trickling Filters and Control Building	A-10
3. Trickling Filter Arms and Media	A-11
4. Final Clarifier	A-12
5. Chlorine Contact Tank	A-13
6. Treated Effluent	A-14
Iowa Beef Processors, Inc. (Dakota City, Nebraska	
1. Anaerobic Lagoon	A-15
2. Rotating Biological Disc Building	A-16

3. Rotating Biological Discs A-17

4. Final Clarifier A-18

5. Chlorine Contact Tank A-19

Lykes Brothers (Plant City, Florida)

1. Aeration Basin A-20

2. Final Clarifier A-21

3. Polishing Lagoon A-22

Irrigation

1. Traveling Sprinkler System A-23

2. Traveling Sprinkler System A-24

SECTION I

THE NEED FOR WASTEWATER TREATMENT

The discharge of industrial wastewater has recently become a significant area of concern as public regulating bodies have become increasingly involved with the establishment of water quality criteria. Many types of substances when discharged into a receiving body of water degrade the water quality to such an extent that beneficial uses of the stream are no longer attainable. While no one industry will pollute a stream with all types of damaging substances, sufficient quantities or combinations of even a few can cause irreparable harm.

The major components present in industrial waste discharges which have a pollution potential are solids (floating, suspended, settleable, and dissolved), organic matter, nutrients, temperature change, toxic substances, and acids and alkalis.

Floating solids, including grease and scum, are not only unsightly but may adversely effect natural aquatic characteristics such as oxygen transfer and light penetration. Setteable solids may have an adverse effect on stream organisms by covering up the stream bed and forming sludge blankets which will decompose anaerobically with the formation of odorous gases. Prevention of fish hatching on the stream bed and creation of an anaerobic environment which will hamper bottom dwelling microscopic animals may also result from settling solids. Moreover, suspended solids will give the water a turbid complexion, causing limitation of light penetration which in turn hampers aquatic vegetation relying on photosynthetic reactions for survival. Large amounts of suspended solids will also increase the requirements for treatment if the water is to be used for domestic supply.

In addition, organic matter, when discharged into a water course, will decompose, depleting the dissolved oxygen supply available in the water. When such oxygen depletion occurs, definite changes will occur in the composition of the organisms that inhabit that particular reach of stream. More desirable species of fish (trout, bass, etc.) which require dissolved oxygen levels near 5 mg/l

or greater, will disappear to be replaced by the coarser types such as carp and bullheads, which can survive dissolved oxygen levels near 2 mg/l. Below this level, however, fish life will cease to exist. Other forms of life react in a similar manner to decreasing levels of dissolved oxygen, and a shift towards anaerobic species will eventually ocurr in the affected area. Only physical processes such as the natural reaeration of flowing water will help the stream to recover from its oxygen depleted state.

Nutrient-rich waste flows are causing increasing concern as excessive algae growths become unacceptable. The two major nutrients commonly found in many types of industrial discharge are nitrogen and phosphorous. Presence of these nutrients may cause excessive growth of algae. When these heavy algae growths die, they exert an oxygen demand which in turn may cause fish kills, unpleasant odors, and an undesirable taste. The effective use of a body of water for recreational and domestic purposes is greatly diminished by algae growth.

Temperature changes in water may cause adverse changes in the organisms and affect stream reaeration. Fish and other forms of aquatic life have preferred temperatures at which their life processes are at an optimum. When temperatures deviate from the optimums, the organisms will not flourish and may disappear entirely. In addition to long-term alteration of temperatures, rapid changes in temperature are also harmful. Moreover, deviation to higher than normal temperatures result in the lowering of the stream's ability to reaerate itself, by limiting the amount of dissolved oxygen at saturation.

Toxic chemicals are common constituents of some types of industrial processes and therefore find their way into the waste stream. Such toxic substances may be harmful to both plant and animal life, and furthermore may leave the water unsuitable for recreation and human consumption.

Acidity and alkalinity, as measured by pH, are also a factor to be considered in stream quality. Since the pH of most industrial discharges varies from neutral,

effluents must be checked and often adjusted before being discharged into a stream.

To avoid degradation of water quality, industrial waste treatment must be practiced in some form. This may take the form of complete treatment at the industrial plant or partial treatment prior to discharge to a municipal sewer system. The degree of treatment required is contingent upon Federal and local requirements, which establish effluent standards for a particular receiving body of water.

SECTION II

MICROORGANISMS AND THEIR ROLE IN WASTE TREATMENT

Treatment of industrial wastes is accomplished by living systems. The waste flow furnishes food and environment to a mixed culture of microorganisms which break down the organic constituents of the waste and remove it from solution. The basis of adequate treatment is the proper control of the biological environment, to make it possible for the organisms to function at the desired level.

The most important organisms in waste treatment are bacteria, the simplest form of living matter. Bacteria may be heterotrophic (using organic compounds as a carbon source), or autotrophic (using carbon dioxide as a carbon source). Heterotrophs may be aerobic, requiring free dissolved oxygen; facultative, functioning with or without free oxygen; or anaerobic, requiring complete absence of oxygen. Other organisms of importance are fungi, protozoa and rotifers (higher level animals which feed on bacteria and play an important part in activated sludge). Algae which are important in some waste treatment systems are autotrophic photosynthetic plants, relying on carbon dioxide and sunlight to carry out their biochemical reactions.

The breakdown of organic wastes is a complex process involving complicated biochemical reactions. The process by which cells remain viable and obtain energy for synthesis and respiration is called metabolism. For heterotrophic aerobic bacteria, the large molecules which make up the food supply must first be hydrolized with carbohydrates going to sugars, protein to amino acids and fats into fatty acids. These products can then be used by the cells for assimilation.

Anaerobic reaction involves the breakdown of organics to intermediate products (chiefly organic acids) by one set of bacteria and the use of these products as food by methane forming bacteria which further break down the waste. These bacteria require higher temperatures to live than do aerobic bacteria and are called thermophillic. When compared to aerobic processes, anaerobic reactions will not yield as

much energy and breakdown will be incomplete.

Metabolism to insure growth is important because the maximum rate of metabolism results in the maximum growth rate for the organisms. This means that the greatest removal of organics occurs at the time of greatest growth.

In summary, aerobic processes are characterized by complete metabolism and large biological growth while anaerobic processes are characterized by small growth, incomplete metabolism, and creation of high-energy end products.

SECTION III

WASTE LOADS FROM THE MEAT PACKING INDUSTRY

A definite analysis of the waste characteristics of the meat packing industry is not a simple matter. It is difficult to characterize a typical plant and its associated wastes, due to the many procedures and facets of meat processing operations. A single plant may perform just a few or many of these procedures. However, for all practical purposes, the industry may be divided into three categories:

1. Slaughterhouses (killing and dressing)
2. Packinghouses (killing, dressing,curing, cooking, etc.)
3. Processing plants (processing with no killing operation)

Typical slaughterhouse and packinghouse wastes are generally high in biochemical oxygen demand (BOD_5), total suspended solids, floatable material, and grease. Furthermore, the waste is generally at an elevated temperature and contains blood, bits of flesh, fat, manure, dirt and viscera. Important processes such as blood recovery, grease recovery, separate paunch manure handling, and efficient rendering operations can substantially reduce waste loads and may also produce salable by-products. Furthermore, a well-managed program of in-plant housekeeping practices is desirable both from a sanitary and wasteload standpoint.

Waste loads which have been found through extensive study and research of records to be typical of various types of meat packing plants are given in Table I. A widespread sampling program is currently being conducted by the North Star Research and Development Institute for the Environmental Protection Agency, for the purpose of supplementing and updating this data.

TABLE I*

STANDARD RAW WASTE LOADS

Type	Flow (gal)	BOD_5 (lb)	SS (lb)	Grease (lb)
Slaughterhouse Per 1000 lb LWK**	696	5.8	4.7	2.5
Packinghouse Per 1000 lb LWK**	1046	12.1	8.7	6.0
Processing Plant Per 1000 lb Product	1265	5.7	2.7	2.1

*Industrial Waste Study by North Star Research and Development Institute for Environmental Protection Agency

**Live Weight Kill

The values listed for slaughterhouses apply only to medium-sized plants which slaughter from 95,000 to 750,000 pounds per day and do very little or no processing of edible by-products, perform dry inedible rendering and do no blood processing or dry blood in such a manner as to produce no blood water.

The values listed for packinghouses apply to most medium or large plants which carry out all processes associated with slaughtering, cutting, rendering, and processing. Values for processing plants represent plants which cut and process meat, but do no slaughtering or rendering.

These values are in general agreement with other values found in the literature although the variations may have a wide range. Table II shows the characteristics of the waste flow from numerous cattle and hog packing plants, illustrating a typically wide variation from plant to plant.

In general the processes which are undertaken at a packing plant have a far greater effect on the waste load factors than the size of the plant.

TABLE II*

UNIT WASTE LOADINGS FOR MEAT PACKING PLANTS
(Pounds per 1,000 pounds of live weight)

Type of Animal Slaughtered	BOD	Suspended Solids	Nitrogen	Grease
Hogs	18.0	12.0	2.67	0.90
Hogs	15.0	9.1	1.29	2.30
Mixed	12.7	4.6	2.02	1.44
Hogs	13.1	9.8	1.25	2.83
Cattle	20.8	14.8	2.24	.68
Hogs	15.7	14.8	2.01	1.79
Hogs	10.5	10.0	1.02	1.00
Mixed	19.7	9.4	2.59	.60
Hogs	9.8	7.2	1.46	.27
Mixed	16.7	15.0	2.18	2.00
Cattle	10.0	11.0	1.08	.55
Mixed	14.7	13.2	1.70	1.5
Mixed	6.5	6.2	.79	.5
Mixed	19.2	11.2	2.10	2.1
Mixed	8.9	10.8	.89	---
Mixed	21.6	21.7	1.82	6.0
Average	14.6	12.0	1.70	1.63

A limited number of studies have attempted to analyze the component parts of the process. The fact that such wide variations in raw waste loads do exist make data obtained from actual sampling of wastes similar to those anticipated extremely useful and often economically beneficial in designing waste treatment facilities.

Table III presents a typical source breakdown of hog packinghouse wastes. Packing plant wastes are of an organic nature and treatment may be accomplished by many different systems of biological treatment.

*An Industrial Waste Guide to the Meat Industry, U.S. Department of Health, Education and Welfare.

TABLE III*

ANALYSES OF MAJOR COMPONENTS OF
WASTE FROM HOG PACKINGHOUSES

Source of Flow	Concentration in mg/l						
	Solids		Nitrogen				
	Total	Suspended	Organic	NH_3	Cl as Na Cl	BOD	pH
Killing Department	1,840	220	134	6	435	825	6.6
Blood and Tank Water	44,640	3,690	5,400	205	6,670	32,000	9.0
Scalding Tub	13,560	8,360	1,290	40	640	4,600	9.0
Hog Dehairing	1,540	560	158	10	290	650	6.7
Hair Cook Water	4,680	80	586	30	290	3,400	---
Hair Wash Water	7,680	6,780	822	18	230	2,200	6.9
Meat Cutting	2,840	610	33	2.5	1,620	520	7.4
Gut Washer	22,600	15,120	643	43	360	13,200	6.0
Curing Room	26,480	1,800	83	12	19,700	2,040	7.3
Curing Room Showers	34,100	1,720	255	25	29,600	460	6.7
Cured Meat Wash	9,560	920	109	17.5	6,200	1,960	7.3
Pickle	140,000	------	2,750	37	77,800	18,000	5.6
Sausage & Miscellaneous	11,380	560	136	4	880	800	7.3
Lard Department	820	180	84	25	230	180	7.3
By-Products	4,000	1,380	186	50	1,330	2,200	6.7
Laundry	18,620	4,120	56	5	-----	1,300	9.6

*"An Industrial Waste Guide to the Meat Industry", U.S. Department of Health, Education and Welfare

SECTION IV

PROCEDURES IN THE PLANNING, DESIGN AND CONSTRUCTION OF A WASTEWATER TREATMENT SYSTEM

A. SAMPLING THE WASTE

When a meat packing plant undertakes the task of providing treatment for its wastewater, one of the first steps is to determine the characteristics of the waste flow. As mentioned previously, meat packing wastes vary considerably from plant to plant. Consequently, it is important to set up a sampling program to determine the specific nature of the flow for which the treatment facilities are to be designed. Sampling stations should be established at all accessible points of waste discharge, and samples should be taken at halfhour intervals continuously for three days and preferably one week. These samples should be combined for every twenty-four hour period to provide an accurate composite of the waste. A weir or similar measuring device should be installed at each sampling station in order to provide a means of determining the rate of flow when each sample is taken. The sampling bottle must be kept chilled during the sampling period, and should be delivered to the testing laboratory as quickly as possible at the end of each twenty-four hour interval. It is important that the laboratory selected to perform the tests be experienced in the analyzing of wastewater samples. The most frequently performed determinations are BOD_5 (5-day Biochemical Oxygen Demand), COD (Chemical Oxygen Demand), settleable solids, suspended solids, volatile suspended solids, grease, Kjeldahl nitrogen, and pH.

B. DEVELOPMENT OF DESIGN CRITERIA

Once the results of the sampling program have been fully reviewed and analyzed, the design engineer is able to establish the design criteria. These factors are usually determined on the basis of 1000 pounds of live

weight kill or per head. Any anticipated change in slaughtering or processing operations must be considered, as it will affect the current waste characteristics. If flows and BOD appear to be excessively high as sampled, a conscientious review of waste conservation and in-plant housekeeping programs should be made, with the goal of reducing these values to more generally acceptable values.

The following design factors are determined from sampling data:

Design average flow (gallons/1000 lbs. live weight/day)
Design maximum flow (gallons per day)
Design BOD (pounds/1000 lbs. live weight kill)
Design suspended solids (pounds/1000 lbs. live weight kill)
Design work week (days/week)

C. EFFLUENT REQUIREMENTS

1. Environmental Protection Agency Guidelines. The following effluent guidelines listed in Table IV for discharges in the meat processing industry are based on the application of the "best practicable control technology currently available". These limitations reflect the Agency's best technical judgement of the effluent levels which can be maintained through the application of the highest levels of pollution control that are currently available and practicable.

TABLE IV**

Meat Processing	BOD_5*	Suspended Solids*
Slaughterhouse	0.17	0.23
Packinghouse	0.26	0.35
Processing Plant Only	0.26	0.26

The above values represent minimum limitations only, and generally will be less stringent than state restrictions.

2. State Requirements. Effluent requirements as determined by a state will vary considerably throughout the country, and will also vary within an individual state, depending upon the water quality standards for the receiving stream

* Values expressed in terms of pounds/1000 pounds of live weight killed.
** Effluent Limitation Guidance for the Refuse Act Permit Program, Environmental Protection Agency, July 27, 1972.

into which the treated wastewater will be discharged. By July 1, 1977, all municipal waste treatment facilities must provide a minimum of secondary treatment, and all industries must be applying the best practicable control technology available. However, in some states, tertiary treatment is already required on some streams and lakes, with BOD and suspended solids limitations of 5 mg/l or less.

3. Municipal Requirements. Most municipalities have ordinances which place limitations on the characteristics of the wastewater which may be discharged into the municipal sewer system. These limitations are set to prevent operational problems at the municipal waste treatment facility and to prevent the plant from becoming overloaded. Any industry which fails to meet this limiting value must pay a surcharge. Because of the high flows and concentrated wastes discharged from a meat packing plant, it is generally necessary to pretreat these wastes to a degree that will permit the municipality to handle the wastes. Also, further reduction of BOD and suspended solids would be economically advantageous. Screening, grease skimming, and solids removal are perhaps the most important initial types of pretreatment. In some cases, waste flow must also be treated biologically in order to meet BOD limitations.

When a municipality builds or expands its waste treatment facility, the industries are expected to pay their share of the construction and operational costs. This cost can become extremely high, particularly in smaller communities where the industrial flow is a substantial percentage of the total. In these cases, the economics of extensive pretreatment, partial treatment, or completely separate and industry-owned waste treatment facilities must be carefully studied.

D. DEVELOPMENT OF ALTERNATE TREATMENT METHODS

Once design criteria and effluent requirements have been established,

various methods of waste treatment which will provide an effluent meeting those standards are investigated by the design engineer. Several additional factors must be considered in making a choice. They include land availability, proximity to residential or commercial areas, initial construction cost, operation and maintenance costs and ease of operation. Meat packing plants which are located in a built-up area will have fewer options to consider, since available space will be at a minimum. It is wise to be in contact with state regulatory agencies at this stage of the design. Preliminary submittal of the selected treatment scheme for approval of design criteria and layout will facilitate later review by these agencies.

E. DESIGN OF THE TREATMENT SYSTEM

Preparation of final plans and specifications for construction is begun by the design engineer once the selection of the treatment system is made. At this stage, it is important that reliable topographical information is obtained, providing ground elevations, location of existing property lines, building and sewers, sewer invert elevations, and a benchmark elevation on which to base proposed construction. Where a large area is involved, an aerial survey is often the most efficient way to obtain this information. The design engineer must also check the availability of utilities and electrical service at the site, as well as the power characteristics which should be used in specifying equipment.

Once the treatment units have been sized, an overall site layout can be developed, leaving adequate room between structures for access and maintenance. This layout will include utilities and wastewater piping, site grading and other site improvements. It is essential that future expansion and upgrading of the system to be considered in making the layout, permitting

additions to be made to the facilities with minimum disruption of the existing treatment system. Sewer outfall lines can often be designed with extra available capacity at little additional cost.

Final plans and specifications will include all structural, electrical and mechanical work required to complete the project. Equipment drawings and specifications are generally prepared in such a manner as to permit various manufacturers to bid on the units, and installation details are provided with shop drawings furnished after award of contract.

When the plans and specifications are complete, the design engineer prepares for the owner, an estimate of the construction cost. The final design documents are then submitted to the State environmental regulatory agency for review and approval leading to issuance of a permit for construction.

F. CONSTRUCTION

As soon as a permit has been granted by the State, the project can be advertised for bids. A notice describing the project is made available to any qualified contractor in the vicinity, and plans and specifications are issued to any of these contractors upon request, for a period of three weeks to a month. Sealed bids are then opened by the owner or his representative on a specified letting date. Award of contract is usually made to the low bidder, contingent upon the recommendation of the engineer.

The construction phase of the project should be subject to periodic inspection by the design engineer or other qualified personnel hired by the owner. Careful conformance of construction with plans and specifications is essential for correct and reliable functioning of the system. Any deviation from the contract documents should be made only with the

approval of the design engineer. Equipment shop drawings should also be routed to the engineer for review and approval.

When construction has been completed, the contractor should put the facility into operation for a brief period of observation, during which time the owner and the design engineer should inspect the project for final acceptance.

SECTION V

WASTEWATER TREATMENT METHODS FOR THE MEAT PACKING INDUSTRY

The secondary treatment methods commonly used for the biological treatment of meat processing waste flows include: (1) anaerobic processes; (2) aerobic lagoon systems; (3) variations of the activated sludge process; (4) high rate trickling filters; and (5) rotating biological discs. All of these treatment processes are capable of providing complete treatment and can achieve BOD reductions of 70% to 95% and suspended solids reductions of 80% to 95%. Each system has advantages and disadvantages, and generally, the degree of treatment required, together with site location and limitation, capital costs and operational costs will dictate the selection of the treatment system. The following discussion of each system describes the treatment process, equipment utilized, as well as advantages and drawbacks. In addition, disposal of treated wastewater by irrigation methods is discussed as an alternate to tertiary treatment.

A. ANAEROBIC PROCESSES

Treatment by the anaerobic process is often used for wastes originating from meat processing plants, since the nature of the waste lends itself to this type of biological activity. Elevated temperatures (85° - 95°), and high concentrations of BOD and suspended solids--typical characteristics of the waste flow from a meat packing plant--are necessary for successful anaerobic treatment. As previously discussed, anaerobic bacteria, which function in the absence of free oxygen, break down organic waste into gases (primarily methane and carbon dioxide) through production of intermediate acids. When compared to aerobic processes, the rate of removal and sludge yield are small. Nevertheless, anaerobic treatment often proves to be a highly economical method for removing substantial amounts of BOD and suspended solids.

Two types of anaerobic treatment are commonly utilized: (1) anaerobic lagoons, and (2) anaerobic contact units.

1. Anaerobic Lagoons. Anaerobic lagoons are widely used for treatment of meat packing wastes and function extremely well when the wastes have the desired characteristics. Typically, meat packing wastes have an appreciable amount of fats and proteins, high concentrations of nutrients, and an elevated temperature--all of which are essential for good anaerobic biological treatment.

Such lagoons are designed with a low surface to volume ratio in order to conserve heat in the pond. Depths are much deeper than aerobic ponds, ranging from 12 to 17 feet. Loadings range from 12-25 pounds BOD/1000 cubic ft. with 15-20 pounds BOD/1000 cubic ft. frequently used in meat processing waste applications. A typical anaerobic lagoon system consists of one or more square or rectangular ponds with a depth of 15 feet and an inlet near the bottom. A layer of sludge on the bottom of the lagoon which contains active microorganisms comes in contact with the incoming waste. Excess grease floats to the surface and forms a scum layer or grease cover, which serves to both retain heat and restrict odors. Recirculation is generally not considered necessary, although it has been used in some installations.

Site conditions which must be evaluated when considering anaerobic lagoons are: (1) proximity to residential or commercial areas where potential odors may cause a nuisance (one-quarter mile distance from any single family dwelling is usually considered minimum and at least 1/2 to 1 mile from any residential area, preferably down wind; and (2) soil conditions--i.e., location of the ground water table and nature of the soil with respect to workability and impermeability.

It is essential that a natural cover be developed as soon as possible after the lagoon is placed in operation, particularly in northern climates. The cover will minimize odors and assure adequate heat retention. Recently, concern with air pollution has resulted in consideration of artificial covers for odor control.

A natural cover will usually form if enough grease is present in the waste. To accelerate development of a cover, paunch manure or normally recovered grease may be by-passed to the lagoon for a short period. Since high winds may disturb

the scum layer and result in heat loss and odor problems, a windbreak, such as a board fence sheltering the lagoon from high prevailing winds, may be advisable to keep the natural cover intact. Low pH may adversely effect formation of a natural cover and the influent may require some pH adjustment.

Styrofoam, polyvinyl chloride, and nylon reinforced hypalon have been used as artificial covers, and other materials are currently being investigated. A major consideration in constructing a cover is providing an adequate gas collection system to trap the methane gases which rise to the surface. Also sunlight and wind action on the cover will affect the life of the cover depending upon the material selected.

Properly designed inlet and outlet structures are important to successful functions of the anaerobic lagoon system. Good operation has been achieved with a feed inlet near, but not on, the bottom. The effluent piping should be near the surface and designed to prevent short circuiting and disturbance of the grease cover.

Studies have indicated that solids do not accumulate to any significant extent in anaerobic lagoons, but reach a state of equilibrium. Consequently, solids removal is not a maintenance problem.

Advantages of an anaerobic lagoon system are low initial cost, ease of operation, ability to accept shock loads while continuing to provide a consistent quality effluent, and ability to handle large amounts of grease. Problems may arise if a sufficient cover cannot be maintained and odors result.

Where water used for meat processing is high in sulfates, waste flows cannot be treated in anaerobic lagoons. Oxygen is stripped from sulphates by anaerobic bacteria, and hydrogen sulfide is produced, causing severe odor problems as the gas is released to the atmosphere.

It should also be noted that the effluent from an anaerobic lagoon system generally contains up to 100 mg/l of ammonia nitrogen. The presence of ammonia nitrogen is toxic to fish in concentrations of 3 to 5 mg/l, depending upon pH, and water quality standards in most states limit the concentration to 2 to 5 mg/l.

Consequently, the secondary treatment method selected to follow the anaerobic lagoon system should provide for nitrification of the ammonia nitrogen where water quality standards place this limitation.

The anaerobic lagoon system will not produce an effluent suitable for discharge into a stream without further treatment. It is highly efficient as a first-stage treatment unit and is generally followed by some form of aerobic system. However some states will not permit the use of anaerobic lagoons or are requiring that they be provided with a cover.

2. Anaerobic Contact Process. The anaerobic contact process consists basically of an anaerobic digester with mixing equipment, a degasification system and a clarifier. Solids from the digester are sent to a degasifier in order to minimize floating material, and are then settled, with sludge from the clarifier being returned to the raw waste line. The separation and recirculation of seed sludge permits short retention periods, ranging from 6 to 12 hours. Solids retention time for a high degree of treatment is approximately 10 days at 90 degrees F. As the operating temperature drops, the solids retention time must be increased.

Control of pH is essential to insure proper operation, and lime or sodium bicarbonate is commonly used to raise the pH of the raw wastes. Inorganic salts in high concentrations may be toxic to the anaerobic organisms.

Anaerobic contact digester units are loaded in the range of 0.10 to 0.20 lb. BOD/ft.^{3}/day at approximatley 90^0 to 95^0 F. Flow equalization is employed in order to maintain a uniform feed rate to the digester. This is necessary because of the short contact time involved in the process. Either draft tube or turbine-type mixers are utilized to provide complete mixing. Digester gas may be used to heat the digester.

The degasification step may be accomplished by vacuum degasification or air-stripping. In vacuum degasification, a vacuum of twenty inches of mercury

is maintained in a vessel which has a diameter equal to its length. The influent is elevated to the top of the vessel and cascaded down over slotted trays with removed gases sent to a waste gas burner. The air-stripping process involves passing diffused air through the waste to scrub off the gas. This method is less expensive but has more operational problems than the vacuum process.

The clarifier receiving the sludge should be provided with a well designed recirculation system in order to move the light floc and to avoid a temperature loss.

Treatment efficiencies of 85 to 93% removal of BOD can be obtained with the anaerobic contact system, but generally additional aerobic treatment is required. The overall cost of such a system usually lies between that of anaerobic lagoon system and an activated sludge plant.

An anaerobic contact system is currently in use at the Wilson Certified Foods Plant in Albert Lea, Minnesota. This facility consists of a flow equalizing basin, two digesters of approximately 12 hours detention time which are loaded at 0.156 lb. BOD/ft.^{3}/day, two vacuum degasifiers, two sludge separation units (clarifiers), and two oxidation ponds receiving the separation effluent. The separators are designed for a detention time of one hour, based on total flow including recirculation. The recirculation rate is approximately one third of the raw waste flow.

Table V is actual operating data taken from the Wilson & Co. anaerobic contact system. BOD removal is approximately 91% through the anaerobic contact process and 98% in the stabilization ponds. Good removals (80%) were also obtained for suspended solids. Lagoon treatment provided after the contact process is lowering the effluent concentrations to acceptable levels and is an essential segment of the total treatment system.

TABLE V

ANAEROBIC CONTACT SYSTEM
WILSON CERTIFIED FOODS, INC.
ALBERT LEA, MINNESOTA

Average operating data (all killing days in 1960)*

	Raw Waste		Anaerobic Process Effluent		Pond Effluent	Loss in Pond
Flow, Gallons	1,410,000		1,410,000		772,000	638,000
	Raw Waste		Anaerobic Process Effluent		Plant Effluent Corrected for Seepage	
	mg/l	Pounds	mg/l	Pounds	mg/l	Pounds
BOD	1381	16220	129	1517	26	304
Suspended Solids	998	11610	198	2325	23	268
Suspended Volatile Solids	822	10370	153	1800	20	232
Total Solids	2100	36500	2080	24450	1076	12500
Total Solids-Water Supply	560	6500	560	6500	560	6500
Total Solids after deducting TS in Water Supply	2540	30000	1520	17950	516	6000
Total Volatile Solids	1700	19980	800	9400	367	4310
Total Volatile Solids in Water Supply	300	3520	300	3520	300	3520
Total Volatile Solids after Deducting TVS in Water Supply	1400	16460	500	5880	67	790

*"An Industrial Waste Guide to the Meat Packing Industry," U.S. Department of Health, Education and Welfare.

B. AEROBIC LAGOON SYSTEMS

1. General. Treatment of domestic and industrial wastes, including those from meat packing plants,is frequently accomplished in aerobic lagoons. Two types of lagoons are generally classified as being aerobic: (1) aerated lagoons, which mechanically introduce oxygen by aeration; and (2) oxidation ponds which are lightly loaded and rely on sunlight and wave action to accomplish bio-oxidation and photosynthesis. Aerobic lagoons are frequently utilized to provide additional treatment to the effluent from an anaerobic lagoon system.

2. Aerated Lagoons. Aerated lagoons are usually designed with detention times of 2 to 10 days, have liquid depths of eight to fifteen feet, and utilize some type of aeration equipment--either fixed mechanical turbine type aerators, floating propeller type aerators, or a diffused air system.

In most cases, not enough turbulence is maintained in the basin to maintain the solids in suspension and those solids which settle may be degraded anaerobically on the bottom. In those instances where sufficient turbulence does exist, the system approaches the conditions of an extended aeration system without sludge return.

BOD removal in aerated lagoons is dependent upon temperature, detention time and influent waste characteristics. Treatment efficiency decreases as temperature decreases. In northern climates, lower BOD reduction is experienced during the winter months. Aerated lagoons treating meat packing wastes are generally designed to achieve an average BOD reduction of 50 to 60%.

Power requirements are a major consideration and treatment facilities handling a high industrial flow may utilize several hundred horsepower. Facilities for small meat processing plants may use no more than twenty horsepower.

When aerated lagoons are used in series with anaerobic lagoons, suff-

icient oxygen is added to restore the waste to an aerobic state, including oxidation of sulfides, and to provide for the additional biological treatment.

The most significant advantage of an aerated lagoon system is its relatively small land requirement. The high cost or unavailability of land can easily offset the higher operational cost of the aerated lagoon system. There is, however, only a minimum reduction of ammonia nitrogen in an aerated lagoon. Furthermore, aerated lagoons must always be followed by an oxidation lagoon to capture the suspended solids and to provide additional treatment.

3. Oxidation Ponds. Oxidation ponds consist of relatively shallow, lightly loaded lagoons (20 to 40 lbs. of BOD per acre) with detention times often as long as several months. They will provide a high degree of BOD reduction and have been widely used in the past for both domestic and industrial wastes. As effluent quality requirements become more stringent, however, the treatment efficiency achievable in oxidation ponds may be inadequate for discharge into a particular receiving stream. In areas where the effluent would flow into a recreational body of water, the BOD and suspended solids must usually be reduced to 5 mg/l or less, and ammonia reduced to less than 3 mg/l. Discharge may even be prohibited entirely. In these cases, the effluent from the oxidation pond must be disposed of by irrigation or evaporation.

Even when effluent requirements are less stringent, problems may develop due to the development on the lagoon surface of algae growth. This algae escapes with the pond effluent and creates an undesirable appearance, odor and taste in the receiving stream.

Oxidation ponds which treat wastes from the meat processing industry are frequently preceded by anaerobic lagoons or anaerobic lagoons in conjunction with aerated lagoons. Even with this prior treatment, the BOD remaining in the flow entering the oxidation pond may still be substantial. Since the loading rate to oxidation ponds is generally kept quite low in order to minimize odor problems

and to provide for a high degree of treatment, large areas of land are necessary to provide adequate surface area for the wastewater.

The water depth in oxidation ponds varies usually from four to eight feet. Frequently a level control system is provided to permit rapid discharge of the effluent during periods of higher flow in the receiving stream, dropping the water level to a minimum of two feet prior to cutoff of discharge and temporary storage.

Loadings for oxidation ponds are expressed in pounds of BOD per acre of water surface. Generally accepted values for industrial ponds range from 20 to 40 pounds per acre, with 25 to 30 pounds per acre being a commonly used design loading. Loadings as high as 100 and 150 pounds of BOD per acre have been used for meat processing wastes with reasonably high initial treatment efficiencies; however, odor problems have usually occurred and the quality and efficiency of the lagoons have frequently deteriorated after a period of several years. Because of this, State and Federal health officials are increasingly reluctant to approve these high loading rates, and engineers no longer recommend them.

Suitable soil conditions are of basic importance to stabilization pond design, as it is essential that the compacted earth below the maximum water surface be essentially impermeable. Sandy or other granular soils are unsuitable for lagoon construction and require some type of liner. Due to the extensive surface area involved, lining of large stabilization ponds with any material other than clay soils found in upper soil layers or nearby excavation is usually prohibitive in cost. Smaller ponds may be sealed or lined with bentonite or some type of vinyl or asphalt liner.

It is generally not necessary to chlorinate the effluent from a stabilization pond, although it may be required whenever effluent standards for pathogenic bacteria are not met.

The large surface area required for adequate treatment of meat processing

wastes often results in ponds sufficiently large to have significant wave action and accompanying erosion of dikes. Riprap is often placed on those dikes subject to the wave action caused by high winds. Continuous maintenance of the dikes is essential for good operation, as excessive weed growth will lead to septic areas and mosquito breeding, and weakening of dikes caused by erosion or burrowing by rodents can result in potential flooding of surrounding land.

The configuration of stabilization ponds is generally rectangular, with acute angles avoided to prevent dead areas. Inlet and outlet structures are placed to prevent short circuiting of the flow through the lagoon. Two or more ponds may be used in parallel, to avoid the excessive unbroken surface area of one large pond. Oxidation ponds are often constructed in series, to provide succeeding degrees of treatment. Stabilization ponds which follow anaerobic or aerated lagoons will generally have an average efficiency of approximately 80% (in the first stage) and as high as 90% in the summer and 70% or less in the winter months. Efficiency tends to drop off somewhat in successive stages, reaching as low as 50% in a third stage aerobic pond.

Stabilization ponds provide an excellent means of treating meat processing wastes prior to use of the wastewater for irrigation purposes. However, due to increasingly stringent effluent quality standards, the discharge from a stabilization pond may frequently not be satisfactory for discharge into a receiving body of water.

C. ACTIVATED SLUDGE PROCESSES

Probably one of the most efficient and widely used systems of biological treatment of wastewater is the activated sludge process. Aeration of wastewater containing biologically degradable material in the presence of microorganisms produces a mass of settleable solids known as activated sludge. Stabilization occurs as organic matter in the wastewater is used as food

by the microorganisms. There are several variations of the activated sludge process, four of which are shown in Figure 1 and all of which are described below.

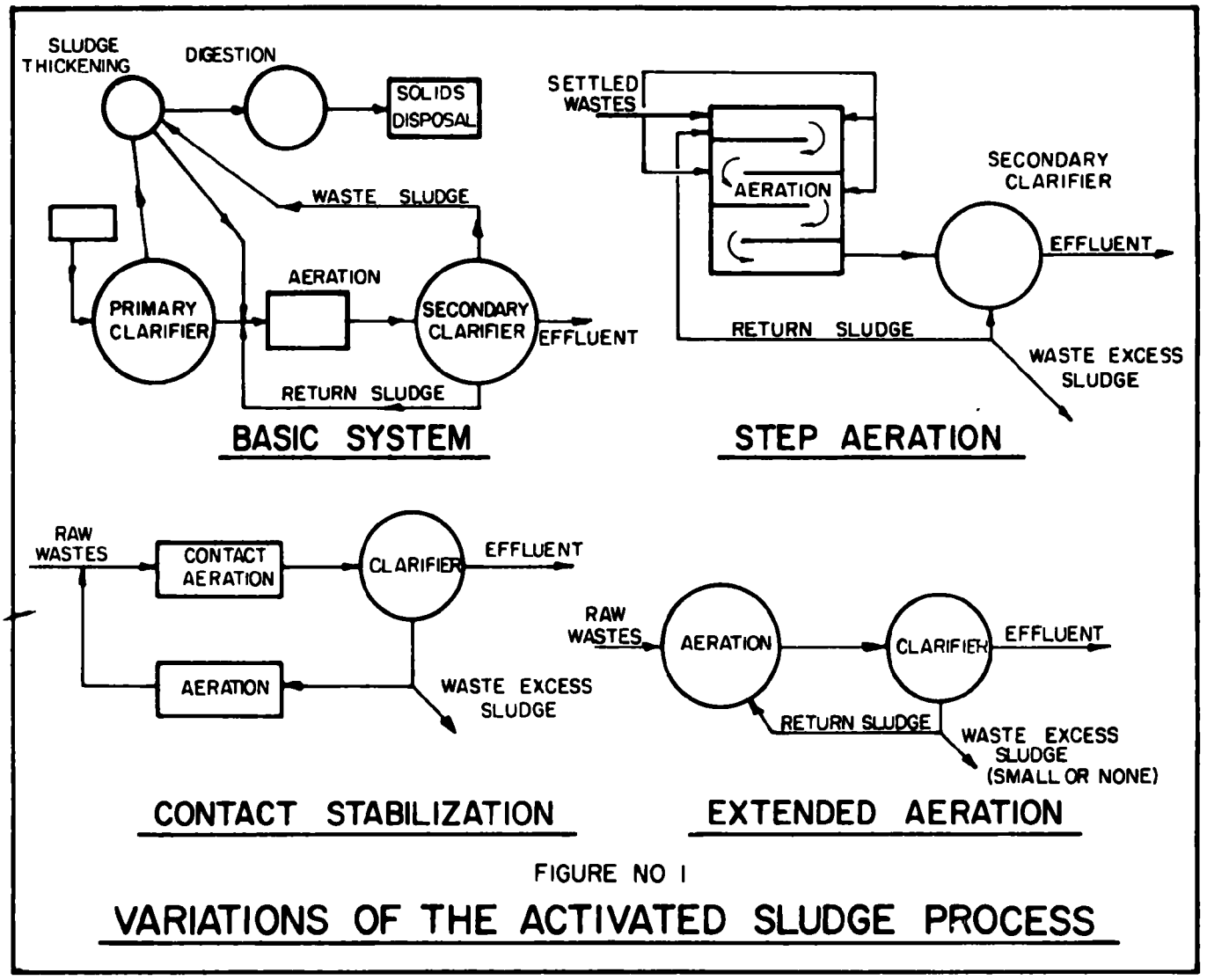

FIGURE NO 1

VARIATIONS OF THE ACTIVATED SLUDGE PROCESS

1. Conventional Activated Sludge. The conventional activated sludge process is composed of four functional steps: (1) primary sedimentation to remove settleable solids; (2) aeration of a mixture of waste and biologically active sludge; (3) separation of the biologically active sludge from the treated waste by sedimentation; and (4) recycle of this settled biological sludge.

Following sedimentation in a primary clarifier, the wastewater is mixed with recycled sludge in an aeration basin. This insures that adequate numbers of microorganisms are present to carry out the degree of waste stabilization desired. In the aeration basin the mixture of wastewater and recycled sludge is aerated for a specified length of time to provide an aerobic environment for the biological oxidation of the organic matter present. Final sedimentation following this aeration allows the activated sludge to settle producing both a clear effluent, low in organic content, and a biologically active sludge for recycle.

The conventional process is capable of achieving BOD reductions of 90% to 95% and can produce a stable effluent with little nitrification.

The conventional activated sludge is adversely affected by the occasional spills or dumps of high organic wastes such as blood. Also the widely varying flows can be troublesome.

Due to problems encountered in the basic activated sludge system when dealing with a particular waste or when a higher degree of treatment is desired, a number of modifications have been devised.

2. Tapered Aeration and Step Aeration. In the basic activated sludge system, air requirements decrease as flow proceeds through the aerated basin. Two systems, the tapered aeration system and the step aeration system, have been devised to match the oxygen supply with the oxygen demand.

The tapered aeration system provides for the introduction of air to the aerated basin in decreasing amounts in an attempt to match the air applied

with the air requirements of the system. Reducing the air applied in no way arfects the biological process in the basin as long as sufficient amounts of air are present. It does, however, increase the air application efficiency as only that air actually required is supplied to the basin.

The step aeration system splits the wastewater flow to the aerated basin and feeds it separately at different points along the aeration basin. The return activated sludge is introduced with the first portion of the raw waste at the head of the basin. Step aeration evens out the air requirements over the length of the tank, allowing higher BOD loadings, shorter detention times and more efficient use of applied air.

3. Contact Stabilization. The BOD in sewage is rapidly adsorbed by microorganisms after initial contact between waste and organisms. In the conventional activated sludge system, the time and air necessary to stabilize this adsorbed material is provided in the same tank where original contact between waste and organisms was made.

The contact stabiliztion process provides separate tanks for initial microorganisms waste contact and stabiliztion. The microorganism waste contact part of the process generally requires 15 to 30 minutes. Following the tank in which initial contact takes place, a clarifier is used to settle out the micro-organisms and the organic material entrapped with them. The settled sludge is then pumped to a second aerated basin where the time and air required to stabilize the entrapped organic material is furnished. The overflow from the clarifier is then chlorinated and discharged directly to a receiving stream.

The contact stabilization process allows a substantial savings in basin size over the conventional system. The short detention time in the first basin and the smaller volumes of sludge recycled to the second basin make this savings possible. There are not many designed true contact stabilization systems and none for meat packing wastes.

4. Completely Mixed Activated Sludge. By providing enough mixing in the aeration tank to completely mix the incoming wastewater with the contents of the tank, it is theoretically possible to obtain any degree of treatment desired. The rapid mixing produces a homogeneous mixture of wastewater and activated sludge within the aeration basin. Any slugs of incoming waste are quickly mixed and distributed evenly throughout the basin, reducing the chance of system upset commonly associated with conventional systems.

5. Extended Aeration. A completely mixed activated sludge system designed for long detention time (24 hours or more) is known as an extended aeration system. Extended aeration systems operate at the lowest BOD loadings of any activated sludge system. Due to the smaller amounts of food available to the organisms, nearly complete oxidation occurs for microorganisms and BOD removals are high. Removals in excess of 95% are not uncommon.

Provision must still be made, however, for wasting sludge as solids tend to accumulate within the system. Generally, provision is also made for 50 to 100% sludge recycle to the aeration basin from the final clarifier.

Advantages of the extended aeration system include ability to handle shock loads, low capital investment due to elimination of primary clarifiers and sludge digestion equipment, as well as the capability to produce a nitrified effluent.

6. Nitrification in Extended Aeration. Long detention times and aerobic conditions found in extended aeration systems provide an ideal atmosphere for the process of nitrification. Under aerobic conditions, ammonia is converted to nitrites and nitrates by specific groups of nitrifying bacteria. A sludge detention time of eight to ten days is required for the nitrifying organisms to establish themselves in sufficient numbers to accomplish any appreciable degree of nitrification. Usually, extended aeration systems

designed to accomplish nitrification are designed for sludge detention times in excess of 10 days. Although liquid detention times in the system are generally approximately 24 hours, the sludge age may be controlled by regulating the amounts of sludge recycled and wasted each day.

Oxygen (for the oxidation of ammonia) must be supplied in excess of that required for BOD reduction. About 4.33 pounds of oxygen are required to convert one pound of ammonia nitrogen to nitrates. This results in a substantial increase in air requirements over those required for BOD reduction alone, necessitating the installation of larger, more expensive aeration equipment.

Extended aeration systems which follow anaerobic lagoons are capable of producing an effluent low in BOD and ammonia nitrogen. Anaerobic lagoons are capable of BOD reductions in excess of 80%; however, under anaerobic conditions the protein in the packing plant wastes are decomposed, resulting in the conversion of most nitrogen forms present to ammonia nitrogen and some nitrogen gas. The nitrogen gas escapes to the surrounding atmosphere, but the ammonia nitrogen remains in the anaerobic pond effluent creating an additional oxygen demand if discharged to a receiving stream. Further, this chemical is toxic to fish at low concentration. The use of an extended aeration system following anaerobic lagoons provides the time and air required to reduce the remaining BOD and convert the ammonia nitrogen to nitrates. Following final sedimentation and chlorination the effluent may be discharged to a receiving stream with a minimum of impact.

It should be noted that although the nitrogen in the plant effluent does not create a significant oxygen demand upon the receiving stream, it does remain a nutrient source, enhancing the possibility of undesirable aquatic plant growth and algae blooms.

7. Activated Sludge Treatment for Meat Processing Wastes. All of the

previously mentioned activated sludge systems may be used to treat wastes characteristic of the meat packing industry. The particular system chosen will depend upon the degree of treatment desired and the existing facilities available for use.

The conventional, tapered air, step aeration, contact stabilization, completely mixed and extended aeration systems will all produce an effluent capable of meeting effluent standards for BOD reduction. In many cases the particular system chosen will depend to a large extent upon the characteristics of the effluent from existing treatment facilities.

For example, many meat processors utilize anaerobic lagoons for reduction of BOD. The effluent from these lagoons is generally still quite high in BOD and contains large amounts of ammonia nitrogen. Extended aeration following anaerobic lagoons, as mentioned earlier, performs quite well in reduction of the remaining BOD and nitrification of ammonia nitrogen. This treatment system functions well, meeting both BOD and ammonia nitrogen effluent standards.

Some of the loading and operational parameters for the activated sludge processes described previously are presented in Table VI below. BOD loadings to aeration tanks are calculated using the influent wastewater BOD only. Loadings are expressed as pounds applied per day per 1000 $ft.^3$ of aeration tank volume and pounds of BOD per day per pound mixed liquor suspended solids in the aeration basin. Aeration periods, expressed in hours, are calculated using the daily average flow without regard to return sludge flow. The return sludge flow is usually expressed as a percentage of the daily average flow.

TABLE VI
GENERAL LOADING AND OPERATIONAL PARAMETERS FOR
ACTIVATED-SLUDGE PROCESSES*

Process	BOD Loading		Aeration Period	Average Return	BOD
	lb BOD / 1000cuft.	lb BOD / lb MLSS	Hour	Sludge Rates percent	Efficiency percent
High Rate (Complete Mixing)	100 up	0.5-1.0	2.5-3.5	100	85-90
Step Aeration	30-50	0.2-0.5	5.0-7.0	50	90-95
Conventional (Tapered Aeration)	30-40	0.2-0.5	6.0-7.5	30	95
Contact Stabilization	30-50	0.2-0.5	6.0-9.0	100	85-90
Extended Aeration	10-30	0.05-0.2	20-30	100	85-90

D. TRICKLING FILTERS

Trickling filters are commonly used for biological wastewater treatment. With this system, wastewater which has undergone primary settling is sprayed over beds of rock or other media to achieve contact between microorganisms present on the surface of the media and organic material in the wastewater.

A trickling filter is composed of three main components: (1) the rotary distribution arms; (2) the media; and (3) an underdrain system.

Where ample head is available, rotary distribution arms are turned by the reaction of water leaving nozzles in the arm. Distribution arms are used to uniformly distribute the wastewater flow over the filter media. Where sufficient head is not available, water must be pumped to the distributor.

The filter media provides both a surface for the biological growth and also voids for movement of air and water through the filter bed.

Because of its low cost, durability and availability, stone or crushed rock has been the most popular filter media in the past. New materials have

*Water Supply and Pollution Control, Clark, Viessman and Hammer, International Textbook Co., 1971, pp 507.

recently been developed and are on the market. They include various plastic media and also redwood slats. Advantages of the newer media include lower weight, chemical resistance, and a high specific surface area with a large volume of void spaces. Thus the synthetic media will require significantly less space to accomplish the same degree of treatment.

The underdrain system provides the means to carry away the filter effluent, allows circulation of air thorugh the filter bed and provides structural support for the filter media.

Filters utilizing light weight plastic media are able to utilize much deeper beds (up to 21.5 feet) than for those utilizing crushed rock.

The high rate filter and the roughing filter are the most common trickling filter systems presently used. Flow diagrams for the high rate and roughing filter systems are shown below.

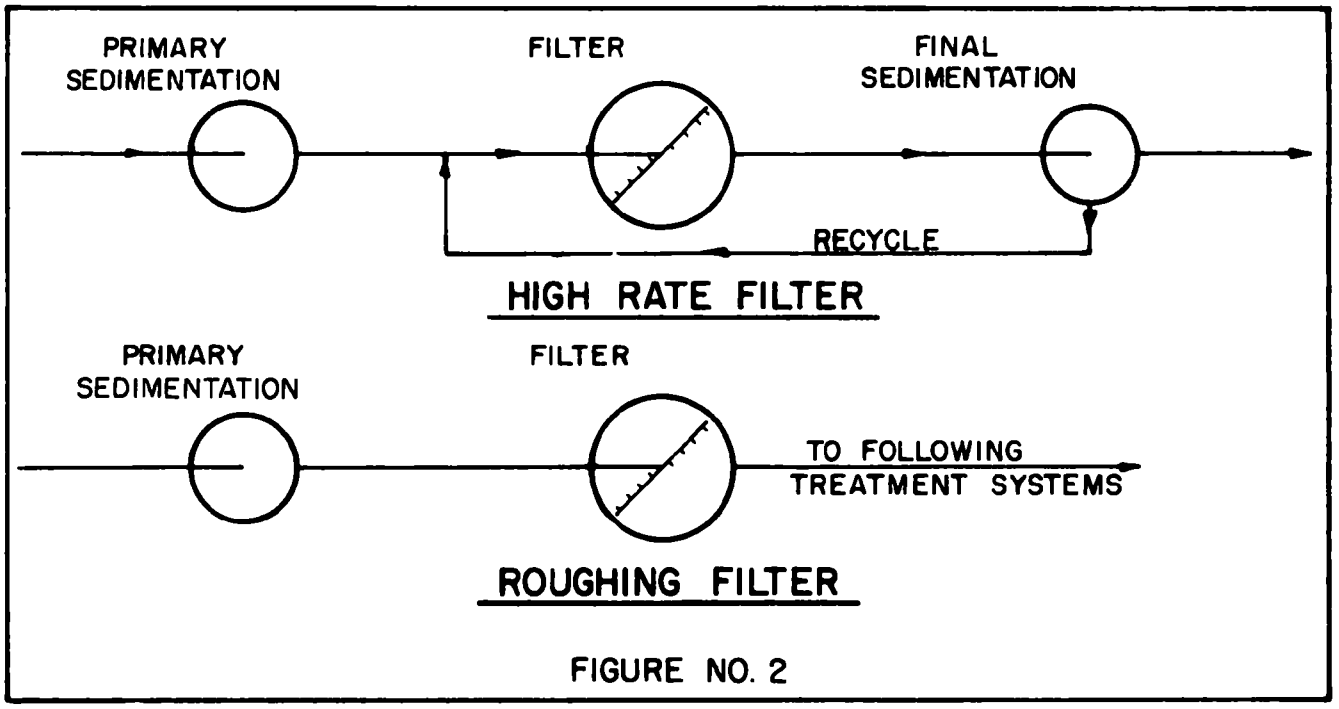

FIGURE NO. 2

BOD loadings to trickling filter systems are generally expressed either as pounds of BOD per 1000 cu.ft. of filter media or as pounds per acre-foot of media. Hydraulic loadings are expressed as million gallons per acre per day of filter area or gallons per minute per square foot of filter area. The hydraulic loading is computed using both the raw wastewater flow plus the re-circulated flow.

The high rate trickling filter is capable of achieving BOD reductions as high as 90% with proper recycle and loading rates. Removals in the roughing filter are considerably less than those in the high rate system.

The major use of trickling filters in the meat processing industry involves their use as roughing filters. Roughing filter systems operate at hydraulic and BOD loadings much higher than those of conventional trickling filter systems. Their major function is to smooth out influent shock loads and provide some initial reduction of BOD. In most cases roughing filters are used prior to some type of the activated sludge system.

E. ROTATING BIOLOGICAL DISCS

The use of rotating biological discs is a new approach to the treatment of meat processing wastes. The discs were first developed in Europe in 1955 for the treatment of domestic wastes. Today there are approximately 1,000 domestic installations located primarily in West Germany, France and Switzerland. Development work on the rotating biological discs in the United States began in 1965. Utilization of the discs in the treatment of meat processing wastes is recent, and to date, no operational data is available except on a pilot plant scale. A large treatment facility for the Iowa Beef Processors plant at Dakota City, Nebraska, is currently under construction and should be in operation later this year.

The rotating biological discs system consists of large diameter, light-weight plastic or high density styrofoam discs, which are mounted on a

horizontal shaft and placed in a semicircular-shaped tank containing wastewater. Organisms present naturally in the wastewater adhere to the rotating surfaces and begin to multiply. As the discs rotate through the wastewater, wastewater adheres to the discs and then trickles down the discs absorbing oxygen. The aerobic organisms present in the wastewater then utilize the oxygen to reduce the organic matter in the wastewater. As the discs continue to rotate through the wastewater, the organic material is further reduced. The discs support a growth of organisms, provide aeration of wastewater, and also provide contact of organisms with the wastewater. Excess growths of organisms slough off the discs. This minimizes clogging problems and maintains a nearly constant growth of organisms on the discs. The mixing action of the discs in the wastewater prevents the solids that have sloughed off from settling in the tank. These solids are removed in a final clarifier following the discs.

BOD removal and oxidation of ammonia nitrogen has been found to be directly proportional to the hydraulic loading on the disc units. At a specific hydraulic loading, a given percentage of BOD is generally removed even with fluctuation of the influent BOD. As a result, the principal design criterion is hydraulic loading.

Wastewater temperature will affect rotating biological disc efficiency, but this affect is negligible for normally encountered ranges of temperature. Wastewater temperatures in the range of 60° to 80° F. have little affect on disc treatment efficiencies. Waste temperatures from packing plants will generally average from 80° to 95° F.; thus the treatment efficiency will be higher than normally experienced.

The arrangement of biological media (organisms) in a series of stages has been shown to enhance the overall treatment of a wastewater, because the organisms that develop on each successive stage (disc) are adapted to treat

the characteristics of the wastewater in each stage. Generally the organisms present in the first stages remove the organic (carbonaceous) material present in the wastewater while the last stage organisms are adapted to converting ammonia nitrogen to nitrate nitrogen (nitrification). Nitrogen in the ammonia nitrogen form is toxic to aquatic life.

The rotating biological discs should be enclosed to protect the organisms from cold temperatures and to help control odor emissions. As previously discussed, waste treatment efficiencies are reduced considerably when temperatures fall below 55° - 60° F. The enclosure helps to prevent winter weather from adversely affecting the treatment system. The enclosure will also help to control odor problems which may occur, by confining the odors in the building. Adequate ventilation is imperative, however, particularly if the waste flow is anaerobic when it enters the system. An odor control system may be required.

The type of enclosure that is generally used for a rotating biological disc system is a timber or concrete building with a poured concrete floor. Steel construction is not generally suitable since the air within the rotating biological disc building has a high degree of humidity.

A simplified typical flow schematic illustrating the treatment of a meat packing waste using rotating biological discs is shown in Figure 3. The raw wastewater flows into anaerobic lagoons or a pretreatment facility where suspended solids and BOD are removed and where flows are equalized. The partially treated flow then goes to the rotating biological discs where the organic material is converted to a biological floc which can be settled

in the final clarifiers. The wastewater is then disinfected by chlorination, prior to discharge to the receiving stream.

Figure No. 3

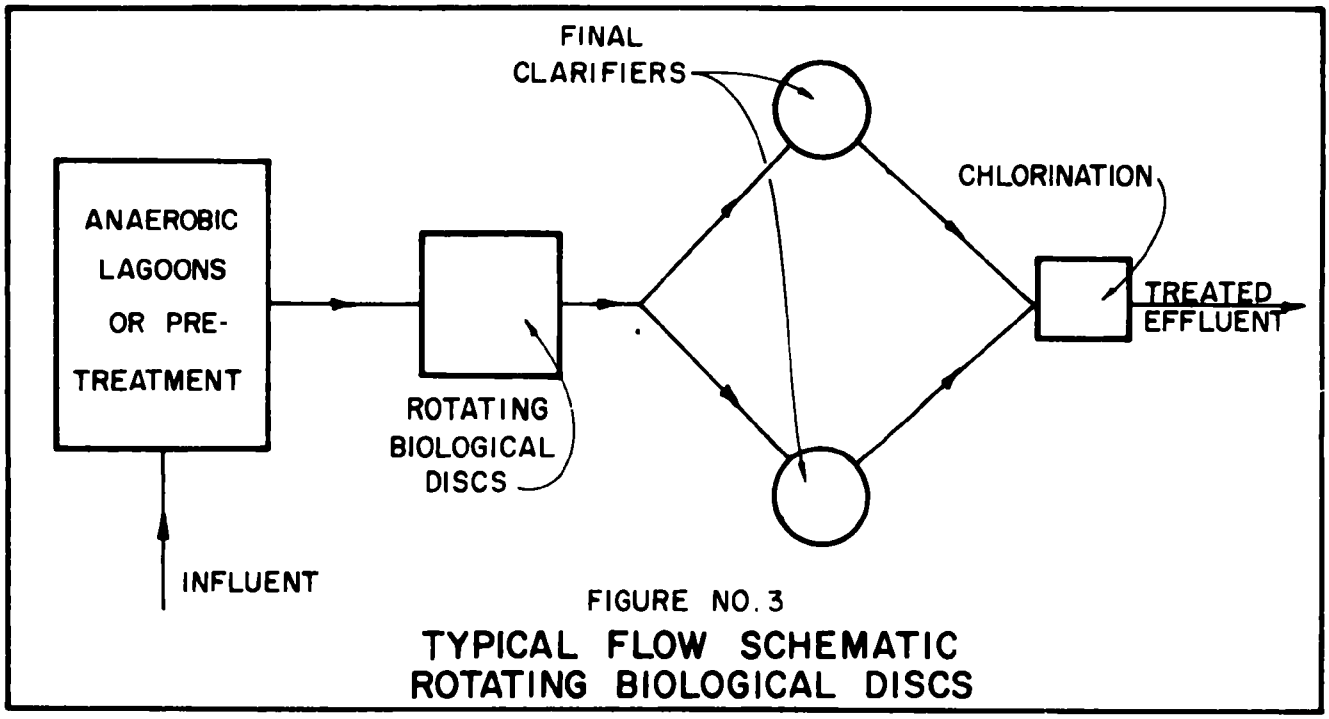

FIGURE NO. 3

TYPICAL FLOW SCHEMATIC
ROTATING BIOLOGICAL DISCS

Rotating biological discs can also be used in completely aerobic systems. The discs must be preceded by adequate grease removal. The number of stages of dics required will depend upon the desired degree of treatment. The system will also include a final clarifier and chlorination. A system of this type is currently treating poultry wastes with the effluent discharged to the municipal sewer system. With four stages, 98% BOD reduction is achieved.

F. IRRIGATION METHODS FOR THE MEAT PACKING INDUSTRY

As water quality standards become more stringent, increasingly elaborate and complex treatment systems become necessary. These tertiary treatment systems will have a high first cost as well as high annual operation and maintenance costs, all of which must be borne by the meat packer. One possible alternative is the disposal of treated wastewater by application to the soil. Where sufficient land area is available, this method may be less expensive in first cost, as well as operation and maintenance costs, when compared to a highly sophisticated tertiary treatment facility.

Application of wastewater on the soil can be a natural and efficient method of waste disposal. During movement into and through the soil, contaminants are removed by chemical, biological, and physical action. Generally, soil disposal systems are classified according to the mode of application of wastewater. In the physical sense, they differ with respect to the volume of water applied and the pathway taken by the liquid through the soil. There are three basic methods of irrigation which can be used for ultimate disposal of wastewater: spray irrigation, overland runoff, and rapid infiltration.

1. Spray Irrigation. Spray irrigation is defined as the controlled spraying of wastewater onto the land, at a rate measured in inches of wastewater per week, with the flow path being infiltration and percolation within the boundaries of the disposal site with no surface runoff. Natural precipitation is a factor, because wastewater applications must be suspended or greatly reduced when the ground is very wet from heavy or prolonged rain or snow. Since spray irrigation is generally limited to the plant-growing months, adequate storage ponds must be constructed as part of the system.

The major limiting factor in spray irrigation is the maintenance of infiltration capacity, which is reduced due to clogging of the soil by solids present in the wastewater. The most common method of restoring the infiltration capacity

of a soil involves the intermittent application of wastewater with intervening rest periods. If wastewater were to be continuously applied to the soil, an equilibrium infiltration rate would eventually be established--a rate which is generally too small to be acceptable.

Another important factor in spray irrigation is the necessity of maintaining aerobic conditions in the soil, in order to insure proper treatment of the wastewater. Consequently, application rates should be significantly less than infiltration capacities if unsaturated soil conditions--i.e. aerobic conditions--are to exist in the infiltration surface.

Groundwater characteristics must be thoroughly studied before spray irrigation is commenced in order to preclude the possibility of groundwater contamination. The soil mantle between the ground surface and the water table must be of sufficient depth to ensure treatment of the wastewater prior to reaching the groundwater. Caution must be exercised where geologic conditions include fracture zones--i.e. limestone formations--for rapid water movement with little filtration may result in contamination. Minimum depths from the ground surface to the groundwater table may vary from 10 feet to 15 feet depending on the infiltration rate of the particular soil.

Spray application rates are usually expressed in terms of inches of liquid depth per unit of time. Net weekly applications may range from 0.2 inches to 6.0 inches, but the most common application rate is 2.0 inches. Application rates and weekly application amounts are generally selected on the basis of the capacity of the vegetation to take up nutrients. Usually this results in application rates being less than infiltration rates.

Many different crops have been successfully used in land disposal operations, including wheat, corn, alfalfa, clover, and Sudan grasses. Corn and some of the grasses grown as hay crops have significant nutrient uptake capabilities.

Spray irrigation can be practiced on land that is either flat or gently roll-

ing. Land areas characterized by steep slopes will become eroded before infiltration can take place.

Spray equipment will vary, depending on the site topography and crop. (Conventional aluminum irrigation pipe is commonly used.) For large permanent facilities, the pipe network can be buried, with only risers and spray nozzles appearing above the ground surface. At sites with flat or rolling terrain, center pivot irrigation systems can be used successfully. Self-propelled traveling sprinkler systems are another common type of equipment.

2. Overland Runoff. Overland runoff is defined as the controlled discharge (of wastewater onto the land) by spraying or other means, at a rate measured in inches per week, with the flow path being downslope sheet flow. This method of wastewater application relies on the treatment of the wastewater during its passage over the ground as a thin liquid layer, due to contact with the soil and plant roots. Overland runoff is best suited to sloping sites with impermeable subsoils.

Natural precipitation is a factor in overland runoff, requiring either the suspension of wastewater applications or substantial reduction in rates, during periods of sustained rain or snowfall. However, precipitation may also have a beneficial effect on an overland runoff site by acting as a flushing or cleansing agent removing material deposited by the wastewater.

One of the major design considerations in designing an overland runoff system is achieving and maintaining proper overland flow. Flow which is too slow can result in ponding and anaerobic conditions; too rapid a flow will result in inadequate contact time between the wastewater and the soil and vegetation. The site must be steep enough to maintain desired flow without causing erosion. Slopes for overland flow may vary between 2 percent and 6 percent. Unbroken slope lengths should not exceed 300 feet, while application rates average 2 inches per week.

The treated wastewater is intercepted in collection ditches at the toe of the slope, and then discharged directly to a receiving stream. If the wastewater is not yet adequately treated, it may be discharged across a second slope before ultimate discharge to the stream or ditch.

Fixed spray nozzles are usually used in applying wastewater to the land for overland runoff. The pipe network may be buried with only risers and spray nozzles appearing above the ground surface.

Plant species currently used in overland runoff installations consist of grasses grown for hay cropping, such as Kentucky Blue, Bermuda, red top, and fescue.

3. Rapid Infiltration. Rapid infiltration is similar to spray irrigation in that the wastewater is intended to infiltrate the soil and become treated during percolation. However, with a rapid infiltration system, the application rates are substantially higher and the wastewater is applied by spreading or flooding rather than by spraying. Precipitation is not a significant factor, since the liquid volume of the spreading basins will be relatively unaffected by rainfall.

The limiting factor in rapid infiltration is the maintenance of infiltration capacity. Surface clogging can be controlled by the intermittent application of wastewater, with intervening rest periods.

The depth of the groundwater table is of major concern in rapid infiltration just as it is in spray irrigation, due to the possibility of groundwater contamination. Minimum distances between the ground surface and water table may range between 10 and 15 feet, depending on the type of soil.

Application rates will vary considerably, ranging from 6 inches per day to 2 feet per day.

4. Irrigation Design Report. Prior to the time an irrigation system is placed in operation, most state regulatory agencies will require an irrigation

design report. This report must usually include maps and diagrams of the area affected by the irrigation system as well as any additional material which is pertinent about the location, geology, topography, hydrology, soils, areas for future expansion and adjacent land use. The system must be designed to prevent surface runoff from leaving and entering the site and must be adequately fenced.

SECTION VI

OPERATION AND MAINTENANCE OF WASTE TREATMENT PLANTS

The construction of a wastewater treatment facility is only the first step in the process of achieving successful waste treatment. The second and equally important step is the proper operation and maintenance of the physical plant to insure the treatment that the system was designed to achieve. Responsibility for this program should be in the hands of well-trained and conscientious personnel.

Industries which utilize complicated treatment facilities and plants which use relatively simple treatment systems both require someone in charge who has a thorough knowledge of his job. The plant operator is often called upon to make adjustments or modifications in the treatment units to obtain maximum treatment efficiency. The equipment must receive proper care if the treatment system is to provide the degree of treatment designed into the system.

A good program of waste flow sampling can help substantially in obtaining the optimum degree of treatment. In addition to providing the required data for regulatory agencies, a complete record of treatment factors may help the operator cope with present inconsistencies and future expansion in the waste treatment system. Familiarity with the physical appearance of the raw influent and of the well-treated or under-treated effluent flow will provide an indication to the operator of an upset or change which will require more detailed and careful sampling. A reliable and workable arrangement must be made for the necessary analytical work that is required, whether it is performed by company personnel or by an outside agency.

The operational problems to be encountered will depend upon the waste

characteristics, type of treatment, climate and design. All manufacturers' data should be read, understood and kept as a permanent record along with all shop drawings. A detailed manual relating to proper operation of treatment plants ,such as published by the Water Pollution Control Federation should be readily available as a reference for all employees associated with the waste treatment facilities. Such manuals contain information on the causes and cures of many operational difficulties encountered in usual types of treatment. Operational practices for anaerobic and aerobic lagoons may be found in numerous text books or published articles in wastewater journals. Furthermore, an operation and maintenance manual dealing with the specific waste treatment system should be provided to the industry by the engineer who designs the facility.

In addition to proper operation, the importance of maintaining the physical structures cannot be underestimated. A system of routine inspection and maintenance should be established, based upon the nature and needs of the equipment. All literature from the manufacturer relating to equipment upkeep should be filed away for future reference after being studied by the operations staff. A supply of spare parts, as recommended by the manufacturer, should be kept on hand at all times.

If possible, daily attention should be given to the operation and maintenance of the system. Simple systems may require little day to day care, but should be checked on a regular basis. Care of the treatment site is also important. Mowing should not be neglected, fences and gates should be kept in good repair, and utilities maintained.

The following schedule lists some of the many types of maintenance required on various segments of the complete system. It should serve only

to provide a base upon which each individual plant operator may build his own operation and maintenance programs.

TYPICAL OPERATION AND MAINTENANCE PROGRAM FOR WASTE TREATMENT SYSTEM

A. PUMPING STATIONS

1. Hose down wet well to control grease accumulations.
2. Check packing glands for correct tightness (centrifugal pumps).
3. Adjust V-belt drive as necessary.
4. Lubricate pumps according to manufacturers' recommendations, using high grade lubricants.
5. Check bearings for over-heating after starting pump.
6. Inspect pump and bearings on shutdown so that necessary maintenance can be performed during shutdown period.
7. Inspect water level controls in wet well to insure proper operation.
8. Check electric motor pump drives periodically.
9. Alternate pumps on a weekly basis if automatic alternation is not provided.

B. SCREENING FACILITIES

1. Check daily to determine if screens require cleaning.
2. Rake screens and dispose of material by burying or other suitable means.

C. SEDIMENTATION TANKS (CLARIFIERS)

1. Check tanks and equipment several times daily for proper operation.
2. On a regular basis, clean inlet baffles, effluent weirs, and scum removal mechanisms.
3. Hose down all spills.
4. Keep lubrication records for all equipment and use high grade lubricants.

5. Drain tanks annually and inspect all systems for wear and corrosion. Replace badly worn equipment and adjust all chains.

D. TRICKLING FILTERS

1. Inspect rotating arm nozzles daily for clogging; clean as required.
2. Check bearings and lubricate in accordance with manufacturer's recommendations.
3. Adjust guy lines to account for seasonal temperature variations,thus allowing arms to remain horizontal.
4. Check filter surface daily for contaminants such as leaves or debris.
5. Periodically inspect underdrain system for clogging.
6. Follow recommended courses of action if trouble develops such as ponding, filter flies, odor and icing.

E. CHLORINATION FACILITIES

1. Check daily for proper functioning of all systems.
2. Check for leaks every 8 hours.
3. Check safety equipment monthly.
4. Check feed rates every 8 hours.

F. ACTIVATED SLUDGE SYSTEMS

1. Check air compressors for lubrication and overheating.
2. Check air filters daily for cleanliness. Clean monthly.
3. Use rotation schedule for compressors to insure even wear.
4. Check compressor for satisfactory performance.
5. Check air flow in tanks every 8 hours.
6. Check all aeration tanks annually and repair or replace worn equipment.

G. SAMPLING

1. Check raw flow rate weekly, preferably daily.
2. Perform periodic settleable solids tests on influent and effluent flow.

3. Perform daily dissolved oxygen, BOD, suspended solids, and settleable solids tests on activated sludge systems to insure proper operation.
4. Run BOD, suspended solids, D. O. tests daily or bi-weekly at trickling filter plants but not less than 2 times a week.
5. Run tests for nitrates, ammonia nitrogen and organic nitrogen, and possibly phosphates on samples collected preceding and following treatment at regular intervals.
6. Perform daily tests for settleable solids, suspended solids, total and volatile solids on samples from sedimentation units. Check sludge for total and volatile solids to provide information required for proper operation of sludge recirculation and drawoff systems.
7. Perform at regular intervals (for both influent and effluent), grease determination on all grease removal systems.
8. Perform all tests on plant effluents required by regulatory agencies.

GENERAL

1. Mow grass on ground dikes.
2. Keep in good repair all external construction, such as buildings and sheds.
3. Check for leaks in valves and other appurtenances.
4. Check operability of all valves and gates.

SECTION VII

CASE HISTORIES

A. AMERICAN BEEF PACKERS, COUNCIL BLUFFS, IOWA

The American Beef Packers plant at Council Bluffs, Iowa, was constructed in 1969. The plant consists of beef slaughtering and processing facilities in a main plant, with hide processing facilities located in an adjacent building. Waste treatment facilities included with the plant construction consisted of an air flotation tank to remove grease from the slaughtering-processing waste stream, followed by an aerated lagoon. Effluent from the flotation tank and the hide processing building were discharged separately to the aerated lagoon prior to disposal in the city sewer system. Four 50-hp, slow-speed, pedestal-supported mechanical aerators, located at the south end of the aerated basin, were used to supply oxygen for BOD reduction.

Anaerobic odors emanating from the aerated basin due to an insufficient amount of aeration, coupled with recently increased sewer surcharge fees established by the City of Council Bluffs for discharge of the plant effluent into the municipal sewer system, made upgrading of the existing treatment facilities necessary and economically advantageous. Modifications to the existing facilities were investigated which would stop the odor nuisance caused by anaerobic conditions in the aerated basin and increase overall BOD removals to comply with standards required for discharge to the city sewer without surcharge.

The system which was designed to upgrade the existing facilities was an extended aeration system based upon the following design data:

BOD Loading----------18,000 lbs/day
Design Flow----------1.5 MGD

At a design flow of 1.5 MGD, the existing basin provides a detention time of 3.5 days which is more than adequate for the extended aeration system. The air being supplied to the basin was considered insufficient for both the necessary mixing and BOD reductions, as evidenced by the anaerobic conditions existing at the northern end of the basin. Consequently, eight 40-hp, high-speed floating aerators were added to the existing aeration basin to provide the additional air required. As an integral part of the extended aeration system, a 55-foot diameter concrete clarifier was constructed, with provisions for sludge return in an amount equal to 100% of the design flow. Effluent from the clarifier is discharged to the existing city sewer system. The schematic flow diagram for the plant is shown in Figure 4.

Grease skimming and solids screening are provided for the hide processing effluent (brine curing) prior to discharge to the aeration basin.

The eight, 40-hp aerators were installed in the aerated basin prior to completion of the clarifier in order to correct the prevailing anaerobic conditions. The aeration equipment was furnished at a cost of $ 35,000 and was installed by American Beef Packers. The new 55-foot diameter clarifier including the recirculation system and all piping cost $ 70,000 to construct with an additional $ 20,000 for equipment. The system is operating as an extended aeration system, providing a high degree of secondary treatment. Recent sampling data from the effluent of the final clarifier resulted in a BOD of 100 mg/l, suspended solids concentration of 100 mg/l, and a grease concentration of 90 mg/l. The site plan for the facility is included in the Appendix.

B. IOWA BEEF PROCESSORS, INC., DENISON, IOWA

Iowa Beef Processors, Inc., recognized in 1966 the need for secondary waste treatment for their beef slaughtering plant at Denison, Iowa. An anaerobic-aerobic lagoon system was determined to be the best type of treatment facility, and was designed using the following factors:

BOD Loading----------9,600 lbs/day
Design Flow----------720,000 gpd
Anaerobic Lagoon Loading--------15 lbs BOD/1000 ft^3
Depth of Anaerobic Lagoon-------15 feet
Assumed Efficiency--------------65%
1st Stage Aerobic
Lagoon Loading---------------150 pounds BOD/acre
2nd Stage Aerobic
Lagoon Loading---------------50 pounds BOD/acre

Figure 5 shows the schematic layout and flow diagram for the system. Plant waste undergoes pretreatment in an air flotation unit, while pen wastes flow through a settling basin prior to discharge to the lift station. The combined pen and plant wastes flow through a mechanically cleaned bar screen and measuring flume, and are then pumped to the anaerobic lagoons. These two lagoons are operated in parallel with the effluent discharged to two first-stage aerobic ponds, also in parallel. The effluent from the two cells received further treatment in a second-stage aerobic pond prior to discharge into the Boyer River.

Sampling data obtained by the State of Iowa Hygienic Laboratory indicates that the lagoon system has performed well since its completion in November 1968. BOD removal efficiencies of over 80% have been consistently achieved in the anaerobic lagoons, and the overall efficiency of the system is approximately 98%.

The approximate 1967 cost of construction for the facility was $ 110,000, with much of the labor performed by Iowa Beef construction personnel.

With an operating anaerobic lagoon treatment efficiency of 80% rather than the assumed design value of 65%, the actual loading to the first stage aerobic pond is approximately 85 pounds of BOD per acre, and the final stage is approximately 30 pounds of BOD per acre.

C. FARMLAND FOODS, DENISON, IOWA

The wastewater treatment system serving the hog processing plant owned by

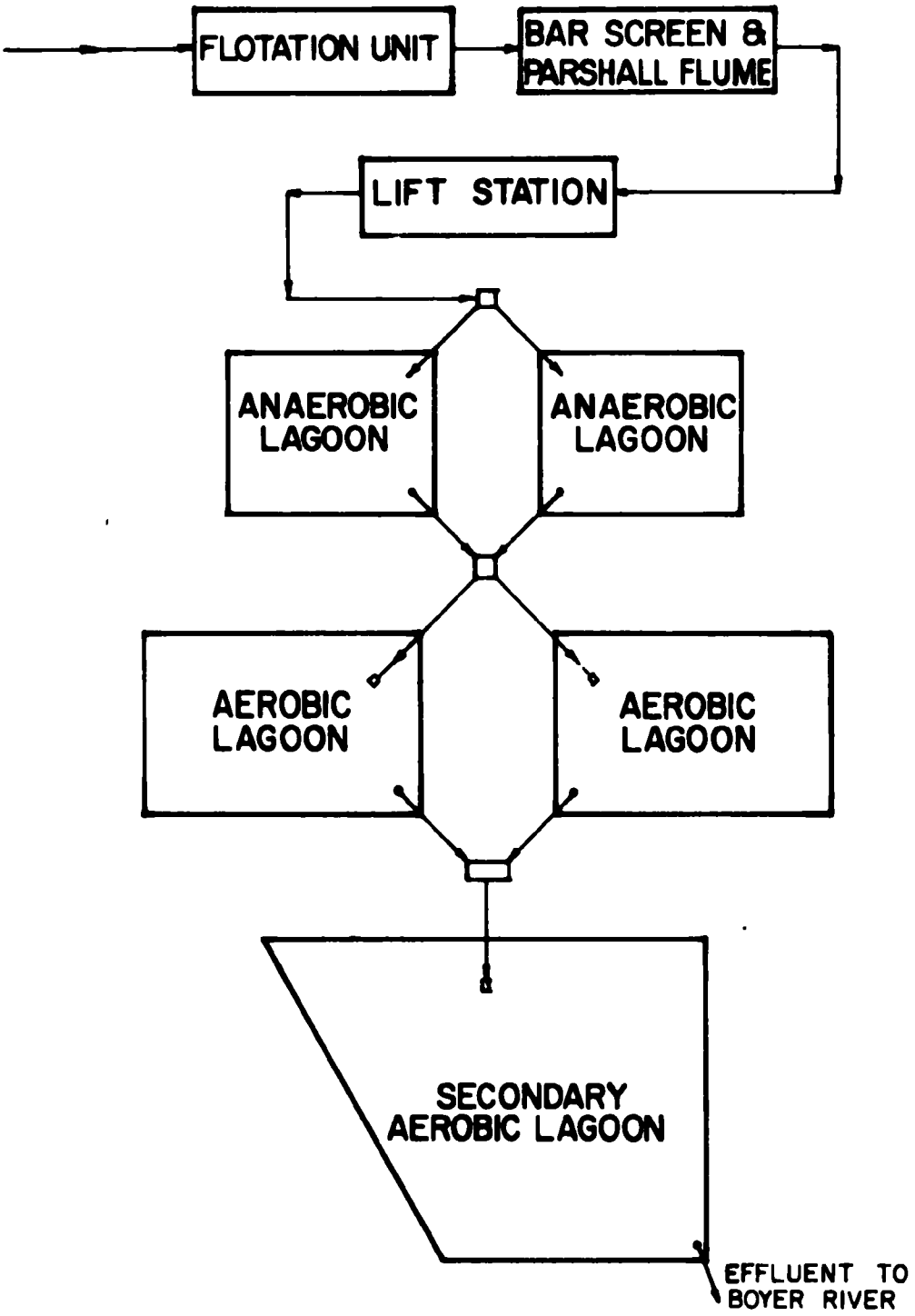

FIGURE NO. 5

FLOW SCHEMATIC

IOWA BEEF PACKERS, INC.

DENISON, IOWA

Farmland Foods, Denison, Iowa, was designed to treat the varied waste flows from the killing floor, holding pens, blood recovery system, rendering, and processing operations and also domestic sewers.

The plant kills 5,000 hogs per day, of which 40% are usually kept for further processing operations, the rest being shipped. The processing operations include cutting and processing into hams, bacon and picnics. Rendering operations are performed on fat and bones, and there is a blood recovery system for the kill floor. The major consideration in designing the waste treatment facility was the small amount of available land.

Construction on the project was initiated in April of 1969. The facility now has been in operation for approximately 2-1/2 years.

The raw waste criteria employed in the design of this treatment system is given below:

RAW WASTE DESIGN CRITERIA[1]

BOD Loading----------21,500 lbs BOD/day

FLOWS
Average---------- 850,000 gpd
Maximum Daily----------1,000,000 gpd
Maximum Hourly----------1,500,000 gpd

The flow diagram for the treatment facilities is shown in Figure 6. The wastes from the kill floor are pumped to an air flotation unit for separation of grease, which is then returned for rendering. The effluent from the flotation unit is combined with the raw waste from the pens, scald tank and domestic lines and is sent to two parallel anaerobic lagoons. The lagoons provide biological treatment and also serve as flow equalizing basins.

After anaerobic treatment, the waste flow is preaerated to satisfy immed-

[1]Baker, D. and White, T. "Treatment of Meat Packing Waste using PVC Trickling Filters", National Symposium on Food Processing, Denver, March 23-26, 1971.

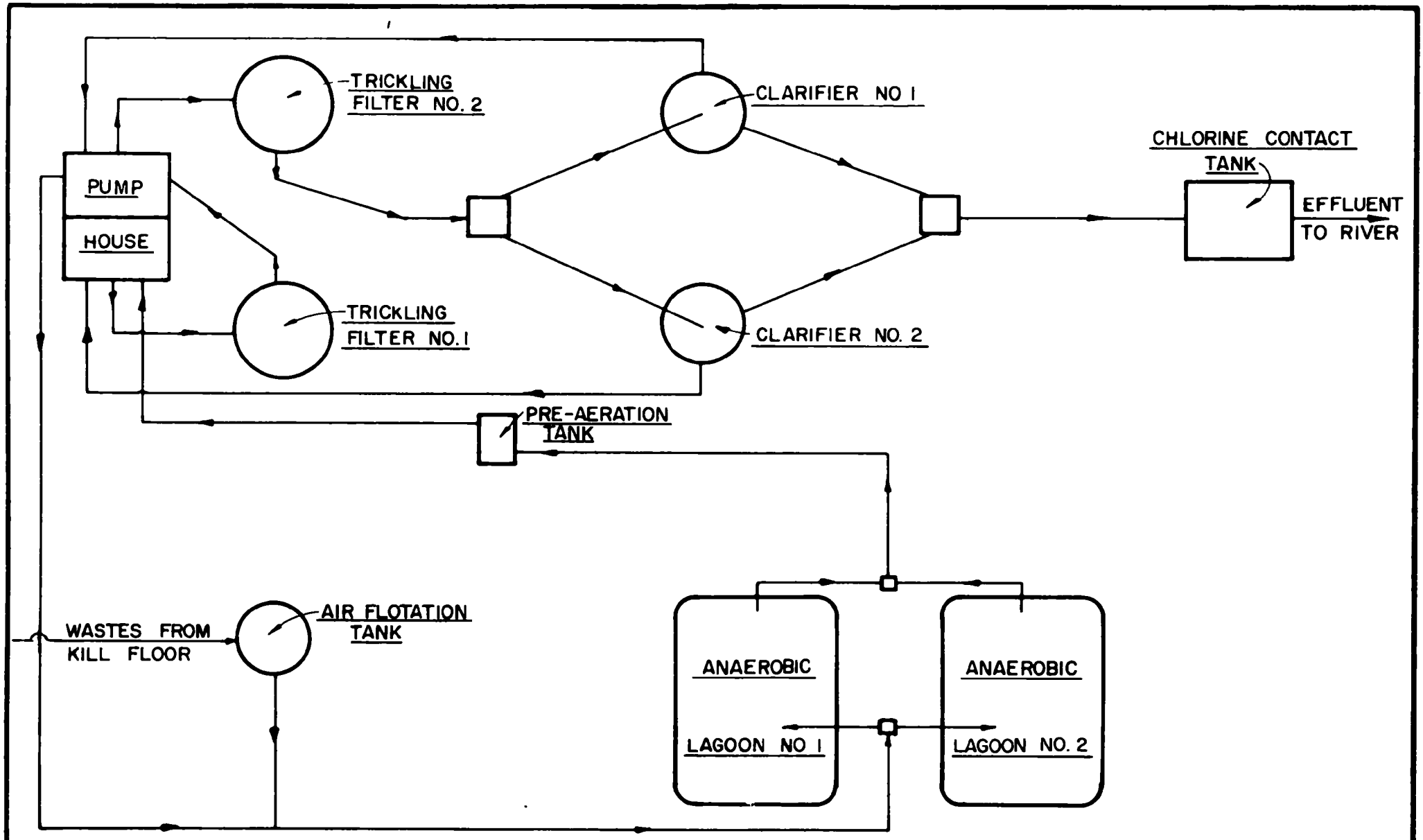

FIGURE NO. 6

FARMLAND FOODS

DENISON, IOWA

oxygen demand in preparation for discharge to the plastic media trickling filters. These filters are normally used in series, with provisions for parallel operation. The filter effluent is then clarified and disinfected in a chlorine contact basin prior to discharge to the Boyer River. Sludge is wasted back to the anaerobic lagoons.

The air flotation unit functions primarily to remove grease and was designed with the following dimensions and performance criteria:

Hydraulic Loading----------1500 gpm
BOD Removal----------40 percent
Grease Removal----------85 percent
Diameter----------22.5 feet
Depth----------12 feet

The anaerobic lagoons were designed to achieve a significant reduction in BOD and to prevent shock loads from upsetting the filters. The basis of their design is as follows:

BOD, Loading----------12,900 pounds/day
Design Loading----------15 pounds BOD/1000 $ft.^3$
Depth----------14 feet
Surface Area----------1.97 acres
BOD Removal----------80 percent

The preaeration basin serves to help reduce odors which may emanate from the anaerobic effluent. Such odors would create serious problems due to the close proximity of a residential area. The design engineers also hoped to begin converting the effluent from the anaerobic lagoons to an aerobic state prior to sending it to the filters. With these factors in mind, the unit was designed with 30 minute detention time and an applied air flow of 100 cfm.

The trickling filters have shown the best results when they have been operated in series. The synthetic filter media is polyvinyl chloride (PVC) manufactured by B. F. Goodrich Co. This type of media may be loaded at higher rates, is lighter in weight and is more uniform than standard rock media.

The media is formed in 2 feet by 4 feet by 2 feet sections which are stacked in layers of 11 cells, resulting in a total depth of 22 feet. Design data for the filters is as follows:

BOD LOADING

First Stage----------101 lbs/1000 ft^3
Second Stage---------31 lbs/1000 ft^3
Hydraulic Loading----0.5 gpm/ft^2
BOD Removal----------91 percent
Diameter-------------39 feet
Media Depth----------22 feet

The final clarifiers are considered part of the trickling filter system and are designed to provide adequate settling times for the filter effluent. Two 26-foot diameter clarifiers are utilized at Farmland Foods, each with a surface overflow rate of 800 gpd/ft^2.

The chlorine contact chamber was designed for a contact time of 49 minutes and a chlorine dosage rate of 10 mg/l.

Table VII shows the plant efficiencies, both for the total plant and on a unit by unit basis.

TABLE VII

PLANT EFFICIENCIES*
PERCENT REMOVAL
FARMLAND FOODS
DENISON, IOWA

UNIT	BOD	COD	GREASE	SS	COLIFORM
Flotation	33	11	62	32	-
Anaerobic Lagoons	82	68	78	59	-
Trickling Filters	74	73	69	80	-
Chlorine	-	-	-	-	99+
Total Plant Removal Excluding Flotation	97.4	91.5	96.5	93.5	99+

*Baker and White

The operating expenses for the year 1970 are given below in Table VIII. When determined on a daily basis, the cost of operation was approximately $ 304 per day.

TABLE VIII

OPERATING EXPENSES
1970

Salaries----------	$ 47,893
Utilities----------	1,443
Maintenance----------	10,413
Capital Cost Debt Retirement-----	50,900
	$ 110,648

D. IOWA BEEF PROCESSORS, INC., DAKOTA CITY, NEBRASKA

The Dakota City, Nebraska, plant of Iowa Beef Processors, Inc., (IBP), lies just outside of the metropolitan Sioux City, Iowa, area. The plant is bounded by Dakota City on the south, South Sioux City on the north, the Missouri River on the east, and a populous suburtan area to the west.

The plant has the capacity to slaughter 2,400 head of cattle per day, to process 3,000 head per day into institutional cuts, and to bone completely 900 animals per day. The average wastewater flow rate is 3 mgd and the raw waste load to the treatment facility is 33,600 lbs. BOD per day and 28,000 lbs. SS per day. The average temperature of the waste coming from the combined slaughtering and processing operations ranges between 90 degrees and 105 degrees F. The high strength of the wastes, combined with the high temperature, provided ideal design conditions for anaerobic lagoons which were chosen for the first stage of the new waste treatment facility.

The concept of utilizing rotating biological discs following anaerobic treatment had not been tried prior to development of the IBP Dakota City project. All previous research and operational data had been in the area of domestic wastewater, and it was necessary to establish independent data for the design. As

a result, a pilot test program using the anaerobic effluent from one of IBP's existing waste treatment facilities, was initiated to evaluate the rotating biological discs. The pilot plant consisted of three stages of 4-foot rotating discs, each capable of delivering 1750 gpm, with 50 discs in each stage; followed by a small steel circular clarifier. Composite samples were taken (of the influent and effluent from each stage) and of the effluent from the final clarifier. Variations were made in speed of rotation of the discs, as well as rate of flow to the units. As a result of the pilot study, design parameters were established for application in the full scale design.

The total waste treatment facility, now nearing completion, consists of a lift station and force main, anaerobic lagoons, rotating biolobical discs, final clarifiers, and chlorination facilities, as shown on Figure 7. Iowa Beef Processors, Inc., Dakota City, applied for and received a Federal demonstration grant to assist in the construction of the project.

The following design criteria was used in the design of the waste treatment facilities:

Design BOD----------33,600 lbs/day
Design Average Flow----------3,000,000 gal/day

The lift station consists of three self-priming centrifugal pumps each capable of delivering 1750 gpm. The pumps are driven by 40 hp motors, and deliver the wastewater to the anaerobic lagoons through 6,200 feet of 18-inch force main.

The wastewater is discharged into four anaerobic lagoons operating in parallel. Each lagoon is 15 feet deep with a water surface area of 1.5 acres. The design BOD loading for these lagoons is 12 pounds per 1000 cubic feet, and BOD removal averages approximately 85%.

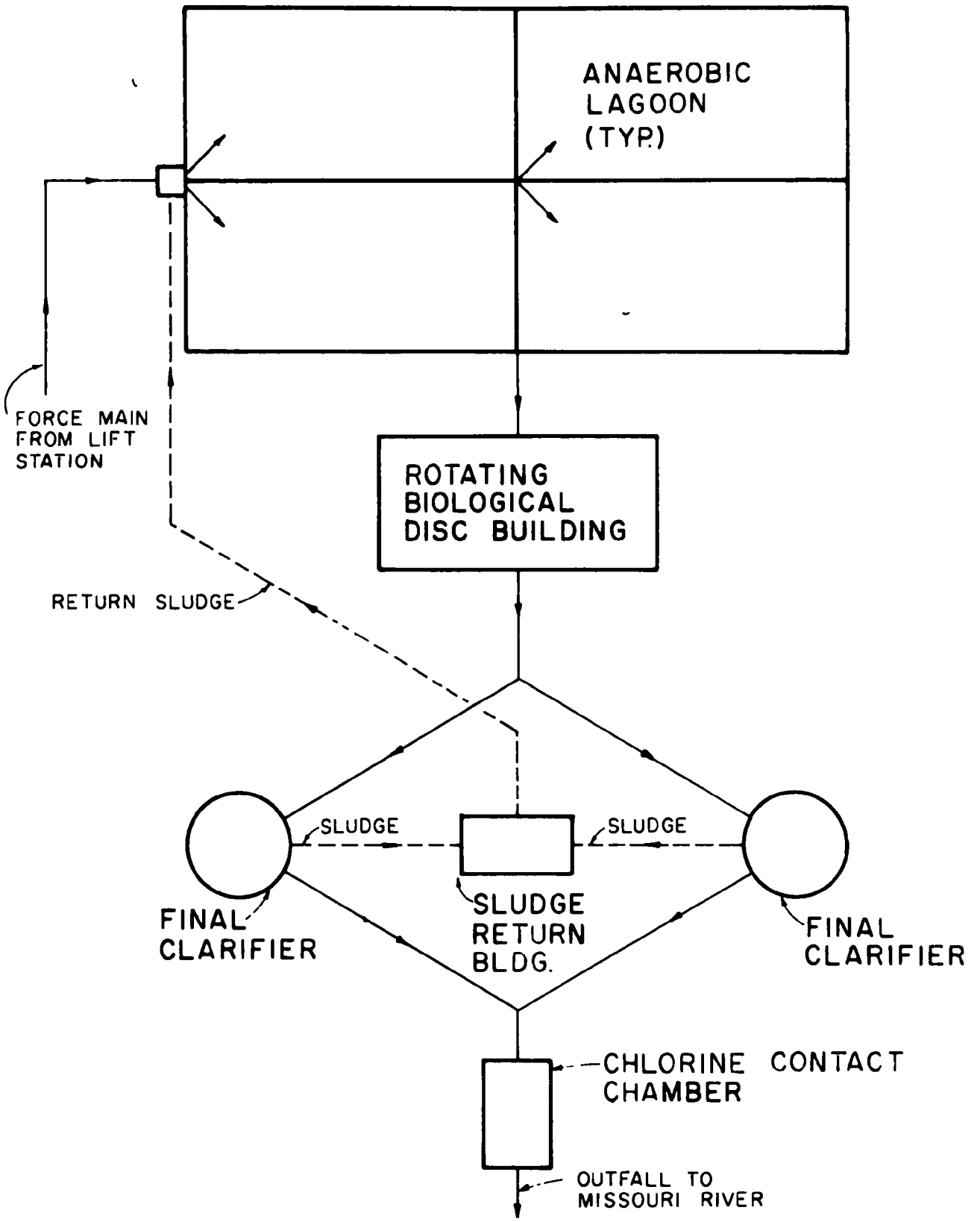

FIGURE NO 7

WASTE TREATMENT FACILITIES

IOWA BEEF PROCESSORS, INC.

DAKOTA CITY, NEBRASKA

The wastewater then flows to the rotating biological discs, which are housed in a timber pole building. The design hydraulic loading on the discs is 4.8 gallons per day per square foot, resulting in a total required disc area of 625,000 square feet. This area is supplied by 24 shafts of 139 discs each. The discs are 11 feet in diameter and have a surface area of 190 square feet each. The anticipated BOD reduction through the disc system is approximately 70%.

Following treatment in the RBS units, the wastewater is discharged to two fifty-five foot diameter clarifiers, each designed for a design average flow of 1.5 mgd. Sludge from the clarifiers is returned to the anaerobic lagoon.

The wastewater then flows to the chlorine contact basin, which provides a chlorine contact period of approximately 20 minutes at design average flow. The chlorine facilities include a building and overhead crane for handling ton containers.

The effluent from the chlorine contact basin flows 800 feet to the Missouri River through an 18 inch outfall line.

The lift station, force main, and anaerobic lagoons have been in operation for approximately one and one-half years. Operation of the entire facility including the rotating biological discs, final clarifiers, and chlorination system, in combination with the anaerobic lagoons, is expected within the next several months. Since the total plant is not yet on line, operational data is not available regarding treatment efficiencies. The anticipated overall BOD removal through the facility is approximately 90-95%.

Total construction cost of the project including the lift station and force main is approximately $814,000.00.

E. LYKES BROTHERS PACKING PLANT, PLANT CITY INDUSTRIAL PARK, FLORIDA

The Lykes Brothers Packing Plant, is located in Florida, a state which does not permit construction of anaerobic lagoons. Moreover, the site available for construction of waste treatment facilities was characterized by high ground water and sandy soil, weighing heavily against any type of large lagoon. The treatment system effluent was to be discharged into a dry ditch, so a high degree of secondary treatment was required. After consideration of several different treatment schemes, the design engineers concluded that the extended aeration modification of the activated sludge process would best meet the treatment needs of this typically high strength waste.

The packing plant slaughters up to 350 head of cattle per day, and includes beef dressing, smoking and sausage processing in its operation. An extensive program of water conservation and waste flow pretreatment was undertaken prior to commencement of design, in order to minimize the hydraulic and organic loading on the treatment system. The final design criteria, based on 6 pounds of BOD_5 and 900 gallons per head, was as follows:

Total Daily Flow----------315,000 gallons per day
Total BOD_5----------2,100 pounds per day

The treatment system consists of a grease skimming and sedimentation tank, two extended aeration tanks, final clarifier, polishing lagoon, aerobic digester and sludge drying beds. The flow diagram is shown in Figure No. 8.

The settling-grease skimming basin is sized for thirty minutes detention with a small amount of air added to aid in water and grease separation.

The extended aeration tanks are operated in parallel and are sized on the basis of 20 pounds per day of BOD removed per 1000 cubic feet of tank volume. The two tanks have a total volume of 105,000 cubic feet, and on the basis of the design flow, provide a retention period of 30 hours. Air is supplied to

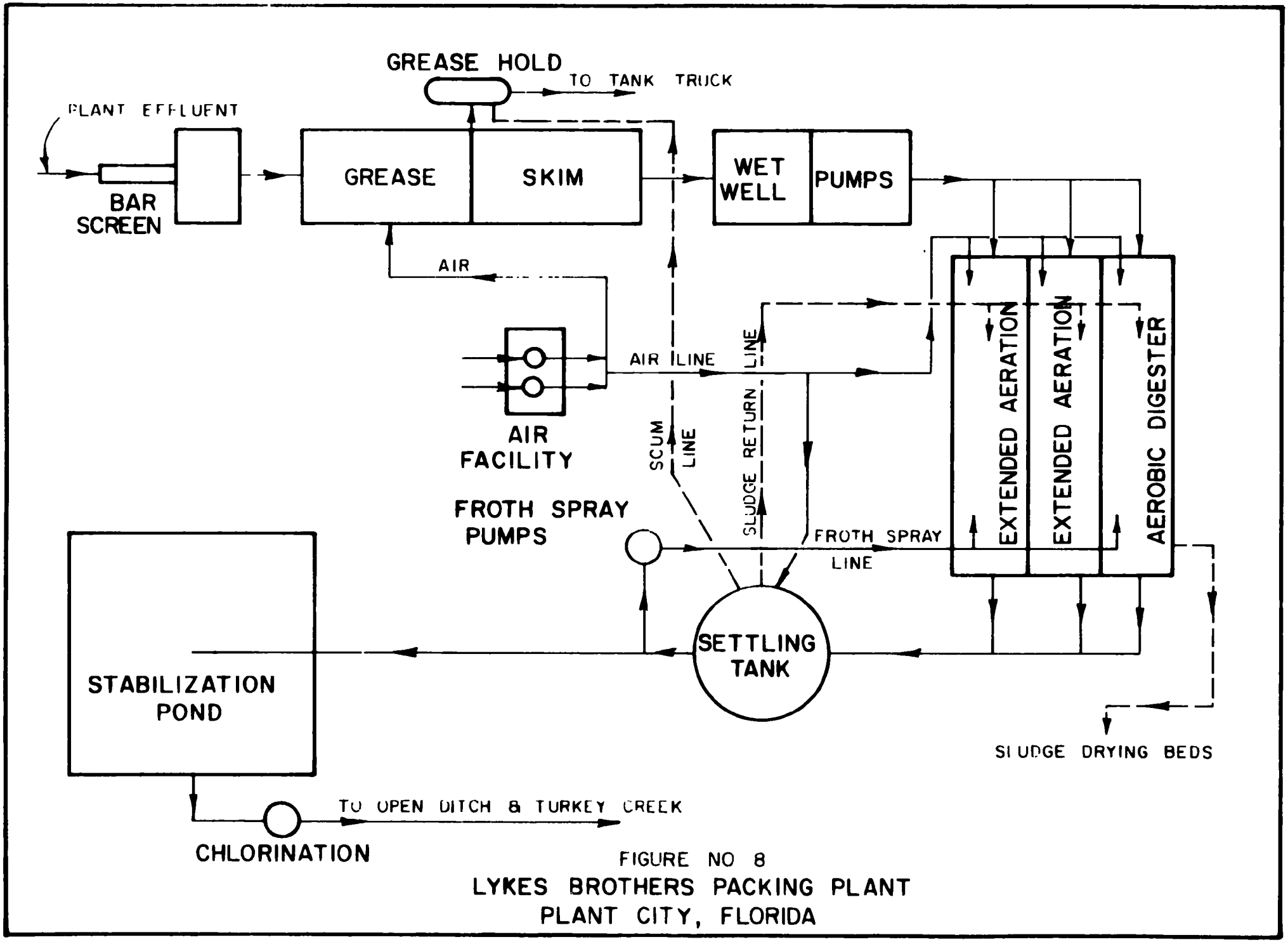

FIGURE NO 8
LYKES BROTHERS PACKING PLANT
PLANT CITY, FLORIDA

the aeration tanks at the rate of 1500 cubic feet per day per pound of applied BOD. Sludge is wasted periodically to the aerobic digester.

The final settling tank is designed for a surface overflow rate of 800 gallons per day per square ft. Settled sludge is returned at a rate of 540 gpm by an air lift pump to the head of the aeration tank or to the aerobic digester.

Effluent from the settling tank flows into a five-acre stabilization pond, which serves to provide tertiary treatment prior to chlorination. A 30-minute detention period is provided by a small final pond where chlorine is added at a fixed rate to produce an effluent having a 2 mg/l minimum chlorine residual.

The aerobic digester has a volume of 37,200 cubic feet. Air is introduced into the digester at the rate of 350 cfm to reduce further the well-oxidized solids developed in the extended aeration process. Periodically, a portion of the digested sludge is wasted to sludge drying beds.

Recent sampling data obtained from personnel at Lykes Brothers Packing Plant is given in Table IX.

TABLE IX

WASTEWATER ANALYSIS - LYKES BROTHERS PACKING PLANT
(Average Values from Past 6 Months)

ITEM	RAW	CONCENTRATIONS (mg/l) EFFLUENT FROM FINAL SETTLING TANK	EFFLUENT FROM POND
pH	6.9	7.4	7.4
BOD	1,574.0	89.0	15.7
Total Solids	5,507	3,621	2,884
Suspended Solids	396	180	56
Dissolved Oxygen	0.0	0.80	4.40
Chlorides*	1,787	1,700	1,425

This sampling data is based upon an average water usage of 240,000 gallons per day.

*Approximately one ton of salt is used every two weeks for plant process.

Total construction cost of the project in 1966 was approximately $ 250,000.00. Operational and maintenance costs as reported by plant personnel, are approximately $20,000.00 per year. This figure includes labor, power, chemicals, lubrication and miscellaneous items.

Information concerning the design of this facility was obtained from a paper published in the January 1968 Journal of the Water Pollution Control Federation.

SECTION VIII

SURVEY OF EXISTING WASTE TREATMENT FACILITIES FOR THE MEAT PROCESSING INDUSTRY

Questionnaires were sent to all fifty states in order to obtain data on the status of meat processing waste treatments in the United States. Many states did not have data available and to date, twenty-five states have responded to the questionnaire. Several of the states indicated the existence of few meat processing facilities and in these locations, existing plants were usually very small, often not discharging a waste stream into a surface body of water. In such cases, septic tanks were employed or other underground waste disposal schemes practiced. Ponds which had only seepage as effluent were also noted in some localities, notably in the western United States where the weather is arid. These treatment facilities apparently were meeting state standards because of subsurface discharge or no effluent discharge.

Questionnaires returned from states where more and larger meat processing operations were located showed that more complex methods of treatment were employed. It is interesting to note, however, that the regulatory agencies from these states felt that only half the treatment facilities under their jurisdiction were effective. Many plants were operating well, but it was indicated that upgrading was needed, and in some cases work was already in progress.

The types of treatment indicated as generally in use are anaerobic lagoons, anaerobic-aerobic lagoons, anaerobic-aerated lagoons, various types of activated sludge systems (mostly extended aeration), aerobic lagoons or oxidation ponds, aerated lagoons and trickling filters. An anaerobic lagoon system followed by aerobic treatment was the most frequently listed type of treatment and was reported as working well in achieving good BOD reduction. Values reported were in excess of 90% BOD removal, generally over 95%. Extended aeration systems

also showed high BOD removals, in the range of 90%. There seemed to be a tendency to use extended aeration on smaller plants with the lagoons being employed on large installations, (i.e. greater than 500,000 gpd). Less frequently used systems were aerated lagoons or oxidation ponds. Spray irrigation was used as a means of disposal, particularly in arid climates. Use of trickling filters, based on the limited data, was not wide spread. Such installations are in existence, of course, and are capable of providing good treatment if properly loaded and operated.

Table X lists the types and number of waste treatment facilities reported by the twenty-six states responding to the questionnaire.

TABLE X

EXISTING WASTE TREATMENT FACILITIES FOR THE MEAT PROCESSING INDUSTRY*

TREATMENT	NUMBER OF INSTALLATIONS	SIZE RANGE	BOD REDUCTIONS
Anaerobic-Aerobic Lagoons	26	0.40-2.50 mgd	90-99%
Anaerobic-Aerated Lagoons	6	0.66-1.97 mgd	98-99%
Aerated Lagoons Aerobic Lagoons	11	0.005-0.75 mgd	91-98%
Lagoons	30	0.005-1.20 mgd	87-99%
Extended Aeration	21	.001-0.10 mgd	85-99%
Activated Sludge	3	0.060 mgd	99%
Trickling Filters	7	1.0-1.85 mgd	92-99%
Spray Irrigation	2	-	-
Septic Tanks	33	0.01 - 1.15 mgd	-
Other	14	-	-
None	2	-	-

The above table is general in nature; in many cases the treatment scheme has been simplified for use in this table. For example, if a system consisted of grease removal, primary screening, flow equalization, extended aeration and

*Based on results of a questionnaire distributed to State Water Pollution Control Agencies. Data received from the following states: Alaska, Arizona, Delaware, Florida, Hawaii, Illinois, Iowa, Kansas, Kentucky, Louisiana, Maine, Maryland, Michigan, Missouri, Nebraska, New York, Nevada, North Carolina, Ohio, Pennsylvania, Tennessee, Texas, Utah, Virginia, Wisconsin and Wyoming.

chlorination, the overall system was classified as extended aeration. Flow and performance data was taken from systems on which the information was provided, some units being reported without data. It is interesting to note that one of the plants with no treatment slaughtered 1000 head/day and had a BOD of 2250 mg/l. However, the report went on to state that a program is underway to provide treatment.

A P P E N D I X

AMERICAN BEEF PACKERS
COUNCIL BLUFFS, IOWA

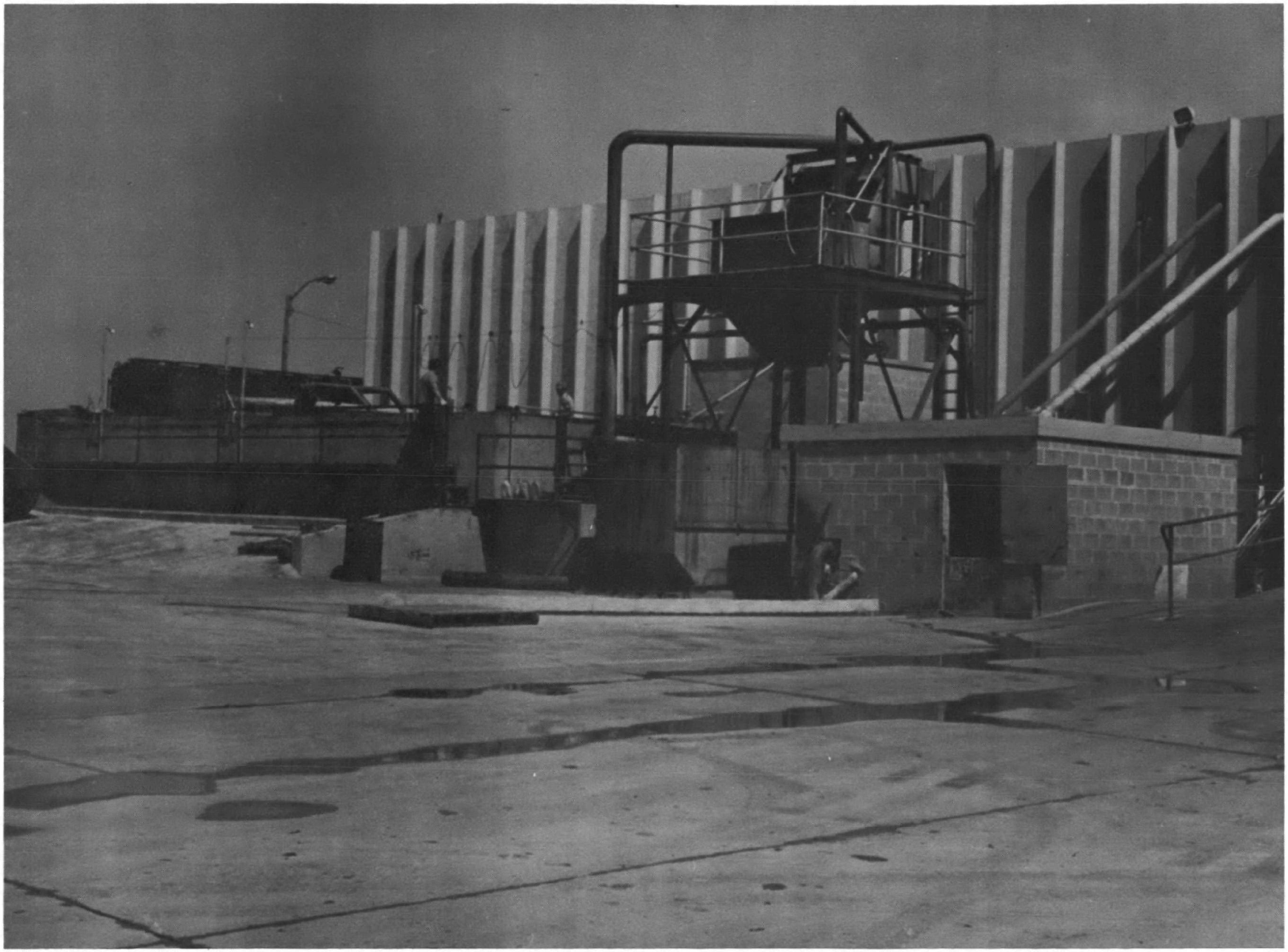

A-1 SOLIDS SCREENING FACILITY AND HIDE PROCESSING SETTLING TANK

AMERICAN BEEF PACKERS
COUNCIL BLUFFS, IOWA

A-2 HIDE SETTLING TANK

AMERICAN BEEF PACKERS
COUNCIL BLUFFS, IOWA

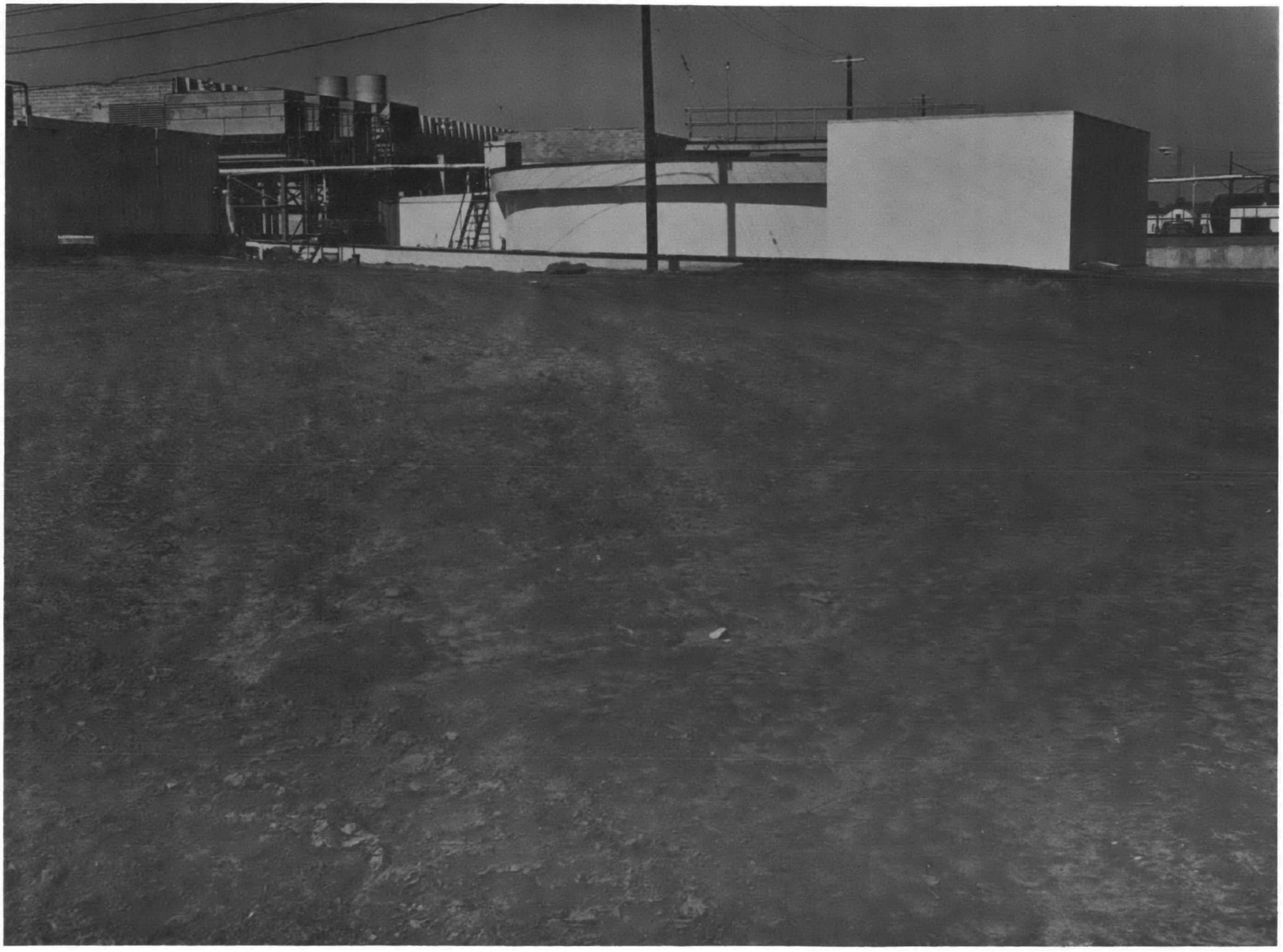

A-3 GREASE FLOTATION TANK

AMERICAN BEEF PACKERS
COUNCIL BLUFFS, IOWA

A-4 FINAL CLARIFIER

AMERICAN BEEF PACKERS
COUNCIL BLUFFS, IOWA

A-5 AERATION BASIN

IOWA BEEF PROCESSORS, INC.
DENISON, IOWA

A-6 MEAT PROCESSING PLANT AND LAGOON LAYOUT

IOWA BEEF PROCESSORS, INC.
DENISON, IOWA

A-7 ANAEROBIC LAGOON

IOWA BEEF PROCESSORS, INC.
DENISON, IOWA

A-8 AEROBIC LAGOON

FARMLAND FOODS
DENISON, IOWA

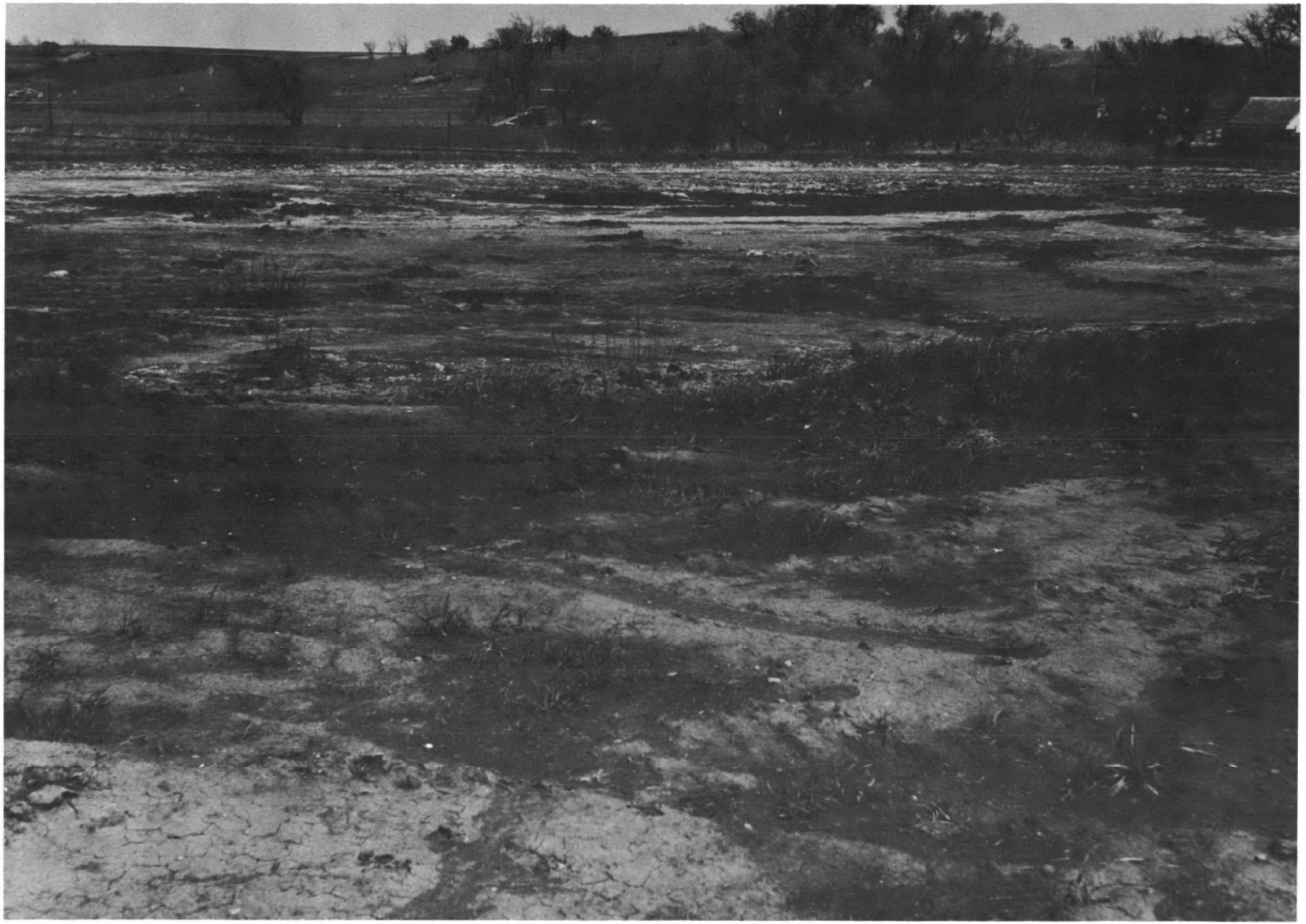

A-9 ANAEROBIC LAGOON

FARMLAND FOODS
DENISON, IOWA

A-10 PRE-AERATION BASIN, TRICKLING FILTERS AND CONTROL BUILDING

FARMLAND FOODS
DENISON, IOWA

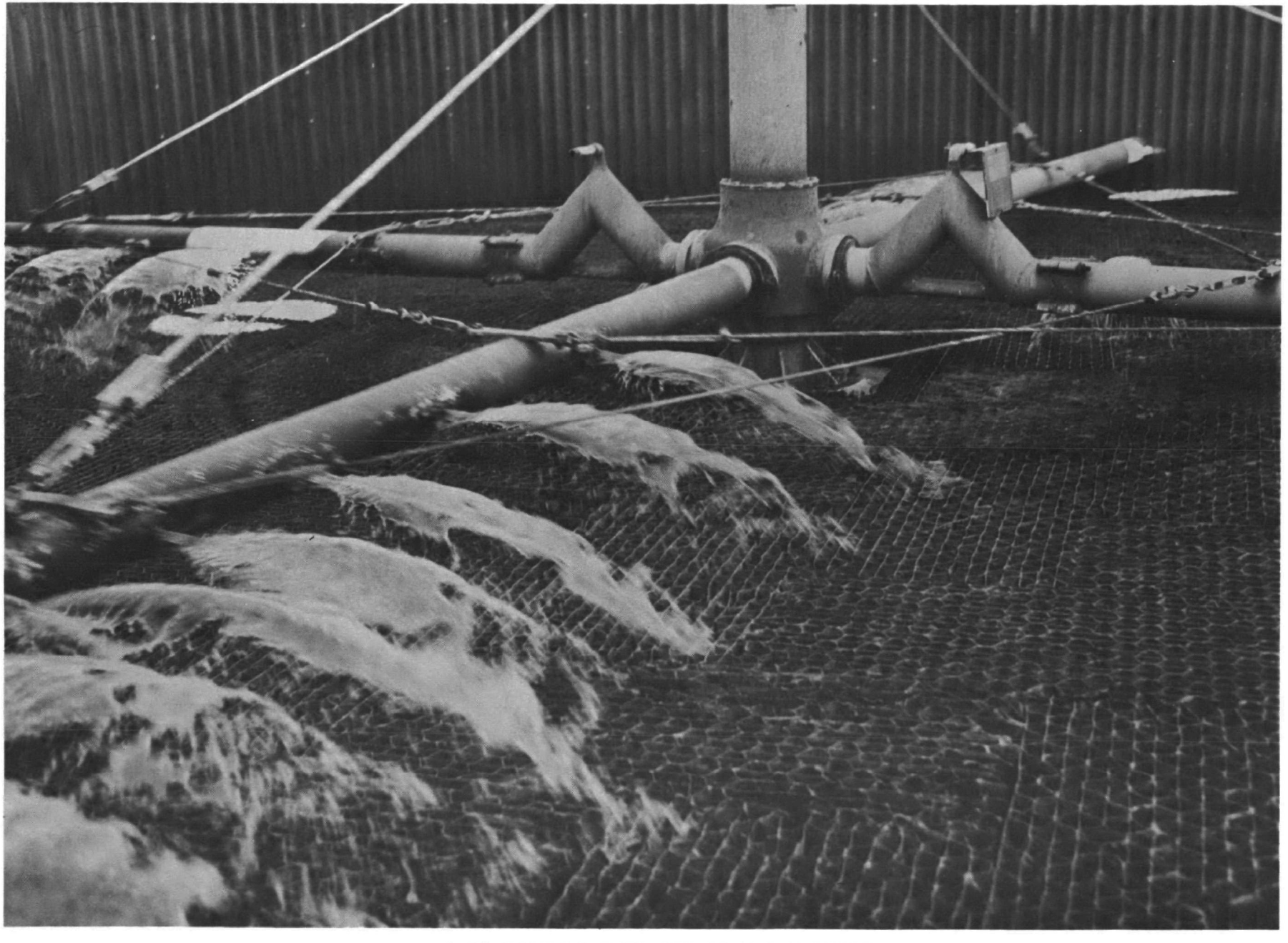

A-11 TRICKLING FILTER ARMS AND MEDIA

FARMLAND FOODS
DENISON, IOWA

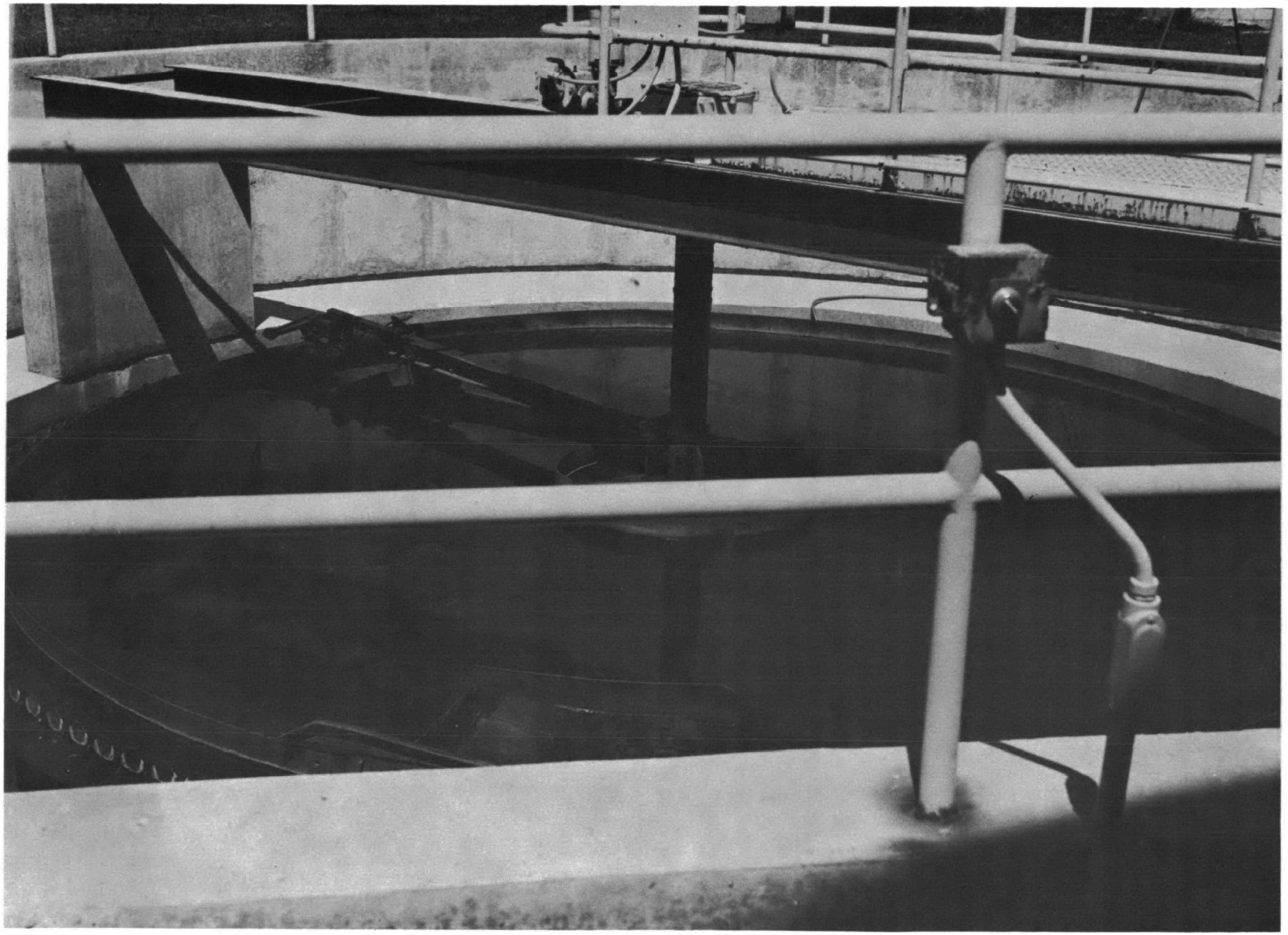

A-12 FINAL CLARIFIER

FARMLAND FOODS
DENISON, IOWA

A-13 CHLORINE CONTACT TANK

FARMLAND FOODS
DENISON, IOWA

A-14 TREATED EFFLUENT

IOWA BEEF PROCESSORS, INC.
DAKOTA CITY, NEBRASKA

A-15 ANAEROBIC LAGOON

IOWA BEEF PROCESSORS, INC.
DAKOTA CITY, NEBRASKA

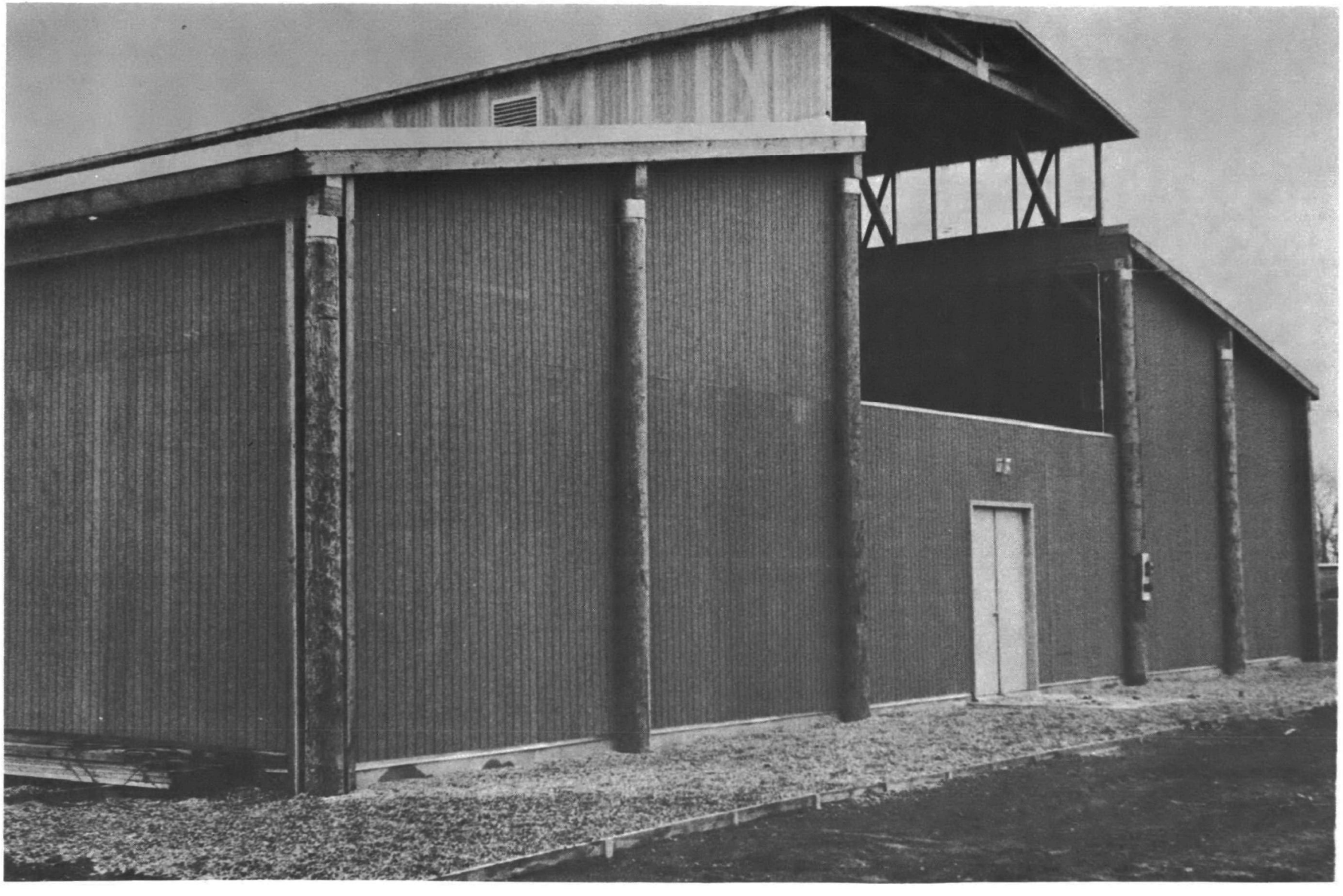

A-16 ROTATING BIOLOGICAL DISC BUILDING

IOWA BEEF PROCESSORS, INC.
DAKOTA CITY, NEBRASKA

A-17 ROTATING BIOLOGICAL DISCS

IOWA BEEF PROCESSORS, INC.
DAKOTA CITY, NEBRASKA

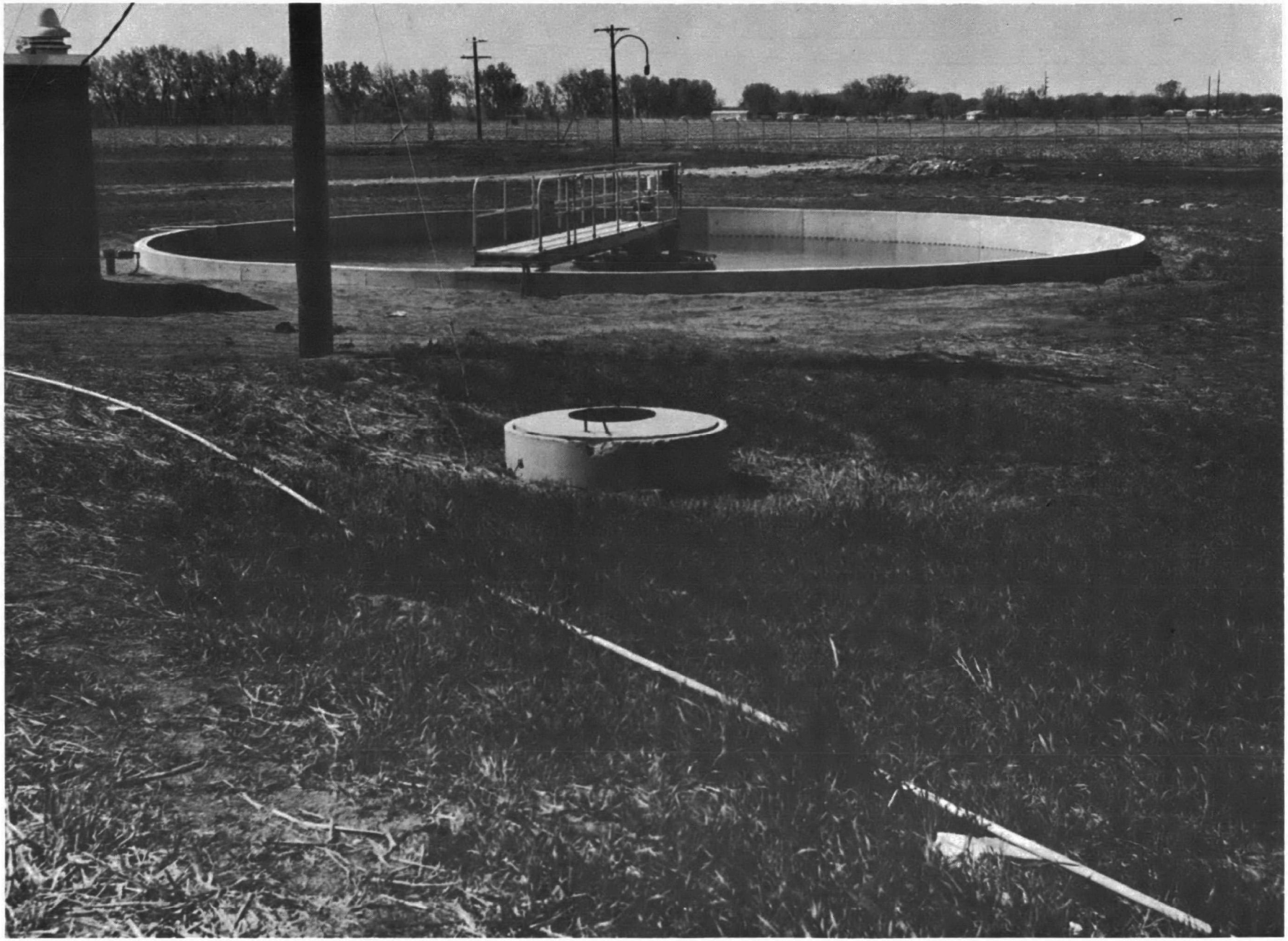

A-18 FINAL CLARIFIER

IOWA BEEF PROCESSORS, INC.
DAKOTA CITY, NEBRASKA

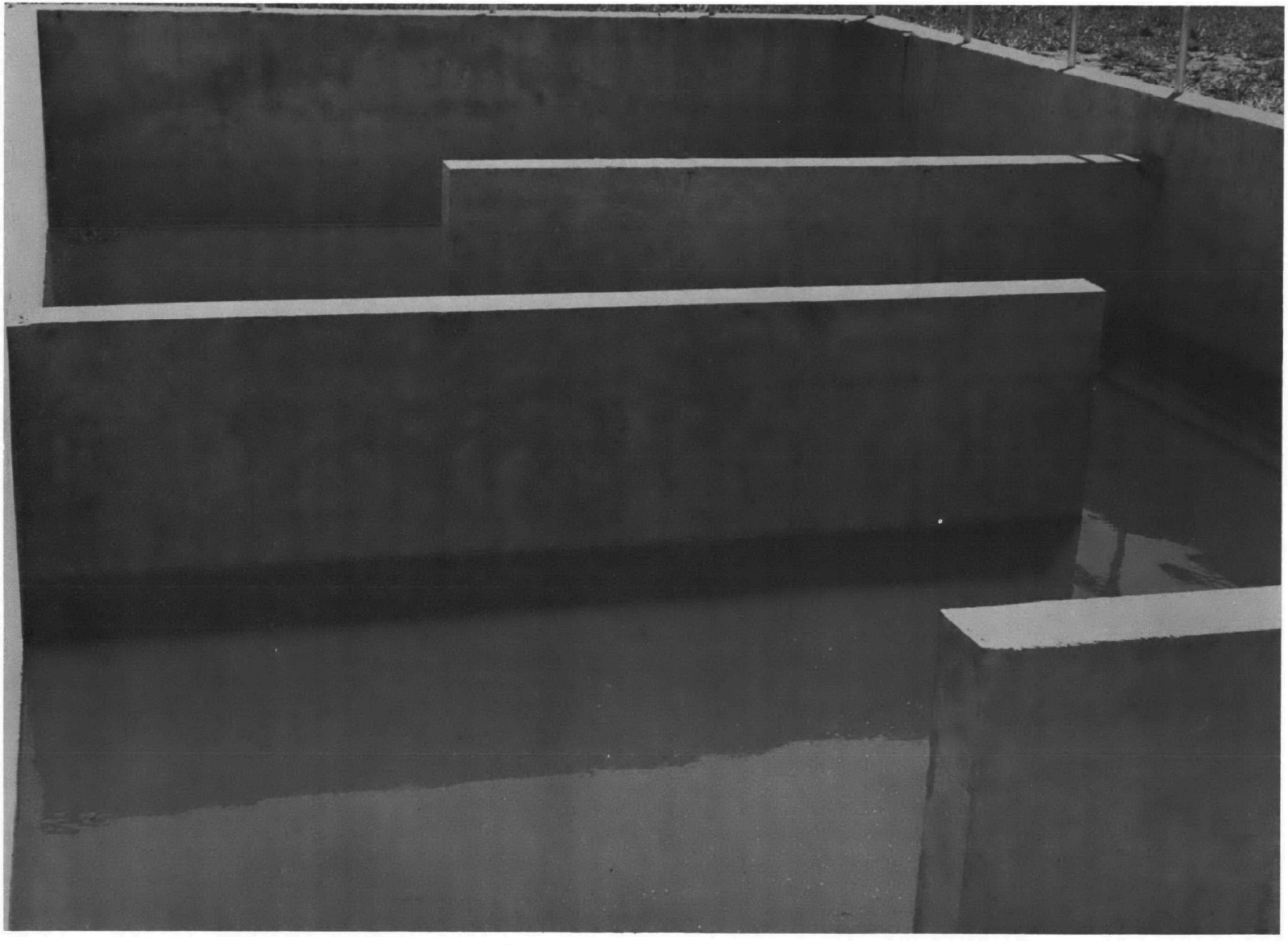

A-19 CHLORINE CONTACT TANK

LYKES BROTHERS
PLANT CITY, FLORIDA

A-20 AERATION BASIN

LYKES BROTHERS
PLANT CITY, FLORIDA

A-21 FINAL CLARIFIER

LYKES BROTHERS
PLANT CITY, FLORIDA

A-22 POLISHING LAGOON

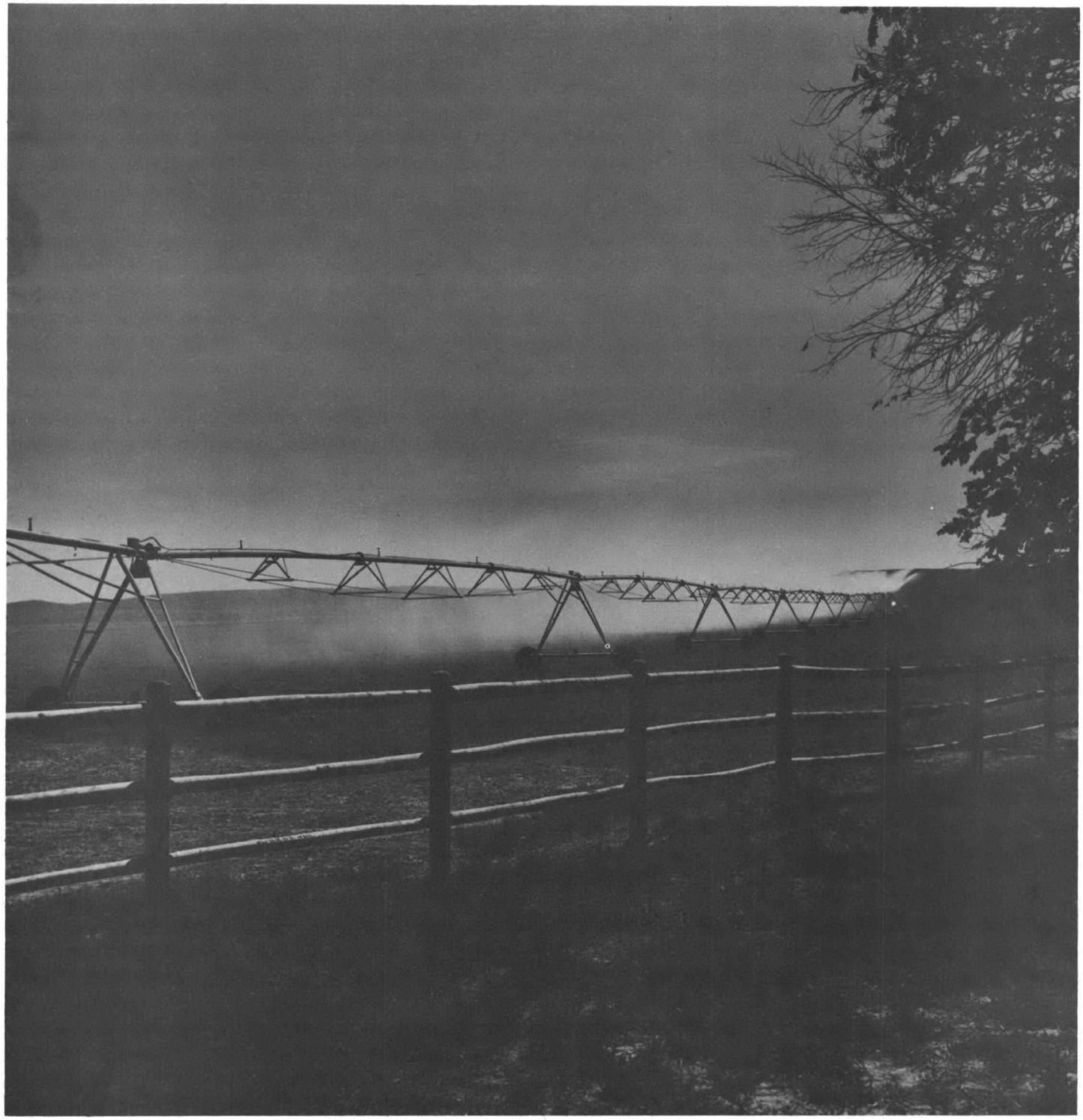

A-23 TRAVELING SPRINKLER SYSTEM

A-24 TRAVELING SPRINKLER SYSTEM

PAGE NOT

AVAILABLE

DIGITALLY