WATER POLLUTION CONTROL RESEARCH SERIES • 17010FAH07/70

DEVELOPMENT OF PHOSPHATE REMOVAL PROCESSES

DEVELOPMENT AND DEMONSTRATION OF PHOSPHATE REMOVAL FACILITIES AT DETROIT USING AN ACTIVATED SLUDGE PROCESS AND STEEL PICKLING LIQUOR

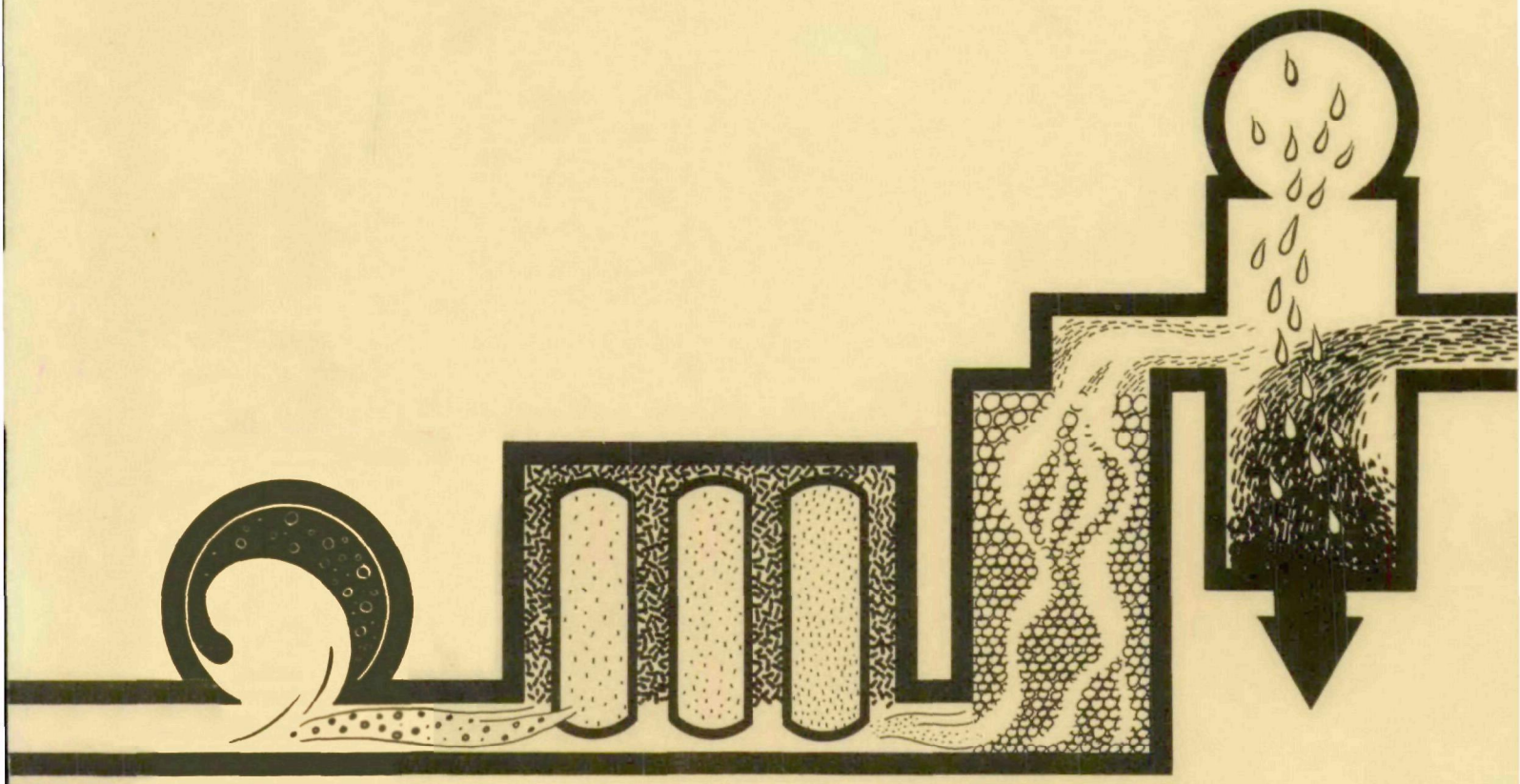

ENVIRONMENTAL PROTECTION AGENCY • WATER QUALITY OFFICE

WATER POLLUTION CONTROL RESEARCH SERIES

The Water Pollution Control Research Reports describe the results and progress in the control and abatement of pollution in our Nation's waters. They provide a central source of information on the research, development, and demonstration activities in the Water Quality Office, in the Environmental Protection Agency, through inhouse research and grants and contracts with Federal, State, and local agencies, research institutions, and industrial organizations.

A triplicate abstract card sheet is included in the report to facilitate information retrieval. Space is provided on the card for the user's accession number and for additional uniterms.

Inquiries pertaining to Water Pollution Control Research Reports should be directed to the Head, Project Reports System, Planning and Resources Office, Office of Research and Development, Environmental Protection Agency, Water Quality Office, Room 1108, Washington, D. C. 20242.

DEVELOPMENT OF PHOSPHATE REMOVAL PROCESSES

Development and Demonstration of Phosphate Removal Facilities at Detroit Using an Activated Sludge Process and Steel Pickling Liquor

by

Detroit Metro Water Department
Detroit, Michigan 48226

for the

WATER QUALITY OFFICE

ENVIRONMENTAL PROTECTION AGENCY

Program #17010 FAH
Grant #WPRD 51-01-67

July, 1970

For sale by the Superintendent of Documents, U.S. Government Printing Office, Washington, D.C. 20402 - Price 65 cents
Stock Number 5501-0114

WQO Review Notice

This report has been reviewed by the Water Quality Office and approved for publication. Approval does not signify that the contents necessarily reflect the views and policies of the Water Quality Office, nor does mention of trade names or commercial products constitute endorsement or recommendation for use.

ABSTRACT

During approximately twenty months of test operation on a 200 gpm (max.) facility at the Detroit Regional Wastewater Plant, over 50 experiments on various treatment processes were performed and the data utilized to develop and confirm design concepts for a full scale plant.

The major processes tested were chemical pre-treatment, activated sludge, plastic media trickling filter tower, deep tank aeration and activated sludge disposal. Results of testing subsequent to June 30, 1969, are not a part of this project report.

As of June 30, 1969:

(1) It was judged that the trickling filter process was not suited to the present and projected needs of Detroit's regional treatment plant.

(2) It was concluded, on the basis of testing, that the full scale plant should be designed for the activated sludge process, with deep tank aeration, and that the facilities be arranged to accommodate both the conventional and step feed process variations. Further, provisions were to be made for phosphate removal by injection of steel pickling liquor (ferrous chloride) into the plant influent.

(3) It appeared that continued research would be required to achieve a phenol effluent standard requiring about 97% removal. (Eighty-five percent removals were achievable with the process tried.)

(4) It was determined that secondary sludge disposal requires continued research and study for practical and economical solutions.

This report was submitted in fulfillment of Research and Development Grant No. WPRD 51-01-67 (Program No. 17010 FAH) between the Water Quality Office and the Detroit Metro Water Department.

Key Words: Phosphate-removal, Activated Sludge, Aeration

CONTENTS

Section	Title	Page
	ABSTRACT	iii
	LIST OF FIGURES	vi
	LIST OF TABLES	vii
I	SUMMARY, FINDINGS AND CONCLUSIONS	
	Summary	1
	Findings and Conclusions	1
II	INTRODUCTION	
	Background-History	3
	Effluent Quality Standards	3
	Problems	4
	Concept Development	4
	Proposed Study	5
	Authorization, Scope and Content of Report	6
III	PILOT PLANT FACILITIES	
	Basic Pilot Plant Layout	8
	Activated Sludge Process	8
	Trickling Filter Process	12
IV	ACTIVATED SLUDGE STUDIES	
	Introduction	15
	Suspended Solids	17
	Biochemical Oxygen Demand	17
	Phosphate (Total)	18
	Phosphate (Ortho)	19
	Oil	20
	Phenol	20
	Applicability of Process for Detroit	20
V	TRICKLING FILTER STUDIES	
	Introduction	22
	Suspended Solids	22
	Biochemical Oxygen Demand	22
	Phosphate (Total)	22
	Phosphate (Ortho)	23
	Oil	23
	Phenol	24
	Applicability of Process for Detroit	24

CONTENTS (Continued)

Section	Title	Page
VI	SLUDGE DISPOSAL STUDIES	
	Introduction	26
	Vacuum Filter	26
	Centrifuge	27
	Filter Press	27
VII	DEEP TANK AERATION STUDIES	
	Introduction	30
	Test Tank and Equipment	30
	Procedure	30
	Testing	32
	Indicated Power Requirements	37
	Test Tank Parameters	37
	Conclusions	38
VIII	LABORATORY TEST PROCEDURES	
	Introduction	39
	Grease Analysis	39
	Sludge Volume Index	40
	Suspended Solids and Volatile Suspended Solids	40
	Dissolved Oxygen	40
	Biochemical Oxygen Demand	41
	Iron	41
	Chlorine Requirement	42
	Inorganic Phosphate Determination	43
	Phenol Determination	45
IX	ACKNOWLEDGMENTS	48
	APPENDICES	
A	Summary - Activated Sludge Testing	50
B	Activated Sludge Test Data	51
C	Trickling Filter Test Data	54

FIGURES

Number	Title	Page
1	Flow Diagram - Activated Sludge Process	9
2	Test Facility Building	10
3	Activated Sludge Facilities - Sludge Storage Tank, Return Sludge Pumps and Two Final Clarifiers	10
4	Activated Sludge Facilities - Primary Tank, Aeration Tank, Final Tank and Mixed Liquor Flocculator	11
5	Activated Sludge Facilities - Sludge Storage Tank, Two Raw Sewage Flocculators and Primary Tank	11
6	Flow Diagram - Trickling Filter Facilities	13
7	Trickling Filter Facilities - Plastic Media Trickling Filter	14
8	Trickling Filter Facilities - Primary Clarifier and Two Final Clarifiers	14
9	Activated Sludge Testing - Step Feed Modification	16
10	Deep Tank Aeration Studies - Typical Tank Section Dimensional (One Aeration Unit Shown)	31
11	Deep Tank Aeration Studies - Two Aeration Units - Flow Pattern - Both On	33
12	Deep Tank Aeration Studies - Two Aeration Units - Flow Pattern - One On	34
13	Deep Tank Aeration Studies - Flow Pattern - One Aeration Unit On	35
14	Schematic of Modified Laboratory Analysis for Orthophosphate	44
15	Schematic of Laboratory Analysis for Phenol	46

TABLES

Number	Title	Page
1	Vacuum Filter Test - Primary Sludge	26
2	Filter Press Test	29
3	Summary of Deep Tank Aeration Studies	36

SECTION I

SUMMARY, FINDINGS AND CONCLUSIONS

Summary

In May 1966, the City of Detroit signed a Stipulation with the Michigan Water Resources Commission in which the City agreed to meet certain effluent quality standards for discharges from its Regional Wastewater Plant to the Detroit River. The degree of treatment provided by the primary facilities at Detroit was not adequate to meet the standards.

Conventional secondary processes at other plants had proved effective in meeting the BOD and suspended solids limitations required. The oil and coliform limitation could be met by modifying and expanding existing facilities at the plant. Phosphate and phenol, however, presented a major problem because conventional processes had not proven to be effective in their reduction.

In March 1967, the basis of design report for improved treatment and plant expansion at Detroit proposed the activated sludge process. The report also offered two alternates:

1. Activated Sludge, step feed modification, with the addition of iron for the complexing of phosphates.

2. Trickling filter using plastic media filter towers with the addition of iron.

The effectiveness and applicability of the basic design and the proposed alternates for Detroit were to be determined through pilot plant operation. To be included in the pilot study investigation was the Levin and and BioAbsorption processes.

Also to be included in the test program was the use of polymer and caustic in the treatment processes, deep tank aeration studies and sludge disposal studies. The basic testing program ran from November 1967 to June 1969.

Findings and Conclusions

1. Findings and Conclusions of the Activated Sludge Studies. Most of the activated sludge processes investigated provided reductions of suspended solids and BOD adequate to meet the Michigan Water Resources Commission's effluent quality standards.

The most effective phosphate reduction was provided in the tests utilizing the conventional process with iron feed to the primary effluent.

Findings and Conclusions (Continued)

1. Findings and Conclusions of the Activated Sludge Studies (Continued)

The step feed process (with iron) also proved relatively effective. The addition of polymer and/or caustic to the conventional and step feed processes did not significantly improve phosphate reduction across the entire primary-secondary system. The conventional and step feed process, with the addition of iron, provided reductions of orthophosphate adequate to meet the Michigan Water Resources Commission's pound limitation but did not meet the percentage removal requirement.

Each of the processes tested indicated reduction of oils adequate to meet the Stipulation. The coliform effluent requirements are expected to be met by expanding the chlorination facilities and improving chlorination techniques. None of the processes tested were able to reduce the final phenol to 12 ppb as ultimately required by the Stipulation. Additional process study and evaluation of phenol control measures is required with the ultimate goal of satisfactory phenol control.

Based on the twenty months of testing, Detroit has selected the conventional activated sludge process. The construction will include provisions for the step feed modification for versatility and further plant scale study. A pickle liquor injection system is to be provided for phosphate reduction. Because it will be some time before the entire 800 mgd secondary system will be in operation, a polymer feed system will be provided to improve removals in that portion of the flow receiving only primary treatment.

2. Findings and Conclusions of the Plastic Media Trickling Filter Tower Studies. This facility did not demonstrate consistent BOD, suspended solids or orthophosphate reduction in the treatment of Detroit's sewage. For these reasons, and others, the process was determined to be not suitable for use at Detroit.

3. Findings and Conclusions of the Sludge Disposal Studies. The testing of a pilot vacuum filter, a centrifuge and a filter press did not demonstrate that these processes were adequate for the development of a full-scale sludge dewatering system for Detroit. Further testing is indicated.

4. Findings and Conclusions of the Deep Tank Aeration Studies. The deep tank aeration testing demonstrated the applicability of using aeration tanks with a side water depth of 30 ft and a normal blower pressure of 7 to 8 psi for Detroit. The testing has provided data for the design of a full-scale aeration system utilizing the deep tank aeration concept.

SECTION II

INTRODUCTION

Background-History

In 1940 the Detroit Sewage Treatment Plant was completed with a design capacity (under 1940 design criteria and water quality standards) adequate to serve a population of 2,400,000 and, with additions, adequate to serve 4,000,000 people.

The facility currently serves an area of 476 square miles and a population of 3,000,000 persons, 80 per cent of which are served by combined sewage systems. By 1980 it is estimated that the Detroit Regional Sewage Disposal System will serve at least 4.25 million persons. "Ultimately" the plant will serve 7,000,000 persons and have an average flow of 1200 MGD.

The plant, as originally designed, provides primary treatment and post chlorination. Sludge disposal is by vacuum filtration and incineration, with ash disposal to sanitary land fill. The plant effluent discharges to the Detroit River, which has an average flow of 180,000 cfs.

Effluent Quality Standards

In May of 1966 the City of Detroit signed a Stipulation with the Michigan Water Resources Commission in which the City agreed to restrict the content of sewage and industrial waste discharged to the waters of the State. The effluent quality standards for the existing and future service area are as follows:

	Existing Service Area	Future Service Area
Suspended Solids	324,000 lb/day & not to exceed 50 mg/l	514,000 lb/day & not to exceed 50 mg/l
BOD (5-day)	206,000 lb/day	250,000 lb/day
Phosphate (Ortho)	21,000 lb/day as PO_4 & not to exceed 20% of influent soluble PO_4	26,000 lb/day as PO_4 & not to exceed 20% of influent soluble PO_4
Oil	Not to exceed 15 mg/l	Not to exceed 15 mg/l
Phenol	93 lb/day	115 lb/day
Coliforms	Not to exceed 1000 MPN monthly mean density based on daily samples	Not to exceed 1000 MPN monthly mean density based on daily samples

Problems

To meet the requirements of the Stipulation it was apparent that the plant would have to be provided with at least secondary treatment facilities. Conventional secondary processes in other cities had proved effective in meeting the BOD and suspended solids limitations. The limitations on oils and coliform could be met by modifying and expanding existing facilities at the plant. Only the phosphate and phenol removal requirements presented a major problem.

It was known that with sufficient dosages of chemicals such as alum, ferric chloride, ferric sulfate, lime or sodium aluminate, phosphates could be removed. However, the magnitude and cost of the chemical handling facilities required is staggering. For example, a lime dosage of 500 mg/l (range of 300 to 700 mg/l) at 1200 MGD average flow would require facilities adequate to handle 2500 tons of lime per day. It was apparent from the start that some other more economical process had to be found.

In addition, land in the area is at a premium. The existing plant site is bounded on the north by residential sites, on the east and south by industrial complexes and on the west by railroads. Thus, it was imperative that the facilities be constructed in as compact an arrangement as possible.

Concept Development

Prior to the development of the preliminary design concepts for advanced treatment, plant data had indicated that ferrous iron may be effective in a phosphate removal process. Ferrous iron in the form of pickling liquor (ferrous chloride) is a problem waste for many of the steel manufacturing plants in the Detroit area. The economic implications for utilizing pickle liquor in a phosphate removal process are attractive for two basic reasons:

1. The City will obtain a relatively low cost source of ferrous iron.

2. The pickling liquor waste disposal problem for the area's industry will be greatly reduced.

In March 1967, the basis of design for the improved treatment process and plant expansion was submitted to the Michigan Department of Public Health and the Michigan Water Resources Commission.

The basic design of the facilities proposed the use of the activated sludge process.

Concept Development (Continued)

Two alternate design concepts were also submitted. The first proposed the use of the activated sludge process with addition of iron at the primary tanks. Although the suitability of the process had not been determined, it was believed that the process may offer the following advantages over the basic design concept.

1. Complexing of the phosphate would be provided in both the primary and secondary systems.

2. The settleability of mixed liquor suspended solids would be improved.

3. Permits use of step-feed with consequent adequate sludge age and low solid load to final clarifiers.

4. The use of an industrial waste product, pickling liquor, as the iron ion source.

5. More stable operation.

6. Possible saving in capital and operating costs.

The second alternate proposed the use of plastic media trickling filter towers with addition of iron at the primary tanks. This process, if determined to be suitable, may offer the following advantages:

1. Elimination of air blowing other than for channel aeration.

2. Land area 53% of aeration tank area.

3. Secondary sludge more amenable to dewatering.

4. The use of an industrial waste product, pickling liquor, as iron ion source.

5. Simplified operation and control.

6. Possible saving in capital and operating costs.

Proposed Study

The effectiveness of the basic design concept and the proposed alternates had not been determined. Their applicability therefore could only be determined through a pilot operation. The pilot plant testing would also provide important data for the development and confirmation of design parameters.

Proposed Study (Continued)

The following types of activated sludge processes were to be investigated:

1. Conventional Process
2. Step Feed Process
3. Levin Process
4. Bioabsorption Process

The conventional and step feed processes were to be run using no chemicals; with pickling liquor; with polymer; with caustic and polymer; and with pickling liquor, caustic and polymer. The effectiveness of mixing and flocculation was also to be investigated. No chemical feed was to be used in the Levin or Bioabsorption processes.

Also to be studied was the applicability of deep (30 ft liquor depth) aeration tanks for the treatment of Detroit sewage.

Testing of the trickling filter tower was to include the study of chemical addition.

Various types of sludge dewatering equipment were to be tested to determine their applicability for the disposal of Detroit's secondary sludge.

Authorization, Scope and Content of the Report

The studies covered in this report were undertaken with the support of a Demonstration Grant from the Federal Water Quality Administration of the Department of the Interior. The grant was awarded on December 23, 1966, under the authorization of Section 6 of the Federal Water Pollution Control Act, as amended. The grant award of $299,800 was made to the City of Detroit, Department of Water Supply. The total project cost to June 30, 1969, was $765,579.82.

The ultimate goal of the project was to develop a phosphate removal process for use at Detroit and establish the necessary design and operating correlation for this system.

The need for the testing program has been discussed. The basic facilities and equipment for the activated sludge and plastic media trickling filter test programs are described in Section III.

Descriptions of the activated sludge and trickling filter testing are included in Sections IV and V respectively. The sections outline the facilities' effectiveness as they relate to the Stipulation requirements for reduction of suspended solids, BOD, phosphate, oil and phenol. The process applicability for treatment of Detroit wastes is included.

In the development of any wastewater treatment system, sludge disposal and the costs thereof must be made a major factor to be considered. Section VI includes a discussion of the testing of a vacuum filter, centrifuge, and filter press. Although the results obtained are deemed inconclusive at this time, they will provide guidance for future sludge disposal testing programs.

To keep land area requirements to a minimum, it was decided to test the feasibility of utilizing aeration tanks approximately twice the "normal" depth. Section VII describes the test facilities and outlines the testing.

Section VIII is a summary of the laboratory test procedures used throughout the test program. A summary of the mode of operation of the activated sludge testing is included in Appendix A. Tabulation of the data for the activated sludge testing and the trickling filter testing are contained in Appendices B and C respectively.

SECTION III

PILOT PLANT FACILITIES

Basic Pilot Plant Layout

Raw sewage for each pilot process was taken from the discharge of the main plant grit chamber utilizing a 200 gpm submersible pumping unit. The flow passed through a 1/4-inch slot comminuter into a constant head tank. Feed rate to either process could be varied by V-notch weir adjustment at the constant head tank outlet. Chemical feed to each process was from a 6 ft diameter by 19.5 ft long pickling liquor storage tank and acid feeders.

Equipment for each process, except for the trickling filter tower, was housed in a 50 ft wide x 100 ft long x 25 ft high building. A completely equipped laboratory was included. Space in the building was also available for sludge dewatering pilot work.

Each process was provided with equipment for flash mixing, flocculation, primary sedimentation and final clarification. Since versatility of operation and testing were of prime importance, extensive use was made of by-pass piping, valving, etc.

Activated Sludge Process

The activated sludge pilot facility was designed to operate at a raw sewage feed rate range of from 50 gpm to 100 gpm. The flow diagram for the activated sludge process is shown on Figure No. 1. The equipment provided for this facility included the following:

Raw Sewage Flash Mix	- One unit 24-inch diameter x 4.33 ft side water depth (swd)
Raw Sewage Flocculators	- Two units each 6 ft diameter x 7 ft side water depth with dual variable speed mixers
Primary Settling Tanks	- One unit 9 ft diameter x 8 ft swd with mechanical sludge collection equipment
Aeration Tank	- One unit with five compartments, each 3.5 ft x 9 ft x 9 ft swd. Each compartment provided with 28 air outlets each with four 1/4-inch orifices
Mixed Liquor Flash Mixer	- One unit 30-inch diameter x 2.67 ft swd

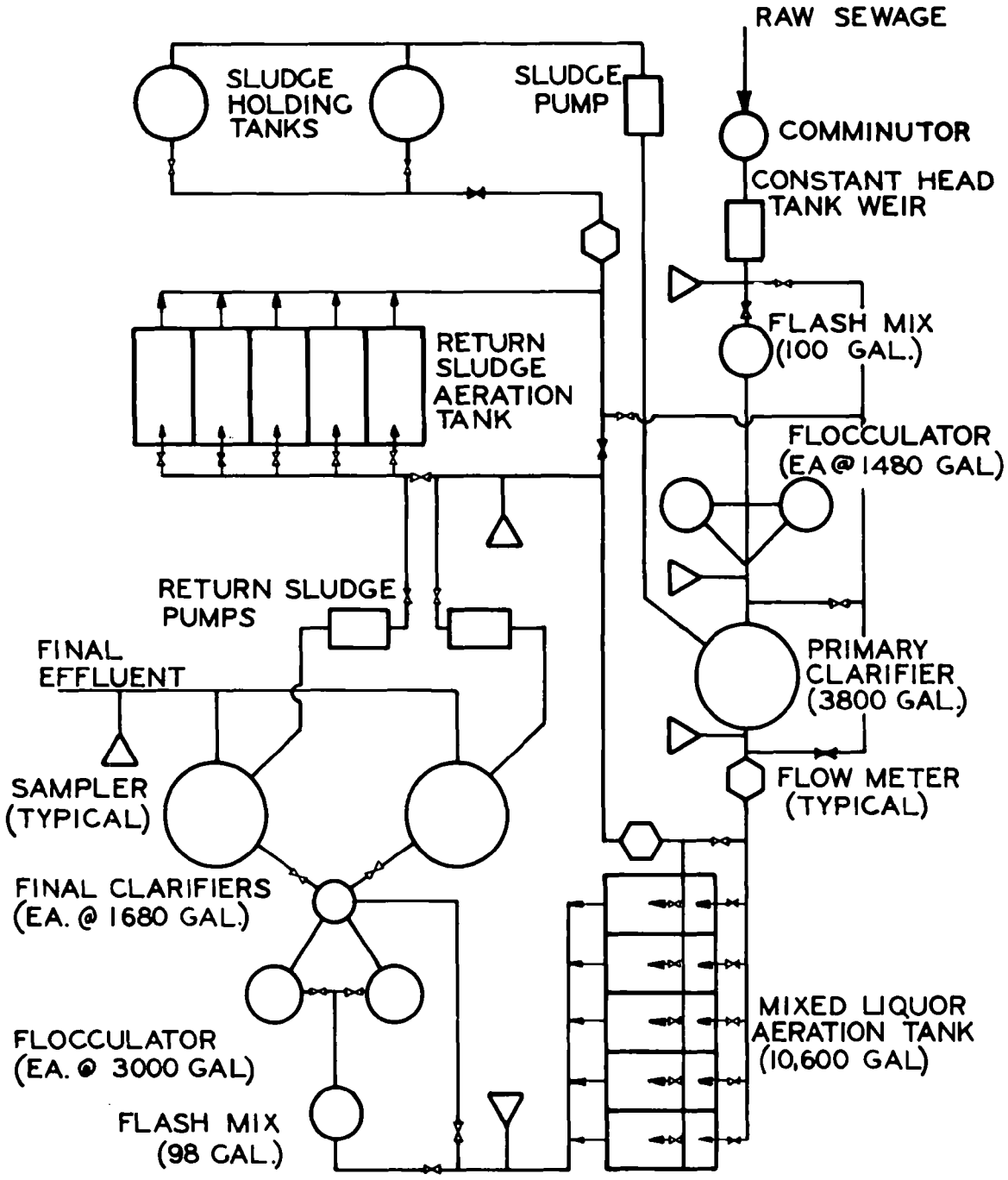

FIGURE 1
FLOW DIAGRAM-ACTIVATED SLUDGE PROCESS

FIGURE 2 TEST FACILITY BUILDING

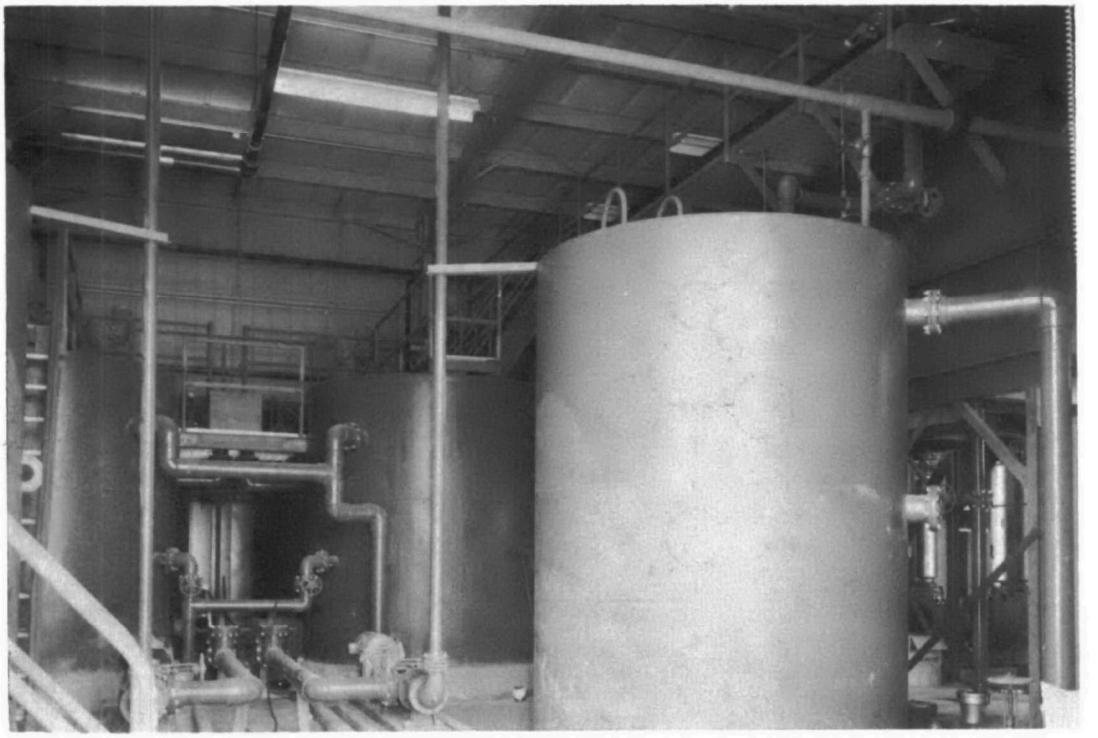

FIGURE 3 ACTIVATED SLUDGE FACILITIES
Sludge Storage Tank (right foreground), Return Sludge Pumps (bottom center) and Two Final Clarifiers (left background)

FIGURE 4 ACTIVATED SLUDGE FACILITIES
Pri. Tank (left background) , Aeration Tank (right background), Final Tank (left foreground), and Mixed Liquor Flocculator (right foreground)

FIGURE 5 ACTIVATED SLUDGE FACILITIES
Sludge Storage Tank (foreground), Two Raw Sewage Flocculators (left background) and Primary Tank (right background)

Activated Sludge Process (Continued)

Mixed Liquor Flocculators	- Two units each 8 ft diameter x 8 ft swd with dual variable speed mixers
Final Settling Tanks	- Two units each 9 ft diameter x 8 ft swd with mechanical sludge collection equipment
Return Sludge Pumps	- Two variable speed, metering units each with capacity of 10 to 60 gpm
Sludge Stabilization Tank	- One unit with five compartments, each 6.5 ft x 9 ft x 9 ft swd. Each compartment provided with twelve air outlets each with four 3/16-inch orifices. (Return sludge aeration tank)
Air Blowers	- Four units at 700 cfm capacity
Sludge Storage Tanks	- Two units 8 ft diameter x 9 ft swd
Air Meters	- One unit on each compartment of the aeration tank and sludge stabilization tank (10 units total).
Flow Meters	- Three units, one each for primary effluent, return sludge and waste activated sludge.
Samplers	- Six continuous units.

Trickling Filter Process

The trickling filter pilot facility was designed for a flow of from 7 gpm to 28 gpm. The flow diagram for the Trickling Filter Process is shown on Figure 6. The equipment provided for the facility includes the following:

Raw sewage flash mix and flocculator	- One unit 4.5 ft diameter x 5 ft swd
Primary Settling Tank	- One unit 5 ft diameter x 8.25 ft swd
Trickling Filter Tower	- One unit area 7 sq ft x 21.6 ft high. Dow Surfpac plastic media.
Final Settling Tanks	- Two units 5 ft diameter x 10.67 ft swd
Samplers	- Four continuous units

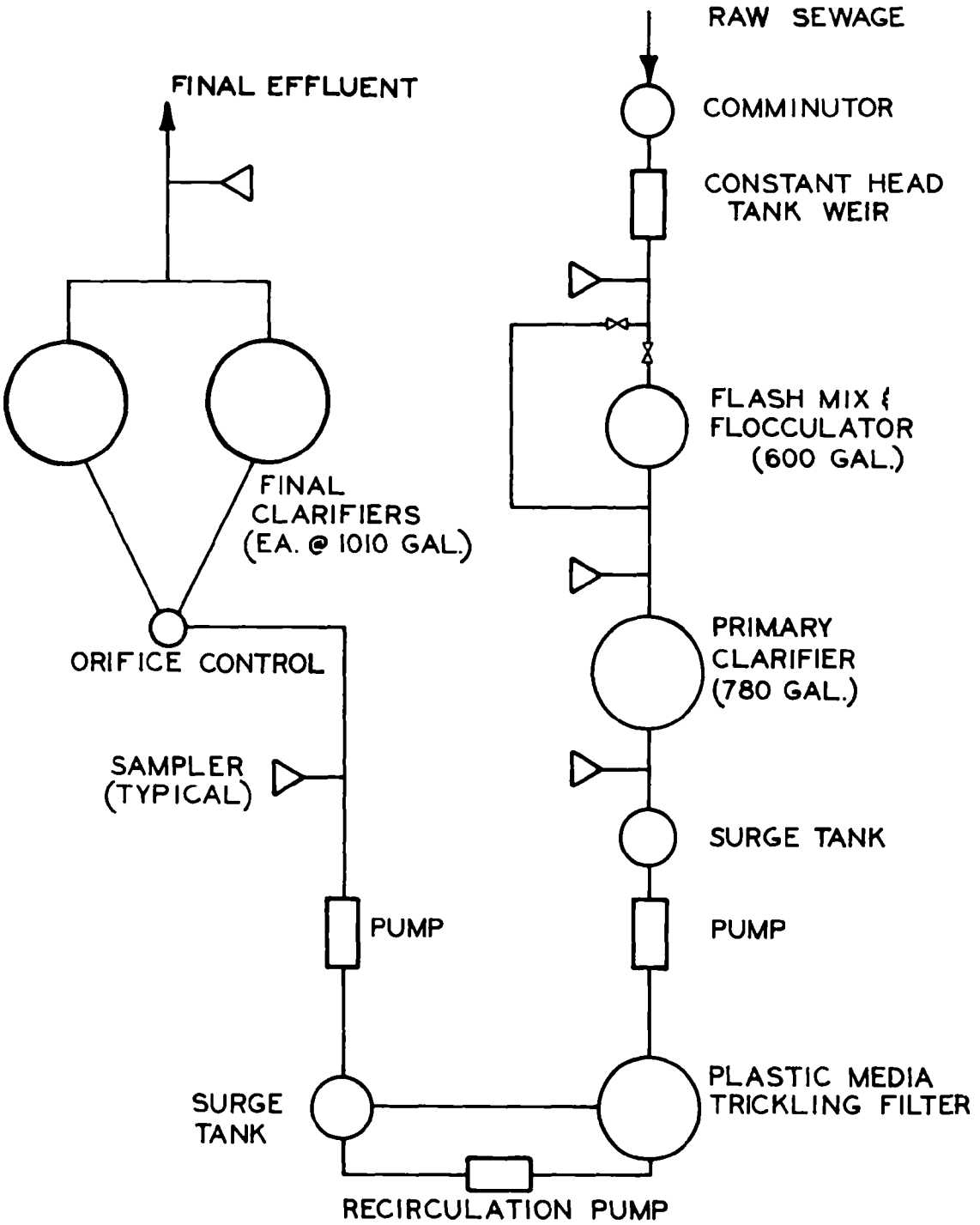

FIGURE 6

FLOW DIAGRAM-TRICKLING FILTER PROCESS

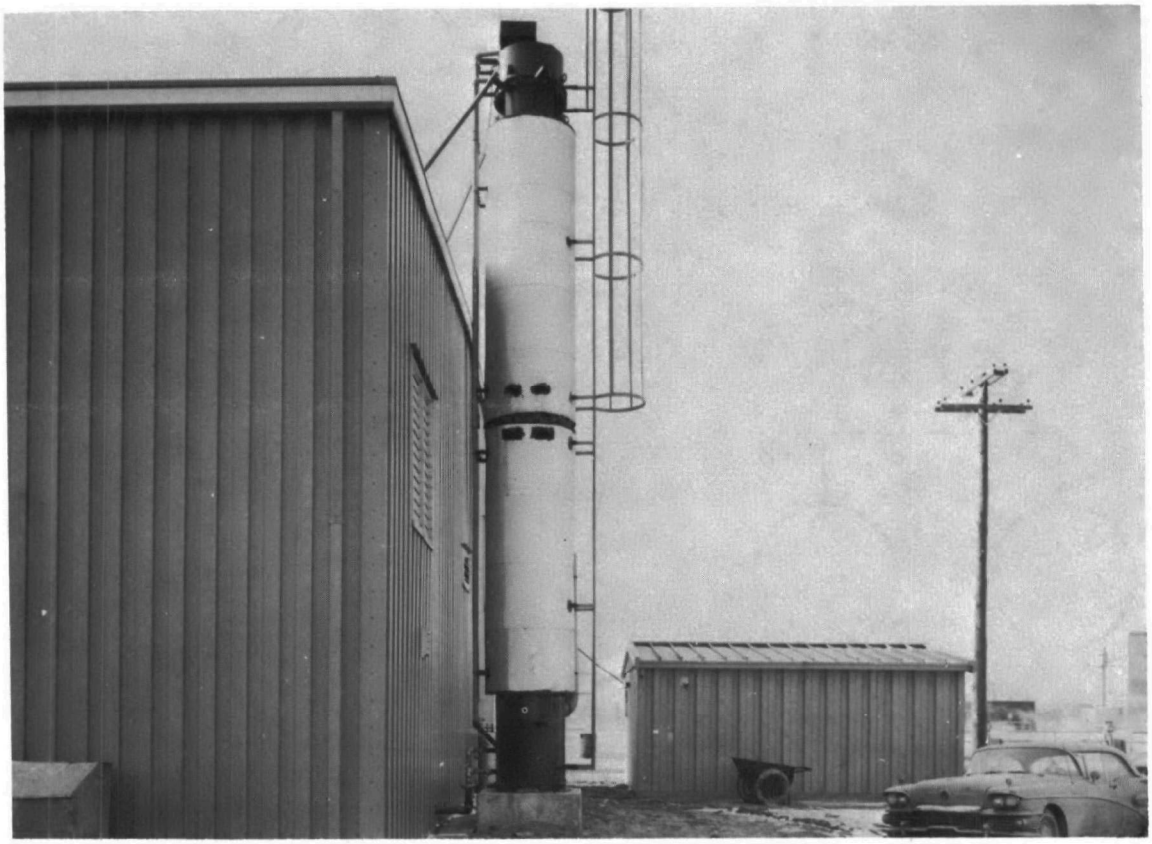

FIGURE 7 TRICKLING FILTER FACILITIES
Plastic Media Trickling Filter

FIGURE 8 TRICKLING FILTER FACILITIES
Primary Clarifier (right foreground) and
Two Final Clarifiers (left foreground)

SECTION IV

ACTIVATED SLUDGE STUDIES

Introduction

The activated sludge process testing reported herein covers a period from November 17, 1967, to June 30, 1969. The testing consisted of a series of thirty-two (32) experiments conducted at the pilot plant facility. Test Nos. 17, 19, 20 and 22 were further broken down with A and B designations to reflect operational modifications and the effects thereof.

During test periods 1 through 16, 19 and 28, the facility was operated basically as a conventional activated sludge plant. Tests 17, 18, 21, 22, 24 through 27 and 29 through 32 were run using a step feed modification of the activated sludge process. Tests 20 and 23 were run using the "Levin" process and a bioabsorption process, respectively.

Conventional treatment consisted of one to two hours of primary clarification, two to three hours of aeration, and one to four hours of final clarification. Sludge was wasted, as required, to maintain mixed liquor solids at predetermined levels. Five aeration chambers were utilized in each test except in Test No. 28 in which only two chambers were used. Figure 1 shows the general flow diagram for this process.

The operation of the step feed modification followed the same general flow pattern as the conventional process. The basic difference in the processes involved the way in which the primary effluent and return sludge were fed into the aeration chambers. See Figure 9.

In step feed Test Nos. 17 and 18, the return sludge was fed to, and provided aeration in, the first chamber. The primary effluent was fed equally to the next four chambers. In Test Nos. 21, 22, 24, 25, 26 and 27 the return sludge was aerated in the first chamber and the primary effluent was fed equally to and aerated in the second, third and fourth chambers. The mixed liquor was provided aeration in the fifth chamber. In Test Nos. 29, 30, 31 and 32 the return sludge was fed to the first chamber and the primary effluent was fed equally to the first four chambers. The mixed liquor received aeration in the fifth chamber.

Test No. 20 was the Levin process. This process followed the conventional flow pattern but required above normal aeration rates and the holding of the return sludge under anaerobic conditions to promote the release of phosphate taken up by the organisms during the aeration process. During the particular test, the experimental design called for aeration rates of up to 5.4 cf per gallon of waste, an aeration time of four hours, an anaerobic detention period of 13 hours, and mixed liquor solids of 5,000 mg/l or more.

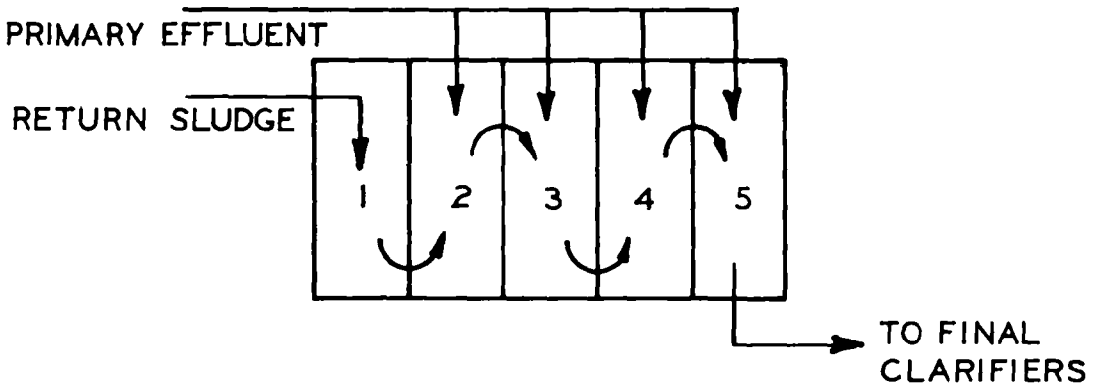

A) TESTS 17A AND 18

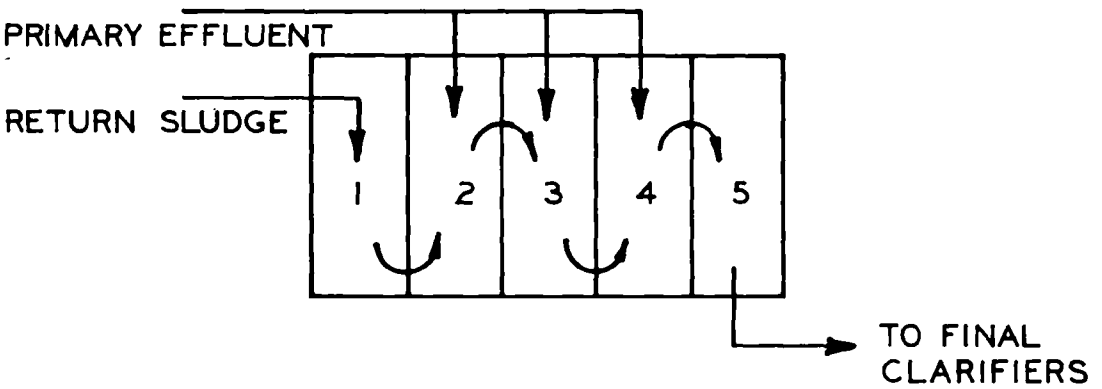

B) TESTS 21, 22 & 24 THRU 27

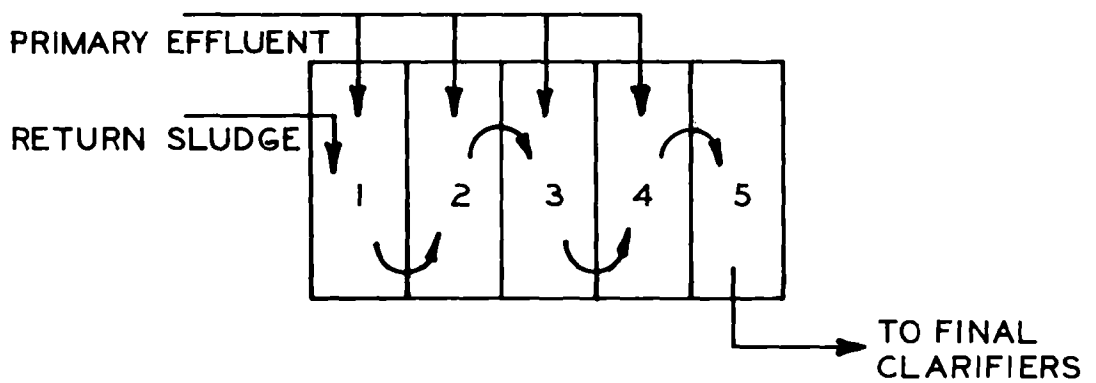

C) TESTS 29 THRU 32

FIGURE 9 ACTIVATED SLUDGE TESTING
STEP FEED MODIFICATION

Introduction (Continued)

Test No. 23 was a form of bioabsorption. The return sludge received about 6.2 hours of aeration prior to mixing with the primary effluent. The mixed liquor received 0.6 hours of aeration. Approximately 2.8 hours of final settling was provided.

Suspended Solids

Suspended solids removal under all modes of operation, with and without chemical addition, were, in general, excellent. The test plant did, however, receive a wide range in suspended solids in the raw wastewater with a minimum day at about 130 mg/l and the maximum day at about 1390 mg/l. Test No. 9 was subjected to the highest average concentration at 782 mg/l and Test No. 22A the lowest at 306 mg/l. The average suspended solids in raw wastewater throughout the twenty-month period was 420 mg/l.

Except for Test Nos. 1 and 19B, each of the conventional activated sludge process tests provided suspended solids removals greater than 85%. The majority of the tests provided removals in the 90-95% range. When iron or iron and polymer were used, the percentage removals across the primary portion of the system were generally higher than when no chemicals were added. However, there is no indication from the testing at Detroit that the addition of iron and/or polymer significantly improves suspended solids removal over the entire primary-secondary system.

Except for Test No. 17B, each of the step feed activated sludge process tests, with iron, provided suspended solids removals greater than 85%. Where polymer or polymer and caustic were used, the percentage removals across the primary portion of the system were generally higher than when only iron was added. As with the conventional process, no significant improvement in removals was indicated over the entire primary-secondary system with the addition of polymers.

The Levin process averaged 92.7% removal of suspended solids and the bioabsorption process averaged 86.4%.

Biochemical Oxygen Demand

Biochemical oxygen demand (BOD) reduction under all modes of operation was, in general, good. The BOD in the raw wastewater ranged from a minimum day at 60 mg/l to a maximum day at 425 mg/l. Test No. 11 was subjected to the highest average at 279 mg/l and Test No. 5 the lowest at 125 mg/l. The average BOD in the raw wastewater throughout the twenty-month test period was 185 mg/l.

Except for Test Nos. 1 and 19B, each of the conventional activated sludge process tests provided BOD reductions greater than 85%. The majority of the tests provided reductions in the 90-95% range. The addition of iron

Biochemical Oxygen Demand (Continued)

or iron and polymer did not improve the BOD reduction. Tests 12 and 15 provided reductions of less than 80%. Tests 13, 14, 16 and 28 provided reductions between 80% and 90%. All other testing (Tests 7 through 11) using iron provided reductions greater than 90%.

Except for Tests 17B and 22B each of the step feed activated sludge process tests, with iron, provided BOD reductions greater than 80%. None of the tests provided reductions greater than 90%. In general, when polymer or polymer and caustic were used, the percentage removals across the primary portion of the system were generally higher than when only iron was added. However, no significant improvement in BOD reduction was indicated over the entire primary-secondary system with the addition of polymer.

The Levin process averaged 88.5% BOD reduction and the bioabsorption process averaged 81.2% reduction.

Phosphate (Total)*

All test facility data for total phosphate is in terms of P. The minimum day total phosphate in the raw wastewater was 1.9 mg/l and the maximum day was 26.6 mg/l. Test No. 26 was subjected to the highest average concentration at 13.0 mg/l and Test No. 17A the lowest at 4.9 mg/l. The average total phosphate in the raw wastewater throughout the twenty-month period was 7.9 mg/l.

None of the conventional activated sludge process tests provided total phosphate removals greater than 72%. The majority of the tests provided removals in the 55-70% range. When iron was used, the majority of the tests provided removals in the 75-85% range. Only Test No. 10 provided a removal greater than 85%. Total phosphate reduction across the primary system was highest in Test No. 28 where both polymer and iron were used. However, the total removal across the primary-secondary system was no better than when just iron was added. In general, the addition of iron to the conventional activated sludge process provided a relatively consistent total phosphate reduction.

Except for Test Nos. 17 (A & B) and 22B, each of the step feed activated sludge process tests, with iron, provided total phosphate reductions of 80% or greater. Only Test No. 24 provided a reduction greater than 85%. When polymer or polymer and caustic were used, the percentage removals across the primary portion of the system were generally higher than when only iron was added. Only one test (No. 29) provided a reduction of less than 80%. In general, the addition of iron or iron, polymer and caustic to the step feed activated sludge process provided a relatively consistent total phosphate reduction.

The Levin process averaged 70.5% removal of total phosphate and the bioabsorption process averaged 78.0% reduction.

*Total phosphate data as reported herein is total inorganic phosphate.

Phosphate (Ortho)

All test facility data for soluble ortho phosphate is in terms of P. The minimum day soluble phosphate in raw wastewater was 0.3 mg/l and the maximum day was 5.8 mg/l. Test No. 6 was subjected to the highest average concentration at 3.3 mg/l and Test No. 27 the lowest at 0.7 mg/l. The average ortho phosphate concentration throughout the twenty-month period was 2.0 mg/l.

The conventional activated sludge process tests provided no consistent ortho phosphate reduction. The maximum removal was provided in Test No. 4 at only 53.5%. Test No. 2 actually showed an increase in orthophosphate across the system. The testing indicates that the conventional activated sludge process will not consistently remove soluble phosphate at Detroit.

Only Test No. 13 provided 80% reduction of soluble phosphate during the twenty-month testing period. This test along with Test Nos. 10, 11 and 12 provided the most consistent reduction. Each utilized the conventional activated sludge process with the addition of iron to the primary effluent. In each test, the data indicated an increase in soluble phosphate across the primary system. The four tests run over a 8½ week period, averaged 77.5% reduction. Although iron fed (as Fe) was varied from 15 mg/l to 30 mg/l during this testing, the higher feed did not exhibit significant improvement in overall ortho phosphate reduction. The main treatment plant effluent (@ 800 mgd) based on the data from the four tests, would average 8,950 pounds of PO_4 per day. The City's Stipulation with the Michigan Water Resources Commission limits the effluent to 21,000 pounds of PO_4 per day.

Test Nos. 8, 9, 14, 15 and 16 also utilized the conventional activated sludge process with the addition of iron. In these tests the iron was fed to the primary influent. Although these tests (average total reduction at 60% with 45% across the primary system) were not as effective as Nos. 10, 11, 12 and 13, the main plant effluent at 800 mgd would average 14,300 pounds of PO_4 per day and thus meet the Michigan Water Resources Commission's daily pound limitations.

Except for Test No. 17B, each of the step feed activated sludge process tests utilizing iron provided ortho phosphate reductions adequate to meet the Michigan Water Resources Commission's pound limitation. In this testing the iron (@ 15 mg/l) was fed to the primary influent. The major portion of the ortho phosphate reduction was across the primary system. The average reduction across the entire process for all tests (17A, 17B, 18, 21, 22A, 22B, 24, 25 and 26) was approximately 60% and ranged from 33% (Test No. 25) to 62% (Test No. 22A). The main plant effluent at 800 mgd would average 15,600 pounds of PO_4 per day.

Each test utilizing iron, polymer and caustic in conjunction with the step feed activated sludge process provided ortho phosphate reductions adequate to meet the Michigan Water Resources Commission's pound limitations. The average reduction across the entire process for all tests

Phosphate (Ortho) - (Continued)

(27 and 29 through 32) was approximately 70% and ranged from 43% (Test No. 27) to 75% (Test No. 31). The major portion of the ortho phosphate reduction was provided across the primary system. Based on the data from this series of tests, the City's main treatment plant, at 800 mgd, would average 13,000 pounds of PO_4 per day.

The Levin process, Tests 20A and 20B, provided 34% reduction in orthophosphate with an average of 1.7 mg/l in the effluent. The bioabsorption process provided 50% reduction with 0.6 mg/l in the effluent.

Oil

Final effluent oil in all testing averaged 12.0 mg/l with test averages varying from a minimum of 5.0 mg/l to a maximum of 36.5 mg/l.

Phenol

Phenol reduction in the test facility was basically accomplished through biological oxidation in the secondary system. Removal across the primary clarifier was insignificant and the data often showed increases. This phenol release appeared to be due to anaerobic decomposition of the settled sludge. Some degree of phenol stratification was noted in the primary clarifier with the highest concentration appearing just above the settled sludge.

The step feed activated sludge mode of operation provided the most consistent removals. Maximum reduction occurred under the conditions of Test 18, in which the raw sewage flow to the test facility was varied in a ratio proportional to the main sewage plant flow. However, when this condition was reapplied in later tests, the reduction was inconsistent with that obtained in Test 18.

Changes in mixed liquor solids and aeration time appeared to have little effect on removals. The utilization of iron, polymer and caustic did not provide any significant improvement in phenol reduction. Although no correlation was developed between air application rates and phenol reduction, rates at or greater than 1.6 cubic feet per gallon appeared to be beneficial. In general good solids removal brought the best phenol reductions.

None of the testing proved adequate to meet the Michigan Water Resources Commission's Stipulation of 93 pounds per day of phenol in the plant effluent.

Applicability of Process for Detroit

The activated sludge process has been demonstrated to be applicable for use at Detroit.

Applicability of Process for Detroit(Continued)

Based on the twenty months of testing the Detroit Metro Water Department has selected the conventional activated sludge process for use at Detroit. For versatility and to allow for continued study on a plant scale, the step feed modification is to be included in the design of the facilities.

Facilities are to be provided for the injection of pickling liquor into the primary influent for phosphate reduction. Also, because it will be some time before the entire 800 mgd secondary system will be constructed and in operation, a polymer feed system will be provided, in the interim, to improve removals in that portion of the flow receiving only primary treatment.

In the future, when the entire 800 mgd secondary system is in operation, an alternate pickling liquor feed point to the primary effluent may be provided.

SECTION V

TRICKLING FILTER STUDIES

Introduction

The testing of the plastic media trickling filter tower reported herein covers a period from June 5, 1968, to April 19, 1969, and consisted of a series of sixteen (16) experiments.

Tests No. 1 through 4 were run without additive chemicals at application rates varying from 1.14 gallons per minute per square foot of filter area (gpm/sq ft) to 3.22 gpm/sq ft.

Tests No. 5 through 9 were run with 15 mg/l of iron added to the raw sewage at application rates varying from 1 gpm/sq ft to 3.46 gpm/sq ft.

Tests No. 10 through 14 were run with 15 mg/l of iron plus 0.3 mg/l of Dow A 23 polymer added to the raw sewage at application rates varying from 1.14 gpm/sq ft to 3.08 gpm/sq ft.

Tests No. 15 and 16 were run with 15 mg/l of iron plus 0.3 mg/l of A 23 polymer plus 30 mg/l of NaOH added to the raw sewage at application rates varying from 1.47 gpm/sq ft to 2.86 gpm/sq ft.

Suspended Solids

Average final suspended solids with the addition of iron was 103 mg/l and with the addition of iron, polymer and caustic was 61 mg/l. Best performance was 37 mg/l without chemicals. Poorest performance was 162 mg/l with iron. To meet the stipulation the final effluent suspended solids cannot exceed 50 mg/l.

Biochemical Oxygen Demand

Average final effluent BOD with the addition of iron was 58 mg/l and with the additions of iron, polymer and caustic was 49 mg/l. The best performance was 35 mg/l with poorest performance 83 mg/l.

The MWRC stipulation limitation for effluent BOD is 31 mg/l (@ 800 MGD).

Phosphate (Total)*

All test data is in terms of total phosphate as P.

---

* Total phosphate data as reported herein is total inorganic phosphate.

Phosphate (Total) - Continued

Without the addition of chemicals, raw phosphate test averages varied from 4.9 to 7.0 mg/l with final effluent P varying from 3.0 to 4.0 mg/l for removals of from 18% to 57%.

With the addition of 15 mg/l of iron the raw phosphate test averages varied from 6.9 to 8.6 mg/l with final effluent P varying from 1.9 to 4.8 mg/l for removals of from 34% to 77%.

With the addition of 15 mg/l of iron and 0.3 mg/l of A 23 polymer raw phosphate test averages varied from 7.0 to 10.3 mg/l with final effluent P varying from 2.0 to 4.4 mg/l for removals of from 47% to 80%.

With the addition of 15 mg/l of iron, 0.3 mg/l of A 23 polymer and 30 mg/l of NaOH raw phosphate test averages varied from 8.1 to 10.9 mg/l with final effluent P varying from 2.1 to 3.6 mg/l for removals of from 67% to 78%.

Phosphate (Ortho)

All test data is in terms of soluble ortho phosphate as P.

Without the addition of chemicals, raw ortho phosphate test averages varied from 2.0 to 2.6 mg/l with final effluent P varying from 1.9 to 2.2 mg/l for removals of from 0 to 15%.

With the addition of 15 mg/l of iron, raw ortho phosphate varied from 2.3 to 3.1 mg/l with final effluent P varying from 0.4 to 1.7 mg/l for removals of from 45% to 86%.

With the addition of 15 mg/l of iron and 0.3 mg/l of A 23 polymer, raw ortho phosphate test averages varied from 1.3 to 2.8 mg/l with final effluent P varying from 0.4 to 1.2 mg/l for removals of from 52% to 86%.

With the addition of 15 mg/l of iron, 0.3 mg/l of A 23 polymer and 30 mg/l of NaOH the raw ortho phosphate test averages varied from 0.9 to 1.3 mg/l with final effluent varying from 0.50 to 0.90 mg/l for removals varying from 11% to 62%.

The current stipulation places a pound effluent limitation of 21,000 pounds of soluble phosphate as PO_4 or 7,000 pounds as P but not less than 80% removal of incoming phosphate. At 800 MGD flow to the main treatment plant, the pound limitation is equivalent to 1 mg/l as P.

Oil

Final effluent oil averaged 16 mg/l with test averages varying from a minimum of 7.7 mg/l to a maximum of 44.5 mg/l.

Oil (Continued)

Stipulation requirements call for not in excess of 15 mg/l of oil.

Phenol

Raw sewage phenol tests averaged 393 ppb with final effluent averaging 116 ppb for removals varying from 46% to 83%.

Stipulation requirements of initial daily limit of 93 pounds, with ultimate of 115 pounds, required an effluent with not over 12 ppb phenol.

Applicability of Process for Detroit

The use of plastic media filters for treating primary effluent at Detroit was determined to be inappropriate for the following reasons.

1. The process did not consistently result in final effluent BOD's of 31 mg/l required to meet the stipulation.

2. The process did not result in final effluent suspended solids consistently at the 50 mg/l required to meet the stipulations.

3. Operator control of the plastic media filter process is limited to changes in the application rate. The tests indicated that for Detroit's sewage, a low uniform application rate was desirable; so in effect no operator control is possible to meet the changing treatability of the incoming sewage.

4. Optimum conditions for maximum removal of phosphate using plastic media filters requires closely controlled physical conditions with regard to chemical additions. This involves specific times for flash mixing flocculation and conduit velocity. The existing Detroit primary installation does not provide the required conditions nor is it practical to add mixing and flocculation ahead of the existing primary tanks. In addition, the variation in flow would not allow obtaining optimum time relationships in the treatment units.

5. No plastic media filter plants of the magnitude of the Detroit installation are in existence. Problems encountered in smaller trickling filter installations such as odors, flies and winter operation could result in major operating difficulties when scaled up to an installation of the size required at Detroit.

6. At the present time there are only three manufacturers and suppliers of plastic media for sewage filters compared to the many suppliers for equipment and facilities for alternate biological processes.

7. Historically, effluent standards have been gradually increasing. The practical limit on the treatment efficiency of trickling filters is somewhat less than that for activated sludge and this thus constitutes a risk of earlier obsolesence. Further it is not as feasible to modify the trickling filter process and physical plant for greater efficiency and economy as it is for the activated sludge process.

SECTION VI

SLUDGE DISPOSAL STUDIES

Introduction

Vacuum filtration with incineration is currently used for disposal of Detroit's primary sludge. Tests were run to determine its applicability to the disposal of waste activated sludges.

Also tested were a centrifuge and a filter press type dewatering device.

Vacuum Filter

Initial testing of vacuum sludge filtering was performed using a ten square foot test unit. The unit featured a continuously washed belt as filter media. Belt material was 40 x 40 mesh monofilament nylon. Although the belt speed could be adjusted, the lowest speed was used in all testing. A tumbler or cement mixer type flocculator, rotating on a horizontal axis, was used for flocculation and sludge conditioning.

During the period February 15, 1969, to February 25, 1969, primary sludge from the pilot plant (with 6% to 7% solids) was filtered in an attempt to develop a correlation between the test vacuum filter and main plant vacuum filtration units. Some of the data for the test vacuum filter for primary sludge dewatering is tabulated in Table 1.

TABLE 1
VACUUM FILTER TEST
PRIMARY SLUDGE

Test Date	Conditioning Chemicals CaO(%)	Conditioning Chemicals $FeCl_3$(%)	Cake Solids Content(%)	Dry Solids Filter Yield lb/sq ft/hr
2/15/69	10.0	2.0	29.3	
2/17/69	10.0	2.0	25.9	
2/17/69	15.0	2.0	26.5	
2/19/69	20.0	2.0	30.8	
2/24/69	15.0	2.0		1.25
2/24/69	10.0	2.0		0.94
2/25/69	10.0	2.0	27.8	1.44
2/25/69	10.0	2.0	26.4	1.38

Vacuum filtration of sludges averaging 7.2% solids in the main plant for the month of February 1969 produced cake with a mean solids content of 30.2%. The average doses of lime and ferric chloride were 9.7% and 2.24%, respectively, which produced an average filter yield of 5.4 lb/sq ft/hr.

Although the solids content of the filter cake was about the same for both the main plant filters and the test filter, the average yield of the main plant filters was approximately five times that of the test filter.

Vacuum Filter (Continued)

Mixtures of primary and secondary sludges (in a one-to-one ratio) were conditioned with lime and ferric chloride and with polymer. The sludge mixture contained 3% to 5% solids. The lime-ferric chloride conditioning (16% and 2% respectively) produced a cake with 29.9% solids. However, the yield was only 0.69 lb/sq ft/hr. Organic polymers at rates as high as 60 lb/ton produced wet thin cakes that would not peel.

The data from the pilot filter testing was only comparative and could not be scaled up to the plant size filters. Further study on full scale vacuum filters is required.

Centrifuge

The batch feed centrifuge test unit consisted of a drum or bowl spinning on a vertical axis. The sludge, after introduction into the center of the bowl, passed through a series of baffles and was thrown against the sides by centrifugal force. When the bowl filled to capacity, the sludge cake was discharged through a withdrawal tube.

Secondary sludges of from 2.1% to 3.7% were fed to the centrifuge. The dry solids content of the thickened sludge depended on the rotational speed of the bowl. The average results are as follows:

1500 rev/min	11.9% dry solids
2000 rev/min	14.0% dry solids
2500 rev/min	15.9% dry solids

The liquid centrate contained between 1000 to 2000 mg/l of suspended solids. Feed rates to the centrifuge varied from 2 gpm to 4 gpm. Further testing of this type of equipment, preferably on a larger scale, would be required before any recommendation could be made for their use at Detroit.

Filter Press

The test unit consisted of a series of four circular plates held together by a hydraulic ram. The concave faces of the plate when brought together formed three ventricular cavities or cells. Covering the surfaces of the concave faces was a monofilament nylon filter cloth. Backing the cloth was a large-mesh stainless steel screen support. Openings leading away from the screen support were provided for filtrate flow. Each plate had a circular hole in its center for sludge feed. Cake discharge was performed by separating the plates. A sludge filtration pressure of 250 psi was used.

Primary sludge, mixtures of primary and secondary sludge, and secondary sludge was tested. Lime, ferric chloride, organic polymers and incinerator ash were used in various tests as filtration aids. Incinerator ash was also used as a precoat on the filter cloth to improve sludge cake

separation. Incinerator ash in theory could substitute for chemicals and under ideal conditions could be the only filter aid required. However, this did not prove practical at Detroit.

Table 2 is a summary of some of the filter press test data. The tests have been numbered for identification purposes. The tests are not necessarily tabulated in the order in which they were run. The mixture ratio of the unconditioned sludge is reported on a dry weight basis. A three-to-one mixture ratio means that primary sludge containing three pounds of dry solids was mixed with secondary sludge containing one pound of dry solids. The per cent solids of the unconditioned sludge is based on the dry weight of solids to the mixture, free of chemicals and ash. The ash ratio is based on the weight of ash to the weight of the sludge mixture dry solids. The filter cake is reported in terms of the weight, in pounds, of one cubic foot of cake and in terms of per cent dry weight of solids.

Testing using polymers proved unsatisfactory. In general, much longer filtration times were required. Sludge cake produced was wet and sticky. Filtration times of four hours with dosages of nearly 50 lbs of polymer per ton of dry solids produced wet cakes. It may be noted that the rather crude test operations may have created a break in the floc. More sophisticated operation and further testing would be required to prove feasibility of polymer for use at Detroit.

The basic procedure for the operation was to batch mix the sludges, determine solids content (and pH), add ash, remix, add conditioning chemicals, remix again and feed to the filter press. In general it was found that secondary solids, when fresh, were easier to filter. Secondary solids that had been allowed to become anaerobic for longer than twenty-four hours were extremely difficult to filter.

Two sizes of filter cells were utilized in the testing. It was found that ash was required, in addition to ferric chloride and lime, when filtering secondary sludge with the one and one-half inch cell. Ash was generally not required when utilizing the one-inch cell. Both lime and ferric chloride were required in all cases when filtering secondary sludge.

However, ferric chloride was not always required when filtering primary or primary-secondary sludge mixtures with ash. Lime was required in all cases. Filtrate samples averaged about 10 mg/l suspended solids.

Further study and testing of the filter press would be required to determine its applicability for use at Detroit.

TABLE 2
FILTER PRESS TEST

Test Run	Unconditioned Sludge Mixture Ratio Pri. to Sec.	Unconditioned Sludge Solids (%)	Unconditioned Sludge pH	Cell Width (in)	Ash Ratio	Conditioning Chemicals(%) CaO	Conditioning Chemicals(%) $FeCl_3$	Filtration Time (Minutes)	Filter Cake lb/cf	Filter Cake Solids (%)
1	Secondary	4.0	6.2	1.0	0	12	5.0	120	-	42.3
2	Secondary	4.0	6.5	1.0	0	15	7.5	120	72	-
3	Secondary	4.0	6.2	1.0	3:2	6	3.0	120	-	37.0
4	Secondary	4.3	6.8	1.5	3:2	12	3.0	120	98	-
5	Secondary	4.3	6.8	1.5	3:2	12	6.0	150	96	58.0
6	3:1	4.7	7.0	1.5	1:1	10	0.0	120	-	-
7	3:1	6.0	7.2	1.5	1:1	10	0.0	100	80	59.0
8	Primary	3.5	6.9	1.5	1:1	10	0.0	120	91	61.2
9	Primary *	7.4	6.8	1.5	1:1	10	0.0	75	-	-
10	Primary *	7.4	6.8	1.5	1:1	10	0.0	90	89	60.0

*Main plant primary sludge

SECTION VII

DEEP TANK AERATION STUDIES

Introduction

Most diffused air aeration tanks in the United States have liquor depths of about 15 ft requiring blowers operating in the range of 7 psi. Due to the restricted plant site area available for expansion, it was decided to develop, if feasible, a coarse bubble aerator system operating in the range of 7 psi but with tank liquor depth of 30 ft. This was to be accomplished by the use of individual fixed header air release units with training walls to act as air lifts for oxygen transfer and circulation of liquor in aeration tanks having a series of connected bays each 60 ft wide by 132 ft long by 30 ft liquor depth. Model testing was indicated to determine oxygen transfer efficiency and circulation adequacy.

Test Tank and Equipment

Available at the existing wastewater treatment plant site was a concrete tank 70.33 feet long by 18 ft wide by 25 ft liquor depth with a total volume of 238,000 gallons. The tank was normally used for primary sludge thickening. This tank was used as the model for the tests. Two air lifts were provided each consisting of a dual 4-inch fixed pipe header system with centerline 12.5 ft below the surface to which the various air release devices were attached. Each header system was contained within baffle walls 4.5 ft apart by 16 ft long, 9.0 ft from the surface and extending down to 20 ft from the surface ending 5 ft above the tank bottom. A horizontal baffle at the liquid surface directs the flow laterally.

Each 4-inch dual header system was fed at the center by an 8-inch pipe connected to a constant speed positive displacement blower. A by-pass air valve provided for air regulation to the air lift devices. Air measurement was by means of an Ellison Annubar flow meter of the double probe pitot tube type. Dissolved oxygen uptake was measured at four (or five) locations in the tank by means of a Bausch and Lomb-VOM-5 continuous recorder with check calibration by means of a single probe Yellow Spring dissolved oxygen meter. The test tank and equipment are shown on Figure 10, as set up for the single air lift tests.

Procedure

All tests were run with City of Detroit tap water. Paper punchings and rolled oats were used for particle movement observations. Several of the tests were observed under water by scuba divers.

Before each test, 100 lbs of sodium sulfite and 1 lb of cobalt were added to the tank and mixed to reduce the dissolved oxygen to zero. A steady

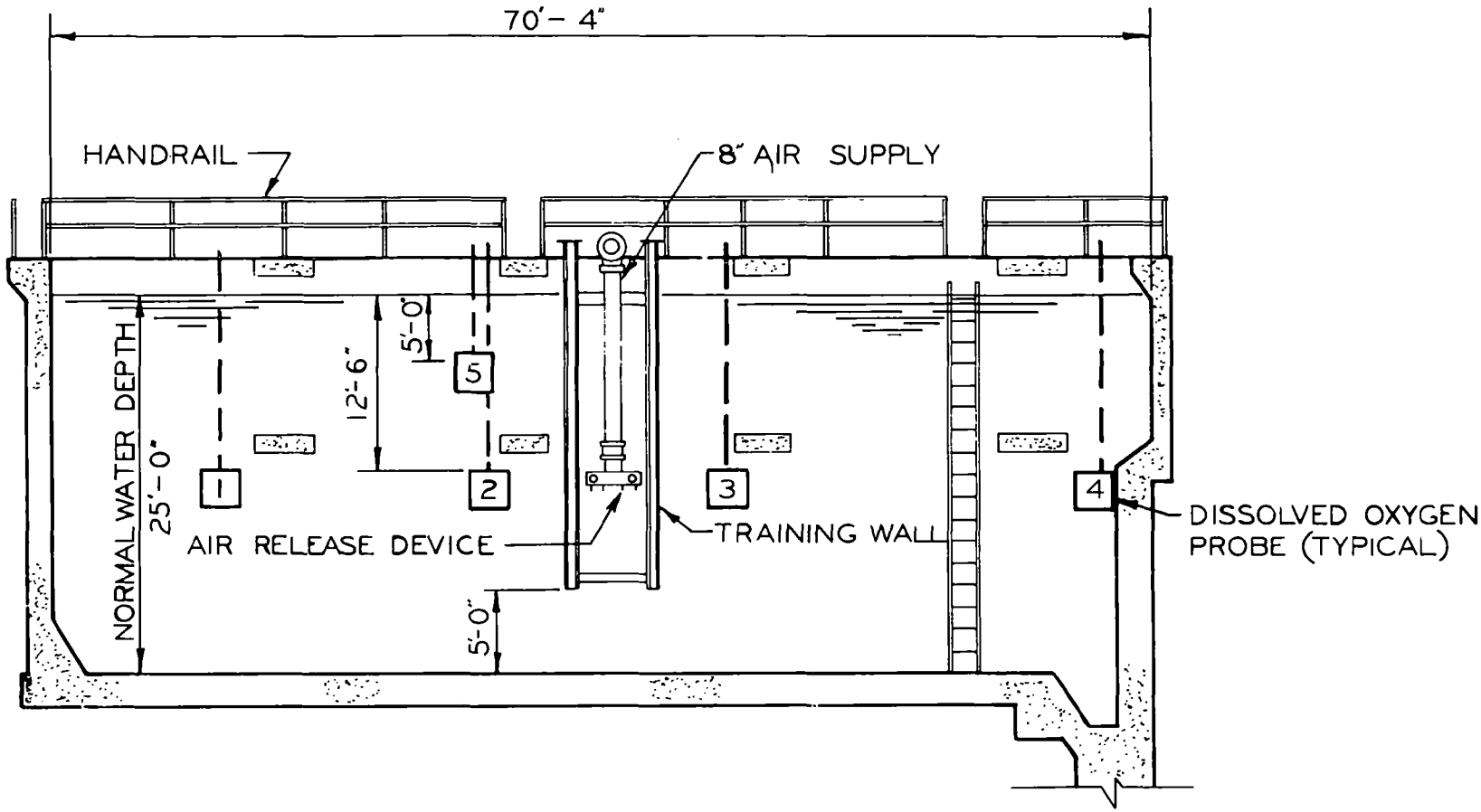

FIGURE 10
DEEP TANK AERATION STUDIES
TYPICAL TANK SECTION DIMENSIONED
(ONE AERATOR UNIT SHOWN)

Procedure (Continued)

reading for each probe was recorded each minute of the test. Water temperature, air temperature, barometric pressure and power requirements were recorded. For each test and each probe oxygen deficit in mg/l was plotted against time in minutes on semi-log paper and a straight line fit obtained from which the values of KL_a were computed to obtain the pounds of oxygen supplied per hour at 20 degrees C.

Testing

On September 17, 1968, the tank was operated with two airlift units to determine the general underwater conditions as to velocity and solid suspension characteristics. Three scuba divers made visual observations within the tank during various modes of aeration operation. A composite sketch of their observations is shown on Figure 11. Operation with two aeration units in service, while giving a high degree of surface agitation, did result in areas within the tank having little if any movement. Operation with one unit, as shown in Figure 12, provided a high degree of surface agitation with surface velocity of 6 fps and bottom velocity of 2 to 4 fps with entire tank content in motion. As a result of these observations it was decided to remove one air lift unit and move the remaining unit to the center of the tank before proceeding with the dissolved oxygen uptake tests. On October 2, 1968, the alteration was completed and scuba diver observations of the operation were recorded with composite results as shown on Figure 13. Air outlet was from 56 sparger units set at 6-inch center to center with each unit providing 8 holes 7/32-inch diameter and two 9/16-inch blow off pipes extending 6 inches below the center of the 7/32-inch holes.

On November 15, 1968, Tests 1 and 2 were run for oxygen uptake with results as shown in Table 3. An indicated oxygen transfer efficiency of 11% was obtained at an air flow of 2900 scfm and 9.9% at 700 scfm.

No further testing was done until May 26, 1969, by which time the air release devices had been changed to provide 56 units set at 6-inch center to center with each unit providing 16 holes 3/16-inch diameter and four 3/4-inch blow off pipes extending 6 inches below the center of the 3/16-inch holes. Tests 3, 4, 5 and 6 were run with these outlets with results as shown in Table 3. Oxygen transfer efficiency varied from 8.3% to 13.4% with air flow varying from 1200 scfm to 3260 scfm.

During the period June 19 to August 27, 1969, Tests 7, 8, 9, 10 and 11 were run using the air outlets installed for Tests 3 through 6 but with all 3/16-inch holes closed forcing all air to outlet from the blow off pipes with results as shown in Table 3. Test No. 7 with indicated efficiency of 4.4% and Test No. 8 with indicated efficiency of 17.9% are to be disregarded due to instrumental difficulties in measuring oxygen uptake and air flow. Oxygen transfer in Tests 9, 10 and 11 varied from 5.3% to 8.1% with air flow varying from 1344 scfm to 1910 scfm.

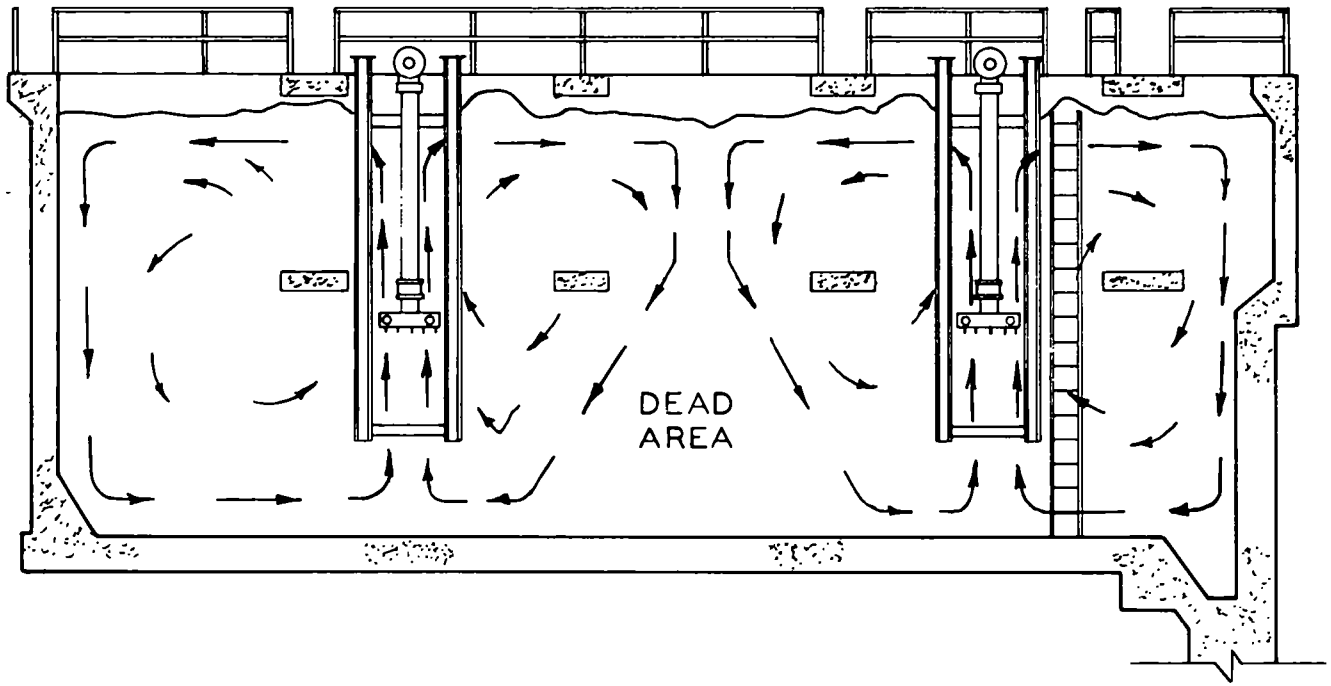

FIGURE 11
DEEP TANK AERATION STUDIES
TWO AERATION UNITS - BOTH ON

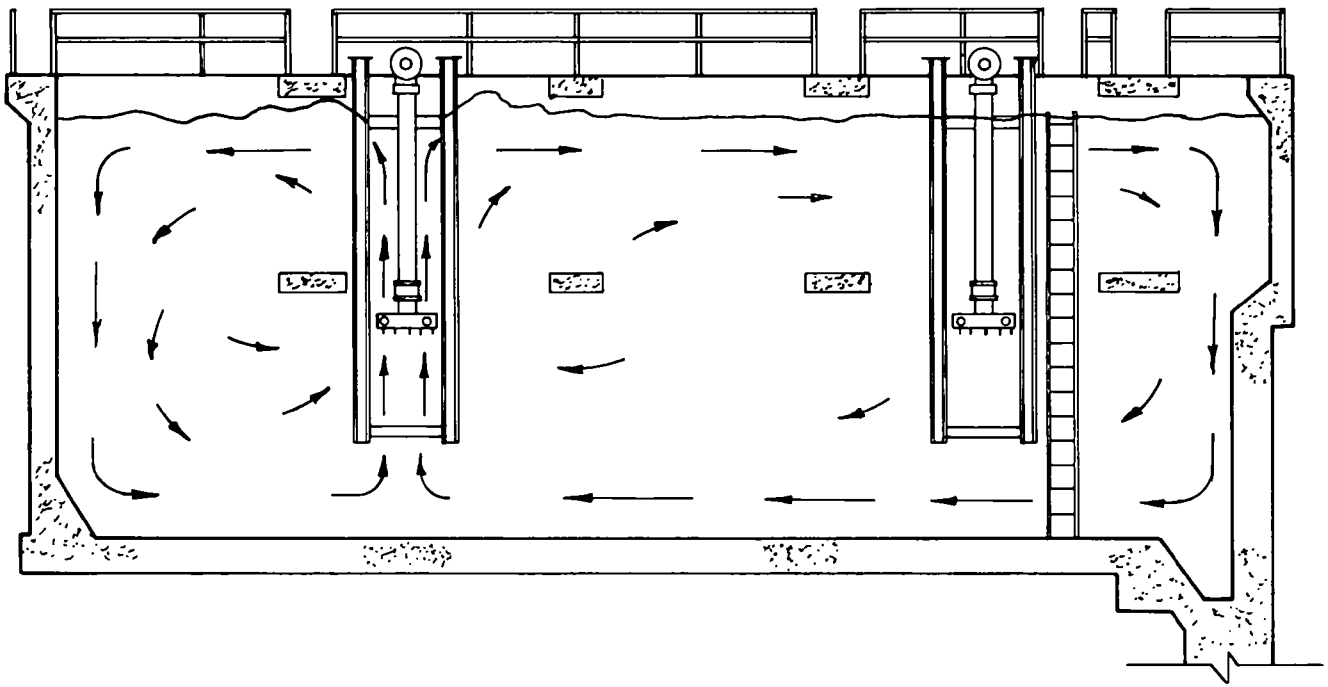

FIGURE 12
DEEP TANK AERATION STUDIES
TWO AERATION UNITS - ONE ON

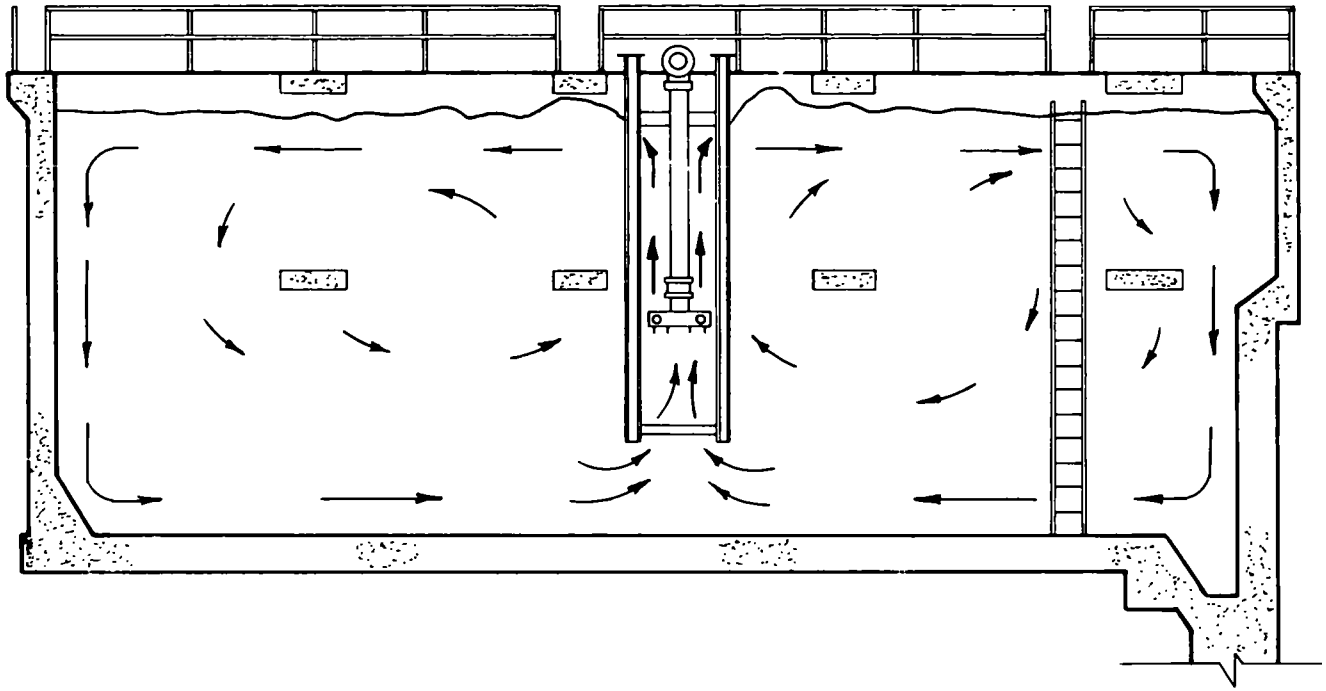

FIGURE 13
DEEP TANK AERATION STUDIES
ONE AERATION UNIT

TABLE NO. 3

SUMMARY OF DEEP TANK AERATION STUDIES

Test No.	Air Release Device	KL_{aT} Probe No. 1	Probe No. 2	Probe No. 3	Probe No. 4	Probe No. 5	Avg.	(1) KL_a @ 20°C	(2) Oxygen Supplied lb/hr 41.72* x (1)	(3) Air Feed SCFM	(4) Oxygen Feed lb/hr 0.96x (3)	Efficiency % (2)/(4)
1	Dual Sparjer	5.15	7.00	5.64	9.60		6.83	7.37	307	2900	2780	11.0
2	" "	1.27	1.48	1.18	1.96		1.47	1.59	66.3	700	670	9.9
3	Quad Sparjer	8.77	8.72	9.08	7.63		8.55	10.05	419	3260	3130	13.4
4	" "	2.06	1.96	1.86	1.91		1.95	2.29	95.5	1200	1150	8.3
5	" "	3.69	3.60	3.37	3.66		3.58	4.24	177	2133	2050	8.6
6	" "	6.31	6.23	6.36	6.24		6.28	7.38	308	3100	2980	10.3
7	Blow Off Pipes Only	--	2.78	3.14	3.23		3.05	3.31	138	3269	3140	4.4
8	" "	9.22	8.50	9.08	8.66		8.86	9.30	388	2384	2289	17.0
9	" "	3.65	3.42	3.79	3.32		3.54	3.35	140	1990	1910	7.3
10	" "	4.95	4.92	5.60	5.20		5.17	4.90	205	2636	2530	8.1
11	" "	1.82	1.74	1.87	--		1.81	1.71	71.3	1400	1344	5.3
12	Quad Sparjer	1.60	1.63	1.63	1.51		1.59	1.57	65.5	1379	1325	4.9
13	" "	2.70	2.71	2.35	2.68		2.61	2.58	108	1957	1880	5.7
14	" "	4.21	4.16	4.69	3.82		4.22	4.18	174	2763	2650	6.6
15	" "	6.19	5.78	5.66	5.71		5.84	5.77	241	2771	2660	9.1
16	Discfuser	2.79	2.95	3.51	3.07		3.08	3.78	157.7	1410	1354	11.6
17	"	8.30	7.00	8.16	9.07		8.13	9.99	416.8	2820	2720	15.3
18	"	2.04	2.08	2.04	2.10		2.065	2.56	106.7	860	825	12.9
19	"	4.85	5.14	4.86	4.81		4.915	6.09	254.0	1990	1910	13.3
20	"	4.43	3.61	5.07	4.74		4.46	5.52	230	1990	1910	12.0
21	"	6.64	6.18	6.20	6.68	7.68	6.68	8.27	345	2700	2590	13.3
22	"	1.54	1.65	1.45	1.48	1.64	1.55	1.92	76.0	250	240	31.6
23	"	5.62	6.28	7.53	5.75	6.85	6.41	7.95	315	2750	2640	11.9

* 39.6 used for Tests 22 and 23 in which water level was 18 in. below normal.
See Page 38 for sample calculations and equations.

Testing (Continued)

During the period September 8, 1969, to September 19, 1969, Tests 12, 13, 14 and 15 were run using the air outlets as installed for Tests 3, 4, 5 and 6, i.e., air was released from the 3/16-inch holes as well as the 3/4-inch blow off pipes, with results as shown on Table 3. Oxygen transfer efficiency for this series of tests varied from 4.9% to 9.1% with air flow varying from 1379 scfm to 2771 scfm.

During the period October 31, 1969, to November 6, 1969, Tests 16 through 23 were run using 112 discfuser assemblies for air release. Each air outlet consisted of a 3/4-inch nipple with a 3-9/16-inch diameter polyvinyl chloride floating disc which released air around its periphery. The air outlets were fed from a central 6-inch pipe with 3/4-inch feed pipes at 3-inch centers. The air outlets were in four rows with outlets spaced on 6-inch center in each row, all contained within baffle walls 6'-0" apart. The horizontal area within the baffles was 96 sq ft. Within the range of air flow from 860 scfm to 2820 scfm the oxygen transfer efficiency varied from 11.6% to 15.3%, averaging 12.9%. Test No. 22 at an extremely low air flow of 250 scfm resulted in an oxygen transfer efficiency of 31.6%; however, under these conditions circulation velocity and oxygen transfer rate were impractical for the proposed aeration system. The uniformly high oxygen transfer efficiency for this series of tests is attributed to the 33% increase in the area contained within the baffles as compared to the results of Tests 1 through 15.

Indicated Power Requirements

Power measurements were significant only when all air from the blower was being delivered to the air outlets. Tests 3, 6, 14 and 15 averaged 286 pounds of oxygen per hour and required 134 HP resulting in an average of 2.14 lbs oxygen/HP-Hr at an average oxygen transfer efficiency of 9.8%.

Test No. 17, 21 and 23 averaged 358 pounds of oxygen per hour equal to 2.67 lbs of oxygen/HP-Hr at an average oxygen transfer efficiency of 13.5%.

Test Tank Parameters

Air from the 56 sparjers was released at rates varying from 21 to 58 scfm per unit. The 56 sparjers were contained within a baffled 72 sq ft area. Air release within this area varied from 17 to 45 scfm/sq ft.

The air liquid flow relationship for the 238,000 gal. test tank is as follows:

Test Tank Parameters (Continued)

Mixed Liquor Detention Hours	Total Flow GPM	Primary Effluent Flow 25% Return GPM	Primary Effluent Flow 50% Return GPM
2	1980	1530	990
3	1320	990	660

Primary Effluent Flow GPM	SCFM Air Flow Per Gallon 0.5	1.0	1.5	2.0
		Total Air Flow		
660	330	660	990	1320
990	495	990	1485	1980
1530	765	1530	2295	3060

The test facility was operated at total air flows ranging from 700 to 3260 scfm. While no actual BOD removal tests were run the following BOD relationships have been computed for an average primary effluent BOD of 130 mg/l and a tank volume of 31,800 cf.

Primary Effluent Flow GPM	BOD per Day lbs	lbs BOD per day per 1000 cf Aeration Volume	Total Air SCFM to supply 1000 cf/lb BOD
660	1020	32.1	660
990	1530	48.2	1060
1530	2370	74.5	1650

Conclusions

The tests have demonstrated the feasibility of using compressed air at normal blower pressure of 7 to 8 psi using the air lift pumping principal to provide for oxygen transfer and circulation of contents of deep aerator tanks. The device tested created currents that entrained air throughout the test tank, provided good mixing and transferred oxygen within acceptable limits of efficiency and horsepower requirements. The tests have provided data for the design of a full scale aerator having a volume of 17,800,000 gallons consisting of 10 bays, each 60 ft wide by 132 ft long by 30 ft swd.

The calculations for the development of Table No. 3 were based on the following:

① $KL_a = \log_e \frac{(C_s - C_1)}{(C_s - C_2)} \div (t_2 - t_1)$

② O_2 Supplied @ 20° C lb/hr $= 2.3 \frac{9.17 \times 8.34 \times 238{,}000}{1{,}000{,}000} KL_a = 41.72\ KL_a$

③ O_2 Feed lb/hr $= 0.76 \times \text{cfm} \times 60 \times 21 \div 100 = 0.96 \times \text{cfm}$

SECTION VIII

LABORATORY TEST PROCEDURES

Introduction

To evaluate the performance of the pilot plant, various analytical tests, as described in the following pages, were performed. Most of the analytical tests were performed on a routine daily basis. Automatic samplers were used to obtain 24-hour composites of the raw sewage, primary effluent and final effluent. The mixed liquor and return sludge samples were grab samples.

The analytical procedures were basically performed in accordance with methods outlined in the Twelfth Edition of "Standard Methods for the Examination of Water and Wastewater, 1965", unless otherwise indicated.

Grease Analysis

Reference is made to "Standard Methods," Pages 383 through 385.

A one-liter sample of final effluent sewage was collected from the 24-hour composite. The sample was acidified to a pH of about 1.0 with 3 to 5 mls of concentrated HCl.

A Buchner funnel was prepared by taking one gm of Johns-Mansville celite filter aid and adding it to 100 mls of water to make a slurry. The slurry was poured into the funnel, which contained a Whatman No. 40, 12.5 cm filter paper. Vacuum was applied and the slurry filtered. The sample was then filtered until the paper appeared dry.

When completely filtered the paper was removed and put into a Whatman seamless extraction thimble. Any residue remaining in the funnel was collected with a piece of cotton soaked in petroleum ether, and the cotton and residue were added to the extraction thimble. The thimble was dried for 2 hours at 103°C.

An extraction flask was weighed and recorded. The grease was extracted for 4 hours in a Soxhlet apparatus using petroleum ether (boiling point 30°-60°C). Finally the ether was distilled off, and the flask dried and weighed.

Calculation:

$$\text{mg/l total grease} = \frac{\text{mg increase in weight of flask} \times 1000}{\text{ml sample used}}$$

Sludge Volume Index

Reference is made to "Standard Methods," Page 541 and 542.

The sludge volume index (SVI) of grab samples of mixed liquor and returned activated sludge were measured daily as the milliliters occupied by one gram of sludge which settled from one liter of the sample after 30 minutes of settling in a one-liter graduated cylinder.

Calculation:

$$SVI = \frac{\text{ml settled sludge} \times 1000}{\text{mg/l suspended matter*}}$$

Suspended Solids and Volatile Suspended Solids

Reference is made to "Standard Methods," Pages 424 and 425.

The suspended solids was determined by vacuum filtration in a #4A Gooch crucible using a Reeves Angel Glass Fiber Filter No. 934AH, 2.4 cm. The vacuum was provided by a Precision Scientific Company Vacuum Pump, Model 150.

The crucibles were prepared by placing a glass mat in each crucible and filtering distilled water to remove any loose fibers and to seat the mat. These crucibles were then fired at 600°C for 20 minutes, cooled to room temperature, weighed and stored in a dessicator until used.

At time of use they were placed in a Walters Crucible holder in a vacuum flask. The sample was added and vacuum applied until all the liquid had passed through the mat. In most cases, a fifty milliliter portion of the sample was filtered.

The crucibles were dried at 103°C for at least 30 minutes, cooled and weighed for suspended solids.

For volatile suspended solids the same crucible was then placed in a muffle furnace at 600°C for 20 minutes to burn off all volatile solids. (Note: Any longer time may cause loss in weight of the glass mat). The crucibles were then cooled and weighed for volatile solids.

Dissolved Oxygen

Reference is made to "Standard Methods," Pages 405 and 406.

The dissolved oxygen (DO) analyses for the pilot plant were run with a Yellow Springs Instrument Company's Model 50 Oxygen Meter, using #5103

---

* Suspended matter - obtained from the analysis of suspended solids.

Dissolved Oxygen (Continued)

temperature compensated probe with 0.0005-inch thick teflon membranes. The probe was completely immersed in the liquid with flow past the membrane being provided by the motion of the liquid. It was found that from 1 to 2 minutes was generally required for equilibrium to be reached. The probe was standardized against water which was standardized by the Winkler DO method.

Biochemical Oxygen Demand

Reference is made to "Standard Methods," Pages 415 to 421.

The Biochemical Oxygen Demand (BOD) was determined for the raw influent, primary effluent and final effluent samples.

Two BOD determinations were made for each sample. The following concentrations were found satisfactory for our samples.

Raw sewage:	1% and 2%
Primary effleunt:	2% and 3%
Final effluent:	10% and 15%

A portion of the sample was pipetted into two 300 ml BOD bottles and each diluted with dilution water of known dissolved oxygen concentration. The dilution was prepared by adding magnesium sulfate, calcium chloride, ferric chloride and phosphate buffer to distilled water and aerating it. The BOD bottles were then placed in a BOD cabinet for five days at 20°C.

After five days the samples, along with a blank, were removed and the DO was determined by the azide modification of the idometric method. The DO of the blank was then used to calibrate a YSI Model 54 DO meter. The meter was then used to determine the DO of the samples. The probe used was the YSI 5420 BOD probe with agitator.

The following formula was used to determine the BOD.

$$BOD = \frac{a - (a \times b) - c}{b} \times 100$$

Where: a = DO of BOD water (blank) @ 20°C
b = % concentration of sample used
c = final DO after 5 days @ 20°C

The average of the two BOD determinations were reported.

Iron

Reference is made to "Standard Methods," Pages 154 to 159.

Ferrous iron concentrations were determined colorimetrically after the formation of an orange-red complex of ferrous iron and phenanthroline.

Iron (Continued)

The reagents were:

a) Buffered ortho-phenanthroline solution containing 50 grams sodium acetate, 25 grams sodium hydroxide, and 0.35 grams 1,10-phenanthroline monohydrate per liter of distilled water.

b) Hydroxylamine solution containing 100 gm hydroxylamine hydrochloride per liter of distilled water.

c) Concentrated hydrochloric acid.

A Bausch & Lomb "Spectronic - 20" Spectrophotometer was used for iron analysis of the raw influent, primary effluent and final effluent samples.

A 50 ml sample was measured into a 150 ml graduated beaker. To the sample was added 2 ml concentrated hydrochloric acid and 2 ml of hydroxylamine solution. The sample was mixed and heated in an autoclave at 230°F for 15 minutes. After cooling, 30 mls of phenanthroline solution was added. The sample was diluted to 100 mls with distilled water, mixed and allowed to set at least 10 minutes for color development.

After the "Spectronic - 20" was allowed to warm up for at least 15 minutes, the absorbence of the sample was measured, using distilled water as the blank. The wave length was set at 510 millimicrons.

The absorbence reading was compared to those of standard iron solutions previously analyzed.

Chlorine Requirement

Reference is made to "Standard Methods," Pages 112 to 114 and Pages 381 to 383.

The chlorine requirement of the final effluent after a 15 minute contact period was determined to measure the minimum amount of chlorine necessary to provide a free chlorine residual.

Chlorine water was prepared by bubbling chlorine gas through tap water until a medium yellow color developed, and then by diluting a part of the solution to 2 parts of tap water. The weaker solution was analyzed daily for its chlorine content.

Approximately 0.2 gm of reagent grade potassium iodide crystals and six drops of 50% glacial acetic acid (sufficient to drop the pH to 4.0) were added to 100 mls of distilled water in a 300 ml Erlenmeyer flask. After adding 10.0 mls of chlorine water the solution was immediately filtrated with 0.025 normal sodium thiosulfate solution to a faint yellow color.

Chlorine Requirement (Continued)

Starch indicator solution was added, and the titration continued until the blue color disappeared. The starch indicator contained 5 gm starch and 17 gm potassium iodide per liter. The following formula was used to determine the chlorine content.

$$\text{mg/ml Cl} = \frac{\text{ml } Na_2S_2O_3 \text{ x Normality } Na_2S_2O_3 \text{ x } 35.46 \text{ mg/ml}}{\text{ml chlorine water}}$$

The chlorine requirement was determined from a grab sample of the final effluent. After determining the temperature of the sample, it was mixed and poured into each of five graduated 300 ml Erlenmeyer flasks (200 ml of sample into each). Chlorine water was added to the samples increasing the amount by 0.4 ml in each successive flask, so that the third flask contained approximately that amount necessary to satisfy the chlorine demand previously estimated by an analysis or spot plate test.

Fifteen minutes after the last chlorine water addition (a timer was set), approximately 5 ml of starch indicator solution was added to each flask. The amount of chlorine water that produced the faintest blue color was noted. Usually that amount had to be estimated between the successive dosages. The following formula was used to calculate the chlorine requirement.

$$\text{mg/l Cl} = \frac{\text{ml } Cl_2 \text{ water x mg Cl per ml } Cl_2 \text{ water x } 1000}{\text{200 ml of sample}}$$

Inorganic Phosphate Determination

Reference is made to Technicon Corporation's "Operating Instruction Manual" for the Technicon Auto Analyzer.

Each sample was set up to determine the inorganic phosphate concentration to three levels. (1) The total inorganic phosphate concentration was determined from a portion of the sample which had been hydrolyzed for the conversion of inorganic phosphate to ortho phosphate. Hydrolysis was accomplished by autoclaving 25 ml of sample with 0.5 ml of strong acid solution for 15 minutes at 230°F and 15 psi. The sample was cooled and filtered through S & S fluted filter paper (#588, 18 cm) to remove turbidity. (2) The total dissolved inorganic phosphate concentration was run on the filtrate of the suspended solids test after undergoing hydrolysis. (3) The dissolved inorganic phosphate concentration was determined from the filtrate of the suspended solids test but was not subjected to hydrolysis.

These samples were then run on a Technicon Auto Analyzer using a modified version of Technicon's Inorganic Phosphate Method (N-4b). The modified version is illustrated in Figure 14. The samples were treated with acidified ammonium molybdate reagent, producing phosphomolybdic acid, and immediately reduced with 1-amino-2-naphthol-4-sulfonic

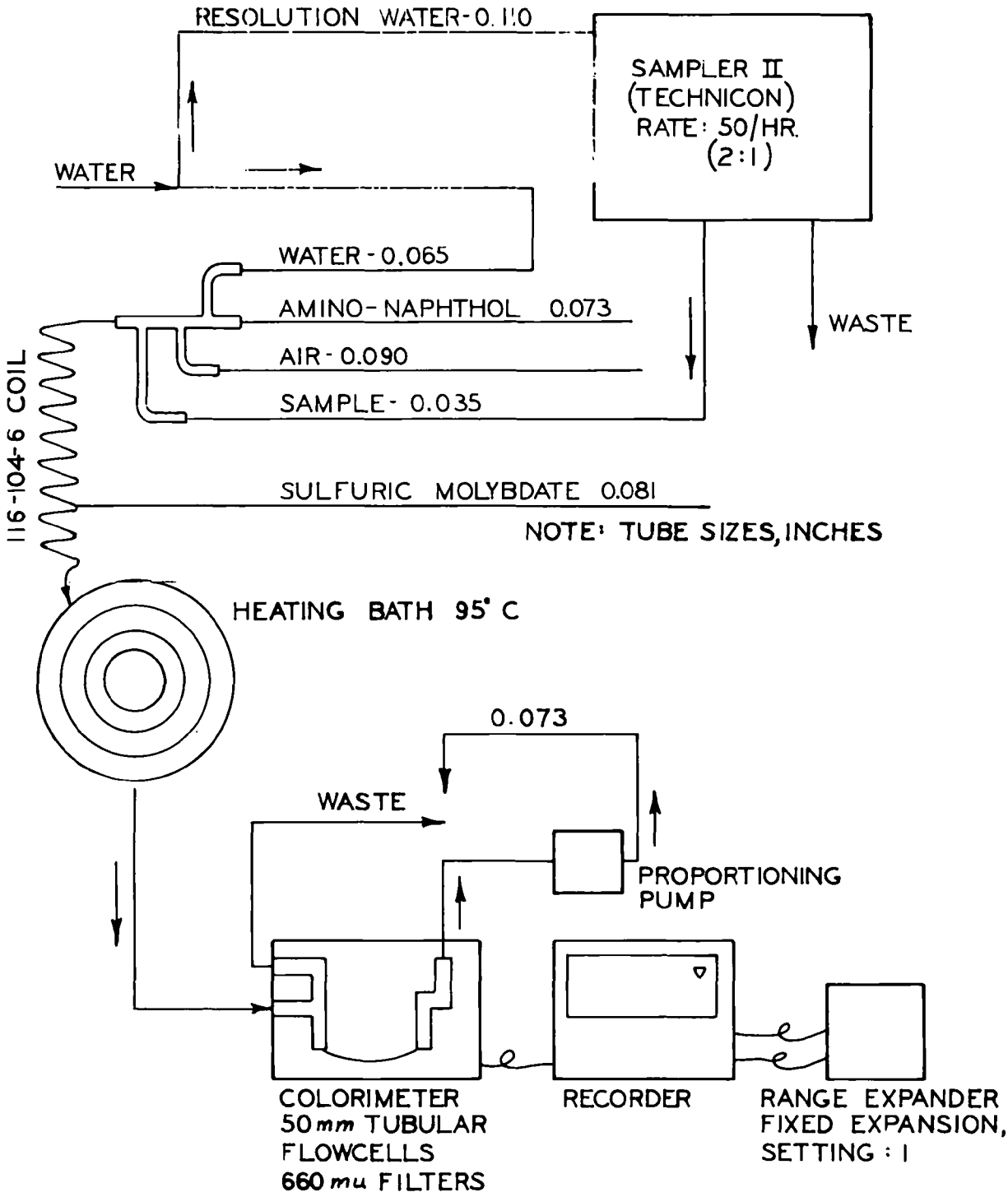

FIGURE 14
MODIFIED ANALYSIS ORTHO PHOSPHATE

Inorganic Phosphate Determination (Continued)

acid reagent. The reaction mixture passed through a 95°C heating bath to develop the blue color resulting from the formation of molybdenum blue. The optical density of the resultant solution was proportional to the amount of phosphate present. It was measured at 660 millimicrons in a tubular flow cell having a 50 mm light path and graphed on a strip chart. The peaks were compared to those of standard phosphate solutions previously analyzed.

The strong acid solution was prepared by adding 300 ml of concentrated sulfuric acid to 600 ml of water. After cooling, 4.0 ml of concentrated nitric acid was added to the solution. The solution was then diluted to one liter.

The stock solution of sulfuric molybdate (See Figure 14) was prepared by dissolving 75 gm of ammonium molybdate in approximately 1 liter of water. Concentrated sulfuric acid (530 ml) was added and the solution was mixed, cooled and diluted to 2 liters. The working solution was prepared by mixing one part of the stock solution with four parts water.

The amino napthol stock solution (See Figure 14) was prepared by dissolving 240 gm of sodium bisulfite and 8.0 gm of sodium sulfite in 800 ml of water. After heating the solution to 50°C, 4.0 gm of 1-amino-2-napthol-4-sulfonic acid was added. The solution was diluted to two liters. The working solution was prepared by mixing one part stock solution with four parts water.

The phosphate standard solution of 1 mg P/ml was prepared by mixing 4.3937 gm of potassium dihydrophosphate with one liter of water.

Phenol

Reference is made to "Standard Methods," Page 514 and to the Technicon Corporation's "Operating Instruction Manual for the Technicon Auto Analyzer."

Phenol determinations were run on the raw influent, primary effluent and final effluent. One ml of 10% phosphoric acid was added to a 50 ml sample in a 300 ml boiling flask with boiling chips. The mixture was distilled until 40 ml of distillate was collected. After the flasks cooled, 10 ml of distilled water was added. The distillation was continued until a total of 50 ml of distillate was obtained.

Portions of the distillate were processed through the Technicon Auto-Analyzer as illustrated in Figure 15. The reading was compared to those of standard phenol solutions previously analyzed.

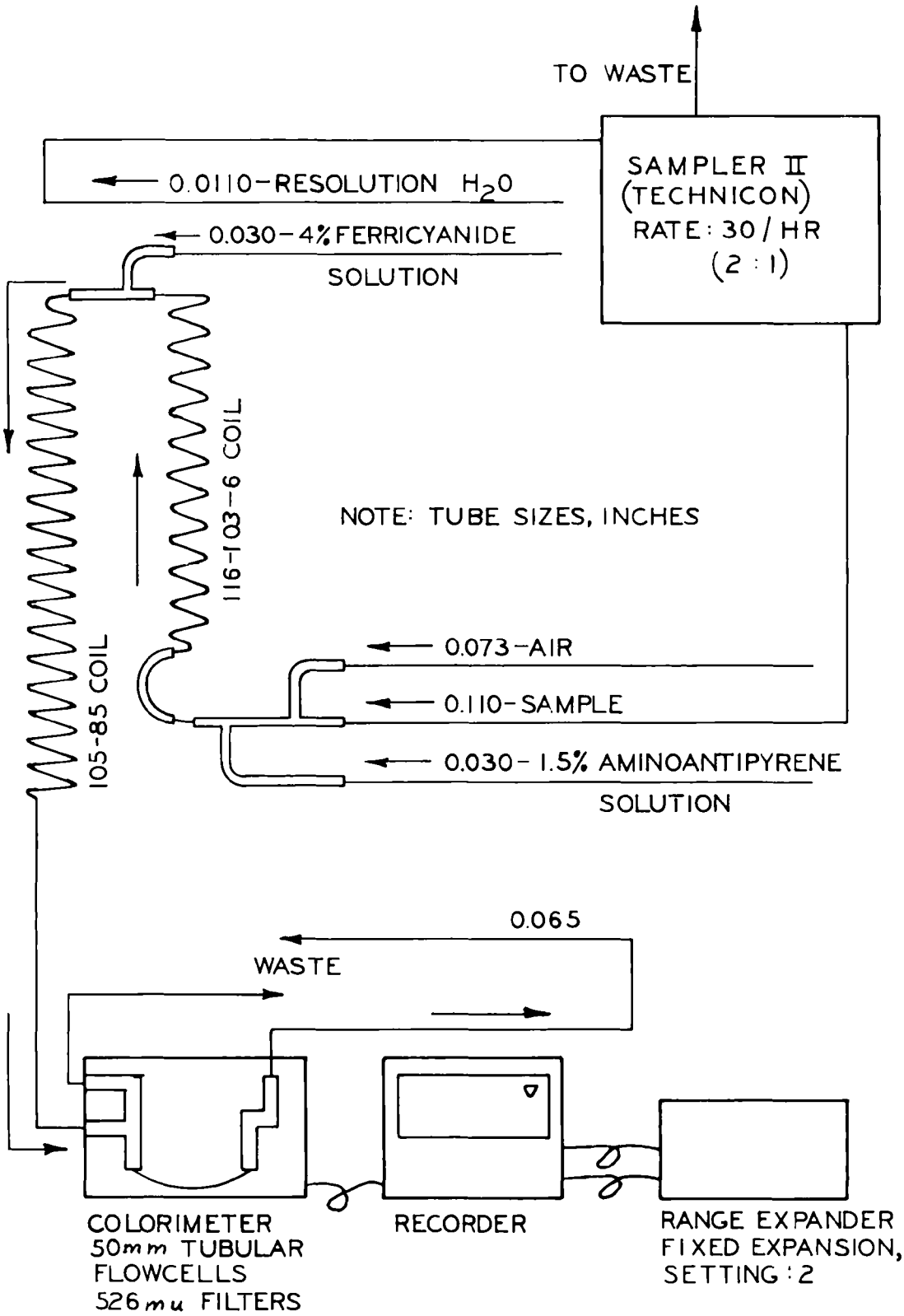

FIGURE 15
PHENOL ANALYSIS

Phenol (Continued)

The 1.5% buffered aminoantipyrene solution (See Figure 15) was prepared by dissolving 15 gm 4-aminoantipyrene, 30 gm of sodium carbonate and 30 gm sodium bicarbonate and diluting to one liter. The solution was filtered after mixing.

The 4.0% buffered ferricyanide solution (See Figure 15) was prepared by dissolving 40 gm potassium ferricyanide, 30 gm sodium carbonate and 30 gm sodium bicarbonate and diluting to one liter. The solution was filtered after mixing.

SECTION IX

ACKNOWLEDGMENTS

Board of Water Commissioners

John H. McCarthy
Charles H. Beaubien
Oscar A. Wagner
John D. McEwen
Henry R. Kozak
William Haxton
George J. Fulkerson
David Boston, Secretary to the Board

Gerald J. Remus, General Manager and Chief Engineer

Engineering Division

Harvey E. Werner - Assistant Chief Engineer
E. Cedroni - Head Engineer, Engineering Services
C. Schultz - Head Engineer, Field
D. Suhre - Head Engineer, Wastewater Systems
F. Daskus - Electrical Engineer
I. Schuraytz - Mechanical Engineer
R. Hagen - Sr. Associate Civil Engineer
J. Kegler - Sr. Associate Civil Engineer
C. Barksdale - Associate Civil Engineer

Operations Division

George Dehem - Superintendent of Operations
A. Shannon - Chief of Water and Sewage Treatment
J. Urban - Chief Engineer, Wastewater Plant
P. Skupeko - Supervisor of Filtration

Consultants

George E. Hubbell - President, Hubbell, Roth & Clark, Incorporated
Dr. Gilbert V. Levin - President, Biospherics Incorporated

Federal Water Quality Administration

Dr. Robert L. Bunch - Chief, Biological Research Activities

ACKNOWLEDGMENTS
(Continued)

Project Steering Committee

R. Bunch - Federal Water Quality Administration
G. Hubbell - Hubbell, Roth & Clark, Incorporated
J. Kegler - Detroit Metro Water Department
G. Levin - Biospherics Incorporated
A. Shannon - Detroit Metro Water Department
P. Skupeko - Detroit Metro Water Department
D. Suhre - Detroit Metro Water Department
J. Urban - Detroit Metro Water Department

Pilot Plant Operations

P. Skupeko
J. Grasel
S. Finkelstein
W. Cebalt
R. Encelewski
J. VanHavermaat
W. Nagi
J. Troiano
J. Grogenski
C. Leen

Report Delineation and Production

S. Beer
C. Porter
E. Tulecki
B. Walker
Q. Washington

APPENDIX A

SUMMARY ACTIVATED SLUDGE TESTING

TEST NUMBER	PROCESS	TREATMENT UNITS*	REMARKS
1	Conventional	1P, 5ML, 2F	No chemical feed
2	Conventional	1P, 5ML, 2F	No chemical feed
3	Conventional	1P, 5ML, 2F	No chemical feed
4	Conventional	1P, 5ML, 2F	No chemical feed
5	Conventional	1P, 5ML, 2F	No chemical feed
6	Conventional	1P, 5ML, 2F	No chemical feed
7	Conventional	1P, 5ML, 2F	No chemical feed
8	Conventional	1P, 5ML, 2F	Iron feed to raw sewage
9	Conventional	1P, 5ML, 2F	Iron feed to mixer and flocculate ahead of primary
10	Conventional	1P, 5ML, 2F	Iron feed direct to aeration tank
11	Conventional	1P, 5ML, 2F	Iron feed direct to aeration tank
12	Conventional	1P, 5ML, 2F	Iron feed direct to aeration tank
13	Conventional	1P, 5ML, 2F	Iron (7 x dilution) feed direct to aeration tank
14	Conventional	1P, 5ML, 2F	Iron (7 x dilution) feed direct to raw sewage
15	Conventional	1P, 5ML, 2F	Iron feed direct to raw sewage
16	Conventional	1P, 5ML, 2F	Iron feed direct to raw sewage
17A	Step Feed	1P, 1RS, 4SF, 2F	Iron feed direct to raw sewage
17B	Step Feed	1P, 1RS, 3SF, 2F	Iron feed direct to raw sewage
18	Step Feed	1P, 1RS, 4SF, 2F	Iron feed direct to raw sewage, raw sewage flow varied in proportion to main plant flow
19A	Conventional	1P, 5ML, 2F	No chemical feed
19B	Conventional	1P, 5ML, 2F	No chemical feed
20A	Levin	1P, 5ML, 2F	Return sludge under zero DO for 12.5 hours
20B	Levin	1P, 4ML, 2F	Return sludge under zero DO for 13.0 hours
21	Step Feed	1P, 1RS, 3SF, 1ML, 2F	Iron feed to raw sewage
22A	Step Feed	1P, 1RS, 3SF, 1ML, 2F	Iron feed to raw sewage
22B	Step Feed	1P, 1RS, 3SF, 1ML, 2F	Iron feed to raw sewage
23	Bioabsorption	1P, 4RS, 1ML, 2F	
24	Step Feed	1P, 1RS, 3SF, 1ML, 2F	Iron and waste sludge feed to raw sewage, mixed and flocculated
25	Step Feed	1P, 1RS, 3SF, 1ML, 2F	Iron feed to raw sewage, mixed and flocculated
26	Step Feed	1P, 1RS, 3SF, 1ML, 2F	Iron feed to raw sewage, mixed
27	Step Feed	1P, 1RS, 3SF, 1ML, 2F	Iron and waste sludge feed to raw sewage, mixed and flocculated, polymer to aerator
28	Conventional	1P, 2ML, 2F	Iron feed to raw sewage, polymer into flocculator
29	Step Feed	1P, 4SF, 1ML, 1F	Iron feed to raw sewage, caustic and polymer into mixer, mixed and flocculated
30	Step Feed	1P, 4SF, 1ML, 2F	Iron feed to raw sewage, caustic to mix, flocculate, polymer to aeration tank
31	Step Feed	1P, 4SF, 1ML, 2F	Iron feed to raw sewage, flocculate, polymer to aeration tank
32	Step Feed	1P, 4SF, 1ML, 2F	Iron feed to raw sewage, caustic to mixer, flocculate, polymer to aerator

*Treatment Units: P = primary tank, ML = mixed liquor compartment, RS = return sludge compartment, SF = step feed compartment and F = final tank. The prefix number indicates the number of units utilized.

APPENDIX B

ACTIVATED SLUDGE TEST DATA

Test No.	1	2	3	4	5	6	7	8	9	10	11	12
Date Start	1/17/67	12/5/67	12/18/67	1/12/68	1/24/68	2/14/68	3/1/68	3/28/68	4/8/68	4/23/68	5/4/68	5/17/68
Date End	12/4/68	12/17/67	1/9/68	1/22/68	2/13/68	2/29/68	3/27/68	4/7/68	4/22/68	5/3/68	5/16/68	6/6/68
Iron Feed mg/l Fe++								15	15	15	30	15
Caustic Feed mg/l NaOH												
Polymer Feed mg/l Dow A 23												
GPM Raw Sewage	60	45	45	54	55	30	44.5	40	35	40	42	63
GPM Return Act. Sludge	20	15	15	26	26	30	22.2	20	20	20	18	14
GPM Waste R.A.S.	0.44	0.75	0.26	0.58	0.73	0.55	1.30	0.76	0.99	1.23	1.70	1.56
S.V.I.R.A.S.	65	46	92	81	64	85	71	50	72	104	86	54
S.V.I. Mixed Liquor	59	34	68	67	40	55	55	37	55	71	58	34
Mixed Liquor Solids mg/l	2350	2120	2720	3350	4180	4606	3140	2554	2520	2928	2410	2265
Return Act. Sludge Solids mg/l	6480	8200	7450	10500	12200	8930	8850	6729	7000	7900	7050	8951
Pounds of Aerator Solids	210	190	240	295	367	405	275	225	220	260	212	200
Pounds of BOD per day	84	63	63	96	65	52	66	60	57	79	80	88
BOD Sludge Age Days	2.5	3.0	3.5	3.1	5.6	7.8	4.2	3.75	3.86	3.30	2.66	2.27
BOD Raw Sewage mg/l	148	187	223	254	125	180	208	207	272	231	279	153
BOD Primary Eff. mg/l	117	114	125	149	98	144	124	125	136	166	159	117
BOD Final Eff. mg/l	26	10	16	14	17	18	16	19	21	21	25	39
Air C.F. per Gallon	0.94	0.98	0.83	1.22	0.94	1.97	1.31	0.98	1.12	1.31	1.30	0.83
Air C.F. per Pound of App. BOD	968	1000	790	990	1150	1625	1275	935	1000	960	980	855
Suspended Solids Raw Sewage mg/l	308	393	500	515	346	383	457	445	782	630	582	320
Suspended Solids Pri. Eff. mg/l	191	170	193	247	177	181	233	202	206	211	245	181
Suspended Solids Final Eff. mg/l	59	21	38	31	19	27	23	40	32	25	31	46
Primary Settling Rate gal/sf/day	1350	1050	1050	1240	1260	700	1040	900	800	900	950	1430
Primary Settling Time Hrs.	1.05	1.4	1.4	1.16	1.14	2.1	1.38	1.58	1.80	1.58	1.53	1.0
Mixed Liq. Aeration Time Hrs.	2.2	3.0	3.0	2.2	2.2	3.0	2.6	3.0	3.2	3.0	3.0	2.3
Final Settling Rate gal/sf/day	675-1350	525	525	620	630	350	520	460	400	460	480	715
Final Settling Time Hrs.	2.1-1.05	2.8	2.8	2.32	2.28	4.2	2.76	3.06	3.60	3.16	3.06	2.0
Total Phosphate as P Raw mg/l	6.7	6.9	6.8	8.6	6.0	8.2	7.8	6.4	8.7	7.7	7.5	6.2
Total Phosphate as P Pri. Eff. mg/l	5.8	5.6	6.1	7.7	5.1	7.2	6.6	4.5	6.0	7.1	5.9	5.6
Total Phosphate as P Final mg/l	3.0	2.4	3.0	2.4	2.2	2.8	2.6	1.2	1.5	1.2	0.9	1.5
Total Phosphate as P M.L. mg/l	57	48	59	85	80	125	70	52	60	86	60	54
Total Phosphate as P RAS mg/l	134	170	146	228	200	230	172	127	156	187	144	195
Soluble Phosphate as P Raw mg/l	2.1	1.3	1.9	2.8	2.3	3.3	1.7	1.1	1.6	2.0	2.0	1.8
Soluble Phosphate as P Pri. Eff. mg/l	2.3	1.6	1.9	1.6	1.2	2.0	1.7	.5	1.0	2.3	2.2	2.0
Soluble Phosphate as P Final mg/l	1.8	1.4	1.9	1.3	1.1	1.6	1.3	0.5	0.7	0.6	0.4	0.4
Oil Final mg/l		11.4	13.5	18.4	13.0	8.4	5.9	6.0	11.0	16.0	9.0	9.0
Phenol Raw ppb	283	248	318	365	227	404	415	309	335	344	397	256
Phenol Final ppb	82	58	88	50	39	39	53	49	48	44	85	75

APPENDIX B
ACTIVATED SLUDGE TEST DATA

Test No.	13	14	15	16	17A	17B	18*	19A	19B	20A	20B	21
Date Start	6/7/68	6/21/68	7/12/68	7/26/68	8/9/68	8/23/68	9/6/68	10/4/68	10/18/68	11/7/68	11/26/68	12/10/68
Date End	6/20/68	7/11/68	7/25/68	8/8/68	8/22/68	9/5/68	10/3/68	10/17/68	11/7/68	11/25/68	12/9/68	12/31/68
Iron Feed mg/l Fe++	19	.18	16	15	15	15	17					15
Caustic Feed mg/l NaOH												
Polymer Feed mg/l Dow A 23												
GPM Raw Sewage	52	55	60	46	58	65	45	45	54	36.1	35.2	40
GPM Return Act. Sludge	14	13	13	16	19	23	22	23	25			20
GPM Waste R.A.S.	1.74	1.65	1.97	1.6	1.9	1.7	2.1	2.6	2.2			1.77
S.V.I.R.A.S.	53	56	82	106	82	80	105	82	90	43	36	83
S.V.I. Mixed Liquor	37	41	56	72	75	62	76	65	70	38	39	68
Mixed Liquor Solids mg/l	2730	2540	2440	2400	2905	2690	2580	2452	2884	4802	5502	3255
Return Act. Sludge Solids mg/l	12500	10900	9950	8160	11550	10940	7590	6745	9731	23959	28378	12395
Pounds of Aerator Solids	240	225	215	210	452	395	387	227	252	420	483	552
Pounds of BOD per day	76	62	78	54	88	112	73	63	98	69	69	84
BOD Sludge Age Days	3.16	3.64	2.76	3.89	5.14	3.53	5.3	3.6	2.6	6.1	7.0	6.6
BOD Raw Sewage mg/l	189	160	166	149	173	209	196	169	196	198	214	198
BOD Primary Eff. mg/l	122	94	108	97	127	143	136	117	151	160	163	174
BOD Final Eff. mg/l	38	26	33	21	25	45	25	25	61	28	22	28
Air C.F. Per Gallon	1.16	0.95	0.88	1.25	1.79	1.15	1.67	1.39	1.25	5.44	2.44	1.98
Air C.F. per Pound of App. BOD	1140	1210	977	1120	1700	960	1480	1430	990	4100	1790	1360
Suspended Solids Raw Sewage mg/l	482	438	322	333	338	364	405	491	503	592	462	439
Suspended Solids Pri. Eff. mg/l	195	179	179	184	226	221	186	235	261	221	240	253
Suspended Solids Final Eff. mg/l	34	35	21	30	25	64	15	31	159	47	27	15
Primary Settling Rate gal/s.f./day	1200	1240	1360	1010	1330	1500	1000	1000	1220	1200	1200	900
Primary Settling Time Hrs.	1.2	1.1	1.05	1.40	1.08	0.97	1.40	1.4	1.08	1.2	1.2	1.60
Mixed Liq. Aeration Time Hrs.	2.66	2.60	2.43	2.83	2.30	2.0	2.63	2.60	2.23	3.9	4.17	2.96
Final Settling Rate gal/s.f./day	600	620	680	505	665	750	500	500	615	680	695	450
Final Settling Time Hrs.	2.4	2.2	2.10	2.80	2.16	1.94	2.80	2.80	2.25	2.10	2.16	3.2
Total Phosphate as P Raw mg/l	7.4	5.5	5.9	5.2	4.9	7.0	7.5	6.9	8.6	9.7	9.8	8.2
Total Phosphate as P Pri Eff. mg/l	6.0	3.7	5.1	4.1	4.8	6.3	6.2	6.8	7.6	7.8	8.0	8.3
Total Phosphate as P Final mg/l	1.1	1.3	1.5	1.3	1.5	3.1	1.3	3.0	5.8	3.0	2.7	1.3
Total Phosphate as P M.L. mg/l	77	54	67	57	61	78	76	52	60	105	166	90
Total Phosphate as P RAS mg/l	287	199	239	172	229	278	191	120	159	597	827	306
Soluble Phosphate as P Raw mg/l	2.1	1.6	2.5	1.8	1.6	2.7	2.7	2.3	2.9	2.8	2.3	2.1
Soluble Phosphate as P Pri. Eff. mg.l	2.3	.7	1.6	0.9	1.0	1.6	0.9	2.7	3.0	2.4	2.4	1.3
Soluble Phosphate as P Final mg/l	0.4	0.6	0.9	0.8	0.7	1.3	0.9	2.4	2.9	1.8	1.6	0.8
Oil Final mg/l	7.4	6.5	5.0	6.4	9.1	20.6	7.0	9.4	36.5	14.2	14.2	7.7
Phenol Raw ppb.	455	338	530	410	231	353	369	331	460	390	427	363
Phenol Final ppb.	67	53	67	45	44	93	25	47	172	77	40	43

APPENDIX B

ACTIVATED SLUDGE TEST DATA

Test No.	22A	22B	23	24	25	26	27	28	29	30	31	32
Date Start	1/3/69	1/21/69	2/1/69	2/10/69	2/26/69	3/11/69	3/21/69	4/2/69	4/28/69	5/8/69	5/16/69	6/5/69
Date End	1/20/69	1/31/69	2/9/69	2/25/69	3/10/69	3/20/69	3/31/69	4/27/69	5/7/69	5/15/69	6/4/69	6/30/69
Iron Feed mg/l Fe++	15	15	15	15	15	15	15	15	15	15	15	15
Caustic Feed mg/l NaOH									30	30		30
Polymer Feed mg/l Dow A 23							0.3	0.3	0.3	0.3	0.3	0.3
GPM Raw Sewage	52.4	48	44.9	53.3	51.2	48.5	41.9	48.5	59.6	67.5	68.1	72.3
GPM Return Act. Sludge	12.0	10	11.4	12.6	18.9	16.8	19.2	17.9	27.7	24.2	24.0	25.0
GPM Waste R.A.S.	0.50	0.05	0.4	1.8	1.0	0.90	0.5	0.9	1.6	1.3	0.6	1.0
S.V.I.R.A.S.	81	39	57	84	100	88	74	52	74	64	66	77
S.V.I. Mixed Liquor	68	36	35	58	80	105	56	36	48	43	45	50
Mixed Liquor Solids mg/l	2500	2135	4139	1966	2555	3222	2714	2980	2946	2157	2551	2213
Return Act. Sludge Solids mg/l	13686	21730	16800	10729	13489	11567	7781	11867	12275	9154	14530	10882
Pounds of Aerator Solids	490	660	910	375	530	468	368	100	428	288	425	330
Pounds of BOD per day	90	58	73	89	93	92	40	48	76	63	68	78
BOD Sludge Age Days	5.5	11.4	17.9	4.2	5.7	5.1	9.2	2.08	5.65	4.58	6.25	4.25
BOD Raw Sewage mg/l	163	126	159	213	212	197	163	151	.213	127	164	169
BOD Primary Eff. mg/l	144	100	138	139	152	157	80	83	106	78	83	89
BOD Final Eff. mg/l	20	36	30	26	32	37	31	26	50	18	23	31
Air C.F. Per Gallon	1.32	0.76	1.97	1.23	1.02	0.98	1.10	0.44	0.72	0.74	0.69	0.64
Air C.F. per Pound of App. BOD	995	910	1730	1065	810	747	1650	775	820	1140	990	850
Suspended Solids Raw Sewage mg/l	306	311	316	470	438	430	358	351	536	389	355	459
Suspended Solids Pri. Eff. mg/l	220	290	293	193	275	252	114	135	203	84	124	106
Suspended Solids Final Eff. mg/l	29	38	46	28	43	40	51	39	127	24	35	38
Primary Settling Rate gal/s.f./day	1180	1080	1050	1230	1180	1090	940	1090	1340	1520	1530	1620
Primary Settling Time Hrs.	1.2	1.3	1.4	1.09	1.13	1.29	1.43	1.29	1.05	0.93	0.92	0.87
Mixed Liq. Aeration Time Hrs.	2.73	3.07	0.62	2.7	2.5	2.7	2.9	1.05	2.0	1.9	1.9	1.8
Final Settling Rate gal/s.f./day	590	540	520	500	480	507	438	507	1250	705	765	810
Final Settling Time Hrs.	2.47	2.60	2.80	2.80	2.92	3.04	3.50	3.04	1.24	2.2	2.16	1.74
Total Phosphate as P Raw mg/l	8.5	6.6	8.2	9.8	9.4	13.0	9.3	8.0	12.8	7.4	9.0	10.6
Total Phosphate as P Pri Eff. mg/l	7.6	7.2	8.2	6.0	9.4	9.6	3.8	5.4	6.0	2.9	5.4	4.3
Total Phosphate as P Final mg/l	1.7	1.9	1.8	1.2	1.7	2.4	1.9	2.0	3.3	1.4	1.8	2.1
Total Phosphate as P M.L. mg/l	73	63	103	57	69	115	68	92	104	67	134	78
Total Phosphate as P RAS mg/l	353	423	411	305	307	347	183	332	361	264	467	341
Soluble Phosphate as P Raw mg/l	2.1	1.1	1.2	1.4	0.9	1.4	0.7	1.2	2.5	1.3	2.4	2.6
Soluble Phosphate as P Pri. Eff. mg.l	1.0	0.6	0.6	0.7	0.7	0.7	0.5	0.8	1.0	0.7	1.2	1.2
Soluble Phosphate as P Final mg/l	0.7	0.5	0.6	0.5	0.6	0.7	0.4	0.6	0.7	0.5	0.6	0.8
Oil Final mg/l	9.6	14.2	12.4	8.3	14.8	11.2	13.6	14.1	22.4	13.4	8.0	12.0
Phenol Raw ppb.	454	385	490	643	520	634	355	373	601	286	458	465
Phenol Final ppb.	43	105	43	35	87	62	85	51	79	43	32	43

APPENDIX C

TRICKING FILTER TEST DATA

Test No.	1	2	3	4	5	6	7	8	9	10	11	12	13	14	15A	15B	16
	1968												1969				
Date Start	6/5	7/1	7/26	8/9	8/23	9/13	10/4	10/18	11/2	11/12	11/27	12/17	1/2	1/14	2/3	3/1	3/27
Date End	6/25	7/31	8/8	8/22	9/12	10/3	10/17	10/31	11/11	11/26	12/16	12/31	1/13	2/3	2/28	3/26	4/19
Iron Feed mg/l Fe++					15	15	15	15	15	15	15	15	15	15	15	15	15
Polymer Feed mg/l Dow A23										0.3	0.3	0.3	0.3	0.3	0.3	0.3	0.3
Caustic Feed mg/l NaOH															30	30	30
Filter Feed gpm	8	12	14	22.6	24.2	14	7	7	8	8	14	21.6	20.5	10.2	10.3	11.3	20
Filter Feed gpm/sq ft	1.14	1.72	2.00	3.22	3.46	2.00	1.00	1.00	1.14	1.14	2.00	3.08	2.94	1.46	1.47	1.62	2.86
Filter Recycle gpm	0	0	0	0	0	0	0	0	0	0	0	0	0	0	0	0	0
Raw BOD mg/l	187	161	149	181	213	183	169	205	206	195	224	209	154	147	196	194	155
Filter Feed BOD mg/l	108	109	126	159	159	175	136	147	142	105	120	135	120	103	95	121	70
Final Eff. BOD mg/l	39	37	42	57	80	83	42	41	42	35	54	69	65	49	55	55	37
BOD Load/1000 cf/day	68.5	103.5	140.0	284.0	304.0	194.0	75.3	81.5	90.2	65.8	133.0	231.0	195.0	83.0	79.0	108.0	111.0
Filter Feed Ratio SS/BOD	1.53	1.79	1.58	1.60	2.43	2.05	2.84	2.37	1.38	1.58	1.37	1.45	1.30	1.52	1.15	1.16	1.45
Primary Tank Feed gpm	16.0	16.0	31.0	37.6	37.0	32.0	29.0	30.2	31.7	31.7	31.7	31.7	33.2	21.1	22.7	27.3	29.3
Primary Overflow Rate gal/sf/day	1170	1170	2300	2700	2700	2400	2020	2260	2350	2350	2350	2350	2460	1560	1580	1900	2040
Primary Hrs Detention	1.50	1.50	0.80	0.67	0.67	0.75	0.85	0.79	0.78	0.78	0.78	0.78	0.75	1.18	1.08	0.90	0.84
Raw Susp. Solids mg/l	511	343	388	338	403	380	491	505	629	574	410	545	301	298	435	437	344
Pri. Eff. SS mg/l	165	195	199	254	386	359	385	349	295	166	165	196	147	156	110	140	101
Final Tank Feed gpm	7.0	7.0	12.8	13.9	13.5	13.0	7.0	5.0	7.0	7.0	7.0	11.2	9.0	7.9	8.8	8.3	8.4
Final Overflow Rate gal/sq ft/day	514	514	900	1060	1000	950	514	368	514	514	514	790	635	557	650	610	620
Final Hrs Detention	4.32	4.32	2.36	2.18	2.24	2.32	4.32	6.05	4.32	4.32	4.32	2.70	3.36	3.84	3.30	3.50	3.46
Final Eff. SS mg/l	37	44	77	101	151	162	84	59	61	52	84	100	83	45	62	70	52
Total Raw P mg/l	7.0	5.8	5.2	4.9	7.3	7.3	6.9	8.6	8.2	10.3	9.5	7.0	8.3	7.3	9.3	10.9	8.1
Total Filter Feed P mg/l	5.2	4.9	4.6	5.1	7.0	7.3	7.4	7.8	7.6	5.5	5.7	5.8	6.8	5.1	3.9	5.7	3.7
Total Final P mg/l	3.0	3.2	3.1	4.0	4.8	4.6	1.9	2.1	1.9	2.2	3.1	3.0	4.4	2.0	2.1	3.6	2.7
Raw Ortho P mg/l	2.6	2.2	2.2	2.0	3.1	2.7	2.3	2.9	2.8	2.8	2.4	1.9	2.5	1.3	1.3	1.1	0.9
Filter Feed Ortho P mg/l	2.4	2.0	2.1	2.1	1.5	1.0	0.9	0.6	0.5	0.7	0.8	0.7	1.6	0.5	0.7	1.2	0.9
Final Ortho P mg/l	2.2	1.9	2.0	2.0	1.7	1.0	0.5	0.5	0.4	0.4	0.9	0.4	1.2	0.5	0.5	0.9	0.8
Final Oil mg/l		7.7	8.6	23.3	44.5	34.2	17.2	15.6	8.4	14.8	21.6	19.0	21.4	9.9	10.6	18.4	16.3
Raw Phenol ppb	432	475	410	231	353	369	365	362	452	454	406	466	492	286	411	455	252
Final Phenol ppb	86	88	104	102	155	130	98	134	102	79	95	136	267	93	99	135	74

BIBLIOGRAPHIC: Detroit Metro Water Department. Development of Phosphate Removal Processes. FWQA Publication No. ORD-17010FAH07/70, July 1970

ABSTRACT: The development and demonstration of phosphate removal facilities at Detroit using an activated sludge process and steel pickling liquor are reported. The report is based on the data from over 50 experiments performed over a period of about twenty months on a 200 gpm (max.) test facility at the Detroit Regional Wastewater Plant. The major processes tested included chemical pre-treatment, activated sludge, plastic-media trickling filter tower and deep tank aeration. It was concluded that the full scale plant at Detroit should be designed for the activated sludge process, with deep tank aeration, and that the processes be arranged to accommodate both the conventional and step feed process variations. Further provisions were to be made for phosphate removal by injection of steel pickling liquor into the plant influent.

ACCESSION NO:

KEY WORDS:

Phosphate-removal

Activated Sludge

Aeration

BIBLIOGRAPHIC: Detroit Metro Water Department. Development of Phosphate Removal Processes. FWQA Publication No. ORD-17010FAH07/70, July 1970.

ABSTRACT: The development and demonstration of phosphate removal facilities at Detroit using an activated sludge process and steel pickling liquor are reported. The report is based on the data from over 50 experiments performed over a period of about twenty months on a 200 gpm (max.) test facility at the Detroit Regional Wastewater Plant. The major processes tested included chemical pre-treatment, activated sludge, plastic-media trickling filter tower and deep tank aeration. It was concluded that the full scale plant at Detroit should be designed for the activated sludge process, with deep tank aeration, and that the processes be arranged to accommodate both the conventional and step feed process variations. Further provisions were to be made for phosphate removal by injection of steel pickling liquor into the plant influent.

ACCESSION NO:

KEY WORDS:

Phosphate-removal

Activated Sludge

Aeration

BIBLIOGRAPHIC: Detroit Metro Water Department. Development of Phosphate Removal Processes. FWQA Publication No. ORD-17010FAH07/70, July 1970.

ABSTRACT: The development and demonstration of phosphate removal facilities at Detroit using an activated sludge process and steel pickling liquor are reported. The report is based on the data from over 50 experiments performed over a period of about twenty months on a 200 gpm (max.) test facility at the Detroit Regional Wastewater Plant. The major processes tested included chemical pre-treatment, activated sludge, plastic-media trickling filter tower and deep tank aeration. It was concluded that the full scale plant at Detroit should be designed for the activated sludge process, with deep tank aeration, and that the processes be arranged to accommodate both the conventional and step feed process variations. Further provisions were to be made for phosphate removal by injection of steel pickling liquor into the plant influent.

ACCESSION NO:

KEY WORDS:

Phosphate-removal

Activated Sludge

Aeration

1 Accession Number	2 Subject Field & Group	SELECTED WATER RESOURCES ABSTRACTS INPUT TRANSACTION FORM
	Ø5D	

5 Organization

Detroit Metro Water Department, Detroit, Michigan

6 Title

Development of Phosphate Removal Processes

10 Author( )

16 Project Designation

Program No. 17010FAH

21 Note

22 Citation

FWQA Grant No. WPRD 51-01-67

23 Descriptors (Starred First)

*Phosphate-removal, *Activated Sludge, *Aeration, Nutrient Water Quality, Tertiary treatment, Activated sludge

25 Identifiers (Starred First)

Detroit

27 Abstract

The development and demonstration of phosphate removal facilities at Detroit using an activated sludge process and steel pickling liquor are reported. The report is based on the data from over 50 experiments performed over a period of about twenty months on a 200 gpm (max.) test facility at the Detroit Regional Wastewater Plant. The major processes tested included chemical pre-treatment, activated sludge, plastic-media trickling filter tower and deep tank aeration. It was concluded that the full scale plant at Detroit should be designed for the activated sludge process, with deep tank aeration, and that the processes be arranged to accommodate both the conventional and step feed process variations. Further provisions were to be made for phosphate removal by injection of steel pickling liquor into the plant influent.

Abstractor	Institution
D. Suhre	Detroit Metro Water Department