EPA-600/2-76-252
September 1976

Environmental Protection Technology Series

PAPERMILL WASTEWATER TREATMENT BY MICROSTRAINING

Industrial Environmental Research Laboratory
Office of Research and Development
U.S. Environmental Protection Agency
Cincinnati, Ohio 45268

RESEARCH REPORTING SERIES

Research reports of the Office of Research and Development, U.S. Environmental Protection Agency, have been grouped into five series. These five broad categories were established to facilitate further development and application of environmental technology. Elimination of traditional grouping was consciously planned to foster technology transfer and a maximum interface in related fields. The five series are:

1. Environmental Health Effects Research
2. Environmental Protection Technology
3. Ecological Research
4. Environmental Monitoring
5. Socioeconomic Environmental Studies

This report has been assigned to the ENVIRONMENTAL PROTECTION TECHNOLOGY series. This series describes research performed to develop and demonstrate instrumentation, equipment, and methodology to repair or prevent environmental degradation from point and non-point sources of pollution. This work provides the new or improved technology required for the control and treatment of pollution sources to meet environmental quality standards.

This document is available to the public through the National Technical Information Service, Springfield, Virginia 22161.

EPA-600/2-76-252
September 1976

PAPERMILL WASTEWATER TREATMENT BY MICROSTRAINING

by

Frederick R. Bliss
Strathmore Paper Company
Turners Falls, Massachusetts 01376

Project No. 12040 FDE

Project Officer

Edward Conley
Regional Office I
John F. Kennedy Federal Building
Boston, Mass. 02203

INDUSTRIAL ENVIRONMENTAL RESEARCH LABORATORY
OFFICE OF RESEARCH AND DEVELOPMENT
U.S. ENVIRONMENTAL PROTECTION AGENCY
CINCINNATI, OHIO 45268

DISCLAIMER

This report has been reviewed by the Industrial Environmental Research Laboratory - Cincinnati, U.S. Environmental Protection Agency, and approved for publication. Approval does not signify that the contents necessarily reflect the views and policies of the U.S. Environmental Protection Agency, nor does mention of trade names or commercial products constitute endorsement or recommendation for use.

FOREWORD

When energy and material resources are extracted, processed, converted, and used, the related pollutional impacts on our environment and even on our health often require that new and increasingly more efficient pollution control methods be used. The Industrial Environmental Research Laboratory - Cincinnati (IERL-Ci) assists in developing and demonstrating new and improved methodologies that will meet these needs both efficiently and economically.

Papermill Wastewater Treatment by Microstraining concerns the use of microstrainer facilities for removal of waste components contained in wastewater discharges originating from the manufacture of fine papers. The wastewaters from two small mills were combined, flocculated and passed through the microstrainer. Significant removal of suspended solids and BOD_5 was achieved by this method of treatment. Such a system can be installed in situations where only limited space is available for the development of equivalent primary facilities. Effectiveness of this method of treatment should be first determined by suitable laboratory examination to forecast expected full scale efficiencies. Waste treatment by microstraining may be particularly applicable to wastewater discharges from small tissue mills where fiber losses form the principle primary waste component discharged by the industry. For further information contact the Food and Wood Products Branch, Industrial Pollution Control Division, IERL-Ci.

David G. Stephan
Director
Industrial Environmental Research Laboratory
Cincinnati

ABSTRACT

An original treatment system was designed, constructed, and operated for removal of suspended solids, turbidity, color, and BOD from the wastewaters of two paper mills which produce technical and other fine papers. The treatment process involves coagulation and flocculation followed by microstraining. Space and cost considerations were of paramount importance in selecting this process.

Fiber recovery was investigated, but was found to be uneconomical because of the high percentage of fillers being employed and unacceptable levels of color and dirt. The sludge is being discharged to the municipal sewerage system.

Plant operating efficiencies over the past year indicated substancial removal of the suspended solids and 5-day BOD. Effluent turbidities averaged less than 30 Jackson turbidity units (JTU).

The estimated construction cost of the treatment facility is $689,000. First-year operating costs including wages, power, supplies, chemicals, microfabric, and maintenance totaled $36,175, which is approximately equivalent to $1.50 per ton of paper produced.

It is expected that the techniques used in this operation may have broad applicability to industries under similar space limitations and using similar manufacturing methods. Cooperative ventures will be attractive to many small firms to meet the new criteria for industrial wastewater discharges.

This report was submitted in fulfillment of Project 12040 FDE by Esleeck Manufacturing Company and Strathmore Paper Company under the sponsorship of the Environmental Protection Agency. Work was completed as of April 1974.

TABLE OF CONTENTS

Section		Page
I	CONCLUSIONS	1
II	INTRODUCTION	3
III	DESIGN OF PROTOTYPE TREATMENT PLANT	8
IV	OPERATION	32
V	DISCUSSION	56
VI	PHASE IV PLANT OPERATION OPTIMIZATION	92
VII	SOLIDS HANDLING	96
VIII	REFERENCES	108
IX	GLOSSARY OF TERMS AND ABBREVIATIONS	109
X	APPENDICES	110
XI	EXHIBITS: TYPICAL WASTEWATER CHARACTERISTICS	117

LIST OF TABLES

Table No.		Page No.
1	Design Criteria for Joint Industrial Wastewater Treatment Facility	11
2	Unit Sizes of Components of Joint Industrial Wastewater Treatment Facility	11
3	Treatment Plant Alarms	25
4	Construction Highlights -- Strathmore-Esleeck Joint Industrial Wastewater Treatment Facility	28
5	Final Construction Costs, Joint Industrial Wastewater Treatment Facility	31
6	Microstrainer Seals Utilized	45
7	Phase III Microstrainer	78
8	Pilot Sludge Studies Data	97
9	Microstrainer Backwash Sludge Design Parameters	99
10	Sludge Handling Facility, Unit Design Parameters	103
11	Sludge Handling Operating Costs	105
12	First Year Operating Costs	106

LIST OF FIGURES

Fig. No.		Page No.
1	Location Plan	4
2	Yard Piping Schematic	10
3	Junction Manhole Schematic	15
4	Automatic Bypass System	16
5	Process Piping Schematic	17
6	Instrumentation Control Cabinet	21
7	Chemical Feed Schematic	23
8	Plan, Chemical Feed	24
9	Effluent Pump Control Cabinet	26
10	Typical Microstrainer Arrangement	33
11	Daily Operating and Analysis Reports	38-39
12	Plant Effluent Pumped to Canal	40
13	Esleeck Wastewater Flows	41
14	Strathmore Wastewater Flows	43
15	Microstrainer Sealing Arrangements	48-49-50
16	Phase II Suspended Solids Removal	57
17	Phase II Frequency Distribution of Suspended Solids Removal	59
18	Phase II Turbidity Removal	60
19	Phase II Frequency Distribution of Turbidity Removal	61
20	Phase II Color Removal	63
21	Phase II Frequency Distribution of Color Removal	64
22	Phase II BOD Removal	65
23	Phase II Frequency Distribution of BOD Removal	66
24	Phase III Suspended Solids Removal	68
25	Phase III Frequency Distribution of Suspended Solids Removal	69
26	Phase III Turbidity Removal	71
27	Phase III Frequency Distribution of Turbidity Removal	72
28	Phase III Color Removal	73
29	Phase III Frequency Distribution of Color Removal	74
30	Phase III BOD Removal	75
31	Phase III Frequency Distribution of BOD Removal	76
32	Effect of Seal Leakage on Suspended Solids Removal	80

LIST OF FIGURES (CONT.)

Fig. No.		Page No.
33	Suspended Solids Removal -- Selected Data.	81
34	Turbidity Removal -- Selected Data	82
35	Color Removal -- Selected Data	84
36	Filterability Index.	86
37	Long-Term BOD (Samples of 5/9/72).	88
38	Long-Term BOD (Samples of 9/11/72)	89
39	Long-Term BOD (Samples of 9/19/72 and 10/11/72). . . .	91
40	Daily Variations of Backwash Sludge.	100
41	Schematic Flow Diagram	102
A-1	Project Schedule	111
B-1	Ultrasonic Filtration Schematic.	116

ACKNOWLEDGMENTS

The investigations and studies reported herein were carried out by the Esleeck Manufacturing Company, the Strathmore Paper Company, and Camp Dresser & McKee, consulting engineers. The authors gratefully acknowledge the cooperation during construction of the treatment facility and throughout the duration of the study of Mr. Albert Dempsey, plant manager; Mr. Gustave Sell, plant engineer; Mr. Frederick Bliss, technical director; and Mr. Francis Vivier and Mr. Thomas Rodencal, mill chemists of Strathmore Paper Company, and Mr. Irving Esleeck, president; Mr. Charles Winslow, plant engineer, and Mr. Paul Coughlin, technical director of Esleeck Manufacturing Company.

Operation and analytical work was assisted by Mr. Leo Mutti and Mr. Robert Leighton, plant operators. Mr. John S. Mudgett, project director and chief engineer of Strathmore Paper Company, assisted in the coordination and administration of all project activities.

Camp Dresser & McKee, Inc., Boston, Massachusetts, was responsible for the design and general supervision of the treatment plant construction and the first year of operation. Mr. Darrell A. Root, project officer, Mr. John C. Thompson, project engineer and Mr. Norton G. True, field engineer, assisted in the preparation of this report. Mr. Alan E. Rimer, formerly of Camp Dresser & McKee, assisted in the initial phases of the project.

Mr. Thomas McMahon, director, Mr. Han Bonne, supervising sanitary engineer and Mr. Alfred Ferullo of the Massachusetts Water Resources Commission, Division of Water Pollution Control, also gave generously of their time.

The support of this project by the Environmental Protection Agency -- Mr. George R. Webster, project manager, Mr. James D. Gallup, plant engineer, and Mr. Edward Conley, project officer -- is greatly appreciated.

SECTION I

CONCLUSIONS

The following conclusions have been reached, based on the experience of one year's operation:

1. The microstraining process was effective in treating the paper mill wastewaters, when mechanical failures did not hinder the operation of the treatment plant.

2. Chemical treatment was required to maintain an acceptable degree of suspended solids, turbidity, and color removal, but close analytical control, using bench scale jar studies, was needed to maintain the best chemical dosages for optimum removal efficiencies and acceptable filtration rates.

3. A secondary coagulant, or polymer, together with pH control, was needed practically all the time as a flocculant aid and floc strengthener. Polymers were effective in dosages of 0.5 to 2.0 mg/l. The most common dosage overall was 1.0 mg/l. Only the strong, aniomic, high molecular weight polymers were effective. Polymers increased the flow capacity of the microstrainers by keeping the solids mat open, thus allowing better drainage.

4. Microstrainer No. 2 (35-micron microfabric) was capable of as good a removal efficiency as microstrainer No. 1 (23-micron microfabric) during chemical feed periods. The data at times was primarily a result of the seal leakage of microstrainer No. 1 (from a damaged drum).

5. Under normal operating conditions, microstrainer No. 2 had a higher flow capacity than microstrainer No. 1.

6. The microfabric on both microstrainers was not always clean and free, because of low backwash water pressure and large amounts of very fine suspended solids which clogged the microfabric openings. Serious hydraulic deficiencies sometimes developed because of this clogging of the screen, especially on microstrainer No. 1. A thorough cleaning of the microfabric with 10% phosphoric acid cleaning is needed once each week, on the average, to overcome this.

7. Average incoming wastewater flows were somewhat higher than expected, and peak incoming flows and flow surges at times exceeded the design capacity of the treatment plant. These factors upset the operation and efficiency of the plant.

8. The most effective seals to date for the microstrainer are the knife edge plastic and the dumbbell seals, as shown in Fig. 15. Constant attention is needed to be sure the seals are clean and tight. Investigation is continuing to find more effective seal configurations and materials.

9. It was impossible to evaluate properly the ultrasonic microfiltration process because of a malfunction in the automatic controls of the ultrafilter and the lack of technical assistance from the manufacturer to correct it. It was not felt that this process would be practical in treating wastewater with suspended solids concentrations as high as those experienced at the treatment plant.

10. The backwash sludge was easily dewatered to a consistency of 20 to 30 percent solids by flotation thickening followed by either a solid bowl centrifuge or a vacuum coil filter. This dewatered sludge could either be disposed of in a sanitary landfill, sold as a byproduct, or recycled in the paper process. The paper mills feel, at this time, that it would be impractical to recycle the paper sludge because of the large percentage of filler material and the high cost of conditioning for reuse.

SECTION II

INTRODUCTION

BACKGROUND OF THE INVESTIGATION

The three major dischargers of industrial wastewaters in New England are pulp and paper manufacturers, the textile industry, and the tanning industry. Because of the increasing public concern with the effect of these wastewaters on the receiving streams, and more stringent federal requirements, many of these industries are faced with costly cleanup programs or closing their operations.

Currently, several processes are used by paper manufacturers to treat their wastewaters to varying qualities. Many of these processes are biological, and require relatively large areas for the treatment facilities.

To find an effective and economical treatment process to remove a substantial portion of the suspended matter and BOD (biochemical oxygen demand) from the wastewaters of two paper companies (Esleeck Manufacturing Company and Strathmore Paper Company, Turners Falls, Massachusetts), Camp Dresser & McKee, Inc. conducted pilot plant studies at each plant. The two plants are located in the western part of Turners Falls on an island bound by the Connecticut River on the northwest and a power canal owned by the Western Massachusetts Electric Company on the southeast. Fig. 1 shows the location of the mills.

Both companies have endeavored for years to determine an economic means of reducing their pollutional discharges to the Connecticut River. In this connection, extensive independent and joint studies have been conducted for both mills by the engineering firm of Camp Dresser & McKee, Inc. (CDM). The most recent work for Esleeck Manufacturing Company was completed by CDM in September 1967: "Report on Process Wastewater Treatment." In June 1969, CDM completed a "Report on Process Wastewater Treatment" for the Strathmore Paper Company.

Both reports recommended the installation of a mechanical process utilizing microstrainers to remove suspended solids and turbidity from the wastewaters. Other more conventional methods of treatment such as sedimentation, vacuum filtration, and full treatment in the town (Montague) sewerage system were studied, but were not considered feasible either because of the lack of the excessive capital and operating costs associated with the particular alternative.

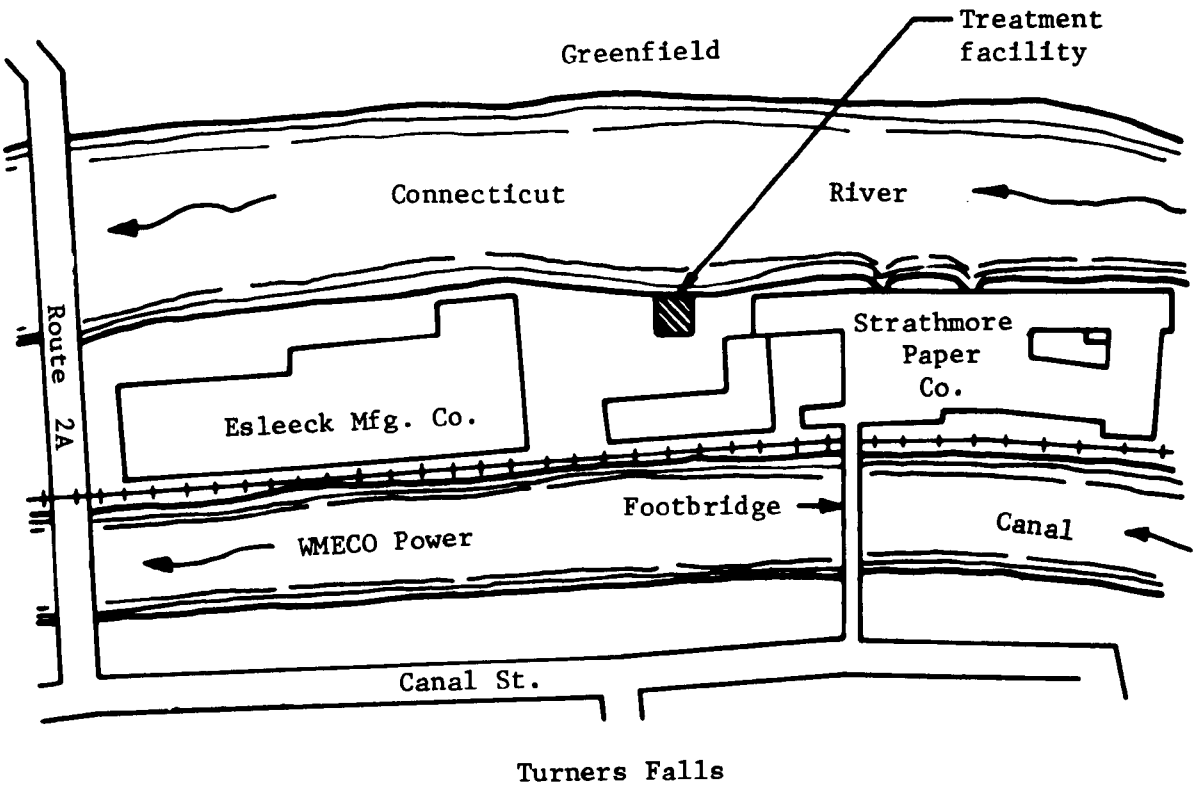

Scale: 1 in. = 200 ft

Fig. 1. Location Plan

In the 1967 pilot plant study conducted at the Esleeck Manufacturing Company, microstraining alone was used to remove the suspended solids in the wastewater. In the 1969 Strathmore Paper Company investigation, flocculation and coagulation, as well as microstraining, were required because of the higher degree of suspended solids and turbidity in the wastewaters. The experience gained in the Esleeck studies was a substantial aid in evaluating procedures for the subsequent Strathmore investigations.

Since October 1971, a CDM-designed plant, the first of its kind, has been treating an average of over 1.8 mgd of wastewater from the Strathmore and Esleeck plants in Turners Falls. These wastewaters, basically the excess whitewaters from both mills, are subjected to coagulation and flocculation and are then sent through two 10-ft-diameter by 10-ft-long microstrainers prior to discharge.

The decision to employ microstrainers was based on previous pilot plant studies conducted at both mills, from which it had been concluded that:

1. The mills could not discharge untreated wastewater to an adjacent power canal.

2. It was not economical, nor was space available, to construct clarifiers.

3. Neither the Montague municipal sewerage system nor the primary wastewater plant had the capacity to treat the wastewaters of the two mills.

The present report discusses the results of the operation of the treatment facility and some of the problems encountered in establishing the routine operation of the plant.

PROJECT OBJECTIVES

Because of the significance of this project to the paper industry, the cost of design, construction, and the first year of operation of the treatment plant was partially funded by a research and construction grant from the Environmental Protection Agency (EPA) to the amount of $252,345. Under the terms of this grant, our project objectives were:

1. To investigate the applicability of microstraining mill wastewaters from two paper manufacturers (whose products consisted of technical and other fine papers made from rag or chemical wood pulps) to determine the degree of removal of BOD, suspended solids, color, and turbidity

2. To investigate the use of a coagulant or coagulant aid, such as a polyelectrolyte, for more effective removal of turbidity from the wastewaters

3. To determine the possibility of reclaiming fibers from the microstrained sludge (appropriate treatment processes such as centrifugation or sedimentation may enable mills to recover lost fibers economically)

4. To determine the annual operating costs for such a treatment plant based on one year of operation

5. To determine design factors and to estimate the cost of construction and operation of such a facility (the cost of operation will be correlated with the retail market value of the product)

6. To conduct tests on an ultrafilter manufactured by the American Process Equipment Corporation and supplied free of charge (including shipping and major maintenance) by the FWPCA, now called EPA.

Grant funds were committed in May 1970; engineering design was completed in July 1970; construction was started in January 1970 and substantially completed in October 1971. Operation of the treatment plant began in November 1971 and the project objectives were completed in October 1972.

PLAN OF OPERATION

To accomplish the above objectives, a plan of operation consisting of three phases was established. A detailed log of operations and a bar graph of the phases are given in Appendix A.

Phase I was to consist of the evaluation of the ultrafilter described above (two to three months of testing). Construction and operationg costs were to be developed for a full scale plant if the unit proved suitable for this application. A description of the ultrafilter studies and their results is given in Appendix B.

Phase II, in actuality the initial phase, consisted of the operation of the treatment plant, which was composed of an equalization basin, flocculation basins, microstrainers, and effluent pumps. The wastewater streams to be treated averaged 1.8 mgd (million gallons per day), and contained approximately 4,500 lbs. of suspended solids daily. The purpose of this phase was to demonstrate the applicability of microstraining without chemicals for paper mill waste treatment. During its four-month duration, suspended solids, turbidity, color and BOD removals were measured and evaluated.

Phase III consisted of the investigation of the use of a coagulant or coagulant aid prior to the microstraining for more effective removal of suspended solids, turbidity, color, and BOD. During this phase, possible coagulants, such as those utilized in the Strathmore pilot plant investigations (Nalco 636 and sodium aluminate), as well as alum and other polymers were tested to determine the most effective and efficient combination. Evaluation of the coagulant or coagulant aid was based on its performance and a cost effective analysis. It was anticipated that three to four months would be necessary to determine the optimum combination and dosage of coagulants and another four to five months to collect adequate data over a wide operating range to estimate the overall efficiency and effectiveness of the process.

Phase IV consisted of the 18-month period following the conclusion of Phase III. Investigations leading to the successful operation of the plant were concluded in this period.

During the course of our study, alternative methods of sludge disposal were evaluated. Initially, we considered that the waste sludge averaging 75 gpm (gallons per minute) would be discharged to the municipal sewerage system, and thus tests were conducted at the municipal plant to evaluate the effect of this sludge on the sewerage system and on the treatment plant itself. Preliminary tests indicated that the sludge would present no undue burden on the system or the treatment plant.

It was considered possible that appropriate mechanical processes such as centrifugation or vacuum filtration could be used as a first step to reclaim the paper fibers which could then be treated for ultimate reuse. These processes would be evaluated.

SECTION III

DESIGN OF PROTOTYPE TREATMENT PLANT

BRIEF DESCRIPTION OF MILLS

Strathmore Paper Company

The Strathmore Paper Company, a division of Hammermill Paper Company, Inc., produces a wide variety of opaque and colored paper products. Paper is manufactured from virgin chemical pulp, rag pulp, and reused fibrous material on three 86-in. Fourdrinier paper machines, capable of producing 54 tons per day. The plant employs about 115 persons and operates three 8-hour shifts daily, six days per week.

The primary sources of wastewater discharges from the Strathmore mill are the whitewater, seal box, and wire pit overflows of the three paper machines. Smaller intermittent flows from the pulper and various wash-up operations also contribute to the discharge. Before and during construction of the treatment plant, Strathmore began construction of a whitewater recirculation system designed to reduce their total industrial wastewater discharge from 2.30 to 0.75 mgd. Under this system, the relatively clear whitewater flows would be segregated from the other wastewaters for transmission to the treatment plant separately. Wastewater from the Strathmore paper machines flows directly to the treatment plant. Save-alls are not used at this mill to recover paper fibers because of the numerous paper grade changes.

Esleeck Manufacturing Company

The Esleeck Manufacturing Company produces chiefly high-grade onionskin and thin bond papers. The mill output is approximately 16 tons of paper per day, manufactured primarily from rag pulp on a single 122-in. Fourdrinier paper machine. Other processes used to produce the paper include rag cooking, rag bleaching, and rag pulping operations. Sheet finishing and sheet coating services are also provided. The plant employs approximately 120 persons and operates three 8-hour shifts daily, five days per week.

Paper machine whitewater from the Esleeck mill is pumped to the treatment plant after a large portion of the suspended solids (SS) is effectively removed in a flotation-type save-all. The smallest percentage

of the mill's wastewater (37 percent), which results from the rag washing operations, flows by gravity to the plant via a separate line. Because of the high BOD and sulfite concentration, the rag cooking liquors from two rotary boilers are discharged directly to the Montague sewerage system by a centrifugal pump. Fig. 2 shows the yard piping layout from the two mills to the treatment plant.

Water for the various plant processes of both mills is obtained from the Western Massachusetts Electric Company (WMECO) power canal. Before use, it undergoes coagulation and filtration in separate treatment plants. Water for sanitary services is obtained from the Turners Falls fire district. Total process water consumption presently averages over 1 mgd for each mill. Domestic wastewater from both mills is discharged to the Montague sanitary sewerage system through individual ejector stations.

DESIGN CRITERIA OF TREATMENT PLANT

Based on the pilot plant studies described in the 1967 and 1969 CDM reports, the treatment plant was designed to provide adequate mixing, coagulation, and microstraining of the combined wastewater from the two mills (except the rotary boiler wastes from the Esleeck mill) to maintain the Class B quality in the power canal and in the Connecticut River. The primary intent of the design was to remove suspended solids, color, and turbidity from the wastewaters of the two mills. Removal of suspended solids (the fines, such as clays and other fillers associated with paper making operations) was enhanced by the coagulation process, and this resulted in clearer effluents and greater efficiency of BOD removal.

The design of the treatment facility was based on the flow and solids loadings outlined in Table 1.* Table 2 describes the basic unit sizes in the plant. The equalization basin provides time for damping of surges in the solids loadings before the introduction of chemicals into the wastewater in the rapid mix basins. Flocculation of the wastewater occurs in the slow mix basin before the solids are removed by the two microstrainers, which employ different sizes of microfabrics. Screen mesh sizes and drum sizes are directly proportional to those used in the previous pilot studies, which were based on a thorough study of the filterability index. Filtered effluent from the plant is pumped to the WMECO power canal for dilution. Backwash sludge solids are pumped to Montague sanitary sewers for transfer to the Montague sewage treatment plant.

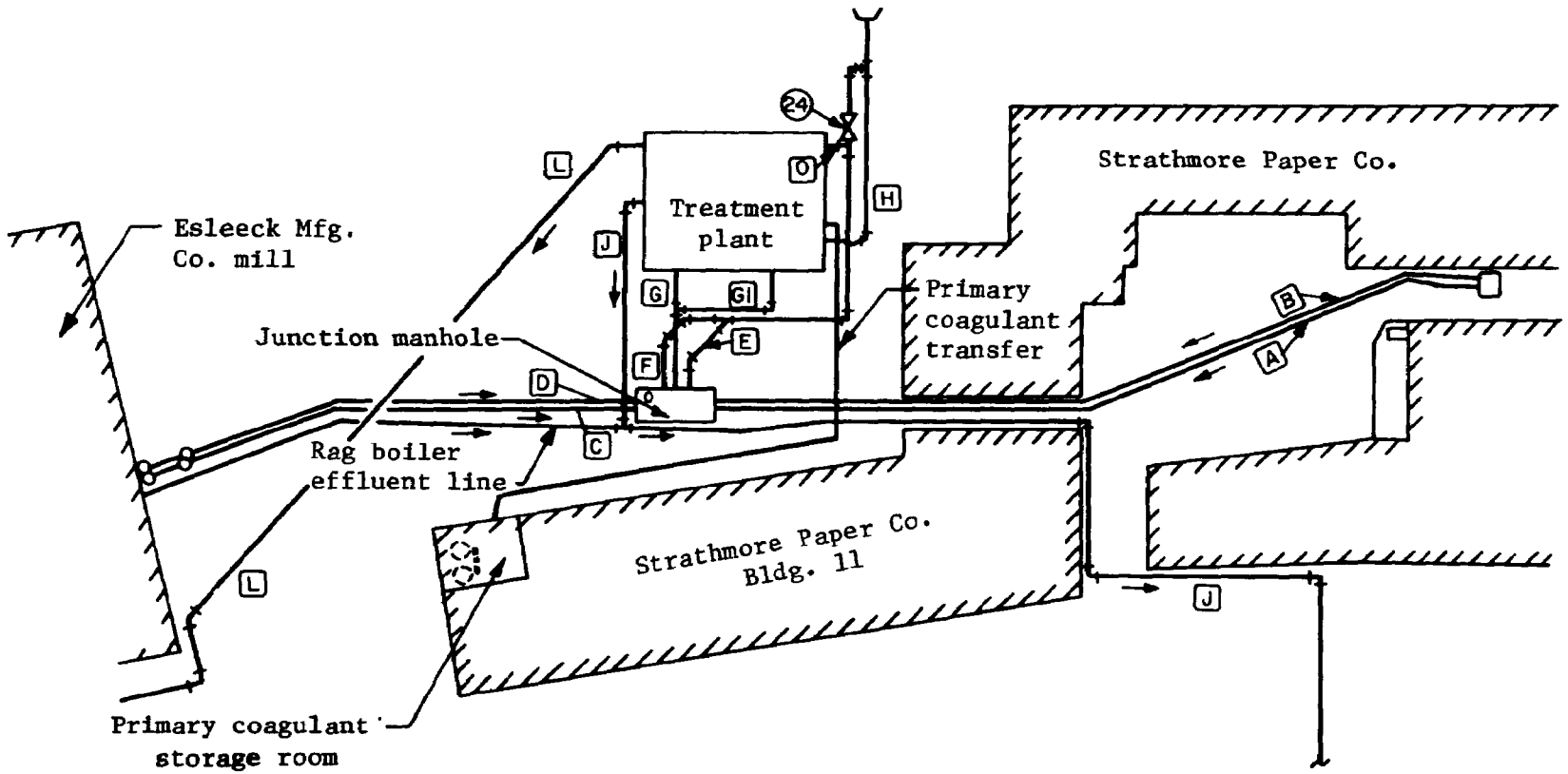

Legend

A	Strathmore whitewater	F	Plant bypass	L	Effluent to canal
B	Strathmore wirewater	G	Plant influent	O	Plant bypass influent to wet well
C	Esleeck whitewater	GI	Plant influent	24	Gate valve No. 24
D	Esleeck washerwater	H	Plant overflow and drain		
E	Plant bypass	J	Backwash sludge to sewer		

Fig. 2. Yard piping schematic

TABLE 1

DESIGN CRITERIA FOR JOINT INDUSTRIAL WASTEWATER TREATMENT FACILITY

Waste Source	Flow, mgd Average	Flow, mgd Maximum	Average SS, lb/day
Esleeck			
White water	0.65	1.08	1,200
Washerwater	0.37	0.57	500
Strathmore			
Whitewater	0.46	0.72	3,200
Wirewater	0.26	0.43	300
Total	1.74	2.80	5,200

*Exhibit A lists the actual characteristics of the wastewater flow received at the plant.

TABLE 2

UNIT SIZES OF COMPONENTS OF JOINT INDUSTRIAL WASTEWATER TREATMENT FACILITY

Design flow, mgd	
Average	1.74
Maximum	2.80
Equalization basin	
Dimensions, ft.	26 by 17 by 9 side water depth
Capacity, gal.	30,000
Detention time, min	
Average	25
Minimum	15
Mixer size, hp	10
Rapid mix chamber (two)	
Dimensions, ft.	5 by 8 by 9 side water depth
Capacity, gal.	2,700
Detention time, min.	

TABLE 2. UNIT SIZES OF COMPONENTS OF JOINT INDUSTRIAL WASTEWATER TREATMENT FACILITY (Cont.)

Average	2.3
Minimum	1.4
Mixer size, hp	3
Flocculation chamber	
Dimensions, ft.	17 by 17 by 8.5 side water depth
Capacity, gal.	18,500
Detention time, min.	
Average	15
Minimum	9.5
Mixer size, hp	1.5
Microstrainer (two, 10 by 10 drum)	
Maximum screen area, sq. ft./min.	1,500
Maximum head loss, in.	6
Screen opening size, microns	23 and 35
Pu,p wet well	
Dimensions, ft.	3.25 by 27 by 8 side water depth
Capacity, gal.	5,300
Detention time, min.	
Average	4
Minimum	3
Effluent pumps	
Variable speed pumps	Three (one standby)
Capacity of each, gpm	1,200
Force main to canal, in.	12 (internal diameter)
Sludge disposal*	
Fixed discharge pump	
Number	Two (one standby)
Capacity of each, gpm	120

*Discharge to 4-in. force main to Montague sewer system.

UNIT OPERATIONS OF TREATMENT PLANT

In-Mill Changes

Prior to design and construction of the treatment plant, both mills made major in-mill piping changes to collect all extraneous sources of wastewater discharge and to reduce the total flow. Esleeck's changes consisted of the construction of a concrete holding tank and new gravity piping connections from the paper machine and whitewater save-all and other smaller wastewater lines. Two 700-gpm pumps with automatic level controls then deliver the whitewater to the treatment plant through a 10-in. line. The flows from the individual rag washers (two units) are collected and the flow by gravity directly to the treatment plant through an 8-in. cast iron pipe. The rotary boiler wastes (cooking liquor) are discharged via a metering pump to the town sanitary sewer through the 4-in. cast iron line that joins the backwash sludge force main outside the treatment plant.

Strathmore's changes consisted of the following for each paper machine:

1. Collecting the paper machine whitewater flows and diverting them to a whitewater holding tank

2. Providing recirculation pumps to deliver whitewater from the holding tank to the hydropulper and to the headbox of the machine for the makeup water

3. Constructing new seal box holding tanks and providing recirculation pumps to the whitewater tanks to reduce the amount of overflow from the seal box

4. Collecting the wirewaters (water that washes the forming wire) into a separate line for delivery to the treatment plant or to the whitewater tank as needed for makeup water.

For the entire mill (all three machines), Strathmore made the following changes:

1. Constructing an in-mill drainage system that would collect all wastewater overflows, including the whitewater tanks, seal boxes, floor drains, stock chest drains, and other miscellaneous sources that contain wastewater

2. Conveying these flows, of which whitewater is the largest volume, to the wastewater treatment plant through a 12-in. cast iron gravity sewer

3. Discharging the wirewater flows through a separate 8-in. cast iron gravity sewer to the treatment plant

4. Separating all starch wastes from internal and external size operations and diverting these to the existing domestic waste collection system.

Junction Manhole

Wastewaters from the two mills pass through a junction manhole in the driveway beside the treatment plant (Fig. 2). The purpose of this manhole is to house the magnetic flow meter equipment and to combine the four separate wastewater flows into the plant influent line. Fig. 3 is a schematic layout of the junction manhole. Whitewater from the two mills is measured by individual magnetic flow meters before it flows directly to the plant for treatment. The washerwater from the Esleeck mill and the wirewater from the Strathmore mill, both usually clear, are measured by separate magnetic flow meters and are then passed through diverting plug valves. An automatic sampling and turbidity monitoring system controls these valves.

Automatic Bypass System

The automatic bypass system is designed to divert the flow from the Esleeck washerwater line, the Strathmore wirewater line, or both to the power canal when these flows are clear, thus reducing the hydraulic load on the plant and saving chemical costs. This system consists of a hydraulically operated three-way plug valve controlled by an automatic sampling and turbidity monitoring system (Hach flow-through turbidimeter). If the turbidity monitoring system senses a high turbidity, the flow is automatically diverted to the treatment plant by means of the plug valve. When the turbidity drops below a preset level, generally 50 JTU, the flow is diverted to the effluent wet well, mixed with the effluent from the screens, and pumped to the power canal. Fig. 4 is a schematic layout of the automatic bypass system.

Equalization Basin

The equalization basin is designed as a holding tank to provide the necessary detention time for complete mixing of the separate waste streams entering the plant, and as a surge tank to control peak flows and solids loadings prior to entering the rapid mix basins. As shown in Table 2, detention time at average plant flow is 25 minutes. Wastewater enters the basin through a 14-in. cast iron influent line and exits through one or more of three 30-by 24-in. slide gates controlling the flow through one or both of the rapid mix basins or into microstrainer No. 1. Fig. 5 is a process piping schematic of the treatment plant.

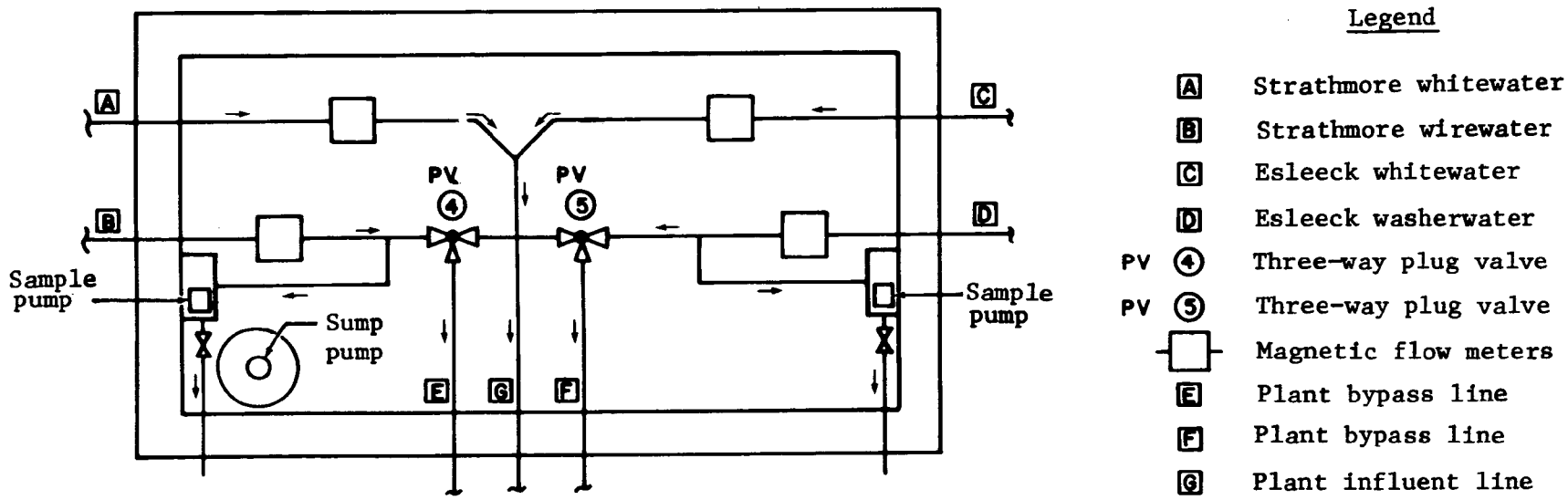

Fig. 3. Junction manhole schematic

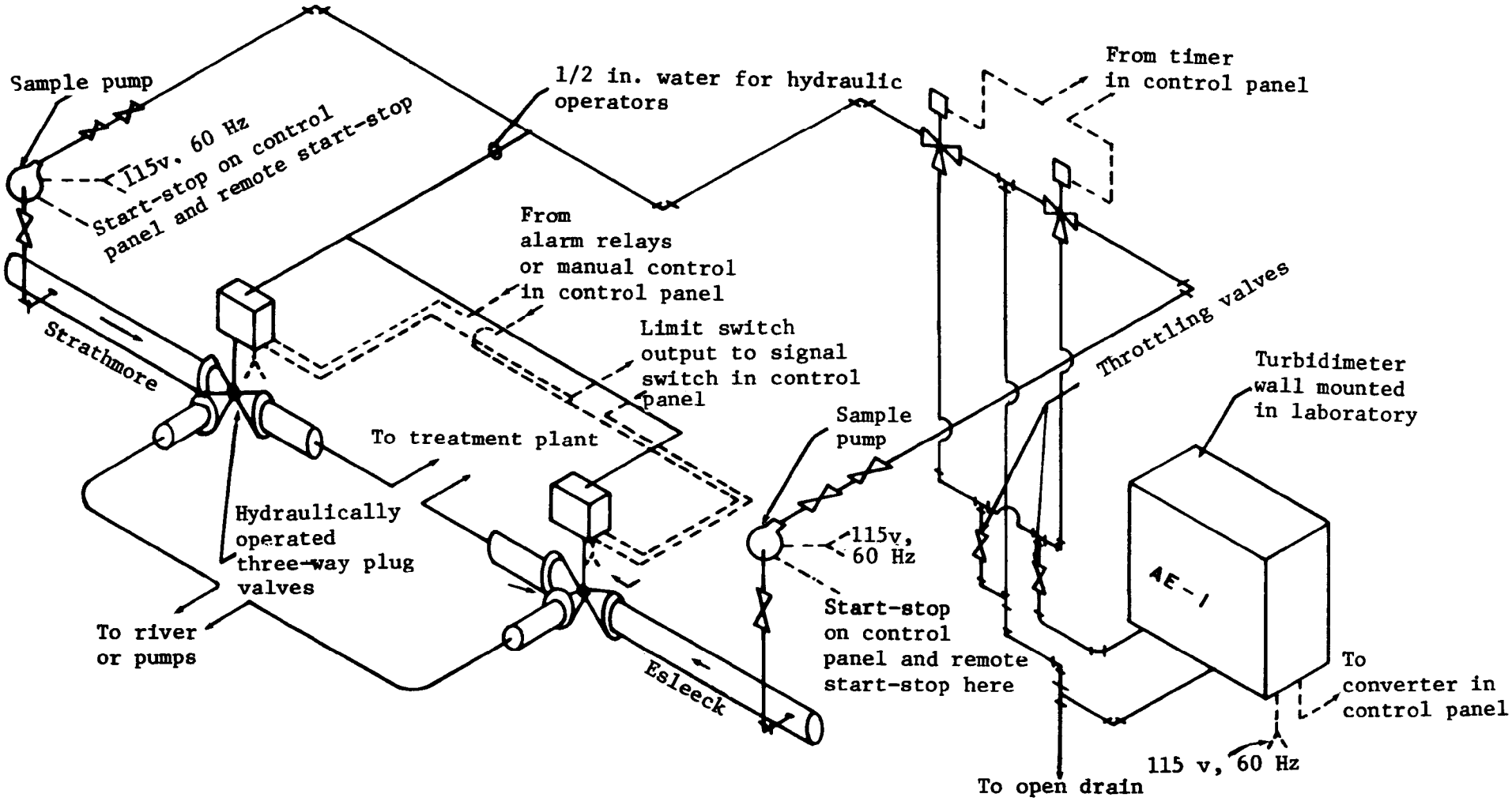

Fig. 4. Automatic bypass system

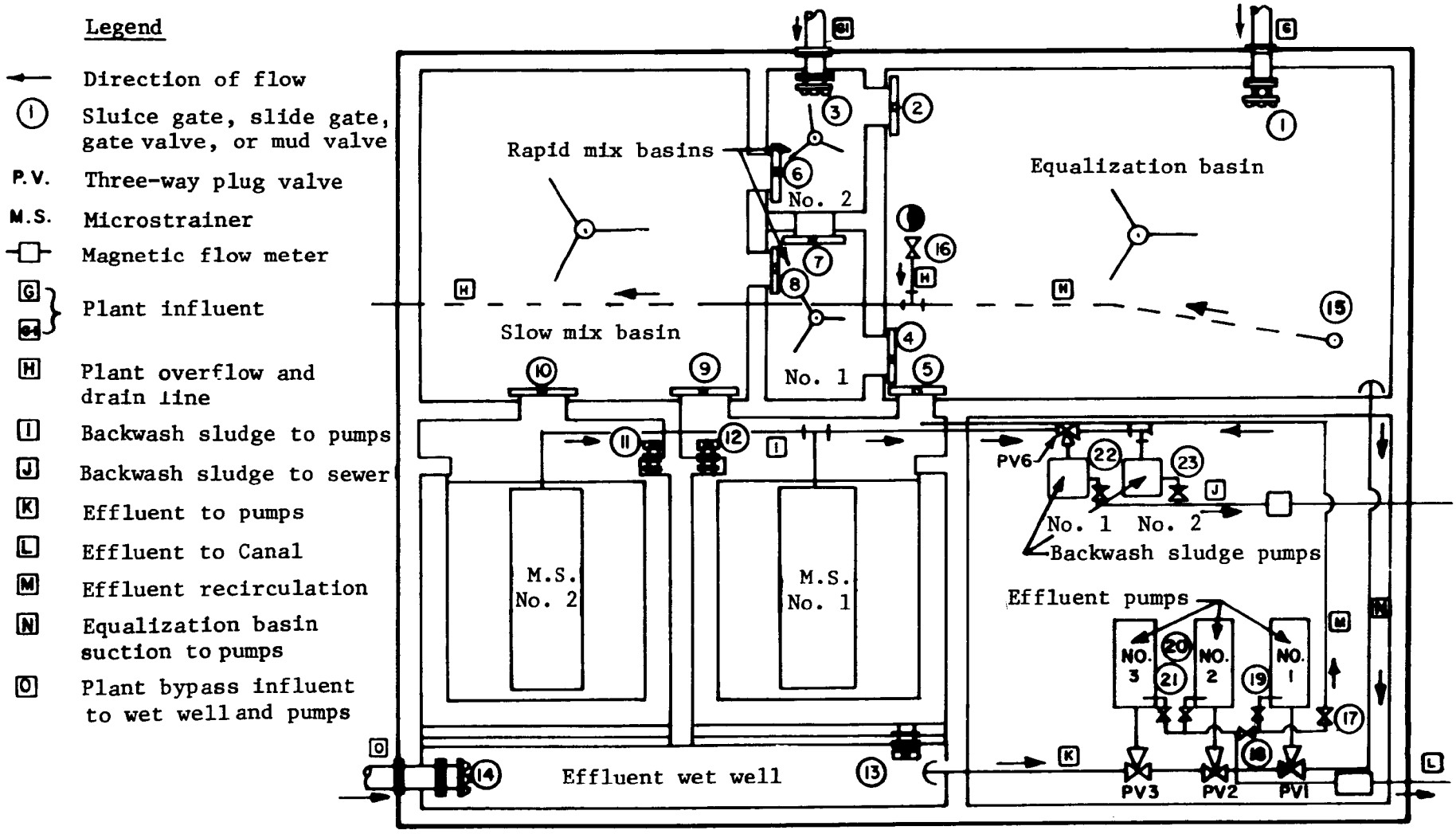

Fig. 5. Process piping schematic

To keep the wastewater in suspension in the equalization basin, a Lightnin 10-hp axial flow turbine mixer is mounted in the center of the tank. A 14-in. overflow pipe is provided for emergency overflow if the plant operating water level becomes too high. A 10-in. cast iron suction line is also provided in this basin to facilitate dewatering.

Rapid Mix Basins

From the equalization basin, the wastewater flows into one or both rapid mix basins where chemical flocculation normally begins. A Lightnin 3-hp axial flow twin turbine mixer in each basin provides flash mixing of the wastewaters. Detention time, at an average flow of 1.8 mgd, is 2 minutes if the basins are used in parallel or 4 minutes if they are used in series. Primary coagulants (alum and/or sodium aluminate) are introduced into the wastewater through diffusers in the slide gate channels entering the basin.

Slow Mix Basin

The slow mix basin provides the necessary mixing and detention time to complete flocculation of the suspended material before the flow is passed to the microstrainers through 48-by 30-in. slide gates. The detention time in this basin is 15 minutes at average flow, and mixing is supplied by a 1.5-hp Lightnin variable speed turbine flocculator. Primary coagulant and/or a coagulant aid (polymer) can be fed through diffusers in the inlet channels from the rapid mix basins.

Microstrainers and Microstrainer Chambers

After passing through the equalization, rapid, and slow mix basins, the wastewater enters the microstrainer chambers which house the 10-ft-diameter by 10-ft-long microstrainers -- the basic treatment units of this wastewater treatment plant. Flow can enter these units from the equalization basin, the slow mix basin, or both. Flow enters the microstrainer through one end, called the upstream end, and exits through the sides of the drum which are covered with the microfabric. The filtering action takes place on this microfabric. Under normal operating conditions, the drum is submerged in the flowing water to about two-thirds of its depth.

As the waste water passes out through the microfabric, suspended material is retained on the inside and forms a continuous blanket of sludge. As the drum rotates, this blanket of sludge moves to the top and is washed off by a backwash spray from two spray heads. The sludge then falls into a hopper and is carried by gravity to the backwash sludge pumps. The filtered wastewater, or filtrate, then flows over the effluent weir into the effluent wet well.

The two Glenfield & Kennedy microstrainer units were furnished by the Cochrane Division of the Crane Company, King of Prussia, Pennsylvania. The two units are identical except for the mesh size of the microfabric (unit No. 1: 23 micron; unit No. 2: 35 microns). These units have the following common features:

Diameter and length of drum	10 ft by 10 ft.
Microfabric	Stainless steel (monofilament wound)
Screen area	314± sq ft (each unit)
Gear drive and motor	10-hp hydraulic variable speed
Drum speed	0 to 150 fpm (feet per minute) (0 to 4.78 rpm)
Speed control	Pneumatic, automatic, and manual
Backwash spray system	32-jet header system (each unit)
Backwash flow	49 gpm at 40± psi (each unit)
Backwash supply	2-in mill water or 3-in. filtered effluent

Effluent Wet Well

The effluent wet well maintains a constant flood suction for the effluent pumps; its normal operating depth is 5 ft of filtered effluent from the microstrainer chambers. Connections to the wet well are a 14-in effluent pump suction line and a 12-in. inlet connection from the plant bypass line.

Effluent Pumps

Since that reach of the Connecticut River in the area of the treatment plant often has no flow, it was not possible to discharge the plant effluent directly into the river and still achieve an acceptable degree of dilution. It is therefore necessary to pump the effluent from the wet well through a 12-in. force main into an 8-in. diffuser in the bottom of the power canal. Three 50-hp Warren model 6PH-15 centrifugal pumps, rated at 1,200 gpm at 115 ft. total dynamic head (TDH), are installed in the pump room.

The pump speed and level control system is an automatic variable frequency system furnished by Electric Machinery Company, Minneapolis, Minnesota. This system operates any two of the three effluent pumps according to the liquid level in the wet well. The third pump is kept on standby with an on/off full speed control only. A manual pump selector switch permits any combination of pumps to be run variable speed (ampli-cycle) and manual speed.

Backwash Sludge Pumps

Two sludge pumps were provided to pump the backwash sludge generated by the microstrainers to the Canal Street sanitary sewer for transmission to the Montague wastewater treatment plant. Each pump is rated at 120 gpm at 100 ft TDH of mixed flow backwash sludge. Pumps are on/off full speed control; one is kept on standby.

The sludge pumps originally selected for the plant were Megator "snore" pumps, which were recommended by Glenfield & Kennedy because they had employed them previously for pumping microstrainer sludge. For reasons discussed in another section of this report, the Megator pumps were later replaced by Warren Solids-Master end suction impeller pumps.

Flow Measurement and Instrumentation

Flow measuring devices in the treatment plant are all of the magnetic flow meter type. Meters are located on the four incoming wastewater lines in the junction manhole, as well as the plant effluent and backwash sludge force mains. Strip chart recorders and totalizers are located in the central instrument control cabinet furnished by the Wallace & Tiernan Division of the Pennwalt Corporation. This cabinet, situated in the office/laboratory area adjacent to the motor control center, is shown in Fig. 6. Instrumentation for most of the treatment plant is also located in this control cabinet.

Chemical Feed System

The alum feed system for the treatment plant consists of:

1. Two 2,000-gal. fiber glass holding tanks for liquid alum storage

2. Transfer piping and a 50-gal. day service tank (located in the treatment plant itself), with liquid level probes for maintaining a constant level

3. Chemical feed metering pumps and a rotameter broad for diverting flow to one or more chemical diffuser locations.

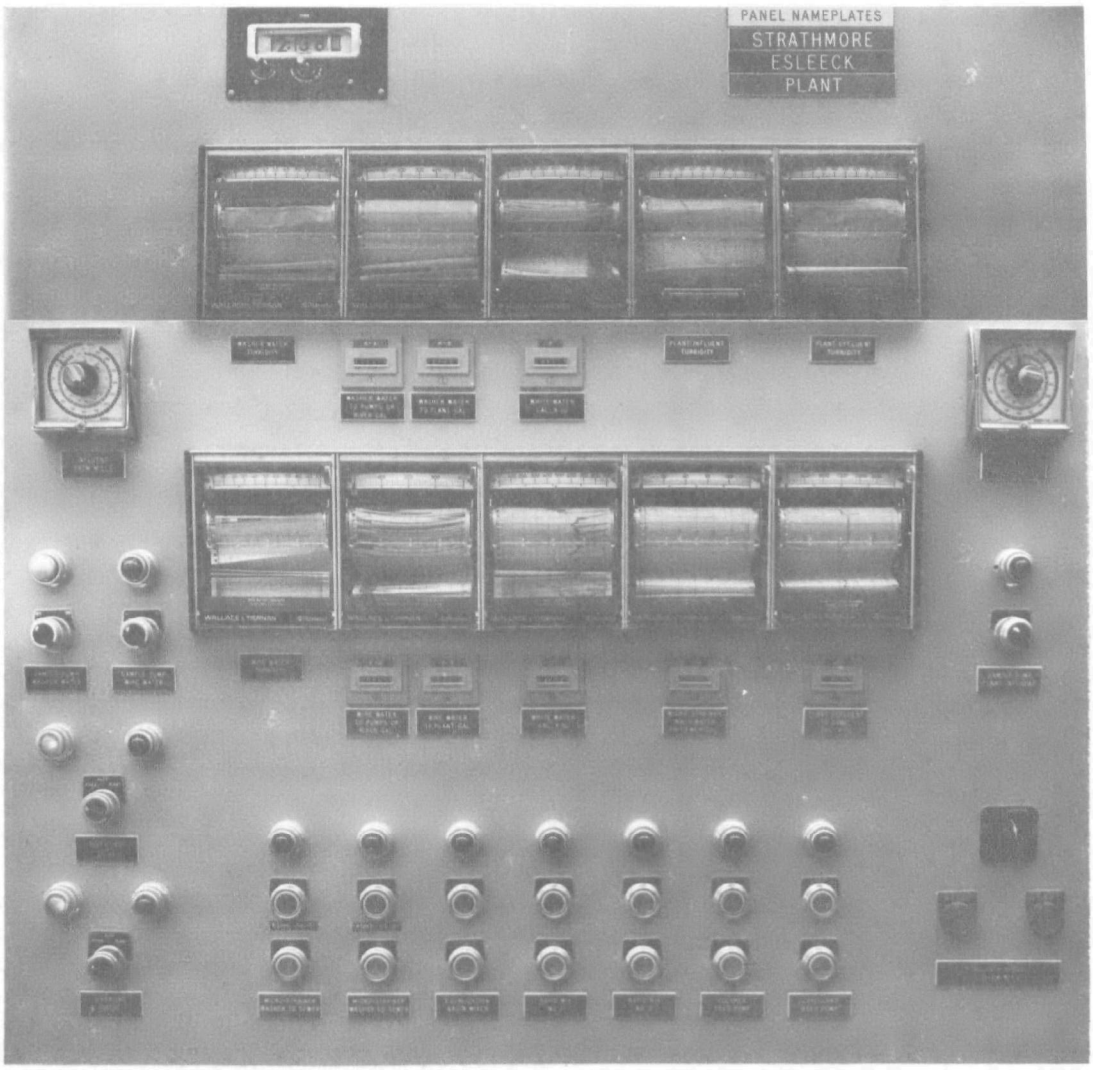

Fig. 6. Instrumentation control cabinet

Originally, the alum feed system described above was used for sodium aluminate. When it became apparent that alum was needed, and in far greater quantities than sodium aluminate, the system was converted. Because of the flexibility built into the original system, it was possible to divide the polymer feed system and create a completely separate sodium aluminate system consisting of:

1. One 900-gal. holding tank for liquid sodium aluminate

2. Chemical feed metering pumps and rotameter board for diverting flow to the inlet of one or both rapid mix basins.

The polymer feed system for the treatment plant consists of:

1. One 1,200-gal. makeup and holding tank equipped with both dry and liquid polymer makeup facilities

2. Polymer metering and diverting facilities similar to the alum and sodium aluminate systems.

Fig. 7 is a schematic diagram of the complete chemical feed system. Fig. 8 shows the outlet locations of the chemical diffusers in the sub-structure of the treatment plant.

Alarms and Alarm Systems

A fully automatic alarm system has been installed to prevent damage to the equipment or interruption in treatment efficiency due to failure of any operation. The alarms and their pertinent systems are listed in Table 3.

Alarm lights are mounted on the effluent pump panel (see Fig. 9). An audible alarm buzzer and alarm silencer and reset button are supplied. The alarm light will not go out until the condition has been corrected. A four-way selector switch is mounted adjacent to the alarm lights for use in sounding alarms in one or all of the following places:

Position No.	Location
1	All stations
2	Treatment plant control area
3	Strathmore Paper Company boiler room
4	Esleeck Manufacturing Company boiler room

An alarm lamp will light and an audible alarm will sound in either or both mill boiler rooms when any one of the 12 alarms trips in the control panel at the treatment plant. It is anticipated that this complex system of alarms will insure constant and efficient operation of the treatment plant, even in the absence of the treatment plant operator during night shifts and weekends.

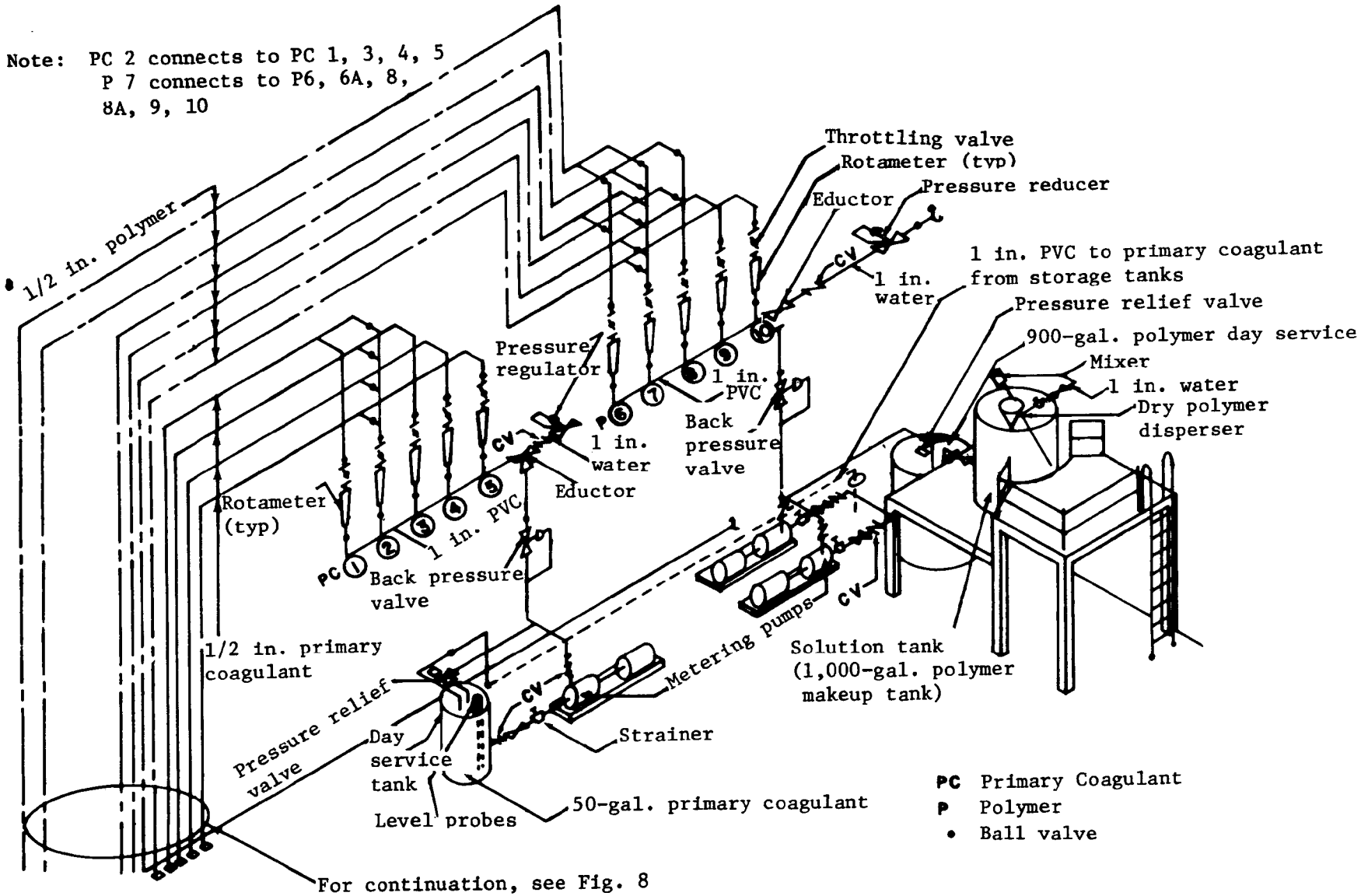

Fig. 7. Chemical feed schematic

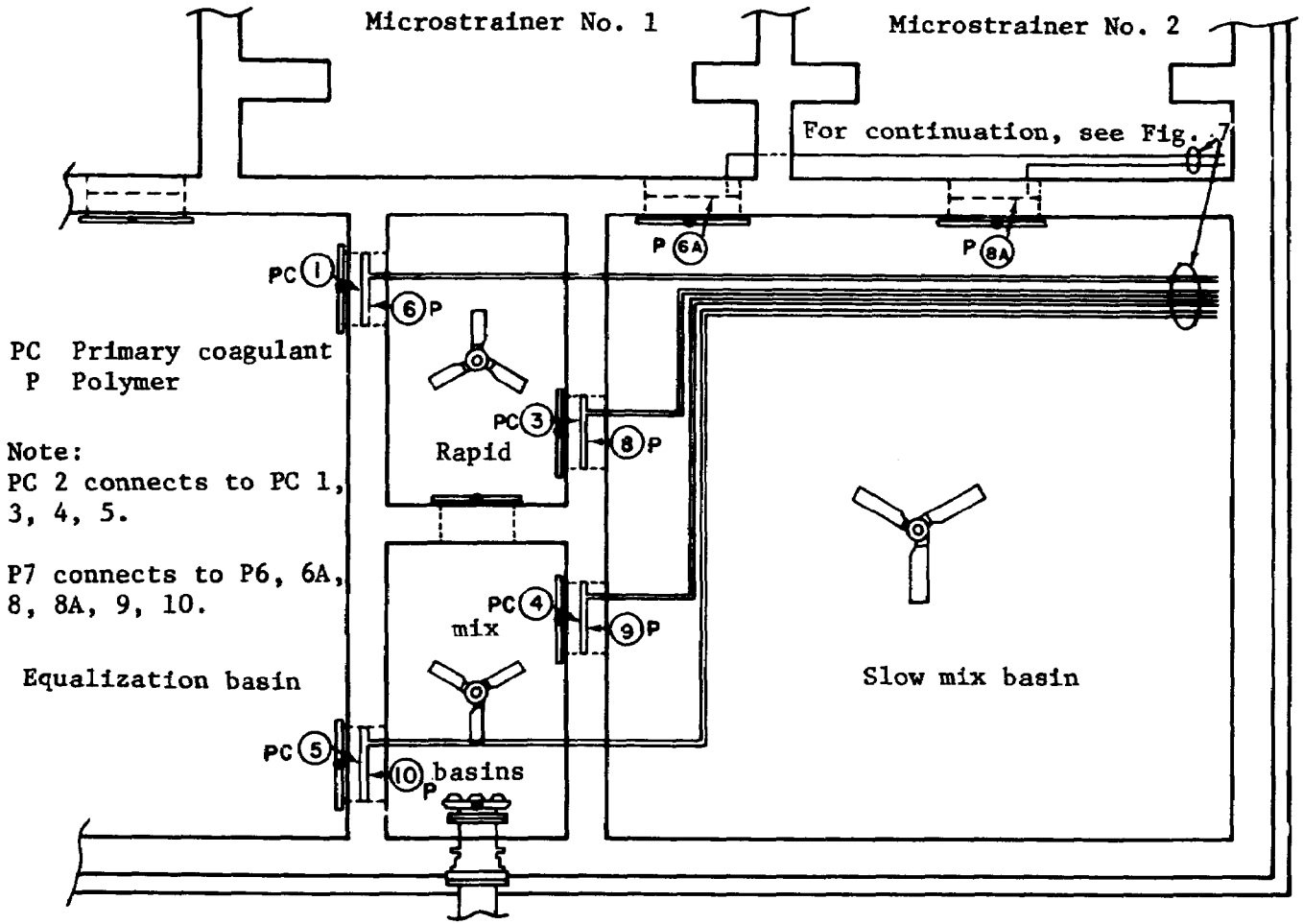

Fig. 8. Plan, chemical feed

TABLE 3

TREATMENT PLANT ALARMS

Alarm	System
High condensate	Pumps for condensate return for steam heating system
High wet well level	Wet well for plant effluent pumps
Low wet well level	Wet well for plant effluent pumps
High effluent turbidity	Plant effluent sampling and turbidity monitoring system
Microstrainer low air	Air supply for microstrainer automatic control system
Microstrainer No. 1, high differential	Hydraulic head loss through the screens exceeds 10 in. of water
Microstrainer No. 2, high differential	Hydraulic head loss through the screens 10 in. of water
Microstrainer bearing water low flow, each drum	Little or no flushing and lubricating water being supplied to the bearings
Microstrainer drive overload, each drum	Hydraulic oil pressure in variable speed drum drive; indicates high head loss or drum bearing problems
Equalization basin, high level	High operating level in treatment plant; indicates condition of approaching emergency overflow
Backwash sludge, no flow	Backwash sludge pumping system; indicates pump failure
Power failure	Indicates no electrical power to treatment plant

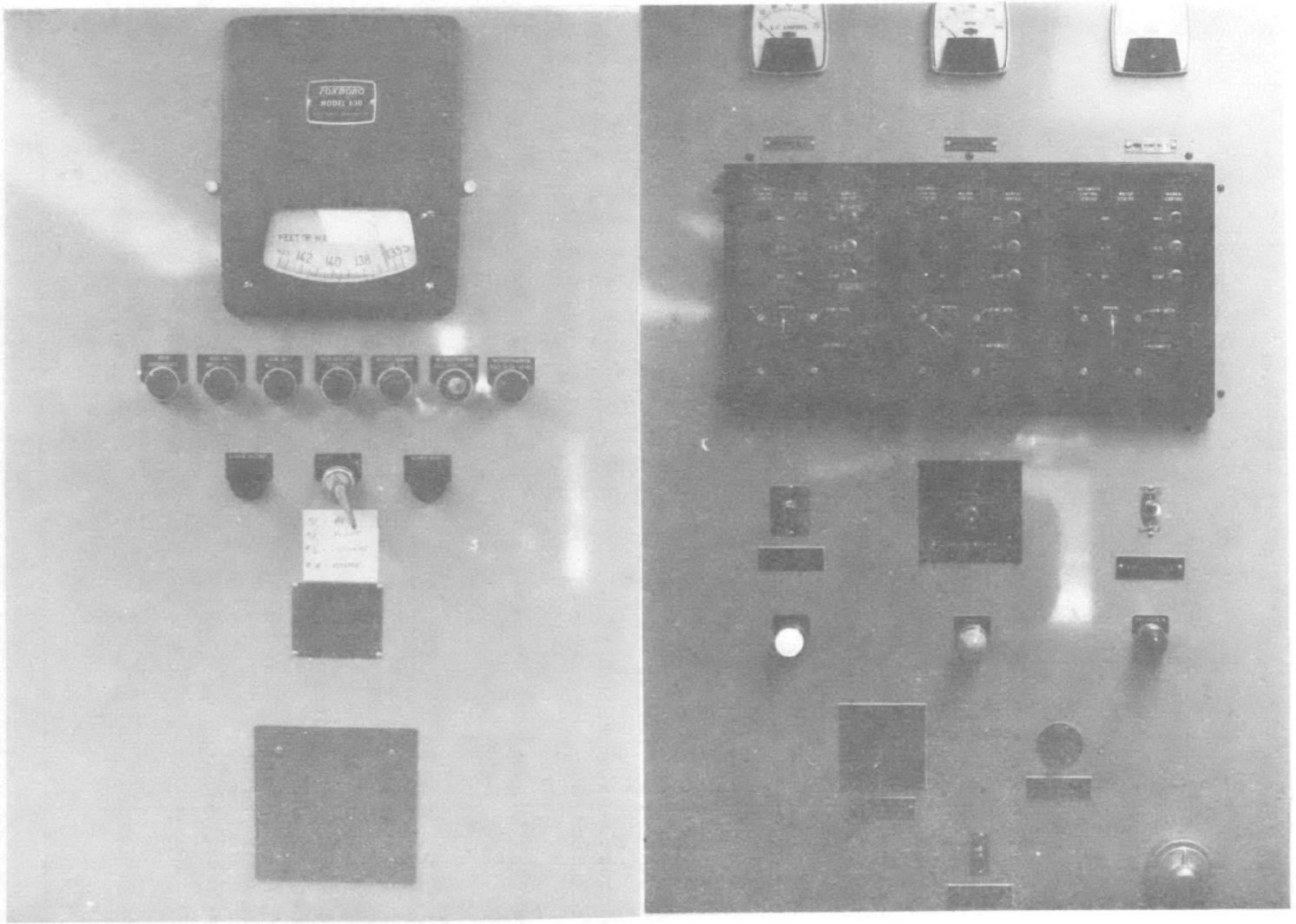

Fig. 9. Effluent pump control cabinet

ACTUAL CONSTRUCTION

The Strathmore Paper Company and the Esleeck Manufacturing Company shared equally the construction costs of the joint industrial wastewater treatment facility and, on a prorated basis, the operating costs. Bids for construction were let in the fall of 1970; Nalews Construction Company of Laconia, New Hampshire, was the low bidder. After some negotiations, a contract for the construction was signed on December 12, 1970.

Work on the project began on January 18, 1971, when the contractor moved equipment to the site; however, excavation for the building did not begin until January 25, 1971. Highlights of the construction activity, some of which are described below, are given in Table 4.

After one month of construction during a very cold January (average temperature was less than 15°F., with a recorded low of -33°F., the base slab and piers were ready to be formed and poured. Because of unusually heavy rains and other problems encountered in the excavation (such as old mill debris), the final pours for the base slab were not completed until March 24. The contractor utilized a critical path scheduling technique to insure the timely finish of the project, and it was during this two-month period that the technique illustrated its greatest flexibility. Other tasks such as yard piping, some manhole construction, and work not affected by weather were completed. Thus jobs which could not be finished on schedule were allotted time at the end of the project, so that the actual date of completion need not be changed.

On April 13, the excavation and wall forms, half of which had been erected, were inundated. Recent work on the Northfield pumped storage project, one of the nation's largest, required modification of several dams on the Connecticut River. The Montague dam, just upstream of the treatment plant site, was not quite complete and a tainter gate on the dam was raised but could not be lowered. Water in the Connecticut River rose nearly level with the proposed elevation of the main floor slab of the plant.

No permanent damage was done either to the excavation or the form work and slab, which were in place, but heavy deposits of silt were left in the construction area. Although the high water receded within about eight hours, the general level of runoff in the Connecticut River basin was such that the operating authority at the dam could not insure that flooding would not recur. It was therefore decided to halt construction on the building until a more certain prediction of flood conditions could be made.

TABLE 4

CONSTRUCTION HIGHLIGHTS -- STRATHMORE-ESLEECK
JOINT INDUSTRIAL WASTEWATER TREATMENT FACILITY

1972 Date	
January 18	Contractor began work on site by constructing work sheds, etc.
January 25	Excavation for main building begun
February 26	Piers for base slab foundation poured
March 24	Base slab, first major concrete pour
April 13	Flood waters inundate site
May 10	Excavation for 12-in. effluent line begun
May 20	Flood cleanup commenced
May 27	First wall pour for below-grade structure
June 15	Final wall of below-grade structure poured
June 23	First slab poured, excavation for junction manhole begun
June 28	Cement block wall construction begun
July 13	Plant operator hired by Strathmore (on their time) to be present during final stages of construction
July 20	Microstrainers arrived (one damaged), precast T-beams arrived (four damaged)
July 22	First microstrainer placed in plant
July 26	Second microstrainer placed in plant
July 28	Precast T-beams placed on roof
August 24	Roof and all other exterior portions of building completed
September 7	Microstrainer fabric secured to drum
October 5	Pump tests begun for plant startup
October 14	Plant startup, shakedown and punch list begun

Work on the project did not stop however. Construction continued on the interior piping, rag boiler line, sludge line, and 12-in. effluent line, which was started on May 10. On May 20, permission was given to clean up the substructure, forms, and everything affected by the flood. By May 27, the forms had been cleaned and the first wall pour for the below-grade structure was made. Work in this area continued smoothly, and by June 15 all below-grade concrete work was completed. At this date all construction was behind by nearly 1.5 months, but the September completion date still appeared realistic if overtime were authorized.

On June 23 the first floor slab was poured and excavation for the junction manhole was begun. The construction of the cement block walls began one week later, and was completed by early July.

Strathmore, which was responsible for the operation of the plant, hired an operator before the completion of the project. On July 13 the operator was assigned to the plant full time so that he could become familiar with equipment and construction before the plant itself was placed in operation.

On July 20, 1971, the microstrainers arrived at the site by truck after shipment from England. The drums were unloaded and swung to a temporary location by a 60-ton truck crane. It was not until July 22, after an inspection of both drums, in which one was found slightly damaged, that one of them was finally placed in its well in the plant. By July 26, the second unit was placed and provisions were being made to pour the concrete end wall around each microstrainer.

On July 20, the precast T-beams also arrived (their arrival was scheduled to utilize the truck crane to lower these beams to the site as the microstrainers had been). When the beams arrived, it was noted that four of them were cracked, some badly, at or near the neutral axis. The cracks extended upward through the beam to the flanges. It was determined that the beams should be unloaded, but they were not accepted pending an extensive period of testing and study by the manufacturer, engineer, client, and a special consultant. It was not until after a sustained loading test several days later that the beams were declared suitable, and on July 28 they were placed on the roof.

By August 24 the roof and all other exterior work were completed, and the major effort of the contractor was concentrated in the building where the interior piping was being installed. By September 7 most of the interior

painting was finished, and it was possible to affix the microfabric to the microstrainers. Prior to this time, it was felt that the fabric would be clogged with paint, dust, etc. The work of attaching the screens took over two weeks with at least two people working full time.

Pump tests were begun on October 5 when the wet wells, etc., were filled with clear water. Finally, on October 14, the plant was filled with wastewater and filtration began. Although the startup was about one month late, most of this delay was attributable to problems beyond the contractor's control. The plant shakedown and punch list items were then completed, as would be expected in a project of this size.

TREATMENT PLANT COSTS

Table 5 lists the construction costs of this facility. Based on a total cost of $689,000, and assuming an average life of the equipment and building of 25 years, the annual capital cost is $27,600. The two mills produce approximately 70 tons of paper per day, and operate a minimum of five days per week, 50 weeks per year. Thus the capital cost of the treatment plant is approximately $1.50 per ton. An equal amount should be allocated for interest charges on financing the project at 8% interest.

Operating costs are discussed in Section IV.

TABLE 5

FINAL CONSTRUCTION COSTS, JOINT INDUSTRIAL WASTEWATER TREATMENT FACILITY

Exterior piping	$ 54,500
Excavation, site work, building, and other miscellaneous expenses	279,700
Equipment	
Pumps, piping, valves	61,300
Microstrainers (two units)	120,000
Mixers	14,700
Chemical feeding and plant control equipment	37,000
Gates, hoists, and miscellaneous steel	19,000
Electrical	43,700
Subtotal	$629,000
Engineering and contingencies (engineering includes design, resident engineer, and services during construction)	60,000
Total	$689,900

SECTION IV

OPERATION

TREATMENT PROCESS DESCRIPTION

Microstraining is a relatively simple method of solids-liquid separation, which utilizes direct filtration of the wastewater through a very fine screen (called a microfabric) mounted on the outer periphery of a cylindrical drum. Wastewater is introduced into the inside of the drum through the open end, called the upstream end, and passes through the screen because of the hydraulic head differential across the screen. Suspended material is trapped by the microfabric and deposited on the inside of the drum. To insure a continuous flow, the drum rotates constantly. When deposited solids are brought to the top of the drum, two rows of backwash spray heads spray process or city water through the microfabric and wash the solids mat into a V-shaped hopper mounted on the center axis of the drum. Thus the microfabric, as it returns into the wastewater flow, is clean and ready to filter more solids.

Two 10-ft-diameter by 10-ft-long Crane-Glenfield microstrainers are used at the wastewater treatment plant. Microstrainer No. 1 has a 23-micron (Mark 0) opening, 316 stainless steel microfabric, and No. 2 has a 35-micron (Mark 1) microfabric. Both microstrainers are identical in all other aspects of design and operation. Each microstrainer is sized to filter 1.75 mgd of combined industrial wastewater from the two mills. The filtered water, or effluent, fills the outside chamber of the drum and flows over a weir to the effluent wet well. The weir maintains an operating water level in and around the drum of about two-thirds the drum depth. The solids washed off into the hopper (backwash sludge) flow by gravity to the backwash sludge pumps. Fig. 10 is a cutaway view of a typical microstrainer installation.

The most important criteria to be met by the microstrainer are its hydraulic capacity and its solids removal efficiency. Factors affecting the hydraulic capacity of a microstrainer are: (1) size of screen opening (in microns), (2) head loss through the screen, (3) filtering area, and (4) characteristics of the wastewater. To accommodate varying hydraulic conditions, the plant microstrainers have a pneumatically operated automatic control system that maintains a relatively constant head loss across the screens (approximately 6 in.) by increasing or decreasing the filtering area per unit time (i.e., the drum speed) according to the increase or decrease in flow.

Filtering efficiency is affected primarily by the size of the microfabric and characteristics of the wastewater. However, other conditions such as head loss and drum speed seem to be more significant in the treatment plant. These are discussed later in this report.

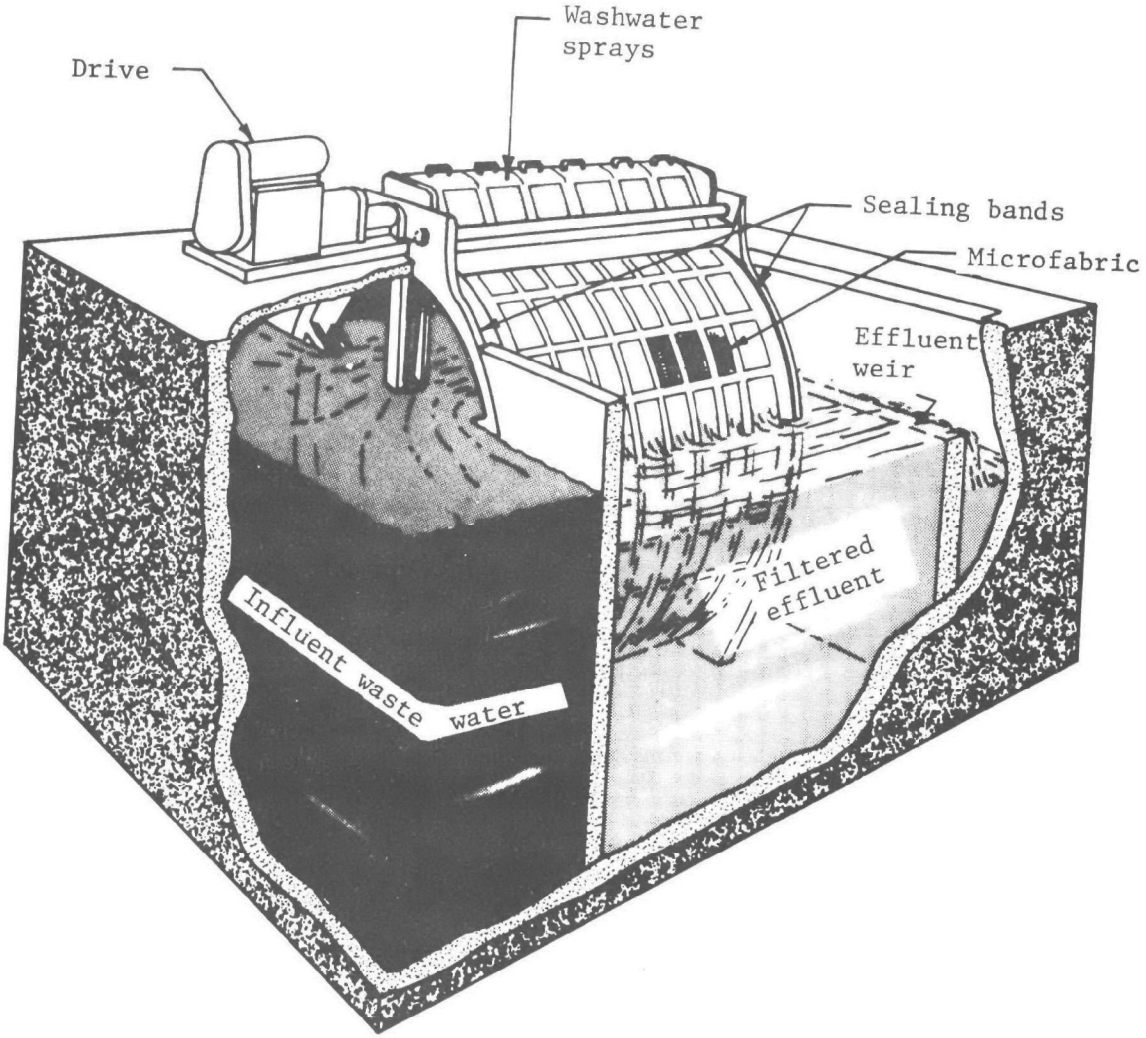

Fig. 10. Typical microstrainer arrangement

To optimize the removal of suspended solids, color, and turbidity, chemical feeding and flocculation facilities were supplied as part of the overall treatment system. Flocculation of the fine suspended matter and filler material as well as the fibrous material creates large particles that filter more easily, and creates a fibrous mat on the microfabric that also becomes a filter aid. Chemical feeds at several locations in the rapid and slow mix basin (as described in Section II) allow additional flexibility of operation.

Operation of the microstrainers was designed for both parallel and series flow sequences. Piping was installed to recirculate filtered effluent to microstrainer No. 1 for further screening through the 23-micron screen, or to treat the plant wastes completely when the unit is dewatered. Manual override speed control was also provided, for flexibility of operation.

All features of this system were designed for maximum flexibility of operation to determine the most effective and efficient means of utilizing the process of microstraining in treating this type of wastewater.

TESTING METHODS AND PROCEDURES

Data collection from the treatment plant began at the onset of operation in late November and early December 1971, but was sporadic because of repeated mechanical problems. Sampling was stopped until the treatment plant became operational. Data collection was resumed May 1, 1972, and continued through October 17, 1972 (the completion of the studies by CDM). The same sampling and testing procedures were used throughout the duration of the straight screening and chemical feed portions of the project, except for periods of special studies and sampling programs.

Sampling

Composite samples (16-hour) were collected by hand hourly and composited on an equal volume basis. Automatic samplers were tried but abandoned because high concentrations of suspended solids clogged the sample lines. Routine day shift sampling was accomplished by the treatment plant operator under the supervision of Camp Dresser & McKee personnel, who conducted second-shift sampling. Manual 24-hour composites were not possible, because of the unavailability of personnel during the night hours.

Samples were not composited on the basis of flow for two reasons: (1) the flows from the two paper mills were so sporadic that compositing on the basis of flow would not necessarily be representative; and (2) the concentrations of solids, color, turbidity, and organic matter fluctuated so greatly, and not necessarily in proportion to flow, that it would have been impossible to catch every fluctuation in wastewater concentration.

Samples were taken at the following points within the treatment plant:

1. Combined influent from the equalization basin
2. Filtered effluent from microstrainer No. 1
3. Filtered effluent from microstrainer No. 2
4. Combined effluent from both microstrainers plus any bypassed flow taken at the effluent force main
5. Backwash sludge from the backwash sludge force main.

Combined influent and combined effluent samples were taken at sample cocks at the laboratory sink. Effluent samples from each microstrainer were taken with a sample dipper at the effluent weirs. After collection, samples were refrigerated at 40°F. until analysis was started.

Analytical Methods

All analyses of the composite samples were in accordance with Standard Methods for the Examination of Water and Wastewater, thirteenth edition, 1971, except for color analysis. Color, at best, is defined by arbitrary standards and is difficult to monitor, particularly when there are so many varied colors resulting from the papermaking processes. For the purposes of this study, therefore, we based our color determinations of both the influent and effluent on a dilution test recommended by the Massachusetts Division of Water Pollution Control. The tests consisted of determining the quantity of sample which had to be added to 1 liter of tap water before color was noticeable.

Daily composite samples were analyzed and the results recorded on daily operating forms. The following analyses were conducted on each sample:

pH
Turbidity
Settleable solids
Total solids and total volatile solids
BOD (5 day, 20° C)
COD
Color
Aluminum

All analyses were conducted at the fully-equipped treatment plant laboratory by Camp Dresser & McKee personnel assisted by the treatment plant operator.

Jar Studies

Jar studies were conducted daily on grab samples of the influent to determine the most effective and most efficient combination of chemicals for the particular wastewater. Because the wastewater characteristics changed rapidly, and because some flows were more difficult to treat than others, on many days more than one jar test was required to determine the chemical dosages necessary to meet the change. During the straight screening phase (Phase II) of the project, many jar tests were run to evaluate several different combinations of primary coagulant and polymer.

Jar tests were run in series, six jars at a time, using a Phipps & Bird six-unit paddle stirrer and 2-liter battery jars. Chemicals were added into 1,500-ml samples in increasing dosages. Primary coagulants such as alum and/or sodium aluminate were added prior to a 2-minute flash mixing at 100 rpm, followed by a 10- to 20-minute slow mix at 15 to 20 rpm. Before the slow mix, increasing dosages of a polymer were added. After completing the flocculation process, a portion of the flocculated wastewater from each jar was filtered through a small hand microstrainer unit supplied by the microstrainer manufacturer. This hand unit consisted of a 3-in. diameter plastic column 6 in. high with a section of Mark 1 (35-micron) microfabric enclosing the bottom end. A sample was poured into this column and the volume of filtrate passed in 9 seconds was noted. This method was used instead of settling the flocculated sample, because it more closely duplicated the actual conditions expected in the full scale plant.

Evaluation of the most effective chemicals and dosages were based on several factors: (1) size and characteristics of the floc, (2) filterability through the screen in comparison with the raw wastewater filterability, and (3) clarity of the filtered effluent. The chemical requirements determined by the jar tests were then utilized in the full scale wastewater flow during the chemical feed portion (Phase III) of the study.

Records

Complete and accurate records were collected at the treatment plant using the standard forms shown in Fig. 11. These forms were prepared for the operating manual and were designed to be used not only for laboratory analysis reporting but also for recording complete backup information pertaining to the wastewater streams entering the plant each day (i.e., individual hydraulic flows, turbidity, and grades of paper made at each mill). In addition, complete daily records of the chemicals and dosages fed were kept for future reference and also for cost analysis purposes.

Besides the forms shown in Fig. 11, individual daily work sheets were provided for recording analyses of solids, BOD, and COD. A monthly form for reporting analyses and operating conditions at the treatment plant was provided (after being accepted by the state) for the required monthly reports to the State of Massachusetts Division of Water Pollution Control.

A bound operating log was maintained to record all operating conditions and related problems during the first year of operation.

OPERATING PROBLEMS

The Strathmore-Esleeck wastewater treatment plant is an original facility for treatment of paper mill whitewaters, and is the first plant in the United States that uses microstraining with coagulants. Therefore, one of the objectives of the post-construction studies was to report on the performance of the related equipment and any unusual operating problems. The following paragraphs describe some of the problems encountered during the first year of operation.

Minor problems centered on the microstrainer control system and pump plugging. There were, however, major problems concerning the overall plant flows, the microstrainer seals and capacity, the sludge pumps, the plant effluent pump controls, and the automatic bypass system. Some of these are not yet fully resolved.

Plant Flows

Incoming wastewater flows have been consistently higher than anticipated, as shown in Fig. 12, which illustrates the total plant flows pumped to the canal. This figure indicates that the design average flow was 1.74 mgd (1,200 gpm), but the actual pumped flow to the canal has been closer to 2.0 mgd (1,400 gpm).

That portion of the flow from the Esleeck mill has been approximately as expected -- the average whitewater and washerwater flows have been about 1.00 mgd. However, during the early stages of operation, the whitewater flows were sporadic. Whitewater is pumped from Esleeck (the only pumped flow to the treatment plant) by a duplex pump station with two pumps rated at 750 gpm each. Initially, these pumps worked from a level control in the wet well. When this control system was used, the flow to the treatment facility fluctuated drastically, upsetting operations. To correct this condition, a flow throttling valve was installed on the discharge line, which resulted in a relatively stable pumping rate and alleviated much of the flow surging. Fig. 13 illustrates the actual Esleeck whitewater and washerwater flows versus their design values.

DATE _____

OPERATOR _____

	FLOWS (MGD)					
	MIN.	AVG.	MAX.	TREATED	DIVERTED	PUMPED
STRATHMORE WHITEWATER						
STRATHMORE WIREWATER						
ESLEECK WHITEWATER						
ESLEECK WASHERWATER						
TOTAL FLOW						
BACKWASH SLUDGE						

		PAPER GRADE		
		MACH. #7	MACH. #8	MACH. #9
STRATHMORE	GRADE			
	COLOR			

		MACH. #1
ESLEECK	GRADE	
	COLOR	

	CHEMICALS LISTED		
	FEED RATE (gph)	DOSAGE (mg/l)	DOSAGE (lbs/day)
PRIMARY COAGULANT			
( )			
POLYMER			
( )			

	TURBIDITY (JTU)		
	MIN.	AVG.	MAX.
STRATHMORE WIREWATER			
ESLEECK WASHERWATER			
COMBINED INFLUENT			
EFFLUENT			

	MICROSTRAINERS			
	DRUM SPD.	DIFF. HD.	EFFLUENT SOLIDS	
	AVG. (fpm)	AVG. (in)	SETTL. (ml/l)	SUSP. (mg/l)
UNIT #1				
UNIT #2				

Fig. 11. Daily operating and analysis report
(daily operating report and data sheet)

DATE _____

OPERATOR _____

ANALYSIS (1) (2)		COMBINED INFLUENT	MICROSTRAINER #1 EFF.	MICROSTRAINER #2 EFF.	PLANT EFFLUENT	% REMOVAL	BACKWASH SLUDGE
TEMPERATURE (°F)							
PH							
ACIDITY							
TURBIDITY (JTU)							
SOLIDS	Settleable (ml./L)						
	Total						
	Total Volatile						
	Suspended						
	Volatile Suspended						
BOD 5 DAY - 20°C							
COD							
COLOR							
ALUMINUM							
TITANIUM							

(1) See Table 6 for frequency of testing

(2) All results in mg/L unless otherwise noted

Fig. 11. Daily operating and analysis report (laboratory analysis report)

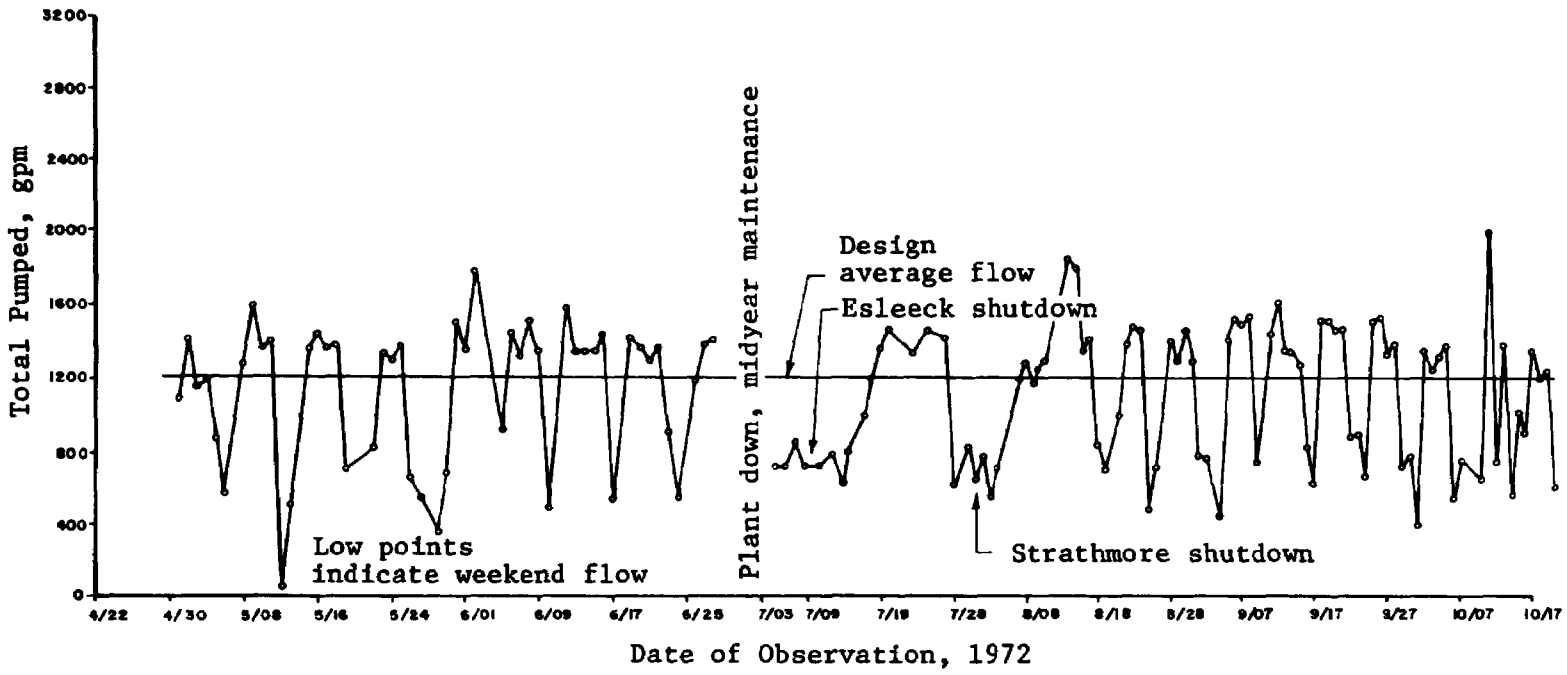

Fig. 12. Plant effluent pumped to canal

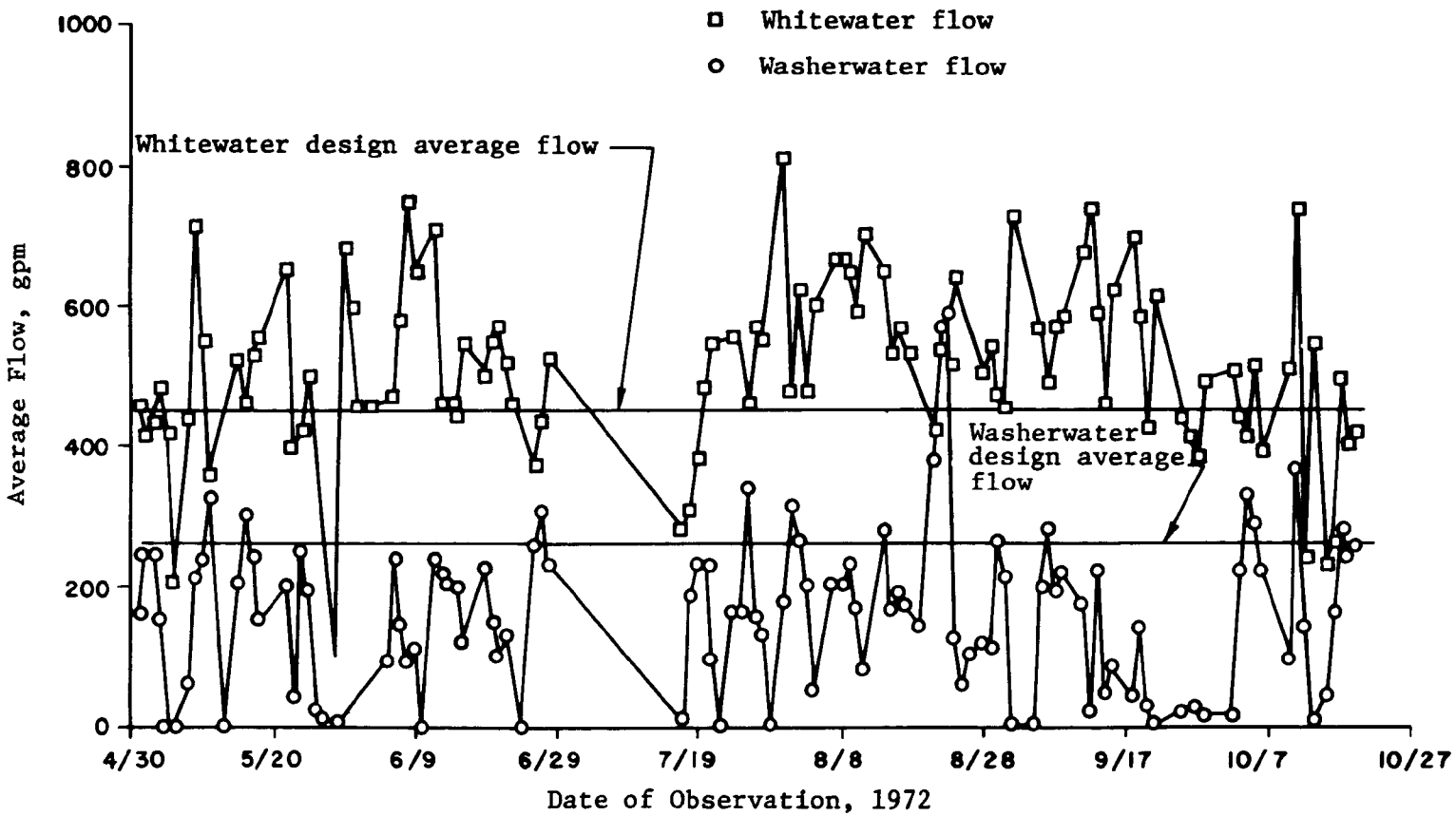

Fig. 13. Esleeck wastewater flows

Prior to design, estimates were made of the total wastewater flows expected (after providing for recirculation of certain wastewaters). These flows were confirmed by Strathmore. However, during actual operation it was found that those values were exceeded at the plant.

Flows from the Strathmore mill fluctuated even more widely than those from Esleeck during the early stages of the project. There were several reasons for this: (1) flows were discharged by gravity to the treatment plant, and were thus more erratic; (2) three paper machines were contributing flows, and corresponding sequences of grade changes and washups of two or more machines resulted in peak surges in flow; and (3) at times, only limited amounts of whitewater were recirculated at one or more machines.

Flows from the wirewater pits were below the expected average by some 70 percent, or about 60 gpm. This was due in part to the incorrect implementation of the wirewater collection system, which resulted in the wire pit flow going to the whitewater storage tanks instead of directly to the treatment plant. The mill is now taking the necessary action to correct this problem.

Whitewater flows were nearly 700 gpm, which was well above the predicted average. This was partially the result of inefficient use of the whitewater recirculation system -- primarily that portion relating to whitewater reuse in the hydropulper operation. The high whitewater flows varied in duration. Short-term peak flows caused severe hydraulic loads on the plant and microstrainers, thus reducing plant efficiency. These peak flows were generally caused by chest dumps and washups of the paper machines. Proper scheduling of machine washups and more consideration of the effect of quick dumping of chests has generally relieved the condition. However, the mill is constantly monitoring this problem.

Whitewater flows from the mill still exceed the estimates used for design. Originally it was anticipated that whitewater flows could be reduced to almost 300 gpm. The mill is in the process of further reusing whitewater to reduce the flow to more nearly conform to the design parameters. Fig. 14 shows the whitewater and wirewater flows for the study period.

Microstrainers

No significant problems of installation of the microstrainers were encountered, although one microstrainer was slightly damaged in transit. The only serious problems encountered with the microstrainers were fouling of the drum bearings with paper stock and drum seal leakage.

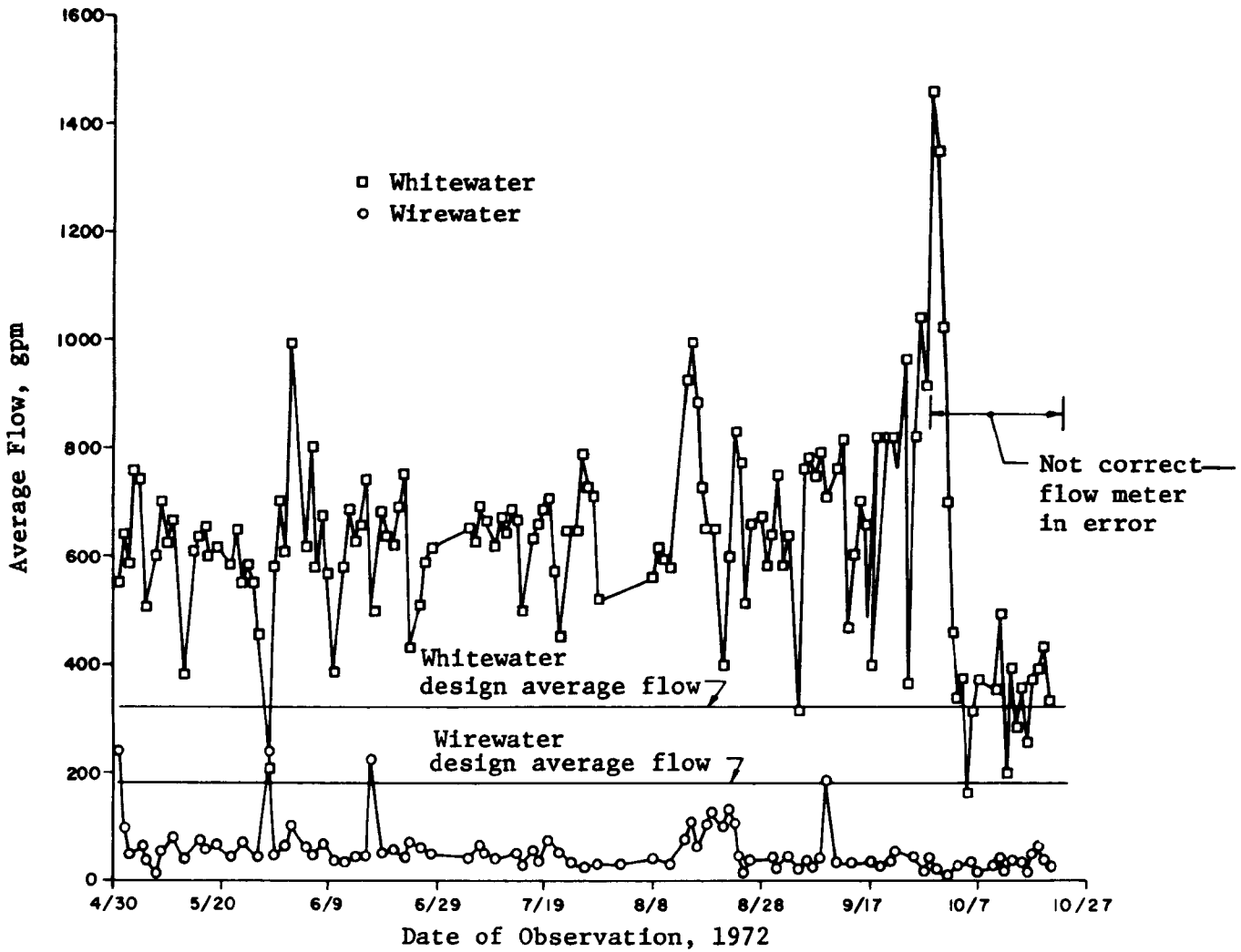

Fig. 14. Strathmore wastewater flows

Bearings -- Three water-lubricated bearings were provided on each drum. The bearings on each end of the drum were supplied directly from a source of fresh water and in turn supplied the middle bearing. When the bearings became packed with paper stock, causing an eventual stoppage of drum rotation, it was assumed that this was caused by the high solids content of the waste and low pressure in the bearing water feed line.

To alleviate the problem each of the three bearings on each microstrainer was connected to its own separate water supply and the supply lines enlarged. The modification immediately relieved the problem. A rotameter was installed on each flow line, so that a drop in the preselected flow rate at the bearing water line would automatically warn the operator to take appropriate action.

Prior to removing the paper stock from the bearings and installing additional water supply lines to them, it was necessary to raise the microstrainer assembly with jacks. As a result of an improperly placed jack, one of the microstrainers was severely damaged. One end of the drum was bent so that seal leakage, discussed below, increased for an extended period of time until the damage was repaired.

Seals -- Leakage of the bands sealing the fixed and rotating portions of the microstrainer (Fig. 15) was a problem far more difficult to resolve. Failure of a seal allowed leakage of wastewater to bypass the microfabric and pass untreated to the plant effluent. Seal failure was a result of the accumulation of fibrous suspended material (paper stock) under the unattached edge of the seal. Small particles of fibrous material became attached to the seal and, from the rotation of the drum, these rolled into small balls which continued to grow in size under the seal. Therefore, a seal had to be designed to insure that fibers would not be passed under it.

Seven different seals were tried on one or both drums, including the original equipment seals furnished with the units. In all, nine different combinations and/or seal arrangements were tried. Table 6 lists the type of seal employed, the length of service, and average suspended solids removal. The table is keyed to Fig. 15, which illustrates the various seals. As indicated in Table 6, only varying degrees of success were experienced with most of the seals tried.

The flat seals tried (such as arrangements a and b, Fig. 15) failed almost immediately. The most effective seals to date were the cove molding seal (arrangement d), the knife edge seal (arrangement f). The cove molding seals worked well except when there was a large percentage of cotton fiber in the wastewater. Cotton rolls much faster and into larger balls than wood fiber. Once these seals failed, the treatment plant had to be shut

TABLE 6

MICROSTRAINER SEALS UTILIZED

Date of Service	Design	Material
11/8-12/13/71 (drums Nos. 1 and 2)	Standard Glenfield & Kennedy seals	Nylon outside, felt and brass inside
12/31/71-2/18/72 (drum No. 1)	Flat plastic	Plastic Orkot
12/14/71-2/11/72 (drum No. 2)		
2/18/-3/2/72 (drum No. 2)	Knife edge	Plastic
3/4-4/28/72 (drum No. 1)	Cove molding curved edge	Rubber
4/29-5/15/72 (drum No. 1)	Double overlapping	60-durometer rubber
5/16-7/3/72 (drum No. 1)	Reinstalled cover molding seals	Rubber
7/5-9/12/72 (both drums)	Dumbbell type cylinder mold	PVC
9/13-10/20/72 (drum No. 1)	Drum shutdown -- bent drum caused excessive seal leakage	
9/13/72 to date (drum No. 2)	Reinstalled knife edge seals	Plastic
10/21/72-11/15/72	Flat plastic feather edge	Plastic - brass
	Combination	
	Combination with flushing water	

TABLE 6 (cont.)

MICROSTRAINER SEALS UTILIZED

Key	S.S. Removal, percentage	Comments
15a	40-45	Seals plugged and leaked immediately
15b	36	As above
15c	No data	Seals failed immediately because of out-of-round drum, downstream end (see text)
15d	70-75	Seals worked well, except for downstream end drum No. 1
15e	63	Failed because of high friction between two rubber seals
15d	68	Worked well except for periods of high cotton fiber in waste (see text)
15f	70-75 (with chemical feed)	Worked well except for periods of rapidly changing head loss (downstream end No. 1 drum leaked excessively)
15c	85-90 (with chemical feed)	Worked well
15g	40-50	Failed because of solids buildup under seal, causing seal to pull away from drums
15h		Not tried, see above
15i		

down to clean them. The dumbbell seal worked well except for periods of rapidly changing head loss, when the seals tended to leak at the newly established water level. Although this seal appeared to be satisfactory, continuing research was being carried out on the knife edge seal similar to arrangement c. When this seal was originally installed, as shown in Table 6, it was put on the downstream end of microstrainer No. 1. At that time, it was not known that this microstrainer (which was the one damaged in shipment) was so out-of-round that it caused the almost immediate failure of all seals installed. Because this seal was not given a reasonable trial, it was placed on microstrainer No. 2 in the middle of September. This seal held tight, and did not fail immediately or stop the drum.

The plastic feather edge and brass combination seal tried on microstrainer No. 1 failed due to solids buildup under the seal. This buildup pulled the plastic seal from the drum, and stretched it so that it did not return to the drum surface after cleaning. For this reason, use of the plastic seal in combination with the outside dumbbell seal (Fig. 15, h and i) was abandoned.

Controls -- As previously described, the speed of the microstrainer drums is controlled by a pneumatic automatic and/or manual system. This system worked well, except for a few minor problems. A constantly recurring problem was the plugging with paper stuck of the screen on the air bubbler tubes, used to record the head differential. This created an incorrect head differential reading and consequently affected the operation of the automatic control system. By raising the elevation of these tubes and providing a blowdown system to periodically clear these lines, the problem was eliminated.

Another problem was the overall adjustment of the automatic control system. To function properly, this system had to maintain a fine adjustment at three locations: (1) the hydraulic drive, (2) the differential air to current converter, and (3) the differential controller. Incorrect adjustment at any one of these locations caused inefficient operation of the microstrainer control system. For the first few months of operation, the microstrainer controls were always out of adjustment, even with constant maintenance by the manufacturer's service representative and Strathmore instrumentation personnel. Eventually this system became less troublesome, but to date minor adjustments are still needed.

Drives -- The Carter "F" type hydraulic variable speed drives that were supplied with the microstrainers in general performed well with proper maintenance. On two separate occasions, once on each drum, the hydraulic drives failed. Failure was directly related to torque overloads on the

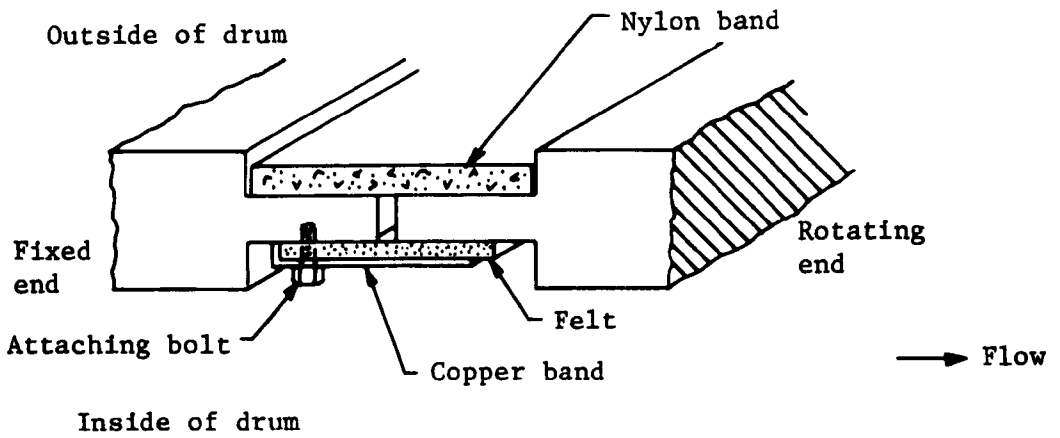

(a) Original Equipment Design

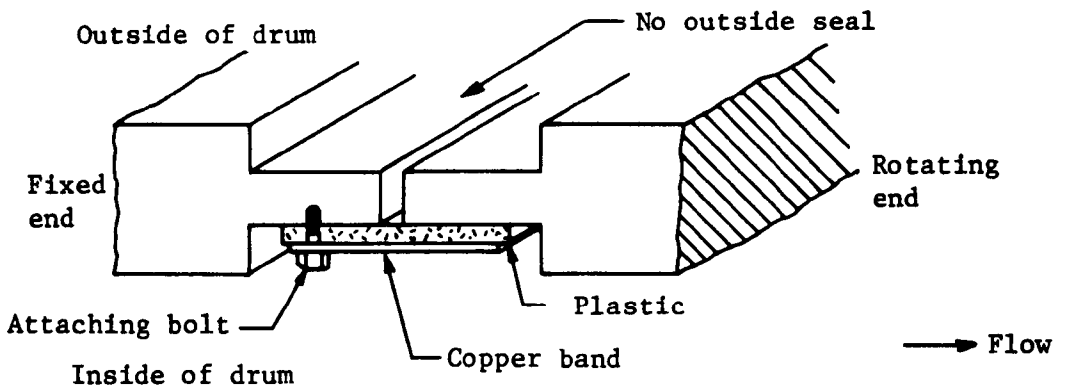

(b) Inside Band Only

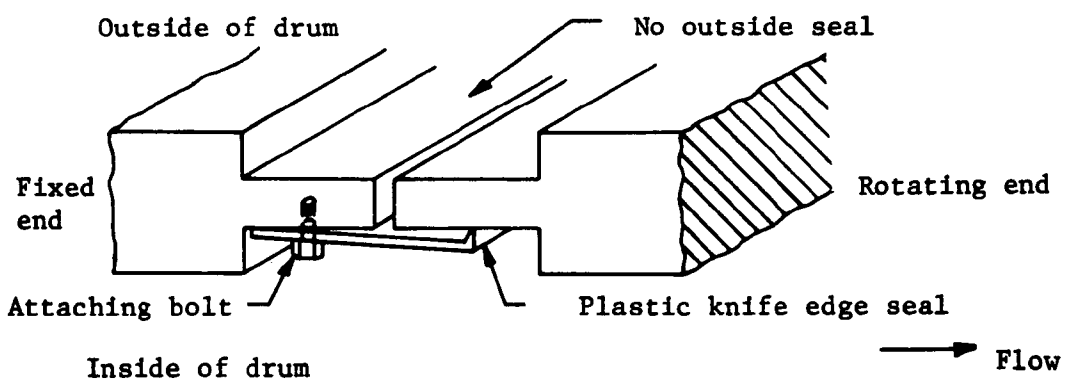

(c) Knife Edge Seal

Fig. 15. Microstrainer sealing arrangements

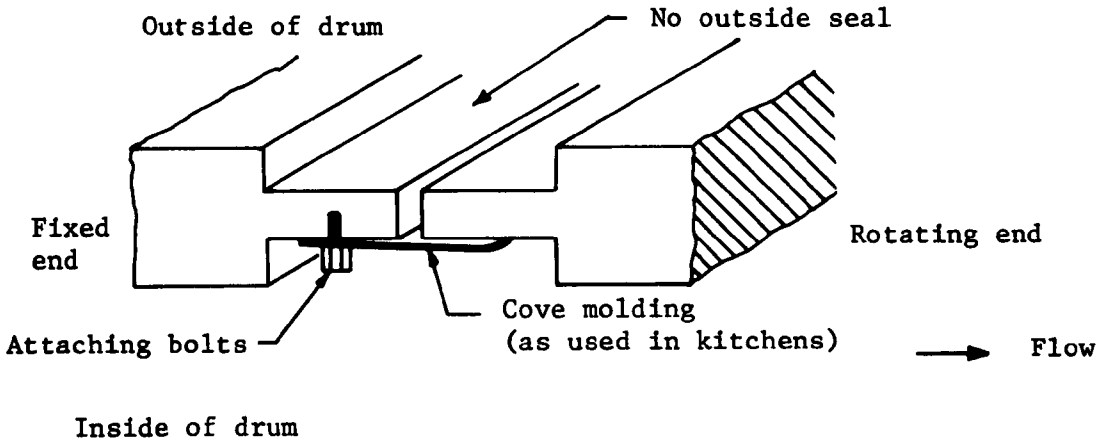

(d) Cove Molding

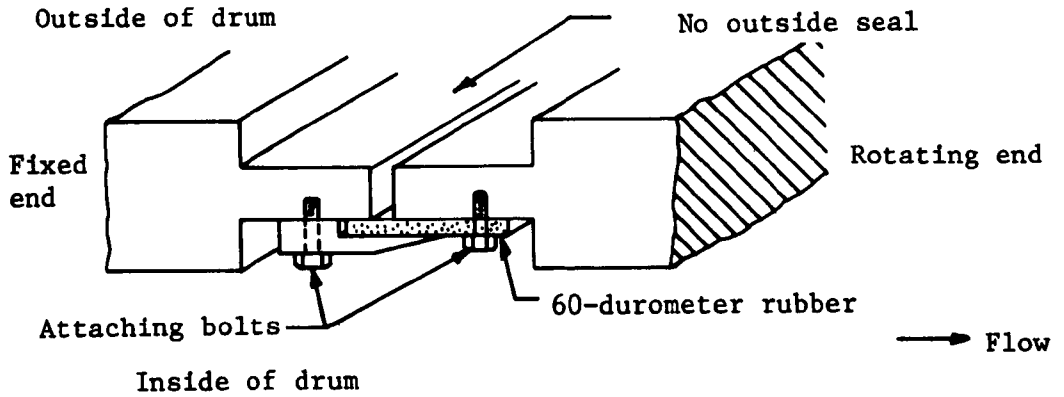

(e) Double Overlapping

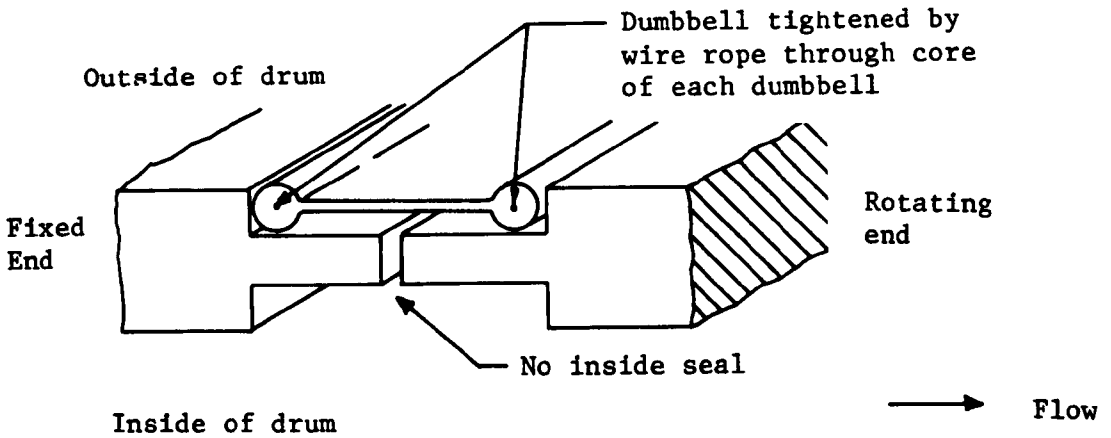

(f) Dumbbell Seal

Fig. 15. Microstrainer sealing arrangements (Cont.)

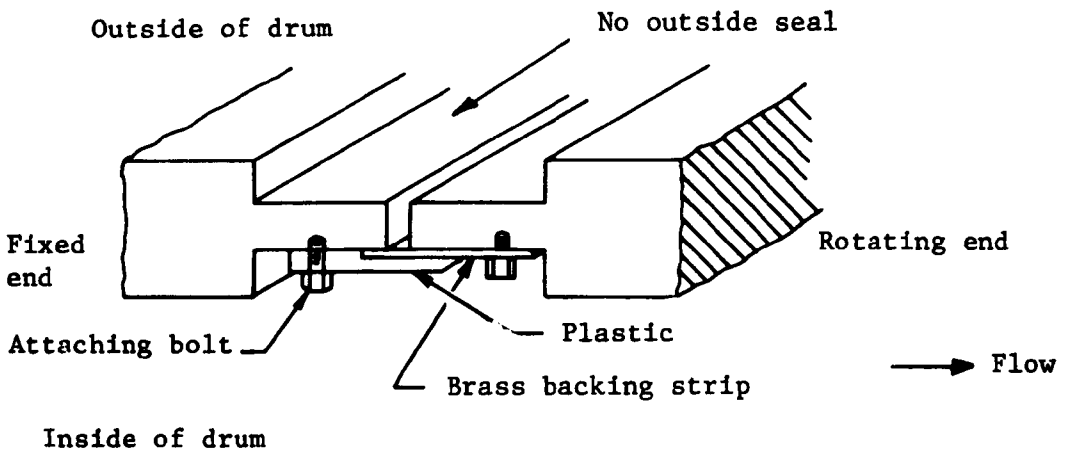

(g) Plastic-Brass

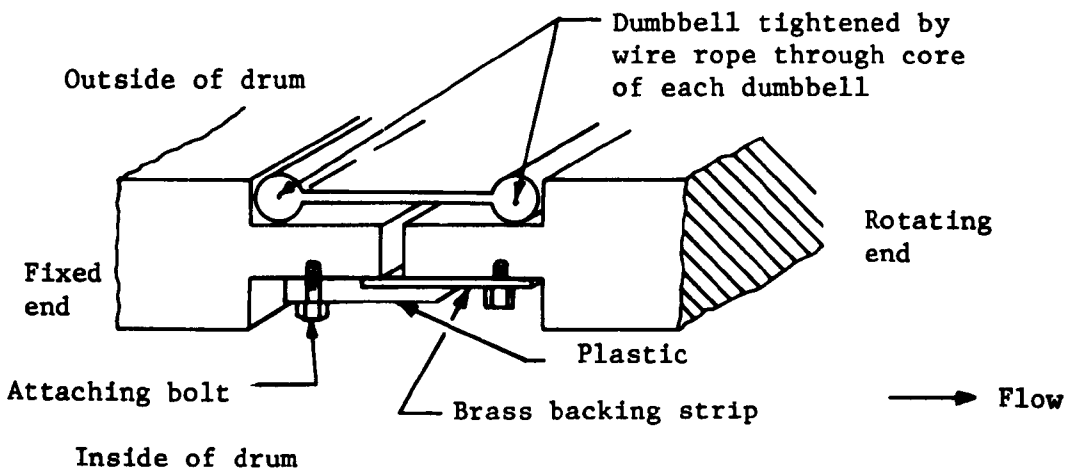

(h) Combination

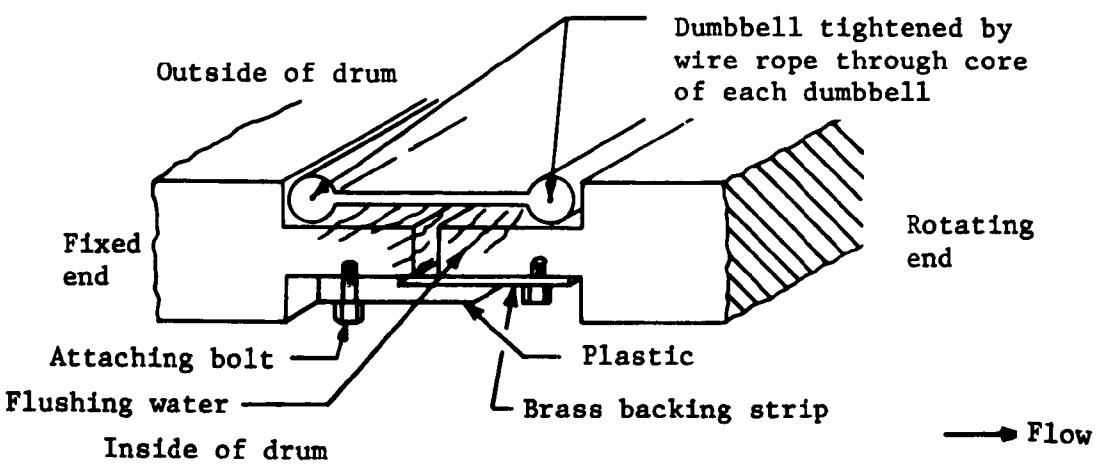

(i) Combination Plus Flushing

Fig. 15. Microstrainer sealing arrangements (Cont.)

drive when the microstrainer drum bearings became jammed with paper stock, as mentioned above. This resulted in a braking action on the drum. Once the drum bearing problems were corrected and the hydraulic drives were rebuilt, the condition did not recur. To insure that the drives would not become overloaded to the point of damage again, indicating hydraulic pressure gages with alarm devices and a preset pressure adjustment were installed. The alarm signal was added to the plant alarm system located in the operating control center.

Microfabric Cleaning -- One of the most important factors in the efficient operation of the microstrainers and their hydraulic capacity is the condition of the microfabric. Because the openings in the microfabric are minute, and because the microfabric is continuously filtering wastewater containing fine suspended material, it is imperative that it be kept clean and unplugged. This is accomplished by the backwash sprays that spray through the microfabric continuously as it reaches the high point in the drum.

One of the most troublesome problems with the microstrainers, aside from seal leakage, was the continual plugging of the microfabric. This was due in part to the very fine particles of titanium dioxide and filler material and in part to the backwash pressure available. (It was initially proposed by Strathmore that sufficient water pressure would be available.) The washwater sprays did not clean the microfabric properly when the drum speed was greater than 100 feet per minute (drum speeds range from 25 to 150 fpm), because of a deflection of the washwater sprays at the higher drum speeds.

As a result of the microfabric plugging problem, frequent washups with a strong cleaning solution had to be employed. The manufacturer recommended that the microfabric be cleaned by spraying phosphoric acid solution on the screen as it rotated slowly, and that the microstrainer chamber be completely drained during the process. This soon became prohibitive because of the complete disruption of the treatment process. Frequency of cleanings during the first year of operation averaged one per week and sometimes more often on microstrainer No. 1, which has the finer mesh microfabric. A highly alkaline foam cleaner was substituted for the acid and was applied without dewatering the chamber. This allowed the screens to be cleaned without interrupting plant flow longer than 30 minutes.

Two alternative cleaning methods were tried during the latter part of the first year's operation. These were: (1) daily injection of a liquid cleaner into the washwater spray head intermittently, and (2) intermittent cleaning of the microfabric with high pressure steam nozzles after the backwash sprays. It is believed that either procedure will allow the microfabric to be cleaned more regularly, perhaps daily. This will increase the efficiency of the straining process, including the hydraulic capacity of the microstrainers, lengthen the life of the microfabric, and reduce the cost of cleaning.

Sludge Pumps

The sludge pumps originally selected for the plant were Megator shore stainless steel fitted pumps. The pumps were recommended by Glenfield & Kennedy, who had employed them previously for pumping microstrainer sludge. The manufacturer stated that these pumps would pump soft suspended solids and grit.

Each pump, rated at approximately 120 gpm at 100 ft total dynamic head (TDH), was capable of discharging all the microstrainer sludge. The design of these pumps is such that they have three shoes mounted on an eccentric cam shaft and riding on a port plate. Excessive wear occurred on the shaft, shoes, and plate. Finally, after 1,500 to 1,700 hours of service, both pumps failed. The manufacturer claimed that failure was caused by excessive solids and low pH (4 to 5) which attacked the stainless steel.

After replacing the shaft and cam assembly, shoes, and port plate, one pump was again placed in service. After approximately 150 hours of operation, this pump again failed from excessive wear.

The Megator pumps were then replaced with Warren Solids -- Master pumps, which are open end impeller pumps. These are working satisfactorily, with no sign of wear.

Effluent Pumps

The three effluent pumps installed in the treatment plant (Warren paper stock pumps) are each rated at 1,200 gpm at 112 TDH. Thus any two pumps are capable of pumping the peak plant flow, with the third pump as standby. To equalize pumping and minimize the size of the required wet well, variable speed drives were chosen for the pumps. Magnetic drive units and ampli-cycle drive units were considered. The latter were chosen as the best compromise, considering initial cost, needed floor space, and cooling requirements. Although the ampli-cycle unit has a slightly higher initial capital cost than the magnetic drive, it requires less floor space, since it does not fit in the drive train between the motor and pump.

The ampli-cycle unit was purchased from Electric Machinery Company, and was one of the first of its kind used in such a facility. The unit is unusual; only one drive is required to serve all three pumps. As one pump reaches maximum speed, it is automatically transferred to the bus and the second pump is then activated to pump at a variable speed. Failure of the ampli-cycle unit does not put all pumps out of operation, because an alternative system of automatic on/off control, operated by a bubbler system which indicates a wet well level, can be used.

Problems were encountered with the ampli-cycle system. The problems could be attributed essentially to the initial adjustment of the unit and failure of electrical components. Since this was an original unit, field adjustments were required several times during startup. If the ampli-cycle system does fail, the system can be switched to the automatic bubbler operation which only operates one pump. Thus, if a second pump is required, an operator may be needed 24 hours a day to operate the second pump to accommodate the random high flows.

The continued smooth operation of this system was marred by the instability of certain components in the unit; in particular, some resistors were particularly sensitive to heat. These resistors failed at critical times, and it was not until after several failures that the problem was pinpointed.

An apparent problem also developed in meeting the rated capacity of the three effluent pumps. During several pump tests, design conditions could not be met. Repeated high flows made it sometimes impossible to handle the flow with two pumps. This condition was finally traced to a partially plugged wastewater distributor located in the power canal. After cleaning this distributor during plant shutdown in July, the problem was corrected. A final pump test indicated that the pumps were capable of meeting their requirements. Steps have been taken to monitor the distributor head losses continuously to alleviate future pumping difficulties.

Sampling and Turbidity System

The sampling systems for the automatic turbidity monitoring systems (Strathmore wirewater-Esleeck washerwater and plant influent-effluent) were designed to operate continuously, on an alternating basis, with two waste streams tributary to one wall-mounted Hach model 1800 turbidimeter. Automatic solenoid diverting valves controlled by a timer for each sample line divert one waste stream into the turbidimeter and one to waste. Individual sample pumps continuously deliver wastewater from three of the four sources to the diverting valve system, while the plant effluent is delivered under pressure from the effluent force main.

A problem that was experienced with these sample systems was plugging of the pumps, sample lines, and solenoid valves, as well as the turbidimeter measuring chamber, with suspended solids (paper stock) in the wastewater.

Replacing the sample pumps with pumps of a different design and installing basket strainers in the lines solved the problem of frequent plugging. However, frequent cleaning of the microstrainers is required.

Excessive wear of the impellers of the new pumps appears to be due to running the pumps dry during periods when the basket strainers are plugged.

Replacing the solenoid valves with specially designed three-way valves and enlarging the drains from the turbidimeter corrected the failure of the throttling system at the turbidimeters. Solids continued to accumulate in the overflow chamber of the turbidimeter, but a regular program of cleaning and flushing the chambers solved the problem and permitted uninterrupted service.

Alarm System

As previously described, a comprehensive alarm system was provided in the operating area, with branch alarms to each mill, to detect any malfunction of equipment or change in operation that would cause damage or interrupt the treatment process. During the first months of operation, it became evident that further alarms were needed to insure efficient and regular operation. Initially, only the first seven alarms listed in Table 3 were installed; the remaining five were added in late October. Each one of the last five alarms was added as a result of some breakdown or malfunction experienced with that system, or repeated conditions causing interruption in treatment. Fig. 9 showed the alarm panel with the selector switch.

Since the installation of this last set of alarms, the treatment plant has become more flexible in operation, and closer monitoring of the major mechanical equipment involved is now possible.

Chemical Feed System

A major factor in efficient operation of the treatment plant is the ability to add the proper chemicals at various points in the plant basins to flocculate the wastewater effectively. The basis of this system design was to feed a primary coagulant and/or coagulant aid (polymer) at the various points, as shown in Figs. 7 and 8. In general, this system proved to be very effective in its flexibility of operation and accuracy of control.

One problem which developed with the primary coagulant feed system (only sodium aluminate at the beginning) was the frequent plugging which occurred in the small plastic distribution lines leading from the rotameter board to and including the diffusers located in the sludge gate openings. In addition, the 1-in. PVC transfer line and transfer pump (from the holding tanks in the Strathmore mill to the 50-gal. day service tank) were continually plugged because of the high strength and viscosity of the 43 percent sodium aluminate used. These

plugging problems were solved by: (1) adding flushing connections at the feed end of the 1-in. transfer line and on the suction side of the metering pump, (2) enlarging the diffuser holes to 0.25± in., and (3) replacing the transfer pump by a motorized ball valve controlled by level probes in the day service tank, after it was determined that gravity flow from the holding tanks would be sufficient to supply the feed requirements.

The polymer feed system, as designed and built, worked well with no major problems. The system provided facilities for making up polymer solutions from either dry or liquid polymer bases; and had a holding tank and feeding capacity, via a two-pump system, for a wide range of feed concentrations.

One major change in the chemical feed system was made after repeated jar test data indicated that alum in place of or in conjunction with sodium aluminate was needed. It was determined that the primary coagulant would be alum, and sodium aluminate would be used only when wastewater was highly colored and turbid. Therefore, it became necessary to provide holding and feeding facilities for liquid alum. Because the design of the existing facilities was flexible, it was possible to develop a third system for feeding alum without any major additional construction. This was accomplished by:

1. Converting the two 2,000-gal. tanks from sodium aluminate to alum storage

2. Converting the transfer piping day service tank, metering pump, splitting and diffuser system for primary use of alum

3. Converting the 1,000-gal. polymer day service holding tank to a sodium aluminate storage tank

4. Converting one of the two polymer feed metering pumps to a sodium aluminate metering pump

5. Rearranging the necessary suction and discharge piping from the polymer makeup tank and the new sodium aluminate holding tank to the respective metering pumps, and from the pumps to the rotameter splitting board

6. Utilizing the polymer feed lines connected to the rapid mix basins to convey sodium aluminate. This would eliminate the possible application of polymer to the rapid mix basins.

SECTION V

DISCUSSION

As stated in the introduction, the overall objectives of this study, as far as the treatment process is concerned, were:

1. To compare the efficiency of the two microstrainers in screening wastewater without prior chemical coagulation

2. To compare the efficiency of the two microstrainers in screening wastewater when primary coagulant aids were added prior to screening

3. To compare the overall efficiency of the microstraining process with and without the above-mentioned coagulants

4. To investigate the capacity of each microstrainer and compare the two.

This section describes and compares the Phase II and Phase III studies. Special studies and alternatives are discussed according to their relevance to the microstrainers or microstraining process. Also included are the results of the backwash sludge dewatering studies and a description of full scale units that would be needed to handle the sludge on site.

PHASE II STUDIES

Phase II comprised approximately three months of straight screening studies (parallel screening of the wastewater through the microstrainers). During this period, however, microstrainer performance was hampered by the leaking sealing bands. The data presented will therefore reflect days when efficiency was poor because of seal leakage. Unfortunately, the seals leaked sporadically throughout the study, so there are no distinct periods of good or bad seal performance. Only 20 percent of the data on microstrainer No. 1 and 40 percent of the data on microstrainer No. 2 are representative of no leakage.

Suspended Solids Removal

Suspended solids removals for this period generally ranged from 50 to 85 percent for microstrainer No. 1 and 60 to 87 percent for microstrainer No. 2. Fig. 16 shows the suspended solids removals for Phase II. Major seal leakage on microstrainer No. 1 is indicated by the removals near or less than 50 percent. An average of selected data on days when there was little or no seal leakage shows removals of 84 percent and 82 percent for microstrainers No. 1 and No. 2, respectively.

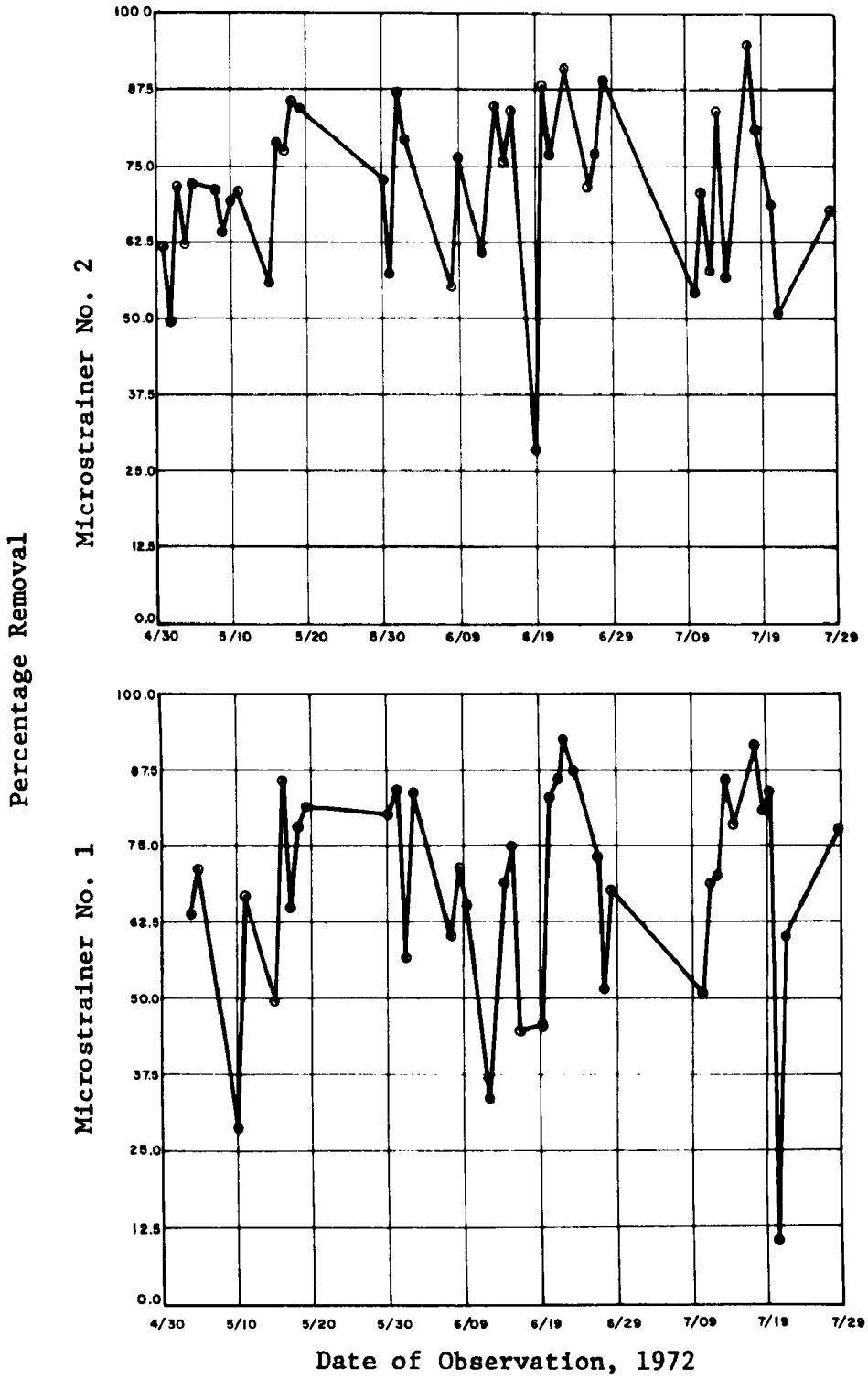

Fig. 16. Phase II suspended solids removal

Fig. 17 shows the frequency distribution of suspended solids removal for this phase. These curves indicate that 50 percent of the time microstrainers No. 1 and No. 2 had 73 percent or better suspended solids removal; 75 percent of the time the removal for microstrainer No. 1 was 60 percent or better, and for microstrainer No. 2 was 62 percent or better.

Turbidity Removal

Turbidity removals during Phase II fluctuated greatly, partly because of the wide range of influent turbidity (generally between 100 and 3,000 JTU) of the wastewaters. Most of the time, however, low turbidity removals were caused by the passing of very fine suspended titanium dioxide (10-to 20-micron particle) through the screens and also through the seal leaks.*

Microstrainer No. 1 had turbidity removals ranging from 10 percent to 90 percent, with an average of about 40 percent. Microstrainer No. 2 had a similar range, with an average of 35 percent. During days or no seal leakage, microstrainer No. 1 had an average turbidity removal of 51 percent and microstrainer No. 2 had a removal of 50 percent. Fig. 18 illustrates turbidity removals for this period.

The frequency distribution of turbidity removal (Fig. 19) indicates that microstrainers No. 1 and No. 2 averaged 35 percent and 38 percent or better removal 50 percent of the time, respectively, and 47 percent and 52 percent or better 25 percent of the time, respectively.

Color Removal

Color removal during Phase II also depended on the characteristics of the incoming wastewater. Color changes in the wastewater varied in frequency from once every two hours to once every several days, and at least 50 different color combinations were experienced. The intensity and nature of the colors varied from color that was attached to the suspended solids to completely soluble colors that could not be removed with the suspended solids.

Individual microstrainer effluent color determinations did not begin until halfway through Phase II; thereafter, ranges of removal varied from 20 to 75 percent for microstrainer No. 1 and 10 to 65 percent for microstrainer No. 2. Average removals were 45 and 30 percent for microstrainers No. 1 and No. 2, respectively.

* Titanium dioxide is used as a filler material in the paper making operation to increase opacity and brightness.

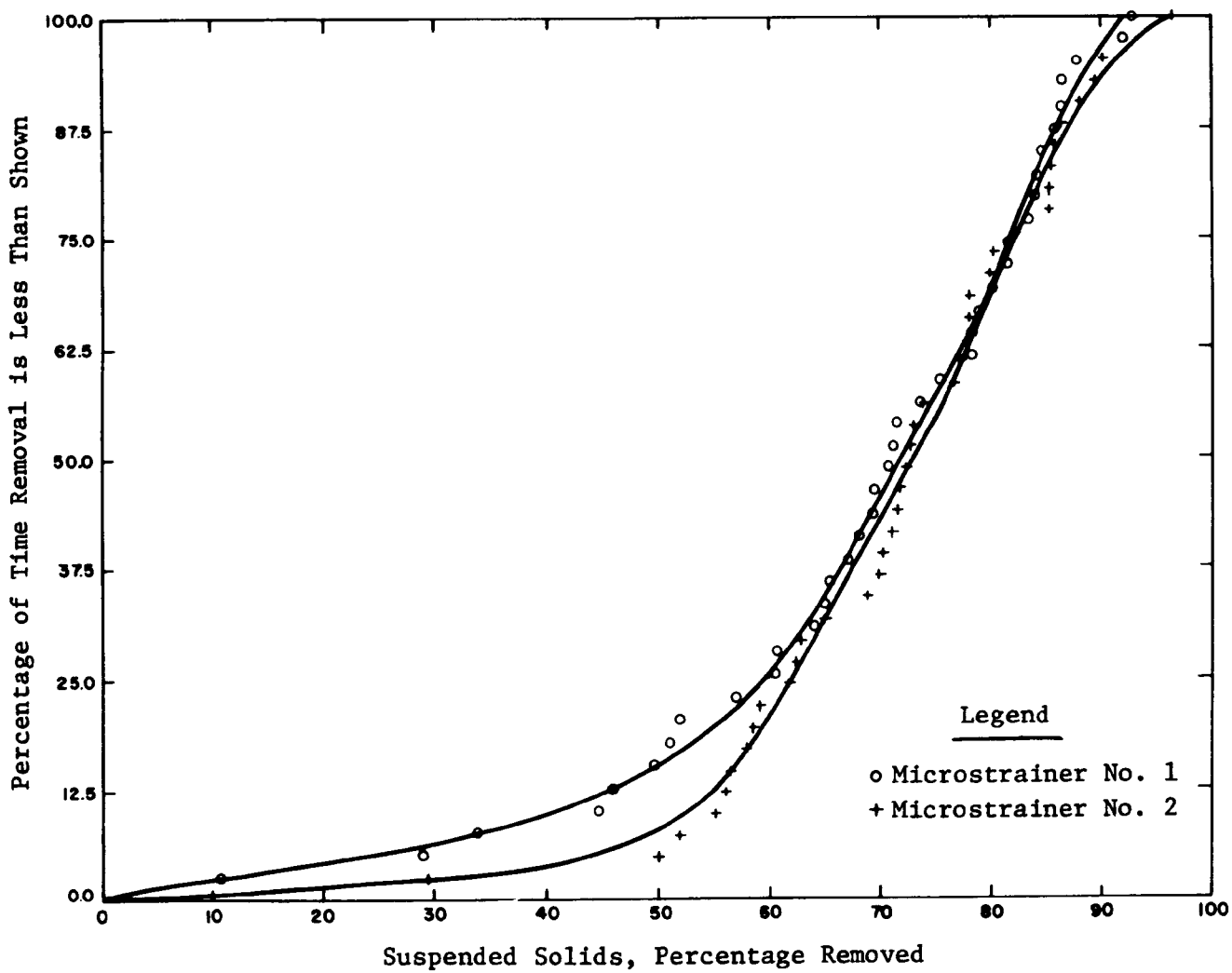

Fig. 17. Phase II Frequency distribution of suspended solids removal

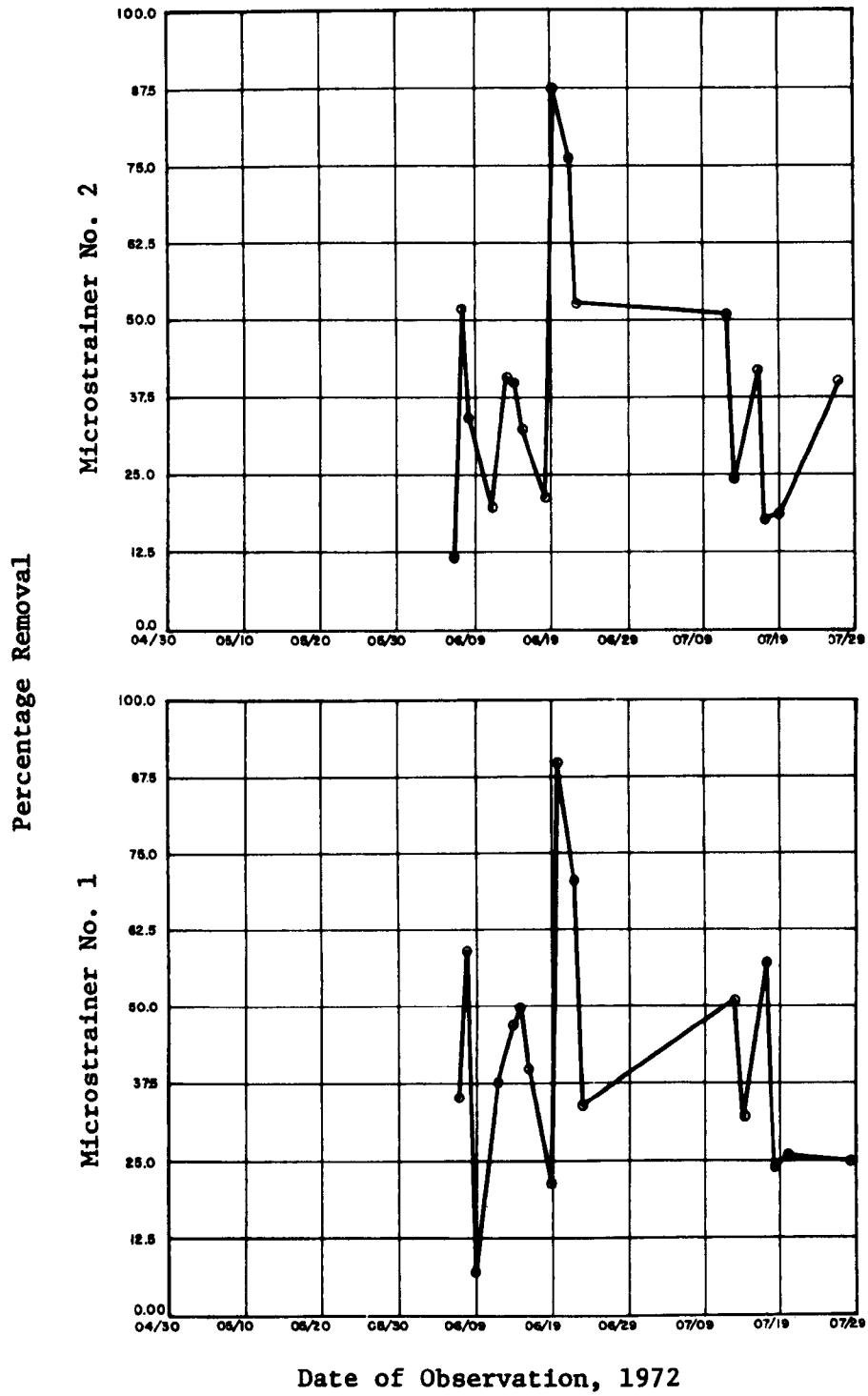

Fig. 18. Phase II Turbidity removal

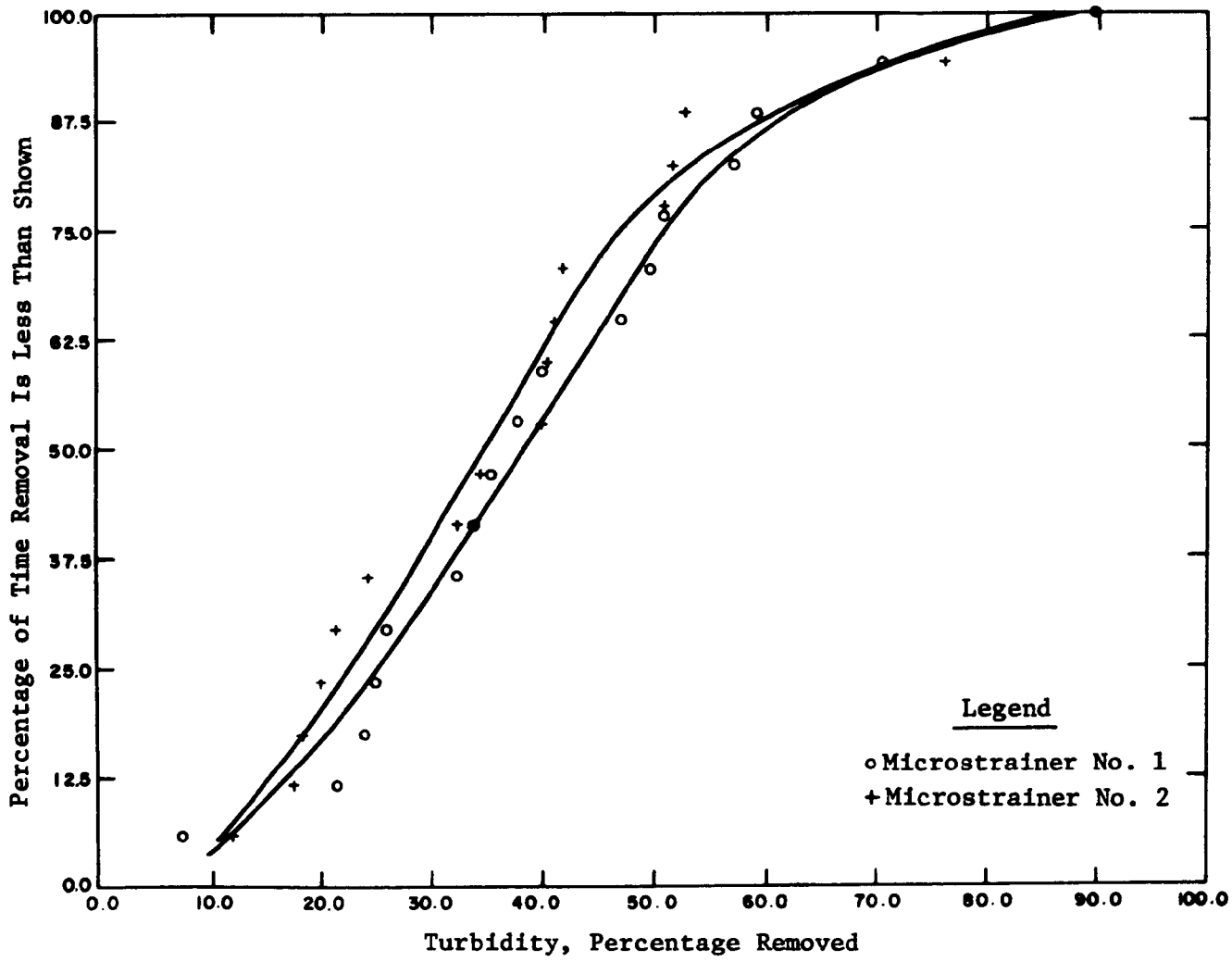

Fig. 19. Phase II frequency distribution of turbidity removal

Color removal was not expected to be as high during the Phase II studies as during the Phase III studies, when preliminary coagulants would aid in removal of colloidal color particles. Fig. 20 illustrates Phase II color removal, and Fig. 21 gives the frequency distribution of color removal. Fig. 21 shows that microstrainer No. 1 had 41 percent or greater removal 50 percent of the time and 57 percent or greater removal 25 percent of the time. Microstrainer No. 2 had 32 and 46 percent removals 50 and 25 percent of the time, respectively.

BOD Removal

BOD removals during this study were not expected to be as high as the suspended solids and turbidity removals, because much of the BOD was caused by the starch used in the sizing process in the paper mills. However, the amount of this soluble BOD was considered to be so low that an acceptable reduction could be attained with the removal of the suspended solids. It was expected that BOD removal would be proportional to the suspended solids removal.

BOD removals during Phase II were generally low, as shown by Fig. 22, partly because of seal leakage (especially on microstrainer No. 1). However, a general trend toward lower removal efficiencies can be seen as this phase progressed, and this is not due to lower suspended solids removal efficiencies. Tests on the influent showed a high percentage of soluble BOD. The studies conducted to locate the source of this soluble BOD are discussed in more detail later in this section.

BOD removals averaged 50 percent for microstrainer No. 1 and 55 to 60 percent for microstrainer No. 2. The frequency distribution of BOD removals is shown on Fig. 23. Both microstrainers showed 42 percent or better removal 50 percent of the time and only 52 percent or better 25 percent of the time.

Microstrainer Comparisons

We expected that the smaller screen (23 microns) would be superior in all areas of removal to the larger screen (35 microns). However, a comparison of the frequency distribution curves (Figs. 17, 19, 21, and 23) reveals that microstrainer No. 1 demonstrated only slightly higher removal of turbidity and color than microstrainer No. 2, and that suspended solids and BOD removal efficiencies are nearly the same for each. This was caused partly by the considerable seal leakage on microstrainer No. 1 during this phase. As discussed previously, average suspended solids removals on days of little or no seal leakage were 84 percent for microstrainer No. 1 and 82 percent for microstrainer No. 2. This is reasonable, if the nature of the suspended solids to be removed is considered.

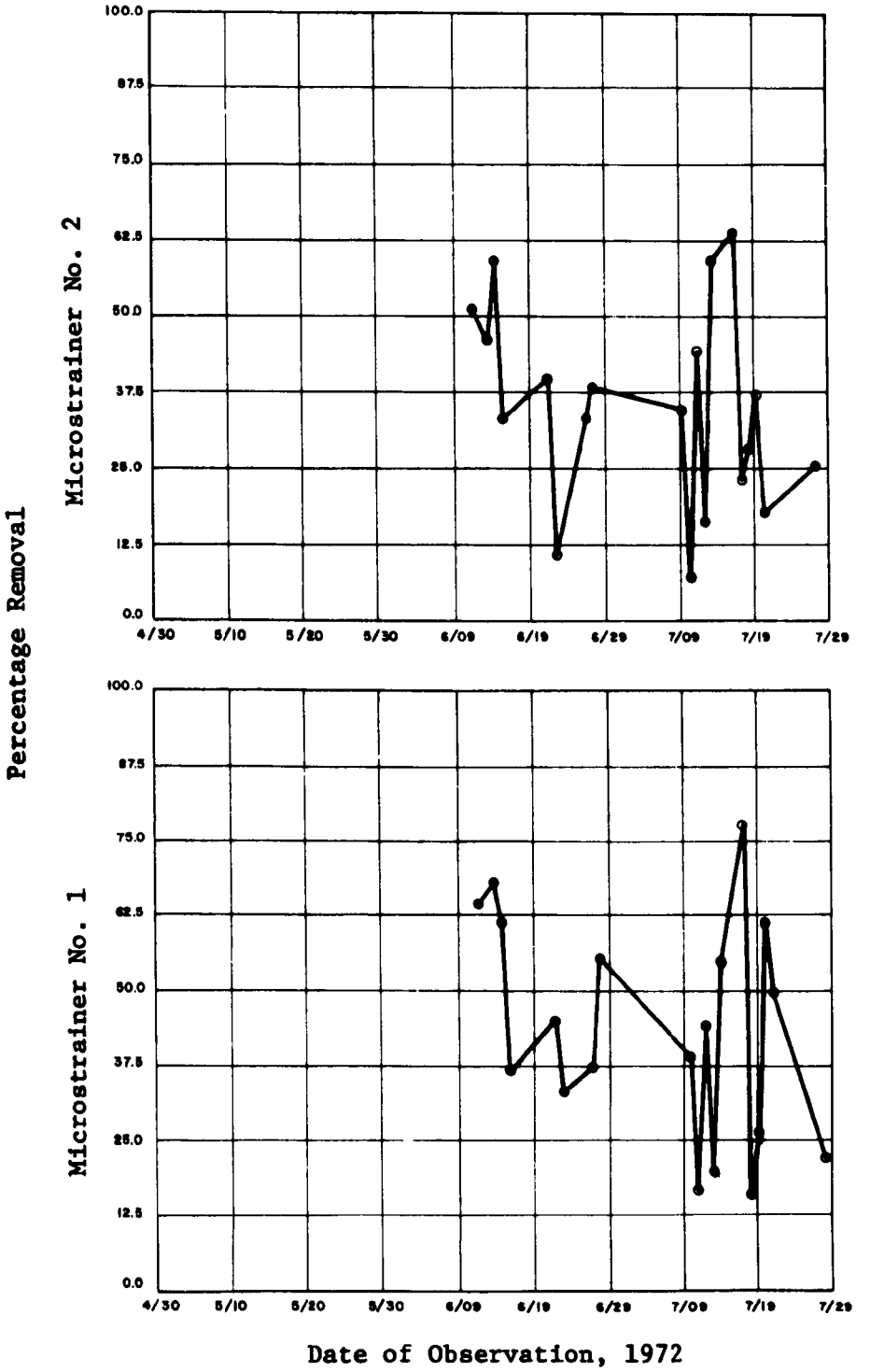

Fig. 20. Phase II color removal

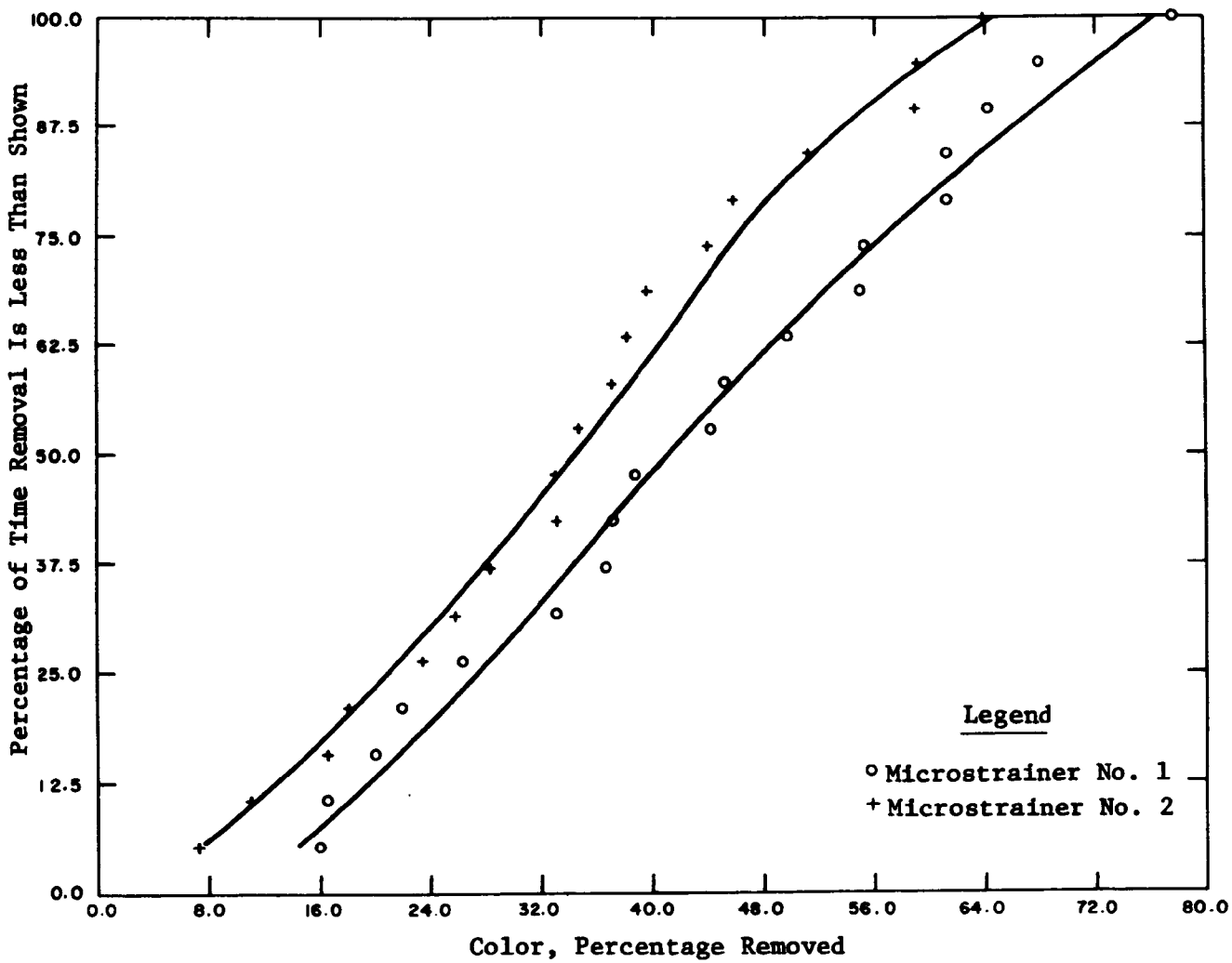

Fig. 21. Phase II frequency distribution of color removal

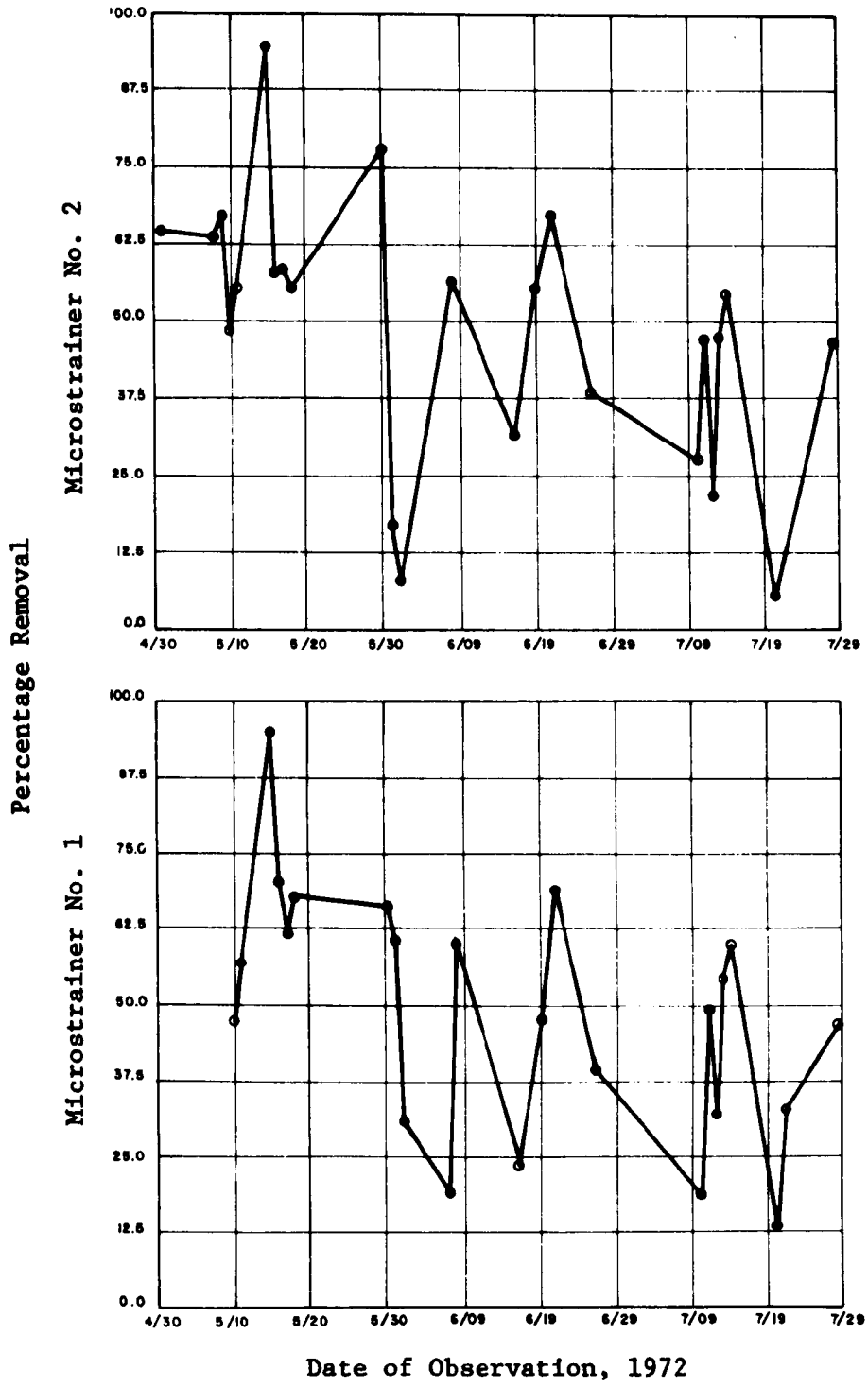

Fig. 22. Phase II BOD removal

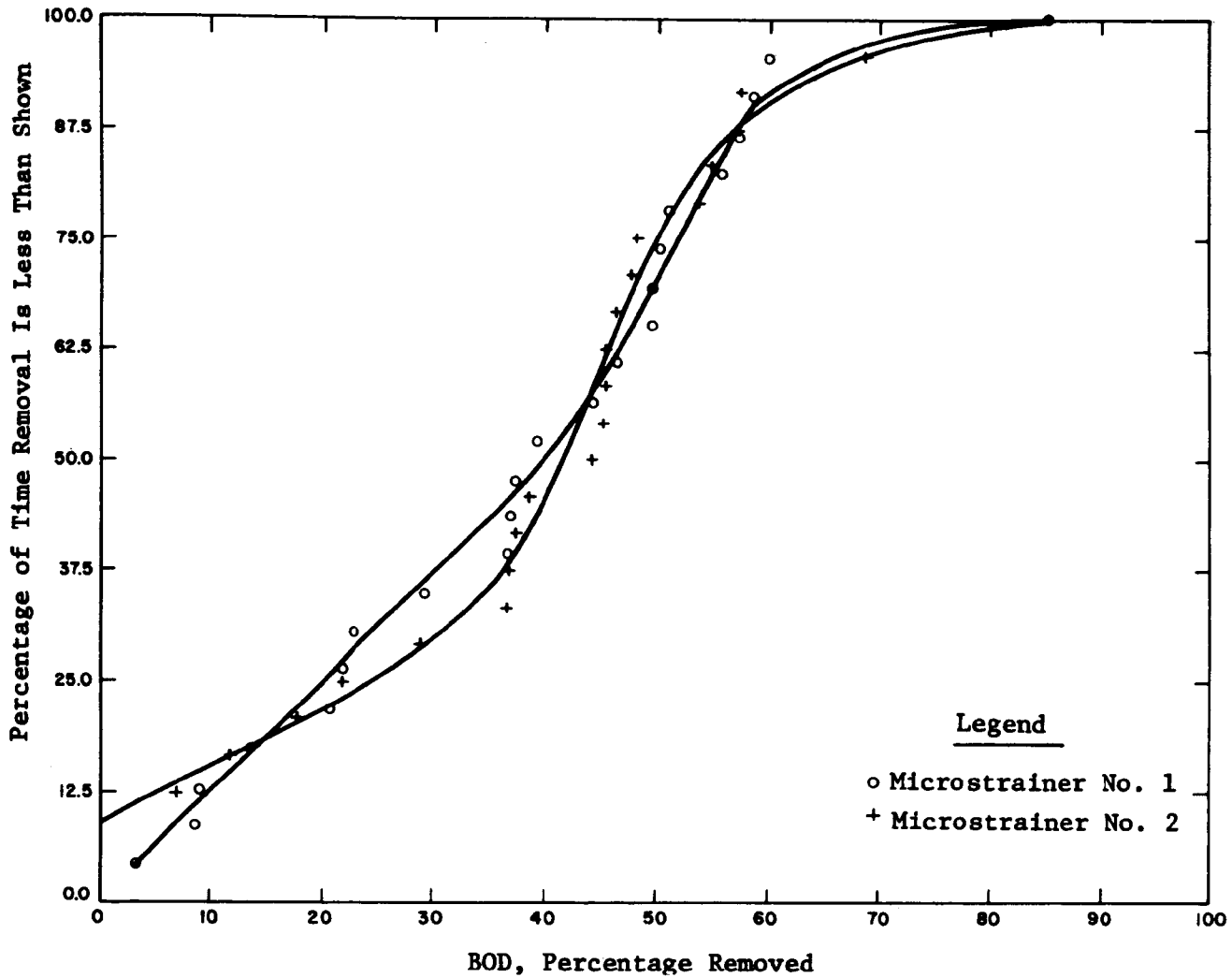

Fig. 23. Phase II frequency distribution of BOD removal

Straight microstraining of the wastewater removed only the large and medium sized suspended solids -- the fines and filler materials passed through the screen. Because of the size of these fines and filler materials, the 23-micron screen did not retain a significantly higher amount than the 35-micron screen. Phase III, the chemical feed period of this study, illustrates that coagulation assists the removal of more of these fine suspended solids.

PHASE III STUDIES

Phase III comprised the chemical feed studies. Coagulants and coagulant aids were added to the influent to increase removals of suspended solids, turbidity, BOD, and color. The primary coagulant used, aluminum sulfate and/or sodium aluminate, increased the particle size and density for more efficient removal by microstraining. Cationic polyeletrolytes, the secondary coagulants, were used primarily to strengthen the coagulated solids produced by the primary coagulant.

The percentage removal efficiency data are highly variable, because of continuing seal leakage. In the following discussion, suspended solids removals less than 50 percent indicate very high leakage around the drum seals.

Suspended Solids Removal

The suspended solids removal for microstrainer No. 1 ranged from 89 percent to 10 percent with an average of 68 percent. For microstrainer No. 2, the data show two distinct averages. Initially, an outside dumbbell drum seal was used, and during this period the suspended solids removal averaged 68 percent with a range of 91 to 24 percent. Following this, an inside knife-edge plastic drum seal was used. During this period the average removal was 82 percent, with a maximum and minimum values of 95 percent and 67 percent, respectively. These data are shown in Fig. 24.

The relative performance of each drum in removing suspended solids is shown in Fig. 25. Those curves, based on all the data collected, could lead to the false conclusion that increased suspended solids removal is proportional to increased screen opening. Actually, there was serious seal leakage in microstrainer No. 1, and this effectively shifts the curve to the left. In addition, during much of the period leakage was so bad that operation of microstrainer No. 1 was impossible. It is expected that the curve for microstrainer No. 1 in Fig. 25 would lie to the right of No. 2; however, no valid comparison can be made from these data.

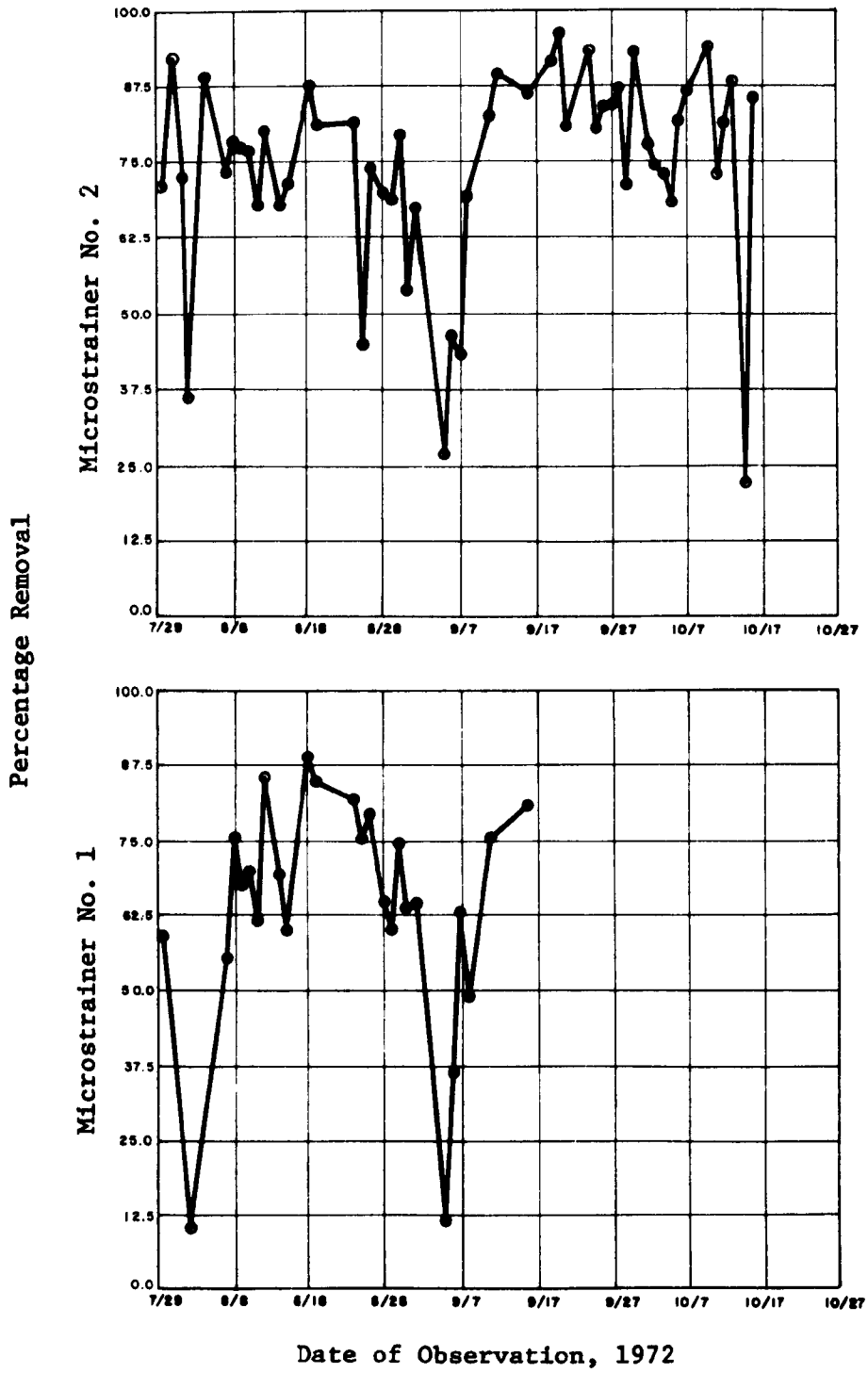

Fig. 24. Phase III suspended solids removal

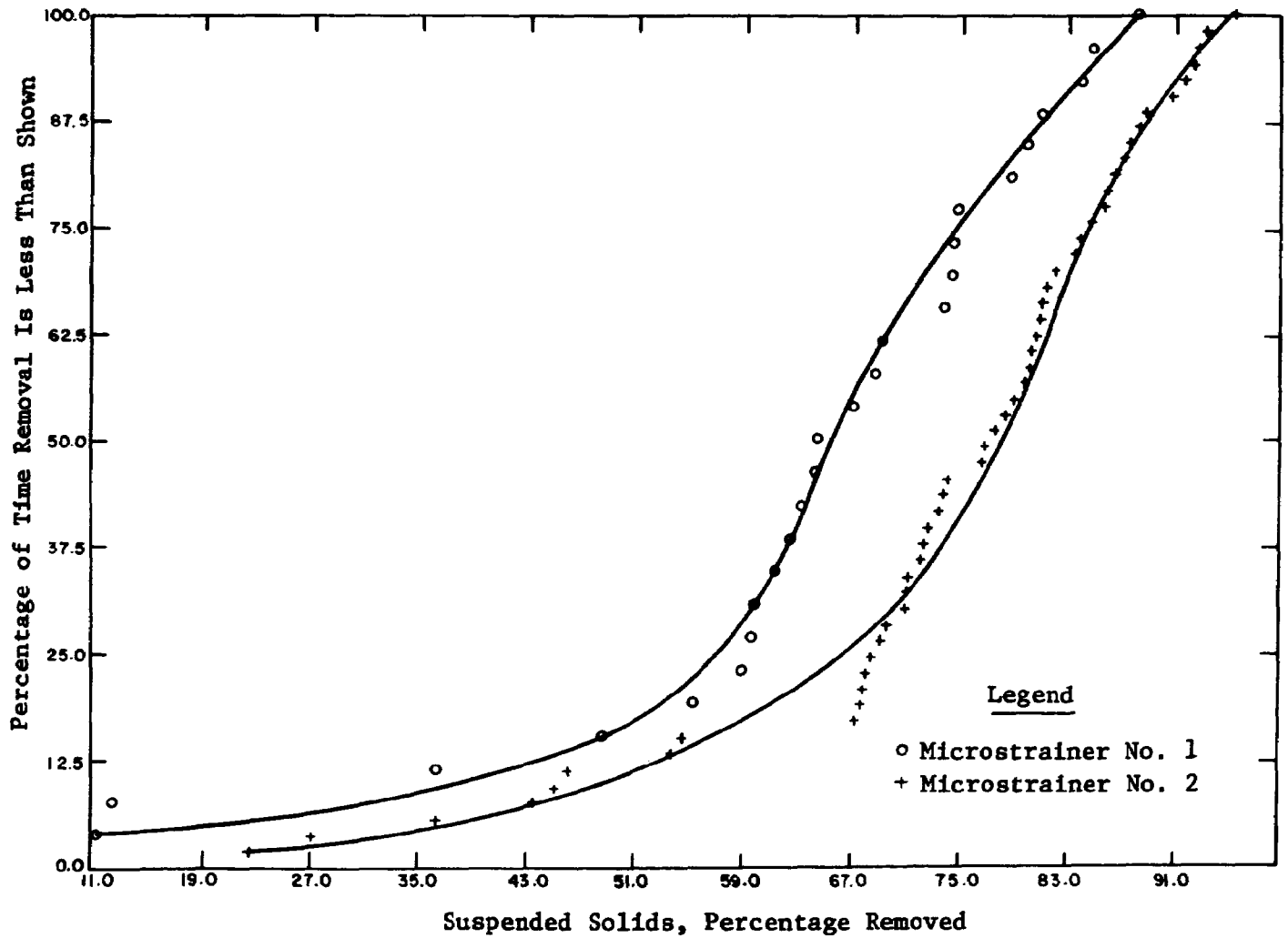

Fig. 25. Phase III frequency distribution of suspended solids removal

From Fig. 25 it can be seen that the suspended solids removal of microstrainer No. 2 was 66 percent or better 75 percent of the time. When data for selected dates in the chemical feed period when seal leakage was minor or nonexistent were compared, microstrainer No. 1 had an average suspended solids removal of 75 percent and microstrainer No. 2 had an average removal of 83 percent.

Turbidity Removal

The turbidity removals of Phase III are shown in Fig. 26. The average removal for microstrainer No. 1 was 46 percent, with maximum and minimum values of 75 and 5 percent, respectively. Microstrainer No. 2 had about the same average removal, and maximum and minimum efficiencies of 88 and 10 percent, respectively. Fig. 27 shows the frequency distribution of Phase III turbidity removals.

Average turbidity removals for periods of no seal leakage were 46 and 55 percent for microstrainers No. 1 and No. 2, respectively. The accumulated data for microstrainer No. 1 are of doubtful value. Operation of this microstrainer was discontinued from September 16 to the end of Phase III because of the seal leakage.

Color Removal

Phase III color removals are shown in Fig. 28. The average removal for microstrainer No. 2 was 55 percent, with maximum and minimum values of 80 and 4 percent, respectively. The percentile ranking curves in Fig. 29 indicate that 75 percent of the time color removal of microstrainer No. 1 was 32 percent or better. Microstrainer No. 2 showed a removal of 39 percent or better 75 percent of the time.

BOD Removal

The BOD removal efficiencies were highly variable (see Fig. 30). Considering all the data, microstrainer No. 1 had an average BOD removal of 45 percent. The maximum and minimum removals were 80 and 2 percent, respectively. Microstrainer No. 2, which had little difficulty with seal leakage, showed less variable data. The average removal was 42 percent, with maximum and minimum values of 75 and 11 percent, respectively. The percentile ranking curves in Fig. 31 indicate that 50 percent of the time BOD removal for microstrainer No. 1 was 42 percent or better. Microstrainer No. 2 was slightly better, with a BOD removal of 49 percent or higher.

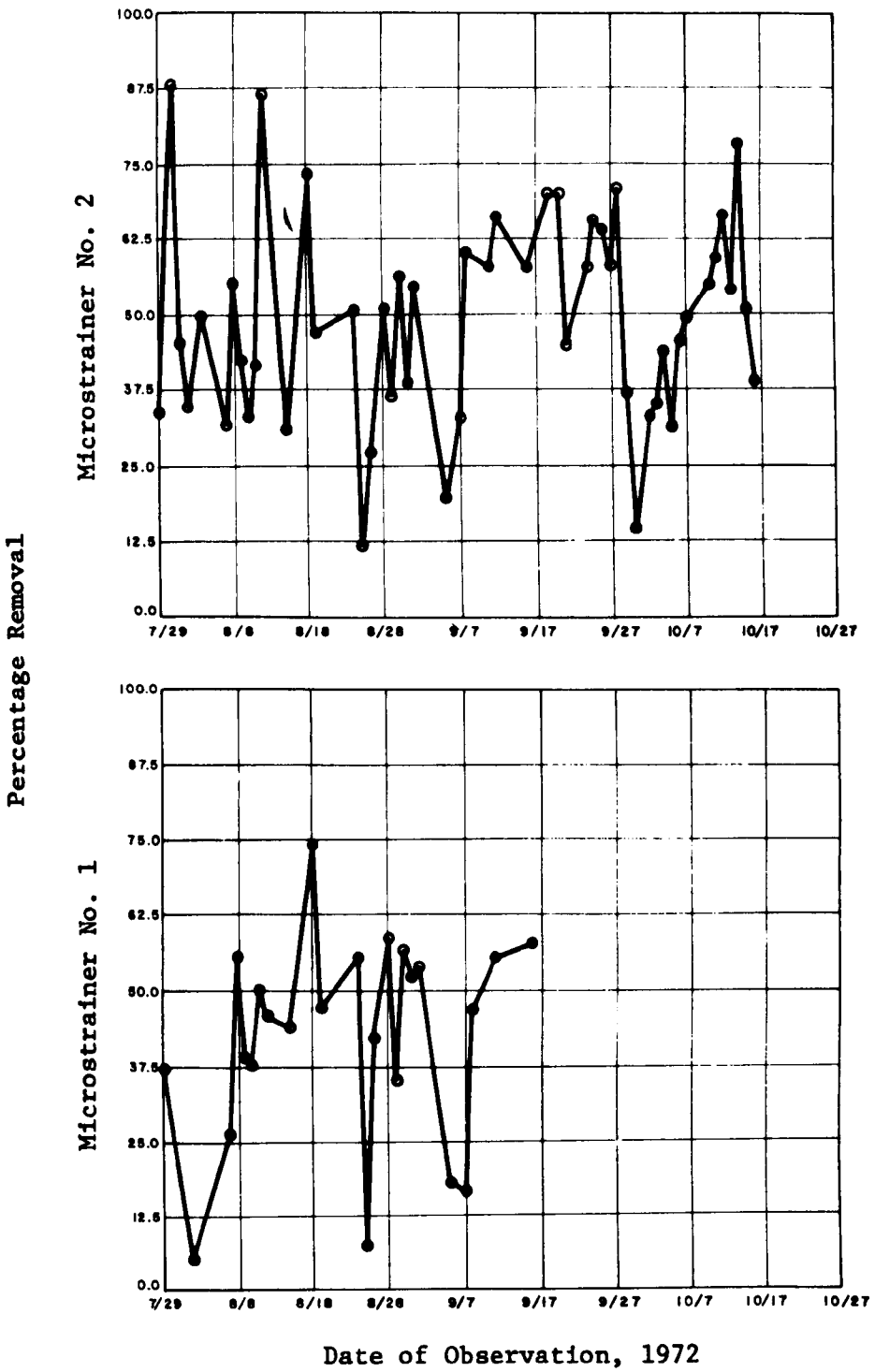

Fig. 26. Phase III turbidity removal

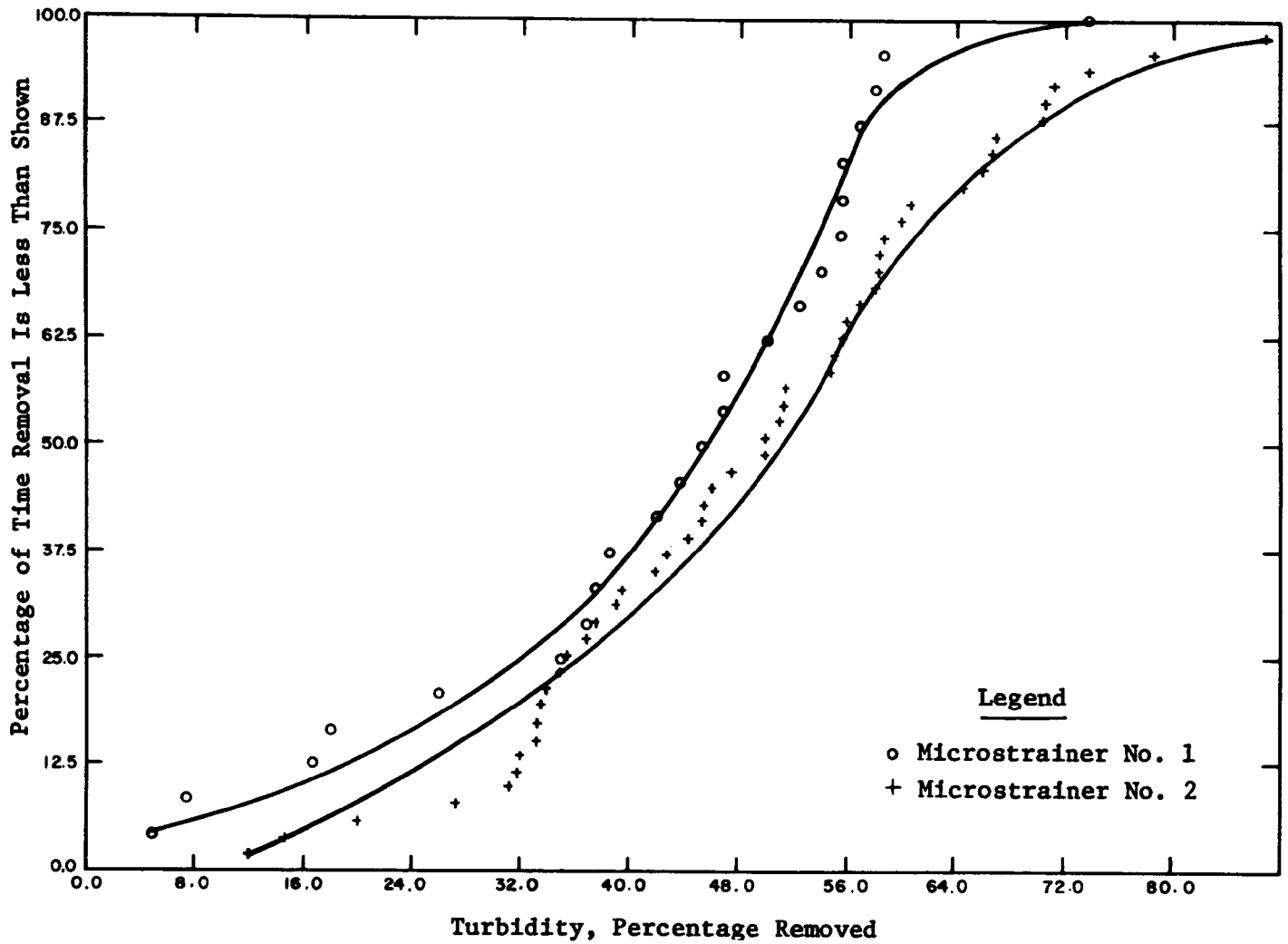

Fig. 27. Phase III frequency distribution of turbidity removal

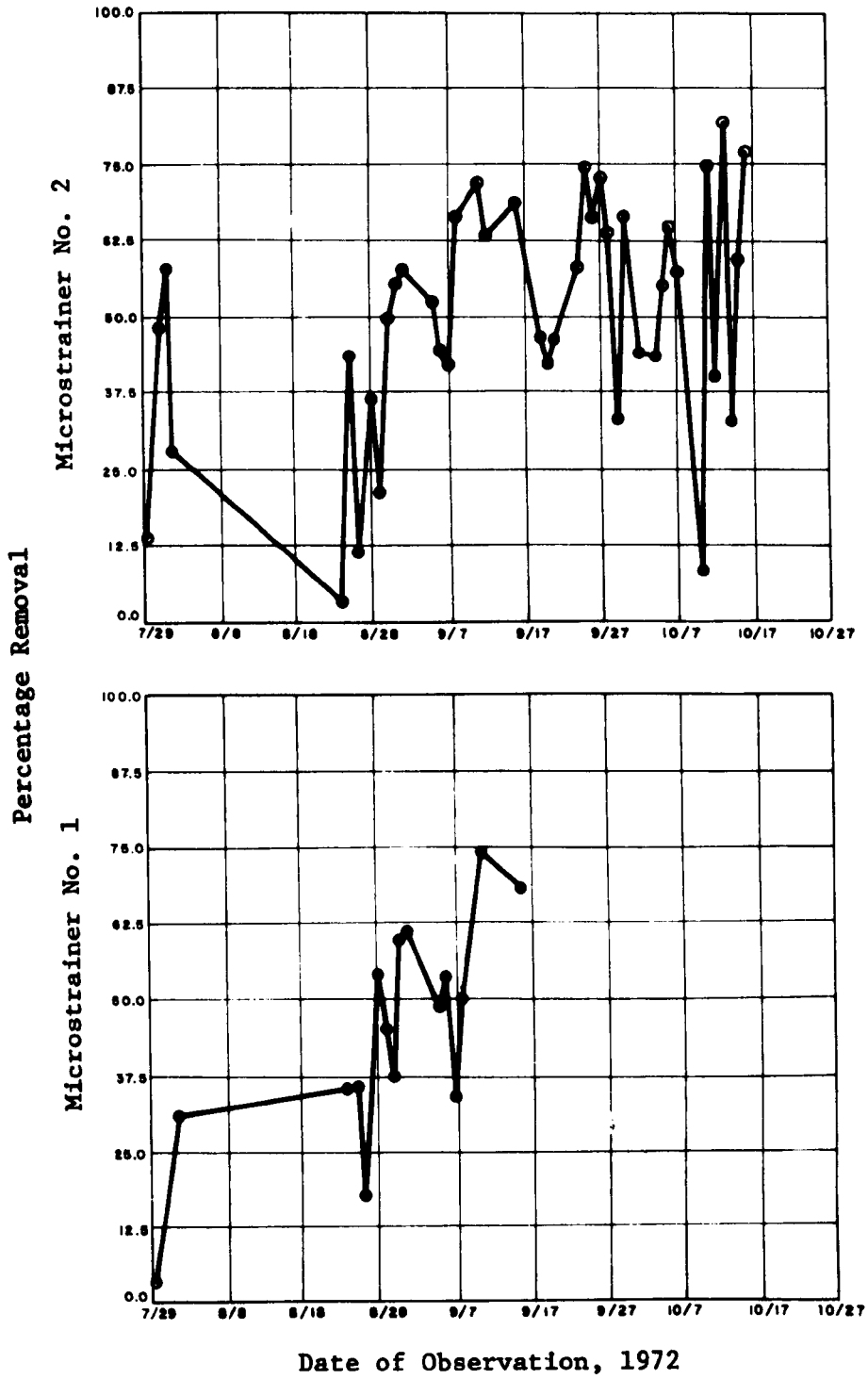

Fig. 28. Phase III color removal

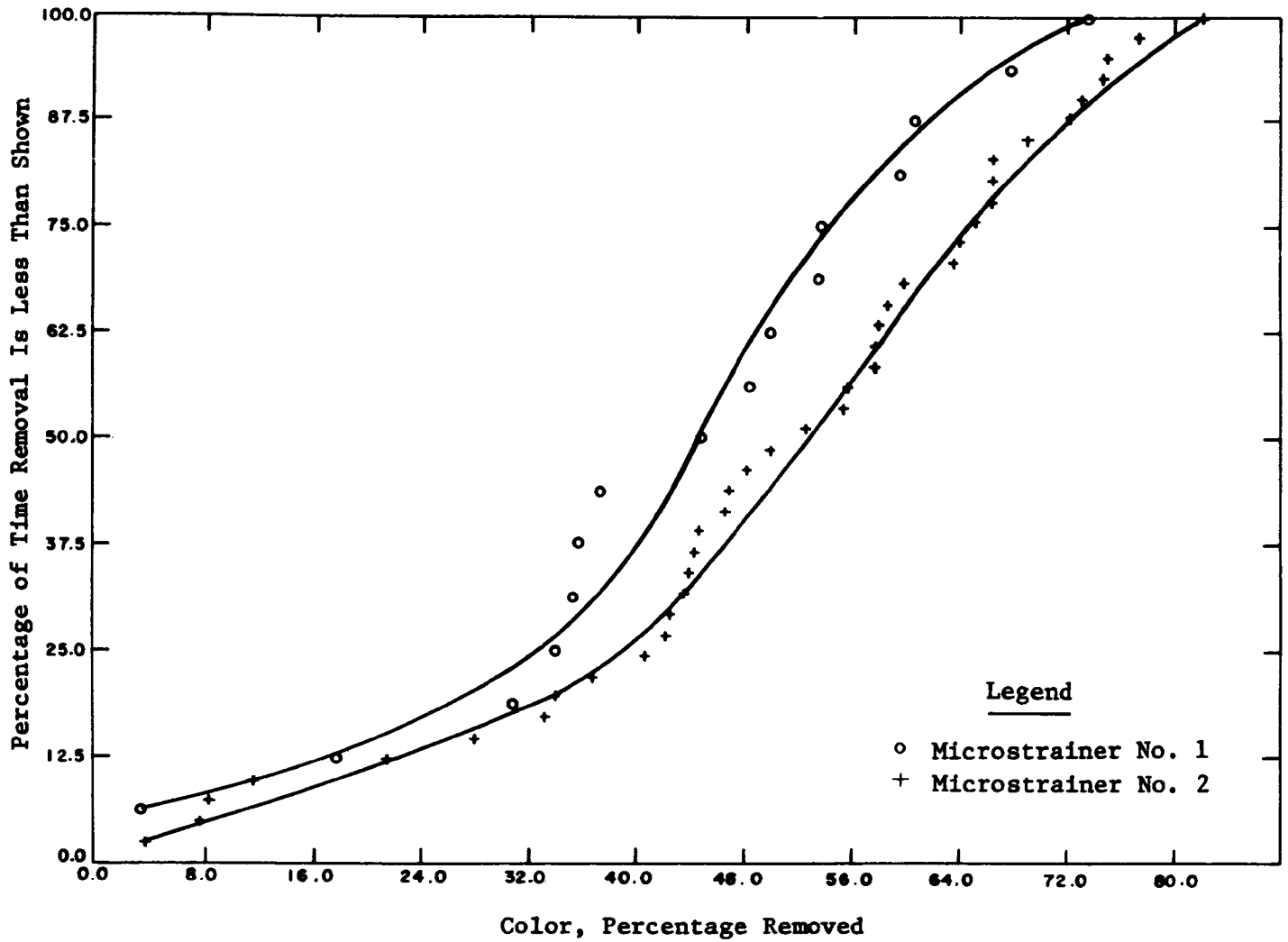

Fig. 29. Phase III frequency distribution of color removal

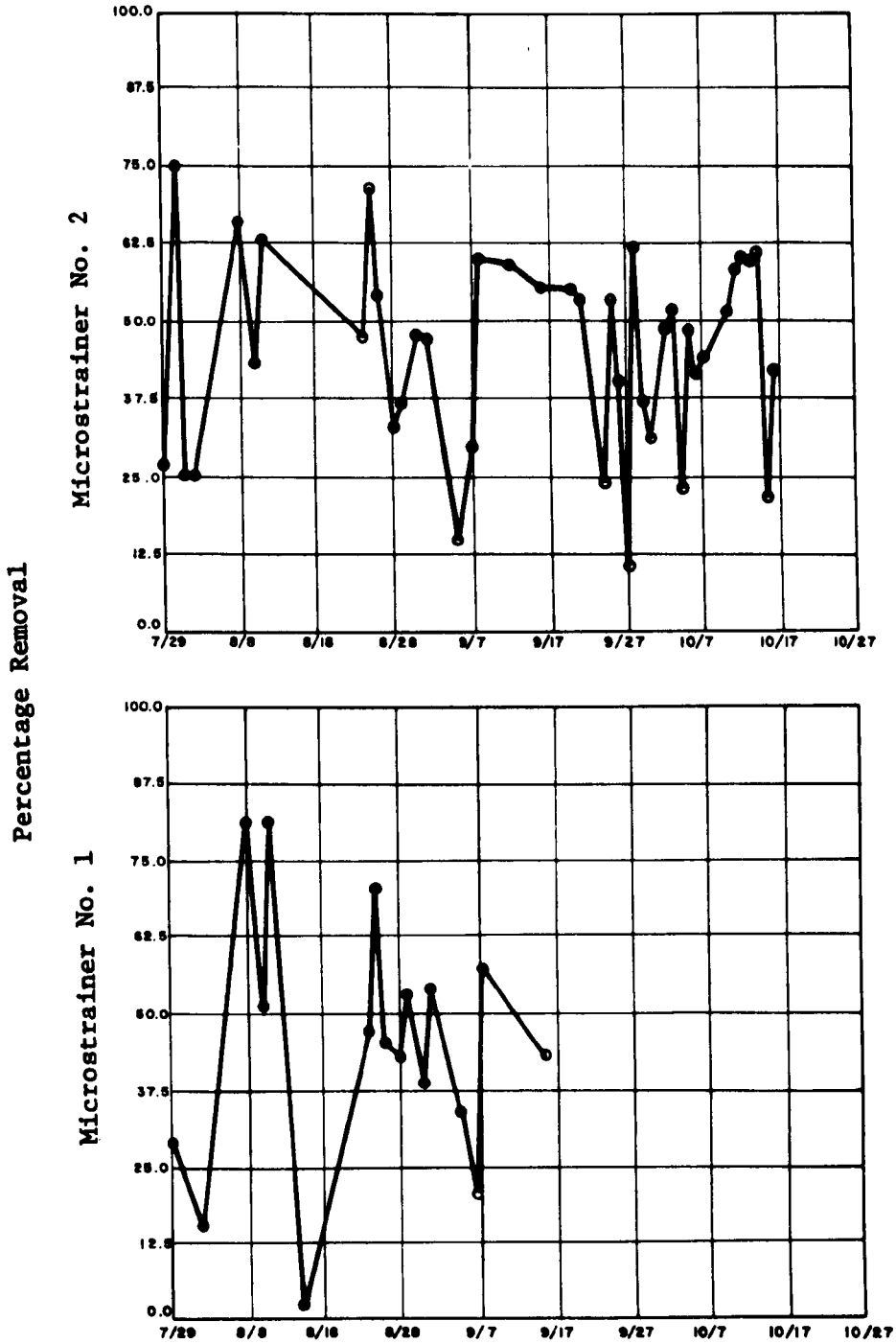

Fig. 30. Phase III BOD removal

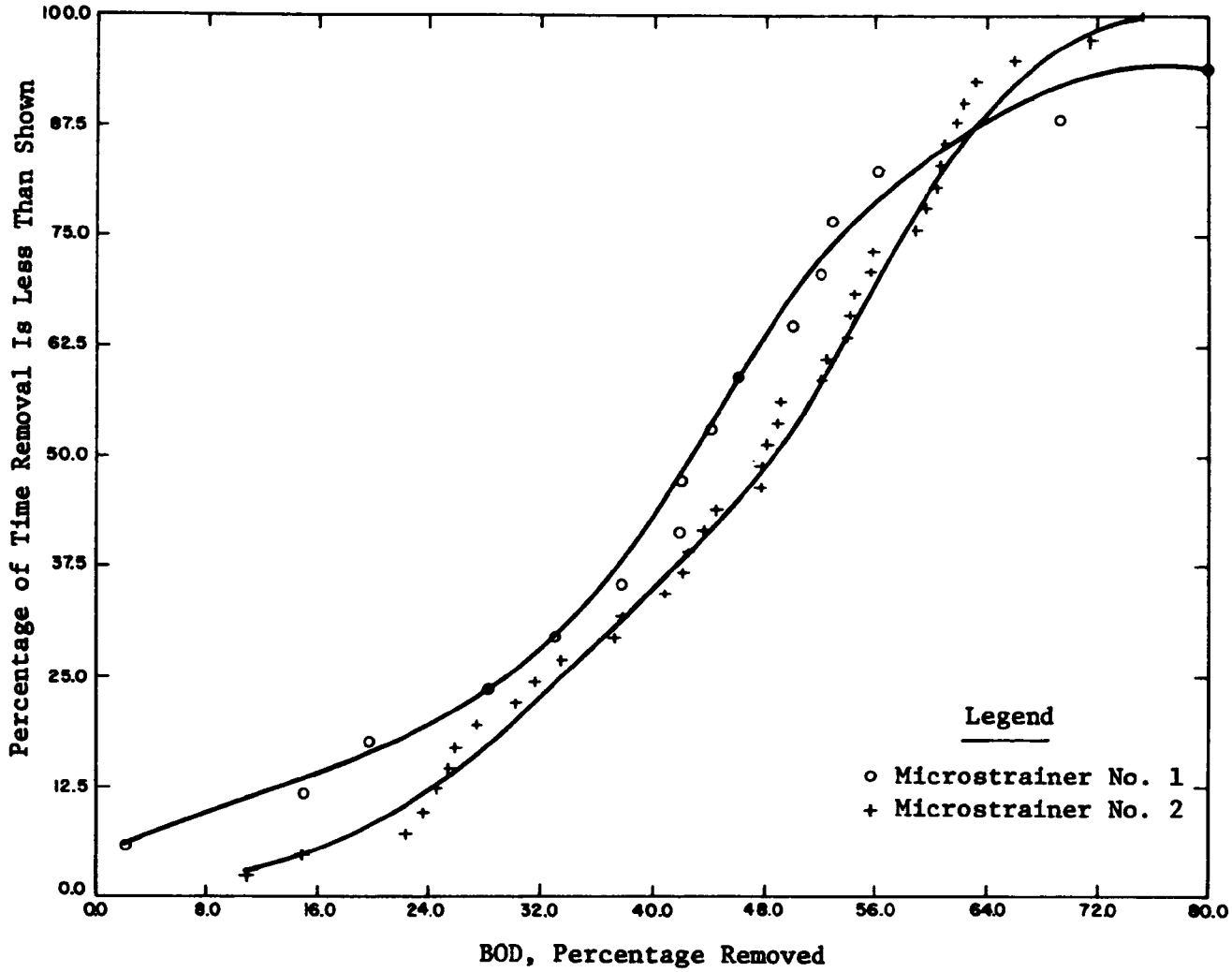

Fig. 31. Phase III Frequency distribution of BOD Removal

Polymer Feed

Throughout Phase III, several strongly cationic polymers were evaluated, either singly or in addition to the primary coagulants. Polymers were evaluated on the bases of their efficiency in floc strengthening and their effect on drainage characteristics. Table 7 lists some of the more promising polymers and dosages tried and the primary coagulant dosages for selected days when no seal leakage occurred. For comparison purposes, percentage removals of suspended solids and turbidity and chemical costs are also shown. Total chemical cost ranged from $8.00 to $156.80 per day or $7.40 to $149.00 per million gallon treated. It should be noted that the cost of polymers is not a major portion of the total chemical cost.

COMPARISON OF PHASE II AND PHASE III STUDIES

The selected data used in the preceding paragraphs are for those operating days when there was no leakage around the seals. This leakage, of course, reduced removal efficiencies, because less material was removed by the microstrainers. The effect of seal leakage, using suspended solids data, is illustrated in Fig. 32. The steep slope of the selected data is a relative indication of process reliability, since it shows that for a large percentage of the time the removal efficiency was nearly constant. The inclusion of all data implies highly variable removal efficiencies over relatively short periods.

The following discussion uses only no-leakage data for comparisons of and/or conclusions on microstrainer performance during Phases II and III. It should be noted that there is a limited amount of selected data for microstrainer No. 1. The performance data are shown in Figs. 33, 34 and 35.

Fig. 33 indicates that straight screening (i.e., Phase II) results were almost equivalent for each screen size. The suspended solids removal was approximately 80 percent or better 70 percent of the time. During Phase III, the performance of microstrainer No. 2 was about the same as in Phase II, with a removal of 78 percent or less 70 percent of the time. For the same period, microstrainer No. 1 had a removal of only 55 percent or better 70 percent of the time.

Similar comparisons may be made from the turbidity removal efficiencies, Fig. 34. Here again there was no major difference in performance between the microstrainers in Phase II. During Phase II, the turbidity removal for both microstrainers was about 35 percent or better 70 percent of the time. In Phase III, however, better turbidity removal was exhibited by both microstrainers. These removals were 40 and 45 percent or better for microstrainers No. 1 and No. 2, respectively, 70 percent of the time.

TABLE 7

PHASE III MICROSTRAINER PERFORMANCE AND CHEMICAL COSTS

		Primary Coagulant		Polymer	
Date, 1972	Flow, mgd	Alum, mg/l	Sodium Aluminate, mg/l	Name	Dose, mg/l
8/4	1.03	0	0	Nalco 636 HD	1.0
8/7	1.74	50	0		
8/9	1.77	25	0		
8/10	1.81	50	0		
8/11	1.90	25	0		
8/12	--	25	0		
8/24	2.14	50	0		
9/11	2.11	50	0		2.0
9/12	2.34	25	0		1.0
9/16	1.19	25	0		1.0
9/19	2.20	75	0		2.0
9/20	2.13	75	0		
9/21	2.13	75	0		
9/24	0.96	75	0		
9/25	2.20	0	0		
9/26	2.23	25	0		
9/27	1.95	0	0	Natron 88	
9/28	2.01	0	0		1.0
9/29	1.04	50	0		2.0
9/30	1.13	0	0		1.0
10/3	1.81	100	30		1.0
10/6	1.05	150	100		3.0
10/7	1.08	0	0		1.0
10/10	0.94	0	0	Nalco 71D09	2.0
10/12	1.08	50	0		1.0
10/13	2.00	50	0		1.0
10/14	1.71	50	0	Natron 88	2.0

TABLE 7 (Cont.)

PHASE III MICROSTRAINER PERFORMANCE AND CHEMICAL COSTS

PERFORMANCE AND CHEMICAL COSTS

Suspended Solids Removal, percent		Turbidity Removal, percent		Chemical Costs	
Microstrainer No. 1	Microstrainer No. 2	Microstrainer No. 1	Microstrainer No. 2	Per Mil Gal.	Per Day
	88.5		50.0	$ 12.91	$ 13.30
	73.6	26.0	32.0	29.59	51.50
	77.1	40.3	44.4	21.40	36.60
70.4	77.6	37.5	33.3	29.50	53.40
61.5	68.0	50.0	42.0	21.21	40.30
85.1	80.2	45.4	86.9	-	-
81.3	81.3	55.5	51.1	29.57	63.30
74.7	82.3	55.5	58.3	42.51	89.70
	89.1	-	66.6	21.23	49.70
	85.9	58.0	58.0	21.21	25.25
	91.1		70.5	50.68	107.50
	95.6		70.4	50.84	108.30
	80.6		45.5	50.84	108.30
	93.0		58.3	50.93	48.90
	80.5		66.0	25.81	56.80
	83.2		64.6	34.17	76.20
	84.1		58.7	14.82	28.90
	86.7		75.3	7.41	14.90
	71.2		37.5	31.53	32.80
	92.6		14.7	7.43	8.40
	74.3		35.5	63.00	114.60
	81.6		46.1	149.00	156.80
	86.1		50.0	7.40	8.00
	93.6		55.7	13.50	12.70
	82.7		91.3	26.08	28.20
	88.2		54.7	47.89	95.70
	77.8		33.6	31.60	54.10

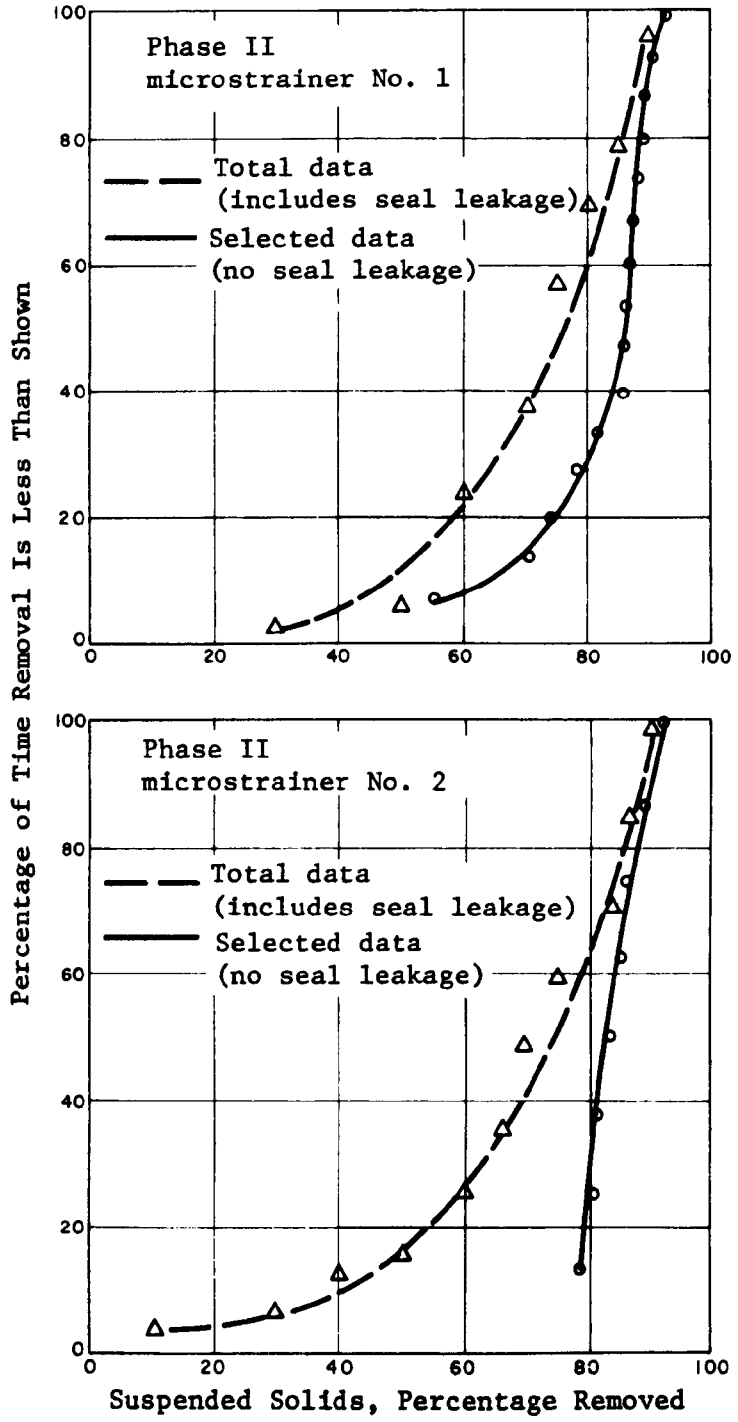

Fig. 32. Effect of seal leakage on suspended solids removal

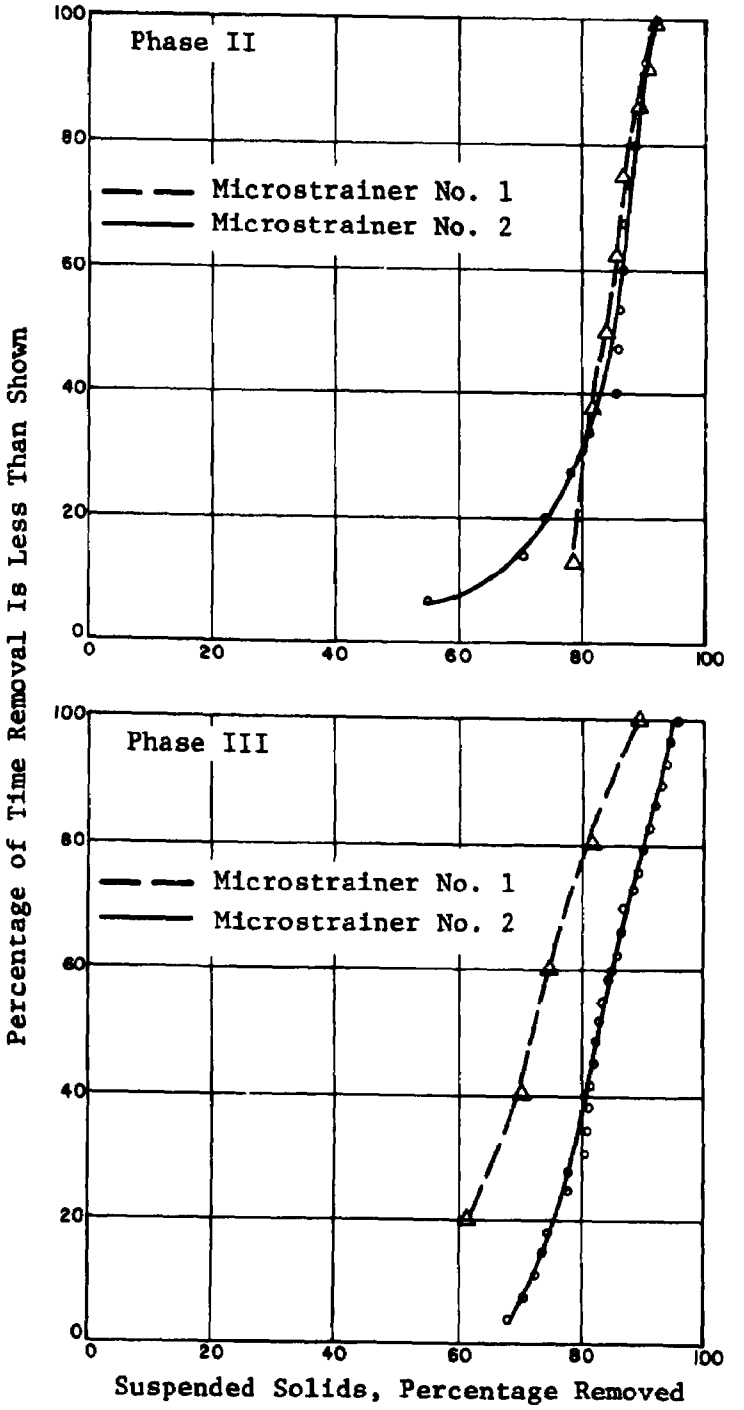

Fig. 33. Suspended solids removal—selected data

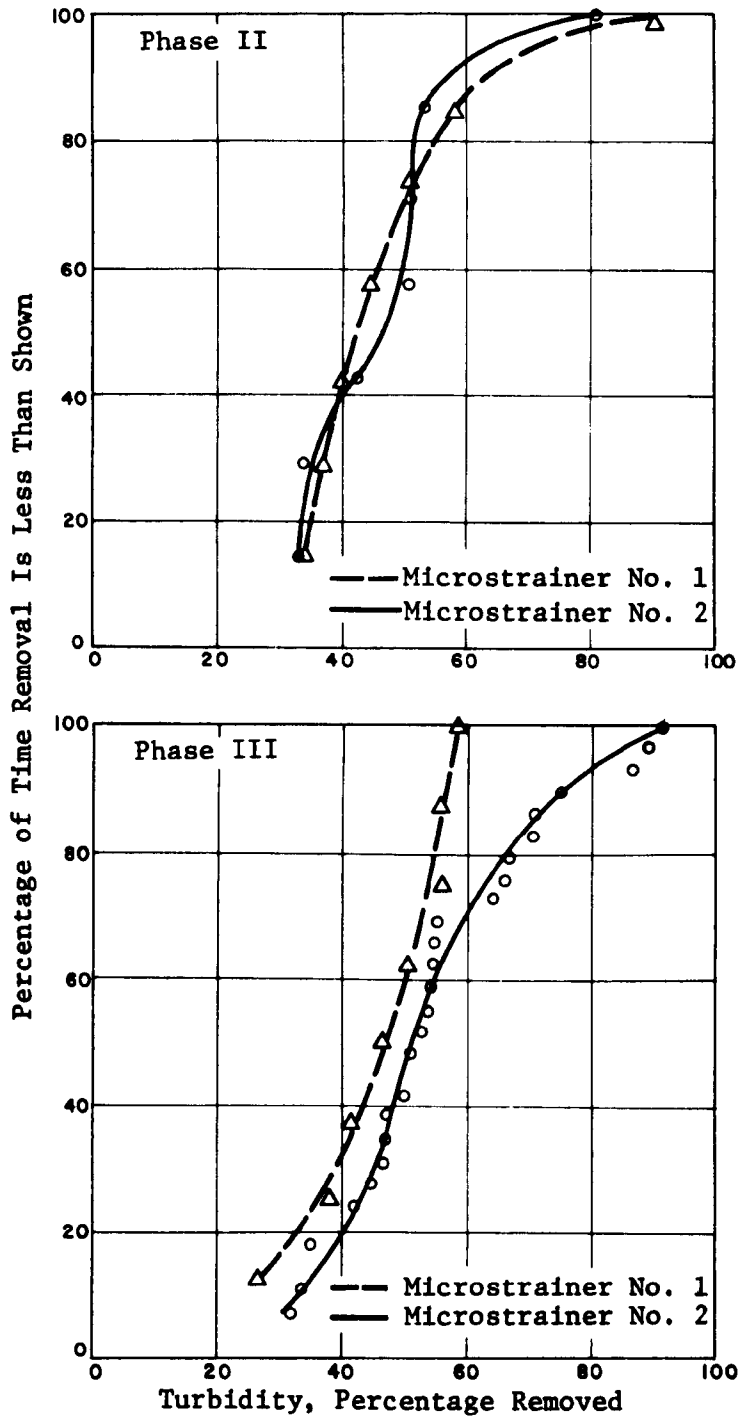

Fig. 34. Turbidity removal—selected data

The effect of chemical addition on color removal is shown in Fig. 35. Microstrainer No. 2 showed significantly better removal in Phase III, compared to Phase II when straight screening was practiced. Due to lack of usable data during Phase III, no correlation can be made for microstrainer No. 1.

MICROSTRAINER CAPACITY AND FILTERABILITY INDEX

The hydraulic capacity of the microstrainers is a function of: (1) the characteristics of the wastewater being filtered, (2) the opening size of the microfabric, (3) the freeness of the solids mat on the microfabric, (4) head loss through the microfabric, and (5) the speed of the drum, (i.e., filtering area per minute).

These parameters are related according to the following formula:

$$H_L = \frac{MQC_f e^{N1Q/S}}{A}$$

Where HL = head loss, in.
Q = flow rate, gpm
Cf = hydraulic resistance of the screen (23-microns = 1.8 ft. water, 35 microns = 1.0 ft.)
A = effective submerged area, sq. ft.
1 = filterability index
S = speed of microstrainer, sq.ft/min.
M = 0.0267, N = 0.1337
e = base of the natural system of logarithms (2.71828...)

All of these values can be determined by field measurements, except the filterability index (1). This is an index of the rate of clogging of the microfabric, and is a function of the characteristics of the wastewater, the solids mat, and the condition of the microfabric (i.e., cleanliness). olving the equation for 1 yields:

$$1 = \frac{S}{NQ} \ln \frac{AH}{MQC_f}$$

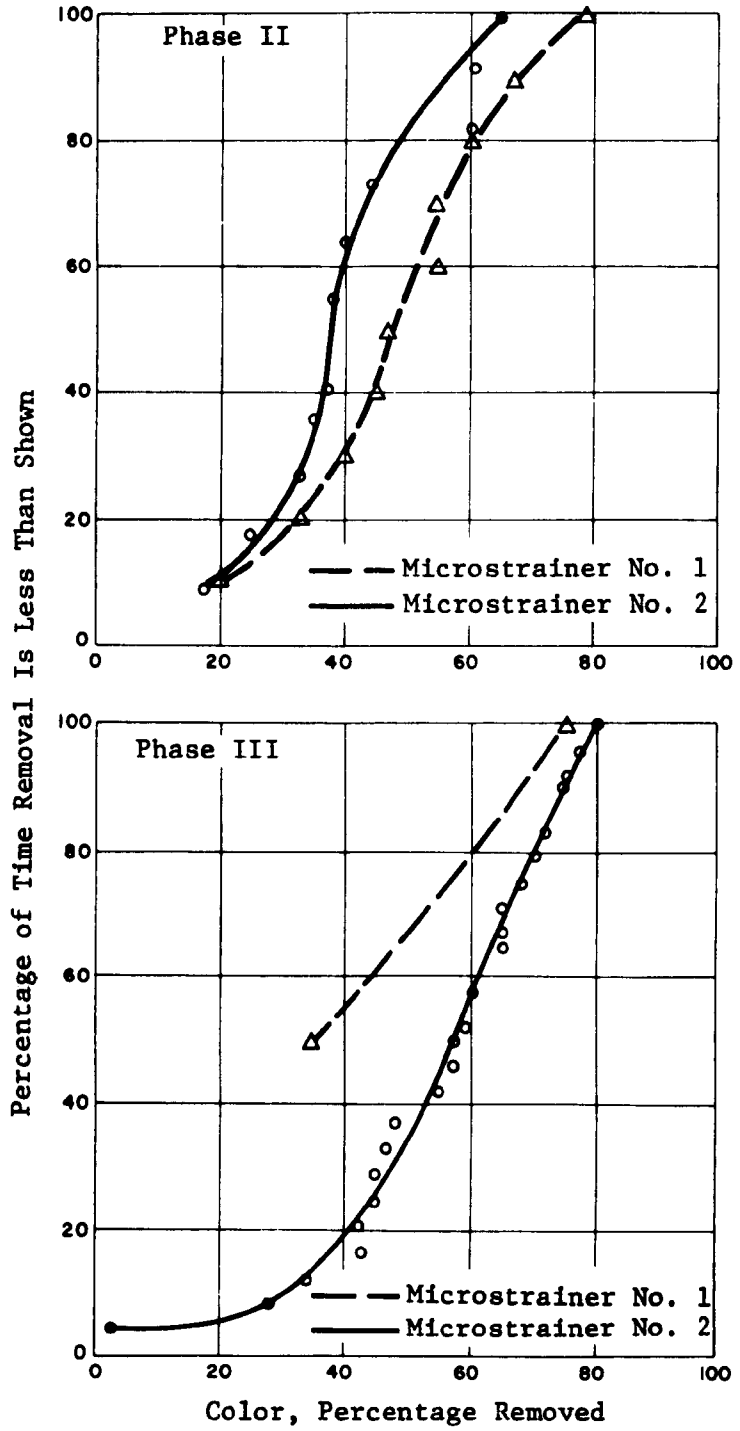

Fig. 35. Color removal—selected data

For the purpose of sizing the microstrainers, a value of l = 24 was given as an estimated average filterability index of the waste, based on previous studies and the manufacturer's past experience.

The capacity of each microstrainer can be determined in two ways. First, the actual flow through the microstrainer and other related conditions can be measured directly, the equation can be solved for the filterability index, and this can be compared with the given index of 24. Secondly, using the given index of 24, the manufacturer's rated capacity (Q) of the microstrainer can be compared with the actual measured flow (Q) passed.

Neither method is accurate for a determination of the capacity of the microstrainers because of the following factors:

1. The filterability index varies with the rapidly changing characteristics of the wastewater, and may not be equal to 24.

2. The flow capacity of the screen is computed assuming that the microfabric is clean and completely open -- most of the time it was partially plugged. The intensity of plugging, however, depended on the backwash pressure, speed of the drum, and fine suspended material in the washwater.

3. The values of l reported are based on average values of head loss, flow, and drum speed.

Daily readings of head loss, flow, and drum speed were averaged and the daily filterability indexes computed assuming a clean screen. Fig. 36 illustrates the fluctuations in these indexes for microstrainers No. 1 and No. 2 during the straight screening and chemical feed periods, and also shows their relation to the given average design index of 24. Generally, points located below the 24 index line indicate that the microstrainer has a capacity greater than design capacity; points located above the line indicate a lower capacity than design capacity.

The indexes for microstrainer No. 1 show that most of the time it did not meet design capacity in Phase II, but did during Phase III. Microstrainer No. 2 met its design capacity most of the time during Phase II and Phase III.

It is impossible to evaluate properly the capacity of microstrainer No. 1 until new methods, now being tested, of cleaning the screen are perfected or the backwash pressure is increased to meet the manufacturer's recommendations. Microstrainer No. 2 has the ability to meet its design capacity under normal operating conditions.

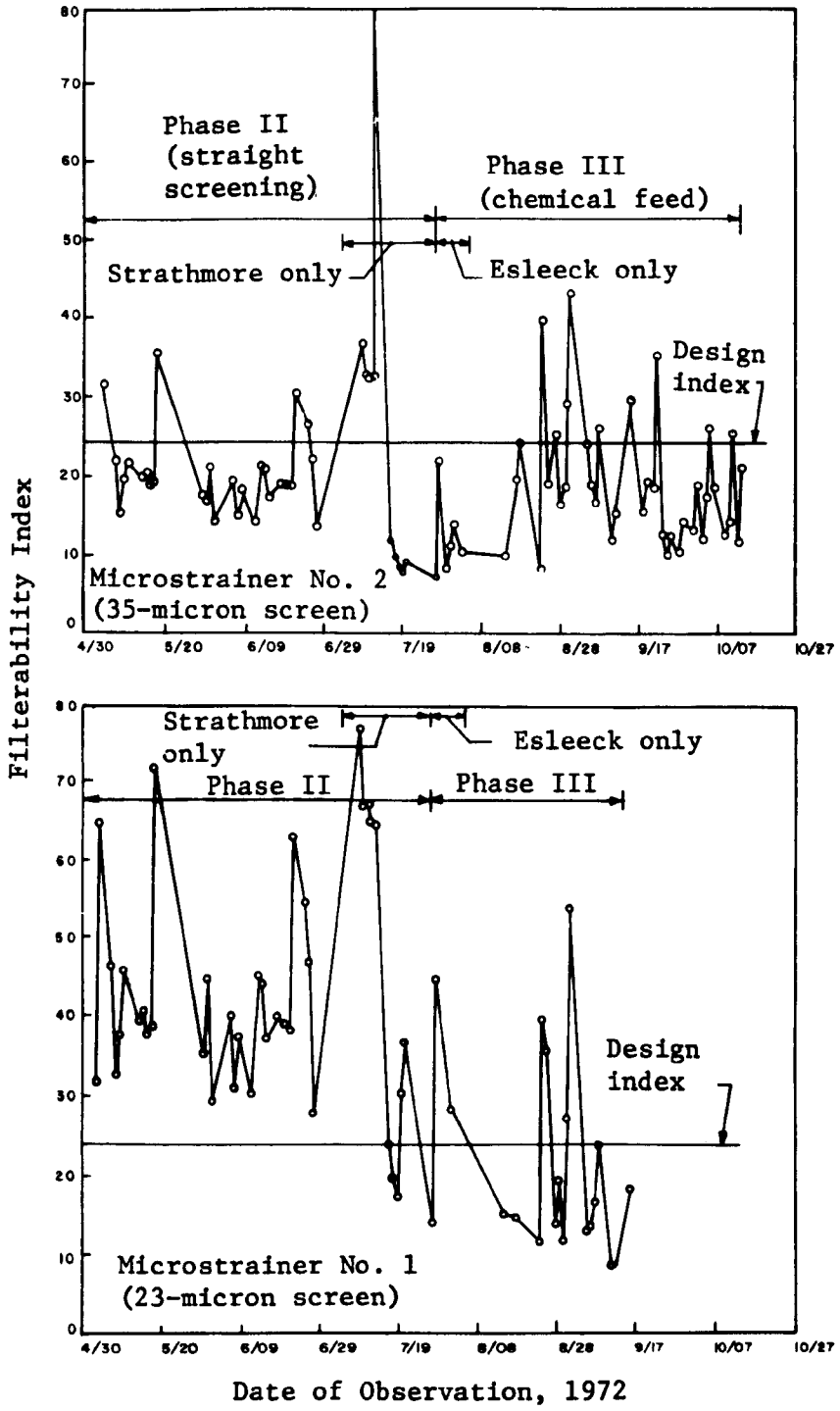

Fig. 36. Filterability index

SPECIAL STUDIES

Long-Term BOD's

Throughout Phase III, several long-term BOD tests were run to study the extended oxygen demand of organic matter in the wastewater. These tests also compared the extended BOD to the standard 5-day BOD. It is generally considered that the 5-day BOD values of domestic sewage are approximately 75 percent of the ultimate BOD. However, not all organic solids demonstrate the same rate of biodegradation, especially those found in industrial wastes. For this reason, long-term, or ultimate, BOD tests are important to determine the rate and amount of biochemical oxygen demand over a given time.

Tests for long-term BOD's were conducted on composite samples of the treatment plant influent, effluent, and backwash sludge. BOD analyses were conducted on samples at 5-, 10-, 20-, and 30-day intervals. Fig. 37 shows the development curves for a 10-day period on samples taken 5/9/72. The influent and sludge curves indicate that the 5-day BOD is 67 percent of the 10-day BOD. From the effluent curve, the ratio of 5-to 10-day BOD is 80 percent (because of the lack of solids in the effluent). This can also be shown by the higher values of 10-day BOD for the influent sample and sludge samples; 210 mg/l and 3,000 mg/l, respectively. These values correspond to the increased solids concentrations of the two samples. It will be observed that an apparent plateau is reached at the 10-day interval. This is not, however, an indication that the samples have reached their ultimate level of BOD, as shown by further studies.

An example of a 30-day BOD is given in Fig. 38. This family of curves shows a plateau or decreasing rate of oxygen depletion for the influent and sludge samples between the 5- and 10-day periods, and then a rapid increase through the 30-day period. In addition, the curves are still climbing at 30 days, which indicates an even longer time needed for complete degradation (ultimate or total BOD). The effluent curve shows a slow rate of oxygen depletion, as denoted by its flat slope. The ratios of 5- to 30-day BOD values for the sludge and influent samples are 8.7 and 9.7 percent, respectively; the same ratio for the effluent samples is 23 percent.

BOD removal efficiencies are greatly affected by the longer term BOD tests. The ratio of influent to effluent BOD values, shown in Fig. 38, is only 46 percent for the 5-day period, but 79 percent for the 20-day period and 81 percent for the 30-day period.

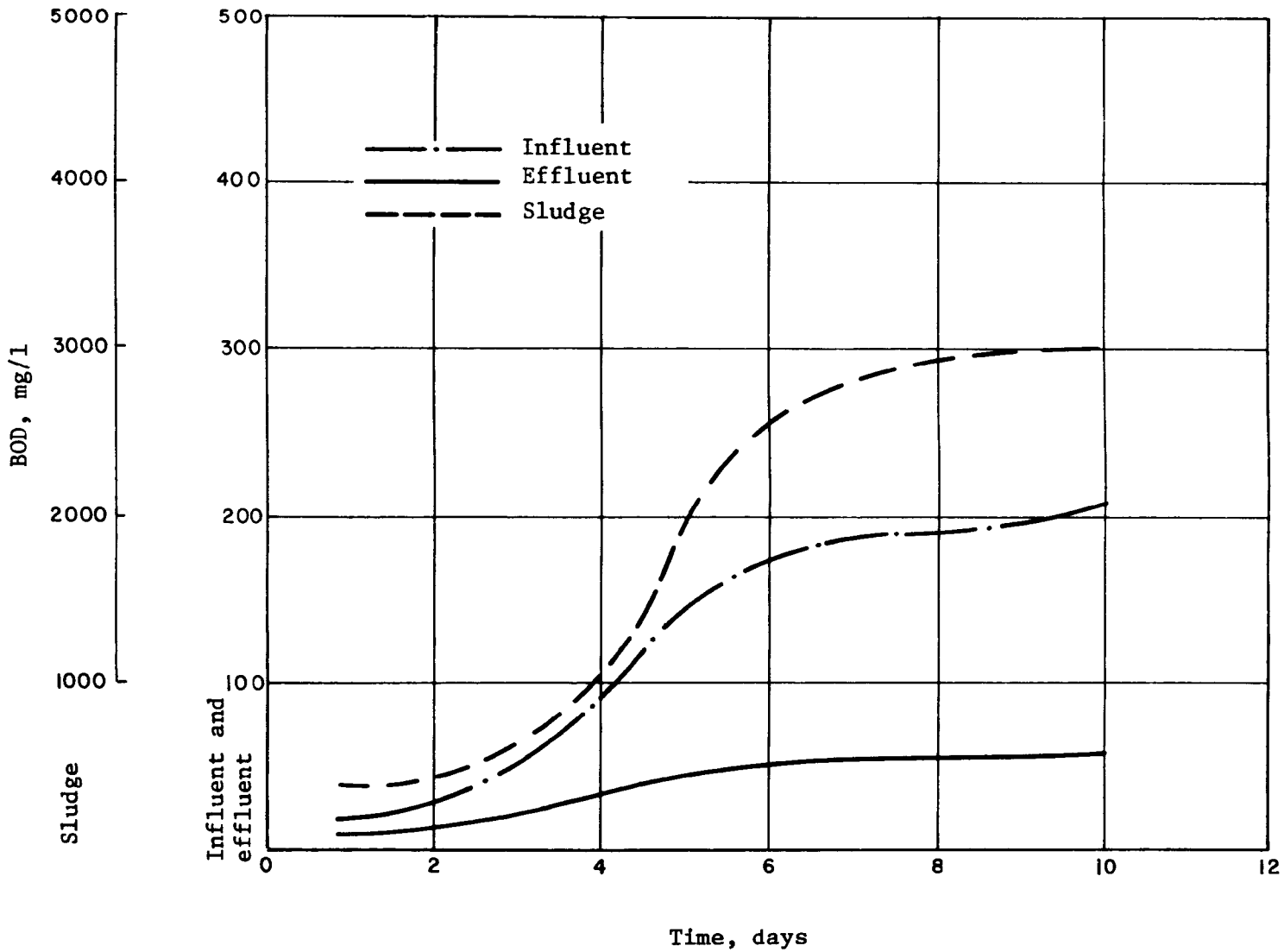

Fig. 37. Long-term BOD (samples of 5/9/72)

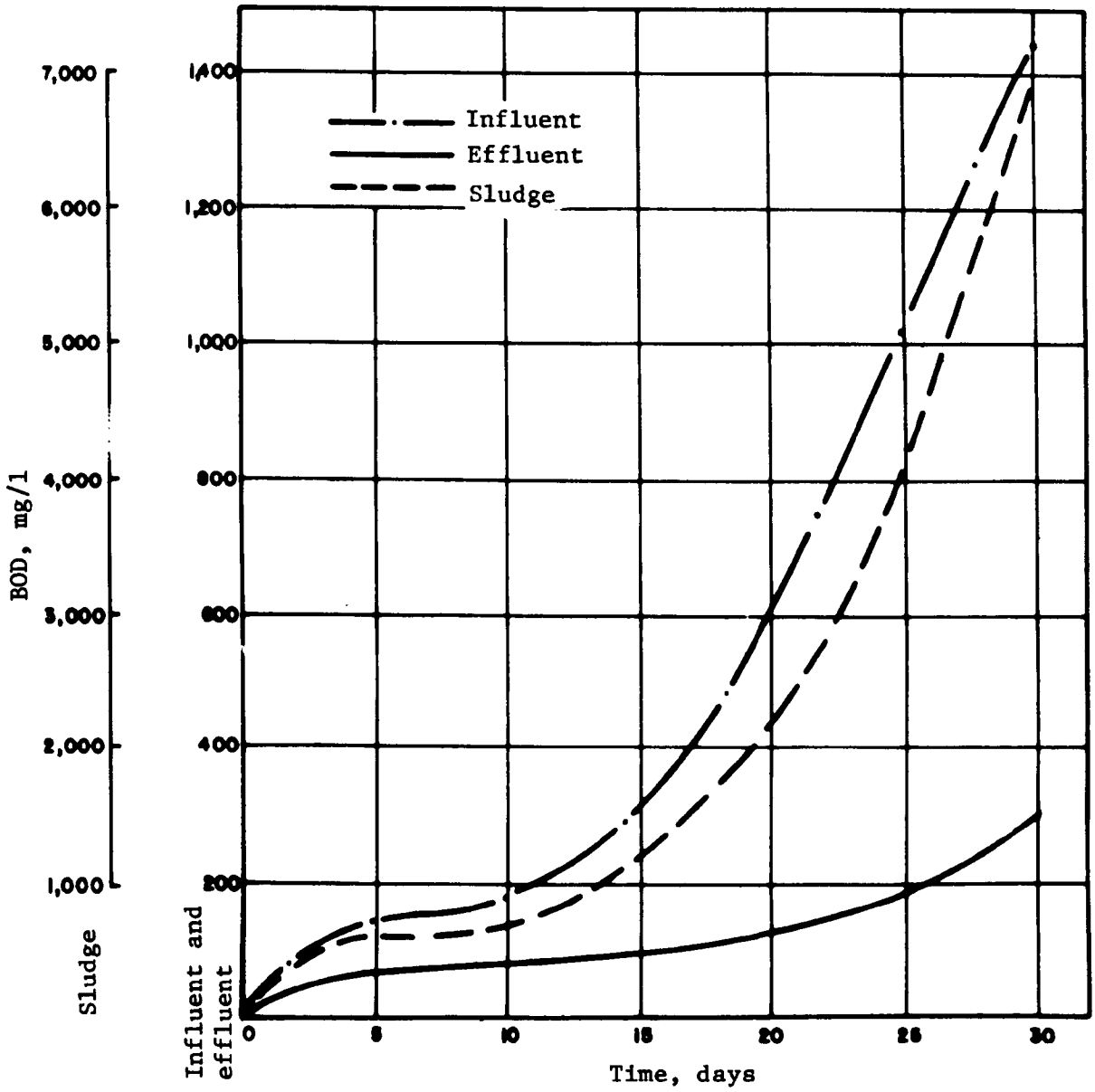

Fig. 38. Long-term BOD (samples of 9/11/72)

Fig. 39 shows families of 20- to 30-day curves for samples taken 3/19/72 and 10/11/72, respectively. Effluent BOD compared to influent BOD shows 5- and 20-day removals of 68 and 80 percent, respectively, for samples of 9/19/72.

A slower BOD development is shown in the 10/11/72 samples of this figure. The 5- and 30-day BOD removal efficiencies for the influent and effluent samples of 10/11/72 are 59 and 65 percent, respectively.

To sum up: the BOD's of the influent and backwash sludge samples for 10-, 20-, and 30-day periods are much higher than the 5-day standard BOD, but the effluent BOD's for 10, 20, and 30 days are more nearly equal to the 5-day values. The actual long-term BOD's for influent and sludge samples fluctuated from day to day according to the fluctuations in the characteristics of the wastewater. The effluent long-term BOD values, however, were relatively constant. This is an indication of the relative consistency of effluent quality, even though removal rates varied.

Soluble BOD

The previously mentioned problems with high percentages of soluble BOD in the wastewater required further study to locate their source. Since most of the soluble BOD is attributed to the starch in the internal and surface sizing operations of the paper mills, it was assumed that one or several sources of waste from the sizing operations were finding their way into the treatment plant.

Three separate special sampling programs were conducted to find the source of the soluble BOD. The first two sample programs indicated that the Strathmore whitewater had a high percentage of soluble BOD. This was attributed in part to the resolubilized surface size on the reused fibrous material and the internal size. The third study showed a decrease in the amount of soluble BOD in the whitewaters at both the whitewater tank overflows and the paper machines (tray water). This in soluble BOD found in the latter program was from the relocation of certain size tank drains entering the treatment plant to discharge to the sanitary sewers. Relocation of all wash drains has been completed.

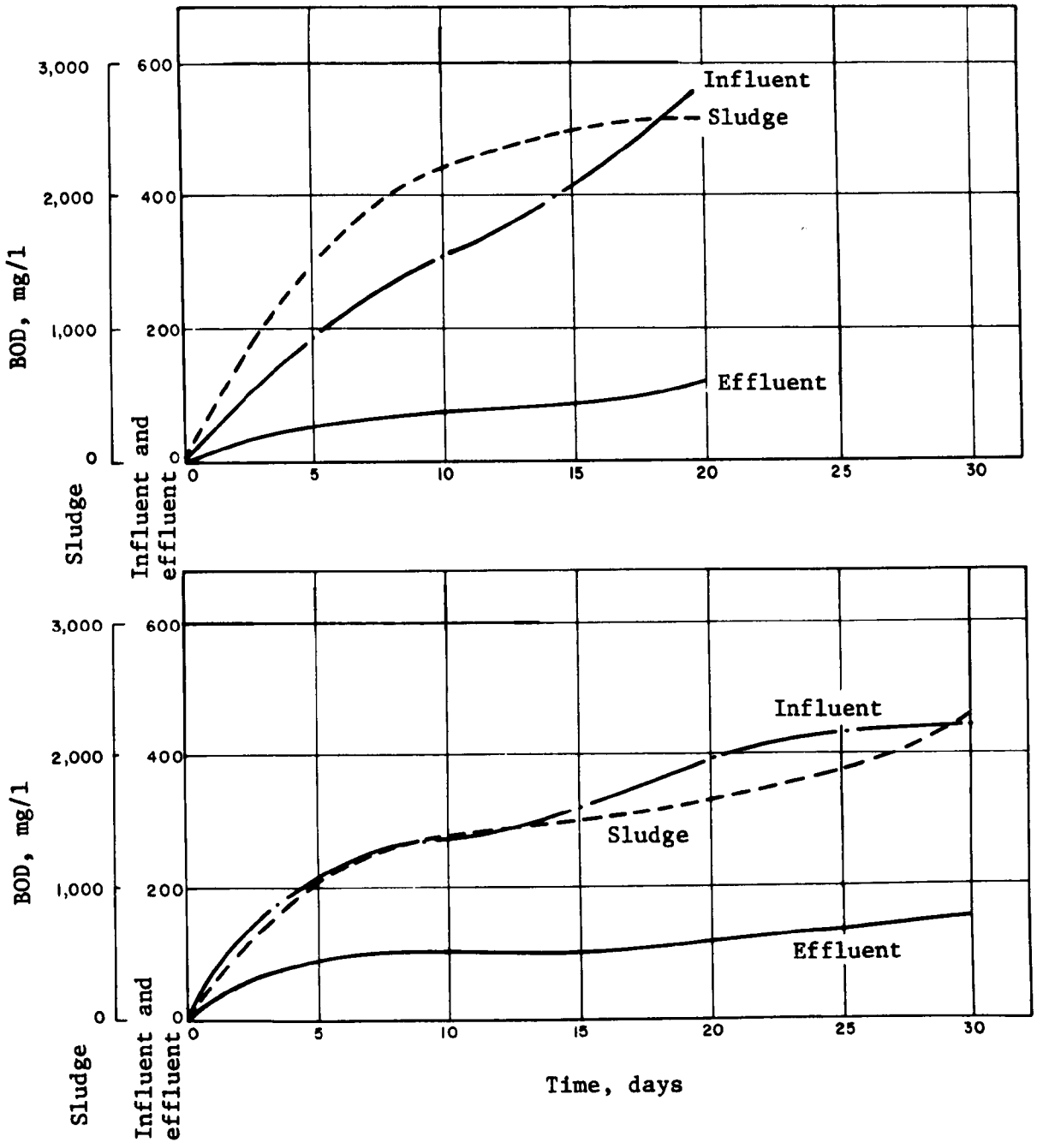

Fig. 39. Long-term BOD (Samples of 9/19/72 and 10/11/72)

SECTION VI

PHASE IV

PLANT OPERATION OPTIMIZATION

Problems

1) Inability to handle surges or high flows -- even within design range. Often, normal flows could not be filtered.

2) Leaking seals.

3) Failure to treat effluent adequately so regulatory agency requirements could be met consistently or even a high percent of the time.

4) The effluent pump drive was unreliable suffering frequent failure and causing use of backup and even manual controls.

5) There appeared to be no hope of removing soluble BOD even with good plant operation.

6) Chemical costs were higher than anticipated because of high polymer and alum dosages required for drainage.

7) Federal regulations became more stringent than those for which the plant was designed and approved while the plant was being built.

8) Because of effluent bypassed during failures of equipment during this shakedown period, the canal discharge manifold plugged several times.

9) Hydraulic microstrainer drives failed because of high loads imposed on them by excess drag from seals. The seals were overtightened in an attempt to stop the leakage.

10) Chemical upsets of an unknown origin in the mills caused loss of floc and drainage.

11) Much maintenance, technical and engineering time was required to operate the plant and find solutions to the problems.

12) There were numerous less important problems such as the automatic turbidity system not working and magnetic flowmeters being kept in calibration.

Flow surges

Esleeck originally had a collection sump which was pumped out rapidly when it filled. They converted to a continuous pump system which eliminated that source.

Strathmore has all gravity flows. The solution here was to control dumps particularly from white water chests. The white water is released over a relatively long period rather than all at once. This procedure does not affect machine changeover time.

Another source of difficulty was several machines dumping at the same time. Coordination of these activities by plant supervision has minimized this type of surge.

Leaking Seals

As has been discussed earlier, many types of seals were tried but all either leaked or put too much drag on the drums or wore out quickly. Later discussion will show that the seals would not have been anywhere near the problem they seemed to be had we discovered how to achieve a free-draining floc and how to keep the screens clean. The seals finally chosen were the dumbbell (Skelley)seals on the outside with no inside seals. See (f) Fig. 15, page 49.

Composite samples have no measurable settleable solids normally with these seals.

The dumbbell seals are inexpensive and can be used four times before discarding by turning them over, turning end-for-end, and turning over again. Only the edge against the moving chime wears, and there are four such edges on each seal.

In addition, the dumbbell seals are simple to replace -- taking about 30 minutes. By contrast, inside seals require about 8 hours for each drum with the plant down. The level need not be dropped to change a dumbbell seal.

The reason that the seals leaked earlier was because a) the head differentials across the screens were so great (8-10") and b) the drum speeds were usually at their maximum to handle or attempt to handle the flow.

The head differentials resulted from a) dirty screens and b) poor floc.

Soluble BOD

It was demonstrated in the lab and in the treatment plant, when it was operating properly, that BOD removal would not be sufficient to meet either the old 85% removal or the new 8 lbs. per ton requirements. The problem was almost entirely soluble BOD which could not be filtered or flocced. Some small removals were obtained by flocculation. This was probably finely colloidal starch.

It was shown by a series of experiments in the Strathmore mill that starch accounted for more than 95% of the BOD from that mill.

A campaign was mounted to

1) Reduce starch usage
2) Increase starch retention
3) Decrease starch storage time
4) Avoid over-cooking of starch
5) Maximize material retention of all kinds
6) Police water use practices.

The results of this effort were dramatic. Solids losses from Strathmore were cut in half and BOD was cut 65%.

It was then discovered that a high molecular weight, anionic polymer developed a large, tough, free-draining floc which greatly improved plant performance. In spite of this development the plant still could not handle high flows within the design range.

Screen Cleaning

CDM evaluated many cleaning agents including phosphoric acid initially recommended by Crane. The chemical cleaner chosen and used for a long period of time was Oakite LSD, a highly alkaline detergent.

It was reasoned that the flow handling capability of the plant could be improved by 30% by changing the No. 1 screen from 23 micron fabric to 35 micron fabric as was on No. 2 screen. No. 2 screen seemed to pass twice the flow that No. 1 passed. No. 1 screen was changed during our 1973 summer shutdown.

Flow handling improved markedly. But over a few weeks' time, we again could not handle the flows. It was noted that sludge flow to the town sewers had gone up when the new screen was installed and gradually fell off corresponding to the loss of flow handling capability. It seemed that the knockoff showers were not penetrating the fabric.

A piece of the removed, dirty, No. 1 fabric was cleaned with various chemicals in the laboratory. Phosphoric acid appeared to do the best job.

Both screens were cleaned by applying 10% phosphoric acid with a sprinkling can to the exposed portion of the drums. A 10-minute soak time was allowed before rotating the drum to do the next section.

Following the cleaning, the plant could handle all flows. On one occasion just one screen passed a 2.5 MGD flow rate. In conjunction with the anionic polymer effluent quality was excellent. Sludge flow to the town went from 60,000 gpd to over 200,000 gpd -- off the magmeter scale. Dirty screens had obviously been the main problem all along.

November 1973 marked the beginning of 24-hour anionic polymer usage. (Stein Hall's Polyhall 980.) It was discovered that pH had to be between 6.5 and 8.0 for adequate floc characteristics particularly as regards drainage. pH 7.5 was best.

Because of this requirement and the NEPDES Permit requirement for pH of discharge, automatic pH control using NaOH was installed.

We were plagued by shortages of chemicals during early 1974. Caustic and phosphoric acid were unavailable from time to time and finally we were notified that the best polymer was not available at all.

When operating at neutral pH, a gradual deposition of aluminum hydroxide occurs that eventually blinds the screen such that normal plant flows cannot be handled. The deposition appears as a uniform, "plated-on" coating in an SEM picture. X-ray energy dispersion analysis shows aluminum to be the predominant substance present in the coating. At this writing, a satisfactory solution to the blinding has not been found and the plant is bypassed several times per day.

The total by-passed per day is in the range of 30-150,000 gallons; the balance of the 2 MGD is treated and meets permit requirements.

A recent development is that with summer river water temperature the entire effluent can be adequately treated with just one microstrainer. It seems that the viscosity and surface tension of water from 55° F. (winter) to 90° F. (summer) have a marked effect on drainage and chemical reaction time of floccing chemicals.

SECTION VII

SOLIDS HANDLING

PILOT FACILITIES

To determine the dewaterability of the backwash sludge, small scale thickening and dewatering units were set up and operated intermittently during two months of the last part of the Phase III studies at the treatment plant. These studies were a preliminary step to ascertain the possibility of reclaiming paper fibers in the backwash sludge and reusing them in the mill or producing a marketable byproduct for sale. After determining whether the sludge could be dewatered efficiently and economically, the paper mills would study the feasibility of reusing the reclaimed fiber.

The methods of sludge dewatering studied were centrifugation, vacuum filtration, flotation, and gravity thickening. Pilot units included a 6-in. solid bowl centrifuge manufactured by Bird Machine Company, a 3-ft-diameter by 1-ft-wide coil filter, and a 1-sq-ft thickening utilized a 55-gal. barrel fitted with side draw-offs and a side window.

Before commencing the studies, it was assumed that it would be possible to dewater the backwash sludge (average suspended solids concentration 0.25 percent) directly in the centrifuge and on the coil filter units operating in parallel. After some preliminary studies, it became apparent that the backwash sludge was too low in solids for efficient operation of the centrifuge and coil filter units. In fact, the coil filter unit would not form a solids mat unless the suspended solids concentration in the sludge was greater than 0.50 percent.

For this reason, gravity thickening was begun using the 55-gal. barrel mentioned previously. In this procedure, the barrel was filled with backwash sludge and allowed to settle. About 90 percent of the time the solids floated to the top because of entrainment of air caused by the backwash water passing through the microfabric. Therefore, either the supernatant or underflow was drawn off to leave only the thickened sludge. Thus, by repeating this operation several times (three to five), the solids concentration was doubled (i.e., 0.5 percent or greater solids concentration was obtained).

It was anticipated that gravity thickening might not be feasible for full scale operation, because of the need for large settling tanks and the inability of this method to raise the solids concentration above 1 percent. For this reason, a plant flotation thickener was set up and operated during the last two weeks of the study. Operating results of the flotation thickener as well as the coil filter and centrifuge are given in Table 8. The flotation thickener was very effective in thickening the

TABLE 8

PILOT SLUDGE STUDIES DATA

	Bird 6-in. Solid Bowl Centrifuge						
	Bowl Data			Sludge Solids, percent			
Date, 1972	Flow, gpm	Speed, rpm	Bowl Depth	Raw	Filtrate	Cake	Percentage Recovery
8/30	10*	5,000	Medium	0.32	0.12	13.4	62
9/7	2-3	5,000	Medium	0.27	0.08	25.8	70
9/8							
9/11	2-3†	5,000	Maximum	0.394	0.103	30.5	74
9/12	2†	5,000	Maximum	0.394	0.109	76	71
9/18	1-1.5†	5,000	Maximum	0.524	0.099	32.6	81
9/19	1.0†	5,000	Minimum	0.5755	0.084	21	85
10/2	1.5†	5,000	Medium	0.698	0.076	29.5	89
10/3	1.0-1.5	4,000	Medium	0.456	0.058	34.8	87
10/5							
10/11							
10/12	1.5-2.0†	4,000	Medium	0.279	0.094	37.1	62.3
10/13							
10/14	2†	4,000	Maximum	0.685	0.202	44.8	70
10/15							
10/16	1.5†	5,000	Medium	0.632	0.142	45.6	78
10/17	2‡	5,000	Maximum	1.43	0.31	43.5	78

* Unit plugged.

† Gravity thickened sludge.

‡ Flotation thickened sludge.

TABLE 8 (Cont.)

PILOT SLUDGE STUDIES DATA

Komline-Sanderson 10-sq-ft Coil Filter							Komline-Sanderson 1-sq-ft Flotation Thickener				
Drum Data			Sludge Solids, percent			Percent Recovery		Sludge Solids, percent			Percent Recovery
Flow, gpm	Drum Speed	Submergence Percent	Raw	Filtrate	Cake		Flow, gpm	Raw	Filtrate	Cake	
15-18	Slow	37	0.44	0.14	21.0	68					
15-18	Slow	37	0.44	0.19	22.2	57					
15-18	Med.	37	0.51	0.053	37.4	90					
6.5†	Slow	37	0.58	0.31	20.5	47					
5†	Slow	37	0.60	0.21	21.3	65					
3†	Slow	37	0.49	0.10	20.2	80					
5†	Slow	37	0.53	0.08	22.5	85					
							1.5-2.0	0.099	0.010	2.34	90
								0.103	0.021	4.9	80
							2	0.178	0.034	2.9	81
							2.5	0.156	0.038	3.54	75
2‡	Slow	37	2.32	0.045	21	98	3	0.201	0.029	4.18	85

raw backwash sludge from 0.25 to 2 to 4 percent solids, with good recovery efficiencies. Further studies were conducted with the centrifuge and coil filter using the flotation thickened sludge as a feed. These results are also shown in Table 8.

FULL SCALE FACILITIES

Because the wastewater treatment plant is attended only 8 hours per day, the solids handling facilities should be designed for similar operation. Considering the time needed to start operation and to clean up, 6 hours actual operating time were allowed.

Fig. 40 shows the daily variations of the backwash sludge flow, percentage solids, and total solids coming from the microstrainer from April 30 through October 20, 1972. From this figure and the results of the pilot plant studies listed in Table 8, the backwash sludge design parameters for a full scale solids handling facility were determined. These are given in Table 9.

TABLE 9

MICROSTRAINER BACKWASH SLUDGE DESIGN PARAMETERS

Average daily flow	0.15 mgd
Maximum daily flow	0.20 mgd
Percentage solids in sludge	0.25
Maximum total solids per day	4,200 lb.

Fig. 41 is the schematic flow diagram for the microstrainer backwash water sludge consolidation treatment plant showing the two alternatives (vacuum filtration or centrifuging). An equalizing tank has been provided between the microstrainer and the first treatment unit, the flotation thickener, to hold the sludge during the 18-hour period that the treatment plant is not operating. The tank has been sized for an 18-hour flow under maximum flow conditions, i.e., 20,000 cu. ft. The tank's contents would be thoroughly mixed to insure that the sludge withdrawn for treatment was of uniform consistency.

The sludge would be pumped from the equalizing tank at a steady rate to the air flotation thickener. Table 10 lists the design parameters used to size this unit and other units making up the sludge dewatering facility. The conditioned sludge would flow from the flotation unit into a holding

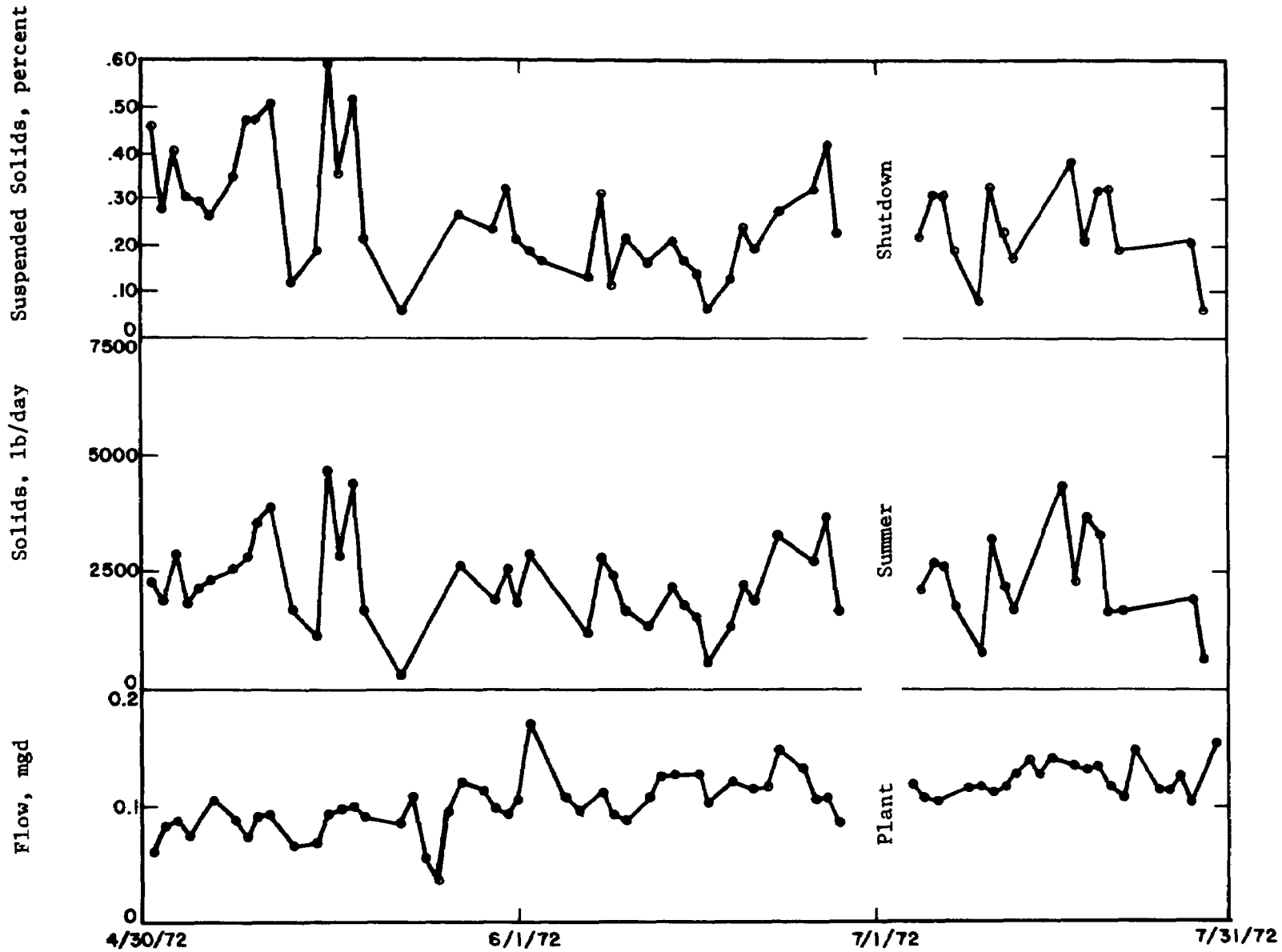

Fig. 40. Daily variations of backwash sludge

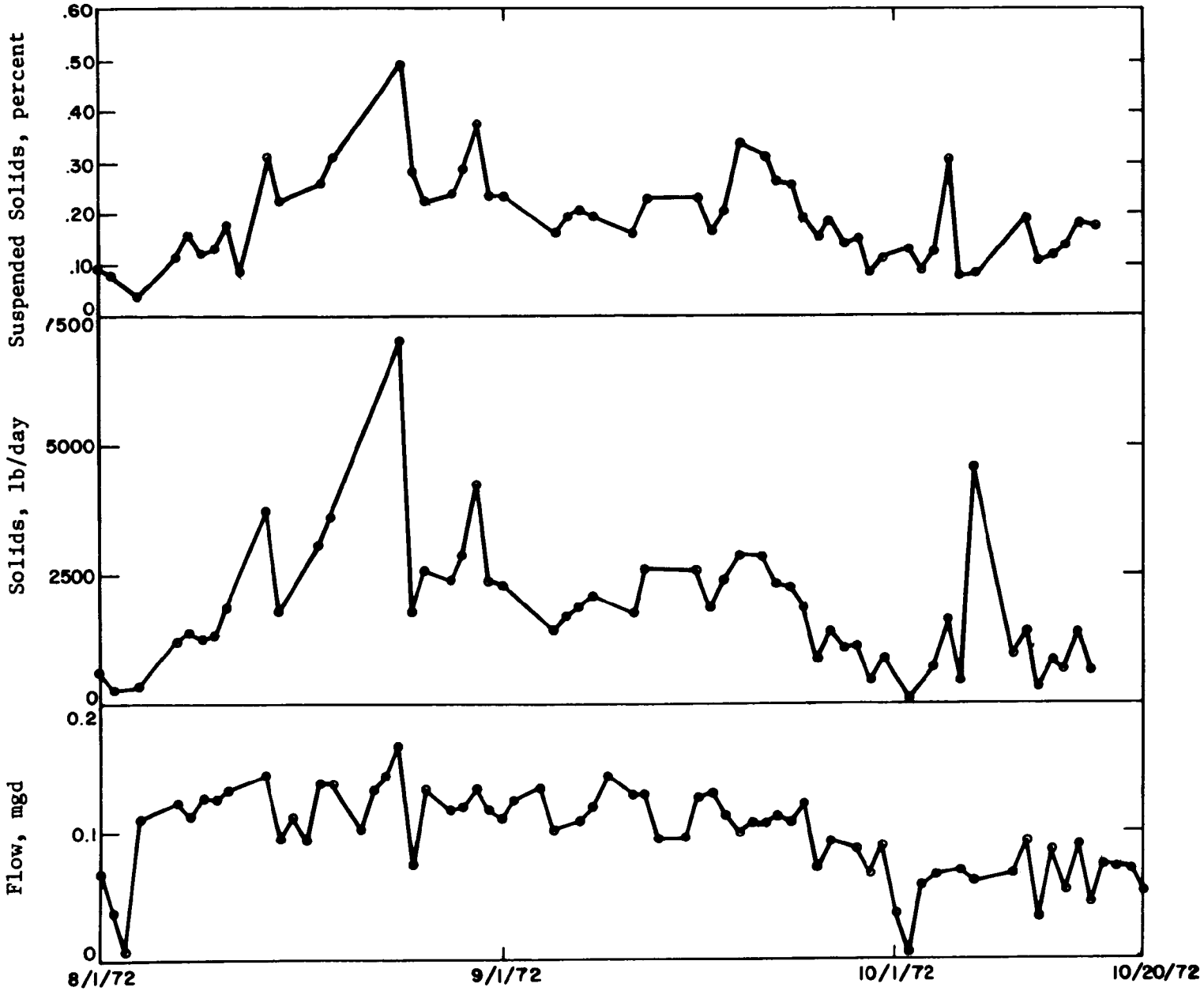

Fig. 40. Daily variations of backwash sludge (Cont.)

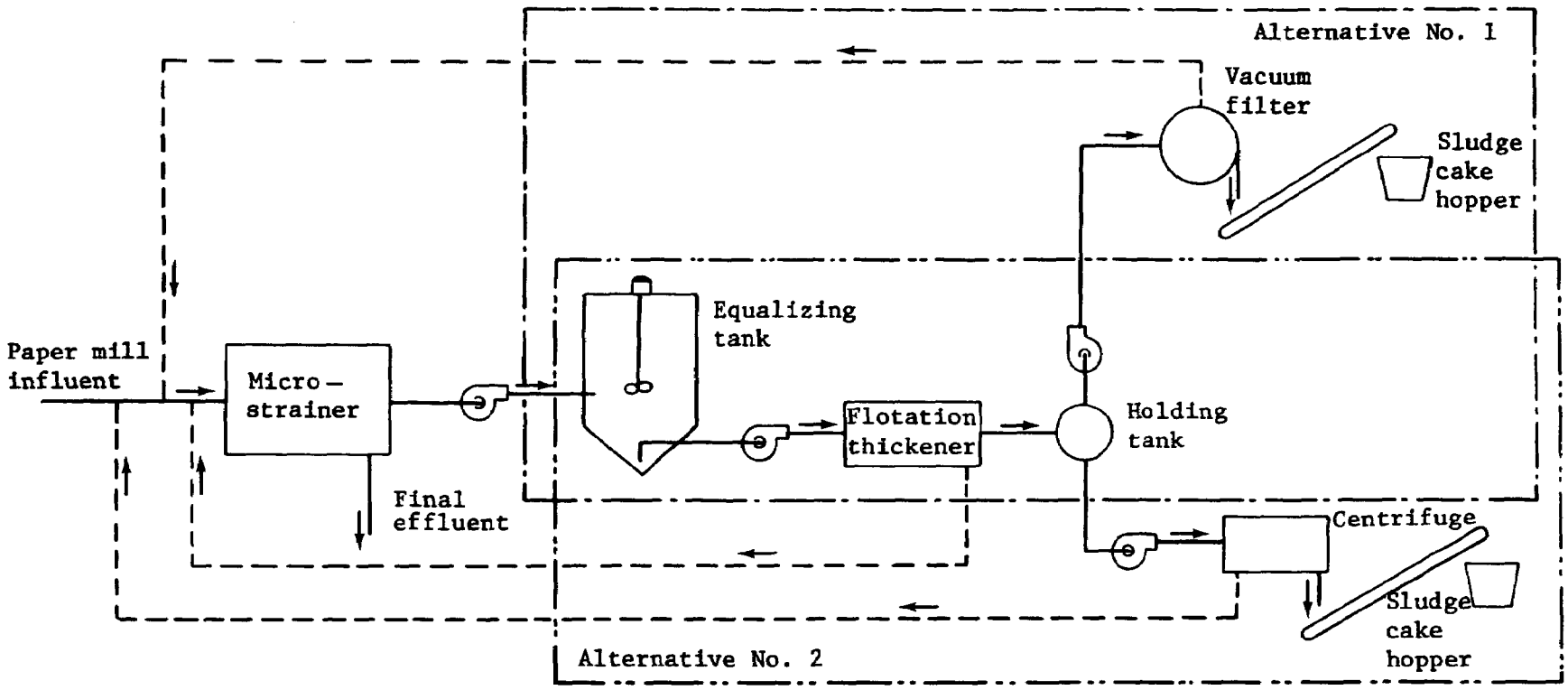

Fig. 41. Schematic flow diagram

TABLE 10

SLUDGE HANDLING FACILITY, UNIT DESIGN PARAMETERS

Equalizing Tank	
Number	One
Volume, cu. ft.	20,000
Raw sludge pumps	
Number	Three (including one standby)
Capacity each, gpm	300
Flotation thickener	
Surface area, sq. ft.	400
Solids loading, lb/sq. ft./hr.	1.75
Volume of raw sludge, gpm	555
Volume of consolidated sludge, gpm	41.2
Percentage solids in consolidated sludge	3.0
Volume of underflow, gpm	513.8
Percentage solids recovery	89.0
Conditioned sludge holding tank	
Volume, cu. ft.	2,850
Percentage of maximum day	100
Conditioned sludge pump	
Number	Two (including one standby)
Capacity each, gpm	45
Vacuum filter	
Number	One
Surface area, sq. ft.	100
Loading, lb/sq. ft./hr.	6.2
Volume of sludge cake, cu. ft/day	292
Percentage solids in cake	20
Volume of filtrate, gpm	35
Percentage solids in filtrate	0.05
Percentage solids recovery	98.5
Sludge cake hopper, cu. ft.	300*
Centrifuge	
Number	One
Diameter, in.	24
Loading, lb/hr.	620
Volume of sludge cake, cu. ft./day	120
Percentage solids in cake	45
Volume of centrate, gpm	38.7
Percentage solids in centrate	0.3
Percentage solids recovery	90.5
Sludge cake hopper, cu. ft.	125*

*Allows for bulking and assumes emptying twice per day.

tank to allow continuous operation of the vacuum filter (or, alternatively, the centrifuge) with sludge of uniform consistency. The holding tank would be capable of holding one day's conditioned sludge production for the flotation unit at maximum daily flow. The tank would be fitted with diffused air mixing facilities.

The use of either a vacuum filter or centrifuge as the final unit in the sludge dewatering process has been considered. These are shown as Alternatives Nos. 1 and 2 in Fig. 41. Sludge pumps would transfer the sludge directly from the holding tank to the final process unit.

The vacuum filter would have a surface area of 100 sq. ft. and would be loaded at a rate of 6.2 lb./sq. ft./hr. at maximum conditions. We estimate from the results of the pilot plant work that the percentage solids recovery would be 98.5 and the sludge cake would have a solids content of 20 percent and a maximum volume of 292 cu. ft. per day.

The sludge cake from either of the alternative final units would be transferred by conveyor to an elevated sludge hopper for storage prior to hauling by truck for reuse in the paper mill or for off-site disposal.

The flotation thickener underflow, the vacuum filter filtrate, or the centrate would be returned by gravity to the wastewater treatment plant influent. The treatment plant and sludge processing facility would thus be a closed system, since the total sludge removed by the microstrainers will be recovered. The microstrainer backwash sludge solids content will increase somewhat as the underflow and filtrate or centrate are returned to the microstrainer. No provision has been made for duplication of these principal units for standby purposes, since it would probably be more economic to discharge the sludge into the Montague sewerage system at times of emergency shutdown.

OPERATING COSTS

Table 11 lists the estimated costs of operating the microstrainer sludge handling facility. We estimate that two men per day could operate the treatment plant and the sludge handling facility, allowing 1.5 man-days per day for the running of the sludge facility. A nominal amount only has been allowed for chemical conditioning, because the wastewater normally contains suitable chemicals from the paper manufacturing process and the wastewater treatment process.

TABLE 11

SLUDGE HANDLING OPERATING COSTS*

Item	Cost per Ton Dry Solids†	Cost per Day‡
Chemicals	$ 3.19	$ 5.00
Labor	44.00	69.00
Power	7.47	11.72
Cake disposal**	28.68	45.00
Total	$ 83.34	$130.72

* Based on average daily flow.
† 1.38 tons/day.
‡ Based on 7-day week, 8-hour day.
** Assuming cake hauled to municipal disposal site 5 miles from mill.

The costs are based on an average daily flow of 0.15 mgd of backwash water. The solids recovered equal the total solids entering -- 1.57 tons dry weight per day. For the purpose of these estimates, it has been assumed that the sludge cake is hauled to the local municipal landfill for final disposal.

The estimated operating cost per day is $130.72, or $83.34 per ton of dry sludge.

First Year Operating Costs

Table 12 lists the operating costs according to general categories for the first year of operation of the wastewater treatment plant. These costs were taken from a summary sheet prepared by the Strathmore Paper Company showing their detailed operating expenses for the period October 1971 to 4 December 1972. For the purpose of this study, however, only those costs from 1 November 1971 to 1 November 1972 were used (start of operation of the treatment plant until the end of the post-construction studies). An explanation of each of the categories follows.

TABLE 12

FIRST YEAR OPERATING COSTS*

	1971	1972	Total
Chemicals	$2,930†	$ 1,810	$ 4,740
Electricity	2,705	10,750	13,455
Supervisor	490	1,535	2,025
Operator	1,200	9,890	11,090
Maintenance	109	4,445	4,554
Laboratory supplies	1,110‡	200	1,310
Miscellaneous	13	565	578
Major repair and labor	--	1,305	1,305
Microstrainers repair and labor	--	2,395	2,395
Heating and ventilation	424	1,690	2,115
Process water	400	1,590	1,990
Total	$9,382	$36,175	$45,567

* Compiled from 1 November 1971 to 1 November 1972.
† Includes initial purchase of bulk chemicals.
‡ Includes initial purchase of basic supplies.

Chemical costs refer to the purchase of aluminum sulfate and sodium aluminate (used as primary coagulant) and polymers (used as coagulant aids). These costs are not necessarily distributed throughout 1971 and 1972, because some chemicals were purchased in bulk at the treatment plant startup.

Electrical costs are the direct costs of the electrical power used. The rate was approximately 2.5 cents per kilowatt-hour.

Supervisor costs refer to the time spent by Strathmore supervisory personnel in overseeing the operation of the treatment plant. These costs are based on 10 percent of the payroll costs, including fringe benefits, of operation and maintenance personnel.

Operator costs include the payroll costs of the operating personnel plus 30 percent for fringe benefits.

Maintenance costs include the payroll costs plus 30 percent for fringe benefits of the Strathmore maintenance personnel needed for the day-to-day preventive maintenance and repair needed at the plant.

Laboratory supplies costs comprise all expenses of the operation of the laboratory and wastewater testing. They include some small initial purchases, but for the most part are related to the normal replacement purchases of chemicals and apparatus needed. Costs of additional glassware and chemicals needed to conduct the post-construction studies are not included, but amounted to approximately $500.00.

Major repair and labor costs include all costs of the repair of mechanical equipment and piping, excluding the microstrainers, such as repair and replacement of the sludge pumps, fixing and cleaning valves, piping, wastewater distribution, etc. Also included are costs for alterations or modifications made to the treatment plant for more efficient operation.

Miscellaneous costs include small items such as cleaning materials and tools needed for the operation and maintenance of the treatment plant.

Microstrainer repair and labor costs include costs for major maintenance of the microstrainer, and major repair of items such as the main drum bearings, bearing water flush system, drive controls, and microfabric repair. Also included in, and a major part of, this cost were the replacement and maintenance of the several different sealing operations.

Heating and ventilating costs include maintenance and repair of the heating, ventilating, and air conditioning equipment.

Process water costs include the mill process water supplied by Strathmore for use in the backwash spray systems for each microstrainer, as cooling water for the effluent and backwash sludge pumps, and for microstrainer washups. This cost is based on 6 cents per 1,000 gallons of water supplied.

All of the costs in Table 12 are not considered normal yearly operating costs, but are the actual first year costs. A portion of the maintenance, major repair, and microstrainer repair costs is due to unexpected mechanical failures encountered in the first year. It is difficult, however, to estimate a yearly cost that could be used for these categories, and no attempt is made to do so.

Based on the total operating costs of $45,567 and an average daily flow of 1.8 million gallons (6 days per week, 50 weeks per year), the first year's operating costs per million gallons is $84.30. Based on an approximate paper production of 70 tons per day from the two mills, the first year's operating cost per ton of paper is $2.20.

SECTION VIII

REFERENCES

American Process Equipment Corporation, "Ultrasonic Filtration of Combined Sewer Overflows" for Environmental Protection Agency Water Quality Office, (June 1970).

Camp Dresser & McKee, "Strathmore Paper Company and Esleeck Mfg. Company--Joint Industrial Wastewater Treatment Plant Operating Manual" (December 1972).

Bliss, Frederick R., "Strathmore Paper Company--Industrial Wastewater Report" (September 1968).

Bliss, Frederick R., "Strathmore Paper Company--Process Wastewater Treatment" (September 1967).

Bliss, Frederick R., "Strathmore Paper Company--Process Wastewater Treatment" (June 1969).

Esleeck Mfg. Company, "Industrial Wastewater Disposal" (May 1965).

Rimer, Alan E., "Microstraining Paper Mill Wastewater," Journal WPCF (July 1971). Vol. 43, pp. 1528-1540.

Bliss, Frederick R., "Papermill Wastewaters: A Prototype Study of Microstraining," paper presented at the 45th Annual Conference of the WPCF (October 1972). Atlanta Georgia.

SECTION IX

GLOSSARY OF TERMS AND ABBREVIATIONS

BOD	Biochemical oxygen demand
5-Day BOD	Biochemical oxygen demand, 5-day, 20°C.
Coagulant aid	Chemical used to assist coagulation process (e.g., polymer)
COD	Chemical oxygen demand
Filterability index	Index of rate of clogging of microfabric (function of wastewater characteristics, solids mat, and condition of microfabric)
gpd	Gallons per day
gpm	Gallons per minute
mgd	Million gallons per day
Microfabric	Stainless steel, monofilament wound cloth mounted on the rotary drum of a microstrainer; opening size of fabric is measured in microns
Microstrainer	Rotary drum covered with microfabric, used for filtration of wastewater
Microstraining	Process of solids/liquid separation utilizing microstrainer
Primary coagulant	Chemical, such as aluminum sulfate (alum) or sodium aluminate, used in the rapid mix basins
SS	Suspended solids
TDH	Total dynamic head
Ultrafilter	Unit employing ultrasonic microfiltration
Ultrasonic microfiltration	Solids/liquid separation using microporous stainless steel canisters for ultrasonic cleaning

APPENDIX A

LOG OF OPERATION

A schedule of operation was set up at the beginning of the post-construction studies in November 1971, when treatment plant operation was initiated. Although sufficient time had been allowed to accomplish the contract objective, repeated startup problems and mechanical equipment malfunctions (the microstrainers in particular) prevented effective operation and data collection on any of the scheduled phases of study. For this reason, scheduled studies were interrupted in February 1972, although the plant operations continued.

The studies were begun again in April 1972, and data collection on the Phase II studies was initiated on May 1, 1972. The project schedule, Fig. A-1, was revised in accordance with the new dates. This appendix presents the revised log of operation.

MAY 1 TO JULY 22, 1972

During this period, straight screening studies, utilizing microstrainers only to treat the industrial wastewaters, commenced. The purpose of these studies was to evaluate the efficiency of the two microfabrics (23-micron opening on microstrainer No. 1 and 35-micron opening on microstrainer No. 2) to evaluate the efficiency of microstraining alone in removing suspended solids, turbidity, color and BOD.

Drum speed and head loss were varied in each microstrainer, and series and parallel screening sequences were attempted by rescreening some of the plant effluent through microstrainer No. 1. The latter process proved ineffective, and had to be abandoned due to high plant flows and leaking seals.

Throughout this period of operation, two major problems persisted that greatly affected the data collected. The first problem, excessively high plant flows, hydraulically overloaded the microstrainers and caused problems in evaluating efficiencies at various drum speeds and head losses. The second and most important problem was the seal leakage experienced during almost the entire period. The results of this leakage varied in degree from almost completely cancelling the effectiveness of the microstraining process to consistently lowering the efficiency somewhat. This proved especially critical in determining the removal efficiencies of the two microstrainers. To solve this problem, several different types and/or designs of sealing bands were installed and evaluated.

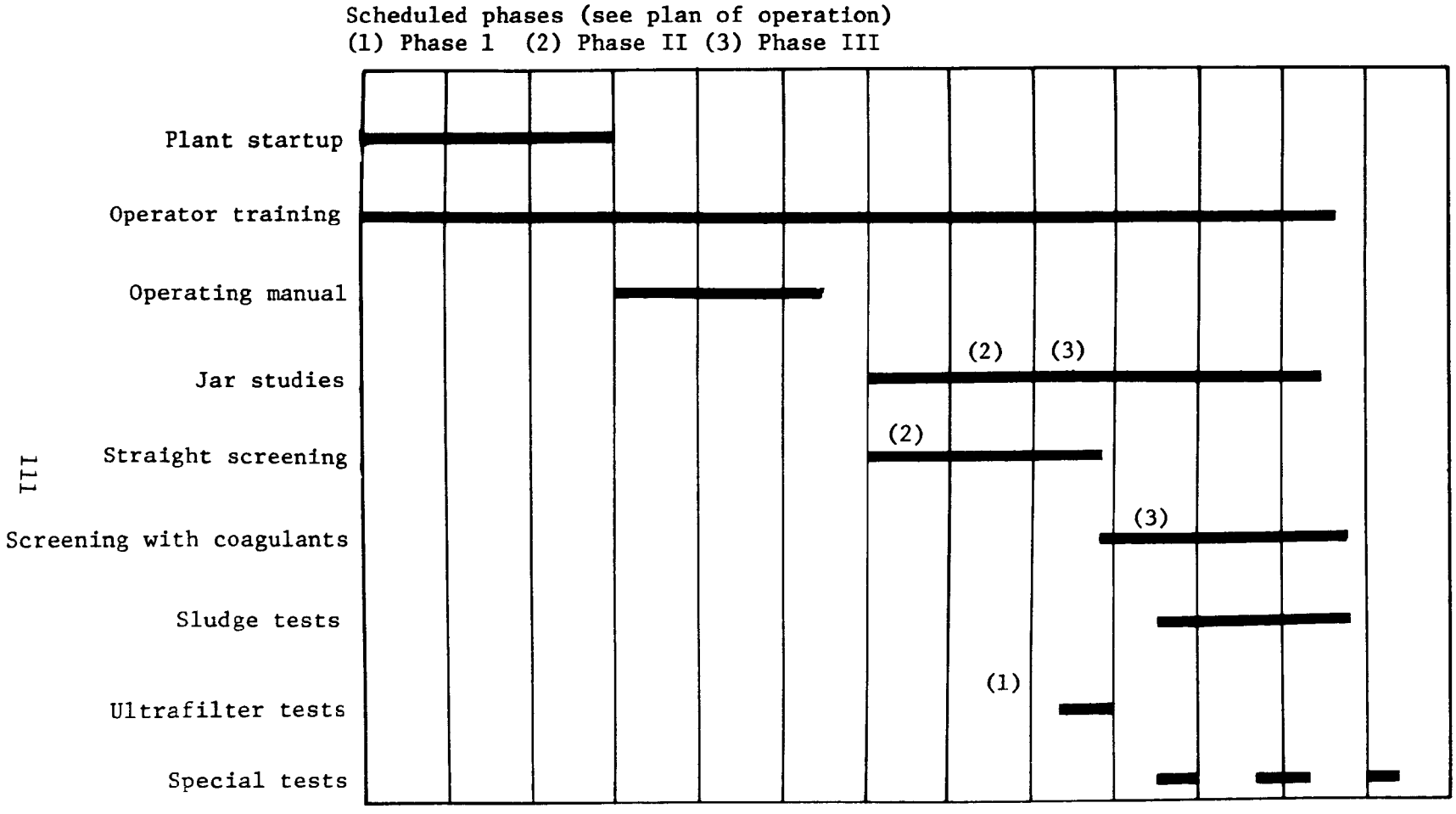

Fig. A-1. Project schedule

Numerous jar studies were conducted in the laboratory during this period in an attempt to gather sufficient data on the use of various combinations of coagulants and coagulant aids. These data were utilized in the full scale studies of Phase III.

From July 10 to 26, ultrafilter studies were conducted. The results of these studies are given in Appendix B.

JULY 28 TO OCTOBER 16, 1972

Chemicals were added full scale to the treatment plant under the Phase III portion of the schedule. Various combinations of primary coagulants (alum and/or sodium aluminate) and coagulant aids (polymers) were tried and their effectiveness in flocculating the fine suspended solids was evaluated. The purpose of this chemical addition was to increase solids removal by the microstrainers. Chemical feed requirements were determined by jar studies of daily wastewaters. The most effective dosages were then used full scale and compared with the bench scale results. The efficiencies of the different microfabrics were also evaluated during this period, as well as the filterability index of each microstrainer (see Section IV).

Again, high flows and leaking seals affected the data collected. Microstrainer No. 1 had excessive seal leakage at times because of an improperly seated sealing band. From September 22 to October 16, microstrainer No. 1 was shut down because of this leakage. At this time, a new seal was installed on microstrainer No. 2, and it proved effective. The operating data obtained during this period were among the best, as far as treatment efficiency was concerned.

Several special studies were conducted on the wastewater entering the treatment plant and also on other sources affected by the treatment plant effluents. Several sets of 30-day BOD's were run on the influent and effluent wastewaters. Weekly samples of the canal water, upstream and downstream of the wastewater distributor, were taken to study the effect of the plant effluent on the canal. Sampling programs were conducted at the Montague sewage treatment plant to determine the effect of the backwash sludge discharged to this system.

AUGUST 16 TO OCTOBER 16, 1972

During this period, equipment was assembled and operating data were obtained on several pilot sludge dewatering units to evaluate their effectiveness in dewatering the backwash sludge for alternative methods of sludge disposal or recovery. Methods of sludge dewatering tried included: gravity thickening, air flotation thickening, vacuum coil filtration, and centrifugation.

APPENDIX B

ULTRAFILTER STUDIES

An ultrasonic microfiltration system designed and built by the American Process Equipment Corporation, Hawthorne, California, was supplied by EPA for pilot testing on the paper mill wastewaters. Previous studies with this unit have shown that it is not successful in filtering wastewaters with suspended solids concentrations in excess of 100 mg/l. The proposed testing, therefore, was strictly for research purposes, since the suspended solids concentrations of the Strathmore-Esleeck wastewaters far exceed 100 mg/l. Because the raw wastewater would be pretreated before it was introduced to the ultrasonic unit, no valid comparison could be made between ultrafiltration and microstraining.

The ultrafilter system, assembled on a flat bed trailer unit, consisted of:

> Twenty stainless steel canisters, each fitted with an influent port, an effluent port, a backwash port, a drain, and an air vent in five banks of four canisters each with each bank connected to the system manifold through automatic and manual valves. Each canister contained a cluster of microporous polyethylene filter tubes which were sealed at the bottom and fitted at the top with connections to the effluent and backwash manifolds (influent flow is into the canister body, through the filter element, and out the top fitting to the effluent manifold). The bottom plate of each canister holds an electrostrictive ultrasonic transducer driven by an ultrasonic generator located in the electrical control console. The transducer is activated during frequent, short, backwash cycles (spritz) for one second out of each 10 or 20 seconds, and during long-clean backwash for three minutes out of every 15 minutes.
>
> Dial pressure gages were provided on the inlet side of one canister in each bank, and one on each system manifold line for each bank.
>
> An air compressor and air storage tank supplied control air to solenoid valves for operation of the automatic flow control valves. Wastewater was supplied to the filters by means of a 200-gpm capacity pump. A separate pump provided backwash water.

An electronic control panel contained two 700-w, 22-kHz ultrasonic generators, stepping switches, control circuits, timers, manual overrides, and a lighted control panel array showing the operational status of each bank of filters at any moment.

Fig. B-1 is a schematic diagram of a typical bank of filter canisters and basic canister design.

The ultrafilter trailer was positioned and set up in the parking area near the treatment plant, adjacent to the Strathmore mill for convenient electrical power hookup. Influent pump suction piping connections were made to the plant influent wastewater line in the junction manhole and to a 250-gallon tank for dilution of the wastewater with city water. Filtrate and drain lines were connected to 2,5-in. fire hoses which conducted these to the river.

The intended plan of operation for the ultrafilter studies was to: (1) dilute the paper mill wastewaters with city water to lower the suspended solids below 100 mg/l; (2) depending on these results, gradually decrease the dilutions until raw wastewater was introduced into the ultrafilter; and (3) pretreat the raw wastewater by settling and then pumping the supernatant into the ultrafilter.

After repeated mechanical failures, the ultrafilter was placed in operation on July 25, 1972. Raw influent wastewater was diluted with city water approximately fourfold and the mixture pumped into the system. After 10± minutes, the filter plugged. In addition, the drain control panel indicated that these systems were operating. Repeated attempts to locate the problem were fruitless, and the unit was shut down.

Results of samples taken during this limited run are as follows (flow, 20± gpm; cycle time, 20 sec.):

Test	Influent	Filtrate	
7/25/72		1*	2†
pH	-	-	-
Turbidity, JTU	270	19	12
SS, mg/l	72	8	3
BOD, mg/l	-	-	-
COD, mg/l	183	53.5	53.5

* After 100± gal. filtered.
† After 200± gal. filtered.

On July 26, another attempt was made to operate the ultrafilter. This time, influent wastewater was diluted approximately two times before feeding. There was no plugging, and the filter operated at a much higher flow; however, very little filtrate was produced. It appeared that the influent was being discharged into the drain line. Again, the control panel indicated that all sequences were operating properly, but the respective valves were not responding as indicated. It became evident that the control panel did not indicate the actual conditions at each bank of canisters. Upon isolating single banks of canisters, it appeared that the valve sequence was wrong for continuous filtering and backwashing operations due to a faulty signal from the control panel. Again the unit was shut down. Samples of that filtrate gave the following results (flow, 45± gpm; cycle time, 20 sec):

Test	Influent	Filtrate	
(7/26/72)		1*	2†
pH	7.4	7.4	7.5
Turbidity, JTU	405	65	54
SS, mg/l	144	7	10
BOD, mg/l	38.3	15	16.2
COD, mg/l	275	22.9	30.6

* After 3 minutes.
† After 5 minutes (approximately 200 gallons filtered).

Many more attempts to operate the ultrafilter system ended in failure. The malfunction appeared to be in the electronic control panel which controlled the sequence of operation. After several discussions with officials of the EPA concerning these problems, and after their repeated attempts to obtain assistance from the manufacturer, they advised us to discontinue our studies.

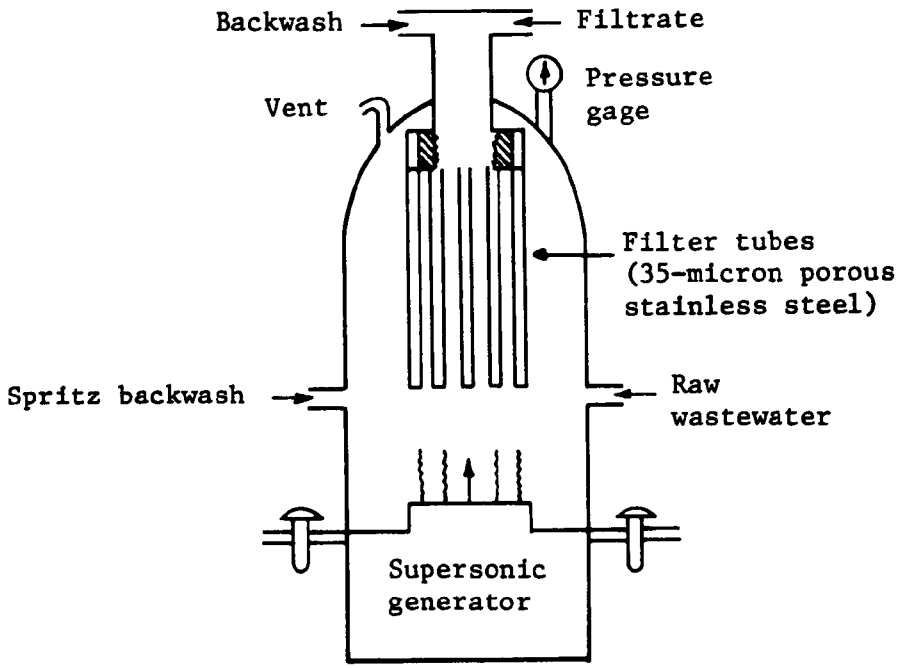

Basic Canister Design

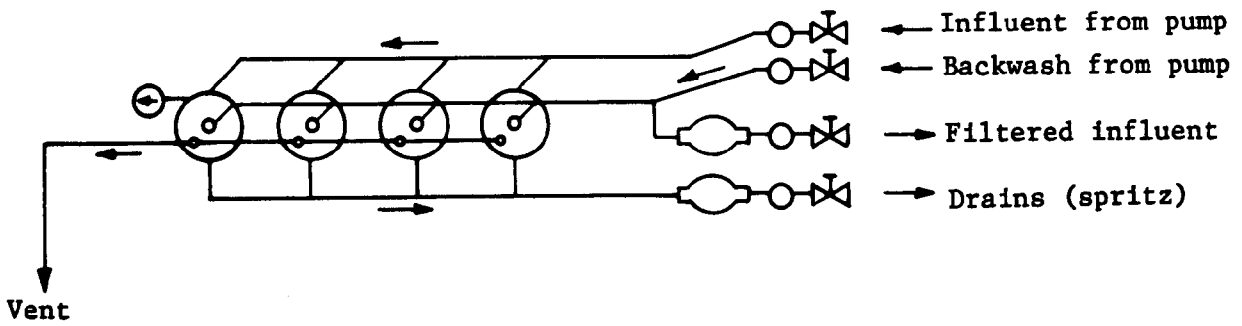

Typical Four-Unit Canister Bank

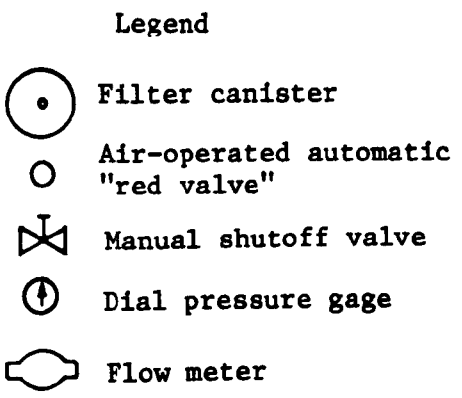

Fig. B-1. Ultrasonic filtration schematic

EXHIBIT A

TYPICAL WASTEWATER CHARACTERISTICS (THROUGH PHASE III)

	Range	Average	Total*
Flow, average mgd	0.58-2.90	1.8	--
pH	3.7-10.10	5.5	--
Turbidity, JTU	32-3,000	600	--
Color, mg/l	15-200	--	--
Suspended solids, mg/l	40-600	300	4,500
BOD, mg/l	75-765	180	2,700
COD, mg/l	150-1,150	500	7,500

* Pounds per day, based on average flow and concentration.

EXHIBIT B

TYPICAL WASTEWATER CHARACTERISTICS (AFTER PHASE IV)

	Range	Average	Total*
pH	6.4-7.8	6.9	--
Suspended solids, mg/l	2-48	20.4	338
Turbidity, JTU	3-27	11.6	--
BOD, mg/l	12-61	31.5	528
COD, mg/l	61-202	120	2,123

* Pounds per day, based on average flow and concentration.

TECHNICAL REPORT DATA
(Please read Instructions on the reverse before completing)

1. REPORT NO. EPA-600/2-76-252	2.	3. RECIPIENT'S ACCESSION NO.
4. TITLE AND SUBTITLE PAPERMILL WASTEWATER TREATMENT BY MICROSTRAINING		5. REPORT DATE September 1976(Issuing date)
		6. PERFORMING ORGANIZATION CODE
7. AUTHOR(S) Frederick R. Bliss		8. PERFORMING ORGANIZATION REPORT NO.
9. PERFORMING ORGANIZATION NAME AND ADDRESS Strathmore Paper Company, Turners Falls, Massachusetts 01376		10. PROGRAM ELEMENT NO. 1BB037
		11. CONTRACT/GRANT NO. 12040 FDE
12. SPONSORING AGENCY NAME AND ADDRESS Industrial Environmental Research Laboratory - Cin., OH, Office of Research and Development, U.S. Environmental Protection Agency, Cincinnati, Ohio 45268		13. TYPE OF REPORT AND PERIOD COVERED Final
		14. SPONSORING AGENCY CODE EPA/600/12

15. SUPPLEMENTARY NOTES

16. ABSTRACT An original treatment system was designed, constructed, and operated for removal of suspended solids, turbidity, color, and BOD from the wastewaters of two paper mills which produce technical and other fine papers. The treatment process involves coagulation and flocculation followed by microstraining. Space and cost considerations were of paramount importance in selecting this process.

Fiber recovery was investigated, but was found to be uneconomical because of the high percentage of fillers being employed and unacceptable levels of color and dirt. The sludge is being discharged to the municipal sewerage system.

Plant operating efficiencies over the past year indicated substantial removal of the suspended solids and 5-day BOD. Effluent turbidities averaged less than 30 Jackson turbidity units (JTU).

The estimated construction cost of the treatment facility is $689,000. First-year operating costs including wages, power, supplies, chemicals, microfabric, and maintenance totaled $36,175, which is approximately equivalent to $1.50 per ton of paper produced.

It is expected that the techniques used in this operation may have broad applicability to industries under similar space limitations and using similar manufacturing methods, and that cooperative ventures will make it possible for many small firms to survive when faced with meeting the new criteria for industrial wastewater discharges.

17. KEY WORDS AND DOCUMENT ANALYSIS

a. DESCRIPTORS	b. IDENTIFIERS/OPEN ENDED TERMS	c. COSATI Field/Group
Coagulation, Flocculation, Pollution Abatement, Waste Water Treatment	Microstraining, Paper Wastes Treatment, Suspended Solids Separation, Paper Mill Fiber Recovery	13/b

18. DISTRIBUTION STATEMENT Unlimited Distribution	19. SECURITY CLASS *(This Report)* UNCLASSIFIED	21. NO. OF PAGES 128
	20. SECURITY CLASS *(This page)* UNCLASSIFIED	22. PRICE

EPA Form 2220-1 (9-73) ☆ U.S. GOVERNMENT PRINTING OFFICE: 1977—757-056/5500