EPA-650/2-74-009a

January 1974

Environmental Protection Technology Series

EVALUATION OF POLLUTION CONTROL IN FOSSIL FUEL CONVERSION PROCESSES

GASIFICATION; SECTION I: KOPPERS-TOTZEK PROCESS

Office of Research and Development
U.S. Environmental Protection Agency
Washington, DC 20460

EPA-650/2-74-009a

EVALUATION OF POLLUTION CONTROL IN FOSSIL FUEL CONVERSION PROCESSES

GASIFICATION; SECTION 1: KOPPERS-TOTZEK PROCESS

by

E.M. Magee, C.E. Jahnig,
and H. Shaw

Esso Research and Engineering Company
P.O. Box 8, Linden,
New Jersey 07036

Contract No. 68-02-0629
ROAP No. 21ADD-23
Program Element No. 1AB013

EPA Project Officer: William J. Rhodes

Control Systems Laboratory
National Environmental Research Center
Research Triangle Park, North Carolina 27711

Prepared for

OFFICE OF RESEARCH AND DEVELOPMENT
U.S. ENVIRONMENTAL PROTECTION AGENCY
WASHINGTON, D.C. 20460

January 1974

This report has been reviewed by the Environmental Protection Agency and approved for publication. Approval does not signify that the contents necessarily reflect the views and policies of the Agency, nor does mention of trade names or commercial products constitute endorsement or recommendation for use.

TABLE OF CONTENTS

	Page
SUMMARY	1
A. TABLE OF CONVERSION UNITS	2
B. INTRODUCTION	3
C. PROCESS DESCRIPTION AND EFFLUENTS	5
1. General	5
2. Effluents To Air - Main Gasification Stream	5
2.1 Coal Preparation	5
2.2 Gasifier	10
2.3 Gas Cleaning	10
2.4 Acid Gas Removal	11
3. Effluents To Air - Auxiliary Facilities	12
3.1 Oxygen Plant	12
3.2 Sulfur Plant	12
3.3 Utilities	12
3.4 Miscellaneous	15
4. Liquids and Solids Effluents	15
4.1 Coal Preparation	15
4.2 Gasifier	17
4.3 Gas Cleaning	17
4.4 Gas Compression and Acid Gas Removal	19
4.5 Auxiliary Facilities	20
D. THERMAL EFFICIENCY	23
E. TRACE ELEMENTS	25
F. POSSIBLE PROCESS CHANGES	27
1. Process Alternates Considered	27
2. Engineering Modifications	29
3. Potential Process Improvements	32
G. PROCESS DETAILS	34
H. RESEARCH AND DEVELOPMENT NEEDS	42
I. QUALIFICATIONS	45
J. REFERENCES	47

SUMMARY

The Koppers-Totzek Coal Gasification Process has been reviewed from the standpoint of the potential effluents to the environment. The quantities of solid, liquid and gaseous effluents have been estimated, where possible, as well as the thermal efficiency of the process. A number of possible process modifications or alternates have been proposed and new technology needs have been pointed out.

A. TABLE OF CONVERSION UNITS

To Convert From	To	Multiply By
Btu	Calories, kg	0.25198
Btu/pound	Calories, kg/kilogram	0.55552
Cubic feet/day	Cubic meters/day	0.028317
Feet	Meters	0.30480
Gallons/minute	Cubic meters/minute	0.0037854
Inches	Centimeters	2.5400
Pounds	Kilograms	0.45359
Pounds/Btu	Kilograms/calorie, kg	1.8001
Pounds/hour	Kilograms/hour	0.45359
Pounds/square inch	Kilograms/square centimeter	0.070307
Tons	Metric tons	0.90719
Tons/Day	Metric tons/day	0.90719

B. INTRODUCTION

Along with improved control of air and water pollution, the country is faced with urgent needs for energy sources. To improve the energy situation, intensive efforts are under way to upgrade coal, the most plentiful domestic fuel, to liquid and gaseous fuels which give less pollution. Other processes are intended to convert liquid fuels to gas. A few of the coal gasification processes are already commerically proven, and several others are being developed in large pilot plants. These programs are extensive and will cost millions of dollars, but this is warranted by the projected high cost for commercial gasification plants and the wide application expected in order to meet national needs. Coal conversion is faced with potential pollution problems that are common to coal burning electric utility power plants in addition to pollution problems peculiar to the conversion process. It is thus important to examine the alternate conversion processes from the standpoint of pollution and thermal efficiencies and these should be compared with direct coal utilization when applicable. This type of examination is needed well before plans are initiated for commercial applications. Therefore, the Environmental Protection Agency arranged for such a study to be made by Esso Research & Engineering Company under contract EPA-68-02-0629, using all available,non-proprietary information.

Phase I of the contract involved the collection and evaluation of published information concerning trace elements in coal, crude oil and shale. This information is contained in the report, "Potential Pollutants in Fossil Fuels", by E. M. Magee, H. J. Hall and G. M. Varga, Jr., EPA-R2-73-249, June 1973 (20). Phases II and III were concerned with the collection of published information on fossil fuel conversion/treatment processes and the description of selected processes. These selected processes were evaluated for their ability to produce clean fuels and for their possibilities for environmental pollution.

The present study, Phase IV of the contract, involves preliminary design work to assure the processes are free from pollution where pollution abatement techniques are available, to determine the overall efficiency of the processes and to point out areas where present technology and information are not available to assure that the processes are non-polluting.

All significant input streams to the processes must be defined, as well as all effluents and their compositions. This requires complete mass and energy balances to define all gas, liquid, and solid streams. With this information, facilities for control of pollution can be examined and modified as required to meet Environmental Protection Agency objectives. Thermal efficiency is also calculated, since it indicates the amount of waste heat that must be rejected to ambient air and water and is related to the total pollution necessary to produce a given quantity of clean fuel.

Alternatively, it is a way of estimating the amount of raw fuel resources that is consumed in making the relatively pollution-free fuel. At this time of energy shortage this is an important consideration. Suggestions are included concerning technology gaps that exist for techniques to control pollution or conserve energy. Maximum use was made of the literature and information available from developers. Visits with some of the developers were made, when it appeared warranted, to develop and update published information. Not included in this study are such areas as cost, economics, operability, etc. Coal mining and general offsite facilities are not within the scope of this study.

The first detailed study was made using the Koppers-Totzek gasifier because of the large amount of commercial experience and the resulting information. This study is to serve as a model for future studies of other conversion/treatment processes.

Considerable assistance was received in making this study and we wish to acknowledge the help and information furnished by EPA and the Koppers Company as well as that furnished by many specialists in the Engineering divisions of Esso Research and Engineering Company.

C. PROCESS DESCRIPTION AND EFFLUENTS

1. General

The Koppers-Totzek gasifier as part of a complete gasification process is the first one examined in this pollution study. This process can be used to make synthesis gas, reducing gas, or fuel gas, and was studied first for several reasons: (1) more complete information is available than on some other processes, this specific design does not include proprietary clean-up processes, and there are a number of commercial plants in operation; (2) it is a simple and relatively clean process in that it does not produce tar, oil, or phenols, (Minor amounts of cyanide, ammonia, etc., are produced.);(3) the process developer was cooperative in supplying requested information.

The gasifier operates at about 2700°F and atmospheric pressure with oxygen, a small amount of steam, and a dilute suspension of powdered coal to produce synthesis gas. The product gas is high in CO and hydrogen, with negligible methane. The process is described generally in the Koppers brochures. Additional information has been obtained from the literature (1,2,3,4) and by discussions with the Koppers Company. The processing steps together with effluents and a discussion of pollution aspects follows. (In this report Figure 1 is referred to as the design as supplied by the Koppers Company and Figure 2 is the design as revised to incorporate environmental controls).

2. Effluents To Air - Main Gasification Stream

Figure 2 is a block flow diagram of the process and auxiliary facilities. This design, based on the design supplied by the Koppers Company, feeds 6,750 T/D of bituminous coal containing 16.5% moisture, 17.3% ash, and 0.63% sulfur with a HHV of 8830 Btu/lb. The product gas, after acid gas removal, is 290 MM cfd with a HHV of 303 Btu/cf and 300 ppm sulfur. This sulfur content meets requirements but could be reduced by the use of more equipment. Most commercial applications are for making ammonia or methanol, but the gas can also be used as a clean fuel for firing ceramics, glass manufacture, etc., or for steam generation and combined cycle power plants or for upgrading to high Btu SNG; in other words the gas can be used whenever synthesis gas, fuel gas or reducing gas can be used. The process can also be used to gasify coal fines, char, hydrocarbons, or tar.

2.1 Coal Preparation

All effluents to the air are shown on Figure 2 and Table 1. The first unit to be considered is the coal storage pile and handling facilities. This particular design does not require beneficiation of coals of 30% ash content or lower. For 30 days storage, the coal piles are about 200 feet wide, 20 feet high and 1,000 feet long. There are two of these, with loading, unloading, and conveying equipment. These will generally

FIGURE 1

KOPPERS-TOTZEK COAL GASIFICATION PROCESS

DESIGN BASIS AS ORIGINALLY FURNISHED BY KOPPERS CO.

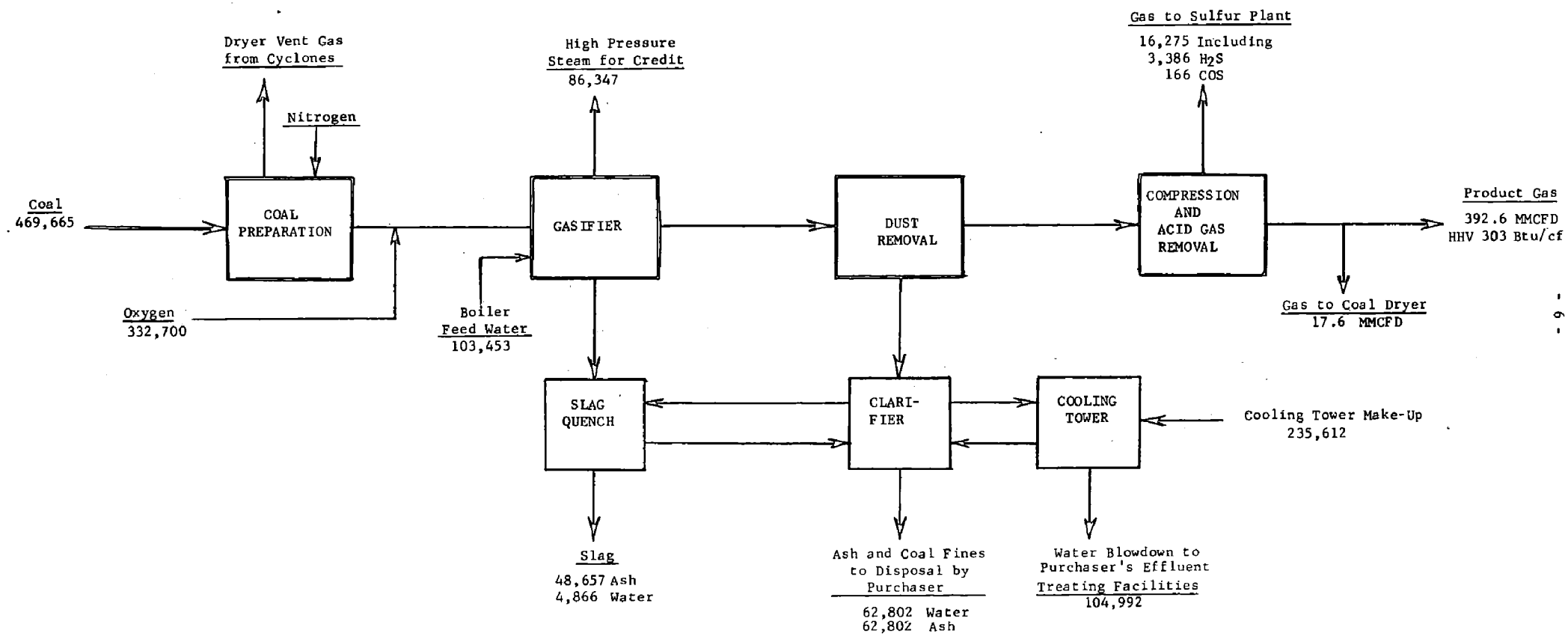

NOTE: All numbers are flow rates in lb./hr. except as indicated.

FIGURE 2

KOPPERS-TOTZEK COAL GASIFICATION PROCESS

DESIGN REVISED TO INCORPORATE ENVIRONMENTAL CONTROLS AND TO INCLUDE ALL AUXILIARY FACILITIES

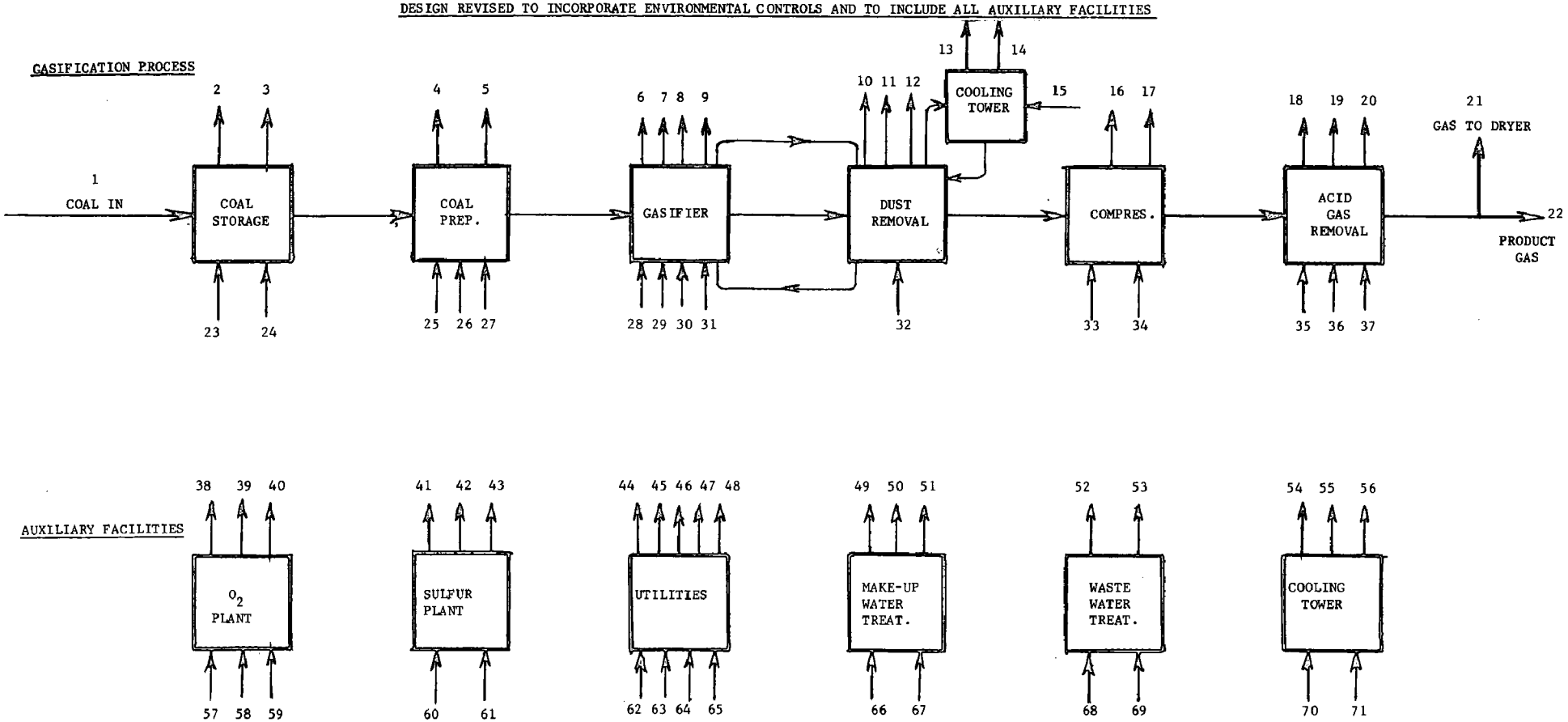

TABLE 1

STREAM IDENTIFICATION FOR REVISED KOPPERS-TOTZEK PROCESS

Stream No.	Identification	Flow Rate	Comments
1	Coal Feed	562,500 lb/hr	For inspections; see Table 7
2	Dust from storage pile	--	Depends on wind conditions
3	Rain run-off from storage pile	e.g. 500,000 lb/hr	Based on 6" rain in 24 hrs.
4	Dryer vent gas	150 MM SCFD	Control of dust and sulfur needed
5	N_2 transport gas	6 MM SCFD	Include with dryer vent gas
6	Wet slag	53,523 lb/hr	To disposal in mine
7	High pressure steam	661,801 lb/hr	From waste heat boiler
8	Low pressure steam	98,527 lb/hr	From gasifier cooling jacket
9	Boiler blowdown	38,016 lb/hr	Send to utility cooling tower
10	Wet ash from clarifier	125,604 lb/hr	To disposal in mine
11	Blowdown from Scrubber cooling tower	--	Eliminated
12	Emergency release to flare	--	Use non-smoking flare
13	Air effluent from cooling tower	7,100 MM SCFD	Also water vapor-potential fog
14	Drift loss from cooling tower	16,220 lb/hr	Typical loss for cooling tower
15	Air in to cooling tower	7,100 MM SCFD	--
16	Cooling water, compressor driver	48,500 gpm	Recirc. to utility cooling tower-closed circuit
17	Condensate, compressor driver	507,000 lb/hr	Return to boiler feed water system
18	Purge from amine scrubber	--	Incinerate in utility boiler
19	H_2S stream to sulfur plant	3.9 MM SCFD	23.1% H_2S, 15.2% moisture
20	Cooling water	1110 gpm	Clean, recirculate to cooling tower
21	Fuel gas to coal drier	--	Eliminate or use only enough to meet S limit
22	Product gas	292.6 MM SCFD	Increases to 306.9 if none used to dry coal
23	Wind on coal storage	--	Can cause dusting
24	Rain on coal storage	6" in 24 hrs.	To holding pond, work off over 10 days
25	Air to burner, coal dryer	--	Limit to give 10% O_2 in dryer gas
26	Fuel to coal dryer	220 MM Btu/hr	Use mostly coal, to save clean gas
27	N_2 to purge storage drum	5.8 MM SCFD	Available from oxygen plant
28	Steam to gasifier	84,735 lb/hr	From gasifier jacket boiler
29	Oxygen to gasifier	326,861 lb/hr	From oxygen plant, plus 5838 lb/hr N_2
30	Boiler feed water	798,344 lb/hr	To boilers on jacket and hot gas
31	Spray water	49,503 lb/hr	Tempers hot gas to boiler
32	Water make-up to cooling tower	302,485 lb/hr	From utility cooling tower blowdown
33	Cooling water, compressor driver	48,500 gpm	For driver condenser and after cooler
34	Steam to compressor driver	507,000 lb/hr	High pressure steam
35	Make-up water and chemicals	1879 lb/hr	Water evaporation in scrubber
36	Cooling water	1110 gpm	From utility cooling tower
37	Steam, low pressure	16,500 lb/hr	For reboiler
38	Oxygen to gasifier	326,861 lb/hr	Plus 5838 lb/hr N_2
39	Nitrogen stream	1,235,864 lb/hr	Plus 28,825 lb/hr O_2
40	Condensate, total	576,782 lb/hr	Driver, heater, plus moisture in air
41	Sulfur	40 t/d	From Claus plant
42	Tail gas	7 MM SCFD	Add tail gas clean-up process
43	Steam make	10,564 lb/hr	From heat of reaction
44	Electric power used	19,426 KW	Burn coal and use flue gas clean-up to control sulfur and ash
45	Flue gas from boiler	320 MM SCFD	
46	Steam used	645,989 lb/hr	
47	Boiler blowdown to cooling tower	30,800 lb/hr	
48	Cooling water in power generation	16,400 gpm	
49	Treated water	1,500,013 lb/hr	Cooling tower make-up
50	Treated water	75,098 lb/hr	Boiler tower make-up
51	Sludge from water treating	--	Include in ash disposal
52	Treated water	--	From storm run-off pond
53	Sludge	--	Sediment in run-off pond
54	Blowdown from util.cooling tower	302,485 lb/hr	Send to scrubber cooling tower
55	Air from util. cooling tower	48,000 MM SCFD	Also water vapor, potential fog
56	Drift loss	147,528 lb/hr	Entrained mist of water
57	Air to oxygen plant	1,597,388 lb/hr	--
58	Steam to oxygen plant	584,000 lb/hr	High pressure (plus 7856 lb/hr low pressure)
59	Cooling water to oxygen plant	79,400 gpm	On compression
60	H_2S stream to Claus plant	3.9 MM SCFD	From acid gas removal
61	Utilities to Claus plant	--	156 KW, 5 MM Btu/hr. to incinerator
62	Coal to utility boiler	1360 t/d	Need flue gas clean-up of sulfur and ash
63	Combustion air	296 MM SCFD	Based on 20% excess air
64	Boiler feed water	75,098 lb/hr	From water treating
65	Cooling water	16,400 gpm	For power generation
66	Fresh water	1,575,111 lb/hr	Gross water required
67	Chemicals	--	Depends on water quality and treatment process
68	Water from process area	--	Rain run-off, drains, etc.
69	Water from coal storage	--	Rain run-off
70	Make-up to utility cooling tower	1,500,013 lb/hr	Evaporation drift and blowdown
71	Air to utility cooling tower	48,000 MM SCFD	--

be tamped down, but there can still be dusting and wind loss. Covered conveyors should be used, and other precautions included in the design to minimize dusting from stacking etc. Thorough planning is necessary to avoid possible combustion in coal storage piles etc., and to provide for extinguishing any fires that may start (13).

The next effluent to the atmosphere is from coal drying which in this case uses a rotary drum drier fired with part of the product gas, giving a sulfur level in the off gas well below that allowable for liquid or solid fuel firing. Use of feed coal as fuel would be more efficient than the use of product gas but would give 1.4 lb SO_2/MM Btu compared to the allowable 1.2 lb SO_2/MM Btu. However, the major part of the fuel could be coal, supplemented by some product gas to meet sulfur emission limits. The gas effluent rate from drying is 150 MM cfd A large volume of excess air is used to bring the drying gas temperature down to less than 1000°F in order to avoid overheating the coal. Also, flue gas is recycled on the drier to hold a maximum of about 10% oxygen in the gas. The coal is not oxidized in the drying step and no tar, sulfur, or volatiles should be evolved, since the coal temperature is not over 200°F. It may be that a fluid bed drier would be more effective than the preceeding because it would allow a higher gas inlet temperature without overheating the coal. This would reduce the volume of dusty effluent gas since less excess air is needed, and the fuel efficiency would increase correspondingly. As an alternate, it might be possible to dry the coal using heat in the flue gas from the utility boiler.

The drier vent gas must be cleaned up and for this purpose an electrostatic precipitator was added to the base design. Bag filters might be used instead, but they must be kept hot enough to avoid water condensation. A water scrubber could be used, and may be preferred if odors in this vent gas are objectionable. The degree of odor control needed will depend on the type of coal and the plant location. It may be more of a problem for example on lignite, and this information should be obtained from plant or experimental operations. Even so, the gas will have a high moisture content and may form a water fog under certain atmospheric conditions. In locations where this is not acceptable, one solution is to make sure that the vent gas is above the critical temperature for fog formation.

Grinding and pneumatic transport with nitrogen do not generate a gas effluent since they are designed for completely closed gas recycle. The gas balance lines from this system (e.g. coal feed hoppers) should be vented into the dust removal system. Great care should be taken to avoid spills, overflow, leaks on seals, and the like. As a further precaution to control pollution, this entire system could be housed in a building, with positive ventilation control tied into bag filters.

Noise control may also be needed. While the building may shield the process area from undue noise of the grinding and handling operations, additional precautions may be needed from the standpoint of personnel inside the building.

In all solids handling or processing, good housekeeping is essential, with plans for quickly containing and cleaning up spills and leaks. Inside a building, this will be required by proper safety procedures. Outdoors in the process and coal storage areas any dust could be picked up by the wind unless promptly collected. Specific clean-up equipment should be provided for this, such as trucks for vacuum pickup and spraying water on roads, and hoses to flush dust to the storm sewer system.

2.2 Gasifier

No gaseous streams are released to the atmosphere from the gasifier. Molten slag leaving the bottom of the gasifier is granulated by dropping into a tank of water. Vapors from this tank need to be contained. Wet slag is removed by a conveyor and is not expected to be an odor problem.

2.3 Gas Cleaning

The raw product gas is cooled in a waste heat boiler and then scrubbed with water. Water from the scrubber, containing approximately half of the slag as well as dissolved H_2S etc., goes to a clarifier to remove solids and then to a cooling tower in which the air will strip out dissolved gases. If all the dissolved H_2S is stripped into the air, it will give a concentration of 1-2 vppm. While this is below the Maximum Allowable Concentration, it is far above the odor threshold and would be unacceptable (see references 5 and 6). It is common to find an appreciable Biox action in the cooling water circuit, and Koppers Company experience shows that there is no odor problem, but this area needs better definition, particularly on higher sulfur coals. The problem can be avoided by using indirect cooling by cooling water or air-fins. The calculated amount of H_2S is less than 100 lbs/hr and it should be relatively easy to inactivate it by adding lime slurry, or by passing the circulating water through a bed of lump limestone. There might be sufficient alkalinity from the fraction of the slag that is carried over to do the task.

An additional effluent is the drift loss of mist from the cooling tower. The mist will contain dissolved and suspended solids, which will result in deposits on the ground and on nearby equipment. When this dries out, it can cause a dust nuisance, for example if trucks use the area. In some cases this type of drift loss has caused icing problems on equipment and public roads in the winter. With any cooling tower, the problem of fog formation must be assessed, since under certain conditions the moisture condenses and the resulting plume can be a problem if it affects public highways. In planning the layout of the plant facilities, these aspects should be given careful consideration, and every effort made to avoid potential problems by proper placement of the equipment.

If necessary, an alternate approach is to avoid the cooling tower by using air fin exchangers. The gas would first be scrubbed with water to remove dust and cooled by evaporating water. Air fin exchangers would then be used for further cooling prior to compression. Air fins reduce water consumption since the heat removed from the gas is taken up as sensible heat of the air rather than by evaporating water in the cooling tower. Water evapororated in the scrubber is recovered down stream as condensate, amounting to 80,000 lbs/hr (160 gpm). It can be cleaned up to supply part of the boiler feed water makeup. Since this is a completely closed system, it avoids potential pollution problems associated with the cooling tower. It would be more practical in higher pressure operations, where the condensation temperature is higher.

2.4 Acid Gas Removal

After compression, the gas is scrubbed with amine to remove H_2S. The various mono- and diethyl- amines that have a high capacity for acid gas removal are not very selective for separating H_2S from CO_2. If most of the CO_2 is removed along with the H_2S, there results a rather dilute H_2S stream for subsequent sulfur recovery and gas to the Claus plant would contain only about 5% H_2S. This low H_2S concentration would result in poor burner efficiency and less than optimal sulfur recovery in the Claus plant. Actually, it is understood that Koppers Company is planning to use MDEA (methyl diethanolamine) for selective removal of H_2S; thus, a concentration of 22% H_2S passes to the Claus plant.

The final product gas after scrubbing contains 200 vppm of H_2S, as well as an estimated 100 vppm of COS. This gas is considered a relatively clean low Btu fuel. The sulfur level is too high, however, for methanation etc., to make a high Btu fuel. However, if methanation is desired other systems can be used to reduce sulfur to acceptable limits.

Carbonyl sulfide results from the gasification reactions and causes complications in amine scrubbing. A hot carbonate scrubbing system would be more effective but would also take out CO_2. Other processes such as the Stretford process, Institut Français du Pétrole (IFP) process, Thylox, etc. remove H_2S down to a level of a few parts per million and at the same time produce free sulfur as a by-product. They can operate at low pressure, for example, near atmospheric pressure, and greatly reduce the amount of gas compression required, depending on the disposition of the product gas.

These processes do not remove carbonyl sulfide so that this will still leave considerable sulfur in the product gas. Work in the literature indicates that carbonyl sulfide has been hydrolyzed over various catalysts to give a high conversion to H_2S (7). If this operation is perfected, it could be used ahead of acid gas removal to give nearly complete removal of sulfur compounds. Development of this step appears highly desirable and would find application in most gasification processes.

3. Effluents To Air - Auxiliary Facilities

In addition to the basic process, a number of auxiliary facilities are required which will now be discussed with regard to effluents to the air.

3.1 Oxygen Plant

The oxygen plant provides 4,000 tons per day of oxygen. It should pose no pollution problems since the only major effluent is a nitrogen stream, but there is a large consumption of utilities which affects overall thermal efficiency of the process.

3.2 Sulfur Plant

The H_2S stream from acid gas removal goes to a Claus plant. Sulfur recovery of about 97% can be achieved with three stages in "straight-through" flow. The tail gas still contains about 1 ton per day of sulfur and must be cleaned up, although this gas volume of 7 MM cfd is small relative to the other effluents. A number of processes are available now for tail gas clean up and several of these will be in commercial use soon (e.g. Shell's SCOT process, Wellman-Lord process, Beavon Process, etc.). In some, the tail gas is first reduced to convert all sulfur compounds to H_2S which can then be removed; in others, the tail gas is incinerated and the SO_2 is then scrubbed out. Limestone scrubbing of the incinerated tail gas may be used, with disposal of spent limestone along with the coal ash being returned to the mine. The amount of spent limestone is relatively small.

No specific preference is indicated for Claus tail gas clean-up since by the time that coal gasification finds much commercial application in this country, there will be considerable commercial experience to draw on. It is reasonably certain that there will be at least one demonstrated, satisfactory process available.

3.3 Utilities

In the utilities area, the main cooling tower has by far the largest volume of discharge, 48,000 MM cfd of air. It is therefore critical from the standpoint of pollution. In this particular case it is not expected to contain significant amounts of undesirable contaminants. The cooling water circuit is clean and does not contain ash or objectionable materials such as H_2S. Normally a certain amount of leakage can be expected on exchangers using cooling water. Since the process operates at low pressure, this should not be a major item. Also, most of this cooling water is from steam condensers of drivers on compressors, rather than on oil, sour water, etc. Cooling towers will always have the problem of mist as well as fog formation, as discussed under the area of gas scrubbing.

The utility power plant is a major item from the standpoint of pollution as well as thermal efficiency of the over all process, and is sized to make the plant self-sufficient in steam and power. It is desirable to burn coal as fuel, which means that sulfur and ash removal are required on the flue gas. This particular coal contains 0.63 wt. % sulfur corresponding to 1.4 lb SO_2/MM btu, whereas the allowable is 1.2. Therefore, some sulfur control is required. There are many ways to do this. As one example, a water scrubber can be used to remove ash and if some limestone is added it should be feasible to remove, for example, 20% of the SO_2, and thereby conform to regulations. The amount of limestone to dispose of is moderate, amounting to about 40 tons per day for complete SO_2 removal, compared to the ash production of 235 tons per day from the utility boiler.

An alternate is to burn part of the product gas along with coal to meet the allowable quantity of SO_2 in the flue gas discharged to the atmosphere. It would be possible to burn only product gas in this utility boiler to supply all the fuel required. This may not be a practical case but does set a limit. It would result in minimum pollution from the utility boiler, with regard to sulfur and particulates, in cases where this is justified or necessary. The volume of flue gas from the power plant is 320 MM cfd, or about the same as the volume of clean product fuel gas.

In view of the intensive effort underway on flue gas clean-up, it is expected that there will be techniques in wide spread use by the time that coal gasification finds extensive application. Some of the processes for SO_2 removal use liquid scrubbing which will also remove ash, or SO_2 might be removed first in a dry operation, followed by scrubbing to remove ash and perhaps other contaminants such as trace metals. On this basis it is reasonable to assume that coal can be burned in the utility boiler. A recent paper by Commonwealth Edison (8) indicates that a low Btu gas produced in a manner similar to that described here may be a practical way to use coal in power plants as an alternate to flue gas desulfurization. Of course the specific situation will determine which method is used.

When flue gas desulfurization is used on a boiler with coal firing, it may be desirable to add the Claus tail gas to the boiler so that it is incinerated and passes through the sulfur cleanup. This would avoid the need for separate facilities for tail gas cleanup, but it does assume that the Claus plant would be near the boiler house. Location of the boiler might also be dictated by the practicality of using the flue gas for coal drying.

The emissions of other gaseous pollutants from the Koppers plant are associated with the power plant and are common to other industrial boilers. The major pollutants will be the oxides of nitrogen (NO_x) and carbon monoxide (CO). Carbon monoxide emissions are generally less than 0.1 lb/MM btu for gas or coal firing and are not considered to be a problem.

Duprey (9) reported that the average emission factors for NO_x from industrial boilers are 0.205 lb NO_x (as NO_2)/MM Btu for natural gas fired boilers and 0.842 lb NO_x (as NO_2)/MM Btu for coal fired boilers. These values are slightly above the national standards that were promulgated by EPA on December 23, 1971 (10) for all new fuel-fired steam generating units of more than 250 million Btu per hour heat input. The standards are based on a two hour average value and are 0.20 lbs NO_x (as NO_2)/MM Btu for gas firing and 0.70 lbs NO_x (as NO_2)/MM Btu for coal firing.

No systematic survey of the factors affecting the emissions of NO_x, SO_x, and CO for industrial boilers has been made to date. Estimates of these pollutants will, therefore, be made from experience with utility boilers (11). This assumption is fairly conservative since it has been shown that utility boilers produce larger levels of pollutants on the average than industrial boilers (9). The regression line for all types of boilers fired with high Btu gas is:

$$\text{lbs } NO_x/\text{MM Btu} = 0.145 + 2.84 \times 10^{-3} \text{ MW}$$

(MW is size of the boiler in megawatts.) Similarly the regression line for horizontally opposed coal fired boilers is:

$$\text{lbs } NO_x/\text{MM Btu} = 0.398 + 2.61 \times 10^{-3} \text{ MW}$$

The nitrogen content of the coal adds the following amount of NO_x to the above, for coals of 1.1 to 1.5% nitrogen:

$$\text{lbs } NO_x/\text{MM Btu} = -1.56 + 1.21 \text{ (wt \% N in fuel)}$$

Thus for a power plant, which is rated at 110 MW (part of this is used for steam generation in the present case), the uncontrolled NO_x emissions would be 0.457 lbs. NO_x/MM Btu for natural gas firing and 0.783 lbs. NO_x/MM Btu for coal firing taking into account the contribution of the fuel nitrogen in coal. Low Btu gas, such as that from the Koppers-Totzek gasifier, would be expected to give lower NO_x due to lower flame temperature. However, some techniques of NO_x control may have to be applied to the power plant in order to meet the clean air standards.

The NO_x emissions limitation can be met based on the experience of Crawford, Manny and Bartok (12) who showed that NO_x emissions can be reduced by 25 to 60% in coal fired utility boilers by using low excess air firing and staged burner patterns. Similarly, NO_x can be reduced by as much as 80% in natural gas fired boilers using a combination of techniques which include low excess air, staged firing, and flue gas recirculation.

3.4 Miscellaneous

In general, there may be other effluents to the air from sources such as ponds, Biox units, and API separators if used, etc. It appears that the latter two items will not be needed in the specific design case studied. In addition, leaks on processing equipment must be expected. For example, packing on valves and seals on rotating equipment such as compressors and rotary dryers are commonly found to leak, depending upon operating pressure, design, and maintenance. Estimates must be made for specific projects to determine the magnitude, as has been done, for example, on oil refineries in California (25).

4. Liquids and Solids Effluents

4.1 Coal Preparation

Coal storage and preparation is the first major item in this category (Figures 2 and 3). The problem is due to rain runoff. The storage pile has a very large volume such as 30 days holdup and the residence time is long so that rain has a chance to react and form acids or extract organics and soluble metals, and in any event give suspended matter in the rain runoff. Therefore, it is necessary to collect water from this area as well as from the process area, and send it to a separate retention pond. This pond should have a long enough residence time for solids to settle out; also, there will be a certain amount of biological action which will be effective in reducing contaminants. Limestone can be added in this circuit if needed to correct acidity. The problem may bear some resemblance to acid mine water and should be reviewed from that standpoint (13).

In some comparable situations, seepage down through a process area can be a problem in addition to the runoff. Even though storm sewers collect the runoff in a chemical plant or refinery, leaks and oil spills can release enough material that it actually seeps down into the ground water supply. If the ground contains a lot of clay this will not normally be a problem - in fact the clay can absorb large quantities of metallic ions. In sandy soil it may be necessary to provide a barrier layer underneath the coal storage piles. This could be concrete, plastic or possibly a clay layer. Storm sewers from the process area should also be collected and sent to the pond. In the present design this should be satisfactory. However, in other cases where there can be serious spills of oil and phenols, the process area should be drained to a separate holding pond.

Water from the retention pond will be relatively clean and low in dissolved solids and is therefore a good make-up water for the cooling tower circuit and for preparation of boiler feed water. Where all of the run-off water can be used in this way, it will not constitute an effluent from the plant.

FIGURE 3

COAL PREPARATION & GASIFICATION EFFLUENT WATER & SOLIDS

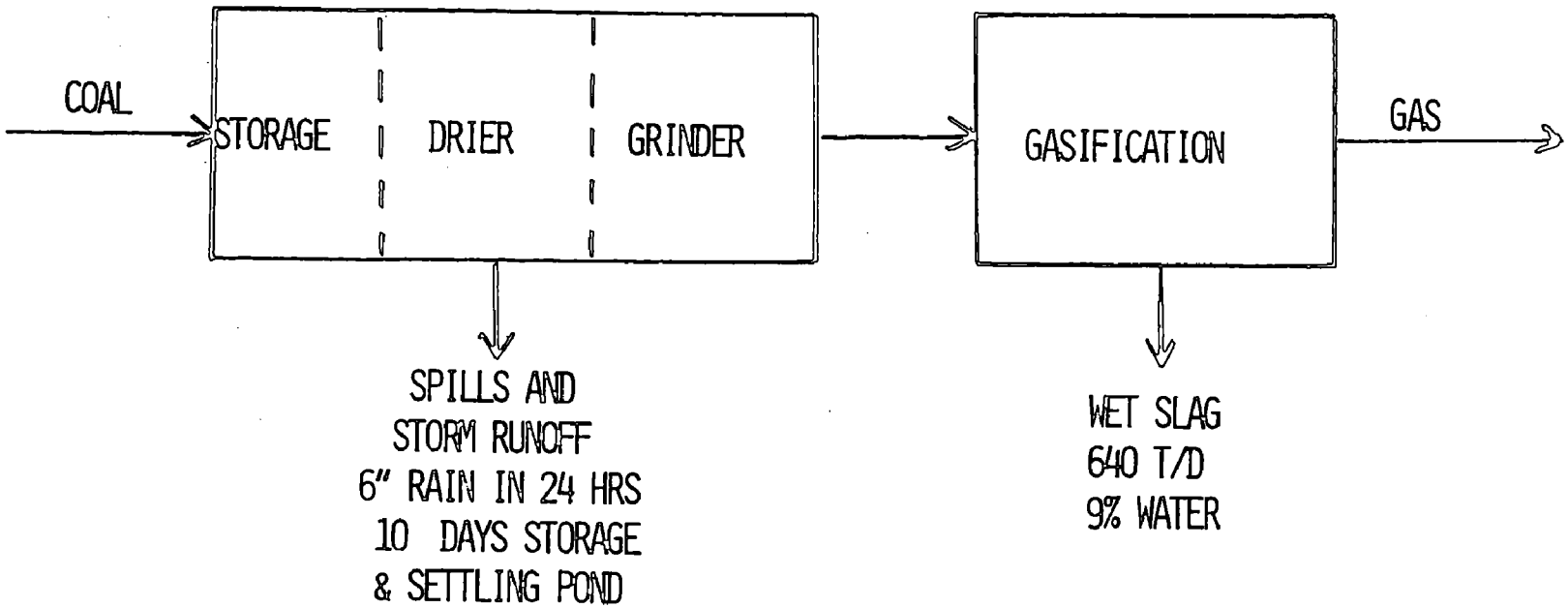

There are no specific liquid or solid effluent streams from the drier and grinder except that the off gas passes through bag filters or a scrubber to remove dust. An electrostatic precipitator or bag filters can be used on the coal drier vent gas, and the dust can be returned to the feed hoppers. Or, a scrubber may be preferred if there is an odor problem, or if sulfur must be removed from this gas because of the fuel fired to the dryer. Rather than to allow this scrubber water to become an effluent from the plant, it is much preferred to return it to the slurry scrubbing system downstream of the gasifier. In this way it can be cleaned up without adding a separate system. Also, the residues will be combined with the main ash discharge for return to the mine.

4.2 Gasifier

On the gasifier, the only discharge stream is wet granulated slag which is drained to about 10% water for disposal. The material is similar to blast furnace slag, but lower in sulfur, and it should be suitable for fill, for road aggregate, or for addition to cinder blocks. Since this slag stream has been melted, it should contain a minimum amount of dust and leachable material. There can still be a question of odor and sulfur release and these questions will have to be answered with further data. The problems will be common to some other gasification operations. Water used in quenching the slag is recirculated to the scrubbing system and is not an effluent from the plant.

4.3 Gas Cleaning

The next process area is the scrubber which removes dust from gas leaving the gasifier. A water scrubber is used, followed by disintegrators, which are high-powered agitators; or a venturi scrubber can be used. The resulting spray is then knocked out in a mist eliminator (Figure 4).

The water slurry used for scrubbing becomes saturated with hydrogen sulfide and other gases, and is then cooled by circulating directly to a cooling tower. Part or all of the dissolved gases will be stripped out by the air in the cooling tower. If the scrubber water is saturated, calculations indicate that it will contain 7 parts per million of H_2S which is far above the target level. At least on one plant, the Koppers Company reports that there is no H_2S odor on the cooling tower. As discussed in connection with effluents to the air, the total hydrogen-sulfide carried in the circulating water is less than 100 lbs. per hour. It should be relatively easy to control this by adding limestone as a slurry ahead of the cooling tower in order to fix the sulfur in a non-volatile form. In fact, it may be that the ash of the coal is alkaline enough to do this. Returning the ash and other solids to the mine would probably not cause a secondary pollution problem, but this point should be checked further.

FIGURE 4

GAS CLEANUP - EFFLUENT WATER & SOLIDS

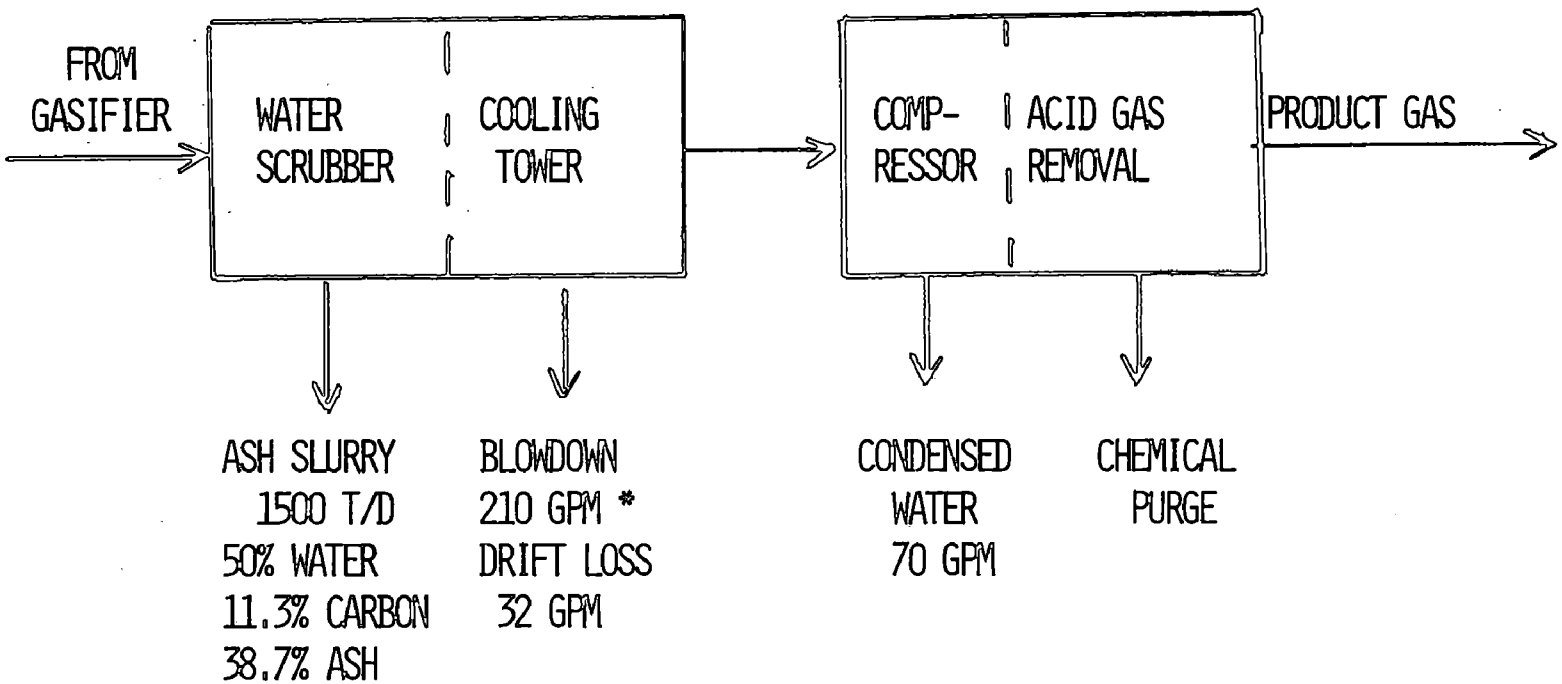

* ORIGINAL BASIS - THIS BLOWDOWN IS ELIMINATED IN MODIFIED CASE.

If the operating pressure of the gasifier were much higher, then the solubility of H_2S would be increased and the pollution problems on the slurry cooling tower could be greater. It might then be necessary to go to indirect cooling or to use air fin exchangers. This does not appear necessary or warranted from a pollution standpoint in the present design with low pressure gasification using low-sulfur western coal.

The original Koppers design shows effluent water from this scrubbing circuit. It contains ash fines and dissolved H_2S, and would be difficult to clean up as an effluent. There appears to be no basic necessity for having a water effluent from this system, so it has been changed to operate as a closed circuit, and the only water discharged is that in the ash slurry returned to the mine for disposal.

In all conventional cooling towers there is a drift loss representing the water spray which is carried away by the circulating air, as discussed under air effluents. Typically, this amount is at least 0.2% on the circulating water, or 25,000 lbs. per hour in the present slurry cooling tower. This together with the 62,800 lbs. per hour of water in the ash constitutes the liquid water effluent from the plant. Water evaporated in the cooling tower is about 200,000 lbs. per hour. The resulting concentration or build-up of total dissolved solids compared to the makeup water is less than a factor of three. This compares with a common guideline of 7 maximum and should be satisfactory.

As mentioned, it is feasible to operate the slurry scrubber system with no net water effluent other than that contained in the wet ash slurry being returned to the mine for disposal. It will be seen from subsequent discussion that this is the only net water effluent from the plant; that is, there is no effluent to rivers or the like.

Ash is separated from the scrubber slurry in a clarifier, and is a major part of the ash in the coal feed. For convenient handling, it is maintained as a thick sludge for transporting back to the mine. There it will be desirable to concentrate it further and return the separated water back to the process area for reuse. The concentrated ash sludge will then give minimum secondary pollution (e.g., to ground water) when buried.

4.4. Gas Compression and Acid Gas Removal

Gas compression is next in the process sequence. The only effluent it generates is water condensate containing H_2S and some dust. This can be used as water make-up in the amine scrubber. Next is acid gas removal where the H_2S is removed by scrubbing. Amine scrubbing is used and there will be a purge stream of amine to get rid of contaminants produced by side reactions. One way to dispose of this is to incinerate it in the power station boiler. Some water is evaporated

in the acid gas scrubber due to a small increase in gas temperature. In many cases the product gas will then be used directly as a specialty clean fuel gas, for example in metallurgical applications, glass manufacture, etc. In other cases it may be desirable to dry the gas further before use, giving additional water from condensation.

4.5 Auxiliary Facilities

Next to be considered are the liquid and solid effluents from auxiliary facilities (Figure 5). The first of these is the Claus plant which makes about 40 tons per day of sulfur. Tail gas from the Claus plant must be desulfurized and several processes have been developed to accomplish the task, most of which will generate additional liquid and solid effluents. These are described in the section on effluents to the air. One alternate is limestone scrubbing, which has been tested extensively on flue gas from power stations (14-17).While there have been problems of plugging and sludge disposal, it should be possible to use the process on tail gas from a Claus plant. Disposal of spent limestone would be a relatively minor problem since it only amounts to about 6 tons per day of sludge in the present case.

The next item is the oxygen plant which is relatively clean. Some water is condensed from the after-cooler on the main compressor, and should be processed for boiler feedwater makeup.

Next is the water treating system which depends on the quality of makeup water at the specific plant location. It may include the use of lime to precipitate hardness and alum to cause flocculation. Sludge from water treating must be concentrated and can be included with the ash disposed in the mine. Boiler feedwater treating includes demineralization using ion exchange resins. These are regenerated by backwashing with sulfuric acid or caustic which can then be combined, neutralized, and included in the makeup water to the ash slurry scrubbing system.

Water circulating to the cooling tower on the utility system will normally need chemical additives to control algae and corrosion. Chromium is considered to be the most effective corrosion inhibitor, but is highly toxic. It can be precipitated out by raising pH although further study is needed to define the treating needed to assure an acceptable level. Blowdown water from steam boilers is included as makeup to the utility cooling tower. Blowdown or purge from the latter is used as make-up water in the ash cooling circuit.

The utility power plant has been sized based on utility balances and requires 1360 tons per day of coal. Included are items such as water-pumps and air fans on the cooling towers, but excluded are general offsites such as shops, office buildings, etc. The largest effluent stream from the boiler is 235 tons per day of ash. This may be handled along with the ash from gasification. The exact disposal may depend upon whether a slag-

FIGURE 5

EFFLUENT WATER AND SOLIDS FROM AUXILIARIES FOR KOPPERS-TOTZEK PROCESS

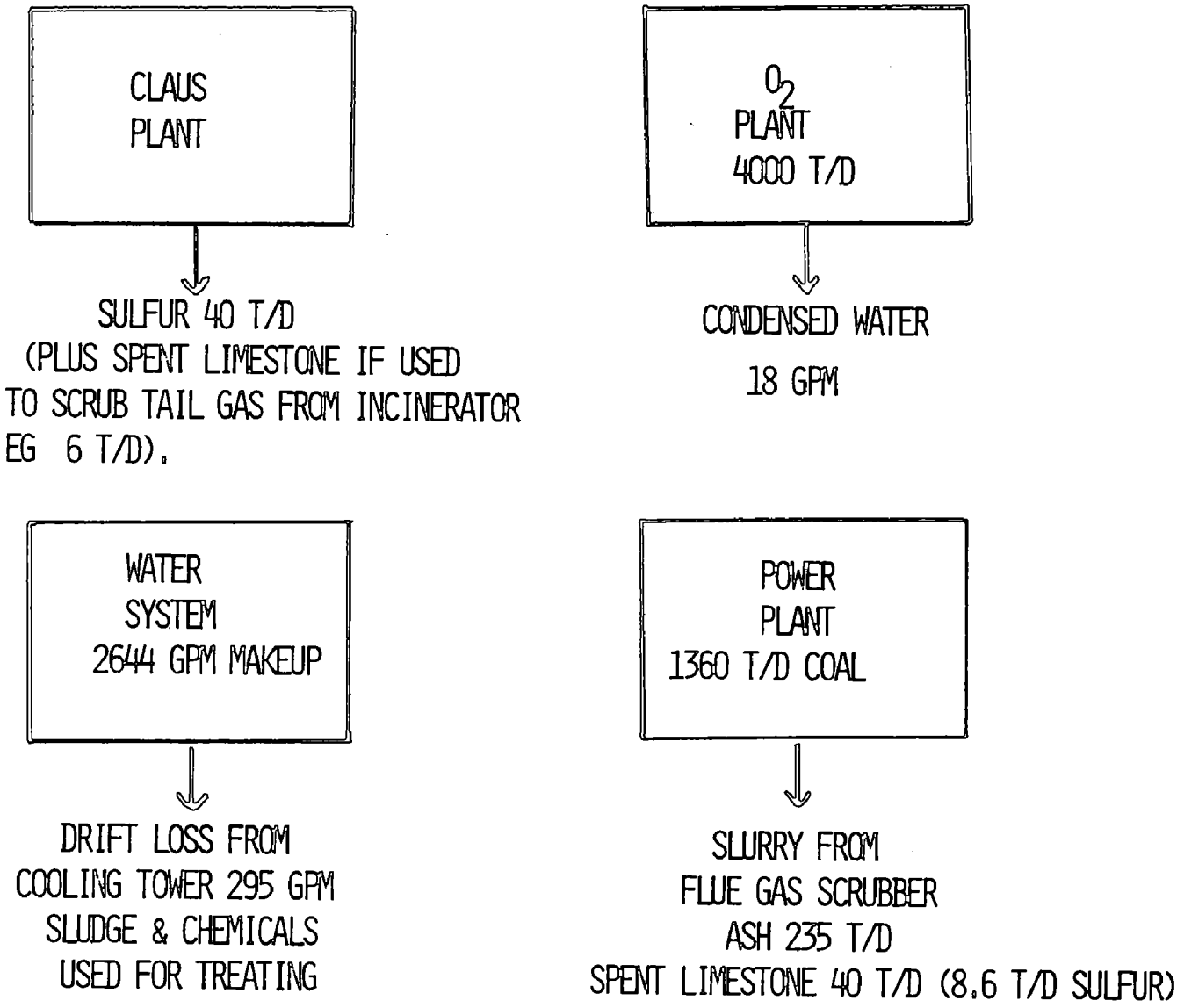

ging or non-slagging type of boiler is used. With a slagging boiler, most of the ash is recovered from the bottom, and may be suitable for road aggregate, etc. Also, there is less fly ash to recover and handle, for example in a water slurry. However, the slagging boiler may not be applicable on all types of coal, and tends to make more NO_x. Further consideration on the type of boiler to use appears warranted with regard to pollution, including the effect on the fate of trace elements.

Depending upon the process used to clean up the boiler flue gas, there will be additional streams to be disposed of. For example, if limestone scrubbing is used for desulfurization, there will be 40 tons per day of spent limestone, which is small compared to the amount of ash, even assuming rather complete sulfur removal beyond target levels.

D. THERMAL EFFICIENCY

Overall thermal efficiency is important in that it sets the amount of coal raw material required to produce a given amount of clean fuel. Moreover, part of the unused energy must be dissipated to air or water. As a first calculation, the total product gas heating value is divided by that for the total coal used in the plant including utilities. This hypothetical figure is 65%. However, some of the product gas is used for fuel in the coal dryer of the Koppers design, and subtracting this out gives a base thermal efficiency of 61%. There are many variations of this which can be considered, some of which are summarized in Table 2 and discussed below.

A minimum level of pollution can be achieved by burning product gas in the utility boiler, avoiding the need for flue gas clean up. This gives very low sulfur and particulates compared to burning coal, but of course the thermal efficiency is also low, and it is probably not a realistic case. For example, only enough product gas(ca. 20% of the boiler fuel) need be burned to meet the sulfur emission limitation for the coal considered here and then a water scrubber could be used to remove fly ash. But as a limiting case, if the only fuel to the boiler is product gas then the thermal efficiency would be 53%. This does bring out strongly the need for a process to clean up the flue gas from a boiler firing coal, particularly high sulfur coal, so that high value product gas does not have to be burned in order to control pollution.

It is feasible to use coal as fuel in the coal dryer. If this is done instead of using product gas, then the thermal efficiency increases from the base 61% up to 62%. While this is not a large increase, it is worthwhile. If only coal is fired, sulfur emission in the vent gas would be 1.4 lb SO_2/MM BTU, which is above the standard of 1.2. The standard can be met by using gas to supply about 20% of the heat, or by partial sulfur removal on the vent gas.

Gas compression is a major consumer of power and thus lowers the thermal efficiency. Depending upon the situation, a pressure such as 150 psig may be needed by the gas customer. In other applications low pressure gas may be sufficient; therefore, we have projected a case where the product gas is needed at only 15 psig. Thermal efficiency for this low pressure case is 69% reflecting the saving in compression power.

An amine scrubbing solution would have quite a low capacity at this pressure, however other processes can be used that operate efficiently at low pressure (see 2.4 above). They can reduce the H_2S level down to a few parts per million, which is much lower than indicated for the amine scrubbing system used in the original design.

TABLE 2

THERMAL EFFICIENCY

	T/D	MM Btu/D	Thermal Efficiency
In:			
Coal To Gasifier	6750	119,200	
Coal To Boiler	1360	24,000	
	8110	143,200	
Out*:			
Total Gas		93,000	65%
Less Gas To Drier		87,000	61%
Less Drier and Boiler		63,700	53%
Potential Improvements:			
Base			61%
Coal Fuel To Drier (vs. Product Gas)			62%
Compression to 15 psig (vs. 150 psig)			69%

* Thermal efficiency based on 150 psig product gas pressure.

E. TRACE ELEMENTS

Fuels burned in the U.S. in 1970 included: 0.5 billion tons of coal, 60 billion gallons of fuel oil, and 100 billion gallons of gasoline. Since the potential contaminants emitted from these sources is so large, EPA and others are making comprehensive studies on the contribution of fuels to pollution by trace components. Available data on trace element contents of fossil fuels have been compiled in reference 20. In addition, surveys are being made to establish the level of contaminants in the environment, and the sources of these. In one study the amount of particulates in urban air was measured, and the concentration of various toxic metals in the particles was determined for particles of different sizes, in the range of 1.5 to 25 microns (21). Results indicate that the concentration of some metals in fly ash is much higher than in the coal. This reference also compares the amount of trace elements in various fuels. Several industrial operations were examined to determine the concentration of elements in the emissions, and this was compared to that in the raw materials. Coal fired power plants were included, giving a basis for examining the utility boiler of a gasification plant.

The fate of trace elements during combustion was determined in another study for both experimental and industrial furnaces (22). Some 85-90% of the mercury in coal leaves in the flue gas, and is not retained in the ash. Neither is it removed with the fly ash in an electrostatic precipitator. A large portion of the cadmium and lead are also vaporized during the combustion process, but the indications are that these will be retained with the fly ash and can be separated, for example, by an electrostatic precipitator on the stack gas. A water scrubber could be used, although it is not known to what extent trace elements may be soluble. This work also shows that some elements appear in higher concentration in the high density fractions of coal, so that coal cleaning may be effective in some cases for control.

Mass balances were made for 34 elements on a coal fired power station (23). More than 80% of the mercury, a major part of the arsenic, and probably the selenium leave as a vapor in the flue gas. The electrostatic precipitator was about 98% efficient for removing fly ash and the elements associated with it. Analytical techniques and problems are discussed in these references.

It is apparent that further study of the emissions from coal fired boilers associated with gasification plants will be needed with regard to trace elements. However, the necessary studies are just getting underway to define what is emitted, the level that will be acceptable, and control techniques. Therefore it is premature to suggest detailed pollution control procedures at this time. Such a study will be needed in the near future to provide guidelines for coal fired boilers.

Gasification can also release volatile elements from coal, although it may be different than combustion since the atmosphere is reducing. In many gasification processes the maximum temperature is much lower than for combustion, but in the Koppers-Totzek process it is comparable. Data have recently been obtained on the decrease in trace metals in the solids as they pass thru the sequence of operations in the HYGAS process (24). Considerable amounts of many elements are lost from the ash during devolatilization and gasification, especially mercury (see Table 3). The loss is appreciable even in pretreating where the maximum temperature is only 430°C. Preliminary results from the HYGAS bench scale work are summarized below for solids leaving each processing step - the concentration being calculated based on the original weight of coal.

TABLE 3

TRACE ELEMENT CONCENTRATION OF PITTSBURGH NO. 8 Bituminous Coal at VARIOUS STAGES OF GASIFICATION IN THE HYGAS PROCESS

Calculated on the Raw Coal Basis (From Ref. 24)

	Feed Coal	After Pretreat	After Hydro-Gasifier	After Electro Thermal Gasifier	% Overall Loss for Element
Max.Temp.of treat °C	-	430	650	1000	
Element:	ppm				
Hg	0.27	0.19	0.06	0.01	96
Se	1.7	1.0	0.65	0.44	74
As	9.6	7.5	5.1	3.4	65
Te	0.11	0.07	0.05	0.04	64
Pb	5.9	4.4	3.3	2.2	63
Cd	0.78	0.59	0.41	0.30	62
Sb	0.15	0.13	0.12	0.10	33
V	33	36	30	23	30
Ni	12	11	10	9.1	24
Be	0.92	1.0	0.94	0.75	18
Cr	15	17	16	15	0

Although elements are lost, information is needed as to where they will appear, and in what form (also vapor pressure, water solubility etc). Such results will be needed for critical elements on all gasification processes used commercially, to define what recovery or separation may be required and to allow designing effective pollution control and disposal facilities. It is expected that a large part of volatilized elements will be recovered in the scrubbing operations, and whether this will result in complications or side reactions in the presence of sulfur, phenols, and ammonia, ash, etc., will not be known until further information is available.

F. POSSIBLE PROCESS CHANGES

1. Process Alternates Considered

The gasification process was examined to indicate what facilities should be added to control pollution, or whether simple modifications could be made to the process to eliminate or minimize the problems. Some of the alternates considered are summarized in Table 4 , classified according to the section of the process involved.

The general approach in this study was a stepwise attack as follows:

1. Eliminate the problem if possible by simple modification of the design.
2. Provide additional pollution control facilities where needed.
3. Increase thermal efficiency of the process by minor changes.
4. Point out where further work is needed to resolve pollution questions, or where it could improve the operations significantly.

Examples of alternates in each of the above four catagories will now be given.

On item 1, it was possible to eliminate the water blowdown from the ash slurry cooling tower, without changing the basic operation or introducing major new problems. The only blowdown from the plant is then the water in the wet ash slurry returned to the mine, and drift or mist loss from the cooling tower . The concentration of dissolved solids is still reasonable and tolerable at the reduced blowdown rate.

With regard to item 2, addition of lime to the ash slurry cooling water is suggested, to avoid possible loss of H_2S to air in the cooling tower. Also, the vent gas from coal drying needs to be cleaned up by removing dust, and an electrostatic precipitator, bag filters, or a scrubber will serve this purpose. In some cases it may be advantageous to combine the grinding and drying in a single operation.

Item 3 relates to thermal efficiency - an example is the suggested use of coal as fuel in the dryer to replace high value product gas used in the original design.

On the final item 4, one suggestion is to develop catalytic hydrolysis of COS and other sulfur compounds to H_2S before acid gas scrubbing, in order to give better sulfur removal. Also, consideration of another type process is suggested to allow operating at low pressure, while reducing H_2S to a much lower level than is practical with amine scrubbing. A saving in gas compression would result if the gasifier could be operated above atmospheric pressure. This may also increase the capacity per gasifier.

Similar alternates and variations will no doubt become apparent as reviews are made of high pressure gasification and other fuel conversion processes.

TABLE 4

PROCESS ALTERNATES CONSIDERED

Coal drier:

- Electrostatic precipitator or bag filters vs water scrubber.
- Coal fired vs gas fuel (or use boiler flue gas).
- Fluid bed drier vs rotary drum.
- Flash drying in mills for lower moisture content coals.

Gas clean-up:

- Effluent water clean-up vs eliminate blowdown.
- Air fins vs cooling tower, or add limestone to scrubber slurry to keep free H_2S out of air in cooling tower and ash slurry returned to mine.

Acid gas removal:

- Stretford or similar process at low pressure to replace amine scrubbing plus Claus plant with tail gas clean-up.
- Hydrolysis of COS, etc. to H_2S will allow clean-up to a few ppm total sulfur.

Gasifier:

- Higher pressure gasifier will save on gas compression.

Utilities:

- Purchased power may allow shutting down utility boiler if gas compression is not required.
- Wet bottom vs dry bottom boiler with coal fuel to reduce amount of fly ash.
- If methanation is used, heat of reaction may be used to generate high pressure steam, particularly if reactor is fluid bed type. Steam generated will supply a large part of that required for gas compressor.

2. Engineering Modifications

This study was based on a specific Koppers Company design for a particular application (e.g., the necessity for compression to a higher pressure). As part of the present study, consideration was given to potential changes or improvements that might be possible without involving extensive development or pilot plant operations. Table 5 lists engineering type modifications that may be desirable.

An important efficiency increase will result if it is acceptable to provide the product gas at low pressure and save on compression. In fact, for this case the entire utility boiler can be virtually eliminated for normal operation although it may be required for start up. This assumes that electric power requirements are purchased. As indicated, the low pressure operation is well suited to application of the liquid absorption/air oxidation type of process for removing H_2S from the product gas. Not only does this allow lower sulfur level in the product gas at little added effort but, in addition, the tail gas clean-up operation on the Claus plant is avoided.

Coal drying is an important operation from the standpoint of effluents, as well as thermal efficiency, and there is considerable room for improvement in these respects. A very large volume of gas is required to provide the sensible heat needed for drying, but it's oxygen content must be limited to 10-11% max. due to safety considerations. This is accomplished by recycling part of the vent gas from drying to control the oxygen level, while treating the remainder to remove sulfur, dust, etc. as required.

Fuel efficiency is low, about 50%, due to the excess air, even though the gas exit temperature may be only 500°F. Drying can be carried out in a rotary drum, by grinding in a stream of hot gas, or in a fluid bed dryer. To optimize the drying operation in a specific application, detailed evaluations are warranted of a number of alternates. One possibility to consider is to use hot flue gas from the utility boiler for drying, thereby reducing or eliminating the consumption of fuel for drying. This fuel amounts to 300 T/D of coal in the base case, or 3.7% of the total coal. Use of boiler flue gas for drying may also allow incorporating or combining gas clean-up facilities for both operations, e.g. on a coal fired boiler, dust removal would only be applied after the flue gas has been used for coal drying.

In general, the waste heat of the process will go either to air or to water. In a typical cooling tower only 20% to 30% of the heat is taken out as sensible heat of the air flowing through. The other 70-80% of the heat is removed by evaporation of water in the cooling tower. This is by far the major water consumer in the entire process. Thus, for a plant with no net water effluent the total water consumption for the

TABLE 5

ENGINEERING MODIFICATIONS

Utility Boiler:	Not needed for low pressure operation with purchased power.
Sulfur Plant:	Use liquid absorption/oxidation on low pressure gas to avoid Claus and tail gas clean-up.
Coal Drier:	Use fluid bed drier to reduce volume of vent gas.
Water Make-Up:	Use air fin cooling to reduce water consumption and replace ash slurry cooling tower.

plant will be primarily set by the thermal efficiency, or rather the thermal inefficiency. One way to reduce water consumption is to transfer more of the waste heat to air as sensible heat using air fin exchangers. Normally, this raises the investment and is relatively inefficient but at least partial application may be justified for reducing water consumption and potential water pollution where there is an effluent. Air fins are more suitable for removing higher level heat such as above 150°F. For low temperature services such as on the steam condensers of turbine drivers,where the condensing temperature may be only 105°F,it may not be practical to use air fins.

3. Potential Process Improvements

Gas compression is a very large power consumer. Improvements can be made by reducing the amount of compression required or perhaps by eliminating it (Table 6). One means is operating the gasifier at higher pressure, which will require process development. When supplying clean specialty fuel gas, it may only be necessary to operate at 2 atmospheres or less. This should provide enough pressure to flow through the gas cleanup and acid gas removal sections. Some oxygen compression would be needed. Increasing the pressure to 10 atmospheres or higher would be of interest when making synthetic natural gas. Process development questions are considerably more difficult but the throughput of the gasifier vessel should be greatly increased. Based on thermodynamic calculations, such a high pressure operation will increase the amount of contaminants such as ammonia and cyanide in the off-gas and data on this would be needed.

In general, coal gasification forms a gas containing large amounts of carbonyl sulfide and possibly other forms of sulfur in addition to hydrogen sulfide. In order to get complete sulfur removal it is desirable to convert these other forms of sulfur to hydrogen sulfide which can then be removed by conventional processes. There is a great need for a process to hydrolyze carbonyl sulfide, carbon disulfide, etc.,to hydrogen sulfide at reasonable conditions. It appears that this is possible over simple catalysts such as alumina, bauxite, and the like at perhaps 400°F to 800°F (7), and development of this type of process would find application in most of the coal gasification operations to improve and simplify the sulfur removal system.

The Koppers-Totzek type gasification can be used to make synthetic natural gas. There are, of course, efficiency debits due to the low pressure at which the gas is available, as well as the large amount of shift and methanation required. Methanation is highly exothermic, but to the extent that this heat can be recovered and converted to useful high pressure steam the debit is greatly decreased. In fact, the steam generated in methanation could be enough to supply the balance of the utilities required by the overall plant to the 150 psig. level. Since methanation can operate at 800°F to 900°F the temperature level is suitable. One possibility is to methanate in a fluid bed, with steam generating tubes in the bed. The catalytic tube process being developed by the Bureau of Mines is another way.

When required, oxygen represents a large cost item in gasification. Where the product gas is used simply as clean fuel, it may be that air or oxygen enriched air would be more attractive. The cost of oxygen by air fractionation is not reduced much when going to lower purity oxygen, but this may not be the case if another type of oxygen separation process is used.

Where the product gas is used for power generation, a combination gas turbine and steam power plant should be attractive. The gasifier would operate at above atmospheric pressure as determined by the requirements of the gas turbine.

TABLE 6

POTENTIAL PROCESS IMPROVEMENTS

Higher pressure gasification.

Hydrolyze COS to H_2S for complete sulfur removal.

Methanate to SNG (heat release is equal to utility boiler load).

Air or enriched air instead of pure oxygen for low Btu gas.

Combine with gas turbine for power generation.

G. PROCESS DETAILS

Other details on coal analysis, utilities, etc. are covered in Tables 7-13 for the present design supplying gas at 150 psig.

TABLE 7

ANALYSIS OF COAL AND PRODUCT GAS

COAL COMPOSITION

Proximate:

Fixed carbon	35.0
Volatiles	31.2
Ash	17.3
Moisture	16.5
	100.0

Higher Heating Value: 8830 Btu/lb.

Ultimate:

C	76.72
H	5.71
N	1.37
S	0.95
O	15.21
Cl	0.04
	100.00

PRODUCT GAS COMPOSITION (dry basis)

CO	60.88
H_2	32.60
CO_2	5.23
N_2	1.16
CH_4	0.10
H_2S	0.02
COS	0.01
	100.00

TABLE 8

STEAM BALANCE

	High Pressure Steam	Low Pressure Steam
Consumed, lb/hr.		
Oxygen heater	-	7,856
BFW pumps on gasifier	22,530	-
Gasifier steam	-	84,735
Gas compressor	507,000	-
Amine reboiler	-	16,500
Oxygen plant	560,000	-
Oxygen compression	24,000	-
Power generation (19,426KW)	194,260	-
	1,307,790	109,091
Generated, lb/hr.		
Gasifier jacket	-	98,527
Gasifier WHB	661,801	-
Sulfur plant	-	11,000
Utility boiler	645,989*	-
	1,307,790	109,527

* Coal fired 1360 T/D @ 8830 Btu/lb, HHV.

TABLE 9

WATER BALANCE

Ash Cooling Tower	lb/hr
Evaporation	218,598
Drift loss	16,220
In wet slag	4,865
In wet ash	62,802
	302,485

Utility Cooling Tower	
Evaporation	1,050,000
Drift loss	147,528
Blow down to Ash C.T.	302,485
	1,500,013

Consumed in gasifier	11,208
Handling loss on condensate	63,890
Cooling tower makeup	1,500,013
	1,575,111

Available in coal @ 2%	9,585
Available from O_2 plant	8,926
	18,511

NET WATER REQUIRED	1,556,600	(3113 gpm)

TABLE 10

POWER CONSUMPTION

	KW
Coal preparation & handling	9,380
Gasifier	155
Scrubber & cooling tower	1,585
Fan on gas to compressor	500
Acid gas removal system	65
Oxygen plant	-
Sulfur plant	241
Cooling water pumps	4,500
Cooling tower fans	3,000
TOTAL	19,426

TABLE 11

FUEL CONSUMPTION

Coal to gasifiers	6,750 T/D
Coal to utility boiler	1,360 T/D
Fuel fired to coal drier	220 MM Btu/hr*
Fuel fired Claus tail gas incineration	5 MM Btu/hr

* Equivalent to 300 T/D coal

TABLE 12

MISCELLANEOUS INPUT MATERIALS

For water treating:	lime, caustic, sulfuric acid, alum, chlorine.
Cooling water additives:	anti-algae (chlorine), anti-corrosion (chromate).
Other chemicals:	amine with additives if any.
Limestone:	if used for flue gas scrubbing, or to control slag viscosity.
Oil:	for lubricating pumps, compressors, etc.
Catalysts,etc:	if add shift, methanation, driers, or guard bed to remove sulfur.

TABLE 13

POTENTIAL ODOR EMISSIONS

Coal preparation & drier

Ash cooling tower

Sulfur plant

Wet slag and ash to disposal

Utility boiler house

Ponds

H. RESEARCH AND DEVELOPMENT NEEDS

An objective of EPA is to anticipate pollution problems and call attention to them ahead of time so that they can be examined carefully, and planning or experimental work carried out where a need is indicated. This approach is intended to:

1. Point out to process developers where pollution problems may appear, to allow resolving questions well before definite plans are underway on commercial applications.

2. Encourage or support work needed to develop techniques or processes aimed at pollution control - especially when it applies to problems that are common to a number of fuel conversion processes, or where existing technology is inadequate.

3. Identify pollution areas that are not yet adequately defined or controlled, and point out what further work is needed.

An important part of the present study is to review various gasification processes to identify items of the above types. Results so far, from examination of this first gasification process, are summarized in accompaning Table 14 grouped according to the process area.

For example, suggested items on coal drying are applicable to most coal gasification processes, and are therefore an illustration of a type 2 objective noted above. Similarly, hydrolysis of various sulfur compounds to H_2S would find wide application.

The desirability of a test program on commerical coal gasification plants, to identify all trace effluents and their amounts, is an illustration of a type 3 objective.

An example of the type 1 objectives is the suggestion to add lime to the ash slurry scrubbing system to fix H_2S so that it is not stripped out by air in the cooling tower. This may also make it satisfactory to dispose of the solid in a mine, without secondary pollution problems due to odor, leaching, etc.; however, further information is needed to see whether this is acceptable.

TABLE 14

R&D NEEDS

COAL PREPARATION

- Improved drier to allow high gas inlet temperature and maximize coal preheat without releasing volatiles, thereby decreasing amount of vent gas to be cleaned up.
- Use warm flue gas from utility boiler to dry coal ahead of flue gas scrubber.
- Determine leachability of trace metals from coal pile.
- Check for organic run-off in coal piles.
- Determine quantity of volatiles in dryer gas (e.g., mercury).

GASIFICATION

- Operate at higher pressure to save compression.
- Increase capacity per gasifier vessel, e.g. by larger diameter, a larger number of coal feeders, higher pressure, and higher temperature to convert more steam.
- Determine leachibility of trace metals from slag.

GAS CLEAN UP

- Catalyst to shift COS etc. to H_2S on outlet of gasifier.
- Simple venturi type water scrubber or other equipment to give very efficient dust removal and demisting.
- Add lime or limestone to ash slurry scrubbing system to fix H_2S and keep it from being stripped out by air in cooling tower.
- Test program on Koppers Company's operating plants to define all trace effluents.

TABLE 14 (CONT'D)

R&D NEEDS

- Selective removal of H_2S (and COS, etc.) in presence of CO_2, to give less than 1 ppm total sulfur in outlet gas and concentrated H_2S to Claus plant.
- Where product gas is used nearby as fuel, efficiency would be improved if dust and sulfur could be removed at moderate temperature, e.g. 300-1000°F.
- Fate of trace elements in coal; distribution to air, water, ash, etc., and in what form.

OTHER

- High value use for by-product slag.
- High capacity methanator at 800-900°F to recover heat as high pressure steam (e.g., liquid phase or fluid solids to give good heat transfer).
- Low cost oxygen - even if it is low purity.

I. QUALIFICATIONS

As pointed out, this study does not consider cost or economics. Also, areas such as coal mining and general offsites are excluded. These will be similar and common to all gasification operations. Miscellaneous small utility consumers such as instruments, lighting, etc., are not included in the utility balance.

The study is based on the specific process design and coal type supplied by the process developer, with modifications as discussed. Plant location is an important item of the basis and is not always specified in detail. It will affect items such as the air and water conditions available, and the type of pollution control needed. For example, the Koppers Company study happens to be on low sulfur western coal, although high sulfur coal can be used. Because of variations in such basis items, great caution is needed in making comparisons between coal gasification processes since they are not on a completely comparable basis. Some of the important factors in the study basis that must be specified in order to make an engineering analysis of a process are summarized in Table 15.

In some other gasification processes, appreciable amounts of by-products are made, such as tar, naphtha, phenols, and ammonia. The disposition and value of these must be taken into account relative to the increased coal consumption that results. Such variability further increases the difficulty of making meaningful comparisons between processes.

TABLE 15

GENERAL SELECTION OF STUDY BASIS

Location: Air and water conditions, water treatment, rainfall.

Coal: Type, preparation, drier type and fuel ash disposal.

By-Products: Tar, phenols, naphtha, ammonia, etc.

Utilities: Pollution control on boiler
Fuel to boiler
Water quality and treatment
Cooling water additives
Cooling tower operation (fog and drift)
Application of air-fin coolers

Minor Components: Cyanides, ammonia, various sulfur compounds, and products of interactions.

Trace Components: Mercury, arsenic, fluorine, etc.

J. REFERENCES

1. Koppers, H. H. "The Koppers Totzek Gasification Process", J. Inst. of Fuel, Dec., 1957, pp. 673-680.

2. "The Gasification of Oil & High-Ash Coal by the Koppers Totzek Process", Report 76, World Power Conf., Vienna, 1956.

3. "Town Gas Production from Coal by the Koppers Totzek Process", Gas World, 24, 1962, pp. 315-322.

4. "Koppers Unveils Versatile Coal-To-Gas Process", Oil Gas Journal, June 19, 1972, p. 26.

5. Sax, N. I., "Dangerous Properties of Industrial Materials", Reinhold, 1968, 3rd Ed., (ACGIH recommendation for H_2S is 10 ppm max.).

6. Sullivan, Ralph J. "Air Pollution Aspects of Odorous Compounds", Litton Ind. Inc., Rept. of Sept. 1969 prepared for Nat. Air Pollution Control Admin. (Clearinghouse Rept. No. PB188089).

7. Pearson, M. J., "Hydrocarbon Process, 52, (2), p. 81.

8. Agosta, J., et al., "Status of Low BTU Gas as a Strategy for Power Station Emission Control", AICHE 65th Mtg., Nov., 1972, New York City.

9. Duprey, R. C. "Compilation of Air Pollutant Emission Factors", PHS Publication No. 999-AP42, 1968.

10. Federal Register, 36, (247), 24876, Dec. 23, 1971.

11. Bartok, W., Crawford, A. R., and Piegari, G. J., "Systematic Field Study of NO_x Emissions Control Methods for Utility Boilers", P.B. 210739, Dec. 1971.

12. Crawford, A.R., Manny E.H., and Bartok W., "NO_x Emission Control for Coal-Fired Utility Boilers", presented at the Coal Combustion Seminar, EPA, North Carolina, June 19-20, 1973.

13. Coalgate, J. L., Akers, D. J. and From, R. W. "Gob Pile Stabilization, Reclamation, and Utilization", OCR RE'D Report 75, 1973.

14. Final Report, Sulfur Oxide Control Technology Assessment Panel., APTD-1569, April 15, 1973.

15. Jones, J. J. "Limestone Sludge Disposal", Flue Gas Desulf. Symp., New Orleans, May 14, 1973.

16. "Control Techniques for SO_x Air Pollution", Rept. AP-52, U.S. Dept. Health, Jan.,1969.

17. Gifford, D. C.,"Operation of a Wet Limestone Scrubber", Commonwealth Edison Co., Chicago, Chem. Eng. Prog.,69,(6),p. 86, June, 1973.

18. Horlacher, W. R. et al.,"Four SO_2 Removal Systems",Chem. Eng. Prog., 68, (8), p. 43, Aug., 1972.

19. Slack, A. V.,"Removing SO_2 from Stack Gases", Environmental Science and Tech., 7,(2), Feb. 1973.

20. Magee, E. M., Hall, H. J. and Varga, G. M. Jr., "Potential Pollutants in Fossil Fuels", EPA-R2-73-249, NTIS PB No. 225,039, June 1973.

21. Lee. R. E.,et al.,"Trace Metal Pollution in the Environment", Journ. of Air Poll. Control, 23, (10),Oct.,1973.

22. Schultz, Hyman et al.,"The Fate of Some Trace Elements During Coal Pre-treatment and Combustion", ACS Div. Fuel Chem. 8, (4), p. 108, Aug.,1973.

23. Bolton, N. E.,et al.,"Trace Element Mass Balance Around a Coal-Fired Steam Plant", NCS Div. Fuel Chem., 18, (4), p. 114, Aug. 1973.

24. Attari, A. "The Fate of Trace Constituents of Coal During Gasification", EPA Report 650/2-73-004, Aug.,1973.

25. Atmospheric Emissions from Petroleum Refineries, U.S. Dept. of Health, Educ. and Welfare, Public. No. 763, 1960.

TECHNICAL REPORT DATA
(Please read Instructions on the reverse before completing)

1. REPORT NO. EPA-650/2-74-009a	2.	3. RECIPIENT'S ACCESSION NO.
4. TITLE AND SUBTITLE Evaluation of Pollution Control in Fossil Fuel Conversion Processes; Gasification; Section 1: Koppers-Totzek Process		5. REPORT DATE January 1974
		6. PERFORMING ORGANIZATION CODE
7. AUTHOR(S) E.M. Magee, C.E. Jahnig, and H. Shaw		8. PERFORMING ORGANIZATION REPORT NO.
9. PERFORMING ORGANIZATION NAME AND ADDRESS Esso Research and Engineering Company P.O. Box 8 Linden, NJ 07036		10. PROGRAM ELEMENT NO. 1AB013; ROAP 21ADD-23
		11. CONTRACT/GRANT NO. 68-02-0629
12. SPONSORING AGENCY NAME AND ADDRESS EPA, Office of Research and Development NERC-RTP, Control Systems Laboratory Research Triangle Park, NC 27711		13. TYPE OF REPORT AND PERIOD COVERED Final
		14. SPONSORING AGENCY CODE

15. SUPPLEMENTARY NOTES

16. ABSTRACT

The report gives results of a study of pollution control and thermal efficiency of the Koppers-Totzek process for producing clean, low-Btu (303 Btu/cu ft) gas from coal. It estimates quantities of potential pollutant streams and gives a preliminary design that ensures clean up of these streams where appropriate pollution control techniques are available. The report points out information gaps and research needs, and discusses process alternatives and potential process improvements.

17. KEY WORDS AND DOCUMENT ANALYSIS

a. DESCRIPTORS	b. IDENTIFIERS/OPEN ENDED TERMS	c. COSATI Field/Group
Air Pollution Coal Gasification Fossil Fuels Thermal Efficiency Trace Elements	Air Pollution Control Stationary Sources Clean Fuels Koppers-Totzek Process Fuel Gas Research Needs Low-Btu Gas	13B

18. DISTRIBUTION STATEMENT Unlimited	19. SECURITY CLASS *(This Report)*	21. NO. OF PAGES 49
	20. SECURITY CLASS *(This page)*	22. PRICE

EPA Form 2220-1 (9-73)