EPA-650/2-75-027-b

March 1975

Environmental Protection Technology Series

FLUIDIZED BED COMBUSTION PROCESS EVALUATION

(PHASE I - RESIDUAL OIL GASIFICATION/DESULFURIZATION DEMONSTRATION AT ATMOSPHERIC PRESSURE)

VOLUME II - APPENDICES

U.S. Environmental Protection Agency
Office of Research and Development
Washington, DC 20460

EPA-650/2-75-027-b

FLUIDIZED BED COMBUSTION PROCESS EVALUATION

(PHASE I - RESIDUAL OIL GASIFICATION/DESULFURIZATION DEMONSTRATION AT ATMOSPHERIC PRESSURE)

VOLUME II - APPENDICES

by

D.L. Kearns, R.A. Newby, E.J. Vidt, E.P. O'Neill,
C.H. Peterson, C.C. Sun, C.D. Buscaglia, and D.H. Archer

Westinghouse Research Laboratories
Beulah Road, Churchill Borough,
Pittsburgh, Pennsylvania 15235

Contract No. 68-02-0605
ROAP No. 21ADB-009
Program Element No. 1AB013

EPA Project Officer: P.P. Turner

Control Systems Laboratory
National Environmental Research Center
Research Triangle Park, North Carolina 27711

Prepared for

U.S. ENVIRONMENTAL PROTECTION AGENCY
OFFICE OF RESEARCH AND DEVELOPMENT
WASHINGTON, D. C. 20460

March 1975

EPA REVIEW NOTICE

This report has been reviewed by the National Environmental Research Center - Research Triangle Park, Office of Research and Development, EPA, and approved for publication. Approval does not signify that the contents necessarily reflect the views and policies of the Environmental Protection Agency, nor does mention of trade names or commercial products constitute endorsement or recommendation for use.

RESEARCH REPORTING SERIES

Research reports of the Office of Research and Development, U.S. Environmental Protection Agency, have been grouped into series. These broad categories were established to facilitate further development and application of environmental technology. Elimination of traditional grouping was consciously planned to foster technology transfer and maximum interface in related fields. These series are:

1. ENVIRONMENTAL HEALTH EFFECTS RESEARCH
2. ENVIRONMENTAL PROTECTION TECHNOLOGY
3. ECOLOGICAL RESEARCH
4. ENVIRONMENTAL MONITORING
5. SOCIOECONOMIC ENVIRONMENTAL STUDIES
6. SCIENTIFIC AND TECHNICAL ASSESSMENT REPORTS
9. MISCELLANEOUS

This report has been assigned to the ENVIRONMENTAL PROTECTION TECHNOLOGY series. This series describes research performed to develop and demonstrate instrumentation, equipment and methodology to repair or prevent environmental degradation from point and non-point sources of pollution. This work provides the new or improved technology required for the control and treatment of pollution sources to meet environmental quality standards.

This document is available to the public for sale through the National Technical Information Service, Springfield, Virginia 22161.

Publication No. EPA-650/2-75-027-b

ABSTRACT

This volume contains appendices resulting from the design, evaluation, and experimental work carried out by Westinghouse to develop an atmospheric-pressure fluidized bed residual oil gasification process for power generation. The process, conceived by Esso Research Centre, Abingdon, England, as the chemically active fluidized bed (CAFB) process, produces a clean, low heating-value fuel gas for firing in a conventional boiler. The integrated process, previously operated successfully in a 750 kw_e pilot plant unit, has demonstrated the ability to meet environmental emission standards for sulfur oxides, nitrogen oxides, and particulates.

Work carried out under this contract was directed toward a commercial demonstration of the process. A preliminary design and cost estimate for a 50 MW_e atmospheric-pressure fluidized bed residual oil gasification/desulfurization demonstration plant was completed for the 50 MW_e unit No.12 at the Manchester Street Station, Narragansett Electric Co., Providence, RI. The design and cost estimate provide sufficient detail to proceed with the detailed design and construction. Boiler performance with hot, low heating-value gas is assessed. Experimental programs were carried out to select limestone sorbents for the plant and to provide design and operating criteria on spent sorbent processing. The environmental impact of the process is assessed and areas which require further development identified. Market projections are presented for the process. A 200 MW_e commercial plant design and cost estimate were prepared. Capital and operating costs are presented for commercial plants with capacities from 50 to 500 MW_e. Detailed design and construction of the 50 MW_e demonstration plant utilizing low-grade, high metal content fuels is recommended if completion of the critical experimental tests identified and review of fuel projections demonstrate process operability and fuel availability.

PREFACE

The Office of Research and Development (ORD) of the United States Environmental Protection Agency (EPA) has organized and is sponsoring a fluidized bed fuel processing program. Its purpose is to develop and demonstrate new methods for utilizing fossil fuels to produce electrical energy from utility power plants which meet environmental standards. These methods should:

- Meet environmental goals for sulfur dioxide (SO_2), nitrogen oxide (NO_x), ash, smoke emissions, trace element emissions, and wastes
- Utilize fuel resources efficiently
- Compete economically with alternative means for meeting environmental goals.

Westinghouse Research Laboratories, under contract to ORD, is carrying out a program to evaluate, develop, and demonstrate fluidized bed gasification/desulfurization of residual fuel oil for power generation. This two-volume report describes work performed from May 1973 to December 1974 under contract 68-02-0605. The work carried out during this period is based on tasks set forth by EPA which were completed by Westinghouse under previous contracts. The results from these prior tasks on fluidized bed gasification of residual oil were published in a three-volume report, "Evaluation of the Fluidized Bed Combustion Process," in November 1971 under contract No. CPA 70-9[1] and as part of a four-volume report, Volume IV "Fluidized Bed Oil Gasification/Desulfurization," in December 1973 under contract 68-02-0217.[2] The previous work on residual oil gasification included:

- Conceptual design and cost estimate of atmospheric-pressure fluidized bed residual oil gasification/desulfurization system for utility power generation

- Assessment of the effectiveness and economics of an atmospheric-pressure fluidized bed residual oil gasification/desulfurization system
- Identification of a project team to demonstrate fluidized bed residual oil gasification/desulfurization for power generation
- Identification of a boiler unit to carry out the demonstration plant program
- Evaluation of pressurized residual oil gasification/desulfurization for combined cycle power generation
- Provision of technical consultation and assistance on the fluidized bed fuel processing program.

Tasks carried out under contract 68-02-0605, which are reported in this two-volume report, have included:

- Preparation of a preliminary design and cost estimate for the 50 MW fluidized bed residual oil gasification/desulfurization demonstration plant. The design is for the 50 MW unit No. 12 at the Manchester Street Station, Narragansett Electric Company, Providence, Rhode Island. The design and cost estimate provide sufficient detail to proceed with the detailed design and construction of the demonstration plant.
- Evaluation of the demonstration plant boiler performance. The boiler performance with the hot, low heating-value gas is assessed for the demonstration plant. Modifications and associated costs to maintain the performance are identified.
- Evaluation and selection of the fluidized bed gasification process and design options. Alternative design and operating parameters are identified and evaluated. Recommendations are made for the demonstration plant and for commercial plants.
- Development of process data. Experimental tests were carried out to identify candidate limestone sorbents; to obtain data on sulfur removal, sorbent regeneration, and spent stone processing; and to assess the environmental impact of spent stone.

- Determine market for fluidized bed residual oil gasification/desulfurization. Factors are identified which will determine the market potential. Market projections are made based on a review of these factors.
- Prepare commercial plant design and cost estimate. A 200 MW commercial plant design is prepared on the basis of the demonstration plant design work. A factored cost estimate is made on the basis of the demonstration plant estimate.
- Prepare assessment of environmental impact. Solid, liquid, and gaseous emissions are identified and assessed to determine their environmental impact. Resource utilization is also reviewed.
- Identify Development requirements. Areas which require further development are identified and programs projected to obtain the necessary information to carry out the program.

Volume I contains a summary of the work performed and program recommendations. Volume II contains appendices which provide supplemental information and detailed back-up to support the summary and recommendations.

TABLE OF CONTENTS

APPENDICES

		Page
A.	Market Data	1
B.	Preliminary Design Process Description	13
C.	Demonstration Plant Site	27
D.	Fluidized Bed Oil Gasification Demonstration Plant Design Basis	35
E.	Design Manual	63
F.	Boiler Modifications	163
G.	Environmental Impact	169
H.	Commercial Plant Design	177
I.	Initial Design Study	191
J.	Evaluation and Selection of Reaction System Process and Design Options	213
K.	Spent Stone Processing Options	221
L.	Dry Sulfation Experimental Program	271
M.	Slurry Recarbonation Experimental Program	307
N.	Acid Sulfation Experimental Program	325
O.	Dry Recarbonation and Sintering Experimental Programs	345
P.	Sulfur Recovery System Design and Evaluation	361
Q.	Limestone Selection	377
R.	Thermogravimetric Studies on the Sorbtion of Sulfur by Lime	397
S.	Spent Limestone Disposition	407

LIST OF FIGURES

	Page
APPENDIX A	
1. United States Fossil Generation Overview	11
APPENDIX B	
1. Reaction System	15
2. Stone Processing System (Dry Sulfation)	19
APPENDIX C	
1. Manchester Street Station Operating Floor Plan	29
2. Manchester Street Station Basement Floor Plan	31
3. Manchester Street Station Basement Floor Plan	33
APPENDIX D	
1. Gasifier Fundamentals	36
2. Regenerator Fundamentals	41
3. Stone Processing Design Options	57
4. Estimated Fines Size Distribution from Boiler prior to Existing Cyclone	61
5. Existing Cyclone Efficiency	61
APPENDIX E	
1. Schematic Flow Diagram and Material Balance Base Case	79
2. Schematic Flow Diagram Material Balance Turndown Case and Low Air/Fuel Ratio Case	81
3. Reaction System Oil Gasification-Desulfurization CAFB	85
4. Fuel Oil and Waste Stone Handling Systems	87
5. Equipment Arrangement Plan, Lower Level	105
6. Equipment Arrangement Plan, Upper Level	107
7. Equipment Arrangement, Section AA	109
8. Equipment Arrangement, Section BB and CC	111
9. Site Plan	113
10. L-1 Gasifier and L-2 Regenerator	119

List of Figures (Continued)

	Page
11. L-3 Absorber	121
12. L-1, L-2, L-3 Design Data	123
13. One Line Diagram	157
APPENDIX H	
1. Reaction System Oil Gasification-Desulfurization CAFB	181
2. Schematic Flow Diagram and Material Balance Base Case	183
APPENDIX I	
1. Initial Design Study - Reaction System	195
2. Initial Design Study - Stone Processing System	197
3. Initial Design Study - Gasifier Design	205
4. Initial Design Study - Regeneration Design	207
APPENDIX K	
1. Logic Diagram for Dispoal of Spent Limestone	230
2. Oil Gasification: Spent Stone Disposal Processes	232
3. Oil Gasification, Nonregenerative Mode-Option NDN-3: Oxidation plus Carbonation	234
4. Oil Gasification, Nonregenerative Mode-Option NDN-4: Silica Sintering	235
5. Oil Gasification, Nonregenerative Mode-Option NWS-1: Wet Carbonation	238
6. Oil Gasification, Nonregenerative Mode-Option NWS-2: Wet Sulfation	239
7. Oil Gasification, Nonregenerative Mode-Option NDS-6: Steam Recarbonation	241
8. Oil Gasification, Regenerative Mode-Option RDN-1: Dry Sulfation	242
9. Oil Gasification, Regenerative Mode-Option RDS-1: Direct Disposal	244
10. Oil Gasification, Regenerative Mode-Option RDS-2: Dry Oxidation	245

List of Figures (Continued)

		Page
11.	Oil Gasification, Regenerative Mode-Option RDS-3: Oxidation plus Carbonation	246
12.	Oil Gasification, Regenerative Mode-Option RDS-4: Silica Sintering	247
13.	Oil Gasification, Regenerative Mode-Option RDS-5: Dead-Burning	248
14.	Oil Gasification, Regenerative Mode-Option RWS-1: Wet Carbonation	250
15.	Oil Gasification, Regenerative Mode-Option RWS-2: Wet Sulfation	251
16.	Oil Gasification, Regenerative Mode-Option RWN-1: Lime Scrubbing	252
17.	Oil Gasification, Regenerative Mode-Option RDS-6: Steam Recarbonation	254

APPENDIX L

1.	The Dry Sulfation Process	272
2.	Rate Criteria for Sulfation of Waste in TG Experiments at 0.5% SO_2	274
3.	The Sulfation of Fine Particles of Calcined Limestone	276
4.	First-Order Model for Fluidized Bed Sulfation of CaO	277
5.	The Sulfation of Spent Sorbent from the CAFB Regenerator Bed	280
6.	The Rate of Sulfation of Finely-Ground Spent Stone	283
7.	Schematic Diagram of the 25 mm Quartz Reactor Test System for Dry Sulfation	285
8.	SO_2 Absorption Profiles of Dry Sulfation Runs in the 25 mm Quartz Reactor	289
9.	SO_2 Absorption Profiles for Dry Sulfation Runs at 870°C (1000°F)	290
10.	SO_2 Absorption Profiles for Dry Sulfation Runs at 870°C (1000°F)	291

List of Figures (Continued)

		Page
11.	Comparison of Dry Sulfation Runs	293
12.	Percent of CaO Utilization as a Function of the Total SO_2 Feed, Showing the Effect of Bed Temperature	294
13.	Percent of CaO Utilization of the Total SO_2 Feed, Showing the Effects of Particle Size and Gas Flow Rate	295
14.	Calculated SO_2 Absorption Profile for Dry Sulfation Reaction	298
15.	Calculated SO_2 Absorption Profile for Dry Sulfation Reaction at 870°C (1600°F)	299
16.	Comparison of the Calculated Dry Sulfation Reaction Curve and the Experimental TG Data	301
17.	Fixed Bed Experimental Results	304

APPENDIX M

1.	Schematic Diagram for the Slurry Recarbonation System	312
2.	Neutralization Curve of 10 ml Slurry Recarbonation Run 6 Filtrate with 0.1 N HC 1	319
3.	Slurry Settling Curve for Run 25	320
4a.	A Typical Optical Microphotograph of the Slurry Recarbonated Product from Run 22 (200 x)	323
4b.	A Typical Electron Scanning Microphotograph of the Slurry Recarbonated Product from Run 22 (2000 x)	323

APPENDIX N

1.	Schematic Diagram for the Acid Sulfation System for Spent Stone Processing	329
2a.	An Optical Microphotograph of the Acid-Sulfated Product from Run AS5 (200 x)	339
2b.	An Electron Scanning Microphotograph of the Acid-Sulfated Product from Run AS5 (500 x)	339
3.	Slurry Settling Curve for Acid Run AS19 Immediately Following the Sulfation Reaction	340

List of Figures (Continued)

	Page
4. Slurry Settling Curve of AS19 after 4-Day Settling and Reshaking to Form the New Slurry	342
5. Comparison of Photomicrographs of the Acid Sulfation Products from (a) AS5 and (b) AS19 (200 x)	343
APPENDIX O	
1. Recarbonation of Calcium Oxide	349
2. Rate of Recarbonation of Residual CaO in Spent Sorbent	352
3. CO_2 Requirement for CaO Recarbonation	354
4. Effect of Bed Height on CO_2 Requirement for Recarbonation of CaO	355
APPENDIX Q	
1. Location of Limestone Supplies in Relation to Providence, Rhode Island	380
2. Location of Limestone Deposits in Eastern United States	381
3. Repeatability of Stone Sulfidation Kinetics	384
4. Grain Structure of Candidate Stones for the NEES Plant	386
APPENDIX R	
1. Sulfidation of a Large Particle of Calcium Limestone	402
2. Comparison of Esso CAFB Oil Gasification Desulfurization and the Projection of Fluidized Bed from the Thermogravimetric Data	404

LIST OF TABLES

	Page
APPENDIX A	
1. Imports of Residual Fuel Oil by Percent Sulfur Content by Country of Origin: Jan.-Dec. 1973	4
2. Refinery Production of Residual and No. 4 Fuel Oil by Sulfur Content by P.A.D. and Refinery Districts: Jan.-Dec. 1973	6
3. Imports of Residual Fuel Oil by Percent Sulfur Content by Country of Origin: Jan.-July 1974	8
4. Refinery Production of Residual and No. 4 Fuel Oil by Sulfur Content by P.A.D. and Refinery Districts: Jan.-July 1974	10
5. United States Fossil Fuel Generation Survey	12
APPENDIX C	
1. Power Plant Design and Operating Characteristics	28
APPENDIX D	
1. Fluidized Bed Oil Gasification and Demonstration Plant	38
2. Fluidized Bed Oil Gasification Process Fuel-Gas Characteristics	39
APPENDIX E	
1. Reaction System-Process Equipment	152
2. Fuel-Gas Piping System	154
3. Stone Processing System (Dry Sulfation)	155
APPENDIX G	
1. Summary of Environmental Performance of Chemically Active Fluidized Bed (CAFB) Pilot Plant	169
2. Environmental Impact Comparison	173

List of Tables (Continued)

Page

APPENDIX H

1. Comparison of Utility Requirements for CAFB and Limestone Slurry Scrubbing 188

APPENDIX I

1. Equipment List of Initial Design Study 202
2. Cost Breakdown for the Initial Study Demonstration Plant 203
3. Summary of Major System Costs in the Initial Study Demonstration Plant 204
4. Summary of Major Component Costs in the Initial Study Reaction System 209
5. Demonstration Plant Modified Costs Projection 211

APPENDIX J

1. General Process Options for the Reaction System 215
2. Reaction System Operating Options 216
3. Equipment Design Options for the Reaction System 218

APPENDIX K

1. Solubility of Calcium Compounds in Water 224
2. Estimate of By-Product Stone Production 228
3. Demand for Construction Material 229
4. Oil Gasification - Comparison of Spent Stone Disposal Processes 259
5. Realization from Gypsum Landfill 261
6. Base Equipment Cost Comparison 263

APPENDIX L

1. Projected SO_2 Retention in Fluidized Beds of CAFB Spent Sorbent 281
2. TG Experiments Probing Conditions for the Dry Sulfation Process 282
3. A Summary of the Dry Sulfation Tests 287
4. Program for Numerical Prediction of SO_2 Retention 302

List of Tables (Continued)

Page

APPENDIX M

1. Slurry Recorbination Test Results 314
2. Ca^{++} and $S^{=}$ Determination for the Slurry Recarbonation Reactions 316
3. Chemical Analyses of Ca^{++}, $S^{=}$, and Cationic Impurities for a Typical Slurry Recarbonation Test 318
4. Particle Size Distribution of the Recarbonated Product from Slurry Recarbonation Run 25 321

APPENDIX N

1. A Summary of the Acid Sulfation Experiments 332
2. Chemical Analyses of Ca^{++}, $S^{=}$, $SO_4^{=}$, and Cationic Impurities for Acid Sulfation Reactant, Products, and Filtrates 336
3. Rate of Filtration and pH of the Washing Solutions for the Acid Sulfation Reaction Mixture AS8 337

APPENDIX O

1. TG Runs for Spent Sorbent Disposal 347
2. Exothermic Hydration of Waste Lime in 20 ml Water 357
3. Temperature Rise on Hydration of Spent Sorbent CAFB Run 7 Regenerator Bed Material 359

APPENDIX P

1. Demonstration Plant 363

APPENDIX Q

1. Limestones Tested by Esso 377
2. Limestone Specification 378
3. Candidate Materials - Composition 382
4. Conditions for 51 mm (2 in) Unit Attrition Index Tests 387
5. Comparison of Attrition Index from 51 mm (2 in) Unit and Results Noted by Esso 388
6. Summary of Candidate Stones for the NEES Plant 392
7. Respondents to Sampling Request 394

List of Tables (Continued)

	Page
APPENDIX R	
1. TG Results on Sulfidation of Lime	399
APPENDIX S	
1. Sulfur Resources in the United States	411
2. Phosphorus Reserves	413

LIST OF ABBREVIATIONS

A/F	-	air/fuel ratio
BCURA	-	British Coal Utilization and Research Association
$BaSO_4$	-	barium sulfate
$CaCO_3$	-	calcium carbonate
CAFB	-	chemically active fluidized bed
CaO	-	calcium oxide
$Ca(OH)_2$	-	calcium hydroxide
CaS	-	calcium sulfide
$Ca(SH_3)_2$	-	calcium bisulfite
$CaSO_3$	-	calcium sulfite
CE	-	Combustion Engineering
$CH_{1/2}$	-	residual hydrocarbon content of gasifier stone
CH_4	-	methane
CH_3OH	-	methanol
CO	-	carbon monoxide
CO_2	-	carbon dioxide
Consol	-	Consolidated Coal Company
COS	-	carbonyl sulfide
CS_2	-	carbon disulfide
EPA	-	Environmental Protection Agency
GJ	-	giga joule (10^9), S.I. unit of energy
HDS	-	hydrodesulfurization
H_2S	-	hydrogen sulfide
H_2SO_4	-	sulfuric acid
kg	-	kilogram
kPa	-	kilopascal, S.I. unit of pressure
kw	-	kilowatt
kWh	-	kilowatt hours
m	-	meter

$MgCO_3$	-	magnesium carbonate
MgO	-	magnesium oxide
ml	-	milliliter
mm	-	millimeter
m/s	-	meters per second
MW	-	megawatt
NEES	-	New England Electric Systems
NO_2	-	nitrogen dioxide
O_2	-	oxygen
OCR	-	Office of Coal Research
ORD	-	Office of Research and Development
ORM	-	Office of Research and Monitoring
Pa	-	pascal, S.I. unit of pressure
PTG	-	purge transport gas
rms	-	root mean square
SiO_2	-	silicon dioxide
SO_2	-	sulfur dioxide
SO_3	-	sulfur trioxide
SRE	-	sulfur removal efficiency
SWEC	-	Stone and Webster Engineering Corporation
TG	-	thermogravimetric

ACKNOWLEDGMENTS

The results, conclusions, and recommendations presented in this volume represent the combined work and thought of many persons at Westinghouse and the Office of Research and Development (ORD), and personnel at New England Electric System (NEES). Other ORD contractors have freely shared with us their ideas and results of their research and development effort. Westinghouse subcontracted Stone and Webster Engineering Corporation (SWEC) to prepare the preliminary design and cost estimate.

In particular, we want here to express our high regard for and acknowledge the contribution of personnel at Westinghouse Research Laboratories, New England Power Service Company, Esso Research Centre (England), and the personnel at ORD who have directed the overall fluidized bed residual oil gasification program and who have defined, monitored, and supported the efforts of Westinghouse and others on the program. Mr. P. P. Turner, Chief of the Advanced Process Section, has served as project officer on our work. Numerous enlightening and helpful discussions have been held with Mr. Turner; with section members S. L. Rakes and D. Bruce Henschel; and with R. P. Hangebrauck, Chief of the Demonstration Projects Branch. Mr. S. K. Batra and Mr. R. Gendreau of New England Power Service Company contributed to the demonstration plant design, provided data on the Manchester Street Station, and participated in process evaluation and selection. Dr. J. W. T. Craig of Esso Research Centre (England) participated in the preliminary design study from August 1973 through February 1974. Dr. Craig was effective in integrating the Esso pilot-scale experience and results into the demonstration plant design. He also participated in the investigations and evaluation of spent stone processing systems. Mr. John P. Malloy of SWEC served as project manager for preparation of the preliminary design and cost estimate. Mr. Harry

Robinson, SWEC, was the lead process engineer. Allied Chemical Corporation provided technical and economic information on sulfur recovery. Mr. W. D. Hunter of Allied coordinated the effort. Many persons at the Westinghouse Research Laboratories have contributed to the program. Dr. T. K. Gupta and Dr. M. Gunasekaran are initiating work to identify and develop market applications for the spent stone. Mr. R. Brinza and Mr. W. F. Kittle assisted in the collection of data.

APPENDIX A

MARKET DATA

APPENDIX A
MARKET DATA

This appendix provides additional data on the availability of petroleum residues and the fuel utilization in fossil-fired steam power plants. An overview of the market is presented in Volume I, section IV.

AVAILABILITY OF PETROLEUM RESIDUES

Recent data on the availability of heavy fuel oils by sulfur level from the Bureau of Mines are appended. Summary tabulations are included for January to December 1973 and January to July 1974. Vacuum tower bottoms or other high metal content fuels are the most likely to be economically attractive for the chemically active fluidized bed (CAFB) process (see Volume I, sections I and IV). The utilization of these low-grade petroleum residues is, unfortunately, unclear.

Commercial processes are being developed to desulfurize fuel oil from many crude oils. The cost of desulfurizing high-sulfur, high metals content residual oil fractions, however, is currently too high to permit the production of a fuel economical for power generation. Thus, residues from low-quality crudes are more attractive, economically, for power generation utilizing the fluidized bed residual oil gasification/desulfurization process. The price of lower quality residues, therefore, could be substantially below the price of higher grade, low-to-medium sulfur residual oils.

Estimates of the potential availability of low-grade petroleum fractions (for example, vacuum tower resid-- 1050°F+) are approximately one million barrels per day. This is equivalent to approximately 30,000 MW of power generation capacity. Estimates for high metals content crude oil reserves are in the order of 15 billion barrels. The use of this fuel is unclear. Several processing alternatives have been

proposed, including blending with low-sulfur and/or low-metals residual oils. What quantity of the low-grade fuel would be available for utility use with the CAFB will depend on numerous factors, including the fuel requirements of other countries, crude oil availability, fuel distribution problems, alternative process options available. If half the potential low-quality fuel is available for utility use, this would represent roughly 15,000 MW or 25 percent of the present oil-fired power generation capacity. Figure A-1 and Table A-5 summarize the utility power generation market.

MINERAL INDUSTRY SURVEYS

U. S. DEPARTMENT OF THE INTERIOR
BUREAU OF MINES
WASHINGTON, D. C. 20240

Rogers C. B. Morton, Secretary — Thomas V. Falkie, Director

For information call Paul Chapman
Telephone: 703 557-0442

AVAILABILITY OF HEAVY FUEL OILS BY SULFUR LEVELS

December 1973

New supply of residual fuel oil, including No. 4 fuel oil, in the United States in December totaled 91.0 million barrels according to the Bureau of Mines, United States Department of the Interior. Of this total, domestic refinery production accounted for 36.5 million barrels and imports for 54.5 million barrels. In this report new supply excludes domestic crude oil used for direct burning as fuel. Import data shown in this report are import data reported to the Office of Oil and Gas under the oil import program. Imports reported in the Bureau of Mines Monthly Petroleum Statement include bonded imports of fuel oils used for vessel bunkering and fuel oil used by the military offshore in addition to the imports included in this publication.

RESIDUAL FUEL OIL

Domestic refinery production of residual fuel oil in December totaled 35.9 million barrels of which low-sulfur oils (1.0 percent or less sulfur content by weight) amounted to 17.1 million barrels or 47.7 percent of the total. The West Coast Refining District produced 37.9 percent of the total low-sulfur residual fuel oil, followed by the Indiana-Illinois Refining District with 16.5 percent. Compared to 1972, domestic refinery production during 1973 increased by 21.2 percent. Imports of low-sulfur fuel oil in December, amounting to 24.9 million barrels, represented 49.2 percent of the total 50.7 million barrels of residual oil imported during the month. Imports from Venezuela accounted for 38.3 percent of the total imports of low-sulfur residual fuel oil, followed by the Netherlands West Indies with 22.5 percent of the total. Total imports of residual fuel oil during 1973 increased by 29.1 million barrels, or 4.9 percent, over 1972. The Central Atlantic States received 56.0 percent of the total imports of low-sulfur residual fuel oil during December, followed by the New England States with 28.0 percent.

NO. 4 FUEL OIL

Domestic refinery production of No. 4 fuel oil in December totaled 0.6 million barrels, including 0.4 million barrels of low-sulfur oils. Compared to 1972, domestic refinery production during 1973 decreased by 31.0 percent. During the month imports of No. 4 fuel oil totaled 3.8 million barrels of which low-sulfur oils amounted to 2.8 million barrels or 74.5 percent of the total. Imports for 1973 increased by 4.3 million barrels, or 13.7 percent, over 1972.

STOCKS

Stocks of heavy fuel oils held by refining and pipeline companies on December 31, 1973 amounted to 53.5 million barrels of residual fuel oil and 3.4 million barrels of No. 4 fuel oil. Of the total residual and No. 4 fuel oil stocks, 25.3 million barrels and 2.7 million barrels, respectively, contained 1.0 percent or less sulfur.

Table 14. -Refinery Production of Residual and No. 4 Fuel Oil by Sulfur Content, by P.A.D. and Refinery District: 1972
Table 15. -Imports of Residual Fuel Oil by Percent Sulfur Content, by Country of Origin: 1972
Table 16. -Imports of Residual Fuel Oil by Percent Sulfur Content, by States: 1972
Table 17. -Imports of No. 4 Fuel Oil by Percent Sulfur Content, by Country of Origin: 1972
Table 18. -Imports of No. 4 Fuel Oil by Percent Sulfur Content, by States: 1972
Table 19. -Stocks of Residual and No. 4 Fuel Oil Held by Refineries and Bulk Terminals by Sulfur Content by P.A.D. and Refinery Districts: December 31, 1972.

Prepared April 2, 1974 in the Division of Fossil Fuels - Mineral Supply.

Table A-1

IMPORTS OF RESIDUAL FUEL OIL BY PERCENT SULFUR CONTENT

BY COUNTRY OF ORIGIN: JAN-DEC 1973

(Thousands of Barrels)

DISTRICT COUNTRY	PERCENT SULFUR CONTENT 0-.50	.51-1.00	1.01-2.00	OVER 2.00	TOTAL
P.A.D. I					
NEW ENGLAND					
CANADA	7,042	4,532	122	4,992	16,688
MEXICO	3	-	-	75	78
BAHAMAS	298	5,237	-	506	6,040
BRITISH W.I.	-	148	-	-	148
TRINIDAD	5,869	8,761	2,817	153	17,600
N.W.I.	8,704	15,777	1,116	1,885	27,482
VENEZUELA	8,354	5,950	5,034	10,468	29,806
BRAZIL	196	-	-	-	196
SWEDEN	132	-	-	-	132
ENGLAND	1,069	242	-	-	1,310
NETHEPLANDS	166	231	-	-	397
BELGIUM	380	1,100	-	-	1,480
FRANCE	250	284	-	-	535
WEST GERMANY	-	132	-	517	650
SOVIET UNION	280	220	-	-	499
SPAIN	236	135	-	-	370
ITALY	2,394	4,382	-	297	7,073
GREECE	155	-	-	-	155
RUMANIA	466	-	-	-	466
GHANA	-	259	-	-	259
NIGERIA	117	140	-	-	257
VIRGIN ISLANDS	9,270	209	1,072	170	10,720
TOTAL.....	45,380	47,739	10,161	19,062	122,342
CENTRAL ATLANTIC					
CANADA	5,022	873	840	5,559	12,294
BAHAMAS	28,850	3,041	351	-	32,243
BRITISH W.I.	-	205	-	-	205
TRINIDAD	8,356	9,057	6,093	1,356	24,862
N.W.I.	27,688	14,241	3,814	11,581	57,325
COLOMBIA	-	-	919	-	919
VENEZUELA	32,545	5,921	12,376	24,592	75,433
ECUADOR	-	-	130	-	130
PERU	886	133	-	-	1,019
BRAZIL	1,052	368	-	-	1,420
SWEDEN	435	-	-	-	435
NORWAY	-	250	-	-	250
ENGLAND	280	437	-	-	717
NETHERLANDS	1,126	1,111	128	37	2,401
BELGIUM	1,067	1,060	-	-	2,127
FRANCE	575	109	-	-	685
WEST GERMANY	117	-	-	54	171
SOVIET UNION	1,222	249	-	-	1,470
SPAIN	3,020	314	-	-	3,333
ITALY	18,013	4,966	-	206	23,186
GREECE	462	-	-	-	462
RUMANIA	173	-	-	-	173
SAUDI ARABIA	-	-	50	-	50
ALGERIA	4,293	-	119	-	4,412
LIBYA	8,944	-	-	-	8,944
GHANA	-	388	-	-	388
NIGERIA	2,876	-	-	-	2,876
ANGOLA	-	-	140	-	140
VIRGIN ISLANDS	38,543	3,142	6,095	6,722	54,501
TOTAL.....	185,543	45,864	31,057	50,106	312,571
LOWER ATLANTIC					
MEXICO	-	-	-	561	561
BAHAMAS	24	333	2,961	2,485	5,804
BRITISH W.I.	-	-	-	131	131
TRINIDAD	522	-	2,545	690	3,757
N.W.I.	502	21,568	4,096	31,485	57,651
COLOMBIA	-	-	240	-	240
VENEZUELA	237	12,425	23,281	43,568	79,510
BRAZIL	-	239	-	-	239
ARGENTINA	-	-	-	152	152
ENGLAND	-	110	-	8	117
NETHERLANDS	-	244	-	-	244
BELGIUM	-	170	-	-	170
ITALY	-	1,052	-	-	1,052
LIBYA	681	486	-	-	1,167
MALAGASY REPUBLIC	-	-	3	-	3
VIRGIN ISLANDS	-	27	606	12,566	13,199
TOTAL.....	1,966	36,655	33,732	91,646	163,999

Table A-1(Continued)

DISTRICT COUNTRY	PERCENT SULFUR CONTENT 0-.50	.51-1.00	1.01-2.00	OVER 2.00	TOTAL
P.A.D. II					
CANADA	1,654	993	1,345	116	4,108
VENEZUELA	-	587	374	654	1,615
LIBYA	-	198	-	-	198
NIGERIA	-	186	-	-	186
TOTAL.....	1,654	1,964	1,719	770	6,107
P.A.D. III					
MEXICO	124	-	-	-	124
BAHAMAS	-	385	-	-	385
TRINIDAD	-	-	-	11	11
N.W.I.	-	609	20	244	873
COLOMBIA	-	-	60	-	60
VENEZUELA	-	-	355	783	1,138
ECUADOR	-	-	113	-	113
NETHERLANDS	77	-	-	-	77
BELGIUM	-	332	-	-	332
LIBYA	-	504	-	-	504
NIGERIA	-	474	-	-	474
VIRGIN ISLANDS	-	-	-	371	371
TOTAL.....	201	2,303	547	1,408	4,459
P.A.D. V					
CANADA	-	-	26	-	26
N.W.I.	594	-	-	-	594
VENEZUELA	2,350	-	-	166	2,516
ECUADOR	155	-	-	-	155
PERU	432	-	-	-	432
ITALY	524	-	-	-	524
GREECE	213	-	-	-	213
SAUDI ARABIA	628	16	567	50	1,260
BAHRAIN	-	-	-	5	5
MALAYSIA	317	16	486	-	819
INDONESIA	4,332	-	-	-	4,332
HAWAII[1]	-	-	384	-	384
TOTAL.....	9,542	32	1,464	221	11,259
U.S., TOTAL.....	244,286	134,557	78,680	163,213	[2]620,736
COUNTRY TOTALS					
CANADA	13,718	6,398	2,333	10,666	33,116
MEXICO	127	-	-	636	763
BAHAMAS	29,172	8,996	3,312	2,991	44,472
BRITISH W.I.	-	353	-	131	484
TRINIDAD	14,747	17,819	11,455	2,209	46,230
N.W.I.	37,488	52,195	9,047	45,195	143,925
COLOMBIA	-	-	1,219	-	1,219
VENEZUELA	43,485	24,882	41,419	80,230	190,017
ECUADOR	155	-	243	-	398
PERU	1,317	133	-	-	1,450
BRAZIL	1,248	607	-	-	1,855
ARGENTINA	-	-	-	152	152
SWEDEN	567	-	-	-	567
NORWAY	-	250	-	-	250
ENGLAND	1,349	788	-	8	2,145
NETHERLANDS	1,368	1,586	128	37	3,119
BELGIUM	1,446	2,662	-	-	4,109
FRANCE	825	394	-	-	1,219
WEST GERMANY	117	132	-	571	821
SOVIET UNION	1,501	468	-	-	1,970
SPAIN	3,255	448	-	-	3,704
ITALY	20,930	10,401	-	503	31,835
GREECE	830	-	-	-	830
RUMANIA	639	-	-	-	639
SAUDI ARABIA	628	16	617	50	1,311
BAHRAIN	-	-	-	5	5
MALAYSIA	317	16	486	-	819
INDONESIA	4,332	-	-	-	4,332
ALGERIA	4,293	-	119	-	4,412
LIBYA	9,625	1,188	-	-	10,813
GHANA	-	647	-	-	647
NIGERIA	2,993	800	-	-	3,793
ANGOLA	-	-	140	-	140
MALAGASY REPUBLIC	-	-	3	-	3
VIRGIN ISLANDS	47,813	3,377	7,772	19,828	78,790
HAWAII[1]	-	-	384	-	384

SOURCE: OFFICE OF OIL AND GAS Table 5.

NOTE..DATA MAY NOT ADD TO TOTALS SHOWN BECAUSE OF INDEPENDENT ROUNDING

[1] FOREIGN TRADE ZONE

[2] INCLUDES CRUDE OIL FOR DIRECT BURNING AS FUEL: CANADA, 1,916, INDONESIA, 4,036; LIBYA, 8,342, NETHERLANDS ANTILLES, 239; NIGERIA, 345; SAUDI ARABIA, 50; TRINIDAD, 439; VENEZUELA, 3,698.

Table A-2

REFINERY PRODUCTION OF RESIDUAL AND NO.4 FUEL OIL BY SULFUR CONTENT

BY P.A.D. AND REFINERY DISTRICTS: JAN-DEC 1973

(Thousands of Barrels)[a]

P.A.D. AND REFINERY DISTRICTS	RESIDUAL FUEL OIL					NO. 4 FUEL OIL				
	PERCENT SULFUR CONTENT					PERCENT SULFUR CONTENT				
	0-.50	.51-1.00	1.01-2.00	OVER 2.00	TOTAL	0-.50	.51-1.00	1.01-2.00	OVER 2.00	TOTAL
DIST. I, TOTAL	11,743	15,834	16,112	8,569	52,258	153	-	205	108	466
EAST COAST, TOTAL	11,263	15,056	10,350	8,569	45,238	153	-	205	108	466
APPL. NO. 1	480	778	5,762	-	7,020	-	-	-	-	-
DIST. II, TOTAL	*985	*30,368	25,952	13,815	71,120	2,040	1,441	153	222	3,856
APPL. NO. 2	-	1,615	143	-	1,758	-	-	-	-	-
IND.-ILL.	29	26,433	20,518	6,632	53,612	209	1,401	153	-	1,763
MINN.-WISC.	111	927	2,488	4,500	8,026	307	-	-	222	529
OKLA.-KANS.	*845	*1,393	2,803	2,683	7,724	1,524	40	-	-	1,564
DIST. III, TOTAL	12,790	*26,462	*9,927	39,276	88,455	1,220	485	82	214	2,001
TEXAS INLAND	2,151	1,383	1,583	578	5,695	76	51	-	-	127
TEXAS GULF	4,150	11,972	4,650	32,303	53,075	517	389	-	-	906
LA. GULF	4,049	*12,722	*1,755	5,229	23,755	5	45	-	-	50
ARK.-LA. INL.	1,496	384	1,718	1,166	4,764	408	-	82	214	704
NEW MEXICO	944	1	221	-	1,166	214	-	-	-	214
DIST. IV	824	2,451	3,323	3,266	9,864	406	196	200	20	822
DIST. V	70,348	7,385	47,528	7,639	132,900	1,058	-	-	100	1,158
U.S. TOTAL	*96,690	*82,500	*102,842	72,565	354,597	4,877	2,122	640	664	8,303

* REVISLD.

READS:	0-0.50	.51-1.00	SHOULD READ:	0-0.50	.51-1.00
AUGUST 1973:					
DISTRICT II, TOTAL	82	1,586		75	1,593
OKLA.-KANS.	70	77		63	84
U.S. TOTAL	7,367	5,385		7,360	5,392
SEPTEMBER 1973:	.51-1.00	1.01-2.00		.51-1.00	1.01-2.00
DISTRICT III, TOTAL	1,664	427		1,592	499
LA. GULF	878	-		806	72
U.S. TOTAL	5,774	7,052		5,702	7,124

[a]Mineral Industry Surveys, U.S. Department of the Interior, Bureau of Mines, Washington, D.C., December 1973, Table 3.

MINERAL INDUSTRY SURVEYS

U. S. DEPARTMENT OF THE INTERIOR
BUREAU OF MINES
WASHINGTON, D. C. 20240

Rogers C. B. Morton, Secretary

Thomas V. Falkie, Director

For information call Stephen K. Patterson
Telephone: 703 557-0442

AVAILABILITY OF HEAVY FUEL OILS BY SULFUR LEVELS

July 1974

New supply of residual fuel oil, including No. 4 fuel oil, in the United States in July totaled 75.3 million barrels according to the Bureau of Mines, United States Department of the Interior. Of this total, domestic refinery production accounted for 33.4 million barrels and imports for 41.9 million barrels. In this report new supply excludes domestic crude oil used for direct burning as fuel. Import data shown in this report are import data reported to the Office of Oil and Gas under the oil import program. Imports reported in the Bureau of Mines Monthly Petroleum Statement include bonded imports of fuel oils used for vessel bunkering and fuel oil used by the military offshore in addition to the imports included in this publication.

RESIDUAL FUEL OIL

Domestic refinery production of residual fuel oil in July totaled 32.7 million barrels of which low-sulfur oils (1.0 percent or less sulfur content by weight) amounted to 17.4 million barrels or 53.3 percent of the total. The West Coast Refining District produced 29.7 percent of the total low-sulfur residual fuel oil, followed by the Texas Gulf Refining District with 20.4 percent. Imports of low-sulfur fuel oil in July amounting to 24.0 million barrels, represented 58.9 percent of the total 40.8 million barrels of residual oil imported during the month. Imports from the Virgin Islands accounted for 31.0 percent of the total imports of low-sulfur residual fuel oil, followed by the Netherlands West Indies with 21.9 percent of the total. The Central Atlantic States received 62.6 percent of the total imports of low-sulfur residual fuel oil during July followed by the New England States with 16.6 percent.

NO. 4 FUEL OIL

Domestic refinery production of No. 4 fuel oil in July totaled 0.7 million barrels, including 0.6 million barrels of low-sulfur oils. During the month imports of No. 4 fuel oil totaled 1.1 million barrels of which low-sulfur oils amounted to 1.0 million barrels or 86.1 percent of the total.

STOCKS

Stocks of heavy fuel oils held by refining and pipeline companies on July 31, 1974 amounted to 59.8 million barrels of residual fuel oil and 4.4 million barrels of No. 4 fuel oil. Of the total residual and No. 4 fuel oil stocks, 31.7 million barrels and 3.9 million barrels, respectively, contained 1.0 percent or less sulfur.

Prepared October 31, 1974 in Division of Fossil Fuels - Mineral Supply.

Table A-3

IMPORTS OF RESIDUAL FUEL OIL BY PERCENT SULFUR CONTENT
BY COUNTRY OF ORIGIN: JAN-JULY 1974
(Thousands of Barrels)

DISTRICT COUNTRY	PERCENT SULFUR CONTENT 0-.50	.51-1.00	1.01-2.00	OVER 2.00	TOTAL
P.A.D. I					
NEW ENGLAND					
CANADA	2,960	557	-	2,774	6,290
BAHAMAS	504	795	-	354	1,652
BRITISH W.I.	-	150	308	-	458
TRINIDAD	4,649	5,949	1,003	399	12,000
N.W.I.	5,237	7,645	264	1,071	14,217
VENEZUELA	2,614	2,054	2,369	6,251	13,287
ENGLAND	251	-	-	-	251
NETHERLANDS	-	173	-	222	396
FRANCE	112	-	-	-	112
ITALY	622	361	-	-	983
GREECE	101	-	-	-	101
RUMANIA	-	182	-	-	182
NIGERIA	98	-	-	-	98
ANGOLA	-	102	-	-	102
VIRGIN ISLANDS	2,053	-	2,299	-	4,352
TOTAL.....	19,200	17,966	6,243	11,071	54,481
CENTRAL ATLANTIC					
CANADA	2,771	196	635	4,054	7,656
MEXICO	-	-	-	108	108
BAHAMAS	8,187	3,625	-	2,765	14,577
BRITISH W.I.	100	-	-	127	227
TRINIDAD	6,366	1,154	4,093	939	12,552
N.W.I.	17,626	7,258	1,159	7,053	33,096
COLOMBIA	-	-	502	-	502
VENEZUELA	15,457	4,178	6,745	11,293	37,673
PERU	144	-	-	-	144
BRAZIL	466	-	-	-	466
ENGLAND	275	149	-	-	424
NETHERLANDS	-	352	-	329	682
BELGIUM	-	124	-	351	475
FRANCE	286	-	-	-	286
WEST GERMANY	-	-	-	277	277
SPAIN	376	-	-	-	376
PORTUGAL	-	-	152	-	152
ITALY	4,872	698	368	798	6,736
GREECE	-	-	-	135	135
RUMANIA	-	202	-	-	202
IRAN	-	-	50	54	104
U. ARAB EMIRATES	-	12	360	-	372
INDONESIA	141	-	-	-	141
ALGERIA	239	-	-	-	239
GHANA	-	261	120	-	380
NIGERIA	1,328	-	-	124	1,452
VIRGIN ISLANDS	20,324	5,619	10,641	1,968	38,552
TOTAL.....	78,958	23,827	24,824	30,376	157,985
LOWER ATLANTIC					
MEXICO	-	-	-	103	103
BAHAMAS	-	541	2,724	4,551	7,816
TRINIDAD	-	-	847	54	901
N.W.I.	-	8,981	2,477	17,464	28,922
COLOMBIA	-	-	617	-	617
VENEZUELA	-	5,580	8,197	19,503	33,280
NETHERLANDS	-	170	120	125	416
BELGIUM	-	-	-	320	320
WEST GERMANY	-	177	-	236	413
PORTUGAL	-	-	64	-	64
ITALY	-	539	-	241	780
VIRGIN ISLANDS	-	-	903	7,675	8,578
TOTAL.....	-	15,987	15,950	50,273	82,210

Table A-3(Continued)

DISTRICT COUNTRY	PERCENT SULFUR CONTENT 0-.50	.51-1.00	1.01-2.00	OVER 2.00	TOTAL
P.A.D. II					
CANADA	1,335	847	79	60	2,322
VENEZUELA	-	341	8	-	349
TOTAL.....	1,335	1,188	87	60	2,671
P.A.D. III					
BAHAMAS	-	853	-	229	1,082
BRITISH W.I.	149	221	-	-	370
TRINIDAD	-	363	-	234	597
N.W.I.	-	130	-	57	187
COLOMBIA	-	-	30	-	30
VENEZUELA	72	-	525	569	1,166
RUMANIA	-	246	-	-	246
VIRGIN ISLANDS	-	932	20	718	1,670
TOTAL.....	221	2,746	575	1,807	5,349
P.A.D. V					
N.W.I.	-	-	37	-	37
VENEZUELA	3,964	-	23	-	3,987
ECUADOR	-	150	-	-	150
PERU	691	-	-	-	691
ITALY	282	-	-	-	282
SAUDI ARABIA	79	-	300	-	379
MALAYSIA	20	-	244	59	323
INDONESIA	3,584	-	-	-	3,584
VIRGIN ISLANDS	1,102	-	403	-	1,505
HAWAIIAN F.T. ZONE	-	-	-	-	-
TOTAL.....	9,721	150	1,007	59	10,937
U.S., TOTAL.....	109,436	61,864	48,686	93,646	[1]313,632
COUNTRY TOTALS					
CANADA	7,066	1,600	714	6,888	16,268
MEXICO	-	-	-	211	211
BAHAMAS	8,690	5,813	2,724	7,899	25,127
BRITISH W.I.	249	371	308	127	1,055
TRINIDAD	11,015	7,466	5,943	1,626	26,050
N.W.I.	22,864	24,013	3,937	25,645	76,459
COLOMBIA	-	-	1,149	-	1,149
VENEZUELA	22,108	12,152	17,868	37,615	89,743
ECUADOR	-	150	-	-	150
PERU	835	-	-	-	835
BRAZIL	466	-	-	-	466
ENGLAND	526	149	-	-	675
NETHERLANDS	-	696	120	677	1,493
BELGIUM	-	124	-	671	795
FRANCE	399	-	-	-	399
WEST GERMANY	-	177	-	513	689
SPAIN	376	-	-	-	376
PORTUGAL	-	-	216	-	216
ITALY	5,776	1,598	368	1,039	8,780
GREECE	101	-	-	135	237
RUMANIA	-	630	-	-	630
IRAN	-	-	50	54	104
SAUDI ARABIA	79	-	300	-	379
U. ARAB EMIRATES	-	12	360	-	372
MALAYSIA	20	-	244	59	323
INDONESIA	3,724	-	-	-	3,724
ALGERIA	239	-	-	-	239
GHANA	-	261	120	-	380
NIGERIA	1,425	-	-	124	1,550
ANGOLA	-	102	-	-	102
VIRGIN ISLANDS	23,479	6,550	14,266	10,362	54,658
HAWAIIAN F.T. ZONE	-	-	-	-	-

SOURCE: OFFICE OF OIL AND GAS Table 5.
NOTE..DATA MAY NOT ADD TO TOTALS SHOWN BECAUSE OF INDEPENDENT ROUNDING

[1] INCLUDES CRUDE OIL FOR DIRECT BURNING AS FUEL: CANADA, 1,274; IRAN, 50; TRINIDAD, 241; UNITED ARAB EMIRATES, 360, VENEZUELA,1,708..

Table A-4

REFINERY PRODUCTION OF RESIDUAL AND NO. 4 FUEL OIL BY SULFUR CONTENT BY P.A.D. AND REFINERY DISTRICTS: JAN-JULY 1974

(Thousands of Barrels)[a]

P.A.D. AND REFINERY DISTRICTS	RESIDUAL FUEL OIL					NO. 4 FUEL OIL				
	PERCENT SULFUR CONTENT				TOTAL	PERCENT SULFUR CONTENT				TOTAL
	0-.50	.51-1.00	1.01-2.00	OVER 2.00		0-.50	.51-1.00	1.01-2.00	OVER 2.00	
DIST. I, TOTAL	6,311	11,079	8,391	7,282	33,063	505	20	261	-	786
EAST COAST, TOTAL	6,110	10,881	4,608	7,282	28,881	214	-	169	-	383
APPL. NO. 1	201	198	3,783	-	4,182	291	20	92	-	403
DIST. II, TOTAL	2,411	15,260	11,838	8,175	37,684	393	547	13	137	1,090
APPL. NO. 2	-	1,045	-	-	1,045	-	-	-	-	-
IND.-ILL.	1,868	12,882	8,184	5,189	28,123	225	456	-	137	818
MINN.-WISC.	150	616	1,387	1,795	3,948	150	89	13	-	252
OKLA.-KANS.	393	717	2,267	1,191	4,568	18	2	-	-	20
DIST. III, TOTAL	11,951	22,633	8,581	22,924	66,089	617	726	68	164	1,575
TEXAS INLAND	1,397	1,472	890	306	4,065	6	-	-	-	6
TEXAS GULF	6,056	10,892	4,932	17,930	39,810	-	335	-	-	335
LA. GULF	1,837	10,045	1,584	3,346	16,812	215	247	-	-	462
ARK.-LA. INL.	1,958	53	975	1,342	4,328	359	118	68	164	709
NEW MEXICO	703	171	200	-	1,074	37	26	-	-	63
DIST. IV	1,158	1,564	1,476	2,356	6,554	417	30	167	-	614
DIST. V	32,043	2,903	31,414	4,413	70,773	487	-	53	82	622
U.S. TOTAL	53,874	53,439	61,700	45,150	214,163	2,419	1,323	562	383	4,687

[a]Mineral Industry Surveys, U.S. Department of the Interior, Bureau of Mines, Washington, D.C., July 1974, Table 3.

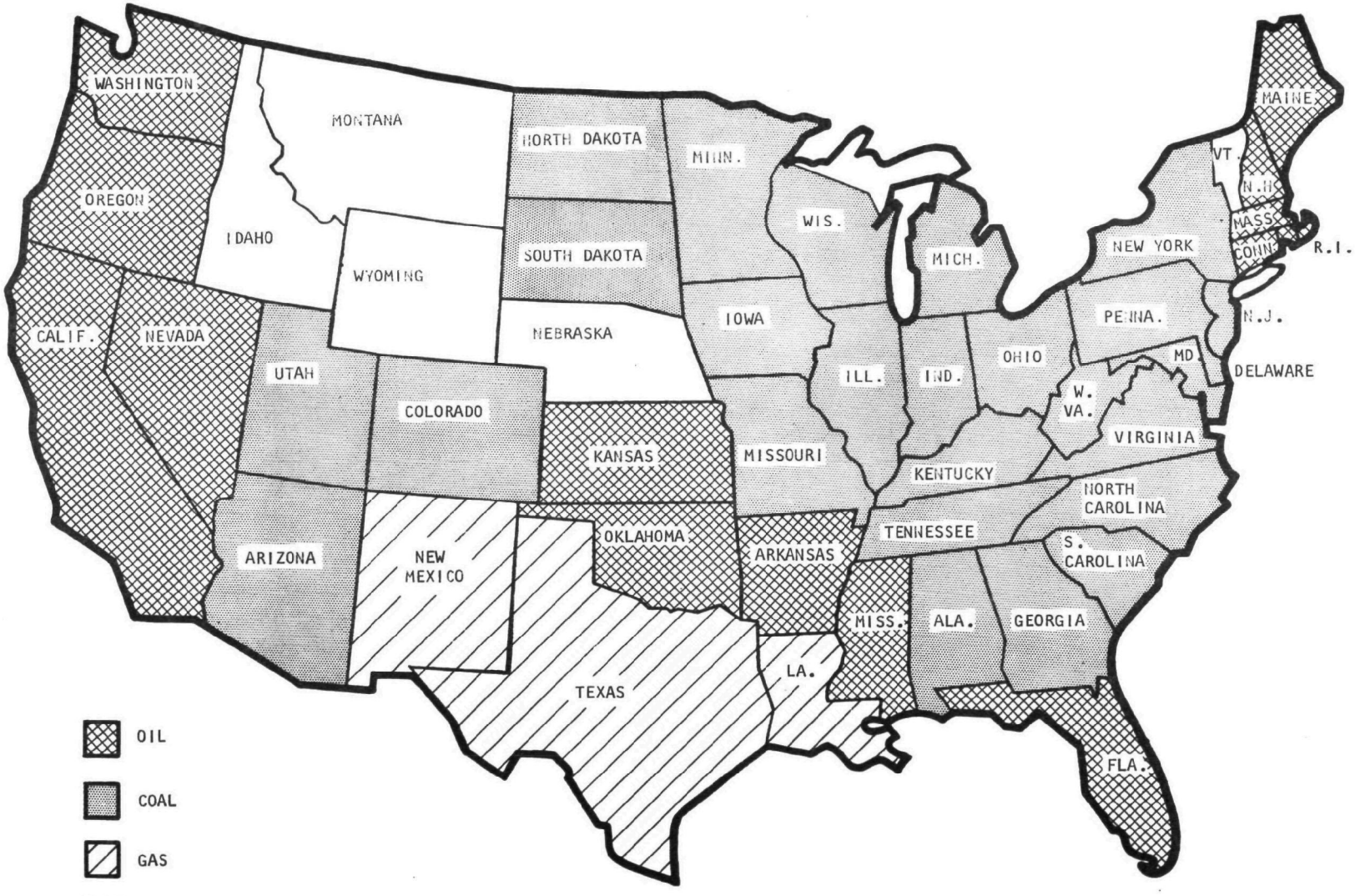

NOTE; EACH STATE IS SHADED TO REPRESENT MORE THAN 50% OF ITS FOSSIL GENERATION BY FUEL TYPE.

Figure A-1—United States fossil generation overview

Table A-5

UNITED STATES FOSSIL FUEL GENERATION SURVEY[a,b]

State	Gas	Oil	Coal
Alabama			3206
Alaska	(Hydro & diesel)	-	-
Arizona			700
Arkansas		30	
California		16682	1600
Colorado		375	1220
Connecticut		1609	633
Delaware		365	497
District of Columbia		573	2961
Florida	75	9859	1331
Georgia	112	318	4064
Hawaii		935	
Idaho	-	-	-
Illinois		1209	11959
Indiana		46	7535
Iowa		117	393
Kansas		1484	540
Kentucky			2996
Louisiana	3654	1269	
Maine		381	
Maryland		1021	1412
Massachusetts		3647	867
Michigan		427	7851
Minnesota		202	2634
Mississippi	686	1231	200
Missouri		562	4973
Montana	(Hydro)	-	-
Nebraska	(Diesel	-	-
Nevada		275	234
New Hampshire		317	
New Jersey		2406	5883
New Mexico	334		206
New York		6689	7278
North Carolina		16	7873
North Dakota		2	113
Ohio			19196
Oklahoma		3153	164
Oregon		479	
Pennsylvania		1605	8134
Rhode Island		215	62
South Carolina		98	1489
South Dakota			116
Tennessee			15124
Texas	18843	418	-
Utah		305	561
Vermont	(Hydro & Diesel)		
Virginia		1427	6022
Washington		87	-
West Virginia		-	1173
Wisconsin		95	182
Wyoming	(Diesel)		
TOTAL	23,704	59,961	131,382

[a] Information extracted from Electrical World Directory of Electrical Utilities, 1971-1972.
[b] In MW.

APPENDIX B

PRELIMINARY DESIGN PROCESS DESCRIPTION

INTRODUCTION

The chemically active fluidized bed (CAFB) demonstration plant is a facility which will demonstrate system operability, environmental performance, boiler performance, and process retrofit capability. It will also provide a projection of the economics of an ultimately commercial oil gasification process. The demonstration plant has been designed with sufficient flexibility to enable the exploration and determination of optimum operating conditions and operating procedures.

The demonstration plant consists of five major processing systems:

- Reaction
- Stone processing
- Limestone handling
- Fuel-oil handling
- Waste/by-product stone handling.

The general function of the reaction system is to generate a low heating-value fuel gas for utilization by the boiler. The stone processing system employs a dry sulfation process to convert the spent sorbent into a form suitable for disposal or by-product utilization. The remaining three systems store and carry the raw materials (residual oil and limestone) and the waste or by-product materials (sulfated limes) which are utilized in the process.

REACTION SYSTEM

The reaction system boundaries and components are shown on Figure B-1. The reaction system consists of

- A gasifier
- A regenerator
- Solids transport components
- Particulate removal components

- Air and stack-gas compression components
- Fuel-gas handling and combustion components
- Heat exchange components
- A purge and transport gas (PTG) system.

General

The process logic is as follows: Residual fuel oil is fed to the gasifier at 12,700 kg/hr (28,000 lb/hr) along with limestone at 1,070 kg/hr (2,355 lb/hr), air at 32,100 kg/hr (70,604 lb/hr) and stack gas for temperature control at 30,800 kg/hr (67,020 lb/hr). Oil cracking, partial oxidation, and hydrogen sulfide (H_2S) absorption proceed at 880°C (1616°F) in the gasifier to generate 76,000 kg/hr (167,175 lb/hr) of low heating-value fuel gas. The reaction mechanisms involved in the gasification step have been described in detail previously.[1,2] The hot fuel gas flows to the four boiler burners through four separate refractory-lined pipes, where combustion is completed for steam generation. The sulfided lime (∿ 6 wt % calcium sulfide [CaS]) is transported pneumatically to the regenerator vessel at 31,400 kg/hr (69,419 lb/hr). The calcium sulfide stone and the carbon (∿ 0.3 wt % $CH_{1/2}$) are reacted with preheated air at a temperature of 1075°C (1970°F) to generate calcium oxide (CaO), calcium sulfate, sulfur dioxide (SO_2) (8 mole %), and water vapor. Regenerated sorbent is recirculated to the gasifier at 32,400 kg/hr (71,615 lb/hr). The sulfur dioxide gas at 3,980 kg/hr (8,778 lb/hr) and a regenerated stone purge stream at 297 kg/hr (655 lb/hr) are removed from the reaction system for processing in the stone processing system (dry sulfation process). Regenerator chemistry has also been previously described in detail.[1,2]

Solids Transport Components

Solids transport components are utilized to carry stone between the gasifier and regenerator, to transport the regenerator stone purge stream to the stone processing system, to recycle gasifier fines collected in the gasifier cyclones to the gasifier and regenerator, and to transport fines collected in the boiler cyclone and the recycled stack-gas baghouse

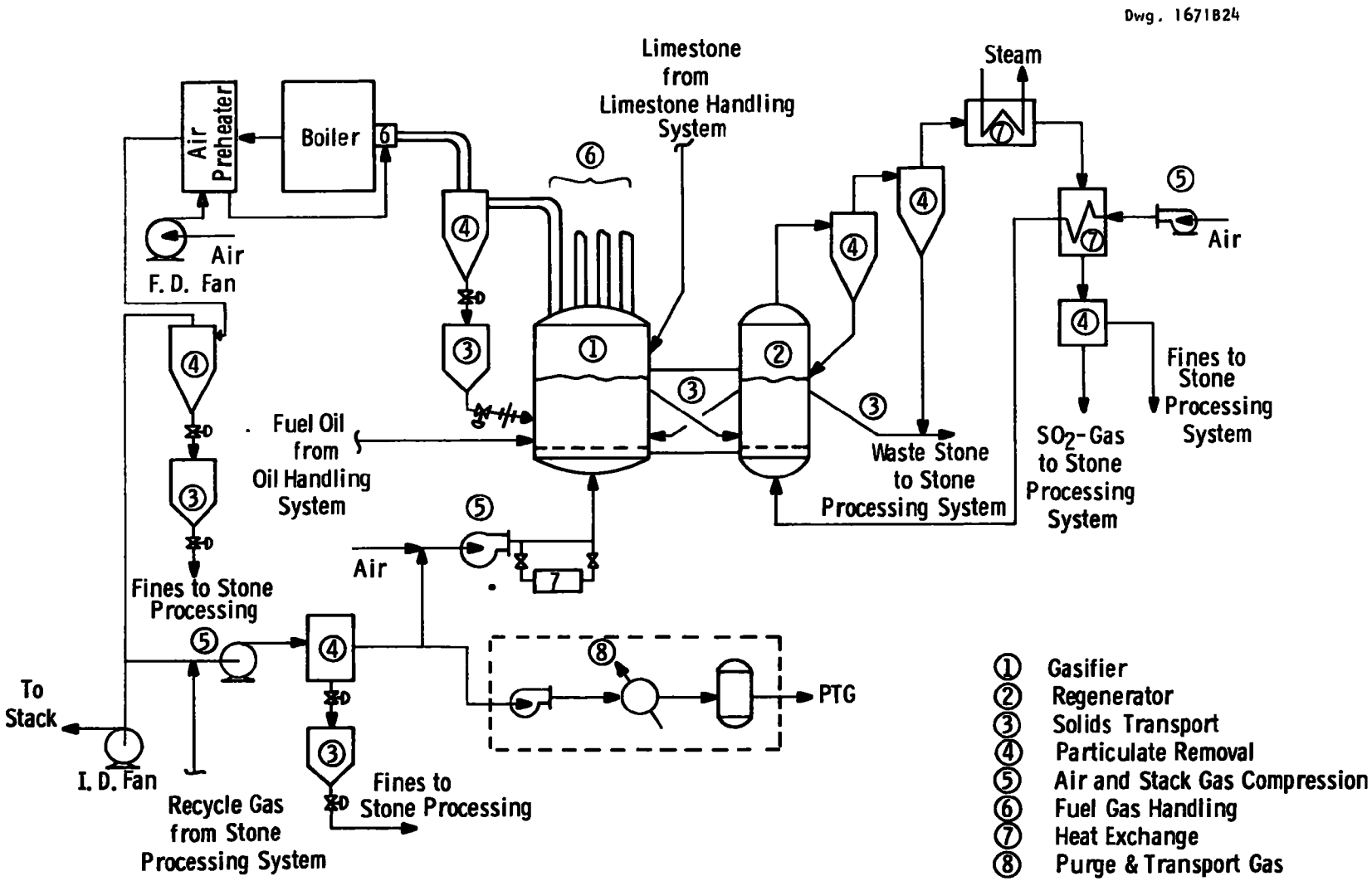

Figure B-1—Reaction system

to the stone processing system. Stone transport between the gasifier and regenerator is carried out using a pulsed transport scheme developed in the Esso Research Centre, Abingdon, England (Esso) pilot plant. The transport ducts are of rectangular cross sections 12.7 cm high, 73.7 cm wide, (5 in. high, 29 in. wide), with a lateral leg about 0.92 m (3 ft) long set at a 30 degree angle to the vertical and a horizontal leg about 0.31 m (1 ft) long set at the base. The whole transport system is formed in a single refractory block connecting the gasifier and regenerator together. Solids in the gasifier enter the lateral leg of the transport duct at a depth of about 0.92 m (3 ft) in the bed. Transport gas is pulsed to the transport leg through a pipe located at the junction between the lateral and horizontal legs periodically to fluidize and defluidize the leg and, thus, periodically permit solids flow. The rate of circulation is controlled by the pulse frequency and the pulse duration. The time-average transport gas rate is about 264 kg/hr (580 lb/hr). Solids return to the gasifier from the regenerator by an identical mechanism. The circulation rate of solids is set to control the regenerator temperature.

The stone purge stream is transported by means of a smaller pulsed transport leg operated by the same principle described above. About 2.7 kg/hr (6 lb/hr) of transport gas is required for this leg, which is used to control the gasifier bed depth.

Cyclones, which are set with insufficient elevation to transport collected fines by gravity, utilize a commercial pulsed transport system (Sturtevant Engineering Company Ltd., London, England) consisting of a lock hopper/control valves arrangement which permits long-distance transport of solids as plugs. The operation of this system in the Esso pilot plant has been described.[3] Four refractory-lined Sturtevant systems are used to return gasifier fines from the four gasifier cyclones. Each system handles a maximum of 780 kg/hr (1,720 lb/hr) of fines, requiring about 6.8 kg/hr (15 lb/hr) of transport gas. Two transport systems return fines directly back to the gasifier, while the other two transport fines to the entrance of the gasifier-to-regenerator transport

duct. This arrangement permits very fine particles to be removed from the gasifier rather than to be circulated continuously through the cyclone-gasifier circuit. The fines are added at the transport duct entrance so that they can mix with the bed material before going to the regenerator and not disrupt regenerator performance. The boiler stack cyclone Sturtevant system carries about 136 kg/hr (300 lb/hr) of fines and the recycle stack-gas baghouse about 7.7 kg/hr (17 lb/hr).

Particulate Removal Components

Conventional cyclone and filter equipment is utilized to control particulate loadings in gas streams for environmental and compression equipment protection. Four parallel refractory-lined cyclones are located in the four fuel-gas lines to collect elutriated bed material from the hot fuel gas before it is combusted. Each of the cyclones handles a maximum of 19,000 kg (42,000 lb) of fuel gas per hour and a maximum of 820 kg (1,800 lb) of fines per hour. The cyclones are elevated so that the total length of hot fuel-gas piping is minimized.

A pair of refractory-lined cyclones is arranged in series to collect fines elutriated from the regenerator. The primary cyclone is designed to return fines of a coarse size (larger than 300 microns in diameter) to the regenerator. The secondary cyclone collects the remaining fines and removes them from the reaction system. Its purpose is to act as an elutriation point for fines which would otherwise be trapped in the system.

A bag filter is situated at the point of regenerator sulfur dioxide gas-release from the reaction system for a final cleaning of the gas prior to its processing in the stone processing system. Fines collected are also transported to the stone processing section. Stack gas recycled for gasifier temperature control also requires a baghouse filter to remove fines before the stack gas is compressed. This baghouse handles 30,800 kg/hr (28,000 lbs/hr) of stack gas which has been cooled to temperatures less than 260°C (500°F) by a water spray. Fines collected

are transported to the stone processing system. The stack gas includes a 5,670 kg/hr (12,500 lb/hr) recycle stream from the stone processing system.

Air and Stack Gas Compression Components

The major reaction system blower supplies air and stack gas to the gasifier at a rate of 62,600 kg/hr (138,000 lb/hr). The exit pressure produced by this blower is 161 kPa (23.3 psia). The regenerator air blower supplies 3,860 kg/hr (8,500 lb/hr) of air at 165 kPa (24.0 psia) for regenerator operation. Recycled stack gas is given a 4.6 kPa (0.7 psi) boost prior to passing through the stack-gas baghouse.

Fuel-Gas Handling Components

Four parallel refractory-lined pipes carry the hot fuel gas from the gasifier vessel to the four boiler burners. All pipe bends and transition regions are smoothed to prevent turbulent mixing regions which lead to carbon/fines deposits. The entrances to the cyclones are points where deposits are likely to form, which causes an increase in system pressure drop. The demonstration plant is equipped with a steam/air injection point at the cyclone inlet to remove deposits and permit continuous gasifier operation.

Heat Exchange Components

Heat exchange equipment is utilized in the reaction system for the purposes of start-up heating of the gasifier and regenerator and for cooling the regenerator sulfur dioxide gas prior to its processing in the stone processing system.

The sulfur dioxide gas from the regenerator is cooled from 1075°C (1970°F) to 315°C (600°F) in a waste heat boiler to raise 1033 kPa (150 psig) steam. The 315°C (600°F) sulfur dioxide gas is then used to preheat the regenerator air stream. The resulting 149°C (300°F) sulfur dioxide gas stream passes through a baghouse for fines collection.

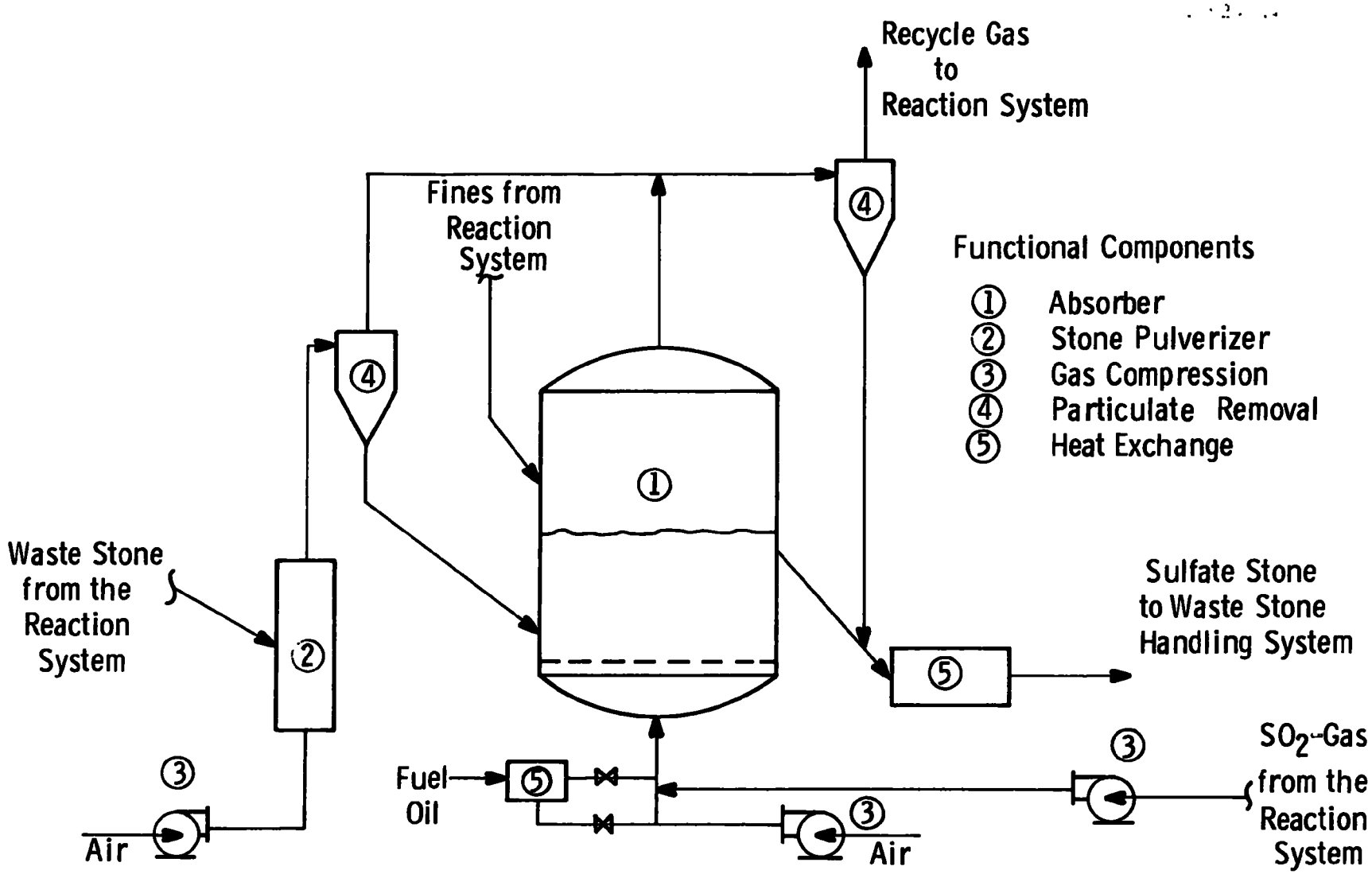

Figure B-2—Stone processing system (dry sulfation)

Purge and Transport Gas Component

A small portion of the recycled stack gas (about 635 kg/hr [1400 lb/hr]) is used for instrument purge gas and for solids transport in the demonstration plant with stone streams which cannot be transported with air. The purge and transport gas is withdrawn after recycling in the stack-gas baghouse, is compressed to about 345 kPa (35 psig), and is cooled to about 38°C (100°F). The gas cooler is followed by a water separator to eliminate the corrosive water vapor in the gas. The small amount of separated water contains sulfur dioxide and is recycled to the gasifier, where it is combined with the fuel-oil feed stream. The purge and transport gas is then distributed to numerous components in the plant, the major user being the pulsed stone circulation component.

Gasifier and Regenerator Vessels

The gasifier and regenerator vessels are conventional refractory-lined fluidized bed vessels with carbon-steel shells. The gasifier has an inner diameter of about 5.95 m (19.5 ft). The design basis bed depth is 1.22 m (4 ft), and the freeboard height is about 5.5 m (18 ft). The air distributor is of a refractory construction to allow a start-up temperature below the grid of 760°C (1400°F). Fuel oil is injected into the gasifier bed at a level of about 15.2 cm (6 in) above the grid through three independent oil rings surrounding the vessel which distribute oil to about 60 horizontal injection tubes, with one injection point per 0.47 m^2 (5 ft^2) of bed cross section. A single vertical baffle wall is placed in the bed and the regenerated stone inlet to the gasifier is situated on the side of the baffle opposite to the gasifier stone outlet to guarantee that the general circulation pattern will not bypass the bulk of the bed. The transport leg outlet is set at a 0.92 m (3 ft) bed depth, and the inlet from the regenerator is set at a 15.2 cm (6 in) bed depth. Four fuel-gas outlets are arranged in the top of the gasifier.

The regenerator design is similar to that of the gasifier. The regenerator vessel has a 1.37 m (4.5 ft) diameter and is designed on the basis of a 1090°C (2000°F) operating temperature. No flow baffles are

utilized in this regenerator. In addition to the circulating stone inlet and outlet, the regenerator has a waste stone drain line located in the wall at about a 0.92 m (3 ft) bed depth.

Control

The major control points in the reaction section of the demonstration plant are the gasifier temperature and bed depth, and the regenerator temperature and bed depth. The gasifier temperature is controlled at about 870°C (1600°F) by the rate at which stack gas is recycled to the unit. The demonstration plant can also utilize steam or water injection as a method for gasifier temperature control. The gasifier bed depth is controlled by the rate at which stone is withdrawn from the regenerator through the waste stone line. The pressure differential across the gasifier bed controls the transport gas pulsing rate to this withdrawal leg.

The regenerator temperature is controlled by the rate of stone circulation between the gasifier and regenerator. The transport gas pulsing rate to the gasifier-to-regenerator transport leg is controlled by the regenerator temperature measurement. The regenerator bed depth is controlled by the regenerator-to-gasifier transport leg pulsing rate. An emergency quench system also exists for the regenerator in case of a temperature overshoot.

The performance of the gasifier and regenerator is not too sensitive to these control points so the control system response may be slow over a large operating range. Other important performance variables, such as the gasifier sulfur removal efficiency and the regenerator product-gas sulfur dioxide and carbon dioxide contents, will be monitored and controlled manually by setting the fresh limestone feed rate, the air-to-fuel ratio, the regenerator air rate, and the set points for the automatically controlled parameters.

Turndown

The demonstration plant is designed to operate stably at

specified levels of performance down to a partial load of 25 percent of full plant capacity. The stability of the reaction system is limited by the minimum operable fluidization velocity in the regenerator and gasifier. The minimum operable fluidization velocity of these units is one-half of the full capacity design velocity, so a turndown of the reaction system to 50 percent of full capacity can be carried out by a simple linear reduction by 50 percent in the capacity of all process streams. Further reduction in the plant output must be carried out by increasing the gasifier air/fuel ratio to such a degree that the 0.92 m/sec (3 ft/sec) minimum operating fluidization velocity is maintained.

The minimum operable regenerator fluidization velocity of 0.92 m/sec (3 ft/sec) is maintained by operating the regenerator with high excess air. This procedure may reduce the regenerator performance (product-gas sulfur dioxide concentration reduced and rate of calcium sulfate generation increased) but will not disrupt the plant performance significantly.

Turndown of the other components in the reaction system is facilitated by conventional practices.

Flexibility

The reaction system in the demonstration plant is designed on the basis of the best existing pilot-plant data, but the demonstration plant is also designed with the flexibility of an experimental installation to reflect the uncertainties involved in the scale-up of the pilot-plant information, the integration of the process with a full-scale power plant, the turndown performance of the plant, and operating procedures; and also to allow the testing of many operating and design options. The capacity and complexity of all the components in the reaction system are increased by this requirement for flexibility.

STONE PROCESSING SYSTEM

The boundaries and components of the stone processing system are defined in Figure B-2. Dry sulfation has been selected as a means to process the waste stone from the reaction system in the demonstration plant.

The dry sulfation stone processing system consists of an absorber component, a stone pulverizer component, gas-compression components, particulate removal components, and heat exchange components, as is shown in Figure B-2.

General

The dry sulfation process contacts the waste stone from the reaction system and the boiler cyclone with the sulfur dioxide product-gas from the regenerator to produce a highly sulfated by-product stone and a low concentration sulfur dioxide gas stream which is recycled to the gasifier. This contacting is carried out at about 870°C (1600°F) in a fluidized bed absorber. In order to enhance the rate of absorption and the degree of sulfation of the stone, the stone is pulverized while hot to an average size of about 75 microns before being contacted with the sulfur dioxide. The kinetics of this reaction have been described in Appendix L. The sulfated by-product stone from the absorber is cooled and transported to the waste stone handling system.

Stone Pulverizing Component

The 1075°C (1970°F) waste stone from the regenerator is pulverized by jet grinding in a commercial grinding device (Fluid Energy Processing and Equipment Co., Jet-O-Mizer). A single pulverizer (refractory lined) handles about 435 kg/hr (960 lb/hr) of stone, producing material with an average diameter of about 75 microns. About 1130 kg/hr (2,500 lb/hr) of air at 517 kPa (75 psia) is required for the jet pulverizing operation.

Gas-Compression Components

Three blowers are utilized in the stone processing system:

- A compressor for stone pulverization
- An air blower for the absorber, which provides air temperature excess oxygen in the absorber

- A blower which handles the sulfur dioxide gas stream from the reaction system.

The pulverizer compressor requirements are 1130 kg/hr (2500 lb/hr) air at 517 kPa (75 psia). The absorber air requirements are about 1500 kg/hr (3,300 lb/hr) air at 159 kPa (23 psia). The sulfur dioxide blower compresses about 3630 kg/hr (8,000 lb/hr) of gas from 97 kPa (14.0 psia) to 155 kPa (22.5 psia).

Particulate Removal Components

High efficiency refractory-lined cyclones are located at the pulverizer and absorber exits. The pulverizer cyclone removes about 95 percent of the pulverized solids and transports them to the absorber by gravity drainage. The absorber product-gas is combined with the pulverizer air stream; and the combined streams pass through the absorber cyclone, where 95 percent of the fines are removed and drained to the waste stone cooler.

Heat Exchange Components

Sulfated stone from the absorber and fines drained from the absorber cyclone are cooled and conveyed in a Holoflite screw conveyor at a rate of about 1360 kg/hr (3000 lb/hr). These solids are handled by the waste stone handling system.

A conventional oil burner is utilized to heat the absorber air for start-up and for absorber turndown where the rate of heat generation in the absorber will not maintain the 870°C (1600°F) absorber temperature.

Absorber

The absorber is a fluidized bed reactor having a design very similar to the gasifier vessel. Its inner diameter is about 6.1 m (20 ft). The bed depth is 1.22 m (4 ft), and the freeboard height is about 5.5 m (18 ft). No baffle flow restrictions are utilized in the absorber because of the long stone residence time (∿50 hr). A

refractory distributor design similar to that of the gasifier distributor is used. A single stone inlet point handles the pulverized stone from the pulverizer cyclone and the fines streams from other points in the plant. A single stone outlet removes the sulfated stone from the absorber. The outlet is in the form of an overflow wire which controls the bed height. The fluidization velocity in the unit is about 0.12 m/sec (0.40 ft/sec), which is many times the minimum fluidization velocity of the pulverized material. For this reason turndown of the absorber is facilitated simply by reducing the fluidization velocity proportionally to the plant output.

SUPPORT SYSTEMS

The limestone handling systems, the fuel-oil handling system, and the waste stone handling system function to support the two major processing systems in the demonstration plant which have been described. These three support systems are all of a conventional nature and are not described in any detail. The limestone handling system receives, stores, and feeds limestone at a controlled rate of about 1135 kg/hr (2500) lb/hr to the gasifier. The fuel-oil handling system receives, stores, and feeds high-sulfur residual oil to the gasifier at 12,700 kg/hr (28,000 lb/hr). The waste stone handling system transports and stores waste stone at about 1360 kg/hr (3,000 lb/hr).

REFERENCES

1. Craig, J.W.T., G. Moss, J.H. Taylor, D.E. Tisdall. Sulfur Retention in Fluidized Beds of Lime under Reducing Conditions. (Proceedings of the 3rd International Conference on Fluidized Bed Combustion, EPA, Hueston Woods, Ohio, 1972.) p. 379.

2. _____. Study of Chemically Active Fluid Bed Process for Sulfur Removal during Gasification of Heavy Fuel Oil. Interim Report for 1974, EPA Contract No. 68-02-0300.

3. _____. Final Report for 1974, EPA Contract No. 68-02-0300.

C

APPENDIX C

DEMONSTRATION PLANT SITE

APPENDIX C

DEMONSTRATION PLANT SITE

The 46 MW unit, No. 12, at the Manchester Street Station of Narragansett Electric Company, Providence, R.I., was selected by New England Electric System for the demonstration plant program. Power plant layout drawings and an elevation drawing of unit No. 12 are shown in Figures C-1, C-2, and C-3. A summary of the plant design and operating characteristics is presented in Table C-1.

Table C-1

POWER PLANT DESIGN AND OPERATING CHARACTERISTICS

Unit No. 12

Manchester Street Station

Capacity	46 MW
Heat rate	1.48 MJ/kWh
Steam conditions	8446 kPa (1225 psi)/510°C (950°F)
Burners	
Number	6
Capacity	84.4 GJ/hr (80 x 10^6 Btu/hr)
Fuel	coal 1949-1967
	gas 1967-1970
	oil 1970-present
Operation	daily cycling
	on-line between 8 and 50 MW
	16-20 hr/day

PAGE NOT

AVAILABLE

DIGITALLY

PAGE NOT

AVAILABLE

DIGITALLY

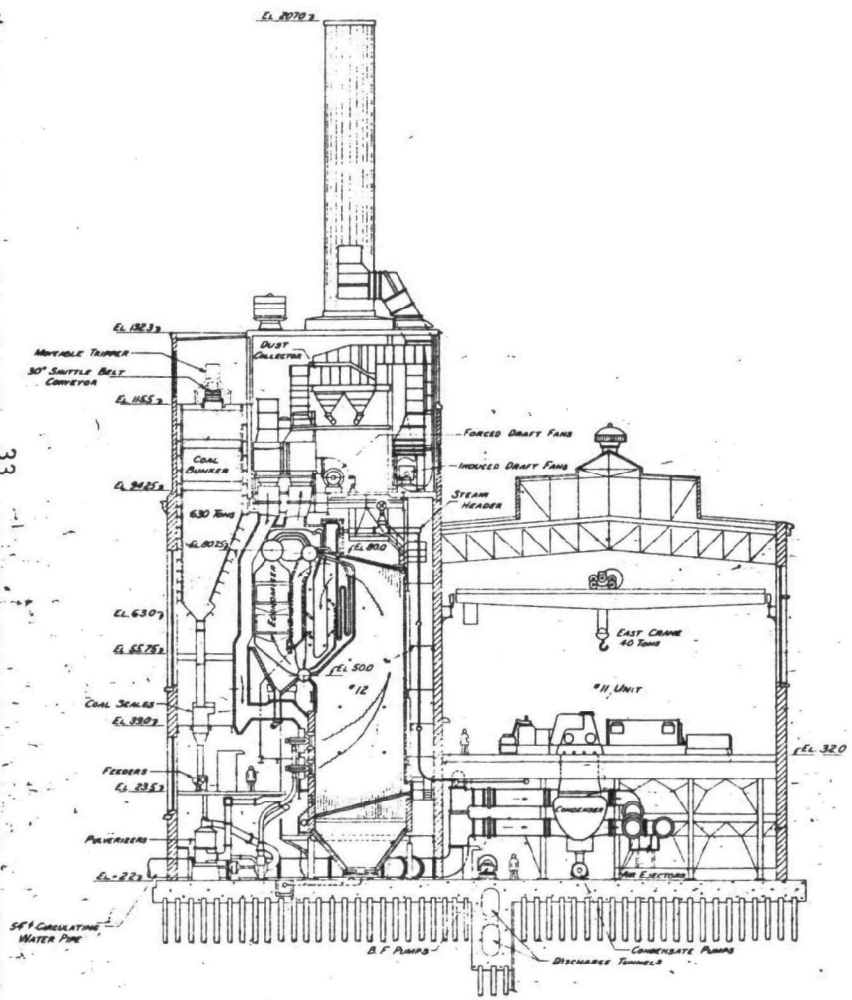

GENERAL SECTION THROUGH UNIT #11 LOOKING WEST

Figure C-3—Manchester Street Station basement floor plan

COMPANION SHEETS

General Plan Station & Yard	B-233
Basement Floor Plan	B-234
Operating Floor Plan	B-235
Miscellaneous Floor Plans	B-236
General Plan of yard & Coal Handling Facilities	B-264

NEW ENGLAND POWER SERVICE COMPANY
PART OF NEW ENGLAND ELECTRIC SYSTEM
BOSTON, MASS.

THE NARRAGANSETT ELECTRIC CO
MANCHESTER ST. STATION
PROVIDENCE R. I.
POWER PLANT
SECTIONS

B-511

APPENDIX D

D

FLUIDIZED BED OIL GASIFICATION DEMONSTRATION PLANT DESIGN BASIS

APPENDIX D

FLUIDIZED BED OIL GASIFICATION DEMONSTRATION PLANT DESIGN BASIS

The design basis for the demonstration plant is tabulated under four general divisions - overall plant considerations and reaction, stone processing, and support sections. Explanations for the listed bases are included as notes.

OVERALL PLANT CONSIDERATIONS

- Plant - New England Electric System (NEES) Manchester Street Station, boiler No. 12
- Plant size - ∿ 50 MW
- Plant sulfur removal efficiency - 90%
- Plant turndown ratio - 4:1
- Plant points of sulfur (S) emissions - from boiler stack only; all other sulfur-containing streams are recycled to gasifier.
- Boiler excess air - 6%
- Stack gas temperature - 149°C (300°F)
- Boiler cyclone (existing) efficiency - 85%
- Fines elutriated to boiler - all calcium sulfide (CaS) in the fines are converted to calcium oxide (CaO) and sulfur dioxide (SO_2): all carbon on fines is burned off; all fines pass through the boiler.

REACTION SECTION — MAJOR COMPONENTS

Gasifier

- Chemistry - See Figure D-1[1]
- Operating conditions

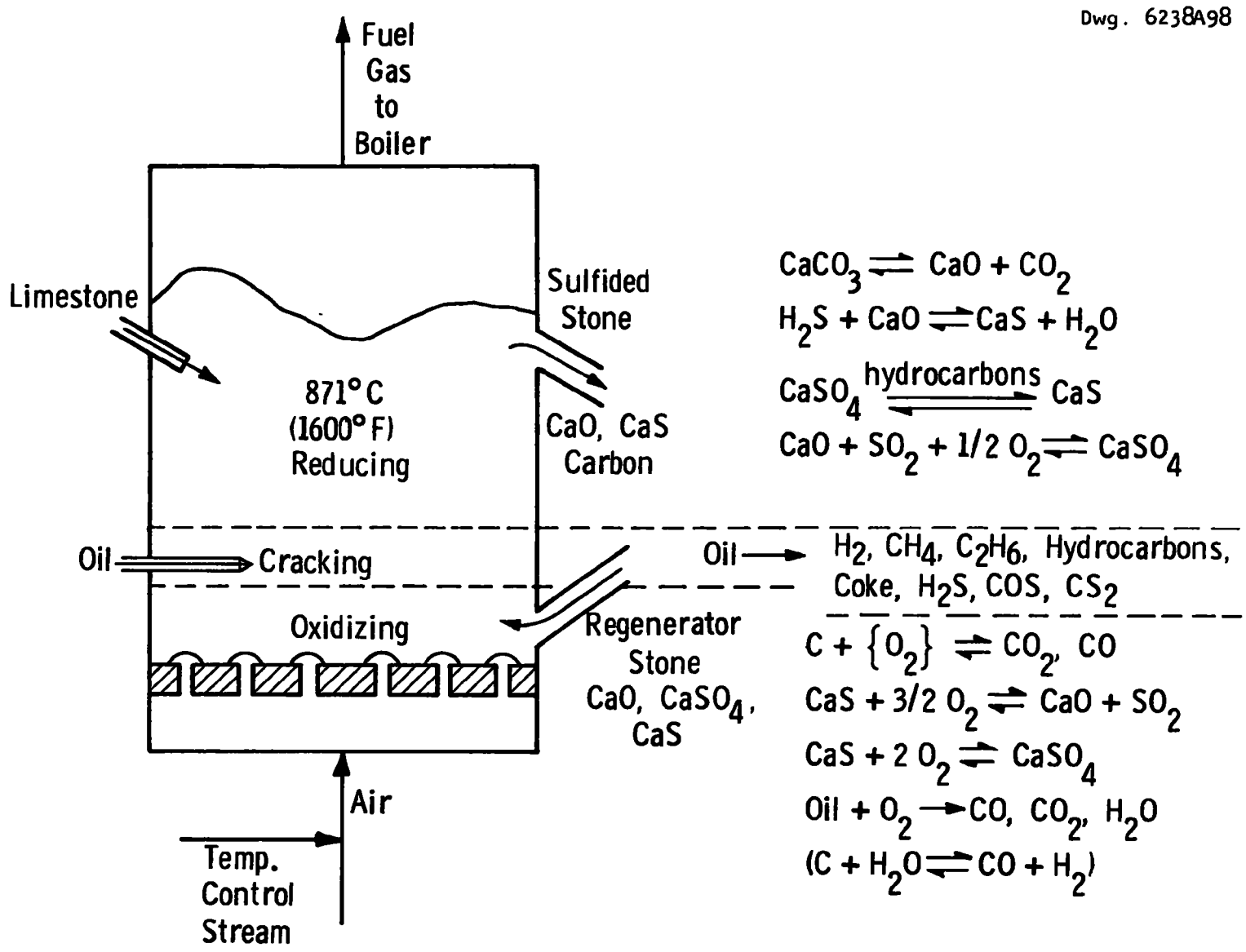

Figure D-1—Gasifier fundamentals

- Bed temperature - 880°C[2] (1616°F)
- Gas space pressure - 17.9 kPa (2.6 psig)[3]
- Maximum bed depth - 1.22 m (4 ft)[4]
- Superficial fluidization velocity - 1.83 m/s (6 ft/sec)[5]

- Flow rates and composition
  - Fuel oil rate - 12,700 kg/hr (28,000 lb/hr)
  - Fuel oil composition - see Table D-1
  - Fuel oil temperature - 93°C (200°F)
  - Air rate - air/fuel ratio of 20% of stoichiometric[6]
  - Limestone feed rate - 0.5 to 1.5 x stoichiometric,[7] normal being stoichiometric based on fuel-oil/sulfur feed rate
  - Limestone composition - see Table D-1
  - Limestone size = 300-3175 microns (μ)
  - Fuel-gas composition - see Table D-2[8]
  - Sulfided lime composition - 3 wt% S, 0.3 wt% S as calcium sulfate ($CaSO_4$)
  - Sulfur removal efficiency - 90% overall plant
  - Fines elutriation rate - 3,175 kg/hr (7,000 lb/hr)[9]
  - Elutriated fines composition - same as bed[10]
  - Stack gas for temperature control - ∿35,000 kg/hr (77,200 lb/hr)
  - Stack-gas composition - based on 6% excess air to boiler burners
  - Metals retention - 100% vanadium (V), 75% nickel (Ni), 36% sodium (Na)
- Operation
  - Temperature control - stack-gas recycle[11]
  - Turndown ratio - 4/1
  - Turndown method - adjustment of air/fuel ratio to minimize velocity reduction during turndown[12]
  - Burnout - provision for continuous steam/air injection into gasifier cyclone entrances/or flue gas burnout during shutdown[13]
  - Staging - no special considerations for horizontal staging of gasifier[14]

Table D-1

FLUIDIZED BED OIL GASIFICATION DEMONSTRATION PLANT

Raw Materials and Product Gas

Material	Composition, wt %	Metals content, ppm
Limestone - BCR 1359		
CaO	54.1	
MgO	0.60	
SiO_2	0.75	
Fe_2O_3	0.09	
Al_2O_3	0.31	
CO_2	44.0	
S (total)	0.12	
V		50
Na		< 20
Ni		30
Fuel Oil[a], No. 6		
S	2.6 (3.0 max.)	
C	85.9	
H_2	11.0	
O_2	0.1	
W_2	0.4	
V		442
Na		30
Ni		52
I		14

[a]300 SSU at 60°C (140°F) viscosity;
41.8 x 10^6 kJ/m^3 (150,000 Btu/gal) gross (high) heat value)
12.8° API gravity

Table D-2

FLUIDIZED BED OIL GASIFICATION PROCESS
FUEL-GAS CHARACTERISTICS

Composition	Mole %[a]	Weight %[b]
N_2	57.0	58.70
CO	10.3	9.55
CO_2	9.7	14.60
H_2	10.0	0.28
CH_4	6.5	2.31
C_2H_4	5.8	4.96
C_3H_6	0.5	0.41
C_4H_8	0.2	0.37
Condensable tars, soot	--	5.61 C + 0.92 H_2
H_2S	--	0.20
H_2O	--	1.99

[a]Actual product analysis.

[b]Estimated chemical analysis.

- Start-up - external direct heating air heater for 788°C (1450°F) start-up air

- Design factors
  - Freeboard - 6.1 m (20 ft)
  - Baffles - single vertical baffle[15]
  - Number of fuel-gas outlets - 4 (one per burner)
  - Stone inlet location - ∿ 127 mm (5 in) above distributor
  - Stone outlet location - 0.916 m (3 ft) above distributor
  - Distributor - single plate of refractory construction (Harbison-Walker design)
    . 12.4 kPa (1.8 psi) maximum ΔP at maximum flow rate[16]
    . 38.2 m/s (125 ft/sec) efflux velocity at maximum flow rate[17]
    . 10.75 chimney per m^2 (1 chimney per ft^2)/4 holes per chimney
    . Start-up temperature of 788°C (1450°F)[18]
  - Fuel-oil injection - horizontal pipes with one injection point per 0.465 m^2 (5 ft^2) set at 127 mm (5 in) above distributor[19]
  - Gasifier elevation - minimum required for construction and maintenance (to minimize fuel-gas piping length)
  - Number of gasifier modules - 1.[20]

<u>Regenerator</u>

- Chemistry - see Figure D-2[21]
- Operating conditions
  - Bed temperature - 1080°C (1976°F)[22]
  - Gas space pressure - 0-2488 Pa (0-10 in) H_2O less than gasifier pressure[23]
  - Maximum bed depth - 1.22 m (4 ft)
  - Superficial fluidization velocity - 1.83 m/s (6 ft/sec)
- Flow rates and compositions

Dwg. 6238A99

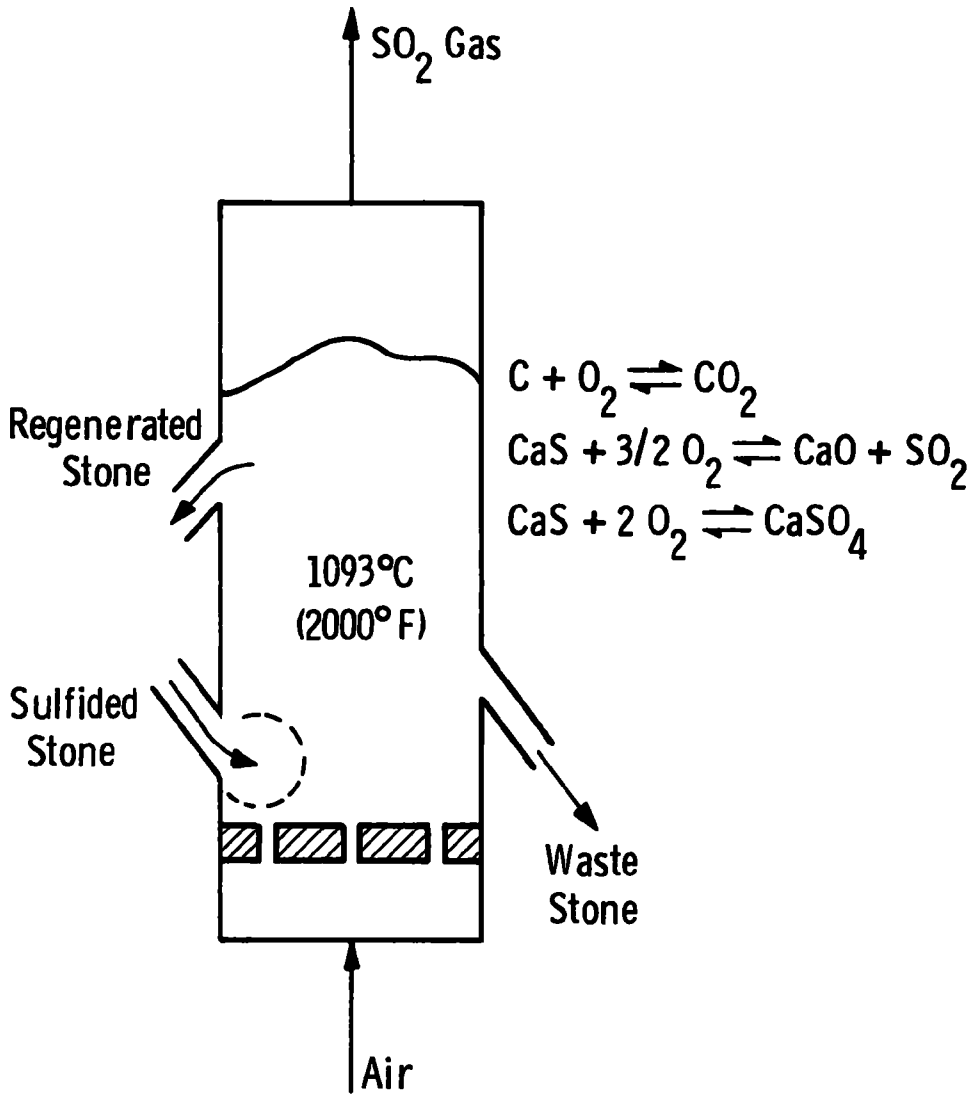

Figure D-2—Regenerator fundamentals

- Product-gas composition - 8 mole % SO_2, 6% carbon dioxide (CO_2), 0.05 percent oxygen (O_2), 2% H_2O,[24] N_2
- Regenerated stone composition - CaO, CaS, $CaSO_4$, inerts[25]
- Fines elutriation rate - 191 kg/hr (420 lb/hr)[26]
- Fines composition - same as bed
- Air - preheated by exchange with regenerator SO_2 product

- Operation
  - Temperature control - stone circulation rate, with emergency quench for temperature overshoot[27]
  - Turndown method - reduction in regenerator SO_2 concentration when maximum velocity reduction is reached by excess air/stack gas[28]
  - Staging - no special considerations for horizontal staging[29]
  - Start-up - utilize gasifier start-up heater
- Design factors[30]
  - Freeboard - 5.5 m (18 ft)
  - Baffles - none[29]
  - Stone inlet location - ∿ 127 mm (5 in) above distributor
  - Stone outlet location - 0.916 m (3 ft) above distributor[31]
  - Distributor - (Harbison-Walker)
    . 13.8 kPa (2 psi) pressure drop at maximum flow rate[16]
    . 38.2 m/s (125 ft/sec) efflux velocity[18]
  - Regenerator elevation - same as gasifier
  - Number of regenerator modules - 1[32]
  - Regenerator primary cyclone - remove 80% of fines > 300μ and returns to regenerator
  - Regenerator secondary cyclone - high efficiency (95%) with fines drained to pulverizer.[33]

<u>Solids Circulation System</u>

- Flows
  - Solids rate - up to 45,360 kg/hr (100,000 lb/hr)[34]

- Carrier gas - about 80.3 dm^3/S (170 scfm) per pulser (maximum)[35]

- Operation
  - Turndown - by flue gas pulsing rate[36]
  - Constraints - solids cannot sit in presence of oxygen due to the possibility of the occurrence of particle agglomeration[37]
- Design factors
  - Valves - camflex type
  - General - fit into cylindrical gasifier and regenerator vessel designs as refractory block[38] (Harbison-Walker)
  - Gasifier/regenerator separation - about 0.305 m (1 ft)
  - Transfer duct height - 127 mm (5 in)[39]
  - Transfer duct width - 645 mm (29 in)[39]
  - Flue gas distribution for pulsing - 508 mm (2 in) I.D. pipe with 803 mm (3.16 in) holes spaced at 25.4 mm (1 in) intervals and located horizontally across duct at duct base.
  - Thermal expansion - regenerator mounted on flexible base.[40]

<u>Gasifier Cyclones and Fine Return - Design Factors</u>

- Number of cyclones - 4
- Cyclone overall efficiency - 90%
- Cyclone elevation - set to minimize fuel-gas piping length
- Cyclone fines return - Sturtevant Pulse Phase Powder Conveyor
- Number of Sturtevant Systems - 4 (1/cyclone).
- Fines return distribution - two return fines to the gasifier, two return fines to the entrance of the gasifier-to-regenerator stone transport line[41]
- Fines return system cycle time - about three minutes[42]
- Valves - use high-temperature valves for Sturtevant system.[43]

Fuel Gas Ducts - Design Factors

- Design velocity - increase from pilot plant basis of 18.3 m/s (∿60 ft/sec) to 45.8 m/s (150 ft/sec)
- Length - minimum required
- Shape - smooth entrances, bends, and so on, to reduce turbulence and resulting deposits at these points
- Valves - eliminate valves in fuel-gas lines.[44]

Air and Stack-Gas Recycle Circuits

- Pressure drop - minimize losses by proper design of blower controls, air lines, and so forth (13.8 kPa [2 psi] drop estimated between gasifier blower exit and gasifier plenum)[45]
- Blower - single gasifier blower for air and recycled stack gas.

Other Items

- Burners - 4
- Start-up heater
- Baghouse - handles stack-gas recycle and recycled absorber product-gas[46] fines sent to absorber
- Purge transport gas (PTG) blower[47] - assumes 310 kPa (45 psia) exit pressure
- Stack-gas recycle fan
- Waste heat boiler - cools regenerator SO_2-gas to 315°C (600°F)
- Regenerator air preheater - regenerative heating to cool regenerator SO_2-gas from 315°C (600°F) to 149°C (300°F)
- PTG cooler and water separator
- Limestone feeding system - based on 1.5 x stoichiometric

STONE PROCESSING SECTION MAJOR COMPONENTS — DRY SULFATION CONCEPT[48]

Spent Stone Pulverizer

- Operating conditions - maximum temperature - 500°C (932°F)[49]
- Flow rates

- Spent stone from regenerator drain and second-stage cyclone flow to pulverizer by Esso pulsed flow
- Spent stone size - -10 mesh (see Regenerator)
- Pulverized stone size - 95% 900μ (170 mesh), 5% 640μ (230 mesh); average size $\sim$ 75μ (200 mesh)
- Pulverizer air rate - air at 515 kPa (74.7 psia); based on pulverizer requirements[50]

- Operation
  - Turndown - reduced pulverizing efficiency as velocity is reduced
  - Temperature control - steam injection can be used to avoid high-temperature conditions[49]
- Design Factors
  - Pulverizer type - Jet-O-Mizer, Fluid Energy Processing and Equipment Company, Hatfield, Pennsylvania
  - Number of units - 1
  - Transfer of stone from regenerator to pulverizer - by Esso solids transport scheme
    - About 25.8 cm^2 (4 in^2) duct cross-sectional area
    - About 1.415 dm^3/s (3 cfm) transport gas required.

<u>Pulverizer Air Compressor - Operating Conditions</u>

- Inlet pressure - 100 kPa (14.6 psia)
- Outlet pressure - 515 kPa (74.7 psia)
- Inlet temperature - ambient.

<u>Pulverizer Cyclone - Design Factors</u>

- Type - high efficiency (95%); conventional design
- Number - 1
- Cyclone drain - into absorber by dense standleg
- Pulverizer gas - to inlet of absorber cyclone.

Absorber

- Operating Conditions
  - Bed temperature - 870°C (1608°F)[51]
  - Maximum bed depth - 1.22 m (4 ft)[52]
  - Superficial fluidization velocity - 0.122 m/s (0.40 ft/sec)[53]
- Flow rates and composition
  - Regenerator SO_2-gas rate - see Regenerator
  - Regenerator SO_2-gas composition - see Regenerator
  - Absorber air rate based on temperature control[54]
  - Pulverizer stone rate - see Pulverizer
  - Pulverizer stone composition - see Regenerator
  - SO_2 absorption efficiency - 90%
  - Fines elutriation rate - 68 kg/hr (150 lb/hr)[55]
  - Fines particle size - < 30μ
  - Fines composition - same as absorber bed material[56]
  - Sulfated stone particle size - same as pulverizer product stone
- Operation
  - Temperature control - by excess air control or fuel combustion
  - Turndown method - velocity reduction[57]
  - Start-up - fuel combustion flue gas into distributor
- Design Factors
  - Type of reactor - fluid bed[58]
  - Staging (horizontal) - none
  - Staging (vertical) - none; space available for second-stage absorber if necessary
  - Number of units - 1[59]
  - Freeboard height - 6.1 m (20 ft)[55]
  - Baffles - none[60]
  - Pulverized stone inlet - set at absorber wall at maximum bed depth level of 1.22 m (4 ft)[61]
  - Sulfated stone outlet - single overflow outlet set at

wall opposite stone inlet at 1.22 m (4 ft) above distributor;[61] dense phase drain to stone cooler

- Distributor[62]
  . Single refractory construction
  . 13.8 kPa (2 psi) pressure drop based on maximum flow
  . 38.2 m/s (125 ft/sec) efflux velocity - see Gasifier
  . $172/m^2$ (16 chimneys per ft^2)/8 holes per chimney[63]
  . Start-up temperature of 788°C (1450°F).

Absorber Cyclone

- Operating conditions
  - Temperature - 870°C (1608°F) (absorber gas inlet)
    - 500°C (932°F) maximum (pulverizer gas inlet)
- Flow rates - see Absorber and Pulverizer
- Design factors
  - Type - high efficiency, such as Aerodyne
  - Number - 1 (depending on sizes available)
  - Efficiency - removes 98% > 10μ
  - Cyclone drain - into stone cooler by dense phase standleg.

Absorber Air Blower

- Operating conditions
  - Inlet pressure - 100 kPa (14.6 psia)
  - Outlet pressure - 155 kPa (22.5 psia)
  - Inlet temperature - ambient
- Flow rate
  - Air rate - set by temperature control of absorber and excess oxygen requirement for reaction.

Absorber SO_2 Blower

- Operating conditions
  - Inlet pressure - 98 kPa (14.2 psia)

- Outlet pressure - 155 kPa (22.5 psia)
- Inlet temperature - 149°C (300°F)

- Flow rate - see Regenerator.

Regenerator SO_2-Gas Bag Filter

- Operating conditions - inlet temperature - 149°C (300°F)
- Flow rates - see Regenerator
- Design factors - type: Reverse jet cleaning Sly Dynaclone
- Air/cloth ratio - 2.5:1.

Stone Cooler/Conveyor

- Operating conditions
  - Stone inlet temperature - 870°C (1608°F)
  - Stone outlet temperature - 150°C (302°F)
- Flow rates and compositions - see Absorber.

SUPPORT SECTIONS

Equipment for waste stone handling and for fuel oil storage is of a conventional nature and is based on normal limestone and fuel oil requirements.

ASSUMPTIONS FOR ENERGY AND MATERIAL BALANCES

Common assumptions have been made for generating energy and material balances having sufficient accuracy for a preliminary design task. The assumptions include:

- No heat losses
- Steady-state with no accumulations
- Air to blowers is at 25°C (77°F) and bone dry
- Purge and transport gas streams have been neglected
- The pulsed nature of solids transport systems have been neglected by assuming steady flow behavior

When possible, data and correlations generated by Esso experimental programs have been utilized to carry out balances--for example, for fuel-gas compositions and gasifier heat generation rates. Fines carried over in the gas streams have been included in the balances because they are an important operating and environmental consideration.[64]

NOTES

1. Gasifier Chemistry

   - Due to the endothermic nature of the calcination reaction, the limestone feed rate must be continuous rather than periodic.
   - The calcium sulfate ($CaSO_4$) produced in the regenerator is completely reduced to calcium sulfide (CaS) in the gasifier. A low level of residual $CaSO_4$ circulates between the gasifier and regenerator.
   - The fuel oil cracks immediately to liberate hydrogen sulfide (H_2S), carbonyl sulfide (COS), and carbon disulfide (CS_2), the bulk being H_2S.
   - An important balance exists between the air/fuel ratio and gasifier temperature in terms of the rate of carbon laydown and burn-off in the oxidizing region. Lower air/fuel ratios require higher gasifier temperatures to increase the carbon burn-off rate.
   - An important balance exists between stone carbon level and sulfur removal efficiency. Too low a carbon level permits SO_2 to be released in the oxidizing region once the stone carbon layer is burned off. Once released, SO_2 is difficult to reabsorb in the bed.
   - The addition of water or steam to the gasifier has an important effect on the sulfur removal efficiency. The sulfur removal efficiency may be reduced because of thermodynamic effects, reduced kinetic driving force, or reduced bed-carbon level. Operation at lower air/fuel ratios (< 20 percent), where higher carbon levels result, may permit the use of water or steam for temperature control.

2. The bed may be required to operate over a range of temperatures from 850 to 900°C (1562 to 1652°F) depending on the air/fuel ratio.

3. Reflects initial Stone and Webster Engineering Corporation (SWEC) design study.

4. Bed depths down to 0.61 m (2 ft) may be utilized. Deeper beds may improve sulfur removal efficiency and reduce the rate of carbon

build-up in the fuel-gas lines due to increased bed surface for carbon laydown or cyclone inlet scouring due to increased elutriation of particles.

5. Minimum operable superficial velocity ≈ 0.915 m/s (3.0 ft/sec). Velocities lower than 1.83 m/s (6 ft/sec) will result at lower air/fuel ratios than 20% of stoichiometric at full capacity.
6. A minimum air/fuel ratio of ∿15% gives adiabatic operation. Includes oxygen supplied by stack-gas recycle. Twenty percent has been demonstrated and should be the maximum required.
7. A maximum of 1.5 x stoichiometric permits faster bed depth build-up and operation with higher sulfur fuel oils.
8. An example of an experimentally determined composition. Composition will change with operating conditions and process design.
9. Based on recent pilot plant data (run 8) the elutriation rate could be twice as great as this amount (90.7 kg/hr [∿ 200 16/hr] in pilot plant). Because the freeboard in the demonstration design is about twice that of the pilot plant, the 3180 kg/hr (7,000 lb/hr) figure is considered reasonably conservative.
10. Pilot runs have indicated fines compositions such as 6 wt % $CaSO_4$ and 2% carbon. Because of the high carbon content of the gasifier fines, care must be taken in returning all or part of them to the regenerator, if this is done as a batch, because of the high heat load.
11. The amount of stack gas required for temperature control depends greatly on the air/fuel ratio. This amount is based on 20% air/fuel ratio. This amount is also sufficient for burnout. The options of water, steam, or indirect cooling will not be considered in the preliminary design for temperature control.
12. Only a 50% reduction in gasifier velocity is permitted if operating at 1.83 m/s (6 ft/sec) in order to maintain fluidization. By increasing the air/fuel ratio (and therefore the stack-gas recycle rate) as the fuel is turned down, a high gasifier velocity can be maintained. The limiting factor on how high an air/fuel ratio can be utilized may be the heating value of the fuel gas produced during turndown.

13. Recent pilot plant information indicates that deeper beds (up to 1.22 m [4 ft] reduce the rate of carbon build-up in the cyclone inlets due to increased bed surface for carbon laydown or increased solids rates through the cyclones. Water and steam injection into the bed also reduces carbon build-up. Steam/air injection into the cyclone entrance has not yet been demonstrated. The 200-hour operating times on the pilot plant have been scaled to ∿2000-hour operating time between burnouts on the demonstration plant.
14. Horizontal staging of the gasifier has been proposed as a method of improving gasifier sulfur removal performance. Because of the increased complexity, this option should not be utilized unless it is demonstrated that sufficient sulfur removal cannot be achieved without staging.
15. Esso Research Centre, Abingdon, England (Esso) has proposed utilizing a vertical baffle connected to a central core of circular cross-section in the gasifier to permit staging, reduce distributor structural problems, and reduce the lengths required for fuel injectors. This advanced design is not required for the preliminary design study.
16. The pressure drop across a 1.22 m (4 ft) deep bed (maximum depth) is about 13.8 kPa (2 psi). The distributor pressure drop should be ∿ 25 percent of the bed pressure drop for good distribution at the lowest operating velocity, which is one-half of the maximum velocity at 4:1 turndown. At 0.915 m/s (3 ft/sec) the distributor pressure drop then equals 3.45 kPa (1/2 psi) and at 1.83 m/s (6 ft/sec) it will be 13.8 kPa (2 psi). This has been reduced to 12.4 kPa (1.8 psi) for structural reasons.
17. An efflux velocity too high may cause excessive particle attrition at the air jets.
18. The start-up temperature should be high enough to prevent recarbonation of the lime bed and defluidization caused by increased bed density.
19. Spacing of fuel injection points based on pilot plant tests. Recent tests with a single vertical fuel injector having adjustable height indicate that the elevation of the fuel injection point above the

distributor has little effect on gasifier performance, except as it affects the active bed height.

20. Larger installations (> 100 MW) may use multiple gasifiers which will simplify turndown. Small units could use multiple gasifiers, if optimization studies indicate an economic advantage.

21. Regenerator chemistry
    - Carbon deposited on the stone surface is combusted before any stone regeneration takes place, according to batch results.
    - Carbon combustion on the particle surface permits the stone to heat up to the bed temperature before the competing reactions listed in Figure D-2 can progress. Thus, the formation of CaO and SO_2 is favored. Pilot plant operation, with low carbon levels on the stone, have provided poor regenerator performance (i.e., high $CaSO_4$ and low SO_2).
    - Stagnant regions in the regenerator, or regions where air leaks into the regenerator during shutdown, lead to large agglomerated deposits of stone.

22. Regenerator temperature > 1100°C (2012°F) should be avoided.

23. Based on pilot plant experience. Pressure arranged to draw fuel gas into regenerator rather than SO_2-gas into gasifier to maximize sulfur removal. No seal is required between the vessels.

24. With the dry sulfation reaction scheme, lower SO_2 levels from the regenerator can be tolerated. This additional degree of freedom may permit operating the gasifier with improved performance. Also, the SO_2-fuel from the regenerator may be changed during turndown without reducing the plant performance. Thus, no SO_2 recycle system is required as was the case in the previous SWEC design with sulfur recovery.

25. Small amounts of inerts and V, Ni, Na from the fuel oil are also present.

26. Based on fuel-gas dust loading - very conservative estimate.

27. Required circulation rate depends on stone carbon level and selectivity of the regenerator to CaO formation rather than $CaSO_4$. A maximum stone carbon level exists above which the regenerator

temperature cannot be controlled by circulation rate (∿ 1 wt %).

28. Some fuel combustion may be required in the regenerator at turndown greater than 50 percent to maintain the bed temperature. Two regenerators could be used if this mode of turndown were difficult.
29. Esso has proposed staging of the regenerator to improve performance. Would require a single baffle and bed temperature gradient measurement for control.
30. The diameter of the regenerator used in the initial SWEC design is somewhat small. This factor will not affect the resulting cost projection sufficiently to require resizing the regenerator.
31. For bed levels less than 0.915 m (3 ft) the normal splash rate of particles is sufficient for solids circulation.
32. With multiple gasifier modules a single regenerator vessel per gasifier would probably be used. Two regenerators could be used in the demonstration plant if regenerator turndown were expected to be a problem.
33. The regenerator acts as an elutriator to eliminate fines from the system which would otherwise be circulated continuously through the regenerator-cyclone circuit.
34. Normal pilot plant operation would indicate a circulation rate of about 24,950 kg/hr (55,000 lb/hr). This excess factor accounts for operation under unusual circumstances, with higher sulfur fuel oils, or with limestones having higher inert contents, and so on.
35. Based on pilot plant transport gas rate of 1 dm^3 per 0.16 kg (1 cf per 10 lbs) solids transferred.
36. Full-scale cold modeling will be carried out prior to designing detailed solids circulation system.
37. Stone circulation with flue gas rather than nitrogen as the transport gas is due to be demonstrated in run 9.
38. Esso has suggested an advanced design which integrates the pulsed stone circulation system into the gasifier and regenerator designs. The cost difference is not expected to be significant.
39. Based on direct pilot plant scale-up for rate of 24,950 kg/hr

(55,000 lb/hr) Large duct dimensions should reduce wall effects present in pilot plant system, making the projected design capable of higher transport rates.

40. Alternatively, expansion joints between the vessels and the refractory block could be utilized.

41. The fines are split in this manner to permit gasifier fines to enter the regenerator (which acts as an elutriator) and be removed from the system. All of the gasifier fines are not sent to the regenerator, because of their high carbon content and the resulting high heat load. The fines which are to be sent to the regenerator are placed in the entrance of the gasifier-to-regenerator stone transport line to mix the fines with the gasifier bed material being transported, so that hot spots will not develop periodically in the regenerator. The fines will be pulled into the regenerator only when the circulation system is being pulsed.

42. Surge vessels may be required in the fines return circuits carrying material to the regenerator in order to provide a smooth return rate and reduce regenerator fluctuations. This is not done in the pilot plant and is not to be considered in the preliminary design.

43. High-temperature butterfly valves supplied by the Dally Engineering Valve Company, Pittsburgh, Pennsylvania are being used in the Consolidation Coal Company (Consol), Rapid City, South Dakota, coal gasification plant at 870 to 982°C (1600 to 1800°F) and ∿1033 kPa (∿150 psi). The FMC Princeton Plant has used a high-temperature slide gate knife valve (Alloyco 310 SS gate valve) custom made at 870°C (1600°F). The designs for that valve are available.

    The alternative of cooling the recycled fines and striping the line to prevent tar condensation has been considered, but the high-temperature valve is more advantageous.

44. The valves would not function long because of carbon build-up. Also, methods to limit build-up or burnout during operation are being actively investigated, making valves unnecessary. The legal and insurance aspects of valves in the fuel-gas lines must be explored.

45. The initial SWEC design was based on a 2.44 m (8 ft) maximum bed depth and used

- Bed pressure drop - 27.6 kPa (4 psi)
- Distributor pressure drop - 27.6 kPa (4 psi,)
- Losses between blower and plenum - 41.3 kPa (6 psi).

46. Water injection into the recycled absorber gas may be required at reduced stack-gas recycle rates in order to limit the baghouse temperature to 260°C (500°F).

47. If the recycle flue-gas oxygen content becomes too great due to the presence of the recycled absorber product gas, then the purge and transport gas may have to be taken from the stack gas upstream of the point at which the streams combine. The PTG stream would then require its own baghouse prior to compression.

48. A number of process modifications have been proposed. These options deal with how to reduce the stone particle size enough to permit SO_2 absorption to a high level of efficiency with high stone utilization (∿75μ); how to place the reactants into the absorber; and how to handle the products from the absorber.

- Pulverization may be by mechanical grinding after the stone has been cooled to about 260°C (500°F), (Option e) by pneumatic grinding of the hot stone (Jet-o-Mizer), (Options a-d), or bed jet pulverizing directly in the absorber (Option f). These options are shown in the accompanying simple flow diagrams.
- With external pulverization, stone may be carried to the absorber by dilute pneumatic transport using the pulverizing air as a carrier gas (Option a) or may be separated from the pulverizing gas in a cyclone and sent to the absorber by dense phase standleg (Options b-d). The pulverizer air may be utilized in the absorber (Options a, b, d) or combined directly with the absorber gas product (Option c).
- The absorber product may be sent directly to the stack if SO_2 and particulate contents are low enough, may be cooled and sent through a bag filter before going to the stack if SO_2 is low enough, or may be recycled to the gasifier by combining it with the recycled stack gas before the stack-gas baghouse.

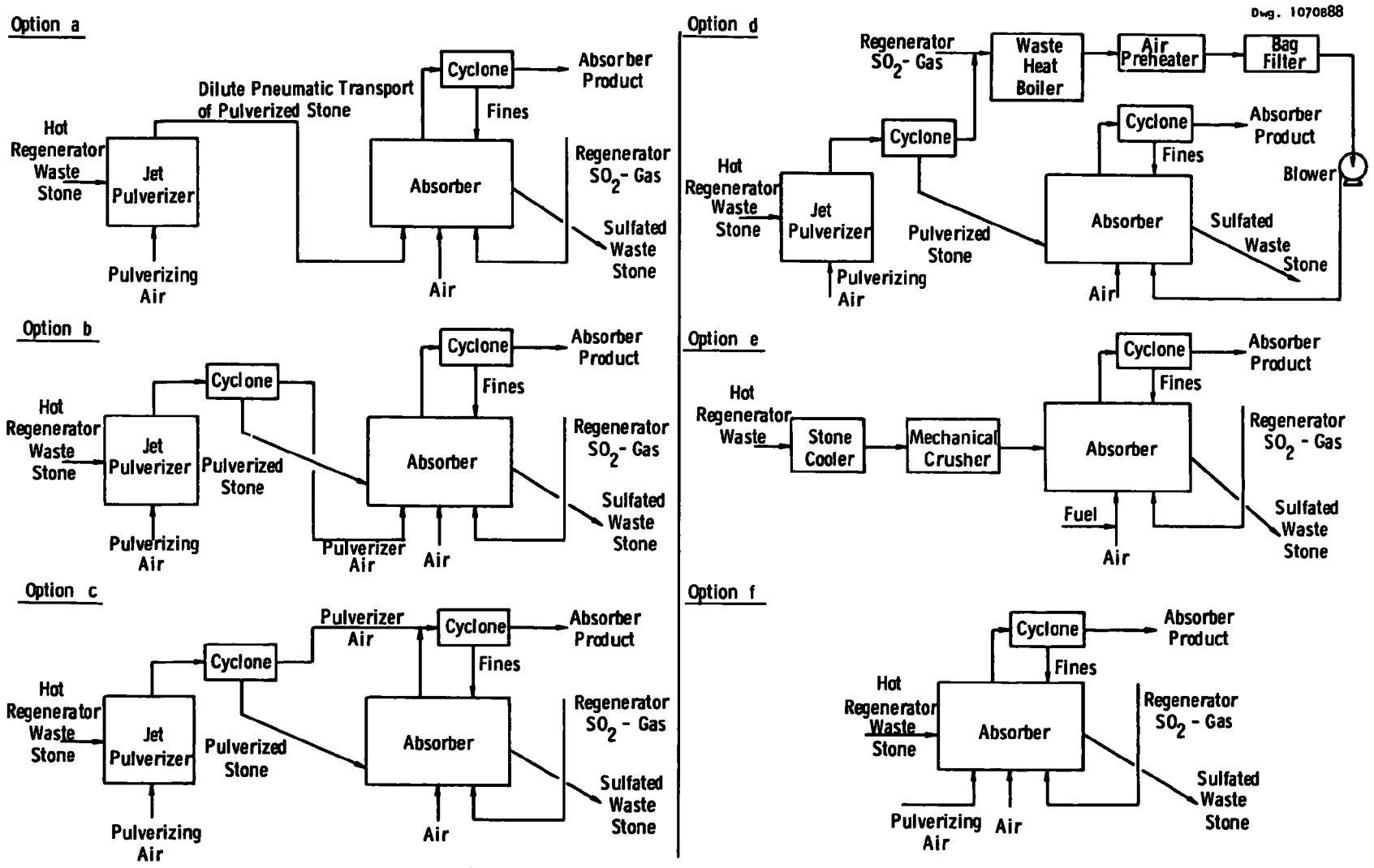

Figure D.-3 —Stone processing design options

Referring to the flow diagrams:

Option a: Combines simple pulverization system and no need for a cyclone with the problem of distributing the gas-solid suspension over the absorber cross-section.

Option b: Combines simple pulverization and cyclone separation of pulverized stone with problem of distributing the separated pulverized (dusty) air over the absorber cross-section.

Option c: Retains simple pulverization and cyclone separation but eliminates the problem of pulverizer air distribution. The exit oxygen content of the absorber product is reduced from about 8 mole % in Options a, b, d to about 4 mole % which should still give sufficiently good kinetics in the absorber.

Option d: Eliminates the problem of pulverizer air distribution but increases the capacity of the SO_2-gas compression system to permit utilization of the pulverizer gas.

Option e: Eliminates absorber distribution problems. May give superior control of pulverizing quality. Requires fuel combustion to maintain 870°C (1600°F) absorber temperature.

Option f: Simple system, but in-bed quality of pulverization is questionable. May be feasible because of long stone residence time (∿50 hr) but may require extensive development.

Option c has been selected for the demonstration plant preliminary design. Small amounts of fuel may be combusted to raise the absorber oxygen level, if required.

49. Resulting temperature with required pulverizing air rate. No lower limit on this temperature as long as hydrating conditions are not approached.

50. Conservative estimate is 991 dm^3 (35 cf) air per 0.4536 kg (1 lb) stone pulverized.

51. Based on thermodynamic and kinetic information.

52. A gas residence time of three seconds should be sufficient for 90 percent absorption of SO_2. This corresponds to about a 0.458 m (1.5 ft) bed depth.

53. The minimum fluidization velocity of this material is about 0.00305 m/s (0.01 ft/sec) Fluidization studies at room temperature have indicated poor fluidization quality of this material, but at high velocities mixing is fast with particle sticking at the wall. High-temperature fluidization quality may be better (Esso finds that their materials flow much better when hot). The maximum allowable ratio of U/U_{mf} is about 80 based on the average particle size.

54. Based on bed temperature control. Fuel may be burned to heat air and increase the bed oxygen content. Fuel will be required for turndown to maintain the absorber temperature.

55. The particle elutriation rate due to bubble splash should be very small with a 6.1 m (20 ft) freeboard height, especially if very shallow beds are used 0.61 m (∿2 ft). At the operating velocity of 0.122 m/s (0.40 ft/sec) the gas will carry out by pneumatic transport any particles less than about 15 microns in diameter. The estimated rate is set at 10 percent of the stone feed rate.

56. Assumed that the fines are extremely reactive. The fines may be recycled to the absorber or combined directly with the stone waste. If the fines are not highly reacted, they may have to go to a separate sulfation stage.

57. The range of operable velocities is very large with very fine particles, but in order to reduce distributor pressure drop, the absorber air rate can remain high during turndown.

58. The absorber could also be an entrained bed reactor (or fast fluidized bed), in which case the quality of fluidization would be unimportant; the absorber size and possibly pulverization could be carried out in the reactor.

59. Multiple units could be used if economic considerations indicated an advantage.

60. Because of long stone residence time (about 50 hours) in the absorber,

no baffles should be required, since the mixing rate of solids will greatly exceed the bed net velocity.

61. Set arbitrarily to maximize inlet and outlet separation distance.

62. For the option chosen (Option c) the distributor is of a conventional design. Options a and b require unusual distributor designs because of the particulate content of the gas. For Option a, a disengaging zone located at the base of the absorber having a coarse distributor could be used, or a series of nozzles located around the circumference of the absorber. Option b could use a nozzle concept or an independent tubular distributor located above the refraction distributor plate.

63. For shallow bed operation with fine particles, dead spots at the distributor should be avoided. Corresponds to 25.4 mm (1 in) chimneys set on square lattice with 50.8 mm (2 in) separation.

64. An estimate of the size distribution of fines passing through the boiler is shown in Figure D-4. The quantity of fines passing through the boiler has been estimated from the following basis:

- Direct scaling of pilot-plant elutriation rates to the base design conditions indicate a fines rate of 3180 kg/hr (7000 lb/hr) elutriated from the gasifier. This is a pessimistic assumption since the demonstration plant freeboard will be much greater than the pilot-plant freeboard.
- Gasifier cyclone efficiencies of 95percent (optimistic) yields a rate of 159 kg/hr (350 lb/hr) of fines passing to the boiler.
- Assuming all of the fines entering the boiler pass through the boiler, then a dust loading of 159 kg/hr (350 lb/hr) or 0.3 kg/GJ (0.7 lb/10^6 Btu) are carried on to the existing stack-gas cyclone.
- The existing stack-gas cyclone efficiency is indicated in Figure D-5 for fly ash. If the overall cyclone efficiency with the fines elutriated from the CAFB is 85 percent, then the stack dust loading would be 0.043 kg/GJ (0.1 lb/10^6 Btu)--which would meet the federal particulate standard of 0.43 kg/GJ (0.1 lb/10^6 Btu).
- At a low air/fuel ratio (∿17%) and with a shallow gasifier bed the elutriation rate from the gasifier could be an order

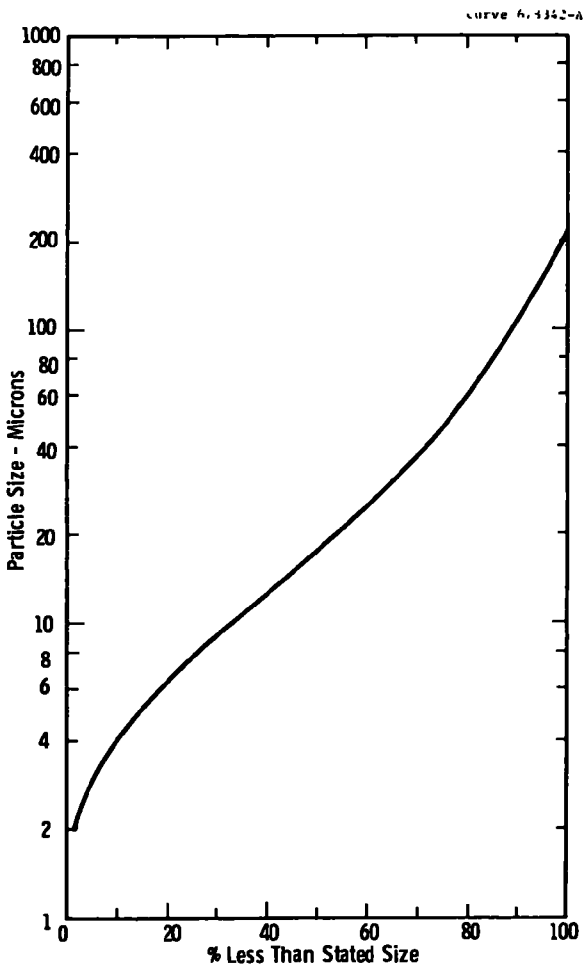

Figure D-4—Estimated fines size distribution from boiler prior to existing cyclone—Rate = 350 lb/hr

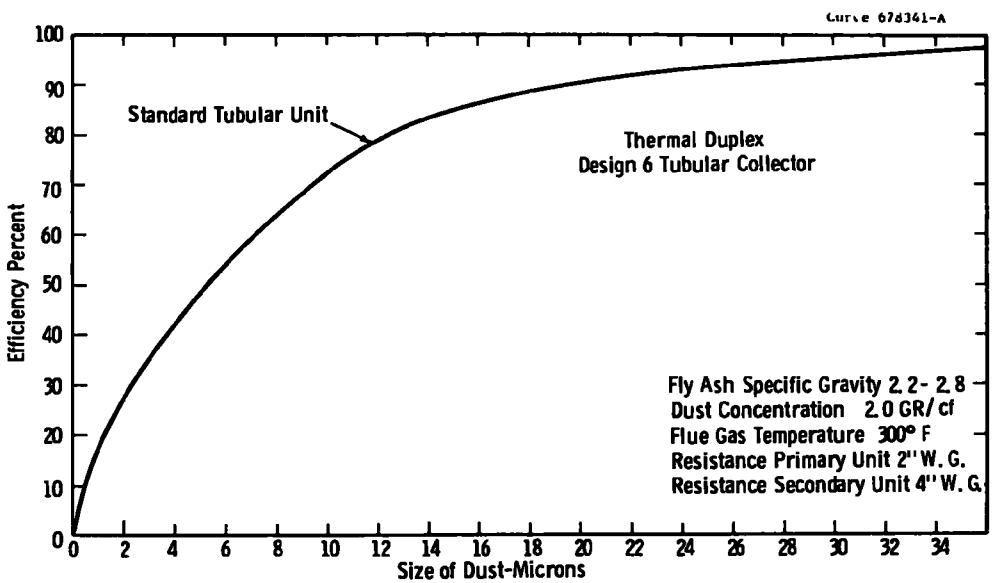

Figure D-5—Existing cyclone efficiency

of magnitude less than with the base design conditions, or about 318 kg/hr (700 lb/hr). A gasifier cyclone efficiency of 95 percent would yield 16 kg/hr (35 lb/hr) of fines passing to the boiler. If all this material passes through the boiler and an 85 percent efficiency is representative of the existing stack-gas cyclone, then a dust loading of 0.004 kg/GJ (0.01 lb/10^6 Btu) would result from the power plant stack.

APPENDIX E

DESIGN MANUAL

E

APPENDIX E

DESIGN MANUAL

This design manual was prepared as Phase I of a contract with Stone & Webster Engineering Corporation (SWEC). The contract between Westinghouse Electric Corporation and SWEC provided for the completion of a preliminary design and cost estimate for the 50 MW fluidized bed oil gasification demonstration plant with dry sulfation of waste limestone. SWEC completed the work on December 5, 1974.

DESIGN MANUAL

INDEX

1. Description of Process Elements
   1.1 Chemistry and Basis of Design
   1.2 Process Alternatives
   1.3 System Performance Assessments
2. Utilities, Raw Materials and Products
   2.1 Feeds and Products
   2.2 Utilities and Fuel Summary
3. Flow Diagrams
   3.1 Material Balance Flow Diagrams
   3.2 Process Flow Diagrams
4. Functional Description of System Operation
5. Equipment Arrangement Drawings
6. Equipment Drawings and Specifications
   6.1 Equipment List
   6.2 Vessel Drawings
   6.3 Equipment Specifications
   6.4 Summary of Equipment Rooms
   6.5 Summary of Equipment Costs
7. One Line Diagram
8. Economics
   8.1 Base Conditions and Assumptions
   8.2 Investment Cost Summary
   8.3 Operating Cost Summary

1. DESCRIPTION OF PROCESS ELEMENTS

1.1 Chemistry and Basis of Design

The basic process used in the oil gasification-desulfurization unit was developed by Esso Petroleum Company, Research Division, Abingdon, Berkshire, England, and Esso Research and Engineering Company, Florham Park, New Jersey. Data for most of the design was provided by bench scale batch tests and one megawatt pilot plant continuous runs of 200 to 500 hours duration carried out at Abingdon.

The Esso CAFB (chemically active fluidized bed) process vaporizes and thermally cracks heavy fuel oil at 1,616 F by partial oxidation in a fluidized bed. In this reducing atmosphere the sulfur compounds in the fuel are converted to H_2S (hydrogen sulfide). The fluidized bed material is CaO (calcium oxide, quicklime) which reacts with the gasous H_2S and traps the sulfur as solid CaS (calcium sulfide). The reactor in which this is carried out is called the Gasifier. The cracked gas formed, with oil vapors and combustion products, is fed hot to special burners installed in the boiler. About 90 percent of the sulfur in the original fuel is removed from the gas. Design in this area is based on pilot plant results.

Air for the partial combustion is fed to the Gasifier along with recycled flue gas from the boiler stack. The recycled flue gas coming in cool and leaving at reactor temperature removes excess heat of combustion and regulation of its quantity controls the Gasifier temperature. In the Gasifier some carbon is laid down on the stone and the amount varies with the ratio of air to fuel. The rate of carbon lay down determines the minimum feasible air/fuel ratio. The unit is designed to operate normally at an air/fuel ratio of 20% of stoichiometric, with capability of 25%. Air/fuel ratios below 17 percent have been demonstrated in the pilot plant.

Make-up of solids for the fluidized bed is in the form of crushed limestone sized 1/8" to 300 microns, approximately 600 microns average size. The $CaCO_3$ (calcium carbonate, limestone) becomes calcined to CaO in the Gasifier giving off CO_2 (carbon dioxide). The term stone is used below to refer to the solids in the system at any point whether limestone or quicklime or sulfided or sulfated lime. In an ideal system, no stone make-up would be required but pilot plant continuous runs showed that the CaO loses its activity (ability to pick up sulfur) so stone purge, plus loss make-up, at a rate of 20 to 28 tons per day of limestone is required. 28 tons per day is coincidentally the stoichiometric rate of calcium through-put with reference to sulfur to be removed from the fuel.

The stone in the Gasifier picks up 3 to 5 wt% sulfur as CaS and is circulated at high rate to a second fluidized bed reactor called the Regenerator. Here it is contacted with preheated air which rapidly burns the carbon off the stone and more slowly reacts with CaS until essentially all the oxygen is consumed. The reaction of CaS is in two steps, first forming $CaSO_3$ (calcium sulfite) which is unstable at reaction temperature and, secondly, decomposing to regenerated CaO and SO_2 gas (sulfur dioxide). An alternate second step is further oxidation of $CaSO_3$ to stable solid $CaSO_4$ (calcium sulfate), which is encouraged by low sulfur to oxygen ratio. The percentage of CaS going to CaO, referred to CaS reacted both ways is defined as the Selectivity of regeneration, and selectivity is found to vary directly with sulfur content of the stone.

For each mol of CaS going to CaO, 1/2 mol of oxygen is absorbed from the gas into the stone while one mol of SO_2 gas joins the associated nitrogen. For each mol of CaS going to $CaSO_4$, two mols of oxygen are absorbed into the stone leaving only associated nitrogen in the gas. Hence the SO_2 concentration in the gas depends on the selectivity of regeneration, and at 100% selectivity (with no carbon present) the concentration would be a maximum of 15% SO_2 in nitrogen. At design selectivity of 80%, and with carbon to yield 6% CO_2 in the gas, the SO_2 concentration is 8%.

If the input of air (oxygen) is reduced, the quantity of CaS reacted will be reduced, relative to sulfur pick-up by the stone, so the sulfur content of the stone will increase. That increase gives higher selectivity, and a higher portion of smaller total reaction goes to SO_2. The net result is the same SO_2 output with decreased $CaSO_4$, decreased nitrogen from the air, and hence higher SO_2 concentration. Conversely, if air input is increased, total reaction increases, total sulfur decreases, selectivity decreases, more oxygen goes to $CaSO_4$, and more nitrogen is left to dilute the SO_2 to lower concentration.

The limit of the effect of reduced air, in causing increased SO_2 and decreased $CaSO_4$, is reacted when the sulfur loading on the stone becomes high enough to interfere with pickup of sulfur in the Gasifier. Then the required amount is not delivered to the Regenerator and more than allowable sulfur goes to the boiler and stack. The operator adjusts the flow controlled air input for constant SO_2 percentage in the Regenerator off gas at a target value deduced from analysis of gas and stone samples.

The reactions in the Regenerator are exothermic and the temperature is controlled by varying the stone circulation rate. The stone enters at 1616 F and leaves at 1970 F, and a massive but practical circulation rate is capable of carrying away a large amount of sensible heat. Sulfur and carbon levels on the stone tend to vary inversely with circulation rate, so that change in sensible heat exceeds change in

reaction heat and control is obtained. Control could become weak if carbon on the stone were excessive, and in this case the air/fuel ratio in the Gasifier must be increased to reduce carbon lay down.

Design parameters for the Gasifier-Regenerator System have been well established by the one megawatt pilot plant operations. In the event of failure of normal means of temperature control for either, steam and water injection is provided for emergency use.

At this point in the processing the sulfur which was in the fuel oil has been transferred to a hot gas stream leaving the Regenerator in the form of SO_2 at about 8 vol% concentration. A net purge stream of regenerated stone, principally CaO, is also withdrawn from the Regenerator. These two streams plus fines collected at various points are fed to a third reactor called the Absorber, to recombine the sulfur and the net stone. For this purpose, the stoichiometric rate of stone, or higher, is required and the waste stone produced by the process can be essentially $CaSO_4$ (calcium sulfate) containing all the sulfur removed by the process. The reversal of the decomposition reaction occurring in the Regenerator is to be obtained in the Absorber by operating at a lower temperature, 1600F, such that the CaO and the SO_2 can combine to make $CaSO_3$ and with an excess of air to oxidize that to $CaSO_4$. Near completion of this reaction, at flowrates close to stoichiometric, is to be aided by reducing the particle size of the net stone leaving the Regenerator to 60 micron average in a proprietary air jet pulverizer, before feeding to the absorber.

The temperature in the Absorber is controlled by admitting excess air to carry off excess heat, when operating near full capacity. At reduced rates of throughput, the heat of reaction may be insufficient to maintain temperature, and in this case additional heat can be supplied by combustion of low sulfur No. 2 oil at the gas inlet to the reactor.

The stone leaving the Absorber constitutes the waste solid from the process which has been converted primarily to $CaSO_4$ with 6% residual CaO. It is essential that CaO be small and that CaS be completely absent, since CaO releases heat and CaS is hydrolyzed to H_2S gas by water and atmospheric CO_2. In the order of 1% CaS is present in the Regenerator stone, and it is expected that this residual CaS will be completely oxidized in the Absorber so that an H_2S nuisance will not occur after dumping the waste stone.

The design of the absorber, the estimation of its effectiveness in absorbing SO_2, and the prediction of the waste stone composition to be produced from it, are projections from a small amount of data. The design parameters have not been proven in the Pilot Plant at this writing.

In an earlier draft report, prepared for Westinghouse in March, 1974, the regenerative process was used, with the SO_2 gas from the Regenerator being converted to elemental sulfur in a process unit to be designed by Allied Chemical Company. However, the sulfur conversion unit would cost about 3 million dollars and a lower cost process was desired.

Also, for the plant as designed in the earlier draft report, the waste stone was taken from the regenerator to disposal. The stone at that point is primarily CaO with small percentages of Ca SO_4 and CaS. The CaS created an even greater hazard in disposal than CaO. When contacted by rainwater containing CO_2 the CaS is hydrolized and releases H_2S gas which is six times as poisonous as hyrogen cyanide. The characteristic rotten egg odor is not sensed at high concentrations, but dilute gas gives odor nuisance down to five parts per billion.

Laboratory work indicated that the stone could be sintered or "dead burned" at temperature over 2200F to eliminate CaS and render the CaO unreactive toward water. However, for lack of design data, uncertainty as to the long term permanence of the sintering inertness, and fuel debit of the sintering furnace, this method was not adopted.

The method proposed to avoid the heat, poison and odor effects was to slurry the stone in water in the plant so that released heat would form steam and released H_2S would be directed back into the process. To render the stone completely unreactive the slurry was contacted with flue gas so that the stone would be reconverted to $CaCO_3$ which is inert and harmless. Although the stone could be filtered and dried, the use of a slurry system in the plant was considered undesirable. It is possible that the fluid bed Absorber now proposed will be roughly the same cost as will the slurry system formerly proposed.

An additional change which has been made is in the method of handling the stone flow between the units. In the March, 1974 design, stone was transferred by Fluidizing technique used in petroleum plants in fluid coking units called a "dense phase riser system". Such a system imposes minimum elevations at the base of the reactors since vertical seal loops must be provided below the reactor level. In the Esso pilot plant at Abingdon transfer in essentially horizontal manner was accomplished by using inclined throughs or conduits with gas pulse to maintain the flow of solids. In the present design it is postulated that scale up of this method by a factor of 50 is feasible. This postulate is to be tested by cold mock-up of the stone flow system before the demonstration unit is erected.

1.2 Processing Alternatives

Some alternatives to the processing scheme outlined above are available. One would be to operate the second reactor at conditions to retain the sulfur on the stone as $CaSO_4$ rather than to regenerate CaO. The stone would feed directly through the system without recycling to the Gasifier. However, the maximum allowable sulfur pick-up by the stone is indicated by batch tests to be 16 weight percent which represents about 33 mole percent conversion of the stone. Therefore, the amount of stone throughout would have to be three times the stoichiometric rate or 84 tons per day, in order to attain 90 percent sulfur removal.

In the above mode, called Once-Through, the waste stone to be disposed of would be two-thirds CaO and one-third $CaSO_4$ on a mole basis (54 weight percent $CaSO_4$). Its disposal as land fill would represent a hazard due to the fact that the reaction between CaO and water liberates a large amount of heat. Given the presence of sufficient water, steam could be generated explosively in a large mass of solids, or with deficient water, temperature sufficient to ignite flamables have been demonstrated, the theoretical maximum being about 1200F. Furthermore, pilot plant work on a Once-Through process has not been carried to a point to provide adequate design for such a system.

1.3 System Performance Assessments

Gasification

The pilot plant work provides a sound basis for anticipation of 90 percent or better removal of sulfur at level of 2.6 percent in the fuel. The depth of the bed of fluidized lime in the demonstration unit is more than double that in the pilot plant. This should provide adequate safety factor to compensate for degree of grossness in air and fuel distribution caused by practical mechanical designs and to allow for modest recycle of SO_2 from the Absorber.

The most probable source of difficulty is the formation of solid deposits of coke and lime dust on surfaces exposed to the hot fuel gas. It is believed that the rate of increase of depth of deposit is constant with time for given operating conditions. The effect of larger scale is beneficial in this respect since a depth which could shut down the pilot plant by restriction of small passages would have little effect in the large passages of the 50 MW unit. Nevertheless, rates of deposit as high as 1/2" in 200 hours have been reported, and it will be necessary to maintain operating conditions giving the much lower but unquantified rates which were also reported. No provision is made for decoking in operation, and complete shutdown of the gasifier is required.

On occasion an accumulation of solid particles too large to fluidize has been noted in the pilot plant. These were eliminated by rapid drainage of solids from the bottom of the bed. A bottom drain has been provided for the 50 MW gasifier also, but its effectiveness is not readily predictable.

Regeneration

The pilot plant work provides a sound basis for anticipation of sulfur rejection at 8% SO_2 in the off-gas and loading of sulfur on the stone sufficiently low to provide pickup in the gasifier. The stone circulation rate required for temperature control is calculated to be proportionately higher than in the pilot plant. This should tend toward lower sulfur loading, or better than 90% pickup in the gasifier, or reserve capacity to carry Absorber SO_2 leakage.

The rate of carbon lay-down on the stone could be a limiting factor, since it reduces the effectiveness of temperature control by stone circulation and the SO_2 concentration margin is provided by increasing air/fuel ratio to the gasifier, but this decreases Btu value of the fuel gas. On this account, the running of vacuum residual oils should not be accorded undue optimism; there is no continuous pilot plant backup, although batch unit tests were made.

The concentration of 8% SO_2 in the Regenerator off-gas is probably not critical to the performance of the SO_2 Absorber. However, it would be important if conversion to elemental sulfur were desired, since 8% is a borderline concentration which might require supplemental methane consumption in the conversion unit. Every effort should be made to meet the design concentration. The pilot plant has shown values both higher and lower than 8% in various runs.

SO_2 Absorber

At this writing, no pilot plant data on the Absorber reaction is at hand, and there is no basis for comment on the Westinghouse projection of 94% reaction efficiency of CaO and SO_2.

The particle size required for near completeness of reaction in the Absorber is not established. The smaller the better for this purpose, obviously. However, the particle size of the waste stone may have important effects on the stability of land fill, and in that respect larger particles are preferable.

While some residual CaO is desirable in the waste solids, it is essential that CaS be completely reacted in the Absorber. Adequate test of this point must be made before the 50 MW unit is built.

Gas - Solids Separations

The material balance streams indicating fines content of gas streams seem reasonable estimates, for the most part predicated on 95% cyclone efficiency. There is no way to make accurate predictions without knowledge of the quantity and particle size distribution of the solids entering the cyclones. It is to be expected that these values will be quite different in the 50 MW unit than in the pilot plant, and extensive efforts to get more pilot plant data do not seem warranted. The pilot plant cyclones were designed for 90% efficiency on assumed solids loading, and results were adequate. With an appropriate cyclone design, the solids effluent will vary with the attrition characteristics of the stone being fed.

Solids Transport

The transport of solids for controlled circulation between Gasifier and Regenerator is a vital function whose scaleup from pilot plant size is regarded with less certainty than other factors. If this should fail, it is difficult to conceive of feasible modifications short of elevating the major reactors. Full scale demonstration is essential. However, the arrangement as specified does appear to have good prospects of functioning.

The Sturtevant systems for fines transport have been proven in all-metal systems at temperatures up to 750F, but there is no experience with slug flow in refractory lined pipe. In case of inoperability, substitution of Incolloy pipe is a possible modification.

2. UTILITIES, RAW MATERIALS AND PRODUCTS

2.1 Feeds and Products

The principal feed to the system is high sulfur residual fuel oil, a No. 6 oil containing 2 1/2 to 3 percent by weight of sulfur. High sulfur fuel oil is received by barge, held in the storage tank, and fed to the unit as required by the boiler. The design feed rate is 28,000 lb/hr or 514 million Btu/hr. The specifications of the oil used for design calculations are as follows:

API Gravity	12.8 (8.166 lb/gal) @ 60F	
Viscosity	300 SSU @ 140F	
Higher Heating Value	150,000 Btu/gal	
Compositions:	Carbon	85.9 wt%
	Hydrogen	11.0
	Sulfur	2.6
	Nitrogen	0.4
	Oxygen	0.1
Metals content:	Vanadium	442 ppm
	Nickel	52 ppm
	Sodium	30 ppm
	Iron	14 ppm

The ultimate product sought by use of this system in conjunction with a power boiler, is, of course, clean stack gas. The projected performance of the system will yield a stack gas containing about 140 ppm (Vol) sulfur dioxide and 0.80 lb/million Btu particulates.

The principal direct product of the system is low Btu fuel gas, with 90% of fuel sulfur removed. The calculated higher heat of combustion of the gas is 199 Btu/scf, referred to 77F; however, since the gas is delivered to the boiler at 1616F, it has an appreciable sensible heat content of 38 Btu/scf, therefor effective heating value of 237 Btu/scf. The gas ignites spontaneously in air and burns with a luminous flame. The gas has a solids content estimated at 1.25 grains/scf and also tends to deposit coke on contact surfaces, particularly at points of high turbulence. At turndown rates from 50% to 25%, the gas becomes progressively leaner in combustibles with increased nitrogen and CO content, and 25% oil rate is the lowest design condition. The normal and turndown compositions of the gas are tabulated below.

Component	Normal wt%	Turndown (25%) wt%
Hydrogen	0.44	0.12
Methane	2.07	1.41
Ethylene	3.31	0.82
Heavier HC	4.41	1.33
Hydrogen Sulfide	0.05	0.03

Carbon Monoxide	7.48	6.16
Carbon Dioxide	16.15	20.89
Water Vapor	4.15	3.50
Nitrogen	61.94	65.74
	100.00	100.00
Heat of Combustion	199	88
Sensible Heat @1600°F	38	34
Heating Value (HHV,77°F)	237 Btu/scf	122 Btu/scf

Secondary feeds to the system are air and limestone. The design is based on a limestone containing 98.1 wt% calcium carbonate and 0.1 wt% sulfur, the balance inert. Normal feed rate is 2355 lb/hr or 28 tons/day, presized at 1/8" to 300 microns. If the commercial grade of 1/8" to dust is fed, the weight rate will be somewhat larger in amount of the quantity of ineffectively used fines content.

The secondary product of the system is the waste stone, primarily as calcium sulfate. The calculated rate is 2920 lb/hr or 35 tons/day. To the degree that any excess fines in the limestone feed are collected and sulfated in the Absorber, the stated feed need not be increased. The waste stone will be 75 microns and smaller in size, averaging 60 microns.

An auxiliary feed to the system is low sulfur No. 2 fuel oil, presently the principal fuel of the Manchester St. Station. This feed is used only for startup heating and for Turndown Case operation of the Absorber.

2.2 Utilities and Fuel Summary

A. FUEL OIL - LBS/HR	Intermittent	Design	Continous
1. F.O. (High Sulfur)			
L-1 Gasifier			28,000.00
Total			28,000.00
2. F.O. (Low Sulfur)			
F-1 Start-up Heater	13,000	13,000	0
F-3 Absorber Heater	110	120	0
Total			0
B. PROCESS WATER-GPM			
Service Water			
50PSIG, 65°F			
G-18 Absorber Cyclone (Exit)		5	4.4
R-9 Absorber Air Blower		8	0.1
L-1 Gasifier	14	17	0
Total			4.5
C. COOLING WATER-GPM			
1. Service Water			
50PSIG, 65°F			
G-27 Solid Waste/Cooler Conveyor		150.00	120.0
T-3 Purge & Transport Gas (PTG) Cooler		40	32.0
T-7 PTG Blower Suction Cooler		10	6.0
R-8 GA/FG Blower L.O. Console			100.0
Total			258.0
D. STEAM - LBS/HR.			
150PSIG, 366°F			
1. Import (From Battery Limits)	14,000	14,000	0
2. Produced			
M-3 Steam Drum		4,000	4,000
Total Continuous			4,000
3. Used			
T-5 0.1 Storage tk Suction Heater			1,480
T-6A 0.1 Oil Transfer Line Heater			1,635
Total			3,115
Decoking Lines From Gasifier Cyclones	150	200	0

	Intermittent	Design	Continuous
3. Used (Cont'd)			
Process			
L-1 Gasifier	15,000	15,000	0
Heating H-1 Control Building	none	none	0
Heating H-2 Laboratory	none	none	0
4. Export			885
E. BOILER FEED WATER-GPM			
M-3 Steam Drum		10	8

F. ELECTRIC POWER-KW	Connected HP	Spare or Intermittent-KW /HR	Continuous-KW /HR
1. 2300 V, 3 PH, 60 Hz			
R-8 Gasifier Air/Flue Gas Blower	3000.0		2141.0
2. 600 V, 3 PH, 60 Hz			
G1-1 Filter Receiver Air lock	0.75	0.6	0.02
G1-2 Pressure System Air blower	75.0	62.00	2.18
G1-4 Vac. System Air blower	60.0	50.00	1.80
G1-5 Baghouse Rotary airlock	0.75	0.6	0.02
G2-1 Waste Stone Rotary airlock	0.75		0.6
G2-4 Vacuum System blower	30.0		25.00
G2-5 Filter Receiver airlock	1.0		1.2
G2-6 Pressure System blower	20.0		16.6
G2-8A Silo Rotary airlock	0.5		0.4
G2-8B Silo Rotary airlock	0.5	0.4	0
G-4A Screw Conveyor	3.0		0.25
G-4B Recycle flue gas airlock	1.0		1.2
G-26 Limestone Star valve	0.5		0.4
G-27 Solids waste cooler/conveyor	1.0		1.2
P-4A Oil transfer pump	5		5.0
P-4B Spare	5	5.0	0
R-3 Purge & transport	75.0		119.0
Gas (PTG) blower	100.0		
R-4 Flue Gas	100.0		48.0
Booster Fan			
R-6 Regenerator	200.0		134.0
Air blower			
R-9 Absorber	75.0		41.0
Air blower			
R-10 Absorber SO_2	150.0		241.0
Blower	150.0		
R-11 Pulverizer	150.0		101.0
Air Blower			
H-1 Control Room Bldg.			5.0
A. cond. unit			

	Connected HP	Spare or Intermittent-KWH	Continuous-KWH
H-2 Laboratory Bldg.			5.0
A. Cond.unit			
Lighting & instruments (assumed average)			50.0
3. 120 V, 1 PH, 60 Hz			
G-3A Limestone Weigh feeder	1.0		0.8
G-3B Limestone Weigh feeder	1.0	0.8	
G-5 Gasifier Air Screen	1/6		0.1
G-6 Regenerator Air Screen	1/6		0.1
G-17 Pulverizer-cyclone		0.1	0
G-19 Bag filter-rapper		0.1	0
G-24 Pulverizer air blower-Air screen	1/6		0.1
G-25 Absorber air blower - Air screen	1/6		0.1
G-34 Air screen intake for G2-3	1/6		
G-35 Air screen intake for G2-6	1/6		0.1
TOTAL			2943.17

G. PLANT AIR - SCFM
100 PSIG, Ambient

Sturtevant Valves G-23A-H, G-30A/B, G-31A/B	200.0

H. INSTRUMENT AIR - SCFM

100 PSIG, 20°F.	100.0
G-4 Recycle Flue Gas Baghouse	80.0
G-19 Bag Filter	11.5
	191.5

3. FLOW DIAGRAMS

3.1 Material Balance Flow Diagrams

Drawing No. 61D

Schematic Flow Diagram and

Material Balance Base Case

Drawing No. 61E

Schematic Flow Diagram

Material Balance

Turndown Case and

Low Air/Fuel Ratio Case

PAGE NOT

AVAILABLE

DIGITALLY

PAGE NOT

AVAILABLE

DIGITALLY

PAGE NOT

AVAILABLE

DIGITALLY

PAGE NOT

AVAILABLE

DIGITALLY

4. FUNCTIONAL DESCRIPTION OF SYSTEM OPERATION

Fuel Oil Feed

The present normal fuel of the Manchester St. Station is No. 2 grade low sulfur distillate oil, which has replaced natural gas, which had replaced coal, the original design fuel. For the Oil Gasification - Desulfurization CAFB Demonstration Unit on No. 12 Boiler, No. 6 Grade Residual Fuel, of about 2.6 wt% sulfur content, will be received at the existing barge unloading facilities and sent by a new branch line to the new 30 day storage tank Q-1. Process Flow Diagram 12418.01-61C shows the new oil feed equipment.

Tank Q-1 is 104' diameter by 40' high and is provided with a flame arrestor on the vent, level indicator, overflow, and dike. In Q-1, a steam heated U-tube bundle of 1350 sq. ft. surface, T-5 Suction Heater, warms the oil to 150F for pumping from Q-1 by positive displacement Fuel Oil Pump P-4A or spare P-4B. P-4A & B are gear pumps of 72 gpm capacity at 35 psig discharge pressure. A duplex strainer G-14 is provided in the pump suction line, and oil can be recirculated back to Q-1 from P-4 discharge via a back pressure controller. All piping for No. 6 oil is steam traced to maintain fluidity when flow is stopped.

Oil is pumped from P-4 through T-6 A&B Fuel Oil Heaters of 560 sq. ft. surface each. T-6 A&B warm the oil to a controlled temperature of 200F with 150 psig steam, and thence to process. The pumping rate is higher than the design process rate, and continuous recirculation from the point of use to Q-1 is maintained.

For startup of the reactors, for experimental or contingency operations, and for Turndown case operation of the Absorber L-3, a supply of No. 2 low sulfur oil is required. This is drawn from the existing oil supply of the No. 12 Boiler and may be fed to startup Heater F-1, to Absorber Heater F-3, or to Gasifier L-1 via the normal No. 6 oil controls described below, and shown on Dwg. No. 12418.01-61A. The No. 6 oil feed is Material Balance Stream No. 4 (MBS-4) of quantities shown on Dwgs. Nos. 12418.01-61D & -61E.

No. 6 oil from the heaters T-6 A&B is admitted to the Gasifier L-1 at a flow controlled recorded rate with a master FRC set by the operator. The FRC resets three slave FIC's feeding a three segment ring main on the gasifier. The FIC's can have different offsets put in so that oil rate to three zones in the gasifier may be graduated. Multiple injection nozzles on each segment of the ring main distribute the fuel oil over the cross section of each zone of the fluidized bed.

The master FRC also puts out a signal of measured oil feed rate to a ratio controller which regulates the quantity of air supplied to the gasifier, as described under subheading 3.2.2. The system is designed to be operable over an oil feed rate range of 25% to 115% of the normal

rate, which is 28,000 lb/hr. If desired, the master FRC could be made responsive to power demand on No. 12 Boiler; however, for purposes of the Demonstration Unit, it is deemed preferable that the master FRC be set by the operator.

Air and Recycle Gas Feed

Air (MBS-1) is drawn from atomosphere by Gasifier Air/Flue Gas Blower R-8 through Gasifier Air Screen G-5. G-5 has a glass fiber screen, automatically renewable by electric moter drive. R-8 is a centrifugal compressor of 46,700 CFM capacity and 23.3 psia discharge.

The air is sent to Gasifier L-1 along with recycle flue gas (MBS-3) which is also fed to R-8 suction. The combined gas (MBS-2) enters L-1 below a refractory arch distribution grid which is provided with multiple holes to distribute the gas evenly throughout the cross-section of the fluidized bed.

The air rate (MBS-1) is normally regulated to obtain 20% of the stoichiometric amount of oxygen for complete fuel oil combustion. This is referred to as air/fuel ratio of 20%, although correction is made by the operator for oxygen content of the recycle flue gas so the air rate is not exactly 20%. Provision is also made for operation at lower air/fuel ratio equivalent to 17% of stoichiometric oxygen. The flow rate and oxygen content of the combined gas are continuously recorded to provide a basis for operator adjustment of the automatic controls described below. Under the Turndown conditionsbetween 25% and 50% of normal fuel rate, the air/fuel ratio will be higher than normal, resulting in decreased heating valve of the fuel gas as shown under 3.1.3.

The air rate is controlled by an FRC throttling the air intake to R-8. The index of the air FRC is pneumatically reset normally by a ratio controller which receives an oil flow rate signal from the master FRC on the fuel oil feed. The ratio to be maintained is constant and normally would not be changed over long periods of operation, the primary operator control being the oil FRC. The ratio setting would be changed slightly if a change in oil feed stock altered carbon lay down. The ratio setting would be altered significantly for operation, for example at 17% air/fuel. Ratio control of air FRC set point is maintained over the fuel oil feed range from maximum to approximately 50% of normal, which will result in total gas flow from R-8 to L-1 varying over about the same range.

The air FRC index can also be reset by the FRC on total gas flow, but the signal is normally blocked. The purpose of the latter is to maintain a minimum flow of gas to L-1 for adequate fluidization of the solids bed, which is approximately 50% of normal flow, and the total gas FRC is set permanently at that value. When air flow demand by the oil ratio control falls below the demand by the total gas FRC, a se-

lector relay is actuated which blocks the ratio control signal and allows the total gas FRC signal to take over the reset function. The total gas FRC remains in control of the air FRC reset so long as its demand is higher than that of the oil ratio controller.

The effect of varying air flow on total gas flow is roughly double the change in air itself. Since all of this air goes for fuel combustion in the Gasifier, a change in rate produces a change in heat release. The recycle flue gas also fed to R-8 is throttled by an FRC reset by the Gasifier temperature controller. Therefor a change in air rate results in a similar change in recycle flue gas rate to compensate for the change in heat release and maintain constant Gasifier temperature.
Recycle flue gas (MBS-39) is drawn from the outlet of the existing boiler stack cyclones, upstream of the existing induced draft fans, by new Flue Gas Booster Fan R-4. R-4 has a capacity of 22,800 CFM at suction conditions of -14" wg and 300F, and discharges at +6" wg (MBS-40) to Recycle Flue Gas Bag House G-4. Off-gass from the Absorber Cyclone G-18 (MBS-38) joins the recycle flue gas between R-4 and G-4, constituting about 20% of the gas flow to G-4 and raising its temperature to 350F (MBS-3).

Recycle Flue Gas Bag House G-4 is a reverse gas jet type dust collector with approximately 6000 sq. ft. of Nomex fabric bags, for a capacity of 30,000 cfm gas flow at 5:1 gas to cloth ratio. Its function is to remove fine particulates for protection of downstream compressor and the Gasifier distributor grid. The solids collected (MBS-42) are automatically transferred to Absorber L-3 and become part of the waste stone (MBS-30), along with parallel transfer of solids from the stack cyclones (MBS-41).

Virtually all of the gas from G-4 passes to R-8 at the rate allowed by the recycle flue gas FRC (MBS-3). About 2% of the gas is used for purge and transport gas (PTG) as described under 3.2.8, and this quantity is not included in the Material Balance Streams. Delivery of gas by R-4 is thus restricted to the foregoing less the quantity displaced by the independently controlled Absorber off-gas.

In starting up the unit from a cold condition, it is necessary to warm the Gasifier L-1 to 1100F before any oil is fed; including low sulfur oil. The bed must be calcined and fluidized before high sulfur oil is fed. If the starting bed is fresh limestone, it must be heated well above 1250F in order to calcine it. For heating purposes, part or all of the gas to L-1 may be passed through Startup Heater F-1 and heated to 1400F by direct combustion of low sulfur No. 2 oil, at a maximum rate of 22 million Btu/hr. Gas lines downstream of F-1 are refractory lined. Heated air and flue gas from F-1 is also piped to Regenerator L-2 for warmup.

Warmup must be done slowly to avoid damage to refractory. Temperature indicating controllers are provided in the plenum chambers of L-1 and L-2. Regulating valves throttle the heated gas to be combined with cool gas which bypasses F-1. The temperature setting may then be increased manually at a rate to be specified by the manufacturer of the refractory, probably 100 degrees per hour. Temperature of the gas at F-1 exit should be held constant by the heater controls, or may, if necessary, be manually controlled.

Limestone Feed

Limestone of the proper grade and size, which is 1/8 in. to 300 mu will be received by rail cars of approximately 200 tons capacity. The rail car unloading system (G-1) is shown on drawing No. 12418.01-61C, and is designed to unload a 200 ton railroad car in less than one shift, or about six hours, which entails a flow rate of approximately 67,000 lb per hour. Normal flow rate to the process (MBS-5) is 2,355 lb per hour and one rail car of limestone should last about seven days.

The railroad car unloading system will be a packaged solids handling system of the push-pull type. The limestone will be drawn from the railroad hopper cars through unloading Kit G1-6 by a vacuum system into Filter/Receiver G1-7 with suction provided by Vacuum System Air Blower G1-4. The solids separate in the vacuum receiver and drop through Rotary Airlock G1-1 to a pressure system. Pressure System Blower G1-2 drives the limestone up about 200 ft to Baghouse G1-3. The solids then drop through Rotary Airlock G1-5 into the existing coal bunkers above the boiler, which will be converted to limestone use. The bunker is designated Q-4 and this portion of the flow is shown on drawing No. 12418.01-61A.

The limestone to be fed to the unit flows by gravity from the converted coal bunker to an automatic weigh feeder. Limestone Weigh Feeders G-3A and B of which one is to be operating and one spare. The design weight rate of limestone feed (MBS-5) is set by the operator and the weigh feeder drops the limestone into a feed pipe to flow by gravity to Gasifier L-1. Since L-1 is operating under positive pressure and contains hot flammable gas, a seal is necessary between the gasifier and the weigh feeder. This is provided by Limestone Star Valve G-26. Gas purge is used to G-26 and to a point just down stream of G-26 to prevent the contact of hot gas with G-26 itself. The capacity of G-26 is well above any expected feed rate and a level indicator and switch keeps it in on-off operation according to the presence or absence of solids in a small hopper which is part of the weigh feeder G-3. Limestone feed enters the gasifier at one of the inlets returning solids to the Gasifier from one of the four cyclones G-8A, B, C, D described below.

Gasifier Operation

The principal reactor in the system is Gasifier L-1 which contains the fluidized bed of CaO solids (stone) wherein partial combustion of the fuel oil occurs and sulfur is trapped. The Gasifier is 19 ft-4 in. ID of the refractory lining. The depth of the fluidized bed is 4 ft and the clear space from the top of the bed to the upper bend line is 14 ft. The fluidized bed rests on a distributor composed of refractory brick, each with a hole for gas passage, and the distributor is integral with a refractory arch. The depth of the gasifier below the distributor is that required to accommodate the supporting arch, and the gas inlet to the plenum chamber formed by the space beneath the arch. Air and flue gas from blower R-8 (MBS-2) enter the plenum chamber and pass through the distributor holes to fluidize the solids bed.

The oxygen content of the air/flue gas mixture entering the Gasifier is continuously monitored by a recording analyzer, and the flow rate is also recorded. With this information, the operator can set the ratio controller which normally regulates the ratio of air to oil being fed. On turndown operation below 50% of normal, the air/flue gas flow is automatically held at the mechanical minimum required to fluidize the bed of solids. The high sulfur No. 6 fuel oil feed (MBS-4) is injected into L-1 through 36 injection nozzles grouped 12 on each of three segments of the ring main around the Gasifier. Controls for the gas and oil inlet rates are described in Sections 4.2.1 and 4.2.2. Connections are provided for the injection of steam and water into the oil fuel lines to the Gasifier dowstream of the fuel oil controls. These are for use in the event that the Gasifier temperature cannot be controlled and tends to rise excessively.

The temperatures in the Gasifier bed are measured at 12 points at various elevations and circumferential locations in the bed and these 12 points are carried on a single recorder. There is also temperature measurement of the gas in the plenum chamber beneath the refractory arch, and of the gas in the upper part of L-1 immediately below the gas outlet. This last is used for purposes of control, by connecting to the TRC which resets the FRC on recycle flue gas to R-8.

The pressure in Gasifier L-1 will be as is developed for the fuel gas to pass through the exit cyclones, through the transfer lines to the burners and through the burners into the boiler firebox. At normal firebox draft, pressure in the Gasifier is estimated to be 2.6 psi gage, and L-1 is designed for a maximum pressure of 10 psi gage.

There are four fuel gas outlets (SUM=MBS-6) in parallel of size 42 in OD steel by 30 in ID refractory, each having a refractory lined cyclone, Gasifier Cyclones G-8A, B, C, and D. These remove 95% of the solids (MBS-8) which are entrained from the gasifier by the fuel gas. The fuel gas tends to deposit coke on all solid surfaces and particularly

at points of high turbulence. The location of the most severe coking is at the cyclone inlets, and to monitor this, there is a pressure differential indicator connected between the top of the gasifier and the outlet of each cyclone. There is a separate transfer line for fuel gas from the outlet of each cyclone to one of the four burners which are to be installed in the existing boiler. Although overall pressure difference between boiler and L-1 for the four paths must be equal, significant changes can occur in cyclone pressure drop, absolute, relative to the overall, and relative to each other. An eight point temperature recorder is provided with one thermocouple at the outlet of each cyclone and one at the inlet of each burner. These are for use in following the progress of the decoking of the cyclones and lines, for which air and steam connections are provided.

Each of the four cyclones has a Sturtevant system for returning fines to the gasifier (SUM=MBS-8). The Sturtevant systems are described in Section 4.2.7. There is a chunk trap on the outlet of each cyclone upstream of the Sturtevant conveyor system consisting of a coarse strainer in the line and a plug valve through which chunks can be removed. The fines from each cyclone are returned through separate inlets on the gasifier, two being located on each side of the baffle described below. Thereby, half of the fines (MBS-9) enter the bed with the fresh and regenerated stone and half of the fines (MBS-10) are deposited at the outlet to flow immediately to the regenerator with the main flow of sulfided stone (MBS-12).

Connections are necessary between Gasifier L-1 and Regenerator L-2 for the circulation of the stone in both directions (MBS-11, MBS-10+12). The stone passages must be shallow, wide and short, and L-2 is much smaller in diameter than L-1, which results in passages having compound curves and opening into L-1 very close together. The passages for the stones will be cast into a monolithic block which extends through the refractory walls of L-1 and L-2, and this monobloc will be encased in a gas-tight steel shell. Since the stone inlet and outlet of the gasifier are adjacent, a baffle is provided between them of twice the height of the bed and extending to the center of the gasifier, so that the stone flow will not short-circuit. The baffle is formed of high cr-ni alloy which will have adequate strength at the design temperature of 1,710 F, to be supported primarily from the wall and not by the refractory arch. Stone flow rate through each passage is regulated by providing a short horizontal run near the outlet which requires pulsed injection of gas to aid flow, and by making the pulse rate automaticly variable. The prime function of the circulation is to send sulfided stone to the Regenerator for removal of its sulfur content, and to return for more sulfur pickup. However, the flow is actually controlled for a secondary purpose described in the next section which demands a rate more than sufficient for sulfur transport.

The performance of the gasifier in terms of sulfur removal from the fuel is determined by a continuous recording analyzer on the stack. At 90 percent removal of sulfur from the fuel containing 2.6 weight

percent, the concentration of SO_2 in the stack gas should be about 140 ppm. If the removal of sulfur is not satisfactory then oil feed must be decreased or limestone feed must be increased in order that the stone in the bed be purged more rapidly and its activity maintained at a higher level. If the circulation rate to and from the regenerator becomes very high with associated difficulty in controlling the regenerator temperature this probably indicates excessive laydown of carbon on the stone and the remedy for this is an increased ratio of air to fuel.

The density of fluidized bed is measured by finding differential pressure across two points a known vertical distance apart in the bed. The level of the bed is measured by taking the differential pressure from the bottom of the bed to a point well above the bed and comparing this to the bed density. The level of the bed is controlled by regulating the rate of withdrawal of stone from the system (MBS-30) via the regenerator (MBS-30) as described in Section 4.2.5.

A condition has been noted in the pilot plant gasifier wherein activity of the stone decreases seriously due to formation of large and heavy particles which tend to stratify in the bottom of the bed. To maintain satisfactory operation, it is necessary that these be removed rapidly. A connection with plug valve is provided at the bottom of the bed, piped to the inlet of Pulverizer G-20 (see 4.2.5) through which a fraction of the bed can be drawn fairly rapidly. Normal flow from Regenerator L-2 to G-20 should be interrupted during this procedure.

Regenerator Operation

Regenerator L-2 receives a massive circulation of stone from Gasifier L-1, burns the carbon off the stone, converts the CaS partially to CaO and SO_2 and partially to $CaSO_4$. The stone is recirculated to the Gasifier. The circulation back and forth passes through a monobloc connection between the two reactors as described below. Regenerator L-2 is 4 ft-6 in. ID of refractory lining and is mechanically an appendage of the Gasifier which is about four times larger.

The Regenerator is fitted with a refractory distributor grid for the fluidized bed, containing multiple holes for passage of gas to the bed. L-2 is supplied with air by Regeneration Air Blower R-6 equipped with an air screen G-6. R-6 is a positive displacement axial flow machine of 2500 cfm capacity from 14.6 to 24.0 psia pressure. The air (MBS-13) is throttled by a flow controller on the blower suction, the rate being set by the operator. Air from the discharge of R-6 (MBS-14) is preheated in Regenerator Off-gas/Air Exchanger T-1 to a temperature of 452 F. From T-1, the air (MBS-15) passes to a chamber beneath the refractory grid of L-2. The reactions of L-2 are exothermic and the temperature is controlled at 1,970 F. The temperature is normally controlled by adjusting the circulation rate of stone between L-1 and L-2, whereby the excess heat of reaction is carried away as sensible heat of the stone circulation.

The off-gas from the Regenerator L-2 (MBS-16) contains SO_2 at about 8% concentration and CO_2 at about 6%, by volume. The off-gas passes through two cyclones in series. The Regenerator Primary Cyclone, G-9, returns fines (MBS-18) to the Regenerator by gravity. The Regenerator Secondary Cyclone, G-10, sends the fines (MBS-20) to join the net stone purge stream (MBS-19) flowing from L-2 to Pulverizer G-20.

The gas from Secondary Cyclone G-10, (MBS-21) still at 1,970 F, passes through Waste Heat Boiler B-1, where the temperature is reduced to 600 F (MBS-22), and the heat is used to generate steam at 150 psig. Boiler feed water is used as make-up for the Steam Drum M-3, and approximately 4,000 lb/hr of steam are produced. About 3,000 lb/hr are normally used for preheating the fuel oil feed in T-5 and T-6A&B. A small excess of steam is sent to the boiler service steam system, normally, or steam may be drawn from that system when usage is higher than normal.

The off-gas from B-1 (MBS-22) passes through Regenerator Off-Gas/Air Exchanger, T-1, where it preheats incoming air and is reduced itself to 300 F (MBS-23). The off-gas then passes to Bag Filter G-19, for removal of fines (MBS-24) before forwarding to Absorber L-3. The off-gas leaving G-19 (MBS-25) is throttled to maintain the back pressure on the Regenerator, L-2. The throttling is controlled by a PDRC which maintains a differential of 0.3 psi between L-1 and L-2.

In Regenerator L-2, the amount of sulfur which is released to the off-gas as SO_2 must come to balance with the amount of sulfur removed from the fuel gas in the Gasifier, L-1. The amount of sulfur as CaS which is converted to $CaSO_4$, rather than being rejected to off-gas, has a very significant effect on the quantity of heat released in L-2 as does the amount of carbon which is oxidized in L-2. At the sulfur levels and carbon levels on the stone experienced in the pilot plant, there should be no difficulty in controlling the temperature of L-2 by adjustment of the stone circulation rate.

The circulating stone passes through inclined passages in the monobloc connection between L-1 and L-2 mentioned above. The lower end of each passage is horizontal for a short distance which tends to impede the flow. A gas distributor pipe lies across the horizontal section and timed pulses of gas are injected to speed the flow of solids. By altering the time rate of pulsing, the flow rate of the stone can be controlled. The flow of sulfided stone from Gasifier to Regenerator (MBS-10+12) is controlled by a TRC in the gas space of the Regenerator which alters the pulsing rate. The flow from L-2 back to L-1 (MBS-11) is similarly regulated by the level controller of the Regenerator.

In the event that modulation of the rate of stone circulation is unable to maintain the temperature at 1,970 F, and it begins to rise, a por-

tion of the air/flue gas mixture from the discharge of blower R-8 is admitted to the plenum chamber below the refractory grid on automatic control by the same TRC which regulates the stone rate. It is considered that the nature of the reactions occurring in Regenerator L-2 is such that a tendency to overtemperature would be naturally self-limiting. In any case, provision is made for manual injection of steam and water to L-2 as auxiliary temperature regulation, if required.

L-2 is provided with a density recorder which measures the differential pressure across a fixed depth of bed. There is also a level controller and alarm which functions by measuring the differential pressure between the bottom of the bed and a point well above the bed. The level controller acts to regulate the rate at which the stone circulation is returned from L-2 to L-1 (MBS-11).

The quantity of stone in the fluidized bed in the Gasifier is roughly 35 tons while that in the regenerator is about two tons. The stone circulation in each direction between the two is over half a ton per minute, which would seem to place a severe requirement on level regulation. However, the circulation flow rates are strongly influenced by difference in level between Gasifier and Regenerator and the levels tend toward a stable balance.

A net purge stream of stone (MBS-19) is taken from Regenerator L-2 for further processing as waste stone. The limestone make-up to the system (MBS-5) is fixed by the operator's setting of Weigh Feeder G-3, so the purge must be withdrawn at a rate to maintain constant system inventory. The withdrawal of stone from the system via L-2 is regulated by the level controller on Gasifier L-1. Since this is the larger body of stone in the system and the bed level is not subject to rapid fluctuation, a steady rate of net stone flow can be obtained.

Stone from L-2 (MBS-19) flows to Pulverizer G-20 through an inclined pipe, followed by a short horizontal run where the solid flow rate is controlled by the rate of gas pulsing to the horizontal section. It is necessary that this horizontal run be very short, and also necessary that it receive connections for fines from Regenerator cyclone G-10 (MBS-20) and for heavy particle drainage from Gasifier L-1. Due to the requirements of the physical dimensions, this multiple connection is fabricated of a high Cr-Ni alloy capable of withstanding the regenerator temperature of 1,970 F, rather than of refractory lined pipe. Further treatment of the waste stone is discussed in under 3.2.6.

The operation of L-2 is monitored by continuous recorded analysis of the off-gas (MBS-25) downstream of G19, for SO_2, CO_2 and O_2. Since the air entering L-2 may contain recycled flue gas from R-8, analysis is provided at that point also. Comparison of the two analyses together with the air rate yields the results of the reaction in L-2. Samples of the stone are analyzed periodically also.

For start-up purposes, hot air and flue gas mixture from Start-up Heater F-1 are introduced with normal air into the Regenerator plenum chamber below the refractory grid. A TIC is provided in the chamber to throttle this hot gas stream and assist the operator in the gradual warmup required to avoid damage to the refractory.

SO_2 Absorber Operation

The function of Absorber L-3 is to recombine the sulfur removed from the fuel and converted to SO_2 in the Regenerator off-gas with the net stone purge also leaving the Regenerator, in order that the waste solids disposed of may consist primarily of non-reactive calcium sulphate ($CaSO_4$).

The stone as it is drawn from the Regenerator (MBS-19) is joined by fines from Regenerator Secondary Cyclone (MBS-20) and the mixture is of 1/8 in. to dust size range. In order to enhance completeness of the reaction in the Absorber, the stone is first pulverized to 88 microns and smaller with an average size of 60 microns. Since the stone is at a temperature of 1,970 F, a pneumatic pulverizer is used rather than mechanical grinding. The stone flows to pulverizer G-20 which is supplied with air (MBS-32) by Pulverizer Blower R-11, having an air screen G-24 on the suction. R-11 is a positive displacement machine of 600 cfm capacity with 14.6 psia suction and 75 psia discharge. A flow indicating controller is provided with orifice in R-11 discharge line and valve throttling a recycle line from discharge to suction of R-11, which compensates for any volume flow mismatch between G-20 and R-11, or for any blockage of air flow through G-20.

In the pulverizer G-20, the stone is reduced in size by the kinetic energy of jetted air (MBS-33), and contact between the stone and the air in G-20 gives a resultant temperature of 794 F. The total air and stone (MBS-34) is blown upward through a stainless steel line to Pulverizer Cyclone G-17, which is located at an elevation that will allow separated solids (MBS-35) to flow by gravity into Absorber L-3. In addition to the pulverized stone separated in G-17, Absorber L-3 also receives fines at the same inlet, from the existing stack cyclones (MBS-41), from the Recycle Flue Gas Bag House (MBS-42) and from Bag Filter G-19 (MBS-24). The air separated in G-17 (MBS-36) passes forward to join the gas effluent from the Absorber (MBS-31) at the inlet of Absorber Cyclone G-18.

Absorber L-3 is a refractory lined carbon steel vessel 20 ft diameter inside of the refractory. It is provided with a refractory brick distributor grid, integral with an arch, similar to that in gasifier L-1. The bed of fluidized solids is maintained at 3' depth by an overflow weir, and the upper bend line is 10' above the nominal bed level. The Regenerator off-gas to be fed is picked up (MBS-25) from Bag Filter G-19 by Absorber SO_2 Blower R-10 and sent to the plenum chamber in L-3 below the refractory grid. R-10 is a centrifugal blower of 3500 cfm capacity, 14.0 psia suction and 22.5 psia discharge. The flow is throttled for back pressure at the outlet of G-19 as described in the

preceding section, and the rate is as produced by the Regenerator.

For operation in the turndown mode, and also for start-up purposes, Absorber Heater F-3 is provided, mounted directly on Absorber L-3 inlet nozzle, through which the Regenerator off-gas from R-10 as well as reaction air for L-3 are passed. Under conditions where the reaction heat in L-3 is not sufficient to maintain the normal temperature of 1,600 F, F-3 is fired with low sulfur fuel oil under temperature control of a TIC with thermocouple in the plenum chamber. Under 25 percent turndown condition, the usage of low sulfur oil is approximately 110 lb per hour.

In Absorber L-3, two principal reactions are carried out. The regenerated stone is primarily CaO, entering addition reaction with SO_2 to give $CaSO_3$, and air sent to L-3 oxidizes the $CaSO_3$ to $CaSO_4$. Also any residual sulfide on the regenerated stone is expected to be completely oxidized. Air for L-3 is provided by Absorber Air Blower R-9, a positive displacement axial flow blower, with Air Screen G-25, of 870 cfm capacity at 14.0 psia suction, 22.5 psia discharge. The air flow is throttled on the suction of R-9 by an FIC which is reset by a TIC measuring the temperature in L-3. A small amount of water is also necessary for the reaction and service water is injected between R-9 and F-3 on flow control.

The fluidized solids in L-3 form a bed of 3 ft depth. A density recorder is provided measuring the differential pressure across a known depth of bed. The total depth of the bed is recorded by measuring the differential pressure from a point just above the refractory grid to a point well above the bed. The reacted stone is removed by gravity overflow from L-3 and no level control as such is used. The reacted stone overflowing from L-3 drops into Solid Waste Cooler Conveyor G-27, and is joined by fines separated in Absorber Cyclone G-18. These gravity flow lines are purged with a small flow of air which is tapped from the discharge of Pulverizer Blower R-11. G-27 is helical ribbon cooler manufactured by Joy Manufacturing Company and service water flows through passages in the helix. The solids are cooled to 200 F in G-27 and fall from the outlet to be picked up by the waste stone system described in the next section.

Off-gas from absorber L-3 consists primarily of nitrogen, CO_2 and some excess oxygen, with a small amount of SO_2. The gas leaves L-3 at 1,600 F and is mixed with the pulverizer air from cyclone G-17 giving a resultant temperature of 1,435 F. This gas passes through Absorber Cyclone G-18 where entrained fine solids are separated. The pipes entering and leaving G-18 are refractory lined due to the temperature of the gas. A short distance from G18, service water is injected into the gas to reduce its temperature to 500 F and from that point a carbon steel line is used. This gas joins recycle flue gas entering Recycle

Flue Gas Bag House G-4, as described in Section 3.2.2, so any unreacted SO_2 leaving Absorber L-3 will return to Gasifier L-1 where it is reduced to H_2S and picked up by the stone again.

Waste Stone and Fines Handling

Waste stone leaving the Waste Stone Cooler Conveyer G-27 will be picked up by the Waste Stone Transport and Loading System item G-2. This will be a package solids handling unit of the push/pull type. Waste stone from G-27 passes through a rotary air lock, G2-1 into a vacuum line, carrying air drawn through a screen G-34, by air blower G2-4. The air and solids pass into filter/receiver G2-3, where the air separates and passes through blower G2-4. Solids from G2-3 pass through a rotary air line G2-5 into a pressure blowing system. For this system, the pressure system blower G2-6 picks up air through a screen G-35 and blows it to filter/receivers G2-7A and B. A diverter valve is used to pass the solids and air to one or the other of these receivers. The receivers G2-7A or B are located above the two existing ash silos now designated Q-2 and Q-3. The solids flow by gravity from the receivers through rotary air locks G2-8A and B, into the silos. The existing ash silos are already set up for gravity loading of trucks to remove the solids from the plant. The set up can load a 10 ton truck in about 20 minutes, and five truckloads per day must be removed on a five day week basis.

At some points in the process it is necessary to transfer fines from the bottom of the cyclone to a point higher than the bottom of the cyclone. For this purpose a fine solids transport method developed in Britain and provided commercially by Sturtevant Engineering Co. Ltd. is suggested by Esso Research. The system consists of the hopper receiving the fines by gravity with shut off valves above and below the hopper. When the hopper is full the upper valve is closed and the hopper is pressurized to about 20 psig with transport gas. The lower valve is open and the solids flow out. In order to maintain flow through the exit line, the solids coming out are divided into discreet slugs by an air knife which is a device for injecting the air on a pulse basis into the line. Normal operation is controlled from an automatic timer panel.

These devices are used under the Gasifier Cyclones G-8A, B, C, and D, which remove fines from the fuel gas make and transport these fines back into the Gasifier as described in Section 4.2.4. Similar systems but much smaller in size are used to take fines from the existing stack cyclones and from the Recycle Flue Gas Bag House G-4, to the inlet of the Absorber L-3.

Purge and Transport Gas

At several points through the system a gas feed under pressure is required for the transport of solids. Also, at many points through the system, instrument connections and other small connections must be purged to prevent their being plugged with solids. In several of these places it is not possible to use air since the air might react with hot solids, and a small portion of the recycled flue gas is used for this purpose.

About two percent of the flue gas leaving Recycle Flue Gas Bag House G-4 is taken for purge and transport gas, referred to as PTG. The gas at about 350 F passes first through PTG Blower Suction Cooler T-7, where it is cooled to about 200 F. The water dew point of the gas is about 150 F, and condensate would be corrosive due to the presence of CO_2 and SO_2. Also, the gas passes next to a blower and therefore the outlet from T-7 is held well above the water dew point. This gas is picked up by Purge and Transport Gas Blower R-3. R-3 is a positive displacement axial flow blower with a discharge pressure of 35 psig. The compressed gas passes through PTG Cooler, T-3 for cooling to about 100 F. This is well below the dew point of the gas and some water will condense. The gas and water pass through PTG Water Separater M-4 where the water is knocked out and sent on level control into the Gasifier. The water is of very small quantity, and is introduced into the oil feed to the gasifier. The gas from M-4 passes through PTG filter G-7 for the removal of mist and any fine particulates remaining.

From this point, the PTG is distributed as required to the control panels of the six Sturtevant solids transport systems described in Section 3.2.7. This gas also supplies the pulsing systems used for the circulation of stone from Gasifier to Regenerator and from Regenerator to Gasifier and for the net stone coming from the Regenerator to the Pulverizer. The gas will also be piped in manifold to all points requiring gas purge of instrument connections.

5. EQUIPMENT ARRANGEMENT DRAWINGS

PAGE NOT

AVAILABLE

DIGITALLY

PAGE NOT

AVAILABLE

DIGITALLY

PAGE NOT

AVAILABLE

DIGITALLY

PAGE NOT

AVAILABLE

DIGITALLY

PAGE NOT

AVAILABLE

DIGITALLY

6. EQUIPMENT DRAWINGS AND SPECIFICATIONS

6.1 EQUIPMENT LIST

Item Number	Service	Drive
Acct. B - Boilers		
B-1	Waste Heat Boiler	
Acct. F - Heaters		
F-1	Start-up Air Heater	
F-2, A-D	Hot Fuel Gas Burners	
F-3	Absorber Heater	
Acct. G - General Equipment		
G-1	Fresh Limestone Unloading System	
G1-1	Filter Receiver Airlock	Motor
G1-2	Pressure System Air Blower	Motor
G1-3	Baghouse	
G1-4	Vac. System Air Blower	Motor
G1-5	Baghouse Rotary Airlock	Motor
G1-6	Railcar Unloader	
G1-7	Filter/Receiver	
G-2	Waste Stone Transport and Loading System	
G2-1	Waste Stone Rotary Airlock	Motor
G2-3	Filter/Receiver	
G2-4	Vacuum System Blower	Motor
G2-5	Filter Receiver Rotary Airlock	Motor
G2-6	Pressure System Blower	Motor
G2-7 A&B	Silo Filter Receivers	
G2-8 A&B	Silo Rotary Airlocks	Motors
G-3 A&B	Limestone Weigh Feeders	Motors
G-4	Recycle Flue Gas Baghouse	
G4A	Screw Conveyor	Motor
G4B	Recycle Flue Gas Airlock	Motor
G-5	Gasifier Air Screen	Motor
G-6	Regenerator Air Screen	Motor
G-7	Purge & Transport Gas Filter	
G-8 A-D	Gasifier Cyclones	
G-9	Regenerator Primary Cyclone	
G-10	Regenerator Secondary Cyclone	
G-14	Duplex Oil Filter	

Item Number	Service	Drive	
Acct. G - General Equipment (Cond't.)			
G-17	Pulverizer Cyclone		
G-18	Absorber Cyclone		
G-19	Bag Filter	Motor	(R1)
G-20	Jet Pulverizer		
G-21 A-D	Fines Lock Hoppers		(R1)
G-22 A-D	Air Knife & Transport System		
G-23 A-D	Fines Lock Hopper Valves-Inlet		
G-23 E-H	Fines Lock Hopper Valves-Outlet		
G-24	Pulverizer Air Blower-Air Screen	Motor	
G-25	Absorber Air Blower-Air Screen	Motor	
G-26	Limestone Star Valve	Motor	
G-27	Solid Waste Cooler/Conveyor (Service Water)	Motor	
G-28	Stack Cyclone Lock Hopper		
G-29	Baghouse Lock Hopper		
G-30 A&B	Stack Cyclone Lock Hopper Valves - Inlet and Outlet		
G-31 A&B	Baghouse Lock Hopper Valves - Inlet and Outlet		
G-32	Stack Cyclone Lock Hopper Air Knife & Transport System		
G-33	Baghouse Lock Hopper Air Knife & Transport System		
G-34	Air Screen Intake for G2-3	Motor	
G-35	Air Screen Intake for G2-6	Motor	
Acct. H - Buildings (These to be in existing Building)			
H-1	Control Room		(R1)
	(Air conditioned)	Motor	(R1)
H-2	Laboratory (Air conditioned)	Motor	
Acct. L - Reactors			
L-1	Gasifier		
L-2	Regenerator		
L-3	Absorber		
Acct. M - Drums			
M-3	Waste Heat Boiler Steam Drum		
M-4	PTG Water Separator		

Item Number	Service	Drive
Acct. P - Pumps & Drivers		
P-4 A&B	Oil Transfer Pump and Spare	Motors
Acct. Q - Storage Tank		
Q-1	High Sulfur Oil Storage Tank	
Q-2	Ash Silo (Existing-16'Ø to be modified)	
Q-3	Ash Silo (Existing-22'Ø to be modified)	
Q-4	Limestone Storage Bunker (Existing- to be modified)	
Acct. R - Compressors & Drivers		
R-3	PTG blower (Z-in series)	Motors (R1)
R-4	Flue Gas Booster Fan	Motor
R-6	Regenerator Air Blower	Motor
R-8	Gasifier Air/Flue Gas Blower	Motor
R-9	Absorber Air Blower	Motor
R-10	Absorber SO_2 Blower (2 in Parallel)	Motors (R1)
R-11	Pulverizer Air Blower	Motor
Acct. T - Heat Exchangers		
T-1	Regenerator Off-Gas/Air Exchanger	
T-3	Purge and Transport Gas (PTG) Cooler	
T-5	Oil Storage Tank Suction Heater	
T-6 A&B	Oil Transfer Line Heaters	
T-7	PTG Gas Blower Suction Cooler	(R1)

6.2 Vessel Drawings

L-1 Gasifier & L-2 Regenerator

L-3 Absorber

L-1, L-2, L-3 Design Data

Fuel Oil Storage Tank

PAGE NOT

AVAILABLE

DIGITALLY

PAGE NOT

AVAILABLE

DIGITALLY

PAGE NOT

AVAILABLE

DIGITALLY

A 9030 1A

Item Q-1
Page 1 OF 1
Rev. 1
Rev. 2

STONE & WEBSTER ENGINEERING CORPORATION
DRUM OR TANK PROCESS SPECIFICATION

Client WESTINGHOUSE ELECTRIC Location
J. O. No. 12418.01
Apparatus FUEL OIL STORAGE TANK
Est. No.
Date JAN 30-74 By
Based on

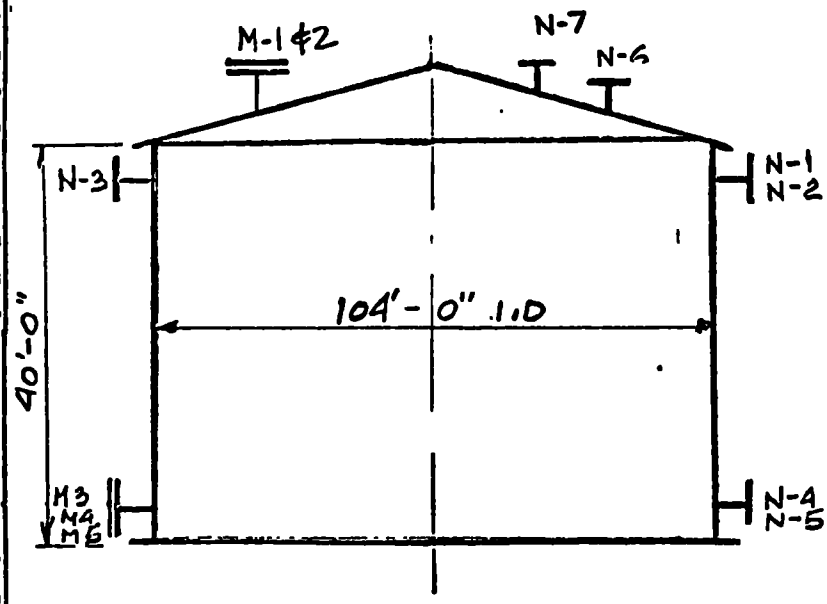

Shell Diameter (~~Inside~~ or I.D.) 104 ft. 0 in. Shell Length (BL BL) 40 ft. 0 in. Number Required: 1

	Pressure	Temperature	NOZZLES	Mark No	Size in	Qty	Rating	Facing
Operating	ATM Psig.	AMB °F	Inlet	N-1		1		
Design	ATM Psig	150 °F	RETURN	N-2		1		
Emergency Vac. Design		Yes (No)	Vapor Out					
	Material	Corr. Allow	OVERFLOW	N-3		1		
Shell	A-283-C	—	Liquid Out ***	N-4		1		
Heads	A-283-C	—						
Liner	—		Drains	N-5		1		
Type of ~~Roof~~: ROOF-SUPPORTED CONE (BY VENDOR)								
Code: API-650			Safety Valve					
Stress Relieve:	Yes	(No)	Manholes (ROOF)	M-1 & 2	24	2		
Radiograph:	Yes	(No)	Thermocouples					
Inspection			MANHOLES (SIDE)	M-3, 4, 5	30	3		
Weight: Empty:	Full:							
Internals: SUCTION HEATER			Gage Glass					
			Pr Gage					
			Level Control *	N-6		1		
			Vent **	N-7		1		
* Plus Full of Liquid Sp Gr = .98			Steam Out					

Insulation: ~~Yes~~ (No) Type: Hot Cold Antisweat Thickness
Supports: Skirt Length : Lugs or Saddles — (No.) Size : Material
Reference Drawings.
Remarks: * LEVEL GAGE TYPE VAREC TO BE SUPPLIED BY MANUFACTURER
** VENT N-7 TO BE WITH FLAME ARRESTER, TO BE DESIGNED BY VENDOR
*** NOZZLE N-4 TO BE PROVIDED WITH SUCTION HEATER
THIS VESSEL WILL BE DESIGNED BY THE VENDOR.
PAINTING 1 COAT OF RED LEAD (FOR ESTIMATING)

Copy To Date 125 Checked Date Approved Date

STONE & WEBSTER ENGINEERING CORPORATION

WASTE HEAT BOILER B-1 & M-3 STEAM DRUM
[redacted] SUMMARY

CLIENT Westinghouse
LOCATION Providence R.I.
TYPE OF UNIT Fluid Bed/Gas Oil Desulfurization Demonstration Plant

SHEET NO. 1 OF 1
EST [redacted] NO 12418.01
DATE 10/18/74
ISSUE NO 1 BY J.P.M.

ITEM NO →	B-1 & M-3													
DESCRIPTION	Waste Heat Boiler & Steam Drum 30"Φ													
DUTY MM BTU/HR	3.386													
HOT T1 T2	1970 600													
COLD T2 T1	366 366													
MTD °F	712													
U SERVICE RATE	15													
TOTAL SURFACE Ft²	314													
NO. OF SECTIONS	one													
ARRANGEMENT														
SIZE	I.D. = 28"													
TYPE	SPECIAL S & T													
GPM OF WATER														
LBS/HR STEAM	3930													
NO. & HP OF MOTORS														
SIDE	S	T	S	T	S	T	S	T	S	T	S	T	S	T
MEDIUM	C	H												
ESTIMATED ΔP														
DESIGN PRESSURE	180	25												
DESIGN TEMPERATURE														
MATERIAL - SHELL	C.S.													
MATERIAL - CHANNEL	C.S. with Refrac.													
MATERIAL - TUBES	C.S.													
MATERIAL - TUBE SHEET	C.S. with Ferrules													
NO. OF TUBES	59													
SIZE X BWG X LENGTH	1½"x 12 x 192"													
TUBE PITCH	2⅛" Δ													
ESTIMATED WEIGHT (LBS)														
COST	31000													
VENDOR														
DIRECT LABOR MH'S														

6.3 Equipment Specifications for Items in Accounts B, F, G, M, P, R & T

STONE & WEBSTER ENGINEERING CORPORATION

CLIENT Westinghouse
LOCATION Providence R.I.
TYPE OF UNIT Fluid Bed/Gas Oil Desulfurization Demonstration Plant

START-UP HEATER F-1, HOT FUEL GAS BURNERS-F2A-D
[redacted] SUMMARY

SHEET NO. 1 OF 1
EST./[redacted] NO 12418.01
DATE 10/18/74
ISSUE NO 1 BY J.P.M.

ITEM NO. →	F-1		F-2A-D											
DESCRIPTION	Start-Up Heater		Hot Fuel Gas Burners											
DUTY MM BTU/HR	22.0													
HOT T1 T2	Temp. In - 234°F													
COLD T2 T1	Temp. Out - 110°F													
MTD °F														
U SERVICE RATE														
Flow Rate	97436 lbs/HR													
TOTAL SURFACE														
NO. OF SECTIONS														
ARRANGEMENT														
SIZE														
TYPE														
GPM OF WATER														
LBS/HR STEAM														
NO. & HP OF MOTORS														
SIDE	S	T	S	T	S	T	S	T	S	T	S	T	S	T
MEDIUM														
ESTIMATED ΔP														
DESIGN PRESSURE														
DESIGN TEMPERATURE														
Pressure - In & Out	10 PSIG.													
MATERIAL - SHELL														
MATERIAL - CHANNEL														
MATERIAL - TUBES														
MATERIAL - TUBE SHEET														
NO. OF TUBES														
SIZE X BWG X LENGTH														
TUBE PITCH														
ESTIMATED WEIGHT (LBS)														
Approx. Size	5'-0"ϕ x 11'-0"													
COST	55,000		Allow - 70,000											
VENDOR														
DIRECT LABOR MH'S														

ABSORBER HEATER - ITEM F-3

One in-line burner for No.2 fuel oil for direct heating of air fed by R-9 and 4% SO_2 gas fed by R-10 to mixed gas outlet of 1200°F. F-3 similar to F-1 and consisting of oil atomizing nozzle in a refractory lined combustion chamber with connections for air inlet (estimated size 8") Process gas inlet from R-10 (estimated size 8") at 300°F. Normal intermittent oil flow 110 lb/hr, heat release approx. 2MM BTU/Hr.

The following is a preliminary sketch for estimating, layout and report purposes

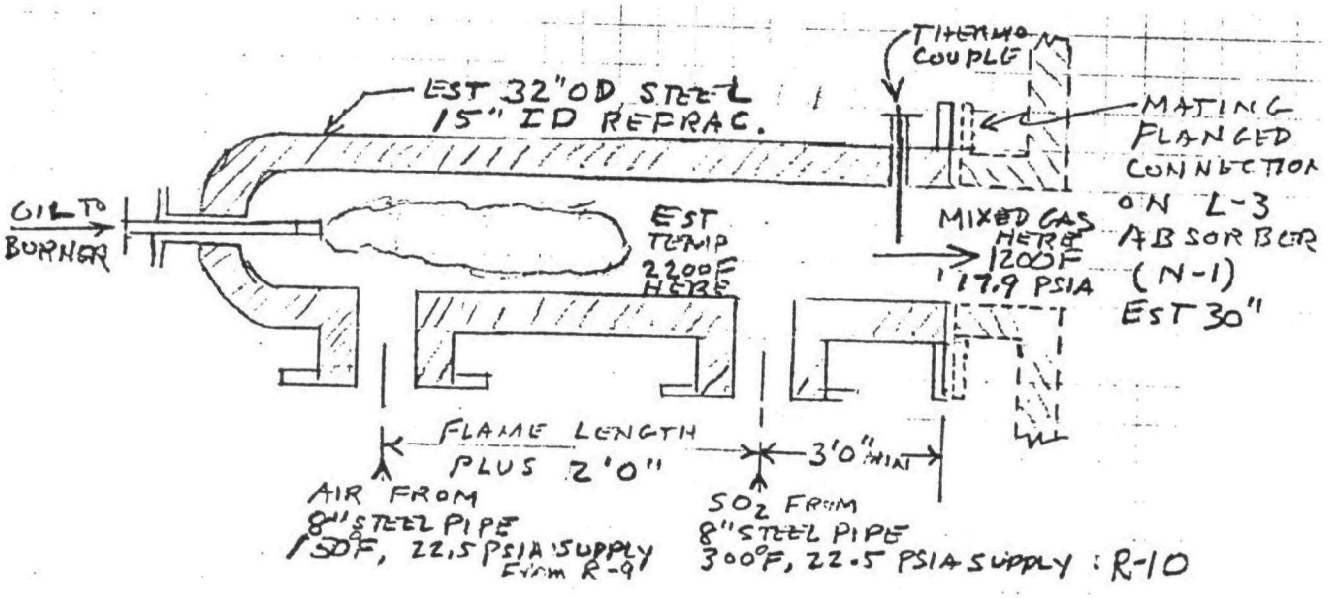

LIMESTONE UNLOADING SYSTEM - ITEMS G-1 SYSTEM
(See Dwg. 12418.01-61C)

System is designed to unload a 200 ton railroad car in less tha 1 shift (6 hours). This rate will be approximately 67,000 lbs/hr. The system is designed to convey over a 100' lift and 400 lineal feet of tubing with 4 elbows. A pull-push system will be employed. The material will be pulled out of the railroad car under a vacuum and then sent to the existing coal bunker under pressure. System will include: railcar unloading kit, 6" dia. tubing and fittings, 2-Filter/Receivers, 2 Rotary Airlocks with 3/4 HP motors, Vacuum blower with 60 HP motor, Pressure blower 75 HP motor, required silencers, flexible hoses, and inlet air filter.

Similar to systems manufactured by Ducon, Shick, etc.

WASTE STONE SYSTEM - ITEMS: G-2 SYSTEM
(See Dwg. 12418.01-61C)

System is designed to pick-up all the waste stone produced and convey the material at a rate of 4,500 lbs/hr., to either of the two (2) existing ash silors. The system is a vacuum pressure type, and reflects a lift of 100 feet, and includes 600 lineal feet of tubing, 4 Rotary airlocks, 3 filter/receivers, 1 Diverter Valve, 1-30 HP Vacuum Blower, 1-20 HP Pressure Blower, Lot of 4" tubing, fitting elbow etc., silencers, flex hoses, manifolds, and inlet air filters.

Similar to systems manufactured by Ducon, Shick, etc.

LIMESTONE WEIGHT FEEDERS-ITEM: G-3 A/B

Belt type weight feeder to meter between 750 and 4500 #/Hr. with an accuracy of ± ½ %. Weigh measurement accomplished by load cell. Feeder is complete with 1 Hp DC motor, totalizer, digital rate setter, HI-low alarm contacts, zero speed switch, external signal acceptor, complete internal controls, all in a totally enclosed dust cover. Unit is constructed of carbon steel with 304SS skirtboards.

Similar to Acrson Model 203-105Z.

RECYCLE FLUE GAS BAG HOUSE ITEM: G-4

Reverse air jet type dust collector to filter 30,000 ACFM of Flue gas to 350 F and + 6" W.G. Unit sized at a 5:1 air to cloth ratio (approx. 6,000 ft. of filtration area). Unit is furnished complete with solenoid valves, air header, internal catwalks, external ladder and catwalks, bracing, support legs, Nema IV electricals, trough (s), screw conveyor (s), and air lock (s). Unit is constructed of carbon steel with, Nomex bags.

Similar to Flex-Kleen Model 84UDC-608

GASIFIER AIR SCREEN ITEM: G-5

Vertical Roll type, with automatic renewable media to filter 20,200 cfm of atmospheric air. Filter complete with 1/6 Hp motor drive mechanism, internal controls, timers, etc. Unit shall be of carbon steel construction with a glass fiber media.

Similar to American Air Filter Model Roll-O-Matic 5-98

REGENERATOR AIR SCREEN ITEM: G-6

Same description as G-5 except 2450 cfm of air is to be filtered.

Similar to American Air Filter Model Roll-O-Matic 3-50

PTG FILTER ITEM G-7

Inline cartridge type filter to remove all particles larger than 1 micron from 140 ACFM of gas at 100°F & 30 psig. Housing and cartridge to be 316SS, replaceable filter sock to be polypropylene cloth. Particles wet with corrosive steam condensate containing SO_2& CO_2.

Similar to Twistloc Model 100-1.

GASFIER CYCLONES ITEM: G-8 A -D

Four Cyclones in parallel to handle 670 ACFS each at 1600°F and 2.6 psig. Internal design conditions 1710°F, 10 psig unit will be of Carbon Steel construction with 5" of refractory lining on all inside walls. Units to be 7'-11"OD x 33'-0" high.

Similar to Ducon Size 1025 Type VM700-L5

REGENERATOR PRIMARY CYCLONE ITEM: G-9

Cyclone to handle 148 ACFS at 1960°F & 2.1 psig. Internal design conditions 2012°F, 10 psig unit will be of carbon steel construction with 7" of refractory lining on all inside walls. Unit to be 4'-6"OD x 19'-0" high.

Similar to Ducon Size 225 Type VM700-L7

REGENERATOR SECONDARY CYCLONE ITEM: G-10

Cyclone is in series with G-9 and designed exactly the same as G-9.

SUCTION LINE DUPLEX OIL FILTER ITEM: G-14

Manual twin basket type oil filters. Carbon Steel housing with stainless steel baskets. Switch-over accomplished by a manually operated plug valve. Cover to be of quick opening type. Unit sized for a maximum pressure drop of less than 1 psi.

Similar to Zurn Industries Model 4" 590 FPS.

PULVERIZER CYCLONE ITEM: G-17

Cyclone to handle 25 ACFS at 794°F & 1.0 psig. Internal design conditions 850°F, 10 psig. Unit of 304 S.S. construction to be 1'-11" O.D. x 9'-6" high.

Similar to Ducon size 40 VM700-L3

ABSORBER CYCLONE ITEM: G-18

Cyclone to handle 200 ACFS at 1436°F & 1.4 psig. Internal design conditions 1700°F, 10 psig. Unit of carbon steel construction with 5" of refractory lining. Unit is 4'-0" O.D. x 20'-0" high

Similar to Ducon size 330 VM700-L5

BAG FILTER ITEM G-19 Iincluding components G-19A and G-19B)

Reverse air jet type dust collector to filter 2625 ACFM of Regenerator off gas at 300°F and - 8.5 WC (Design 3300 ACFM). Unit sized at a 5:1 air to cloth ratio (approx. 640 ft2 of filtration area). Unit is furnished complete with solenoia valves, air header, external ladder and cage, four support legs, NEMA IV electrical components, and air lock (1/6 HP). It is carbon steel construction with nomex bags, size 13'-2" high x 5'-4" square.

Similar to Flex-Kleen Model - 84 RA-64.

FINES LOCK HOPPER - ITEMS G21A-D

Carbon steel shell, use Sturtevant -25ft^3 size with 4" refractory lining.

Inlet nozzle 6" ID refractory.
Outlet nozzle 4' ID refractory.

Valves - Item G-22-A-D - 2" nominal bore.

Valves - Item G-23A-D - assume 2" air operated knife gate valves with 10" OD size companion flanges.

Valves - Item G-23 E-H - assume 2" air operated knife gate valves with 10" flanges.

C.S. Stack cyclone lock hopper - Item G-28 Sturtevant - 3ft^3

C.S. Bag house lock hopper - Item G-29 Sturtevant - 3ft^3

G-30 A and G-31 A - 8" Carbon steel air operated knife gate valves.

G-30 B and G-31-B - 1-1/2" Carbon steel air operated knife gate valves.

G-32 and G-33 - 1-1/2" nominal bore

PULVERIZER BLOWER AIR SCREEN ITEM: G-24

Same as G-6 except 700 cfm air

Similar to American Air Filter Model Roll-O-Matic 3-50

ABSORBER BLOWER AIR SCREEN ITEM: G-25

Same as G-7 except 940 cfm air

Similar to American Air Filter Model Roll-O-Matic 3-50

LIMESTONE STAR VALVE - ITEM G-26

One star valve for feeding limestone of 1/8" to dust size at a rate governed by G-3 A or B between 750 and 4,500 lb/hr. The star valve serves as a gas lock to prevent escape from L-1 Gasifier, normal pressure 2.6 psig, design 10 psig. The star valve and downstream line will have purge gas supply available at 100F and 25 psig, to prevent entrance of hot gas into the line. Motor size - ½HP.

Similar valve by Beaumont - Birch Co.

SOLID WASTE COOLER CONVEYOR- ITEM G-27

Normal Feed Rate: 2292 lb/Hr. solids, size 75 micron to dust
Normal Heat Duty: .968 MM BTU/hr.

Design for 150% of capacity and duty

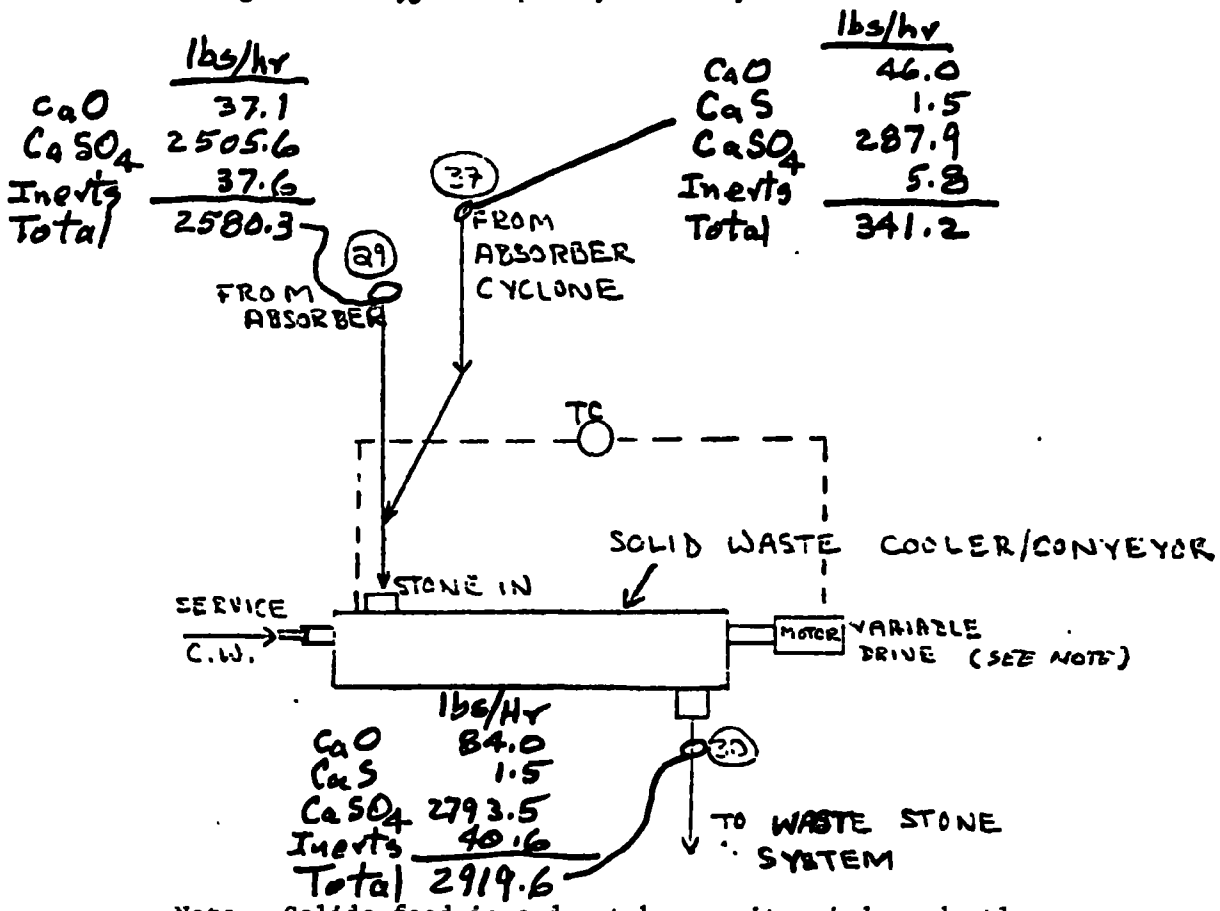

Note: Solids feed in and out by gravity, independently. If feasible, use constant speed drive set for Heli-flow to handle maximum solids rate.

If necessary to regulate drive to maintain level of solids, suggest skin thermocouple on cover which will be responsive to approach or recession of hot solids level, TC to vary speed.

AIR SCREEN INTAKE FOR G-2-3 Item G-34

Same as G-
Similar to American Air Filter Model - Roll-o-matic

AIR SCREEN INTAKE FOR G2-6 Item G-35

Same as G-
Similar to American Air Filter Model - Roll-o-matic

PTG WATER SEPARATOR ITEM: M-4

A centrifugal type water separator to remove 200 lbs/hr of water from 205 acfm of gas at 100°F and 40 psig.

Similar to unit manufactured by Dyna-therm.

STONE & WEBSTER ENGINEERING CORPORATION

CLIENT WESTINGHOUSE
LOCATION PROVIDENCE
TYPE OF UNIT OIL GASIFICATION

PUMP SUMMARY

SHEET NO. 1 OF 1
EST./JOB NO. 12419.01
DATE OCT 1 1974
ISSUE NO. 2 BY BECKFORD

ITEM NO.		SPARED BY	P-4A	P-4B																				
Q'TY			Two																					
SERVICE			OIL TRANSFER PUMP																					
PUMP	ARRANGEMENT & TYPE		HORIZ ~~VERT~~ ~~CENT~~ ~~RECIP~~ ~~ROT~~					HORIZ	VERT	CENT	RECIP	ROT	HORIZ	VERT	CENT	RECIP	ROT	HORIZ	VERT	CENT	RECIP	ROT		
	MANUFACTURER & MODEL		SIERBATH GEAREX																					
	SIZE	STAGES	RPM	C-2	1	1200																		
	CAP. EA. (GPM)	NPSH REQ. (FT)		72																				
	SUCTION (PSIG)	DISCH. (PSIG)		0	35																			
	TEMP °F	PROD. S.G		120	0.98																			
	MATERIAL			STEEL																				
	F.S EACH INCL DRIVER			10 x 30 x 18 (2)																				
	WEIGHT (LBS)																							
DRIVER TURBINE	MANUFACTURER & MODEL																							
	STEAM CONDITIONS																							
	DRIVER RPM	GEARED TO RPM																						
	Q'TY	HP	WR																					
	WEIGHT OF TURBINE(S) (LBS)																							
DRIVER MOTOR	MANUFACTURER & TYPE			WESTINGHOUSE (2)																				
	DRIVER RPM	GEARED TO RPM		1200	—																			
	Q'TY	HP	ENCL	VOLTS	2	5	ODP	600																
	WEIGHT OF MOTOR(S) (LBS)																							
COST	PUMP (S)			1270 /EA					/EA				/EA					/EA						
	TURBINE (S)			/EA					/EA				/EA					/EA						
	MOTOR (S)			253 /EA					/EA				/EA					/EA						
	GEAR (S)			/EA					/EA				/EA					/EA						
	FREIGHT																							
	TOTAL COST VQ			1523	3046																			
	DIRECT LABOR MH'S																							

(2) 10-18-74

STONE & WEBSTER ENGINEERING CORPORATION

CLIENT WESTINGHOUSE
LOCATION PROVIDENCE, R.I.
TYPE OF UNIT OIL GASIFICATION

COMPRESSOR SUMMARY.

SHEET NO. 1 OF 2
EST./JOB NO. 12418.01
DATE OCT-11-74
ISSUE NO. 2 BY ADM

ITEM NO.			R-3		R-4		R-6		R-8	
QTY			1 (2 IN SERIES)		1		1		1	
SERVICE			PTG BLOWER		FLUE GAS BOOSTER FAN		REGENERATOR AIR BLOWER		GASIFIER AIR/FLUE GAS BLOWER	
COMPRESSOR	TYPE		CENTRIFUGAL		BLOWER		SCREW		CENTRIFUGAL	
	MANUFACTURER & MODEL		SUNDYNE LMC311P		BUFFALO 730H268		IR LAXI		ELLIOTT P-4	
	SIZE	RPM	·		–	1800	787 L165	1800	·	1800
	CAP. EA. (CFM)	NO OF STAGES	550	2	22,800	1	2500	1	46,700	1
	SUCTION PSIA	DISCH PSIA	14.6	45.0	14.2	14.9	14.6	24.0	14.6	23.3
	TEMP °F	MOL. WT.	250	28.6	300	29.2	77	28.8	215	28.7
	NORMAL HP	DESIGN HP		129		81		145		2585
	MATERIAL		316 SS (2)		C.S.		C.I. (2)		C.S.	
	F.S. EACH INCL DRIVER		36 x 36 x 72 (2) (INLINE)		150 x 140 x 130 (2)		150 x 80 x 72 (2)		150 x 120 x 150 MACHINE (2)	
	AUXILIARIES INCLUDED								LUBE CONSOLE —	
	WEIGHT (LBS)								— 72 x 120 x 72 (2)	
DRIVER — TURBINE	MANUFACTURER & MODEL									
	STEAM CONDITIONS									
	DRIVER RPM	GEARED TO RPM								
	QTY	HP / WR								
	WEIGHT OF TURBINE(S) (LBS)									
DRIVER — MOTOR	MANUFACTURER									
	DRIVER RPM	GEARED TO RPM	3600	33,900	1800	—			1800	4000
	QTY / HP	ENCL / VOLTS	2 / 75/100	ODP / 600	1 / 100	ODP / 600	1 / 200	ODP / 600	1 / 3000	ODP / 2300
	WEIGHT OF MOTOR(S) (LBS)									
COST	COMPRESSOR (S)	(2)	16 000/EA	32 000	10,000/EA	10000	35,000/EA	35,000	100,000/EA	100,000
	TURBINE (S)		— /EA	—	— /EA	—	— /EA	—	— /EA	—
	MOTOR (S)	(2)	1500 /EA	3000	— /EA	—	2500 /EA	2,500	50,000 /EA	50,000
	GEAR (S)		— /EA	—	— /EA	—	— /EA	—	— /EA	—
	CONSOLE (S)		— /EA	—	— /EA	—	— /EA	—	50,000/EA	50,000
	FREIGHT									
	TOTAL COST									
	DIRECT LABOR MH'S									

(2) 10-18-74

STONE & WEBSTER ENGINEERING CORPORATION

CLIENT WESTINGHOUSE
LOCATION PROVIDENCE, R.I.
TYPE OF UNIT OIL GASIFICATION

COMPRESSOR SUMMARY

SHEET NO. 2 OF 2
EST./JOB NO. 12418.01
DATE OCT-11-74
ISSUE NO. 2 BY ADM

ITEM NO.			R-9		R-10		R-11				
Q'TY			1		1 (2 IN PARALLEL)		1				
SERVICE			ABSORBER AIR BLOWER		ABSORBER SO_2 BLOWER		PULVERIZER AIR BLOWER				
COMPRESSOR	TYPE		SCREW		CENTRIFIGAL		POSITIVE DISPLACEMENT				
	MANUFACTURER & MODEL		I.R. AXI		SUNDYNE LMC313		GARDER - DENVER				
	SIZE	RPM	562L 145	1800			RLOD 15x11	400			
	CAP. EA. (CFM)	NO OF STAGES	870	1	3500	1	600	1			
	SUCTION PSIA	DISCH PSIA	14.6	22.5	14.0	22.5	14.6	75			
	TEMP °F	MOL. WT.	77	28.8	300	31.7	77	28.8			
	NORMAL HP	DESIGN HP		45		262		110			
	MATERIAL		C.I (2)		316 SS		C.S.				
	F.S. EACH INCL DRIVER		100 x 72 x 72 (2)		36 x 36 x 72 (INUNZ) (2)		200 x 50 x 100 (2)				
	AUXILIARIES INCLUDED										
	WEIGHT (LBS)										
DRIVER TURBINE	MANUFACTURER & MODEL										
	STEAM CONDITIONS										
	DRIVER RPM	GEARED TO RPM									
	Q'TY	HP	WR								
	WEIGHT OF TURBINE(S) (LBS)										
DRIVER MOTOR	MANUFACTURER						—				
	DRIVER RPM	GEARED TO RPM	1800	—	3600	33,900	1750	belt - 400			
	Q'TY	HP	ENCL	VOLTS	1 / 75	ODP / 600	2 / 150	ODP / 600	1 / 150	ODP / 609	
	WEIGHT OF MOTOR(S) (LBS)										
COST	COMPRESSOR (S)		30,000 /EA	30,000	28 000 /EA	(2) 56 000	36,000 /EA	36,000	/EA		
	TURBINE (S)		— /EA	—	— /EA	—	— /EA	—	/EA		
	MOTOR (S)		1500 /EA	1500	4500 /EA	9000	INC /EA	INC (2)	/EA		
	GEAR (S)		— /EA	—	— /EA	—	— /EA	—	/EA		
	CONSOLE (S)		— /EA	—	— /EA	—	— /EA	—	/EA		
	FREIGHT										
	TOTAL COST										
	DIRECT LABOR MH'S										

(2) 10-18-74

STONE & WEBSTER ENGINEERING CORPORATION

CLIENT Westinghouse
LOCATION Providence, R.I.
TYPE OF UNIT Fluid Bed/Gas Oil Desulfization Demonstration Plant

EXCHANGER SUMMARY

SHEET NO. 1 OF 1
EST./[redacted] NO 12418.01
DATE 10/18/74
ISSUE NO 1 BY J.P. Malloy

ITEM NO. →	T-1		T-3		T-5		T-6A&B		T-7					
DESCRIPTION	Regenerator Off-Gas/Air Exchanger		PTG Cooler		Oil Storage Tank Heater		Oil Transfer Line Heaters		PTG Gas Blower Suction Cooler					
DUTY MM BTU/HR	0.67		0.24		1.4		1.4		0.042					
HOT T1 T2	600	300	527	100	250	250	350	350	350	230				
COLD T2 T1	480	200	80	65	120	40	200	200	100	65				
MTD °F	80													
U SERVICE RATE	2.7													
TOTAL SURFACE - Ft²	3400		80		1350		560		≈ 40					
NO. OF SECTIONS	one		one		one		one		one					
ARRANGEMENT														
SIZE	I.D.: 35"		Dia. 20" X L 38"						Dia. 20" x L 38"					
TYPE	S&T, Type BEM		SPIRAL		SPECIAL S&T		S&T		SPIRAL					
GPM OF WATER														
LBS/HR STEAM														
NO & HP OF MOTORS														
SIDE	S	T	S	T	S	T	S	T	S	T	S	T	S	T
MEDIUM	C	H	H	C										
ESTIMATED ΔP														
DESIGN PRESSURE	25	25	75	75		25		175	75	75				
DESIGN TEMPERATURE	505	625	580	580		300		400	400	400				
MATERIAL - SHELL	C.S.		SPIRALS-Inconel				C.S.		SPIRALS-Inconel					
MATERIAL - CHANNEL	C.S.				C.S.		C.S.							
MATERIAL - TUBES	C.S.				C.S.		C.S.							
MATERIAL - TUBE SHEET	C.S.				C.S.		C.S.							
NO. OF TUBES	1090													
SIZE X BWG X LENGTH	3/4" X 14 X 192"		12 ga.						12 ga.					
TUBE PITCH	15/16" Δ													
ESTIMATED WEIGHT (LBS)														
COST	17,000		12,000		10,000		6000		12,000					
Freight					300		200							
VENDOR														
DIRECT LABOR MH'S														

6.4 SUMMARY OF EQUIPMENT ROOMS

A. H-1 Control Room & Model Shop

Control room size; 10'-0" W by 20'-0"L by 15'-0"H

B. H-2 Laboratory

1. Space for following type of tests and apparatus
   a) Viscosity, density, sulfur content, carbon, conrad-carbon, vanadium, nickel, sodium, water, asphaltenes, calcium, carbon dioxide, inerts
   b) Sieve analysis, atomic adsorption, wet extraction, muffle furnace, gas chromatograph.
   c) Racks for samples - 24 hour basis
2. Size - 10'-0"W by 20'-0"L by 15'-0"H

C. Switchgear Room

Size; 10'-0"W by 15'-0"L by 15'-0"H

D. Analyzer Shelter

Size; 10'-0"W by 15'-0"L by 8'-0"H

6.5 SUMMARY OF EQUIPMENT COSTS

Table E-1 summarizes the equipment costs for the reaction system of the demonstration plant. Table E-2 gives a breakdown of the fuel-gas piping system cost. The dry sulfation system equipment costs are listed in Table E-3.

Table E-1

REACTION SYSTEM-PROCESS EQUIPMENT

Item	Material ($)	Labor ($)	Total ($)	Basis and Comments
Gasifier (L-1)	222,000	13,400	235,400	20% A/F ratio; 6 ft/sec velocity 20' 8" diameter; 23' vertical matls. - shell and internals - 82,500 refractory lining - 78,700 distributor - 66,250
Regenerator (L-2)	41,000	900	41,900	8% SO_2; 6 ft/sec velocity 6' diam. x 22' vertical matls. - shell - 17,800 refractory lining - 15,340 distributor - 6,895
Gasifier Cyclones (G-8 A-D)	213,000	1,800	214,800	20% A/F ratio; 4 units; 670 acfs each; 7'11" O.D. x 33' vertical (30% o.c. on volume) matls. - shell (est. from SWEC) - 168,000 refractory - 38,000
Gasifier Fines Recycle System (G-21 A-D), (G-22 A-D), (G-23), (G-23 A-D), (G-23 E-H)	188,100	5,800	193,910	4 Sturtevant Systems; 25 ft^3 volume (∿ 40 min capacity) per lock hopper; valves from Dally Eng. Co. matls. - lock hoppers, refractory, air knife valves and connecting piping - 108,000 inlet butterfly valves - 38,000 outlet ball valves - 34,000
Regenerator Primary Cyclone and Trickle Valve (G-9), (G-9A)	23,800	450	24,250	8% SO_2; 148 acfs; (15% o.c. on volume) 4' 6" O.D. x 19' vert. matls. - shell (est. from SWEC) - 17,000 refractory - 4,240 trickle valve - 2,500
Regenerator Secondary Cyclone and Trickle Valve (G-10) and (G-10A)	23,800	450	24,250	Identical to primary cyclone
Gasifier Air/Flue Gas Blower (R-8) and Console and Screen (G-5)	208,750	20,300	229,050	20% A/F ratio, 46,000 ft^3/min; 23.3 psia 2585 hp, c.s.; 79.70 $/hp (4% o.c. on volume/15% on hp)
Regenerator Air Blower (R-6) and Screen (G-6)	39,230	1,800	41,030	2500 ft^3; 24.0 psia; 145 hp, c.s., 266 $/hp (30% o.c. on volume) 38% o.c. on hp) net 80% o.c. on h.p.
Fuel-Gas Piping System (see Table E-2)	521,415	150,000	671,415	(design velocity < 100 ft/sec; 150 ft/sec velocity would reduce diameter by 21%)(Pipe layout not optimum)

Table E-1(Continued)

Item	Material ($)	Labor ($)	Total ($)	Basis and Comments
Regenerating Off-Gas System				
Waste heat boiler and steam drum (B-1), (M-3)	32,000	700	32,700	3.39 MM Btu/hr; 3930 lb steam/hr at 366°F; c.s.
Regenerator off-gas/air exchanger (T-1)	17,500	500	18,000	0.67 MM Btu/hr; c.s.
Bag filter (G-19), wrapper (G-19A), and discharge valve (G-19B)	8,800	300	9,100	2525 acfm; 300°F
Flue-Gas Recycle System				
Stack cyclone lock hopper (G-28), valves (G-30A, G-30B, G-32), and connecting piping	10,200	1,700	11,900	5 c.f. capacity, c.s., Sturtevant Ltd.
Recycle flue gas bag-house (G-4), screw conveyor (G-4A), and airlock (G-4B)	55,600	2,200	57,800	30,000 acfm at 350°F (26% o.c. on gas volume)
Baghouse lock hopper (G-29), valves (G-31A-B, G-33) and connecting piping	10,200	1,700	11,900	5 c.f capacity, c.s., Sturtevant Ltd.
Flue gas booster fan (R-4)	10,300	1,400	11,700	22,800 ft^3; 14.2 to 14.9 psia; c.s.; 81 hp; $127/hp (29% o.c. on volume/ 23% o.c. on hp)
PTG System				
PTG blower suction cooler (T-7)	12,350	300	12,650	0.042 MM Btu/hr; to seawater; cools PTG to 230°F from 350°F
PTG blower (R-3)	36,000	2,500	38,500	550 ft^3/ min; 45 psia; 129 hp; S.S. 316 279 $/hp (∿ 25% o.c. on volume/35% o.c. on h.p.)
PTG cooler (T-3)	12,350	300	12,650	0.24 MM Btu/hr; to seawater; cools PTG to 100°F from 527°F
PTG water separator (M-4)	500	200	700	
PTG filter (G-7)	260	100	360	
Boiler Modifications- Fuel-Gas Burners (F-2A-D) and Windbox (F-24-D)	82,000	3,400	85,400	
Start-up Air Heater (F-1)	56,500	1,100	57,600	22 MM Btu/hr; 97,400 lb/hr flow rate; 1100°F exit temp.
Portable Chunck Trap Vessel (G-36)	5,000	300	5,300	
TOTAL PROCESS EQUIPMENT	1,830,655	211,600	2,042,255	

Table E-2

FUEL-GAS PIPING SYSTEM

Item	Material ($)	Labor ($)	Total ($)	Basis and Comments
Shop Fab. Pipe				
48"	2,700	12,700	15,400	35 ft; gasifier to cyclone; C.S.
46"	15,330	57,000	72,330	210 ft; cyclones to burners; C.S.
90° Elbows	11,440		11,440	3; 46"; C.S.
45° Ells	4,200		4,200	1; 46"; C.S.
Tees	21,200		21,200	4; 46"; C.S.
Reductions	9,215		9,215	4; C.S.
Flanges - 48"	59,160		59,160	34; C.S.
Flanges - 46"	79,200		79,200	45; C.S.
Blind Flanges	8,100		8,100	3; 46"; C.S.
Welds	70,820		70,820	79; C.S.
Testing Fab.	6,850		6,850	
Bolt-up		9,400	9,400	
Hangers and Supports	57,600	43,700	101,300	Matls. at 20% of above items
Design Allowance	51,900	14,100	66,000	15% allowance
Refractory	50,000		50,000	Estimated from SWEC costs
Additional Structures	73,700	13,100	86,800	Includes 10% design allowance
TOTAL COST	521,415	150,000	671,415	

Table E-3

STONE PROCESSING SYSTEM (Dry Sulfation)

Item	Material ($)	Labor ($)	Total ($)	Basis and Comments
Absorber (L-3)	241,000	13,500	254,500	0.4 ft/sec; 21' 4" diam. x 23' vert. Matls. - shell - 72,700 refractory - 76,200 distributor - 87,050
Absorber Cyclone (G-18) and Trickle Valve (G-18A)	24,000	300	24,300	200 ACFS at 1436°F; 4' diam. x 20' vert. (35% o.c. on volume) Matls. - shell (est. from SWEC) - 18,000 refractory - 3,400 trickle valve - 2,500
Jet Pulverizer (G-20)	34,200	560	34,760	870 scfm at 75 psia, 932°F 1500 lb stone/hr. (45% o.c. on gas) Fluid Energy Co., Hatfield, Pa.
Pulverizer Cyclone (G-17) and Trickle Valve (G-17A)	7,600	300	7,900	25 ACFS at 794°F; 1' 11" O.D. x 9' 6" vert. (27% o.c. on gas volume) Matls. - shell (est. from SWEC) - 5,000 trickle valve - 2,500
Absorber Air Blower (R-9) and Screen	33,130	1,200	34,330	870 cfm; 22.5 psia; 45 hp 722 $/hp (15% o.c. on gas/67% o.c. on hp)
Absorber SO_2 Blower	67,000	1,700	68,700	3500 cfm; 22.5 psia; 316 S.S.; 262 hp; 255 $/hp (15% o.c. on gas/15% o.c. on hp)
Pulverizer Air Blower (R-11) and Screen (G-24)	37 730	1,800	39,530	600 cfm; 75 psia; C.S.; 110 hp 337 $/hp (5% over capacity on compressor/37% o.c. on motor hp)
Solid Waste Cooler/ Conveyor (G-27)	47,500	2,200	49,700	1.5 x stoichiometric stone rate
Absorber Heater (F-3)	12,600	560	13,160	2 MM Btu/hr; 1200°F exit temp.
TOTAL PROCESS EQUIPMENT	504,760	22,120	526,880	

7. ONE LINE DIAGRAM

PAGE NOT

AVAILABLE

DIGITALLY

8. ECONOMICS

8.1 Base Conditions and Assumptions - 50 MW Demonstration Plant

(a) Retrofit to New England Power Service Co. No. 12 Boiler, Manchester St. Station, Providence, R. I.

(b) Cost of removal of No. 10 and No.11 Boilers to provide space is not included, and cost of refractory lined 42" piping for hot fuel gas is based on four burners located together in near side of No. 12 boiler. Tangential firing will require at least 50% more 42" piping.

(c) Boiler house, overhead coal bunker, ash silos, railroad siding, rail car spotting equipment, oil barge unloading facilities are all existing and usable.

(d) Steam, boiler feed water, service cooling water, electric power, plant air, instrument air, and low sulfur fuel oil are all available by connecting to existing supplies at no cost.

(e) Continuous firing of present normal fuel at 5% minimum of boiler capacity; 50 MW power requires 422,000 lb/hr steam. The hot fuel gas is estimated to raise 430,000 lb/hr. The boiler capacity is 450,000 lb/hr.

(f) Fuel oil feed cut-off has sufficiently fast response to boiler fuel rejection signals so no need for hot fuel gas line to have cut-off and relief facilities; if the latter were required, significant cost and major practical problems would be entailed.

(g) Design parameters and effectiveness of Absorber reaction at 94% minimum efficiency (not more than 6% of SO_2 and of CaO unreacted) will be tested and proven in Pilot Plant.

(h) Complete reaction of residual CaS in regenerated stone occurs in Absorber, (so that waste stone is unreactive toward natural waters) will be tested and proven in the Pilot Plant.

(i) Suitable limestone supply 300 miles by rail. Suitable waste solids disposal 30 miles by truck.

(j) Horizontal pulsed flow for controlled stone circulation will be tested and proven in a full scale cold flow model.

(k) Air jet pulverizing of regenerated stone for feed to Absorber will be tested and proven in manufacturer's test equipment.

(l) The 50:1 scaleup of processes proven in Abingdon Pilot Plant is feasible and appropriate.

8.2 Investment Cost Summary - 50 MW Pilot Plant, Total Project

Item	Material ($)	Labor ($)	Total ($)
PROCESS EQUIPMENT			
A. Towers			
B. Boilers, S·heaters	32,000	500	32,600
F. Process furnaces	151,200	5,100	156,300
G. General equipment	775,000	45,900	820,900
L. Reactors	504,000	27,800	531,800
M. Drums	500	200	700
Q. Storage tanks	355,500	35,500	391,000
P. Pumps (including drives)	3,100	300	3,400
R. Compressors (including drives)	429,500	30,100	459,600
S. Stacks	--	--	--
T. Heat exchangers	58,700	1,800	60,500
TOTAL PROCESS EQUIPMENT	2,309,500	147,300	2,456,800
PROCESS MATERIALS			
C. Piping	1,048,000	545,000	1,593,000
D. Structures	169,800	48,800	218,600
E. Electrical	158,800	221,400	380,200
H. Buildings	24,500	25,400	49,900
J. Civil	65,800	110,100	175,900
K. Instruments	129,200	54,600	183,800
N. Insulation[b]	54,000	--	54,000
N. Painting[b]	87,900	--	87,900
Refractory lining[b]	60,000	--	60,000
TOTAL PROCESS MATERIALS	1,798,000	1,005,300	2,803,300
TOTAL DIRECT COST (DM*+DL)	4,107,500	1,152,600	5,260,100
DISTRIBUTABLE ACCOUNTS			
V1. Insurance (excluding all risk)			
V2. Federal and states taxes			
X. Temporary construction facilities			
Y. Field office (including insurance and taxes)			850,000
Z. Construction tools and equipment			
O. Other distributable items			
TOTAL DISTRIBUTABLE			850,000
SUBTOTAL—COST OF WORK			6,110,100
U. INDIRECT ACCOUNTS			
Engineering			
Design			
Other headquarters office			1,250,000
Taxes—headquarters payroll			
Overhead allowance			
TOTAL INDIRECT (HEADQUARTERS OFFICE)			1,250,000
TOTAL, PRESENT DAY PRICES (BARE COST)			7,360,100
Fee, Escalation, and Contingency			Not included
Order of Accuracy			15%

[a]From original SWEC table.

[b]Subcontract.

8.3 Operating Cost Summary

Unit costs used are as provided by NEES (New England Electric Systems) basis 1976; - Internal Power - 23 Mils/KW Hr; No. 6 Fuel Oil - $2.25/MM BTU (HHV); Capital Charges - 20 Percent of Bare Cost/Yr; Maintenance (including construction tools, supplies and labor) - 5 percent of bare cost/yr.

Annual costs assumed on 7000 hr/yr stream operation. Other costs estimated by SWEC.

Bare Cost (Accuracy 15%)		$7,360,100.00
Direct Operating Costs		
Power	$1,472,020.00	
Operating Labor	304,500.00	
Limestone Supply	76,250.00	
Solid Waste Disposal	40,880.00	
Maintenance	368,005.00	
Total		2,261,655.00
Indirect Operating Costs		
Capitol Charges		1,472,020.00
Total Direct & Indirect Costs		3,733,675.00
Fuel Operating Cost		8,100,000.00
Total Operating Costs		11,833,675.00

APPENDIX F

BOILER MODIFICATIONS

F

APPENDIX F
BOILER MODIFICATIONS

An initial evaluation of the interfaces between the demonstration plant boiler and the fluidized bed residual oil gasification process was carried out. Combustion Engineering Power Systems Services (CE) provided certain engineering services designed to establish parameters for firing the high-temperature, low heating-value gas in the CE steam generator (unit No. 12) at the Providence, Rhode Island plant of the New England Electrical Services (NEES) (see Appendix C). Westinghouse provided CE with a design basis taken from conservative CAFB performance estimates (20 percent air/fuel ratio; high stack-gas recycle requirement). Little information was provided on the probable range of performance capable by CAFB. A summary of their study and an assessment of the requirements for the demonstration plant are presented.

SUMMARY OF THE CE ENGINEERING EVALUATIONS

An analysis of current performance data and latest equipment capabilities reveals that high-temperature. low heating-value gas can be fired in this unit. The maximum steam generating rate would be limited to 180,440 kg (400,000 lb) steam per hour with existing equipment because of induced draft (I.D.) fan limitations. To achieve a 204,120 kg (450,000 lb) per hour steaming rate new I.D. fans must be supplied.

New burners will be required to fire the low heating-value gas. After careful consideration, the CE tangential firing system was chosen to fire this fuel. Tangential firing burners would be installed in the four corners of the unit. The burners would be arranged with a center No. 6 oil compartment in which the flame scanner (supplied with the burner control system) would be located. Adjacent to this oil compartment, a CE 152 mm (6 in) side eddy plate No. 2 oil igniter would be installed.

Above and below the center oil compartment, compartments would be provided for low heating-value gas firing. Within these compartments, Type 309 stainless steel burners would be installed with their manifolds. Manifolds would terminate immediately adjacent to the windbox.

If the tangential firing system is selected, it will be necessary to plug the existing burner openings when low heating-value gas is fired, and it is expected that a 48-hour shutdown will be required to change over to low heating-value gas firing.

When firing the high-temperature gas, higher exit gas temperatures are expected in the economizer area, based on the conservative design basis used by CE. The economizer supports must be modified to provide insurance against failure. Inasmuch as the condition of the lower economizer bank is questionable, a replacement is recommended.

PREDICTED PERFORMANCE

- When firing low heating-value gas having an analysis projected for the 20 percent air/fuel ratio case—see Appendix E:
  - Steam load - 204,120 kg (450,000 lb/hr)
  - Unit efficiency - 82.5 percent
  - Superheater steam temperature - 510°C (950°F)
- When firing No. 6 Oil:
  - Steam load - 204,120 kg (450,000 lb/hr)
  - Superheater steam temperature - 510°C (900°F)

MATERIALS AND EQUIPMENT AND COST ESTIMATE

The following material and equipment would be required to implement the recommendations made by CE:

- Four (4) tangential burners for low heating-value gas and No. 6 oil firing. All material in contact with low heating-value gas is to be 309 stainless steel. Burners to be complete with windbox, air dampers, and so on.

- Four (4) No. 2 oil side eddy plate self-proving igniters rated at 2.11 MJ/hr (2 M Btu/hr), one (1) per corner, located adjacent to oil compartments
- Four (4) igniter air fans, one (1) per corner, complete with butterfly valve, air piping
- Two (2) scanner air fans with flapper arrangement for back-up complete with air piping
- Furnace Safety Supervisory System hardware
- Bent tube inserts for the tangential burner openings in the sidewall pressure parts as close as possible to the corners
- Bent tube inserts for the side igniters
- Wall boxes and mountings for the side igniters
- Refractory, insulation, casing, and so on, for the burner openings, igniter openings, closing up other openings, patching up affected furnace areas, and so forth
- Hot air ductwork from existing hot air source to burner windboxes, including air foils in each side for air measurement
- Insulation, and so on, for hot air ductwork
- Removable refractory plugs for existing six (6) horizontal burners, to be used for protection when these burners are not in use during tangential firing
- Economizer supports for entering gas temperature of 704°C (1300°F)
- Two (2) I.D. fans complete with motor drives
- Transition gas ductwork for new I.D. fans
- Insulation, and so on, for gas ductwork and I.D. fans
- One (1) set lower bank economizer elements (included since condition of existing elements is unknown)

The budget price associated with this scope of supply is $612,000. The erection effort associated with the installation of the

above listed material, to include both removal and installation, is estimated at $300,000.

The following materials and actions would be required to complete the modifications. The above prices do not cover this work scope.

- Low heating-value gas piping to burner including gas control valves and shutoff dampers for each low heating value gas compartment (two [2] per corner)
- Burner piping material
- Relocation of boiler feedwater piping
- Relocation of platforms and stairways
- Relocation of any other equipment
- Foundations, structurals, and so forth, for I.D. fans
- Any gas-cleaning equipment to meet pollution codes
- Electrical material and labor for wiring burner controls
- Combustion control material and erection labor.

It is estimated the modifications can be completed in 18 months.

ASSESSMENT

The study carried out by CE represents an initial evaluation of the boiler requirements. The study adopts the point of view that the plant should be modified to produce the maximum boiler design capacity, given certain assumptions about the gasification process. While this perspective is of interest, it may not be necessary or desirable to adopt this point of view for a demonstration plant. The study was also influenced by the basis which CE used for the gasification process. Certainly, some modifications would be required to adapt the existing boiler to its role in a low heating-value gas demonstration plant. The new economizer supports, burner plugs, and dual fuel safeguard system are examples of those required adaptations. In Westinghouse's opinion, however, the need for tangential firing, plus wall and tube modifications for that type of firing, is marginal. They are certainly the kind of modifications that would be required to maintain maximum boiler efficiency, but this is not

a requirement of the demonstration plant. It appears that a substantial saving could be made by using the four-burners-in-one-wall approach to boiler firing, and with fewer potential problems than with longer, more convoluted fuel-gas pipes. If this approach caused some loss in boiler efficiency, it would not be significant to the overall program. In addition, it should be noted that Stone and Webster Engineering Corporation (SWEC) included in their costs new air ducts and wind boxes for the new gas burners. Two factors indicate that a new I.D. fan may not be required for the demonstration plant:

- The design basis for the plant is 195,000 kg steam/hr (430,000 lb steam/hr) (equivalent to 50 MW) and not 204,000 kg/hr (450,000 lb/hr).
- The base design conditions are the most conservative conditions, and it is probable that lower flue gas volumes will exist in reality (by using a 17 percent air/fuel ratio, or water injection for gasifier temperature control, for example). Thus, the existing I.D. fan may be sufficient but, in any case, should not be replaced until the demonstration plant program has progressed to a point indicating its need.

In summary, further review of the boiler modification study is required before an optimal decision can be made regarding material and equipment requirements. Heat and material balance data on low heating-value gas firing, specific equipment costs, trade-off reviews on tangential burners over side burners, projection of boiler performance with and without new I.D. fans, and other related engineering data must be developed and reviewed.

APPENDIX G

ENVIRONMENTAL IMPACT

G

APPENDIX G

ENVIRONMENTAL IMPACT

The fluidized bed oil gasification process, in which limestone or dolomite removes the sulfur from fuel gas during the gasification process, has been developed to permit the utilization of high-sulfur residual fuel oil with conventional boilers by producing a low-sulfur fuel gas. The process can be operated as a once-through limestone sorbent system, a sorbent regeneration/sulfur recovery system, or a sorbent regeneration system without sulfur recovery by capturing the sulfur-rich gas from the regenerator with the spent stone. The spent stone from each system alternative can be processed to minimize the environmental impact of the waste stone for disposal or to provide material for potential market utilization (Appendices K-N).

Under contract to the U.S. Environmental Protection Agency (EPA), Westinghouse is carrying out laboratory support work on the sulfur removal system, and Esso Research Centre, Abingdon, England (Esso) is carrying out pilot-scale tests to investigate sulfur removal. A summary of the Esso pilot-scale experimental results is shown in Table G-1. The demonstration plant has been designed on the basis of these results.

Table G-1

SUMMARY OF ENVIRONMENTAL PERFORMANCE OF CHEMICALLY ACTIVE FLUIDIZED BED (CAFB) PILOT PLANT

Sulfur Removal Potential	-	Up to 95%
NOx Control Potential	-	Normal 270 ppm reduced to 155 ppm
Limestone Makeup Rate	-	0.5 to 1.5 times stoichiometric
Removal of Metals	-	100% fuel vanadium, 75% nickel, 40% sodium
Fuel Oils Utilized	-	Atmospheric residual (vacuum bottoms on batch unit tests)
Processing Steps Demonstrated	-	Gasification and regeneration

The gaseous sulfur dioxide (SO_2) and particulate sulfate emission from the 50 MW oil gasification demonstration plant has been investigated. New federal Source Performance standards for fossil fuel-fired steam generators of greater than 263.75 GJ/hr (250 million Btu/hr) heat input are 0.34 kg/GJ (0.8 lb/10^6 Btu) for sulfur dioxide and .043 kg/GJ (0.1 lb/10^6 Btu) for particulates. For the oil gasification demonstration plant, the sulfur dioxide output is projected to be 0.15 kg/GJ (0.35 lb/10^6 Btu) and is safely within the limit. This is based on 90 percent sulfur removal for the 2.6 percent sulfur residual oil for the demonstration plant. The total particulate emission is projected to be 0.0043 to 0.043 kg/GJ (0.01 to 0.1 lb/10^6 Btu) which meets the Performance Standard of 0.043 kg/GJ (0.1 lb/10^6 Btu). (See Appendix D).

Since the particulate emission from the oil gasification plant consists mainly of calcium oxide (CaO), the environmental impact of calcium oxide particulate emission is also of interest. According to the Analytical Handbook of Toxicity, calcium oxide is not toxic, but is irritating to the eye and skin and respiratory system. Its Threshold Limit Value is 5 mg/m^3. The stack exhaust from the oil gasification demonstration plant as projected from the composition of the stack fines from the Esso pilot tests is to contain less than 0.026 kg/GJ (0.06 lb/10^6 Btu) of calcium oxide based on the fines containing 60 percent calcium oxide and with 0.043 kg/GJ (0.1 lb/10^6 Btu) particulate emission. This is equivalent to approximately 0.032 kg/453 kg (0.07 lb/1000 lb) effluent gas in the 50 MW demonstration plant, which is well below the emission standard of 0.1134 kg/453 kg (0.25 lb/1000 lb) for the cement industry.[1]

There is evidence that sulfuric acid (H_2SO_4) aerosols and sulfates may be more potent irritants than sulfur dioxide.[2-5] The literature on current knowledge and on emission standards of these species has been reviewed:

- Approximately 95 percent of the sulfur emitted to the atmosphere from urban sources is in the form of sulfur dioxide. The primary urban source of sulfate is the atmospheric oxidation of sulfur dioxide to sulfuric acid,

with subsequent neutralization or exchange reactions giving a variety of sulfates.

- Sulfates can have a deleterious effect on human health and weather, climate, visibility, and vegetation. Reliable no-effect threshold levels have not been established. Sulfuric acid and certain sulfates are more potent irritants than sulfur dioxide.
- The irritant response of certain mixtures of sulfates is probably greater than the sum of the responses of the individual compounds and is related to the size and number density of the sulfates.
- The major portions of the sulfate particles in the atmosphere are in the respirable range.
- Approximately 20 percent of the sulfate exists as heavy-metal (zinc, iron, manganese, lead, vanadium, etc.) sulfates, 20 to 30 percent is in the form of ammonium sulfates, and 50 percent exists as sulfuric acid.[6]
- Little is known of the individual sulfate compounds. Amdur and Corn studied the irritant potency of zinc ammonium sulfate, zinc sulfate, and ammonium sulfate and found the double salt sulfate the most and ammonium sulfate the least irritating of the three compounds.[7] Not all sulfates are irritants in nature; ferric sulfate is,[7] but ferrous, manganese and calcium sulfates are not.[8]
- At eastern urban sites (east of the Mississippi River), sulfate contributed 10 to 20 percent of the annual average particulate loading, whereas at western urban sites (west of the Mississippi), sulfate contributed 5 to 10 percent of the annual average particulate matter in ambient air.
- In 1970, the national average sulfate concentration at urban locations was 10.1 $\mu g/m^3$. The nonurban average was 6.3 $\mu g/m^3$.
- Current knowledge and available data are inadequate at this time to provide criteria that might be used as a basis for standards.

Chemical analysis of the stack fines from the Esso pilot plant indicates that the fines contain 13 percent calcium sulfate ($CaSO_4$). If this composition holds true for the stack particulate emission from the demonstration plant, calcium sulfate emission is projected to be 0.0043 kg/GJ (0.01 lb/10^6 Btu). Although there is no emission regulation for sulfate particulate at the present time, a research and development program is outlined by EPA to establish criteria that can be used as a basis for control standards in the near future. Since calcium sulfate is considered inert,[8] it is not expected to cause any pollution problems at this level.

Environmental factors for power generation by oil gasification with a conventional plant are compared with those of a conventional oil-fired power plant using limestone wet scrubbing in Table G-2. Each of the processes has some advantages. The major advantage of the once-through limestone wet-scrubbing process is the status of its development. The oil gasification processes have cost advantages and potentially lower waste and emission levels.

The spent stone from the fluidized bed oil gasification/desulfurization process is dry and granular (-6.35 mm/-1/4 in). The composition of the spent stone is primarily calcium oxide and calcium sulfide, with a small amount of calcium sulfate. The disposal of this solid may be accomplished by a variety of methods. Several processing alternatives[12] have been developed to convert calcium oxide and calcium sulfide to an environmentally acceptable form for disposal (Appendix P). Dry sulfation (Appendix L) and dead-burning (Appendix O) are examples of dry processing systems; slurry carbonation (Appendix M) and acid sulfation (Appendix N) are examples of wet methods investigated for spent stone processing before disposal or further utilization.

The environmental impact of any disposed material is a function of its physical and chemical properties and the quantity involved. Potential water pollution problems can, in many cases, be predicted by chemical properties such as solubility, the presence of toxic metals, and pH of leachates. The disposal of spent stone from the oil gasification processes

Table G-2

ENVIRONMENTAL IMPACT COMPARISON

	200 MW conventional oil-fired power plant with limestone or lime slurry flue-gas scrubbing	200 MW conventional oil-fired power plant with CAFB oil gasification and dry sulfation of solid product
Plant Emissions		
SO_2 kg/GJ (lb/mm Btu)	0.15 (0.35)	0.15 (0.35)
NO_x kg/GJ (lb/mm Btu)[a]	0.34 (0.80)	0.17 (0.40)
Total Particulates kg/GJ (lb/mm Btu)	0.043 (0.10)	0.043 (0.10)
CaO	None	0.026 (0.06)
$CaSO_4$	None	0.0043 (0.01)
Solids Mg/day (tons/day)	145 (160)	145 (160)
chemical form[b]	$CaSO_3$, $CaSO_4$, $CaCO_3$, inerts (sludge)	> 95% $CaSO_4$, CaO, inerts
Liquids Mg (tons/day)[b]	145 (160)	None
chemical form	Water (sludge)	None
Resource Usage		
Limestone Mg (tons/day)	118 (130)	118 (130)
Process water, liters/day (gal/day)[c]	1.1×10^6 (3.0×10^5)	1.1×10^5 (3.0×10^4)
Auxiliary power (kw)[c]	$6 \times 10^3 - 8 \times 10^3$	$6 \times 10^3 - 8 \times 10^3$
Steam, kg/day (lb/day)[d]	3.2×10^5 (7×10^5)	None
Land, m^2 (acres)[b]	2×10^4-4×10^4 (5-10) per year per 3 m (10 ft) depth of pond	None
Ability to utilize atmospheric residual oils (#6 oil)	Yes	Yes
Ability to utilize vacuum bottoms with high metals content.	No	Yes

[a] NO_x emission for gasifier based on pilot-plant measurements and experience with fluidized bed combustion.

[b] Waste water based on 50% water sludge product. Typical sludge properties and land requirements are reported in J.W. Jones, "Environmentally Acceptable Disposal of Flue Gas Desulfurization Sludges: The EPA Research and Development Program" and C.N. Ifeadi, H.S. Rosenberg, "Lime/Limestone Sludge Disposal - Trends in the Utility Industry"; both presented at the EPA Flue Gas Desulfurization Symposium, Atlanta, Georgia, Nov. 1974.

[c] Process water and auxiliary power for limestone and lime slurry scrubbing based on G.G. McGlamery and R.L. Torstrick, "Cost Comparisons of Flue Gas Desulfurization Systems," presented at the EPA Flue Gas Desulfurization Symposium, Atlanta, Georgia, Nov. 1974.

[d] Based on steam for stack-gas reheat.

may create air pollution or odor nuisance, e.g. hydrogen sulfide (H_2S), depending on the amount of calcium sulfide present. Heat may be released on hydration and carbonation of calcium oxide. Potential water pollution may be introduced from the runoff leachates caused by the rainfall and naturally occurring subsurface flow through the landfill site. In order to predict leachate characteristics of a landfill, it is first necessary to describe the general features of water movement and geological consideration for this disposal method. Due to the recent surge of ecological interest in sanitary landfills utilized for solid waste disposal, there is an abundance of information available. Emrich's review of research in this field presents an overall view of progress on this subject.[9,10] Westinghouse will be continuing investigations conducted toward the definition and assessment of this problem; results available to date, however, are not sufficient to assess fully its extent. Tests on stone analysis, leaching properties, heat release properties, landfill properties, and air emission are being planned to obtain this information.

To summarize, the CAFB process compares favorably environmentally to limestone and lime slurry scrubbers. Sulfur removal capabilities for the processes appear comparable:

- CAFB provides a considerable reduction in nitrogen oxide emissions.
- The CAFB process consumes an order of magnitude less process water than slurry scrubbing processes.
- Limestone usage is comparable for the processes at about 1 mole of calcium per mole of sulfur removed from the fuel, but the CAFB process could potentially reduce this utilization to half that level by utilizing a regenerative operation with sulfur recovery.
- The CAFB process produces a dry product with potential market value rather than a sludge which is difficult to handle and requires large land areas for disposal ponds.

REFERENCES

1. Lund, H.F. Industrial Pollution Handbook McGraw Hill Co. New York.
2. Summary Report on Suspended Sulfates and Sulfuric Acid Aerosols. EPA-650/3-74-000. Final Report, 1974.
3. Air Quality Criteria for Sulfur Dioxide. U.S. Department of Health, Education and Welfare. AP-50. 1969.
4. Air Quality Criteria for Particulate Matter. U.S. Department of Health, Education and Welfare. AP-49. 1969.
5. Lewis, T.R., M.O. Amdur, M.D. Fritzland, and K.I. Campbell. Toxicology of Atmospheric Sulfur Dioxide Decay Products. EPA. Research Triangle Park, North Carolina. July, 1972.
6. Amdur, M.O. and M. Corn. The Irritant Potency of Zinc Ammonium Sulfate of Different Particle Sizes. Am. Ind. Hyg. Assoc. J. 24:326-333, July-August 1963.
7. Amdur, M.O. and D. Underhill. The Effect of Various Aerosols on the Response of Guinea Pigs to Sulfur Dioxide. Arch. Environ. Health. 16:460-468, April 1968.
8. Sunshine, I. Handbook of Analytical Toxicology. The Chem. Rubber Co., Cleveland. 1969.
9. Emrich, G. H. Guidelines for Sanitary Landfills -- Ground Water and Percolation. Compost Science, May, 1972. pp. 12-5.
10. Emrich, G.H., G.L. Merrit, R.C. Rhindress. Geocriteria for Solid Waste Disposal Sites. Program for the 5th Annual Meeting, Northeastern Section, Geological Society of America, 2(1). 1970. p. 17.

APPENDIX H

COMMERCIAL PLANT DESIGN

H

APPENDIX H

COMMERCIAL PLANT DESIGN

A commercial plant design study was made by Stone and Webster Engineering Corporation (SWEC) based on direct proration of selected data for the 50 MW plant described in detail in Appendix E. This appendix will present summaries of those prorations and the bases for them.

COMMERCIAL PLANT

DESIGN INDEX

1. Base Conditions and Assumptions - 200 MW Commercial Unit
2. Process Flow Diagram
3. Material Balance Flow Diagram
4. Economic Evaluation
   4.1 Investment Cost Summary
   4.2 Operating Cost Summary
   4.3 Evaluation

1. BASE CONDITIONS AND ASSUMPTIONS - 200 MW COMMERCIAL UNIT

- All aspects of operation of the 50 MW demonstration unit will function as projected with no more than minor modifications, giving a sound basis for scale-up
- 200 MW is an appropriate commercial module size which can be built as a single train. The gasifier and absorber reactors' refractory arch distributor grids cannot be built at the approximately 12.2 m (40 ft) diameter required, so more expensive stainless steel grids must be used; these have an underside temperature limitation of 594°C (1100°F), which requires added provision for charging the gasifier with precalcined stone for every start-up following a bed removal and requires that such grids of this size are technically feasible.
- Use of regenerator/dry sulfation system with sulfur removal efficiency 90 percent, turndown ratio 4:1, same boiler efficiency, waste solids suitable for landfill disposal
- Air/fuel ratio of 20 percent, limestone makeup design rate stoichiometric, suitable limestone supply at 300 rail miles, waste disposal area at 30 truck miles
- Outdoor installation adjacent to boiler; no change in heat conservation allowed for
- Existing boiler using No. 6 fuel oil, with all storage and handling facilities for oil, also rail-siding and car-spotting equipment, available
- Sixteen gas burners of the same capacity as the 50 MW plant burners; also eight gasifier cyclones and eight Sturtevant transfer systems for hot fines
- Real estate provided at no charge to the unit
- Clear site, with no overhead or underground obstructions;

soil bearing pressure of 130 kg/m^2 (3000 lb/ft^2) water table below all foundations, and seismic zone zero

- Limestone rate is one (1) times stoichiometric equal 4/1.5 or approximately 2.7 times demonstration plant rate.

2. PROCESS FLOW DIAGRAM

The flow diagram, 61A - Reaction System, has been included here to indicate the general methods to be used for interconnecting the equipment in a 200 MW oil gasification system. This flow diagram was prepared for the 50 MW demonstration plant and carries pipeline sizes and instrumentation for that smaller-sized unit. The 200 MW plant piping and reactor vessels would be approximately double the sizes shown on the flow diagram. One major exception to this would be the fuel-gas lines and cyclones. Since there would be eight of these in parallel rather than four as shown on the flow diagram, the size multiplier would be about 1.4.

3. MATERIAL BALANCE FLOW DIAGRAM

The flow diagram, 61D - Base Case, has been included here to indicate approximately <u>one quarter</u> of the flow rates required for the 200 MW commercial plant design. As stated in the preceding two sections of this appendix, there are eight burners in the commercial plant rather than four as indicated for the demonstration plant on diagram 61 D.

PAGE NOT

AVAILABLE

DIGITALLY

PAGE NOT

AVAILABLE

DIGITALLY

4. ECONOMIC EVALUATION

4.1 Investment Cost Summary - 200 MW Unit (Single Train)

Item	Material ($)	Labor ($)	Total ($)
PROCESS EQUIPMENT			
A. Towers	--	--	--
B. Boilers, S-heaters	90,000	2,500	92,500
F. Process furnaces	520,000	15,000	535,000
G. General equipment	1,800,000	110,000	1,910,000
L. Reactors	1,300,000	72,000	1,372,000
M. Drums	5,000	1,000	6,000
Q. Storage tanks	1,350,000	30,000	1,380,000
P. Pumps (including drives)	50,000	3,000	53,000
R. Compressors (including drives)	1,720,000	120,000	1,840,000
S. Stacks	--	--	--
T. Heat exchanges	150,000	5,000	155,000
TOTAL PROCESS EQUIPMENT	6,985,000	358,500	7,343,500
PROCESS MATERIALS			
C. Piping	3,300,000	1,700,000	5,000,000
D. Structures	900,000	320,000	1,220,000
E. Electrical	530,000	500,000	1,030,000
H. Buildings[b]	250,000	--	250,000
J. Civil	240,000	450,000	690,000
K. Instruments	350,000	150,000	500,000
N. Insulation[b]	300,000	--	300,000
N. Painting[b]	320,000	--	320,000
Refractory lining[b]	180,000	--	180,000
TOTAL PROCESS MATERIALS	6,370,000	3,120,000	9,490,000
TOTAL DIRECT COST (DM*+DL)	13,355,000	3,478,500	16,833,500
DISTRIBUTABLE ACCOUNTS			
V1. Insurance (excluding all risk)			
V2. Federal and state taxes			
X. Temporary construction facilities			
Y. Field office (including insurance and taxes)			2,500,000
Z. Construction tools and equipment			
O. Other distributable items			
TOTAL DISTRIBUTABLE			2,500,000
SUBTOTAL—COST OF WORK			19,333,500
U. INDIRECT ACCOUNTS			
Engineering			
Design			
Other headquarters office			
Taxes—headquarters payroll			2,250,000
Overhead allowance			
TOTAL INDIRECT (HEADQUARTERS OFFICE)			2,250,000
TOTAL, PRESENT DAY PRICES (BARE COST)			21,583,500
Fee, Escalation, and Contingency			Not included
Order of Accuracy			25%

[a]From original SWEC table.

[b]Subcontract.

4.2. Operating Cost Summary

200 MW Commercial Units

A. Single Train Unit

Bare Cost (Accuracy 25%)		$21,583,500.00
Direct Operating Costs		
Power	$1,900,000.00	
Operating Labor	304,500.00	
Limestone Supply	305,000.00	
Solid Waste Disposal	163,520.00	
Maintenance	1,079,175.00	
Total		3,752,195.00
Indirect Operating Costs		
Capital Charges		4,316,700.00
Total Direct & Indirect Costs		8,068,895.00
Fuel Operating Costs		32,400,000.00
Total Operating Costs		40,468,895.00

B. Four (4) Train Unit

Bare Cost (Accuracy 20%)		$29,080,000.00
Direct Operating Costs		
Power	$1,900,000.00	
Operating Labor	609,000.00	
Limestone Supply	305,000.00	
Solid Waste Disposal	163,520.00	
Maintenance	1,454,000.00	
Total		4,431,520.00
Indirect Operating Costs		
Capital Charges		5,816,000.00
Total Direct & Indirect Costs		10,247,520.00
Fuel Operating Costs		32,400,000.00
Total Operating Costs		42,647,520.00

4.3 Evaluation

The preceding sections show estimated capital and operating costs for the chemically active fluidized bed (CAFB) process at 200 MW capacity. For comparative evaluation purposes, the 200 MW single train costs of $21.6 million capital and $8 million/year operating costs convert to $108/kw installed capacity and 5.7 mils/kWh operating cost at 7,000 hr/year. Relative to an oil firing rate of 8,000 bbl/d these convert to $2,700/bbl/d capital and $3.42/bbl fuel adder costs. It must be noted that investment costs are present day, while operating costs used the specified NEES figures on a 1976 basis.

From the study by McGlamery and Torstrick [1] prepared for EPA, using their capital costs for a 200 MW oil-fired unit and SWEC adjustment of their 500 MW operating costs, the regenerative wet scrubber with elemental sulfur by-product shows $76/kw capital and 4.4 mils/kWh operating cost. Similarly, the limestone scrubbing system shows $65/kw capital and 3.0 mils/kWh operating cost. Maintenance costs for limestone scrubbers are high. While CAFB maintenance costs are expected to be lower, no meaningful projection can be made without large-scale operating data. Utility requirements are compared in Table H-1 for 200 MW oil-fired power plants. Although the CAFB process consumes about the same auxiliary power as a limestone slurry scrubber,[2] no steam is used in the CAFB process and an order of magnitude less process water is required.

Low-grade fuel oils (for example, vacuum bottoms) may be available at significantly lower costs than a No. 6 fuel oil, providing a cost advantage for the CAFB process. With the present uncertain fuel situation this potential advantage is difficult to assess, and the availability of lower-grade fuel oils is unknown.

The cost and availability of hydrodesulfurized fuel oils is also in a state highly sensitive to world political and economic conditions. Discussions have been held with Esso Research Centre, Abingdon, England (Esso) engineers and Westinghouse fuels personnel on hydrodesulfurization. Costs for installation of a 60,000 bbl/d addition to an existing eastern United States refinery to produce 0.3 percent sulfur oil with a January

Table H-1

COMPARISON OF UTILITY REQUIREMENTS FOR CAFB AND LIMESTONE SLURRY SCRUBBING

	Annual requirement (7000 hr/yr) for 200 MW power plant retrofit[a]	
	CAFB process	Limestone slurry process[6,8]
Steam, kg(lb)	0.45×10^8 (1.0×10^8) (produced)	0.9×10^8 (2×10^8) (used)
Process water, liters (gal)	3×10^7 (8×10^6)	3.3×10^8
Electricity, kWh	$4 \times 10^7 - 5.5 \times 10^7$	$4 \times 10^7 - 5.5 \times 10^7$
% of power plant output	3-4	3-4

[a]The variability of the utility requirements for both processes is great.

[b]The source of this energy is combustion of carbon deposited on the lime and from the conversion of calcium sulfide to calcium sulfate in the regenerator.

1977 start-up are estimated to be around $3,000/bbl/d of capacity, including off-sites.

Hydrodesulfurization costs of $600/bbl/d capital and $1.60/bbl operating are derived from Oil & Gas Journal 8/18/74. The capital indicated is for refinery installation and does not include capital for the hydrogen unit, so it might well rise above $2,000/bbl/d for a grass roots installation. Thus, residual desulfurization costs will vary widely, depending upon the assumptions made with regard to crude source, distillation cut-point, degree of desulfurization, unit capacity, source of hydrogen, geographical location, and so on. Nine residual fuel oil desulfurization processes were available for licensing in 1973. Only one process, however, (H-Oil, Hydrocarbon Research Inc., 44,000 bbl/d plant in Kuwait) is in use on a commercial scale with vacuum resid. Desulfurization up to 75 percent is feasible. The use of high-metals feedstocks is currently limited by practical considerations -- catalyst life, higher costs, and so on.

None of the above figures can be considered rigorous, although the comparison with McGlamery and Torstrick is probably as good as is possible in present circumstances. It should be noted, however, they were not prepared on the same basis or in the same period of time. It is entirely possible that cost comparisons on the same basis and/or construction and operation of the 50 MW CAFB unit would alter these cost comparisons.

Environmentally, the CAFB process compares favorably with limestone and lime slurry scrubbers (see Appendix G). Sulfur removal capabilities for the processes appear comparable. CAFB provides a considerable reduction in nitrogen oxide emissions. The CAFB process consumes an order of magnitude less process water than slurry scrubbing processes. Limestone usage is comparable for the processes at about 1 mole of calcium per mole of sulfur removed from the fuel, but the CAFB process could potentially reduce this utilization to half that level by utilizing a regenerative operation with sulfur recovery. The CAFB process also produces a dry product with potential market value rather than a sludge which is difficult to handle and requires large land areas for disposal ponds.

APPENDIX I

INITIAL DESIGN STUDY

APPENDIX I

INITIAL DESIGN STUDY

An initial design of the 50 MW chemically active fluidized bed (CAFB) demonstration plant was carried out by Stone & Webster Engineering Corporation (SWEC) under contract to Westinghouse Research Laboratories. The basis for the initial design study was the utilization of conventional catalytic cracking technology developed in the petroleum industry for the solids transport system, the specification of equipment to provide extensive system flexibility and reliability, and the inclusion of sulfur recovery from the spent stone. The study identified the critical design parameters and cost items in the plant. The initial design basis, process flow diagrams, equipment design, and cost estimate are presented. These data provided a basis for evaluation and identification of alternative design and operating parameters to reduce the plant cost while maintaining system flexibility and operability. A revised demonstration plant design (Appendix D) was established on the basis of this evaluation.

GENERAL DESIGN BASIS FOR INITIAL STUDY

The design basis applied in the initial design study is similar to the demonstration plant design basis eventually selected (Appendix D) except for the following items.

Reaction System

The initial design basis included items relating specifically to process flexibility and reliability:

- Once-through operation capability in addition to regenerative operation
- 2.44 meter (8 ft) bed depth capability

- About 50 percent excess capacity for stack-gas recycle
- Extremely high pressure drops assumed in air and stack-gas circuits; 96.5 kPa (14.0 psi) for control, line losses, bed losses, and distributor losses and equipment design
- Low gasifier plenum start-up temperature and lime storage system for start-up material
- Valves in the fuel-gas lines to isolate the fuel liner for burnout during operation. Fuel-gas lines based on 18.3 m/s (60 ft/sec) velocity
- A solids transport system to circulate solids between the gasifier and regenerator based on known catalytic cracker dense-phase pneumatic transport technology. Required tall standlegs and relatively high-pressure transport gas.
- High elevation of gasifier and regenerator vessels and cyclone fines recycle to reactors by dense-phase standleg.
- Stainless steel distributor support plate in gasifier
- A stone quench drum used to cool waste solids before they enter the stone processing system.

The other operating parameters (air/fuel ratio, fluidization velocity, bed temperatures, and so forth) and design parameters (materials of construction, filter types, operating procedures, and so on) are essentially the same as those described in Appendix D with only minor changes or additions.

Sulfur Recovery System

A commercial process to recover elemental sulfur from the regenerator product gas was specified. The process (Allied Chemical) is described in Appendix O.

Stone Processing System

The stone processing system selected for the initial design study was a slurry carbonation process which removed carbon dioxide (CO_2)

from the plant stack gas to contact the regenerator waste stone and produce a dry calcium carbonate product. The hydrogen sulfide (H_2S) produced in the process is recycled to the sulfur recovery system.

Limestone Handling and Feeding System

The design basis for the limestone handling and feeding system used in the initial study is four times the stoichiometric rate. The limestone feed system is a dense-phase standleg system feeding limestone to the stone circulation system.

Waste Stone Handling System

The design basis for the waste stone handling system is a four-times-stoichiometric limestone feed rate.

Fuel Oil Handling System

The design basis for the fuel oil handling system used in the initial design study is the same as that used in the eventual design (Appendix D).

PROCESS DESCRIPTION

Flow diagrams for the reaction system and the stone processing system (slurry carbonation) as utilized in the initial design study are shown in Figures I-1 and I-2.

Reaction System Description

The same processing functions and processing steps are carried out in the initial demonstration plant process shown in Figure I-1 as in the selected process described in Appendix B. The major process differences are in the solids transport components. The initial design study uses gravity flow to return cyclone fines to the reactors, while the selected design uses pulsed flow fines return equipment.

The major solids transport component, which circulates solids between the gasifier and regenerator, incorporates conventional, commercially demonstrated fluidized solids transport design principles which have been successfully utilized in such well-known applications as fluid coking units, many manometer-balanced fluid catalytic cracking units, the chlorination reactors of titanium dioxide (TiO_2) chloride plants, and so on.

In the initial design study process diagram shown in Figure I-1 the sulphided solids in the gasifier are withdrawn by means of a fluidized withdrawal well which also serves to generate static pressure in the same manner as the standpipe below the well. The direction of flow of the dense-phase solids at the base of the standpipe is reversed by means of a short-radius bend. The solids travel up a dense-phase lateral transport line sloped at forty degrees above horizontal and are then vertically lifted by means of recycled flue gas up into the regenerator bed; this lift section of the line is termed a dense-phase riser since it can operate over a very wide range of densities -- for example, from about 160.2 kg/m^3 (10 lb/ft^3) to about 561 kg/m^3 (35 lbs/ft^3), depending upon the relative quantity of lift gas and solids entering the line.

Slurry Carbonation System

The purpose of slurry carbonation is to eliminate calcium sulfide (CaS) from the waste stone and to convert the hygroscopic quicklime or alkaline slaked lime to the neutral and unreactive carbonate form (limestone), thereby rendering the waste innocuous for disposal.

Calcium oxide (CaO) reacts rapidly with water to form calcium hydroxide ($Ca[OH]_2$ or slaked lime) with evolution of heat. A small amount of water (for example, rain) on a mass of calcium oxide could theoretically create a temperature of 650°C (1200°F), and has, in fact, been observed to ignite paper. Given an excess of water, the heat is released by vaporization. Calcium sulfide reacts with water to a very slight degree forming calcium hydroxide and hydrogen sulfide. Calcium sulfide reacts completely with carbonic acid (H_2CO_3), occurring by solution of carbon

PAGE NOT

AVAILABLE

DIGITALLY

PAGE NOT

AVAILABLE

DIGITALLY

dioxide (CO_2) in water, and the products are calcium carbonate ($CaCO_3$) and hydrogen sulfide.

Referring to Figure I-2, the carbonation reaction is carried out in three stages, in drums M-5 A/B and M-7 A/B, having a residence time of one hour each. Essentially all of the reaction occurs in the first stage, M-7 A/B, and the other two stages are aimed at converting any residual unreacted calcium sulfide, which could cause an odor problem or health hazard in the vicinity of the stone dump.

Carbon dioxide for the reaction is supplied by flue gas drawn from the baghouse, G-4, by blower R-7 and delivered to the carbonation drums. Precise control of the gas flow is not required, and hand valves should be set to divide about 5 percent of the gas to M-7 A/B, 10 percent to M-5B, and 85 percent to M-5A. The only requirement is that the slurry be kept saturated with carbon dioxide at all points. The design gas flow contains 300 percent of the estimated carbon dioxide to be reacted. The gas streams leave the drums at 60°C (140°F) to 82°C (180°F), carrying water evaporated by the heat of reaction, and flow together to the inlet of carbonation off-gas scrubber A-1.

Each drum has an agitator whose main function is to keep the stone in suspension, with the secondary function of aiding gas dispersion. The larger particles of stone are 3.2 mm (1/8 in) diameter and settle very rapidly. The slurry flows by gravity from M-7 A/B to M-5B to M-5A, with each outflow throttled by the level in the drum.

The slurry is pumped from M-5A to centrifuge G-12 by P-1A or B. The rate is set by the level in M-2A, with override for excess or deficiency to keep the centrifuge in operable range. Liquor from the centrifuge flows by gravity to surge drum M-6, and provision of return flow from M-6 via pump P-2A or B to G-12 or M-5A should be included. The main flow from P-2A or B is to the quench drum M-1 under flow control as needed for suitable slurry quality. M-6 provides water surge for the system and has a level recorder to facilitate inventory regulation, as discussed later.

Stone cake from the centrifuge drops into a rotary drier, G-11, where it is indirectly heated by 1035 kPa (150 psi) steam coils. Moisture from G-11 is vented to the existing stack cyclones which run at a negative pressure of about 3480 Pa (-14 in) water gauge. Dried stone is conveyed to the waste stone disposal railcar loading facilities. The stone should be dried to a free-flowing consistency yet be damp enough to avoid dusting. Centrifuge operation can be adjusted to aid in reaching this result.

Carbonation off-gas from the four drums M-5 A/B and M-7 A/B at 60 to 82°C (140 to 180°F) and steam from the quench drum M-1 at 93 to 104°C (200 to 220°F) enter the base of carbonation off-gas scrubber A-1. The lower six trays are a cooling and condensing section to retain water in the system. Heat is removed by circulating the bottoms liquid through cooler T-4 and back to tray 6. It is to be expected that the gas and steam will contain entrained slurry droplets, so the bottoms liquid will be water containing some fine solids, as well as be saturated with carbon dioxide plus dissolved hydrogen sulfide and oxygen. (The flue gas contains about one percent oxygen from boiler excess air. It also contains about 40 ppm sulfur dioxide, but this will be absorbed by the stone in the slurry as calcium sulfite). The upper four trays of A-1 provide final cleanup of any solid fines entrained from tray 6 liquid by washing with makeup water. A minimum of 71.54 dm^3 (5 gal) per minute of makeup water should be fed to the top tray at all times for washing, and up to 715.4 dm^3 (50 gal) per minute may be fed if desired for water balance purposes.

The scrubbed off-gas from A-1 will still contain 0.2 to 0.3 percent hydrogen sulfide and must not be released from the system. The gas is sent to the suction of R-2 where it is combined with the recycle flue gas to the gasifier, constituting about one-fourth of the total. The hydrogen sulfide content is recovered by the gasifier solids, along with the sulfur from the fuel.

The sulfur recovery system is described in Appendix O. The support systems (residual fuel oil handling, limestone handling, and waste stone handling) are identical in description to the support systems described in Appendix B.

PROCESS EQUIPMENT

An equipment list indicating the equipment components considered in the initial design study is presented in Table I-1. The two major reaction vessels, the gasifier and regenerator, are described in Figures I-3 and I-4. The two fluidized bed reactors are very similar in design to the gasifier and regenerator described in Appendix D, except for the construction of the distributor plates and the design of the solids inlets and outlets. Comparable drawings for the selected demonstration plant gasifier and regenerator are included in Appendix E.

COST SUMMARY FOR THE INITIAL DESIGN STUDY

A breakdown of the costs estimated for the initial demonstration plant study is shown in Table I-2. The breakdown refers to the equipment in the reaction, stone processing, waste stone handling, fuel oil handling, and limestone handling systems. The sulfur recovery system is indicated as a subcontract item. The sulfur recovery system cost is discussed in Appendix O. Costs are based on end-of-1974 dollars.

Table I-3 lists the total installed costs of the six process systems in the demonstration plant. Table I-4 breaks down the cost of the reaction system into the contributions of the major equipment items (on a total installed-cost basis). It is evident from the tables (I-3 and I-4) that the reaction system and the sulfur recovery system represent the dominant costs in the initial study demonstration plant, 77 percent of the total plant cost. The major items in the reaction system cost appear to be gas compression equipment at 30 percent of the reaction system cost.

EVALUATION OF INITIAL DESIGN STUDY COSTS

The $10 million total cost for the initial study demonstration plant results mainly from the conservative nature of the design and from the high cost of the sulfur recovery system. A number of cost reductions can be made without reducing the demonstration plant performance or usefulness as a means of CAFB demonstration.

Table I-1
EQUIPMENT LIST FOR INITIAL DESIGN STUDY

Item number	Service
Acct. A - Towers	
A-1	Carbonation off-gas scrubber
Acct. B - Boilers	
B-1	Waste heat boiler
Acct. F - Heaters	
F-1	Start-up air heater
F-2 A-D	Hot fuel-gas burners
Acct. G - General Equipment	
G-1	Fresh limestone unloading system
G1-1	Filter receiver air lock
G1-2	Pressure system air blower
G1-3	Baghouse
G1-4	Vacuum system air blower
G1-5	Baghouse rotary air lock
G1-6	Railcar unloader
G1-7	Filter/receiver
G-2	Waste stone transport and loading system
G2-1	Waste stone dryer rotary air lock
G2-2	Recycle flue gas rotary air lock
G2-3	Filter/receiver
G2-4	Vacuum system compressor
G2-5	Filter/receiver rotary air lock
G2-6	Pressure system compressor
G2-7 A&B	Silo filter receivers
G2-8 A&B	Silo rotary air locks
G2-9 A&B	Eliminated
G2-10	Eliminated
G2-11	Eliminated
G2-14	Stack cyclone rotary air lock
G-3 A&B	Limestone weight feeders
G-4	Recycle flue gas baghouse
G-5	Gasifier air screen
G-6	Regenerator air screen
G-7	PTG filter
G-8 A-D	Gasifier cyclones
G-9	Regenerator primary cyclone
G-10	Regenerator secondary cyclone
G-11	Waste stone drier
G-12	Slurry centrifuge
G-13 A&B	Slurry agitators
G-14 A&B	Duplex oil filters
G-15 A&B	Slurry agitators
G-16	Lime charge system
G-16-1	Quicklime charge drum
G-16-2	Vibrating bin bottom
G-16-3	Rotary air lock
Acct. L - Reactors	
L-1	Gasifier
L-2	Regenerator
Acct. M - Drums	
M-1	Stone quench drum
M-2 A&B	Stone surge drums
M-3	Waste heat boiler steam drum
M-4	PTG water separator
M-5 A&B	Slurry carbonation drums
M-6	Liquor surge drum
M-7 A&B	Slurry carbonation drums
Acct. P - Pumps & Drivers	
P-1 A&B	Centrifuge feed pump and spare[a]
P-2 A&B	Centrifuge liquor pump and spare[a]
P-3 A&B	Scrubber circulation pump and spare[a]
P-4 A&B	Oil transfer pump and spare[a]
Acct. Q - Storage Tank	
Q-1	High-sulfur oil storage tank
Acct. R - Compressors & Drivers	
R-1	Gasifier air blower[a]
R-2	Recycle flue gas blower[a]
R-3	PTG blower[a]
R-4	Flue gas booster fan[a]
R-5	SO_2 booster fan[a]
R-6	Regenerator air blower[a]
R-7	Carbonation flue gas blower[a]
Acct. T - Heat Exchangers	
T-1	Regenerator off-gas air exchanger
T-2	Regenerator recycle gas cooler
T-3	PTG cooler
T-4	Scrubber circulation cooler
T-5	Oil storage tank suction heater
T-6	Oil transfer line heater

[a]Motor drive

Table I-2

COST BREAKDOWN FOR THE INITIAL STUDY DEMONSTRATION PLANT

Description	Material ($1000)	Labor ($1000)	Total ($1000)
Towers	29.30	1.10	30.40
Boilers, etc.	31.00	0.80	31.80
Process Furnaces	125.00	1.30	126.30
General Equipment	611.80	60.81	672.61
Reactors	281.70	--	281.70
Drums (tanks)	60.20	2.70	62.90
Storage Tanks	178.00	23.39	201.39
Pumps	25.02	2.10	27.12
Compressors	572.26	37.10	609.36
Heat Exchangers	65.80	1.60	67.40
Fuel-Gas Pipes & Valves	194.42	62.80	257.22
Solids Transfer Systems	47.73	26.81	74.54
TOTAL EQUIPMENT IN PLACE	2,222.23	220.51	2,442.74
Piping	433.65	365.65	618.74
Structures	38.48	25.90	64.38
Electrical	88.47	93.68	182.15
Buildings	10.00	1.50	11.50
Civil	4.22	7.80	12.02
Instruments	150.00	47.12	197.12
Insulation & Plant	9.50	49.50	59.00
TOTAL PROCESS MATERIALS	909.18	920.18	1,829.36
TOTAL DIRECT COSTS	3,131.41	1,140.69	4,272.10
DISTRIBUTED COSTS (18.73% of direct costs)			800.00
SUBTOTAL (COST OF WORK)			5,072.10
INDIRECT COSTS (17.4%)			880.00
CONTINGENCY AND ESCALATION (18.9%)			957.90
FEE (1.18% of cost of work)			60.00
SULFUR RECOVERY SYSTEM (SUBCONTRACT)			3,000.00
TOTAL COST (END OF 1974)			9,970.00

Table I-3

SUMMARY OF MAJOR SYSTEM COSTS IN
THE INITIAL STUDY DEMONSTRATION PLANT

System	Total installed cost (1000$)
Reaction	4,511.00
Stone Processing (slurry carbonation)	1,102.00
Sulfur Recovery	3,000.00
Waste Stone Handling	358.00
Fuel Oil Handling	825.00
Limestone Handling	174.00
TOTAL PLANT	9,970.00

PAGE NOT

AVAILABLE

DIGITALLY

PAGE NOT

AVAILABLE

DIGITALLY

Table I-4

SUMMARY OF MAJOR COMPONENT COSTS IN
THE INITIAL STUDY REACTION SYSTEM

Component	Total installed cost (1000$)
Gasifier	580.00
Gasifier Cyclones	469.00
Gasifier Air Blower	508.50
Regenerator	186.00
Regenerator Cyclones	190.00
Regenerator Blower	85.50
Recycle Flue Gas Blower	763.00
Fuel-Gas Pipes	392.00
Fuel-Gas Valves	306.00
Burners	192.00
Stone Circulation	198.00
Other Items	641.00
TOTAL REACTION SYSTEM	4,511.00

The costs for the three support systems seem to be based on reasonable specifications and are of a conventional nature. The stone processing system and the sulfur recovery system represent more than $4 million. The cost associated with the stone processing system and sulfur recovery system depend most critically on the choice of the specific processes to be applied. Many processing options have been identified which reduce this cost drastically and are discussed in Appendix K. The choice of slurry carbonation for stone processing and the Allied Chemical process for sulfur recovery yield costs which are not feasible for this application.

The initial design study indicates a number of options which can be applied to reduce greatly the cost of the reaction system. These are in the areas of reduced gas handling pressure drops, utilization of the simplified solids transport process developed in the Esso pilot plant operation, elimination of valves in the fuel-gas lines, minimization of fuel-gas line length, and reduced excess blower capacity. Cost projections were made to assess the potential of modifying the initial design study basis. An example of a set of modifications is summarized in Table I-5, and indicates a potential to reduce the reaction system cost to about $3 million. These and other modifications are discussed in more detail in Appendix J.

CONCLUSIONS

The initial design study has been used to guide the selection of a CAFB demonstration plant design basis. Specifically, it has indicated that

- The commercial sulfur recovery process applied in the study results in a significant cost penalty for this application.
- Conventional technology utilized by the petroleum industry for solids circulation is considered excessively expensive in this application. Techniques developed in the pilot plant operation result in a more economical demonstration plant.
- The critical cost items in the reaction system are the gas compression components and the fuel gas handling components,

Table I-5

DEMONSTRATION PLANT MODIFIED COSTS PROJECTION
(Basis - Steam for Temperature Control and Burnout)

Major equipment items	Initial study installed costs, $	Projection of modified costs, $	Modification to initial study design basis
Gasifier Vessel	580,000	566,000	3.05 m (10 ft) reduction in elevation; modified internals
Gasifier Cyclones	469,000	461,000	9.75 m (32 ft) reduction in elevation; pneumatic fines return
Gasifier Air Blower	508,000	330,000	55 kPa (8 psi) reduction in air circuit pressure drop
Regenerator Vessel	186,000	186,000	Reduced elevation
Regenerator Cyclones	190,000	190,000	Reduced elevation
Regenerator Blower	85,000	55,000	55 kPa (8 psi) reduction in pressure drop
Recycle Flue Gas Blower	763,000	34,000	Elimination of flue gas recycle for purge and transport gas; 55 kPa (8 psi) reduction in pressure drop
Fuel-Gas Pipes and Valves	698,000	250,000	Elimination of valves; 24.4 m (80 ft) reduction in 1070 mm (42 in) lines; 27.4 m (90 ft) reduction in 760 mm (30 in) lines
Burners	192,000	192,000	No modification
Stone Circulation	198,000	123,000	Utilize Esso pulsed transport system
Other Items	641,000	458,000	Reduced baghouse capacity; reduced flue gas booster fan capacity; eliminate SO_2 gas heat exchanger; increase waste heat boiler; eliminate SO_2-gas blower.
TOTAL	4,511,000	2,845,000	

and these may be greatly reduced in cost by proper design.

- A stone processing system should be utilized in the demonstration plant which permits the elimination of a sulfur recovery system (Appendix K).

APPENDIX J

EVALUATION AND SELECTION OF REACTION SYSTEM PROCESS AND DESIGN OPTIONS

J

APPENDIX J

EVALUATION AND SELECTION OF REACTION SYSTEM PROCESS AND DESIGN OPTIONS

Numerous process and design options are available for the chemically active fluidized bed (CAFB) demonstration plant reaction system. These have been identified and the demonstration plant design basis selected from them (summarized in Appendix D). The procedure and rationale involved in the selection of the options of major importance for the reaction system are summarized to provide further insight into the nature of the demonstration plant.

BASIS OF SELECTION

The selection of the design basis for the demonstration plant from the identified process and design options rests on a number of general factors:

- Maximum demonstration plant operability based on pilot plant results
- Flexibility to gain maximum information from the plant
- Applicability of demonstration plant to commercial plant considerations
- Environmental performance and goal
- Economics of demonstration plant and economic targets for commercial plant.

These factors have been utilized in the design basis selection, in addition to the requirement that the demonstration plant function as a commercial power plant upon completion of the demonstration plant program. It is clear that the demonstration plant will not represent the ultimate CAFB plant in terms of optimum design or economics, but

it is the goal of the demonstration plant to identify this ultimate plant and its potential.

GENERAL PROCESS OPTIONS FOR THE REACTION SYSTEM

Table J-1 lists some general process options under the categories of the reaction system concept, the general technology basis applied to carry out the reaction system concept, and the commercial market to which the demonstration plant should apply. The selection of the general process configuration for the reaction system is indicated in Table J-1, along with the rationale involved in the selection. The general conclusion drawn from these considerations is that the demonstration plant should be designed to utilize the same general concept being investigated in the pilot plant (regenerative, limestone sorbent, atmospheric pressure, hot fuel gas, and so forth), should utilize much of the technology applied and developed in the pilot plant operation, based largely on the results of the initial design study (Appendix I), and should be concerned with the problems faced with a boiler retrofit.

REACTION SYSTEM OPERATING OPTIONS

Table J-2 lists the operating options considered and selected for the demonstration plant reaction system. These are listed under the categories of basic operating variables, temperature control options, turndown and start-up options, burnout options, and flexibility and reliability options. Those selected correspond to the design basis summarized in Appendix D. They provide system operability and flexibility while satisfying economic feasibility targets.

EQUIPMENT OPTIONS FOR THE REACTION SYSTEM

Options related to the design of equipment in the reaction system are summarized in Table J-3. The options identified and selected for the major equipment components in the reaction system are presented

Table J-1

GENERAL PROCESS OPTIONS FOR THE REACTION SYSTEM

General consideration	Options	Selection for demonstration plant	Basis for selection
Process Concept	General concept investigated by pilot plant (regenerative process at atmospheric pressure producing a hot fuel gas. Air-blown regenerator; limestone sorbent, single-stage gasifier; etc.)	General concept investigated by pilot plant	Maximum operability
	Advanced concepts (once-through process; fuel-gas cooling; increased pressure; alternate regeneration processes; alternate sorbents, staged gasifier)		
Technology Basis	Technology applied and developed by pilot plant (dealing mainly with solids transport systems)	Pilot plant technology	Economics (see Appendix I)
	Conventional technology utilized in petroleum industry		
Commercial Market	New plant considerations (optimized total power plants utility or industrial boiler)	Utility boiler retrofit	Market information
	Boiler retrofit considerations (boiler modifications, boiler derate, available space, gasifier location, boiler type)		

Table J-2

REACTION SYSTEM OPERATING OPTIONS

General consideration	Options	Selection for demonstration plant	Basis for selection
Basic Operating Variables	Gasifier operating options • Limestone size (fine particles or -3000 microns) • Air/fuel ratio (minimum value or large demonstrated value) • Fluidization velocity (low velocity or high velocity; entrained bed reactor) • Bed depth (shallow, demonstrated, bed depth or deep bed capability) • Sulfur removal efficiency (meet existing standards or demonstrate full potential) • Others - bed temperature, limestone makeup rate, etc.	Listed in Appendix D - Design Basis	Maximum operability, flexibility, environmental considerations
	Regenerator operating options • Fluidization velocity • Bed depth • Bed temperature		
Temperature Control	Gasifier • Stack-gas recycle • Steam or water injection • Heat transfer surface	Stack-gas recycle with provision for steam and water	Maximum operability and flexibility
	Regenerator • Stone circulation rate • Heat transfer surface	Stone circulation rate	

Table J-2 (continued)

General consideration	Options	Selection for demonstration plant	Basis for selection
Gasifier Turndown	Multiple units (2) High design velocity (∿3.7 m/sec) Control of air/fuel ratio to maintain operable fluidization velocity	Control of air/fuel ratio	Economic considerations and operability
Gasifier Start-up	High start-up gas temperature (∿800°C/1472°F) and initial bed load of limestone Lower start-up gas temperature and initial bed load of lime	High start-up temperature with limestone as initial bed load	Operability and economics
Fuel line Burnout	Isolation of individual fuel-gas lines with valves and steam/air burnout Backburning out fuel-gas lines during operation Burnout only during shutdown of plant	Backburning of fuel-gas lines	Operability and economics

Table J-3

EQUIPMENT DESIGN OPTIONS FOR THE REACTION SYSTEM

Component	Options	Selected for demonstration plant	Basis for selection
GASIFIER	Number of modules-single or multiple	Single module	Economic consideration
	Type of unit-fluidized or entrained	Fluidized	Operability
	Freeboard height-minimized or conservative	Conservative	Economics and operability
	Vessel elevation	Minimized	Economics (minimum fuel-gas line length)
	Distributor design-alloy steel or refractory	Refractory	Economics and operability
REGENERATOR	Number of modules	Single	Commercial applicability
	Other options identical to gasifier	Same options selected as with gasifier	Same basis as with gasifier
	Regenerator integrated with gasifier or separate units	Separate units	Demonstrated configuration
SOLIDS TRANSPORT			
Gasifier-to-Regenerator Circulation	Technology-Esso pulsed transfer, other conventional dense-phase or dilute-phase transport systems	Esso pulsed transport	Economics and operability
	Esso pulsed transfer	Esso pulsed transport	Operability and economics
Regenerator-to-Stone Processing	Gravity flow standleg		
	Other dilute- or dense-phase transport systems		
Cyclone Fines Recycle	Gravity flow standleg sturtevant pulsed flow system	Sturtevant pulsed flow system	Economics (permits minimized fuel-gas line length)

Table J-3 (continued)

Component	Options	Selected for demonstration plant	Basis for selection
PARTICULATE REMOVAL			
Gasifier Cyclones	Number of units	Single cyclone per fuel-gas line	Operability
	Elevation	Minimized	Economic (minimized fuel-gas line length)
Regenerator Cyclones	Number of units-single high efficiency cyclone; cyclones in series	Two cyclones in series	Operability
	Cyclone drainage-recycle fines to regenerator or remove to stone processing system	Primary cyclone returns course material to regenerator; secondary cyclone removes fines to stone processing	Operability
FUEL-GAS HANDLING AND COMBUSTION			
Burners	Number	Four	Commercial applicability
Fuel-Gas Lines	Number-single with manifold or one per burner	One line per burner	Operability
	Design velocity	46 m/sec (150 ft/sec)	Economics and operability
	Length	Minimized	Economics
AIR-AND STACK-GAS COMPRESSION FOR GASIFIER	Number-individual compressors for air and stack gas or single unit	Single unit for air and stack gas	Economics
	Design for pressure losses	Minimize control and line losses and margin for bed surging	Economics

in the table. The economic conclusions drawn from the initial design study (Appendix I) have played a large part in the selection of the design options; at the same time care has been taken to fulfill goals related to plant operability, flexibility, environmental performance, and commercial applicability.

APPENDIX K

SPENT STONE PROCESSING OPTIONS

K

APPENDIX K

SPENT STONE PROCESSING OPTIONS

BACKGROUND

General

In all desulfurization processes using a solid for sulfur removal, a stream of by-product sorbent is produced because of gradual loss of chemical reactivity and attrition. The main variable defining the quantity is the choice of system: sorbent regeneration or once-through. Thus, an environmentally acceptable method of disposing of this sorbent by-product was needed in order to complete the process design. Alternatively, a market for the material had to be identified and developed.

To gain perspective on what processing would be required, several preliminary studies were made:

- A brief survey of what others were doing in the field of solid industrial waste disposal
- A review of solubility data for calcium compounds
- A review of existing regulations for the proposed site of the demonstration plant
- Preparation of a logic diagram to outline spent stone processing alternatives
- Preparation of a preliminary material balance to estimate probable quantities of material to be processed
- Check of the size of possible markets.

These steps are described in the following sections.

Industry Practices

A hierarchy of disposal methods for various industrial solid wastes exists. In order of increasing environmental acceptability, they are dumping, ponding, landfill, and stockpile. Dumping means the site

is not expected to be usable for any other purpose for an indefinite period. Ponding is a temporary measure used for slurries. Depending on the settling characteristics of the wastes, the solids would eventually be transferred to a dumping site or a landfill area. Landfill implies structural strength and stability so that the site can be used for construction or some other purpose after a reasonable period. To stockpile means to produce some material for which a future market is foreseen.

One industrial waste which presented a disposal problem similar to the current one was fly ash from coal. Much work has been done in recent years to utilize this material, both here and abroad, as reported in recent symposia.[1,2] Although domestically 80 percent of the fly ash was still being dumped, productive use was increasing:

- Fill material
  - Sanitary landfill
  - Mine subsidence control
- Agriculture
  - Land reclamation
  - Soil conditioning
  - Plant nutrients
- Construction
  - Road bases
  - Aggregate
  - Concrete products
  - Dams
- Mineral source
  - Alumina
  - Iron oxide
  - Vanadium
- Miscellaneous
  - Fireproofing
  - Cenospheres
  - Antiskid surface for winter roads.

There had been some attempts to utilize calcium sulfate ($CaSO_4$) as road-building material, but the scope of such efforts was narrow. The Federal Highway Administration reportedly was pursuing research in this area. During the last six years, however, no new tonnage uses for fly ash had been conceived. Further, utilization of fly ash by previously devised methods had increased only modestly, and landfill remained the most common disposal method.

From this review came the idea of using by-product stone as a substitute for road-building materials and, possibly, in combination with fly ash, as new ceramic materials. It appeared likely, however, that landfill would be a temporary disposal method until a new market actually emerged. Some consideration of the probable environmental impact of leaching was therefore in order.

Solubility Data

Readily available data on the solubility of calcium compounds was compiled and is presented in Table K-1 in order of decreasing solubility. It appeared that carbonates, phosphates, sulfites, silicates, and sulfates were potential end products of calcium that might have minimal environmental impact. Both the carbonate and the sulfite had acid forms (bicarbonate and bisulfite) which were the most soluble of the compounds checked.

Tricalcium phosphate ($Ca_3[PO_4]_2$) was eliminated from further consideration because an inexpensive source of the phosphate anion was lacking. Phosphoric acid (H_3PO_4) was priced at $165/metric ton ($150/ton).

Flint and Wells[3] reported solubility studies in which silicon dioxide (SiO_2) was dissolved in lime water using concentrations of calcium oxide (CaO) up to 1.2 g/dm^3. The composition of the solid phase in equilibrium with the solution after one month was determined by the difference in the solution composition itself, which was found to range from $CaO \cdot SiO_2$ to $3CaO \cdot SiO_2$. Other data showed that calcium oxide was leached from anhydrous calcium silicates in amounts decreasing in the order $3CaO \cdot SiO_2$, β-$2CaO \cdot SiO_2$, γ-$2CaO \cdot SiO_2$, $3CaO \cdot 2SiO_2$, and $CaO \cdot SiO_2$. Saturation was reached within an hour for the last three compounds at a calcium oxide level of about one-tenth that of calcium

Table K-1

SOLUBILITY OF CALCIUM COMPOUNDS IN WATER

Formula	Form or natural mineral	Solubility, ppm	Temperature, °C(°F)
$Ca(HCO_3)_2$		166,000	20 (68)
$Ca(HSO_3)_2$		sol.	
$Ca(HS)_2 \cdot 6H_2O$		70,000-250,000	20 (68)
$CaSO_4 \cdot 1/2\ H_2O$	α (stable form)	3,000-8,000	20 (68)
	β (unstable form)	6,600	30 (86)
$CaSO_4$ III	Soluble anhydrite	7,000	20 (68)
II	Insoluble anhydrite	2,100-3,000	20 (68)
$Ca(OH)_2$		1,300-1,400	0 (32)
$CaO + 2SiO_2$		236[a]	30 (86)
$2CaO + SiO_2$		212[b]	30 (86)
$CaO \cdot SiO_2$	Pseudowollastonite	95	17 (63)
		212[c]	
CaS	Oldhamite	120-210[d]	15 (59)
$CaSO_3 \cdot 2H_2O$		43	18 (64)
$Ca_3(PO_4)_2$		25	
$CaCO_3$	Calcite	13-14	25 (77)
	Aragonite	12-15	25 (77)

[a]Hydrolysis studies; 164 ppm free SiO_2 also in solution at equilibrium with solid containing 0.103 moles CaO/mole SiO_2.

[b]Hydrolysis studies; 83 ppm free CaO also in solution at equilibrium with solid containing 1.13 moles CaO/mole SiO_2.

[c]Hydrolysis studies; solid phase 1.07 moles CaO/mole SiO_2.

[d]Decomposes.

oxide alone. The tricalcium silicate reached saturation after eight hours at a solute level like that of pure calcium oxide. While these levels of solubility were encouragingly low, the actual leaching loss from such materials in the environment was expected to be even lower because the above data were obtained with a large excess of water. When hydrolysis studies were done with pastes of silicates, the mixtures hardened; and analysis of samples that had cured for one to two years showed only a fraction of the equilibrium hydrolysis.

Among the complex hydrated silicates known are:

- Ettringite $3\ CaO \cdot Al_2O_3 \cdot 3\ CaSO_4 \cdot 32\ H_2O$
  $3\ CaO \cdot Al_2O_3 \cdot CaSO_4 \cdot 12\text{-}13\ H_2O$
- Tobermorite $CaO \cdot SiO_2 \cdot H_2O$
- Hillebrandite $2\ CaO \cdot SiO_2 \cdot H_2O$
- Okenite $CaO \cdot 2\ SiO_2 \cdot 2\ H_2O$.

Work reported by Minnick[4] at the First Fly Ash Utilization Symposium in 1967 concluded that tobermorite and possibly ettringite might be chiefly responsible for the cementing action observed in lime fly ash blends. This supported the view that fly ash blends with spent stone might prove to have minimal environmental impact.

Overall, processes which led to carbonate, silicate, and sulfate forms of calcium were considered as potential candidates. Sulfite end forms were not considered desirable in view of the experience reported by others in wet lime scrubbing.

Existing Regulations

To include all the essential elements in a disposal process for the demonstration plant, it was necessary to know what existing regulations required. The following information was excerpted from the Rules and Regulations of the Department of Health of the State of Rhode Island and Providence Plantations.[5-9]

- Refuse disposal
  - Refuse includes solid industrial waste.
  - Refuse shall be disposed of only by sanitary landfill...or other means approved by the Director of Health.

- Refuse shall be compacted and covered daily, or more often if necessary, with a layer of cover material at least six inches deep after compaction. Final cover shall be at least two feet deep.
- Cover material shall, when compacted, provide a tight seal, and shall not crack excessively when dry.
- Refuse or leachings therefrom shall not cause or contribute to pollution of any source of public water supply or of any of the waters of the state.
- The deposit area shall be controlled by supervision, fencing, signs, or equally effective means.

- Particulate emissions
  - Maximum particulate emissions for sources other than combustion of liquid or gaseous fuels must be no more than the applicable tabular value.
  - Particulate matter shall be handled, transported, and stored to prevent it from becoming airborne.
  - No contaminant shall be emitted which, either alone or in connection with other emissions, may be injurious to any life, cause damage to property or inconvenience to property owners, or cause a disagreeable or unnatural odor, or obscure visibility, or interfere in any way with the enjoyment of life and property.
- Sulfur content of fuels
  - After October 1, 1971, unless the Director declares a shortage of low-sulfur fuel exists, no one shall store, sell, or use fuel containing more than 1 wt % sulfur on a dry basis.
  - Such high-sulfur fuel may be approved for use by the Director when combined with an approved stack-gas cleaning process, provided the total sulfur emissions from the stack do not exceed 1.1 lbs SO_2 equivalent/1 million Btu gross heat input.

	Maximum emission rate	
	g/sec	lbs/hr
Fuel sources		
Sulfur as SO_2	71.2	565
Nitrogen oxides as NO_2	19.4	154
Particulates	6.6	52
Other process sources		
Particulates	0.75	6

The Federal regulation on sulfur emissions from liquid fossil fuels is more stringent -- 0.344 kg SO_2/MJ (0.8 lbs SO_2/million Btu). It applies to steam generators with heat input greater than 264 GJ/hr (250 million Btu/hr). Particulate emissions from any single source must also be less than No. 1 Ringelmann.

Material Balance Information

As a reference point in the process development work, a preliminary material balance was calculated as shown in Table K-2 for a 50 MW plant using limestone on both a regenerative and a once-through basis. These figures assume that the basic process consists of capturing sulfur from the oil fuel as calcium sulfide in a gasifier and driving it off as sulfur dioxide (SO_2) in a regenerator or oxidizing it to calcium sulfate in an oxidizer. Sulfur dioxide can be processed to sulfur or sulfuric acid (H_2SO_4). Gypsum production is based on converting the by-product stone with the aid of additional purchased sulfuric acid.

Market Size

From the 1970 Minerals Yearbook[10] the demand for various construction materials in millions of short tons/year in the New England area was that shown in Table K-3.

Table K-2

ESTIMATE OF BY-PRODUCT STONE PRODUCTION

Operating mode	Units	Regenerative	Once-through
Net power output	MW	50	50
Heat rate	MJ/kWh (Btu/kWh)	10.98 (10,400)	10.98 (10,400)
Heat to power section	GJ/hr (10^6 Btu/hr)	548 (520)	548 (520)
Gasification thermal efficiency	%	95.0	95.0
Heat fired	GJ/hr (10^6 Btu/hr)	577 (547)	577 (547)
Heating value of fuel	MJ/kg (Btu/lb)	41.9 (18,000)	41.9 (18,000)
Fuel fired	kg/hr (lbs/hr)	13,800 (30,400)	13,800 (30,400)
Sulfur content	Wt. %	3.0	3.0
Sulfur input	kg moles/hr (lb moles/hr)	12.9 (28.4)	12.9 (28.4)
Limestone input	kg moles/hr (lb moles/hr)	12.9 (28.4)	38.7 (85.2)
	kg/hr @ 95% (lbs/hr) 95%	1357 (2,992)	4070 (8,977)
	metric tons/day (tons/day)	32.6 (35.9)	97.7 (107.7)
Sulfur removal in gasifier	%	95.0	95.0
Production rates			
Gasifier stone, net	kg/hr (lbs/hr)	1,122 (2,474)	2,570 (5,660)
	metric tons/day (tons/day)	26.9 (29.7)	61.6 (67.9)
Regenerator stone, net	kg/hr (lbs/hr)	791 (1,743)	--
	metric tons/day (tons/day)	18.9 (20.8)	--
Oxidizer stone, net	kg/hr (lbs/hr)	--	3,350 (7,387)
	metric tons/day	--	80.4 (88.6)
Sulfur plant @ 95% recovery			
Sulfur	metric tons/day (LT/day)	8.96 (8.82)	--
Sulfuric acid, 100%	metric tons/day (LT/day)	27.3 (26.9)	--
Gypsum plant @ 100% recovery			
Hemihydrate	kg/hr (lbs/hr)	3,070 (4,570)	5,810 (12,811)
	metric tons/day (tons/day)	49.7 (54.8)	139.2 (153.7)
Sulfuric acid required	metric tons/day (LT/day)	2.96 (2.91)	62.2 (61.2)

Table K-3

DEMAND FOR CONSTRUCTION MATERIAL

State	Sand & Gravel	Crushed stone	Lime	Cement	Gypsum
Rhode Island	2.4	NA[a]	--	0.19	--
Connecticut	6.8	8.4	NA	0.83	Imported
Massachusetts	17.9	8.0	0.064	1.40	NA
Vermont	4.0	1.5	--	1.08	--
New Hampshire	6.5	NA	--	0.17	Imported
Maine	13.0	1.0	NA	0.21	--
TOTAL	50.6	18.9	0.064	3.88	

[a]Not available

Thus, even on a once-through basis, the production of by-product stone amounts to only 0.06 percent of the sand and gravel demand in the New England states, and 0.17 percent of the crushed stone market. With suitable values of crushing strength and bulk density plus chemical inertness, the by-product stone was potentially a candidate for some portion of these markets.

While a breakdown of the gypsum demand was not available, the price structure appeared to be:

- Crude gypsum - $2.50-5.00/0.9072 Mg (short ton)
- Calcined gypsum - $14-19/0.9072 Mg (short ton)
- Plaster - $25-60/0.9072 Mg (short ton)

It appeared that the by-product stone might be utilized in one of the above ways.

Logic Diagram

A logic diagram (Figure K-1) was then prepared showing alternative solids processing schemes with the ultimate disposal being

- Landfill
- Stockpiling sulfur or calcium sulfide

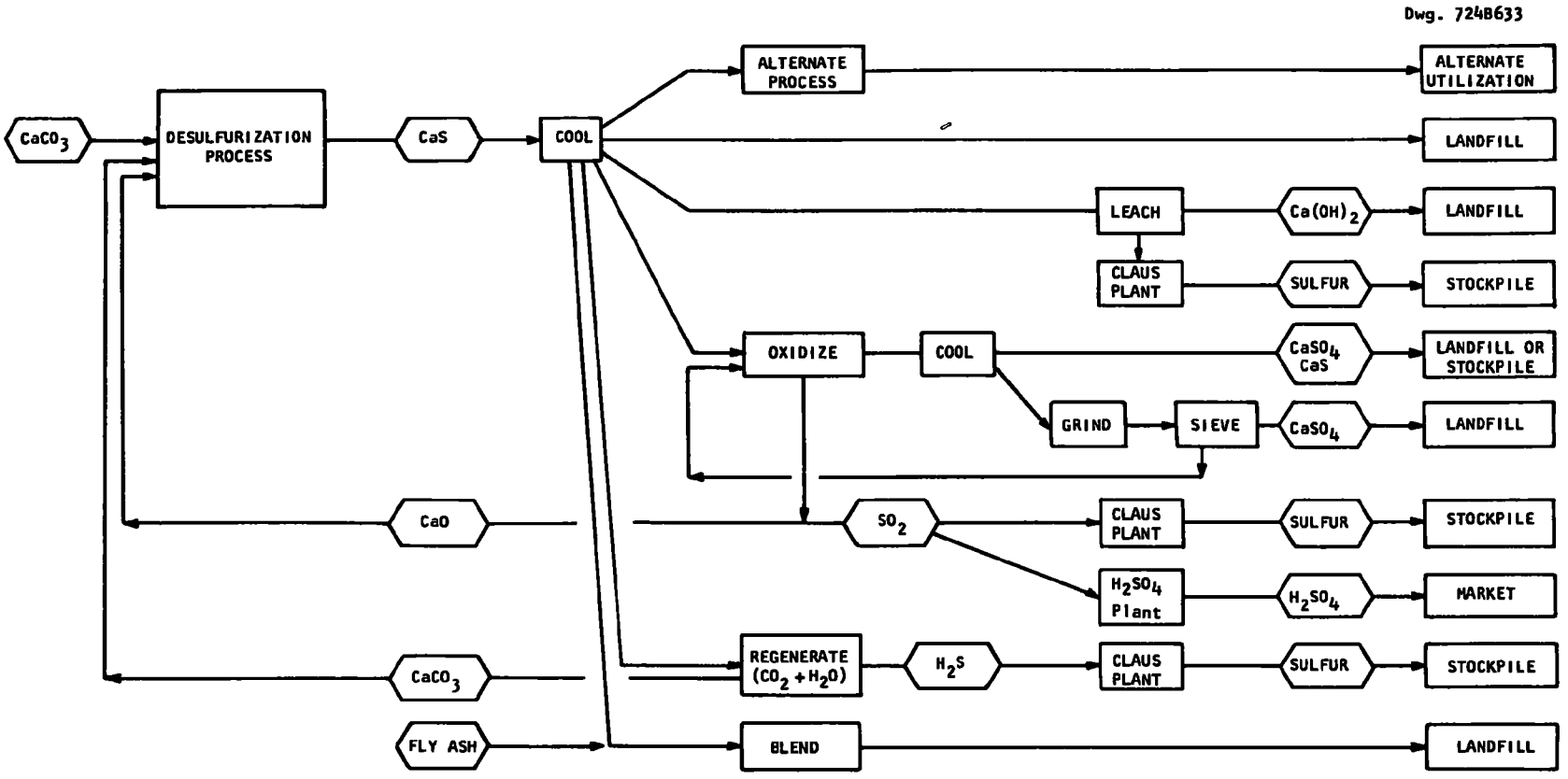

Figure K - 1 — Logic diagram for disposal of spent limestone

- Marketing sulfur, sulfuric acid, or some other as yet undefined product.

Two attractive alternatives were:

- Partial oxidation followed by landfill
- Stockpiling calcium sulfide and blending with fly ash.

The former, which has been previously studied, would preserve most of the sulfur in an available form while protecting the environment by coating the calcium sulfide with a calcium sulfate-impervious shell. The second would take advantage of the pozzolanic activity of typical fly ash to tie up the sulfur in complex cement-type structures.

PROCESS ALTERNATIVES

The block diagrams presented below show 15 alternatives for disposing of spent stone from the fluidized bed oil gasification process. Five other methods are covered in the descriptions following, although no flow sheets are shown. These diagrams were devised to include the essential elements in each process so that priorities for further development work could be assigned on a qualitative basis. Figure K-2 shows the relationship of these processes, grouping them into regenerative and nonregenerative (once-through) types. For convenience, the processes are designated by a letter code.

First letter - R, regenerative; N, nonregenerative
Second letter - D, dry process; W, wet process
Third letter - S, sulfur recovery unit included;
N, no sulfur recovery unit required.

The processes are described in the sequence shown in Figure K-2,beginning with nonregenerative. Experimental data have been obtained on selected spent stone processing systems to support the assessment of the selected options. Reference to the experimental support data is indicated by noting the appropriate appendix in parentheses.

Option NDN-1 Direct Disposal

This is the simplest approach to disposal. No flow sheet is shown, although there would be a cooling and possibly a grinding step. The

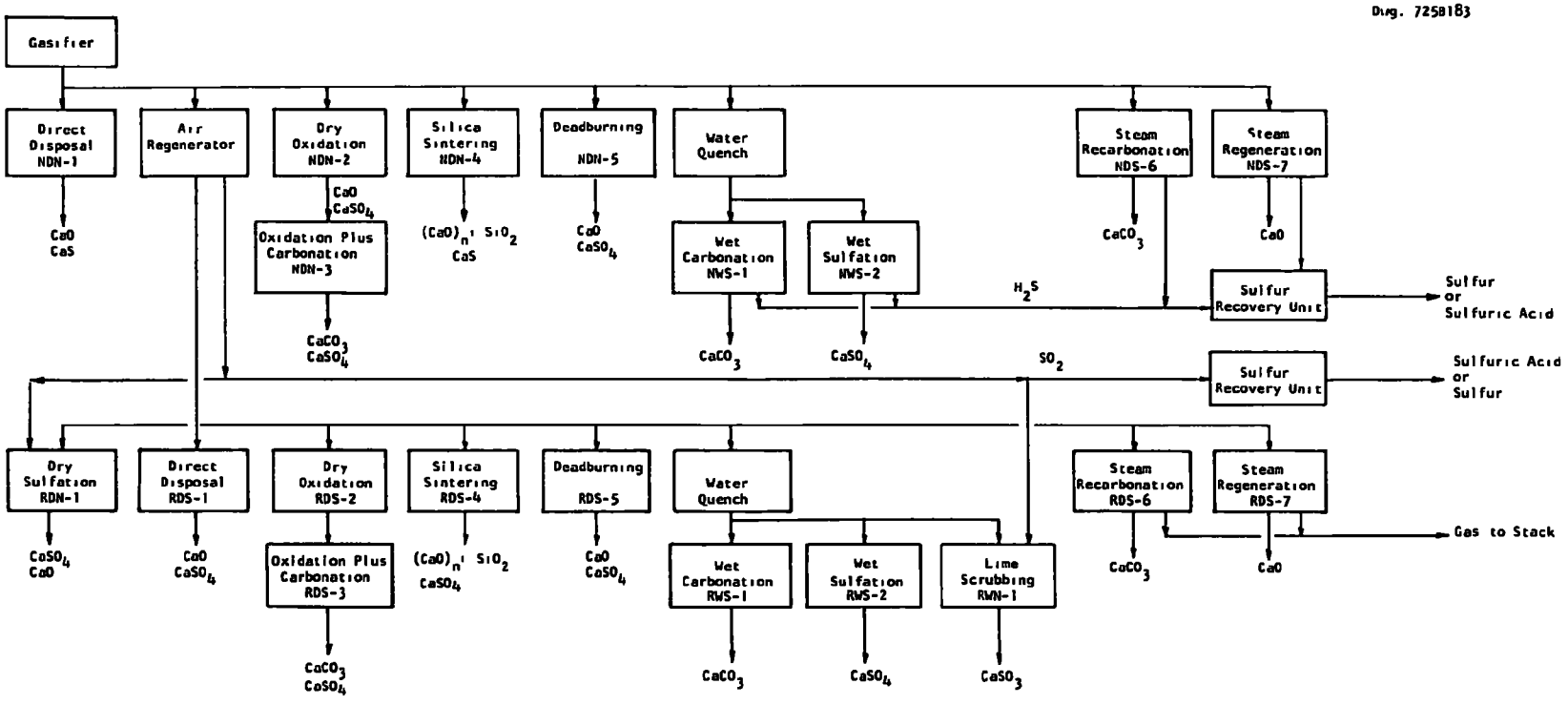

Figure K-2—Oil gasification: spent stone disposal processes

calcium oxide/calcium sulfide product is preferably sold to some user who needs lime and can tolerate the sulfide content. This is not thought of as a general solution because it depends on local market conditions.

Option NDN-2 Dry Oxidation (Flow sheet not shown) (Appendix O and Reference 11)

Adding an air oxidation step could convert all of the calcium sulfide to calcium sulfate so that the product could be marketed as an impure lime. Since calcium sulfate is used as a retardant in cement manufacture, it is possible that this component would not be detrimental. The oxidation may require grinding the limestone below 150 microns (100 mesh). This could be done internally by a jet attriter or externally by a micronizer-type mill. The flow sheet would be represented by the first half of NDN-3.

Option NDN-3 Oxidation Plus Carbonation (Figure K-3) (Appendix O)

In the event the calcium oxide/calcium sulfate from the oxidation step is not marketable, further treatment would be required before it could be disposed of as landfill. This flow sheet shows carbonation at about 760°C (1400°F) with carbon dioxide recovered from calcination of the fresh limestone. A waste heat boiler may be required in the carbonation process to remove the heat of reaction of carbon dioxide and calcium oxide.

There is some reason to believe that successful operation will require an excess of carbon dioxide. If this is true, carbon dioxide would be recovered from flue gas, although there is an advantage in external calcination of limestone in that this carbon dioxide does not become a diluent in the product gas from the gasifier.

Option NDN-4 Silica Sintering (Figure K-4)

The presence of free calcium oxide suggests the possibility of processing the spent stone to cement-type substances by combining it with silica. The silicon dioxide source could be sand, fly ash, or material such as slag. The spent stone from the gasifier would be processed like cement.

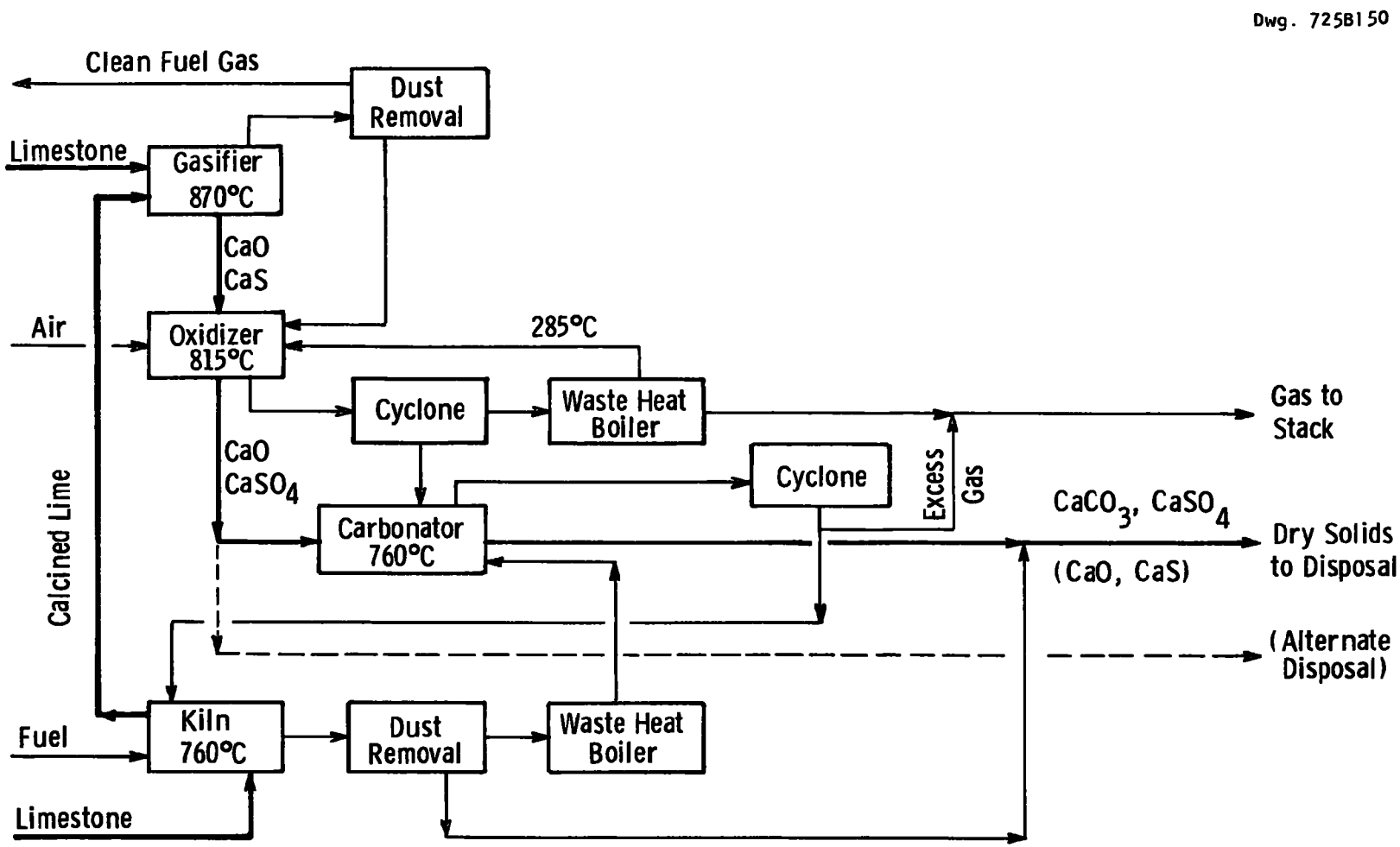

Figure K - 3—Oil gasification, nonregeneration mode-Option NDN-3: oxidation plus carbonation

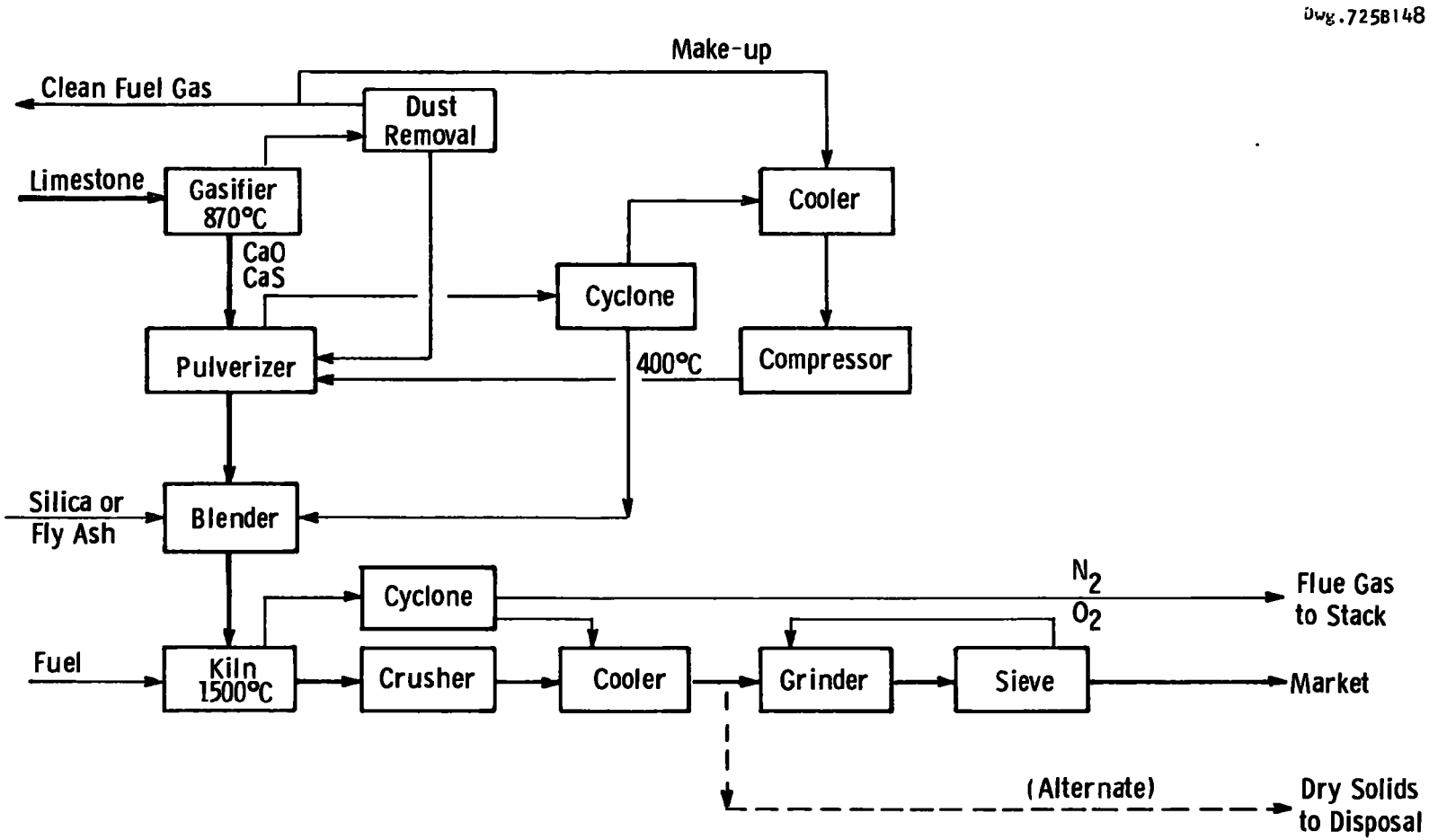

Figure K - 4—Oil gasification, nonregenerative mode-Option NDN-4: silica sintering

Feed materials would be ground to less than 150 microns (100 mesh), blended and sintered at temperatures perhaps as high as 1500°C (2732°F). Optimistically, calcium sulfide would replace calcium oxide in complex silicate linkages. An alternative would be to process a portion of the spent stone to calcium oxide-silicon dioxide ($[CaO]_n \cdot SiO_2$)-type compounds and then blend this back to coat all the calcium sulfide so that, on hydration with water, the calcium sulfide becomes embedded in a cement matrix.

The spent limestone could be ground in a micronizer using a circuit of fuel gas. After the circuit has been established, only makeup for losses would be required.

A further variation is based on work done by the Coal Research Bureau, School of Mines, West Virginia University under a contract with EPA in 1971.[11] This showed that the natural pozzolanic activity of limestone-modified fly ash could be utilized to make calcium silicate bricks. The composition was adjusted by adding silica sand and calcium oxide. Bricks were pressed and autoclaved for eight hours at 1310 kPa (190 psig) and 185°C (365°F).

The variation here is to make any necessary adjustment in composition, hydrate the mixture, and let it develop whatever degree of cement linkages it will. Basically, this is thought of as an ambient-to-moderate temperature process to create enough linkages to permit disposal as landfill.

Option NDN-5 Deadburning (No flow sheet shown) (Appendix O)

It was known that materials like lime can be processed at high temperatures to reduce chemical activity. This phenomenon was studied briefly for applicability to the spent calcium oxide for both once-through and regenerative operation. The stone was sintered at temperatures between 1200 and 1700°C (2192 and 3092°F) to render the stone inactive. A nonregenerative system without sulfur recovery would require inactivating the free calcium oxide under conditions such that the sulfur would be retained. Primary concerns for this approach are the retention of the sulfur and the environmental activity of the processed stone.

Option NWS-1 Wet Carbonation (Figure K-5) (Appendix M)

Spent stone from the gasifier is quenched with water and subjected to a three-stage carbonation with carbon dioxide from external calcination of limestone. The treated stone is dewatered, filtered, and dried. The filtrate is used as quench water in combination with water from the off-gas scrubber. Gases from the first-stage carbonation and the stone quench are scrubbed in an off-gas scrubber to remove particulates. Makeup water can be added here or in the solids separation steps. The scrubbed gas contains hydrogen sulfide and is sent to a sulfur recovery unit such as a Claus or a Stretford plant.

The product is sent to disposal as calcium carbonate plus inerts and some calcium sulfate.

Option NWS-2 Wet Sulfation (Figure K-6) (Appendix N)

An alternative to carbonation is to treat the quenched stone with dilute sulfuric acid to form calcium sulfate from both calcium oxide and calcium sulfide, releasing hydrogen sulfide which is expected to remain in solution, although some odor will be apparent. The acidification step, at least, will have to be conducted in a closed vessel. A three-stage counter-current decantation followed by filtration will produce calcium sulfate which may be

- Marketed
- Disposed of as landfill
- Stockpiled for future use as a sulfur source.

Sour water is stripped of hydrogen sulfide and recycled as quench water or as part of the wash water, depending on the residual acid content. Ideally, the process would use somewhat less than stoichiometric sulfuric acid so that the final product would be slightly aklaline. Hydrogen sulfide would be converted to sulfur or sulfuric acid either on site or off site. The net sulfuric acid requirement for the process could also be derived from effluents from other industrial processes.

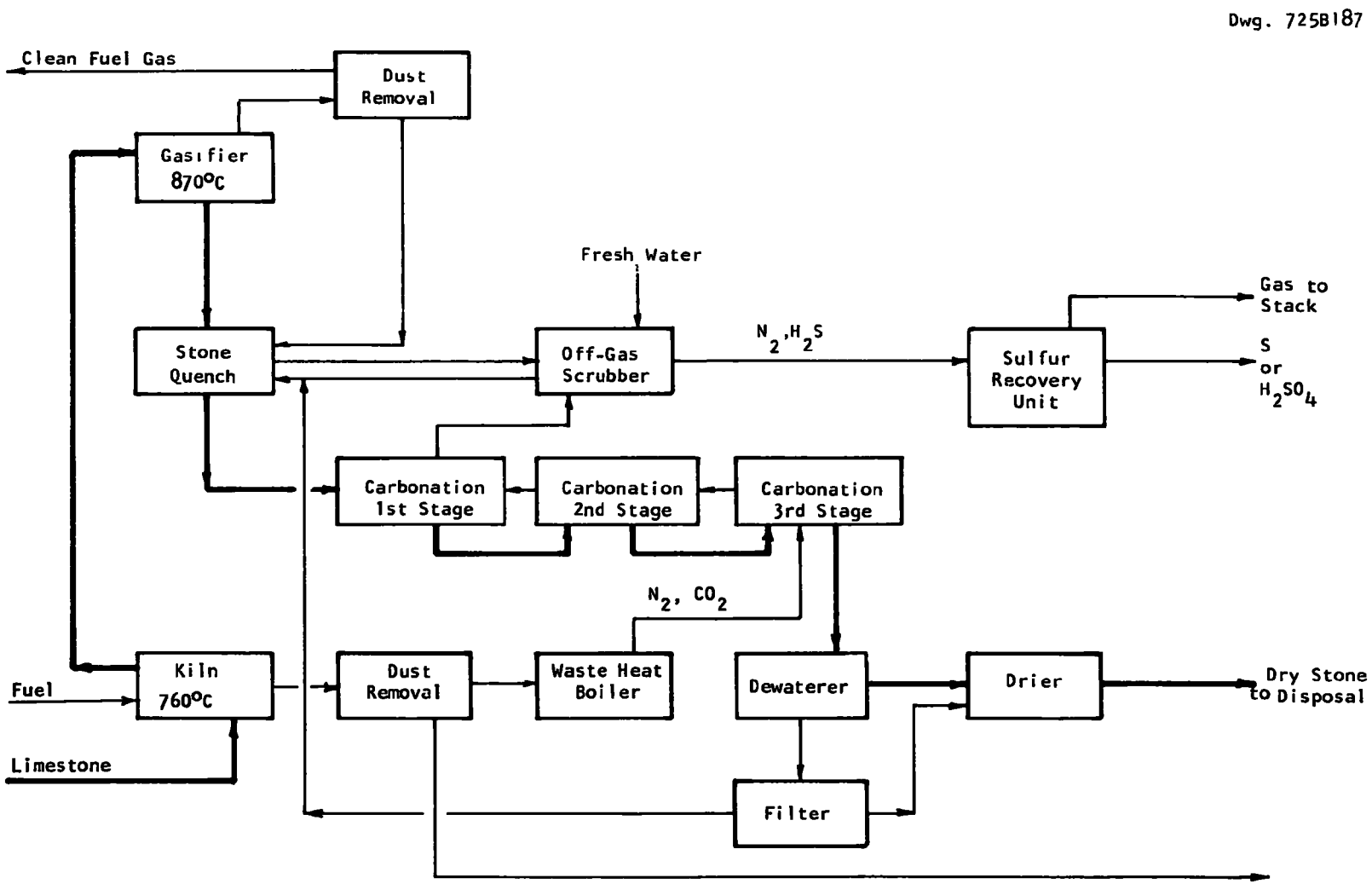

Figure K-5 —Oil gasification, nonregenerative mode - Option NWS-1: wet carbonation

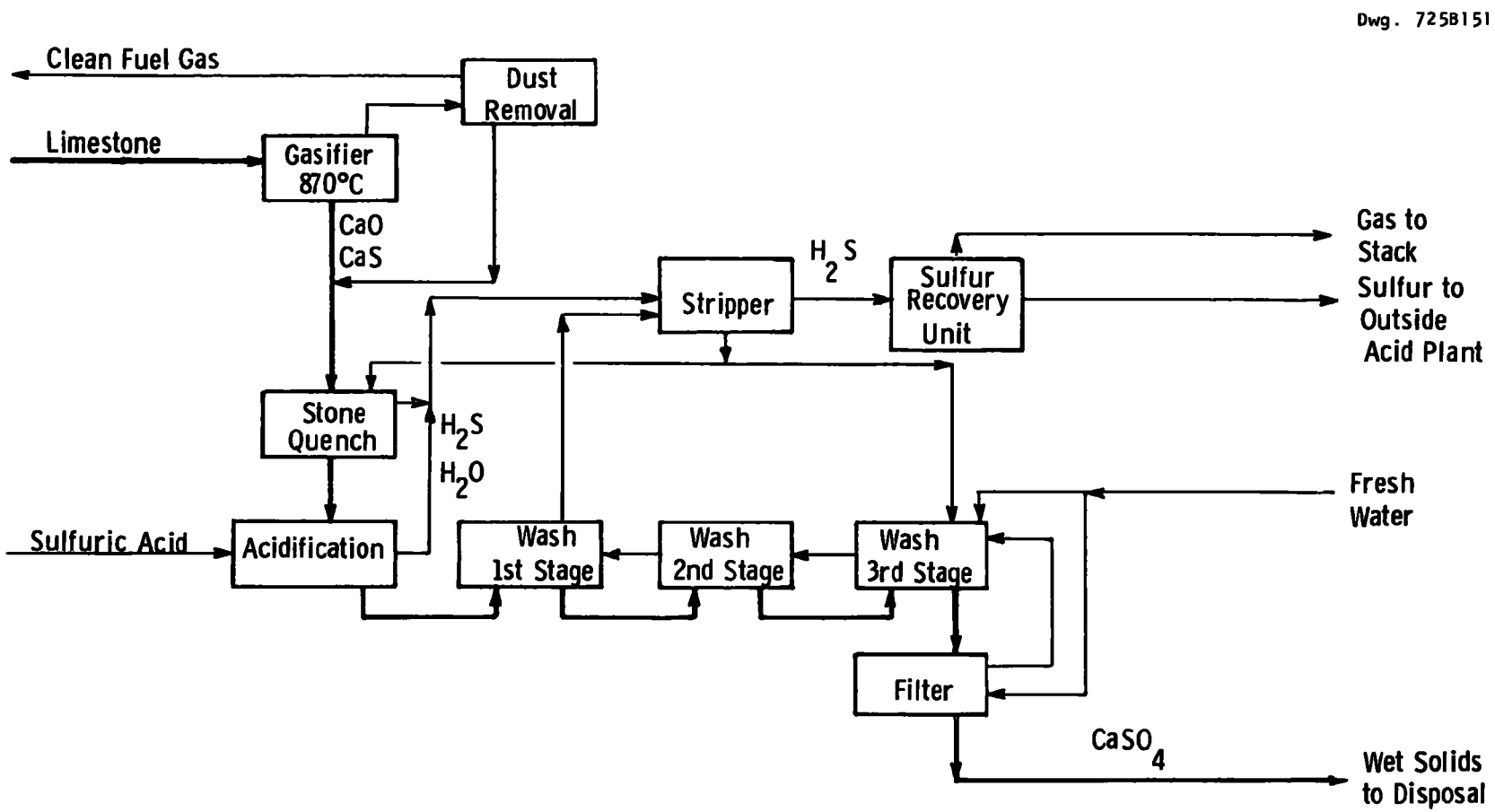

Figure K -6— Oil gasification, nonregenerative mode-Option NW S-2: wet sulfation

Option NDS-6 Steam Recarbonation (Figure K-7)

Another chemical reaction is available for converting the spent stone to an environmentally acceptable form. The stone from the gasifier is first pulverized in a micronizer-type mill using compressed flue gas as a grinding medium. Some carbonation may occur in this step. The stone is transferred to a reactor operating at about 705°C (1301°F) and 1520 kPa (15 atm) where it is contacted with flue gas and steam to produce calcium carbonate and release hydrogen sulfide.

It is possible to regard this as a route to regeneration different from that which corresponds to the R-series of options. One advantage would be that the limestone would not be exposed to the higher temperature levels (1070°C [1958°F]) and presumably would be less subject to deactivation (dead-burning).

Option NDS-7 Steam Regeneration (No flow sheet shown)

A simplication of Option NDS-6 is to produce calcium oxide rather than calcium sulfide by treating the gasifier stone with steam alone. The hydrogen sulfide released would be processed to sulfur. It appears that temperatures of 1200 to 1300°C (2192 to 2372°F) would be required to produce an equilibrium mixture containing even three percent hydrogen sulfide.

If the calcium oxide had to be discarded, this would present problems comparable to those of Option NDN-2 or NDN-1. It is also possible that the calcium oxide could be recycled, which would correspond to a method of regeneration alternative to air oxidation.

Option RDN-1 Dry Sulfation (Figure K-8) (Appendix L)

Sulfur dioxide released during regeneration is cooled to about 870°C (1598°F) in a waste heat boiler and recontacted with the portion of regenerated stone that would have been discarded. In the presence of air, calcium sulfate reforms. The treated stone is cooled by incoming air and may be marketed as a gypsum or discarded. Since the reason for discarding

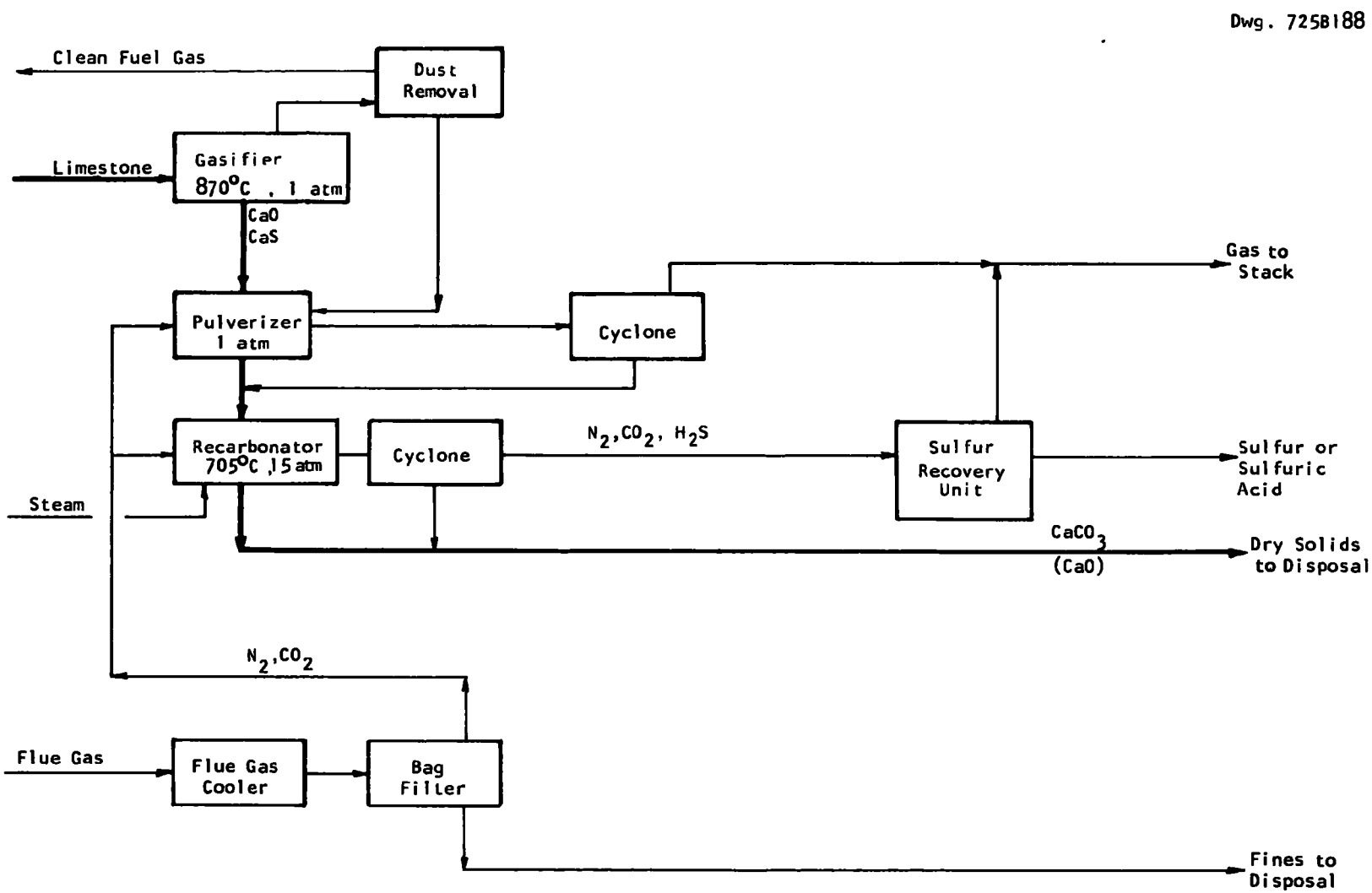

Figure K-7—Oil gasification, nonregenerative mode - Option NDS-6: steam recarbonation

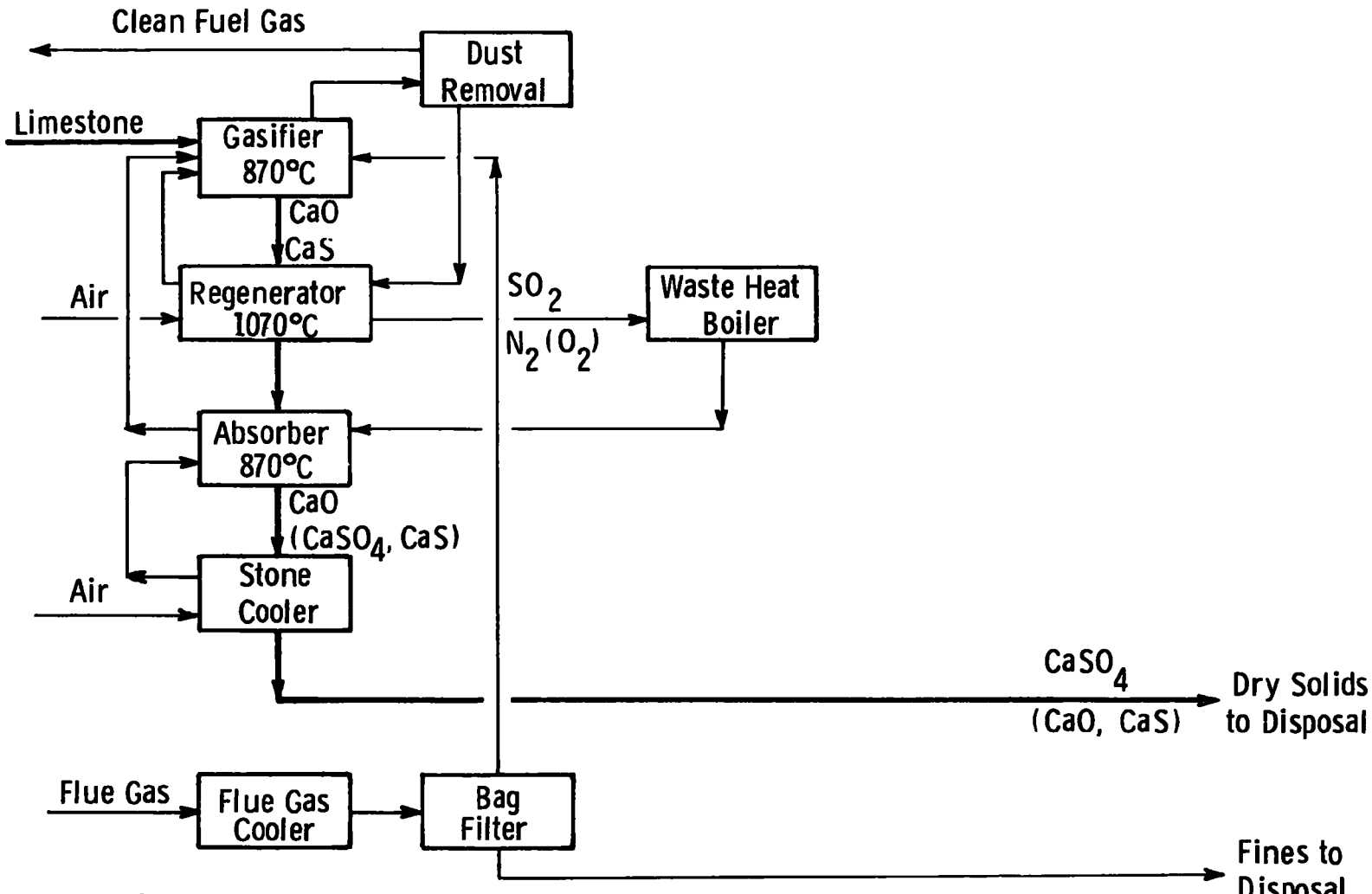

Figure K-8—Oil gasification, regenerative mode-Option RDN-1: dry sulfation

stone in these regenerative processes is to maintain activity and particle size distribution, theoretically the makeup rate could be less than mole-for-mole on sulfur. Option RDN-1 would require an increase to one-for-one.

Option RDS-1 Direct Disposal (Figure K-9)

This is the simplest version of the regenerative processes as far as stone processing is concerned. A water quench prior to disposal may release some hydrogen sulfide, but this is expected to be small enough to permit venting to a stack. It is possible that a market can be found for the slaked lime product.

Option RDS-2 Dry Oxidation (Figure K-10) (Reference 13)

Spent stone from the regenerator is oxidized in a micronizer-type mill to calcium sulfate/calcium oxide. This can be offered as a lime substitute.

Option RDS-3 Oxidation Plus Carbonation (Figure K-11) (Appendix O)

In the event that a market cannot be found for the product from RDS-2, a further process step could be added in which carbon dioxide from flue gas is used to recarbonate the stone. The data, however, do not confirm this.

Option RDS-4 Silica Sintering (Figure K-12)

This is similar to Option NDN-4 except that the product contains much less sulfur since sulfur dioxide is released in the regeneration step for conversion to acid or sulfur.

Option RDS-5 Dead-burning (Figure K-13) (Appendix O)

As in Option NDN-5, the concept is to subject the stone to be discarded to temperatures of about 1500°C (2732°F) to inactivate the calcium oxide. Because most of the sulfur has been released in the regeneration, there is less likelihood of having significant amounts of

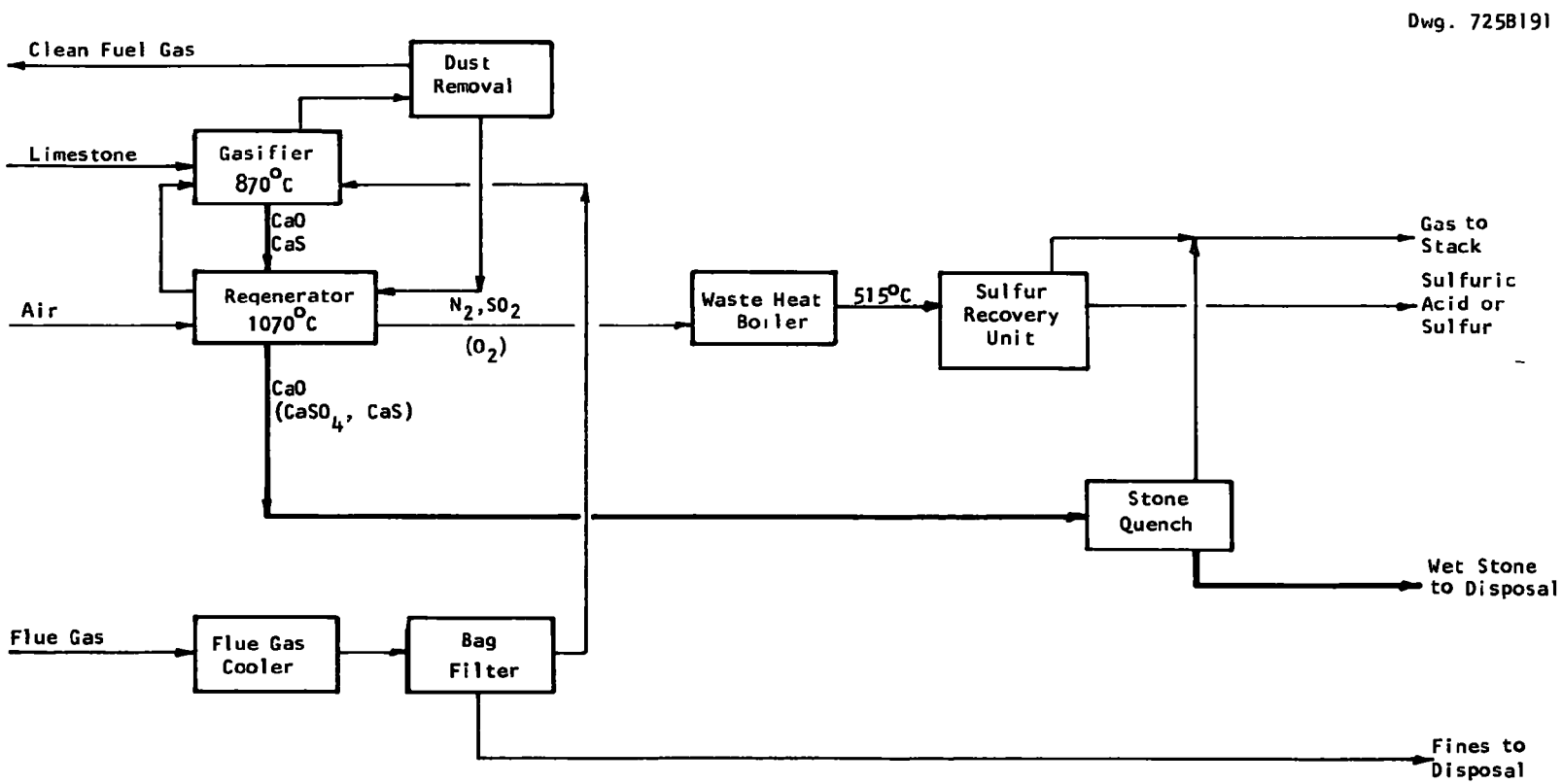

Figure K - 9—Oil gasification, regenerative mode - Option RDS-1: direct disposal

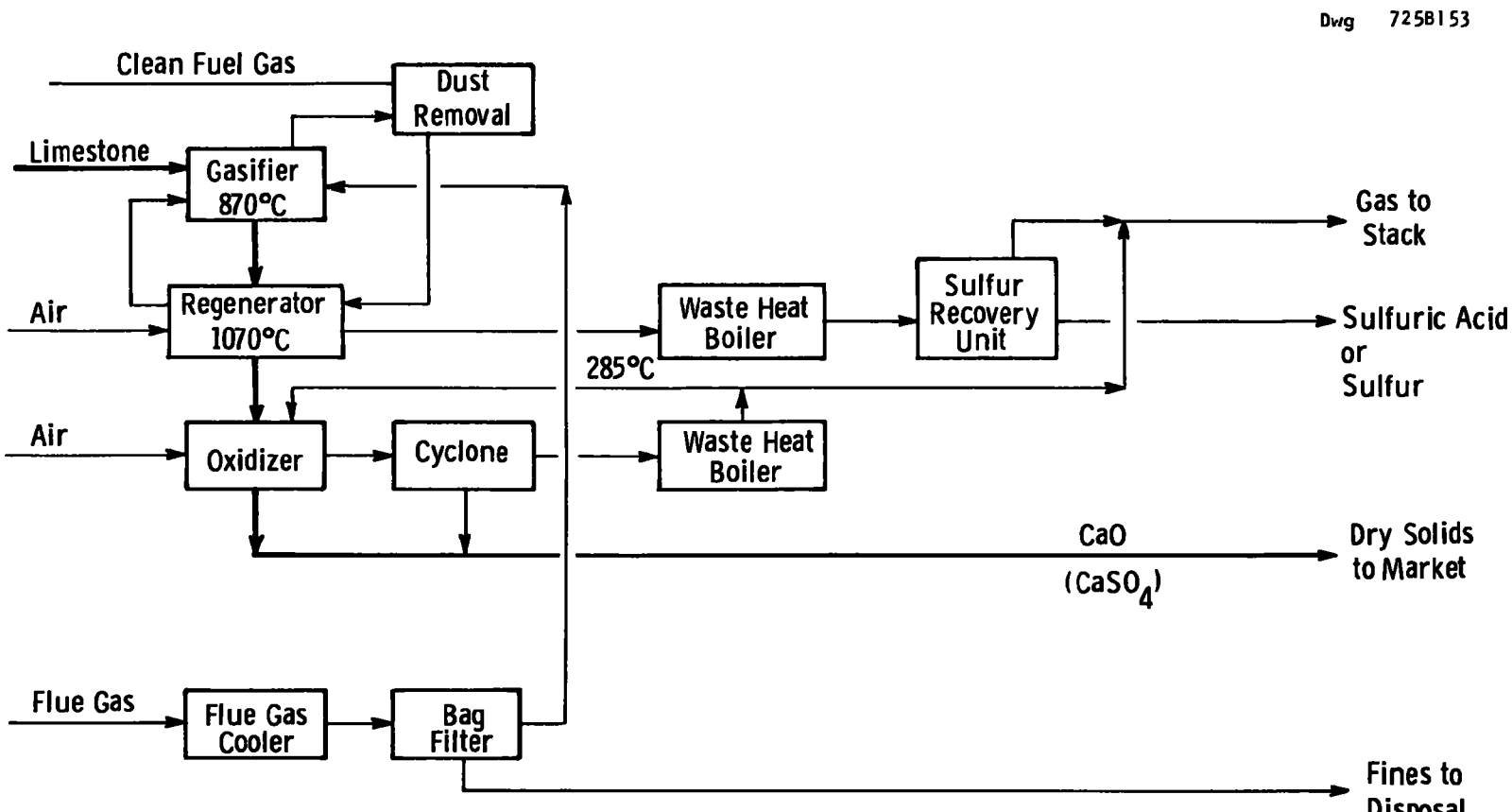

Figure K -10—Oil gasification, regenerative mode-Option R D S-2: dry oxidation

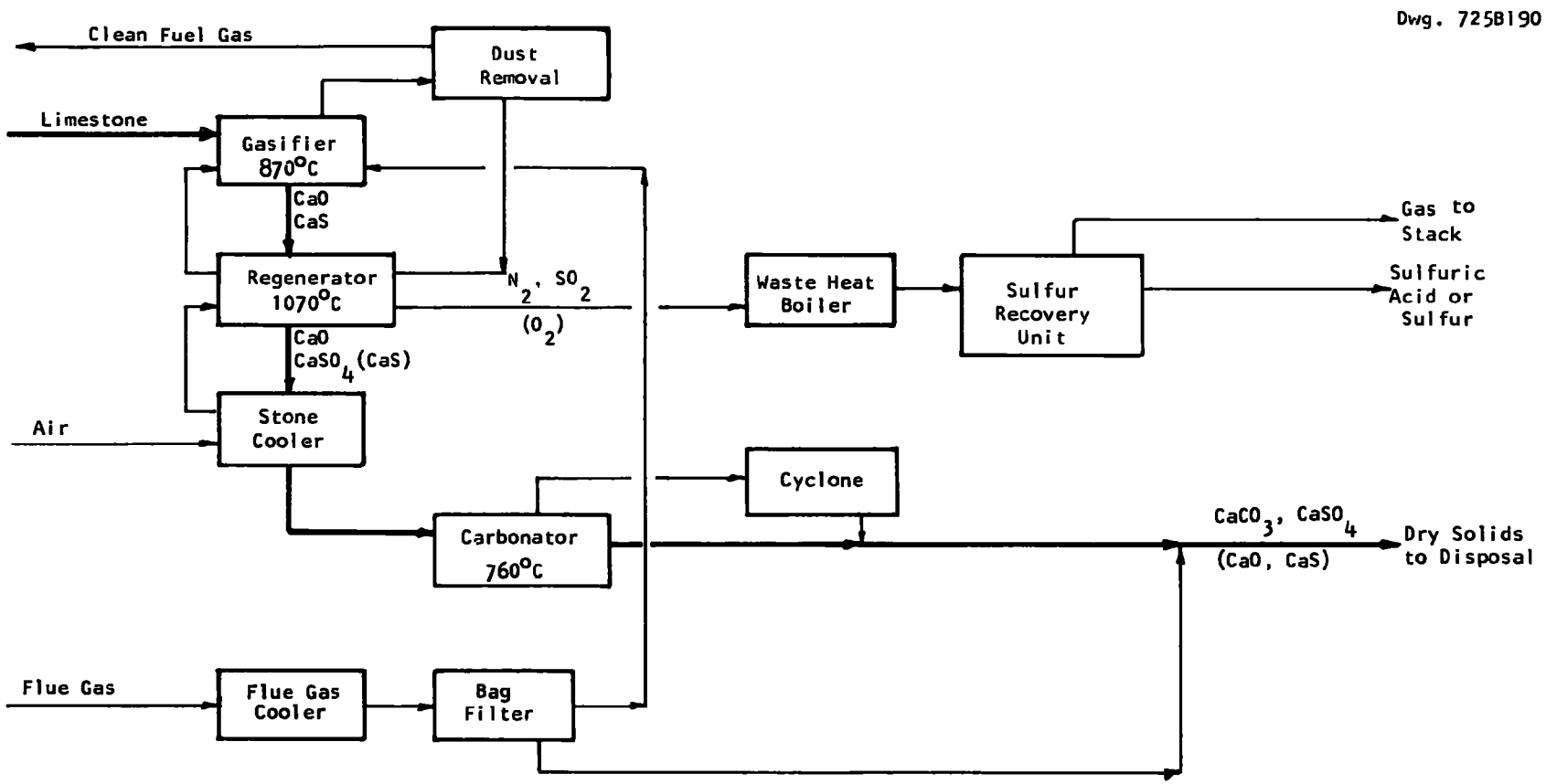

Figure K-11-Oil gasification, regenerative mode - Option RDS-3: oxidation plus carbonation

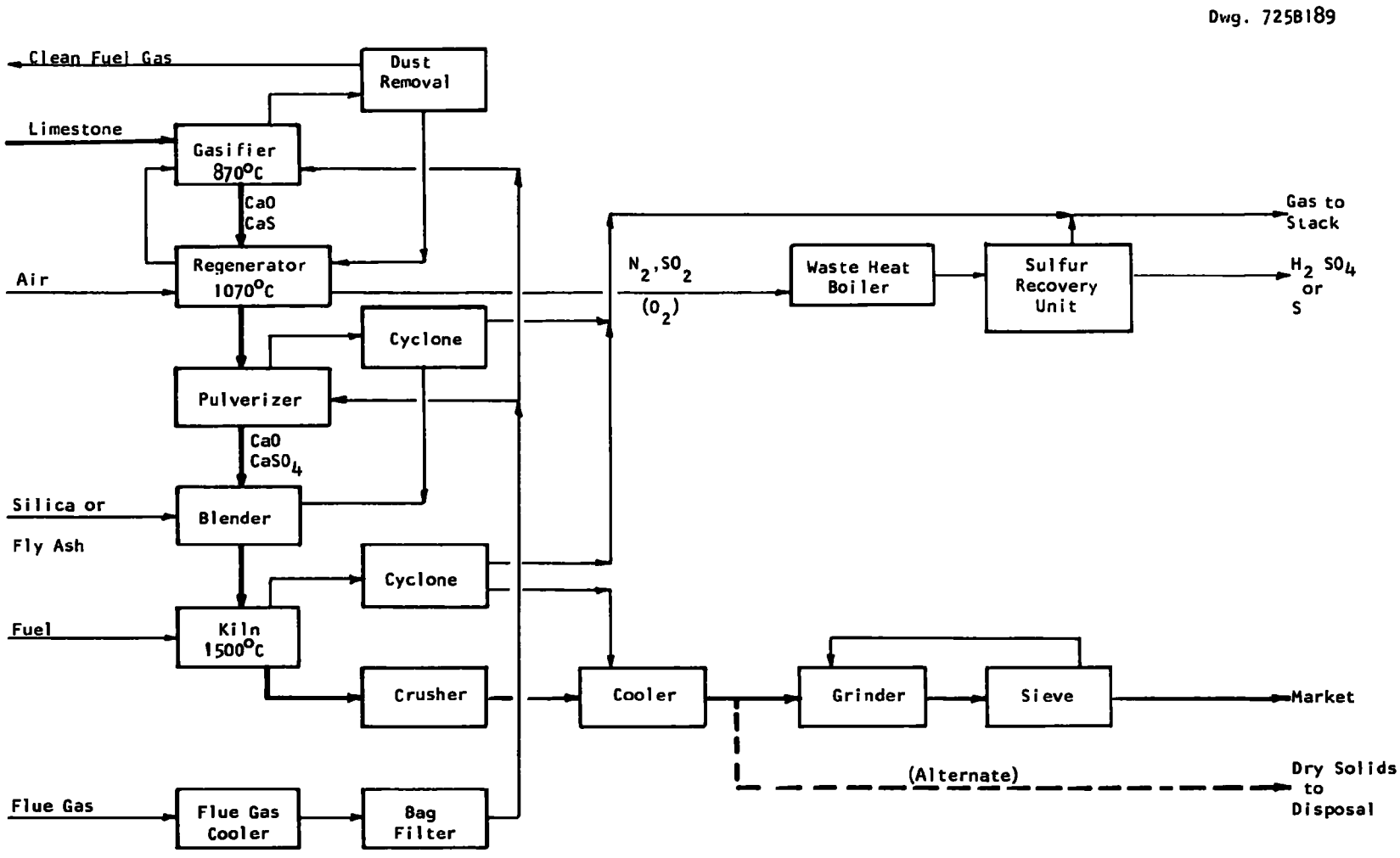

Figure K - 12—Oil gasification, regenerative mode - Option RDS-4: silica sintering

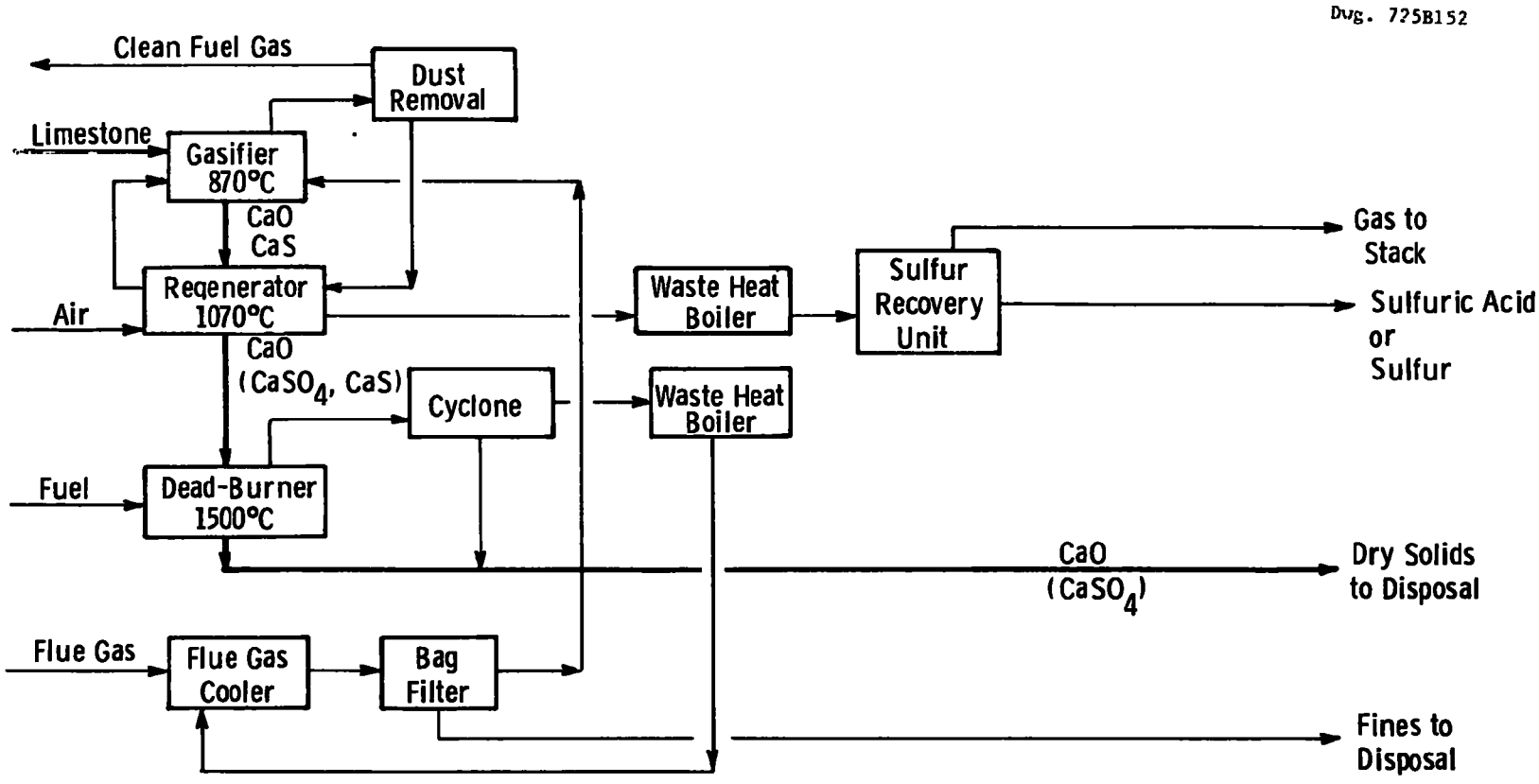

Figure K-13–Oil gasification, regenerative mode–Option RDS-5: dead-burning

sulfur dioxide in the off-gas from the deadburner. In any case, the gas can be recycled as shown to the flue gas cooler and back to the gasifier, or perhaps to the stack.

Option RWS-1 Wet Carbonation (Figure K-14) (Appendix M)

This represents one primary option investigated for the demonstration plant. A modification may be made in doing the carbonation with three parallel streams of carbon dioxide-rich flue gas rather than countercurrent as shown. The final gases are scrubbed to remove particulates before being recycled to the gasifier to reabsorb the small amount of hydrogen sulfide released by carbonation.

Option RWS-2 Wet Sulfation (Figure K-15) (Appendix N)

This is a regenerative version of Option NWS-2. If hydrogen sulfide is released, the amount may be small enough to permit venting to a stack, recycling to the gasifiers, or sending to a sulfur recovery unit.

Option RWN-1 Lime Scrubbing (Figure K-16)

This is another way of designing the spent stone disposal process to be internally sufficient in raw materials. Quenched regenerated stone is used to produce a lime slurry. Calcium sulfate can possibly be separated off. The lime slurry is used to scrub sulfur dioxide from the regenerator gases after they have been cooled in a waste heat boiler. The product is a mixture of calcium sulfite ($CaSO_3$), calcium bisulfite ($Ca[HSO_3]_2$), and calcium sulfate ($CaSO_4$). After drying, the material is disposed of as landfill.

Option RDS-6 Steam Recarbonation (Figure K-17)

This is similar to Option NDS-6. One difference is that the recarbonation can be carried out at 101.3 kPa (1 atm) by raising the temperature to 750°C (1382°F). The objective is conversion of the calcium oxide rather than recovery of hydrogen sulfide. The concentration and amount of hydrogen sulfide

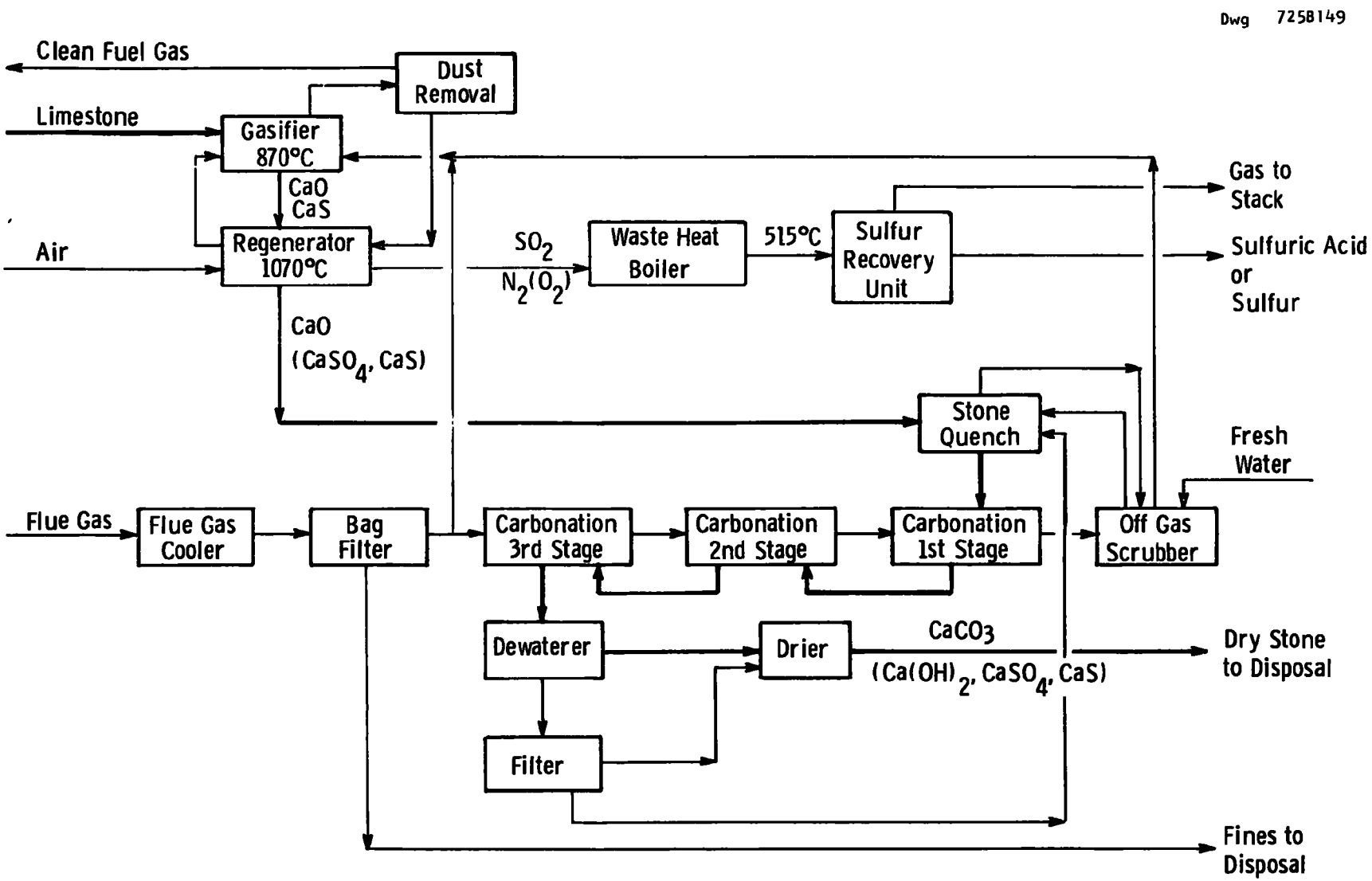

Figure K - 14–Oil gasification, regenerative mode–Option RW S-1: wet carbonation

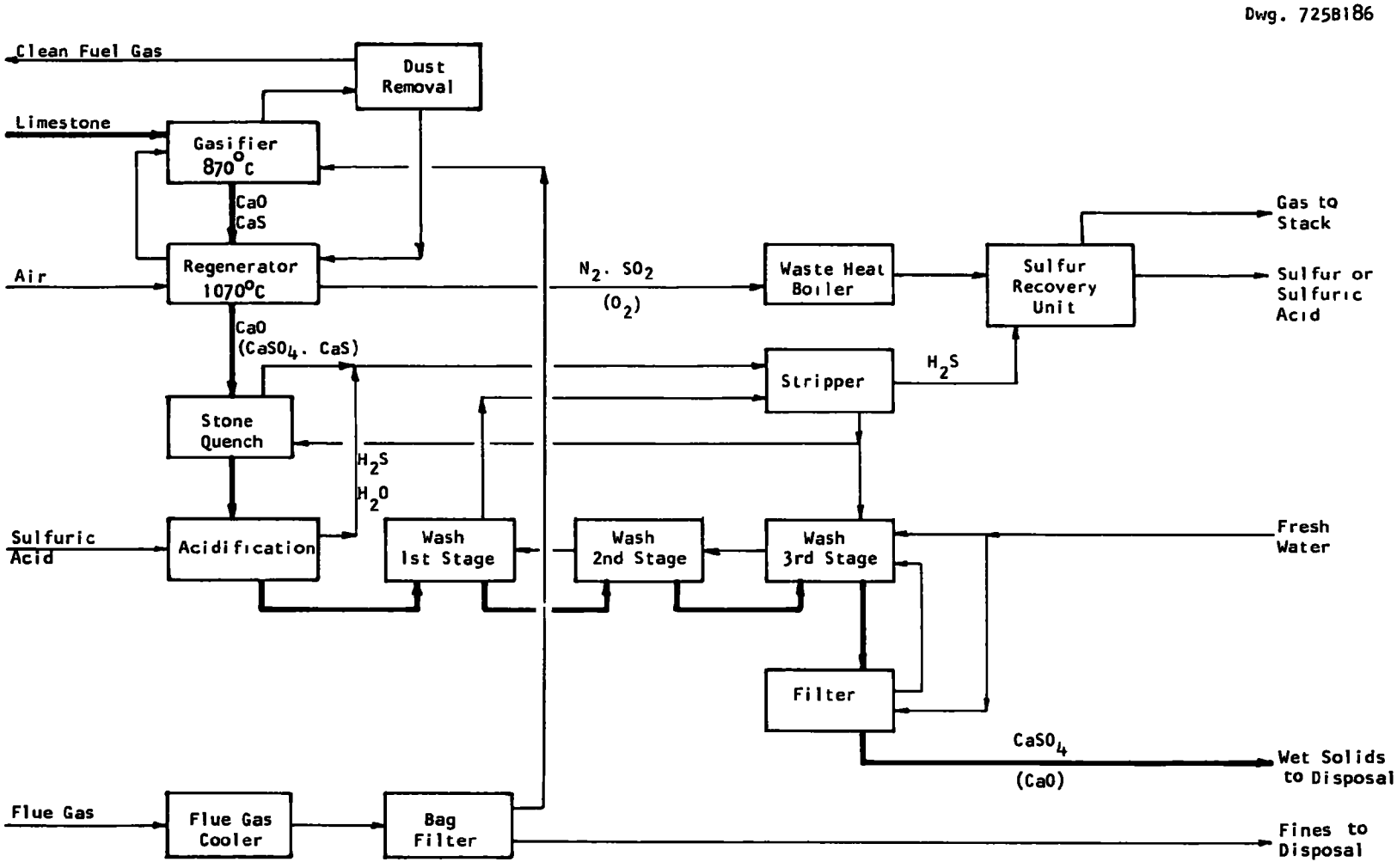

Figure K - 15 —Oil gasification, regenerative mode - Option RWS-2: wet sulfation

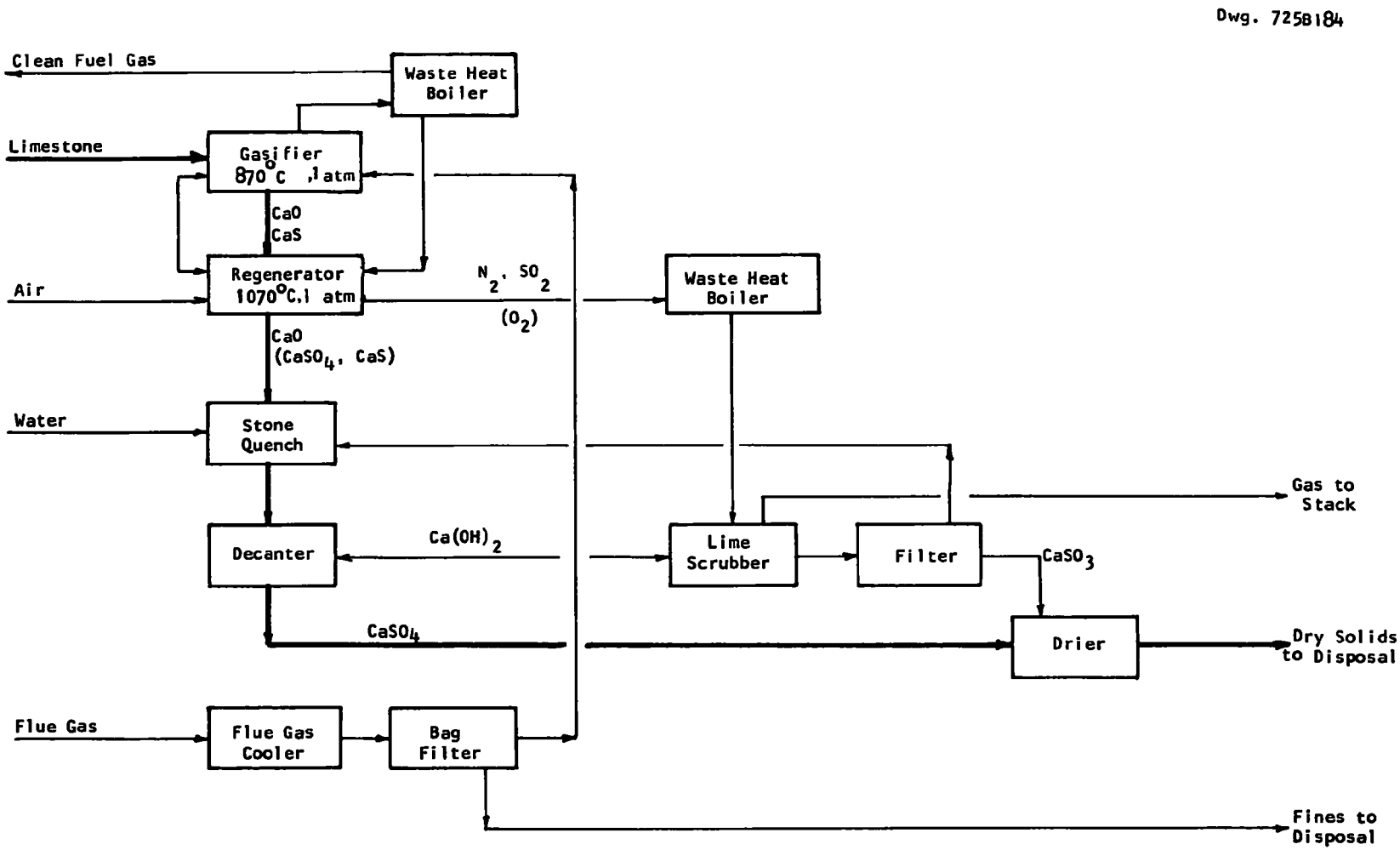

Figure K - 16 —Oil gasification, regenerative mode - Option RWN-1: lime scrubbing

in the off-gas is expected to be low enough to permit venting directly to a stack. A second difference is that sulfur is released in the regeneration as sulfur dioxide, which is probably best processed to sulfuric acid rather than sulfur.

Option RDS-7 Steam Regeneration (No flow sheet shown)

A simplification of Option RDS-6 is to regenerate calcium oxide from calcium sulfide rather than calcium carbonate by treatment with steam alone. There would still be a sulfur recovery plant because of the air regenerator. It is expected that the residual sulfide in the regenerator store would be low enough that the gases from the steam treatment could be vented to a stack. Disposal of the calcium oxide would present the same problems as Option RDS-1 or RDS-2.

INITIAL SELECTION OF CANDIDATE PROCESSES

The above set of 20 alternatives was next subjected to a qualitative review to identify a smaller number of processes for more detailed study. In general, the objective of these evaluations was to

- Minimize the air/water pollution potential
- Minimize the investment and operating costs
- In the absence of a market, minimize the production rate of the stone
- Maximize the possibility of alternative utilization of the stone, even though this might occur sometime in the future
- Favor dry processes over wet ones
- Favor processes for which the technology is the farthest advanced.

Discussions with utility companies confirmed the expectation that they were interested in as simple a process as possible. The generation of electricity itself was beset with enough problems; they were very reluctant to add to them those of a chemical plant.

A direct disposal process would be simple and should have low capital investment. RDS-1, a regenerative process shown on Figure K-9,

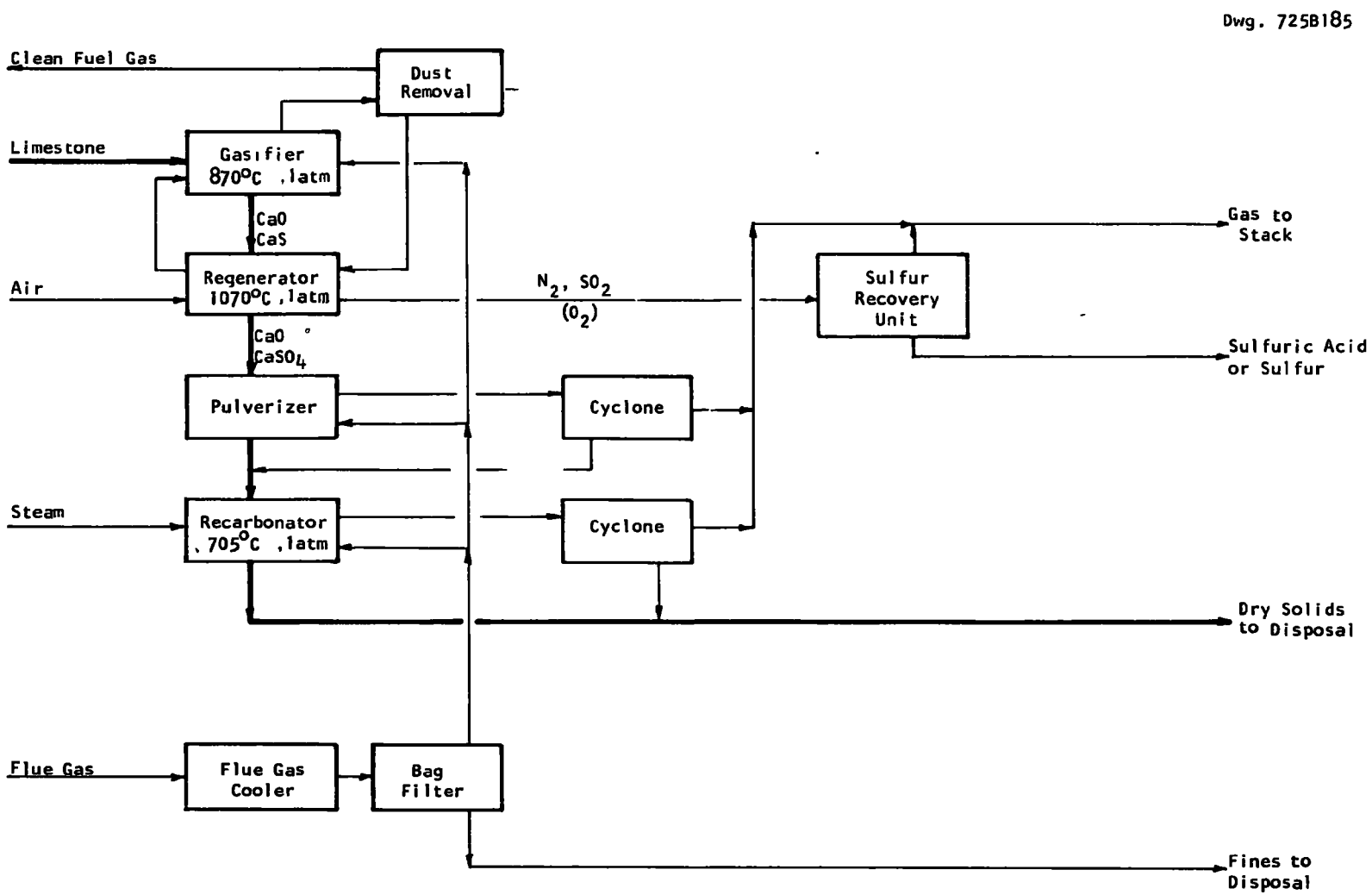

Figure K - 17 —Oil gasification, regenerative mode - Option RDS-6: steam recarbonation

was selected in preference to NDN-1 (figure not shown) because the material to be discarded contained a relatively small amount of sulfur as calcium sulfate rather than a large amount as calcium sulfide. There were potentially more ways of disposing of the former than the latter.

Dry oxidation can convert the sulfide to the sulfate, but there would be substantial amounts of calcium oxide remaining. Initial laboratory data confirmed the difficulty of obtaining complete oxidation of the sulfide because of the rapid formation of a shell of sulfate. The effluent stone could be ground to expose unoxidized calcium sulfide, but the data suggested that the particle size would have to be quite small (perhaps less than 74 μm) in order to achieve complete conversion of the sulfide. NDN-2 (no flow sheet shown) was favored over RDS-2 (Figure K-10) because the latter would require a sulfur recovery plant. The high temperature of regeneration (1070°C/1958°F) would also tend to inactivate the remaining calcium oxide and presumably make dry carbonation less successful. Of the four options in this group, NDN-3 (Figure K-3) was thus selected for further consideration. The feasibility was demonstrated by tests on sulfided limestone which showed that 70 percent recarbonation of -74 μm stone was obtained at 720 to 760°C (1328 to 1400°F) and 101.3 kPa (1 atm) by contacting with 16.5 percent carbon dioxide plus 3 percent water in nitrogen for five hours. Data are presented in Appendix O.

Dry sulfation, as shown in RDN-1 (Figure K-8), showed promise as a means of avoiding the necessity of sulfur recovery facilities by recontacting the by-product stone with the regenerator off-gas in the presence of air to tie up the sulfur as calcium sulfate. The feasibility was demonstrated with BCR 1359 limestone in which 85 percent conversion of calcium oxide to calcium sulfate was obtained by contacting CAFB regenerator stone with 1/2 mole % of sulfur dioxide and 4 mole % oxygen in nitrogen at 870°C (1598°F). The stone was less than -74 μm. With 500 μm stone, the amount of sulfation has not been more than about 40 percent. Support data are presented in Appendix L.

Silica sintering, in which the effluent stone would be blended with fly ash or other siliceous material and sintered at a suitable

temperature, showed promise in view of all the work that had been done by others on fly-ash utilization. NDN-4 (Figure K-4) was favored over RDS-4 (Figure K-12) because the latter would require both a sintering section and a sulfur recovery section.

Deadburning, as represented by NDN-5 (no flow sheet) and RDS-5 (Figure K-13), was intended to utilize the knowledge that exposure to high temperature had the effect of making the calcium oxide less reactive chemically. While it is conceivable that suitable process conditions could be found both to inactivate the lime and to retain the sulfur as calcium sulfate, the regenerative version was judged more immediately practicable. Feasibility was demonstrated by heating CAFB regenerator stone for two hours at 1450°C (2642°F). Contacting the cooled product with water in the ratio of five parts water and one part stone produced a temperature rise of only 0.8°C (32.5°F)/gram of stone versus 4.3°C (40°F) for uncalcined stone. Dsta, are presented in Appendix O.

Steam recarbonation as in NDS-6 (Figure K-7) would release the sulfur as hydrogen sulfide, which is more amenable to sulfur recovery than is sulfur dioxide. It would require elevated pressure, however, to achieve a reasonable hydrogen sulfide concentration. The regenerative version can be conducted at 101.3 kPa (1 atm) by raising the temperature to 750°C (1382°F).

A simplification is obtained by omitting the recarbonation and merely regenerating calcium oxide. Both NDS-7 and RDS-7 (no flow sheets) would be market dependent since disposal of the resulting calcium oxide in a landfill operation is not believed acceptable. There are the further questions of slow rates of reaction and incomplete conversion, especially for the nonregenerative version. Further consideration of these four options was therefore deferred.

With the addition of a water quench, three wet processes were formulated. Lime scrubbing, RWN-1 (Figure K-16), would recontact the sulfur dioxide from the regenerator with a slurry made from the spent stone. It was not considered further because it was expected that direct stack-gas scrubbing with lime would prove less costly. Wet carbonation resulted in one of the more insoluble compounds of calcium. Laboratory

data (Appendix M) also supported the view that essentially complete conversion of the calcium oxide and residual calcium sulfide to calcium carbonate could be obtained. With three hours' contact time at 85°C(185°F), 90 percent recarbonation of CAFB regenerator stone was obtained for 300 to 3000 μm particles using 14 percent carbon dioxide in nitrogen at two times stoichiometric and a water/solid ratio of 40:1. An alternative process, wet sulfation, visualized treating the spent stone with sulfuric acid to make gypsum (Appendix N). Treating CAFB gasifier stone with 100 percent excess of 1:1 sulfuric acid resulted in a weight gain equivalent to a 72 percent conversion of the calcium oxide/ calcium sulfide to calcium sulfate. RWS-1 (Figure K-14) was favored over NWS-1(Figure K-5) because of the smaller lime throughput, hence smaller recarbonation facilities required, and because the CAFB pilot plant work was far more complete for the regenerative mode. NWS-1 was favored over the regenerative version for the initial selection because the stone would not have been exposed exposed to 1070°C (1958°F), only 870°C (1598°F), and because the sulfur would be released as hydrogen sulfide rather than as sulfur dioxide.

The initial seven processes were then examined in more detail, still qualitatively, as shown in Table K-4. Wet carbonation, RWS-1, had the largest number of process steps (17) versus 10 to 12 for the others. Dead-burning required the highest operating temperature: 1500°C (2732°F) versus 1070°C (1958°F) for the other regenerative processes and 870°C (1598°F) for the nonregenerative candidates. Only one, direct disposal, was completely market dependent. Dead-burning was not, but on the other hand was not considered to produce a marketable product. The other five processes produced potentially marketable products. Both wet sulfation and silica sintering would require additional raw materials besides the limestone. Overall, it was decided to eliminate silica sintering from further consideration as a prime candidate because of the length of the development program required. Work would continue in this direction, however, because of the long-term promise of this approach.

Using the material balance shown in Table K-2, a brief look at the gross realization from the wet sulfation process was taken as shown in Table K-5 as three times stoichiometric and, instead of a regenerator,

an oxidizer is used to convert calcium sulfide to calcium sulfate. The balance of the calcium oxide is converted to gypsum by treating with purchased sulfuric acid. In the regenerative version, sulfur dioxide driven off in the regenerator is recovered as acid in a sulfuric acid plant and used to convert the calcium oxide in the by-product stone to gypsum; makeup sulfuric acid is purchased.

Because of the large excess of lime, the once-through option shows a net cost of $2/0.9072 Mg (ton) of gypsum or $312/day added cost over merely disposing of oxidizer stone as landfill. A gross realization is possible in the regenerative version because most of the acid can be generated from the sulfur recovered. Using a service factor of 0.9, the annual gain is $172,800. With 16 percent capital charges, 50 percent taxes, and even a 20-year payout time, however, this gain will support an investment of only $655,000. Out of this must come facilities for a sulfuric acid plant, a gypsum plant, and gypsum handling. Gypsum in this calculation was valued at $14/0.9072 Mg (ton) of hemihydrate. There are, of course, other costs associated with operation of a landfill. Gypsum may be worth $19/0.9072 Mg (ton), and perhaps the product can be upgraded to plaster uses.

Regarding market potential, the gypsum production would be 16,330 Mg (18,000 short tons) of hemihydrate per year, using a 90 percent service factor. The Minerals Yearbook[10] shows that domestic production has been constant at about 9,073-1000 Mg (10,000,000 short tons)/year over the period 1967 to 1970. Thus, it would take 110 to 250 MW plants to match the demand for gypsum. This shows that the market is large enough for at least some locations to use this option for stone utilization.

Laboratory data showed that long residence times in the presence of excess acid were likely to be required for conversions significantly better than 70 percent. This was interpreted to mean that a significant effort would be required to develop optimum conditions. It is known that in the phosphoric acid industry production of by-product gypsum has been hampered by filtration problems and the difficulty of washing essentially all the phosphoric acid out the gypsum. Progress has been made, as in the Kellogg-Lopker process, wherein by use of carefully controlled con-

PAGE NOT

AVAILABLE

DIGITALLY

Table K-5

REALIZATION FROM GYPSUM PRODUCTION

End use	Landfill $/day	Gypsum $/day
Once-through		
Transportation @ $4/0.9072 Mg (ton)	354	615
Sulfuric acid @ $36/1.016 Mg (LT)	NA[a]	2203
	354	2818
Value of product	0	2152
Gross cost	354	666
Incremental cost, $/day		312
$/0.9072 Mg (ton) gypsum		2.03[b]
Regenerative		
Transportation @ $4/0.9072 Mg (ton)	83	219
Sulfuric acid @ $36/1.016 Mg (LT)	NA	105
	83	324
Value of product	0	767
Realization (cost)	(83)	443
Incremental gain, $/day		526
$/0.9072 Mg (ton) gypsum		9.60

[a]NA - not applicable.

[b]Dollars per 0.9072 Mg (ton).

ditions some phosphate rocks do not even require grinding before being fed to the process.

It was concluded that wet sulfation was only marginally attractive at this stage of development, and further consideration of it was deferred.

ECONOMIC COMPARISON OF CANDIDATE PROCESSES

Having narrowed down the number of processes to be examined more closely, a preliminary heat and material balance was made for one case, wet carbonation, and detailed equipment lists and a cost estimate were obtained from SWEC. Cost estimates were then made for the other four processes on a differential basis. The flow sheet of Figure K-14 gives the essential details of RWS-1. Table K-6 shows the breakdown of the investment required for each case.

Observations on Equipment Costs

The base equipment cost for RWS-1 was estimated by SWEC as $2,222,000. Of this, about 27 percent is common for all five processes. This would include the fuel oil handling equipment, the limestone unloading system, the by-product stone handling system, and the gasifier air blower. Seven items account for another 44 percent - the gasifier, the regenerator, the two sets of cyclones, the recycle gas blower, the fuel-gas valves, and the large fuel-gas lines. On a systems basis, the breakdown is as follows:

• Gasifier, ex. common items	27.5 %
• Regenerator	11.3
• Recycle gas and PTG* systems	15.4
• Carbonation system	17.2
• Common & miscellaneous	28.6
	100.0 %

Thus, only 17 percent of the base equipment cost is attributed to the method of processing the by-product stone.

Three of the four alternatives show a lower equipment cost;

*purge transport gas

PAGE NOT

AVAILABLE

DIGITALLY

the fourth is about the same.

The lowest cost process is, as might be expected, direct disposal: RDS-1. At this point, a commercial use for the effluent stone had not been identified, so the ultimate disposition was thought of as dumping or landfill. Work to this date by Consol showed that calcium sulfide does become inactive, that is, resistant to carbon dioxide plus steam regeneration even at 760°C (1400°F). On the basis that the small amount of calcium sulfide that might remain on the stone will be inactive, a simple water quench to cool and hydrate the calcium prior to disposal is used. It is of interest that even with this simplest approach the saving is only about 16 percent ($372,000). On an installed basis including indirects, and so on, the absolute savings would be large, perhaps three times the above figure, although the percent of saving would probably be about the same.

The four alternatives to RWS-1 share a common advantage over wet carbonation: a saving of $380,000 (17%) for deleting the carbonation system. This is offset by the additional facilities required in each case.

The RWS-1 cost is low because a particulate removal system for the sulfur dioxide stream and the sulfur plants was not in the estimate.

Dead-burning (RDS-5) also offers significant savings: $229,000 or about 10 percent. The major questions are whether the stone remains inert over a long period of time and how inert is it when made on a tonnage basis.

Oxidation plus carbonation, NDN-3, is a stand-off with wet carbonation. However, the data thus far show only 81 percent oxidation of calcium sulfate and 67 percent carbonation of the calcium oxide. A significant cost is the oxidizer air blower needed to operate the pulverizer ($201,000). One advantage over RWS-1 results from the higher limestone rate: less recycle flue gas for heat balance on the gasifier is required.

Dry sulfation appears slightly less expensive than RWS-1. It has an advantage over NDN-3 in that the sulfur dioxide available nearly matches the calcium oxide, as opposed to the roughly 200 percent excess for the once-through process.

Selection of By-Product Stone Process

Despite the cost advantage of direct disposal, it was felt that a more general solution would be a process yielding a product that could be disposed of in applications such as landfill. Both wet carbonation and dead-burning were encumbered by the need for a sulfur recovery plant. This would add $3,000,000 investment to the approximately $7,000,000 cost for the wet carbonation system. The latter figure was built up from the $2,222,000 bare equipment cost by the addition of other direct costs, indirect costs, contingency, escalation, and fee.

The investment for dry sulfation was somewhat lower than that for dry oxidation plus carbonation. Since the technology was more fully developed for dry sulfation, it emerged as the prime candidate for a spent stone process.

STATUS OF TECHNOLOGY OF PROCESS SELECTED

Although the initial laboratory work has established the technical feasibility of dry sulfation, further tests are needed to provide the balance of definitive design information. The particle size range is one prime variable. Smaller particles would be utilized to a higher degree, but would require more grinding energy and would be more difficult to recover from the effluent gas streams. They would also be more difficult to fluidize. Gas residence time, percent excess air in the absorber, fluidization requirements, solids transport requirements, particle collection efficiencies are areas that need additional supporting data. Another possible problem is partial sintering due to eutectic formation between calcium sulfate and calcium sulfide and possibly aided by limestone impurities.

After the demonstration plant has been operated successfully, it may be possible to discharge the absorber off-gas directly to the stack. It is for the present being recycled to the gasifier and guarantees meeting the sulfur dioxide emission regulations.

OPTIONS FOR THE DRY SULFATION PROCESS

Size Reduction

The evidence thus far is that the spent stone from the regenerator must be reduced in size to below 74 μm to achieve maximum utilization of the calcium oxide. The design includes size reduction in an external jet pulverizer using a stream of compressed air as the grinding energy source. The manufacturer's literature claims a higher energy efficiency than in grinding in a fluidized bed. This is explained by observing that the available mechanical energy of the jet is distributed over more particles in the fluidized bed, so fewer of them accelerate to a velocity high enough for fracture by interparticle collisions. It is possible that the jet energy can be more efficiently utilized in the fluidized bed, but the jet mill

- Separates the process functions of bed fluidization and size reduction and
- Automatically removes the product by elutriation when it has reached the desired size.

In the fluidized bed, some of the product could be subject to reentrainment in the jet and be overground. Inquiries made of manufacturers of conventional grinding equipment revealed that the stone would most likely have to be cooled to essentially ambient temperature first. Jet pulverization has been used at 482°C (900°F) and higher.

Grinding Medium

The design uses compressed ambient air as the grinding medium to avoid other problems. It is possible that recycle gas could be used for grinding if the particulate load in it was sufficiently low. One advantage would be heat conservation; a second is avoidance of heat release due to oxidation in the pulverizer. An alternative is to use the regenerator off-gas, after cleaning and cooling, as the grinding medium so that some absorption and oxidation could occur during the grinding. With favorable results, the absorber vessel could be eliminated in favor of two or more pulverizers in parallel, contingent on process temperature requirements.

To avoid the problem of how to introduce the dusty air from the pulverizer cyclone into the absorber, the oxidizing air is provided as a separate stream. Costs probably could be reduced if this second air stream could be eliminated or at least reduced.

The residual nitrogen from these air streams enters the product fuel gas as a diluent although it permits some reduction in the recycle gas rate needed for heat balance on the gasifier.

Heat Conservation

One design criterion is to minimize the number of process steps and especially heat exchange steps. A significant variable is the amount of calcium sulfide and carbon left on the effluent stone from the regenerator. Oxidation of calcium sulfide to calcium sulfate releases more heat than absorption of sulfur dioxide on calcium oxide and oxidation of calcium sulfite to calcium sulfate. Any carbon left simply adds to the cooling duty required in subsequent processing.

The air rate used for grinding in the pulverizer is sufficient to absorb the heat of oxidation of calcium sulfide and cool the stone to 500°C (932°F). This is based on 0.5 wt % sulfur as calcium sulfide on the regenerator stone, which is equivalent to 1.0 mole % of the calcium. It was assumed that all the carbon was burned off in passing through the regenerator.

If the heat duty proves to be greater, there is a trade off between the amount of air used and its supply pressure.

The air supplied to the absorber is five to ten times theoretical. This helps the oxidation of sulfur dioxide to sulfur and also permits elimination of a cooling coil for heat balance on the absorber. For larger plants, it may prove economical to reduce the air rate and put in a second waste heat boiler.

REFERENCES

1. Faber, J.H., W.E. Eckard, J.D. Spencer. Ash Utilization Proceedings: Third International Ash Utilization Symposium. March 13-14, 1973. Bureau of Mine Information Circular 864.

2. Faber, J.H., J.P. Capp, J.D. Spencer. Proceedings - Fly Ash Utilization Symposium, March 14-16, 1967. Bureau of Mines Information circular 8348.

3. Flint, E.P., and L.S. Wells, J. Res. NBS 12:751, 1934. RP 687; and in R.H. Bogue The Chemistry of Portland Cement, 2nd ed. New York, Reinhold Publishing Corporation, 1955. Ch. 22, p. 28.

4. Minnick, L.J. in Faber, J.H., J.P. Capp, J.D. Spencer, Fly Ash Utilization Symposium, March 14-16, 1967. Bureau of Mines Information Circular 8348, pp. 287-315.

5. Rhode Island Clean Air Act, General Laws of 1956, Title 23, Chapters 25, 25.1 as amended to 1971.

6. State of Rhode Island and Providence Plantations, Dept. of Health. Rules and Regulations Establishing Minimum Standards for Permissible Types of Refuse Disposal Facilities, January 1969.

7. _____. Rules and Regulations for the Prevention; Control, and Abatement and Limitation of Air Pollution. Regulation 1-13. As of January 1973.

8. _____. Solid Waste Law. Ch. 192, P.L. of 1968.

9. _____. Coated Resource Management Council. Title 45 General Laws, Chapter 279. P.L. of 1971.

10. U.S. Bureau of Mines Minerals Yearbook, Vol. II, 1970. Table 2, p. 2.

11. Keairns, D.L., D.H. Archer, R.A. Newby, E.P. O"Neill, E.J. Vidt. Evaluation of the Fluidized Bed Combustion Process. Volume IV. Environmental Protection Agency. Westinghouse Research Laboratories. Pittsburgh, Pennsylvania. EPA-650/2-73-048d. November 1973.

12. Coal Research Bureau, West Virginia University, Morgantown, W. Va. Pilot Scale-up of Processes to Demonstrate Utilization of Pulverized Cool Flyash Modifier by the Addition of Limestone-Dolomite Sulfur Dioxide Removal Additive. Proposed for EPA Oct. 1971. NDISPB 213 639.

13. Staff Bureau of Mines, Bulletin 650. Mineral Facts and Problems, 1970 edition. Chapters on sulfur, gypsum, calcium, phosphorus, clay, and sand and gravel.

APPENDIX L

DRY SULFATION EXPERIMENTAL PROGRAM

L

APPENDIX L

DRY SULFATION EXPERIMENTAL PROGRAM

All fuel desulfurization processes generate as a by-product spent sulfur sorbent and sulfur in some form--for example, sulfur (S) or sulfuric acid (H_2SO_4). The oil gasification process produces a gas stream containing up to 10 percent sulfur dioxide (SO_2) and spent calcium oxide (CaO) at a temperature of 1070°C (1958°F). Although the process uses a regeneration cycle, the overall makeup rate of calcium required to sustain adequate desulfurization yields an approximately 1:1 molar ratio of calcium to sulfur in the by-product streams. Independent treatment of these by-products requires additional processing facilities to convert sulfur dioxide treatment for the hot waste calcium oxide which contains residual sulfide and has retained sufficient activity as hydrolysable lime to initiate combustion on contact with air and organic waste matter.

A potential solution to these problems lies in combining the waste materials under suitable conditions to form calcium sulfate. The immediate advantage of the process is that a dry, chemically stable solid is formed as the sole waste material released to the environment.

The initial process concept is outlined in Figure L-1.

TECHNICAL ASSESSMENT

There is a large body of literature on the use of lime to capture sulfur dioxide during or after fossil fuel combustion, so it proved possible to outline closely the expected conditions under which the process could be successfully applied to the CAFB by-product streams.

Dwg. 6248A33

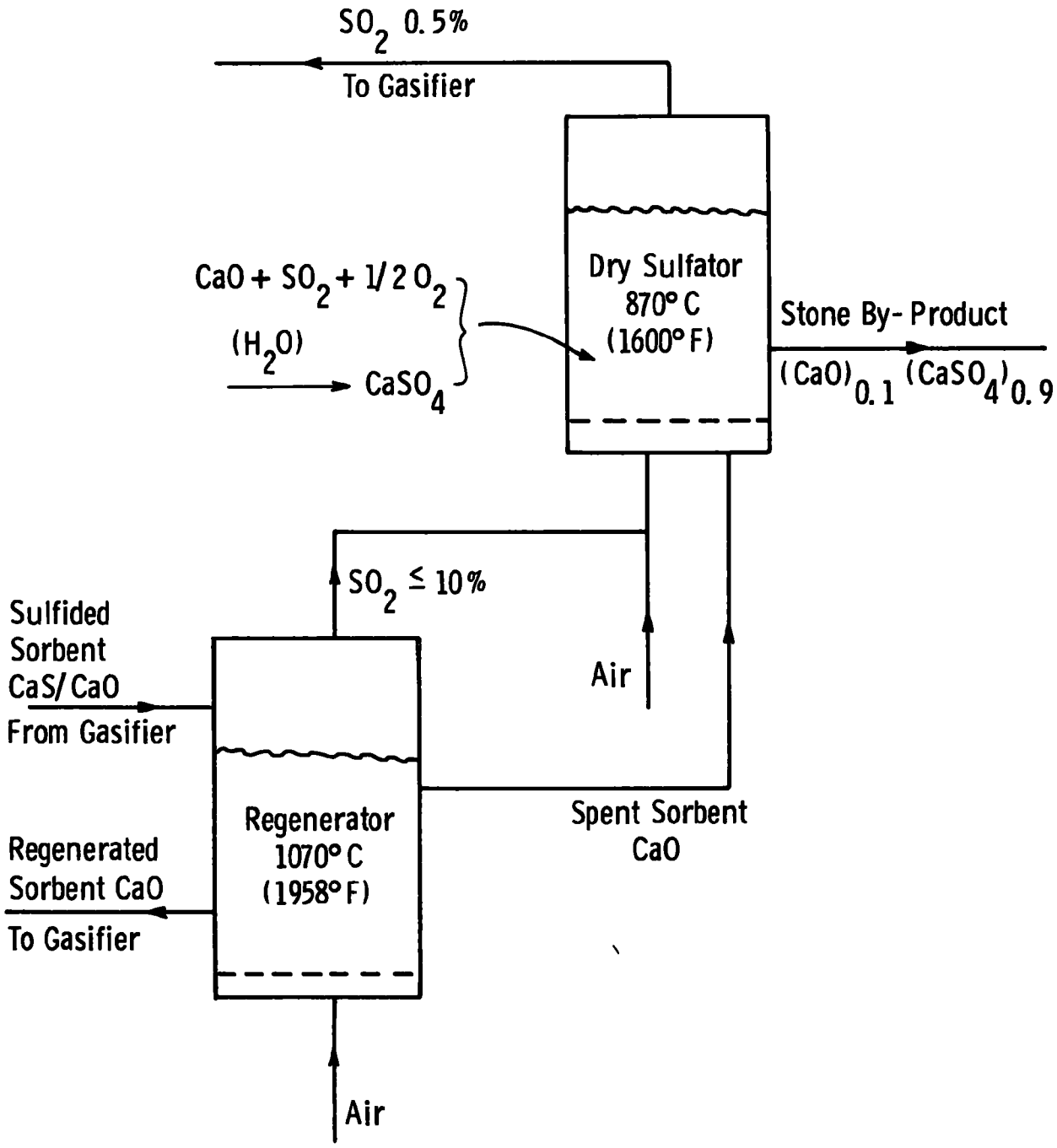

Figure L-1— The dry sulfation process

The immediate problems which required consideration were:

- The utilization criterion or extent of conversion achieved before the process is judged feasible from the point of view of total sulfur emissions from the plant and residual activity of unsulfated lime
- The particle size of lime required to achieve a given degree of sulfation or utilization of the lime.

This utilization criterion was arbitrarily set at $\geq$90 percent conversion of calcium oxide to calcium sulfate ($CaSO_4$), at $\geq$90 percent fixation of sulfur dioxide in calcium sulfate. This would result in an overall sulfur dioxide removal efficiency greater than 81 percent at 90 percent sulfur retention in the gasifier. The efficiency could be 90 percent of total sulfur if the by-product sulfur dioxide which is not converted to calcium sulfate is recycled to the gasifier.

Particle Size

Decreasing particle size generally increases the calcium utilization. Approximately 40 percent utilization of the calcium oxide is the highest value observed in fluidized-bed capture of sulfur dioxide by calcined lime using about 500-micron particles. It is clear that much smaller particle sizes would be essential to obtain the high calcium oxide utilization required to match the production of sulfur dioxide regenerator off-gas and the calcium/sulfur one-molar makeup rate of stone.

This point may be illustrated by showing the rate of sulfation, as a function of stone utilization, for 45-micron limestone particles and the corresponding contact time in a fluidized bed required to achieve 90 percent sulfation of the calcium oxide in the bed at those rates, as in Figure L-2.

Borgwardt,[1] however, has demonstrated that utilization in sulfation increases markedly as particle size decreases -- plugging of the gas-transport pores in the solid becoming less of a barrier to reaction as the diffusion thickness of the product decreases.

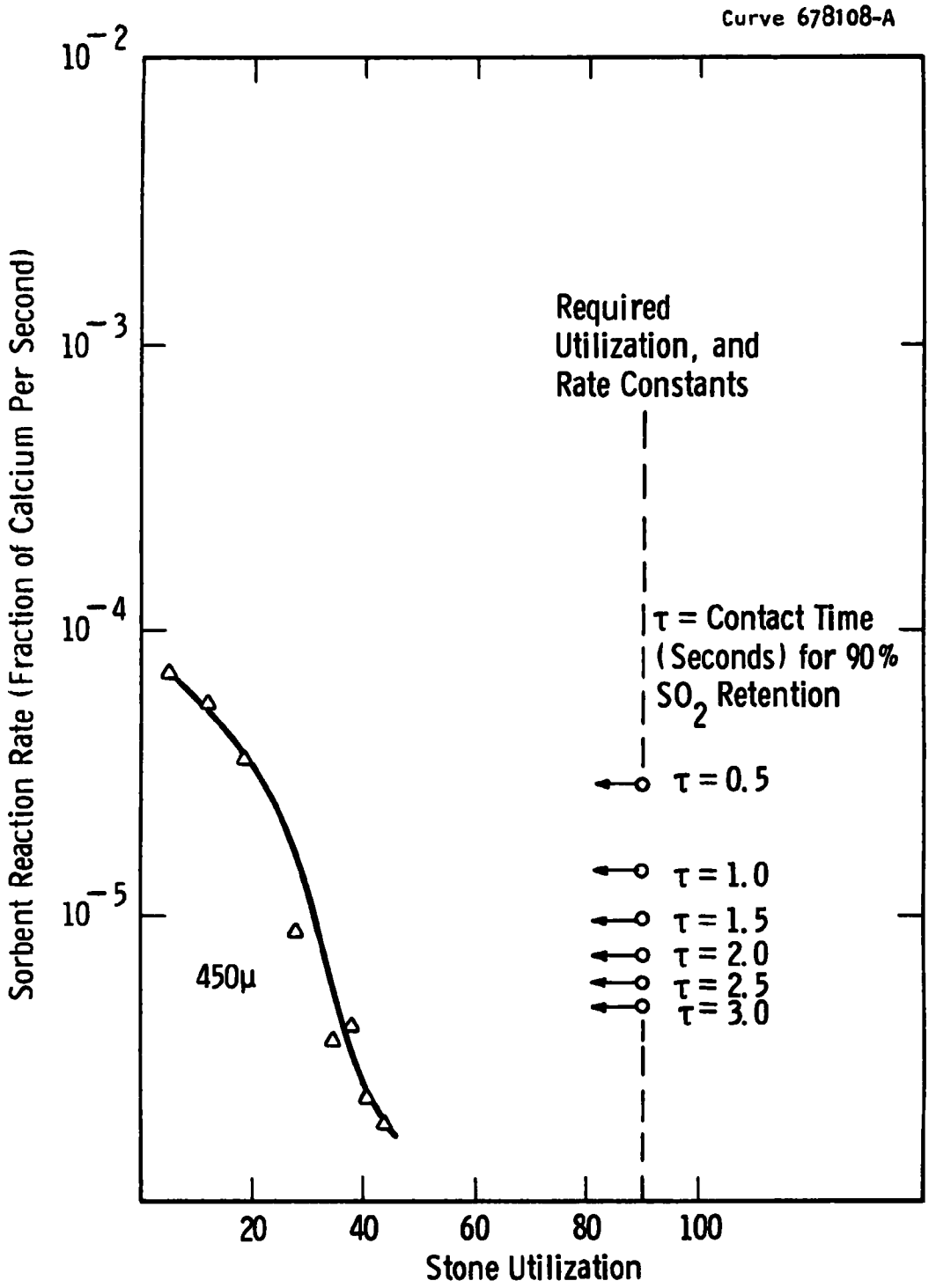

Figure L-2— Rate criteria for sulfation of waste in TG experiments at 0.5% SO_2

A preliminary experiment on the sulfation of calcined limestone was carried out on the thermogravimetric (TG) apparatus.

Limestone 1359, ground to smaller than 37 μm particle diameter, was calcined in 14 percent carbon dioxide/nitrogen by heating to 871°C (1600°F) in TG 295; when calcination was complete, the solid was sulfated at 871°C (1600°F) in 0.5 percent sulfur dioxide, 4 percent oxygen in nitrogen at atmospheric pressure, shown in Figure L-3.

The rate of reaction was rapid up to about 62 percent utilization (16 minutes), and it slowed down considerably after this point. The utilization reached 92.4 percent in 130 minutes. The rate of reaction at the 90 percent utilization level was 1.749×10^{-5} sec^{-1} (i.e., 1.749×10^{-3}% of the total calcium oxide was converting to calcium sulfate per second).

Using this rate data, the bed height necessary to retain 90 percent of the sulfur dioxide was calculated. It was assumed that first-order kinetics holds up to the 10-percent sulfur dioxide levels expected from the regeneration process. Work at TVA[2] has demonstrated first-order kinetics with respect to sulfur dioxide in the concentration range 2 to 10 percent. Using the equation

$$R = 100\ [1-e^{-k\tau}],$$

from the model shown in Figure L-4 the residence time required for the gas in the bed at 90 percent retention is 0.75 seconds. (R is the percent sulfur retained in the bed, k is the first-order rate constant, and τ is the gas residence time.) This requires a bed-height about 1.2 times the superficial gas velocity (in seconds) through the bed and is an encouraging result. A literature review of fluidized-bed results yielded two sets of data which bear on the problem.

The first experiments, carried out by PER[3] on 44 μm limestone 1359 at high-gas superficial velocity in a coal bed, at calcium/sulfur mole ratio of 2.6, gave sulfur dioxide retention of 77 percent, with a bed utilization of 30 percent. The real gas residence time must have been of the order of 0.05 seconds. The relevance of this result to the dry sulfation process can be assessed by comparing models of sulfur retention for

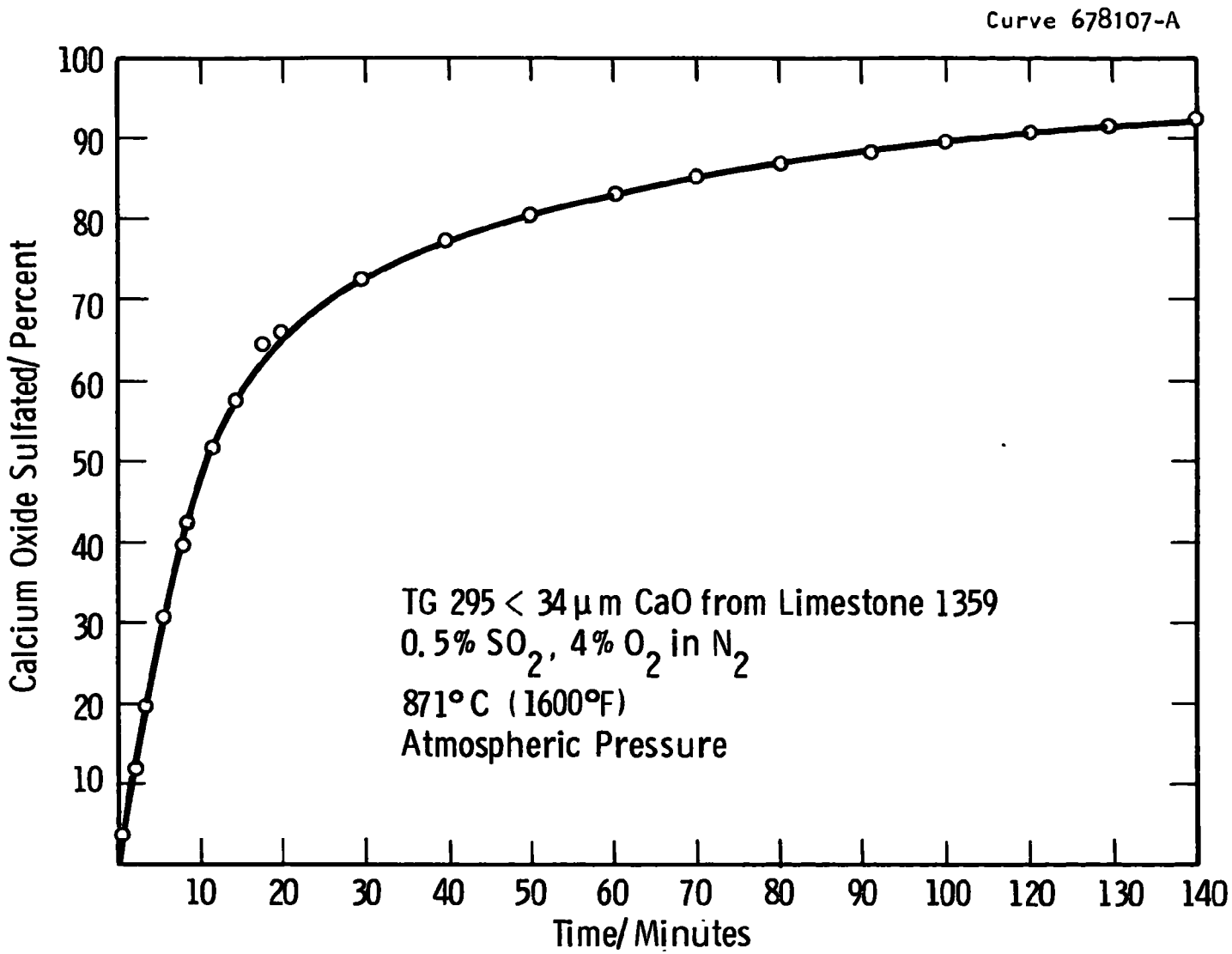

Figure L-3- The sulfation of fine particles of calcined limestone

Dwg. 6248A34

$$CaO + SO_2 + 1/2\ O_2 \rightarrow CaSO_4$$

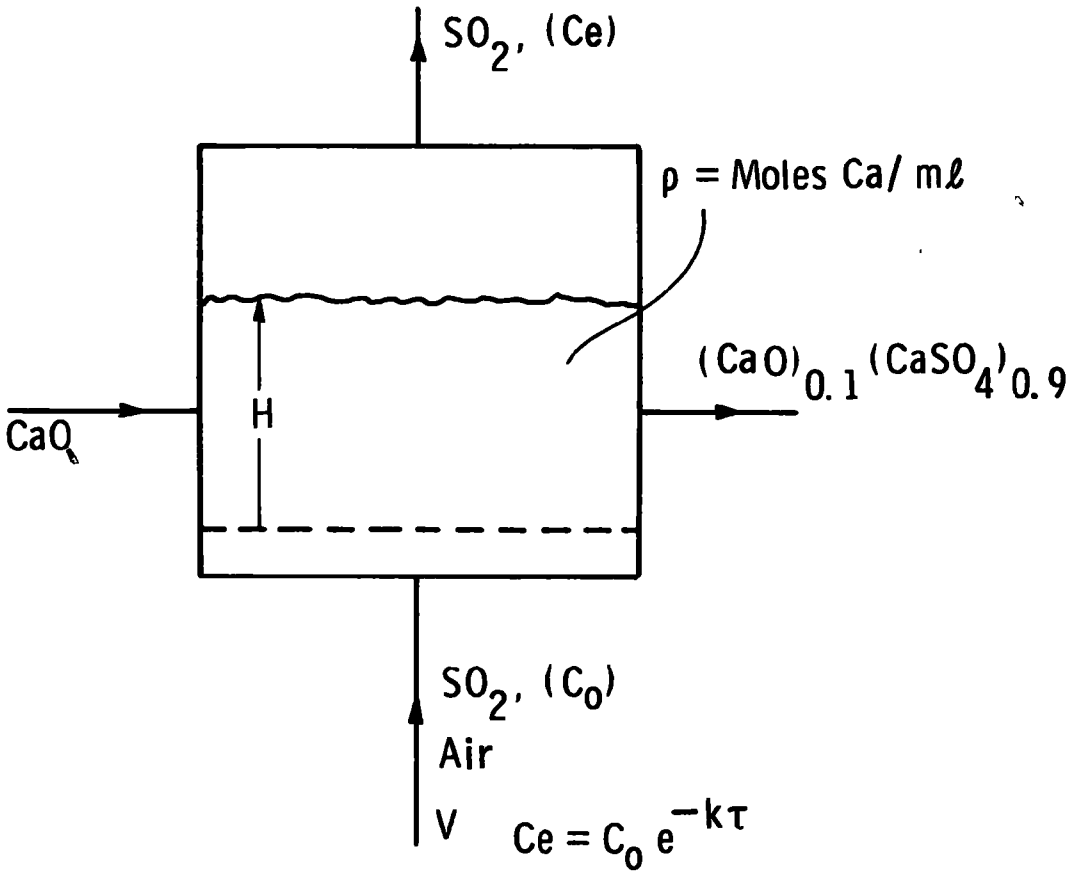

$$Ce = C_0\, e^{-k\tau}$$

$$\tau = \frac{H\varepsilon}{V} \qquad k = \frac{k'\rho}{c'}$$

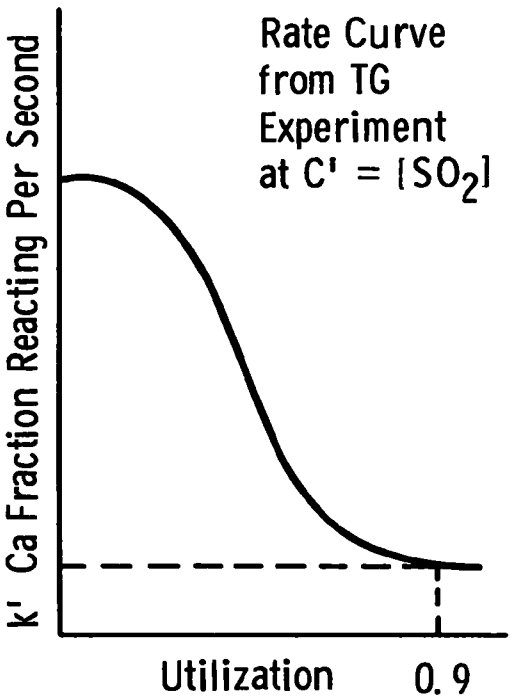

Figure L-4-First-order model for fluidized bed sulfation of CaO

- In-bed generation of sulfur dioxide
- Below-bed generation of sulfur dioxide.

In the latter case all the sulfur dioxide passes through the entire bed, and sulfur dioxide retention is improved over the former process. The Westinghouse model of first-order reaction in the two cases shows that if 77 percent retention is noted in the former case, under the conditions of the PER experiment 98.8 percent sulfur dioxide retention will occur in the latter case. Since the density of the bed (Ca in moles/ml) is not known for the PER experiment, the group $k\rho\tau$ has to be inferred as 4.5 from the retention figure noted. To achieve 90 percent sulfur dioxide retention, the group $k\rho\tau$ must not fall below 2.3. According to the model, since τ can increase by a factor of $\sim$ 30 (making residence time = 1.5 second), k can fall by a factor of $\sim$ 50. In the TG experiment, the rate at 90 percent utilization was 1/50 of the rate at 30 percent utilization, indicating the feasibility of 90 percent sulfur removal at 90 percent utilization.

Argonne[4] tested the reactivity of fine particles of limestone 1359 (25 μm) in the fluidized bed combustion of coal. While laboratory tests showed 85 percent utilization of the calcium oxide in the elutriated solids, they did not observe such good results in the fluidized bed. They concluded that fine particles had insufficient residence time in the bed. There was, however, a significant correlation between the extent of calcination and extent of sulfation of particles collected from the fluid bed, primary cyclones, and secondary cyclones. The indication was that 80 to 90 percent sulfation occurred with fully calcined particles.

The by-product for disposal is not freshly calcined material but lime which has been subjected to recycling between gasifier conditions (870°C/1600°F) and regenerator conditions (1070°C/1958°F). It was anticipated that material from the plant would sulfate at a lower rate because some degree of sintering must occur under process conditions.

Two more experiments were carried out using regenerator bed material from run 7 on the CAFB plant at the Esso Research Centre, Abingdon, England (Esso). In six hours of sulfation in 0.5 percent sulfur dioxide, 4 percent oxygen in nitrogen at 870°C (1600°F), 74 percent

of the residual calcium oxide was sulfated. Calculation using the first-order fluidized bed model shows that 90 percent removal would be achieved at a gas residence time of 1.5 seconds, at the reaction rate noted for 74 percent utilization.

In a second, repeated, sulfation run the effect of water vapor on the slow sulfation rate was tested. The rate increased by a factor of 10 when ∿ 3 percent water vapor was introduced into the sulfating gas stream.

These results were sufficiently encouraging to proceed with tests using a concentration of sulfur dioxide which more precisely simulates the process conditions. It was also necessary to seek an optimum temperature for the process, since the 871°C (1600°F) figure was chosen to maximize the rates at 0.5 percent sulfur dioxide in the sulfating gas.

TG Tests Using Five Percent Sulfur Dioxide as the Sulfating Gas

The results obtained using a simulated inlet concentration confirmed that first-order predictions hold from 0.5 to 5 percent sulfur dioxide; over 90 percent of the calcium oxide was sulfated in several experiments.

The rate of sulfation at 5.0 percent sulfur dioxide, 10 percent oxygen in nitrogen was accelerated

- By increasing the temperature from 871 to 910°C (1600 to 1670°F)
- By saturating the air component of the sulfating mixture with water at 20°C (68°F).

The rate of reaction was decelerated

- By decreasing the temperature to 825°C (1517°F)
- By increasing the particle size from < 74 μm diameter to [74-149] μm diameter.

The course of reaction for four runs is shown in Figure L-5.

The projected sulfur dioxide concentrations exiting from a fluidized bed dry sulfation reactor were calculated, and the results for

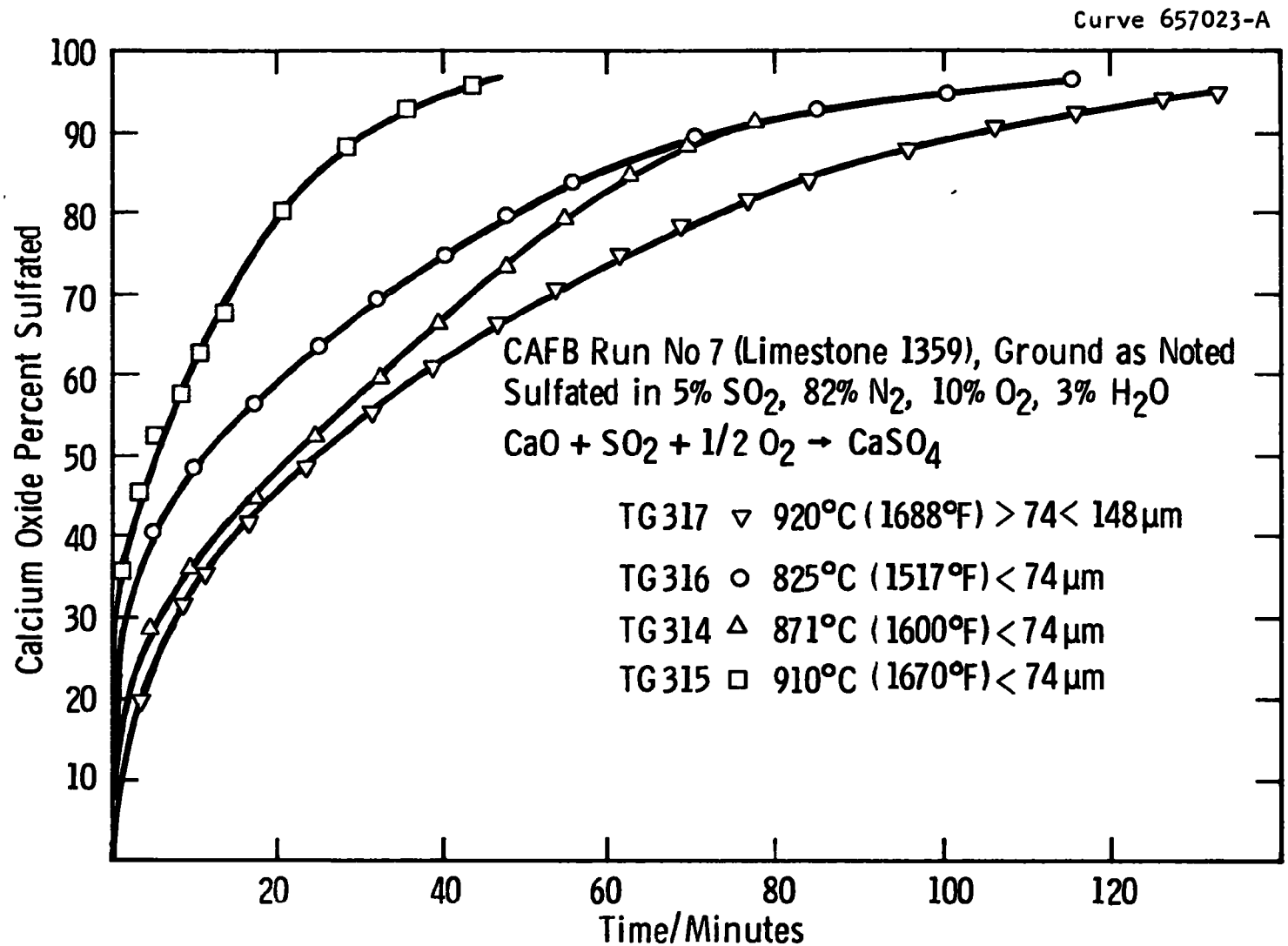

Figure L-5—The sulfation of spent sorbent from the CAFB regenerator bed

a bed which is 90 percent sulfated are shown in Table L-1. The projections are probably underestimates, since they do not allow for the presence in the bed of material which is less heavily sulfated. Because there is not a sharp decrease in rate at 90 percent sulfation, reaction may proceed past 90 percent sulfation; and there will be a distribution of particles in the bed with sulfation levels of between ∿ 40 and 96 percent. The rate-constant used to calculate the residence time in the bed is less than the true average rate constant.

Table L-1

PROJECTED SO_2 RETENTION IN FLUIDIZED BEDS OF CAFB SPENT SORBENT (90% Sulfated)

Experiment	T/°C (°F)	Particle size (μm)	% SO_2 Retained in bed nominal gas residence time	
			2 sec	4 sec
316	825 (1517)	< 74	71.3	91.8
314	871 (1600)	< 74	75.5	94.0
315	910 (1670)	< 74	97.5	99.9
317	920 (1688)	> 74 < 149	77.0	94.7

The runs carried out are summarized in Table L-2. The rate data for TG 314 are plotted in Figure L-6. These rate data were later used to project the performance of the 25.4 mm (1.0 in) fixed-bed reactor.

TESTS OF THE DRY SULFATION PROCESS IN A 25.4 mm (1 in) DIAMETER REACTOR

The thermogravimetric studies have demonstrated the technical feasibility of the dry sulfation process and identified the optimum conditions to be: particle size smaller than 74 μm, temperature range 870 to 910°C (1600 to 1670°F), and gas composition of 5 percent sulfur dioxide, 10 percent oxygen, and 3 percent water vapor in nitrogen. The purpose of this work was to study the dry sulfation reaction in a 25.4 mm (1.0 in) diameter fixed or fluidized bed and verify that optimum conditions and design bases for the dry sulfator of the demonstration plant could be projected from the kinetic model based on the thermogravimetric analyses.

Table L-2

TG EXPERIMENTS PROBING CONDITIONS FOR THE DRY SULFATION PROCESS

TG No.	Solid	Size/μm	Pretreatment	T/°C (°F)	% SO_2	% O_2	% CaO % $CaSO_4$/time (min)	Comment
295	Limestone 1359	< 37	Calcined in 14% CO_2/N_2 at 871°C (1600°F)	871 (1600)	0.5	4	92.4/130	
296	"	< 74	CAFB Run #7 regenerator	"	0.5	4	74/370	
297	"	"	"	"	0.5	4		Rate increased by introduction of H_2O
312	"	"	"	"	5.0	10	90/118	
313	"	"	"	"	5.0	10	> 97/	Accelerated rate due to H_2O
314	"	"	"	"	5.0	10	91.4/77	Residual CaO did not recarbonate
315	"	"	"	910 (1670)	5.0	10	95.2/43	
316	"	"	"	825 (1517)	5.0	10	96/115	
317	"	< 149 > 74	"	925 (1697)	5.0	10		
318	"	< 74	"	910 (1670)	5.0	10		
319	"	"	"	"	0.5	4		

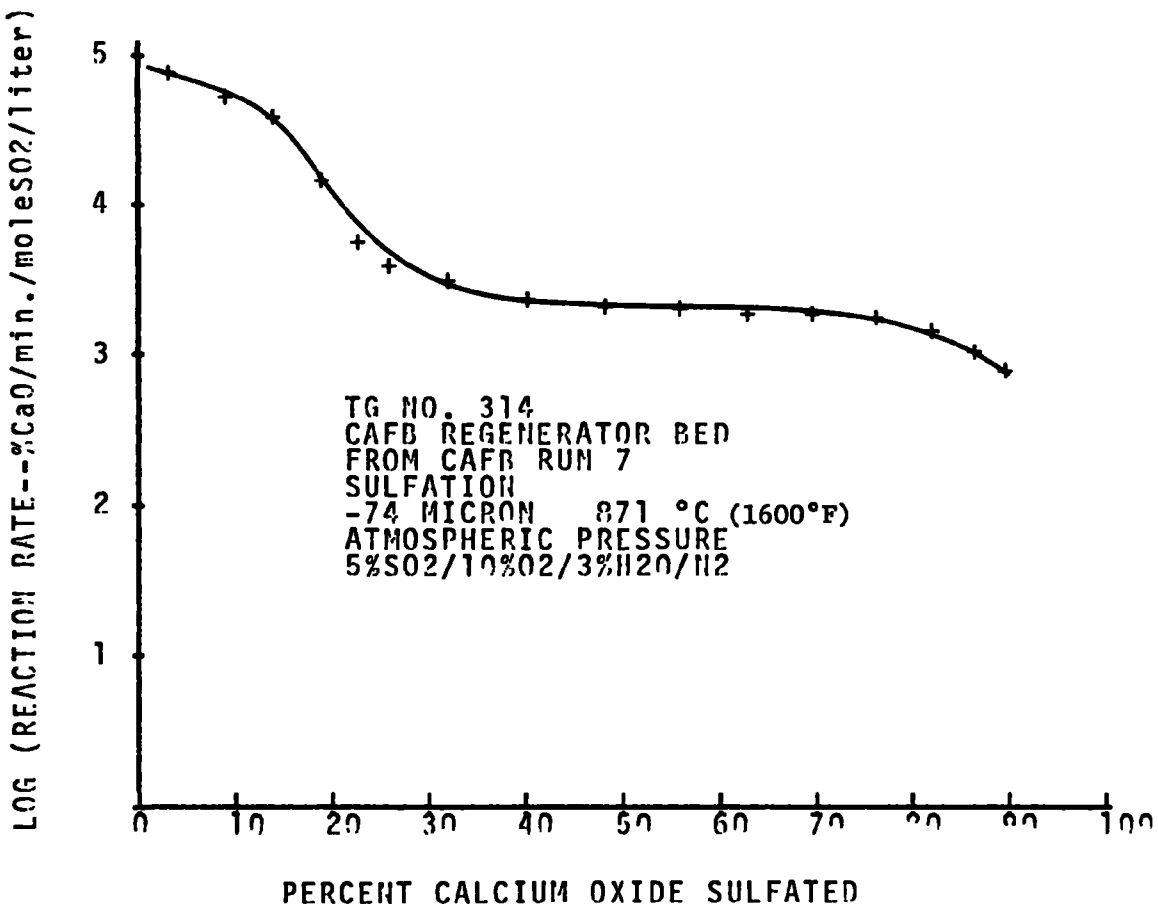

FIGURE L-6 THE RATE OF SULFATION OF FINELY-GROUND SPENT STONE

EXPERIMENTAL SYSTEM

A 25.4 mm (1 in) quartz reactor was designed and constructed to investigate the dry sulfation process in a bench-scale fluid bed reactor under the optimum conditions identified in the thermogravimetric tests. Because of the hygroscopic nature of the fine bed material and the small diameter of the quartz bed, problems associated with bed agglomeration, slugging, and channeling became so severe that it was virtually impossible to achieve any good quality fluidization, even with the assistance of a bed vibrator. Fixed bed reactions, therefore, were conducted in this unit for most of the dry sulfation tests.

Figure L-7 shows a schematic diagram of the 25.4 mm (1 in) reactor test system. By monitoring the sulfur dioxide concentration of the exit gas, the sulfation reaction in the bed could be followed when the sulfur dioxide concentration entering the bed was known. A Dynascience sulfur dioxide monitor with SS 330 sensor measuring up to 10 percent of sulfur dioxide was used. At the upstream 10 percent sulfur dioxide in nitrogen was diluted with an equal volume of air (either dried or saturated with water vapor at 25°C [77°F]) to form 5 percent sulfur dioxide and 10 percent oxygen in nitrogen, which was preheated by passing through the heated quartz beads in the bottom section of the quartz tube. The exhaust was filtered, partially bled out, and the remainder passed to the sulfur dioxide sensor to be monitored for its sulfur dioxide rejection by the bed.

EXPERIMENTAL RESULTS

Twenty bench-scale dry sulfation tests using the 25.4 mm (1 in) quartz reactor, designed to study the effects of temperature, particle size, and gas velocity are summarized in Table L-3. The degree of sulfation was determined by integration of the sulfur dioxide absorption profiles, as well as by analyses of the final bed materials by wet chemical method, gravimetric method, and X-ray diffraction. For runs DS1 to DS8 where fluidization was attempted, the gas-flow rate was chosen between the calculated minimum and terminal fluidization velocities so as to provide maximum fluidization visually at room temperature without suffering too

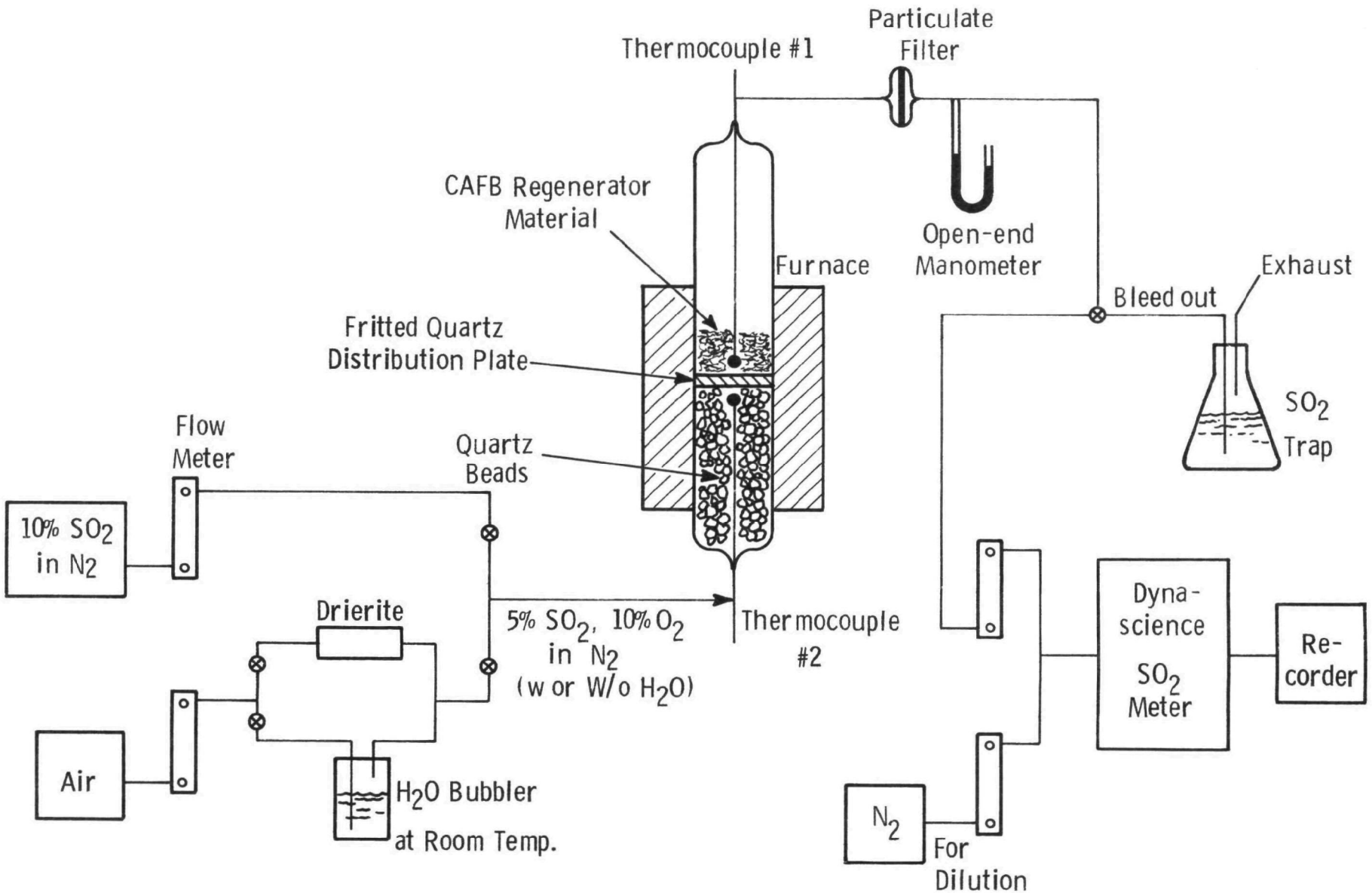

Figure L-7—Schematic diagram of the 25 mm quartz reactor test system for dry sulfation

much elutriation of fines. It must be mentioned that the quality of fluidization achieved was poor in all cases and worse with finer particle size (smaller than 74 microns). It improved significantly when the bed was vibrated with an electronic vibrator attached at the top of the quartz tube. Fixed-bed reactions were carried out in runs 9 through 20, with the exception of DS14. The nominal residence time was determined by the bed height divided by the linear gas velocity. The reaction was usually terminated when the sulfur dioxide absorption ceased or reached a nearly steady rate. In most cases where there was poor or no fluidization the bed material agglomerated at the end of the reaction, probably because of local melting. This was especially true for the finer (smaller than 74 micron) particles.

Sulfur dioxide absorption profiles of three different combinations of bed weights and gas rates are shown in Figures L-8, L-9, and L-10. The shaded areas indicate the reaction time required for 100 percent sulfation of the bed material, at 100 percent sulfur dioxide absorption level for each combination of sulfur dioxide flow, and the amount of calcium oxide in the bed. In Figure L-8 fluid bed tests of the same amount of sulfur dioxide flow and bed material, and, therefore, the same gas-solid contact time, were compared. The following general trends were noted:

- The sulfation reaction was faster for the finer particle size, smaller than 74 microns
- The sulfation reaction was accelerated by the addition of 1.5 percent water vapor for the same particle size.

Repeated dry sulfation runs with two different gas velocities were plotted in Figures L-9 and L-10 separately. Although the reproducibility was not good under any chosen set of controllable parameters, the absorption profiles followed a general shape. Greater than 90 percent sulfation of the bed material (CAFB reg., < 74μ) was obtained in this reactor geometry at approximately 30 percent sulfur dioxide removal of an inlet sulfur dioxide concentration of 5 percent.

As it was extremely difficult to fluidize the fine powder (< 74μ) of CAFB regenerator material in the quartz unit, it was mixed with a

PAGE NOT

AVAILABLE

DIGITALLY

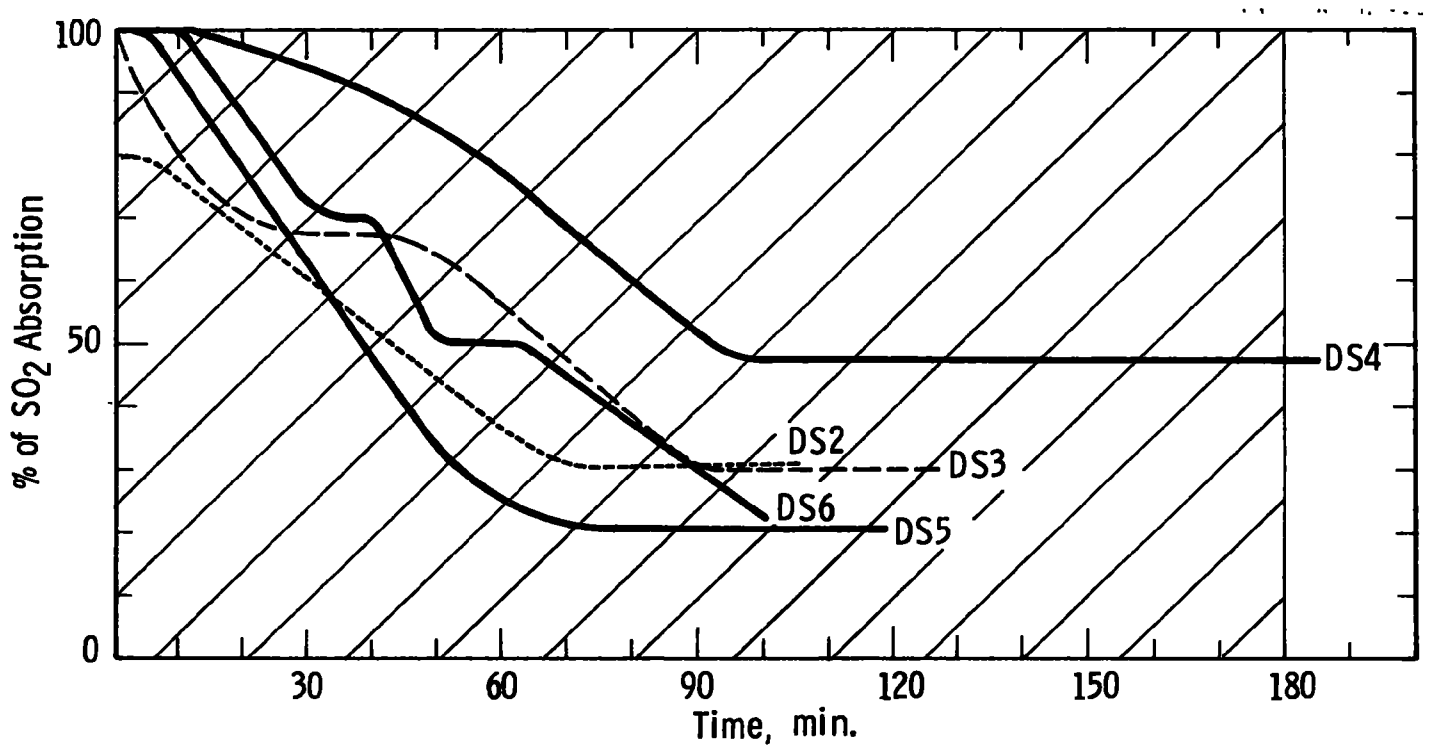

Figure L-8—SO_2 absorption profiles of the following dry sulfation runs in the 25 mm quartz reactor with 10 gm CAFB regenerator material and 500 cc/min of 5% SO_2, 10% O_2 in N_2 with or without H_2O saturation at 25°C:

DS2 < 297μ, 1.5% H_2O added, 910°C (1670°F)
DS3 < 297μ, 1.5% H_2O added, 870°C (1600°F)
DS4 < 74μ, 1.5% H_2O added, 870°C (1600°F)
DS5 < 297μ, No H_2O added, 870°C (1600°F)
DS6 < 74μ, No H_2O added, 870°C (1600°F)

The shaded area indicates 100% sulfation of the CaO.

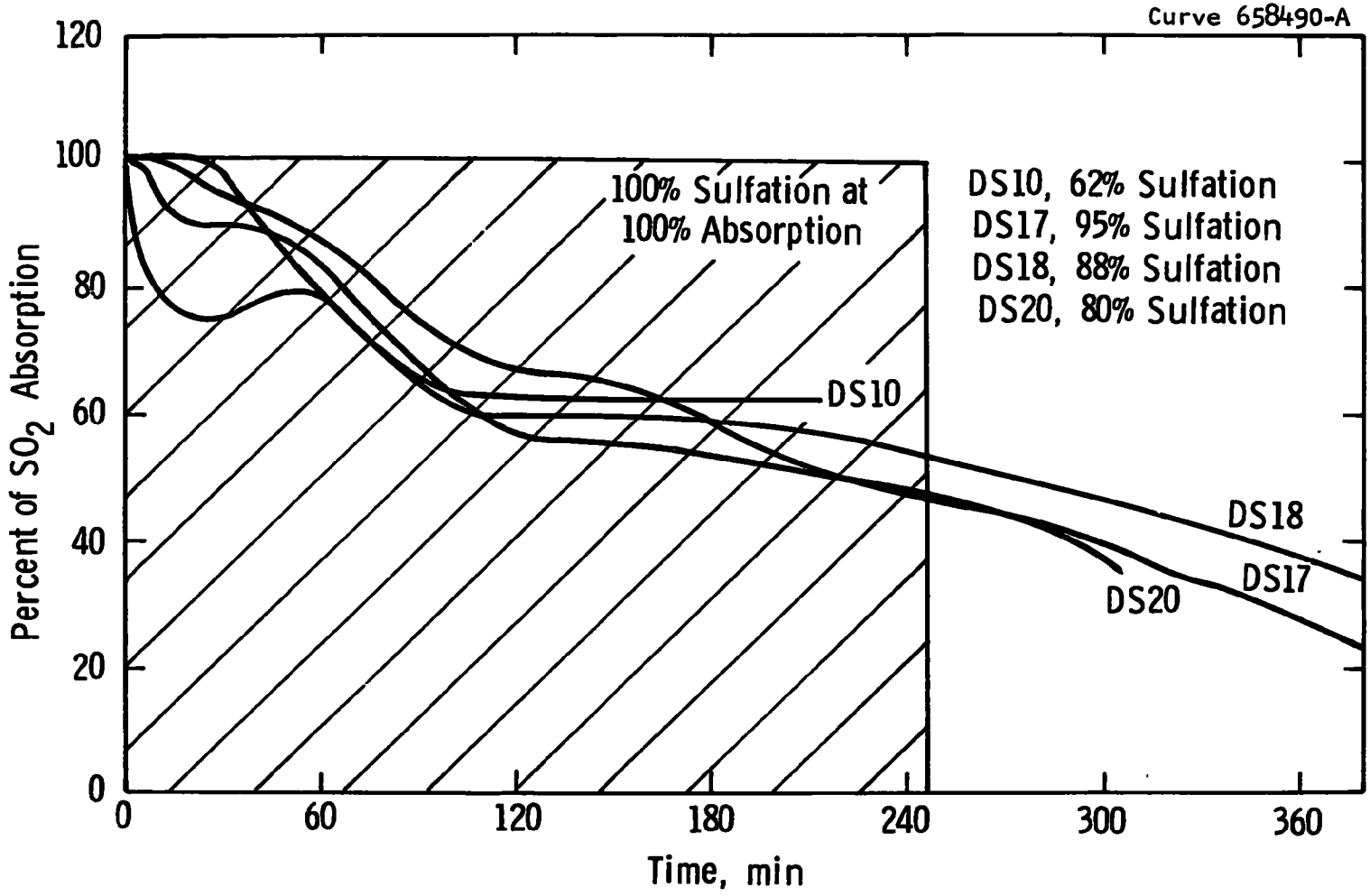

Figure L-9—SO_2 absorption profiles for dry sulfation runs at 870°C (1600°F), of 7 gm, < 74μ CAFB material with 250 cc/min of 5% SO_2, 10% O_2, 1.5% H_2O in N_2

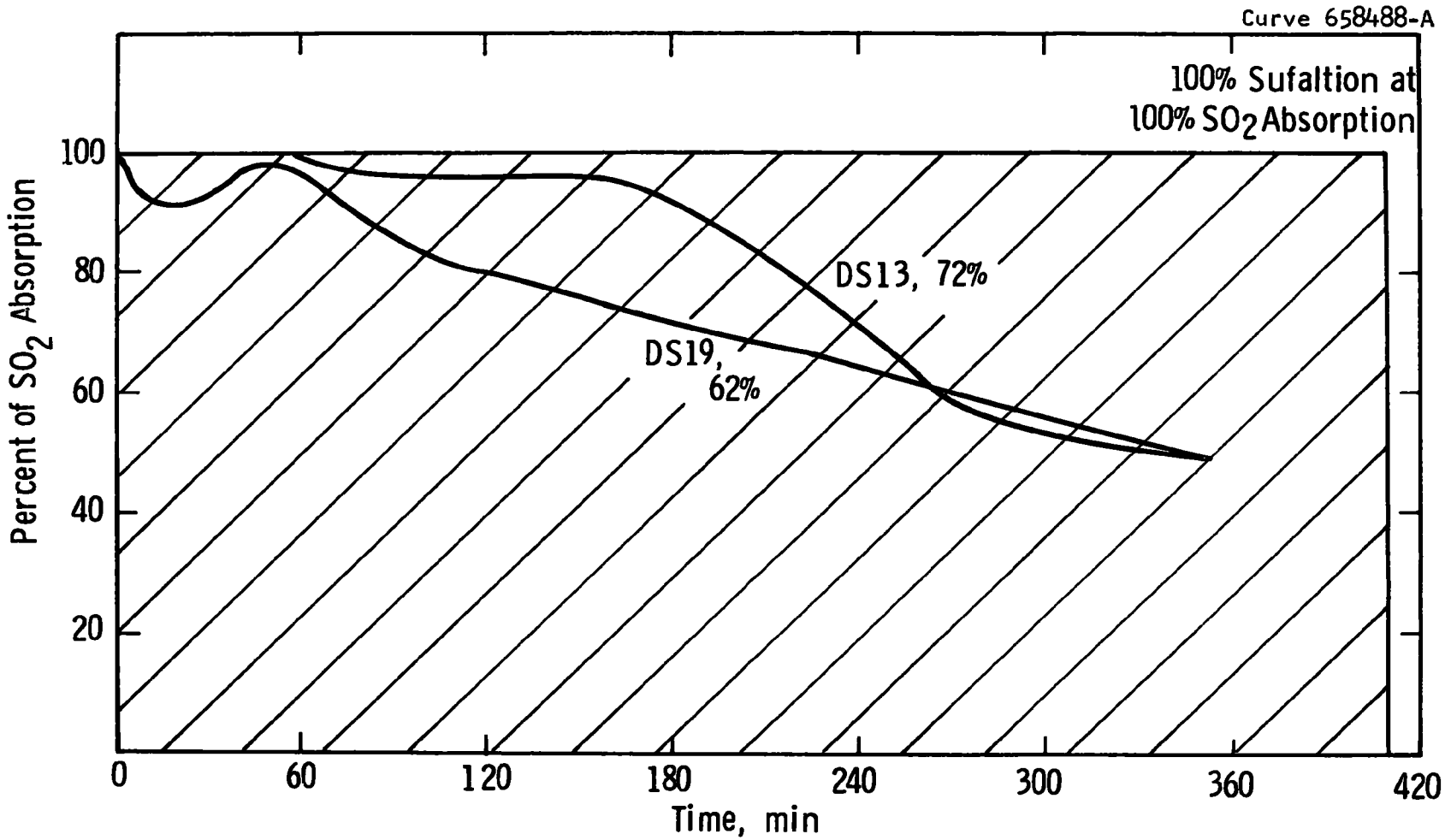

Figure L-10—SO_2 absorption profiles for dry sulfation runs at 870°C (1600°F), of 7 gm, <74μ CAFB material with 150 cc/min of SO_2, 10%O_2, 1.5% H_2O in N_2.

larger size of calcium sulfate (< 1000μ Drierite) in various proportions. This was done in DS7, DS8, and DS14. As a result it was possible to fluidize the mixtures, and the final beds were not hardened. In all three runs the quality of the fluidization was poor, with high particle carry-over. In Figure L-11 the percent of sulfur dioxide absorption was plotted as a function of the total volume of 5 percent sulfur dioxide feed per gram of calcium oxide in the bed, assuming no particle elutriation. It can be seen that the sulfur dioxide absorption decreased rapidly. This is attributed to the higher gas velocity, short contact time, and significant calcium oxide elutriation loss.

The effects of temperature, particle size,and gas velocity were shown in Figures L-12 and L-13, where the degree of calcium oxide sulfation was plotted as a function of sulfur dioxide/calcium oxide ratio in the feed stream. The dotted straight line indicates the theoretical maximum sulfation. In these figures the relative positions of the curves, in other words, the relative deviations from the theoretical maximum line, were significant. Observation of these figures revealed the following:

- At any SO_2/CaO feed, a higher degree of sulfation was obtained at higher temperatures in the range of 770° to 870°C (1418 to 1600°F).
- Higher degree of sulfation was achieved with smaller particle size.
- For particle sizes smaller than 74 microns, a higher percentage of sulfation was obtained with lower gas velocity and longer gas residence time.
- The effect of the gas-flow rate was reversed for particle sizes smaller than 297 microns.

EXPERIMENTAL VERSUS PREDICTED

Calculations were also made to predict the sulfur dioxide absorption profiles of the fixed-bed reaction in the 25.4 mm (1 in) reactor from the kinetic data obtained by the TG studies under similar operating conditions.

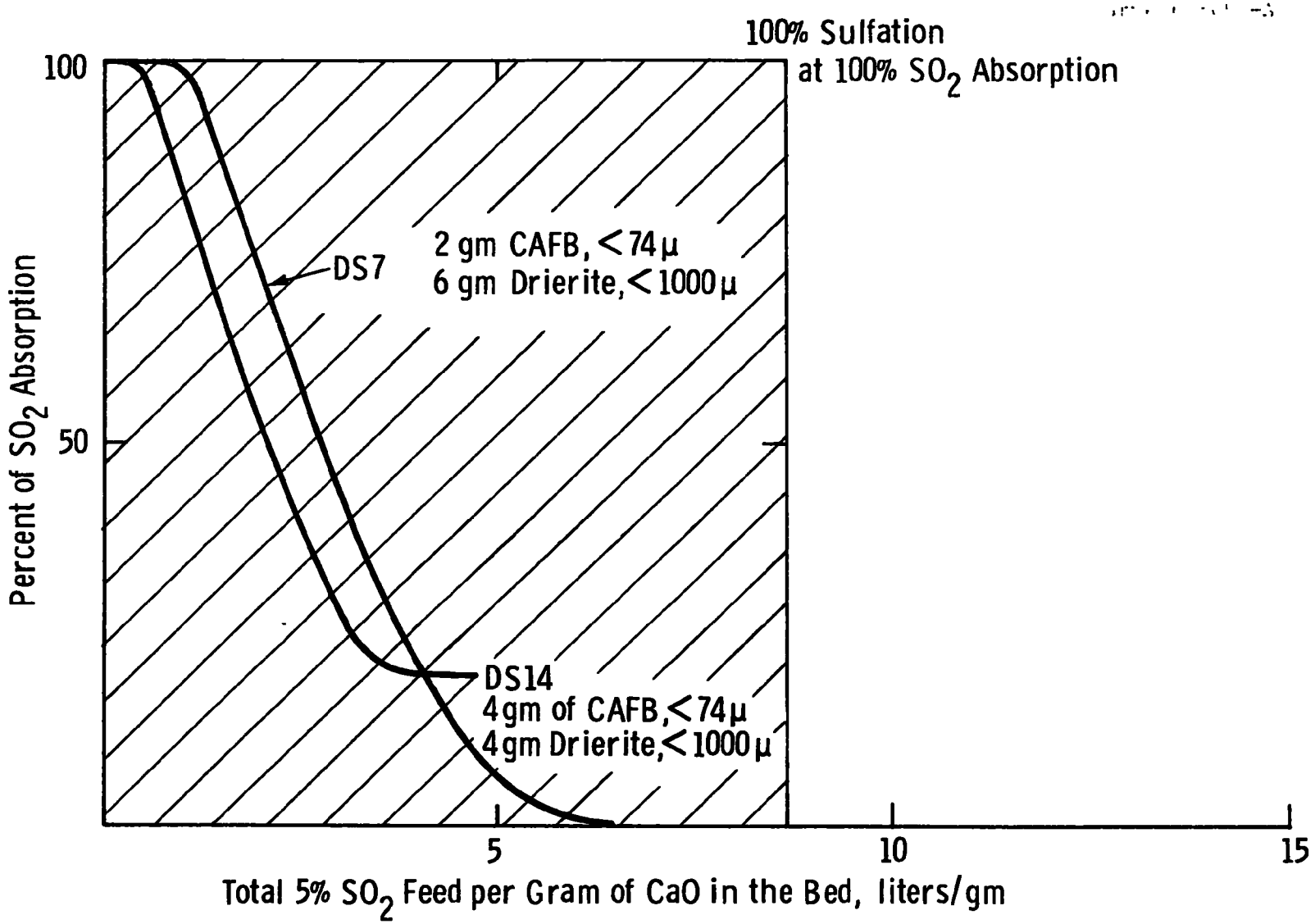

Figure L-11—Comparison of dry sulfation runs at 870°C (1600°F) using mixtures of fine CAFB powder (< 74μ) with larger Drierite (< 1000μ) with gas flow of 1440 cc/min of 5% SO_2 ℓ, 10% O_2, 1.5% H_2O in N_2

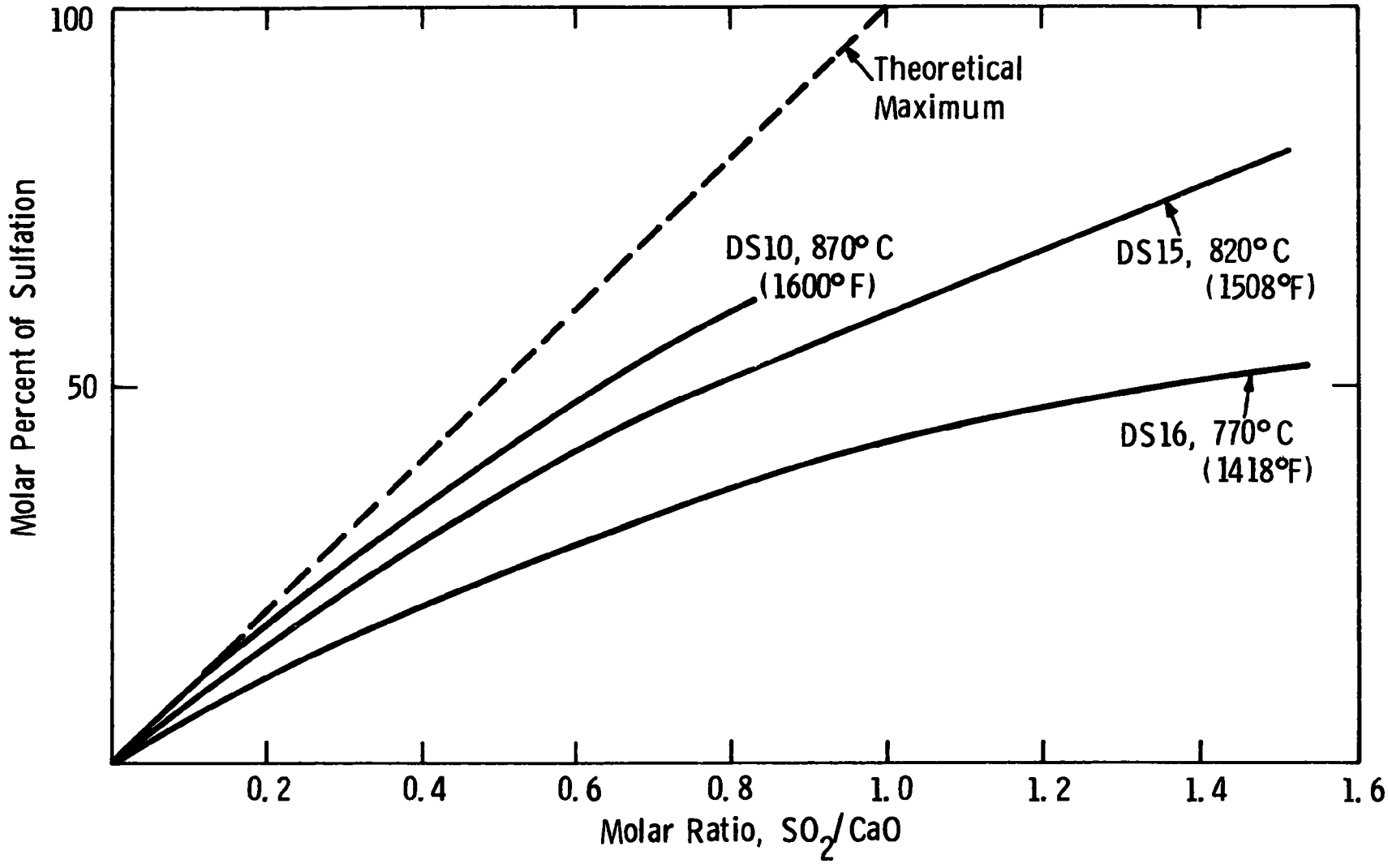

Figure L-12–Percent of CaO utlization as a function of the total SO_2 feed, showing the effect of bed temperature

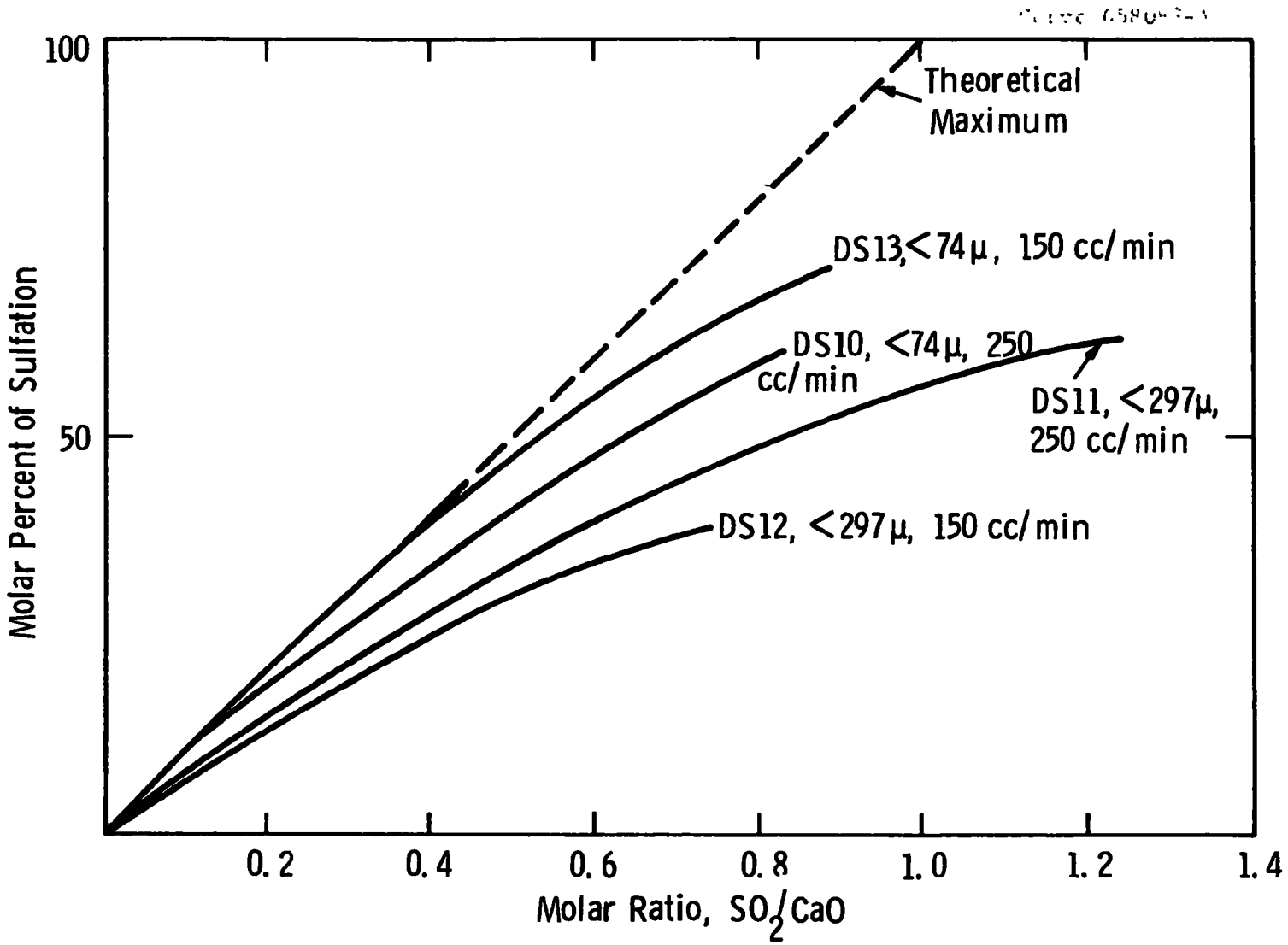

Figure L-13–Percent of CaO utilization as a function of the total SO_2 feed, showing the effects of particle size and gas flow rate

Two approaches were investigated. In the first model a rate law was used to model the TG data over the entire range of utilization, and an explicit model was then derived for the bed conversion as a function of time. In the second model the TG data for rate as a function of utilization were assumed constant in each of ten ranges of calcium oxide utilization, and a numerical method was used to calculate the retention of sulfur dioxide in the bed as a function of time.

Explicit Model Using an Averaged Overall Rate

The explicit model was devised by mass balancing of sulfur dioxide and calcium oxide on a differential volume of the bed and integrating it throughout the total bed height.[5] The mathematics show the following relationships:

$$\frac{S}{100} = \frac{1}{\frac{e^{At}}{e^{BL}-1} + 1} \qquad \text{L-1}$$

$$\frac{y}{yo} = \frac{e^{At}}{e^{At} + e^{BZ} - 1} \qquad \text{L-2}$$

$$\alpha = \frac{e^{At} - 1}{e^{At} + e^{BZ} - 1} \qquad \text{L-3}$$

where S = the percentage of sulfur dioxide absorption by the bed

$A = \frac{Pky_o}{RT}$, min^{-1}

$B = \frac{(1-\varepsilon)\ P\ k}{GRT}$, $mole^{-1}$

Z = bed height expressed in moles of CaO

L = total bed height, mole

t = reaction time, min

P = total pressure, atm

k = rate constant of the reaction, $CaO + SO_2 + 1/2\ O_2 \rightarrow CaSO_4$, as deduced from TG studies $\ell\text{-mole}^{-1}$, min^{-1}

y = SO_2 concentration expressed in moles of SO_2 per mole of N_2

y_o = initial SO_2 concentration

G = moles of N_2 passing through the bed per minute

ε = bed porosity

R = gas constant, $\text{atm-}\ell\text{-deg}^{-1}\text{-mole}^{-1}$

T = reaction temperature, °K

α = fraction of CaO sulfated.

The computation was complicated because the first-order* plot from the TG data, $-\ln(1-\alpha)$ versus t, was not a simple straight line but several segments with a range of slopes. Thus, a range of k values were taken into consideration in calculating S from Equation L-1. Figures L-14 and L-15 show the predicted sulfur dioxide absorption profiles in Figures L-8 and L-9, respectively. Comparing Figures L-7 and L-14, as well as Figures L-9 and L-15, revealed that the first part of the reaction agreed rather well with the predicted values, but the second half, the lower portion of the reversed "S" shaped curve, did not. The bed was capable of removing a much higher percentage of sulfur dioxide from the gas stream than predicted from the kinetic model at greater than 50 percent calcium oxide utilization. This seemed to indicate that the sulfation of calcium oxide proceeded initially as the explicit model predicted but was later influenced by some complex mechanism (perhaps involving the reaction product calcium sulfate) which resulted in much greater sulfur dioxide removal. The formation of white fume when the bed was partially sulfated (∿ 50 percent) seemed to promote this hypothesis further, although the mechanism was not understood.

To check the validity of this exercise, the process was reversed to predict the TG results by setting the bed height, Z, to zero in Equation L-3 and calculating the fraction of calcium oxide conversion,

*First-order in these instances refers to solid concentration.

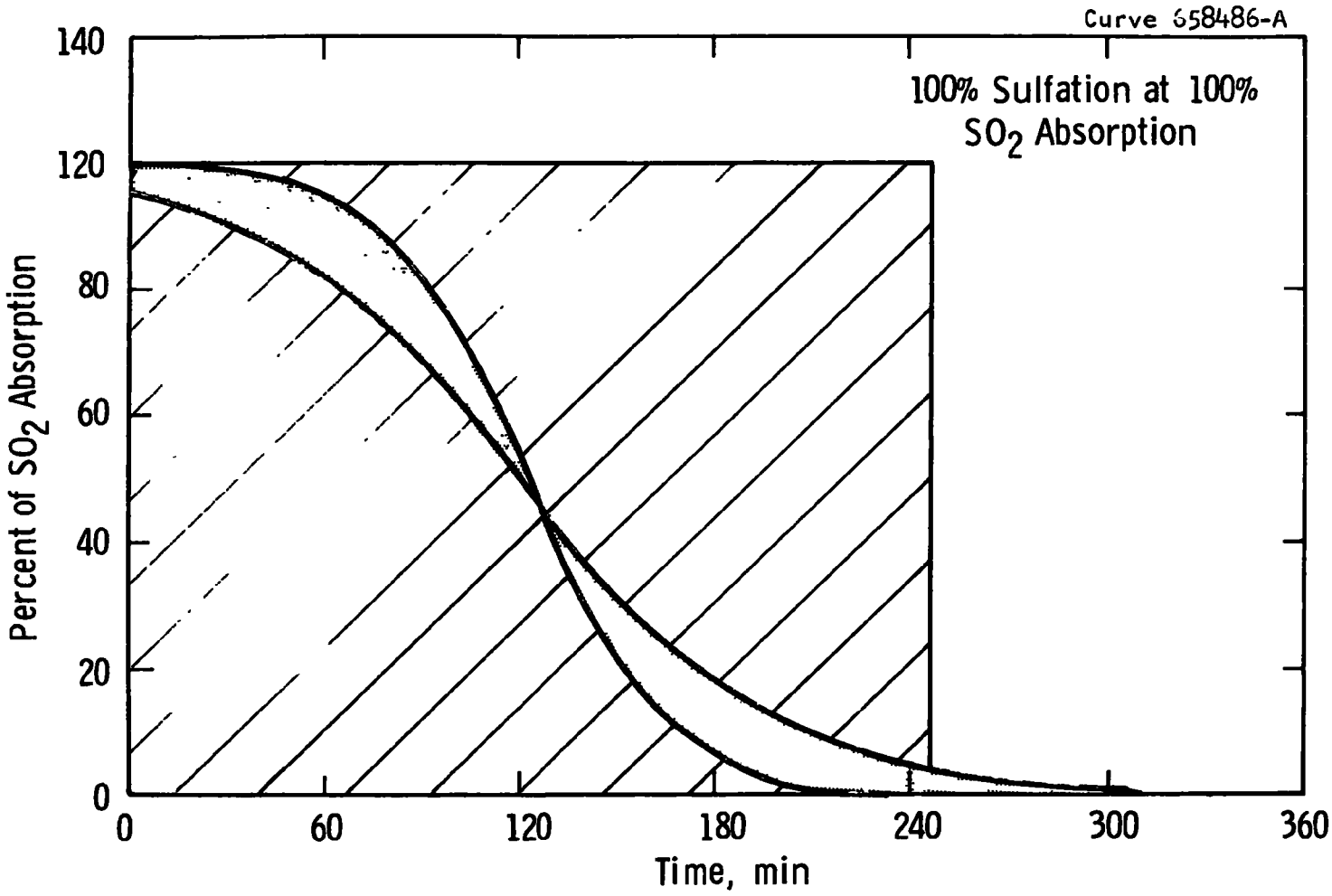

Figure L-14—Calculated SO_2 absorption profile for dry sulfation reaction at 870°C (1600°F) of 7 gm, < 74 μ CAFB material with 250 cc/min 5% SO_2, 10% O_2, 1.5% H_2O in N_2

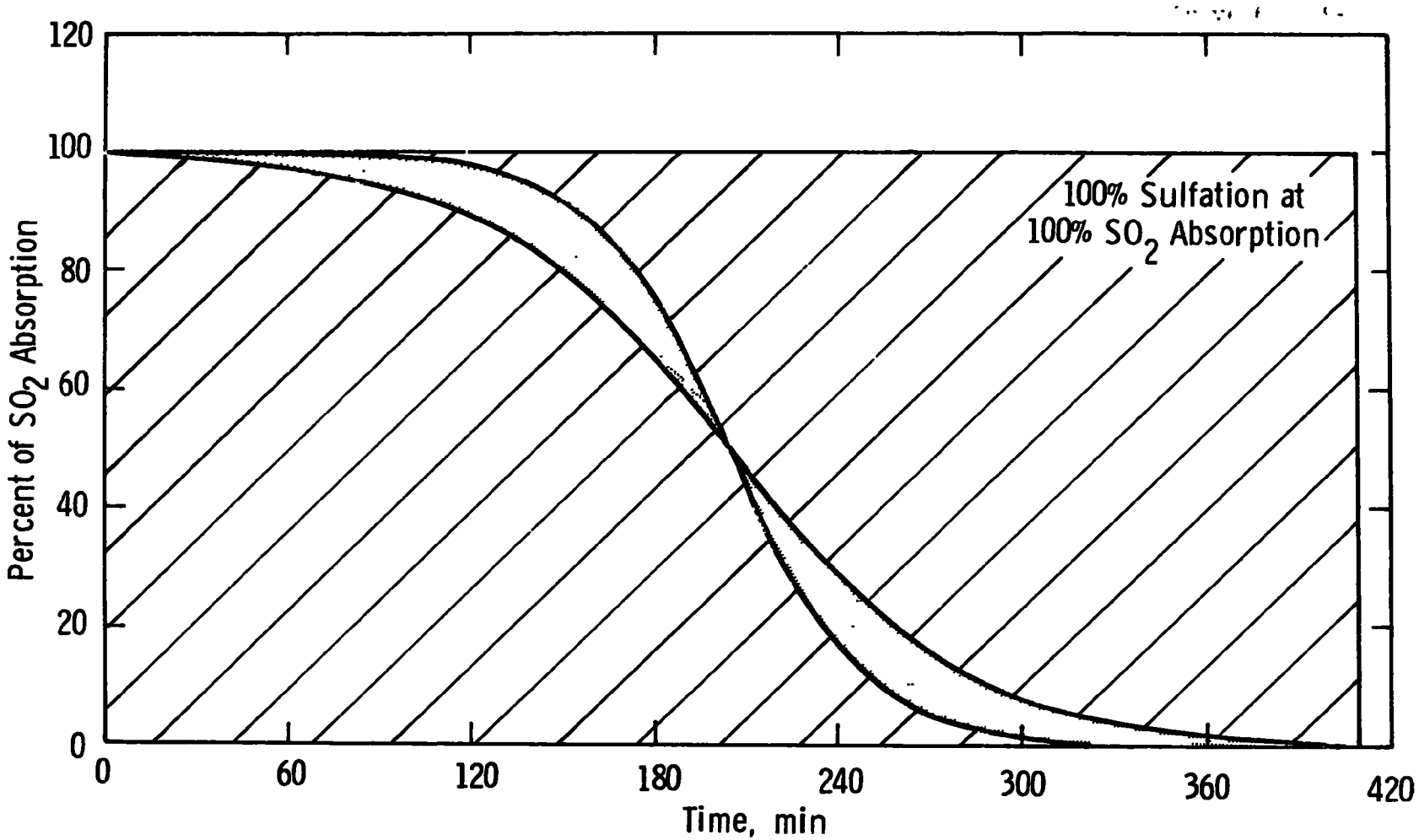

Figure L-15—Calculated SO_2 absorption profile for dry sulfation reaction at 870°C (1600°F), of 7 gm, < 74μ CAFB material with 150 cc/min 5% SO_2, 10% O_2, 1.5% H_2O in N_2

α, at the first layer of the fixed bed. Figure L-16 shows the predicted α versus t curve in the shaded region and compares it with the actual data from TG 314 under the same operating conditions.

Numerical Prediction of the Sulfur Dioxide Retention in a 25.4 mm (1 in) Diameter Batch Reactor

The reactor was modeled as follows. The total bed was considered as a series of n segments of height Δh, where $n \cdot \Delta h$ = total bed height, and $n \cdot \Delta t$ = total gas residence time in the bed. In each segment reaction was assumed to proceed homogeneously over a finite interval of sulfation, taken as 10 percent. For each interval of 10 percent sulfation, the average rate was read from the graph in Figure L-6, so there are ten rate constants, each of which applies to any segment at some point during sulfation of the bed.

The sulfur-dioxide-containing gas is considered as entering the base of the bed. Reaction takes place uniformly in the first segment, and the fraction of sulfur dioxide entering the second segment is computed. This fraction remains constant until 10 percent sulfation of the first level is achieved, when a lower rate constant begins to apply in this segment. The computation is repeated through each layer of the bed until the fraction of the sulfur dioxide which escapes from the bed has been computed. This fraction changes every time one of the segments sulfates through a 10 percent change.

The computation was programmed on a Wang 2200 B calculator, and the program, shown in Table L-4, was run for several numbers of bed segments using the TG rate data of 314 for the 10 rate constants. Apart from smoothing the curve of sulfur dioxide retention with time, the number of bed levels considered did not significantly alter the result. The result for a 40-layer bed is shown in Figure L-17 and compared with the experimental measurements in the 25.4 mm (1 in) unit. The parameters input to the model were chosen as the experimental conditions in DS4 in the 25.4 mm (1 in) unit.

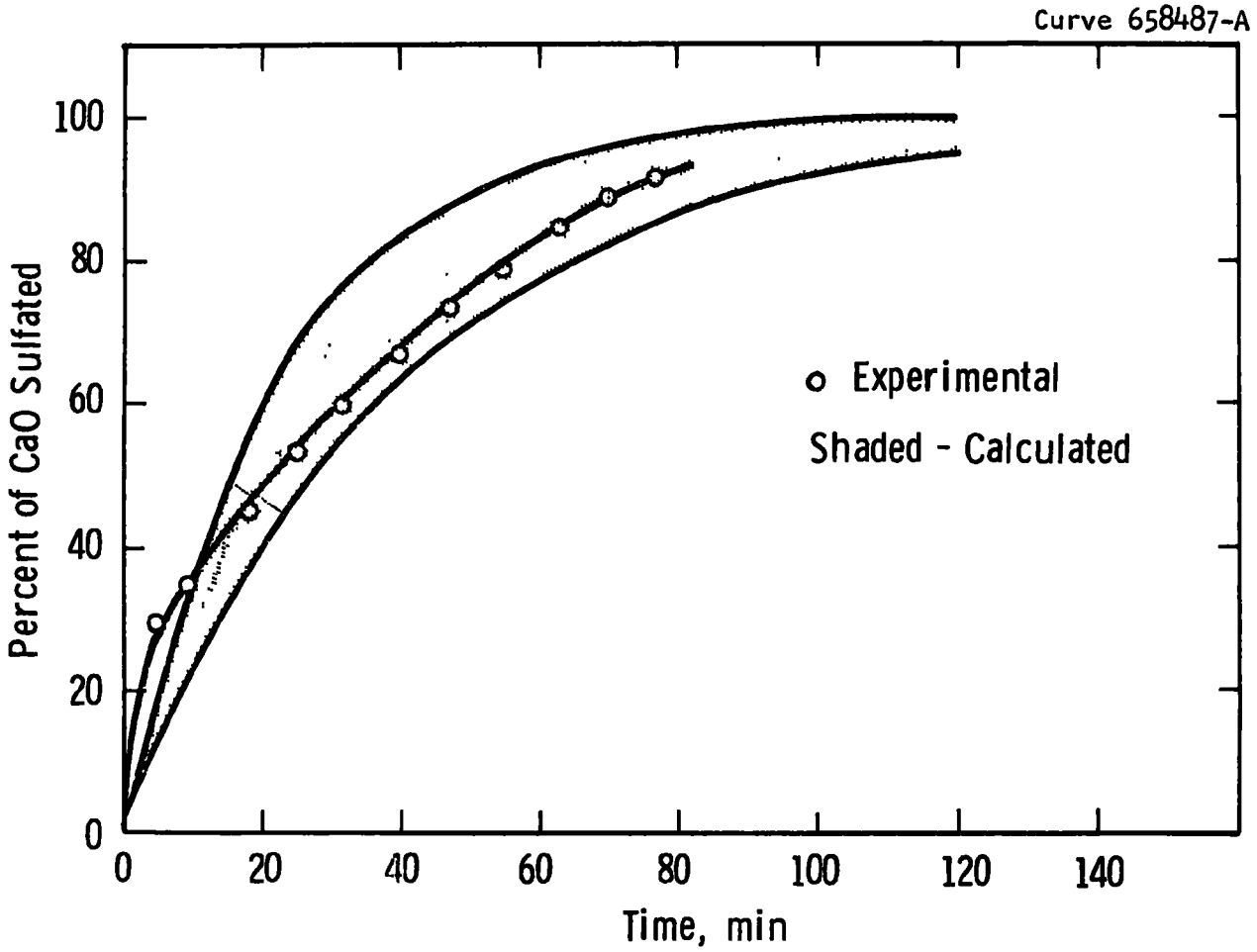

Figure L-16—Comparison of the calculated dry sulfation reaction curve and the experimental TG data

Table L-4

PROGRAM FOR NUMERICAL PREDICTION
OF SO_2 RETENTION

```
10 SELECT PRINT 205 (110)
20 V=40
30 DATA 4400,340,210,0
40 DIM Z(11),E(11)
50 FOR I = 1 TO 4:READ Z(I)
60 E(I)=EXP(-Z(I)*.01293*.2177/V)
70 NEXT I
80 PRINT "FIXED BED SO2 ABSORPTION"
90 DIM T(40),U(12),F(40),J(40),Q(40)
100 K=218.075
110 FOR B = 1 TO 40: Q(B)=.3333:NEXT B
120 FOR I = 1TO 4:U(I)=.3333*I:NEXT I
130 A=0
140 P=2000
150 P=100*P
160 P=2*P
170 M=1
180 FOR B=1 TO 40:S=Q(B):S=S/.3333
190 IF S]11 THEN 440
200 F(B)=E(S)
210 IF F(B)=1. THEN 260
220 H=U(S)
230  T(B) =(H-J(B))*K/(M*(1-F(B)))
240 M=M*F(B)
250 IF P]T(B) THEN 420
260 NEXT B
270 M=1
280 FOR B = 1 TO 40:A=M-(M*F(B))
290 M=M*F(B)
300 J(B)=J(B)+P*A/K
310 IF Q(B)-J(B)[.0001 THEN 400
320 NEXT B
330 X=X+P/60
340 IF X[W+2 THEN 380
350 PRINTUSING 360,M,X
360% #.####                    ###.##
370 W=X
380 IF J(40)[.9THEN 150
390 STOP
400 Q(B)=Q(B)+.3333
410 GOTO 320
420 P=T(B)
430 GOTO 260
440 S=11
450 GOTO 200
```

CONCLUSIONS AND RECOMMENDATIONS

- In a fixed bed of smaller than 74 micron CAFB regenerator material, more than 90 percent sulfation was obtained at 30 percent sulfur dioxide absorption, at 870°C (1600°F) with 5 percent sulfur dioxide, 10 percent oxygen, 1.5 percent water vapor in nitrogen, at three seconds nominal gas residence time.
- A greater sulfation rate was observed with smaller particle size and lower gas velocity.
- A greater sulfation rate was observed at higher temperature in the range of 770 to 870°C (1418 to 1598°F).
- The addition of 1.5 percent water vapor accelerated the sulfation reaction.
- Agglomeration of the bed material was a problem when good fluidization was not achieved.
- The reaction mechanism, including the formation of white fume when the bed was approximately 50 percent sulfated, was imperfectly understood.
- The fluidization behavior in the 25.4 mm (1 in) unit of fine particles of CAFB regenerator material was not satisfactory. The hygroscopic nature, electrostatic forces, light density, fine particle size, and wall effects were among the sources for the channeling, slugging, and elutriation problems observed. Further dry sulfation studies should be conducted in the 100 mm (3.9 in) m fluid bed laboratory test unit.
- Correlation of the results obtained from the TG data and the 25.4 mm (1 in) unit was reasonably good. It can be concluded that the design numbers for the dry sulfator which were based on the TG data were valid.

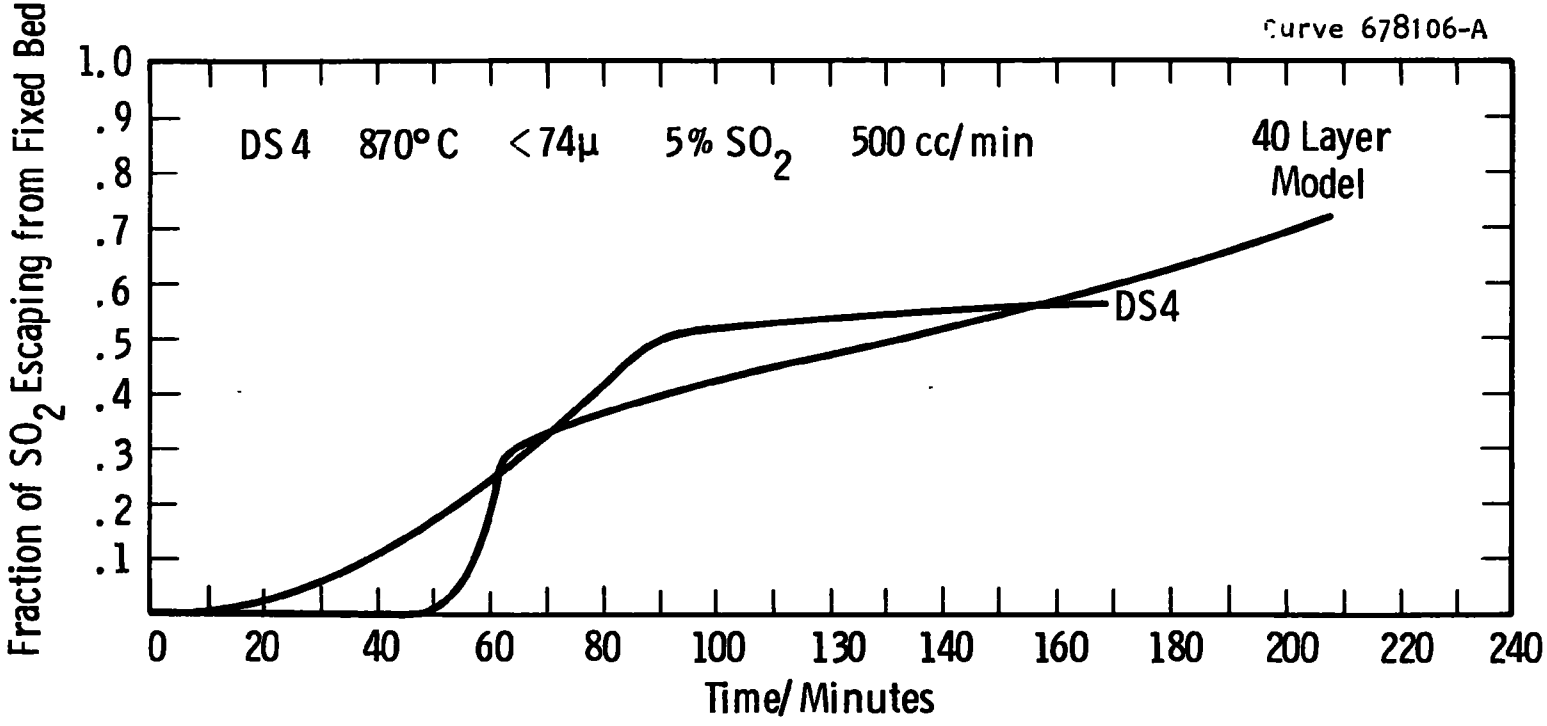

Figure L - 17—Fixed bed experimental results

REFERENCES

1. Borgwardt, R.H., and R.S. Harvey. Environ. Sci. Technol. 6, (4), 350 (1972).

2. Hatfield, J.D., Y.K. Kim, R.C. Mullins, and G.H. McClellan. Investigation of the Reactivities of Limestone to Remove Sulfur Dioxide from Flue Gas. Prepared for the Air Pollution Control Office by TVA, (1971).

3. Robison, E.B., A.H. Bagnulo, J.W. Bishop, S. Ehrlich. Interim Report on Characterization and Control of Gaseous Emissions from Coal-Fired Fluidized Bed Boilers. Pope, Evans and Robbins to NAPCA, October 1970.

4. Jonke, A.A. et al. Reduction of Atmospheric Pollution by the Application of Fluidized Bed Combustion. Annual Report, Argonne National Laboratories. Report ANL/ES-CEN-1002. 1969/1970.

5. Li, K. Private Communication. August 1974.

APPENDIX M

SLURRY RECARBONATION EXPERIMENTAL PROGRAM

M

ABSTRACT

The technical feasibility of slurry recarbonation for processing the spent stone from oil gasification has been demonstrated. Under optimum conditions-- 85°C (185°F), two hours, and twice stoichiometric carbon dioxide (CO_2) -- 96 to 97 percent recarbonation of the regenerator spent stone from the oil gasification process is obtained. Slurry settling characteristics, particle size distribution, and chemical composition of the recarbonated product have been determined.

APPENDIX M

SLURRY RECARBONATION EXPERIMENTAL PROGRAM

INTRODUCTION

There are many options for processing the spent stone from the oil gasification process before disposal--such as direct disposal, dry sulfation, calcium sulfide (CaS) oxidation, dead-burning, silica sintering, acid sulfation, and slurry recarbonation, as described in Appendix K. Stone and Webster Engineering Corporation (SWEC), as subcontractor, has completed an initial design for the demonstration plant, incorporating a slurry recarbonation system which is considered to be of minimal technical risk.

For all practical purposes, dry carbon dioxide (CO_2) will not react with calcium oxide (CaO) at ordinary atmospheric temperatures; but in the presence of water vapor or liquid water recarbonation occurs readily. The hydration reaction of calcium oxide is strongly exothermic. The reaction of water with waste stone from the oil gasification process not only causes release of heat to the environment but also liberates sufficient malodorous and toxic hydrogen sulfide (H_2S) to be considered a nuisance or health hazard. It seems, therefore, that the most reliable way to forestall the weathering effects of ambient water vapor, rain, and atmospheric carbon dioxide on the waste stone is to subject the stone to thorough treatment with water and carbon dioxide prior to disposing of it. This concept forms the basis for the slurry recarbonation process as a method of pretreating spent stone from the oil gasification process. The slurry recarbonation process, using flue gas, converts the calcium sulfide present in the waste stone to hydrogen sulfide gas, which is recycled to the gasifier or could be sent to the sulfur recovery plant. The recarbonated product is expected to

be environmentally suitable for disposal. Furthermore, the sensible heat of the hot waste stone and the heat from the reaction can also be utilized in this process.

A liquid-phase Chance reaction which uses carbon dioxide to convert calcium sulfide to calcium carbonate in aqueous solution was studied by Consolidation Coal Company.[1] At the Westinghouse Research Laboratories a bench-scale experimental program has been set up to investigate slurry recarbonation of the CAFB spent stone. This section summarizes the experimental results, including the optimum conditions for wet carbonation reactions, and identifies the design basis for the slurry recarbonation process as a method of pretreating spent stone from fluidized bed oil gasification.

CONCLUSIONS AND RECOMMENDATIONS

The technical feasibility of slurry recarbonation for processing spent stone from the oil gasification process has been demonstrated. From these studies the following conclusions and recommendations are made:

- Under optimum conditions—85°C (185°F), two hours, and twice stoichiometric carbon dioxide—96 to 97 percent recarbonation of chemically active fluidized bed (CAFB) regenerator bed material is obtained.
- Greater than 85 percent of the calcium sulfide present in the CAFB waste stone is collected as gaseous hydrogen sulfide. The recarbonated product contains less than 0.2 percent of residual sulfide.
- The slurry half-settles in 4 minutes and completely settles in 45 minutes.
- The recarbonated solid is a white powder with the following particle size distribution:
  - 3 percent larger than 74 microns (μ)
  - 3 percent of 44 microns to 74 microns
  - 94 percent of smaller than 44 microns

  The average particle size is approximately 10 microns.
- The marketability of the recarbonated product—a fine, white powder averaging 10 microns in size—should be investigated.

EXPERIMENTAL DATA

Apparatus

Figure M-1 shows a schematic diagram of the experimental set-up. The liquid-phase carbonation reactions

$$CaO + H_2O \rightleftharpoons Ca(OH)2$$
$$Ca(OH)_2 + CO_2 \rightleftharpoons CaCO_3 + H_2O$$
$$CaS + H_2O + CO_2 \rightleftharpoons CaCO_3 + H_2S$$

were studied in batch tests in a glass laboratory apparatus at atmospheric pressure. The reaction vessel was a 500 ml, three-neck, round-bottomed flask equipped with a thermometer, a gas inlet with a frit bubbler, and a gas outlet which was connected to a train of acidified iodine bubblers. The reaction mixture was heated in a hot water bath and a magnetic stir used to mix the slurry.

Procedures

The spent stone from the regenerator of Esso Research Centre, Abingdon, England (Esso) batch test No. 7 was used for these studies.[2] The starting material as received had a particle size range of from 300 to 3,000 microns and was ground to various mesh ranges for different runs. Fourteen percent carbon dioxide in nitrogen was used to simulate the carbon dioxide level in flue gas. In a typical run, 200 ml of deionized water was heated in the reaction flask to the desired temperature. Then a calculated flow of 14 percent carbon dioxide in nitrogen was admitted, and 5 grams of CAFB No. 7 stone of a particular particle size range was added and magnetically stirred. The exhaust gas was passed through two iodine solution traps and the total hydrogen sulfide emission analyzed immediately after each slurry recarbonation run. The parameters explored in these experiments included temperature, particle size, water/stone ratio, amount of carbon dioxide, and reaction time.

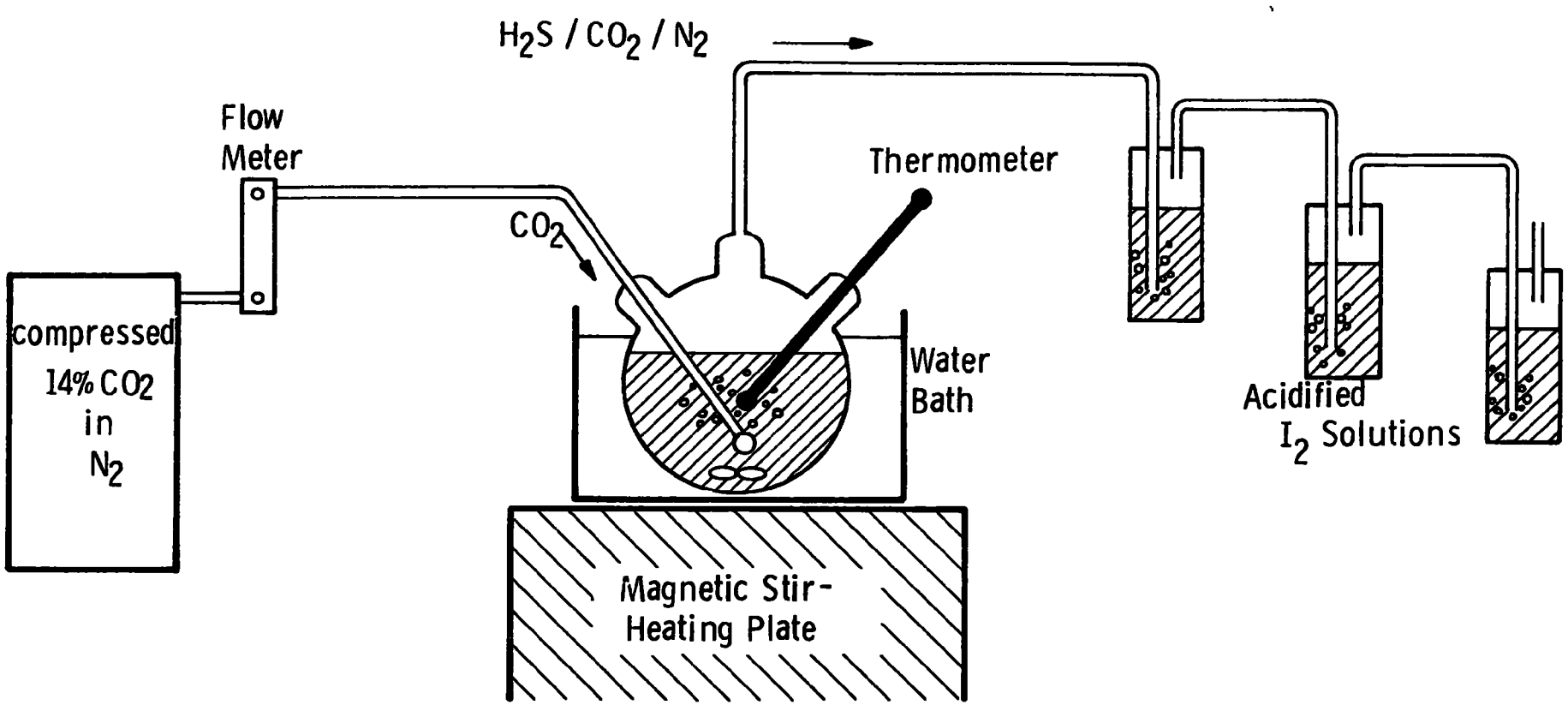

Figure M-1—Schematic diagram for the slurry recarbonation system

Results

At the end of each reaction run, the mixture was filtered on a Buchner funnel with S&S 589 medium-rate filter paper and moderate vacuum. The precipitate was then washed with deionized water and dried at 500°C (932°F) for one hour to convert any calcium hydroxide ($Ca[OH]_2$) to calcium oxide. The dried product was then calcined at 1000°C (1832°F) for one hour, and the molar percent of recarbonation was determined gravimetrically as

$$\% \text{ recarbonation} = \frac{(W_{500°C} - W_{1000°C})/44}{W_{1000°C}/56}$$

in which the starting material was assumed to be 100 percent calcium oxide. Table M-1 summarizes all the slurry recarbonation runs, their reaction variables, and molar percentages of recarbonation as determined by the gravimetric method on calcination of the reaction product. It can be noted that the carbonation reaction is shifted further to the right with smaller particle size, higher temperature, higher carbon dioxide flow, and longer reaction time when the water/solid ratio is sufficient to allow thorough mixing of the slurry. If the particle size of the starting material (300 to 3000 microns), the reaction temperature (85°C [185°F]), and the liquid/solid ratio (40/1) were held constant, the maximum degree of recarbonation (91 to 92 percent) was achieved in a minimum reaction time of two hours and twice the stoichiometrically required carbon dioxide. Since the CAFB No. 7 regenerative material contains approximately 94 percent calcium oxide and 2 percent calcium sulfide, however, the true percentage of recarbonation of the total carbonatable material is the value indicated above divided by 0.96; that is, under optimal experimental conditions 96 to 97 percent of the carbonatable components of the CAFB regenerative material is recarbonated.

Chemical Analyses

In order to understand the slurry recarbonation process better, the following chemical analyses were carried out for runs 16 through 24:

- $S^{=}$ in the exit gas -- by bubbling the exit gas through a

Table M-1

SLURRY RECARBONATION TEST RESULTS

Test	Starting material & particle size (μ)	Reaction time (hours)	H_2O/ solid	Reaction temperature, °C (°F)	Total CO_2 used (times theoretical)	Percent of recarbonation
1	CAFB No. 7 reg. bed 300-3000	3	5:1	75 (167)	much excess	37
2	"	2	5:1	75 (167)	much excess	39
3	"	3	36:1	85 (185)	much excess	85
4	"	3	40:1	85 (185)	much excess	92
5	"	3	30:1	85 (185)	much excess	88
6	"	4	50:1	85 (185)	much excess	92
7	"	2	40:1	85 (185)	much excess	90
8	"	3	40:1	85 (185)	20 x CO_2	91
9	< 430	3	40:1	85 (185)	20 x CO_2	91
10	< 430	3	40:1	85 (185)	4 x CO_2	90
12	300-3000	3	40:1	85 (185)	10 x CO_2	88
13	500-1000	3	40:1	85 (185)	4 x CO_2	92
14	300-3000	3	40:1	85 (185)	4 x CO_2	90
15	"	3	40:1	85 (185)	2 x CO_2	89
16	"	2	40:1	85 (185)	1.5 x CO_2	85
17	"	2	40:1	85 (185)	1.5 x CO_2	90
18	"	2	40:1	85 (185)	1.5 x CO_2	85
19	"	2	40:1	85 (185)	1 x CO_2	88
20	"	0.5	40:1	85 (185)	1 x CO_2	68
21	"	1	40:1	85 (185)	1 x CO_2	79
22	"	2	40:1	85 (185)	2 x CO_2	91
23	"	1	40:1	85 (185)	2 x CO_2	79
24	"	1	40:1	85 (185)	3 x CO_2	84

series of acidified iodine traps for hydrogen sulfide and back titrating the unreacted iodine with sodium thiosulfate using starch indicator

- $S^{=}$ in the filtrate -- by iodometric method and back titrating with sodium thiosulfate
- $S^{=}$ in the solid product -- same as above
- Ca^{++} in the filtrate -- titrating with ethylenediaminetetra-acetic acid solution buffered to pH = 10 using Eriochrome Black T indicator
- Ca^{++} in the solid -- same as above.

Table M-2 summarizes the results. The following observations can be made:

- At optimum conditions for the slurry recarbonation--minimum of twice stoichiometric carbon dioxide, 2 hours, and 85°C (185°F) -- 83 to 87 percent of the total sulfide was collected in the gaseous exit, 2 to 3 percent in the supernatant, and 10 to 15 percent in the solid (runs 22 and 25).
- Less than 0.2 percent of $S^{=}$ was found in the recarbonated solid product
- The presence of carbon dioxide increased the release of hydrogen sulfide as a gaseous product. The effect of carbon dioxide was demonstrated by comparing runs 21, 23, and 24.
- Insufficient carbon dioxide and/or too short a reaction time resulted in higher dissolved sulfide concentration and less hydrogen sulfide released from the gas exit. Run 19 was an example with low $S^{=}$ concentration in the gaseous exhaust but high $S^{=}$ in the filtrate, even though the percent of recarbonation achieved with the set of reaction conditions (1 x CO_2, 2 hours, 85°C [195°F]) was marginally satisfactory.
- Higher dissolved Ca^{++} concentrations were found in the filtrates of those runs with less complete recarbonation (runs 20, 21, and 23). This was expected because of the higher dissolved calcium hydroxide.

Table M-2

Ca^{++} AND $S^{=}$ DETERMINATION FOR THE SLURRY RECARBONATION REACTIONS

Run	Reaction conditions	% Recar-bonation	$S^{=}$, Iodometric method					Ca^{++}, EDTA Method		
			Gas	Filtrate		Solid		Filtrate	Solid	
			Wt % in total $S^{=}$ in the starting material	Mg/ml	Wt % in total $S^{=}$ in the starting material	Wt % in solid product	Wt % in total $S^{=}$ in the starting material	Mg/ml	Wt % in carbonated solid	Wt % in calcined solid
6	85°C (185°F), 4 hr excess CO_2	92		<0.01		<0.05		0.107	38.4	
8	85°C (185°F), 3 hr 20 x CO_2	91		0.024				0.116		
15	85°C (185°F), 3 hr 2 x CO_2	89		0.016				0.218		
16	85°C (185°F), 3 hr 1.5 x CO_2	85		0.272				0.280	39	
17	same as No.16	90	89	0				0.120	41	68
18	same as No.16	85	85	0.083				0.170	41	69
19	85°C (185°F), 2 hr 1 x CO_2	88	36	0.166	51	0.092	13	0.190	40	
20	85°C (185°F), 1/2 hr 1 x CO_2	68	10	0.354	78	0.15	12	0.755	46	
21	85°C (185°F), 1 hr 1 x CO_2	79	9	0.288	73	0.19	18	0.643	43	
22	85°c (185°F), 2 hr 2 x CO_2	91	83	0.011	2	0.17	15	0.147	40	
23	85°C (185°F), 1 hr 2 x CO_2	79	22	0.248	57	0.22	21	0.413	42	
24	85°C (185°F), 1 hr 3 x CO_2	84	77	0.013	3	0.22	20	0.176	40	
25	85°C (185°F), 2 hr 2 x CO_2	92	87	0.0096	3	0.094	10	0.144	40	

series of acidified iodine traps for hydrogen sulfide and back titrating the unreacted iodine with sodium thiosulfate using starch indicator

- $S^{=}$ in the filtrate -- by iodometric method and back titrating with sodium thiosulfate
- $S^{=}$ in the solid product -- same as above
- Ca^{++} in the filtrate -- titrating with ethylenediaminetetra-acetic acid solution buffered to pH = 10 using Eriochrome Black T indicator
- Ca^{++} in the solid -- same as above.

Table M-2 summarizes the results. The following observations can be made:

- At optimum conditions for the slurry recarbonation--minimum of twice stoichiometric carbon dioxide, 2 hours, and 85°C (185°F) -- 83 to 87 percent of the total sulfide was collected in the gaseous exit, 2 to 3 percent in the supernatant, and 10 to 15 percent in the solid (runs 22 and 25).
- Less than 0.2 percent of $S^{=}$ was found in the recarbonated solid product
- The presence of carbon dioxide increased the release of hydrogen sulfide as a gaseous product. The effect of carbon dioxide was demonstrated by comparing runs 21, 23, and 24.
- Insufficient carbon dioxide and/or too short a reaction time resulted in higher dissolved sulfide concentration and less hydrogen sulfide released from the gas exit. Run 19 was an example with low $S^{=}$ concentration in the gaseous exhaust but high $S^{=}$ in the filtrate, even though the percent of recarbonation achieved with the set of reaction conditions (1 x CO_2, 2 hours, 85°C [195°F]) was marginally satisfactory.
- Higher dissolved Ca^{++} concentrations were found in the filtrates of those runs with less complete recarbonation (runs 20, 21, and 23). This was expected because of the higher dissolved calcium hydroxide.

Table M-2

Ca^{++} AND $S^{=}$ DETERMINATION FOR THE SLURRY RECARBONATION REACTIONS

			$S^{=}$, Iodometric method					Ca^{++}, EDTA Method		
			Gas	Filtrate		Solid		Filtrate	Solid	
Run	Reaction conditions	% Recar-bonation	Wt % in total $S^{=}$ in the starting material	Mg/ml	Wt % in total $S^{=}$ in the starting material	Wt % in solid product	Wt % in total $S^{=}$ in the starting material	Mg/ml	Wt % in carbonated solid	Wt % in calcined solid
6	85°C (185°F), 4 hr excess CO_2	92		<0.01		<0.05		0.107	38.4	
8	85°C (185°F), 3 hr 20 x CO_2	91		0.024				0.116		
15	85°C (185°F), 3 hr 2 x CO_2	89		0.016				0.218		
16	85°C (185°F), 3 hr 1.5 x CO_2	85		0.272				0.280	39	
17	same as No.16	90	89	0				0.120	41	68
18	same as No.16	85	85	0.083				0.170	41	69
19	85°C (185°F), 2 hr 1 x CO_2	88	36	0.166	51	0.092	13	0.190	40	
20	85°C (185°F), 1/2 hr 1 x CO_2	68	10	0.354	78	0.15	12	0.755	46	
21	85°C (185°F), 1 hr 1 x CO_2	79	9	0.288	73	0.19	18	0.643	43	
22	85°c (185°F), 2 hr 2 x CO_2	91	83	0.011	2	0.17	15	0.147	40	
23	85°C (185°F), 1 hr 2 x CO_2	79	22	0.248	57	0.22	21	0.413	42	
24	85°C (185°F), 1 hr 3 x CO_2	84	77	0.013	3	0.22	20	0.176	40	
25	85°C (185°F), 2 hr 2 x CO_2	92	87	0.0096	3	0.094	10	0.144	40	

- Percentages of Ca^{++} in the solid products before and after calcination were in good agreement with the expected 40 percent for calcium carbonate and 71.4 percent for calcium oxide.
- The repeatability of the slurry recarbonation experiments was demonstrated in runs 22 and 25, both of which were carried out at the optimum conditions -- twice stoichiometric carbon dioxide, two hours, and 85°C (185°F). Recarbonation of 91 and 92 percent, respectively, was achieved. Results from the sulfide and calcium analyses were also in good agreement.

The starting material (CAFB No. 7 regenerator bed stone), as well as the carbonated solid product and filtrate from run 6, were analyzed by the analytical chemistry staff for $S^{=}$, $SO_4^{=}$, and cationic impurities, using emission spectroscopy and wet chemical methods. Table M-3 presents the results.

The filtrate from the slurry recarbonation run is slightly basic with pH = 7.9, probably due to some dissolved calcium hydroxide. Its buffering capacity is shown in Figure M-2 where 10 ml of a typical recarbonation filtrate (run 6) were neutralized with 0.1 normal hydrochloric acid.

Slurry Settling Characteristics

The recarbonation reaction slurry from run 25 was allowed to cool to room temperature before it was transferred into a 250 ml graduated cylinder (h = 239 mm, A = 10.47 cm^2). It was then diluted to 250 ml with deionized water and thoroughly mixed for five minutes, including inversion of the cylinder by hand. The sedimentation height at the bottom of the menicus was then visually taken at 0.5-, 1.0-, 1.5-minute intervals. Figure M-3 shows a slurry settling curve, from which it is noted that the time required for the slurry to settle completely was 45 minutes, and the time required to settle to half the volume (125 ml) was 4.0 minutes.

Table M-3

CHEMICAL ANALYSES OF Ca^{++}, $S^{=}$, AND CATIONIC IMPURITIES FOR A TYPICAL SLURRY RECARBONATION TEST

Species	CAFB No. 7 regenerator bed material (wt %)	Run No. 6 solid product (wt %)	Run No. 6 filtrate (μg/ml)
Al	3.4	0.81	10.5
Ag	0.02	0.004	0.2
B	0	0	2.0
Ca	69.0	40.0	107.0
Cr	0.2	0	0
Cu	0.2	0.1	5.0
Fe	0.9	0.4	1.0
Mg	1.4	0.8	213.0
Mn	0.9	0.8	0.5
Mo	0	0	10.5
Na	0.8	0.4	53.0
Ni	0.1	0.2	3.0
Si	1.4	0.05	3.0
V	0.9	0.2	64.0
$S^{=}$	1.0	< 0.05	10.0
$SO_4^{=}$	2.6	1.4	240.0
pH	--	--	7.9

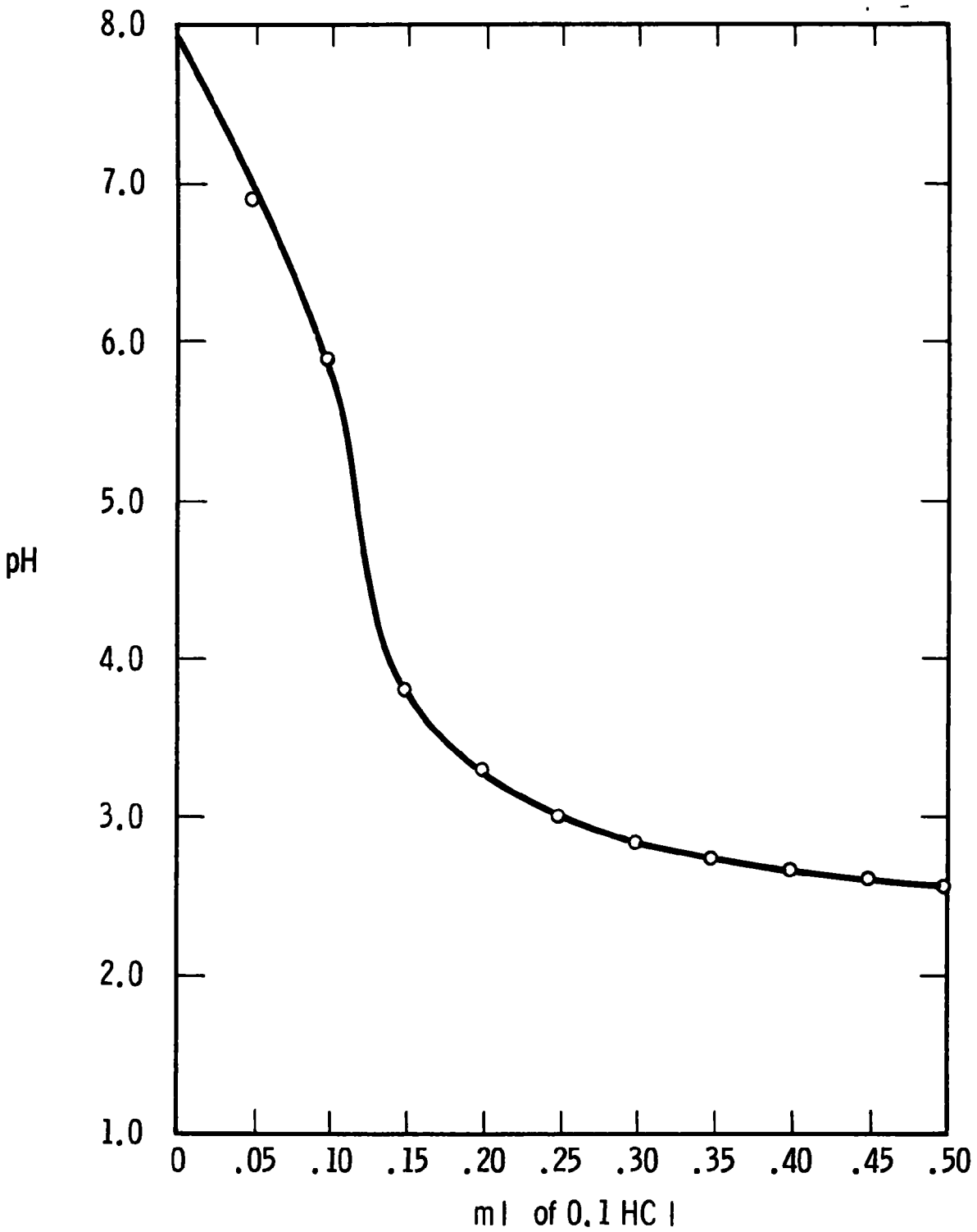

Figure M-2—Neutralization curve of 10 ml slurry recarbonation run 6 filtrate with 0.1 N HCl

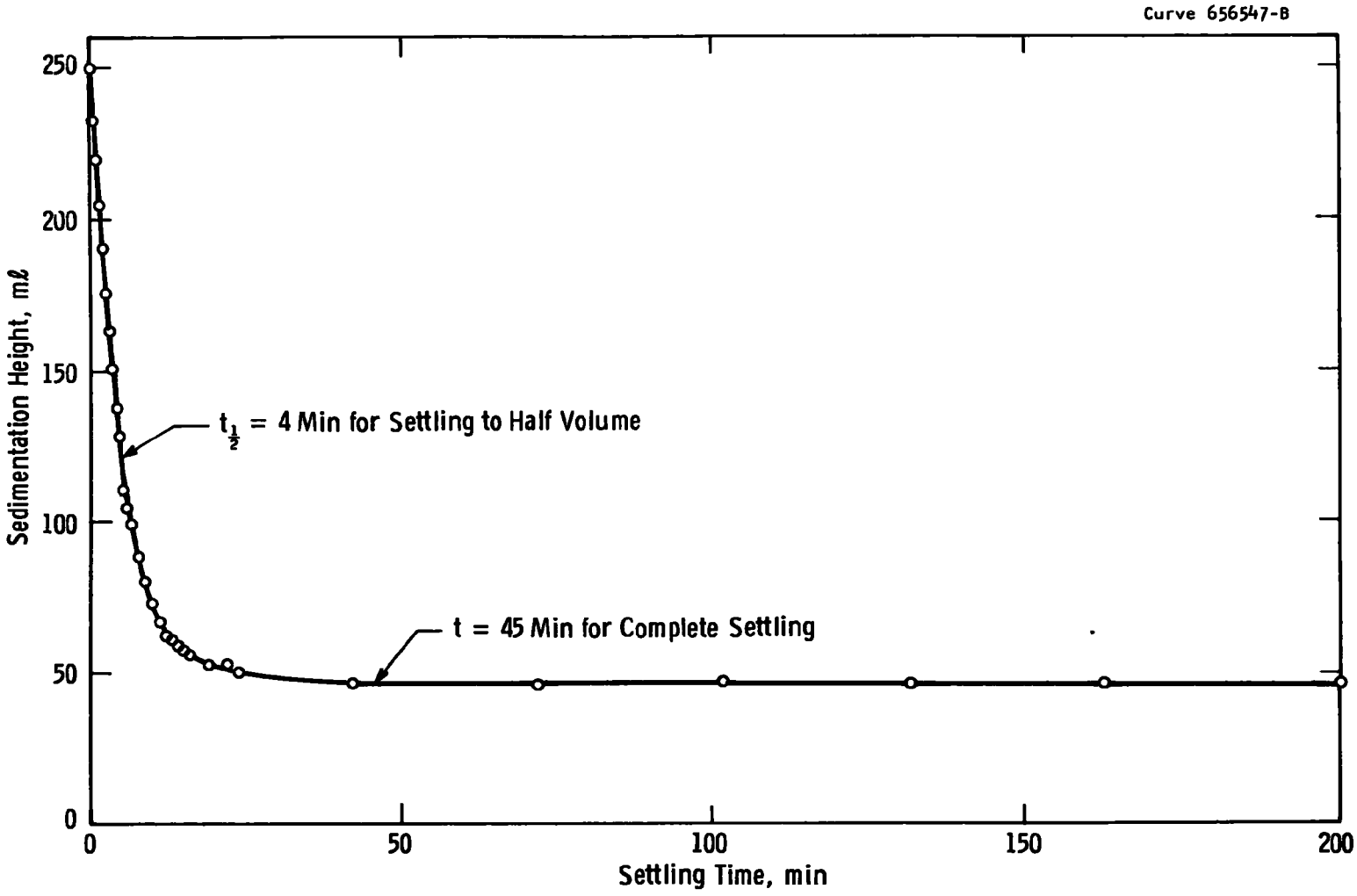

Figure M-3 —Slurry settling curve for run 25

Particle Size Distribution

To further the studies of the slurry recarbonation process for treating spent stone before disposal, the particle size and distribution of the recarbonated product were investigated. Two methods were employed during this study:

Mechanical Sieving

Standard dry sieving, with sieve sizes extending to 37 microns or more commonly 44 microns, was not satisfactory in this case. The agglomerates of the recarbonated powder, even though they adhered loosely together, would not pass through the smallest sieve sizes, thereby distorting the gradation and making it appear coarser than it actually was. A wet sieving procedure was found more suitable. A stream of water was applied at moderate pressure to wash down the putty, and the agglomerates then readily broke up into smaller particles and passed through the smaller sieve sizes. The residues on variously sized screens were then dried at 500°C (932°F) and the weights recorded. The percentage of residue on each sieve was calculated on the basis of the total weight. Table M-4 summarizes the particle size distribution of the recarbonated product from run 25 as determined by the wet sieving method.

Table M-4

PARTICLE SIZE DISTRIBUTION OF THE RECARBONATED PRODUCT FROM SLURRY RECARBONATION RUN 25

Sieve Size	Particle Size	Distribution
+ 200 mesh	> 74μ	2.6%
+ 325 mesh	44 to 74μ	3.2%
- 200 mesh		
- 325 mesh	< 44μ	94.2%

Microscopy

Ordinary microscopy, scanning electron microscopy, and photomicroscopy are often employed to determine particle size, shape and form, and size distribution. Figure M-4a is a typical optical microphotograph, at 200 X, of the recarbonated material showing some agglomerates of smaller particles with dark-field background. The average particle size is seen to be approximately 10 microns. Figure M-4b shows a typical electron scanning microphotograph of the same sample, at 2000 X, revealing the fiber-like microstructure of the recarbonated product.

(a)

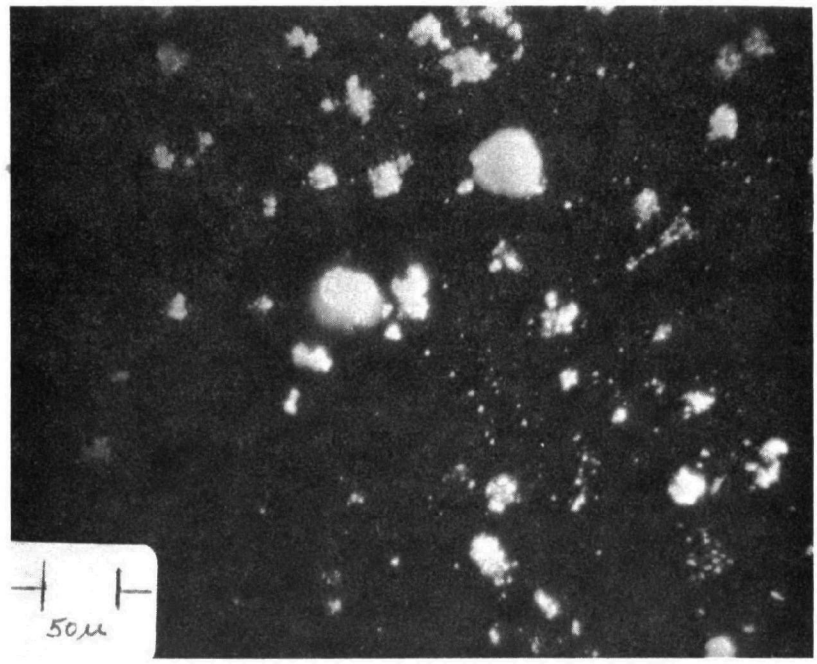

Figure M-4a—A typical optical microphotograph of the slurry recarbonated product from run 22 (200X)

(b)

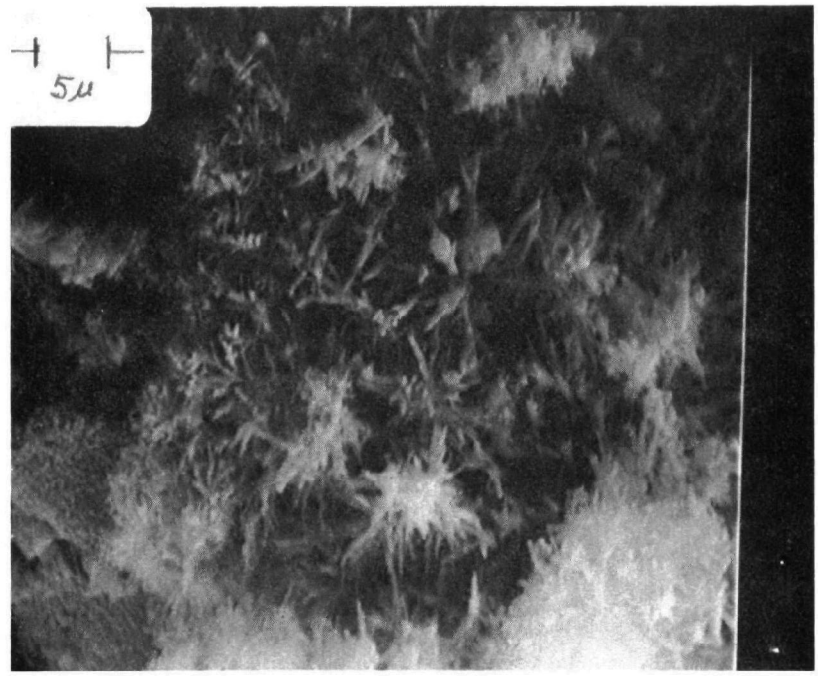

Figure M-4b—A typical electron scanning microphotograph of the slurry recarbonated product from run 22 (2000X)

REFERENCES

1. Esso Research Centre, Abingdon, England. Final Report to U.S. Environmental Protection Agency, February 1974, Contract No. 68-02-03-00.

APPENDIX N

ACID SULFATION EXPERIMENTAL PROGRAM

N

ABSTRACT

The technical feasibility of acid sulfation for processing spent stone from the oil gasification process has been demonstrated and the design bases identified. The reaction rate is slow. The sulfation obtained was 94 percent with 0.95 stoichiometric sulfuric acid in 7.2 hours at 95°C (203°F) with the feed particles ground to smaller than 1000 microns. Slurry characteristics and the particle size distribution of the sulfated stone have been investigated and the chemical compositions determined. The economic practicality of the acid sulfation process has not yet been established. A precipitate has been produced which may have market potential.

APPENDIX N

ACID SULFATION EXPERIMENTAL PROGRAM

INTRODUCTION

One method for processing spent stone before disposal is treatment by acid sulfation. The spent stone from the oil gasification process reacts with dilute sulfuric acid (H_2SO_4) to form calcium sulfate ($CaSO_4$) which is environmentally suitable for disposal. The sulfur content is collected as gaseous hydrogen sulfide (H_2S) and is passed on for further processing. The major debit for this process is likely to be the cost of sulfuric acid.

The Westinghouse Research Laboratories have set up a laboratory-scale experimental program to investigate the liquid-phase sulfation reactions of calcium oxide (CaO) and calcium sulfide (CaS) with dilute sulfuric acid. This report summarizes the experimental results, including optimum conditions for the acid sulfation reactions, and identifies the design basis for the acid sulfation process as a method of pretreating the spent stone from fluidized bed oil gasification.

CONCLUSIONS AND RECOMMENDATIONS

The reaction of the waste stone from the oil gasification process with dilute sulfuric acid was slow. With 0.95 stoichiometric sulfuric acid in 7.2 hours at 95°C (203°F) with the feed particles crushed to smaller than 1000 microns (μ), 94 percent sulfation was obtained.

When the spent stone was used without additional grinding (300 to 3000μ), 94 percent of sulfation was accomplished only when the reaction parameters exceeded the following sets of minimal conditions:

- 90°C (194°F), 3 x H_2SO_4, 4 hours
- 90°C (194°F), 2 x H_2SO_4, 6 hours
- 95°C (203°F), 2 x H_2SO_4, 5 hours

The excess sulfuric acid not only is uneconomical but also creates problems in handling.

More than 90 percent of the sulfide in the waste stone was collected as gaseous hydrogen sulfide. Little dissolved sulfide was found in the filtrate. The sulfated stone contained less than 0.02 percent sulfide.

When the sulfated product was precipitated in 70 percent methanol, more than 99 percent of the particles were smaller than 44 microns, with an average size of less than 10 microns. When the precipitate was allowed to digest in aqueous solution for five days, however, the precipitate grew into needle-shaped crystallines of 50 to 500 microns in length. This product may have market potential.

Slurry settling characteristics were determined for the two types of precipitates described above. Results showed $t_{1/2} \cong 580$ minutes and $t_f \cong 800$ minutes for the former, and $t_{1/2} = 5.5$ minutes and $t_f = 15$ minutes for the latter.

Although the technical feasibility of the acid sulfation process has been demonstrated, there are economical penalties to be paid unless

- Sulfur dioxide from the regenerator off-gas can be converted to sulfuric acid which, in turn, is used to sulfate the spent stone
- A marketable end product can be produced.

EXPERIMENTAL DATA

Apparatus

Figure N-1 shows a schematic diagram of the experimental set-up. The liquid-phase sulfation reactions

$$CaO + H_2SO_4 \rightleftarrows CaSO_4 + H_2O$$
$$CaS + H_2SO_4 \rightleftarrows CaSO_4 + H_2S$$

were studied in batch tests in a glass laboratory apparatus at atmospheric pressure. The reaction vessel was a 500 ml, three-neck, round-bottomed flask equipped with a thermometer, a gas inlet for passing a moderate

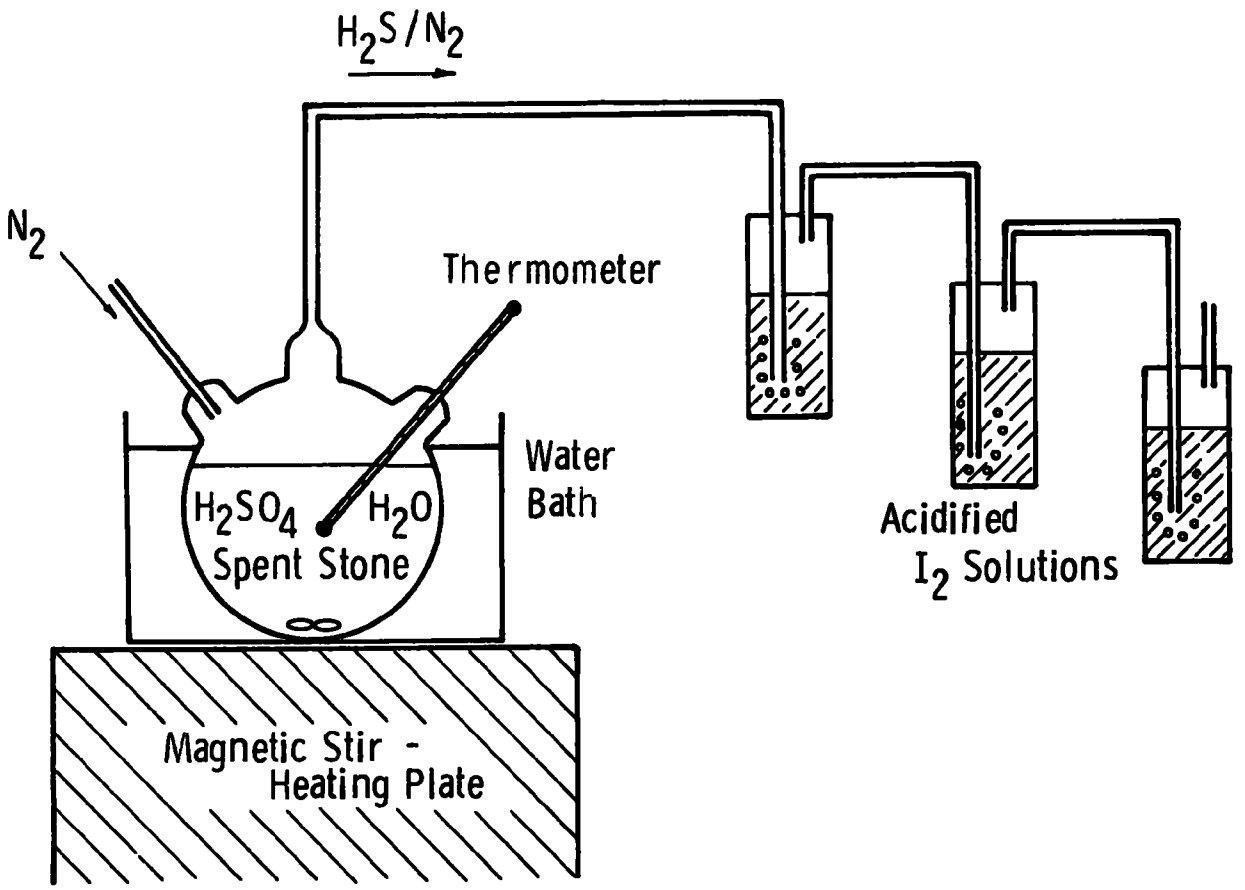

Figure N-1—Schematic diagram for the acid sulfation system for spent stone processing

flow of inert gas--in this case nitrogen (N_2)-- over the reaction, and a gas outlet which was connected to a train of acidified iodine bubblers. The reaction mixture was heated in a water bath, and a magnetic stir was used to mix the slurry.

Procedures

The spent stone from the regenerator of Esso Research Centre, Abingdon, England (Esso) batch test No. 7 was used for these studies.[1] The starting material as received had a particle size range of from 300 to 3,000 microns and was ground to various mesh ranges for different runs. In a typical acid sulfation run, a calculated amount of concentrated sulfuric acid was diluted to 130 ml in a reaction flask and heated to the desired reaction temperature in a heated water bath. Then 5 gm of the CAFB starting material of a specific particle size range was added with magnetic stirring. A moderate flow of nitrogen was flushed over the reaction mixture. The exhaust gas, which contains small amounts of hydrogen sulfide in the nitrogen stream, was bubbled through acidified iodine solutions from which the total hydrogen sulfide was analyzed immediately after each acid sulfation run. Parameters explored in these experiments included reaction temperature, particle size of the waste stone, amount of sulfuric acid used, and reaction time.

Due to the relatively high solubility of calcium sulfate in water -- 0.21 gm/ 100 ml at 30°C (86°F) and 0.16 gm/100 ml at 110°C (230°F) -- the degree of sulfation could not be determined by precipitating calcium sulfate from the aqueous reaction mixture directly. It was found that the solubility of the calcium sulfate was reduced significantly in a 70 percent methanol (CH_3OH) medium. An alternative method is described in the following.

At the termination of the reaction, the mixture was allowed to cool before methanol was added. The precipitate was allowed to settle in 70 percent methanol overnight. The precipitate was then filtered, dried at 110°C (230°F) for 2-1/2 hours, and weighed. The 110°C (230°F) dried solid was again heated to 500°C (932°F) for one hour for the decomposition

of calcium hydroxide ($Ca[OH]_2$) and hydrated calcium sulfate, if they were present.

Results

The molar percentage of sulfation was calculated by the following formula:

$$\% \text{ sulfation} = \frac{(W_{500°C} - W_{initial})/80}{W_{initial}/58} \times 100\%$$

where 58 was the average molecular weight of the CAFB No. 7 regenerator waste stone containing 96 percent calcium oxide, 2 percent calcium sulfide, and 2 percent calcium sulfate; and 80 was the difference between the molecular weights of calcium sulfate and calcium oxide.

Table N-1 summarizes all the acid sulfation runs, their reaction variables, the molar percent of sulfation as determined gravimetrically by the above formula, and the molar ratio of water (H_2O) to calcium sulfate of the sulfated products. The sulfation reaction was accelerated with smaller particle size, larger amounts of sulfuric acid, and higher temperature.

The molar ratio of water to calcium sulfate was calculated from the weight loss on heating the solid from 110°C (230°F) to 500°C (932°F) by the following formula:

$$\text{molar ratio of } H_2O/CaSO_4 = \frac{\Delta W_{(110° - 500°C)}/18}{W_{500°C} \times \% \text{ sulfation}/136}$$

No trend had been found to explain the variation of the molar ratios. Thermal gravimetric work indicated that the water content was due to calcium hydroxide, which was probably the intermediate product of the liquid-phase sulfation of calcium oxide.

From Table N-1 it can be noted that more than 90 percent sulfation of the waste stone (equivalent to less than 94 percent sulfation of the sulfatable portion of the stone) can be achieved only when the reaction parameters exceed the following sets of minimal conditions:

Table N-1

A SUMMARY OF THE ACID SULFATION EXPERIMENTS

Run No.[a]	Temp, °C (°F)	Time, hr	Amount of H_2SO_4, times of stoichiometric required	$CaSO_4$ precipitated in	% of sulfation[b]	Molar ratio $H_2O/CaSO_4$[c]	Comment
AS1	85 (185)	6.0	5	H_2SO_4/H_2O	56		
AS2	90 (194)	6.5	3	70% CH_3OH			
				30% H_2SO_4/H_2O	90		
AS3	90 (194)	4.0	3	same as above	92	1.3	
AS4	90 (194)	4.0	2	same	82	0.15	
AS5	90 (194)	6.0	2	same	93	0.63	
AS6	90 (194)	6.0	1.33	same	66	1.12	
AS7	90 (194)	8.0	1.33	same	discarded		
AS8	90 (194)	4.0	2	same	83	0.35	
AS9	90 (194)	2.0	3	same	83	0.57	
AS10	90 (194)	3.0	3	same	74	0.25	
AS11	90 (194)	8.0	1.33	same	70	0.16	
AS12	95 (203)	6.5	1.33	same	79	1.25	
AS13	95 (203)	6.5	0.95	same	58	1.50	
AS14	95 (203)	2.0	3	same	85	0.39	
AS15	95 (203)	4.0	2	same	86	0.55	
AS16	95 (203)	8.0	1.33	same	86	0.49	

Table N-1 (Continued)

Run No.[a]	Temp, °C (°F)	Time, hr	Amount of H_2SO_4 times stoichiometric required	$CaSO_4$ precipitated in	% of sulfation[b]	Molar ratio $H_2O/CaSO_4$[c]	Comment
AS17	95 (203)	7.2	0.95	same	90	0.66	
AS18	95 (203)	7.2	0.95	70% CH_3OH 30% H_2SO_4/H_2O	59	0.67	
AS19	95 (203)	5.0	2	H_2SO_4/H_2O	Slurry used for determination of its settling characteristics; percentage of sulfation not determined	0.51	No CH_3OH added; slurry settling for 5 days and white needle-shaped crystalline formed in water solution
AS20	95 (203)	5.0	2	same as AS18	90	0.16	Same reaction conditions as AS19
AS21[d]	95 (203)	5.0	0.95	same	68	0.5	

[a]CAFB reg. bed stone used (300-3,000μ) in all runs except those specified otherwise.

[b]Percent of sulfation = $\frac{\Delta W/80}{W_2/58} \times 100\%$.

[c]Molar ratio of $H_2O/CaSO_4$ = $\frac{\Delta W_{(110-500°C)}/18}{W_{500°C} \times \%\ \text{sulfation}/136} \times 100\%$.

[d]CAFB No. 7, 500-1000μ.

1. 90°C (194°F), 3 x H_2SO_4, four hours, 3,000μ (A53)
2. 90°C (194°F), 2 x H_2SO_4, 6 hours, 3,000μ (A55)
3. 95°C (194°F), 2 x H_2SO_4, 5 hours, 3,000μ (A520)
4. 95°C (194°F), 0.95 x H_2SO_4, 7.2 hours, 1,000μ (AS17)

Under the first three sets of sulfating conditions, the process suffered from excess sulfuric acid, which not only was uneconomical but also created problems in handling. When 0.95 times stoichiometric sulfuric acid was used with the purpose of providing just enough sulfating agent to result in a near neutral solution (the fourth set of conditions), 90 percent sulfation could be accomplished in 7.2 hours, but only if the spent stone was first crushed to smaller than 1,000 microns (comparing runs 17 and 18).

Although the technical feasibility has been demonstrated in these studies, the economic practicability may only be justified with a marketable gypsum product.

Chemical Analyses

The following chemical analyses were carried out in the Westinghouse laboratory:

- $S^{=}$ in the exit gas -- bubbling the exit gas through a series of acidified iodine traps for hydrogen sulfide and back titrating the unreacted iodine with sodium thiosulfate, using a starch indicator
- $S^{=}$ in the filtrate -- by iodometric method and sodium thiosulfate back titration
- $S^{=}$ in the solid product -- same as above
- $SO_4^{=}$ in the solid product -- gravimetric determination as barium sulfate ($BaSO_4$).
- Ca^{++} in the filtrate -- titration with ethylenediaminetetra-acetic acid solution buffered to pH = 10 and using Eriochrome Black T indicator
- Ca^{++} in the solid -- same as above.

It was found that more than 90 percent of the sulfide in the CAFB regenerator material was collected as gaseous hydrogen sulfide. Very little sulfide was found in the filtrate, and the sulfated solid product contained less than 0.02 percent sulfide. The weight percentages of calcium agreed reasonably with the theoretical value, 29.4 percent for calcium in calcium sulfate.

The starting material (CAFB No. 7 regenerator bed stone), as well as the solid products and filtrates from runs AS5 and AS19, were analyzed by the analytical chemistry staff using emission spectroscopy and wet chemical methods. Table N-2 presents the results.

Rate of Filtration and pH Change

Additional work was carried out to determine the rate of filtration and the pH of the resulting filtrate and washing solutions.

At the termination of the reaction, the slurry mixture was allowed to digest in 70 percent methanol overnight. It was then filtered on S&S filter paper of medium texture (white ribbon) using a Buchner funnel with moderate vacuum. The time required for filtering the mixture, when the thick slurry was all contained within the volume of the Buchner funnel (130 ml), to form a solid cake was eight minutes. In each washing, 130 ml of water at 51°C (123.8°F) was used. The wash water was collected separately and the pH measured. Table N-3 summarizes the time required for and the pH of each washing.

Particle Size Distribution

Two methods were used to study the particle size distribution of the acid sulfated product.

Mechanical Sieving

Standard dry sieving with sieve sizes extending to 37 microns or more commonly 44 microns was not satisfactory in this case. The agglomerates of the recarbonated powder, even though they adhered

Table N-2

CHEMICAL ANALYSES OF Ca^{++}, $S^{=}$, $SO_4^{=}$ AND CATIONIC IMPURITIES FOR ACID SULFATION REACTANT, PRODUCTS, AND FILTRATES

Species	CAFB No. 7 regenerator bed material (wt %)	AS5 solid (wt %)	AS5 filtrate (μg/ml)	AS19 solid (wt %)	AS19 filtrate (μg/ml)
Al	3.4	0.06	40	0.005	13
Ca	69.0	27	8	27	660
Cu	0.2	0.002	8	0.0005	2
Fe	0.9	0.03	250	0.02	13
Mg	1.4	0.001	160	0.0005	13
Mn	0.9	0.0006	40	< 0.0003	2
Na	0.7	0.1	80	0.03	8
Ni	0.1	0.006	80	< 0.003	2
Si	1.4	0.7	660	0.05	21
V	0.9	0.0006	660	0.0005	26
$S^{=}$	1.0	< 0.02	< 5	< 0.02	< 11
$SO_4^{=}$	2.6	63	Excess	63	Excess

Table N-3

RATE OF FILTRATION AND pH OF THE WASHING SOLUTIONS
FOR THE ACID SULFATION REACTION MIXTURE AS8

Filtration with moderate vacuum	Time	pH
Reaction mixture (130 ml)	8.0 min	< 2.0
1st wash with 130 ml H_2O at 51°C (123.8°F)	1.5 min	2.0
2nd wash with 130 ml H_2O at 51°C (123.8°F)	1.0 min	3.0
3rd wash with 130 ml H_2O at 51°C (123.8°F)	50 sec	4.0
4th wash with 130 ml H_2O at 51°C (123.8°F)	35 sec	6.0
5th wash with 130 ml H_2O at 51°C (123.8°F)	20 sec	7.0

loosely together, would not pass through the smallest sieve sizes, thereby distorting the gradation and making it appear coarser than it actually was. A wet sieving procedure in which a stream of water, applied at moderate pressure and used to wash down the putty, was found to be more suitable. The agglomerates then readily broke up into smaller particles and passed through the smaller sieve sizes. The residues on variously sized screens were then dried at 500°C (932°F) and their weights recorded. The solid product (dried at 110°C [230°F]) from AS5 was wet sieved. It was found that more than 99 percent of all particles were smaller than 44 microns.

Microscopy

Ordinary microscope, scanning electron microscopes, and photomicroscopes are often employed for determining particle sizes, the shape and form of the particles, and particle size distribution. Figure N-2a is a typical optical microphotograph at 200X of the wet sulfated material (AS5) showing some agglomerates of smaller particles with dark-field background. The average particle size is seen to be smaller than 10 microns. Figure N-2b shows a typical electron scanning microphotograph of the same sample at 2,000X, revealing the fine microstructure of the acid-sulfated product.

Slurry Settling Characteristics

Acid sulfation runs AS19 and AS20 were carried out with identical conditions. At the end of the five-hour reaction, the mixture of AS20 was allowed to digest in 70 percent methanol for complete precipitation of calcium sulfate, thus making possible the gravimetric determination of the degree of sulfation (90 percent), while the AS19 slurry mixture was transferred to a 500 ml graduated cylinder with enough water added to make the total volume 500 ml. After thoroughly mixing (about 5 minutes shaking), the sedimentation heights were recorded at 0.5-, 1.0-, 1.5-, and 2-minute intervals. Figure N-3 shows the settling curve, from which it is estimated that $t_{1/2} \cong 580$ minutes and $t_f \cong 800$ minutes for half-volume and complete

(a)

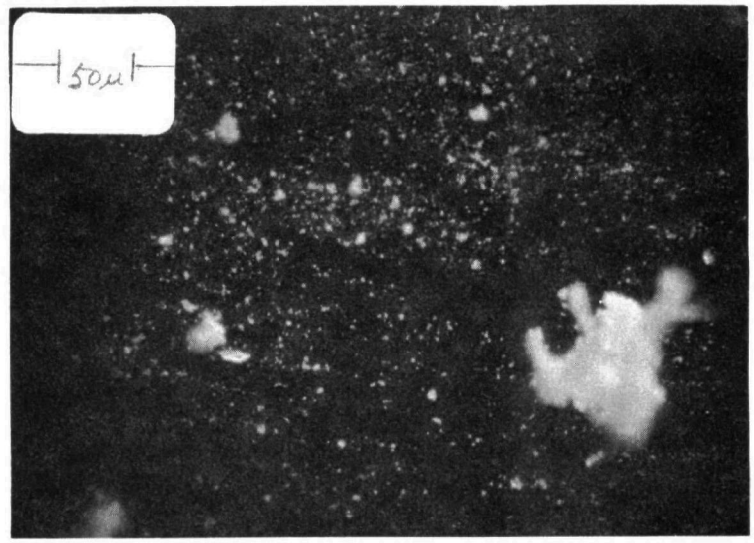

Figure N-2a—An optical microphotograph of the acid-sulfated product from run AS5 (200X).

(b)

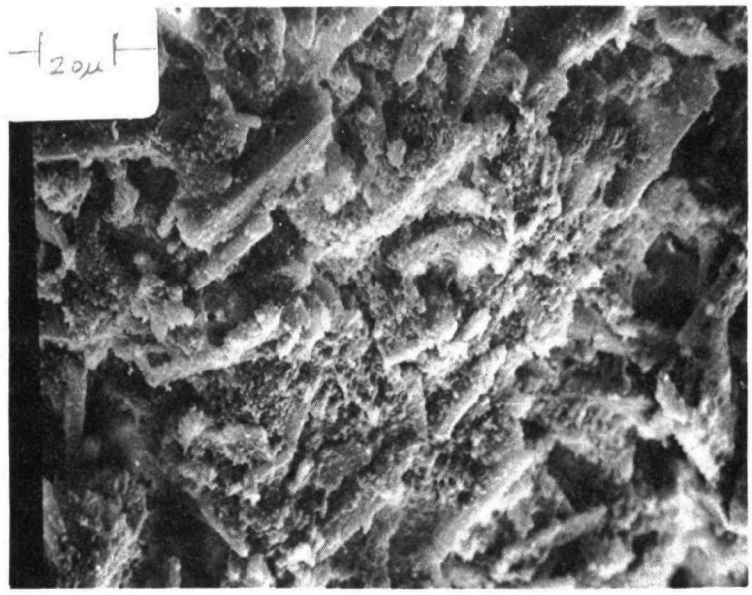

Figure N-2b—An electron scanning microphotograph of the acid-sulfated product from run AS5 (500X).

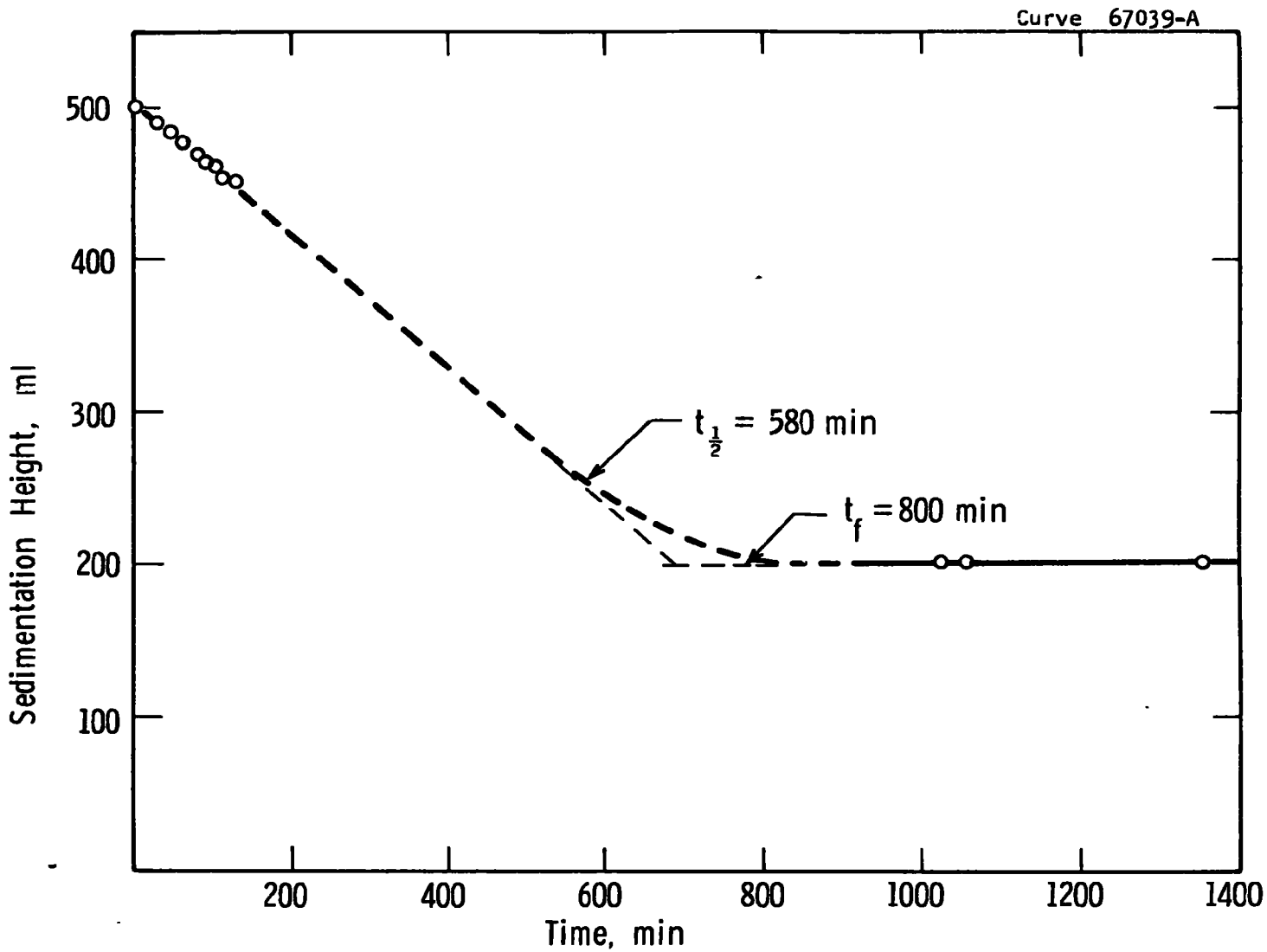

Figure N-3—Slurry settling curve for acid run AS19 immediately following the sulfation reaction

settling, respectively. Since the critical data on Figure N-3 had been missed, it was decided to reshake the slurry after four days and observe the settling behavior once again. Figure N-4 shows the second settling curve. The rate of this settling ($t_{1/2}$ = 5.5 minutes and t_f = 15 minutes) was much faster than that found on Figure N-3. This can be explained by the growth of calcium sulfate particle size during the four days of settling in the dilute sulfuric acid solution.

The precipitate was filtered, washed, and dried after a total of five days in aqueous solution. The final product was white, needle-shaped crystalline material of a much larger particle size than the sulfated products (very fine powder) from the previous runs. Figure N-5 compares some photomicrographs from AS5 and AS19. The digestion of AS19 precipitate slurry in aqueous solution during the five-day settling experiments was most likely responsible for the difference in crystalline form and size. The latter may be marketable.

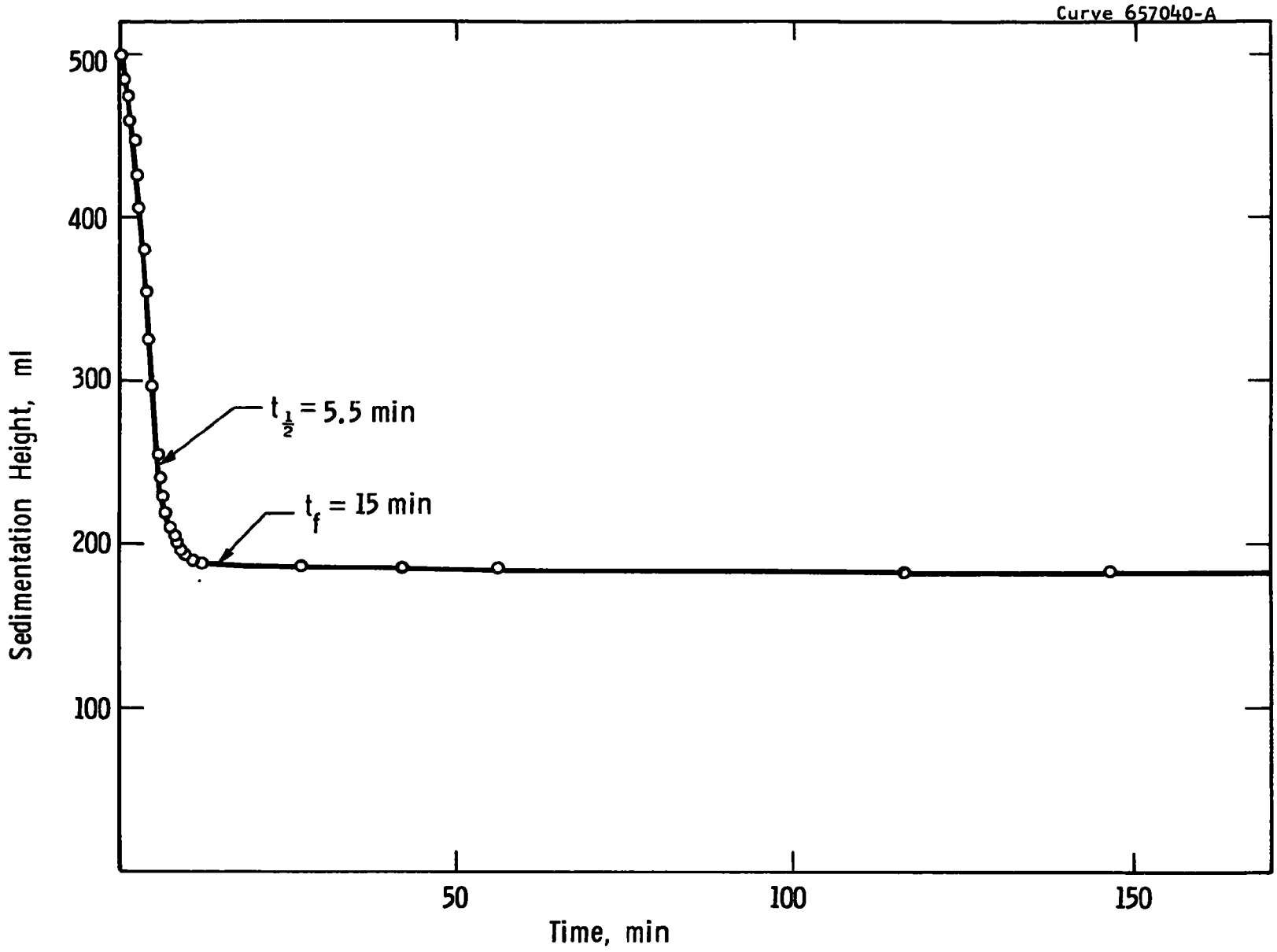

Figure N-4– Slurry settling curve of AS19 after 4-day settling and reshaking to form the new slurry

(a)

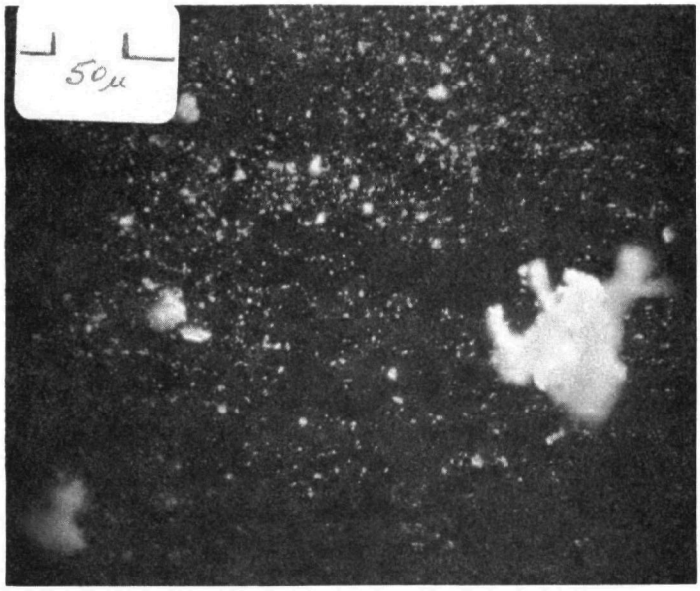

(b)

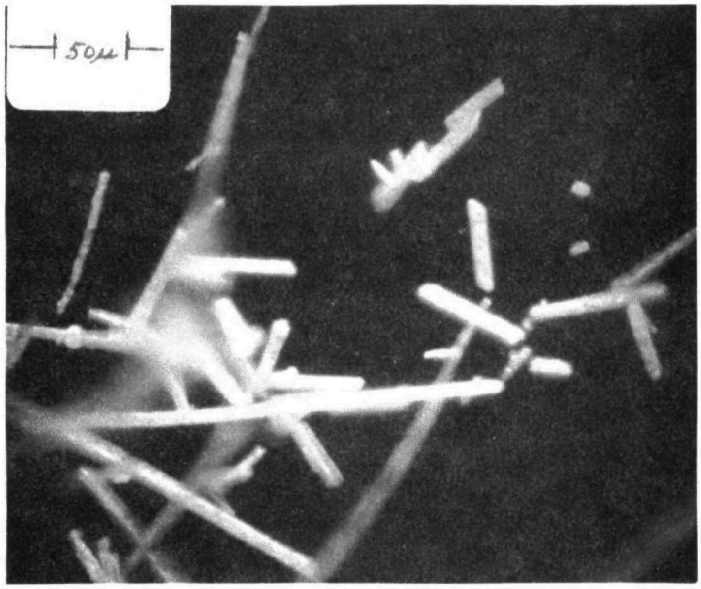

Figure N-5—Comparison of photomicrographs of the acid sulfation products from (a) AS5 and (b) AS19 (200X).

REFERENCES

1. Consolidated Coal Company. Monthly Progress Report No. 3. EPA Contract No. 68-02-1333. September 1973.
2. Esso Research Centre, Abingdon, England. Final Report to U. S. Environmental Protection Agency, February 1974, Contract No. 68-02-03-00.

APPENDIX O

DRY RECARBONATION AND SINTERING EXPERIMENTAL PROGRAM

O

APPENDIX O

DRY RECARBONATION AND SINTERING EXPERIMENTAL PROGRAM

INTRODUCTION

Spent sorbent from the chemically active fluidized bed (CAFB) process may contain considerable quantities of residual calcium oxide (CaO). The residue from the regenerative process may contain 95 percent of the calcium as calcium oxide; in once-through processes the residual calcium oxide decreases as stone utilization in sulfur removal increases.

Although the stone has been rejected from the regenerative cycle in order to allow input of fresh reactive limestone, the activity may be too great to permit disposal of the stone without neutralization of the residual activity of the calcium oxide. Stone and Webster Engineering Corporation (SWEC) indicated the nature of this problem by adding some water to a small pile of the regenerator bed material from run 7. The sample self-heated sufficiently to combust the paper carton holding the stone. Apart from the possibility of burning organic material in contact with the waste and damaging plant and animal tissue, the material undergoes substantial swelling on absorption of and reaction with water, rendering it unsuitable for landfill.

Two processes to overcome this problem were investigated. In the first process, high-temperature recarbonation of the sorbent, using flue gas, was considered. In the second process dead-burning the material by sintering it at high temperature was investigated.

SUMMARY OF HIGH-TEMPERATURE RECARBONATION

To dispose of spent sorbent as calcium carbonate ($CaCO_3$), calcium oxide recarbonation at high temperatures (700 to 800°C/1292 to 1472°F) was studied. The results may be summarized as follows:

- Regenerator bed material cannot be substantially recarbonated, because exposure to the relatively high temperature in the regenerator (1080°C/1976°F) probably sinters the calcium oxide.
- Once-through material can be recarbonated after oxidation of the calcium sulfide fraction.
- The optimum process conditions projected from the thermogravimetric (TG) data are (assuming atmospheric pressure and 14 percent carbon dioxide and 3 percent water in nitrogen as recarbonation gas):
  - 725°C (1337°F)
  - Fine particles (about 74 μm)
  - Approximately twice stoichiometric carbon dioxide
  - Fluidized bed gas residence time approximately 6 seconds (based on superficial gas velocity).

SUMMARY OF STONE SINTERING

To dispose of spent sorbent as calcium oxide, the possibility of deactivating the lime by subjecting it to a high-temperature sintering process was briefly investigated. The results showed that sintering is a feasible method for disposal-processing of material from a regenerative CAFB plant. The process would produce a dry, inactive, nonpowdered solid; it would be used in conjunction with a process for recovery of sulfur dioxide from the regenerator off-gas. Activity tests during hydration showed that sintering for two hours at 1400°C (2552°F) almost totally prevents the hydration. Further tests are required to establish the extent of emissions of trace elements from the stone during sintering and the rate at which ions are leached from the solid during subsequent weathering of the stone.

CALCIUM OXIDE RECARBONATION

Recarbonation experiments in the TG apparatus were carried out on three materials (See Table O-1):

Table O-1
TG RUNS FOR SPENT SORBENT DISPOSAL

TG No.	Solid	Recarbonation of residual CaO			
		Pretreatment	Reaction	Temperature, °C (°F)	Result
248	CAFB 7 regenerator bed	Heated to 500°C (932°F) in N_2	Air oxidation and recarbonation	0-1100 (32-2012)	Incomplete recarbonation over 12 hours. Sulfide oxided corresponded to 2% wt. of stone.
249	CAFB 7 regenerator material	Taken to 800°C (1472°F) in N_2	(i) Air oxidation (ii) Recarbonation	800-1080 (1472-1976) 700 (1292)	(i) Sulfide oxidized corresponded to 0.9% wt of stone (ii) 11% of CaO recarbonated in 16.4 hours.
256	Denbighshire limestone	Calcined in N_2	Recarbonation in 13% CO_2	650-780 (1202-1436)	
4	Powdered $CaCO_3$	Calcined in Argon at 10K/min to 780°C (1436°F)	Recarbonation in 100% CO_2	750 (1382)	91% $CaCO_3$ in 200 minutes
283	CAFB 7 regenerator bed material ground < 74 μm	Air oxidized at 750°C (1382°F) and at 800°C (1472°F)	Recarbonation in 17% CO_2/N_2	Scan 800-700-800 (1472-1292-1472)	20% $CaCO_3$ formed in 200 minutes. ESTIMATED MAXIMUM RATE AT 750°C (1382°F)
285	Limestone 1359 800-2000 μm	Calcined in 17% CO_2/N_2 at 850°C (1562°F)	Recarbonation in 17% CO_2/N_2	750 (1382)	70% $CaCO_3$ formed
286	Limestone 1359 < 74 μm	"	"	750 (1382)	80% $CaCO_3$ (285 minutes)
287	"	Calcined in 17% CO_2/N_2 at 871°C, (1660°F) sintered 70 minutes at 1100°C (2012°F)		750 (1382)	34.5% $CaCO_3$ in 91 minutes
288	"	Calcined in 14% CO_2/N_2 at 871°C (1600°F)	Recarbonation 14.5% CO_2/3% H_2O	750 (1382)	%CaO recarbonated: 85% in 70 minutes
289	"	Calcined at 871°C (1600°F): sulfided 0.5% H_2S in fuel gas; oxidized, air, 800°C (1472°F)	Recarbonation: 14.5% CO_2/3% H_2O after sulfide oxidation	750 (1382)	Sulfidation to 31.4 % CaS % CaS oxidized = 50.2% % residual CaO recarbonated = 77.21% Wt% CaS 11.90 $CaSO_4$ 22.50 $CaCO_3$ 55.8 CaO 9.22 imp .58
290	Limestone 1359 420-500 μm	Calcined, sulfided, oxidized (3X) recarbonated	Recarbonation: 14.5% CO_2/3% H_2O after multiple sulfide oxidation	750 (1382)	Sulfidation to 30.3% CaS % CaS oxidized 80.6% % residual CaO recarbonated = 67%

- Regenerator bed material from run 7 on the Esso Research Centre, Abingdon, England (Esso) pilot plant
- Limestone and dolomite
- Sulfided/oxidized limestone.

Regenerator Bed Material

The recarbonation of residual calcium oxide in CAFB regenerator bed material from run 7 was attempted. Runs 248 and 249 showed that about 10 percent of the residual calcium was recarbonated in a crushed sample at 700°C (1292°F) in a 10 percent carbon dioxide/air mixture over a 16-hour exposure. Reference to an earlier run on calcined powdered calcium carbonate reagent (TG4) showed that 91 percent recarbonation could be achieved in 200 minutes in pure carbon dioxide at 750°C (1382°F).

A sample of run 7 material was ground to less than 74 μm diameter particle size, the air oxidized to convert residual sulfide to sulfate, and the recarbonated in 17 percent carbon dioxide in nitrogen. The temperature was raised through the interval (700 to 800°C/1292 to 1472°F) to find the maximum reaction rate. After 200 minutes, 20 percent calcium carbonate had formed, and the maximum recarbonation rate was estimated to occur at 750°C (1382°F), in agreement with other studies.[1] It was concluded that recarbonation of the regenerator bed material at high temperature is too slow to permit a feasible process.

Limestone and Dolomite

The effects of stone particle size, stone sintering, and water vapor on the recarbonation reaction were tested. Limestone 1359, < 74 μm, was calcined by heating it to 870°C (1598°F) in 14 percent carbon dioxide in nitrogen and then recarbonated at 750°C (1382°F) in the same gas, at atmospheric pressure, in TG 286. The recarbonation was initially extremely rapid, reaching 60 percent of theoretical within four minutes, as shown in Figure 0-1. The rate slackened appreciably, however, and settled into a slow phase. Here the fraction reacted depended linearly on the

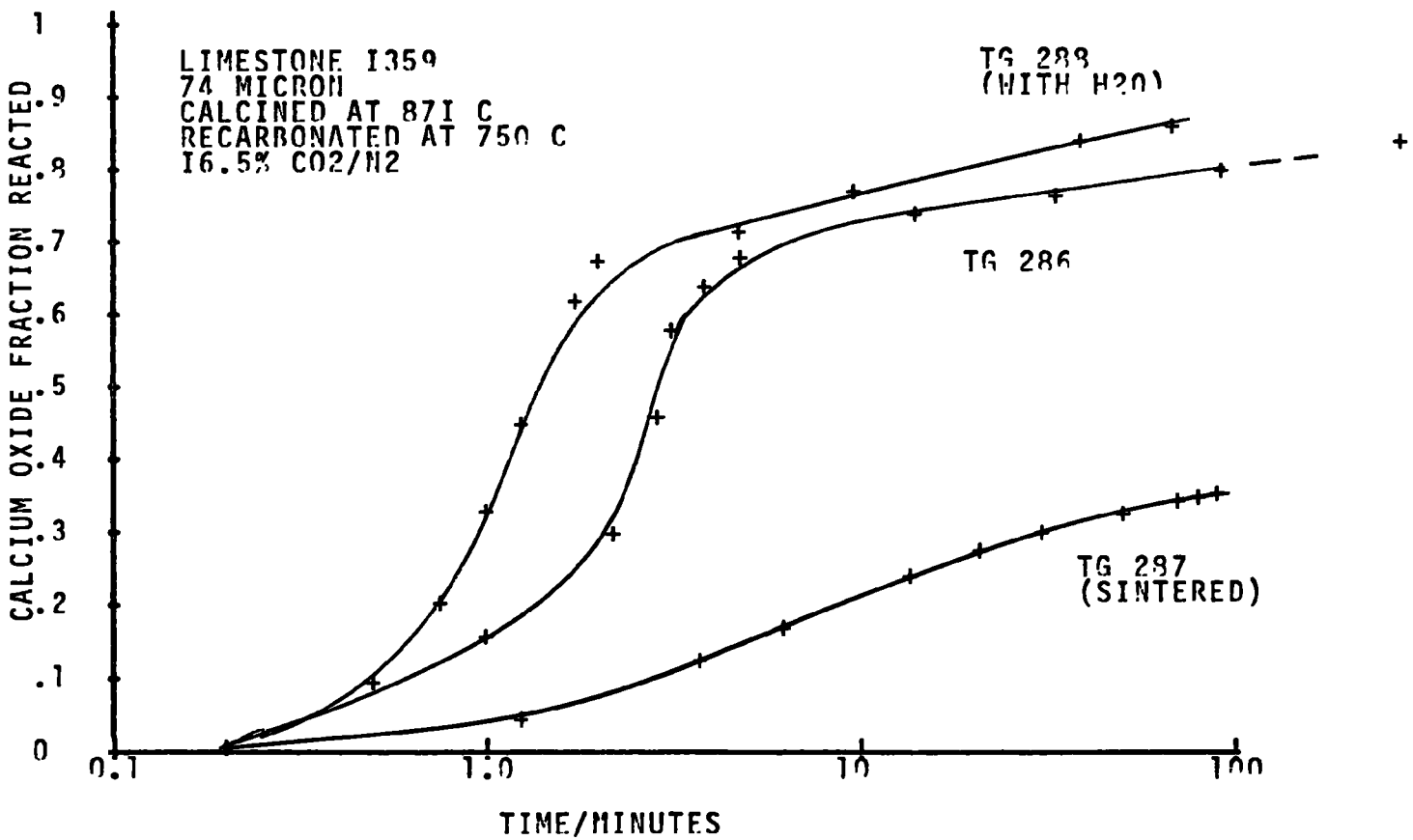

FIGURE 0-I- RECARBONATION OF CALCIUM OXIDE

logarithm of the elapsed time. Projection of the data in the range 10 to 50 minutes up to 300 minutes accurately predicted the observed extent of reaction (easily within 5 percent of the actual value). These data indicate that 80 percent recarbonation is achieved with a residence time of the order of two hours in excess carbon dioxide, but 90 percent conversion would require about two days (44 hours).

Two additional runs were carried out on limestone 1359 (the starting material for run 7), at 750°C (1382°F) and the conversion noted was 70 percent calcium carbonate (< 420 μm particles) and 82.5 percent calcium carbonate (< 74 μm particles).

Since the recarbonation of regenerator bed material (which has been recycled between fluidized beds at 870 and 1080°C/1598 and 1976°F) proceeded much more slowly than in the case of limestone calcined at 871°C (1600°F), the effect of sintering was briefly investigated. In TG 287, limestone 1359, < 74 μm was calcined in 17 percent carbon dioxide in nitrogen and then heated in nitrogen to 1100°C (2012°F) and held at that temperature for 70 minutes. The solid was then cooled to 750°C (1382°F) and recarbonated in 17 percent carbon dioxide in nitrogen. As Figure 0-1 shows, conversion to carbonate was slow and incomplete (34.5 percent calcium carbonate in 91 minutes), indicating that the high-temperature exposure had produced a stone of similar activity to that obtained from the CAFB regenerator.

The effect of adding water vapor to the recarbonation gas was tested in TG 288 after a preliminary test had shown that water vapor caused a marked acceleration in reaction rate. The course of reaction as shown in Figure 0-1 indicated that, while the rate was much faster initially, the increased extent of recarbonation was about 6 percent once the slow diffusion-controlled reaction rate regime had been established.

Oxidized Sulfided Limestone

In order to determine the interaction between oxidation of calcium sulfide to calcium sulfate and recarbonation of the residual calcium oxide, two experiments were performed.

In the first experiment, limestone 1359 was sulfided to 31 percent calcium sulfide, and the stone was then oxidized in air at 800°C (1472°F).

Fifty percent conversion of the sulfide to sulfate was achieved. The stone was then cooled, ground to less than 74 μm and recarbonated at 750°C (1382°F), with 14.1 percent carbon dioxide in nitrogen saturated with water at 20°C (68°F). Reaction was continued to 77 percent conversion of the residual calcium oxide. It is interesting to note that the calcium sulfate loading on the stone had only a minor effect on the rate of recarbonation. The reaction rate during recarbonation is shown in Figure O-2 and was used to outline the required dimensions for a fluidized bed recarbonator.

In the second trial of the two stages, an attempt was made to increase the extent of conversion of the calcium sulfide by successive stages of cooling, grinding, reheating, and oxidizing. After the third oxidation, when no further reaction was apparent, the stone was recarbonated, and 67 percent of the residual calcium oxide was converted to calcium carbonate.

It can be concluded that a combined sulfide oxidation/oxide recarbonation process would yield a finely ground stone composed approximately of:

Component	% by weight
CaS	12
$CaSO_4$	22
$CaCO_3$	56
CaO	10

Further development of this process would require leaching tests on larger samples than are produced in TG experiments. The purpose of the leaching experiments would be to determine the rate of release of sulfur from the residual sulfide and the overall mechanical stability of the spent sorbent.

Reactor Design

The data from TG 289 were plotted in the form rate of recarbonation versus extent of recarbonation. As Figure O-2 shows, the rate was a

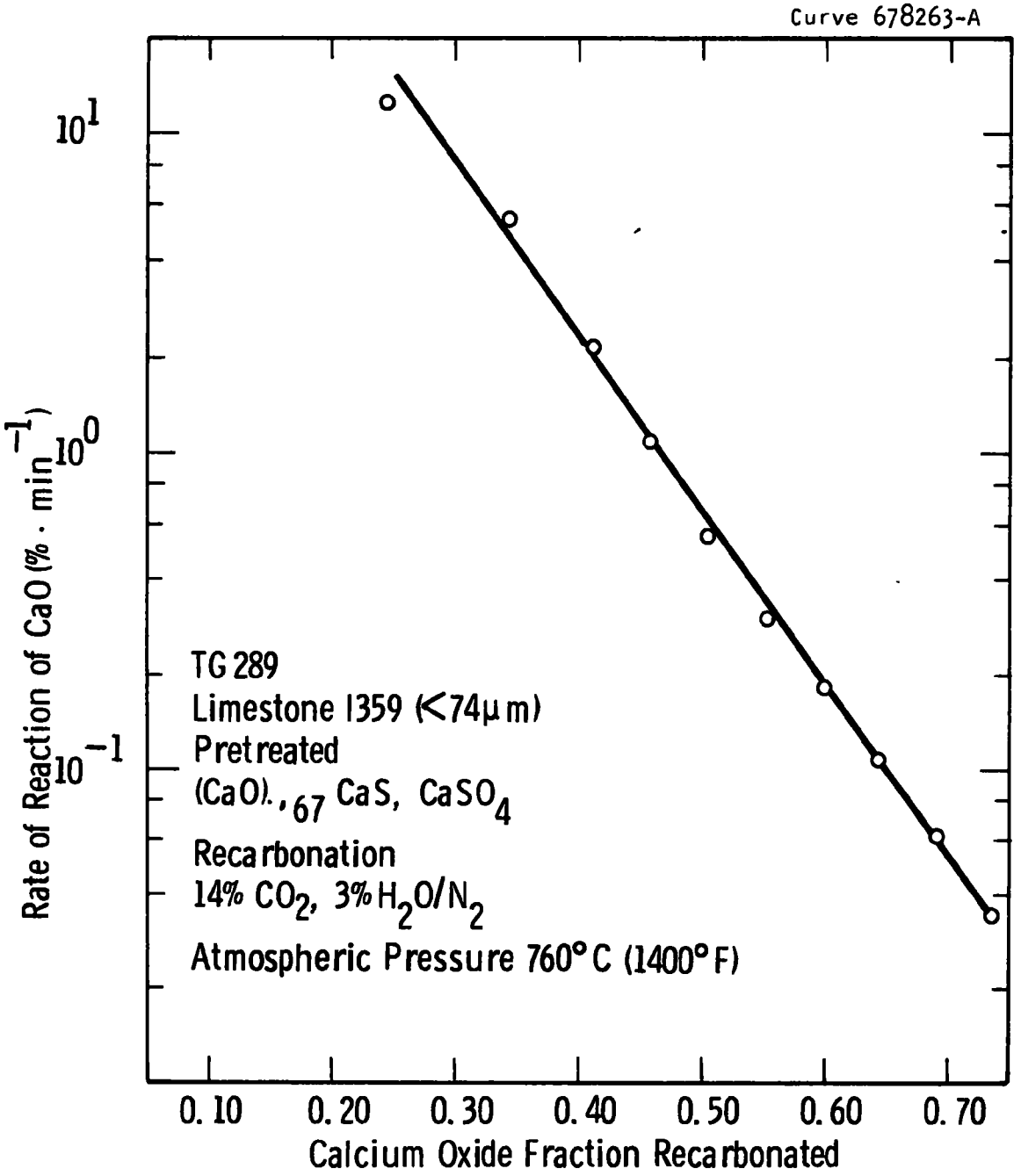

Figure O-2—Rate of recarbonation of residual CaO in spent sorbent

logarithmic function of the extent of the reaction, μ, between 30 and 70 percent recarbonation:

$$k = e^{[5.8736 - 12.593\ \mu]} .$$

Using this rate, the retention of carbon dioxide in a fluidized bed of calcium oxide particles smaller than 74 μm (delivered at a rate of 1.24 x 10^3 kg/68.1 lb moles of calcium per hour) was calculated, assuming first-order kinetics for gas absorption by the solid. From the carbon dioxide retention, the required feed rate of carbon dioxide to the bed was calculated, as shown in Figure O-3. Up to 50 percent of the calcium oxide can be recarbonated with virtually total retention of the carbon dioxide in the bed. The extent of recarbonation for a 1 times stoichiometric feed to the bed is 62.5 percent. To achieve 80 percent recarbonation, 8 times stoichiometric is required.

The effect of lowering the bed height is shown in Figure O-4. In the 60 to 70 percent recarbonation range, halving the bed height reduces the extent of recarbonation by about 5 percent at a given carbon dioxide feed rate.

The bed area required at 62.5 percent conversion is 4.57 m (15 ft) in diameter, assuming the recarbonation gas is delivered at 128 kPa (18.7 lb/in^2); the solids residence time is 16.87 hours.

STONE SINTERING

Since lime is normally produced from limestone as a chemically active material for hydration to calcium hydroxide, the calcination process is usually carefully controlled to ensure maximum stone activity. It is known that calcination at temperatures above 1000°C (1832°F) may lead to reduced activity of the product lime. Several studies have shown that the loss in chemical activity is paralleled by a consolidation of the pore structure in the lime and a growth in the crystallite size which reduces the surface area of the solid. These changes are harnessed in the high-temperature calcination and sintering of dolomite to produce

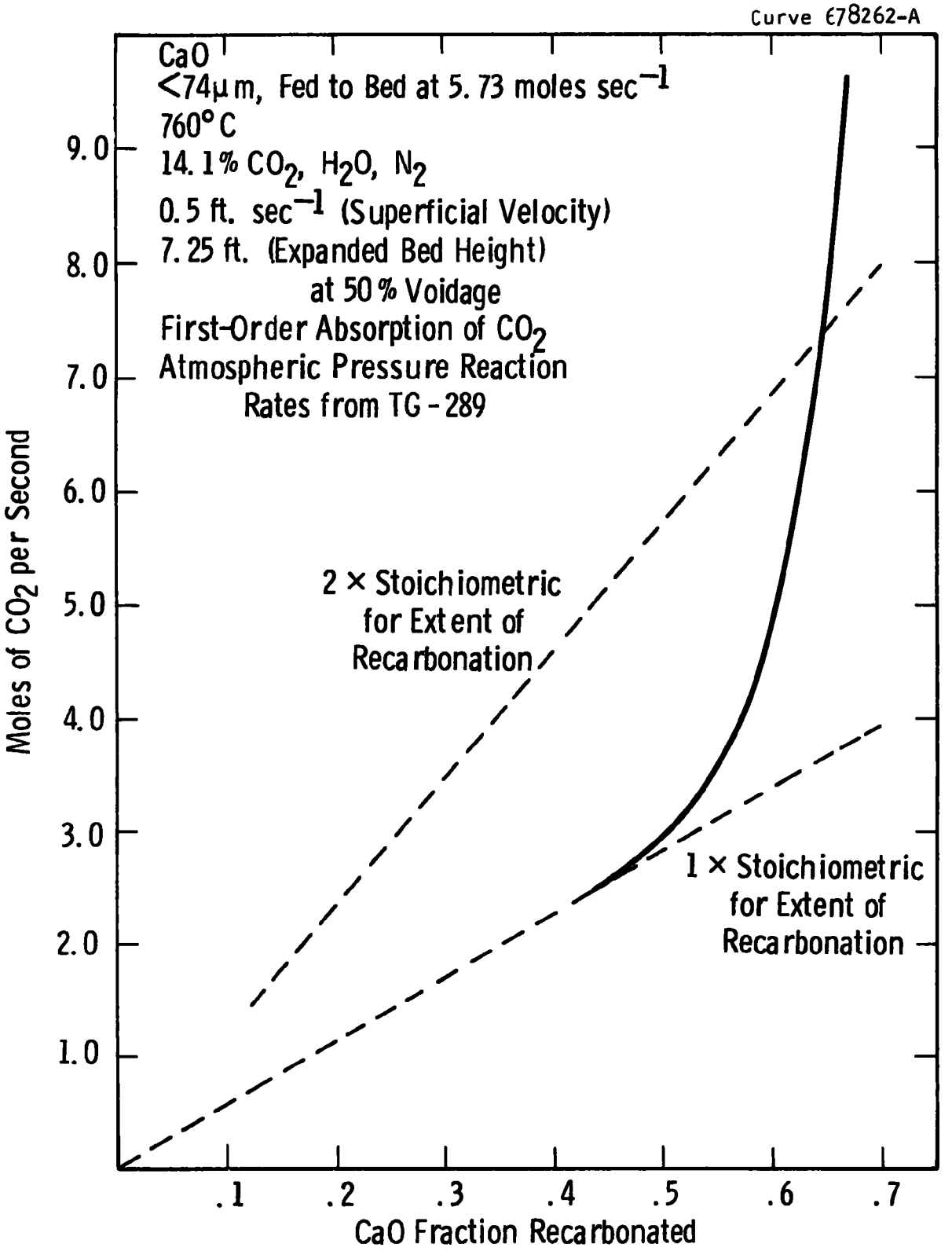

Figure 0-3—CO_2 requirement for CaO recarbonation

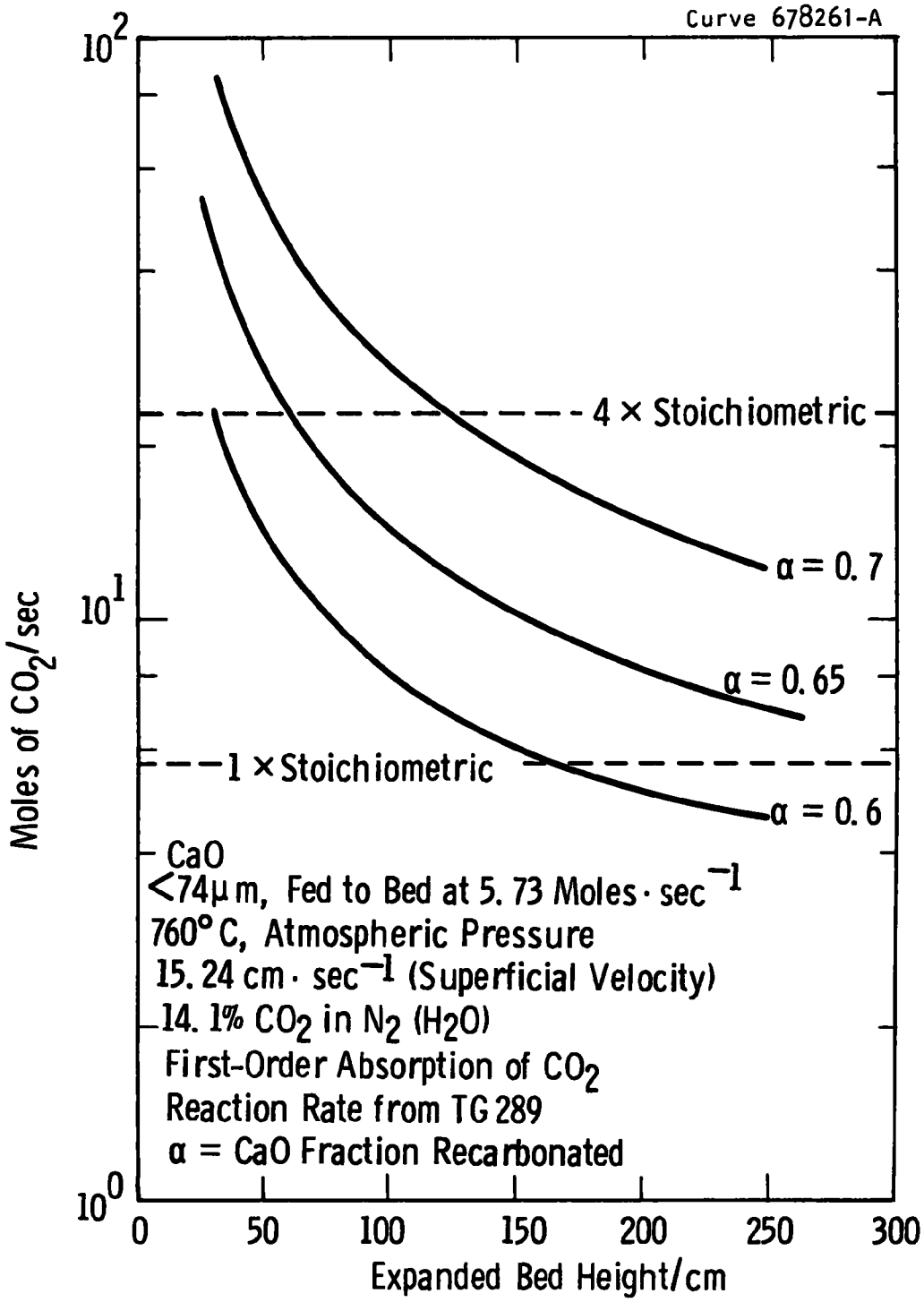

Figure 0-4—Effect of bed height on CO_2 requirement for recarbonation of CaO

dead-burned dolomite which is used as an inert refractory lining for high-temperature process vessels. The idea that the CAFB spent sorbent (which is already partly deactivated by exposure in the regenerator to a temperature of 1080°C/1976°F), could be dead-burned has an immediate attraction. Because sintering involves an almost homogeneous reaction throughout the solid particle, it does not depend on gas/solid contact to achieve some target for conversion of the solid. It thus differs fundamentally from the dry sulfation or oxidation/recarbonation processes.

The process is primarily intended to apply to spent sorbent from a regenerative process with a low-sulfur loading (< 1 wt % sulfur). While the sulfur content would certainly be liberated as sulfur dioxide, the quantity involved would not be large and could be recycled into the gasifier. In a once-through process, the procedure would generate a high concentration of sulfur dioxide, depending on the gas throughput required to heat the stone to the sintering temperature.

Experimental Work

Two phases of experimental tests on spent sorbent sintering were carried out. In the first phase tests designed to measure the activity of the stone during hydration were investigated. In the second phase a set of CAFB regenerator bed material samples were sintered at temperatures from 1200 to 1550°C (2192 to 2732°F) and tested for residual activity during hydration.

Preliminary experiments are listed in Table O-2. The procedure was to add a known weight of the calcium oxide sample to 20 ml of deionized water in a test tube held in a thermos flask containing water at room temperature. The temperature difference between the slaking lime/water mixture, agitated with a magnetic stirrer, and a reference thermocouple held in another thermos filled with water, was monitored using Cr/Al thermocouples connected with a sensitive amplifying voltmeter (Flukemeter) and output to a chart recorder. The temperature difference slowly rose to a maximum over a 15-minute period. Table O-2 shows the maximum temperature rise associated with hydration of CAFB run 7 regenerator bed material before

Table 0-2

EXOTHERMIC HYDRATION OF WASTE LIME IN 20 ml WATER

Experiment No.	Sample	Pretreatment	Temperature recorded	ΔT_{max} / C	Time to ΔT_{max} / Min.	ΔT(C) per gm mat'l
CAL 1	CAFB run 7 regenerator bed material	-	Thermometer	12.7	15.5	4.12
CAL 2	CAFB run 7 regenerator bed material	-	Thermocouple	8.5	13.0	4.3
CAL 3	CAFB run 7 regenerator bed material	-	Thermocouple	13.89	12.8	4.6
CAL 4	CAFB run 7 regenerator bed material	Sintered 2 hrs at 1450°C (2642°F)	Thermocouple	2.56	60.	0.84
CAL 5	Raw Denbighshire limestone		Thermocouple	None	-	-
CAL 7	KOH pellets		Thermocouple	14.6	2.	5.82

and after sintering in air at 1450°C (2642°F). Sintering apparently decreased activity by a factor of five. As a measure of the heat liberated, two experiments were carried out in which KOH pellets were dissolved in 20 ml deionized water. These results indicated a heat capacity for the system water + thermocouple + stirrer of 167 J/K (∿ 40 cal/K) or < 10 percent of the calcium oxide in the sample sintered to 1450°C (2642°F) available for hydration.

Temperature rises measured by Murray[2] in lime-slaking with seven parts of water by weight to one of quicklime show that rises of ∿ 3 °C (37.4°F) can be expected for material calcined for 67 minutes at 1372°C (2500°F).

The second stage of preliminary experimentation consisted of attempts to establish a base-line against which small temperature rises could be measured.

An ice bath was chosen as the most convenient starting point, and the temperature difference between the ice bath and 10 ml of water held in a test tube in the ice bath was recorded for several overnight runs. The 10 ml of water was continuously agitated using a magnetic stirrer. It was found that readings taken every hour over a ten-hour period were remarkably constant, indicating a temperature difference of 0.196 ± .006°C (0.353 ± 0.011°F). While this should give sufficient sensitivity to measure a very slight degree of reaction, the experiments also have to be conducted at higher temperatures, since lime hydrates more extensively the higher the temperature of the reaction.

Experimentation was continued with a change in procedure: the addition of water to a small quantity (∿ 1.5 gm) of CAFB material in a test tube in a water bath. The thermocouple was positioned in the solid at approximately the center of the end hemisphere of the test tube. The quantity of water added was varied from 0.2 ml up. It was found that temperature rises of 182°C (363°F) could be achieved on addition of ∿ 1.6 ml water. On passing through the 100°C (212°F) mark, there was always a halt in the temperature rise, so the water addition was reduced to 0.2 ml in order to keep the temperature maximum below 100°C (212°F).

A set of CAFB samples from the regenerator bed were then sintered in a platinum boat in a muffle furnace under flowing nitrogen. Temperature was attained within 2.5 hours, held for one hour, and cooled to about 600°C (1112°F) over a four-hour period. The samples were then transferred to desiccators. Testing the samples by addition of 0.2 ml of water gave the results shown in Table O-3. There is no significance in the difference recorded for the samples in the range 1400 to 1550°C (2552 to 2822°F).

Table O-3
TEMPERATURE RISE ON HYDRATION OF SPENT SORBENT
CAFB RUN 7 REGENERATOR BED MATERIAL

Sintering temperature, °C (°F)	Temperature rise on hydration
No treatment	77.5 (171)
1200 (2192)	28.5 (83)
1400 (2552)	0.38 (100)
1500 (2732)	0.36 (0.97)
1550 (2822)	0.24 (0.75)

For the purposes of hydration, it can be assumed that sintering at 1400°C (2552°F) is sufficiently high a temperature to render the spent stone inert. The next phase of technical feasibility studies requires leaching tests to determine the environmental impact of trace-element emissions from the stone and to determine the long-term stability of the sintered material. Further work is proceeding in these areas.

REFERENCES

1. Drehmel, D.C. Test to Evaluate Reactivity of Boiler-calcined Limestone Used in Air Pollution Control. Ceramic Bulletin, 50, 666. 1971.
2. Murray, J.A., H.C. Fischer, and D.W. Sabean. The Effect of Lime and Temperature of Burning on the Properties of Quicklime Prepared from Calcite. Proc A.S.T.M. 1263, 1951.

APPENDIX P

SULFUR RECOVERY
SYSTEM DESIGN AND EVALUATION

P

APPENDIX P

SULFUR RECOVERY SYSTEM DESIGN AND EVALUATION

Sulfur can be recovered from the sulfur dioxide (SO_2)-rich off-gas from the regenerator in a number of forms: for example, sulfur, sulfuric acid, liquid sulfur dioxide, gypsum. Sulfur was selected as the preferred product on the basis of an assessment of the alternatives presented in Appendix S. The economics of sulfuric acid production from the off-gas was projected to compare with the sulfur production costs.

PROCESS OPTIONS

Several processes are available for converting sulfur dioxide to sulfur.[1-8] Allied Chemical has developed a process for catalytic reduction of sulfur dioxide to elemental sulfur using natural gas as the reductant. This process has been and will be used to reduce sulfur dioxide to sulfur from smelter plant off-gas and power plant stack-gas cleaning process off-gases. The process consists of three main steps: gas purification, sulfur dioxide reduction, and sulfur recovery. The gas purification essentially removes excess water vapor as well as gaseous and solid impurities. In the reduction step, nearly half of the sulfur dioxide is converted to elemental sulfur by reaction with methane, along with simultaneous formation of hydrogen sulfide (H_2S). In the sulfur recovery step, sulfur formed in the reduction system is condensed out of the gas, and the remaining sulfur dioxide and hydrogen sulfide are reacted in a multistage Claus conversion system to produce additional sulfur.

The citrate system (Bureau of Mines) is another system for removing sulfur dioxide and producing sulfur. Prolonged pilot tests have shown that the Bureau of Mine's buffered sulfur dioxide-hydrogen sulfide process is capable of removing 95 to 99 percent of the sulfur dioxide

remaining sulfur values not converted to elemental sulfur in the off-gas treatment step. These gases are recycled to the front of the adsorber where the sulfur values are adsorbed on the char. The carbon dioxide, water vapor, and nitrogen are nonreactive materials at 170°C (350°F) and therefore pass through the adsorber bed.

While the conversion of the concentrated sulfur dioxide to sulfur offers the potential for a simplified process, it has not been demonstrated on a commercial scale. The Bureau of Mines(Morgantown) and Foster Wheeler are investigating the use of coal to convert sulfur dioxide to sulfur. Their work is also in the development stage.

DEMONSTRATION PLANT

Technical and economic information was obtained on the recovery of sulfur from the sulfur dioxide-rich off-gas produced in the regenerative mode of operation. Several processes were considered;[1-8] the Allied Chemical direct reduction technology, however, is the only compatible process which has been commercially demonstrated. Allied Chemical Corporation provided the following information on its sulfur dioxide reduction technology applied to the 50 MW fluidized bed oil gasification/desulfurization demonstration plant:

- Preliminary flow diagrams with utility and raw material requirements and effluent streams
- Budget cost estimate -- capital and operating -- for the sulfur recovery plant. Boundary conditions: sulfur-containing gas received from waste heat boiler, incinerated tail gas, sulfur shipment facilities
- Space requirements for gas cleaning, sulfur recovery, incineration, sulfur storage, sulfur transport
- Operating constraints, for example start-up, shutdown, load follow.

Westinghouse specified regenerator performance and a sulfur balance for their technical and economic study which is summarized in Table P-1. The report on the sulfur recovery plant is attached. Allied Chemical's

TABLE P-1

DEMONSTRATION PLANT
(Projected Regenerator Performance Data)

Item	Comment
Component	Concentration (% by vol.)
SO_2	8 (6-10% range)
CO_2	4
H_2O	2
O_2	< 0.1
N_2	85.9-86
Sulfur Dioxide Output	180-725 kg/hr (400-1600 lb/hr)[a] (4/1 turndown)
Sulfur	90-360 kg/hr (200-800 lb/hr)
Exit Gas Temperature	1070°C (1960°F)
Exit Gas Particulate Loading	.05-.09 grams/m^3 (0.02-0.04 gr/scf) might be achieved; 2.3-4.6 grams/m^3 (1 to 2 gr/scf) may be emitted depending on the particulate removal following the regenerator.
Gas Pressure	Controlled pressure close to atmospheric (estimated to be 130 to 250 mm H_2O or 5 to 10 inches H_2O)

[a]Daily sulfur to sulfur recovery plant may range from 8.7 Mg/day (9.6 tons/day) to zero; typical sulfur balance around the plant for regenerative operation is: 380 kg sulfur/hr (840 lb sulfur/hr) input from oil 12,700 kg/hr (28,000 lb/hr) 9.1 kg sulfur/hr (20 lb sulfur/hr) leaves with spent stone, 350 kg sulfur/hr (780 lb sulfur/hr) goes with the regenerator off-gas and 18 kg sulfur/hr (40 lb sulfur/hr) leaves in the stack gas.

estimate for the direct cost is $2 million. Westinghouse estimates the total installed cost, including indirect costs, will be approximately $3 million or $60/kw for the 50 MW demonstration plant. The cost of the sulfur recovery system can be projected based on a 0.5 exponent with sulfur dioxide concentration and capacity. Allied Chemical personnel considered this a reasonable basis for cost projection up to the equivalent of ∿ 600 MW plant size.

SULFUR ACID PLANT

Costs were projected for a sulfuric acid plant in order to compare them with conversion to sulfur. These projections, based on data published in June of 1969 by Lurgi Corporation in Chemical Engineering Magazine, indicated that a "battery limits" investment of about $1 million in 1974 would be required for the production of nearly 9072 Mg (10,000 tons) per year of 98% sulfuric acid from sulfur dioxide-containing gas. When off sites investment for the supply of process water, cooling water, and electric power are added to the "battery limits" investment, and costs for piping the dilute sulfur dioxide stream to the acid plant are considered, the total installed cost would approach $1.5 million for a sulfuric acid plant. This acid plant cost, when reviewed briefly by Allied Chemical personnel, was considered to be a minimum cost. The size exponent for capacity of sulfuric acid plants was considered by Lurgi to be 0.65.

REFERENCES

1. Bischaff, W.F., FW - BF Dry Adsorption System for Flue Gas Clean-Up. U.S. Environmental Protection Agency Flue Gas Desulfurization Symposium, May 1973.
2. Steiner, P., H. Tuntgen, and K. Knoblanch. Process for Removal and Reduction of Sulfur Dioxides from Polluted Gas Streams. Presented at the 16th National Meeting of the American Chemical Society.
3. Rosenbaum, J.B., et al. Sulfur Dioxide Emission Control by Hydrogen Sulfide Reaction in Aqueous Solution. The Citrate System. Bureau of Mines Report No. 7774, 1973.
4. Wright, J.P. Reduction of Stack Gas SO_2 to Elemental Sulfur. The Journal of World Sulfur, May/June 1972.
5. Hunter, W.D. and J.P. Wright. SO_2 Converted to Sulfur in Stack-gas Cleanup Route. Chemical Engineering, Oct. 2, 1972.
6. Haas, L.A. Sulfur Dioxide: Its Chemistry as Related to Methods for Removing It from Waste Gases. Bureau of Mines Report No. 8608, 1973.
7. Hunter, W. D. and A. W. Michener. New Elemental Sulphur Recovery System Establishes Ability to Handle Roaster Gases. Engineering and Mining Journal. 1972.
8. Hunter, W. D. Application of SO_2 Reduction in Stack Gas Desulfurization Systems. Allied Chemical. (Flue Gas Desulfurization Symposium. New Orleans. May 14-17, 1973.) p. 15.

ALLIED CHEMICAL SO_2 REDUCTION TECHNOLOGY

APPLICATION IN WESTINGHOUSE ELECTRIC CORPORATION

OIL GASIFICATION DEMONSTRATION PROGRAM

ALLIED CHEMICAL CORPORATION
INDUSTRIAL CHEMICALS DIVISION
SULFUR POLLUTION CONTROL SERVICES
P. O. BOX 1139R
MORRISTOWN, NEW JERSEY 07960

January 15, 1974

INTRODUCTION

Presented herein is technical and economic information pertaining to Allied Chemical Corporation technology for direct reduction of SO_2 gas to elemental sulfur. The basis for this presentation is the letter from Westinghouse Electric Corporation's Dr. D. L. Keairns to Mr. W. D. Hunter, Jr., dated November 19, 1973.

This information is intended for use by Westinghouse in connection with preparation of preliminary design and cost estimates (Phase IA) of a fluidized bed oil gasification system for retrofit on the 50 MW unit #12 at the Manchester Street Plant of New England Electric System.

The SO_2 reduction system in this application will recover sulfur dioxide, in the form of elemental sulfur, from the off-gas produced in the calcium sulfide regenerator in the oil gasification system.

PROCESS DESCRIPTION

In the application of Allied Chemical's SO_2 reduction technology to various emission sources, one requirement is that the entering gas stream must be free of all particulate matter and sulfuric acid mist. Sulfuric acid mist formation generally occurs when a process gas stream contains both SO_3 and water vapor. Some SO_3 is formed under certain conditions when oxygen is present in the SO_2 containing gases. The conventional method of eliminating particulates and acid mist is by wet scrubbing. This adds to the cost of the overall plant and creates another problem in the disposal (neutralization) of a weak sulfuric acid. A favorable feature of the Westinghouse oil gasification process is that the off-gases from the CaS regenerator contain very little oxygen, and consequently, the formation of SO_3 by the oxidation of SO_2 at high temperatures is not expected. This offers the possibility of incorporating bag filters to achieve efficient particulate removal in place of a wet purification system once the gases are cooled to the proper level. It is assumed, therefore, that the gases entering the SO_2 reduction system are clean and at a temperature of 300°F.

The SO_2 is forced through the reduction system by the main blower (1). The reducing agent (natural gas) is introduced at the blower discharge. The reaction between SO_2 and the reducing gas is exothermic, but because the SO_2 concentration in the feed gases is relatively low, some oxygen (air) is admitted at the blower inlet to maintain a thermal balance. The feed gas mixture is then passed through the feed gas preheater (2) where its temperature is raised above the dew point of the sulfur formed in the primary reactor system (3).

The principal function of the catalytic reduction system is to achieve maximum utilization of the reductant while producing both sulfur and H_2S, so the H_2S/SO_2 ratio in the gas stream leaving the system is essentially that required for the subsequent Claus reaction. Although the chemistry of the primary reaction system is extremely complex and includes reactions involving 11 different elements and compounds, it may be summarized in the following equations:

$$CH_4 + 2SO_2 \longrightarrow CO_2 + 2\,H_2O + S_2$$

$$4\,CH_4 + 6\,SO_2 \longrightarrow 4\,CO_2 + 4\,H_2O + 4\,H_2S + S_2$$

Because of the exothermic nature of these reactions, the gases leave the reduction reactor system at a substantially higher temperature. A portion of this heat is used to preheat the incoming gases in feed gas heater (3) as shown in the flow diagram Figure 1.

The elemental sulfur that is formed in the primary reactor system is condensed in a horizontal shell-and-tube steaming condenser (4). This represents over 40% of the total recovered sulfur. The process gas stream then enters the first stage (5) of a two-stage Claus reactor system where the following exothermic reaction occurs:

$$2\,H_2S + SO_2 \longrightarrow 3/2\,S_2 + 2\,H_2O$$

After the first stage of Claus conversion, the gas is cooled and additional sulfur condensed by passage through a vertical steaming condenser (6). Further conversion of H_2S and SO_2 to sulfur takes place in the second stage Claus reactor (7). This sulfur is condensed in a third steaming unit (8). A coalescer (9), containing a mesh pad, then removes entrained liquid from the gas stream. Molten sulfur from the three condensers and the coalescer is collected in a sulfur holding pit (10) from which it is pumped to storage. Residual H_2S in the gas from the process is oxidized to SO_2 in the presence of excess air in an incinerator (11) before being exhausted to the atmosphere.

INVESTMENT COST

The estimated total direct cost given in Table II is order of magnitude quality, based on December 1973 prices, and is for a battery limits unit. A process building, sulfur storage tank and truck loading station are included.

Indirect costs are not included, i.e., engineering, construction supervision, temporary construction facilities, purchasing, license fees, etc.

Offsites facilities are not included; i.e., steam generation and boiler feedwater facilities, electrical substation, administration and service facilities, fire protection, site development (piling, roads, railroads, fencing), sewers, process control room, laboratory, pipe bridges, yard lighting, etc.

OPERATING COSTS

The operating costs relating to natural gas are based on incineration of the gases from the SO_2 reduction system at 1250°F to assure complete oxidation of all sulfur compounds to SO_2. When the percentage of inerts in the feed gas is high, as from Westinghouse regenerator, the fuel cost associated with incineration represents a substantial part of the total natural gas cost. Some reduction in this fuel cost may be realized by incinerating at 900°F, if trace quantities of some sulfur compounds other than SO_2 (less than 500 ppm) can be tolerated. It is believed that substitution of fuel oil for natural gas in the incinerator may be preferred, and this is an acceptable alternative for the incinerator fuel requirement shown in Table I as natural gas.

OPERATING MANPOWER

The operating manpower requirement, shown in Table II, is 1 1/2 men per shift. Actually, one operator controls the process. Only a fraction of an additional man's time is needed for inspection of operating equipment in the field. It is assumed that adequate manpower performing other duties in adjacent areas will be available to serve this purpose.

SPACE REQUIREMENTS

For battery limits SO_2 Reduction unit, including start-up heater, sulfur pit, sulfur storage tank and truck loading station:

80' x 90' = 7200 Sq. Ft.
Max. Ht. = 45 Ft.

Building size

60' x 60' x 45' (within above area)

Roadways are not included in the above space requirements.

PRESSURE DROP

Pressure drop through the unit is estimated at approximately 5 psig. Incinerator outlet gas pressure has been assumed to be plus 0.5 psig.

TURNDOWN

The unit is capable of turndown to 1/4 of rated capacity.

START-UP, SHUTDOWN

Estimated on stream factor: 90%

Estimated time to bring unit on stream following a cold shutdown: 80 hours

Estimated time to bring unit on stream following a hot "stand-by" shutdown: Immediate

Estimated time to take unit off stream: Immediate

TABLE I

PROCESS AND OPERATING DATA

FEED GAS TO REDUCTION UNIT		
Equivalent LT Sulfur/DAy in SO_2		8.58
Composition % by volume, wet basis		
SO_2	8.0	
CO_2	4.0	
H_2O	2.0	
O_2	0.1	
N_2 (balance)	85.9	
Temperature °F		300
Gas Volume SCFM (60°F, 1 atm)		1970
SULFUR PRODUCTION @ 95% recovery LT Sulfur/Day		8.15
TAIL GAS		
% SO_2 by volume, wet basis		0.31
Volume SCFM (60°F. 1 atm)		3440
Temperature, exit incinerator °F		1250
UTILITIES - IMPORTED		
Natural Gas (as 100% CH_4) M SCF/Day (60°F, 1 atm)		
Process Reductant		133
Incinerator Fuel @ 1250°F		113
@ 900°F		73
For "Hot Stand-by" during plant shutdowns		35
Boiler Feed Water (130 psig) #/hr		1975
Cooling Water (90°F) #/hr		1500
Auxiliary Steam (50 psig) #/hr (when unit shutdown only)		550 (max.)
Instrument Air (100 psig) SCFM		100
Electricity		
Motors HP		65
Other (lighting, etc.) KW		20
UTILITIES - EXPORTED		
Steam (15 psig) #/hr		1600 (max.)
Cooling Water #/hr		1500
Condensate #/hr		500 (max.)
Boiler blow down #/hr		180

TABLE II

INVESTMENT AND OPERATING COSTS

INVESTMENT COSTS - Total Direct		$2,100,000
OPERATING COSTS (Basis 330 day operation)		Annual $
Operating Labor	7 shift men plus 1 utility man on days, $6/hr. Total 8 men	99,800
Supervision	1 operating supv. @ $19M 1 technical supv. @ $19M	38,000
Tests and Inspection - Included in above		0
Operating Supplies	10% of (Oper. & supv. labor)	14,000
Normal Maintenance	7% of Total Direct Cost 50% labor/50% materials	147,000
Utilities		
Electricity @ 9 mills/KWH		4880
Natural Gas as 100% CH_4 @ 80¢/MSCF		
Reductant		35,120
"Hot Stand-by" Allowance (35 days/yr.)		980
Incineration Fuel as 100% CH_4 @ 80¢/MSCF		29,840*
Auxiliary Steam @ 65¢/Mlbs. (during shutdown only)		300
Instrument Air		270
Boiler Feed Water @ 25¢/M lbs. (less condensate return @ 12 1/2¢/ M lbs.)		3,420
Cooling Water - No net consumption		0
	Total	74,810*
Overheads @ 63.5% of all labor		134,200
TOTAL OPERATING COSTS		507,810*

NOTE: Excludes depreciation, taxes, insurance, start-up costs, any equipment revisions and debugging

BY-PRODUCT CREDITS	
Sulfur @ $25/long ton	67,200
L.P. Steam @ 30¢/M lbs.	3,800

NOTE: *Incineration Fuel Cost and Total Operating Costs will be reduced by $10,570/yr. with 900°F Incinerator operation.

ALLIED CHEMICAL SO_2 REDUCTION TECHNOLOGY

Fig. 1

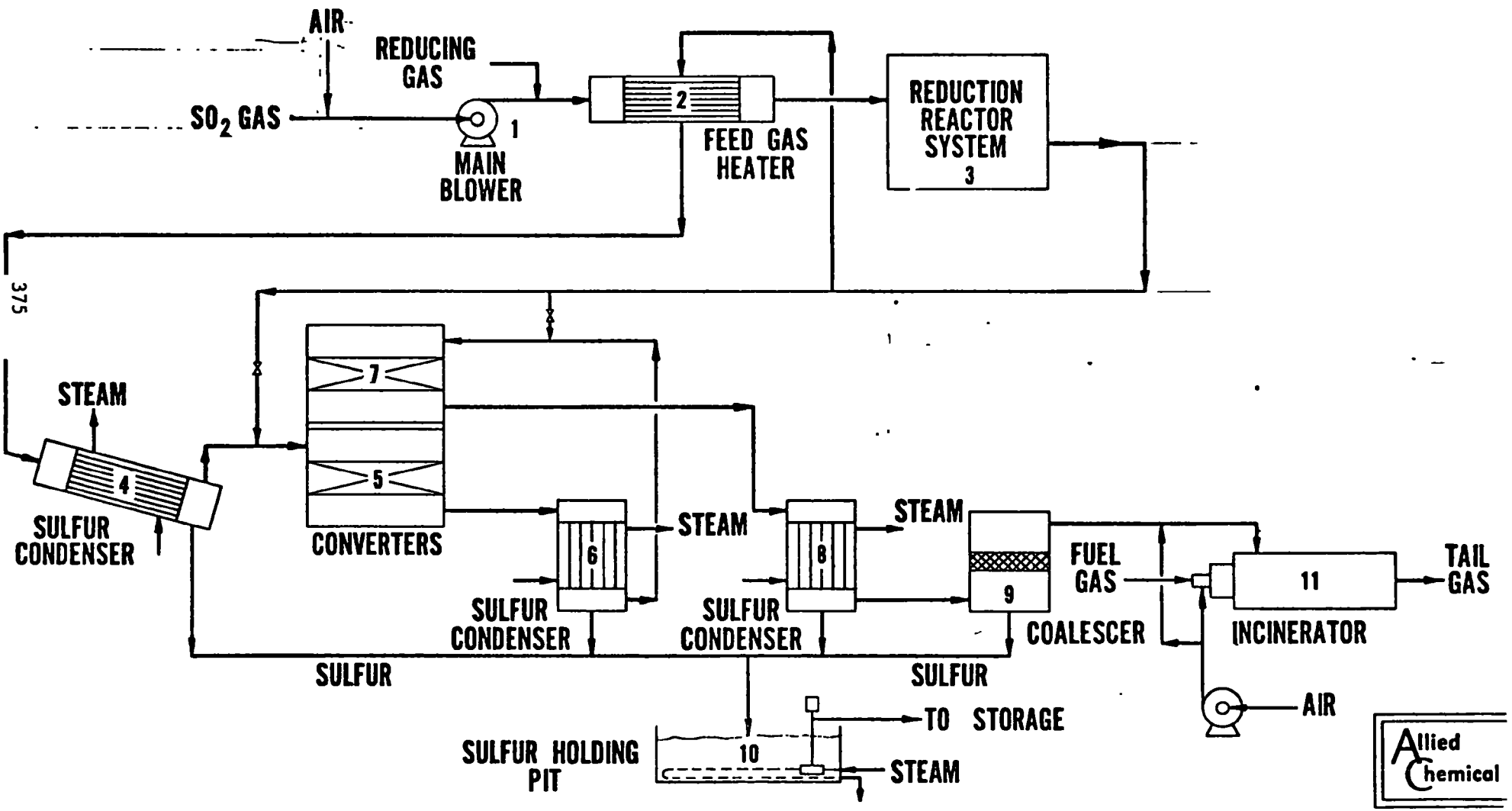

APPENDIX Q

LIMESTONE SELECTION

Q

APPENDIX Q
LIMESTONE SELECTION

INTRODUCTION

The fluidized bed oil gasification process requires a supply of limestone suitable for desulfurization. Selection of the best material for use at any particular plant site requires definition of the criteria to be met by candidate stones in the light of current Esso Research Centre, Abingdon, England (Esso) experience, and location and testing of available stones. Testing the stones is subject to the development and refinement of the selection criteria.

The stone selection process described here focused on finding limestone suitable for use in the Providence, Rhode Island area but should be typical of the stone selection process for almost any area. Most of the fossil-fuel power plants in the eastern United States are located near limestone-or dolomite-producing counties; the Carolinas and the New England states, however, are exceptions. The search for a suitable limestone is correspondingly more difficult in these areas.

INITIAL CRITERIA

As a result of batch reactor and pilot-plant experience with the stones listed in Table Q-1, Esso laid out the initial criteria for stone selection.

Table Q-1

LIMESTONES TESTED BY ESSO

Limestones	Location	Wt % CaO
Denbighshire	Wales, U.K.	55.2
Limestone 1359	Virginia	54.1
Limestone 1691	New York	45.0 - 49.1
Limestone 1690	New York	26.7

The primary emphasis was on purity: the calcined stone should have a calcium oxide content of more than 50 percent, as shown in Table Q-2, in accordance with the Esso finding that "the purer the stone is the better it performs" (in the pilot plant). In addition, it was thought that very fine-grained limestones should be ruled out, in view of a possible tendency to generate excessive fines in the fluidized beds.

Table Q-2

LIMESTONE SPECIFICATION[a]

Component	Concentration (wt %)
CaO	> 50
MgO	< 3
SiO_2	< 10
M_2O_3	< 2

[a]January, 1973.

LOCATION OF CANDIDATE STONES

The original schedule called for selection of five stones for shipment to Esso at Abingdon so that batch unit tests could be performed. The best stone was then to be tested in a continuous run on the Esso pilot plant.

Geographical Location

The New England Electric System (NEES) plant in Providence, Rhode Island is not typical of power plants in the eastern part of the United States in that it is relatively remote from limestone[1] and dolomite-producing areas. Quarries which produce limestone in this area, Rhode Island, Connecticut, Massachusetts (with the exception of the Pfizer Quarry in Adams), and Maine do not yield high-calcium limestone.

The possible sources of limestone may be grouped roughly as follows:

- Sources in adjacent New England states
- Sources in the Middle Atlantic states (New York, New Jersey, Pennsylvania)
- Long-distance supplies--for example, Virginia, the Bahamas, Canada.

Many sources were used to locate likely suppliers of limestone.*

- Suppliers suggested by NEES
- Suppliers listed in the Minerals Yearbook, U.S. Department of the Interior
- The New York office files of the Unites States Bureau of Mines, Albany N.Y.: limestone quarries in the states of Vermont, Massachusetts, Rhode Island, Connecticut
- An EPA limestone inventory and suppliers list
- Suppliers mentioned in reports by contractors on both the Fluidized Bed Combustion and Coal Gasification Programs.

The stones which were eventually obtained are listed in Table Q-3, which includes some stones not yet tested.

The location of the limestone quarries in relation to Providence is shown in Figure Q-1 and Q-2.

Testing

Two forms of screening were carried out on the stone samples obtained. The reactivity of the limestones in a stream of fuel gas containing 0.5 percent hydrogen sulfide (H_2S) was measured in a thermogravimetric (TG) apparatus at 871°C (1600°F), and at atmospheric pressure. At a later stage in the program, measurements of attrition losses during calcination of the stones in a fluidized bed unit were carried out. Additionally, samples of the raw stone were polished, etched, and photographed by optical microscopy to ascertain the grain structure of the material.

* To these should be added, for future reference, the geological surveys of any of the states in the vicinity of a plant site and the list of commercial lime producers published in 1970 by the National Lime Association, Washington, D.C.

Dwg. 1671B61

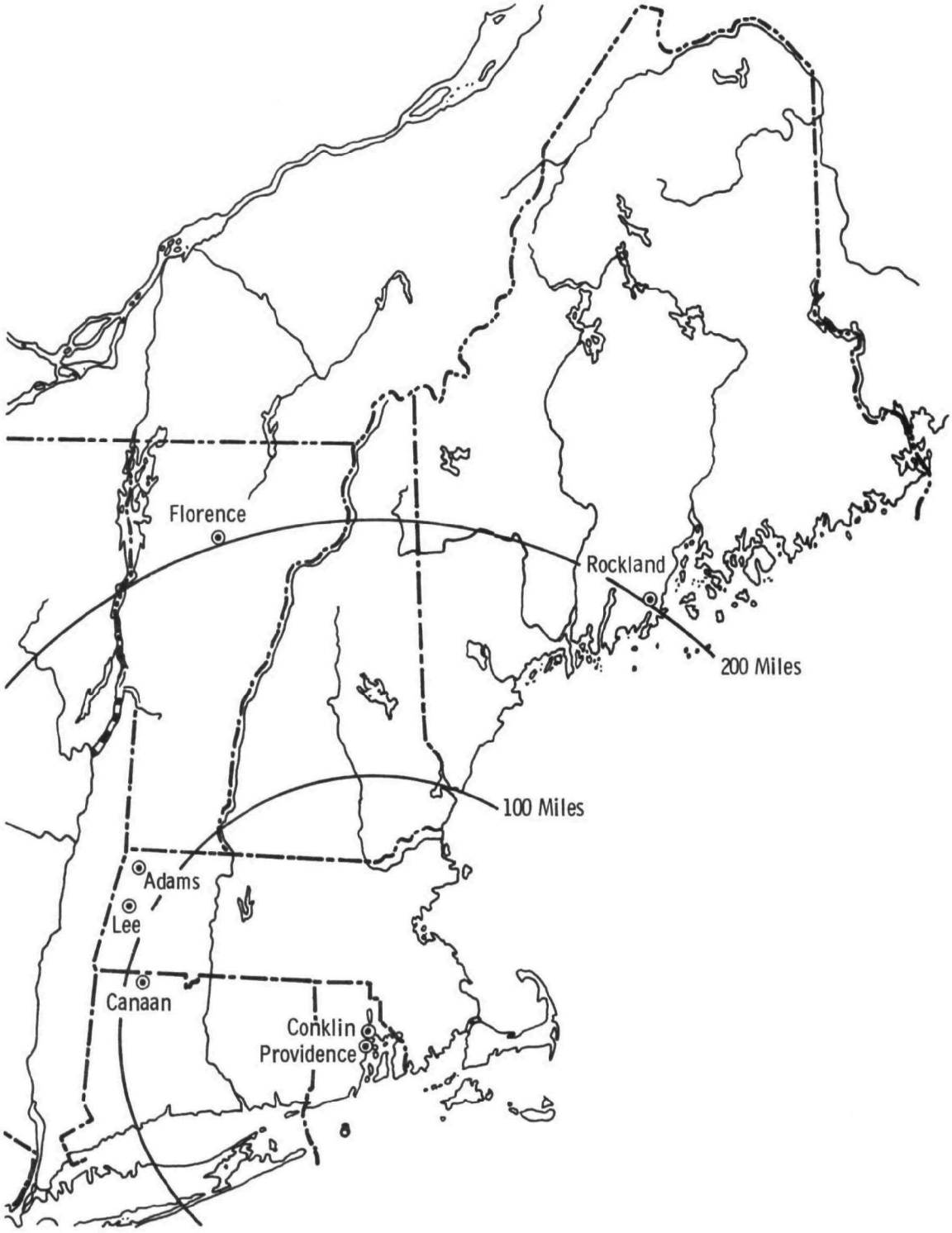

Figure Q-1—Location of limestone supplies in relation to Providence, Rhode Island

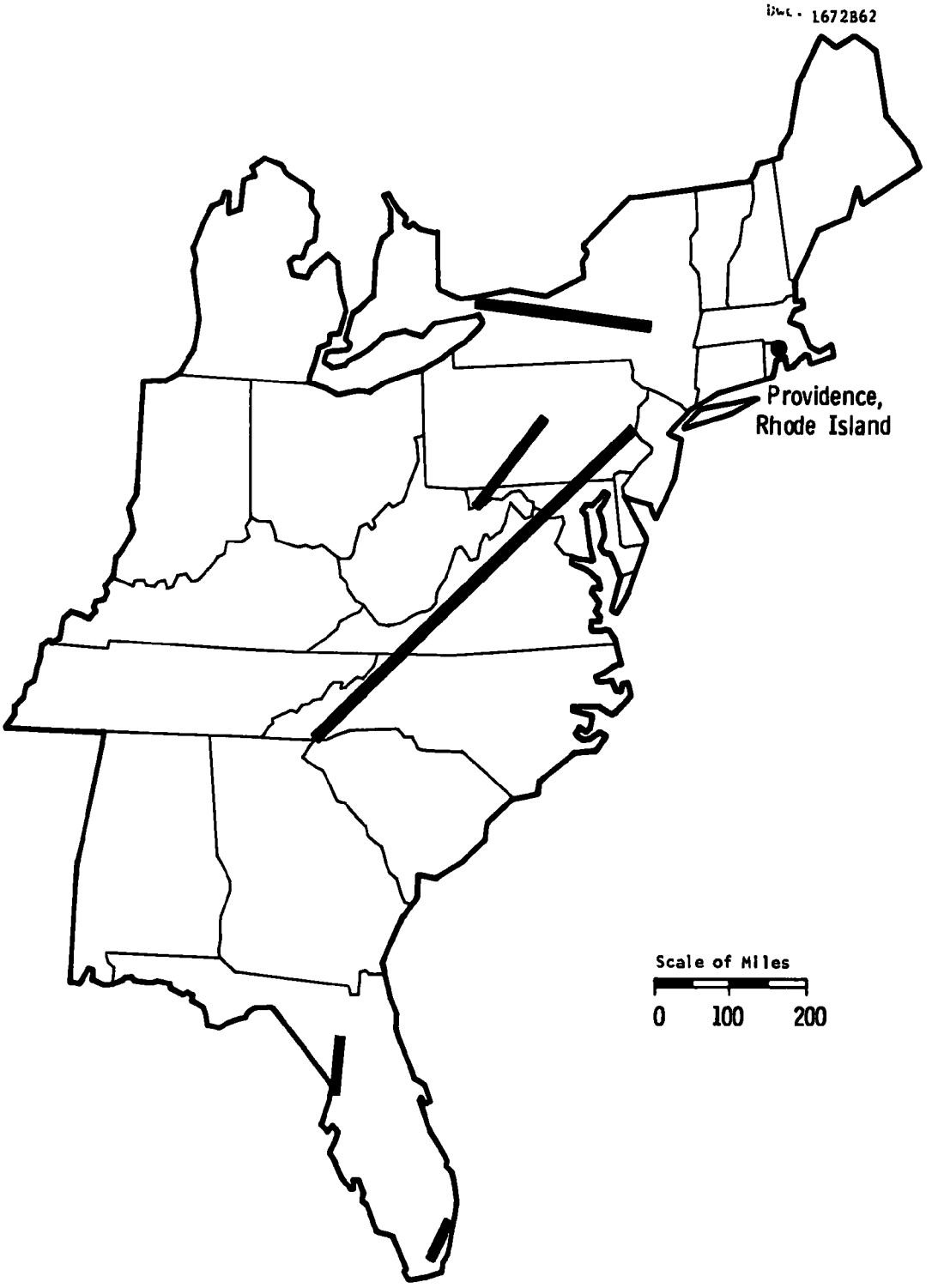

Figure Q-2—Location of limestone deposits in eastern United States

Table Q-3

CANDIDATE MATERIALS - COMPOSITION

Stone	Origin	% Ca	% Mg	% Ignition wt. loss
Limestone 1359	Virginia	38-39.5	0.04	43.4
Ocean Industries (aragonite)	Bahamas	38.9	0.04	
Limestone 1691	New York	33.1	0.2	38.6
(Seneca Falls, N.Y.)				
Conklin limestone	Rhode Island	24.6		
Lee limestone	Massachusetts	27.9	5.8	42.5
Rockland limestone	Maine	29.5		∿54
Farber white limestone	New Jersey	36.3	3.1	
Pfizer calcite	Massachusetts	39.8		42.9
Pfizer dolomite	Connecticut	21.9		47.2
Vermont dolomite	Vermont	20.9	9.7	
(Denbighshire limestone)	Wales, U.K.			
DeVault dolomite	Pennsylvania	21.0	12.9	
Bellefonte limestone	Pennsylvania	38.2	0.23	

Reactivity to Hydrogen Sulfide

The sulfidation of calcined limestones has been discussed in a previous contract report.[2] A description of the apparatus and procedure is given in Appendix R.

The sulfidation of calcined limestone at the temperature of oil gasification proceeds initially at the maximum rate permitted by mass transfer from the gas phase to the solid surface. As the stone is sulfided, the rate of reaction falls off in a manner which reflects the amount of calcium available for reaction. Because the rate of reaction in the range of interest can be closely simulated by a first-order equation, the reactivity of a particular stone can be characterized by the time taken to reach a particular extent of reaction at a fixed gas concentration. Since the highest extent of sulfidation noted in the chemically active fluidized bed (CAFB) process has been less than 30 percent, the time taken to reach 30 percent sulfidation of 1200 to 1000 micron particles of stone in 0.5 percent hydrogen sulfide in a fuel-gas mixture at atmospheric pressure was chosen as an index of the stone reactivity. The results obtained for a particular stone were repeatable, as shown in Figure Q-3. Little variation in the results obtained was noted for the different samples tested--dolomites containing 21 percent calcium react as rapidly as do limestones in this range. Further work to develop a more meaningful reactivity test which can be used to project performance in a fluidized bed is reported in Appendix R.

Attrition

The attrition of sorbent limestones or dolomites leads to loss of fines from the fluidized bed reactors. The resistance of the stone to attrition, therefore, is an important property of the sorbent in a process such as fluidized bed oil gasification in which there is a high recirculation rate of stone between gasifier and regenerator. The maximum deleterious effect is noted where a significant percentage of the stone breaks down into fines on calcination.

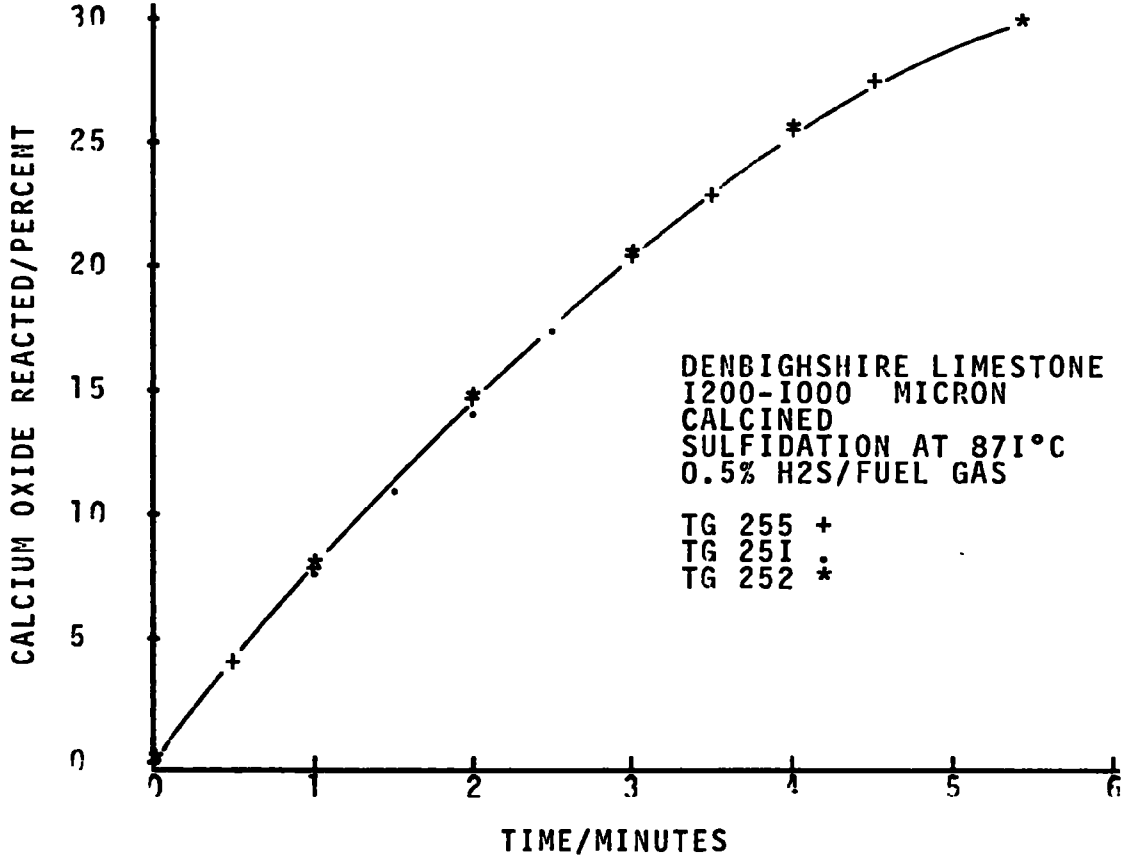

FIGURE Q-3 REPEATABILITY OF STONE SULFIDATION KINETICS

Some limestones dust to a fine powder so rapidly during calcination that it is impossible to maintain a fluidized bed of the stone. There is, however, an intermediate case in a once-through system without regeneration where relatively high attrition rates may be helpful in increasing the sorbent reactivity and utilization in desulfurization. Fine sulfided particles from such a process would be easy to oxidize to calcium sulfate for disposal. As will be discussed in more detail later. Esso has noted that the attrition rate depends on the process occurring in the fluidized bed. Loss rates from the Esso pilot plant and batch reactors have been measured during calcination, kerosene combustion, and oil gasification. The results have shown that losses under one set of operating conditions do not correlate directly with losses under another set of conditions.[3]

Fundamental research on the relation between the properties of carbonate rocks and their mechanical strength in different applications--such as when used as sulfur dioxide (SO_2) sorbents--is in progress at the Illinois Geological Survey, and some preliminary results have become available. In this work attrition by decrepitation was tested by the routine method used in the glass industry, and although the results were in general agreement with data on the relative attrition in some batch fluidized tests, no general correlation with the mineral, chemical, and petrographic properties of the samples was apparent.[4]

The approach adopted here was to calcine samples of carbonate rock in a 50 mm (2 in) fluidized bed unit under the conditions listed in Table Q-4.

The 50 mm (2 in) diameter reactor was run at approximately 1.4 atmospheres for the attrition studies. The reaction vessel, constructed of Inconel 600 alloy, has a capacity of about 50 gm (0.11 lb) of dolomite in the heated zone. Although provision exists for metered introduction of solids, batch reaction was used here. Fluidizing gas passes through a preheating coil wound externally on the reactor, between the furnace and reactor, so that it arrives at the distributor plate at temperature. The distributor plate has 97 equally spaced 1.0 mm (0.040 in) diameter

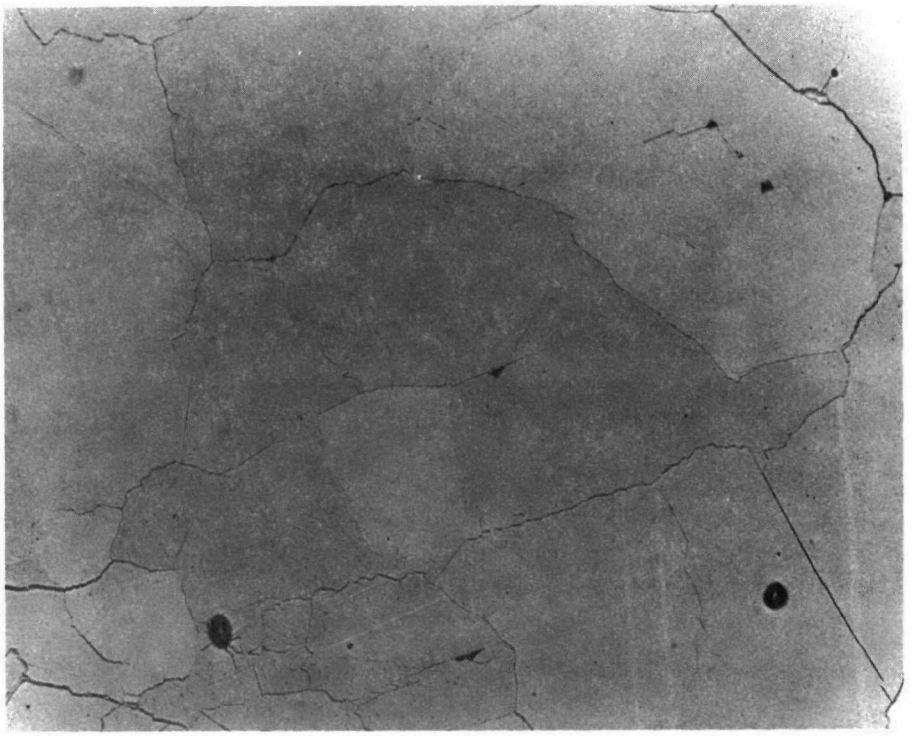

Pfizer (Adams) Calcite 50X

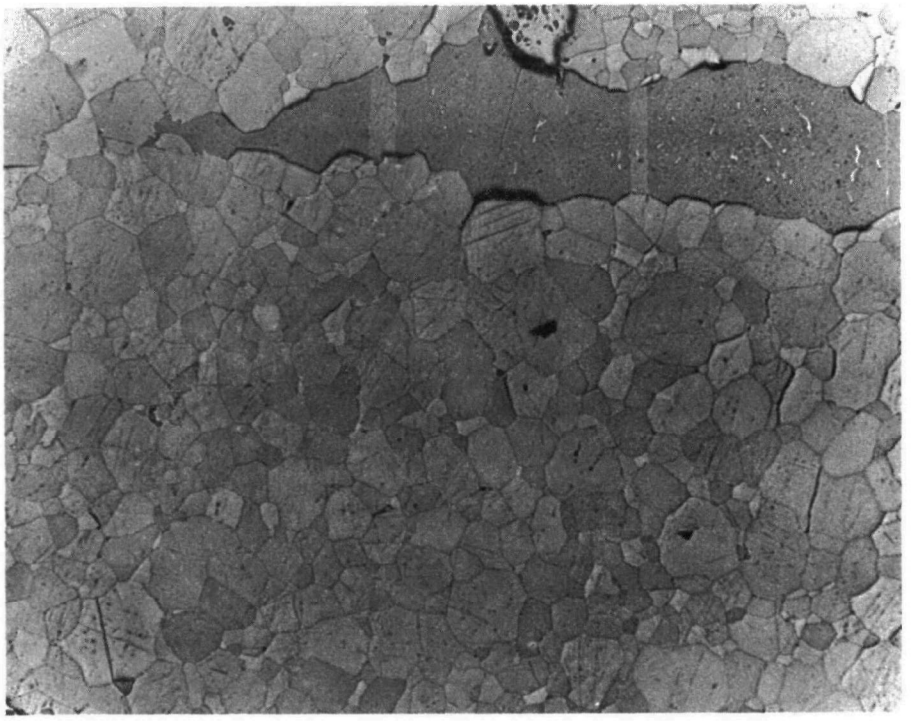

Rockland, Rockport Limestone 50X

Figure Q-4—Grain structure of candidate stones for the NEES plant

Table Q-4

CONDITIONS FOR 51 mm (2 in) UNIT ATTRITION INDEX TESTS

Bed charge	∿ 105 gm (0.23 lb)
Particle size	18/40 (1,000 - 420 μm) (.039 - .0165 in)
Temperature of calcination	750°C (1382°F)
Time at temperature	∿ 100 minutes
Time to heat to temperature	∿ 3 hours
Gas flow	26 l. min^{-1} N_2 [or 2.6 x 10^{-2} m^3. min^{-1} N_2]
Superficial velocity	700 mm sec^{-1} (2.3 ft sec^{-1})

holes. Fine material elutriated from the bed during a run was trapped on filter paper capable of trapping particles (larger than 4 μm diameter) and weighed. The percent weight loss from the bed (calculated on the basis of fully calcined stone) was used as an index of resistance to attrition; low losses from the bed are taken as indicating high attrition resistance.

Since a number of the stones tested in the 51 mm (2 in) unit were also tested on Esso batch reactors or the Esso CAFB pilot plant, an indication of the usefulness of the attrition index can be obtained by examining the results in Table Q-5. Here the indices of attrition are noted and compared with the Esso experience.

There appear to be three ranges of decrepitation behavior: low, high, and intermediate.

Low Attrition

Limestone 1359 gave the lowest attrition index, 0.3. Comparison of the loss rates observed by Esso for four stones (BCR 1359, Denbighshire, Pfizer Adams [designated NEES 1] and BCR 1691), under conditions of kerosene

Table Q-5
COMPARISON OF ATTRITION INDEX FROM 51 mm (2 in) UNIT
AND RESULTS NOTED BY ESSO

Stone sorbent	Attrition index (51mm unit)	Esso CAFB experience
Limestone 1359	0.3	Low attrition rate
Pfizer (Adams) calcite 1921	6.7	Very high attrition (but not by normal mechanism) during cycling[a]
Conklin limestone	13.9 6.0	Very high attrition; Decrepitated badly during calcination
Aragonite Ocean Industries (Bahamas)	--	Dust losses during calcination small
Bahaman aragonite Newton N.J.	0.7	--
Denbighshire limestone	6.6	During calcination had twice the loss rate of 1359; on sulfidation/regeneration cycling had lowest attrition rate of stones tested
Limestone 1359	0.3	Had lowest attrition rate on calcination and a higher rate than Denbighshire on cycling

[a]Craig, J.W.T., G.L. Johnes, G. Moss, J.H. Taylor, D.E. Tisdall, Monthly Report on Contract 68-02-0300. No. 11 Esso Research Centre, Abingdon, England to Environmental Protection Agency, June 1973. P. 7.

combustion showed that BCR 1359 gave the lowest loss rate (the other being R(1359) = 0.1 R (1691)

= 0.32 R (1921)

= 0.5 R (Denbighshire).

In gasification/regenerative cycles the rates observed by Esso were:

R(1359) = 1.4 R (Denbighshire)

= 0.3 R (BCR 1921)

= 0.42 R (BCR 1691).

Thus, BCR 1359 showed the lowest attrition loss on calcination in the 51 mm (2 in) unit and the lowest bed loss rate during kerosene combustion. It was slightly more attrition-prone than Denbighshire stone in gasification/regeneration cycles.

It may be concluded that stones with an attrition index as low as around 1.0 are prime candidates for the fluidized bed oil gasification process if they fulfill other criteria.

High Attrition

Some of the samples, for example Lee limestone, exhibited an attrition index >10.0. This high loss rate should exclude consideration of the stone as a candidate for the CAFB process. It should be pointed out that the calcination procedure in the 51 mm (2 in) unit where the stone is heated to 750°C (1382°F) over a two-hour period is mild in relation to the thermal shock experienced by injection of cold stone into the CAFB fluidized gasifier at 871°C (1600°F). The only direct comparison possible with CAFB experience is the Conklin limestone, which gave attrition indices of 14.0 and 6.0 in two tests, and dusted so badly in the CAFB batch reactor that it was rejected for further testing on the pilot plant.

Intermediate Attrition

Results of attrition measurements which lie in the third interval, 1 to 10, are ambiguous. Thus, Denbighshire limestone and Pfizer

calcite (Adams) gave similar results, 6.0 and 6.7, respectively. Denbighshire limestone has been, to date, the most satisfactory limestone tested in the CAFB process; the Pfizer calcite was unsatisfactory because of the elutriation of fines and a rapid reduction of mean particle size in the fluidized bed. The relative performance of these stones, however, as Esso has noted, was highly dependent on the process in the fluidized bed; under conditions of fuel oil combustion, the Pfizer calcite was marginally more attrition resistant (0.83) than the Denbighshire stone; and under conditions where kerosene was combusted, the order was reversed--Denibighshire stone showing 0.65 times the loss rate of the Pfizer calcite. Esso has suggested that the deteriorating performance of the calcite is due to the thermal shock experienced under cycling between gasifier and regenerator.

While the results to date are not unambiguous, it is thought that stones with a high attrition index should be rejected for further testing; stones with a low attrition index should be favorably considered; and stones with an intermediate attrition index should be considered for further testing.

The measurements of attrition in the 51 mm (2 in) unit should be extended to cover a wider range of stones and operating conditions--for example, sulfidation and sulfidation/oxidation cycling.

Grain Structure

The samples of the candidate limestones were mounted in plastic resin, polished, etched, and photographed. The grains in limestone were evident after the stone had been etched in dilute acetic acid. Some of the dolomites required a stronger solution of 10 ml acetic acid, 10 ml phosphoric acid, 5 ml lactic acid, and 75 ml water to develop the image of the grains. The longest linear dimension of the grains was taken to indicate the grain size of the material. Figure Q-4 shows the massive grain structure of the Pfizer (Adams) calcite and the finer structure of Rockland limestone. Comparison of the numbers with quantitative grain size measurements at TVA showed sufficient agreement to regard the procedure as a guide to grain size.

Stones Sent to Esso for Further Testing

The stones shipped to Esso for testing on their batch reactors were:

- Pfizer calcite (Adams)
- Pfizer dolomite (Canaan)
- Ocean Industries Aragonite
- Conklin limestone.

The Pfizer calcite suffered high attrition losses in gasification/regeneration cycles, and Esso tentatively modified the criteria to exclude highly crystalline limestone from consideration. Pfizer dolomite was shipped because it showed adequate reactivity on the TG sulfidation test, is quarried around 100 miles from Providence, and had been reported by Consolidation Coal Company (Consol) as the most attrition-resistant stone they had tested in their bench-scale sulfidation/regeneration unit. It was later noted, however, that samples of this stone crumbled to a fine powder after sulfidation on the TG apparatus, and Consol confirmed that the stone had poor attrition resistance in the fully calcined state. Apparently its attrition resistance is high only when it is used as half-calcined dolomite ($CaCO_3/MgO$). Esso was advised not to proceed with batch testing of this stone.

The Conklin limestone was shipped because of the proximity of the quarry to the NEES site. Despite its unpromising composition and attrition index, it was thought necessary that its potential usefulness be accurately known. It was then rejected on the basis of high attrition losses in batch tests. The aragonite from the Bahamas was shipped to Esso, gave satisfactory results on the batch reactors, and is scheduled for further testing on the continuous pilot plant. Tymochtee dolomite was also tested on the batch reactors. An assessment of the results will permit a decision on the possibility of using dolomite rather than pure limestone in the CAFB process. The entire stone selection results are summarized in Table Q-6.

Table Q-6

SUMMARY OF CANDIDATE STONES FOR THE NEES PLANT

Stone	% Ca	Reactivity τ33% CaS	Grain size (μm)	Attrition index (% wt loss)	Action basis	Comment
Pfizer calcite, Adams, Mass.	39.9	8.5 10.2	Coarse 600	6.7	Batch tested at Esso	Severe attrition on plant
Aragonite Ocean Industries (Bahamas)	38.1	8.0	--		Shipped to Esso	
Farber limestone Franklin, N.J.	36.4	11.0	Coarse 600	24.9	Rejected (attrition, purity)	
Rockland limestone Rockport, Me.	29.5	8.2	Medium 140	18.22	Rejected (attrition, purity)	
Lee lime Lee, Mass.	27.9	8.5	Medium 40-100	48.4	Rejected (attrition, purity)	
Conklin limestone Lincoln, R.I.	24.6	--	Medium 63-250[b]	11.5	Shipped to Esso	Rejected because of high attrition
Pfizer dolomite E. Canaan, Conn.	21.9	20.0	Coarse[c] 250	--	Shipped to Esso but not tested	TG indicated high attrition in full-calcined state; confirmed by Consol
Vermont dolomite Florence, Vt.	20.9	8.0	Coarse 600	--	Rejected (marble)	
Denbighshire limestone Wales, U.K.	39.8	7.0	--	6.6	Standard, already tested	
Limestone 1359 Stephens City, Va.	38.7	--	Fine 4-63	0.31	Already tested	Provides index for comparison of stone properties

[a] τ 33% CaS is the time required to react 0.1 gms sulfur/gm raw stone.

[b] Harvey, R.D. Paper presented at 3rd Limestone Symposium, St. Petersburg, Florida, December 1967.

[c] Hatfield, J.D., et al. Investigations of the Reactivities of Limestone to Remove SO_2 from Flue Gas, TVA Report to APCO, 1971.

CONCLUSION

The results of the testing procedures have not, as yet, revealed an outstanding candidate stone for the NEES plant. The stones which have been tested can be ranked in order of preference:

- Limestone 1359
- Aragonite
- Limestone 1691

subject to final reporting of the Esso tests on aragonite.

Efforts are continuing to locate and test additional candidate materials. Table Q-7 lists suppliers who responded to a request for samples for testing and whose samples are currently being tested or will be tested. Probably the eastern half of Pennsylvania is the most promising search area. It contains numerous high-calcium limestone deposits, and the future impact of demand for wet-scrubbing materials (lime and limestone) in this area is lower than the national average.[7] Additional sources in Virginia should be examined in an endeavor to find stones which have properties similar to those of limestone 1359. Finally, the possibility of shipping stone from the coastal areas of Florida should be investigated, since this may prove to be competitive with shipping aragonite from the Bahamas.

The more general case of selecting candidate stones for any area has benefited from the experience gained in the search for a stone for Providence. The attrition and grain-size tests provide tools for screening materials. The reactivity tests have been less useful to date but may prove valuable at a later stage. Current Esso research on increasing the extent of sulfidation achieved in desulfurization by increasing the bed height is aimed at decreasing the calcium/sulfur molar feed rate required for 90 percent sulfur removal in the process. Increasing the extent of reaction will depend on sulfidation within the stone structure; and the order of reactivity experienced may reflect the results of TG investigations. The selection process will become easier if forthcoming tests at Esso using Tymochtee dolomite prove successful, since a wide variety of dolomites are mined in Pennsylvania, Ohio,

Michigan, Indiana, and Illinois. Further selection criteria will be developed as the waste stone processing systems are studied and as leaching tests on material for disposal continue. Finally, the restriction to high-calcium limestones may be relaxed if stone hardening processes, such as those developed by Consol, can overcome the high attrition rates experienced with impure stones.

Table Q-7

RESPONDENTS TO SAMPLING REQUEST

Supplier	Location of stone quarry or supplier	Nature of stone
G. & W.H. Corson, Inc.	Plymouth Meeting, Pa.	>97% $CaCO_3$
The General Crushed Stone Co.,	Easton, Pa. (Watertown N.Y; Chattanooga, Tenn.)	
M.J. Grove Lime Co.	Middletown, Va.	
Riverton Corp.,	Riverton, Va.	
Dixie Lime and Stone Co.	Sumterville, Fla.	96.5% $CaCO_3$
Premier Resources	Costa Mesa, Calif.	85% $CaCO_3$
Armco Steel	Piqua, Ohio	

REFERENCES

1. Craig, J.W.T. (Esso Research Centre, Abingdon, England). Letter to S.K. Batra (NEES). January 25, 1973.
2. Keairns, D.L., D.H. Archer, R.A. Newby, E.P.O'Neill, E.J. Vidt. Evaluation of the Fluidized Bed Combustion Process: Vol.IV, Fluidized Bed Oil Gasification/ Desulfurization. Environmental Protection Agency. Westinghouse Research Laboratories. Pittsburgh, Pennsylvania. EPA-650/2-73-048d. 96 pp. and appendices.
3. Craig, J.W.T., G.L. Johnes, G. Moss, J.H. Taylor, and D.E. Tisdall. Chemically Active Fluid-Bed Process for Sulphur Removal during Gasification of Heavy Fuel Oil Second Phase. Environmental Protection Agency. Esso Research Centre. Abingdon, England. EPA-650/2-73-039. November 1973. 204 pp.
4. Harvey, R.D. Fracture Surfaces of Carbonate Aggregates: Scanning Electron Microscope Study. University of Illinois.(Reprinted from Proceedings of Twentieth Annual Highway Geology Symposium. Urbana-Champaign, April 17-19, 1969) (Illinois State Geological Survey Reprint Series 1970V.) 20 pp.
5. Harvey, R.D., and J. C. Steinmetz. Petrography of Carbonate Rocks by Image Analysis. (Proceedings of the 7th Forum on Geology of Industrial Minerals, Tampa, Florida Department of National Resources, Division of Interior Resources - Special Publication 17, April 28-30, 1971.) 9 pp.
6. Drehmel, D.C., and R.D. Harvey. Carbonate Rock Properties Required by Desulfurization Processes. (Proceedings of the 10th Forum on Geology of Industrial Minerals, Columbus, Ohio State University, 1974.)
7. Malhotra, R. and R.L. Major. Electric Utility Plant Flue-Gas Desulfurization: A Potential New Market for Lime, Limestone, and Other Carbonate Materials. Illinois State Geological Survey, Illinois Minerals Note 57. June 1974. 19 pp.

APPENDIX R

THERMOGRAVIMETRIC STUDIES ON THE SORBTION OF SULFUR BY LIME

R

APPENDIX R

THERMOGRAVIMETRIC STUDIES ON THE SORBTION OF SULFUR BY LIME

INTRODUCTION

Desulfurization using lime during oil gasification is generally represented by the reaction

$$CaO + H_2S \rightarrow CaS + H_2O.$$

With this reaction to model the desulfurization process, thermodynamics can be used to find the maximum sulfur retention in a fluidized bed of lime. It should also be possible to define how closely a fluidized bed of given dimensions and operating conditions approaches the thermodynamic limits for sulfur retention by studying the kinetics of the reaction as a function of the bed operating conditions.

A fundamental parameter of the fluidized bed system is the calcium molar feed rate required to desulfurize the fuel gas generated in the bed. As the calcium oxide (CaO) in the bed sulfides, the rate of sulfidation will decrease, thereby lowering the efficiency with which the process prevents escape of sulfur (S). Unless the calcium oxide is replenished, the rate of sulfidation will eventually fail to fix enough sulfur to meet the process requirements (90 percent sulfur removal). In experiments conducted by Esso Research Centre, Abingdon, England (Esso), high calcium to sulfur mole ratios (about 15/1) have, of necessity, been maintained in the fluidized beds while achieving high sulfur retention.[1] In contrast, previous thermogravimetric (TG) studies of the sulfidation of calcium oxide do not show an appreciable decline in the rate of reaction until about 30 percent of the available calcium oxide has reacted.[2] If similar kinetics obtained in the fluidized bed, there should not be

any decline in the efficiency of sulfur removal until the calcium molar feed rate fell to less than 3/1. It follows that there is a distinct difference between TG results and fluidized bed results in regard to calcium utilization. TG data predict that less calcium is needed in the bed to desulfurize the oil than is observed in practice. In order to probe this difference, TG experiments and calculations were carried out on the sulfidation of dolomite.

EXPERIMENTAL WORK

The object of the experimental work was to find the factors which would decrease the rate of sulfidation of calcium oxide. The following factors were considered:

- Stone particle size
- Calcination history
- Carbon deposition on the stone
- Stone sintering
- Exposure of the stone to alternate oxidative and reducing-gas compositions.

The TG experiments are summarized in Table R-1.

The equipment used was a DuPont 951 thermogravimetric balance which, modified as described by Ruth,[2] was capable of operation in flowing hydrogen sulfide (H_2S) at elevated temperatures. The balance, controlled by a DuPont 990 console, sends out a continuous electric signal which provides a reading of the weight of the sample as a function of time. In experiments reported here all work was carried out at atmospheric pressure which in Pittsburgh is 97 ± 6 kPa (28.7 ± 0.2 in Hg). The fuel gas used to simulate the reducing gasifier conditions contained 26 percent hydrogen (H_2), 10.2 percent carbon monoxide (CO), 2.54 percent methane (CH_4), 16.9 percent carbon dioxide (CO_2), 44.4 percent nitrogen (N_2).

Calcination Pretreatment

The majority of the TG experiments have been carried out on limestones calcined by heating to temperature (871°C/1600°F) at a heating

Table R-1

TG TESTS ON SULFIDATION OF LIME

TG no.	Stone	Pretreatment	Reaction	Temp. °C(°F)	Comment
241	Denbighshire limestone 1200-1000 μm	Rapid calcination	Sulfidation in fuel gas 0.5% H_2S	871°C (1600°F)	Rate unaffected by prior calcination rate
242	Denbighshire limestone 1200-1000 μm	Stone coated with Apiezon N grease	Calcination in nitrogen	871°C (1600°F)	Calcination unaffected: no visible carbon layer noted
243	Denbighshire limestone 1200-1000 μm	Stone coated with graphite	Calcination and sulfication 0.5% H_2S	871°C (1600°F)	Sulfidation rate not affected in range (0-30% CaS)
252	Denbighshire limestone 1200-1000 μm	Predried at 500°C; calcined in N_2	Sulfidation (0.5% H_2S- with one oxidation/reduction cycle	871°C (1600°F)	See text
253	Denbighshire limestone 1200-1000 μm	Predried at 500°C; calcined in N_2	Sulfidation 0.5% H_2S in fuel gas with seven oxidation/reduction cycles	871°C (1600°F)	See text
457	Denbighshire limestone ∿ 3,000 μm	Calcined in N_2 at 871°C	Sulfidation in 0.5% H_2S in fuel gas	871°C (1600°F)	Slow sulfidation

rate of 10°C (50°F) per minute in flowing nitrogen. The calcination history of the stone has been shown to be exceedingly important for reaction with sulfur dioxide, in that during the calcination process the pore structure, in which product calcium sulfate ($CaSO_4$) grows, is formed. Experimental tests[3] reported previously show that the calcination pretreatment greatly influences the overall sulfur retention and the calcium oxide utilization expected in fluidized bed reactors. A test was carried out to see if the calcination of the limestone at rates closer to those likely to obtain in the fluidized bed gasifier would influence the rate of sulfidation of the product lime. In TG 241 Denbighshire limestone was calcined as rapidly as the instrument heating rate permitted, and calcination was complete within ten minutes. This treatment proved to be without affect on the sulfidation rate of the product.

Oscillation between Oxidizing and Reducing Conditions

Two tests were carried out on 1200 to 1000 μm samples of Denbighshire limestone. The samples were dried at 500°C (932°F) to prevent "popping" or decrepitation. By heating them in nitrogen at 10°C/min (18°F/min) to 800°C (1472°F) they were then calcined. Sulfidation in 0.5 percent hydrogen sulfide/fuel gas was interrupted when 26 percent of the calcium had sulfided. After they had soaked in nitrogen for ten minutes, air was admitted at 400 ml/minute (24.4 in^3/min) for one to two seconds, resulting in a weight increase of 0.125 mg which may be attributed to oxidation of calcium sulfide to calcium sulfate. An eight-minute soak in nitrogen caused a decrease in weight greater than the increase during oxidation by a factor of 1.3. This weight loss should have been 1.33 times the earlier weight gain if calcium sulfide and calcium sulfate combined to reject sulfur dioxide according to the equation

$$1/4\ CaS + 3/4\ CaSO_4 \rightarrow CaO + SO_2 \quad .$$

Resulfidation of the solid was initially rapid, but within 0.5 minutes it fell to the rate normally observed at that extent of utilization and continued unexceptionally to more than 80 percent sulfidation of the calcium oxide.

In the next run interruption of sulfidation, followed by a pulse of air, under the same conditions as previously, was repeated seven times without deleterious effect on the rate.

The purpose of these experiments was to see if oxidation of calcium sulfide in calcium sulfate could cause a gradual accumulation of sulfate in the pores of the calcium oxide, thereby preventing access to unreacted calcium sulfide. This process was expected to cause a gradual decay in the reactivity of the solid. The observed rates of sulfidation were marginally increased. Craig[4] suggested that the cycle carried out in the TG apparatus duplicates the entire regenerative process and that surface calcium oxide was regenerated on passing from an air to a nitrogen feed. This mechanism is in accord with the observation that the average ratio of weight loss to weight gain in the oxidation/reduction cycle was 1.28 over six cycles. The postulated mechanism requires a ratio of 1.33. If this mechanism is accepted as a working assumption, then it predicts a loss of sulfur dioxide from the stone as it passes from the oxidizing to the reducing zone of the gasifier. This loss of sulfur dioxide may contribute to an overall rate of sulfur retention lower than that expected from the absorption of hydrogen sulfide.

Carbon Deposition

Two experiments were carried out to determine the effect on the sulfidation rate of a coating of carbon on the outer surface of the stone. The first experiment failed because coating the sample with Apiezon grease failed to cause any deposit of carbon during calcination. In the second experiment, the limestone was coated by mixing it with a graphite paste. Although there was a definite black layer on the stone, no evidence of a decrease in sulfidation rate was noted over the first 30 percent of calcium oxide sulfidation.

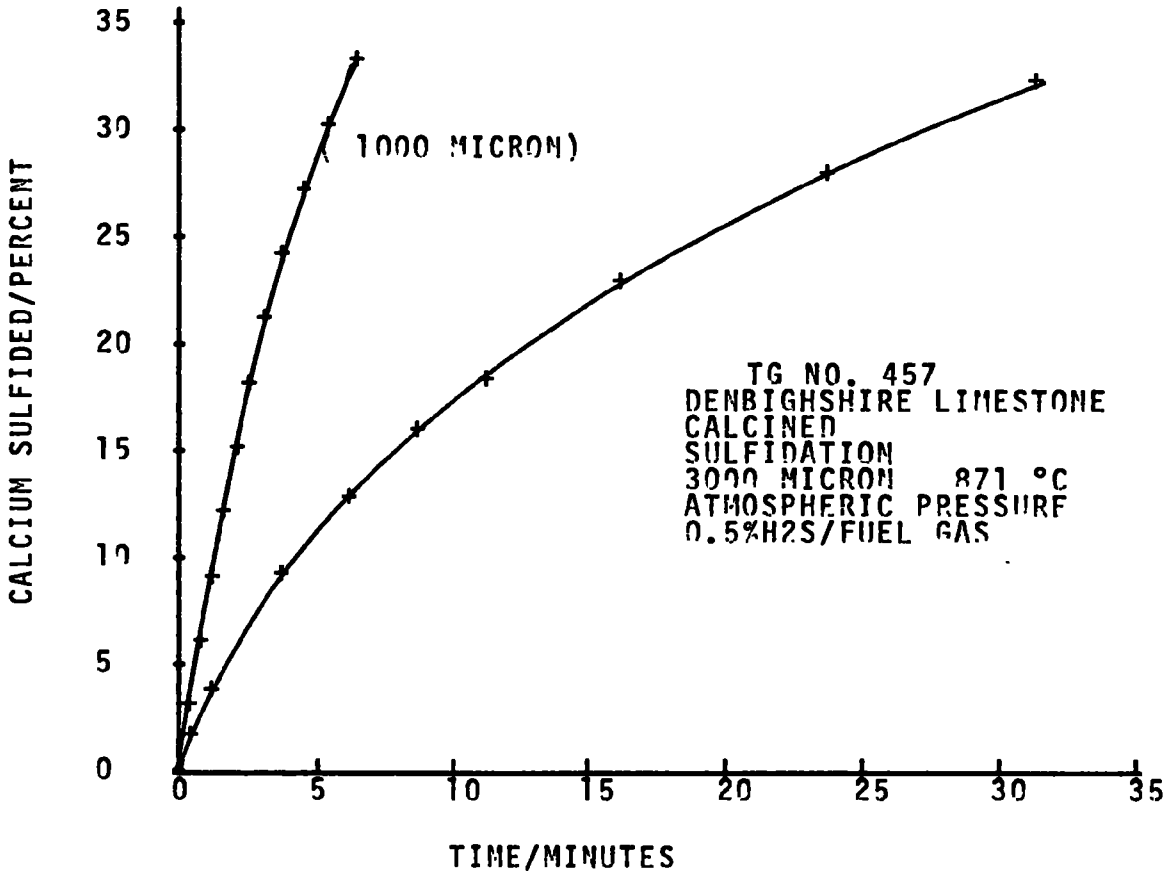

FIGURE R-1 - SULFIDATION OF A LARGE PARTICLE OF CALCINED LIMESTONE

Stone Particle Size

A large particle was selected from the Denbighshire limestone 6-16 mesh sieve fraction. The particle was roughly 3,000 μm in diameter.

On calcining, the stone was sulfided and the sulfidation rate fell drastically after the first five percent of sulfidation, as compared with the smaller particles (1,000 to 1,200 μm) which had been previously tested, as shown in Figure R-1.

The data obtained in this run were entered into the first-order model* of a fluidized-bed desulfurization process. The experimental parameters used were from Esso batch tests using 3,000 to 1,000 μm particles of limestone. As Figure R-2 shows the fluidized bed results are less optimistic than the TG data. They are bounded reasonably by the TG results for the two extremes of particle size. The agreement between TG data and fluidized bed results, however, is much poorer than in the case of sulfur dioxide retention under oxidizing conditions.

Further work is required on this system since it is important to devise a TG test which will accurately predict the fluidized bed performance of a given sorbent. At the moment it is clear that routine tests on candidate limestones for the oil gasification process should be extended to include larger particle sizes. The range of fluidized bed conditions for which test results are available should increase greatly because of the extended bed-height capability coming on line at the Esso plant and because of the 100 mm (4 in) fluidized bed unit which is coming into operation at Westinghouse.

---

*The fluidized-bed model used is described and discussed in detail in the companion two-volume report under this contract on fluidized bed combustion.

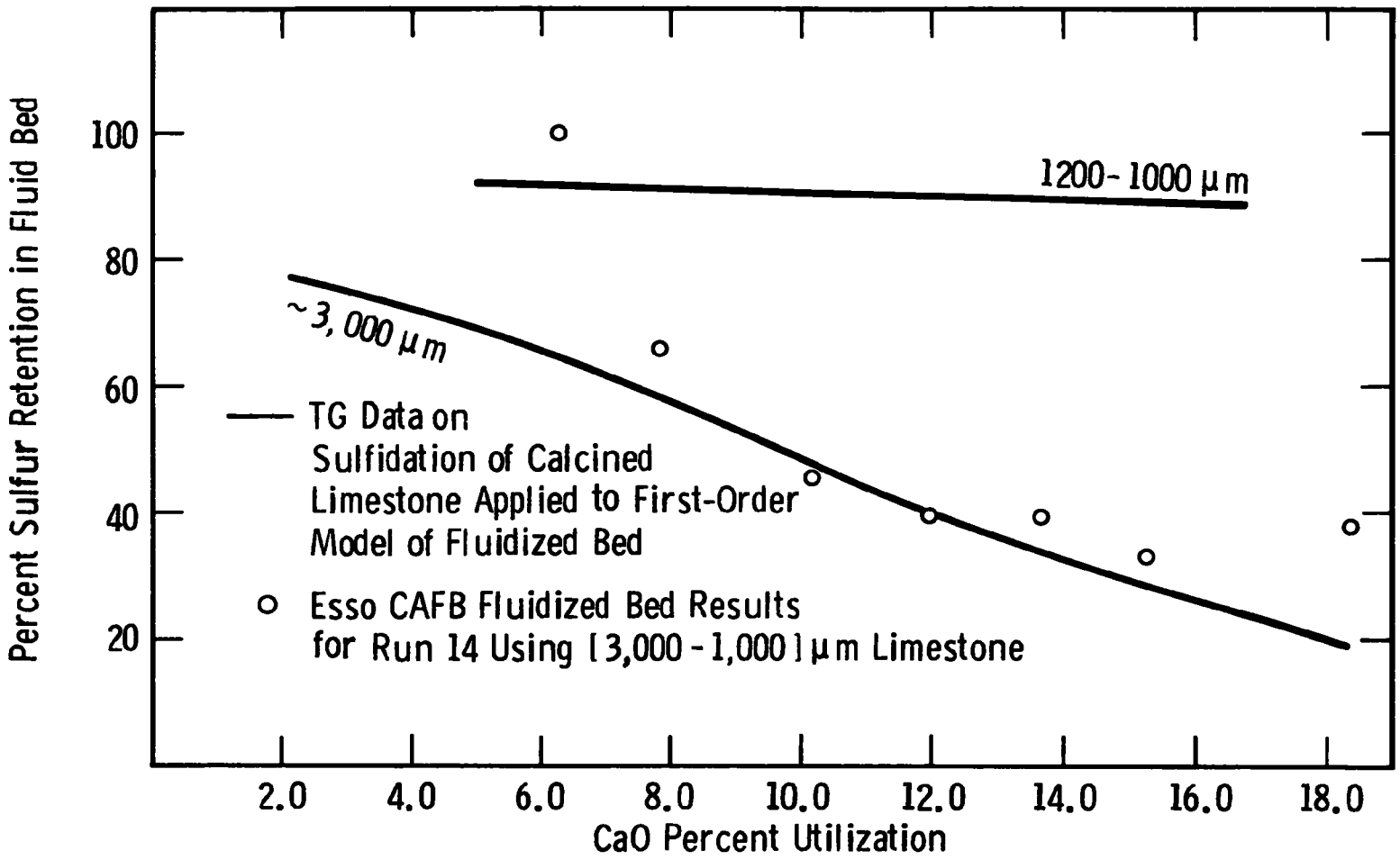

Figure R-2—Comparison of Esso CAFB oil gasification desulfurization and the projection of fluidized bed from thermogravimetric data

REFERENCES

1. Craig, J.W.T., G.L. Johnes, G. Moss, J.H. Taylor, D.E. Tisdall. Chemically Active Fluid Bed Process for Sulphur Removal during Gasification of Heavy Fuel Oil—Second Phase. Environmental Protection Agency. Esso Research Centre, Abingdon, England. EPA-650/2-73-039.
2. Ruth, L.A. Reaction of Hydrogen Sulfide with Half-Calcined Dolomite. Thesis. Department of Chemical Engineering, The City College, The City University of New York. New York 1972.
3. Keairns., D.H. Archer, R.A. Newby, E.P.O'Neill, E.J. Vidt. Evaluation of the Fluidized Bed Combustion Process. Vols. I and IV. Environmental Protection Agency. Westinghouse Research Laboratories. Pittsburgh, Pennsylvania. EPA-650/2-73-048 a and d. December 1973.
4. Craig, J.W.T. Private communication. February 1974.

APPENDIX S

SPENT LIMESTONE DISPOSITION

S

APPENDIX S

SPENT LIMESTONE DISPOSITION

Implicit in the process development work has been the belief that a satisfactory method of disposition of the effluent stone would be available. Several alternatives were investigated:

- Land disposal
- Ocean dumping
- Deep mine injection
- Potential markets.

LAND DISPOSAL

Land dumping does not appear to be a long-range solution to the problem of sorbent disposal. The dump area would not be usable for any other purpose at any foreseeable time. As an interim measure, however, while research to develop other methods continues, it may be an acceptable route. In the vicinity of Providence, Rhode Island, three of six disposal contractors are willing to undertake to remove approximately 36.3 Mg (40 tons) a day of dry by-product stone from the dry sulfation process at costs in the range of from $2.50 to $3.81/Mg ($2.75 to 4.20/ton). Standard roll-off type containers would be used to collect the sorbent on-site. The containers would be removed every two days. Preliminary indications are that no problem exists with leaching of trace elements from the spent stone.

DEEP MINE INJECTION

Discussions were held with members of the Pennsylvania Department of Environmental Resources, formerly the Department of Mines, regarding the feasibility of injecting the waste material into abandoned mines. Even

if the mine owner and/or the Department could be certain of the solubility of the material, it would be difficult to obtain the necessary permits to conduct deep mine injection activities.

OCEAN DUMPING

For locations in and near coastal areas, the possibility of ultimately disposing of spent solid sorbent by ocean dumping exists. Such disposal, however, is now covered by final regulations and final criteria for the evaluation of permit applications established in accordance with Title I of the Marine Protection, Research, and Sanctuaries Act of 1972, Public Law 92-532 and Sections 403 (c) and 402 of the Federal Water Pollution Control Act Amendments of 1972, Public Law 92-500. The basic intent of these regulations is not to prohibit such dumping but to regulate it strictly. There is also an International Convention on the Prevention of Marine Pollution by Dumping of Wastes and Other Matter which was ratified by the U.S. Senate in 1973 and which will come into force when ratified by 15 nations. These regulations form the basis for the operating program to enforce this convention.

As applied to industrial wastes, no material may now be dumped into the territorial waters of the United States without an EPA permit. It is possible to obtain the following classes of permits to cover the disposal of spent sorbent from oil gasification processes:

- General permit - for small quantities of nontoxic waste
- Special permit - for wastes containing amounts of certain elements not in excess of prescribed limits except if such wastes are or rapidly become harmless after dumping. Harm includes rendering edible marine organisms unpalatable or endangering health of humans or other life forms. The spent sorbent would appear to come under the classification of a material requiring special care.
- Interim permit - for materials which do not meet the requirements of the regulations but for which a plan is under active development to bring the dumping within the regulations.

- Research permit - to investigate the impact of spent sorbent on the marine environment.

One other class, the emergency permit, is judged not applicable.

One serious restriction is the language of the act regarding renewal of permits. There is no provision for indefinite extension of the permits; they may be renewed upon application to and review by the Administrator. Research permits last 18 months, special permits three years; both may be renewed. Interim permits last no longer than one year and cannot be renewed; instead, a new one must be obtained. There is an implication to the general permit that it is to cover situations of an intermittent nature. Overall, it would still seem possible to obtain one or the other types of permits for a period of a few years while research continues on developing alternative uses for spent sorbent.

The procedure for obtaining a permit is lengthy, however, as it includes the following steps:

- Accumulation of technical information to support the application
- Preparation of the application
- Public notice via the newspapers, the Post Office, or to any person, group, or state or federal agency requesting it
- Notice to the water pollution control agency for the affected state
- Review by the Corps of Engineers, the Coast Guard, the Departments of the Interior and of Commerce, and the Regional Director of the NMFS-NOAA which has jurisdiction over fish and wildlife resources of the affected state.
- Holding hearings, if written requests from any person are received to hold such hearings. Such hearings shall be held no sooner than 30 days after receipt of the request. No time limit is set on the length of the hearings, although they are to be conducted expeditiously. The recommendations of the presiding officer at the hearing shall be forwarded to the appropriate Administrator within 30 days after adjournment

of the hearings. The Administrator has 30 to 180 days to take final action.

It is of interest that the act lists as alternatives to ocean dumping landfill, deep-well injection, shallow-well injection, and spread of the waste material over open ground. The latter amounts to land dumping. Section 228.52 also provides that solid wastes of natural minerals or materials compatible with the ocean environment may be generally approved for ocean disposal if they meet criteria of insolubility and settling or dispersal rates. Section 227.71 provides that the limiting concentration of a constituent must not exceed one percent of that shown to be toxic to certain sensitive marine organisms or otherwise detrimental to the marine environment.

The oil to be desulfurized contains up to 400 ppm vanadium and 40 ppm nickel. It is expected that most of the vanadium and a substantial fraction of the nickel will be picked up by the sorbent. In the regenerative version of the process, the makeup calcium/sulfur molar ratio is less than 1.0. For an oil containing 3.2 percent sulfur, assuming complete conversion to calcium sulfate, the metals will be concentrated by a factor of 100/13.6 or about eight for a makeup ratio of approximately one. It has been suggested that if, indeed, such metal capture is obtained, the spent sorbent might be sold to a vanadium recovery operation. Alternatively, one of the concerns will be specifying an adequate dispersal method if ocean dumping is utilized.

To follow up this avenue of disposal, the Westinghouse Ocean Research Laboratory has been brought into initial consultation on this subject and has outlined a program which would essentially cover the accumulation of technical back-up information. This would include toxicity experiments designed or approved by EPA. The proposal is being reviewed to assess the probability of its overall success as a viable alternative.

POTENTIAL MARKETS

In addition to exploring the above disposal techniques, the area of by-product recovery was also investigated. Major attention was focused

on locating suitable uses for gypsum, elemental sulfur, or sulfuric acid.

Sulfur Market

The removal of sulfur from fuels offers the possibility of marketing it as sulfur, sulfuric acid, or in some other commercial form. Considering the potential scale of the desulfurization process, both current and projected markets were investigated. The following table is based on data from the Bureau of Mines.

Table S-1

SULFUR RESOURCES IN THE UNITED STATES

	Resources	Years supply
Native sulfur	548 (539)[a]	59[b]
Pyrite	258 (254)	29
Sulfide ores	52 (51)	6
Natural gas	52 (51)	6
Petroleum	51 (50)	6
Oil shale	1,548 (1,524)	168
Coal	13,421 (13,209)	1,453
Anhydrite and gypsum	19,100 (18,798)	2,069
Sea water	NA[c]	--
TOTALS	35,030 (34,426)	3,855

[a]Millions of Mg (millions of long tons).

[b]Year's supply at 1968 production rate of 9.23×10^6 Mg (9.085×10^6 long tons).

[c]Not available.

The table shows that the first five sources, which are relatively easily exploited, can meet current needs domestically for 104 years. This is extended for another 20 centuries with the aid of the energy in oil shale and coal. Given a supply of energy, refractory sources such as gypsum, and eventually even sea water, can be exploited.

The next step is to compare these figures with the potential production of sulfur from the 50 MW demonstration plant. This works out to 8.94 Mg (8.8 LT) day or about 2500 Mg (2900 LT) year. Sulfur production would approach one percent of the 1968 domestic rate when the utility consumed enough fuel to generate 1700 MW. The demonstration plant will, thus, be an insignificant factor in the sulfur or sulfuric acid market. The minimum economic size for an acid plant is probably no less than 25.4 Mg (25 LT) acid/day.

Examination of the end-use pattern for sulfur reveals the following conclusions:

- 87% consumed as acid
- 50% used to manufacture phosphate fertilizers
- 89% supplied by elemental sulfur of which 92% was Frasch sulfur
- The second largest use of sulfur, acid for inorganic pigments, was only about one-tenth the size of the fertilizer market.

Since essentially all of the Frasch sulfur comes from Texas and Louisiana, this confirms that it is economical to ship sulfur rather than acid. This supported the view that stone processing should favor sulfur production rather than acid.

Because of the heavy dependence of the sulfur market on the fertilizer market, a brief check of this aspect was made. The 1968 domestic demand was 3,152,000 Mg (3,475,000 short tons) of phosphorus, of which 76 percent was for fertilizer phosphorus. Since there are other processes for extracting phosphorus from rock, these serve to limit the price of sulfur. This means a limited product credit for by-product sulfur over the long term.

A reasonable question is the stability of the fertilizer market. The following table gives domestic and world reserves of phosphorus, expressed in millions of megagrams (short tons).

Table S-2

PHOSPHORUS RESERVES

Location	Marketable product, million Mg (millions short tons)	Phosphorus content, million Mg/ (millions short tons)
Domestic U.S.		
Known reserves	7,162 (7,895)	939 (1,035)
Potential reserves	49,370 (54,420)	5,245 (5,782)
TOTAL	56,532 (62,315)	6,184 (6,817)
Rest of world	--	13,543 (14,983)
TOTAL	--	19,777 (21,800)

The known domestic reserves will last 2200 years at the 1968 demand rate. Taking into account the geographical distribution of phosphate rock, there may be local shortages, but nationwide the supply is adequate for far more than 22 centuries.

The demand for both sulfur and phosphorus is increasing, however. There is both a population increase and a per capita increase. Some uses will grow with the population, which is estimated at 1.6 percent year. Others will grow at a faster rate. The problem is what growth rate to use. Use of even a modest rate like 4 percent/year would result in a cumulative demand that would exhaust the known reserves of phosphate rock in 65 years, and the total reserves in 110 years. Similar results would obtain for sulfur, although it would last somewhat longer. The population itself will have doubled in 44 years. It appears reasonable, therefore, to adopt the following view:

- Resources of sulfur and phosphorus are adequate for time spans far beyond the life span of the proposed desulfurization processes.
- Except for local situations, it does not appear that a significant economic credit will be obtained for by-product sulfur. At best, these credits will merely offset the cost of the process for producing such products.

- If the by-product sulfur is discharged to the environment, in some suitable form, this should be done without regard for future recovery of sulfur.

Local situations might permit economical marketing of the sulfur. Both Du Pont and Monsanto were contacted regarding the potential of utilizing sulfur or sulfuric acid produced from the Westinghouse process. Both felt that conversion processes for sulfur dioxide to sulfur or sulfuric acid would be expensive to install and not practical on such a small scale (i.e. 50-MW plant scale). Questions regarding the sulfur purity levels also suggested its uncertain marketability.

This information was regarded as confirmation of the above analysis of long-term markets. In effect, if a product is to be developed from the spent sorbent, it is not sulfur or sulfuric acid.

Gypsum Market

Ideally, the effluent stone from the dry sulfation process, or from an alternative process, would be 90 percent calcium sulfate. It is possible this material would be a substitute raw material for gypsum products. For additional information on current industry interest, leaders in the gypsum products industry were contacted to determine if the material produced by the oil gasification process could be used in the manufacture of products such as wallboard and plaster. United States Gypsum, Johns Mansville, and Flintkote have requested samples for testing in order to evaluate the by-product material's compatibility with existing materials of construction for gypsum products. Cinder Products Corporation has requested a sample to test in the manufacture of cinder blocks.

The market potential has been discussed to some extent in Appendix K. For further perspective, data from the Bureau of Mines[1] showed that domestic reserves of gypsum are estimates at 18.14 million Mg (20 million tons), or 2000 years' supply at the 1968 production rate of 9.07 million Mg (10 million short tons/year). United States demand was 14,137,000 Mg (15,600,000 tons); the balance was imported principally from Canada and Mexico. Among the areas deficient in gypsum are the

New England states. There are also enormous reserves of anhydrite and by-product gypsum from phosphoric acid production.

The median growth rate for domestic gypsum demand is estimated at 30 percent/year, corresponding to a demand of 36.29 million Mg (40 million short tons) in 2000. Hence, there is no threat of a shortage of gypsum. Transportation, however, is an important factor. Overland routes are forced by economics to be short. Where ocean transport is available, however, gypsum can be shipped long distances: Nova Scotia to New York City and Mexico to Seattle.

It appears the quality of the spent stone might permit utilizing the stone as a raw material for gypsum products. To check out this alternative, efforts are under way to prepare sample quantities of sulfated stone to send to the above producers for evaluation.

Other Markets

Besides direct use as landfill, there are a variety of outlets in the general construction field that offer market potential. The spent stone will probably have 0 to 10 percent of the calcium as oxide in the regenerative process and possibly two-thirds as oxide in the once-through version. This can be blended with fly ash, which has a high silica content, to make cement-type materials. These may be sintered and hydrated or simply hydrated at ambient temperature. The object is to produce concrete, aggregate, or other materials usable in large-scale construction as in roads, dams, embankments, or sites preparation.

REFERENCES

1. Staff Bureau of Mines, Bulletin 650. Mineral Facts and Problems, 1970 edition. Chapters on sulfur, gypsum, calcium, phosphorus, clay, and sand and gravel.

TECHNICAL REPORT DATA
(Please read Instructions on the reverse before completing)

1. REPORT NO. EPA-650/2-75-027-b	2.	3. RECIPIENT'S ACCESSION NO.
4. TITLE AND SUBTITLE Fluidized Bed Combustion Process Evaluation Phase I--Residual Oil Gasification/Desulfurization Demonstration at Atmospheric Pressure (Vol. II)		5. REPORT DATE March 1975
		6. PERFORMING ORGANIZATION CODE
7. AUTHOR(S) D. L. Keairns, R. A. Newby, E. J. Vidt, E. P. O'Neill, C. H. Peterson, C. C. Sun, C. D. Buscaglia, and D. H. Archer		8. PERFORMING ORGANIZATION REPORT NO.
9. PERFORMING ORGANIZATION NAME AND ADDRESS Westinghouse Research Laboratories Beulah Road, Churchill Borough Pittsburgh, PA 15235		10. PROGRAM ELEMENT NO. 1AB013; ROAP 21ADB-009
		11. CONTRACT/GRANT NO. 68-02-0605
12. SPONSORING AGENCY NAME AND ADDRESS EPA, Office of Research and Development NERC-RTP, Control Systems Laboratory Research Triangle Park, NC 27711		13. TYPE OF REPORT AND PERIOD COVERED Phase I; 5/73-12/74
		14. SPONSORING AGENCY CODE
15. SUPPLEMENTARY NOTES		

16. ABSTRACT This volume contains appendices resulting from an evaluation of the atmospheric-pressure fluidized bed residual oil gasification/desulfurization process, a process referred to by its inventor (Esso Research Centre, Abingdon, England) as the chemically active fluidized bed (CAFB) process. The CAFB produces a clean, low heating value fuel gas for firing in a conventional boiler. The integrated process, previously operated successfully in a 750 kW pilot plant unit, has demonstrated the ability to meet environmental emission standards for sulfur oxides, nitrogen oxides, and particulates. Work carried out under this contract was directed toward completion of a preliminary design and cost estimate for a 50 MW demonstration plant and a 200 MW plant design and cost estimate. Several process and design options are evaluated. Process flow diagrams, energy and material balances, equipment specifications, vessel drawings, equipment arrangement drawings, a site plan, an electrical one-line drawing, and utility requirements are presented for the recommended process concept. Plant performance, environmental impact, and functional operating conditions are presented and development requirements identified. Capital and operating costs are presented for the 50MW demonstration plant and for commercial plants with capacities from 50 to 500 MW. Limestone sorbent support data is given.

17. KEY WORDS AND DOCUMENT ANALYSIS

a. DESCRIPTORS		b. IDENTIFIERS/OPEN ENDED TERMS	c. COSATI Field/Group	
Air Pollution	Boilers	Air Pollution Control	13B	13A
Combustion	Nitrogen Oxides	Stationary Sources	21B	07B
Fluid Bed Processing	Limestone	CAFB Process	13H, 07A	
Residual Oils		Particulates	21D	
Gasification				
Desulfurization				

18. DISTRIBUTION STATEMENT Unlimited	19. SECURITY CLASS *(This Report)* Unclassified	21. NO. OF PAGES 441
	20. SECURITY CLASS *(This page)* Unclassified	22. PRICE

EPA Form 2220-1 (9-73)