EPA-650/4-75-025

June 1975

Environmental Monitoring Series

METHOD FOR OBTAINING REPLICATE PARTICULATE SAMPLES FROM STATIONARY SOURCES

U.S. Environmental Protection Agency
Office of Research and Development
National Environmental Research Center
Research Triangle Park, N. C. 27711

EPA-650/4-75-025

METHOD FOR OBTAINING REPLICATE PARTICULATE SAMPLES FROM STATIONARY SOURCES

by

William J. Mitchell and M. Rodney Midgett

Quality Assurance and Environmental Monitoring Laboratory
National Environmental Research Center
Research Triangle Park, North Carolina 27711

ROAP No. 26AAG
Program Element No. 1HA327

U.S. ENVIRONMENTAL PROTECTION AGENCY
Office of Research and Development
National Environmental Research Center
Research Triangle Park, North Carolina 27711

June 1975

RESEARCH REPORTING SERIES

Research reports of the Office of Research and Development, Environmental Protection Agency, have been grouped into five series. The five broad categories were established to facilitate further development and application of environmental technology. Elimination of traditional grouping was consciously planned to foster technology transfer and a maximum interface in related fields. The seven series are:

1. Environmental Health Effects Research
2. Environmental Protection Technology
3. Ecological Research
4. Environmental Monitoring
5. Socioeconomic Environmental Studies
6. Scientific and Technical Assessment Reports
9. Miscellaneous

This report has been assigned to the ENVIRONMENTAL MONITORING series. This series describes research conducted to develop new or improved methods and instrumentation for the identification and quantification of environmental pollutants at the lowest conceivably significant concentrations. It also included studies to determine the ambient concentrations of pollutants in the environment and/or the variance of pollutants as a function of time or meteorological factors.

EPA REVIEW NOTICE

This report has been reviewed by the Office of Research and Development, U.S. Environmental Protection Agency, and approved for publication. Approval does not signify that the contents necessarily reflect the views and policies of the Environmental Protection Agency, nor does mention of trade names or commercial products constitute endorsement or recommendation for use.

AVAILABILITY

This report is available to the public, for a nominal cost, through the National Technical Information Service, 5285 Port Royal Road, Springfield, Virginia 22161.

Publication No. EPA-650/4-75-025

TABLE OF CONTENTS

	PAGE
LIST OF FIGURES	v
LIST OF TABLES	v
ACKNOWLEDGMENTS	vi
INTRODUCTION	1
EXPERIMENTAL	5
EPA Method 5 Particulate Train	5
Four-train Sampling Arrangement	7
Equipment Calibration	10
Source Characteristics	11
Sampling	12
Sample Recovery	14
RESULTS	15
DISCUSSION OF RESULTS	19
Particulate Results	19
Percent Stack Moisture Results	21
CONCLUSIONS AND RECOMMENDATIONS	23
REFERENCES	25
TECHNICAL REPORT DATA AND ABSTRACT	27

LIST OF FIGURES

		Page
1.	An EPA Method 5 Particulate Train	6
2.	Single-pitot Sampling Arrangement	8
3.	Double-pitot Sampling Arrangement	9
4.	Within-Run Standard Deviation Versus Appropriate Run Mean	17

LIST OF TABLES

		Page
1.	Within-Run Variations in the Particulate Loading	16
2.	Within-Run Variations in the Moisture Determination	18

ACKNOWLEDGMENTS

The authors wish to thank the following for their assistance in this study: Scott Environmental Technology, Inc., Plumsteadville, Pa.; Mr. Jim Shelby, Mr. Frank Shapiro, and their staff at the Dade County Municipal Incinerator, Miami Beach, Fla.; Mr. Jim Rivard at the Allen King Power Plant, St. Paul, Minn.; and Mr. Ray Mobley of the Environmental Protection Agency, Durham, N.C.

METHOD FOR OBTAINING REPLICATE PARTICULATE SAMPLES FROM STATIONARY SOURCES

INTRODUCTION

Spatial and temporal variations in the velocity profile (the distribution of the flow across the stack) and in the particulate profile (the distribution of the particulate concentration across the stack) are common at stationary sources. Since a shift in the velocity profile will not always produce an identical shift in the particulate profile, the effects of these spatial and temporal variations on the sampling results must be minimized when sampling for particulates. To minimize the occurrence of temporal variations when a stationary source is being sampled, the source is generally required to operate at maximum rated capacity. Traversing while sampling the stack--a technique in which the stack is divided into equal concentric areas and each area is then sampled for an equal period of time--is the usual manner by which spatial variations are handled in source testing. In addition, any residual spatial and temporal variations that might still affect the results are supposedly handled by requiring that the average of a minimum number of sequential sampling runs constitute a source test result. For example, the Environmental Protection Agency (EPA) defines a particulate test result as the average of three sequential particulate sampling runs.[1]

Traditionally the precision and accuracy of test methods is established through a collaborative test (round-robin test). The

collaborative test is designed so that the participants (collaborators) each make one or more measurements on identical samples using the same test method. Then from a statistical analysis of the results an estimate is made of the precision associated with the test method. If the collaborators also use the test method to measure standard reference samples of known concentration, then an estimate can be made of the accuracy of the test method.

When we initiated our program to standardize the EPA promulgated stationary source test method for particulates,[1] our collaborative test design employed four sampling ports, which were located on the same stack, and four source sampling teams (collaborators). In the three collaborative tests accomplished thus far, each team sampled simultaneously for particulates, but at any one time only one team was sampling at each port. Each team achieved a complete run by sampling until a complete traverse of the stack had been accomplished.

These collaborative tests of the EPA particulate method (designated as Method 5)[1] were carried out at three different sources - a Portland cement plant,[2] a municipal incinerator,[3] and a coal-fired power plant.[4] In each test, variations of from 37% to 58% were observed between collaborator results.

What caused these wide differences? Possibly it was spatial and temporal variations in the source's particulate loading, but unfortunately the test design contained no means for evaluating the contribution from spatial and temporal variations. This is because it was assumed that traversing while sampling would minimize these

sources of variation. Other possible causes for the large differences between collaborators are: undetected equipment malfunctions, errors in operating the sampling train and recording the sampling data, differences in equipment and between-collaborator variations in their particulate recovery and analysis techniques.

If spatial and temporal changes caused these variations, then we had characterized the three sources but not the performance of Method 5. If the variations were actually attributable to the other causes mentioned above, then we had to conclude that Method 5 as written was not a rugged or reliable test method. Thus, a means was needed to determine the precision that could be obtained using the EPA particulate sampling train in the absence of spatial and temporal variations in the particulate profile. If this could be accomplished, then the variations measured between the trains would reflect only collaborator differences in the assembly and operation of the sampling train, differences due to properties inherent in the trains themselves; and between-collaborator differences in each collaborator's sample recovery and analysis procedure.

This report describes two four-train sampling arrangements that were used to estimate the precision capabilities of the Method 5 sampling train itself; that is, the agreement which could be expected between two identical trains that had simultaneously sampled the same particulate concentration in the absence of spatial and temporal variations. Three field tests of these sampling arrangements were done.

From these field studies an estimate was also made of the reliability of using condensation in the Greenburg-Smith impinger to determine the moisture content of stack gases.

EXPERIMENTAL

A. EPA Method 5 Particulate Train

Figure 1 presents a schematic diagram of the EPA Method 5 trains used. The design and construction specifications for the sampling train have been described by Martin,[5] and a description of the operating principles of the train has been presented by Rom.[6] In its simplest form, the train can be considered as composed of five major components:

1. A nozzle, a probe and a filter.
2. An "s" type pitot tube to measure the stack gas velocity.
3. A condenser (generally four Greenburg-Smith impingers connected in series).
4. An orifice, a vacuum pump and a dry gas meter.
5. A nomograph to relate stack gas velocity to the pressure drop across the orifice.

The train itself is operated as follows: the pitot tube reading is used in conjunction with the orifice reading and the nomograph to obtain an isokinetic sampling rate in the train in order to sample for the particulate at the same velocity that it is moving in the stack. At the end of the sampling run, the particulate that has been collected in the nozzle, probe and on the filter is recovered and weighed. The particulate concentration in the stack,

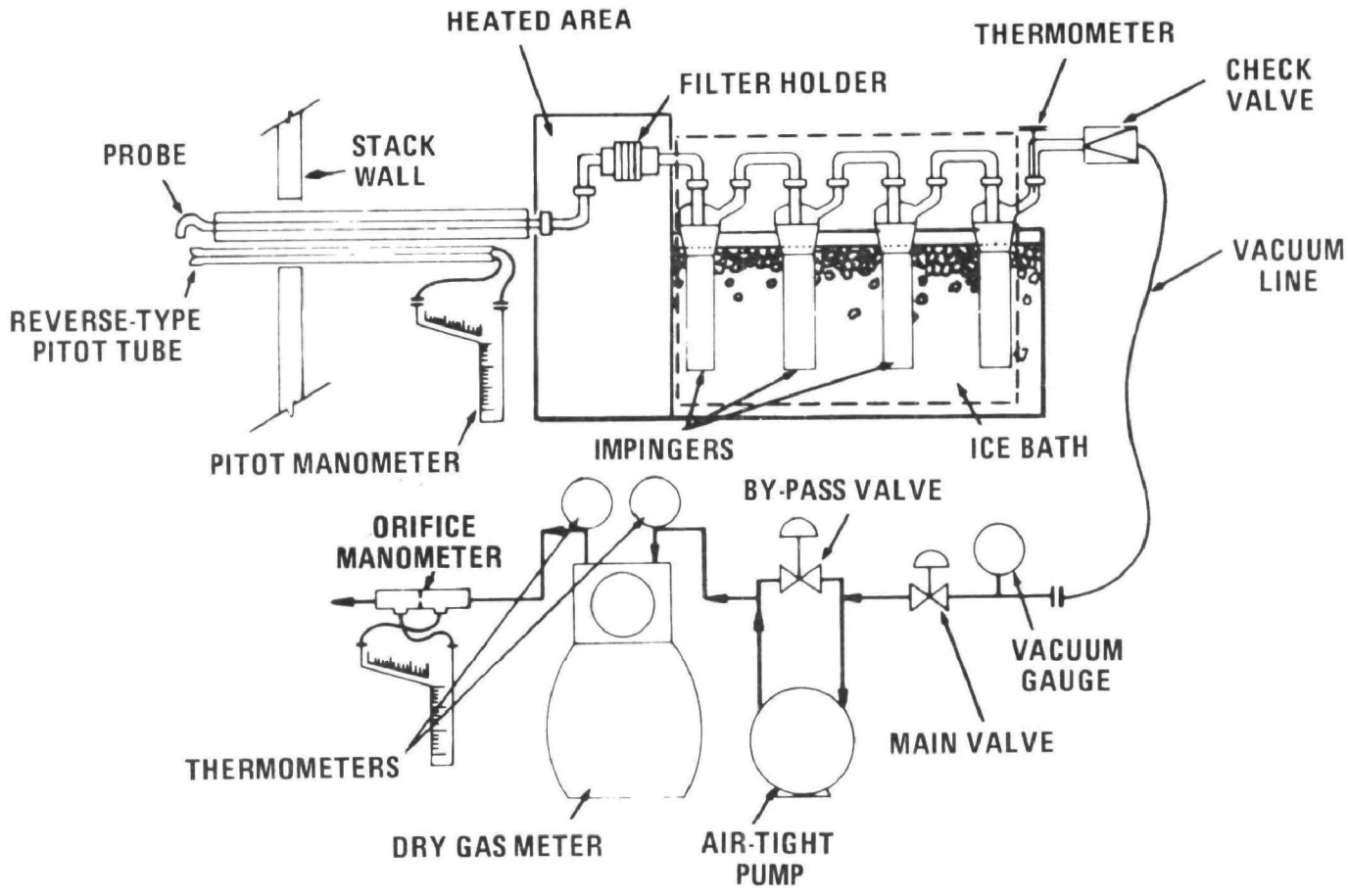

Figure 1. Typical EPA method 5 particulate sampling train.

which is usually referred to as the particulate loading, is then obtained by dividing the weight of particulate collected in the train by the total volume of gas measured at the dry gas meter after correcting this gas volume to the reference conditions of 21°C and standard atmosphere pressure (760mm Hg).

B. Four-train Sampling Arrangements

Two sampling probe/pitot tube arrangements were developed. In the first sampling arrangement, the four sampling nozzles were symmetrically located about a type s pitot tube by placing one nozzle at each corner of a 6-cm square and placing the pitot tube at the center of the square (Figure 2). In the second sampling arrangement, each nozzle was located at a corner of a 3.5-cm square, and the two pitot tubes used were placed on either side of the square (Figure 3). This latter sampling arrangement was developed to see if decreasing the distance between the sampling nozzles would improve the within-run standard deviation.

Except for the two different nozzle/pitot tube arrangements mentioned above, the equipment used in all three studies was identical in design and construction. The nozzles were constructed from 9.5 mm (O.D.) by 7.2 mm (I.D.) stainless steel tubing. The 150-cm glass probes, which were constructed from 1.6-cm (O.D.) by 1.3-cm (I.D.) borosilicate glass tubing, were identically wound with 762 centimeters of 25 gauge nichrome wire. Each glass probe was contained in a 25.4 mm (O.D.) by 22.1 mm (I.D.) stainless steel tube.

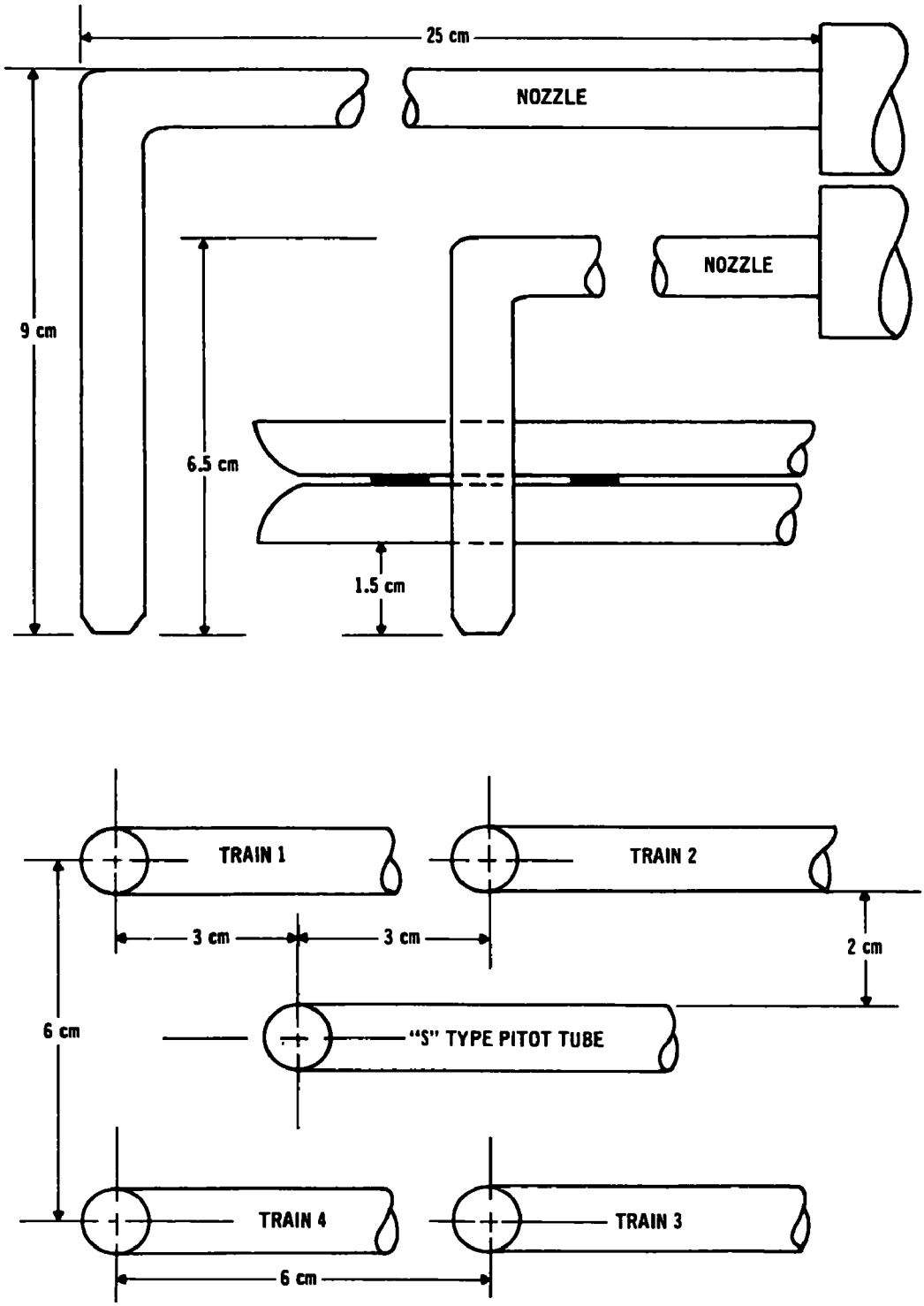

Figure 2. Single-pitot sampling arrangement: (top) side view, (bottom) upstream view

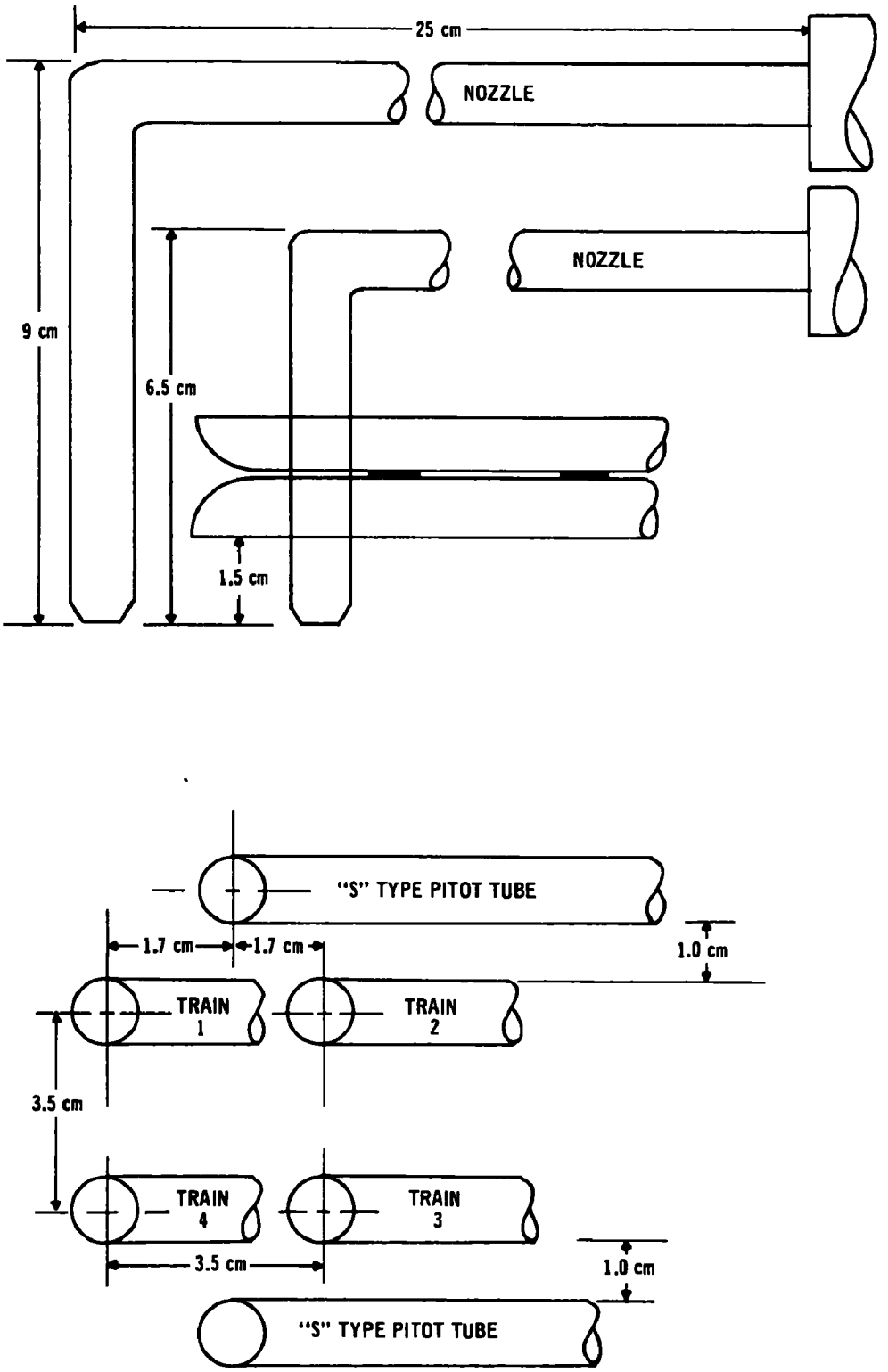

Figure 3 Double pitot sampling arrangement (top) side view, (bottom) upstream view.

The four filter holders used in each sampling run were contained in the same heated, thermostatically controlled box. The four sets of impingers used (four impingers per probe) were also contained in one box. This combining of components from the four trains was a necessary compromise because of physical limitations of space, size and weight.

During each sampling run, the relative spacing between the nozzles and the pitot tube(s) was held constant using stainless steel clamps mounted on the probes. The four probe liners were maintained at the same temperature by connecting each heating wire to the same electrical outlet strip, whose voltage was controlled with a Variac. To facilitate movement of the probes into and out of the stack, all the sampling equipment, with the exception of the meter boxes, was mounted on one lab cart.

C. Equipment Calibration

The dimensionless pitot tube calibration coefficient (C_p) of each type s pitot tube was determined over the velocity range 6.4 to 26 m/sec using a standard pitot tube (C_p = 0.99) as the reference standard. A check for interference of the nozzles on the pitot tube velocity measurement was made in a wind tunnel by comparing the C_p obtained in the absence of the four nozzles with the C_p obtained when the nozzles occupied the positions they would occupy during sampling. Since the C_p determined in the presence of the nozzles (when they were not sampling) was within one percent of the

C_p determined in the absence of the nozzles, there is no reason to suspect that the nozzles interfered with the stack gas velocity measurement. In addition, a check for nozzle interference on the pitot tube reading was also made at each site by comparing the pitot pressure differential (Δp) immediately before sampling began with the Δp measured immediately after sampling was initiated. No sudden change in the Δp was observed in any of the three tests.

Each meter box was calibrated in the laboratory prior to each test, but the calibration was also checked at the site by setting the orifice manometer to the $\Delta H@$ (calibration factor) of the meter box and measuring the flow rate through the dry gas meter. All meter boxes were still in calibration when checked on-site.

The Variac voltage required to maintain the sampled gases in the probe at 120°C was determined on-site by withdrawing gas from the stack through one of the probes and determining the temperature of the gas at the probe exit as a function of the voltage. All probes were identically wound and of the same length; so it was assumed that all probes would have the same temperature if operated at the same voltage.

D. Source Characteristics

The first study was done at a coal-fired power plant equipped with an electrostatic precipitator. When operating at its maximum output of 540 megawatts per hour, the plant used 240 tons

of coal per hour. Sampling was done in a horizontal duct 6.9 meters high by 3.6 meters wide. Stack temperature at the sampling point was 150°C.

The second and third studies were done at the same municipal incinerator at different times. The incinerator, which was equipped with an electrostatic precipitator, burns 300 tons of refuse per 24-hour day. The sampling was done about 1.5 stack diameters below the top of the vertical stack. Stack dimensions were 27.5 meters high and 3.0 meters in diameter, and the stack temperature at the sampling port was 215°C.

E. Sampling

The sampling procedure was similar to that specified in the Federal Register[1] (pp. 28888-28890) except that: 1) fixed-point sampling rather than multiple-point sampling (traversing) was used; and 2) for some sampling runs, the sampling time was less than the 2 hours specified in the Federal Register. (The sampling time was varied to see if the within-run standard deviation was sensitive to the total weight of particulate collected.)

At each site, a sampling point was selected at which the velocity profile varied by less than 2 percent of the absolute flow across the area that would be occupied by the four nozzles and the pitot tube(s). During each test, all sampling runs were done at the selected sampling point. A total of 16 sampling runs were accomplished in the three studies. The first 4 sampling runs

were done at the power plant, and the other 12 were done at the municipal incinerator.

As an aid to following the ensuing discussion, a brief tabulation of the three tests is given below:

Test	Run	Site	Probe/Pitot Tube Arrangement
1	1-4	Power Plant	4 probes, 1 pitot tube
2	5-10	Municipal Incinerator	4 probes, 1 pitot tube
3	11-14	Municipal Incinerator	4 probes, 2 pitot tubes
	15-16		4 probes, 1 pitot tube

In the first two tests, the pitot tube (Figure 2) was connected to one meter box. The operator of this meter box determined the velocity head (Δp) at 5-minute intervals, and then each meter box operator used this Δp and his own nomograph to obtain an isokinetic sampling rate in his train.

In the first four runs of Test 3, the sampling train/pitot tube arrangement in Figure 3 was used. One of the pitot tubes was attached to the meter box of train 1, and the other pitot tube was attached to the meter box of train 3. The operator of train 1 determined the Δp at 5-minute intervals, and then he and the operator of train 2 used this Δp to obtain an isokinetic sampling rate in their respective trains. At the same time the operator of train 3 also determined the Δp using the other pitot tube. Then both he and the operator of train 4 used this Δp to obtain an isokinetic sampling rate in their respective trains. However, the sampling

arrangement in Figure 2 was used in the last two runs of this test to see if decreasing the spacing between the nozzles would decrease the within-run standard deviation. In all 16 runs all the trains were able to operate within 10 percent of the isokinetic sampling rate--the allowable range for a Method 5 determination.

F. Sample Recovery

The particulate material collected in each train was recovered at the end of each sampling run. The material caught in the nozzle, probe, and filter holder was removed by washing these train components with acetone while scrubbing them with a nylon brush. The fiberglass filters, which were tared prior to the test, were removed from the filter holder with a pair of tweezers, placed in a culture dish and returned to the laboratory for a weight-gain determination.

At the end of each test the volume of water collected in the first three impingers of each train was measured in a graduated cylinder. (Impinger set integrity was maintained in all runs at one test site). The amount of water collected in the fourth impinger, which contained a known weight of silica gel, was obtained by weighing the previously tared silica gel.

RESULTS

Table I presents the particulate results obtained in each test and also presents the within-run percent coefficients of variation (%C.V.). The percent coefficient of variation, which is calculated using Equation 1, is a statistical technique that expresses the standard deviation as a percentage of the mean. This technique was used to facilitate comparing the sampling results for different runs, because the mean particulate loading varied from run to run.

$$\% \text{ C.V.} = \frac{\text{within-run standard deviation}}{\text{run mean particulate concentration}} \times 100 \qquad (1)$$

Figure 4 is a plot of each within-run standard deviation versus the mean particulate concentration for that run.

Table II compares the individual train percent moisture results and presents estimates of the within-run variation based on a statistical analysis of these results.

Table I. Within-Run Variations in the Particulate Loading (mg/std m^3, dry basis)

Run	Run Time, min.	Train 1	Train 2	Train 3	Train 4	Mean	% C.V.
1	90	205	202	204	221	208	4.2
2	30	190	196	222	185	198	8.3
3	30	207	240	222	199	217	8.3
4	30	155	150	188	141	159	13.0
5	120	60.4	61.9	63.2	64.6	62.5	2.8
6	120	57.1	62.2	64.1	62.5	61.5	4.9
7	150	62.5	61.3	58.2	56.9	59.7	4.4
8	120	54.2	51.8	49.6	45.3	50.2	7.5
9	55	51.0	50.5	50.5	46.1	49.5	4.6
10	55	56.3	59.9	62.4	51.9	57.6	7.9
11[a]	120	140	143	131	133	137	4.4
12[a]	90	113	107	125	128	118	8.6
13[a]	120	114	234[b]	200[b]	114	166	37.0
14[a]	90	126	123	134	144	132	7.0
15	120	153	141	161	139	148	6.7
16	90	103	106	104	103	104	1.3

[a]Double-pitot sampling arrangement used in this run.

[b]Train nozzle brushed the wall of the stack as it was being inserted into the stack.

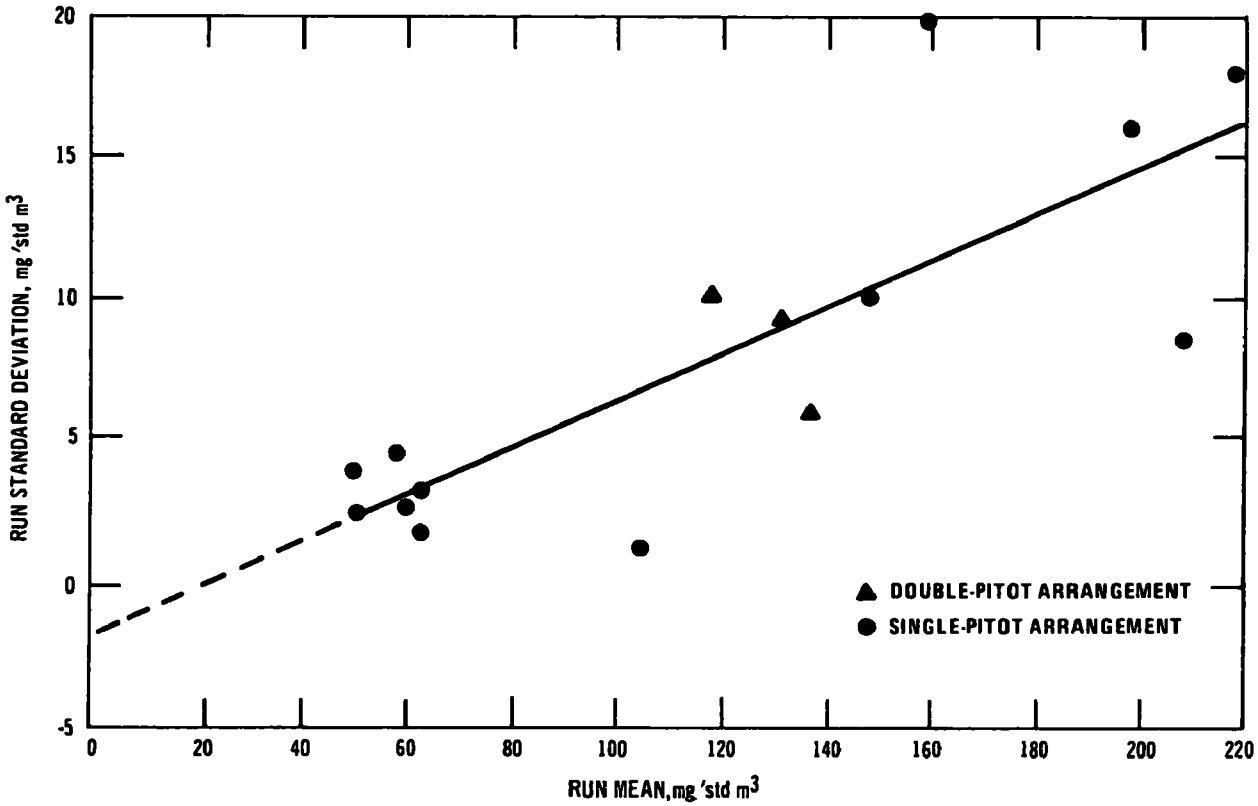

Figure 4. Within-run standard deviation versus appropriate run mean.

Table II. Within-Run Variations in the Moisture Determination

Run	Train 1	Train 2	Train 3	Train 4	Mean	% C. V.
1	6.9	7.0	8.9	7.9	7.7	12
2	7.9	10.0	14.9	8.9	10.4	30
3	9.3	10.6	10.4	8.4	9.7	10
4	9.9	11.3	7.4	11.2	10.0	18
5	14.9	16.2	16.0	15.0	15.5	4.2
6	15.2	16.2	15.8	15.5	15.6	2.8
7	15.1	16.0	15.9	15.5	15.6	2.6
8	14.2	15.5	13.6	13.5	14.2	6.3
9	13.8	14.3	14.7	14.4	14.3	2.5
10	16.1	17.4	16.8	16.4	16.7	3.4
11	10.6	11.0	9.2	10.8	10.4	7.7
12	12.4	11.3	13.2	12.9	12.5	6.7
13	12.1	13.1	12.7	13.0	12.7	3.6
14	12.0	12.2	12.2	12.5	12.2	1.9
15	14.5	15.6	15.2	14.9	15.1	3.1
16	10.8	10.8	11.0	11.1	10.9	1.5

DISCUSSION OF RESULTS

Particulate Results

Our examination of the within-run percent coefficients of variation presented in Table I showed that the two-pitot sampling arrangement (runs 11, 12 and 14) and the single-pitot sampling arrangement (runs 1 through 10 and runs 15 and 16) gave comparable results. On this basis, a linear regression analysis was done to compare the standard deviations from each run (except run 13) with the corresponding mean particulate loading for that run. The results of this linear regression analysis, which are plotted in Figure 4, determined that a linear relationship existed between the standard deviation and the source particulate loading measured for that run, but the reasons for this relationship are unknown. (The data for run 13 were not used because as the probes were being inserted into the stack, the nozzles of trains 2 and 3 brushed the stack wall.)

A similar statistical analysis that compared the standard deviation for each sampling run with the sampling time for that run, showed that the variation in the within-run standard deviation was not affected by the sampling time. Consequently, there is no reason to suspect that the total weight of particulate collected or the total volume of gas sampled affected the within-run standard deviation.

From the above discussion, it can be seen that the sampling results have been interpreted on the assumption that during each

sampling run, each of the four trains sampled the same average particulate concentration. Thus, the four samples obtained in a sampling run are considered to be replicates. Because it is likely that temporal variations in the particulate profile occurred between sampling runs, samples from different runs must not be considered as replicates. Therefore, when we determine the standard deviation observed in a sampling run, we are estimating the smallest variation that might be expected between two identical Method 5 sampling trains that had simultaneously sampled the same stack and had each sampled the same particulate concentration in such a manner that spatial and temporal variations in the source did not affect their sampling results. Because we cannot assume that the samples taken by the same train in different runs are replicates, no estimate of the within-train variation has been attempted.

An examination of the particulate results in Table I shows that the between-train differences observed were small when compared to the differences observed between participants in the three collaborative studies.[2,3,4] However, this should be expected because: 1) as discussed in the Experimental Section, certain components of the four trains were combined, and, to this extent, the trains were not truly independent of each other in their operation; 2) the equipment used here was of a reliable design from a reputable manufacturer, but our observations from the collaborative test program indicate that some of the equipment commercially available for particulate sampling simply does not function as it was designed to function; 3) our use of

fixed-point sampling spared us the trouble of having to change sampling ports during a sampling run (This minimized the chances of brushing the stack wall while inserting and removing the probes--the effect of which can be seen in run 13 of Table I--and also minimized the chance that a leak would develop in the train during a port change); and 4) all sampling, sample recovery, and sample analyses were carried out by the same laboratory. Thus, even though different console operators were used, and sample recovery from the different trains was performed by different individuals, members of this laboratory executed these manipulations in a similar manner--a situation that would not normally be found among independent collaborators in different laboratories.

Thus, our failure to observe in this study the large within-run differences detected in the collaborative tests of Method 5 indicates that in the collaborative tests either: 1) traversing while sampling did not adequately handle spatial and temporal variations; 2) the method was poorly written and lacking in sufficient detail on how various procedural manipulations were to be carried out such that each collaborator was using his own version of the method; or 3) undetected equipment malfunction and poor performance on the part of the collaborators were common occurrences in all the collaborative tests. Perhaps all three of these made significant contributions to the overall differences.

B. Percent Stack Moisture Results

An examination of the within-run, percent coefficients of variation for the determination of the percent moisture in the stack gas (Table II) shows that the variations ranged from a low of

1.5 percent to a high of 30 percent. For the following reasons these within-run variations are attributed to volumetric measuring errors and not to significant differences in impinger collection efficiency: 1) a visual inspection of the moisture results showed that the high and low values in any one test were randomly distributed between the four sets of impingers; 2) a linear regression analysis detected no correlation between the within-run standard deviation and the mean volume of water collected in the impingers during that run; 3) an Analysis of Variance detected no relationship between the individual percent moisture results and the location of the impingers in the impinger box; and 4) an examination of the field data sheets detected no relationship between the individual percent moisture results and the temperature of the gas as it left the last impinger.

CONCLUSIONS AND RECOMMENDATIONS

From the particulate sampling results reported here, it is concluded that either of the four-train sampling arrangements will be a useful means for estimating the best agreement between sampling trains that could be obtained from the test methods used to characterize stationary source emissions. In addition, the technique might be a non-controversial means by which to compare the performance of different types of trains - for example, the ASTM, ASME, and EPA particulate trains.

Since the results obtained in this study conflict with those obtained from three classically designed collaborative tests of Method 5, [2,3,4] additional collaborative testing of Method 5 seems justified. However, these additional tests and similar collaborative tests on other stationary source test methods should be designed so that an estimate can be made of the contribution that spatial and temporal variations make to the total variation observed. In other words, the testing should be designed not only to evaluate the test method, but also to determine if traversing adequately compensates for spatial and temporal variations in the pollutant profile.

The design of these collaborative tests could be similar to that used in the previous collaborative tests with the following exceptions: 1) each train should be leak-checked before sampling is

initiated, after each port change, and at the end of the sampling run (in previous collaborative tests the trains were only leak-checked before the run started - a standard source testing procedure); 2) some means should be devised to ensure that the nozzles do not touch the stack wall when the probes are being inserted into and removed from the stack; 3) the trains should traverse in pairs and not individually; and 4) the sampling method being tested should specify in detail many of the procedural details that are now left to the judgment of the sampling train operator.

The use of paired trains, combined with the leak-check procedure described in the above paragraph, should allow instances of train malfunction to be easily identified. If the traversing procedure adequately compensated for spatial and temporal variations in the particulate profile, then the mean particulate loadings for a set of paired trains should not be significantly different from the means obtained by the other set(s) of paired trains. If the means were not significantly different, then the differences between the trains would yield an estimate of the precision of the stationary source test method. If the means were significantly different, but both trains in a set agreed closely, then it should be possible to estimate the contribution that spatial and temporal variations made to the results.

REFERENCES

1. Environmental Protection Agency. Standards of Performance for New Stationary Sources. Federal Register. 36: 24876-24890, December 23, 1971.
2. Hamil, H. F., and D. Camann. Collaborative Study of the Method for the Determination of Particulate Emissions from Stationary Sources (Portland Cement Plant). Environmental Protection Agency Technical Report No. EPA-650/4-74-029. May 1974. (Available from National Technical Information Service, 5285 Port Royal Road, Springfield, Va. 22161.)
3. Hamil, H. F. and R. E. Thomas. Collaborative Study of the Method for Determination of Particulate Emissions from Stationary Sources (Municipal Incinerators). Environmental Protection Agency Technical Report No. EPA-650/4-74-022. July 1974. (Available from National Technical Information Service, 5285 Port Royal Road, Springfield, Va. 22161.)
4. Hamil, H. F. and R. E. Thomas. Collaborative Study of the Method for the Determination of Particulate Emissions from Stationary Sources (Fossil Fuel-Fired Steam Generators). Environmental Protection Agency Technical Report No. EPA-650/4-74-021. June 1974. (Available from National Technical Information Service, 5285 Port Royal Road, Springfield, Va. 22161.)

5. Martin, R. M.. Conctruction Details of Isokinetic Source-Sampling Equipment. Environmental Protection Agency Technical Report No. APTD - 0581. (Available from Environmental Protection Agency, Air Pollution Technical Information Center, Research Triangle Park, N.C. 27711.)

6. Rom, J. J.. Maintenance, Calibration, and Operation of Isokinetic Source Sampling Equipment. Environmental Protection Agency Technical Report No. APTD - 0576. (Available from Environmental Protection Agency, Air Pollution Technical Information Center, Research Triangle Park, N.C. 27711.)

7. Miller, I., and J. E. Freund. Probability and Statistics for Engineers. Prentice Hall, Inc., Englewood Cliff, N.J. 1965.

TECHNICAL REPORT DATA
(Please read Instructions on the reverse before completing)

1 REPORT NO. EPA-650/4-75-025	2	3 RECIPIENT'S ACCESSION NO.
4 TITLE AND SUBTITLE Method for Obtaining Replicate Particulate Samples from Stationary Sources		5 REPORT DATE June 1975 6 PERFORMING ORGANIZATION CODE
7 AUTHOR(S) William J. Mitchell and M. Rodney Midgett		8 PERFORMING ORGANIZATION REPORT NO.
9 PERFORMING ORGANIZATION NAME AND ADDRESS U. S. Environmental Protection Agency National Environmental Research Center Quality Assurance and Environmental Monitoring Lab Research Triangle Park, North Carolina 27711		10. PROGRAM ELEMENT NO. 1HA327 11 CONTRACT/GRANT NO
12. SPONSORING AGENCY NAME AND ADDRESS U. S. Environmental Protection Agency Office of Research and Development Washington, D. C. 20460		13. TYPE OF REPORT AND PERIOD COVERED Final 14 SPONSORING AGENCY CODE

15. SUPPLEMENTARY NOTES

16. ABSTRACT

Two sampling arrangements that allow four independent trains to sample simultaneously at the same point in the stack are described. These sampling arrangements have been used to obtain replicate particulate samples from stationary sources. Sixteen particulate sampling runs that used these sampling arrangements with four identical EPA Method 5 particulate trains determined that the magnitude of the within-run standard deviation was linearly related to the magnitude of the mean particulate concentration measured for that run. However, no such relationship was found between the within-run standard deviation and either the run sampling time or the total volume of gas sampled.

From a statistical analysis of the percent moisture in the stack determination, an estimate is made of the precision of the condensation technique used in the Method 5 sampling train.

17 KEY WORDS AND DOCUMENT ANALYSIS

a DESCRIPTORS	b. IDENTIFIERS/OPEN ENDED TERMS	c. COSATI Field/Group
Environmental monitoring Sampling Particulates Air pollution Stack emissions		

18 DISTRIBUTION STATEMENT Release unlimited	19 SECURITY CLASS *(This Report)* Unclassified 20 SECURITY CLASS *(This page)*	21 NO. OF PAGES 34 22 PRICE

EPA Form 2220-1 (9-73)