EPA-650/2-74-034
June 1974

Environmental Protection Technology Series

OPTICAL MEASUREMENTS OF SMOKE PARTICLE SIZE GENERATED BY ELECTRIC ARCS

Office of Research and Development
U.S. Environmental Protection Agency
Washington, DC 20460

EPA-650/2-74-034

OPTICAL MEASUREMENTS OF SMOKE PARTICLE SIZE GENERATED BY ELECTRIC ARCS

by

P. W. Chan

Colorado State University
Fort Collins, Colorado 80521

Grant No. R-800150
ROAP No. 21ADL-21
Program Element No. 1AB012

EPA Project Officer: D. C. Drehmel

Control Systems Laboratory
National Environmental Research Center
Research Triangle Park, N. C. 27711

Prepared for

OFFICE OF RESEARCH AND DEVELOPMENT
U.S. ENVIRONMENTAL PROTECTION AGENCY
WASHINGTON, D. C. 20460

June 1974

This report has been reviewed by the Environmental Protection Agency and approved for publication. Approval does not signify that the contents necessarily reflect the views and policies of the Agency, nor does mention of trade names or commercial products constitute endorsement or recommendation for use.

ABSTRACT

Light extinction and photometric scattering measurements employing laser sources have been used for sizing polydispersed metallic particulate systems of unknown index of refraction. Two time-averaged intensity ratio measurements including (i) intensity ratio at two angles and (ii) polarization ratio at one angle, were carried out at several small forward-scattering angles so that the measured values are essentially independent of the index of refraction. Results were presented for smoke generated by electric arc discharges between carbon, copper, aluminum and tungsten electrodes. In the two-angle ratio method, the average size is obtained by using the theory of Hodkinson. In the polarization method which is more suitable for sub-micron particles, the experimental curve of polarization ratio at several scattering angles is fitted by a theoretical best fit using a logarithmic normal size distribution similar to that used by Kerker et al., from which the modal value of the radius and the logarithmic deviations are obtained. The optical system was calibrated with standard latex spheres. The fit was found to be rather good for the arc smokes (polydisperse systems) and good for latex (monodisperse) spheres. The light scattering results agree with those obtained by light extinction method. Combination of the two schemes in one instrument may provide a device for sizing polydisperse particulate systems from .01μm to 10μm in diameter, independent of refractive index. The possibility of measuring size distribution in real-time using instantaneous measurements based on the above schemes, similar to that used by Gravatt, are considered. With some improvements, the device will be able to size particulate systems up to 10^7/cc or higher at a flow rate of 10^3 cm/sec using commercially available electronics. The same device will also count the number density to determine the particle concentration.

ACKNOWLEDGEMENTS

The technical assistance of Mr. Opas Apichatanon in the laboratory throughout the course of investigation is greatly appreciated. Discussions with Dr. C. Y. She of the Physics Department, Colorado State University and with Drs. D. C. Drehmel, J. Abbott and W. Kuykendal of the National Environmental Research Laboratory, Research Triangle Park are most helpful.

This work is supported by a grant sponsored by the U. S. Environmental Protection Agency.

CONTENTS

Page

Abstract iii

Acknowledgements iv

List of Figures vi

List of Tables vi

Sections

I Conclusions 1

II Recommendations 2

III Introduction 3

IV Theoretical Background - Mie Scattering Theory and Applications 5

V Optical Instrumentations for Particle Size Measurements 14

VI Experimental Methods, Results and Analysis 19

VII Instantaneous Forward Scattering Methods 32

VIII Discussion 39

IX References 41

FIGURES

No.		Page
1.	Light Scattering Geometry	6
2.	Essentials of Extinction (Transmission) Measurements	15
3.	Optical System for Scattering Measurements	17
4.	Experimental Set-up for Observation of Scattered and Transmitted Light	18
5.	Theoretical Curve of $E(m,\alpha)$ for DOP Smoke ($m = 1.486$)	21
6.	Experimental Results of Three-wavelength Transmission Measurements	22
7.	Variation of Intensity Ratios versus Size Parameter α According to Fraunhofer Diffraction	26
8.	Viewing Particles in a Flowing System	37
9.	A Proposed Real-time Device for the Determination of Particle Size Distribution	38

TABLES

No.		Page
I.	Theoretical Scattering Intensity - ratios	13
II a.	Three Wavelength Transmission Measurements of DOP Smokes	20
b.	Analysis of Three Wavelength Transmission Measurements of DOP Smokes	23
III	Average Particle Size of Smokes Particles as Measured by the Two-Angle Ratio Method	27
IV	Summary of Experimental Results of Parameters of Arc Smokers as Measured by the Two-Angle Ratio Method and by the Polarization Method	31

I. Conclusions

Two main conclusions can be drawn as a result of the present investigation dealing with optical methods for measuring sub-micron polydispersed smoke systems of unknown refractive indices:

(i) The two-angle ratio forward scattering technique has been found to be a reliable and accurate method for obtaining average sizes of several smoke systems generated by an electric arc between carbon, copper, aluminum and tungsten electrodes. The results can almost be obtained in real-time by comparing experimental results with available universal graphs of Hodkinson. However, in order to obtain particle size distribution (i.e. mean radius as well as standard deviation) for sub-micron particulate systems, the inversion procedure is rather lengthy and inaccurate since the two-angle intensity ratio is insensitive to particle size smaller than 0.2 μm.

(ii) The polarization ratio method appears to be a simpler amd more practical method for obtaining size distribution of sub-micron polydisperse smoke systems. The tecnique involves in measuring the polarization ratio of the scattered light at several scattering angles and fitting the experimental data with the best theoretical fit. For monodisperse latex particles, the fit is extremely good. However for polydispersed systems the fit is only fair. Performing the measurements of polarization ratio in small forward scattering angles also renders the technique to be applicable to particulate systems with unknown refractive indices.

(iii) In addition, theoretical calculations indicate that these techniques have great potentials in real-time applications for sizing sub-micron polydispersed particulate systems with concentrations 10^7/cc and flow rate 10^3 cm/sec with megahertz electronics, the number concentration that can be handled increases with the bandpass of electronics and decreases with flow rate.

II. Recommendations

The results of this investigation establish the feasibility of a practical technique for measurement of size distributions of polydispersed, absorptive particulate systems of unknown index of refraction throughout the range of particle size ranging from 0.01μm to several microns.

The next phase of this investigation will be to extend the present time-average measurements to instantaneous intensity-ratio and polarization measurements.

Theoretical estimates (Section VII) show that with commercially available fast electronics, these techniques can be used to monitor smoke size in real-time for particulate systems with concentrations up to 10^7 particles/cc at flow rates of 10^3 cm/sec, typical for many smoke stack and effluents from power plants. Thus it is strongly recommended that a self-contained unit suitable for field operation be built for measuring particulate size distribution of fine particles.

III. Introduction

Many optical methods exist for measuring particle size (average), size distribution, concentration and shape. Broadly speaking they can be classified as light transmission (extinction) measurements, photometric (multi-particle) scattering measurements and single particle scattering (counting) measurements. Except under special laboratory controlled conditions where particles under study are sufficiently monodispersed and the flow is non-turbulent, very few satisfactory methods have been found to size particles in the size range of .01μm to several microns. Since particles of this size range are of utmost concern to air pollution control and public health, development of accurate, real-time methods to monitor particulate size and concentration in this size range are of urgent importance for legislating environmental standards for air pollution control. Indeed, accurate characterization of particle size, distribution and concentration is important for developing techniques for conglomeration of fine particles. This report describes several optical particle sizing techniques suitable for in situ measurements and remote sensing for micron and sub-micron particles generated by an electric arc, which are highly dispersive systems similar to those encountered in smoke stacks and power plants. The advantages and limitations of each of the methods will be discussed. It should be noted that since the goal of the investigation is to result in a real-time particle in situ instrument for particulate monitoring, the emphasis of the investigations are on the reliability of the instrumentation and in the simplicity of extracting information from experimental data.

Reliable and rugged lasers such as the He-Ne or Argon ion lasers are used for the light source which, because of the monochromaticity, also

greatly increases the signal to ambient noise if narrow interference filter is used in the detector system. In Section IV, the Mie scattering theory which forms the theoretical background of the experimental methods used in this investigation is discussed. Section V describes the optical and electronic instrumentation for both transmission and scattering measurements. Section VI describes experiments on transmission methods from which particle concentration and average size is obtained as well as two scattering methods: one based on measuring the scattered ratio of intensities measured at two forward scattering angles, and the other based on measuring the polariziation artio at a particular angle, (measured at several scattering angles) from which the average size as well as the size distribution are obtained. The possibilities and capabilities of real-time devices based on these optical techniques are analyzed in detail in Section VII. A summary of the present investigation as well as some suggestions for future work in developing the techniques to a real-time system for air pollution is presented in the discussion in Section VIII. Detailed literature references are given in Section IX.

IV. Theoretical Background - Mie Scattering Theory and Applications

The Mie equations provide a general description of light scattered by uniform spherical particles illuminated by a plane wavefront. The results can be expressed in terms of the following parameters:

m = relative index of refraction of particles to the background medium, can be a complex quantity if the particle is absorptive: $m - m' - im''$.

λ = wavelength of incident radiation

r = radius of spherical particles

$\alpha = 2\pi r/\lambda = \pi d/\lambda$ = size parameter

I_o = irradiance of incident light (Watts/m^2)

θ = scattering angle (defined with respect to forward direction)

Plane of observation - plane containing the direction of propagation of incident wave ($\vec{k}_o$) and the direction of observation ($\vec{k}_1$).

Plane of Polarization - plane containing the direction of propagation of incident wave ($\vec{k}_o$) and the direction of its electric field in linearly polarized incident beam ($\vec{E}$).

ϕ = angle between the plane of observation and polarization (see Fig. 1)

For a linearly polarized incident beam, a scattered irradiance I_s (Watts/m^2) at a distance R from the scattering center is given by[1]

$$I_s\{\alpha,m,\theta,\phi\} = \frac{\lambda^2 I_o}{4\pi^2 R^2}\left(i_1\{\alpha,m,\theta\}\sin^2\phi + i_2\{\alpha,m,\theta\}\cos^2\phi\right) \qquad (1)$$

$$\equiv I_1 + I_2$$

and for an unpolarized incident beam,

$$I_s\{\alpha,m,\theta,\phi\} = \frac{\lambda^2 I_o}{8\pi^2 R^2}\left(i_1\{\alpha,m,\theta\} + i_2\{\alpha,m,\theta\}\right) \equiv I_1 + I_2 \qquad (2)$$

The scattered intensity function i_1 is proportional to the scattered light perpendicular to the plane of observation and i_2 is proportional to the scattered light parallel to the plane of observation. The functions

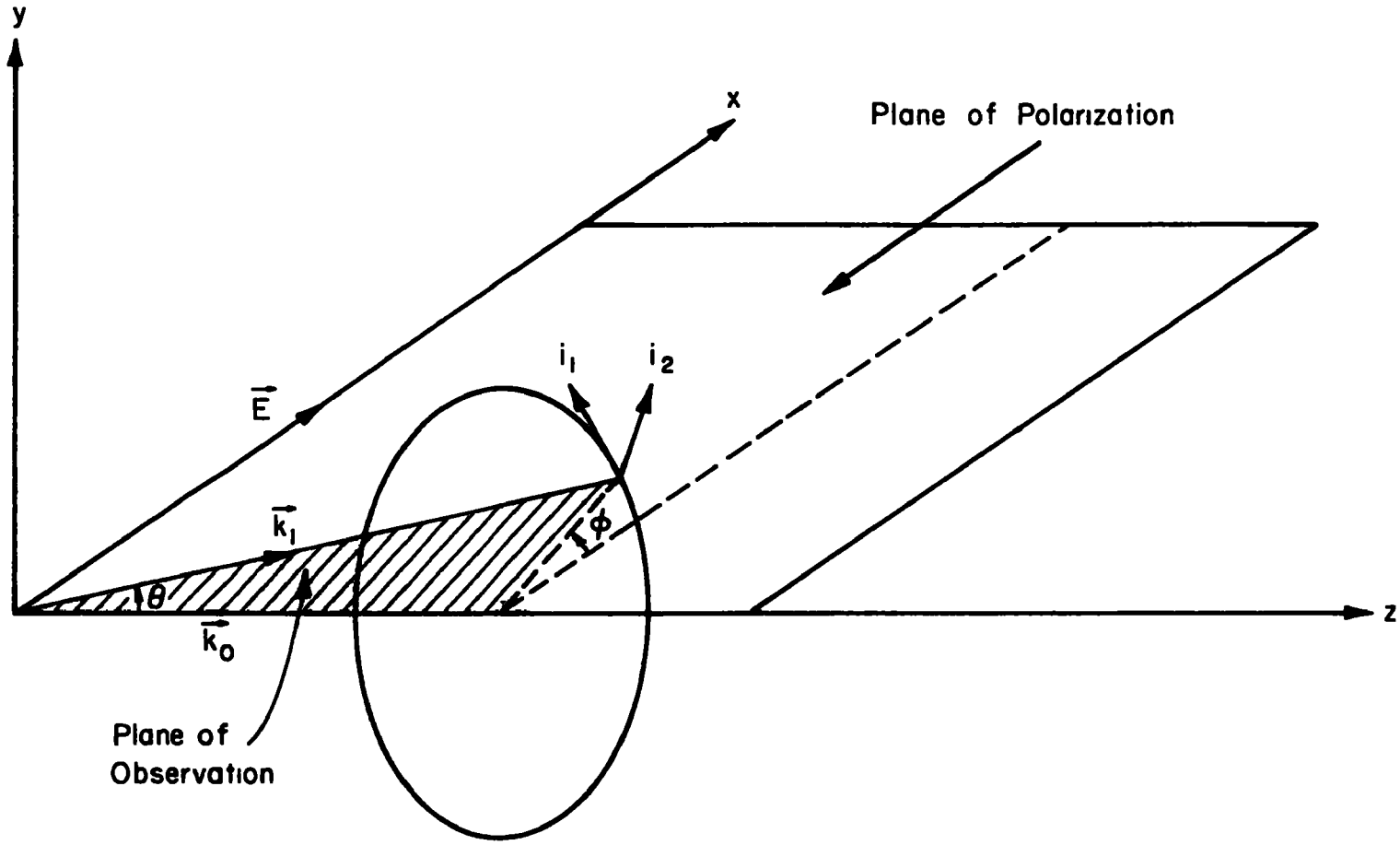

Fig. 1. Scattering geometry showing the incident wave vector $\vec{k}_0$, scattered wave vector $\vec{k}_1$, electric field vector $\vec{E}$ of a linearly polarized incident wave, $(\vec{k}_0, \vec{E})$ is the plane of polarization and $(\vec{k}_0\ \vec{k}_1)$ is the plane of observation. ϕ is the angle between the planes of polarization and observation, ($\phi = 90^o$ is a common scattering geometry). θ is the scattering angle between $\vec{k}_0$ and $\vec{k}_1$, $\theta = 0$ define the forward direction of the beam.

$i_1(\alpha,m,\theta)$ and $i_2(\alpha,m,\theta)$ each have the form of an infinite series of half order Bessel functions and Legendre polynomials.[2] In addition, expressions for light scattering for non-spherical particles have been worked out in simple cases such as cylinder, disks and ellipsoids. Light scattering from irregular shape particles such as fragments of coal and quartz has been studied by Hodkinson[3,4] experimentally and the same gross light scattering characteristics similar to those of spherical particles are found, except for some fine structures. Thus, Mie scattering can be applied to non-spherical particles for obtaining information on size distribution and concentration or number density.

Simplified theoretical solutions exist for very small particles, particles with relative index close to one, and for large particles.[1] For example, for small particles ($\alpha<<1, m\alpha<<1$), $i_1 = \alpha^6 \left(\frac{m^2-1}{m^2-2} \right)^2$ and $i_2 = i_1 \cos^2\theta$. For large particles ($\alpha>>1$), all but the finest details can be described by an incoherent superposition of expressions for diffraction, refraction, reflection and absorption.[5] This is particularly useful for $\alpha>>50$ since in this case the series contained in the Mie equations converge slowly and involve small differences of large terms, requiring relatively lengthy computer calculations for precision.

For the size range from 0.01μm - 10μm employing visible light source (0.4 - 0.7μm) no simplified solutions exist for the Mie equations although computer calculations are fairly readily available.

In real situations where the particles are highly polydispersed and in some cases where the index of refraction is complex and not known, special methods aiming at both simplicity and elegance and real-time practical application are desirable. Several techniques aiming at these goals are

investigated, the theory of the methods, one based on transmission or extinction measurement, and the other on two-angle forward scattering ratio and polarization ratio measurements will now be discussed.

A. Light Transmission Method

The method of light extinction or transmission measurement is useful for obtaining average size. It is based on the Bouguer or Lambert-Beer law which relates the transmitted flux f and the incident flux f_o to the thickness t of the suspension

$$f = f_o \exp(-naEt) \tag{3}$$

where n is the number density, a is the projected area of the particle (against the beam), and $E(\alpha,m)$ is the particle extinction coefficient. For spherical particles of a diameter d and of known refractive index m (relative to the suspending medium), illuminated in monochromatic light of wavelength λ in that medium, the variation of E against the particle-size parameter $\alpha \equiv \pi d/\lambda$ can be calculated from the Mie theory. For diotyl phthalate (DOP) $n = 1.486$, the E versus α curve has been calculated by R. B. Penndorf[6] and shows the usual oscillatory features. To make use of the theoreticel curve for deriving the average particle size, the transmittances of a particulate suspension at three wavelengths λ_1, λ_2, λ_3 are measured and are equal to $(f/f_o)_1$, $(f/f_o)_2$, and $(f/f_o)_3$ respectively. From Bouger's Law $E_1 : E_2 : E_3 = \ln(f/f_o)_1 : \ln(f/f_o)_2 : \ln(f/f_o)_3$ and the ratios existing between the corresponding particle-size parameters are

$$\alpha_1:\alpha_2:\alpha_3 = \lambda_1^{-1}:\lambda_2^{-1}:\lambda_3^{-1}.$$

To derive an estimate of particle-size, the theoretical curve of E versus α is plotted on a log-log graph paper. On a second, identical

sheet of graph paper are plotted the points

$$[\ln(f/f_o)_1/\ln(f/f_o)_1 = 1,\ \pi/\lambda_1]$$
$$[\ln(f/f_o)_2/\ln(f/f_o)_1\ ,\ \pi/\lambda_2]$$
$$[\ln(f/f_o)_3/\ln(f/f_o)_1\ ,\ \pi/\lambda_3].$$

The second sheet is then slid over the first, keeping the corresponding axes on both sheets parallel, until the plotted points best fit the theoretical curve. The correspondence of the logarithmic abscissae $\pi d/\lambda$ and π/λ gives the value of d; the value of E for any wavelength may be read also, and the particle number density (n) can be derived from Bouguer Law.

The results could be checked by a direct measurement of the mass concentration c. If ρ is the bulk density of the particles, and n the number density, then $\frac{4}{3}\pi r^3\rho n = c$ and from Bouguer's Law $D = \log_{10} f/f_o = naEt/2.303$ where $a = \pi r^2$ for spherical particles. Hence $c = 4\rho rD(2.303)/3\ tE$ and r and n may be calculated. It should be noted the mass concentration of smoke particles is difficult to be measured accurately for particulate systems in real situations.

B. Light Scattering Methods

In particle size analysis it is usually assumed that light is scattered incoherently by the particles so that the scattered intensity is proportional to the number density. It is also assumed that the system is so dilute that no neutral polarization effect or multiple scattering occurs. While mutual polarization effect occurs only when particles are very close together (distance smaller than several particle diameters), multiple scattering occurs quite commonly. As a rule of thumb, transmission should not be less than 90% to reduce the error due to multiple scattering.[7]

The basic theory of forward light scattering is based on the fact, first noted by Hodkinson,[8] that the angular distribution of the scattered light within the forward lobe is primarily due to Fraunhoffer diffraction, and as such, is independent of the index of refraction. Since the forward scattering arises from the light passing near the particle rather than from rays undergoing reflection and refraction (which depends on the refractive index), the scattering intensity function is given by

$$i\ (\theta,\ \alpha) = i_{\perp}(\theta,\alpha) + i_{||}(\theta,\alpha) = 2\alpha\ \ [J_1^{\ 2}\ (\alpha\ \ \sin\theta)\ /\ \sin^2\theta]$$

$$\simeq 2\alpha^2\ (J_1^{\ 2}\ (\alpha\ \theta)/\theta^2) \qquad (4)$$

The scatter flux (per unit angle per unit area) for small θ is

$$I(\theta,\alpha) = \frac{\lambda^2}{8\pi^2}\ 2\alpha^2\ (J_1^{\ 2}\ (\alpha\ \theta)/\theta^2)$$

$$= a^2(J_1^{\ 2}\ (\alpha\ \theta)/\theta^2) \text{ where } \alpha \equiv \frac{2\pi\alpha}{\lambda}\text{, a = a particle radius} \qquad (5)$$

For a polydisperse system of spheres

$$I(\theta) = \int_0^{\infty} a^2[J_1^{\ 2}\ (\alpha\ \theta)\ /\theta^2]\ p(a)\ da \qquad (6)$$

where p(a) is the particle size distribution. If one measures the scattered flux at two angles θ_1 and θ_2, for monodispersed systems, the ratio is

$$\frac{I\ (\theta_1\ \alpha)}{I\ (\theta_2,\alpha)} = \frac{[J_1^{\ 2}\ (\alpha\ \theta_1)\ /\ \theta_1^{\ 2}]}{[J_1^{\ 2}\ (\alpha\ \theta_2)\ /\ \theta^2]} \qquad (7)$$

which is a function of any set of small angles, θ_1 and θ_2. A set of graphs is thus obtained by Hodkinson[8] from which α or the radius of the particles can be calculated. In order to obtain the size distribution, one can assume a size distribution in Eq. (6), or the integral can be

inverted as done by Shifrin and Perlman[9,10] to give the size distribution as

$$p(\alpha) = -(2/\alpha^2) \int_0^\infty \alpha\theta J_1(\alpha\ \theta)\ N_1(\alpha\ \theta)\ \psi(\theta)\ d\theta \tag{8}$$

where

$$\psi(\theta) = \frac{d}{d\ \theta} \quad \{I\ (\theta)\ [(2\pi/\lambda)\ J_1\ (\theta)^3]\} \tag{9}$$

The accuracy and stability of the inversion are limited to larger (>2μm) particles and narrow size distributions. One of the limitations of the two-angle ratio method is that it becomes rather insensitive for particles with $\alpha \lesssim 1$ ($d \lesssim 0.2\mu m$).

The polarization ratio method first proposed by Kerker et al.[11] is more sensitive for submicron particles. Based on Mie theory, for a monochromatically illuminated sphere which scatters incoherently, the two polarization components of scattered light are given by

$$I_\perp\ (\theta) = c\int i_\perp(\theta)\ p(a)\ da \tag{10}$$

$$I_{||}(\theta) = c\int i_{||}(\theta)\ p(a)\ da \tag{11}$$

The polarization ratio for each of the angles θ is defined by

$$\rho\ \ (\theta)\ \triangleq\ I_{||}\ \ (\theta)\ \ I_\perp\ (\theta) \tag{12}$$

and is a function of the refractive index m (relative to the surrounding medium), $\alpha = 2\pi a/\lambda$, with $\lambda = \lambda_o/m$ where λ_o is the wavelength in vacuum. The procedure here is to assume a size distribution. A zero-order logarithmic distribution (ZOLD) is used and is defined by

$$p(a) = \exp\ \frac{(\log a - \log a_M)^2}{2\sigma_o^2} \qquad (2\pi)^{\frac{1}{2}}\ \sigma_o\ a_M\ \exp[\sigma_o{}^2/2] \tag{13}$$

where σ_o = log standard deviation

a_M = modal value of the radius.

For narrow distributions, the standard deviation $\sigma = a_M \ \sigma_o$.[12] The theoretical curve is then fitted to experimental data. Excellent agreement has been obtained by E. Matijevic et al.[13] Note that the index of refraction must be known and the method fails if $\sigma_o \geq 0.3$. (broad size distribution). In order to apply the polarization method for submicron particles, without knowing the index of refraction, a natural thing to do is to perform the polarization ratio measurements at forward scattering angles. Using the values of Mie scattering functions,[14] Table I shows some value of $i_{\perp}(\theta) \ / \ i_{||} \ (\theta)$. One sees that this ratio does not depend on the index of refraction especially for small angles. Thus, by combining the features of the forward scattering and the polarization ratio method, a system could result to provide a practical method of measuring size distribution of particles from .01μm to 10μm or larger.

Table I. Calculated Scattering Intensity-ratios for Different Size Parameter α and Refractive Index m.[14]

	*	m = 1.05	m = 1.15	m = 1.30
$\alpha = 0.2$	(1)	1.0076	1.0076	1.0076
	(2)	1.1324	1.1323	1.1321
	(3)	1.0001	1.0001	1.0002
	(4)	1.0234	1.0234	1.0233
	(5)	1.0116	1.0116	1.0116
	(6)	1.0468	1.0468	1.0467
$\alpha = 1.0$	(1)	1.0075	1.0074	1.0072
	(2)	1.1312	1.1286	1.1234
	(3)	1.0046	1.0046	1.0047
	(4)	1.0277	1.0273	1.0267
	(5)	1.0160	1.0158	1.0156
	(6)	1.0649	1.0647	1.0634
$\alpha = 2.0$	(1)	1.0073	1.0063	1.0053
	(2)	1.1267	1.1134	1.0895
	(3)	1.0187	1.0196	1.0210
	(4)	1.0415	1.0401	1.0374
	(5)	1.0299	1.0297	1.0291
	(6)	1.1247	1.1237	1.1213
$\alpha = 5.0$	(1)	1.0066	1.0046	1.0011
	(2)	1.1115	1.0720	0.9996
	(3)	1.1271	1.1379	1.1605
	(4)	1.1496	1.1535	1.1635
	(5)	1.1382	1.1456	1.1624
	(6)	1.7083	1.7601	1.8746

* Intensity-ratios:

(1) $i_{\perp}(5°)/i_{\parallel}(5°)$

(2) $i_{\perp}(20°)/i_{\parallel}(20°)$

(3) $i_{\perp}(5°)/i_{\perp}(10°)$

(4) $i_{\parallel}(5°)/i_{\parallel}(10°)$

(5) $[i_{\perp}(5°) + i_{\parallel}(5°)]/[i_{\perp}(10°) + i_{\parallel}(10°)]$

(6) $[i_{\perp}(10°) + i_{\parallel}(10°)] \;/\; [i_{\perp}(20°) + i_{\parallel}(20°)]$

V. Optical Instrumentations for Particle Size Measurements

Optical instrumentations for both transmission and angular scattering are basically simple. With the advent of lasers as well-collimated light sources, the usual condenser-pinhole-collimator combination for producing a collimated light beam can be eliminated especially if only μm or sub-micron particles are of interest.

(A) Consider first the optical requirements for transmission measurements. It is clear that from the definition of transmission or extinction that its requirement demands all of the undeviated light, and virtually none of the scattered light, to reach the measuring device. This is accomplished in the simple apparatus as shown in Fig. 2. Consider the case, if the first pin-hole can be assumed as a point aperture then the only light reaching the photocell, besides the transmitted beam, would be light scattered through angles less than the exact angle subtended at the pole of the collector lens by the radius of pin-hole (2). The scattered light is concentrated closer to the forward direction, the greater the particle size, and with visible light ($\lambda \simeq 0.5$ μm) a pin-hole is needed only for particles with $d > 10$μm. It is sufficient in practice if the angle subtended by each pin-hole at its lens is not more than one-tenth of the angle of the first angular minimum in the Fraunhofer diffraction pattern of a disc equal to the particle's projected area, i.e., not more than 1/10 of $3.84/\alpha$ radians. For example, if the largest particle is 5 μm, the pin-hole angle should be limited to 0.7° and for a lens of 10 cm, 1.2 mm pin-hole would be small enough. If the largest particles are $d = 1$ μm, the angle is 3.5° and the pin-hole would be 5 mm in diameter. Thus for a He-Ne laser of 1-2 mm diameter, apertures of 1mm placed in the beam and in front of the photodetector are sufficient for the present experimental conditions where only

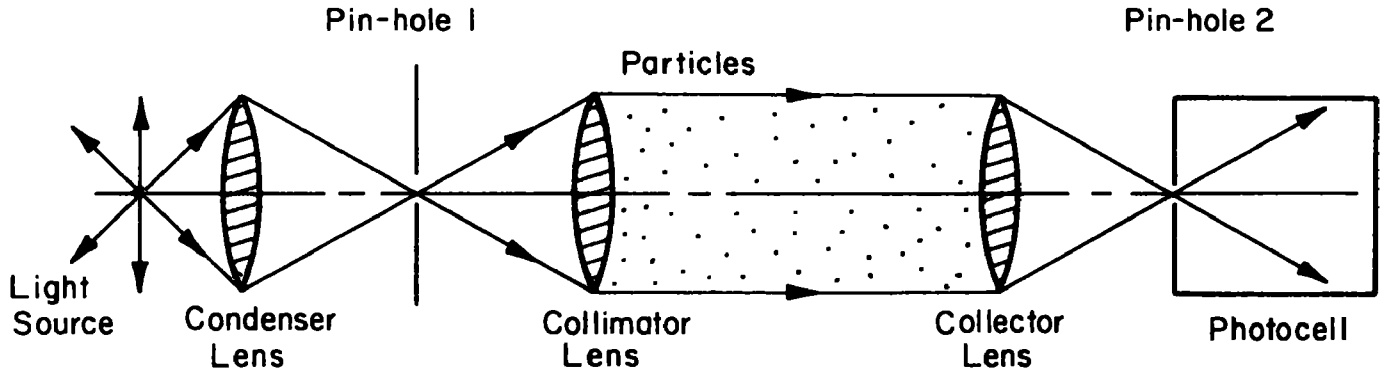

Fig. 2. Essentials of Extinction (Transmission) Measurements

particles of 0.01-2μm are of interest provided the detector is far away (more than 10 cm) from the scattering centers. For spectral rejection, a narrow band interference filter ($\lambda_{center} = 6328\ A^o = \lambda_{laser}$), should also be placed in front of the detector to reduce room light noise level.

(B) Next consider light scattering requirements. An idealized optical system is shown in Fig. 3. With reference to Fig. 3, the illuminated volume is $W^3/\sin\theta$, the solid angle within which light is received is wh/ℓ^2 ster. and if there are n particles per unit volume of projected area $\pi d_a^2/4$, and $I(\theta)$ is the scattered intensity defined as flux scattered per unit solid angle per particle, then $f_s(\theta) = \frac{n\pi d_a^2}{4} W^3(\sin\theta)^{-1}\, wh\ell^{-2} I(\theta)$. Since all values in the formula are derived from measurements, the projected area concentration $C_a \equiv n\pi d_a^2/4$ is found if $I(\theta)$ is known from theory. In most light scattering sizing methods, only relative intensity measurements are important. From the above formula we see that, for angular scattering measurements, $f(\theta)/f(\theta_2) = (\sin\theta_2/\sin\theta_1) \cdot (I_1(\theta)/I_2(\theta))$ and $f_2(\theta)/f_1(\theta) = I_2(\theta)/I_1(\theta) = \rho(\theta)$ so that all but the obliquity factor drops out when measurements involve only the reading of the photodetector. The experimental set-up for both extinction and scattering measurements for the present investigation is summarized as shown in Fig. 4. The light source is a low-power (1-2mw) He-Ne laser. The scattering cell is of cylindrical geometry to permit angular scattering observation. The angular observation is carried out by rotating a rigid optical bench located at the center of the scattering cell. A polarizer at the collection optical arm selects either the perpendicular ($\vec{E} \perp$ plane of observation) or the horizontal intensity. Aqueous solutions of latex spheres of known size distribution and DOP smokes are used for checking the accuracy of the experimental results.

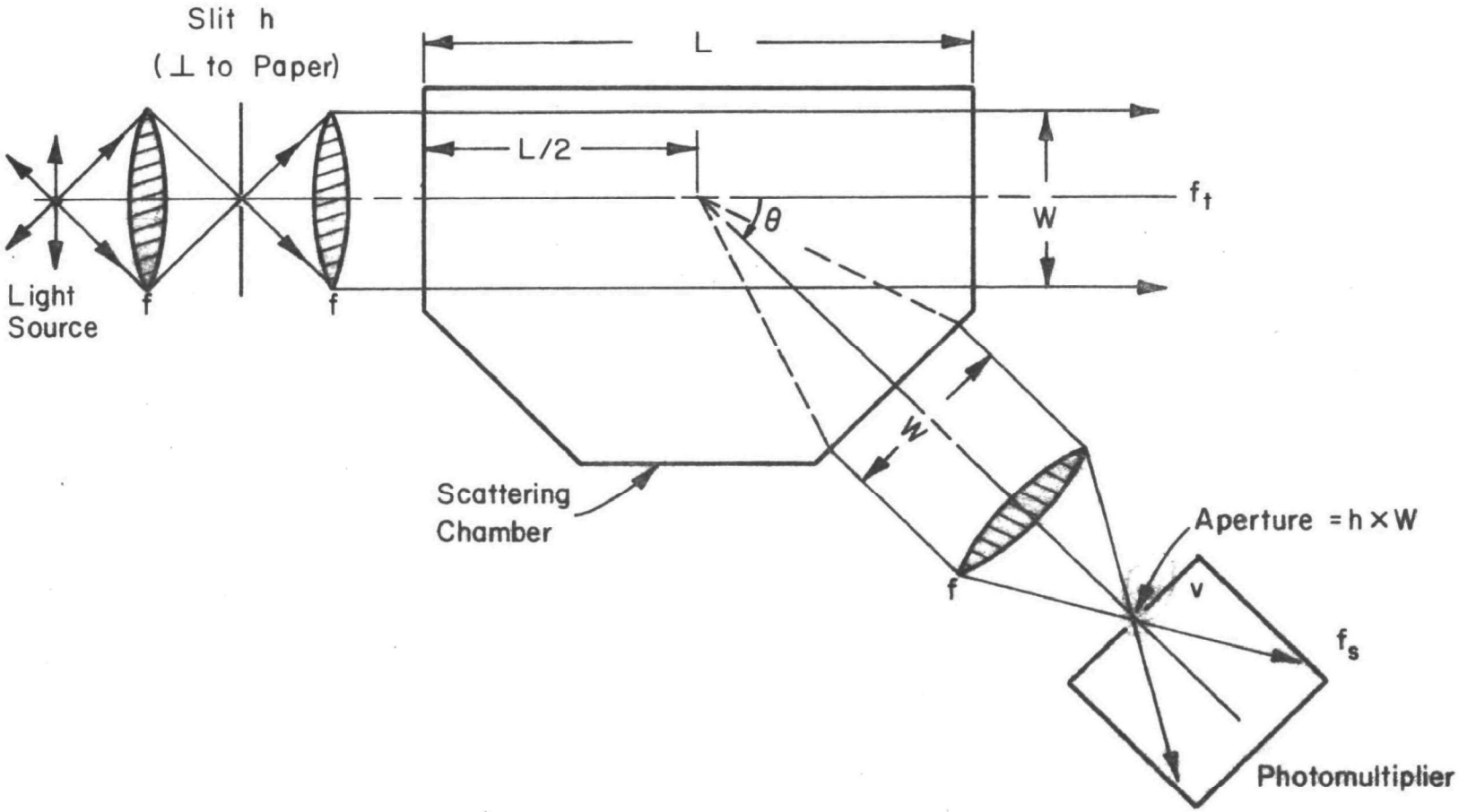

Fig. 3. Optical System for Scattering Measurements.

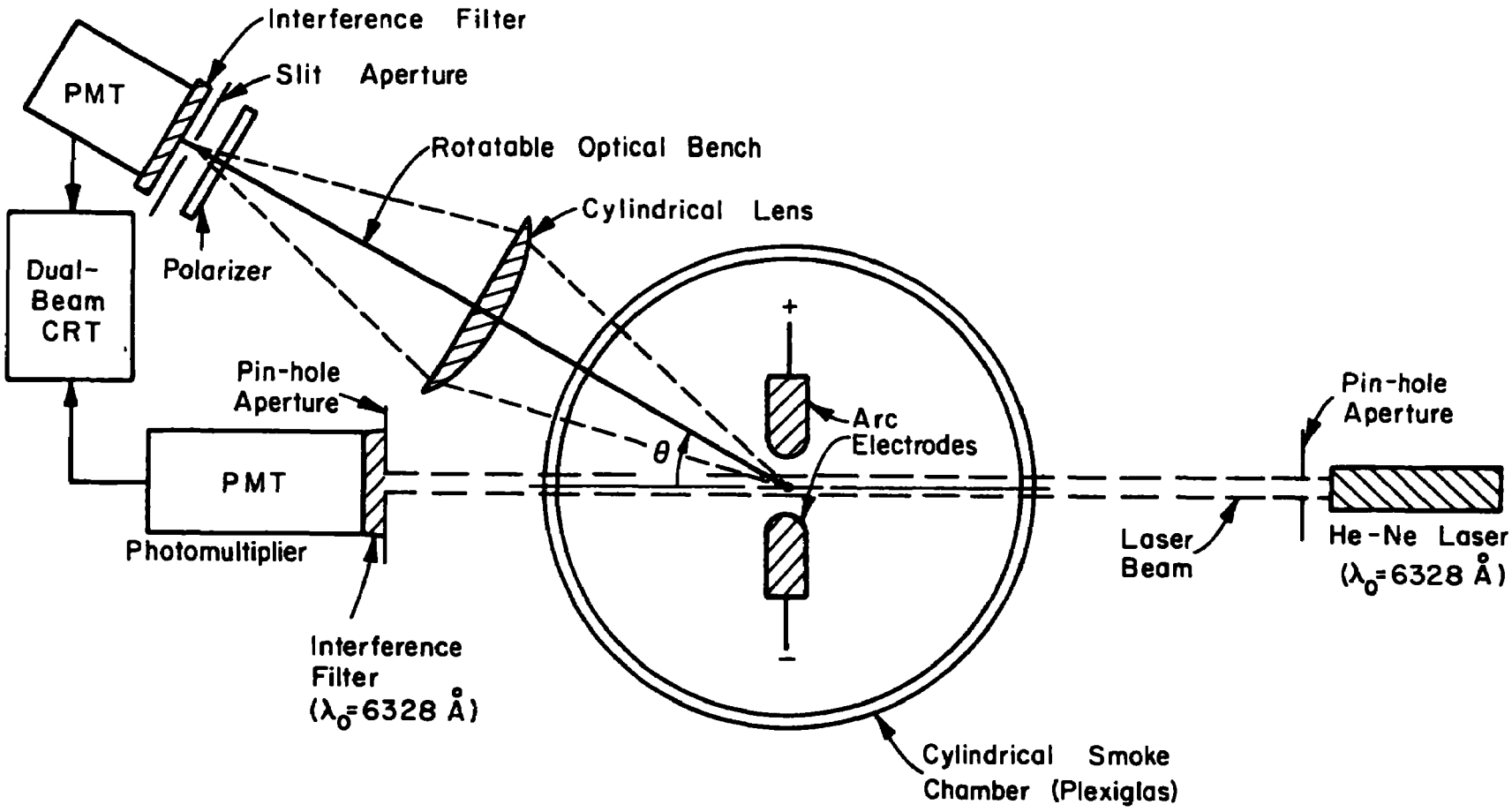

Fig. 4. Experimental Set-up for Observation of Scattered and Transmitted Light from Smoke Particles Generated by an Electric Arc.

VI. Experimental Methods, Results and Analysis

This Section describes the experimental methods of transmission measurement and angular scattering measurements for various kinds of smoke particulate systems. Results are presented for smokes generated by carbon, copper, aluminum and tungsten arcs. Standard latex spheres and DOP smokes are used as calibration standards.

A. Transmission Measurements of DOP Smoke Particulates

DOP smoke is used as a calibration standard since the index of refraction is well known, and the extinction coefficients $E(\alpha,m)$ are available in the literature,[6] and is reproduced here in Fig. 5. The apparatus was essentially the same as that given in Fig. 3 and Fig. 4 of Section V. Two schemes were used, one employing the measurement of the transmission at three different wavelengths at 6328 Å (red), 5460 Å (green) and 4358 Å (blue), and the other by measuring transmission at one wavelength (6328 Å) as well as weighing the smoke. In the transmission method, the light sources used were a He-Ne laser which provides the red line at λ_1 = 6328 Å and a mercury arc lamp with a green (Corning 4-74) filter and blue (Corning 5-56) filter, providing the green line at 5460 Å and the blue line at 4258 Å respectively. In the case of the mercury arc light source, the light was first passed through a pinhole, then condensed and collimated by a lens system. Dioctyl phthalate (DOP) smoke was dispersed in a clean smoke Plexiglas chamber for 15 seconds with the fan on to ensure smoke homogeneity. The initial (without smoke) and the final (with smoke) readings of the photomultiplier tube (RCA 1 P22) were taken for each of the three light sources used.

Experimental Results and Analysis

The experimental results are tabulated as follows:

Table IIa.--Three-Wavelength Transmission Measurements of DOP Smoke

Wavelength Flux (μA meter reading)	$\lambda_1 = 0.6328\ \mu$	$\lambda_2 = 0.546\ \mu$	$\lambda_3 = 0.438\ \mu$
f_o	500 μA	80 μA	200 μA
f	165 μA	30 μA	80 μA

The theoretical curve of E versus α for dioctyl phthalate smoke (m = 1.486) is shown in Fig. 5. On a second identical sheet of paper were plotted the three points located at

$$[\ln(f/f_o)_1 \,/\, \ln(f/f_o)_1\ ,\ \pi/\lambda_1] = 1,\ \ 4.9646]$$

$$[\ln(f/f_o)_2 \,/\, \ln(f/f_o)_1\ ,\ \pi/\lambda_2] = [0.8846,\ \ 5.7531]$$

$$[\ln(f/f_o)_3 \,/\, \ln(f/f_o)_1\ ,\ \pi/\lambda_3] = [0.827,\ \ 7.21]$$

as shown in Fig. 6. A second sheet is then slid over the first with the axes parallel until the plotted points best fit the theoretical curve. From the best fit the extinction coefficient E can be found, d is then read off from the graph and n can be calculated from Bonguer law. The results are summarized in Table IIb.

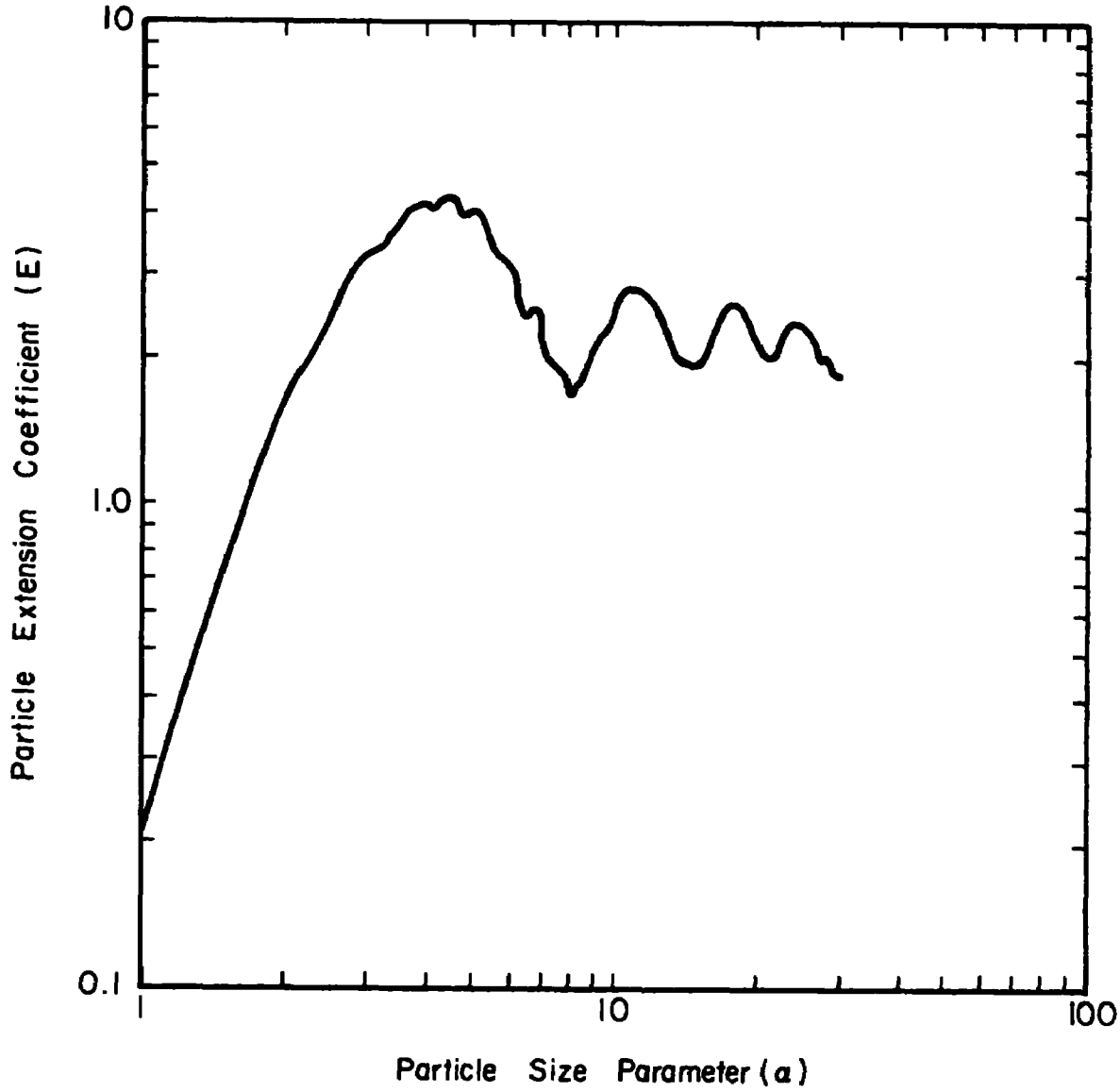

Fig. 5. Theoretical Curve of E (m,α) for DOP Smoke (m = 1.486)[6]

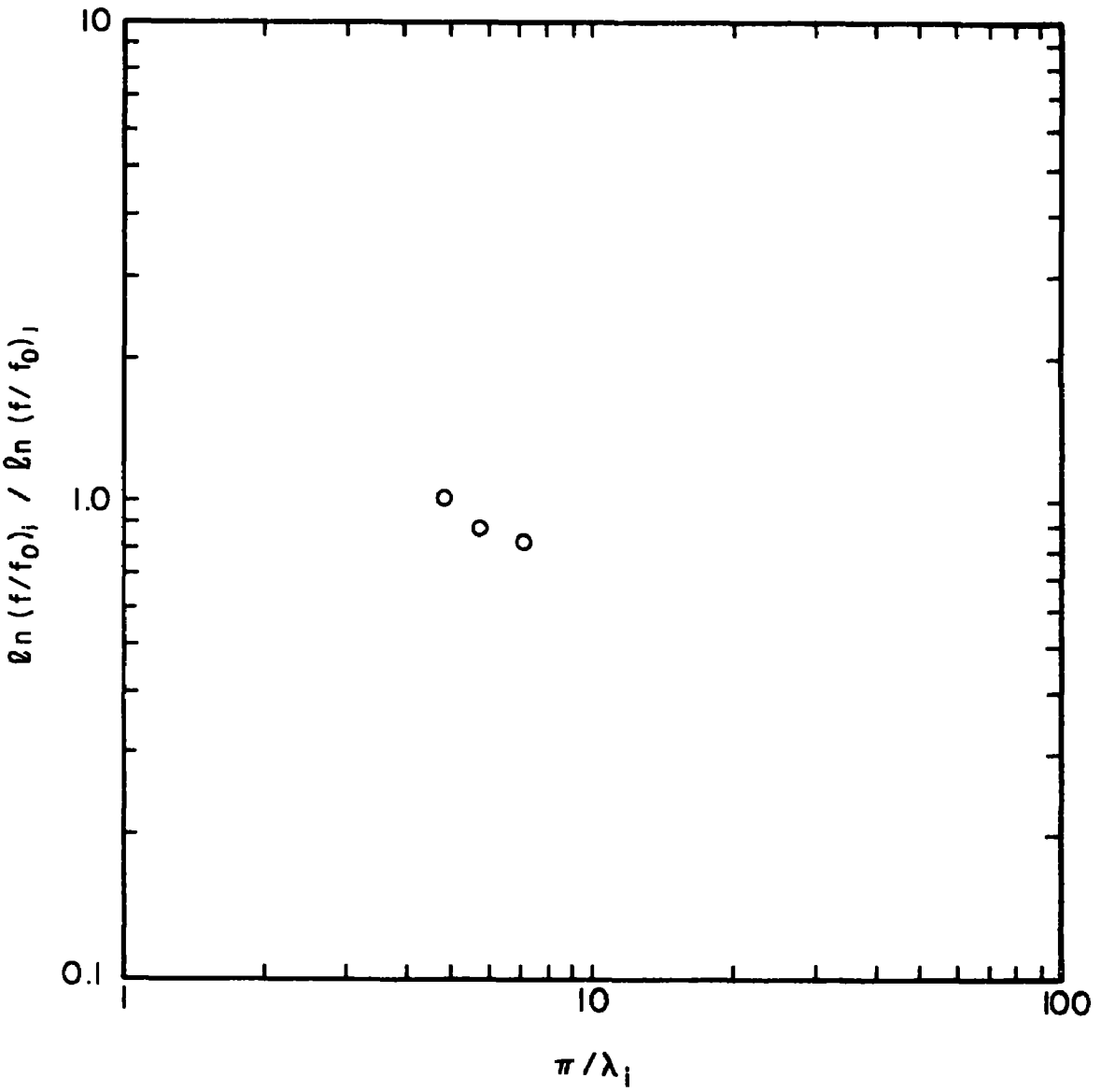

Fig. 6. Experimental Results of Three-Wavelength Transmission Measurements.

Table IIb.--Analysis of Three Wavelength Transmission

Wavelength	$\alpha = \pi d/\lambda$	d (μm)	E	n = D(2.303 / aEt
λ_1 = .6328 μ	3.8	.76 ± .06	4.0	3.3×10^6 particles/cc
λ_2 = .546 μ	4.4	.76 ± .06	3.4	3.5×10^6 particles/cc
λ_3 = .438 μ	5.4	.75 ± .06	3.2	3.6×10^6 particles/cc

The accuracy of the measurements was about 10%. Hence, the average diameter of the particles is .76 ± .06 m, and the average number density is $3.47 \pm 0.4 \times 10^6$ particles/cc; the values are quite consistent for all the three wavelengths. To check the accuracy of these figures, we repeated the extinction measurement using the He-Ne laser light source, and weighed the smoke by the usual practice of passing the smoke and weighing the asbestos before and after. Since the volume of the smoke chamber is known ($18.35 \times 25.4 \times 33.4$ cm^3), the mass concentration C can be calculated; it has already been shown that $C = 4\pi rD(2.303) / 3tE$ where $\rho = 0.8692$ gm/cc is the bulk density of the DOP smoke, where D is the optical density, and t = 18.35 cm in our experiment. From the value E for the three wavelength extinction measurements, a mass concentration C was obtained 9.33 mg/cc which agrees well with the direct measured value.

Although this transmission method is quite accurate, a knowledge of the index of refraction is necessary. The theoretical curve of $E(m,\alpha)$ versus α is also needed for obtaining particle size. It appears that the technique has very limited potential for sizing highly polydispersed arc smoke particles with absorptive and often unknown refractive index.

Thus, forward scattering methods which do not require a knowledge of the refractive indices were carried out. However the transmission technique gives a convenient method of checking the particle size against values obtained by light scattering methods. As a general rule, at least in laboratory work, light transmission measurements should be carried out in addition to light scattering measurements. Transmission data also can be used for monitoring the reproducibility of the smoke system, and to ensure that smoke density is not too high as to create multiple scattering, which could render light scattering measurements inaccurate.

Theoretically, one could obtain the size distribution n(r) from the transmission measurement by Mellin's transformation.[15] However, except in special cases where the particles are very large or very small or have narrow size distributions, the inversion has been found to be highly inaccurate especially for sub-micron particles. Hence the inversion procedure of transmission method will not be pursued here.

B. Angular Scattering Measurements

The two-angle ratio and the polarization ration method, both measured at small scattering angles are used. These methods are both independent of the refractive indices because scattering is primarily due to Fraunhofer Diffraction.

1. Two-Angle Intensity Ratio Method

In this method the ratios of the scattered intensities at selected pairs of angles are measured. The intensity ratios vary with the particle size parameter α according to the Fraunhofer diffraction formula Eq. (4). The two main types of scattering geometries are the goniometer set-up, and the axially symmetric anular set-up.[5] In the goniometer

set-up, a telescope is rotated around the scattering cell whereas in the axially symmetric anular set-up, light is collected by an anulus ring (lens with the center blocked) or fiber optics. Because of the simplicity of the goniometer set-up, this is employed in the present study. The photomultiplier is mounted on a rigid bar rotable around the center of the scattering volume. Accurate and reproducible angular scattering geometry is achieved in this way. The reproducibility of the smoke system generated each time is checked by monotoring the transmitted light. Although there are slight deviations, the reproducibility is good to 10% provided the arc spacing and electrode surfaces are reset and repolished each time. DOP smoke is also used as a reference as its properties have been measured by the transmission technique.

Experimental Results and Analysis

All the smokes (except those of DOP) are generated in an electric arc for a specific time period and subsequently dispersed with a fan in the smoke chamber for a specified period. The experiment was run at least two times to check the reliability of the method. The results are summarized in Table II for each smoke particulate system and the particle size parameter is read from the theoretical curve as shown in Fig. 7 as calculated by Hodkinson.[5]

The results of the DOP smokes with d = (.66 ± .06) m agrees quite well with the results obtained by the transmission method (d = 0.76 ± .06) μm. The results of the arc smokes are the average of two separate runs and the agreements between runs are good.

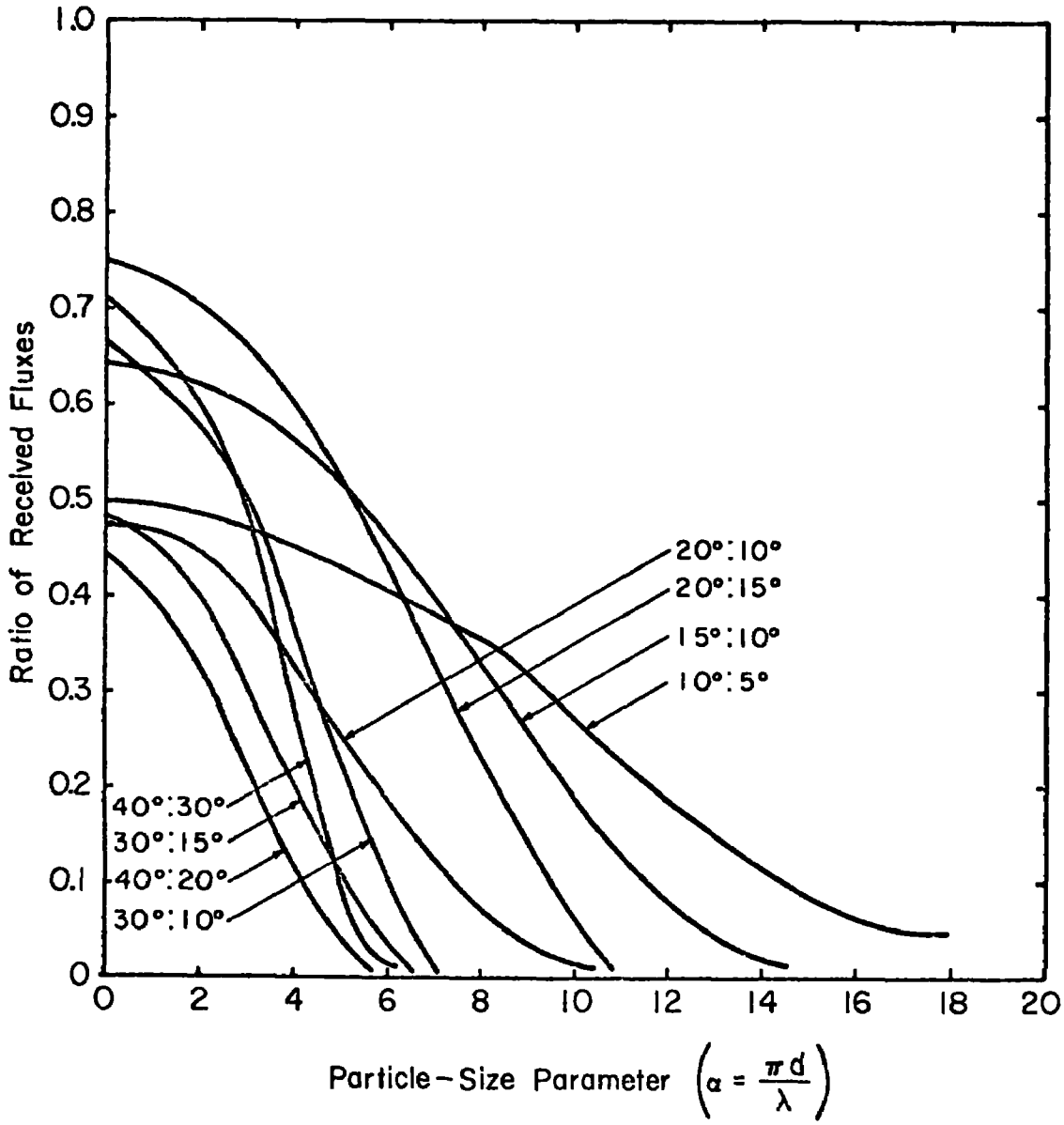

Fig. 7 .--Variation of Intensity Ratios
Versus Size Parameter α According to Fraunhofer Diffraction

Table III--Two-Angle Forward Scattering Measurements of Latex, DOP, Carbon, Tungsten, Copper and Aluminum Arc Particles

Type of Smokes or Particles	Average Particle Size Parameter (α)	Diameter of Particle (micron)
Latex	2.0	0.34 ± .05
DOP	3.3	0.66 ± .06
Carbon	2.97	0.60 ± .10
Tungsten	3.81	0.77 ± .16
Copper	2.52	0.51 ± .13
Aluminum	5.2	1.05 ± .10

2. Polarization Ratio Method

Essentially the same experimental arrangement as in the two-angle forward scattering experiment was used with an additional polarizer placed in front of the photomultiplier to select either the vertically ($I_{\perp}(\theta)$) or horizontally ($I_{//}(\theta)$) polarized components of the scattered light. The experiment was performed with standard latex spheres in dilute aqueous solution for scattering angles from 10° to 40° at 2.5° intervals. Background light for each polarization is measured at each angle and is subtracted from the total scattered light to obtain $I_{//}(\theta)$ (horizontal polarization) and $I_{\perp}(\theta)$ (vertical polarization). The polarization ratio $\rho(\theta)$ defined as the ratio of the intensitied of the horizontally polarized ($I_{//}(\theta)$) to the vertically polarized components of the light scattered at each angle was measured at several scattering angles. He-Ne laser (λ_o = .6328μ) light source was used in the experiment. All particles investigated were assumed to follow a Zeroth Order Logarithmic Distribution (ZOLD) function characterized by a modal value

of size parameter, α_M or d_M, and a logarithmic standard deviation, σ_o. The computer program,[16] which compared the experimental values of $\rho(\theta)$ with theoretical values of $\rho(\theta)$[11] for m = 1.332 (index of refraction of latex relative to water) at λ = 0.6328 μm or λ_{water} = .63/1.333 = .474 μm[12]. The values of α_M and σ_o will be the solutions which fit the data. The experiments and calculations were repeated with other smoke systems.

We note, in applying this method, the index of refraction must be known; and therefore, the method may not be suitable for complicated polluted smoke particles. However, polarization ratio measurements limited to small scattering angles ($\theta < 40°$) do not depend on the index of refraction[5] (Fraunhofer approximation) and can thus be used under conditions where the refractive index is not accurately known. In particular since $\rho(\theta)$ is sensitive for small α (small particles), it therefore complements the two-angle forward scattering scheme in extending the lower limit of particle size to the sub-micron range down to 0.01 μm. The polarization ratios were measured at 2.5° intervals from scattering angles of 10°-40° for the smoke particulates. The computer program was used to fit the experimental data. The average particle size and standard deviation are obtained from the best fit.

Experimental Results and Analysis

(i) Latex Spheres

The theoretical polarization ratio values $\rho(\theta)$ were computed by the computer CDC 6400 for an extensive array of combinations of α_M, σ_o, m and θ; viz

α_M = 0.50 to 2.400 in step of $\Delta\alpha M$ = 0.10

σ_o = 0.100 to 0.145 in step of $\Delta\sigma_o$ = 0.005

$\theta = 10°$ to $40°$ in step of $\Delta\theta = 2.5°$

$m = 1.322$ = index of refraction of latex relative to water[12]

The acceptable results are the best theoretical polarization which fit with the experimental value at different scattering angles.

The best ten fits for α_M and σ_o are values for which agreement was obtained between the experimental and theoretical values of $\rho(\theta)$ at 10 angles. The final best solution of α_M and σ_o was selected from $\alpha_M - \sigma_o$ values at different scattering angles for which the mean square deviation between the experimental and theoretical $\rho(\theta)$ values was a minimum [11]. The final best solution of modal α in log-normal distribution is found to be $\alpha_M = 2.400$, and $\sigma_o = .115$. The diameter is $0.36 \pm .06\ \mu$ and the standard deviation $.04\ \mu$.

(ii) Carbon Smokes

The parameters were used in computation

$\alpha_M = 4.000$ to 5.900 in step of $\Delta\alpha_M = 0.10$

$\sigma_o = 0.16$ to 0.25 in step of $\Delta\sigma_o = 0.01$

$\theta = 10°$ to $40°$ in step of $\Delta\theta = 2.5°$

$m = 2.000 - 0.6600\ i$[17]

The best ten fits for α_M and σ_o values are for which agreement was obtained between the experimental and theoretical values of $\rho(\theta)$ at ten angles. The final best solution is $\alpha_M = 4.00$, $\sigma_o = 0.16$, diameter = $0.80 \pm .10\ \mu$ and the standard deviation $0.08\ \mu$.

(iii) Tungsten Arc Smokes

The parameters were used in computation

$\alpha_M = 4.000$ to 5.900 in step of $\Delta\sigma_M = 0.10$

$\sigma_o = 0.160$ to 0.250 in step of $\Delta\sigma_o = 0.01$

$\theta = 10°$ to $40°$ in step of $\Delta\theta = 2.5°$

$m = 3.4000 - 2.7000\ i$ at 6330 Å [18]

The best ten fits for α_M and σ_o are values for which agreement was obtained between the experimental and theoretical values of $\rho(\theta)$ at ten angles. The final best solution is $\alpha_M = 4.00$, $\sigma_o = 0.169$, diameter = $0.80 \pm .08\ \mu$ and the standard deviation $0.13\ \mu$.

(iv) Copper Arc Smokes

The parameters were used in computation

$\alpha_M = 4.000$ to 5.900 in step of $\Delta\alpha_M = 0.10$

$\sigma_o = 0.160$ to 0.250 in step of $\Delta\sigma_o = 0.01$

$\theta = 10°$ to $40°$ in step of $\Delta\theta = 2.5°$

$m = 0.5600 - 3.0100\ i$ at 6330 Å [1]

The best ten fits for α_M and σ_o are values for which agreement was obtained between the experimental and theoretical values of $\rho(\theta)$ at ten angles. The final best solution is $\alpha_M = 3.9$, $\sigma_o = .250$, diameter = $0.78 \pm .15\ \mu$ and the standard deviation $0.19\ \mu$.

(v) Aluminum Arc Smokes

The parameters were used in computation

$\alpha_M = 4.000$ to 5.900 in step of $\Delta\alpha_M = 0.10$

$\sigma_o = 0.16$ to 0.250 in step of $\Delta\sigma = 0.01$

$\theta = 10°$ to $40°$ in step of $\Delta\theta = 2.5°$

$m = 1.1000 - 6.9000\ i$ at 6330 Å [18]

The best ten fits for α_M and σ_o are values for which agreement was obtained between the experimental and theoretical values of $\rho(\theta)$ at ten angles. The final best solution is $\alpha_M = 5.90$, $\sigma_o = 0.250$, diameter = $1.18 \pm .10\ \mu$ and the standard deviation $.29\ \mu$.

Summary of Results

The experimental results of the polarization ratio measurement are summarized in Table IV together with those measured by the two-angle ratio method for the five particulate systems investigated in this work.

Table IV.--Summary of Experimental Results of Parameter of Particles Generated by Electric Arcs

Smokes or Particles	Two-Angle Ratio Methods (d) μm	Polarization Ratio Method	
		d (μm)	σ_o
Latex	0.34 ± 0.06	0.36 ± .06	0.11
Carbon	0.60 ± 0.10	0.80 ± .10	0.16
Tungsten	0.77 ± 0.16	0.80 ± .08	0.16
Copper	0.51 ± 0.13	0.78 ± .15	0.25
Aluminum	1.05 ± 0.10	1.18 ± .10	0.25

It should be noted that the size of latex as measured by the two-angle ratio method and by the polarization method agree well with each other. The theoretical fit of the experimental data (polarization method) was very good in the case of latex but not as good for all other arc smokes. It is believed that the poor fit is due to the broad size distribution of the arc smokes as explained in Section IV. Thus these forward scattering techniques are only partially successful in solving the problem of sizing sub-micron polydisperse particles with unknown refractive indices. Instantaneous intensity ratio methods are suggested in the next chapter on a possible solution to this problem.

VII Instantaneous Intensity-Ratio Measurements

The fact that the intensity-ratio measurements in the forward scattering lobe yield results insensitive to refractive index, makes the size measurement of highly dispersive systems (with unknown index m) similar to those encountered in smoke stacks and power plants possible. Besides its limitation in handling complex and broad size distributions, the methods of average intensity-ratio measurements described above are time consuming; they cannot be considered as real-time methods to monitor particulate size distribution in the size range of urgent importance (0.01μm to 10μm). The difficulties encountered in determining the particle distribution from angular-dependent average intensity-measurements can be avoided if the particles are viewed one at a time. If the instantaneous two-angle intensity ratios, $i(\theta_1)/i(\theta_2)$ and the polarization ratio, $i_{||}(\theta)/i_{\perp}(\theta)$ can be measured with sufficient resolution, not only can theoretical analysis be much simplified, a real-time determination of complex size distributions should be possible. Gravatt[19] was the first to devise a system to measure size distribution in real-time with two-angle scattering. Chan et al.[20] have considered the possibilities of real-time measurements in more details.

If there is at most one particle scattering light at any instant, the measured intensity-ratio is a function of time,

$$\frac{i(\theta_1,\alpha)}{i(\theta_2,\alpha)} = \rho[\theta_1,\theta_2,\alpha] = \rho[\alpha(t)] = \rho(t) \tag{14}$$

When there is no particle scattering light at a particular instant, $\rho[\alpha(t)]$ gives no signal (only noisy fluctuations). Whenever a particle passes through the scattering volume, light will be scattered to yield an intensity-ratio current pulse corresponding to a particular particle size. The pulse width depends on the response of the photomultiplier

and amplifiers used. Processing of the measured signal, $\rho(t)$, by means of either a probability analyzer or a pulse-height analyzer would give the frequency of occurrence of the intensity-ratio current pulses as a function of pulse height (thus particle size). When the pulse height is transformed to the size parameter by Mie scattering theory, a direct determination of size distribtuion $f(\alpha)$ can be made. The discussion here holds for either the instantaneous two-angle intensity-ratio or the instantaneous polarization-ratio measurements. The technique can handle nearly any type of particle distributions, and gives real-time measurements.

The technique of detecting the individual particles is achieved by focusing the viewing laser radiation onto a small scattering volume V; the particulate matter under study is flowing across this scattering volume with speed v as shown in Fig. 8(a). For clarity, the scattering volume is assumed to be orthorhombic with volume $V = ab\ell$. The total number of particles in the scattering volume at any time would on the average be $N = nV$ where n is particle concentration. The scattered radiation is detected by a photomultiplier-amplifier system whose response time or resolution time it T_R.

One way to view individual particles is to allow one particle at a time into the scattering volume, i.e., $N = 1$. This would put an upper limit on the detectable concentration, i.e., $n \leq V^{-1} = (ab\ell)^{-1}$. Since there is only one particle traversing the scattering volume at any time, the photomultiplier-amplifier system records non-overlapping current pulses whose width equals particle transit time T_t. For the arrangement considered $T_t = b/v$. Fig. 8(b) shows current pulses detected for a modest flow speed v; the magnitude of an individual

pulse depends on the particle size under viewing at the instant. As flow speed increases, T_t decreases and the current pulses come closer together in time as shown in Fig. 8(c). Because it takes a finite time for the electronics in the detection system to respond, the transit time T_t must be larger than the resolution time T_R if the current pulses are to maintain their individual identities. This limits the flow speed to be less than b/T_R, i.e., $v = b/T_t < b/T_R$. For example, if we choose a scattering volume with $a = b = 2 \times 10^{-3}$ cm (20μm) and $\ell = 25 \times 10^{-3}$ cm (250μm), which is typical and practical, the maximum concentration which can be handled would be $n = (ab\ell)^{-1} = 10^7$/c.c. for $T_R = 10^{-6}$ sec, the maximum flow speed manageable is $v = 2 \times 10^{-3}/10^{-6} = 2 \times 10^3$ cm/sec. Although not commonly recognized, it is quite clear that by committing oneself to this case of $N = 1$, the electronic system is not efficiently used for slower flows. One should be able to increase the manageable concentration by improving the detection efficiency. This can be done by allowing the total number of scatterers to be greater than unity.

When there are several particles in the scattering volume at a time, the detecting system will record several overlapping pulses in a transit time T_t. The number of ripples during a transit time T_t shown in Fig. 8(d) corresponds to the number of particles N in the scattering volume. Due to the fact that individual particles are still seen individually as long as the ripples in Fig. 8(d) are distinctive. As flow speed increases, or T_t decreases, the ripples come closer together as shown in Fig. 8(e). Because the time between two successive ripples, T_A, called particle arrival interval, is much less

than the transit time T_t ($T_A = \frac{1}{3} T_t$ for N = 3 as shown in Figs. 8(a) and 8(e), one must make sure that individual particles arrive at an interval T_A longer than the electronic response time of the system T_R if the particles are to be individually identified. Since on the average there are N particles arrived for viewing in a transit time, $T_A = T_t/N$. The only criterion for "single" particle detection is then,

$$T_A = \frac{T_t}{N} = \frac{b/v}{N} = \frac{b}{vN} = \frac{b}{vnab\ell} = \frac{1}{vna\ell} \gtrsim T_R \tag{15}$$

Or, equivalently,

$$n \lesssim (va\ell T_R)^{-1} \tag{16}$$

Using the same example of $a = b = 2 \times 10^{-3}$ cm, $\ell = 25 \times 10^{-3}$ cm, $v = 2 \times 10^3$ cm/sec and $T_R = 10^{-6}$ sec, one obtains again the maximum detectable particle concentration of $n = 10^7$/c.c. However, when the flow speed is made slower by two orders of magnitude, the maximum detectable concentration can go up to 10^9/c.c. for the same scattering volume $V = 10^{-7}$ cm^3 and resolution time $T_R = 10^{-6}$ sec. The detectable concentration can be made even higher if faster electronics are used. In short, the capability of the detection system is fully utilized when the total number of scatterers in the scattering volume is allowed to be larger than one. The flow speed v and the size of scattering volume (more precisely the cross-sectional area, $a\ell$) together determine the detectable concentration. For readily available electronic and optical set up, instantaneous intensity-ratio measurements can be easily carried out for particle concentrations of 10^7/c.c. under a typical flow condition with speed around 10^3 cm/sec.

Continuous-Wave He-Ne laser (λ= 6328Å) and argon-ion laser (λ = 4880Å and 5140Å) may be used for the experiments. Different

wavelengths not only provide a check for the size distribution measurement but allow an extension of the range of particle size measurable by the proposed techniques. For a given measurable parameter $\alpha = \pi d/\lambda$, the particle diameter measured depends on the incident wavelength.

A self-contained real-time device for determination of particle size distribution is shown in Fig. 9. The set up is schematically similar to that used by Gravatt,[19] except the conversion function $\rho[\theta_1,\theta_2,\alpha]$ resulted from Mie theory is included in the present scheme. The inclusion of this conversion function should not only broaden the range of detectable size parameter α, but increase the accuracy of particle sizing. Because the particles are viewed "one at a time in the set up, the system of Fig. 9 permits automatic determination of particle concentration as well.

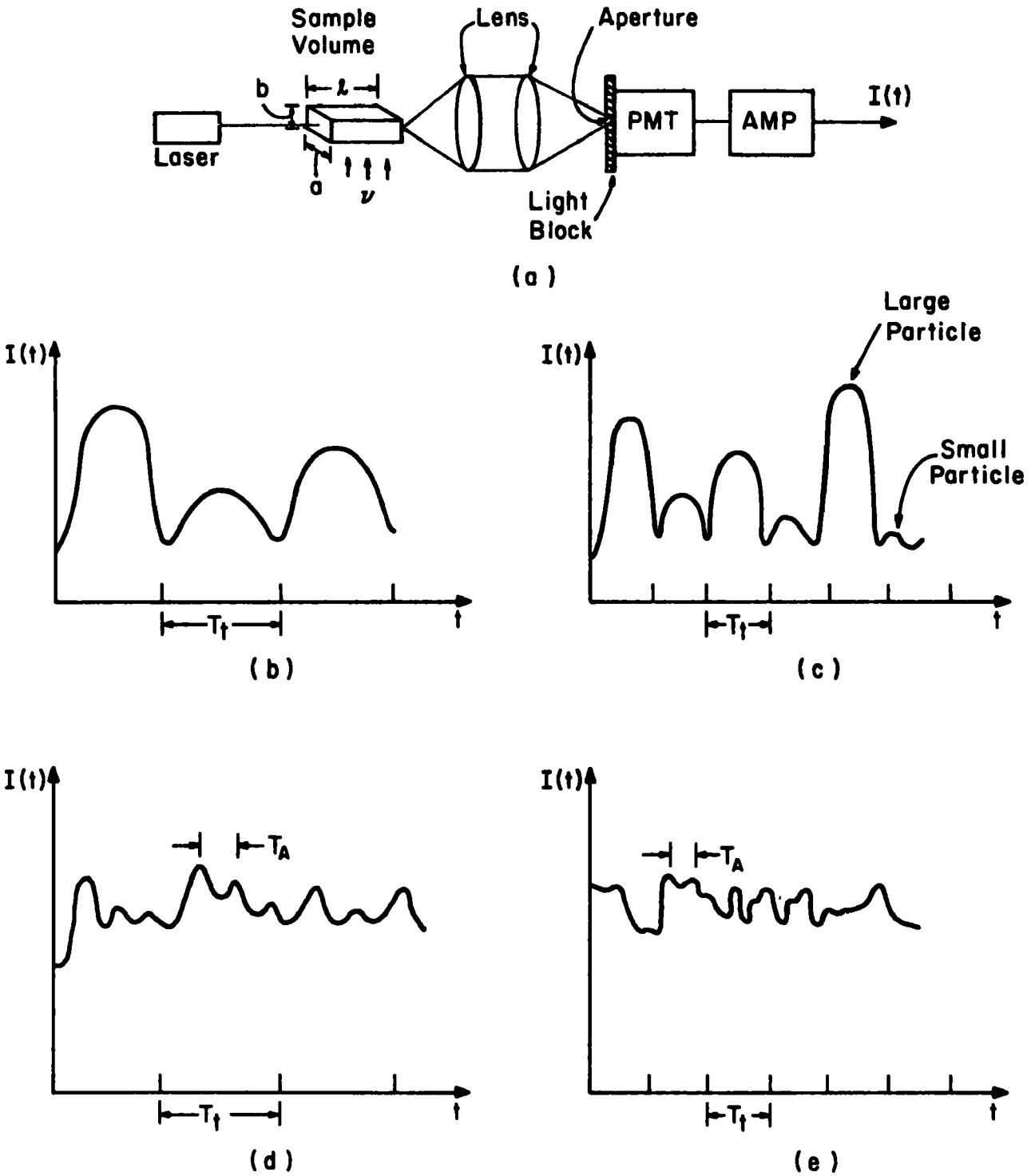

Fig. 8 Viewing Particles in a Flowing System

a. Experimental arrangement.
b. Current pulses for a modest flow speed.
c. Current pulses for an increased flow speed.
d. Viewing several flowing particles in the scattering volume.
e. Viewing several flowing particles in the scattering volume at increased speed.

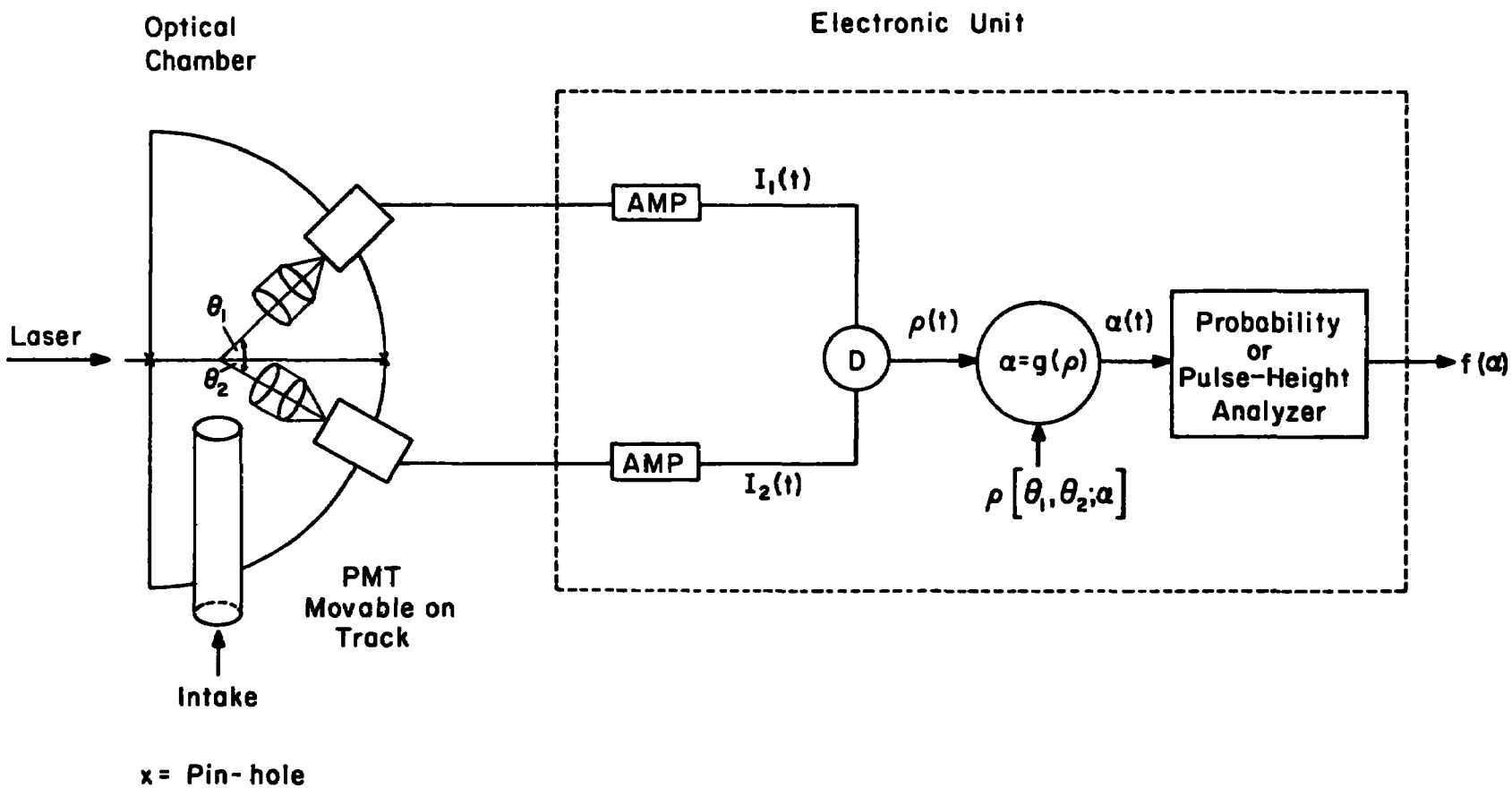

Fig. 9. A Proposed Real Time Device for the Determination of Particle Size Distribution

VIII Discussion

In this chapter we summarize the research results obtained so far, the investigations which are being continued but could not be reported at this time and suggest some extended work for real-time application which should be done in the future.

A. Summary of Results and Critique of the Experimental Methods

The transmission method investigated in this work gives both the number density and the average size particles. However, the method involves more than one light source or one set of optical set-up and only gives average size information. The application of the method also depends on a knowledge of the refractive index and an available E (α,m) theoretical curve. In air pollution monitoring, this does not seem to be promising as having great potentials for developing into real-time techniques.

Light scattering measurements, in spite of its complications, offer many more variations and possibilities and in special circumstances, they can be greatly simplified. Two special scattering methods have been investigated. The two-angle forward scattering ratio method has been found to give reliable and accurate results of size measurement and most important, the method does not require a knowledge of the refractive index and it would seem to have a practical and real-time potential application. The polarization ration method is found to give both average size and size distribution. Although in general the method depends on the refractive index, measurements limited to the forward direction could make its dependence on refractive index unimportant.

B. Future Work

The ultimate goal of this work is to develop, at least in principle, a rugged, practical, outdoor and real-time air-pollution monitoring system for the enforcement of pollution standards by the EPA. Hence, the future work will involve in refining, extending and combining the two-angle forward scattering ratio method as well as the polarization method so that they will yield size distribution measurement in real-time or almost real-time conditions. Although the 'average' scattered light measurements described in this investigation does rely on the computer to obtain particle size, preliminary investigations suggest with the fast electronics now commercially available, 'instantaneous' scattered signal can be analyzed and a real-time device based on this approach is indeed possible. The details of this investigation as well as design specifications of the device are described in a forthcoming proposal to the EPA.

IX. References:

1. H. C. Van de Hulst, Light Scattering by Small Particles, (Wiley & Sons, Inc., New York, 1957).

2. S. Ramo, J. R. Whinnery and T. Van Duzer, Fields and Waves in Communication in Electronics, (John Wiley, New York, 1967).

3. J. R. Hoskinson, Proceedings of the First National Conference on Aerosols, edited by K. Spuony (Gordon & Reach Science Publishers, New York, 1965).

4. J. R. Hodkinson, I.C.E.S., Electromagnetic Scattering, edited by Milton Kerker (Pergammon Press, London, 1963).

5. J. R. Hodkinson and I. Greensleaves, J. Opt. Soc. Am. 53, 577 (1963).

6. R. B. Porndorf, J. Opt. Soc. Am. 47, 1010 (1957).

7. J. R. Hodkinson, The Optical Measurement of Aerosols in Aerosol Science, edited by C. N. Davies (Academic Press, N. Y., 1966).

8. J. R. Hodkinson, Appl. Optics 5, 839 (1966).

9. K. S. Shifrin and A. Y. Perlman, Tellus 18, 566 (1966).

10. K. S. Shifrin and A. Y. Perlman, Optical Spect. (Eng. Trans.) 20, 385 (1966).

11. M. Kerker, E. Matijevic, W. F. Espenscheid, W. A. Farone and S. Kitani, J. Coll. Sci., 19, 213 (1964).

12. M. Kerker, The Scattering of Light, (Academic Press, New York, 1919).

13. E. Matijeori, S. Kitani, and M. Kerker, "Aerosol Studies by Light Scattering II. Preparation of Octanoic Acid Aerosols of Narrow and Reproducible Size Distributions," Jour. Coll. Sci. 19, 233 (1964).

14. H. H. Denman, W. Heller, and W. J. Pangonis, Angular Scattering Functions for Spheres, Wayne State Univ. Press, Detroit (1966).

15. K. S. Shifrin and A. Y. Perlman, Electromagnetic Scattering, edited by Rowell and Stein (Gordon and Breach Science Publishers, New York, 1965).

16. O. Apichatanon, "Measuring Aersol Distributions," M.S. Thesis, Colorado State University (1974).

17. J. E. Mc Donald, "Visibility Reduction Due to Jet-Exhaust Carbon Particles," J. Appl. Met., 1, 391 (1962).

18. G. Hass and L. Hadley in American Institute of Physics Handbook, edited by Daniel N. Fischel, Harold B. Crawford, Don A. Douglas, and Winifred C. Eisler (McGraw-Hill Book Company, New York, Third Edition, 1972).

19. C. C. Gravatt, Jr., "Real Time Measurement of the Size Distribution of Particulate Matter in Air by a Light Scattering Method," presented at Annual Meeting of the Air Pollution Control Association at Miami Beach, Florida, June 18-22, 1972.

20. P. W. Chan, O. Apichatanon, and C. Y. She, "Particle Size Measurements of Arc Smokes by Forward Scattered Intensity Ratio Techniques," Presented at the Annual Meeting of Air Pollution Control Association at Denver, Colorado, June 10-13, 1974.

TECHNICAL REPORT DATA
(Please read Instructions on the reverse before completing)

1. REPORT NO. EPA-650/2-74-034	2.	3. RECIPIENT'S ACCESSION NO.
4. TITLE AND SUBTITLE Optical Measurements of Smoke Particle Size Generated by Electric Arcs		5. REPORT DATE June 1974
		6. PERFORMING ORGANIZATION CODE
7. AUTHOR(S) P. W. Chan		8. PERFORMING ORGANIZATION REPORT NO.
9. PERFORMING ORGANIZATION NAME AND ADDRESS Colorado State University Fort Collins, Colorado 80521		10. PROGRAM ELEMENT NO. 1AB012; ROAP 21ADL-21
		11. CONTRACT/GRANT NO. Grant R-800150
12. SPONSORING AGENCY NAME AND ADDRESS EPA, Office of Research and Development NERC-RTP, Control Systems Laboratory Research Triangle Park, NC 27711		13. TYPE OF REPORT AND PERIOD COVERED Final
		14. SPONSORING AGENCY CODE
15. SUPPLEMENTARY NOTES		

16. ABSTRACT The report gives results of a study of the use of light transmission and photometric scattering measurements using lasers for sizing polydispersed metallic particulate systems (often with unknown index of refraction) produced by a dc electric arc smoke generator. The study emphasized the reliability and accuracy of these techniques, the information obtainable, and potentials for developing these methods into real-time techniques. Transmission (extinction) methods are simple to apply and give average particle size and number density if the refractive index is known: accuracy is good but the size distribution cannot be obtained. The two-angle forward scattering intensity ratio method gives by far the most accurate results· most important, it does not depend on a knowledge of the refractive index. Average size measurements have been obtained with this technique on several metallic and non-metallic particulate systems; the size distribution can also be obtained by computer calculation. The polarization ratio method gives better sensitivity for smaller sub-micron particles (though dependent on refractive index unless forward scattering is used) and has been used successfully to measure size distribution of sub-micron latex spheres. Also discussed is combining the intensity ratio method (at two forward scattering angles) and the polarization ratio method (at one forward angle) for sizing polydispersed particulate systems, and developing it into real-time devices.

17. KEY WORDS AND DOCUMENT ANALYSIS

a. DESCRIPTORS		b. IDENTIFIERS/OPEN ENDED TERMS	c. COSATI Field/Group
Air Pollution	Light Transmission	Air Pollution Control	13B, 20F, 20N
Optical Measurement	Smoke Generators	Photometric Scattering	14B, 15B
Smoke	Reliability	Particulates	21B, 14D
Particle Size Distribution	Accuracy	Polarization Ratio	
	Forward Scattering	Two-Angle Forward Scattering Intensity Ratio	20H
Electric Arcs	Refractivity		20C
Lasers	Extinction		20E

18. DISTRIBUTION STATEMENT Unlimited	19. SECURITY CLASS (This Report) Unclassified	21. NO. OF PAGES 49
	20. SECURITY CLASS (This page) Unclassified	22. PRICE

EPA Form 2220-1 (9-73)