EPA-650/2-74-100

OCTOBER 1974

Environmental Protection Technology Series

PROCESS MODIFICATIONS FOR CONTROL OF PARTICULATE EMISSIONS FROM STATIONARY COMBUSTION, INCINERATION, AND METALS

Office of Research and Development
U.S. Environmental Protection Agency
Washington, DC 20460

EPA-650/2-74-100

PROCESS MODIFICATIONS FOR CONTROL OF PARTICULATE EMISSIONS FROM STATIONARY COMBUSTION, INCINERATION, AND METALS

by

R. Nekervis, J. Pilcher,
J. Varga Jr., B. Gonser, and J. Hallowell

Battelle, Columbus Laboratories
505 King Avenue
Columbus, Ohio 43201

Contract No. 68-02-1323
Task 9
ROAP No. 21ADK-017
Program Element No. 1AB012

EPA Project Officer: G. J. Foley

Control Systems Laboratory
National Environmental Research Center
Research Triangle Park, North Carolina 27711

Prepared for

OFFICE OF RESEARCH AND DEVELOPMENT
U.S. ENVIRONMENTAL PROTECTION AGENCY
WASHINGTON, D.C. 20460

October 1974

This report has been reviewed by the Environmental Protection Agency and approved for publication. Approval does not signify that the contents necessarily reflect the views and policies of the Agency, nor does mention of trade names or commercial products constitute endorsement or recommendation for use.

ABSTRACT

The report summarizes the state of process modifications relative to the control of fine particulate emissions from stationary combustion sources (electric utilities and industrial processes); municipal incinerators; iron and steel plants; ferro-alloy plants; and nonferrous metal smelters (zinc plants, copper smelters, aluminum reduction cells). This study is to uncover modifications to conventional practices or new unconventional practices which appear to improve the control of fine particulate emissions in these five areas. Modifications to conventional stationary combustion sources considered include ash fluxing, SO_3 addition to flue gas, staged combustion, use of fuel additives, fly-ash agglomeration, solvent refining, and flue-gas recirculation. Unconventional systems studied include fluidized bed, coal gasification, and submerged combustion. For incinerators, combined fuel-refuse firing, gas cooling, and pyrolysis methods are considered. Emphasis for iron and steel plants is given to the bottom-blowing oxygen process (Q-BOP). Modification of the conventional reverberatory smelting procedure and the introduction of hydrometallurgical methods are discussed for copper, and the chloride electrolytic (ASP) process by ALCOA is considered for aluminum. Each process is considered with respect to its stage of development, availability or acceptability by industry, efficiency in reducing emissions, and environmental impact.

TABLE OF CONTENTS

Page

1. Introduction 1

2. Summary 2

2.1 Stationary Combustion 4

2.1.1 Electric Utilities 4

2.1.2 Industrial Processing and Steam Generation 6

2.2 Municipal Incinerators 6

2.3 Iron and Steel Plants 7

2.4 Ferroally Furnaces 8

2.5 The Primary Nonferrous Metals Industry 9

2.5.1 Zinc Roasting, Sintering, and Distillation 9

2.5.2 Copper Roasting, Matte Smelting and Converting . . 9

2.5.3 Aluminum Reduction Cells 10

3. Stationary Combustion, Particulate Control Combustion Modification 11

3.0 Introduction 11

3.1 Electric Utilities 11

3.1.0 Background; the Problem of Fine Particles 11

3.1.0.1 New Combustion System Modifications 13

3.1.0.2 Ash Fluxing 13

3.1.0.3 Fluidized-Bed Combustion 14

3.1.0.3.1 Status 18

3.1.0.4 Staged Combustion 18

3.1.0.5 Recirculation of Flue Gas 19

3.1.0.6 Gasification 19

TABLE OF CONTENTS
(Continued)

Page

3.1.0.7 Modification of Fly Ash Resistivity 21

3.1.0.8 Agglomeration of Ash Particles 22

3.1.0.9 Advanced Power Cycles 22

3.1.1.1 Modification of Particle Size 23

3.1.1.2 Solvent Refined Coal 23

3.1.1.3 Low Excess Air 23

3.1.1.4 Electrochemical Oxidation of Coal 24

3.1.1.5 Fuel Additives 24

3.1.1.6 Improved Control Methods for Fine Particulates 25

3.1.1.7 Electrical Control of Particulates From Flames 25

3.2 Industrial Processing and Steam Generation 27

3.2.0 Introduction 27

3.2.1 Process Modifications 27

3.2.1.1 Burner Design 27

3.2.1.2 Flue-Gas Recirculation 28

3.2.1.3 Two-Stage Combustion 28

3.2.1.4 Other Combustion Modifications 29

3.2.1.5 Improved Service and Maintenance 30

3.2.1.6 Modifications to Reduce PNA 30

4. Municipal Incinerators 32

4.0 Introduction 32

4.1.0 Process Modifications 32

TABLE OF CONTENTS
(Continued)

Page

4.1.1 Combined Firing 33

4.1.2 The CPU-400 33

4.1.3 Water-Walled Incinerators 34

4.1.4 Pyrolysis Process 35

4.1.5 Advanced Concepts Involving Heat Recovery . . . 37

4.1.6 Electron-beam Irradiation 38

4.2 Predictions for the Year 2000 38

5. Iron and Steel Plants 39

5.1 Open Hearth Furnace 39

5.1.1 Hydrocarbon Additive to Lancing Operation . . . 40

5.1.1.1 State of Development - Hydrocarbon Addition 40

5.1.1.2 Availability to Industry 40

5.1.1.3 Degree of Effectiveness 41

5.1.1.4 Environmental Effects 41

5.1.1.5 Use of Liquid Oxygen and Liquid Hydrocarbon Injection 43

5.2 BOF Furnace 45

5.3 Q-BOP Process 45

5.3.1 State of Development - Q-BOP Process 45

5.3.2 Degree of Effectiveness 47

5.3.3 Environmental Effects 47

5.4 Electric Arc Furnace 48

5.4.1 Preheating and Melting with Oxygen-Fuel Burners 49

TABLE OF CONTENTS
(Continued)

Page

5.4.1.1 State of Development 49

5.4.1.2 Degree of Effectiveness 49

5.4.1.3 Environmental Effects 50

5.4.2 Electric-Arc Furnace--Scrap Charge Compatibility 50

5.4.2.1 State of Development 50

5.4.2.2 Availability to Industry 50

5.4.2.3 Acceptance by Industry 51

5.4.2.4 Degree of Effectiveness 51

5.5 Metallurgical Coke Ovens 51

5.5.1 Particulates from Charging Coke Ovens 51

5.5.2 Particullates from Pushing Coke 52

5.5.3 Particulate Emissions During Quenching 52

6. Ferroalloy Furnaces 54

7. Process Modifications For Particulate Control In the Primary Nonferrous Metallurgical Industry 55

7.1 Zinc Roasting, Sintering, and Distillation 55

7.1.1 Roasting 55

7.1.2 Sintering 56

7.1.3 Reduction and Distillation 56

7.2 Copper Roasting, Matte Smelting, and Converting . . . 56

7.2.1 Pyrometallurgical Modifications 57

7.2.1.1 Flash Smelting 57

7.2.1.1.1 Electric Furnaces 59

TABLE OF CONTENTS
(Continued)

Page

7.2.1.2 Continuous Smelting 60

7.2.1.3 Miscellaneous Pyrometallurgical Developments 63

7.2.2 Hydrometallurgical Copper Recovery 68

7.2.2.1 Stanford LCPR Process 68

7.2.2.2 Anaconda's "Arbiter" Ammonia Leach Process 70 70

7.2.2.3 Sherritt-Gordon Process 72

7.2.2.4 Cymet Process 73

7.2.2.5 Duval Corporation and Other Processes . 73

7.3 Aluminum Reduction Cells 75

7.3.1 New Aluminum Reduction Processes 79

8. References 82

APPENDIX A

CONTROL OF FINE PARTICULATE EMISSIONS IN CONVENTIONAL COPPER SMELTING PRACTICE A-1

LIST OF TABLES

Page

Table 1. Emissions from Primary Aluminum Industry--1970 80

Table 2. Emissions from an Uncontrolled Prebake 80
Potline 80

Table 3. Fluoride Removal Efficiencies of Selected
Primary and Secondary Controlled Systems 80

Table A-1 Annual Copper Production of Smelters and
Refineries in the U.S. A-2

Table A-2 Control Practice in Copper Smelting A-10

Table A-3 Composition of Typical Emissions From
Reverberatory Stacks A-13

Table A-4 Compositions of Atmospheric Emissions From
Converter Operations in Primary Copper Industry . . A-15

LIST OF FIGURES

Figure 1. Simplified Fluidized-Bed Combustion Boiler Concept . . 15

Figure 2. Atmospheric Fluidized-Bed Combustion Power Plant . . . 16

Figure 3. Pressurized Fluidized-Bed Combustion Power Plant . . . 17

Figure 4. Statistical Distributions of Dust Loadings During the
Operation of a 225 net ton Openhearth Furnace
Using Oxygen Lancing and Oxygen + Propane Lancing . 42

Figure 5. Relationship Between Dust Loadings of a 225 net ton
Openhearth Furnace Operating with Oxygen Lancing
and Oxygen + Propane Lancing 43

Figure 6. OBM Process Vessel, U.S. Patent 3,706,549 46

Figure 7. Outokumpu Furnace 58

Figure 8. INCO Flash Furnace 58

Figure 9. Noranda Process 61

LIST OF FIGURES
(Continued)

Page

Figure 10. Schematic view of Mitsubishi's Semicommercial Plant 64

Figure 11. Bureau of Mines Autogenous Smelting 66

Figure 12. Flowsheet for the lime-concentrate-pellet-roast Process with Direct Electrowinning 69

Figure 13. Anaconda Arbiter Plant--Block Flow Diagram 71

Figure 14. Schematic Flowsheet--Cymet Process 74

Figure 15. Schematic Drawing of a Prebaked Anode Cell 76

Figure 16. Schematic Drawing of a Horizontal Stud Soderberg Aluminum Reduction Cell 77

Figure 17. Schematic Drawing of a Vertical Stud Soderberg Aluminum Reduction Cell 78

Figure A-1 Generalized Diagram of Conventional Smelting Flowsheet A-3

Figure A-2 Cutaway View Showing Key Features of a Conventional Reverberatory Furnace A-6

1. Introduction

The purpose of this study is to summarize in one report the state of technology relating to the control of fine particulate emissions resulting from process modifications in the following areas (1) stationary combustion as it relates to electric utilities and industrial processing, (2) municipal incinerators, (3) iron and steel plants, (4) ferroalloy plants, and (5) nonferrous metal smelters (zinc plants, copper smelters, and aluminum reduction cells). The report is intended to serve as a briefing document for persons who are not well versed in these areas.

Fine particulate emissions may be defined as those particles smaller than 2 microns diameter. The sizes that will deposit in the lungs (called "respirable dust") vary from submicron (0.01μ and smaller) to about 8 microns. A high percentage of the larger particles (2 to 8μ) that enter the bronchial tubes is deposited by the mechanism of inertial impaction, and a large fraction of the smaller particles (less than 0.1 μ) is deposited by means of diffusion. However, for the in-between sizes 0.1 to 2.0 μ), only a small fraction is retained in the respiratory tract because neither mechanism of deposition is efficient in this size range. Hence, the very fine particles (less than 0.1 μ) which are not readily removed by collectors designed in the conventional fashion are of growing concern because of their possible adverse effects on health and reduction of atmospheric visibility. Also, our ability to measure and characterize very fine particulates is limited.

The literature reflects this state of affairs. In our study on the effect of process modifications in the five areas mentioned in the first paragraph above, we found that quantitive data on changes in particulate emissions as a result of either a modification or even a replacement of a conventional process was not only not reported, but appeared to be largely ignored. Accordingly only qualitative data are provided in substantiation of claims of beneficial effects on the amount, size and properties of fine particulate emissions. In almost all cases the degree of reduction of fine particulate emissions could not be ascertained with any degree of precision. This necessiated some changes in the format of the report as originally conceived.

In identifying process modifications that may have beneficial effect on the control of fine particulates, the approach was to determine the mechanism responsible--agglomeration or growth of particulates, alterations of their properties, or reduction in mass. Insofar as possible, information on the stage of development, availability and acceptance by industry, and environmental side effects, if any, of both modifications and the more unconventional system replacements have been covered.

There was an unusual number of new modifications in copper smelting technology which necessitated including background information on the current status of emission control practices in conventional U.S. primary copper smelters. This is provided in Appendix A.

2. Summary

This report summarizes the state of technology relating to beneficial effects on fine particulate emissions that come about through new process modifications in five major areas:

(1) stationary combustion
  (a) electric utilities
  (b) industrial processing
(2) municipal incinerators
(3) iron and steel plants
(4) ferroalloy plants
(5) nonferrous metal smelters
  (a) zinc plants
  (b) copper smelters
  (c) aluminum reduction plants.

Summarizing results that relate to all five areas, the 1-2 percent of fine particles that escapes present day high efficiency collectors are practically all smaller than 1 micron. Quantitative information on the size distribution, chemical properties, and the effects of these fine particulates is lacking, probably because of the difficulties in their measurement.

While quantitative data on fine particulate emissions from conventional stationary combustion equipment, municipal incinerators, iron

and steel plants, ferroally plants, and nonferrous metal smelters are very sparse, similar quantitive data relating to process modifications in these areas are nonexistent. Even the qualitative data on the degree of fine particulate emission from these current modifications in practice are not definitive.

Bag filters are the most effective method for removing particles smaller than 2 microns. Some types of scrubbers and many electrostatic precipitators can also be effective for the collection of particles under 2 microns. The technology for particulate emission control has changed little over the past 20-40 years. Characterization of very small particles has been neglected because they are difficult to sample, classify, and analyze. This difficulty is reflected in the dearth of quantitative data on the effectiveness of process modification in reducing fine particulate emissions.

Fine particulates are formed largely as a result of metals in the coal ash being vaporized by the intense heat of combustion. Upon cooling, these metallic vapors condense to form a multitude of very fine spherical particles. A few small particles are formed also from polynuclear aromatic compounds present in the coal which show up as particulate POM (Polycyclic Organic Matter). Process modifications to circumvent or minimize particle formation by these mechanisms would be helpful.

Our study indicates that generally submicron particle abatement can be achieved more economically through either process modification or outright substitution rather than through the installation of new, larger and more efficient precipitators. To achieve an increment of improvement from 99.0 to 99.5 percent efficiency in an electrostatic precipitator requires a great increase in the size of the collecting apparatus with a corresponding great increase in cost. Wet scrubbers are being designed as a means of capturing particulate matter as well as SO_2 but these are still in the early stages of development. Venturi scrubbers work well down below 1.0 μ.

2.1 Stationary Combustion

2.1.1 Electric Utilities

There are a number of modifications in conventional combustion practices, as well as some totally new unconventional systems, being considered by the electrical utility industry which appear to exert a beneficial effect on the control of fine particulate emissions. Some of these may have questionable side effects. None in the following listing have as yet been studied in a quantitive way to determine the amount, size distribution, and characteristics of fine particulate emission. They are as follows:

(1) Ash fluxing to capture the ash in a molten slag, thereby decreasing the dust loading in the flue gas.

(2) Adding SO_3 in controlled amounts to achieve an optimum resistivity of the fly ash particulates so as to improve their collection in electrostatic precipitation equipment; also altering the burning rate, amount of excess air, coal particle size and rank to achieve the same result.

(3) Utilizing staged combustion (that is burning fuel in a primary zone with less than stoichiometric amounts of air, partially cooling the combustion products, then completing combustion in a second zone with additional air) to reduce the emission of NO_x and particulates by reducing temperature. The degree of beneficial effect on the control of particulates depends on the fusion characteristics of the ash.

(4) Utilizing fuel additives to reduce total particulate emissions (the possibility of toxicity of the newly created emissions makes their use questionable for the present).

(5) Agglomerating the fly ash in the combustion zone by extending residence time to produce tackiness and inducing high turbulence or pulsating flows to promote agglomeration (this approach is still very much in the concept stage).

(6) Solvent refining (reconstituing coal) to achieve low ash and sulfur contents and thus resolve the particulate problem (the cost of this is excessive).

(7) Recirculating flue gas, i.e., diluting the fuel air mixture in the combustion zone with cooled flue gases, has been found to contribute to lower emissions of smoke when firing fuel oil. Application of this technique is still in the early stages of investigation.

Unconventional systems being considered include

(1) Fluidized-bed combustion systems which use relatively large particles of coal in comparison to the pulverized coal used in conventional combustion systems; while more particulates are generated, the larger size leads to greater collection efficiencies with existing collectors. It appears that high-pressure fluidized combustion systems offer even greater collection efficiencies.

(2) Gasification of coal can be considered as modified staged combustion. While fluidized-bed combustors have not as yet been applied to boilers, there are a number under development for gasification of coal to produce pipeline gas or liquid fuels.

(3) Carrying the gasification of coal a step further, there are the submerged combusion processes. One aspect of this concept is to burn pulverized coal in a bath of molten salts or coal-ash slag

to capture sulfur and fly ash in the molten salt or slag. In a related process, crushed coal is injected into molten iron which dissolves the fixed carbon and sulfur constituents, the volatile constituents of the coal are driven off and cracked to H_2 and CO. Air introduced into the molten iron produces a "Bessemer" reaction which oxidizes the carbon to CO. Ash of the coal becomes a supernatant slag which is fluxed with enough lime to extract sulfur from the iron and hold it in the slag which is drawn off continuously. (Development work on these processes is in progress, but no details have been publicly released.)

2.1.2 Industrial processing and Steam Generation

The above conclusions on modifications of stationary combustion units such as flue-gas recirculation and two-stage combustion apply to the industrial processing area also.

Poly-Nuclear-Aromatic (PNA) compound emissions into the atmosphere are generated principally by commercial and residential coal-fired units. Oxidation during the combustion process will destroy PNA and other hydrocarbons. There is a dearth of data identifying the conditions required for the oxidation of PNA, and modifications of the combustion processes to reduce PNA emissions.

2.2 Municipal Incinerators

(1) Tests on combined firing of municipal refuse (20 percent) and fossil fuels (80 percent) in steam generating boilers indicate that the particulate emissions can be controlled to the degree obtainable when firing fuel alone if modifications in the electrostatic collection system are made to accommodate the higher stack volume.

(2) Water-walled incinerator furnaces permit the cooling of gases to a temperature which permits the operation of flue-gas cleaning equipment. While this substantially reduces the particulate emissions over that of conventional incinerators, there is a corrosion problem associated with deleterious salts and gases that are present in all municipal incinerators.

(3) Pyrolysis processes have the potential of reducing particulate emissions; quantitative data on this aspect of these processes have not been published.

2.3 Iron and Steel Plants

A major change in the oxygen-blowing process in steel making from blowing at the surface of a melt in a vessel (the BOF or BOP process) to bottom-blowing oxygen with a hydrocarbon through the melt (U.S. Steel Corporation's Q-BOP and related processes) results in a quieter bath with reduced fumes and larger particulate sizes in the emissions; dusting is reported to be 1/3 to 1/5 that of the BOF process; in addition the Q-BOP and related processes provides slightly higher rates of production and slightly better ultization of scrap than does the BOF process.

Installed or planned capacity of Q-BOP vessels in the U.S. was about 9,000,000 tons annually as of March, 1973. U.S. 1970 production of steel was 150,000,000 net tons, of which the basic oxygen furnace (BOF) accounted for 55 percent (Q-BOP production is included in these BOF statistics), the open hearth accounted for 26 percent, and the electric furnace, 18 percent. There is potential for explosive growth in the Q-BOP and related processes. Of the 21 open hearth shops in operation, only ten are modern plants with extensive air pollution control, three are scheduled to close, and eight will be replaced. The Q-BOP would appear to be a logical replacement for these, but present economic factors and a muddied patent situation make this choice unclear. Since the production

rates and degree of scrap utilization of the Q-BOP vessels are only marginally higher than that of the BOF vessels, there is no pressure on the BOF shops to convert.

The use of hydrocarbons in combination with oxygen during lancing open-hearth steel has been found to reduce the emission of fumes and the grain loadings of exhaust gases when tested on a laboratory scale ten years ago. Except for a few plant trials since, the results of which were not reported, there has been no further interest in the process modification; it has not been accepted by U.S. industry. On the other hand, the Soviets are experimenting with the use of liquid oxygen-liquid hydrocarbons in the lancing of open hearth steels.

The reduction of particulate emissions from coke-oven operations by agglomeration of the particulates, or their reduction, by process modification, does not appear to be imminent, owing to the hard, angular characteristics of the carbon particulates. New processing equipment, such as pipe-line charging and other modifications of charging methods will probably be able to achieve the required reductions in emissions during charging. New equipment, presently under evaluation under production conditions, may be the answer to the reduction or even elimination of emissions during the pushing and quenching operations.

2.4 Ferroally Furnaces

The only modification in ferroally furnace practice which resulted in improvement in the control of particulate emission uncovered in this study was a study on the use of pelletized ore concentrates. These reduced particulate emission by 42 percent in comparison to that of fine ore concentrates.

2.5 The Primary Nonferrous Metals Industry

2.5.1 Zinc Roasting, Sintering, and Distillation

Electrolytic zinc plants, present and being constructed, have negligble loss of particulates other than in general handling of concentrates and calcines or sinter. The two pyrometallurgical zinc plants use good practice in keeping the escape of particulates to the atmosphere at a minimum, and no modifications have been suggested for improvement in the basic steps of their processes.

2.5.2 Copper Roasting, Matte Smelting, and Converting

Progress in controlling the extent of emissions of fine particles in the copper smelting industry appears to be substantial. There are two general approaches; one is to modify the conventional reverberatory smelting procedure, the other is to replace the pyrometallurgical methods with hydrometallurgical methods. The goal in both cases is first to reduce or eliminate the emission of sulfur oxide and concommitantly to reduce stack losses of particulates.

Modification of reverberatory converter procedures has involved the introduction of continuous smelting, flash smelting, and flash roasting-electric furnace combinations, all of which seek a reduction in gas flow and an enrichment of SO_2 in the effluent gases to permit recovery of sulfur as sulfuric acid, liquid SO_2, or elemental sulfur, which in turn necessitates cleaner off-gases. An exception to the new smelter modification to recover SO_2 is a limestone scrubbing treatment to control sulfur. It is only moderately efficient in removing SO_2, but in combination with a preceding dry-gas cleaning system, it is excellent for removing particulates.

Hydrometallurgical methods substantially eliminate the emission of particulates to the atmosphere. A number of new processes are being developed; among these are pressurized ammonia leaches and chloride leaches. One of the new processes, Anaconda's "Arbiter" Ammonia Leach Process, has

reached the commercial stage. The only particulate control involved is in handling concentrates and lime and in preventing tailings from becoming wind blown.

2.5.3 Aluminum Reduction Cells

Aluminum reduction cells which use prebaked anodes,and account for 59 percent of total U.S. production of aluminum, produce less volitization of pitch and less fouling of the emission control system than do Soderberg reduction cells which use baked-in-place anodes. However, the separate anode baking furnace requies an emission control system.

Alcoa's aluminum-chloride electrolytic process (the ASP Process) has reached the pilot plant stage. Press releases on the process indicate less dusting than is the case with the conventional Hall aluminum reduction cells. No cryolite ($Na_3Al\ Fe_6$) will be required. Fluorides, and the working of $Al_3\ O_3$ into the bath will be eliminated. Emphasis, however, is on the savings of energy (as much as 30 percent less energy than the conventional Hall process) and on the fact that "scarce and costly cryolite" will no longer be required.

There are a number of new processes aimed at exploiting new sources of alumina, such as alunite, the kaolin clays, and laterite. These do not affect materially the amount or type of emissions from the reduction cells.

3. Stationary Combustion, Particulate Control Combustion Modification

3.0 Introduction

The burning of coal, more than any other fuel, impacts on the ambient air because of the emission of particulates: fly ash, fine particules of ash; small, but nevertheless important amounts, of organics as vapor or fine droplets; and sulfuric acid mist, in the amount of 1 or 2 percent of the sulfur equivalent in the coal. Thirty-two percent of the industrial particulate emissions in the U.S. are from coal burning.

In the burning of pulverized coal, the characteristics of the particulate emissions depend on many factors. Among these are the heat liberation rate in the furnace, the composition of the coal (especially the ash content), the degree of pulverization of the coal, and the amount of excess air. In addition, the basic parameters of time, temperature and turbulence, plus the reactivity of the coal influence the quantity and characteristics of particulate emissions.

Polycyclic organic matter (POM) which is emitted in particulate form from a vast number of stationary combustion sources will be considered part of this study. Particulate POM consists of a variety of chemical entities; however, it is common practice to use benzo (α) pyrene as an indicator of other POM owing to the demonstrated carcinogenicity of benzo (α) pyrene and the relatively large amount of published data on it.[1] Relatively high levels of POM have been measured in coal-burning equipment.

This section of the report considers practical combustion process modifications that are likely to improve the situation with regard to particulate emission.

3.1 Electric Utilities

3.1.0 Background; the Problem of Fine Particles

Over 80 percent of the potential fly ash from U.S. coal-fired power plants is now being captured by means of large electrostatic precipitators, and most new power plants now have improved collectors guaranteed

to remove 98 to 99 percent of the fly ash leaving the furnace. However, the small amount (only 1 or 2 percent) which escapes these high-efficiency collectors, is practically all smaller than 1 micron. The environmental impact of these extremely fine particles has been largely ignored because quantitative information on the particles and their effects is so difficult to measure. However, their effect in making stack plumes highly visible because of the light-scattering effect of 0.4 to 0.8 micron particles, though hard to quantify, is often readily apparent to the community. Furthermore, such plumes add to the haze so common in metropolitan areas.

There is increasing concern about these fine particles which are not adequately controlled with existing equipment. Often, their physical and chemical properties are not known. However, it is recognized that these fine particles, by nature of their size, are the principal contributors to adverse health effects, visibility reduction, and soiling of surfaces. A review panel of the National Research Council[2] has identified the importance of fine particles and reports that current practices for evaluating control techniques as "tonnage-collection figures and weight-removal efficiencies are inadequate to delineate the entire particle-emission problem". They further state that.... "small particles....may continue to limit visibility and may affect health even when presently uncontrolled sources of particulate matter are equipped with the best collection devices currently available". However, to obtain improved efficiencies in electrostatic precipitation from 99 to 99.5 percent with today's technology involves a great increase in size with a corresponding great increase in cost. Accordingly, alternative strategies for the control of fine particulates are being sought.

One of the most obvious alternatives would be to keep the ash in the furnace. A characteristic of conventional pulverized coal-fired dry-bottom furnaces is that 50 to 70 percent of the ash leaves the furnace as fine particles suspended in the hot (300 F) exhaust gas. Although some of the ash particles become liquid during combustion they are cooled and solidified before they reach the walls of dry-bottom furnaces. In cyclone and conventional <u>slagging or wet-bottom furnaces</u> some of these particles are liquid or sticky when they reach the walls where they combine to form

a viscous slag layer which slowly drains down to a slag tap. The cyclone furnace retains about 90 percent of the ash as slag. However, because of the intense combustion in the cyclone resulting in high flame temperatures, some of the ash is vaporized. When this vapor condenses later in the system, large numbers of extremely fine spherical particles are formed by the La Mer effect which defy conventional collecting systems.

3.1.0.1 New Combustion System Modifications

Other alternative modifications to existing combustion systems are being considered. For example, fluidized combustion systems use relatively large particles of coal in comparison to the pulverized coal used in conventional combustion systems and this use of larger coal particles generates larger particulates in the combustion gas. Although there are more particulates generated by this system, the larger size leads to a greater collection efficiency with existing collectors. It appears that operating fluidized-bed combustion systems at high pressures leads to even greater collection efficiency. Among other new developments that may influence fine-particle generation are combustion-system modifications like staged combustion and flue-gas recirculation that are intended for NO_x control, and submerged combustion in molten salts. These and others are discussed individually below:

3.1.0.2 Ash Fluxing

As pointed out earlier, conventional slag-tap and cyclone furnaces convert much more of the ash into molten slag than do the more common dry-bottom pulverized-coal-fired boiler furnaces. Decreasing the viscosity of coal-ash slags will tend to increase the amount of ash converted to slag, thereby decreasing the dust loading in the flue gas. Fusibility of coal ash varies widely. However, the ash from some coal will not form slag in the cyclone. The addition of inexpensive fluxes such as limestone (CaO) and mill scale or iron ore (Fe_2O_3) can lower slag viscosity appreciably.

3.1.0.3 Fluidized-Bed Combustion

Burning crushed coal in a fluidized bed of limestone has demonstrated merit as a means of reducing gaseous pollutants (SO_x and NO_x). Figure 1 shows a simplified fluidized-bed combustion boiler concept. Research is under way on atmospheric as well as on elevated pressure (10 atmospheres) fluidized-bed combustors. Development work for OCR and EPA by Pope, Evans and Robbins has lead to the announcement [3] of an OCR contract for the design, construction and operation of a 30 megawatt coal-fired atmospheric-pressure, fluidized-bed boiler at the Rivesville Station of Monongahela Power at Fairmont, West Virginia. Several organizations are engaged in bench and pilot plant scale development of pressurized fluidized-bed boilers, including conceptual designs of 30 to 635 MW plants. These studies include sorbent regeneration and sulfur recovery, as well as reduction of SO_x, NO_x, trace materials, and particulate emissions.

In an atmospheric fluidized-bed combustion power plant, the electric power is generated by a steam turbine as shown in Figure 2. In a pressurized combustion system, additional power is generated by a gas turbine which is driven by the high pressure hot-combustion gas as shown in Figure 3.

Fluidized-bed combustors have not as yet been applied commercially in boilers, but there are at least five fluidized-bed reactors currently under development for gasification of coal to produce pipeline gas and/or liquid fuels.[4,5] These activities include Battelle's program for the Office of Coal Research employing the Union Carbide coal gasification process aimed toward production of synthesis gas; the self-agglomerating fluidized-bed concept employed involves production of a clean gas from the combustor and a circulating agglomerated ash burden to supply thermal energy to the fluidized-bed gas generator.[6]

Pressurized fluid-bed combustion (the process that appears to be preferred for electric utility use) appears to be less complex than combustion through coal gasification. Pressurized operation is preferred because of the significant decrease in the size of the plant over atmospheric operation. For large utility plants now contemplated, the multiplicity of atmospheric boilers needed would appear to be prohibitive.

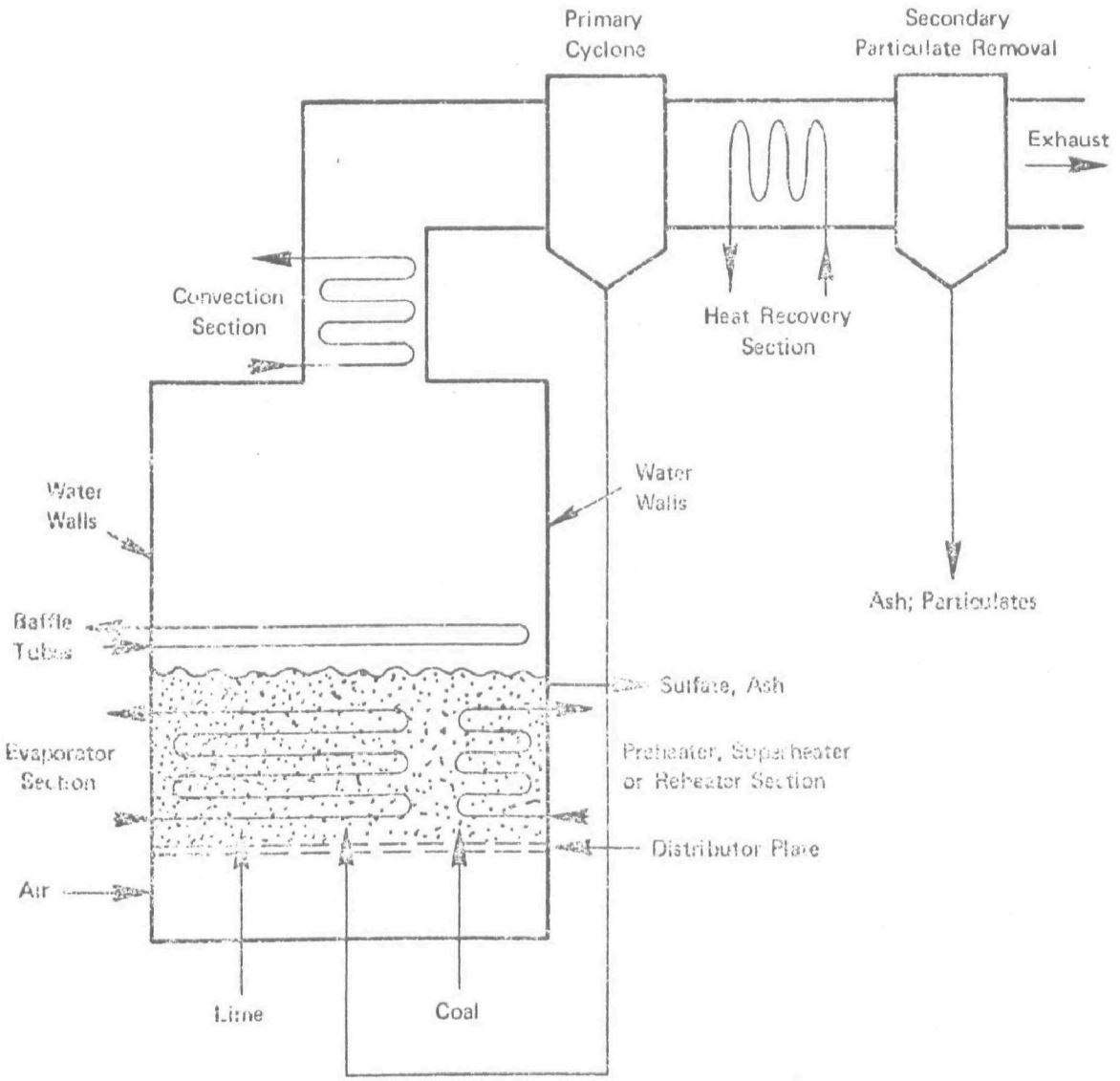

Pressure:	1 – 25 atm	Surface:	Water Walls, Horizontal, and Vertical Tubes in Bed
Coal Size:	pf – 1/4 in.	Sulfur removal:	$CaO + SO_2 + \frac{1}{2}O_2 \rightarrow CaSO_4$
Air Flow:	2 – 15 ft/sec		
Temperature:	1400 – 1900°F		

FIGURE 1. SIMPLIFIED FLUIDIZED-BED COMBUSTION BOILER CONCEPT

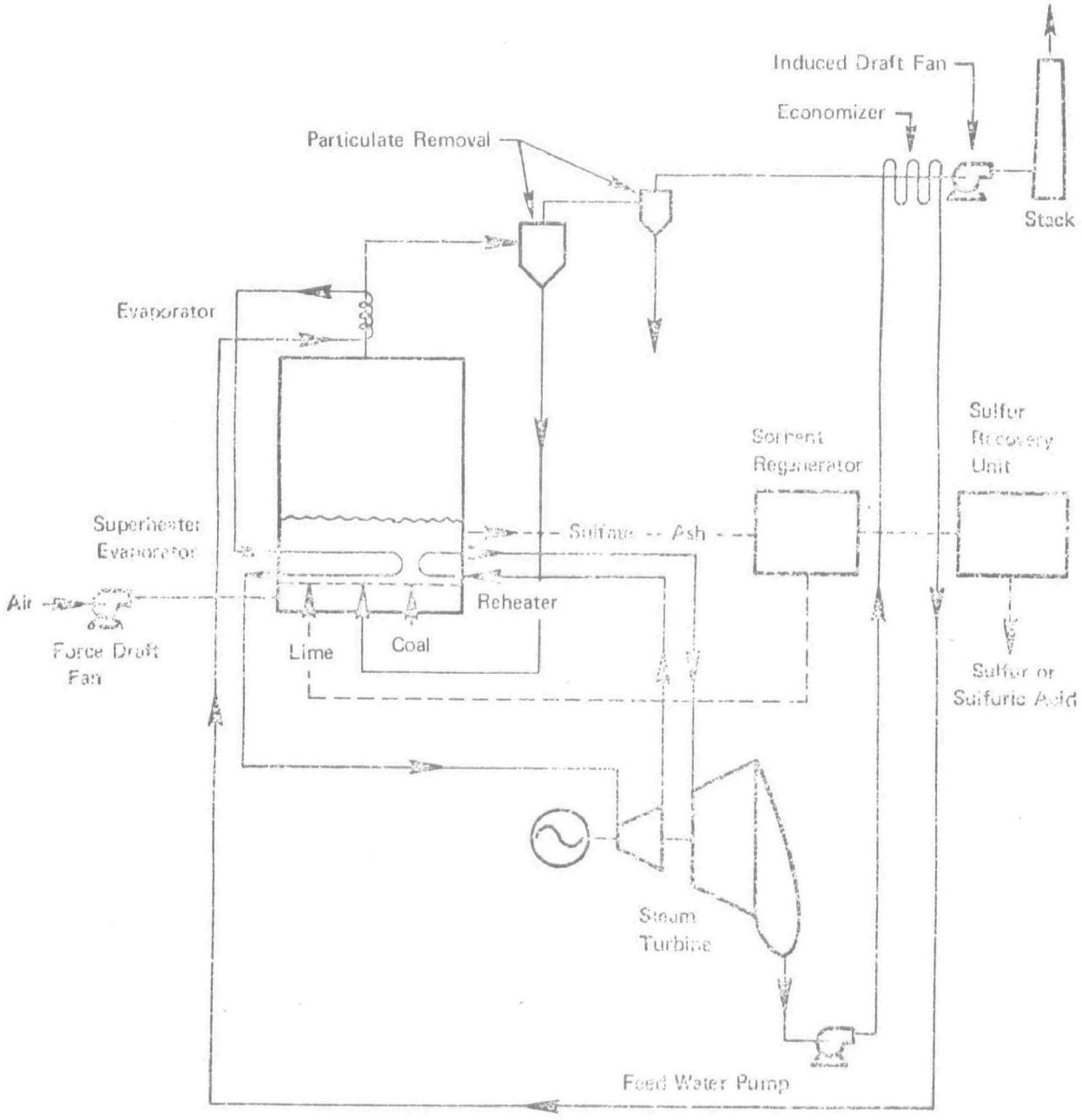

FIGURE 2. ATMOSPHERIC FLUIDIZED-BED COMBUSTION POWER PLANT

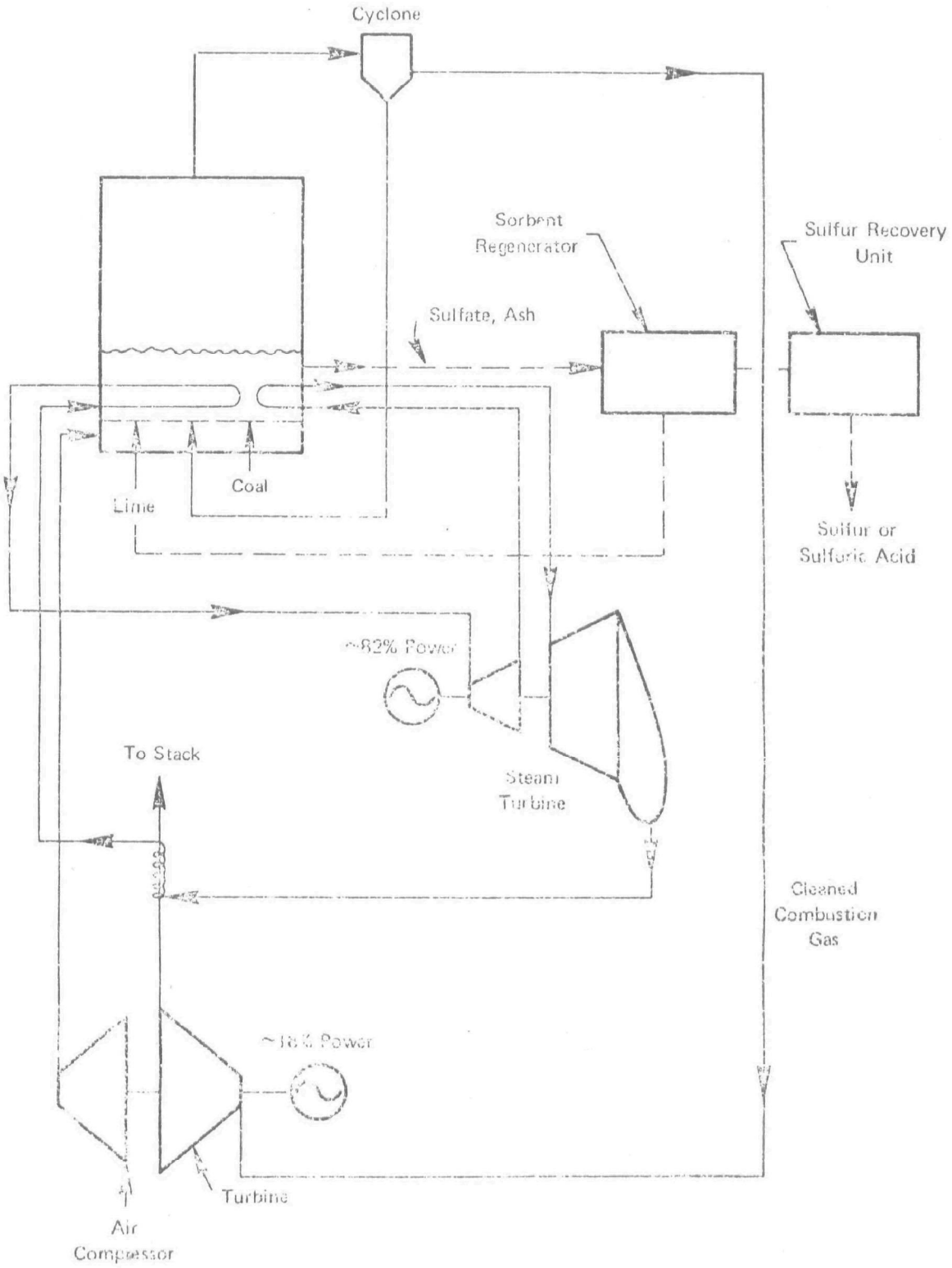

FIGURE 3. PRESSURIZED FLUIDIZED-BED COMBUSTION POWER PLANT

3.1.0.3.1 Status

The fluidized-bed combustion system offers the potential for burning high-sulfur and low rank coals having a wide range of properties. Since fuel-bed temperatures are low, slagging problems are minimized. Heat release and heat transfer rates to tubes immersed in the bed of fluidized solids are considerably higher than those in conventional boilers. Furthermore, it is possible that fluidized-bed combustion can be advanced to a commercial reality with less effort and time than many of the gasification methods now under development.

The major disadvantages of the fluidized-bed approach are engineering rather than fundamental in nature. Problems currently requiring solution relate to solids and gas handling, feeding (especially in pressure operations) and limitations on control of load changes. Additional problems are concerned with efficiency of utilization of sorbent, bed particle attrition and elutriation, and incomplete combustion of coal. However, in combined cycle operations, there is the fundamental problem of developing an adequate cleaning process to remove particulates. An elaborate reinjection system to handle carry-over of unburned combustibles probably will be required.

A fluidized bed of noncombustible particles (not consisting of lime or magnesia), arranged so that particles of coal are burned in close contact with inert particles to which they are transferring thermal energy, offers some promise for particulate control. This is a highly complicated system and much is lacking in an understanding of the mechanism of combustion in fluidized beds that would be required to achieve optimum conditions in large central-station power plants.

3.1.0.4 Staged Combustion

Staged combustion involves burning fuel in a fuel rich primary zone with less than stoichiometric amounts of air (90-95 percent), partially cooling the combustion products, and finally supplying additional air and completing combustion in a secondary zone. The earliest downfired furnaces for firing pulverized coal employed essentially a two-stage combustion process which suggests that two-stage combustion with pulverized coal

may be feasible. Two-stage combustion has been demonstrated, at power plant scale, as a successful method of reducing the emission of NO_x by reducing temperatures. Depending upon the fusion characteristics of the ash, this process may also have a beneficial effect on control of particulates.

3.1.0.5 Recirculation of Flue Gas

The recirculation of flue gas to reduce the peak temperature has been demonstrated on a small scale and has been found to decrease the formation of NO_x. However, its effect on particulate emissions is not known. Factual data are lacking regarding the volume of flue gas that should be recirculated, its composition and temperature, and the points at which it should be injected into the furnace.

3.1.0.6 Gasification

Gasification of coal can be considered as a modified combustor in which the first stage, the gasifier, is operated rich. Babcock and Wilcox are currently studying one variation in which ash- and sulfur-free gas is produced and burned in a combustion boiler and gas turbine cycle. Other unconventional systems which involve submerged combustion/gasification are as follows:

The ATC Molten-Iron Gasification Process. The concept of Applied Technology Corporation's molten-iron coal gasification process is designed to gasify high-sulfur coal with the use of a molten-iron bath in which the sulfur is separated and recovered in usable form while producing an essentially sulfur-free, low-Btu gas, suitable for combustion under steam boilers as a second stage of combustion.

The heart of the process is a molten-iron bath with a depth of 3-4 feet contained in a cylindrical, refractory-lined vessel called a combustor.[7] Crushed coal is injected into the iron bath through a submerged lance to a depth of about 25 inches. This depth has been found sufficient to allow time for the volatile constituents of the coal to be driven off and cracked to H_2 and CO and for the fixed carbon to be dissolved completely in the iron. The sulfur contained in the coal is also dissolved in the iron.

Simultaneously, preheated air is injected through air lances which need to be submerged to a depth of only 5-6 inches. The oxygen of the air produces a Bessemer-type reaction which preferentially oxidizes the dissolved carbon to CO. By balancing the coal injection rate with the air injection rate, the carbon content of the iron would be maintained in the range of 3-4 percent.

The ash of the coal, predominantly Al_2O_3 and SiO_2, floats to the surface of the iron to form a slag. Lime, as limestone, is injected with the coal to flux the coal ash and to provide enough CaO to extract the sulfur from the iron and hold it in the slag as CaS. Sulfur-laden slag is drained continuously from the combustor to make way for new slag. The slag is treated hot with superheated steam to produce elemental sulfur, H_2S, and SO_2. The latter gases are sent to a Claus reactor and converted to elemental sulfur. The desulfurized slag is disposed of or part of it is recycled through the combustor if more slag volume is needed.

The gas generated is composed mainly of CO, H_2, and N_2 and has a heating value of 160 Btu/ft^3. It comes off the combustor at about 2500 F and is conducted directly to a steam boiler where it is burned with secondary air to CO_2 and H_2O. A portion of the off-gas is burned in a stove to preheat the primary air injected into the combustor. It is reported that, under proper operation, the SO_2 content of the off-gas will be less than 60 ppm.

Status. Experimental and development work, under the sponsorship of EPA, has been carried on in the Pittsburgh Laboratories of ATC, since 1970. It was recently reported [8] that ATC has received a contract to develop design criteria for a 50 to 100 MW power generating unit based on their process. ATC has reported that preliminary cost studies have shown the process to be competitive with conventional coal-fired plant. EPA is also considering some engineering studies for application to power plant which include more detailed cost estimated.

Submerged Combustion in Molten Salts. The concept of submerged combustion of coal in a molten bath of basic salts is another variation on the theme of simultaneously providing a sink for slag, sulfur, and trace metal contaminants of the coal at the combustion site. Currently the use of molten salts for this purpose is being investigated by two organizations: (1) Atomics International is investigating the partial combustion of coal

with production of low-Btu gas by submerged combustion[9]; and (2) M. W. Kellogg is studying the potential for production of high-Btu gas by a similar process.[10]

The Atomics International (AI) process is an extension of their previous work with the use of a molten-salt scrubber for the removal of sulfur oxides from flue gas.[11] Both AI and Kellogg use sodium carbonate as the liquid medium at about 1800 F. The major difference between the two processes is that the Kellogg process employs steam as a source of hydrogen to produce a high Btu gas. The Kellogg gasifier is run at 1200 psia to enhance the hydrogenation of the CO produced by the combustion process. The AI process on the other hand involves simple partial combustion of the coal to carbon monoxide. In both systems, the sulfur is retained in the ash/molten-salt mix. A portion of the contaiminated salt is withdrawn and regenerated with the production of hydrogen sulfide or sulfur as a byproduct.

Status. Both systems are still in the early investigative stages. Many problems, such as amounts of sodium carbonate make up required, corrosion problems, and the percentage of sulfur retained in the melt remain unanswered.

The Superslagging Combustor. The concept of burning crushed or pulverized coal in a bath of molten coal-ash slag is another example of submerged combustion of coal incorporating sulfur removal.[12] The two aspects of the Superslagging Combustor that offer an incentive for consideration of the concept as a coal combustion method are (1) capture of coal sulfur by the slag to provide hot, low-sulfur combustion gases to a boiler, and (2) capture of fly ash by the slag that could reduce emissions of fine particulates and perhaps eliminate the need for an electrostatic precipitator. This concept, being investigated at Battelle-Columbus has not been tested experimentally and has received only limited analysis to date.

3.1.0.7 Modification of Fly Ash Resistivity

The ability of an electrostatic precipitator to capture particles of fly ash depends in a large measure on the electrical resistivity of the fly ash. When the electrical resistivity exceeds 2×10^{10} ohm-centimeters,

the normal voltage gradients in a precipitator are upset and the collection efficiency drops sharply. Controlled amounts of SO_3 may be added to the flue gas to alter the resistivity of the fly ash particles so as to improve collection of the fine particulates. Also, by modifying the combustion process by such procedures as changing the rate of burning, particle size, amount of excess air and rank of coal, the resistivity of the ash, and consequently the efficiency of electrostatic precipitators can be improved.

3.1.0.8 Agglomeration of Ash Particles

Ash particles could be more easily removed from the combustion gases if agglomeration of the fly ash particles could be achieved. In order to adhere on contact the particles must be sticky which imples some lower temperature limit at which agglomeration can occur. High turbulence or pulsating flows may promote agglomeration of the stick particles. Also, a longer residence time in the flame should encourage agglomeration.

3.1.0.9 Advanced Power Cycles

Concepts other than those presently in central-station power plants undoubtedly will be developed over the next 30 years to convert the energy in fuels into electricity. Magnetohydrodynamics and fuel cells offer most promise of the so-called direct-energy-conversion processes, but both have serious shortcomings. More attractive at present are advanced power cycles wherein two or more energy-extraction systems are combined in a single power plant.

Typical of such systems is the combined cycle burning of a gaseous or liquid fuel in a pressurized boiler furnace followed by expansion of the hot products of combustion through a gas turbine. The gaseous fuel could be natural gas, but another likely fuel is a hot sulfur-free producer gas made from coal, or a fuel gas produced from residual fuel oil. A suitable gasification scheme including a hot gas-desulfurizing step of the type described above is required. In addition to higher overall thermal efficiency, which can be expected to exceed 50 percent, such cycles have the great advantage of essentially complete removal of sulfur and particulates from the exhaust gas.

Many types of advanced power cycles can be devised, including those in which volatile matter in the coal is distilled off and only the residual char is burned in the power plant. Such systems have been investigated for many years, but without the present-day incentive of emission control. The need for "clean" power is renewing that interest[13]. Power plants based on such cycles should emit substantially less pollutants than current plants.

3.1.1.1 Modification of Particle Size

The size of the ash discharged from a conventional furnace is affected primarily by the size of the coal fired. The finer the grind the finer the ash. Unfortunately, from the particle control standpoint, fine grinding promotes combustion which makes the resulting ash harder to catch. Also, high temperature flames increase ash vaporization and subsequent condensation into fine particles. The full effect of the particle size of pulverized coal on particulate control requires more investigation.

3.1.1.2 Solvent Refined Coal

Solvent refined coal (SRC) is a reconstituted coal, low in ash and sulfur[14]. The use of SRC in place of high sulfur and high ash fuel is a marked modification of conventional methods of burning coal. The particulate emission problem would be resolved, but cost is a factor that would present a serious obstacle.

3.1.1.3 Low Excess Air

If pulverized coal could be burned with low excess air rather than with 15 percent excess air, as is common today in large boiler furnaces, the problem with particulate emissions would be eased. Advantages are that the volume of the flue gas would be reduced appreciably and more effective control of particulates would be possible, and higher efficiency would be achieved (meaning less thermal pollution). To accomplish this may require improved burners, finer sized coal, and higher turbulence levels in the furnace.

In a recent investigation of particulate emissions from oil-fired residential heating units, conducted by Battelle for the EPA, two units (a warm-air furnace and a boiler) were fired in the laboratory while smoke and filterable particulate emissions were measured at several excess air levels for both cyclic and steady-state runs. In addition, particle-size distributions were measured during runs on the boiler to determine if particle-size variations might help explain the lack of correlation between smoke and particulate emissions, based on earlier field measurements.

It was determined that particulate emissions varied with excess air in the same manner as smoke varies with excess air. Also, correlations between smoke and particulate emissions appeared practical for given units firing at specific operating conditions. However, the data did not suggest a general correlation between smoke and filterable particulate emissions. Particle size distributions indicated that over 80 percent of the particles were below 1.0 micron and the distributions were nearly uniform for all runs, so that particle size did not explain differences between smoke and particulate emissions.

3.1.1.4 Electrochemical Oxidation of Coal

Fuel cells using coal as the fuel may offer a long-range solution to the need for supplying large quantities of electrical energy without excessive emissions. The extent to which particulate emissions would be generated is uncertain and would depend on details of the process which are not now known.

3.1.1.5 Fuel Additives

The U.S. Environmental Protection Agency[15] completed in 1971 a study of the use of fuel additives to control air pollution from distillate oil-burning systems. Each candidate was analyzed for elemental composition to provide a basis for testing. A standard screening procedure was established to test the effect of each additive on emissions from fuel oil combustion. Screening tests were carried out on all distillate soluble additives and the most promising additives were subjected to a rigorous examination.

Fuel additives were found not to be a promising way of reducing air pollution from distillate oil combustion. A majority of the additives tested had no beneficial effects on air pollutant emissions; in fact, some additives even increased total particulate and NO_x emissions. Several of the metal containing additives, e.g., Ferrocene, Cl-2, and Fuelco SO_3, reduced total particulate emissions; however, the unknown toxicity of new emissions they create makes their use questionable. Further, there is evidence that for distillate oils, burner modifications are a more suitable route to air pollution control.

3.1.1.6 Improved Control Methods for Fine Particulates

The only control method now being tried for submicron particle abatement is the application, in new installations, of larger and more efficient precipitators. Experience thus far indicates that efficiencies of 99.5 percent and above will achieve invisible plumes except for the sulfuric acid mist that appears almost immediately as a bluish-white haze when the small amount of sulfur trioxide in the emerging gases combines with the moisture in the ambient air to form H_2SO_4 mist. Assuming that SO_2 abatement processes become feasible so that H_2SO_4 mist is eliminated, then achievement of fly ash emission levels low enough to produce invisible exhaust plumes will be feasible at a price.

3.1.1.7 Electrical Control of Particulates from Flames

A radical departure from conventional submicron particle abatement methods is the application of electric fields to charged dispersions so as to alter particle trajectories so that fully formed particles may be caused to deposit in specific places or to burn up if they are combustible. Also, the rate of particle formation, size, and concentration may be modified by applying electric fields to the region in which they are formed[107].

It has been demonstrated that the entire process of burning sprays and particulate dispersions can be controlled electrically, all the way from electrical dispersion and charging, over mixing with air inducted by ion pumps, to burning controlled by electrical fields.

The attachment of flame ions, which would otherwise recombine unprofitably, to particulate pollutants to allow their subsequent manipulation by electric fields appears possible for all particulates. For species whose boiling point lies below the flame temperature, it is necessary to use a second flame as an ion source in the cooler part of the stream.

The concept has only recently been introduced, but already the theory of predicting rates of charging and hence particle trajectories in fields, in terms of their growth histories has been established, and predictions of optimum conditions can be expected to follow[107].

3.2 Industrial Processing and Steam Generation

3.2.0 Introduction

This subsection is concerned with process modifications with the objective of controlling particulate emissions from industrial processes such as cement and lime production, glass melting and brick and ceramic production, and from industrial steam generation and space heating. Metallurgical processes are covered in Sections 5, 6, and 7.

Most pollutants from industrial processing sources are not subject to reduction by modification of the combustion process. For example, the particulates include those from thermal processing in which the finest fractions of the processed materials or ash escape with the combustion gases; such particulate emission would normally be reduced by means of dust collectors rather than by combustion modifications.

The amount of particulate POM formed will vary greatly. Efficient, controlled combustion favors very low POM emissions, whereas inefficient burning results in high emissions. Hand-stoked residential furnaces account for most of the particulate POM emitted.

3.2.1 Process Modifications

Energy-conversion devices for industrial processing and steam generation are used primarily to convert the chemical energy in fuel to thermal energy in the form of steam, hot water, or warm air. Possibilities for reducing particulate emissions by process modifications are discussed in the following paragraphs.

3.2.1.1 Burner Design

Burner design is not a well developed scientific discipline but has been, and still is, largely an art. Most burner designs are arrived at by trial and error and hardware-oriented development, rather than by direct application of a body of scientific knowledge of the subject of combustion. This is not too surprising, considering the complexity of the combustion process. However, as the combustion process is understood more fully and as complete mathematical models describing both the physical and chemical aspects of the process are constructed,

there should be improved understanding of the relationship between particulate emissions and combustion conditions. As a result, burners and furnaces may eventually be designed to assure minimum generation of fine particulates.

3.2.1.2 Flue-Gas Recirculation

Flue-gas recirculation involves diluting the fuel-air mixture in the combustion zone with cooled flue gases and, thereby, reducing flame temperature rise and peak gas temperature. Utilizing cooled flue gas as the diluent does not adversely affect combustion efficiency as neither the mass nor the temperature of exhaust products need increase.

Studies [16] have shown that recirculated flue gas can also contribute to lower emission of smoke when firing fuel oil.

Application of flue-gas recirculation to small and intermediate size combustion equipment is limited by knowledge gaps in the following areas:

- Effect on emission levels of variables such as temperature of the recirculated gas, point at which the gas is injected, and quantity of recirculated gas
- Corrosion and deposits associated with recirculation
- Control of recirculated flue gas quantity in equipment operating at variable firing rates
- Start-up problems.

3.2.1.3 Two-Stage Combustion

Two-stage combustion involves burning fuel in a fuel-rich primary zone, partially cooling the combustion products, and, finally, supplying additional air and completing combustion in a secondary zone. Thus, two-stage combustion makes possible low peak gas temperatures, because the combustion products are cooled before combustion is completed and oxygen levels are low in the highest temperature region--the primary combustion zone. Beinstock, Amsler, and Bauer [17] found that, when pulverized coal was burned in a power plant with 5 percent excess air in the primary zone and 17 percent excess air added at the proper location downstream, NO_x emissions did not increase above levels obtained when

burning with 5 percent excess air and no downstream air addition. Two-stage combustion has not been demonstrated as practical on smaller combustion units.

Application of two-stage combustion to small- and intermediate-size combustion equipment is limited because of gaps in knowledge of:

- Effect on emissions of important combustion variables such as primary-zone fuel-air ratio, temperature drop between the primary and the secondary zones, and secondary zone fuel-air ratio.
- Possible corrosion associated with reducing conditions in the primary zone.
- How to design combustion equipment to achieve effective two-stage combustion (i.e., how to achieve necessary mixing in the secondary zone, how to achieve burnout of incompletely burned products formed in the primary zone, what the residence-time requirements are for primary and secondary zones, and how to incorporate sufficient cooling between zones without increasing equipment size and emissions of smoke, CO, and HC).

3.2.1.4 Other Combustion Modifications

Other techniques to achieve combustion at lower temperatures and possibly reduce particulate emissions are (1) catalytic- or surface-combustion burners, (2) radiant-heating devices, and (3) combustors that operate at high excess air. These techniques have not been developed to the point of practical application to heating boilers or furnaces.

Surface combustion has been used successfully on a number of gas-fired infrared or surface heating units. These units operate with combustion zone temperatures of about 1800 F to 2000 F and, although no specific data are available, these units are likely to have low NO_x emission levels. Surface combustion of gaseous fuels could be incorporated into residential heating units with little difficulty, although

practical combustion of fuel oil has not been demonstrated for long-term operation. Potential problems with fuel oil include achieving complete combustion, achieving uniform fuel feed across the burner face, and preventing deposits on the burner surface.

3.2.1.5 Improved Service and Maintenance

Although only scattered data on burner servicing and maintenance are available [18,19], it is known that lack of proper burner adjustment and/or maintenace can result in poor combustion [20] and higher levels of pollutant emissions. This is especially true with regard to pollutants associated with incomplete combustion of the fuel (combustible particulate, CO, and HC).

Medium- to large-size combustion units are most likely to receive proper maintenance under service contracts or by on-site operators. Therefore, reasonably good combustion performance of these units should be realized. However, emissions such as particulate POM that might be overlooked by service personnel still may not receive proper attention. Education and proper instrumentation would assist in this area.

3.2.1.6 Modifications to Reduce PNA

PNA (Poly-Nuclear Aromatic) compounds, which appear in particulate POM (Polycyclic Organic Matter) comprise only a small fraction of total particulate emissions, but they are significant as some of them are carcinogenic.

Over 90 percent of all PNA emissions from energy-conversion combustion processes is attributed to commercial and residential coal-fired sources utilizing fixed-bed combustion. Although small coal-fired units are disappearing from use, their combustion with regard to PNA emissions is significant.

PNA compounds may be present in the coal itself or may form during the combustion process [21,22]. However, there appears to be no data in the literature which identify PNA as being present in coal. Diehl, DuBruel, and Glenn [23] observed variations in PNA emissions when firing different coals on a pulsating-grate stoker. However, they also observed

such variations when operating a pulverized-coal-fired boiler with one fuel and under essentially constant conditions. Consequently, they were not able to relate PNA emissions to coal, and the source of PNA remains uncertain.

The destruction of PNA, as for any other hydrocarbons, should be by oxidation during the combustion process. The literature appears to contain no data which would identify any unique conditions required for oxidation of PNA [22]. However, the fact that PNA compounds are emitted suggests incomplete combustion of these compounds.

PNA emissions decrease as unit size increases. Larger units provide longer residence times in the flame and, generally, higher average gas temperatures--so that conditions contributing to more nearly complete combustion prevail. Also, fixed-bed combustion units (with poorer mixing) tend to emit larger quantities of PNA than do spreader stokers or pulverized-coal-fired units.

It is possible that, with a better knowledge of how PNA occurs or forms and of the conditions promoting its oxidation, modifications of the combustion process to reduce PNA emissions could be identified.

4. Municipal Incinerators

4.0 Introduction

Approximately three percent of the 4.3 billion tons of solid waste generated in the United States annually is municipal solid waste (MSW)[24]. This means that about 130 million tons of MSW, high in organic content, is generated per year comprised mainly of residential, commercial, and some industrial wastes. This waste can be utilized as an economical and ecological fuel to help relieve the "energy crisis" and, at the same time, achieve considerable recovery of certain natural resources such as metals and glass, provided particulate emissions can be controlled.

In 1968, about 90 percent of MSW was disposed of by landfill, with only 9 percent being incinerated[25]. Waste requiring disposal is increasing at the rate of 7 million tons per year, whereas suitable areas available for economic disposal by landfill is rapidly dwindling. The alternative is to incinerate an increased percentage of this material. A result would be more air pollution unless improved burning processes are developed and adopted. The fact that incinerators can be located near population centers and that they require less land areas in comparison to landfills enhances their atrractiveness to urban planners. Incineration is expected to increase in popularity as improved methods, especially for particulate control and resource recovery, are developed. The use of MSW as a source of energy should be a big plus factor.

4.1.0 Process Modifications

A number of process modifications have been proposed and several are under investigation (some at the pilot plant stage) to control emissions of particulate and, at the same time, utilize some of the heat generated and recover certain natural resources such as metals and glass. These will now be discussed individually.

4.1.1 Combined Firing

In a current task order study for the Emission Standards and Engineering Division, OAQPS of EPA, Battelle-Columbus is compiling information on the combined firing of municipal refuse and fossil fuels in steam-generating boilers. The study includes a survey to determine the planning status of new and retrofit combined-firing installations in the United States, an engineering discussion of the technology of combined firing, estimation of the emissions anticipated from such sources, descriptions of control devices for these emissions, and the impact of combined firing on fossil fuel usage and on solid waste disposal situations in the United States.

The only extensive application of combined firing at present is the demonstration project in St. Louis which is sponsored by EPA, Union Electric and the City of St. Louis. Test data on emissions are incomplete at this time. However, it is expected that, for a nominal firing ratio of 80 percent pulverized coal and 20 percent prepared municipal refuse, the particulate emissions can be controlled by electrostatic precipitators, modified somewhat to accommodate the higher stack gas volume produced, so that final particulate emissions will be similar to those produced when firing coal alone.

4.1.2 The CPU-400

Combustion Power Company, Inc., developed the CPU-400 system which recovers energy from the combustible MSW in the form of electric power through the use of a gas turbine powered electric generator. Simultaneously, the CPU-400 will concentrate, separate, and recover valuable noncombustible materials for recycling. Claims are that CPU-400 produces about five percent of the electric power needs of the community supplying the solid waste. Income from the sale of electric power and recylced materials should result in a substantial reduction in the cost of solid waste disposal.

The pilot plant of the CPU-400 was developed in Menlo Park, California. This plant is a complete system capable of consuming 80 tons per day of

combustible solid waste while producing 1,000 kilowatts of electric power and separating steel, aluminum, glass, and other inerts from the incoming material. The CPU-400 system will be composed of three identical fluid bed combustor/gas turbine modules. Each 3,000 kilowatts module will have a capacity on the order of 150 tons per day. The modular design of the CPU-400 will allow plants processing from 150 to 1,500 tons per day to be constructed and will provide redundancy to assure reliable disposal capability. During a visit to Menlo Park by a Battelle staff member on February 6, 1974[26], he observed that, when burning sawdust, the system works well, the stack is clear, and the dust loading to the turbine and to the stack is extremely low. Turbine erosion and corrosion do not appear to be problems. However, there is a problem of deposition of Al_2O_3 on turbine blades. This is attributed to the melting of aluminum foil which enters with the garbage. A particle bed collector is being considered as a final stage for removal of these Al_2O_3 particles. In cleaning the combustion products do not meet turbine requirements, environmental standards are met.

4.1.3 Water-Walled Incinerators

The use of pollution-control devices requires that the incinerator furnace gases be cooled to permit operation of the flue-gas cleaning equipment. An attractive way to do this is to absorb much of the heat by water contained in furnace wall tubes and in convection-pass tubes.

In addition to greatly decreasing the size requirements for pollution-control equipment and fans, the water-wall incinerator has several attractive features. First, there is a gainful use of the heat energy available in the refuse. Second, the furnace throughput can be increased because of the rapid absorption of heat. Third, wall slagging problems often encountered in refractory-type construction are absent.

The technology of the water-wall incinerator was developed first in Europe where it is in fairly extensive use. Corrosion problems have been reported, however, in some instances. The first operating water-wall unit on

this continent was at the Navy Public Works Center in Norfolk, Virginia, beginning in 1969. Units are now operating in Montreal, Braintree, Massachusetts, Harrisburg, and Northwest Chicago. In all locations except Braintree, the steam is being wasted for lack of local demand. It is anticipated that this type of construction will be used more and more in the future.

In March, 1969, research was started at Battelle-Columbus on a grant program supported by the Solid Waste Management Office, EPA, which was aimed at determining the cause and extent of fireside metal wastage in incinerators and devising methods of alleviation. In March, 1971, work was started on a supplemental program aimed at obtaining a better understanding of incinerator-gas scrubber corrosion and also of metal wastage of grates.

Field and laboratory studies[27] demonstrated that the wastage in water-wall refuse boilers can be more severe than that normally encountered in fossil-fuel-fired boilers. The complex nature of the refuse used as the fuel and the relatively poorer control of burning in an incinerator combine to increase the possibility for corrosion. The contributors to the attack are corrosive gases and low-melting chloride and sulfur-containing salts which exert a fluxing action on the protective films on the metal surface. These low-melting salts primarily contain compounds such as zinc and lead chlorides along with potassium bisulfate and potassium pyrosulfate. The data developed reveal that the gases SO_2, SO_3, HCl, and Cl_2 are also playing a major role in the wastage processes.

Analyses of tube deposits and furnace gases confirm the belief that sufficient quantities of the deleterious salts and gases are present in all municipal incinerators to warrant careful consideration from a corrosion standpoint. Particulate emissions should be substantial, more controlable in water-walled incinerators.

4.1.4 Pyrolysis Processes

Pyrolysis is a process by which carbonaceous materials break down into simpler compounds and elements by means of heating in the absence of oxygen.

A breadown of the organic portion of the refuse into oils, gases and chars occurs. The Bureau of Mines has a pyrolysis unit which consists of a furnace heated with nickel-chromium resistors and a recovery train to trap products. Dependent on the reaction conditions, one ton of municipal refuse yields 154-230 pounds of char residue, 0.5-5 gallons of tar and pitch, 1.2-2 gallons of light oil, and 11,000 - 17,000 cubic feet of gas, in addition to 80-133 gallons of aqueous liquor, and 18-25 pounds of ammonium sulfate. Typical thermal values for the products are: char, 8-13,00 Btu/lb; oil, 150,000 Btu/gal; and gas, 500 Btu/cu ft.

Enviro-Chem has developed a Landgard pyrolysis process which emphasizes disposing of the solid waste, rather than recovery. The refuse is shredded and reduced to a fairly homogeneous mixture with particle size about 3-4 inches in diameter[28]. It is then dumped into a kiln lined with refractory material. The kiln is slightly inclined from exit to entrance so charred material falls by gravity into the water-quenching unit. The residue is water-cooled before passing to a magnetic separator which removes ferrous metals. The wet residue, reduced from the original trash volume by 94 percent, is then loaded into trucks and taken to landfill.

Gases driven off from the kiln during pyrolysis are passed through a combustion chamber where hydrocarbons are oxidized. Complete combustion is assured by an afterburner module. Product gases--carbon dioxide, nitrogen, etc.--are passed through an adiabatic spray-scrubber and then released to the atmosphere. Steam plumes, which might be objectionable from a public relations standpoint, are elmininated by heating the stack gases. Since the gases are clean, very low stacks can be used except where otherwise required by local ordinance. The Landgard system accepts municipal refuse as it is and no hand separation procedures are necessary. The company guarantees to meet all existing air pollution standards in effect when the contract was signed. Cooling water is diverted to sedimentation basins for recirculation. However, the Landgard process has not yet been demonstrated commercially.

The Garrett process is designed to recover salable heating fuels, glass and magnetic metals. The organic portion of these wastes is converted to low sulfur oil, char and gas using a flash pyrolysis process. The process

is designed to be expanded into an integrated series of processing stages for the recovery of over 90 percent of the raw materials contained in municipal refuse. Incoming solid wastes are shredded, dried, and passed through an air classifier which separates most of the metals, glass, and other inorganic materials. The overhead stream from the air classifier is then subjected to a two-stage screening to improve separation of inorganics. The remaining refuse is shredded a second time and then pyrolized, where it is broken down into smaller molecules through the application of heat in the absence of oxygen.

Laboratory studies of the pyrolysis process resulted in the production of approximately one barrel of good quality oil per ton of as-received refuse. Such refuse usually will also yield about 140 pounds of magnetic metals, 120 pounds of glass, and 160 pounds of char.

The flash pyrolysis operation which is the heart of the Garrett process was researched for over a year in a continuous laboratory reactor. Product yields, quality, and the initial favorable economic projections have since been confirmed at a 4 TPD pilot plant during an 18-month period of operations at LaVerne, California.

The quantity of solid material going to landfill from a 200 ton/day plant is only 16 tons/day. The solid debris contains unrecovered glass, aluminum copper, zinc, nickel, and other sterile material. GR&D is currently investigating the economics of reclamation of nonferrous metals, and if a system can be developed, the tonnage of solid rejects going to landfill will be halved.

Other pyrolysis processes which could reduce particulate emissions are described in a catalog of resource recovery processes prepared by Midwest Research Institute for the Council on Enviornmental Quality in February, 1973[29]

4.1.5 Advanced Concepts Involving Heat Recovery

Other methods of incineration involving energy conversion are described in the NCRR Bulletin for the Summer of 1973[24]. They include:

- Burning refuse in existing heat exchangers
- Hydrogenation, in presence of CO and steam
- Anaerobic digestion to produce methane
- Cubetting/Briquetting.

Energy recovery and the productive reutilization of materials, combined with effective control of particulate emissions should result in the commercial development of some of these concepts over the next five years.

4.1.6 Electron-beam Irradiation

The Japan Atomic Energy Research Institute (JAERI) and Ebara Mfg. Co., are jointly grooming a project at JAERI's Takasaki laboratories, whereby such treatment causes both sulfur dioxide and nitrogen oxides to drop out.

In one test, exposure to a "few megarads" of irradiation produced 90 percent SO_2 removal and virtually 100 percent NO_x removal from a 10-cu m/hr flow of flue gas containing about 1,000 ppm of SO_2 and 80 to 100 ppm NO_x.

Full process details have not been disclosed, but the Japanese indicate that the two impurities become captured in aerosol form by electrostatic dust collectors.

4.2 Predictions for the Year 2000

Potential incinerator particulate emissions for both uncontrolled (furnace emissions) and for those abated by control devices (stack emissions) were estimated as follows:[25]

	Thousands of tons per year	
	1968	2000
Furnace particulates	182	1064
Stack particulates	142	391

These data reflect a large increase in disposal of MSW by incineration, but also a great improvement in the control of particulates.

5. Iron and Steel Plants

Particulates generated during the production of steel can originate from several sources. These sources are rust, scale or dirt on the steel scrap used as part of the furnace charge, the degrees of size and thickness of the individual pieces of scrap (small, thin pieces of scrap will oxidize so rapidly that they approach an actual burning situation), fine particulates associated with flux additions to the charge, refractories used for patching, and the oxidation of metallics during the period which high-purity oxygen is blown into the molten metal bath to accelerate the refining reactions.

Particulates of interest in this study are those that originate from the flux additions and the oxidized metallics formed during the oxygen lancing periods. These particulates are associated with the three major processes for making steel; open hearth, basic oxygen (BOF or BOP), and electric-arc furnace processes. Considerable work has been done in the United States and Europe in an attempt to determine the mechanism or mechanisms for the formation of fume during oxygen lancing[30,31,32,33,34,35,36]. Information on the actual mechanism of formation, that could possibly lead to process modifications and improved particulate control have not been forthcoming. However, the factors that affect the formation of fume have been found to be: (1) height of the oxygen lance above the molten metal bath, (2) the carbon content of the molten metal bath, (3) molten bath temperature, (4) concentration of oxygen in the lance gas (i.e., purity of oxygen), and (5) size of orifice and number of orifices in the oxygen lance[34,36].

5.1 Open Hearth Furnace

The open hearth furnace is a shallow hearth furnace that can be alternately fired from either end. Refractory brick work regenerators are located at each end of the furnace which serve to recover heat from the products of combustion and in turn preheat the incoming air for fuel combustion. Briefly the process consists of charging steel and iron scrap into the furnace, melting or partially melting the scrap, charging

molten pig iron to the furnace, and refining the steel by blowing high purity oxygen into the molten bath. The greatest particulate problem occurs during the time high-purity oxygen is used to remove carbon, manganese and silicon from the molten bath. During the oxygen lancing period very turbulent conditions are created in the bath, with the result that significatnt quantities of iron, manganese and silicon oxides are formed and carried into the exhaust system of the furnace.

5.1.1 Hydrocarbon Additive to Lancing Operation

Laboratory research work started in 1959 resulted in a report in 1963 concerned with the use of natural gas in combination with oxygen, as a means for reducing the amount of emissions during oxygen lancing of steel [37]. Various factors were investigated as to their affect on fume formation. These factors were: (1) amount of methane, (2) carbon content of the bath, and (3) temperature of the bath. The use of methane in this manner was shown to be beneficial in reducing the amount of fume, on laboratory scale experiments.

5.1.1.1 State of Development - Hydrocarbon Addition

Development work was not actually undertaken since the application of the modification requires only a source of hydrocarbons and the valving with controls to regulate the flow of hydrocarbons to the oxygen lance. Industrial trials of this process modification were reported in 1966[38]. This work was done with propane-oxygen combinations on 225 net ton open-hearth furnaces in Canada. Results of this work were similar to those obtained with natural gas in the earlier laboratory studies.

5.1.1.2 Availability to Industry

There are no apparent restrictions on the availability of this process modification for use by the industry.

Acceptance by Industry. The iron and steel industry has not accepted this process modification, if the lack of further industrial work can be taken as an indication of acceptance. Shortly after the final laboratory work reported in 1963, plant trials were held, but the results were inconclusive and were not reported. This was followed by the work

reported in 1966. No additional work of record has been reported. Lack of acceptance may be attributed to the following: (1) more stringent air pollution control requirements (hydrocarbon additions, reduced but did not eliminate emissions), (2) possible additional safety hazards associated with such a modification, and (3) increased cost of natural gas and similar hydrocarbons.

5.1.1.3 Degree of Effectiveness

The use of hydrocarbons in combination with oxygen during the lancing of open-hearth steel did reduce the grain loadings per cubit foot of exhaust gases. No data were avaialble pertaining to the agglomerating characteristics of the particulates.

Particulate loading for the work reported on the 225 net ton open-hearths is shown by the statistical distribution in Figure 4. A relationship between dust loadings with the use of oxygen-propane mixtures and oxygen alone, is shown in Figure 5, for the same data. The work conducted with the oxygen-propane mixtures did not consider many of the operating variables that would be of interest to an open-hearth furnace steelmaker. The report did state the desireability of further tests to evaluate the process modification in greater detail.

5.1.1.4 Environmental Effects

There were no detrimental effects mentioned in the work reported. While the reported results did show a reduction in the grain loadings, the work was done without the use of any type of pollution control equipment. Therefore, the reported results do not lend themselves to a conclusion on the overall effects of collection efficiency and improvements in the ease of collection.

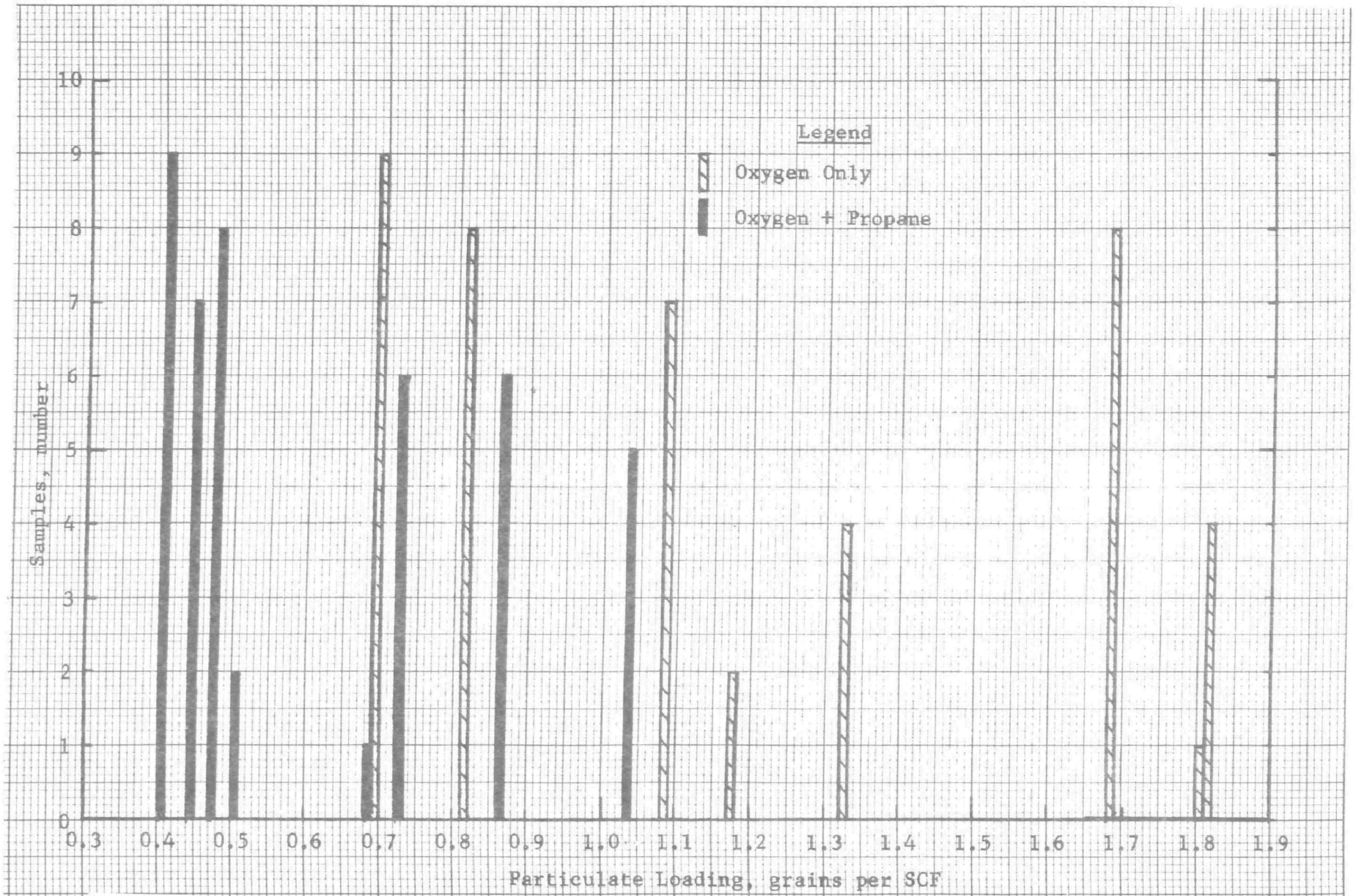

Figure 4. Statistical Distributions of Dust Loadings During the Operation of a 225 net ton Openhearth Furnace, Using Oxygen Lancing and Oxygen + Propane Lancing

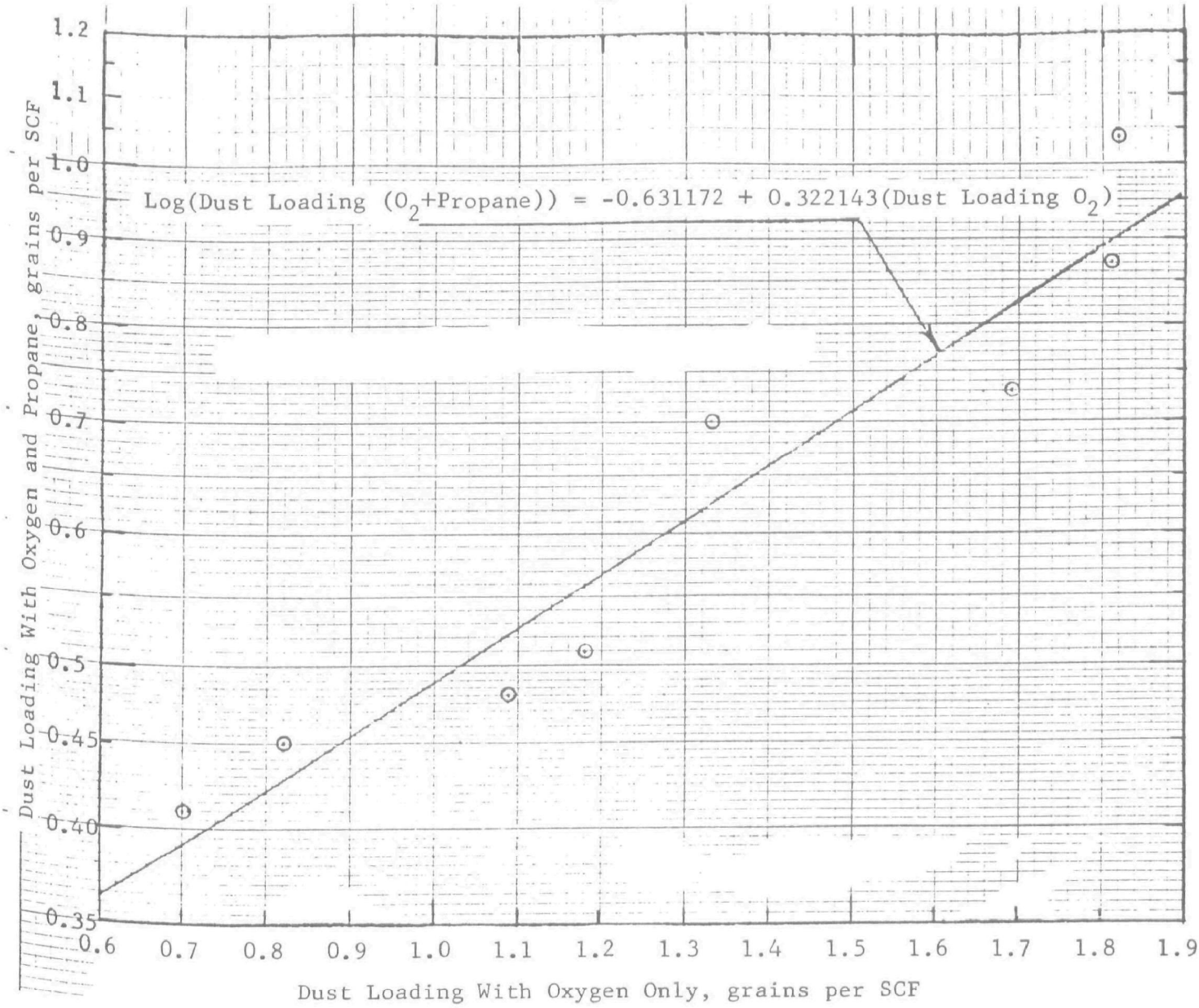

Figure 5. Relationship Between Dust Loadings of a 225 net ton Openhearth Furnace Operating With Oxygen Lancing and Oxygen + Propane Lancing

5.1.1.5 Use of Liquid Oxygen and Liquid Hydrocarbon Injection

A search of the foreign literature resulted in three items originating in the USSR with respect to the use of liquid oxygen and liquid oxygen-liquid hydrocarbons in the lancing of open hearth steels. A continuing search is in progress to obtain any information concerning reports on the work. The three items are quoted from abstracts in the literature and are given for information and possible future use.

Iron and Steel Refining, USSR Patent No. 236499[39]. Iron and steel refining is carried out by blowing with liquid oxygen and this reduces the smoke formation and increases the amount of refined product. Liquid oxygen in quantities corresponding to the gas is fed through the insulated pipes to the 100 ton ladle containing iron. The heat is spent on bringing the metal to the boil, for evaporation and for maintaining the temperature of the reaction. Due to the low temperature of the reaction, the formation of smoke is reduced. The oxygen is diffused in the melt ensuring fast oxidation of the impurities.

Treatment of Metal, USSR Patent No. 276116[40]. In ferrous metallurgy, a molten metal is treated with liquid hydrocarbons. To speed up the process and reduce smoke formation, the liquid hydrocarbons are fed into the molten metal in a mixture with liquid oxygen.

Liquid Oxygen Blast[41]. First pilot operations with the use of liquid oxygen blast were carried out in 600-ton furnace No. 10 at the Kommunarsk Metallurgical Plant. During a two-month period, 32 heats were melted producing 20,000 tons of steel. The use of liquid oxygen reduced iron losses to 90-92 kilograms per one ton of steel, reduced the amount of particulates in waste gases by 30 to 35 percent and increased the steel output by 1-2 percent.

V. Pereloma revealed plans to put in operation the first commercial installation during the second half of 1973 when special cryogenic equipment will be available.

5.2 BOF Furnace

The BOF (Basic Oxygen Furnace) process, or BOP (Basic Oxygen Process), as it is sometimes referred to, utilizes a pear-shaped steel shell lined with refractories to contain the molten iron and scrap used in making steel. The usual charge consists of scrap, molten pig iron and flux. After the materials are charged into the BOF furnace, a water-cooled oxygen lance is lowered into the mouth of the vessel and high-purity oxygen blown into the charge. The high velocity of the oxygen stream (approaching super-sonic speeds) impinging on the surface of the molten metal, produces a violent agitation and intimate mixing of the oxygen with the molten iron. Rapid oxidation of carbon, silicon and manganese in the iron, and reduction of sulfur content by the chemical action of the flux produces a heat of steel. Violent agitation of the molten bath during the blowing process results in the oxidation of very fine particles of iron, and the ultimate formation of the fume associated with BOF steel making. The first BOF was placed in operation in the United States in 1957. Since that time the BOF process has become the major steel producing process in the United States, accounting for 83,260,000 net tons in 1973, for 55.3 percent of the total 150,431,000 net tons of steel produced. Research on the various factors affecting the formation of fume are the same as those described in the section on open hearth furnaces and reported in the published literature[30,31,32, 33,34,35,36].

5.3 Q-BOP Process

Work has not been reported concerning any efforts to improve the collection characteristics of BOF steelmaking fume. However, the "Q-BOP Process" developed in Germany to improve production capabilities has resulted in a secondary benefit of lesser fume evolution during the steelmaking process.

5.3.1 State of Development - Q-BOP Process

The modified bottom-blowing process was developed and placed into commercial operation by the Maximillianshuette Iron and Steel Company

in West Germany, during 1967-1968[42]. The process was developed primarily to produce steels from high-phosphorus pig irons which are predominant in Europe. It is called the OBM (Oxygen Bottom-blown Maxhuette) process and is covered by United States Patent Number 3,706,549[43,44]. Process modification consists of shrouding high-purity oxygen, blown into the vessel through tuyeres in the bottom of the furnace, with a hydrocarbon. The vessel is shown schematically in Figure 6. In 1971, officials and technologists of the United States Steel Company visited Maxhuette, undertook development work of their own directed toward the production of steel from low-phosphorus pig irons, which are predominant in the United States[42]. In December 1971, the U.S. Steel Corporation announced the construction of a Q-BOP plant at their Fairfield, Alabama works[45], which was followed by an announcement in early 1972, that the conventional BOP shop under construction at Gary, Indiana, was to be converted to a Q-BOP shop[48]. A very good description of U.S. Steel Corporation's development work and plant installations is given in the published literature[49].

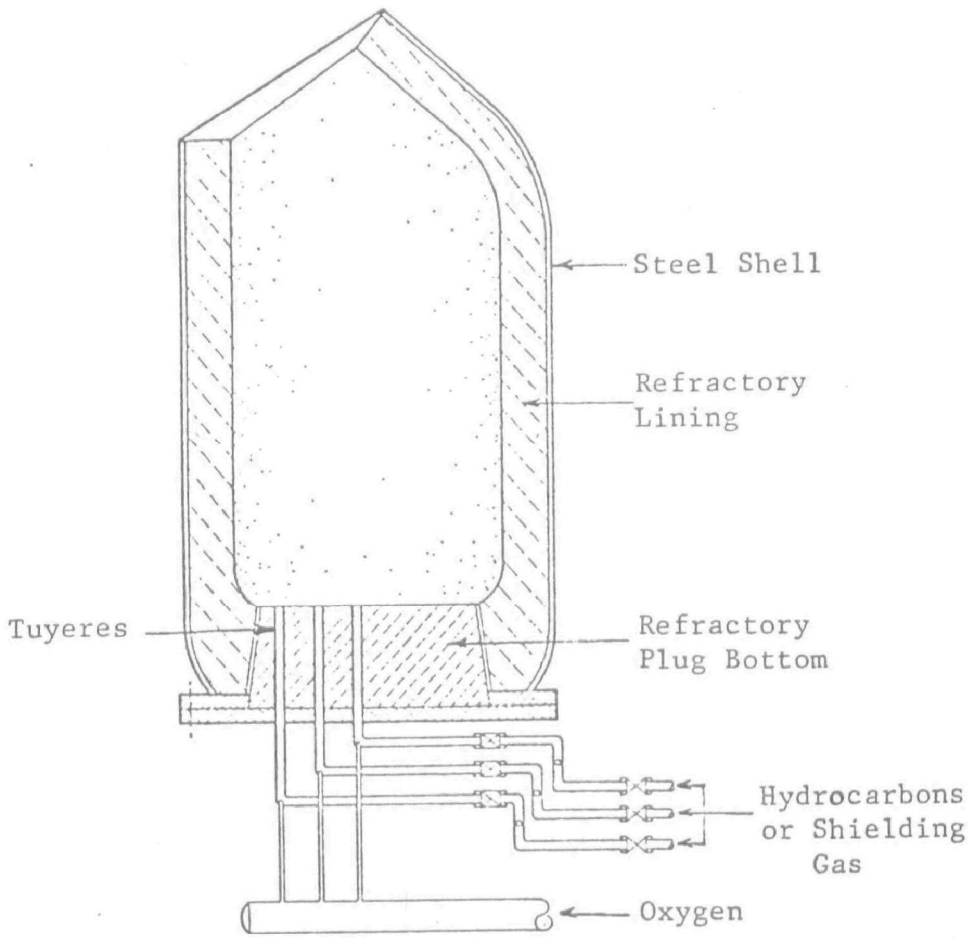

Figure 6. OBM Process Vessel, U.S. Patent 3,706,549

Availability to industry. The availability of the Q-BOP, and a few similar processes, to the industry is somewhat clouded by the patent situation of the several steel companies involved in the various process developments[50]. This is especially true with extensive patent litigation which started in 1966 and is still in progress[51,52,53,54,55,56], with the conventional BOF process.

Acceptance by Industry. The acceptance by industry is of necessity influenced by the patent situation mentioned above. However, if the patent situation were to become clarified, it is possible that within 5 years, eight of the remaining 21 open-hearth steelmaking shops could be replaced by Q-BOP type steel plants. Three will be closed. The remaining 10 open-hearth shops have furnaces that are of rather recent construction and have had considerable air pollution contol equipment installed, would probably still be operated until replacement was required. This replacement would probably take place over a 5 to 15-year period from now.

5.3.2 Degree of Effectiveness

No published reports have been made of the Q-BOP process that provides quantative information on the reduction in particulate emissions. Reports indicate that the bath is quieter, the particle content of the waste gases less, but coarser, and that quantities are only 1/3 to 1/5 that of the BOF furnace.

5.3.3 Environmental Effects.

More definitive information on off-gases and particulates from the Q-BOP steelmaking process must be made available before an accurate evaluation of the effects on the environment can be made. However, if the reported reductions in particulate emissions bear out early indications, the only effect on the environment can be that of an improvement.

5.4 Electric Arc Furnace

The electric-arc furnace is a short cylindrical-shaped furnace, having a rather shallow hearth. Three carbon, or graphite, electrodes project through the roof into the furnace. Electric energy passing through the electrodes and into the charge create the heat required to melt the charge. Furnaces are constructed with fixed or moveable roofs, with the vast amjority in the United States having moveable roofs.

Charge materials usually consist of 100 percent steel scrap, with the exception of one major steel plant that uses molten pig iron as part of the charge. Prepared scrap is loaded into charging buckets in advance of the melting operation and charged as required. The charging operation consists of opening the top of the furnace, lowering the charging bucket part way into the furnace and dropping the scrap into the furnace. The roof is moved back into position and the electrodes lowered through the roof for the start of the melting operation.

The melting operation is started by turning on the electric power to the electrodes. Arcing occurs between the electrodes and scrap as the electric current passes into and through the scrap. When the scrap is almost completely melted a second scrap charge is added, followed by a third or forth scrap charge. The number of scrap charges depend on the apparent density of the scrap as it is charged to the furnace. Refining is accomplished by blowing high-purity oxygen into the molten steel to remove carbon and silicon. This, combined with the refining action of the slag, brings the heat of steel close to its required composition. Ferroalloys are added to achieve the final composition, power is shut off, and the heat poured into a ladle for transfer to the ingot pouring area or continuous casting machine

There has been no reported work concerning the increase in particle size or the reduction of emissions as applied to electric-arc furnace operation. One process modification reportedly does result in the apparent reduction in fume, that of using an oxygen-fuel burner for preheating a more dense scrap charge to eliminate successive opening of the furnace to charge the less-dense scrap charges.

5.4.1 Preheating and Melting with Oxygen-Fuel Burners

Most of the work on preheating has been done with respect to preheating scrap prior to charging it into an electric furnace. This type of operation is considered more favorable since it reduces the actual time required to complete a heat of steel in the furnace. Development work has been done on the use of oxygen-fuel burners to preheat and melt scrap in the electric furnace prior to the application of electric power[57,58,59,60].

5.4.1.1 State of Development

The required equipment and operating practices have been developed to the point where they can be used in the routine production of steel.

Availability to Industry. There are no apparent restrictions on the availability of this technology, unless there may be some licensing fees connected with use of some of the specialty burners designed for the process.

Acceptance by Industry. One of the principle deterrents to the use of oxygen fuel, preheating and melting technology has been the increase in price of hydrocarbons. A second deterrent has been the high noise level created by the burners which are designed to obtain maximum efficiency of heat output.

5.4.1.2 Degree of Effectiveness

No reports have been published which contain data pertaining to measurements of particulates, which would permit a good evaluation to be made of the effects of oxygen-fuel burners on the reduction of particulates. In the discussion of a technical paper given on oxygen-fuel preheating, when the speaker was questioned with respect to fume occurence, made the following reply, "The amount of fume appears to be less than normal. There is, of course, an increase in waste gases. In one case where the burners were used before the power was turned on, the exhaust gas coming out of the electrode ports was almost clear."[62] Two reports on the technology contained photographs to illustrate the before and after situations[60,61].

5.4.1.3 Envrionmental Effects

From the meager amount of information reported it does not appear that there would be any particular detrimental effects to the environment from emissions. However, as stated earlier there is a problem in the noise created by the high-efficiency oxygen-fuel burners. The gas and oxygen emerging from the tip of the burner are traveling at supersonic velocity. Although no reports have been made of the problem, the high noise level situation has been verified in conversations with operating plant personnel in past visits to electric-arc furnace steel plants.

5.4.2 Electric-Arc Furnace--Scrap Charge Compatibility

One of the factors that causes an increased amount of particulate emissions is the number of times the furnace must be opened to charge the amount of scrap required to meet the total weight requirements. If a furnace could be charged with a consistent, high-density scrap charge, the furnace would need to be charged only once. A method for producing such high-density scrap charges for electric-arc furnaces has been developed in Japan [63].

5.4.2.1 State of Development

The technology involves the use of a special press to compact low-density scrap into a single high-density scrap charge that conforms to the control of the inner volume of the furnace. Scrap charges from 5 to 60 tons have reportedly been produced.

5.4.2.2 Availability to Industry

The special presses for providing the customized scrap charges are being marketed in the United States by a U.S. equipment broker. Unless there are some specialized design concepts involved, similar equipment could probably be designed and constructed by U.S. press builders.

5.4.2.3 Acceptance by Industry

There should be no hinderance to the acceptance of this technology, unless the charging cranes in the electric furnace shop have insufficient capacity to handle a complete furnace charge. In such a situation, a scrap crane of large capacity would have to be installed and the supporting crane structure would have to be strengthened. The costs for such modification of the crane and structures could rule out the use of specialized scrap compacting procedures.

5.4.2.4 Degree of Effectiveness

No information has been published pertaining to the air pollution aspects of this technology.

5.5 Metallurgical Coke Ovens

Particulates originate in coke oven operations from three sources, (1) charging of the ovens with coal, (2) pushing incandescent coke from the oven, and (3) the quenching operation. There are no published reports on technology or process modification that pertain to the agglomeration of particulate emissions from coke ovens, or a reduction in particulates. There is only one report of record pertaining to the characterization of particulates from coke ovens[64]. Another report on the collection and analysis of particulate emissions during the coke-oven charging operation, is due for release in one and a half to two months[65]. Efforts to obtain any information from the contractor were unsuccessful.

5.5.1 Particulates from Charging Coke Ovens

Moist, pulverized coal is charged into coke ovens from larry cars. The ovens are at an incandescent heat and the initial amounts of coal dropped into the ovens are heated very rapidly with a resulting evolution of steam and volatile hydrocarbons. The hot expanding gases rise very rapidly and exit the oven through the charging hole at the start of the charge, are suppressed during the flow of the bulk of the coal and then may again exit through the charging port at the end of the

charging operation, before the lid can be replaced. However, if the coke-oven battery has double collecting mains with sufficient suction in the steam aspirator system, the gases and particulates do not reach the atmosphere and particulate emissions are minimized. Larry cars with integral scrubbers and other process modifications serve to improve the efficiency of particulate collection, but they in no way cause an agglomeration of particulates or a reduction in particulates from the charging operation itself.

5.5.2 Particulates from Pushing Coke

Particulates generated during the pushing operation occur primarily from the abrasion of the coke on the refractory of the oven. The particles are hard, angular carbon. The characteristics of these particles do not permit any agglomeration to occur. When materials of this nature are bonded together, such as in the manufacture of briquettes, a petroleum base material or tar is used as the bonding agent. Some times very fine particulates may occur during the pushing operation. These particulates originate from coal that is insufficiently coked. It is often referred to as "green coke". Extended coking time is a suggested remedy for eliminating the fine particulates. The extension of coking time is not a remedy for these emissions. Incomplete coking is caused by insufficient heat transfer which is caused by warping of the oven walls, in the case of older ovens, incomplete combustion in the flues, and many other structural changes that may occur in an oven with age, that affect the heat transfer characteristics of the ovens. Maintenance procedures may reduce the amount of emissions, but this is questionable. Equipment is presently being installed on coke-oven batteries to collect the emissions that occur during pushing. It will be some months before definite results will be available from these installations.

5.5.3 Particulate Emissions During Quenching

The emissions occuring during the quenching operation are essentially the same type of particulates generated during the pushing

operations. They are carried into the atmosphere by the heavy clouds of steam generated by the quench water spraying onto the incandescent coke. These particulates can be minimized by the use of baffles in quench towers, which trap the particulates and carry them into sumps for recovery from the water. Special quench cars, incorporating self-contained water spray and emissions control devices, are in the process of evaluation on full scale, operational equipment.

6. Ferroalloy Furnaces

Ferroalloys are used to make additions of alloying elements to iron and steels, in order to achieve desired mechanical properties. At one time ferrosilicon and ferromanganese were both made in blast furnaces, but today only ferromanganese is made in blast furnaces, and that at only two plants in the United States. All the other ferroalloys are produced in submerged electric-arc furnaces or by alumino-thermic techniques.

Considerable work has been reported in the past five years with respect to emissions from ferroalloy furnaces[66,67,68,69,70,71,72,73,74,75,76,77,78]. Although the reports contain a great deal of information pertaining to the chemical analysis of the particulates, some data on size, and material describing the operation of the various types of air pollution control equipment, there is an absence of data concerning the properties of the emissions that may lead to the evolution of fewer particulates or possibilities of agglomeration that would make collection easier or more efficient. One study did make a comparison between the type of ore charged, i.e., lump ore, fine ore and pellets[73]. Using pelletized ore concentrates in comparison to fine ore concentrates the amounts of particulate emissions was reduced approximately 42 percent, while the use of lump ores reduced the amount of emission only 22 percent. The extent of pelletizing ores in the United States is not known; however, an economic evaluation would have to be made to compare the economics of crushing, grinding and pelletizing ores, against the cost of air pollution control without pelletizing.

7. Process Modifications For Particulate Control In The Primary Nonferrous Metallurgical Industry

This technical review and discussion is limited to consideration of the primary zinc, copper, and aluminum, industries. It is concerned only with possible changes in present procedures that will aid in controlling fine particulate emissions.

7.1 Zinc Roasting, Sintering, and Distillation

Of the primary zinc plants in the United States, the only horizontal retort plants presently operating (Amarillo, Texas, and Bartlesville, Oklahoma) are doing so on variance for a limited time. Since no changes in equipment or operation are contemplated or likely for these, they will not be considered in this review. There are five plants remaining, then, for consideration--three electrolytic and two pyrometallurgical.

The trend in American primary zinc plant construction has been, and is expected to continue to be, toward the hydrometallurgical or electrolytic process rather than toward pyrolytic processes. Two new plants definitely planned by American Smelting and Refining Company and by National Zinc Company, respectively, will be electrolytic. Also announcement has been made recently by New Jersey Zinc Company of plans to build an electrolytic zinc plant. This will give a preponderance of zinc production to hydrometallurgical plants where control of fine particulates is a problem only in roasting and handling.

7.1.1 Roasting

Particulates in roasting zinc concentrates are bourne with the gas stream through flues and in some cases over waste heat boilers to dust collection and scrubbing systems. In all plants under consideration the gases go to an acid plant and are well cleaned before passing to the atmosphere. As a consequence, the roasting operation presents a very minor factor in fine particulate control.

7.1.2 Sintering

The two pyrometallurgical zinc plants sinter roasted calcine and there is some stack loss of fine gas-bourne particulates. This is minimized by water sprays and a dust collection system. No new process modification has been suggested or is presently being investigated to our knowledge to reduce this small loss still further.

7.1.3 Reduction and Distillation

In reducing and distilling zinc from the two pyrometallurgical plants there is very little production of fine particulates that can escape to the atmosphere. Gases from the retorts carrying zinc metal vapor pass through molten zinc or through a chamber filled with a rain of molten zinc droplets to condense the zinc. This is followed by a scrubbing system to collect zinc oxide that may be formed. Since there is no passage of gases through the retorts, other than vaporizing of reduced zinc, there is extremely small carry-over of charge; hence, about all of the particulates that emerge from the retort-condensation system is zinc oxide which is too valuable to lose. Present methods of controlling loss of particulates from the pyrometallurgical reduction furnaces are effective and no better system for improvement appears to be emerging other than greater attention to good plant housekeeping in handling dry concentrates and calcines.

7.2 Copper Roasting, Matte Smelting, and Converting

There are two general methods under consideration for modification of emitted solid particles in copper plants. One is to modify the usual reverberatory-converter procedure and equipment; the other is to eliminate pyrometallurgical treatment entirely. A brief review of conventional U. S. primary smelter practice with data on the degree of efficiencies realized with current control practices is given in Appendix A.

7.2.1 Pyrometallurgical Modifications

The chief smelter modifications presently being used to reduce emission of particulates are the result of efforts to reduce or largely eliminate emission of sulfur oxides. In copper smelting elimination of sulfur gases is of far greater importance than reducing stack losses of particulates. Consequently, the trend that largely affects emission of particulates is that of controlling sulfur gases. All copper smelters now have electrostatic precipitators and/or baghouse units, as well as settling flues, to recover solids, since it is to their economic benefit to avoid such losses. However, to capture the sulfur, as by passing the gases through an acid plant, greater attention is needed to clean the gas stream and fewer particulates escape to the atmosphere. This has meant that efforts to raise the SO_2 content of the gases evolved to permit effective acid recovery, or combining the reverberatory-converter operations, also aids in controlling particulate emissions.

7.2.1.1 Flash Smelting[79,80,83]

The type of flash smelting developed at the Outokumpu smelter in Finland (Fig. 7) or the variation developed by International Nickel Company in Canada (Fig. 8) is a favored replacement method over the present reverberatory. Flotation concentrates, with flux and preheated air, are injected into a hot chamber where the flash burning of sulfides in suspension furnishes the energy needed for smelting. This eliminates the need for coal, gas or oil burners with attendant large volumes of products of combustion. In fact, with the Outokumpu flash furnace a 14 percent SO_2 gas can be produced (8 to 12 percent is more common which is 15 to 25 times more than a reverberatory furnace using air-fuel combustion) which is excellent for making sulfuric acid. The Inco variation is to use 95 percent oxygen in place of air which makes a still more concentrated SO_2 gas, i.e., 75 to 80 percent. This is used in Canada to make liquid SO_2 for pulp and paper plants in the general vicinity. Aside from excellent utilization of heat and diminished gas volume, flash smelting is considered to give a higher grade matte than reverberatory smelting. This requires minimum oxidation

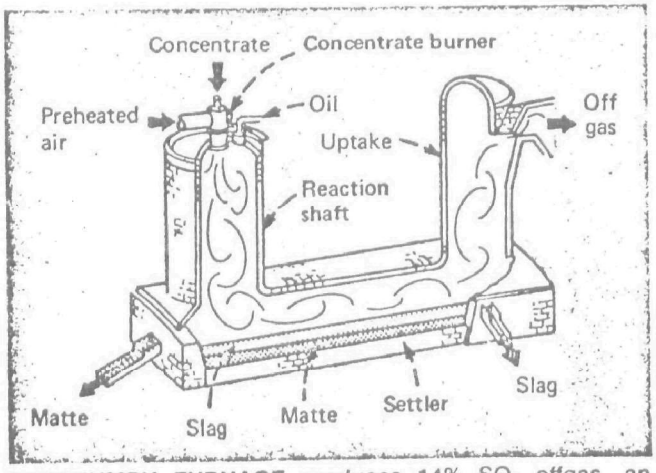

OUTOKUMPU FURNACE produces 14% SO_2 offgas, an ideal gas grade for sulfuric acid plants

FIGURE 7.

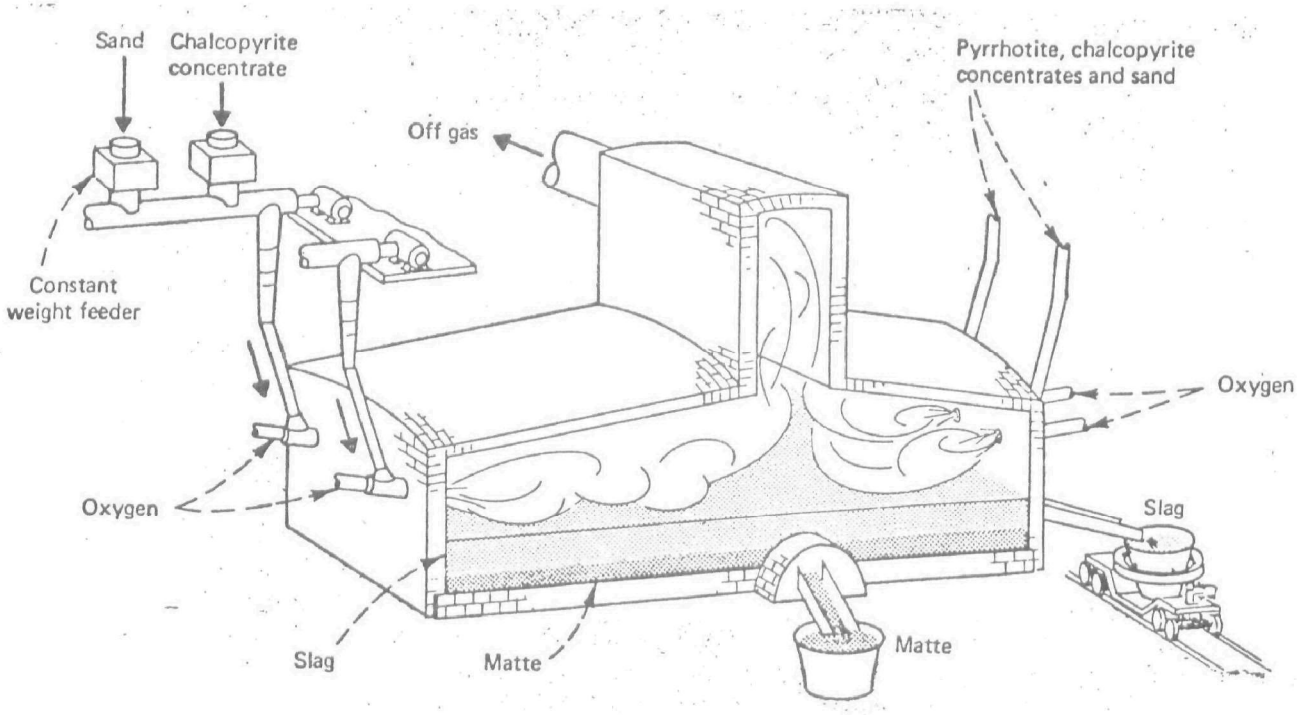

INCO FLASH FURNACE utilizes 95% oxygen for combustion of concentrates, produces 75% to 80% SO_2 offgas

FIGURE 8.

in the converter. Consequently, a stationary converter can be used with a more manageable gas containment system. Where there are outlets for sulfuric acid or for liquid SO_2, flash smelting is deservedly receiving considerable attention. A disadvantage of flash smelting is that both the reverberatory and converter slags must be slow cooled, ground, and treated by ore concentrations methods for recovery of copper values.

An Outokumpu type flash smelting furnace has been estimated to cost $1,600,000 (1973) and an electric furnace for slag treatment, $1,100,000. The cost for an entire plant with waste heat boilers, dust collection system, site preparation, etc., would be on the order of $9,000,000. Generally, the capital cost for a flash smelting unit is considered to be higher than for a conventional reverberatory furnace. An Outokumpu flash furnace is planned for the new Phelps Dodge smelter in Hidalgo County, New Mexico.

7.2.1.1.1. Electric Furnaces[79,80]

Where the cost of electric power is not excessive, the use of electric furnaces is also a recognized and well-developed method of getting a more concentrated SO_2 gas stream suitable for making sulfuric acid. Since there are no products of combustion for gas dilution, an SO_2 workable range of 2 to 4 percent can be attained. Usually this can be combined with converter gases for the acid plant.

Electric furnaces for copper smelting were pioneered in Norway and Sweden, and there is an excellent installation in Uganda. In the United States the first commercial electric furnace for copper smelting was started in early 1973 at Copperhill, Tennessee. Another, by Inspiration Consolidated Copper Company, was started at their Arizona plant, adjacent to their conventional reverberatory smelter, in November, 1973. This unit is a 51,000 KVA furnace (operating on unroasted but thoroughly dried concentrates), five large Hoboken-type converters and a Lurgi double contact acid plant. Construction is expected to begin in early 1974 at Anaconda, Montana, on a fluid-bed roaster and electric furnace installation to eventually replace the present reverberatory furnace operating on unroasted concentrates.

An electric furnace that is smelting roasted concentrates is considered to have some advantages over a reverberatory in that a higher concentration of SO_2 is secured by the flash roaster--electric furnace combination; an electric furnace operating on raw dry concentrate also has some advantages, as a lower capital cost for the simpler construction of one unit, but many factors affect the choice. Both methods tend to reduce the amount of particulates evolved to the atmosphere by producing less volume of gas flow and a gas that can be utilized in an acid plant.

7.2.1.2. Continuous Smelting

Combining the present reverberatory-converter operations into a single unit has attracted much experimental work in the past few years. Such simplified equipment, making only one stream of gases carrying particulates has the potential of greater control over particulate losses. A number of processes in this category have progressed to the pilot plant stage and a few to initial commercial or semi-commercial installations.

The Noranda Process.[81,84] Developed by Noranda Mines, Ltd. in Canada, this process uses a single long (about 70 feet) combined smelting-converting unit. It is a horizontal, cylindrical, furnace having a central depressed area for copper collection and a raised hearth at one end as shown in Fig. 9. A burner heats the smelting end where concentrates and flux are charged, but air or an air-oxygen mix is introduced through submerged tuyeres along the furnace base to oxidize the matte that is formed. The furnace can be tilted for access to the tuyeres. Gases with accompanying particulates may run 5 percent SO_2 or higher as oxygen enrichment above 25 percent is used. Thus, there is only one unit to control, without the fume and trouble of conveying molten material from one furnace to another, and the exit gas is of sufficient SO_2 concentration for use in making acid with attendant thorough cleaning of particulates. After thorough testing on a 100-ton per day pilot plant, Noranda has built a $19,000,000 initial commercial plant of 800 tons/day capacity which was started in 1973.

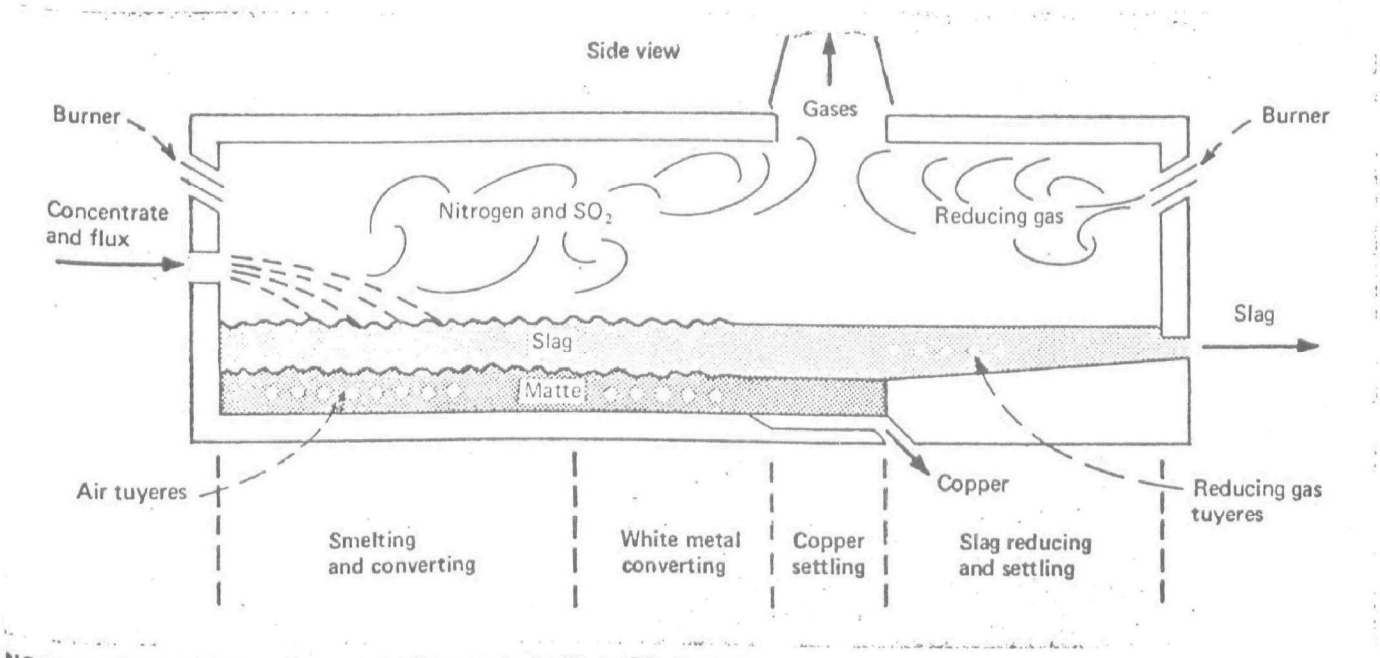

NORANDA PROCESS produces rich off-gases to facilitate SO_2 recovery.

FIGURE 9.

Kennecott has also announced plans to install a Noranda type continuous converting and smelting unit.[85]

The WORCRA Process.[81,86] Developed by Howard Worner and Con-ZincRio Tinto of Australia, this process has also undergone considerable pilot testing over the past few years. It combines smelting, converting, and slag cleaning in one operation, making metal directly and continuously in a long stationary furnace. Slag is removed at one end; molten copper at the other end. Off gases in a single stream are said to range from 9 to 12 percent SO_2 which can be efficiently handled in an acid plant. By utilizing the exothermic reactions efficiently in burning the sulfides in the charge, a minimum of energy is required. No tuyeres are used as in the Noranda process, but air lances from the top are used for converting. Although the process has been tested in pilot plants and semicommercial plants of up to 72-80 tons of concentrates per day, no large commercial plant has been constructed so far. Some disadvantages may be the rather low-grade blister copper produced which requires considerable fire refining, and the probability of short refractory life because of the vigorous bath agitation.

The Q-S Process.[87] Named after the inventors, Paul Queneau of Dartmouth and Reinhardt Schumann of Purdue, this is also a multistage, progressive converter operation that combines continuous smelting and converting into one furnace. Sulfide concentrates are flash smelted by oxygen, and oxygen is also used through submerged tuyeres to effect converting to copper. Dust production is said to be minimized by this procedure, but as the SO_2 rich gas is thoroughly cleaned anyway for recovery of sulfur in some form, this is of minor importance from the standpoint of particulate control.

A slag scavenging operation is part of the process. This involves bottom blowing the slag with coal, oxygen, and sulfur dioxide to recover residual copper, presumably as a matte that can be recirculated. The process can be applied to the recovery of nickel and lead also; in fact, the St. Joe Minerals Corporation is said to have obtained an option for the exclusive use of the process for replacing sintering and blast furnace operations in smelting lead concentrates. Pilot plant investigations of the process are planned.

The Mitsubishi Process.[81,82,88,89] Developed in Japan by Mitsubishi Metals Corporation, this differs from the Noranda and WORCRA continuous processes in that it is a continuous process but the work is not all done in a single unit. Rather, the concentrates are smelted in one furnace, the slag and matte flow continuously through a slag cleaning furnace to a converting furnace having overhead air lances, as shown in Fig. 10. Since these are interconnected, there need not be the loss of fumes that usually exist in transferring from reverberatory to converter and the continuous converting unit is not cooled intermittently, which favors better refractory life than with the usual converter blows. Outstanding features are said to be economy in capital investment (compared to a reverberatory-converter unit) and operating costs, and exit gases of over 10 percent SO_2 which indicates a concentrated or low-volume gas stream. The dusting rate is said to be low because of liquid particle entrapment in the furnace bath. This should further decrease loss of particulates in the gas stream. Charge preparation in drying to 1 percent moisture and instrumentation control are considered to be complex. The process, after thorough testing in a pilot plant, has been further demonstrated in a 1,500-ton blister copper per month semi-commercial plant that was started in November, 1971.

7.2.1.3. Miscellaneous Pyrometallurgical Developments

Although the trend in building new pyrometallurgical copper plants throughout the world has been toward flash smelting, electric furnaces and continuous smelting systems, no discussion of the subject would be complete without at least mention of other methods which may be considered minor or presently not definitely proven to the commercial stage.

The Momoda Blast Furnace.[79] Successfully developed by Sumitomo Metal Mining Company, the Momoda blast furnace is being used in two copper smelters in Japan. It appears to be adaptable to, and have advantages for

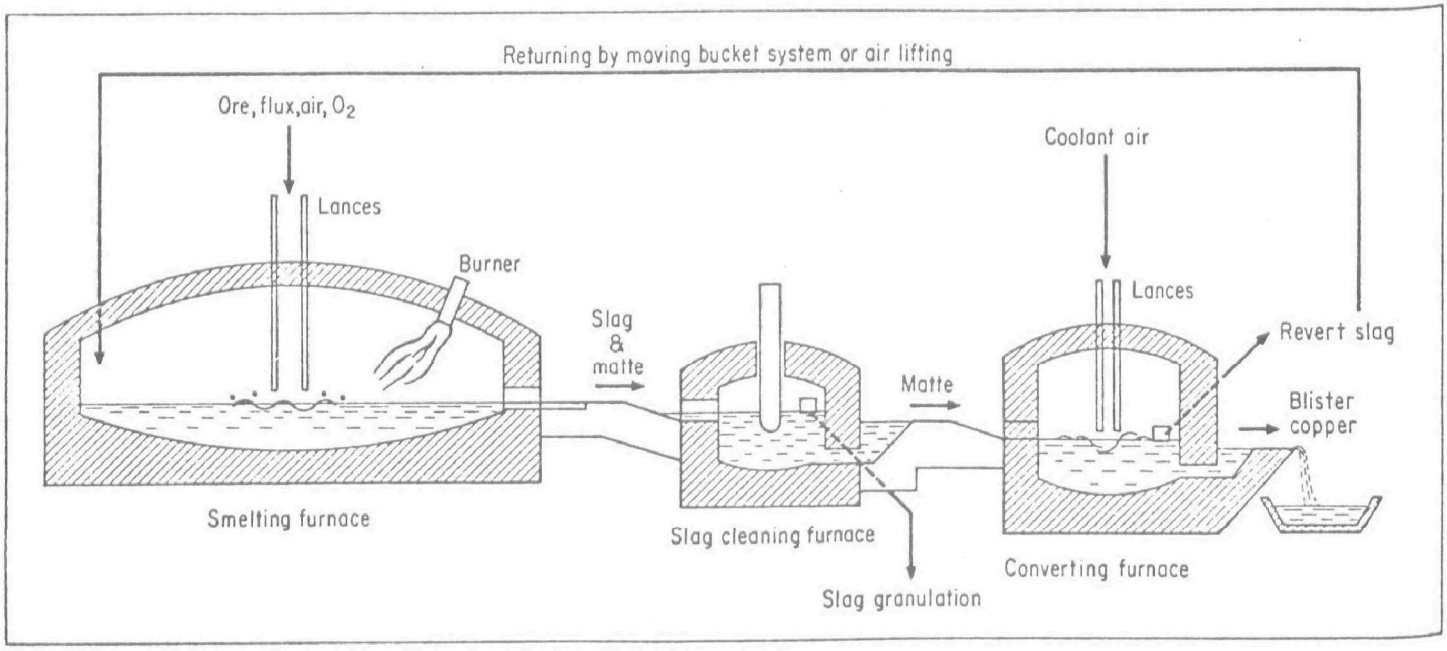

Schematic view of Mitsubishi's semicommercial plant.

FIGURE 10.

small-scale operation, such as a capacity of 500 tons of charge per day per furnace. Since the energy requirement for smelting a ton of charge in a Momoda furnace is said to be only about 28 percent that for reverberatory smelting with a wet charge, there is economy in operation, at least under Japanese conditions. A feature of the process is that the concentrates are charged with other copper bearing materials as a stiff plasticized mass containing 10 to 15 percent water, rather than being sintered or briquetted. The process has been proven successful abroad but has not been tested in this country and would appear to have no direct benefit from the standpoint of greater particulate control.

The U. S. Bureau of Mines.[90] Autogenous smelting work has been done on a laboratory scale and no commercial development of the process appears to be pending, but this procedure has received considerable favorable attention. Like the Noranda and WORCRA processes, it is a continuous smelting method in a single unit to produce copper directly from concentrates. Oxygen is used in place of air which gives a concentrated, low-volume, high SO_2 gas. This should be favorable for minimum particulate loss since the gas would be thoroughly cleaned before going to a plant for sulfur recovery. The furnace combines flash smelting with converting by means of an oxygen lance immersed through the slag into the matte from the top. A simplified sketch of this furnace is shown in Fig. 11.

The Kircet Process.[81,91] The Kircet Process is a development in the U.S.S.R. which has been demonstrated there on a pilot-plant scale. It consists of charging a dry copper concentrate into a cyclone type furnace where an air-oxygen mixture (of up to 100 percent oxygen) affects oxidation and smelting similar to flash smelting. An electric furnace attached to the cyclone smelting furnace receives the molten product to complete the treatment. A second electric furnace receives matte from the main unit and produces blister copper and slag. Since the process is designed to treat combined lead-zinc-copper ores, liquid zinc is recovered by condensation in the gas stream. Incomplete descriptions give few details of how this is done or how lead is recovered. Although a saving is claimed in being able to float lead-zinc-copper values from the complex ores, the complexity of recovering all three metals in a single furnace would seem to be disadvantageous. Off-gases from the system are said to run 70 to 85 percent SO_2

Bureau of Mines Autogenous Smelting

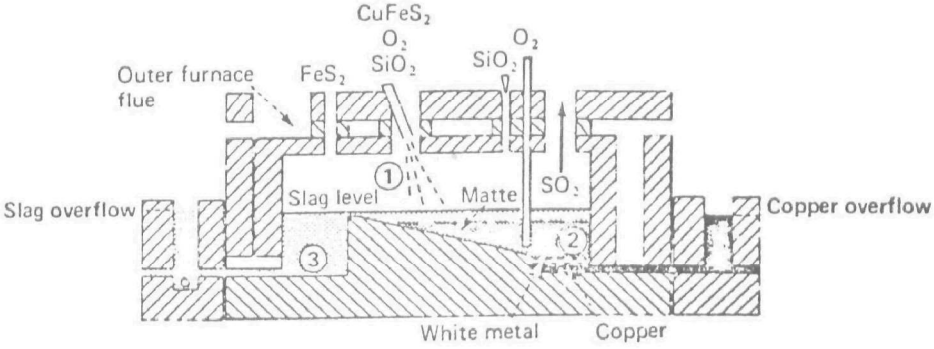

Verticle elevation section through center

FIGURE 11.

(using oxygen in place of air) and only a small amount of reducing material is needed.

Other Process Modifications. Among general improvements of present installations, the use of oxygen enriched air to reduce the volume of gas emissions, and attention to hooding converters to control more efficiently gas and dust emissions, have been common and need not be detailed.

The top-blown rotary converter as developed by International Nickel Company has followed oxygen steel-making practice.[79,81,82] Although currently a commercial installation is being made at Copper Cliff, Ontario, to treat a mixed nickel-copper charge, this procedure is considered to be of potential benefit for handling copper matte alone where low-cost oxygen is available. There are metallurgical advantages to using such a converter, such as excellent mixing, less refractory wear, and a higher temperature in final conversion to blister copper, but for particulate control the only advantage is in the reduced volume of gases from using oxygen.

Improvements in removal of sulfur from the gas stream in copper plants indirectly aids removal of particulates since most procedures require cleaning the gas stream more thoroughly than when it merely goes up the stack. Thus, Monsanto's Cat-Ox process which has been tested to remove SO_2 from power plant gases may be adaptable to dilute SO_2 gases presently evolving from copper smelters. The Wellman-Power Gas procedure uses "sodium sulfite solution to absorb SO_2, forming sodium bisulfite, then reversing the reaction to release concentrated SO_2." As with Monsanto's Cat-Ox process, the gas stream must be thoroughly cleaned before reaching the absorber; hence, particulates of all sizes would be removed. Allied Chemical Corporation has been developing another procedure which reduces a comparatively rich SO_2 stream with natural gas to produce elemental sulfur.[92] This could apply to a 12 percent or over SO_2 gas as produced by other methods, including the Wellman-Power or Monsanto Cat-Ox methods, where production of elemental sulfur was much to be desired over producing acid. Also, the Bureau of Mines has been operating a small pilot plant, and extending their operations on a larger scale to a lead plant and coal-fired power plant on removal of SO_2 from low-concentration gas streams by absorption in a sodium citrate solution.[93] Here again, of course, the gas stream is thoroughly cleansed of particulates by passing through electric precipitators or

baghouses and being water scrubbed before reaching the absorber. American Smelting and Refining Company has had considerable experience in recovering liquid SO_2 from copper smelter fumes, and is building a sizeable plant to do this.[94]

In place of absorbing SO_2 from dilute gases, limestone scrubbing has received considerable attention. The Smelter Control Research Association in pilot plant tests, have found the wet limestone scrubbing process to be unreliable and have put emphasis instead on the ammonia double-alkali process for the removal of SO_2 from copper reverberatory furnace gas.

7.2.2 Hydrometallurgical Copper Recovery

The effort to avoid air contamination with SO_2, and, to a lesser extent, with dust, has led many copper companies to consider hydrometallurgical treatment. Many different procedures have been investigated and some have reached the commercial plant stage. This is in addition to the well-developed present technology of leaching oxidized ores or roasted concentrates with sulfuric acid and recovering the copper by electrolysis or precipitation on iron scrap. Leaching fractured ores in place, heap leaching, and treatment of mine waters with iron scrap to recover copper are important procedures but beyond the scope of particulate control. Improvements in using ion exchange or solvent extraction to isolate and concentrate a desired metal from solution has enhanced the possibilities of useful and economic recovery of metals by hydrometallurgy but such means have only indirect effect on control of particulates.

7.2.2.1 Stanford LCPR Process[95]

A lime-concentrate-pellet-roast procedure investigated by the Process Metallurgy Group at Stanford University is noteworthy in that it combines a pyrometallurgical advancement with hydrometallurgical extraction and recovery of copper. The general plan, as shown in the flowsheet of Fig. 12, is to tie up the sulfur with lime during roasting, then leach the calcine with spent sulfuric acid electrolyte for copper extraction and

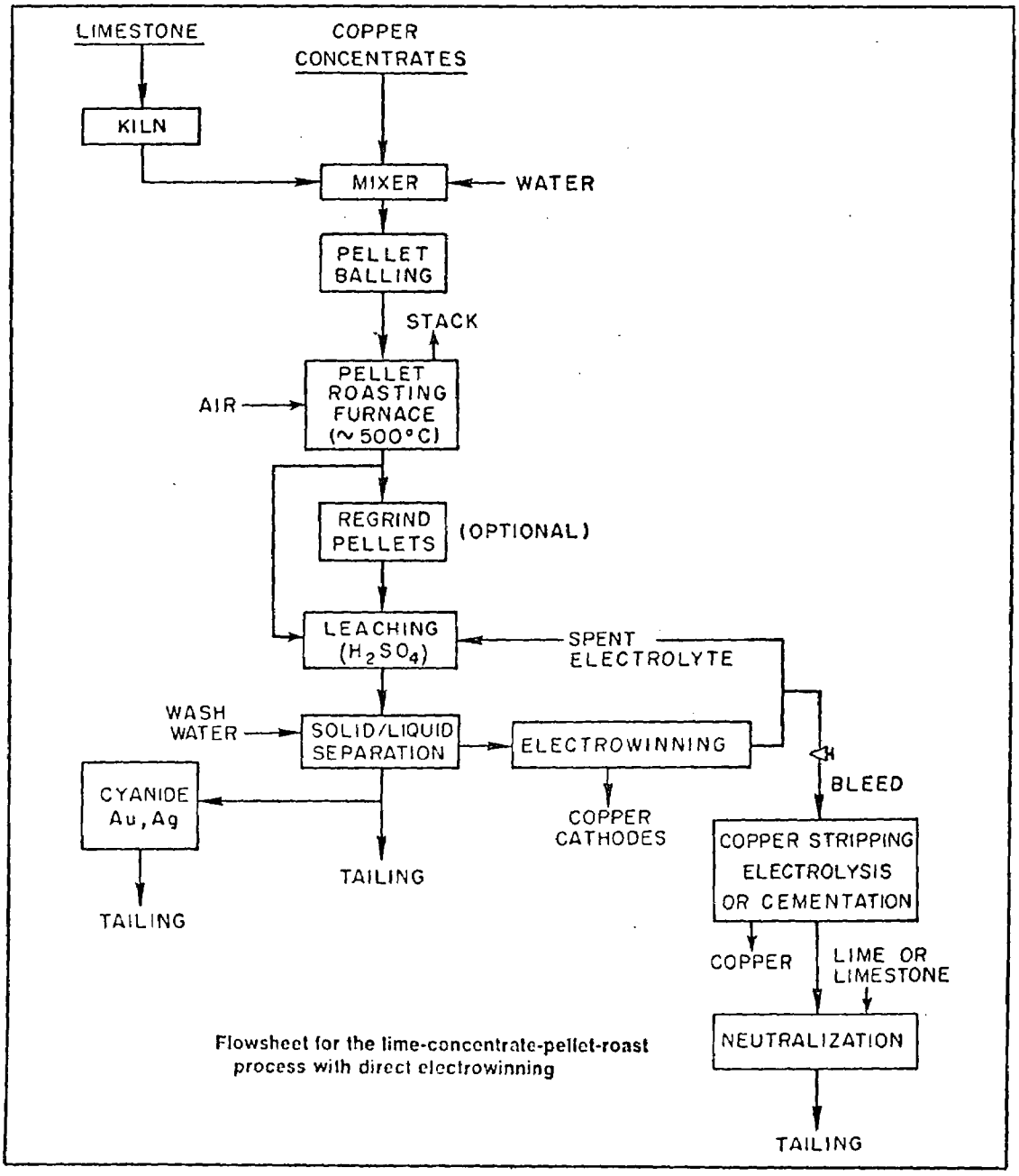

Flowsheet for the lime-concentrate-pellet-roast process with direct electrowinning

FIGURE 12.

electrowinning. Copper concentrates are pelletized with lime and roasted at 400-600 C whereby at least 90 percent and in laboratory tests, about 98 percent, of the sulfur is retained as anhydrite ($CaSO_4$). Little fuel is required, as the process is semi-autogenous, and the capital cost and operating cost of a plant has been calculated to be favorable. The reaction of lime to retain sulfur in roasting is not new but the pelletizing and roasting conditions to obtain maximum results are an advancement. However, this method has not yet been investigated on more than a laboratory scale.

Since most of the sulfur (95+ percent claimed) is retained in roasting and is discarded as a tailings residue after leaching, and possibly cyaniding, there is no need to clean the gases from roasting. Using a traveling grate roasting operation as advocated, a large amount of fine particles, including lime and anhydrite, would be expected to accompany the gas stream. A bag house or electrostatic precipitation unit undoubtedly would be used. This would collect most of the dust for recycling, but the stack loss of particulates obviously would be greater than in a strictly hydrometallurgical plant but probably not as much as from a reverberatory-converter plant that does not have an acid plant.

7.2.2.2 Anaconda's "Arbiter" Ammonia Leach Process[96]

This is an entirely hydrometallurgical process that has gone through the pilot plant stage. The first commercial plant being built at Anaconda, Montana, is scheduled to go into production in September, 1974. A general flow sheet of this plant is shown in Fig. 13. The only particulate control involved is in handling concentrates and lime, and in preventing tailings from becoming windblown. These items are expected to be under good control by recognized operating methods.

The Arbiter process, as it is often called, is essentially a continuous ammonia leach with oxygen under only slight pressure for control, followed by solvent extraction to isolate and concentrate the copper, electrolytic recovery of copper through a closed cycle of stripping the loaded organic solvent with spent electrolyte, and disposal of ammonium sulfate.

—ANACONDA ARBITER PLANT—

BLOCK FLOW DIAGRAM

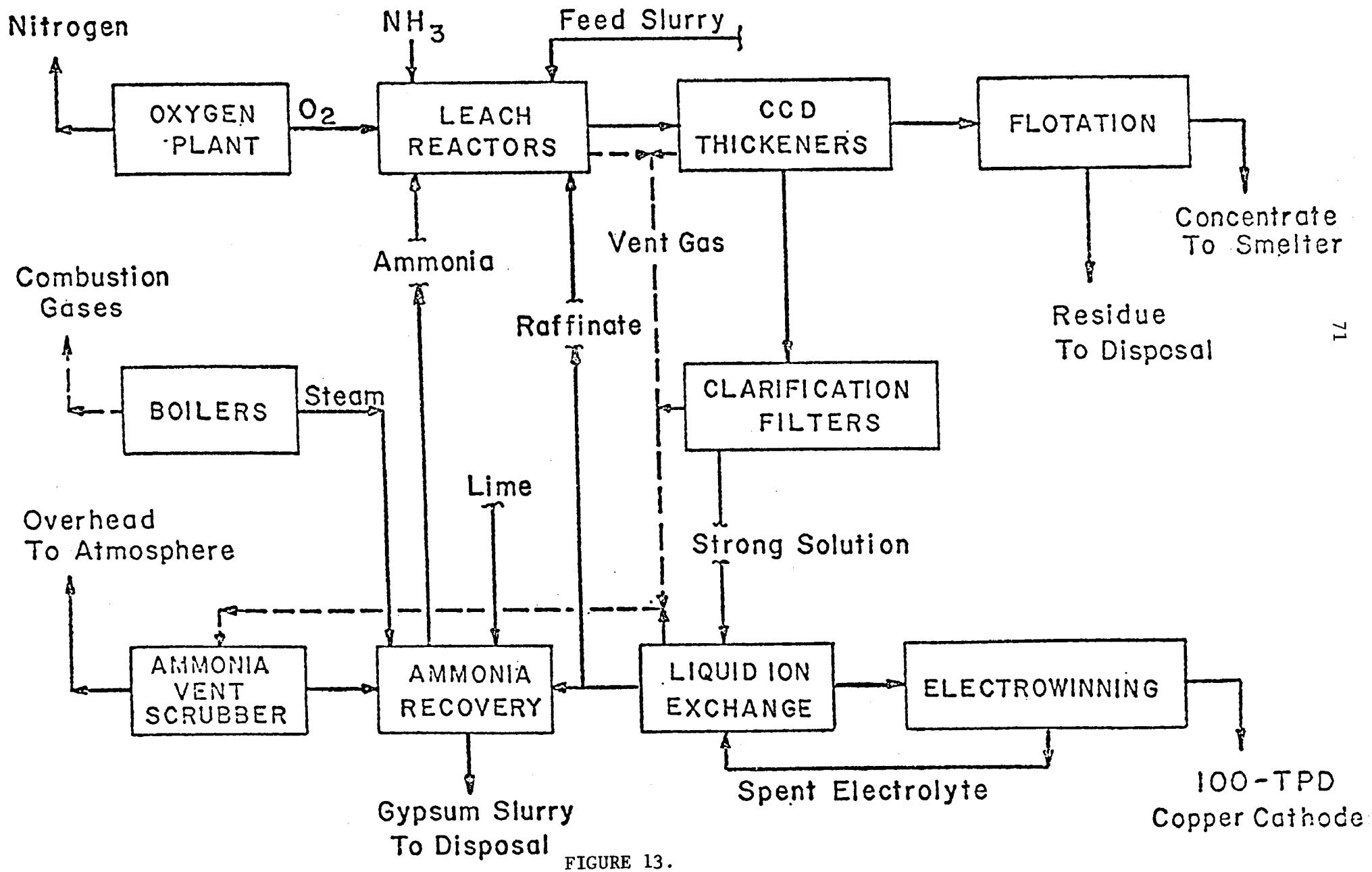

FIGURE 13.

In the commercial plant provision is made for a "lime boil" or hot treatment of the ammonium sulfate solution after copper removal by addition of lime with subsequent regeneration of ammonia and production of a calcium sulfate residue. This can be effected also by adding lime directly to the leaching tanks to regenerate ammonia directly and pass the calcium sulfate into the concentrate tailings. Alternate methods of ammonium sulfate disposal are to dry the solution and sell the crystals, to thermally reduce the ammonium sulfate to sulfur and recover ammonia, or to obtain bacterial decomposition of the ammonium sulfate solutions to produce ammonia and elemental sulfur. The process is flexible in that comparatively low capacity plants can still be efficient and variations in operation can be made readily to accommodate different concentrates or objectives. Ammonia leaching has definite advantages, such as no solution of pyrite or iron oxides and inexpensive materials of construction.

7.2.2.3 Sherritt-Gordon Process

From its long and successful experience in recovering nickel and cobalt by pressure-leaching with ammonia, the entrance of Sherritt Gordon technology into the copper field would be expected. However, the direct application to copper concentrates of ammonia leaching as practiced at the Fort Saskatchewan, Alberta, plant has not been considered to be economically attractive. Likewise, their procedure for precipitating metal powders from solution by hydrogen under pressure has not been entirely successful commercially as applied to copper.

Announcement was made in 1971 that Sherritt Gordon and Cominco would jointly explore and develop a hydrometallurgical process for recovery of copper and other metals, and elemental sulfur, from sulfide concentrates. A procedure mentioned, one that has been patented by Sherritt Gordon, is pressure leaching with sulfuric acid. This would appear to have an advantage over the Arbiter process in recovering elemental sulfur directly, but pressure leaching with acid would seem to be less desirable than near-atmosphere leaching with ammonia.

7.2.2.4 Cymet Process[81,97,98]

The Cyprus Metallurgical Processes Corporation has developed a ferric chloride leaching process for sulfide copper ores which is considered to be essentially pollution free. The only step that may involve loss of particulates, other than general handling of concentrates, is the possible need for grinding the concentrates to facilitate leaching; otherwise, all operations are hydrometallurgical. A flow sheet of the general process is shown in Fig. 14.

This process is rather complicated as it involves leaching with ferric chloride anolyte recycled from diaphragm iron-chloride cells, production of electrolytic iron, recovery of elemental sulfur, and recovery of copper electrolytically as a powder which is subsequently electrorefined. The many interdependent operations which add complexity make development difficult, but a large scale $9,000,000 pilot plant for demonstration of practicality and cost has been built. Recovery of elemental sulfur and of high grade iron are features of the process, and their value is expected to aid substantially in reducing operating costs.

7.2.2.5 Duval Corporation and Other Processes

Typical of other entirely hydrometallurgical processes for copper recovery, the Duval Corporation announced several years ago the development of a pollution-free process for treating copper sulfide concentrates.[99] This also involves a chloride leaching, closed-cycle system with recovery of elemental sulfur and electrolytic grade copper, but recovery of iron oxide in place of electrolytic iron as done by Cymet. A pilot plant was planned and presumably built but details of results have not been noted.

Other suggested procedures in recovering coppy hydrometallurgically have been mentioned or briefly discussed in the technical literature in the past few years. These have largely been variations of the processes outlined.[100,101] In all cases, since they depend entirely on hydrometallurgy, their effect has been the same--little or no air pollution from particulates.

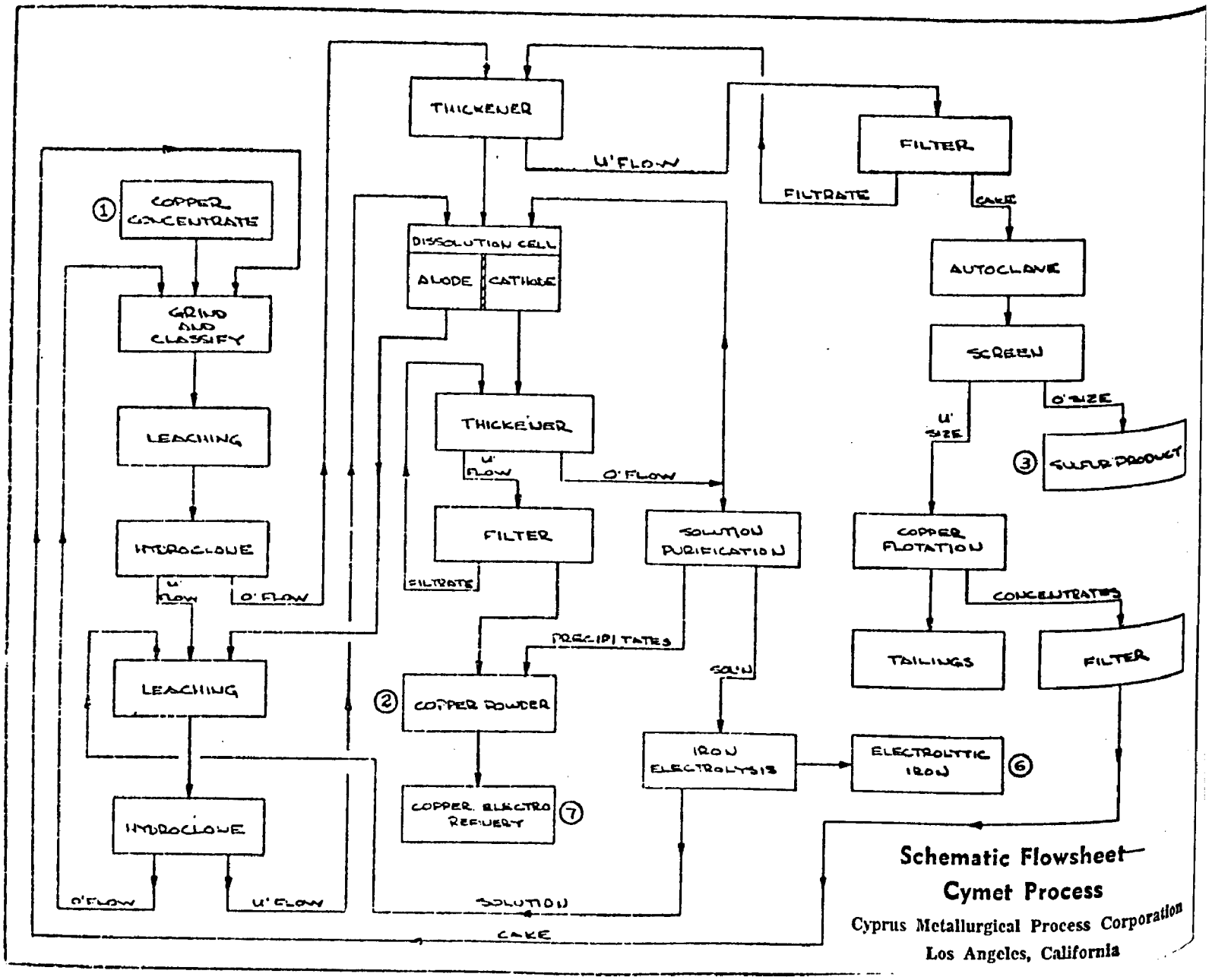
THICKENER
U' FLOW
FILTER
FILTRATE
CAKE
1
COPPER CONCENTRATE
DISSOLUTION CELL
ANODE
CATHODE
AUTOCLAVE
GRIND AND CLASSIFY
SCREEN
O' SIZE
U' SIZE
LEACHING
THICKENER
U' FLOW
O' FLOW
3
SULFUR PRODUCT
HYDROCLONE
FILTER
SOLUTION PURIFICATION
COPPER FLOTATION
U' FLOW
O' FLOW
FILTRATE
CONCENTRATES
PRECIPITATES
TAILINGS
FILTER
LEACHING
2
COPPER POWDER
SOL'N
IRON ELECTROLYSIS
ELECTROLYTIC IRON
6
COPPER ELECTRO REFINERY
7
HYDROCLONE
O' FLOW
U' FLOW
SOLUTION
CAKE
Schematic Flowsheet
Cymet Process
Cyprus Metallurgical Process Corporation
Los Angeles, California

FIGURE 14.

7.3 Aluminum Reduction Cells

At present there are 14 U.S. producers operating 32 reduction plants which, in 1970, produced nearly 4 million tons of aluminum, 46.6 percent of the world total[102].

The processing of primary aluminum is essentially one of materials handling, the difference in the process modifications is in the type of reduction cells used. There are three types, prebake (PB) cells which use prebaked carbon anodes, and two types of Soderberg cells which use single, baked-in-place anodes. One type of Soderberg anode is held in place with horizontal studs (HSS) and the other with vertical studs (VSS). Schematic drawings of each type are shown in Figures 15, 16 and 17.

In plants using prebaked (PB) cells, the anode baking furnace used in manufacture the anode can be a source of particulate and gaseous emissions. However, these may be controlled by electrostatic precipitators or more commonly by wet scrubbers.[103]

In operation, the prebake anodes in the reduction cell produce less volitization of pitch and fouling of collection system scrubbers than do the Soderberg types. Another advantage of the prebaked pot is that it is more readily enclosed without interferring with process operations. Prebaked (PB) potlines accounted for 59 percent of U.S. aluminum production.

In the course of operation with horizontal stud Soderberg cells (HSS), the necessity for frequently changing the studs in turn makes necessary the frequent removal of parts of the hoods with the consequent escape of emissions. There is a further disadvantage in that the hooding system does not allow for the burning of organics or condensed tars; these unburned organics can cause fouling of the emission control system. HSS Soderberg units account for 25 percent of U.S. production.

In the vertical Soderberg stud (VSS) pot, the anode compartment is stationary, so it permits the installation of a "skirt" around the base of the anode, and since the volume of gas is small, carbon monoxide and hydrocarbons can be burned in integral gas burners as shown in Figure 17. Since the skirt does not completely enclose the pot, additional hooding is necessary to minimize fluoride emissions into the pot room. V.S.S. Soderberg production units account for 13 percent of U.S. aluminum production.

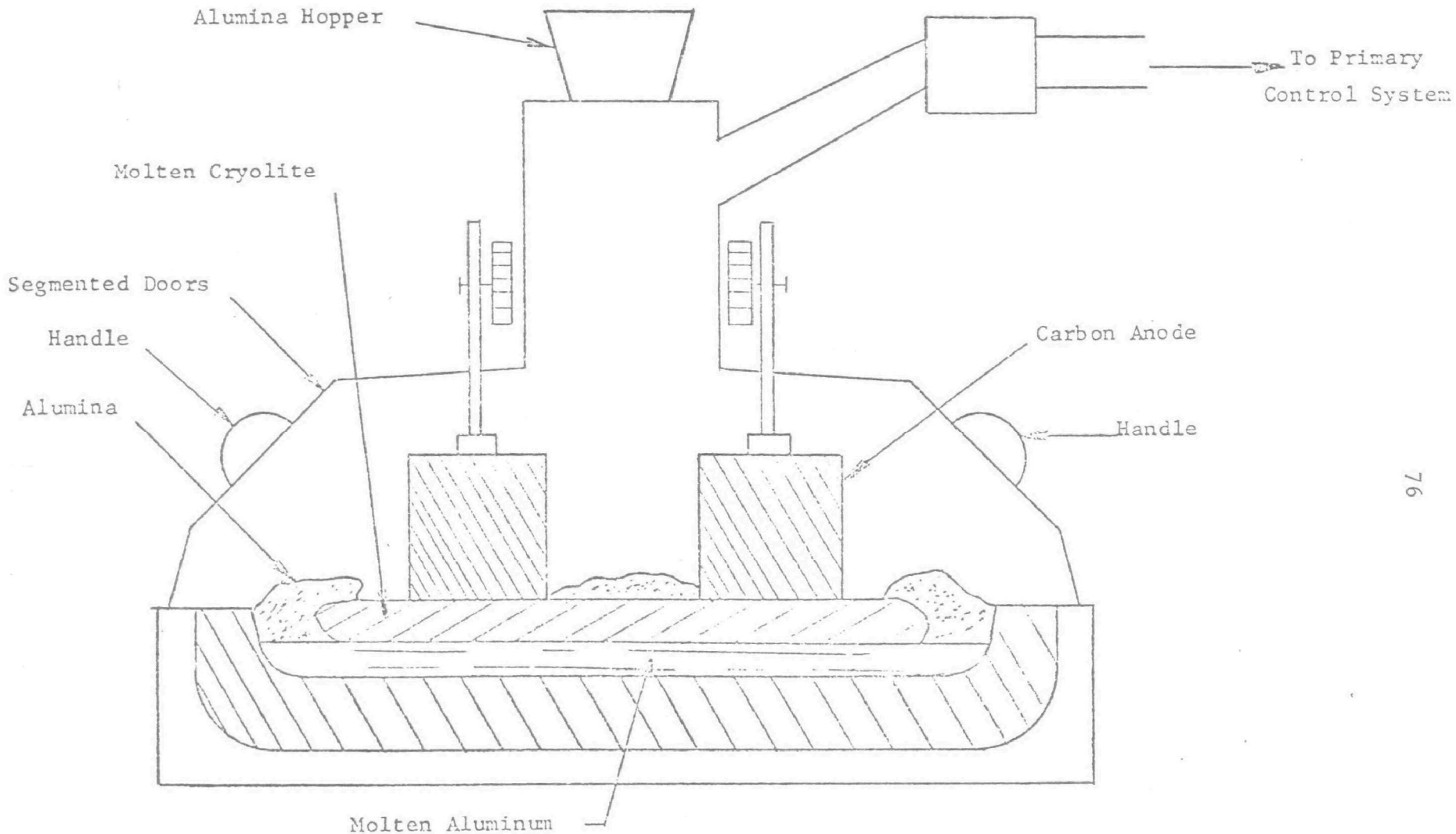

FIGURE 15. SCHEMATIC DRAWING OF A PREBAKED ANODE CELL

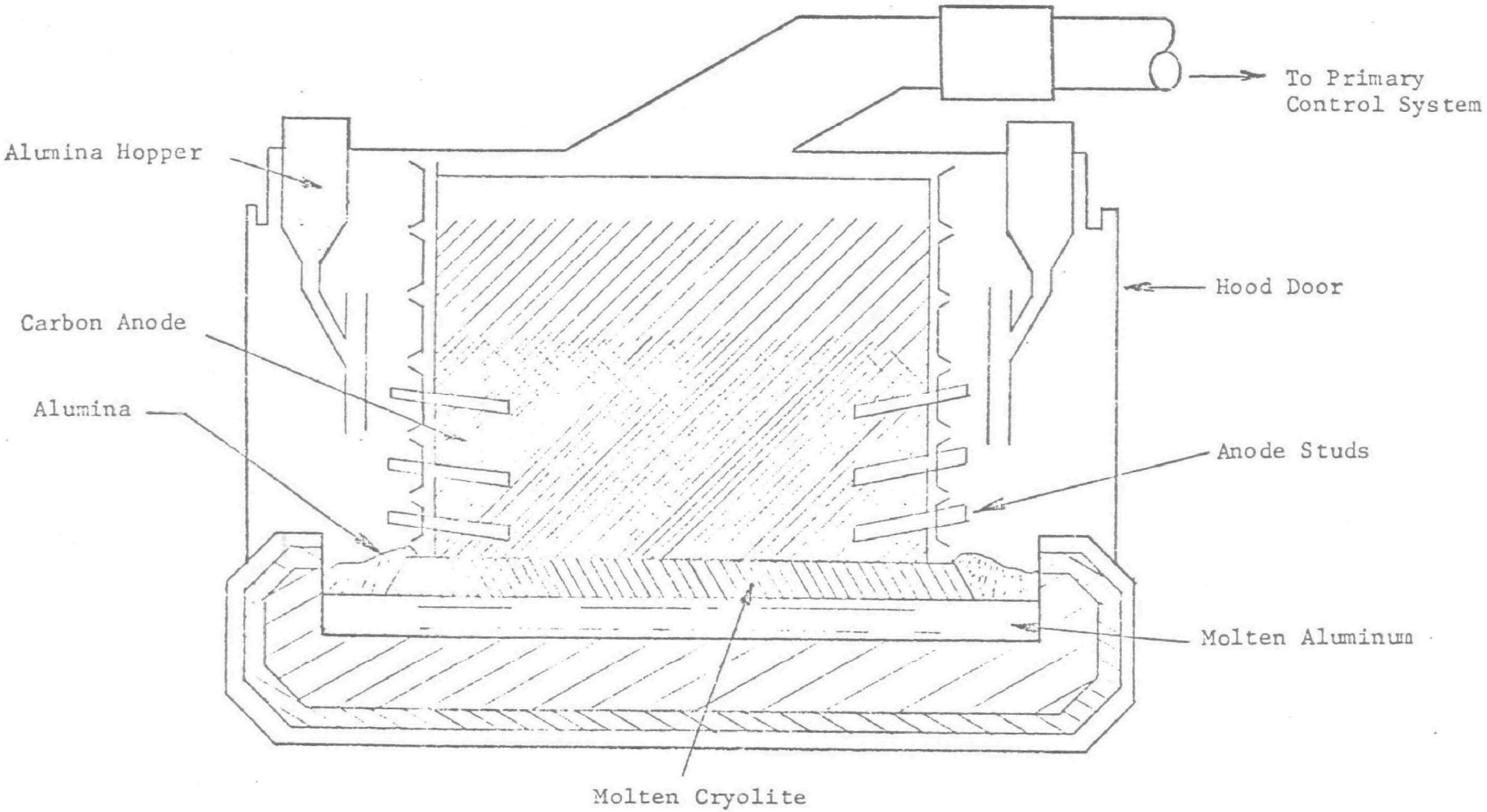

FIGURE 16. SCHEMATIC DRAWING OF A HORIZONTAL STUD SODERBERG ALUMINUM REDUCTION CELL

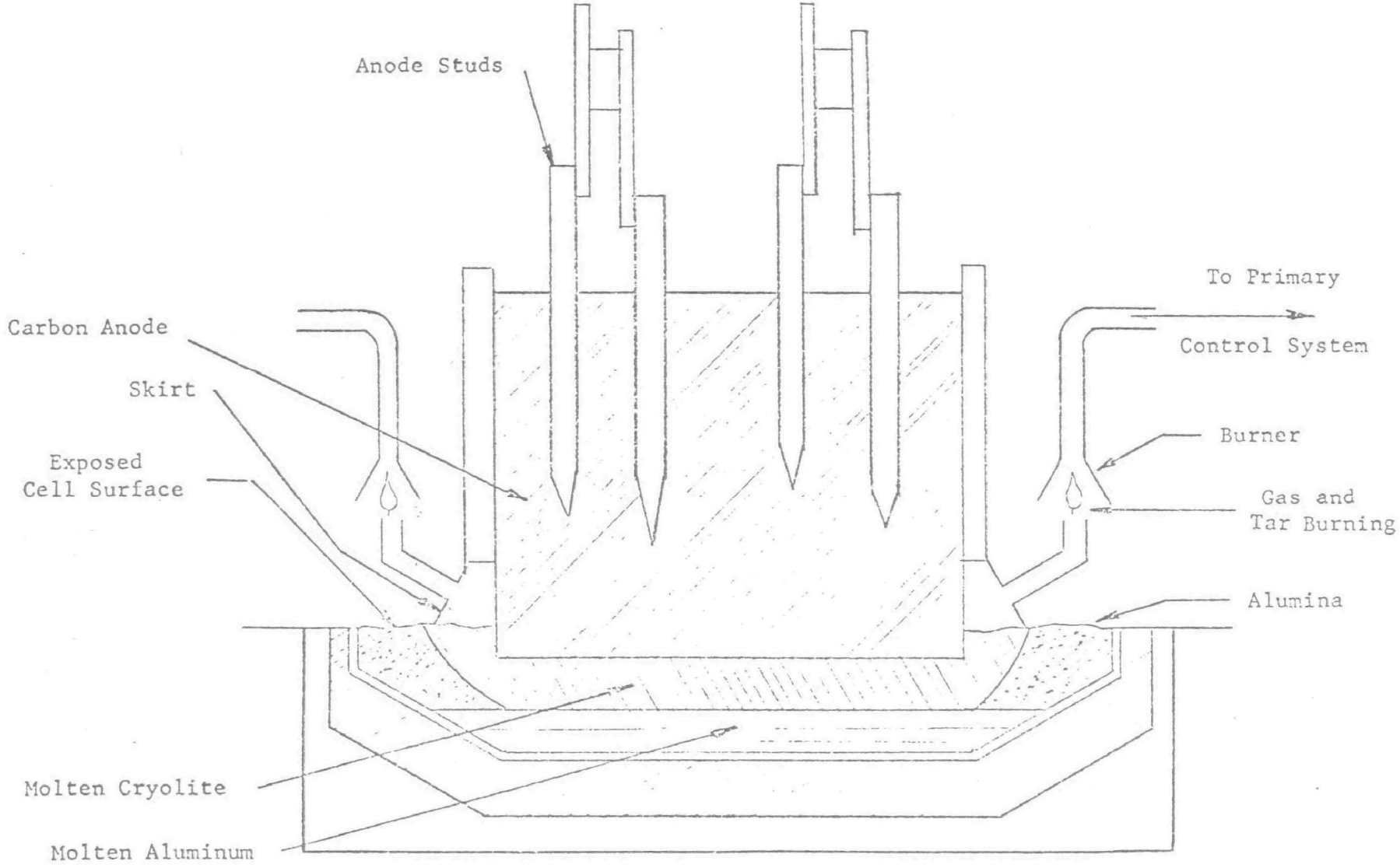

FIGURE 17. SCHEMATIC DRAWING OF A VERTICAL STUD SODERBERG ALUMINUM REDUCTION CELL

There is a continuous evolution of gaseous reaction products and fume from the reduction cells consisting chiefly of carbon dioxide, carbon monoxide, sulfur oxides, gaseous and particulate fluorides, alumina and carbonaceous materials. Hydrocarbon emissions from hot HSS and VSS anodes can also result in a visible haze problem. Table 1 shows total industry-wide emissions in 1970, Table 2, the emissions from a typical uncontrolled pre-bake potline, and Table 3, the removal efficiency of selected primary and secondary control systems.[102] Primary control systems involve the hooding and ducting for the individual cells; secondary control systems involve pot room collection systems located in the roof of the cell room to remove fluorides which escape the primary system.

In 1970, in the U.S., 75 percent of the plants had primary controls only, 15 percent had secondary controls only, 7 percent had both, and 3 percent had none at all[102].

Collection efficiencies approaching 100 percent are not possible under the present state of the technology (see Table 3). The best achievable appears to be 95 percent delivered to the primary system, with 5 percent going to the secondary roof monitors.[102]

7.3.1 New Aluminum Reduction Processes

There are a number of new aluminum reduction processes undergoing development. Among these are Alcoa's chloride electrolysis process (the ASP process), Alcan's sub-halide process, and the Applied Aluminum Research Corporation's (manganese reduction of aluminum chloride) process[104,105]. Furthest along is Alcoa's chloride electrolysis process.[103] In this, alumina is reacted with chlorine in a reactor to produce aluminum chloride which in turn is electrolyzed in a closed cell separating the compound into aluminum and chlorine. The separated chlorine is recycled continuously to the reactor in a closed loop system. The process has the advantages of up to 30 percent less energy consumption, and presumably less dusting since there are no fluorides, the chief effluent in the conventional Hall process which causes the

TABLE 1. EMISSIONS FROM PRIMARY ALUMINUM INDUSTRY 1970 (1,2)

Pollutant	Emissions (tons) Pot-rooms	Bake plants	Total
Total fluorine	23,200	650	23,850
Gaseous fluorides	10,200	600	10,800
Fluorine in particulates	13,000	50	13,050
Total solids	52,800	4,200	57,000

TABLE 2. EMISSIONS FROM AN UNCONTROLLED PREBAKE POTLINE (1,2)

Pollutant	Emissions, lbs/ton Al
SO_2	60
"F" as gaseous fluorides	28
F as solid fluorides	18
Total F	46
Total solids	92

TABLE 3. FLUORIDE REMOVAL EFFICIENCIES OF SELECTED PRIMARY AND SECONDARY CONTROLLED SYSTEMS (1,2)

Control System	Fluoride removal efficiencies, % HF	Particulate	Total F
Coated filter dry scrubber	90	98	94
Fluid bed dry scrubber	99	98	99
Injected alumina dry scrubber	98	98	98
Wet scrubber + wet ESP[a]	99	99	99
Dry ESP + wet scrubber	99	90-95	94-96
Floating bed	98	87	95
Spray screen	93-95	45-85	62-77
Venturi	99	96	98
Bubbler scrubber + wet ESP	99	98	99

[a] Electrostatic precipitator.

industries a most serious air pollution problem, and no working of finely powdered Al_2O_3 into the bath. Also, the requirement for cryolite ($Na_3Al\ F_6$) is circumvented at a time when this mineral has become scarce and costly. There have been no claims as to the degree of reduction in dusting except for that implied in the Alcoa statement that the shift from the Hall process to the ASP process, eliminates both the need for cryolite and the expense of containing cryolite emissions"[3].

A number of the other new processes have as their goal, the utilization of alternative mineral sources of aluminum such as laterite, kaolin clays, and alunite [106]. The implementation of these processes does not affect materially the amount and type of emissions from the reduction cells.

REFERENCES

(1) "Particulate Polycyclic Organic Matter, National Academy of Sciences, Committee on Biologic Effcts of Atmospheric Pollutants (1972).

(2) "Abatement of Particulate Emissions From Stationary Sources", National Research Council - National Academy of Engineering, COPAC-5, Washington, D. C. (1972).

(3) Office of Coal Research, Press Release, July 3, 1973.

(4) "Evaluation of Coal-Gasification Technology: Part I--Pipeline-Quality Gas", National Academy of Sciences, National Adademy of Engineering (December, 1972).

(5) "Evaluation of Coal-Gasification Technology: Part II--Low-BTU Fuel Gas", National Academy of Science, National Academy of Engineering (to be published in 1973).

(6) "Clean Energy from Coal--A National Priority", Amnual Report for Calendar Year 1972, Office of Coal Research, U.S. Department of Interior.

(7) Karnavas, J. A., LaRosa, P. J., and Pelczarski, E. A., "Two Stage Coal Combustion Process", Chemical Engineering Progress, Vol. 69, No. 3, p 54 (March, 1973).

(8) Chementator, Chemical Engineering, August 6, 1973, page 34.

(9) Personal communication with representatives of Atomics International Division,North American Rockwell.

(10) Cover, A. E., Schreiner, W. C., and Skaperdas, G. T., "Kellogg's Coal Gasification Process", Chemical Engineering Progress, Vol. 69, No. 3, p 31-36 (March, 1973).

(11) Oldenkamp, R. D., and McKenzie, D. E., "The Molten Carbonate Process for Control of Sulfur Oxide Emissions", APCA paper 68-183 (1968).

(12) Reid, W. T., "Superslagging Combustor", Battelle-Columbus internal memorandum to D. W. Locklin confirming disclosure of concept (April 2, 1973).

(13) Squires, A. M., "Clean Power from Coal", Science, 169 (3948) (August 28, 1970), p 821.

(14) Jimeson, R. M., and Shaver, R. G., "Credits Applicable to Solvent Refined Coal for Pollution Control Evaluations", p 25C, presented at the Symposium on Synthetic Hydrocarbon Fuels from Western Coals, AIChE Meeting, Denver, Colorado, August 30, 1970.

(15) Martin, G. B., Pershing, D. W., and Berkau, E. E., "Effects of Fuel Additives on Air Pollutant Emissions from Distillate-Oil-Fired Furnaces", U. S. Environmental Protection Agency (June, 1971).

(16) Andrews, R. L., Siegmund, C. W., and Levine, D. G., "Effect of Flue Gas Recirculation on Emissions from Heating Oil Combustion", presented at 61st Annual Meeting, APCA, St. Paul (June 23-27, 1968), 41 pp.

(17) Bienstock, D., Amsler, R. L., and Bauer, E. R., Jr., "Formation of Oxides of Nitrogen in Pulverized Coal Combustion", Jour. APCA, 16, (8), (August, 1966), p 442-445.

(18) Burroughs, L. C., "Air Pollution by Oil Burners Measurable but Insignificant", Fuel Oil and Oil Heat, 22 (6), (June, 1963), p 43-46.

(19) "HEW Issues Guidelines to Control Pollution; Tests Show Distillate Within Limits", Fuel Oil and Oil Heat, 28 (3), (March, 1969), p 57.

(20) Kroshel, C. F., "Improving Performance of Domestic Heating Oil Equipment Through Installation and Servicing Procedures", presented at the 40th Annual Convention, NOFI, Chicago, p 26, (April 12, 1962).

(21) Ornig, A. A., Schwartz, C. H., and Smith, J. F., "A Study of the Minor Products of Coal Combustion", Paper No. 64-PWR-4, presented at National Power Conference, Tulsa, Oklahoma (September 27-October 1, 1964), 8 pp.

(22) Ornig, A. A., Smith, J. F., and Schwartz, C. H., "Minor Products of Combustion in Large Coal-Fired Steam Generators", Paper No. 64-WA/FU-2, presented at Winter Annual Meeting, ASME, New York (November 29-December 4, 1964), 12 pp.

(23) Diehl, E. K., DuBreil, F., and Glenn, R. A., "Polynuclear Hydrocarbon Emission from Coal-Fired Installations", Trans. ASME, Series A, Jour. Engineering for Power, 89 (2), (April, 1967), p 276-282.

(24) NCRR Bulletin; (Summer, 1973), Vol. III, No. 3, National Center for Resource Recovery, Inc., 1211 Connecticut Avenue, N.W., Washington, D. C., 20036.

(25) Niessen, W. R., "Systems Study of Air Pollution from Municipal Incinerators, Vol. 1, Report prepared by Arthur D. Little, Inc. (March, 1970), under Contract CPA-22-69-23.

(26) Hazard, H. R., Trip report covering visit to Combustion Power Company, Inc., on February 6, 1974.

(27) Miller, P. D., et al., "Corrosion Studies in Municipal Incinerators", SW-72-3-3, EPA Solid Waste Research Laboratory, National Environmental Research Center (1972).

(28) Environmental Science and Technology (April, 1971), Pyrolysis of Refuse Gains Ground, p 310-312.

(29) Franklin, W. E., Bendersky, D., Shannon, L. J., and Park, W. R., "Resources Recovery, Catalog of Processes," Final Report, Project No. 3634-D, Prepared by Midwest Research Institute for the Council on Environmental Quality (February, 1973).

Two Battelle reports that served as general references for the stationary combustion and municipal incineration sections of this report are:

A. The Federal R&D Plan for Air-Pollution Control by Combustion-Process Modification, PB-198-066, prepared for EPA (January 11, 1971).

B. Working Paper on Factors Affecting the Future of the Coal Industry in the United States (April 1, 1973). Not for Distribution Outside Battelle.

(30) Rengstorff, G. W. P., "Formation and Suppression of Emissions From Steelmaking Processes, " AIME Open Hearth Proceedings, 44, 120-143 (1961).

(31) Rengstorff, G. W. P., "Factors Controlling Emissions From Steelmaking Processes," AIME Open Hearth Proceedings, 45, 204-219 (1962).

(32) Turkdogan, E. T., Grieveson, P., and Darken, L. S., "Mechanism of the Formation of Iron Oxide Fumes", AIME Open Hearth Proceedings, 45, 470-490 (1962).

(33) Bates, R. E., "Fume Formation", Journal of the Iron and Steel Institute 201 (9), 747-751, (September, 1963).

(34) Morris, J. P., Riott, J. P., and Illig, E. G., "A New Look at the Cause of Fuming", Journal of Metals, 18 (7), 803-810 (July, 1966).

(35) Rossi, G., and Perin, A., "Some Notes on Brown Fume Powders", Journal of the Iron and Steel Institute, 207 (10), 1365-1368, (October, 1969).

(36) Ellis, A. F., and Glover, J., "Mechanism of Fume Formation in Oxygen Steelmaking", Journal of the Iron and Steel Institute, 209 (8), 593-599, (August, 1971).

(37) Rengstorff, G. W. P., "Role of Methane and Other Factors in Controlling Emissions from Steelmaking Processes", AIME Open Hearth Proceedings, 46, 438-452, (1963).

(38) Savard, G., and Campbell, J. C., "Suppression of Iron Oxide Fumes in the Open Hearth Furnace", 33/The Magazine of Metals Producing, 5 (2), 61-70, (February, 1967).

(39) Kocho, et. al., "Iron and Steel Refining--USSR Patent No. 236499", Soviet Bulletin of Discoveries, Inventions, Models and Trade Marks (March 2, 1969).

(40) Naydek, V. L., et. al., "Treatment of Metal--USSR Patent No. 276116", Soviet Bulletin of Discoveries, Inventions, Models and Trade Marks, (July 14, 1970).

(41) Kiyanskiy, D., "Liquid Oxygen Blast", Rabochaya Gazeta, 45, (4912), 3 (February 22, 1973).

(42) "Q-BOP: From Blow to Go in 90 Days", Journal of Metals, 24 (3), 31-37, (March, 1972).

(43) Chatterjee, A., "The New Oxygen Steelmaking Process," Iron and Steel International, 46 (5), 440-448 (October, 1973).

(44) Knuppel, H., et. al., "Method of Refining Pig-Iron Into Steel", U.S. Patent Number 3,706,549, Patent Gazette, 905, 567 (1972).

(45) "U.S. Steel to Substitute Q-BOP for Open Hearths at Fairfield", Metalworking News, 8 (December 20, 1971).

(46) "Q-BOPs for Gary", Journal of Metals, 24 (4), 8 (April, 1972).

(47) "U.S. Steel Managers Rave Over Q-BOP", American Metal Market, 1 (May 25, 1973).

(48) "Development in the Iron and Steel Industry During 1973," Iron and Steel Engineer, 51 (1), D24 (January, 1974).

(49) Hubbard, H. N., Jr., and Lankford, W. T., Jr., "Development and Operation of the Q-BOP Process in the U. S. Steel Corporation", Iron and Steel Engineer, 50 (10), 37-43 (October, 1973).

(50) "Bottom-blown Steel Processes Now Number Three: Q-BOP, LWS, and SIP", 33 Magazine, 10 (9), 34-38, (September, 1972).

(51) "Kaiser Suing J&L Over L-D Rights", Metalworking News, 12 (November 27, 1967).

(52) "Oxygen Furnace Patent Fight to Continue", American Metal Market, 2 (March 10, 1969).

(53) "High Court Bars Oxygen Steel Patent", Metalworking News, 16 (March 10, 1969).

(54) Butler, P., "BOF Patent Fight Flames in Court Today", Metalworking News, 11 (September 27, 1971).

(55) "J&L to Appeal Court Decision Charging Patent Infringement", American Metal Market, 81 (23), 4 (February 1, 1974).

(56) "Q-BOP: Year II", Journal of Metals, 25 (3), 37 (March, 1973).

(57) Hinds, G. W., and Hodge, G. W., "Use of Oxygen-Fuel Gas Burners for Scrap Meltdown in Electric Furnace", AIME Electric Furnace Proceedings, 17 290-298 (1959).

(58) Howard, V. J., "Auxiliary Meltdown Toarch", AIME Electric Furnace Proceedings, 17, 419 (1959).

(59) Howard, V. J., "Use of the Oxygen Gas Burner for Scrap Meltdown in the Small Arc Furnaces", AIME Electric Furnace Proceedings, 18, 398-405 (1960).

(60) Spenceley, G. D., and Williams, D. I. T., "Fumeless Refining with Oxy-fuel Burners", Steel Times, 150-158, (July, 1966).

(61) Grobel, E. A., and Maselle, A. J., "Blowing with Oxygen-Natural Gas for Decarburization and Fume Suppression", AIME Electric Furnace Conference, 27, 67-70 (1969).

(62) Discussion to: Hinds, G. W., and Hodge, G. W., "Use of Oxygen-Fuel Gas Burners for Scrap Meltdown in Electric Furnace", AIME Electric Furnace Proceedings, 17, 300 (1959).

(63) "New Scrap Press Reduces Electric Furnace Operating Cost", Iron and Steel Engineer, 43 (8), 146, (August, 1966).

(64) Herrick, R. A., and Benedict, L. G., "A Microscopic Gassification of Settled Particulates Found in the Vicinity of a Coke-Making Operation", Journal of the Air Pollution Control Association, 19 (5), 325-328 (May, 1969).

(65) Telephone Conversation with Mr. Robert Bee, Mitre Corporation in reference to EPA Contract Number 68-02-0290.

(66) Ferrari, R., "Experiences in Developing an Effective Pollution Control Systems for a Submerged Arc Ferroalloy Furnace Operation", Journal of Metals, 20, 95-104, (April, 1968).

(67) Scott, J. W., "Design of a 35,000 KW High Carbon Ferrochrome Furnace Equipped with an Electrostatic Precipitator", AIME Electric Furnace Proceedings, 29, 80-82, (1971).

(68) Young, J. H., and Singer, D. H., "Manufacture of Low Carbon Ferrochromium at the Steubenville Plant, Foote Mineral Company", AIME Electric Furnace Proceedings, 29, 83-87 (1971).

(69) "Ferroalloy Fume Collection From Submerged Arc Electric Furnace Operation", Industrial Heating, 38, (1), 86 (January, 1971).

(70) Fegan, G. J., "Cleaning Ferroalloy Furnace Fume with High Energy Scrubbers", AIME Electric Furnace Proceedings, 30, 65-68 (1972).

(71) Meredith, W. R., "Operation of a Baghouse Collecting Silica Fume", AIME Electric Furnace Proceedings, 30, 69-71 (1972).

(72) Sherman, P. R., and Springman, E. R., "Operating Problems with High Energy Wet Scrubbers on Submerged Arc Furnaces", AIME Electric Furnace Proceedings 30, 72-76 (1972).

(73) Rentz, O., Siebert, G., and Stracke, R., "Reducing Fume Emissions by Improving Furnace Operation, by Feed Pretreatment", AIME Electric Furnace Proceedings, 30, 77-83 (1972).

(74) Lopuszynski, T. W., Trunzo, J. P., and Wilbern, W. L., "Design and Operation of a 45 MW 50 Percent Ferrosilicon Furnace", AIME Electric Furnace Proceedings, 30, 89-93 (1972).

(75) "Development Document for Proposed Effluent Limitations Guidelines and New Source Performance Standards for the Smelting and Slag Processing Segment of the Ferroalloy Industry", U. S. Environmental Protection Agency, Contract No. EPA 440/1-73/008 (August, 1973).

(76) Jenkins, R. D., "Potential Utilization and Disposal of Particulate Materials Captured From a Silicon Metal Furance", Preprint AIME Electric Furnace Conference, 10 pp (December, 1973).

(77) Killin, A. M., "Progress Report Air Pollution Control Study of the Ferroalloy Industry", Preprint AIME Electric Furnace Conference, 9 pp (December, 1973).

(78) McClure, R. N., "Disposal of Submerged Arc Furnace Fume", Preprint AIME Electric Furnace Conference, 6 pp (December, 1973).

(79) "Copper Smelting Today: The State of the Art", Chemical Engineering, Engineering and Mining J., Special Section, pp. p-z, (March, 1973).

(80) Lane White, "The Newer Technology: Where it is Used and Why", Chemical Engineering, E&MJ, Special Section pp AA-CC, (March, 1973).

(81) Price, F. C.,"Copper Technology on the Move", Chemical Engineering, E&MJ, Special Section, pp RR-DDD, (March, 1973).

(82) Shoemaker, R. S.,"Minerals Processing in 1973", Mining Congress J., pp 24-29, (February, 1974).

(83) Holderreed, F. L., "Copper Smelting", Mining Engineering, p 45, (September, 1971).

(84) Themelis, N. J., McKerrow, G. C., Tarassoff, P., and Hallett, G. D., "The Noranda Process", J. of Metals, pp 25-32, (April, 1972).

(85) American Metal Market, p. 19, (March 26, 1974).

(86) "What's Happening in Copper Metallurgy", E&MJ, pp 75-79, (February, 1972).

(87) "Form Consortium to Exploit New QS Process", J. of Metals, p. 12, (March, 1974).

(88) "Mitsubishi's Continuous Copper Smelting Process Goes on Stream", E&MJ, pp 66-68, (August, 1972).

(89) Suzuki, T., and Nagano, T., "Development of New Continuous Copper Smelting Process", Paper given at Tokyo Meeting of AIME, May 27, 1972.

(90) Worthington, R. B., "Autogenous Smelting of Copper Sulfide Concentrate", U. S. Bureau of Mines, Report of Investigation 7705 (1973).

(91) Quarm, T. A. A., "Copper Smelting with a Cyclone Furnace", E&MJ, pp 80-82, (October, 1969).

(92) Hunter, William D., and Michener, A. W., "New Elemental Sulfur Recovery System Establishes Ability to Handle Roaster Gases", E&MJ, pp 117-120 (June, 1973).

(93) George, D. R., Crocker, L., and Rosenbaum, J. B., "The Recovery of Elemental Sulfur from Base Metal Smelters", Mining Engineering, pp 75-77 (January, 1970).

(94) "ASARCO Building $16 Million Liquid SO_2 Plant", E&MJ, p 26, (September, 1972).

(95) Bartlett, R. W., and Haung, H. H., "The Lime-Concentrate-Pellet Roast Process for Treating Copper Sulfide Concentrates", J. of Metals, pp 28-34, (December, 1973).

(96) Arbiter, N., "Anaconda's Ammonia Leach Process", Paper presented at the Dallas Meeting of AIME, February, 1974.

(97) Krusi, P. R., Allen, E. S., and Lake, J. L., "Cymet Process--Hydrometallurgical Conversion of Base Metal Sulfides to Pure Metals", CIM Transactions, Volume 76, pp 93-99 (1973).

(98) Kruesi, P. R., Allen, E. S., and Lake, J. L., "Inventor, Developers Explain How New Cymet Process Works", Pay Dirt, pp 4-10, (October 23, 1972).

(99) "Duval Claims Development of 'Polution Free' Hydrometallurgical Copper Refining Process", E&MJ, p 171, (September, 1970).

(100) Malouf, E. E., "Current Copper Leaching Practices", Mining Engineering, pp 58-60 (August, 1972).

(101) Beal, John, "Copper in the U.S.--A Position Survey", Mining Engineering, pp 35-47, (April, 1973).

(102) Iversen, R. E.,"Air Pollution in the Aluminum Industry, Journal of Metals, V. 25, No. 1, pp 19-23 (January, 1973).

(103) Gerard, Gary, Editor; "Extractive Metallurgy of Aluminum, Volume 2, Aluminum", Interscience Publishers, New York, p 572, (1963).

(104) Anon., "New Smelting Process, Alcoa Prepares the Site for a Pilot Plant", American Metal Market, p. 18, (September 18, 1973).

(105) Piccolo, L., Chirga, M., and Calcagno, B., "Gas-solid Reactor: Effects of Chemical and Fluodynamic Parameters on Alumina Chlorination Process", Chimie ET Industrie-Genie Chimique, Vol. 101, No. 19, pp 2485-2489, (November, 1971).

(106) Bureau of Mines, U. S. Department of Interior, "Aluminum from Domestic Sources, a Miniplant to Evaluate Alumina Recovery Processes", pp. 85.

(107) Hardesty, D. R., and Weinberg, F. J., "Electrical Control of Particulate Pollutants from Flames" 14th International Symposium on Combustion, Combustion Institute, p 907, (1973)

APPENDIX A

APPENDIX A

CONTROL OF FINE PARTICULATE EMISSIONS IN CONVENTIONAL COPPER SMELTING PRACTICE

INTRODUCTION

U.S. copper ore reserves are predominately sulfides rather than oxides with a low overall copper content (1% or less). Concentration and separation from other mineral values and gangue by grinding and flotation yields concentrates containing 15 to 35 percent copper. Concentrates with a high sulfur content, those that are relatively high in iron sulfide, and those containing certain volatile impurities such as arsenic, antimony, and selenium require a preliminary roasting step. Where roasters can be by-passed, air drying, kiln drying, or drying in a roaster may be practiced. In other respects, smelting practice at the 15 U.S. primary copper smelters (Table A-1) until very recently, has followed the universal technology of matte smelting, converting, and refining shown in Figure A-1. By the way of introducing new modifications in pyrometallurgical practice and new process schemes which by-pass the smelting step entirely, we shall describe briefly what has been, up to the present, conventional smelting practice.

Conventional U.S. Primary Copper-Smelting Practice

The three principal processing steps in conventional U.S. smelting practice are roasting, matte-smelting, and converting. We shall describe each in turn.

Roasting

As explained above, the need for roasting depends on the sulfur content of the copper concentrates. The conventional oxidizing roast oxidizes some of the sulfur content of the concentrate and converts part of the iron sulfide to iron and sulfur oxides.

TABLE A-1. ANNUAL COPPER PRODUCTION OF SMELTERS AND REFINERIES IN THE U.S.

State and Location	Smelters			Refineries		
		1972 Annual Production			Annual Production	
	Company	10^3 kkg	10^3 Short Tons[b]	Company	10^3 kkg	10^3 Short Tons[b]
Arizona						
Hayden	Asarco	163	180[c]	--	--	--
Hayden	Kennecott	58	64[d]	--	--	--
Miami	Inspiration	107	118	Inspiration	68	75
San Manuel	Magma	166	183	Magma	52	57
Morenci	Phelps Dodge	165	182[e]	--	--	--
Ajo	Phelps Dodge	50	55	--	--	--
Douglas	Phelps Dodge	115	127	--	--	--
Maryland						
Baltimore	--	--	--	Kennecott	161	178
Baltimore	--	--	--	Asarco	131	144
Michigan						
White Pine	White Pine	65	72	White Pine[f]	63	70
Montana						
Anaconda	Anaconda	183	202	--	--	--
Great Falls	--	--	--	Anaconda	159	175
Nevada						
McGill	Kennecott	39	43	--	--	--
New Jersey						
Perth Amboy	--	--	--	Asarco	145	160
Perth Amboy	--	--	--	Anaconda	103	113
New Mexico						
Hurley	Kennecott	83	92	Kennecott[f]	80	88
New York						
Maspeth (NYC)	--	--	--	Phelps Dodge	65	72
Tennessee						
Copperhill	Cities Service	19	21[d]	--	--	--
Texas						
El Paso	Asarco	91	100;	Phelps Dodge	381	420[a]
	--	--	--	Phelps Dodge[f]	23	25[a]
Utah						
Garfield	Kennecott	236	260	Kennecott	236	260
Washington						
Tacoma	Asarco	91	100	Asarco	109	120

(a) Data are for 1971 from Yearbook of the American Bureau of Metal Statistics published in 1972.
(b) Data supplied by company.
(c) Capacity of production.
(d) Reference (IV-1).
(e) Reported as fire refined production.
(f) Fire refinery.

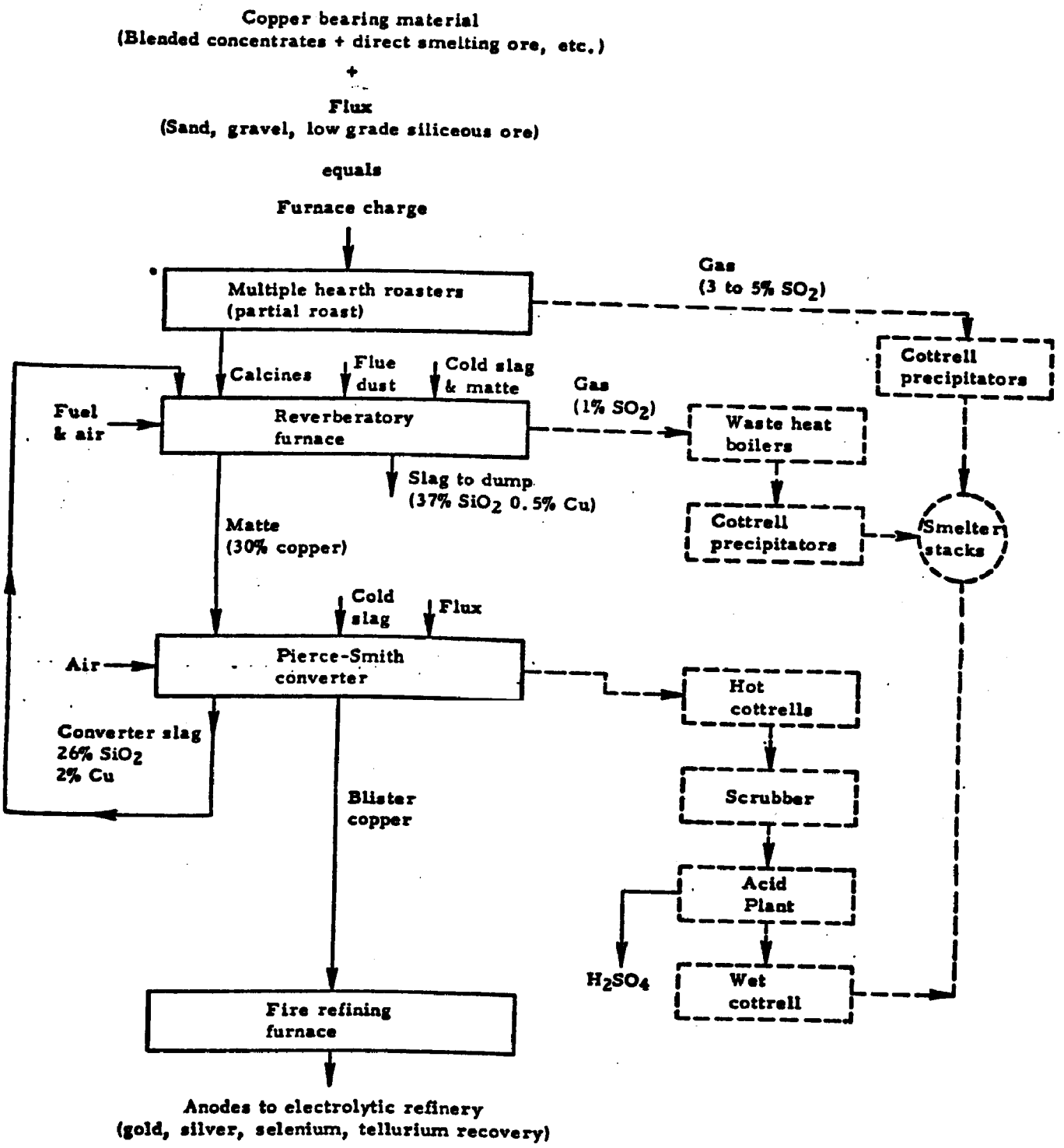

FIGURE A-1. GENERALIZED DIAGRAM OF CONVENTIONAL SMELTING FLOWSHEET

In current conventional practice roasting may be carried out either in multiple-hearth or fluid-bed roasters.

The multiple-hearth roaster is a cylindrical, brick-lined vessel divided from top to bottom by horizontal brick hearths. Each hearth has either one or several drop holes located alternately on the inner and outer peripheries of successive hearths. A central, rotating, brick-lined steel column extends vertically through the center of the roaster. On each hearth, arms equipped with rabbles are fixed to the rotating central shaft. Feed is dropped onto the top drying hearth near the central shaft and rabbled to the outside of the hearth, where it falls through the drop holes to the hearth below. The rabbles on this hearth push the feed toward the central column, the feed drops to the next hearth, and so forth until feed exists at the bottom hearth.

Air introduced at the bottom of the roaster passes up through the heated chambers, and the oxygen in the air stream reacts with the iron and sulfur in the feed to liberate heat, which sustains the roaster's hearth temperature. The gases leaving the top of the roaster contain from 2 percent to 6 percent SO_2--rather low for sulfuric acid manufacture--and carry away about 6 percent of the roaster calcine product. The coarser calcine product rabbled from the bottom hearth is comprised of roasted copper concentrates and flux and totals 94 percent of total calcine produced. Sulfur elimination in the roaster is governed by regulation of air flows and charge retention time on the hearths.

The fluid-bed roasting process is characterized by a gas-solid reaction in a dense suspension of solids maintained in a turbulent mass by the upward flow of gases that affect the reaction. The roaster is essentially a cylindrical refractory-lined steel shell used to contain the suspended solids.

Air is forced into the roaster through tuyeres in a refractory-lined steel distribution plate that is placed at the bottom of the shell. The two best-known types of fluid-bed roasters, the Lurgi and the Dorr-Oliver, are characterized by different tuyere design.

The use of fluid-bed roasting installations is not yet as common in copper smelting as it is in zinc, nickel, iron calcine, and sulfuric acid production units. This is partly because the copper industry is reluctant to wipe out the large investment already made in existing multiple-hearth roasters and partly because of difficulties experienced in fluid-bed operation, shut downs caused by sintering of the roaster bed, and heavy sulfate carryover to the electrostatic precipitators.

Another possible drawback is the excess calcine carryover of 80 percent in outlet gases, as compared with 6 percent for multiple-hearth roasters. A more elaborate dust-handling system is therefore required with fluid-bed units.

There are also some advantageous features to fluid-bed roasting. There are no moving parts in the combustion chamber, and maintenance is simplified accordingly. The vigorous gas currents existing in the fluid bed maintain very uniform bed temperature and composition. And the roasting action is so vigorous that little excess air is required, permitting SO_2 contents of 12 percent to 14 percent to be obtained.

Matte Smelting in Conventional Reverberating Furnaces

Matte smelting is done in a reverberatory furnace (Figure A-2). These are large shallow-hearthed structures of up to 40-meters (130 feet) long, 12-meters (38 feet) wide, with the capability of treating up to 1450-metric tons (1600-short tons) of charge per day. The objective of this treatment is to collect virtually all of the copper in a molten copper-iron-sulfide "matte" layer which is tapped from the furnace for subsequent treatment in converters.

The reverberatory furnace has remained the workhorse of the copper smelting industry for 80 to 90 years and is only now being challenged by newer furnaces that emit a more concentrated exhaust gas.

In conventional operation, calcine from the roaster hoppers, flues, and electrostatic precipitators is gravity charged into hoppers staggered along each side of the furnace and located above drop holes in the roof (Figure A-2). Heat is supplied by coal or gas burners located at one end of the furnace with about (4,000,000 Btu) required per

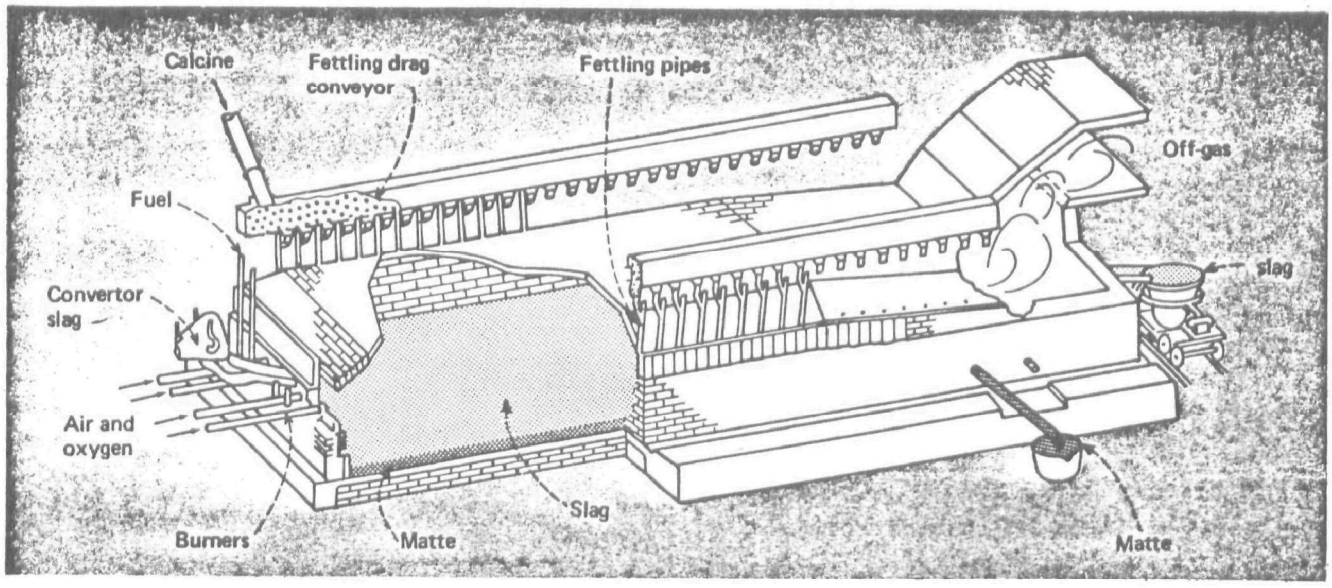

FIGURE A-2. CUTAWAY VIEW SHOWING KEY FEATURES OF A CONVENTIONAL REVERBERATORY FURNACE.

ton of charge smelted when the charge is hot roasted material. Thermal efficiency of the reverberatory furnace is low; however, furnace installations are usually equipped with waste-heat boilers, which recover much of the heat of the combustion gases in the form of superheated steam.

Anywhere from 11 percent to 16 percent of the sulfur content in a calcine charge, and up to 20 percent of the sulfur content in an unroasted charge, is liberated during smelting in a reverberatory furnace and is mixed with the products of combustion to give an outlet gas usually containing between 0.5 percent and 1.0 percent SO_2. Gases pass through waste-heat boilers and electrostatic precipitators and are then vented to the atmosphere. Considerable experimental work is being done using limestone scrubbers to remove small percentages of SO_2 from stack gases, but the problems involved in treating upward of 3-million cubic meters (100-million cubic feet) of gas per furnace per day are formidable.

Generally, slag is side-tapped near the exhaust end of the furnace into locomotive-drawn slag pots of about 6-cubic meters (200-cubic feet) capacity. Slag may be either granulated or dumped molten.

Matte is tapped into ladles, each containing about 16 metric tons (18 short tons), which are drawn down the matte tunnel to the converter aisle by winch and then charged by cranes into one of the waiting Peirce-Smith Converters.

Converting:

Converting is a batch process and is done in large, horizontal cylindrical Peirce-Smith side-blown converter furnaces up to 9 meters (30 feet) in length and about 4 meters (13 feet) in diameter, with a centrally located aperture for charging, unloading and exit of gases. They are also fitted with numerous tuyeres along their length near the bottom through which the air necessary for converting is blown. The converters are mounted on trunnions so that they may be tilted. During the converting operation, the furnace is run in an upright position with the aperture directly beneath a hood through which the converting gases are exhausted. The furnace is tilted for charging, discharging, and inspection.

In operation, the converter converts matte from the reverberatory furnace to an impure form of copper called "blister copper" (so called from the appearance of its cast surface which shows evidences of gas expulsion).

It is a two-stage oxidation process involving high through-puts of air, 850 cubic meters (30,000 cubic ft) per minute, through the molten matte.

In the first stage, the iron sulfide component of the matte is oxidized to sulfur dioxide and iron oxide, leaving nearly all of the copper as molten copper sulfide or "white metal". Sulfur dioxide leaves the converter as a gas and may be processed to sulfuric acid. Fumes and dusts which may contain lead, bismuth, arsenic, etc., produced by converting are collected and sent to lead smelters. The iron oxide formed during converting reacts with silica, added as a flux to the converting operation, to form a molten iron silicate slag which is removed and returned to the reverberatory furnace for reprocessing since it contains significant concentrations of copper.

In the second stage, after removal of the slag, blowing is continued until virtually all of the remaining sulfur is oxidized and removed as sulfur dioxide. The converted copper is normally transferred while still molten to the refining furnace. Blister copper at this stage is still relatively impure; it contains varying amounts of heavy metals, arsenic, some sulfur, and all of the precious metal constituents originally present in the concentrates.

A feature of the Peirce-Smith converters is that they can be modified into a kind of smelting furnace; oxygen is mixed with blowing air to increase the heat available from exothermic converting reactions.

The chief disadvantage of the Peirce-Smith converter is the relatively low concentration, 2 percent to 6 percent SO_2 outlet gas produced when excessive air is allowed to infiltrate into the off-take hood over the converter mouth.

In conventional primary copper smelter practice, converters produce more than half of the SO_2 emissions, the converter can produce

SO_2 gas emissions containing in excess of 6 percent SO_2. Gas concentrations are not steady, since the conversion of matte to blister copper is a batch process. However, with several converters, these irregular streams can be averaged out for sulfuric acid manufacture by regulating blowing schedules, with good results. Most of the sulfuric acid from smelters is made from converter gas.

Current Emission Control Practice in Conventional U.S. Primary Copper Roasting, Matte-Smelting and Converting Operations

The type of emission control devices used in U.S. primary copper smelter operations, with their control efficiencies, are shown in Table A-2.

Seven of the 15 U.S. smelters have roasters; all are equipped with emission control devices. Smelters equipped with fluid-bed roasters are controlled with acid plants, those with multihearth roasters are controlled with electrostatic precipitators (ESP's). Control efficiencies of the acid plants were 99.5 percent, the ESP's handling emissions from the multihearth roasters had efficiencies of 90-90.5 percent. Particulate emissions from the roaster are in the form of fine dust and fume, in many cases, with a particle size of less than 1 micron. Roaster particulate emissions will contain, in addition to 10 percent copper and a large amount of silica and alumina from the gangue, quantities of the more volatile concentrate constituents such as zinc, cadmium, antimony, and arsenic in about the same amounts as that in the concentrate.

Most of the reverberatory furnaces are equipped with either ESP's or cyclones to clean the reverberatory smelter gases. As of 1972, four were not equipped with emission control devices of any kind. Particle sizes of the dust and fume emissions from the reverberatory furnace varied from less than 0.1 micron to greater than 5 microns. In an ESP controlled reverberatory, 70 percent of the stack emissions were less than 0.5 micron, with 34 percent between 0.1 and 0.3 micron. Compositions of typical emissions from reverberatory stacks are given in Table A-3.

All except three of the converters listed in Table A-2 have some type of particulate emission control, these may be ESP, acid plant, scrubber or multicyclone, alone or in combination. Raw emission factors

TABLE A-2 CONTROL PRACTICE IN COPPER SMELTING (1972)

State	Size of Operation: Feed, T/da	Size of Operation: Copper Produced, T/da	Operation	Control Device	Efficiency %
Nevada	170	~30	Reverberatory smelter	Balloon flues-long brick flue-multi-clone-ESP*-tall stack	70-85
			Converter	Cyclone	--
New Mexico	750 (19% Cu)	200-250	Reverberatory smelter	ESP-stack	95
			Converter	Multicyclone-stack	85
Utah	2200	800	Reverberatory smelter	Balloon flues-ESP-stack***	45
			Converter	ESP-wet scrubber-ESP-drying tower acid plant	--
Arizona	1270 (capacity)		Roaster	Cyclones-gas cooler-ESP-acid plant	--
			Reverberatory smelter	Gas cooling-balloon flue-ESP-stack	--
			Converter	Balloon flue-ESP-acid plant	--
Arizona		300	Reverberatory	None	0
			Converter	None	0
Arizona	550		Roasting (F-B, D-O)	Brink's mist eliminator Acid plant	--
			Reverberatory furnace	ESP	--
			Converter	ESP	--
			Refining	None	--
Arizona[a]	2000 (capacity)	450	Roasting (Mh)	ESP-stack	98
			Reverberatory furnace	ESP-stack	98
			Converter	Cyclone-ESP-atmosphere or acid plant	--

TABLE A-2. CONTROL PRACTICES IN COPPER SMELTING
(Continued)

State	Size of Operation: Concentrate Feed, T/da	Size of Operation: Copper Produced, T/da	Operation	Control Device	Efficiency %
shington[h]		300	Roasting	ESP	--
			Reverberatory	ESP	--
			Converter	Cyclone-water spray-ESP-scrubber-ESP-acid plant	--
			Refining (electrolytic)		
nnessee[b]	300	~57	Roasters (fluid bed)	Scrubber-acid plant	
			Reverberatory smelting	Settling chamber	~10
			Converter	Scrubber-acid plant	--
chigan	(g)	220[c]	Reverberatory furnace	ESP or cyclone	~95
			Converter	None	0
izona	60,000 T (ore)	~450	Reverberatory furnace[d]	ESP	--
			Converter[d]	ESP	--
			Fire-refining	?	--
			Electrolytic refining	?	--
izona		350	Roasters	ESP	~90
			Reverberatory furnace	None	0
			Converter	ESP	~95
xas[e]		350 (T Cu)	Roasters	ESP	--
			Reverberatory furnace	ESP	~98
			Converter	ESP	--
			Refining	None	0

TABLE A-2 CONTROL PRACTICES IN COPPER SMELTING
(Continued)

State	Size of Operation: Concentrate Feed, T/da	Size of Operation: Copper Produced, T/da	Operation	Control Device	Efficiency %
Arizona[f]	670	~200	Reverberatory furnace	ESP	--
			Converter	ESP	--
			Oxidizing furnace	ESP	--
			Refining and anode furnace	ESP	--
Montana	2800		Roasters	None	0
			Reverberatory furnace	None	0
			Converter	None	0

(a) Estimated (EPA) particulate emissions/day of 1.2 T/da; 2000 T (concentrate) capacity (29-31% Cu).

(b) New copper system planned.

(c) Stack losses ~1.5 T/day of particulate dust; single stack for plant.

(d) Particulate emissions 14.8 T/day at 35 percent Cu.

(e) Plan to build acid plant to treat converter gases.

(f) 0.7-T dust emitted/day; additional emission controls being constructed.

(g) Ore mined at a rate of 230,000 T/day.

(h) Total stack emissions--253 lbs/hr.

* ESP - Electrostatic precipitator.

*** New system planned to increase efficiency to 95+%. ESP-wet scrubber-packed tower system has given 99.5% efficiency.

TABLE A-3. COMPOSITION OF TYPICAL EMISSIONS FROM REVERBERATORY STACKS

Element, %	Reverberatory Stack (1)	(2)	(3)
Arsenic	0.0102	N.D.	0.21
Cadmium	<0.0001	0.13	0.03
Copper	16.25	11.0	6.3
Selenium	0.0006	0.0009	0.19
Zinc	0.035	2.9	0.89
Chromium	0.0049	0.045	0.009
Manganese	0.0085	0.063	0.023
Nickel	0.0185	0.064	0.012
Vanadium	0.0101	trace	0.01
Boron	nil	trace	0.14
Barium	nil	trace	0.065

(1) New Mexico.

(2) Arizona.

(3) Nevada.

for the uncontrolled converters have been estimated to be between 22-24 kg per metric ton (45-90 pounds/short ton). Typical reported compositions of emissions from converter operations are given in Table A-4. Characteristics of the emissions from the converter stack of the second smelter in the listing in Table A-2 are given in Table A-5. This converter was controlled with a multicyclone.

In addition to the emissions noted above, there is an additional problem involved in transfer operations in the batch operations of a conventional smelter. The new continuous process described in the accompanying report would eliminate this.

TABLE A-4. COMPOSITIONS OF ATMOSPHERIC EMISSIONS FROM CONVERTER OPERATIONS IN PRIMARY COPPER INDUSTRY

Element	Composition of Converter Emissions, Percent, Metal Basis Range
Arsenic	0.001-0.21
Cadmium	0.001-0.085
Copper	1.2-54.4
Selenium	<0.0001-2.3
Zinc	0.04-18
Chromium	0.003-0.08
Manganese	0.003-0.023
Nickel	nil-0.02
Vanadium	0.01-0.004

TABLE A-5. ANALYSES OF CONVERTER STACK EMISSIONS FROM A WESTERN U.S. SMELTER CONTROLLED WITH A MULTICYCLONE COLLECTOR IN THE FLUE AHEAD OF THE STACK

Gas stream characteristics

--volume flow rate: 160,000 SCFM @60°F and 750 mm Hg (upper limit) and 120,000 SCFM @60°F and 750 mm Hg (lower limit)
Condition assumes three converters in operation, two in the stack and one out.
--temperature: 550°F
--pressure drop in system: 1.75" w.c.
--gas color: pale white--transparent
--odor: pungent, irritating
--composition volumetric:

SO_2	:	3.0%
H_2O	:	3.0%
CO_2	:	0.5%
O_2	:	19.4%
N_2	:	74.1%

Particle characteristics

--grain loading: 0.7 grains/ft^3
--size analysis of dust:

Size microns	Percent
0-5	7
5-10	5
10-15	3
15-20	2
20-25	1
25-30	1
30--	81

TECHNICAL REPORT DATA
(Please read Instructions on the reverse before completing)

1. REPORT NO. EPA-650/2-74-100	2.	3. RECIPIENT'S ACCESSION NO.
4. TITLE AND SUBTITLE Process Modifications for Control of Particulate Emissions from Stationary Combustion, Incineration, and Metals		5. REPORT DATE October 1974
		6. PERFORMING ORGANIZATION CODE
7. AUTHOR(S) R. Nekervis, J. Pilcher, J. Varga Jr., B. Gonser, and J. Hallowell		8. PERFORMING ORGANIZATION REPORT NO.
9. PERFORMING ORGANIZATION NAME AND ADDRESS Battelle, Columbus Laboratories 505 King Avenue Columbus, Ohio 43201		10. PROGRAM ELEMENT NO. 1AB012; ROAP 21ADK-017
		11. CONTRACT/GRANT NO. 68-02-1323 (Task 9)
12. SPONSORING AGENCY NAME AND ADDRESS EPA, Office of Research and Development NERC-RTP, Control Systems Laboratory Research Triangle Park, NC 27711		13. TYPE OF REPORT AND PERIOD COVERED Final; 3/74-7/74
		14. SPONSORING AGENCY CODE
15. SUPPLEMENTARY NOTES		

16. ABSTRACT The report summarizes the state of process modifications relative to the control of fine particulate emissions from stationary combustion sources (electric utilities and industrial processes); municipal incinerators; iron and steel plants; ferro-alloy plants; and non-ferrous metal smelters (zinc plants, copper smelters, and aluminum reduction cells). This study is to uncover modifications to conventional or new unconventional practices which appear to improve the control of fine particulate emissions in these five areas. Modifications to conventional stationary combustion sources considered include ash-fluxing, SO3 addition to flue gas, staged combustion, use of fuel additives, fly ash agglomeration, solvent refining, and flue gas recirculation. Unconventional systems studied include fluid-bed, coal gasification, and submerged combustion. For incinerators, combined fuel/refuse firing, gas cooling, and pyrolysis methods are considered. For iron and steel plants, emphasis is given to the bottom-blowing oxygen process (Q-BOP). Modification of the conventional reverberatory smelting procedure and the introduction of hydrometallurgical methods are discussed for copper; the AI-CI electrolytic (ASP) process is considered for aluminum. The stage of development, availability or acceptability by industry, emission reduction efficiency, and environmental impact of each process is considered.

17. KEY WORDS AND DOCUMENT ANALYSIS

a. DESCRIPTORS		b. IDENTIFIERS/OPEN ENDED TERMS	c. COSATI Field/Group
Air Pollution	Ferroalloys	Air Pollution Control	13B
Combustion	Smelting	Stationary Sources	21B
Electric Utilities	Zinc Industry	Fine Particulate	
Industrial Processes	Copper Converters	Process Modifications	13H
Incinerators	Aluminum Industry		
Iron and Steel Industry			11F

18. DISTRIBUTION STATEMENT Unlimited	19. SECURITY CLASS (This Report) Unclassified	21. NO. OF PAGES 116
	20. SECURITY CLASS (This page) Unclassified	22. PRICE

EPA Form 2220-1 (9-73)