United States
Environmental Protection
Agency

Office of Water
Regulations and Standards (WH-553)
Washington DC 20460

1982
Final Draft Report

Water

EPA

SAMPLING PROTOCOLS FOR COLLECTING SURFACE WATER, BED SEDIMENT, BIVALVES, AND FISH FOR PRIORITY POLLUTANT ANALYSIS

Final Draft Report

FINAL DRAFT REPORT

SAMPLING PROTOCOLS FOR COLLECTING SURFACE WATER, BED SEDIMENT, BIVALVES, AND FISH FOR PRIORITY POLLUTANT ANALYSIS

EPA Contract 68-01-6195
Work Assignment No. 4
U.S. Environmental Protection Agency
Office of Water Regulations and Standards
Monitoring and Data Support Division
401 M Street, S.W.
Washington, D.C. 20460
Project Officer: Mr. Rod Frederick
Work Assignment Manager: Mr. Michael Slimak

Prepared by:
VERSAR INC.
6621 Electronic Drive
Springfield, Virginia 22151
IUS 5029

Prepared for:
Dalton-Dalton-Newport
3605 Warrensville Center Road
Cleveland, Ohio 44122

May 28, 1982

DISCLAIMER

This report has been reviewed by the Office of Water Regulations and Standards, U.S. Environmental Protection Agency, and approved for publication. Approval does not signify that the contents necessarily reflect the views and policies of the U.S. Environmental Protection Agency, nor does mention of trade names or commercial products constitute endorsement or recommendation for use.

FOREWORD

In a previous effort for the U.S. Environmental Protection Agency, Monitoring and Data Support Division (MDSD), Versar Inc. described sampling protocols for fish, sediment, and water in shallow water environments. Those protocols are not applicable to many deep water situations, such as estuaries and the Great Lakes. Deep water systems are the primary source of commercial fisheries, and many other factors such as water supply, waste assimilation, navigation, and recreation are affected by the quality of deep water systems. This manual incorporates the content of the previous sampling protocol document and includes methods for sampling deep water environments. It also includes methods for sampling estuarine bivalves, since in estuarine systems bivalves may provide more information on toxics than fish. Analytical methods (including quality control/quality assurance) are being developed by EPA's Office of Research and Development (EMSL/Cincinnati) and therefore are not described in this manual.

Versar Inc. of Springfield, Virginia, has been subcontracted by Dalton-Dalton-Newport (DDN) of Cleveland, Ohio, under EPA Contract 68-01-6195, to develop the necessary sampling protocols for MDSD. This document is the final draft report for the Work Assignment.

Responsible Personnel

Program Manager: Bruno Maestri
Work Assignment Manager: J. Randall Freed
Work Assignment Staff: Phil Abell, Douglas Dixon

ACKNOWLEDGEMENTS

The authors gratefully acknowledge the management and technical guidance provided by Michael Slimak of the U.S. EPA, Monitoring and Data Support Division; Gayaneh Contos and Bruno Maestri of Versar Inc.; and Dr. Robert G. Rolan of Dalton-Dalton-Newport (the prime contractor under which this task was performed). We wish to acknowledge Ralph Huddleston for his contributions to the fish sampling chapter, and the many reviewers and scientists within EPA, the U.S. Geological Survey, U.S. Fish and Wildlife Service, and State agencies who provided ideas and comments for this manual. Also, the efforts of Teresa Halsey, Thompson Chambers, Juliet Crumrine, and the Versar secretarial staff are gratefully acknowledged.

TABLE OF CONTENTS

	Page No.
1.0 INTRODUCTION	1-1
1.1 Background	1-1
1.2 Recommendation for Use	1-2
2.0 SAMPLING AMBIENT WATER	2-1
2.1 Site Selection	2-2
2.2 Sample Equipment and Use	2-3
2.2.1 Cylindrical Samplers	2-8
2.2.2 Bottles (opening at one end)	2-12
2.2.3 US-Series Integrating Samplers	2-17
2.2.4 Bag Samplers	2-20
2.2.5 Pump Samplers	2-20
2.3 Sampling Procedures	2-22
2.3.1 Rivers, Streams, and Creeks	2-22
2.3.2 Lakes, Ponds, and Impoundments	2-24
2.3.3 Estuaries	2-25
2.3.4 General Procedures	2-26
2.4 Container Selection and Cleaning	2-27
2.4.1 Container Selection	2-27
2.4.1.1 Metals and Inorganics	2-28
2.4.1.2 Cyanide	2-28
2.4.1.3 Asbestos	2-28
2.4.1.4 Volatile Organics	2-28
2.4.1.5 Extractable Organics	2-29
2.4.1.6 Total Phenolics	2-29
2.4.2 Container Washing	2-29
2.4.2.1 Metals Containers	2-30
2.4.2.2 Cyanide Containers	2-31
2.4.2.3 Asbestos Containers	2-31
2.4.2.4 Volatile Organics Containers	2-31
2.4.2.5 Extractable Organics Containers	2-32
2.4.2.6 Total Phenolics Containers	2-32
2.5 Sample Handling, Preservation, and Shipment	2-32
2.5.1 Sample Handling	2-33
2.5.2 Sample Preservation	2-37
2.5.2.1 Metals	2-37
2.5.2.2 Cyanide	2-38

TABLE OF CONTENTS (Cont.)

Page No.

2.5.2.3 Asbestos..... 2-38
2.5.2.4 Volatile Organics..... 2-39
2.5.2.5 Extractable Organics..... 2-40
2.5.2.6 Total Phenolics.. 2-40
2.5.3 Sample Transport..... 2-40

2.6 Quality Assurance/Quality Control Procedures..... 2-42

2.7 References..... 2-45

3.0 SAMPLING BED SEDIMENT..... 3-1

3.1 Site Selection..... 3-2

3.2 Sampling Equipment and Use..... 3-6
3.2.1 Corers..... 3-8
3.2.1.1 Teflon or Glass Tube..... 3-9
3.2.1.2 Gravity Corers..... 3-11
3.2.1.3 Free Fall or Boomerang Corers..... 3-16
3.2.1.4 Piston Corers..... 3-16
3.2.1.5 Multiple Tube Corers..... 3-18
3.2.2 Mechanical Grabs..... 3-20
3.2.2.1 Ekman Grab or Box Dredge..... 3-21
3.2.2.2 Petersen Grab..... 3-22
3.2.2.3 Ponar and VanVeen Grabs..... 3-24
3.2.2.4 Smith-McIntyre Grab..... 3-25
3.2.2.5 Jawed Grab Samplers..... 3-26
3.2.2.6 Pole-Operated Grabs..... 3-26
3.2.2.7 Shipek Grab Sampler..... 3-29
3.2.3 Scoops and Buckets..... 3-29
3.2.3.1 Rotating Bucket Sampler BMH-60..... 3-29
3.2.3.2 Scoops and Drag Buckets..... 3-31

3.3 Sample Handling, Preservation, and Shipment..... 3-31

3.4 References..... 3-39

4.0 SHELLFISH SAMPLING..... 4-1

4.1 Site Selection..... 4-2

4.2 Target Species..... 4-4

TABLE OF CONTENTS (Cont.)

Page No.

4.3 Sampling Equipment and Use..... 4-6
4.3.1 Mechanical Grabs..... 4-7
4.3.1.1 Pole Operated Grab Buckets and Tongs... 4-7
4.3.1.2 Line or Cable Operated Grab Buckets.... 4-8
4.3.2 Biological Dredge..... 4-9
4.3.3 Coring Device..... 4-10
4.3.4 Miscellaneous Devices..... 4-10
4.3.4.1 Scoops or Shovels..... 4-10
4.3.4.2 Rakes..... 4-11
4.3.4.3 Dip Nets and Other Assorted Devices.... 4-11
4.3.5 Purchasing Specimens/Coordinated Sampling..... 4-11
4.3.6 Summary..... 4-12

4.4 Sample Handling, Preservation, and Shipment..... 4-13

4.5 References..... 4-16

5.0 SAMPLING FISH..... 5-1

5.1 Site Selection..... 5-2

5.2 Target Species..... 5-6
5.2.1 Freshwater Target Species..... 5-8
5.2.2 Estuarine Species Selection..... 5-10

5.3 Sampling Equipment and Use..... 5-11
5.3.1 Active Collection..... 5-12
5.3.1.1 Electrofishing..... 5-12
5.3.1.2 Seines..... 5-14
5.3.1.3 Trawls..... 5-15
5.3.1.4 Angling..... 5-17
5.3.1.5 Poisoning..... 5-17
5.3.2 Passive Collection..... 5-18
5.3.2.1 Gill Nets..... 5-18
5.3.2.2 Trammel Nets..... 5-19
5.3.2.3 Hoop, Fyke, and Pound Nets..... 5-19
5.3.2.4 D-Traps..... 5-23
5.3.2.5 Purchasing Specimen..... 5-26
5.3.3 Summary..... 5-26

5.4 When to Collect..... 5-29

5.5 Container Selection and Cleaning..... 5-30

5.6 Sample Handling, Preservation, and Shipment..... 5-32

5.7 References..... 5-35

APPENDIX A

APPENDIX B

LIST OF TABLES

		Page No.
Table 2-1	Summary of Water Sampling Equipment.....	2-5
Table 2-2	Container Type, Sample Volume, and Preservation.....	2-34
Table 3-1	Summary of Bottom Sampling Equipment.....	3-32
Table 4-1	Target Species for Bivalve Shellfish.....	4-6
Table 5-1	Target Species for Warm Water, Cold Water and The Great Lakes, and Other Cold Water Lentic Systems.....	5-9
Table 5-2	Target Species in Estuaries.....	5-11
Table 5-3	Summary of Fish Sampling Equipment.....	5-27

LIST OF FIGURES

		Page No.
Figure 2-1	Structural Features of the Kemmerer Water Sampler....	2-9
Figure 2-2	Structural Features of the Van Dorn Water Sampler....	2-10
Figure 2-3	Glass Lined Niskin Bottle.....	2-13
Figure 2-4	Sampling Device for Collecting Water to be Analyzed for Priority Pollutants.....	2-15
Figure 2-5	Pole Operated Bottle Sampler.....	2-16
Figure 2-6	Depth-Integrating Hand Line Sampler, US DH-59.....	2-19
Figure 2-7	Bag Sampler.....	2-21
Figure 2-8	Sample Labels.....	2-36
Figure 2-9	Chain-of-Custody Tag.....	2-43
Figure 3-1	Coring Tube Adapted with Handle.....	3-12
Figure 3-2	Two Types of Coring Tubes with Handles.....	3-13
Figure 3-3	Hand Corer.....	3-14
Figure 3-4	Phleger Corer.....	3-15
Figure 3-5	BMH-53 Piston Corer.....	3-17
Figure 3-6 A & B	Multiple Coring Tube.....	3-19
Figure 3-7	Ekman or Box Dredge.....	3-22
Figure 3-8	Petersen Grab.....	3-23
Figure 3-9	Ponar Grab Sampler.....	3-25
Figure 3-10	Jawed Grab	3-27
Figure 3-11	Controlled Depth Volumetric Bottom Sampler.....	3-28
Figure 3-12	Shipek Grab Sampler.....	3-30

LIST OF FIGURES (Cont.)

		Page No.
Figure 5-1	Beam Trawl	5-16
Figure 5-2	Otter Trawl	5-16
Figure 5-3	Gill Net	5-18
Figure 5-4	Trammel Net	5-20
Figure 5-5	Hoop Nets	5-21
Figure 5-6	Fyke Net	5-22
Figure 5-7	Modifications of the D-Trap	5-25

1.0 INTRODUCTION

1.1 Background

The U.S. Environmental Protection Agency, Office of Water Regulations and Standards, is conducting a program to evaluate exposure and associated risk from the presence of toxic pollutants in our nation's aquatic environment. This program addresses the goals of the Clean Water Act of 1977 by developing exposure profiles for the 129 priority pollutants. An exposure profile identifies subpopulations (geographic, demographic, etc.) and environmental levels and forms of pollutants that come in contact with these subpopulations. This sampling document describes procedures for collecting, preserving, and shipping samples that will be analyzed to provide information on ambient levels of the priority pollutants, which is an essential component of the data base necessary for characterizing exposure.

EPA's Monitoring and Data Support Division has responsibility for providing technical guidance and coordinating the "Basic State Water Monitoring Program" and the U.S. EPA "Regional Toxicant Monitoring Program." A common goal of these programs is to collect and analyze ambient data on toxic pollutants. The "Nationwide Urban Runoff Program" is focused on determining the contribution of urban runoff to ambient levels of toxic pollutants. These programs are now collecting, or are beginning to collect, ambient samples of surface water, sediment, bivalves, and fish. Data from these samples will be entered into EPA's water quality data base (STORET) and toxics data base (TOXET) to be used in evaluating exposure and risk.

The goal of this sampling document is to describe concise and comprehensive field methods for collecting, preserving, and shipping samples of ambient water, bed sediment, bivalves, and fish that can be analyzed for toxic pollutants. Specific objectives of the document are to:

1. Evaluate the collection methods used in taking surface water, sediment, bivalve, and fish samples.

2. Recommend appropriate sample devices, containers, and preservatives.

3. Recommend quantities required for analyses.

4. Recommend appropriate "target" species of fish and bivalves.

5. Evaluate temporal considerations in sampling.

6. Prepare a concise field manual of sampling protocols.

The procedures outlined in this document emphasize methods that are contamination-free and cost-effective. Since the objectives of the programs using this document are to provide information on general trends in water quality and presence/absence of toxic pollutants, many of the more rigorous and more expensive quantitative techniques have been omitted. Although highly sophisticated techniques are not considered vital for generating the "first-cut" data used in exposure profiles, they are useful in verifying data or performing more intensive programs.

1.2 Recommendation for Use

These protocols were developed after a careful review of available literature, discussions with major EPA program and research offices, and review by personnel involved in sampling and analytical studies within EPA Regional Offices, the U.S. Geological Survey, and the U.S. Fish and Wildlife Service. These protocols provide general guidance in the collection, preservation and transporation of ambient samples; no guidance is provided for analytical protocols. Analytical protocols (including Quality Assurance/Quality Control) are presently available from respective EPA program offices and the EPA Office of Research and Development (Environmental Monitoring and Support Laboratory, Cincinnatti, Ohio).

Sampling protocols for each of the different media (surface water, bed sediment, bivalves, and fish) are considered in separate chapters. These chapters are written to be independent of each other, and as a result, there is some repetition of information.

Some general considerations apply to all field sampling programs, the most important of which is the safety of the sampling crew. Aquatic sampling should never be done by one individual since ropes, nets, and other sampling equipment present an increased risk in the event of an accident. The presense of at least two people provides the needed safety

margin and usually results in a more efficient sampling effort. A one man sampling crew is seldom cost-effective and is always unsafe.

Although the procedures presented herein emphasize methods to avoid contamination, it is recognized that field conditions may sometimes make it impossible or impractical to strictly adhere to the recommended methods. In such cases, the data generated will not necessarily be invalid, but confidence in the data will be reduced. Because the purpose of the programs that will use these methods is primarily to determine presence or absence of priority pollutants, and follow-up monitoring of samples may be performed where positive results are obtained, reasonable caution is the key to successful sampling. All deviations from the recommended procedures should be noted; effective quality controls can demonstrate the significance of these deviations.

Although this manual does provide guidelines for sample handling and site selection, it does not deal directly with designing a program. The statistical and logistic considerations that affect program design are in the province of the EPA and State offices that administer specific programs and are beyond the scope of this more general effort.

The procedures described in this manual are recommended for the following specific EPA programs:

1. Ambient sampling under the "Nationwide Urban Runoff Program."

2. Ambient sampling by EPA Regional Offices (and contractor laboratories) for EPA's "Exposure/Risk" program, managed and coordinated by the Monitoring and Data Support Division.

3. Ambient sampling by states under the "Basic State Water Monitoring Program."

Recommendations, suggestions, and criticisms about these protocols should be forwarded to:

Monitoring and Data Support Division (WH-553)
U.S. Environmental Protection Agency
401 M Street, S.W.
Washington, D.C. 20460

2.0 SAMPLING AMBIENT WATER

Analysis of water samples provides information on the nature and quantity of constituents present in the water column. Whereas sediment, bivalves, and fish concentrate some pollutants and can indicate general, long term trends in water quality, water samples give a precise picture of instantaneous conditions.

Laboratory methods used to analyze the dissolved and suspended materials in water have advanced enormously in recent years and are continuously refined. However, a chain is only as strong as its weakest link, and poor sampling technique has been the weak link in many water quality studies because of problems with contamination or obtaining a representative sample. The objective of this section is to provide protocols for collecting uncontaminated, representative water samples in the most cost-effective manner.

In most natural waters, there is considerable heterogeneity, in both time and space, in the concentrations of constituents in the water column. Well-known examples of spatial heterogeneity are the thermal stratification of lakes during the summer and winter and the chemical stratification of estuaries. In rivers and streams, the greatest percentage of suspended solids tends to be near the bottom. Because of the tendency of many pollutants to be adsorbed by solids, a higher concentration of these pollutants may exist in this area. Furthermore, there is also lateral stratification in that discharges or tributaries may travel downstream as a plume for quite a distance before becoming well-mixed with the receiving stream.

Temporal heterogeneity is related to variation in both natural hydrologic conditions and point and non-point discharges of pollutants.

There are two basic ways to approach the problem of heterogeneity of water in water quality studies:

1. Take numerous grab samples (a grab sample is a sample taken at a particular location in the water column at a single time) and analyze each.

2. Take composite samples (a composite sample is a mixture of discrete samples (subsamples) which can be taken from different places at different times).

Since the costs associated with laboratory analysis are usually much greater than the costs of sampling, composite samples are often more cost-effective. For the programs using the protocols set forth here, composite samples formed by mixing water from several sites in close proximity from a single stream, river, estuary, or lake are the best approach (grab samples are sufficient in very small, well-mixed streams). The more intensive labor and equipment requirements for time-composited samples are not necessary under most circumstances.

Due to the fact that the priority pollutants are usually found in extremely low concentrations in ambient waters, the spectre of contamination is more threatening with water than with sediment, bivalves, or fish. Precautions must be taken with sampling equipment, containers, and preservatives to ensure that no contamination occurs. Furthermore, adequate preservation methods must be employed to prevent changes in the nature of the sample between the actual sampling and the analysis in the lab.

Quality Assurance and Quality Control (QA/QC) procedures should also be incorporated in the sampling protocol. These procedures improve the reliability of the data.

2.1 Site Selection

Selection of appropriate sampling sites is of utmost importance in any sampling program. To the extent possible, water sampling sites should coincide with the sites where bed sediment and fish samples are taken. Other important factors include:

1. Locations where quality-based uses such as water supply, fish and wildlife, and recreation may be threatened or where good quality needs to be verified.

2. Easy access.

3. Location in a well-mixed zone where a minimal number of subsamples can be taken to yield a truly representative composite sample.

4. Availability of historical or supplemental data (data on priority pollutants are rare or absent in most cases).

If there is interest in the effects of certain discharges on ambient water quality, sites should be located both upstream and downstream

of the discharges. When sampling below discharges or tributaries, samplers should remember that there is often a pronounced lateral variation in water quality due to lack of mixing; plumes may extend for several miles in slow moving streams and rivers. Water quality also varies vertically.

Before any sampling is performed, an initial reconnaissance should be done to locate suitable sampling sites. Check the distribution and magnitude of currents during the reconnaissance so that sample sites can be located in a representative manner. Bridges are often a good choice as a site since they provide ready access and permit sampling at any point across the width of the water body. Wading for samples is not recommended in lakes, ponds, estuaries, and slow-moving rivers and streams because bottom deposits are easily disturbed thereby resulting in increased sediment in the overlying water column. In slow-moving or deep water, a boat is usually required for sampling.

If the study objectives are more rigorous than to describe the general distribution and occurrence of pollutants, it is recommended that a statistician be consulted for advice on site selection and number of samples needed. The statistical considerations for site selection are beyond the scope of this manual, but are summarized in the EMSL "Handbook for Sampling and Sample Preservation of Water and Wastewater" (EPA, 1981). Other sources of information on site selection include works by Sanders (1979), Kittrell (1969), and Mackenthun (1969).

2.2 Sample Equipment and Use

A variety of devices have been developed for sampling water. These range from a milk jug tied to the end of a stick to elaborate deep ocean samplers costing thousands of dollars. Neither of these extreme examples is suitable for priority pollutant sampling. The milk jug sampler is obviously capable of gross contamination, and the elaborate oceanographic samplers are usually far too expensive for routine sampling programs. Samplers falling between these two extremes are discussed in the following paragraphs.

Any device selected for priority pollutant sampling should have the following features:

1. Glass or Teflon® construction (or any other material which does not contaminate the samples).
2. Operating ease at various depths.
3. Capability to be quickly and thoroughly cleaned.
4. Relatively inexpensive.

Regardless of the type of sampler chosen, it is a good quality control measure to test any new sampling device (even if it is identical to one previously used) by analyzing blank samples for all parameters for which the device will be used. This can be done by filling the sampler with distilled (not deionized) water of known purity, allowing the water to remain in the sample device for an amount of time equivalent to the time required to take a sample, and then emptying it into a clean sample storage bottle whose purity has been previously verified. Subsequent analysis of this "blank" sample will reveal whether or not the device is capable of contaminating samples.

In addition to introducing contaminants to the sample, some materials (including certain types of glass) are capable of adsorbing metals to the container walls. This property of a sampler can be tested by filling the sampler with dilute (in the range frequently encountered in natural waters) standard solutions of the metal ions to be sampled. After these standard solutions have been left in the sampler for an amount of time equivalent to the sample collection time, they are carefully analyzed to determine if any metal ions have been adsorbed by the sampler. This test should also be performed on the containers used for sample storage with the necessary time modification and the addition of any preservative which will be used. The same procedures are recommended to check sampling equipment for organic pollutant contamination. Obviously, the sampling devices and storage containers used to perform this quality control check should be thoroughly cleaned to remove any traces of contamination before being used for any actual sampling. Cleaning procedures are described in Section 2.4.

There are five basic designs of surface water sampling equipment: cylindrical samplers (usually with openings at both ends), bottles (opening at one end), the US-series integrating samplers, bag samplers, and pumps. Each of these is discussed in the following pages. Table 2-1 is a summary comparison of the principal types of equipment.

Table 2-1

Summary of Water Sampling Equipment

Device	Construction	Closure Mechanism	Size Range	Depth Range Meters (feet)	Possibility of Contamination	Advantages	Disadvantages
Kemmerer Water Sample Bottle	Brass or nickel plated brass.	Internal rod or wire. Messenger activated.	0.4 to 8L	1(3) to 90 (300)	Metals from bottle and from closure mechanism.	Ease of use; good depth range.	Separate sampler needed to sample for metals.
Kemmerer Water Sample Bottle	Acrylic plastic, urethane end seals.	Internal rod or wire. Messenger activated.	1.2 to 8L	1(3) to 90 (300)	Phthalate esters and possibly other organics. Metals possible from closure mechanism.	Ease of use; good depth range.	Separate sampler needed to sample for phthalate esters. Possible metals contamination from closure mechanism.
Van Dorn Bottle	Acrylic plastic, PVC, other materials.	Internal elastic tubing. Messenger activated.	2 to 30L (0.5 to 7.9 gal.)	Surface to 90 (300)	Phthalate esters and other organics.	Ease of use; good depth range.	High probability of contamination.
Nansen Bottle	Brass tubing, Teflon-lined. Neoprene gaskets.	Rotary valves close when bottle turns end-over-end. Messenger activated.	1.25L (0.35 gal.) and 1.5L (0.4 gal.)	Surface to deep ocean.	Minimal if Teflon-lined.	Can be used in series for deep water.	Reversing operation prevents sampling close to bottom.
Fjarlie Water Bottle	Brass tubing, Teflon-coated.	Spring-loaded metal cover plates with rubber discs to seal ends. Messenger activated.	1.3L (0.35 gal.)	Surface to deep ocean.	Possible organics or metals contamination from rubber seal.	Flow-through design. Can sample near bottom.	Possible contamination.
Niskin Sampling Bottle-Teflon Coated Internal Closure	Rigid PVC with optional Teflon coating.	Internal latex tubing. Messenger activated	1.7 to 30L (0.4 to 7.8 gal.)	1.8(6) to deep ocean.	Trace metals and organics from latex closure mechanism. Organics from PVC if not Teflon coated.	Multiple bottles can be triggered remotely by use of appropriate accessory.	Not convenient for very shallow low water. Some contamination possibilities.

Table 2-1 (Cont.)

Summary of Water Sampling Equipment

Device	Construction	Closure Mechanism	Size Range	Depth Range Meters (feet)	Possibility of Contamination	Advantages	Disadvantages
Flow-through Niskin Type Bottle Teflon-Coated-External Closure.	Rigid PVC with optional Teflon coating.	Close-open-close valves. No internal mechanism.	1.7 to 60L (0.4 to 15.6 gal.)	1.8(6) to deep ocean.	Minimal if Teflon-coated. Otherwise good chance of organics contamination from PVC.	Can penetrate surface slicks with minimal chance of contamination.	Not convenient for shallow water.
Glass-lined Contamination-free Modification of Niskin Bottle	Body-anodized aluminum alloy. Pyrex glass inner sample chamber. Flow restrictor, check valve, rupture disc of stainless steel.	Stainless steel disc ruptures at preset depth. Stainless steel check valve prevents contamination after bottle is filled.	5 to 90L (1.3 to 23.5 gal.) 15L (3.9 gal.) Standard size.	Moderate depth to 4000 meters (13,200 feet).	Minimal	Lack of contamination, especially organics.	Very expensive. Very heavy and cumbersome.
Grab Sampler-Glass Bottle On Line	Glass bottle supported by metal frame-Teflon cap.	Spring closure. Pulled open by auxiliary line at depth.	3.7L (1 gal.)	Surface to 9 (30).	Minimal	Can penetrate surface slicks. Easily constructed.	Limited to relatively shallow waters.
Grab Sampler-Glass Bottle on Pole	Aluminum pole with glass sample bottle-Teflon cap.	External lever on pole.	125mL to 1L (3.75 to 30 oz.)	Surface to approximately 1.8 (6).	Minimal	Can penetrate surface slicks. Interchangeable bottles.	Limited to shallow waters.
US DH-59 Depth-Integrating Sampler	Bronze (available with epoxy-painted body, nylon nozzles, and silicone-rubber gaskets for trace metals sampling).	N/A (see text for operational details).	473mL (14 oz.)	0 to 5.8 (19)	Minimal organics with bronze body. Minimal metals with painted body.	Depth integrating. Can be operated from bridges or boats. Hand-line operation.	Depth limitation. Intake tube may become plugged by trash. Primarily designed for flowing water.

Table 2-1 (Cont.)

Summary of Water Sampling Equipment

Device	Construction	Closure Mechanism	Size Range	Depth Range Meters (feet)	Possibility of Contamination	Advantages	Disadvantages
US DH-76 Depth-Integrating Sampler	Bronze (available with epoxy-painted body, nylon nozzles, and silicone-rubber gaskets for trace metals sampling).	N/A (see text for operational details).	946mL (28 oz.)	0 to 5.8 (19)	Minimal organics with bronze body. Minimal metals with painted body.	Depth integrating. Can be operated from bridges or boats.	Depth limitation. Intake tube may become plugged by trash. Primarily designed for sampling flowing water.
US P-72 Point-Integrating Sampler	Aluminum (available with epoxy-painted body, nylon nozzles, and silicone-rubber gaskets for trace metals sampling).	N/A (see text for operational details).	473 or 946mL (14 or 28 oz.)	0 to 22 (73) with 473mL container; 0 to 15.5 (51) with 946mL container.	Minimal organics with aluminum body. Minimal metals with painted body.	Point-integrating. Can sample continuously over a range in depth.	Depth limitation. Valving system requires a DC power supply.
Bag Sampler	Aluminum side plates with polyethylene bags.	Messenger activated knife cuts open sealed fill tube.	1.5L (0.4 gal.)	Unlimited.	Phthalate esters and other organics from bag.	Can penetrate surface slicks; may be useful for metals.	Potential for organics contamination.

2.2.1 Cylindrical Samplers

One of the most frequently used designs employs a cylinder with stoppers at each end and a closing device which can be operated remotely by either a messenger weight or an electrical switch coupled to a solenoid device. Samplers of this design are the best type for sampling very deep water. Depending on their specific valve and closure features, they may be most susceptible to contamination by surface slicks, however. Included in this family are the Kemmerer (Figure 2-1) and Van Dorn (Figure 2-2) bottle samplers. The Kemmerer sampler uses a rigid rod or wire along which the stoppers slide whereas the Van Dorn samplers typically utilize a flexible piece of elastic tubing which pulls the stoppers into each end. Samplers of this type are usually made of PVC (polyvinyl chloride), acrylic plastic, or brass. Those made of PVC or acrylic plastic may contaminate samples with phthalate esters whereas those made of brass may introduce contaminating metals. One possible solution to this problem is to use a metal sampler for those samples to be analyzed for organics and a PVC sampler for samples to be analyzed for metals. Some Van Dorn type samplers are now available which are Teflon® coated to reduce contamination. Even this may not ensure contaminant-free samples, however, because as Giam et al. (1975) report, Teflon® sheet material may contain up to 400 ppb of di-2-ethylbutyl phthalate.

The Kemmerer Bottle is designed to be used primarily in depths ranging from 1 to 90 meters (3-300 feet). Several versions are available, including brass, nickel plated brass, and acrylic plastic with urethane end seals. Sizes range up to about 8 liters. The acrylic model has a high risk of contaminating organics samples while the brass model is probably unsuitable for metals sampling. Again, before this sampler is used, blanks should be run to verify the absence of any contamination. The Kemmerer is also suitable for sampling from bridges and piers. If this (or any other messenger operated sampler) is used from a bridge, care should be used in dropping the messenger weight. If the weight is dropped from any considerable height, it may severely damage the triggering mechanism. This problem can be avoided by suspending the messenger a few feet above the water by means of a string and then allowing it to free-fall from this re-

Figure 2-1. Structural Features of the Kemmerer Water Sampler (From APHA 1976).

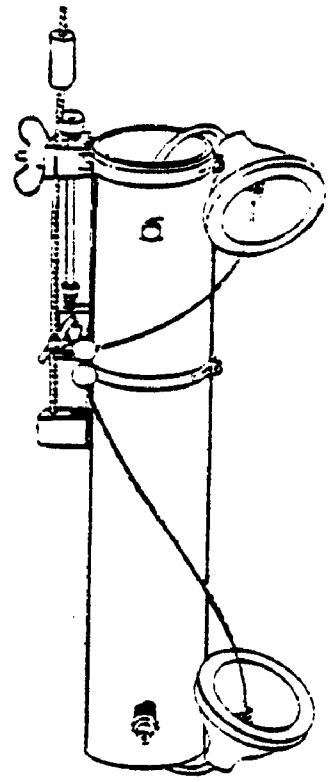

Figure 2-2. Structural Features of the Van Dorn Water Sampler (From APHA 1976).

duced height. Most Kemmerer bottles come from the manufacturer with a small hole drilled in the side of the messenger to accomodate a string.

Modifications of the basic Kemmerer and Van Dorn samplers are discussed below.

Nansen Bottle

This popular design has been used for many years in oceanographic sampling. The bottle essentially consists of a brass tube with rotary valves at each end. A messenger weight is dropped to release the catch mechanism allowing the bottle to turn end-over-end, thus closing the valves. Recent improvements include a baked Teflon® lining and simplified wire clamp release assemblies. Since the bottle must turn end-over-end (reverse) to operate the valves, sampling cannot be performed in proximity to the bottom without danger of disturbing the sediment fines. The head and valve assemblies of the newer bottles are removable to facilitate cleaning. There is some chance of contamination of organics and metals samples by the neoprene gaskets. This bottle is available in 1.25-liter (1.3-quart) and 1.5-liter (1.6-quart) capacities.

Fjarlie Water Bottle

In this modification of the Van Dorn design, two spring-loaded metal cover plates with rubber discs are used to seal each end of the brass tube. This is also a flow through design, and the messenger activated closure mechanism is external. The internal surfaces of the bottle are Teflon® coated to prevent contamination. The capacity of this sampler is 1.3 liters (1.4 quarts). All operating parts are made of non-corrosive brass or stainless steel.

Niskin Bottle

This sampler is available in sizes ranging from 1.7 to 30 liters (0.4 to 7.8 gallons). It is constructed of PVC and is available with an optional Teflon® coating. An internal closure device is used which consists of latex tubing. This bottle is designed primarily for deep water sampling, and multiple bottles may be used at different depths with triggering at the operator's command. The Teflon® coated version may be well suited

for priority pollutant sampling, but blanks (as described above) should be run first to ensure that no contamination occurs. The latex closure device may possibly contaminate samples with zinc and iron (Segar and Berberian, 1975). There is also a distinct possibility of organics contamination from the latex tubing.

Flow-Through Niskin Bottle

This sampler is an adaption of the Van Dorn design which uses no internal closure springs or mechanisms. The sampler is constructed of rigid PVC with an optional Teflon® coating available. A close-open-close valve system opens automatically at a pre-set depth. This provides the advantage of allowing the sampler to penetrate surface contamination (such as oil slicks) with minimal risk of contaminating the internal sample area. It is a good practice, however, to avoid lowering any sampler through obvious surface pollution (unless the purpose is to sample directly beneath such pollution), as oils and other substances may adhere to the external surface of the sampler and be flushed inside when the sample is collected. This sampler is available in [1.7- to 60-liter] (0.4- to 15.6-gallon) capacities. The absence of any internal closure mechanism greatly reduces the risk of sample contamination. Complete assurance that contamination is not occurring, however, can only be achieved if sample blanks are run.

Glass-lined Niskin Bottle

This sampler is yet another modification of the Van Dorn design and is manufactured specifically for oceanographic work. It consists of an anodized aluminum alloy body with a Pyrex glass inner chamber (see Figure 2-3) and is available in sizes ranging from 5 to 90 liters (1.3 to 23.4 gallons). The 15-liter (3.9-gallon) size is standard. This is a specialized piece of equipment which may be prohibitively expensive (over $1,000 for the smallest version) for general use. As a result of the inert materials used in its construction, there is minimal chance of contamination from this sampler.

2.2.2 Bottles (opening at one end)

A popular type of sampling device, useful only in shallow water, consists of a glass bottle attached to a pole or a line with some provision

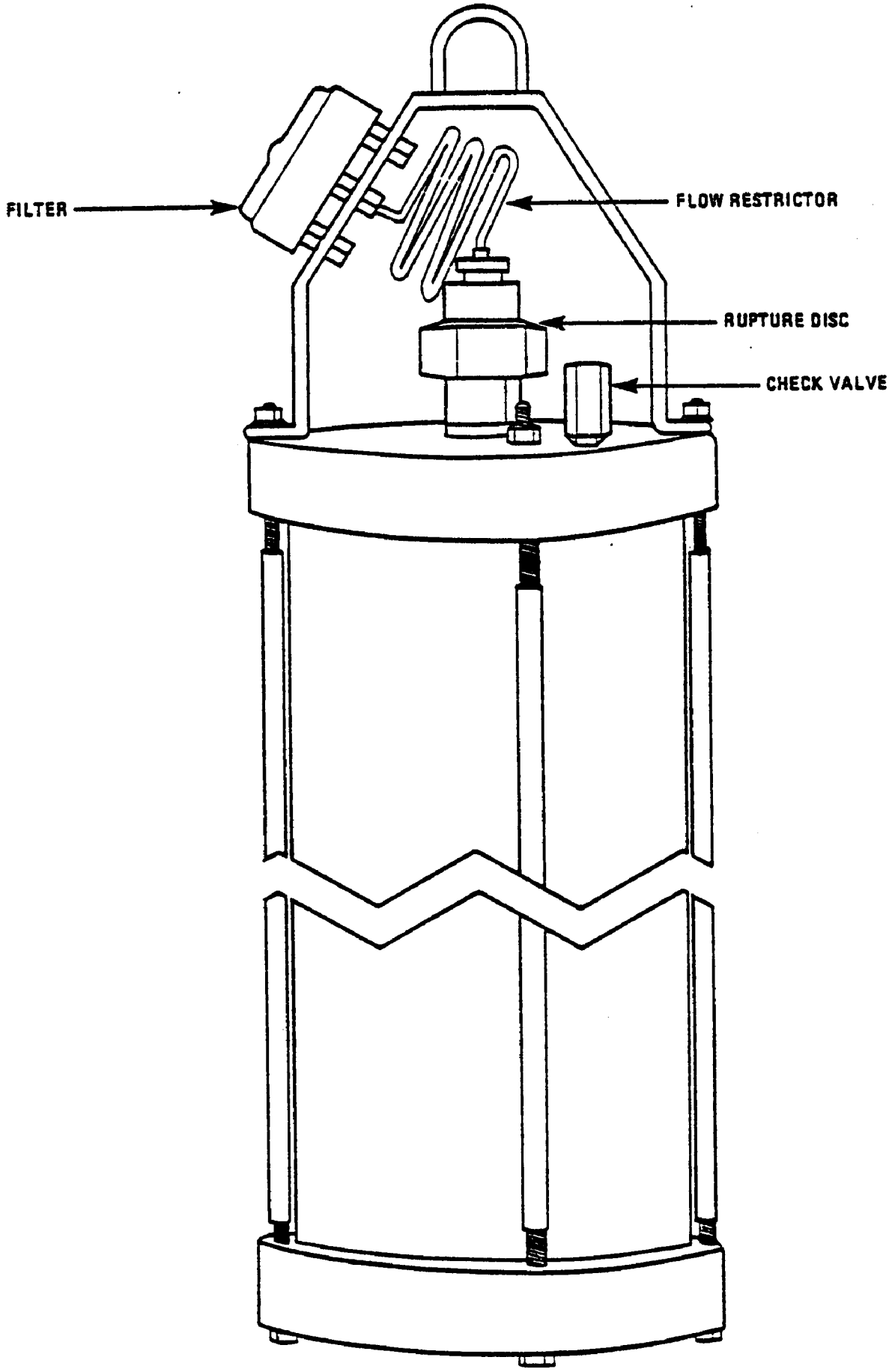

Figure 2-3. Glass Lined Niskin Bottle

for opening the cap after submersion. Commercial devices of this design are available or they may be readily constructed. Construction of a typical sampler of this design (Figure 2-4) involves fastening a removable glass bottle with 0.5-liter to 4-liter (0.1 to 1 gallon) capacity to a stainless steel frame which holds a hinged, collar-type Teflon® lid (Gump et al. 1975). The frame has a Teflon® bumper to protect against impact. The lid is held closed by a spring; when the bottle is dropped to the desired depth, the spring is released by a tug on the attached string, air rushes out of the bottle, and the bottle fills. Use of such a bottle obviously requires ballast; a concrete block or other non-metal object is preferred. The weight, tied to a rope attached to the bottle, should be as far below the bottle as practical to prevent contamination. When sampling is performed near the bottom, sufficient time should elapse for any sediments disturbed by the weight to be carried downstream before the sample is taken. The weight should not be allowed to touch bottom in lakes or ponds because the fine sediments kicked up by the weight will not settle out in any reasonable period of time and will significantly bias the sample. The same will often be true in estuaries.

The principal disadvantage of these homemade bottles is that the spring holding the cap shut cannot be relied upon to keep the bottle closed so that water is taken at the desired depth. Even if a very strong spring is used, a great deal of ballast may be required to sink the bottle to the preferred depth because of the buoyancy of the bottle. The ballast poses a potential for contaminating the sample.

A type of bottle sampler which is commercially available consists of a 1-liter (0.26 gallon) borosilicate glass sampling bottle with a Teflon®-lined cap (Figure 2-5). The bottle is attached to a 1.9-cm (3/4-inch) square aluminum tube 1.8 meters (6 feet) in length. The cleaned, capped sample bottle is clamped onto the sampler and submerged. The operator can then remove the cap by means of a handle at the other end of the tube, collect the sample from the desired depth, and recap the bottle. This system has several advantages for shallow water sampling. The bottles are relatively inexpensive, and a different bottle can be used for each site which will minimize the chance of cross-contamination. This sampler is also capped until the operator opens it which means it can penetrate

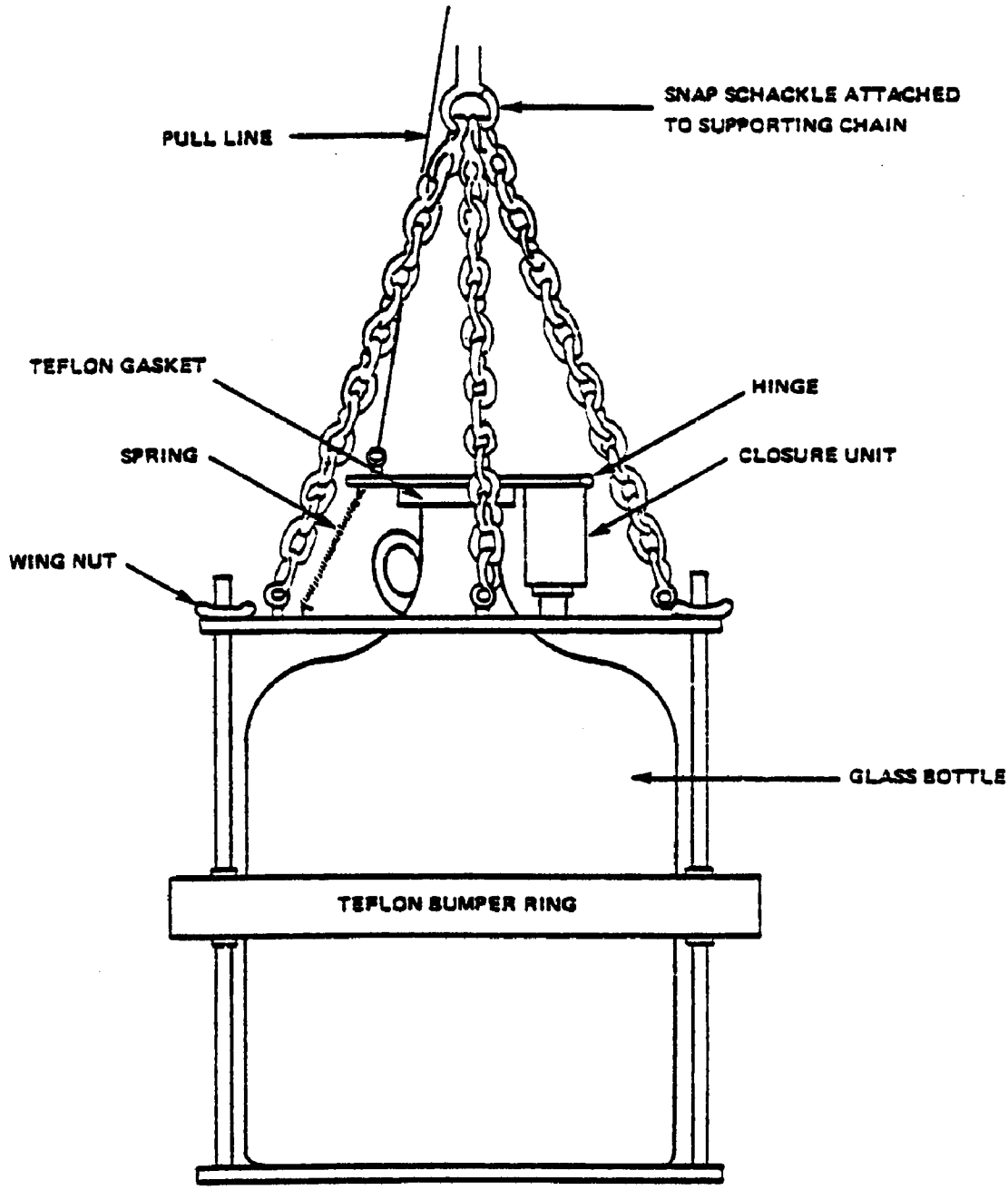

Figure 2-4. Sampling Device for Collecting Water to be Analyzed for Priority Pollutants (After Gump et. al. 1975)

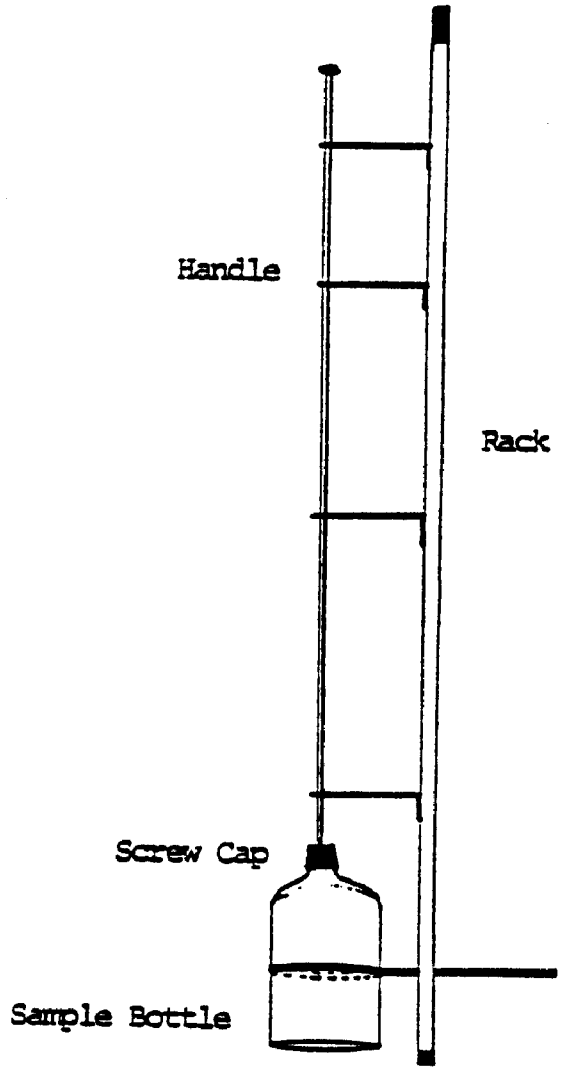

Figure 2-5. Pole Operated Bottle Sampler

surface slicks without contamination of the sample containing area. As mentioned previously, a great deal of caution should be exercised if the sampler penetrates surface contamination to ensure that contaminating material from the outer surfaces is not flushed into the container when it is opened. Obviously the depth to which these devices can be used is limited by the length of the pole. Bottles are available for this sampler in capacities ranging from 125 mL to 1000 mL.

2.2.3 US-Series Integrating Samplers

This is a group of samplers designed to acquire integrated (both depth- and point-integrated) samples for suspended sediment analysis. These samplers are useful for obtaining depth- or point-integrated water samples for priority pollutant analysis as well.

Depth-integrated samples are taken continuously in a sampler that moves vertically at an approximately constant rate between the surface and the bottom. The sample enters the container at a velocity roughly equal to the instantaneous stream velocity at each point in the vertical transit. Point-integrated samples, on the other hand, are accumulated continuously by a sampler held at a relatively fixed point in the stream. Again, water enters the sampler at a velocity about equal to the instantaneous stream velocity at the point being sampled. The capability of the US-series samplers to obtain samples isokinetically (filling rate proportional to stream velocity) makes these samplers the best choice when taking flow-weighted samples in rivers and streams (using the EDI and EWI methods described in Section 2.3). Most of these samplers use a glass bottle within a metal (aluminum, bronze, or plated steel) body, and can be provided with an optional Teflon® nozzle and medical-grade silicone gasket. The optional epoxy-coated bodies available for trace metal sampling applications are not recommended because the coating can chip off and contaminate the sample with organic pollutants. Since the sample itself does not contact anything but the Teflon® nozzle, the sample bottle, and a minute area of the silicone gasket, the potential for contamination using the optional nozzle and gasket and the standard body is minimal. Naturally, blanks should be run, as described earlier in this section, to verify the absence of contamination.

Although the U.S.-series integrating samplers are excellent for use in streams and shallow rivers, they are not suitable for sampling deeper waters such as lakes and larger estuaries. Depth limits and other characteristics are discussed below for three models operable with a hand line.

US DH-59 Depth-Integrating Sampler

This sampler (Figure 2-6) is designed for hand-line operation. The standard version is made of bronze, and optional Teflon® nozzles and silicone-rubber gaskets are available. Three different nozzles are available in sizes of 6.4 mm, 4.8 mm, and 3.2 mm. This enables the sampler to operate at maximum depths of 2.7 meters (9 feet), 4.9 meters (16 feet), and 5.8 meters (19 feet), respectively.

US DH-76 Depth-Integrating Sampler

This is essentially a larger version of the DH-59 sampler with a 946-mL (1-quart) sample container. This sampler is also designed to be used on a cable and the construction materials are the same as the DH-59, including the availability of optional components for metals sampling. The sampler is limited to a depth of 4.9 meters (16 feet) with all three nozzles.

US P-72 Point-Integrating Sampler

This is a point-integrating sampler designed for hand-line operation. The sampler is available with either a 473 mL (1 pint) or 946-mL (1 quart) sample container. The body of the standard version is constructed of aluminum, and the optional nozzle and gasket are available. The only nozzle size available is 4.8 mm, which limits this sampler to a depth of 2.7 meters (9 feet) when the 473-mL sample container is used or 4.9 meters (16 feet) when the 946-mL sample container is used.

Other integrating samplers in the US-series are available for fast water and other special applications. Additional details regarding the US-series samplers and their use may be obtained by contacting:

Engineer-in-Charge
Federal Inter-Agency Sedimentation Project
St. Anthony Falls Hydraulic Laboratory
Hennepin Island and Third Avenue, SE
Minneapolis, Minn. 55414

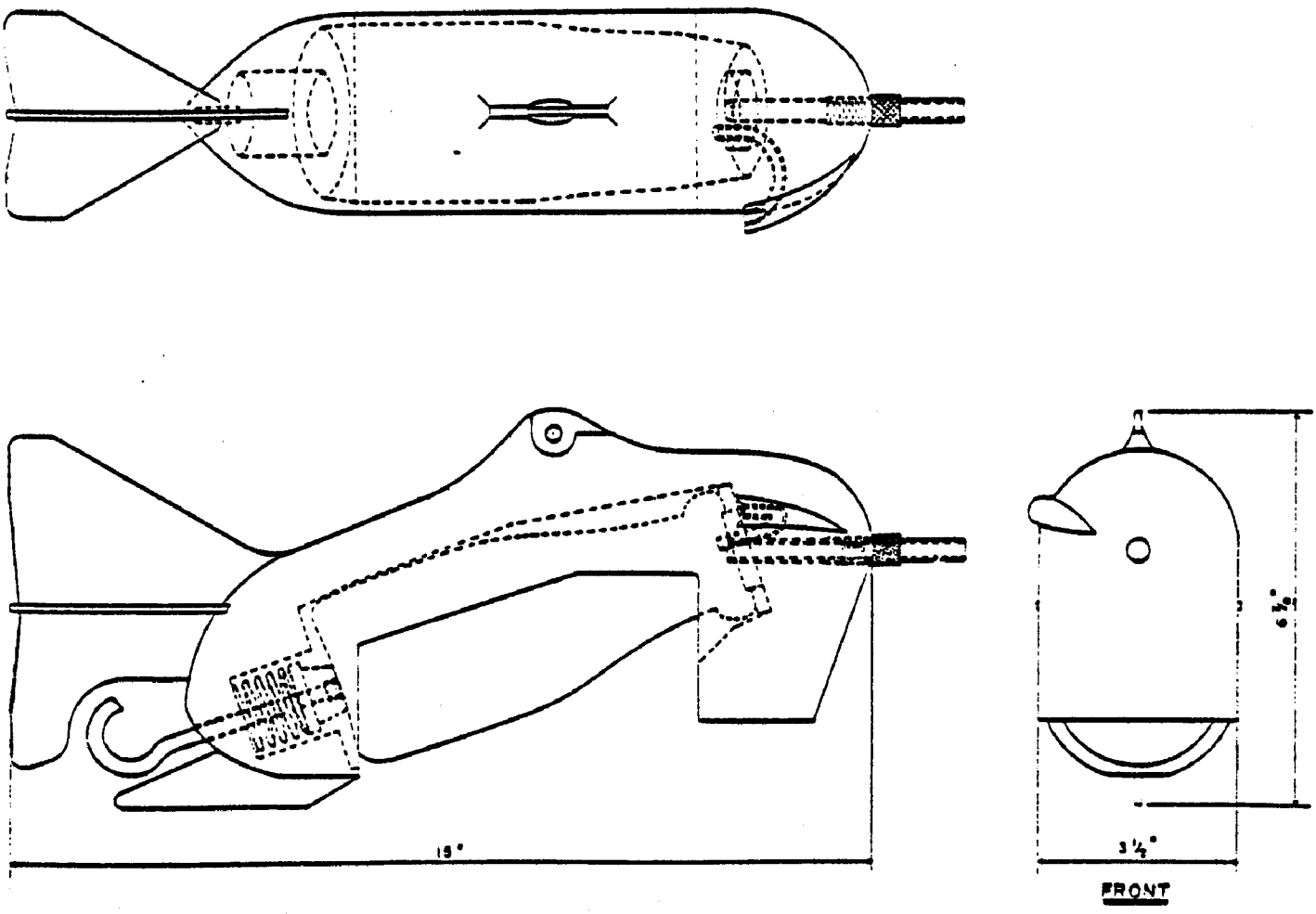

Figure 2-6. Depth-Integrating Hand Line Sampler, US DH-59.

2.2.4 Bag Samplers

At least one manufacturer is currently offering a bag type sampler for oceanographic work. This sampling device consists of a polyethylene bag held by aluminum side plates (see Figure 2-7). The fill tube is covered by a plastic sheath which is cut away upon opening. This feature enables the sampler to penetrate oil slicks and other surface contamination. Because the actual sample container is constructed of polyethylene, this device is not recommended for organic priority pollutant sampling. It may be useful for sampling metals and inorganics since the sampler is designed to orient itself against the current in such a manner as to place the aluminum plates downstream of the sample opening. If the sampler is to be used for metals sampling, the polyethylene bags should be tested by filling with dilute standard concentrations of the metals to be analyzed. These should be left in the bag for a time period equivalent to the residence time of the actual sample. The standard solutions should then be analyzed to determine whether any adsorption has occurred. This is a good procedure to use with any type of sampler which will be used for trace metals.

If non-contaminating bags become available, or if it is proven that the standard bags do not cause contamination, bag samplers may be used for priority pollutant sampling.

2.2.5 Pump Sampler

A number of pump samplers have been developed, especially for wastewater sampling. While the automated versions of these samplers are unsurpassed for taking time- or flow-composited samples from point-source discharges or small flow-controlling structures (e.g., weirs, flumes), they are generally not practical for sampling most surface waters. Most have neither the mobility nor the capability to take deep samples necessary for sampling most natural surface waters. Also, they are quite expensive.

For streams and shallow rivers, pump samplers can be used to obtain a composite sample by raising and lowering the intake line while moving laterally across the water body (such a sample would not be flow-proportional unless flow measurements and appropriate calculations

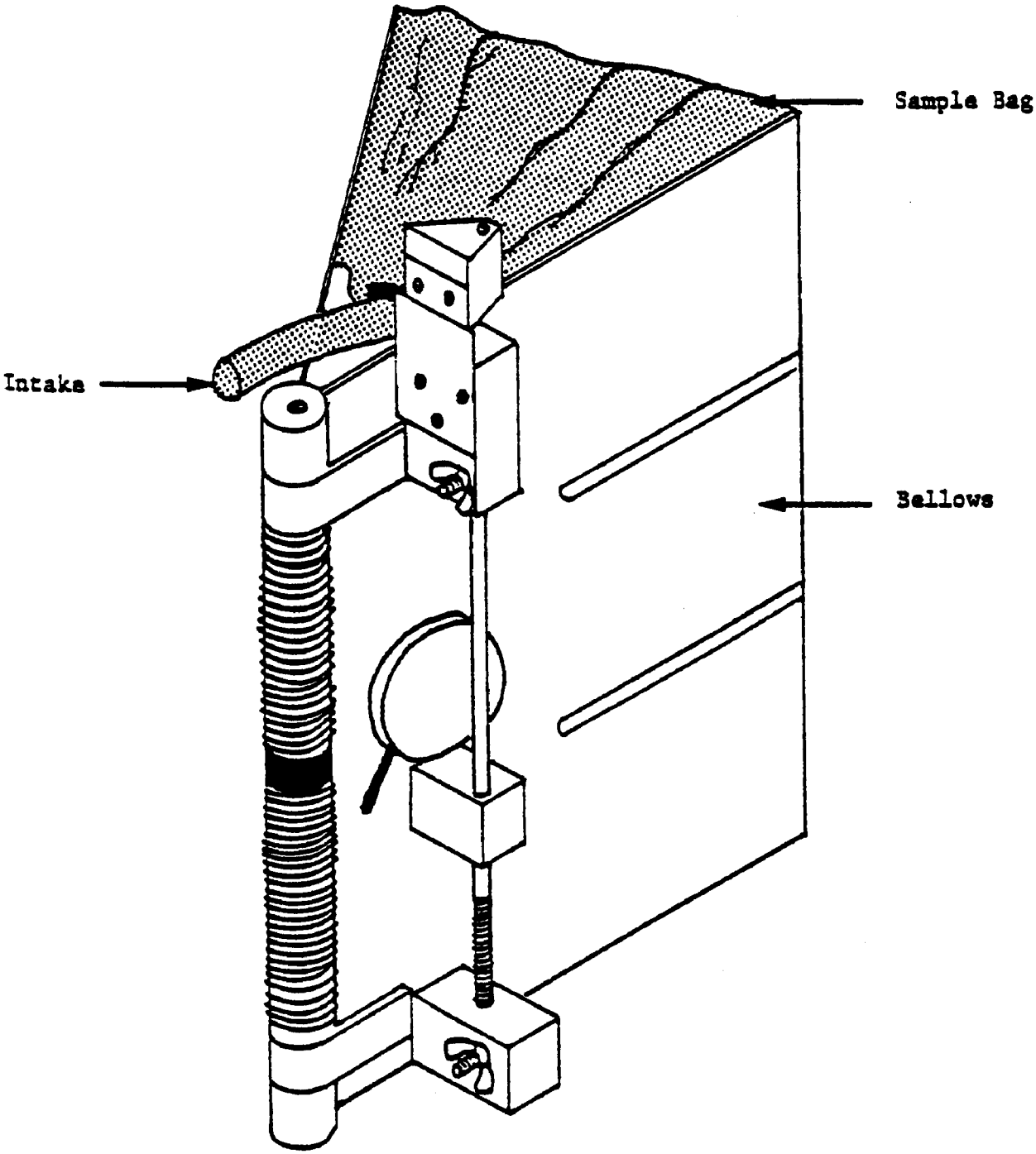

Figure 2-7. Bag Sampler.

were done beforehand). Several automatic sampler manufacturers have introduced sample collection systems specifically designed for sampling toxic pollutants, and "toxic sampler" replacement parts for older model samplers. If an automatic sampler is used for sampling priority pollutants, it should be equipped with these noncontaminating parts.

The variety of automatic samplers presently available is too great to permit adequate discussion within the scope of this manual. Good discussions of the types of such samplers available and their use are given in EPA (1981), Shelley (1977), and Harris and Keffer (1974).

2.3 Sampling Procedures

The sampling regimes which may be used to collect priority pollutant samples are nearly as variable as the types of available equipment. Sampling regimes range from simple grab samples to multipoint, flow-integrated composite samples. The level of sophistication required in sampling technique is obviously related to the goals of the study, which are, in this case, to determine whether measurable quantities of priority pollutants occur in natural waters and to determine approximate concentrations and distributions for those pollutants that are measurable. In view of these goals, sophisticated time-compositing techniques are not generally necessary, although they may be desirable at times (e.g., for verifying unusual data).

Aquatic environments vary considerably in their physical characteristics, and sampling procedures vary accordingly. Three basic types of aquatic environments are covered by this manual: lotic (rivers, streams, creeks), lentic (lakes, ponds, impoundments), and estuaries. Procedures applicable to each are discussed below.

2.3.1 Rivers, Streams, and Creeks

In free-flowing bodies of water, the preferred sampling procedure is to take a discharge-weighted sample. The advantage of discharge-weighted sampling is that the samples will represent the average concentrations of pollutants transported by the water body. The spatial heterogeneity in pollutant distribution can lead to anomalous concentration and loading values if discharge-weighted sampling is not performed.

The most effective means of discharge-weighted sampling in shallow to moderate depth rivers and streams is to use the US-series integrating samplers in conjunction with depth integrating methods. As discussed in Section 2.2, the US-series samplers take samples isokinetically, that is, at a filling rate proportional to water velocity. Two different depth integrating methods are commonly used to obtain a mean discharge-weighted concentration for a cross section. These two methods are the equal-discharge-increment (EDI) method and the equal-width-increment (EWI) method. These two methods are explained in the National Handbook of Recommended Methods for Water-Data Acquisition (USGS, 1980a), as follows.

> "In the EDI method, the cross-sectional area is divided laterally into a series of subsections, each of which conveys the same water discharge. Depth integration is then carried out at the vertical in each subsection where half of the subsection discharge is on one side and half is on the other side. In each individual subsection, a vertical transit rate is used that will provide a sample volume for the vertical which is equal to the sample volumes for every other vertical. ... Generally, if more than five verticals (more than five subsections) are sampled, an accurate mean discharge-weighted concentration will be obtained."

> "In the EWI method, depth integration is performed at a series of verticals in the flow section that are equally spaced across the transect to obtain a series of subsamples. Unlike the EDI method, however, the vertical transit rate used at each vertical is exactly the same as that used at every other vertical, and the subsamples are composited even though they are of different volumes. This procedure provides a transect sample whose concentration is discharge weighted both vertically and laterally and whose volume is proportional to the water discharge in the sampled zone. An advantage of the EWI method is that a knowledge of the lateral distribution of discharge is not required."

> "The primary disadvantage of the EDI method is that the lateral distribution of water discharge must be known or measured each time prior to sampling. With the EWI method, on the other hand, (1) it is sometimes difficult to maintain the same vertical transit rate at all verticals, (2) more verticals must be sampled for a given accuracy than with the EDI method, and (3) wherever the flow is not essentially perpendicular to the transect, the width increment between sampling verticals must be adjusted by dividing it by the sine of the angle between the flow lines and the transect. Generally, 10 to 20 verticals will provide an accurate mean discharge-weighted concentration by the EWI method."

If sampling equipment other than the US-series samplers is used, the EDI method can be adapted for use with other samplers. Flow measurements would need to be taken first, and subsamples would be taken throughout the cross-section corresponding to equal increments of flow.

If it is not practical to take a discharge-weighted sample because of equipment, time, or difficulty in making flow measurements, take subsamples at several verticals along a transect. Locate the verticals in a manner that is proportional to estimated flow, i.e., verticals should be closer together at mid-channel where most of the flow travels, than toward the banks, where the proportion of total flow is smaller. Take subsamples at several depths for each vertical. The locations of all verticals, and the depths at which subsamples are taken should be recorded in the field notebook.

As previously mentioned, it is preferable to select sites that are located in areas where the water is well-mixed. Certain river or stream characteristics can point to well-mixed areas. Since the extent to which mixing occurs is principally governed by turbulence and water velocity, the selection of a site immediately below a riffle area will ensure good vertical mixing. Horizontal (cross-channel) mixing occurs in constrictions in the channel. A method of verifying the presence or absence of stratification or plumes is to traverse the river or stream taking specific conductance measurements. Uniform specific conductance usually indicates good mixing. Dissolved oxygen measurements can also indicate stratification.

The number of verticals sampled along a transect is usually determined in the field by the sampling crew. This determination is based on mixing characteristics of the water body (the more homogenous the water body, the fewer verticals needed).

2.3.2 Lakes, Ponds, and Impoundments

Lakes, ponds, and impoundments have a much greater tendency to stratify than rivers and streams. The relative lack of mixing in lentic systems requires that more subsamples be obtained.

The number of sampling sites on a lake, pond, or impoundment will vary with the size and shape of the basin. In small ponds, a single vertical at the deepest point may be sufficient. In naturally-formed ponds, the deepest point is usually near the center; in impoundments, the deepest point is usually near the dam.

In lakes and larger impoundments, several verticals should be composited to form a single sample. These verticals are often taken along a transect or grid. Again, the number of verticals and the depths at which samples are taken are usually at the discretion of the sampling crew. In most cases, if the lake is stratified, it is recommended that separate composites be made of epilimnetic and hypolimnetic zones. In unstratified lakes, a composite consists of several verticals with subsamples collected at various depths.

In lakes with irregular shape and with several bays and coves that are protected from the wind, additional separate composite samples may be needed to adequately represent water quality (USGS, 1980a). Similarly, additional samples should be taken where discharges, tributaries, land use characteristics, and other such factors are suspected of influencing water quality. The number of separate composite samples that can be taken is obviously a function of the need for spatial (or temporal) resolution in the data and of the availability of manpower and funds.

The locations of all sampling sites, as well as field data on parameters such as pH, dissolved oxygen, temperature, and other parameters measured *in situ*, should be entered into the field notebook during the actual sampling.

2.3.3 Estuaries

The physical characteristics of estuaries are extremely complex and variable. Thermal and chemical stratification, tidal action, and large size make it very difficult to accurately measure flow patterns in estuaries. In most cases, it is recommended that subsamples be taken at various depths along a transect or grid, with the verticals concentrated near the center of water mass. It may be advisable to take separate composites of the layers above and below thermal and saline gradients because the water

quality of these layers is often considerably different. Always take tidal stages into account when sampling estuaries and be sure to note exact date and time of sampling.

As with freshwater systems, a good method of determining layering is to take measurements of temperature and specific conductance (or salinity) at numerous depths and verticals along a transect. The number of verticals and the depths at which subsamples are taken can be planned based on the homogeneity of the water in the estuary.

2.3.4 General Procedures

Regardless of the actual sampling device used, mix the subsamples in a large compositing jug before pouring samples into the various containers. A total of 8 liters is required for each composited priority pollutant sample, including provision for spillage of 1 liter during transfer.

Use a widemouth, glass compositing jug with a handle and Teflon®-lined lid. Keep the lid on except when pouring samples in or out. Volume of the jug should be about 15 liters to allow for collection of duplicate samples for quality control. A commensurately larger jug will be required if non-priority pollutant samples (e.g., solids, nutrients, total organic carbon, oxygen demand) are also collected.

Different compositing jugs should be used for each composite sample. The compositing jugs should be cleaned according to the same basic procedure used for the sample containers (discussed in Section 2.4).

Before each subsample is taken, rinse the line connected to the collecting device with site water to remove oil and other residues. Such residues often accumulate in boat bottoms and similar places where line is stored. Nylon line is preferred since it is durable and tends to absorb less than cotton or polypropylene.

Grab samples should be taken for cyanide and volatile organics. If using a depth-integrating sampler, take the sample for cyanide and volatile organics at the centermost vertical; if using other sampling equipment, take the sample at mid-depth at the centermost vertical. If separate composites are being taken for various layers (e.g., epilimnetic,

hypolimnetic) take the grab sample for cyanide and volatile organics at the mid-point of the layer in the centermost vertical.

2.4 Container Selection and Cleaning

Water samples obtained for priority pollutant analysis require careful handling to avoid the possibility of introducing interferences, both positive and negative, in the sampling process, in the containers used for storage, or in transport to the lab for analysis. Possible routes of positive interference or contamination include residues on the sampling equipment (such as rust and corrosion products), leaching of materials from containers, paint leached from the hulls of ships and boats, and dust and other micro-particles in the sampling environment. Negative interferences may arise as a result of the adsorption of chemicals to surfaces of containers or from the breakdown of samples due to improper preservation procedures. The risks of contamination, adsorption, and desorption have been reviewed by a number of investigators (Cooper, 1958; Robertson, 1968; Tolg, 1972; National Bureau of Standards, 1974a, 1974b, and 1976). The purpose of this section is to summarize the currently accepted practices with regard to container selection and the cleaning procedures required to reduce the risk of sample contamination. The container and cleaning requirements specified below are summarized from Methods for Chemical Analysis of Water and Wastes (EPA, 1979b) and the Office of Research and Development proposed analytical procedures for priority pollutant analysis (EPA, 1980).

2.4.1 Container Selection

The choice of containers and cap material is influenced by a variety of factors which include resistance to breakage, size, weight, interference with sample constituents, cost, and availability. The most important factor to consider, however, when choosing the type of container is the possibility of interference with constituents for which the sample is to be analyzed. This interference may result from adsorption of a constituent by the walls of the container or from the release of an interfering substance by the container. Suitable containers will be described below according to the type of toxic pollutants for which the sample is to be analyzed. These include metals and inorganics, cyanide, asbestos, volatile organics, extractable organics, and total phenolics.

2.4.1.1 Metals and Inorganics

Over the last several years, considerable research has been conducted on the sampling and analysis procedures for the determination of trace metal concentrations in water samples. As a result of this research, much information is available concerning the interferences that may be introduced by the walls of the sample containers. Proper bottle selection and preparation techniques can reduce such interferences.

Samples to be analyzed for toxic metals and inorganics can be stored in 1-liter polyethylene or high quality borosilicate glass bottles with polypropylene caps. Teflon® lid liners should be purchased or cut from sheet Teflon® and inserted in the cap to prevent possible contamination from the caps normally supplied with the bottles. Metal bearing materials, such as aluminum foil, must never be allowed to directly contact the sample either in the sampling process or in sample storage.

2.4.1.2 Cyanide

Samples collected for cyanide analysis should be stored in containers exactly like those used for metals and inorganics.

2.4.I.3 Asbestos

Samples collected for asbestos analysis should be stored in 1-liter plastic bottles.

2.4.1.4 Volatile Organics

Samples to be analyzed for volatile organics should be stored in 40-mL or 125-mL screw cap septum vials with a Teflon®-silicone disc in the cap to prevent contamination of the sample by the cap. The discs should be placed in the caps (Teflon® side down) in the laboratory prior to beginning the sampling program. The discs should not be touched by hands at any time but should be inserted with clean tweezers or some similar instrument. In addition, extra discs stored in aluminum foil should be carried during field sampling in case some of the discs previously placed in the caps are lost.

2.4.1.5 Extractable Organics

At no time should plastic containers, such as polyethylene or polypropylene, be used to store samples to be analyzed for the extractable organics (pesticides, base/neutrals, and acids). This is because samples may be contaminated by leaching of substances (such as phthalate esters) from the plastic container walls and because plastic containers are known to adsorb many organic compounds such as pesticides (EPA, 1979b and 1980). Samples to be analyzed for extractable organics should be stored in 3.8-liter (1-gallon) amber bottles made of high quality borosilicate glass. The amber glass reduces the possibility of photolytic reactions which could alter the constituents of the sample. Nevertheless, the bottles should not be left in direct sunlight for any extended period of time. All caps must be lined with Teflon® to avoid sample contamination by the cap material. Teflon® cap liners may be purchased or cut from Teflon® sheeting by the laboratory personnel.

2.4.1.6 Total Phenolics

One-liter, high quality borosilicate glass bottles with a Teflon®-lined screw cap should be used. Amber glass bottles are preferred (but not required) since they inhibit photolytic reactions. If clear bottles are used, care should be taken to keep the bottles in the dark to the maximum extent possible.

2.4.2 Container Washing

Various procedures are used to clean the containers, depending on the parameters being tested. In addition to the different sample bottles, all sampling equipment containers and intermediate reservoirs should be cleaned. The sampling equipment must be cleaned with regard to all parameters on the priority pollutant list using the following procedure (EPA, 1979b and 1980):

1. Wash all sampling equipment containers, caps and intermediate vessels with a non-phosphate clinical laboratory grade detergent and hot water.

2. Triple rinse with tap water.

3. Rinse with 1:1 nitric acid (HNO_3 - Reagent grade).

4. Rinse with deionized-distilled water.

5. Rinse with 1:1 hydrochloric acid (HCl - Reagent grade).

6. Triple rinse with deionized-distilled water.

7. Rinse with acetone and finally with pesticide grade hexane.

8. Dry in a contaminant free area such as a laminar flow hood.

The nitric acid and hydrochloric acid washes are designed to remove trace metals, and the acetone-hexane rinses are to remove organic impurities which may interfere with the subsequent priority pollutant analyses. The above cleaning procedure should be rigorous and should immediately precede all sampling events. After they are dried, the equipment and containers should be sealed and stored in a contaminant free area. The practice of taking a "blank" sample before starting actual sampling (as described in Section 2.5) helps to identify any contaminants that were not removed by washing, or that were the result of the handling and transport process.

Methods for cleaning the various sample bottles are discussed below. These methods apply to both new and used sample containers.

2.4.2.1 Metals Containers

Because of the sensitivity of the tests examining waterborne trace metals, particular attention must be given to the thorough cleaning of sample containers. The following schedule should be followed for the preparation of all sample bottles and accessories, whether glass, polyethylene, polypropylene, or Teflon®.

1. Wash with non-phosphate laboratory grade detergent and tap water.

2. Rinse with 1:1 nitric acid (HNO_3 - Reagent grade).

3. Rinse with tap water.

4. Rinse with 1:1 hydrochloric acid (HCl - Reagent grade).

5. Rinse with tap water.

6. Triple rinse with distilled-deionized water.

2.4.2.2 Cyanide Containers

The following procedure should be used to wash bottles for cyanide samples:

1. Wash containers and caps with a clinical, laboratory grade non-phosphate detergent; scrub thoroughly with a brush (if possible, wash liners and caps separately).

2. Rinse three times with tap water, then three times with distilled-deionzied water.

3. Invert to drain dry.

4. Visually inspect for any contamination prior to storage.

2.4.2.3 Asbestos Containers

Containers for asbestos samples should be washed as follows (Anderson and Long, 1980):

1. Wash with clinical laboratory-grade non-phosphate detergent and hot water.

2. Rinse with tap water.

3. Rinse three times with distilled water.

4. Rinse container twice with site water just prior to actual sampling.

2.4.2.4 Volatile Organics Containers

The following procedure should be used to wash the septum vials, Teflon®-silicone septa, and caps used to contain volatile organics samples:

1. Wash vials, septa, and caps with a clinical laboratory grade non-phosphate detergent and hot water.

2. Rinse three times with tap water, then three times with distilled-deionized water.

3. Heat vials and septa at 105° for one hour in a clean oven or muffle-furnace.

4. Allow the vials and septa to cool at room temperature in an enclosed contaminant-free area, such as a laminar flow hood.

5. After cooling, seal the vials with the septa (Teflon® side down) and screw on the caps. The vials should remain sealed until the samples are taken.

2.4.2.5 Extractable Organics Containers

Because of the prevalence of organic solvents and plasticizers in the natural environment and the resulting risk of sample contamination, the sample containers, Teflon® sheeting, and caps must be scrupulously cleaned before use. The following procedure is recommended:

1. Wash the bottles, Teflon® liners, and caps in hot water with a clinical laboratory grade non-phosphate detergent.

2. Rinse three times with tap water and three times with distilled-deionzied water.

3. Rinse bottles, Teflon® liners and caps with acetone and finally with pesticide grade hexane.

4. Air-dry at room temperature in an enclosed contaminant free area such as a laminar flow hood. After they are dried, the containers should be sealed until ready for use.

2.4.2.6 Total Phenolics Containers

Bottles for total phenolics samples should be prepared according to the instructions given for cyanide samples.

2.5 Sample Handling, Preservation and Shipment

The handling, preservation, and shipment of water samples to be analyzed for priority pollutants presents a significant challenge to the investigator because of the risks of sample contamination and the fact that some samples start undergoing changes the instant they are sampled. The risk of sample contamination, briefly discussed in Section 2.4, Container Selection and Cleaning, cannot be underestimated. Many of the EPA-designated priority pollutant compounds are contained in common household items such as disinfectants, paints, cleaners, and preservatives. Many others are commonly present as a result of anthropogenic activities such as combustion, vehicular waste, and pest control. In the laboratory, even more of the listed compounds are used as common chemical solvents. Since these compounds are encountered in the everyday life of the sampling and analysis personnel, the likelihood of contamination of the sample is great unless the proper sample handling and (previously discussed) cleaning procedures are carefully followed. Besides the risk of sample contamination, the risk of sample breakdown due to chemical or biological activity after the sample

has been collected is also great. In general, the complete and unequivocal preservation of samples is a practical impossibility, and complete stability can never be obtained (EPA, 1979b). These obstacles, however, can be overcome if the proper sample handling and preservation precautions are followed. The purpose of this section is to discuss the recommended methods for handling and preservation that are intended to retard biological action, retard hydrolysis of chemical compounds, and reduce the volatility of the components.

2.5.1 Sample Handling

Once a water sample has been obtained, it must be carefully mixed and poured into separate sample containers for metals and inorganics, asbestos, extractable organics, total phenolics, and cyanide (as previously mentioned, grab samples should be taken for cyanide and volatile organics). The specific type and size of each container was discussed in Section 2.4 and is summarized in Table 2-2. Samples may be mixed before splitting by various methods including hand stirring with clean glass or Teflon® rods, shaking or agitating sample containers, and magnetic mixing with Teflon® coated stirring bars. None of the these methods is truly effective for attaining a homogeneous distribution of suspended solids throughout the container. As a result, the last samples poured from the compositing jug usually have the greatest concentration of suspended solids. The recently developed USGS cone splitter may offer the best results for sample splitting; however, judgment should await results of current EPA testing to evaluate the splitter as a possible source of priority pollutant sample contamination because of its plastic construction. The USGS splitter allows the sampling team to obtain different subsample volumes from a sample while still maintaining the same basic chemical and physical properties of the original sample. Studies conducted by the USGS and EPA have shown that the cone splitter can split samples as small as 250 mL into 10 equal subsamples within $\pm$ 3 percent of the correct volume and sediment concentration (USGS, 1980b). Unless it is proved that the USGS cone splitter does not cause contamination, the recommended method of sample splitting is to stir or shake the contents of the jug before pouring each sample, or to siphon water while mixing the compositing jug.

Table 2-2
Container Type, Sample Volume, and Preservation
(EPA, 1979 and 1980; Anderson and Long, 1979)

Sample Parameter	Size and Type of Container	Number of Samples	Preservation Technique	Holding Times
Cyanide	1 liter polyethylene or glass bottle	1	NaOH(1:10 dilution) to pH>12; refrigerate to 4°C	14 days
Metals	1 liter glass or polyethylene bottle	1	Nitric acid (1:1 dilution) to to pH<2	6 months except mercury 2-6 weeks **
Asbestos	1 liter plastic bottle	1	None required. Recommend refrigeration or storage in dark	None specified
Volatile Organics	40 ml or 125 ml glass glass screw top vial	2	Refrigerate to 4°C	7 days+
Extractable	1 gallon amber flint glass bottle	1	Refrigerate to 4°C	Extraction within 48 hours++
Total Phenolics	1 liter glass bottle	1	H_2SO_4 to pH<2 refrigerate to 4°C	28 days

*Where HNO_3 cannot be used because of shipping restrictions, the sample may be initially preserved by refrigerating and should be immediately shipped to the laboratory. Upon receipt in the laboratory, the sample must be acidified to pH<2 with HNO_3. At the time of analysis, the sample container should be thoroughly rinsed with 1:1 HNO_3 and the washings added to the sample (volume correction may be required). According to FAA regulations, other potential corrosives including H_3PO_4 and NaOH are allowed on all commercial passenger airliners at least up to one quart. However, some packaging specifications may be required depending on the liquid and the particular airline in question.

**28 days holding time for mercury sample held in glass container, 13 days for plastic container.

+VOA samples not analyzed within 7 days of collection must be prepared for duplicate analysis. The first duplicate should be refrigerated and analyzed for the alkyl compounds. The second duplicate should be preserved with 1:1 HCl to a pH <2 and analyzed for the aromatic compounds. Maximum holding time for duplicate analysis is 14 days.

++If extractable organics sample will not be extracted within 48 hours of collection and residual chlorine is present they must be preserved by adding 35 mg of sodium thiosulfate per 1 ppm of free chlorine per liter of sample. All samples must be extracted within 7 days and completely analyzed within 40 days.

The volatile organics samples require special treatment because of the very volatile nature of the compounds to be measured. The volatile organics vials should be completely filled to prevent volatilization, and extreme caution should be exercised when filling the vials to avoid any turbulence which could also result in sample loss. The sample should be carefully poured down the side of the vial to minimize turbulence. A two-fold or threefold displacement of water in the vial provides further assurance of a representative sample. As a rule, it is best to gently pour the last few drops into the vial so that surface tension holds the water in a sort of "reverse miniscus." The Teflon®-silicone septa, Teflon® side down, is placed over the convex miniscus and some overflow is lost, but airspace in the bottle is eliminated. After capping, turn the bottle over and tap it to check for bubbles; if any are present, remove the lid, top off the bottle, and repeat the sealing process. It is also important to avoid the risk of contaminating the volatile organics sample during handling and transport. Samples can be contaminated by diffusion of volatile organics (particularly fluorocarbons and methylene chloride) through the septum seal into the sample. A field reagent blank, or "trip blank," prepared from organic free water and carried through the sampling and handling protocol can serve as a check on such contamination (EPA, 1980).

Samples should be clearly labelled with the date, time, sample code, station location, sampling team member's initials, analysis requested, and preservation treatment (See Figure 2-8). Duplicate samples should also be prepared in order to provide a quality control check on laboratory analysis. The number of duplicates prepared per sample batch should be determined in consultation with the laboratory performing the analyses and in accordance with the laboratory's quality assurance plan. The investigator should note, however, that in order to meet duplicate needs, the sample volumes collected will have to be adjusted. Duplicate samples prepared for analysis should be labelled with an individual sample code similar to other samples and not identified as a duplicate. The volume level should be marked on all sample containers. This will indicate to the laboratory personnel whether any sample has been lost in the shipment process or whether the sample has been contaminated by fluid entering the

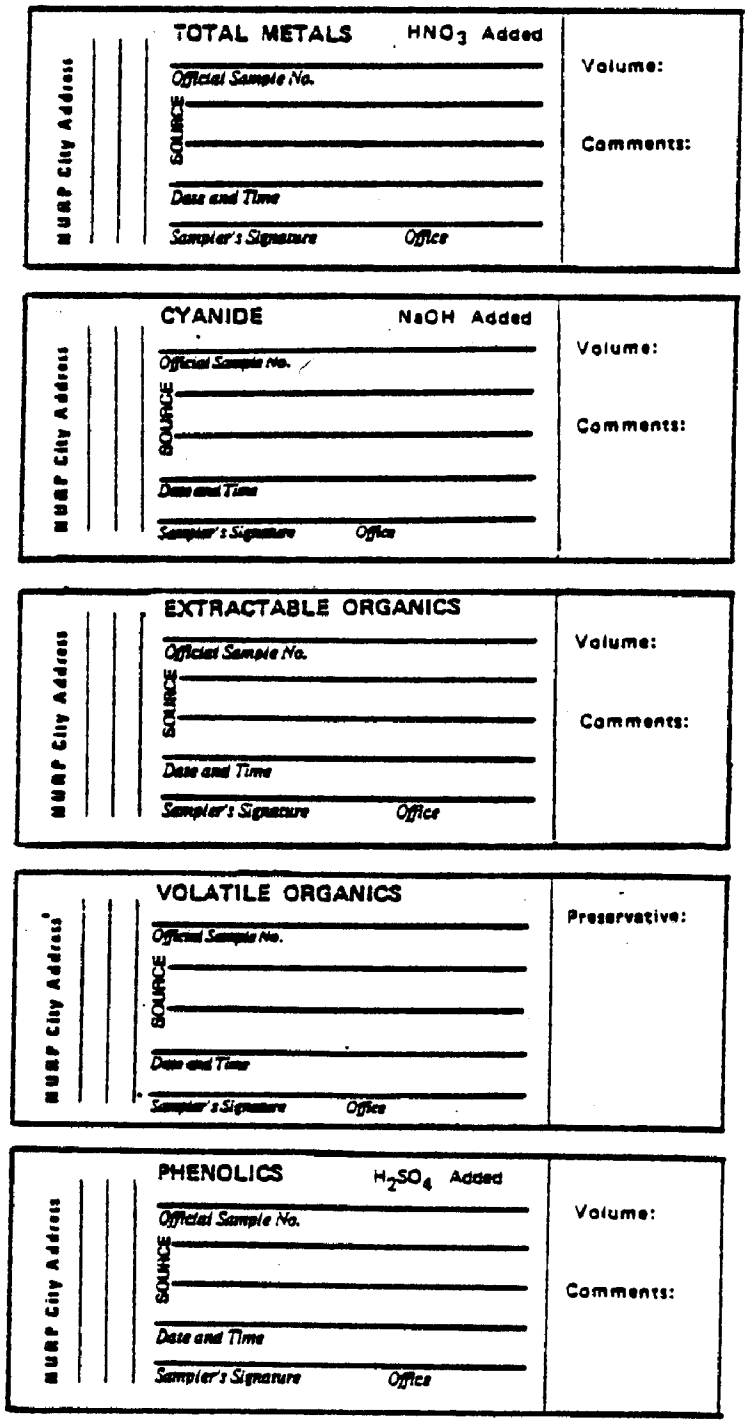

Figure 2-8. Sample Labels.

container. The field blank collected should also accompany all samples and duplicates as they are prepared for laboratory shipment.

Documentation during sample collection should include a cumulative listing of sample times, methods, locations, and sample codes. Other pertinent information, such as time the sample was taken, depth, and any *in situ* measurements, should be recorded in a field notebook and cross-referenced to the sample by using the identification number.

2.5.2 Sample Preservation

Refrigeration of samples to 4°C is a common technique used in field work and helps stabilize samples by reducing biological and chemical activity. All samples except metals must be refrigerated. In addition to refrigeration as a general means of sample preservation, specific techniques are required for certain parameters as discussed in the following subsections. Table 2-2 lists preservation techniques as well as container types, sample quantity, and maximum holding times.

2.5.2.1 Metals

Nitric acid (diluted 1:1 from concentrated reagent) should be added to the sample to adjust the pH to less than 2. Again, the pH may be tested by pouring several drops onto a piece of pH test paper. Adjusting the sample to pH less than 2 will stabilize the sample for up to 6 months. Neither nitric acid nor the preserved samples can be shipped by air freight If the sampling trip involves air travel, the sample may be initially preserved by refrigerating and should be shipped to the laboratory immediately. Upon receipt in the laboratory, the sample must be acidified to pH <2 with HNO_3. At the time of analysis, the sample container should be thoroughly rinsed with 1:1 HNO_3 and the washings added to the sample (volume correction may be required).

When it is desired to determine concentrations of dissolved metals in the water sample, the sample must be filtered through a 0.45 micron average pore diameter membrane filter immediately after collection. It is advisable to discard the first 150 to 200 mL of filtrate in order to rinse the filter and filtering apparatus of any contaminating substances. After filtration, the sample (minimum volume 200 mL) should be preserved as

discussed above. It is recommended that all-plastic filtering equipment and polycarbonate filters be used when taking dissolved metals samples since glass filtering apparatus and cellulose membrane filters may cause metal ion filtration losses (Truitt and Weber, 1979).

2.5.2.2 Cyanide

Oxidizing agents such as chlorine decompose many cyanides. If the sample site is near a sewage treatment facility, power plant, or other industry which may be using chlorine to treat discharge water, the sample should first be tested to determine if residual chlorine is present. This may be done by placing a drop of the sample on a piece of potassium iodide-starch test paper. A blue color indicates the need for treatment. If treatment is required, add ascorbic acid, a few crystals at a time, until a drop of the sample shows no color on the indicator paper. Then add an additional 0.6 g of ascorbic acid for each liter of sample volume and mix well. The ascorbic acid may be prepared in 0.6 g packets at the laboratory prior to beginning the sampling. This test does not always give positive results with small quantities of chlorine. This concentration, however, will not significantly interfere with analysis procedures.

A NaOH solution (1:10 dilution previously prepared) should be added to all cyanide samples to adjust the pH to a value greater than 12. The pH may be adequately measured using pH test paper (the paper should not be placed in the sample, but rather a few drops of sample can be poured onto the paper). After the pH is adjusted, the sample should be refrigerated to 4°C immediately. By adjusting the pH and refrigerating the sample, loss of hydrogen cyanide may be prevented. Samples should be analyzed for cyanide within 14 days (EPA, 1980).

If air travel is involved in the sampling trip, no more than 0.95 liter (1 quart) of sodium hydroxide can be taken on a commercial flight. This volume of NaOH should be more than adequate for normal sampling trips.

2.5.2.3 Asbestos

No preservation methods are required for asbestos samples. It is recommended that the sample be refrigerated to 4°C or kept in the dark to reduce biological activity.

2.5.2.4 Volatile Organics

All samples collected for volatile organics analysis must be iced or refrigerated to 4°C from the time of collection until extraction. If the sample contains residual chlorine, add sodium thiosulfate preservative, (10 mg/40 mL will suffice for up to 5 ppm Cl_2) to empty sample bottles just prior to collection or shipment to the sample site.

Samples must be collected in duplicate with one sample preserved with acid if more than 7 days will elapse before analysis. The acid preservative, as described below, can degrade the alkyl compounds; therefore, the acid preserved samples are to be used only for the analysis of the aromatic hydrocarbons. The specific procedures to be followed when 7 days will elapse before analysis are as follows (EPA, 1980):

1. In the first duplicate, do not use acid preservative. Fill a sample bottle so that no air bubbles pass through the sample as the bottle is being filled. Seal the bottle so that no air bubbles are entrapped in the bottle. Shake vigorously for 1 minute if sodium thiosulfate is being used. Label as "no acid sample." Maintain the hermetic seal on the sample bottle until analysis.

2. Collect about 500 mL of sample in a clean container. Adjust the pH of the sample to about pH 2 by adding HCl (1:1) while stirring vigorously. Fill a sample bottle so that no air bubbles pass through the sample as the bottle is being filled. Seal the bottle so that no air bubbles are entrapped in the bottle. Shake vigorously for 1 minute if sodium thiosulfate is being used. Label as "acid preserved." Maintain the hermetic seal on the bottle until analysis.

Before filling either of the duplicates with water, add a few clean boiling beads to facilitate mixing.

Finally, all volatile organics samples must be analyzed within 14 days of collection. In summary, if the sample is to be analyzed within 7 days of collection, no duplicate is required and the single sample may be analyzed for both alkyl and aromatic compounds. If more than 7 days will elapse before analysis, duplicate samples are required with the no-acid sample analyzed for the alkyl compounds and the acid preserved sample analysed for the aromatic compounds.

2.5.2.5 Extractable Organics

All samples collected for extractable organics analysis must be iced or refrigerated to 4°C from the time of collection until extraction. Immediate delivery (within 24 hours) to the laboratory avoids the need for the addition of chemical preservatives. However, if the samples will not be extracted within 48 hours of collection, they must be preserved as follows: if the sample contains residual chlorine, add 35 mg of sodium thiosulfate per 1 ppm of free chlorine per liter of sample. All samples must be extracted within 7 days and completely analyzed within 40 days of collection (EPA, 1980).

2.5.2.6 Total Phenolics

Preserve samples for total phenols analysis by adjusting the pH to less than 2 with reagent grade sulfuric acid (H_2SO_4). Samples should be stored at 4°C until analysis. The maximum holding time is 28 days (EPA, 1980).

2.5.3 Sample Transport

Samples should be directly transported to the laboratory the same day they are collected. All sample containers should be placed in a strong shipping container such as a metal picnic cooler. All lids should be tightened before containers are placed in the shipping container. Glass bottles should be separated in the shipping container by cushioning (e.g., styrofoam) or absorbent material (e.g., blotting paper) to prevent contact with other objects and to eliminate breakage. For example, a 3.8-liter (1-gallon) glass bottle (extractable organics samples) can be placed in two carved out styrofoam sheets which secure the bottle at the top and bottom. Small glass bottles (volatile organics samples) can be placed inside 0.95-liter (1-quart) plastic cubic containers with screw-type lids to minimize breakage and contain any leakage.

Polyethylene bottles or plastic cubic containers do not require cushioning material to prevent breakage but do need to be protected from punctures by sharp objects.

All samples should be maintained at 4°C during transport. Ice or synthetic "blue ice" can be placed in separate plastic bags and sealed,

or in large mouthed cubic containers with lids. As an alternative, sample bottles and ice can be placed together in a large sturdy plastic bag which will provide an additional waterproof lining to the shipping container. After all sample containers have been carefully arranged and ice has been added, then samples should be delivered to the laboratory for analysis.

If the laboratory selected to analyze toxic pollutants is more than 150 miles away, it may be necessary to use a commercial carrier that provides overnight delivery to ensure that sample holding time constraints are met. Regardless of the carrier, it is essential that arrangements for sample pickup be made prior to sampling period termination. Most carriers have a deadline for package pickup but are willing to make special arrangements if notified in advance. It is advisable to establish an account with the carrier and to obtain a supply of appropriate air bills to expedite sample shipment. It is imperative that the laboratory be given maximum time possible to coordinate sample delivery and analysis. Before sampling is initiated, the laboratory should be contacted and informed of intended sampling activities.

Another shipping option is that of using a commercial airline. However, this option requires making arrangements for laboratory personnel to pick up samples when they arrive. Under normal circumstances, water samples will not meet DOT criteria of hazardous materials as described in 49 CRF 170-179 and, therefore, may be shipped as non-hazardous. Samples can be shipped in coolers by procedures similar to those described for local transport. The shipping container must be marked "THIS END UP," and arrows which indicate the proper upward position of the container should be affixed. A sticker containing the laboratory's name and address must be placed on the outside container. Care must be taken to secure the drainage hole at the bottom of the cooler so that if a sample container leaks or if ice water leaks through the ice bag, the contents cannot escape through the drainage hole. The container should be taped shut in order to obtain as much of a seal as possible around the lid to prevent any leakage.

As soon as sampling is initiated, the toxic pollutant analysis laboratory should be notified so that they can be prepared for sample receipt. Immediately after shipment, the laboratory should be contacted and

the following information relayed:

- Sample numbers
- Name of carrier
- Airbill numbers
- Number of containers
- Date and time of shipment
- Estimated date and time of delivery
- Any problems relating to shipment

When the samples are received at the laboratory, they should be recorded in a permanent log book. This log book should include for each sample, date and time received, source of sample, sample number, how transported to the laboratory, and the number assigned to the sample by the laboratory if this number differs from the field number. Although this recording procedure may seem laborious, it is absolutely imperative that precise records be kept for all samples so that the data generated by the sampling and analysis effort is of unquestionable integrity.

An accurate written record should be maintained which can be used to trace possession of the sample from the moment of its collection until it has been analyzed. A chain of custody tag (Figure 2-9) should be placed on all coolers in which samples are stored and shipped. This should have appropriate spaces for signatures when the sample is transferred from one person to another. The date and time at which the custody is transferred should be indicated on the tag.

2.6 Quality Assurance/Quality Control Procedures

Proper Quality Assurance and Quality Control (QA/QC) measures are essential for ensuring that the sampling and analytical techniques employed produce data with known accuracy and precision. Before any sampling occurs, a detailed QA/QC program should be coordinated between the sampling team leader and the laboratory QA/QC officer. Although development of a specific QA/QC program is beyond the scope of this effort, the following controls should be incorporated:

CHAIN OF CUSTODY RECORD

				SAMPLERS (Signature)					
STATION NUMBER	STATION LOCATION	DATE	TIME	SAMPLE TYPE Water Comp.	Water Grab.	Air	SEQ. NO.	NO. OF CONTAINERS	ANALYSIS REQUIRED

Relinquished by: (Signature)	Received by: (Signature)	Date/Time
Relinquished by: (Signature)	Received by: (Signature)	Date/Time
Relinquished by: (Signature)	Received by: (Signature)	Date/Time
Received by: (Signature)	Received by Mobile Laboratory for field analysis: (Signature)	Date/Time
Dispatched by: (Signature) Date/Time	Received for Laboratory by:	Date/Time
Method of Shipment:		

Distribution: Orig.—Accompany Shipment
1 Copy—Survey Coordinator Field Files

Figure 2-9. Chain-of-Custody Tag.

1. Sample blanks - Distilled water brought from the lab is poured, in the field, into the collecting device, then into the composite jug, and then into the respective sample containers. This is a check on contamination from containers and lab water.

2. Reagent blanks - Distilled water is poured into sample containers for cyanide, metals, and phenols, and appropriate preservatives are added. This is a check on the purity of reagents.

3. Spiked samples - A known quantity of pollutant is added to one of a pair of duplicate samples. This is a check on accuracy of analytical results and possible loss of pollutants during storage.

4. Duplicate samples - Identical samples are taken, assigned separate sample numbers, and sent back to the lab. This is a check on the precision of analytical results.

The number of samples taken for each of the above controls should be sufficient to identify contamination problems and to quantify accuracy and precision.

2.7 References

American Public Health Association (APHA). 1976. Standard Methods for the Examination of Water and Wastewater. 14th Ed. Washington, D.C. 1193 p.

Anderson, C.H., and J.M. Long. 1980. Interim Method for Determining Asbestos in Water. U.S. EPA. Office of Research and Development. Athens, GA. EPA-600/4-80-005.

Bellar, J.A., W.L. Budde, and J.W. Eichelberger. 1979. The Identification and Measurement of Volatile Organic Compounds. In: Aqueous Environmental Samples in Monitoring of Toxic Substances. D. Schuetzle, Ed. ACS Symposium Series No. 94. American Chemical Society. Washington, D.C.

Cooper, L.H.N. 1958. A System for International Exchange of Samples for Trace Element Analysis of Ocean Water. Journal of Marine Research. 17:128-132.

Federal Working Group on Pest Management (FWGPM). 1974. Guidelines on Sampling and Statistical Methodologies for Ambient Pesticide Monitoring. National Technical Information Service. U.S. Department of Commerce. Washington, D.C. PB-239-798.

Feltz, H.R., and J.K. Culbertson. 1972. Sampling Procedures and Problems in Determining Pesticide Residues in the Hydrologic Environment. Pesticide Monitoring Journal. 6(3):171-178.

Feltz, H.R., W.T. Sayers, and H.P. Nicholson. 1971. National Monitoring Program for the Assessment of Pesticide Residues in Water. Pesticide Monitoring Journal. 5(1):54-59.

Giam, C.S., H.S. Chan, and G.S. Neff. 1975. Sensitive Method for Determination of Phthalate Ester Plasticizers in Open-Ocean Biota Samples. Analytical Chemistry. 47:2225-2229.

Harris, D.J., and W.J. Keffer. 1974. Wastewater Sampling Methodologies and Flow Measurement Techniques. U.S. Environmental Protection Agency, Region VII. Surveillance and Analysis Division. Kansas City, MO.

King, D.L. 1971. Sampling in Natural Waters and Waste Effluents. In L.L. Ciaccio, (ed.), Water and Water Pollution Handbook, Volume 2. Marcel Dekker Publishing, Inc., N.Y.

Kittrell, F.W. 1969. A Practical Guide to Water Quality Studies of Streams. Federal Water Pollution Control Administration. Cincinatti, Ohio.

Mackenthun, K.M. 1969. The Practice of Water Pollution Biology. Federal Water Pollution Control Administration. Washington, D.C.

Robertson, D.E. 1968. Role of Contamination in Trace Element Analysis of Sea Water. Analytical Chemistry. 40(7): 1067-1072.

Sanders, T.G. (ed.). 1979. Design of Water Quality Monitoring Networks. Colorado State University. Ft. Collins, Colo.

Segar, D.A., and G.A. Berberian. 1975. Trace Metal Contamination by Oceanographic Samplers. Amer. Chem. Soc., Advances in Chem. Series. 147:9-21.

Shelley, E. 1977. Sampling of Water and Wastewater. Environmental Research Information Center Office of Research and Development. U.S. EPA. Cincinnati, Ohio.

Tolg, G. 1972. Extreme Trace Analysis of the Elements - I: Methods and Problems of Sample Treatment, Separation and Enrichment. Talanta. 19:1489-1521.

Truitt, R.E., and J.H. Weber. 1979. Trace Metal Ion Filtration Losses at pH 5 and 7. Analytical Chemistry. 51(12):2057-2059.

U.S. Environmental Protection Agency. 1979a. Handbook for Analytical Quality Control in Water and Wastewater Laboratories. Environmental Monitoring and Support Laboratory. Office of Research and Development. Cincinnati, Ohio. Chapter 10.

U.S. Environmental Protection Agency. 1979b. Methods for the Chemical Analysis of Water and Wastes. Environmental Monitoring and Support Laboratory. Office of Research and Development. Cincinnati, Ohio.

U.S. Environmental Protection Agency. 1980. Draft Protocols for the Analysis of Priority Pollutants. Methods 601-613, 624 and 625. Monitoring Technology Division. Office of Research and Development. Washington, D.C.

U.S. Environmental Protection Agency. 1981. Handbook for Sampling and Sample Preservation in Water and Wastewater. Environmental Monitoring and Support Laboratory. Office of Research and Development. Cincinnati, Ohio. (EMSL 0220).

U.S. Geological Survey. 1980a. National Handbook of Recommended Methods for Water Data Acquisition. Office of Water Data Coordination. Reston, VA.

U.S. Geological Survey. 1980b. USGS Cone Splitter. Quality of Water Branch Technical Memorandum No. 80. Reston, Virginia.

U.S. National Bureau of Standards. 1974a. Sampling, Sample Handling, and Analysis. Symposium on Accuracy in Trace Analysis. Proceedings of the 7th IMR Symposium. P.D. Lafleur, Ed. NBS Special Publication 422. Washington, D.C.

U.S. National Bureau of Standards. 1974b. Marine Pollution Monitoring (Petroleum). Proceedings of a Workshop. NBS Special Publication 409. Washington, D.C.

U.S. National Bureau of Standards. 1976. A Survey of Current Literature on Sampling, Sample Handling, and Long Term Storage for Environmental Materials. U.S. Department of Commerce. Washington, D.C.

3.0 SAMPLING BED SEDIMENT

Sediment is an important indicator of pollution because it acts as an information integrator and repository for many contaminants. Unlike water samples, which show only instantaneous conditions, bed sediment samples can show long-term trends in the quality of the overlying water for some of the priority pollutants. Most of the priority pollutants are partitioned more strongly in sediment than in water; thus, if these pollutants have been present recently and are not quickly degraded or desorbed, they are evident in the sediment analysis. Bed sediment analysis can thus be an important tool in studying the occurrence and distribution of priority pollutants. Feltz (1980) summarizes the significance and use of bed sediment (bottom material):

1. As a historical water quality integrator.
2. As a reconnaissance tool.
3. In planning analytical schedules.
4. In conducting short-lived studies.
5. For deriving short- and long-term trends.
6. For identification of problem areas.

As discussed later in this chapter, the capacity of sediments to adsorb, coprecipitate, and otherwise bind pollutants varies widely depending upon such factors as grain size, organic carbon content, and iron and manganese concentrations. For this reason, it is recommended that study designs include provisions for analyzing particle size distribution, total organic carbon, iron concentration, manganese concentration, and any other parameters which could help in interpreting data from various sites.

This section has been developed as a guide for sampling bed sediment in streams, rivers, lakes, and estuaries for bulk analysis for the EPA-designated priority pollutants (Appendix A). It is intended to specify the procedures that should be used in collecting, storing, and preserving sediment samples, with the understanding that the results will be used to indicate areas of potential water quality problems rather than as an exact

historical record of long-term conditions. As such, the equipment, procedures, and site selection techniques are geared to a semi-quantitative approach emphasizing convenience, efficiency, and protection from contamination. Site selection is discussed in Section 3.1 of this report; sampling equipment and techniques are described in Section 3.2; and sample handling, preservation, and transport are discussed in Section 3.3.

3.1 Site Selection

The selection of sampling sites when screening for priority pollutants requires considerable forethought to maximize the returns while considering relative costs, data accuracy, and physical limitations. The programs for which this manual has been written will use sediment samples to indicate whether or not priority pollutants are present or have been present in the overlying water column. Site selection, therefore, should be limited to areas where (1) pollutants will have the best chance of being detected if they are or have been present in the surrounding ambient waters; (2) access is relatively easy in order to limit extensive field operations and minimize costs; and (3) the sampling devices recommended in this manual can be readily used.

The ability of sediments to sorb pollutants is related to several factors, one of the more important of which is grain size. As grain size decreases, the surface-to-volume ratio increases, so that there is more contact with the water column and generally greater sorptive capacity. The finer sediments such as clays and silts, therefore, will have a greater probability of exhibiting pollutants than coarse sediments such as sand and gravel. Thus, site selection should be limited to areas where fine sediments are present in active deposits. A further advantage of sampling fine-grained, unconsolidated sediments is that such sediments tend to be relatively high in organic carbon. Organic carbon content is another major factor affecting the amount of adsorption of both metals and organic pollutants. It should be noted that consolidated sediments are often representative of sediments deposited some time ago; therefore unconsolidated sediments should be sampled.

Depositing areas are found where the current speed is slow. Greatest deposition occurs where a stream slows down from fast current to

slow current. Typical depositing areas include insides of river bends, downstream of islands, and downstream of obstructions in the water. Estuarine areas, the region where fresh water mixes with salt water, are often an area of enhanced deposition. This zone represents an area of constant shoaling and a turbidity maximum usually occurs in the water column (Holliday, 1978). Sites that are located immediately above or below the confluence of two streams or rivers should generally be avoided. This is because the flows from two tributaries do not necessarily immediately mix, and the sediment may be moving almost as two streams in proportion to the inflow from two tributaries. Potential sites upstream from the confluence with another stream may also be unsuitable at times due to possible backflow which can disrupt the normal movement of sediment. When lakes, ponds, and reservoirs are to be sampled, consider sampling at the center of water mass. This is particularly true for reservoirs that are formed by the impoundment of rivers or streams. Generally, the coarser grained sediments are deposited near the headwaters of the reservoir, and the bed sediments near the center of the water mass will be composed of fine-grained materials (USGS, 1980). The shape, inflow pattern, bathymetry, and circulation must all be considered when sampling sites are selected in lakes, reservoirs, or estuaries.

Potential sampling sites must also be evaluated for accessibility. Selecting sites that can easily be reached by vehicle will greatly reduce the time necessary for field activities. Bridges, piers, and other projections over the water are readily accessible, but sediment conditions may not be representative or appropriate for sampling (e.g., dredging is often done around piers; bridges are often constructed at the narrowest point in the water body and the constriction increases water velocity). Frequently water body conditions will require the use of a boat; the site, therefore, should be located in the vicinity of launching ramps or areas where a boat is easily carried and launched.

Equipment availability will also help in determining suitable sampling sites. Because the primary recommended collection tools are Teflon® or glass tubes, shallow wadeable areas are best suited for sampling. However, areas that are exposed during low flow or low tide periods

should not be sampled, because they do not represent continuous exposure and some pollutants can be more readily oxidized or volatilized when the sediments are not inundated. To ensure that periodically exposed sediments are not collected, it is best to sample during low flow or low tide periods. It will not always be possible to locate sites in shallow, wadeable areas. In some instances (particularly in estuarine areas), it may be necessary to sample deep waters or coarse substrates to determine sediment quality in particular locations. In such cases, gravity corers or grabs may be used to collect samples, and site selection can be modified accordingly.

As pointed out by Feltz (1980), fresh sediment deposits represent seasonal transport, and repetitive sampling and analysis of samples from fresh deposits can reveal seasonal or short-term trend data. In order to maximize information regarding such trends, the following procedure may be used.

The geological study of stratigraphy is based upon the principal of a vertical sequence of strata with older layers at the bottom of the column and more recent layers at the top. Methods have been developed for dating formations according to their characteristic fossils. While the sediments of concern in the programs to which this manual pertains are all of recent origin and do not contain characteristic fossils, a rough method of identifying recent deposits within a specific area may be utilized. The essential requirements for this procedure are a coring device capable of taking three to four foot core samples and a means of identifying a precise area of the bottom during repeated sampling efforts. The easiest means of identifying such an area is to use a piling, stage height gage, bridge, pier, or other permanent fixture.

During the first reconnaissance trip to the site, a core sample is taken which includes the deeper and more permanent sediment layers. A representative core from the site is either saved for future reference or carefully photographed. The stratigraphy of this core is documented and a deep (old) layer is noted for future reference. All overlying layers are recorded in terms of distance (in cm) above this layer. When sampling personnel return to the site during the next scheduled sampling excursion,

another core is taken which penetrates to at least the same depth. The characteristic reference layer is identified, and again distances are measured from this layer to each of the overlying strata. By this means, newly deposited strata may be identified and any disturbance of the upper strata resulting from storm events, etc., should be identifiable. This method enables the investigators to identify recent strata and determine the extent of deposition or scour which has occurred since the last sampling program. Such data are extremely valuable in interpreting sediment transport phenomena.

Alternative methods of measuring deposition and scour are possible. A very simple method involves accurately measuring the distance from the top of a piling, staff gauge, or other reference point to the top layer of sediment each time. This procedure will only work, however, if the water body has not been subjected to ice cover since the last sampling program. Even moderate ice cover is capable of pulling piles upward as the water level rises. Yet another possibility, more sophisticated and difficult, involves some means of taking a fix upon a permanent landmark on the shore and determining the exact location by triangulation methods. Cores are then taken in proximity to each other during the repeated sampling trips.

If a piling is used as the reference point, samples should always be taken upstream of the piling. This reduces the influence of scour which might occur as a result of propwash from motorboats which use the piling for mooring purposes. The boats will naturally tend to drift downstream of the piling because of the current, and scour is more likely to occur in that direction.

If the effects of particular sources of pollutants on water and sediment quality are to be investigated, sampling sites should be located both upstream and downstream of the source. In order to facilitate comparison of samples, special care should be taken to ensure that sites are located in areas with similar grain size characteristics. It should be taken into consideration that most or all of the sediment at the downstream location could have been upstream as recently as the last storm event and may not have been exposed to pollutants long enough to accumulate them significantly.

Once a site has been selected, it will be the responsibility of the investigator to collect a sample which is representative of the deposited sediment in that area. In most circumstances, a number of samples should be collected along a cross section of a river or stream in order to adequately characterize the bed material. Investigators do not need to establish a complex sampling transect when screening sediments for priority pollutants. A common procedure is to sample at quarter points along the cross section of the site selected. When the sampling technique or equipment requires that the samples be extruded or transferred at the site, they can be combined into a single composite sample. However, samples of dissimilar composition which may alter or shed doubt on the representativeness of the composited sample should not be combined but should be analyzed separately in the laboratory.

In review, the criteria that should be used in selecting sample sites include:

1. Depositing area, with slow current, where silt/mud/clay is settling out. Nothing more coarse than sand (maximum grain size 2mm) should be collected, and silt or clay is preferred.

2. Readily accessible by field personnel. Shallow wadeable waters where the coring tubes can be driven by hand are preferred. However, bridges, piers, or boats may also be used, provided adequate sampling equipment is available.

3.2 Sampling Equipment and Use

A number of collection techniques have been developed to sample sediment material representative of different substrates. In the selection of a sampling device, the investigator must consider: (1) the nature of the bed material to be sampled; (2) the structural detail of sediment layering desired; (3) the amount of sediment material needed for analysis; (4) the depth of water above the sediment; (5) the degree of sediment disturbance by the sampling device; and (6) the possible interferences or contamination introduced by the sampling device. In response to these criteria, sediment sampling equipment can be divided into three basic categories:

1. Scoops or drag buckets.

2. Coring devices.

3. Mechanical grabs.

While sampling for priority pollutants, it is important not to disturb the top layers of sediment and to minimize the loss of low-density deposits during any sampling process. This is because the main emphasis is on the sampling of recently deposited material, which may indicate water quality conditions in the fairly recent past (Feltz and Culbertson, 1972). This material is generally unconsolidated and easily disturbed unless the proper sampling equipment and precautions are used. All sampling equipment will cause the formation of an hydraulic disturbance, or "shock wave," as a result of its design and the manner in which it is used. The shock wave may result in the displacement of the fine overlying sediment material before the sample is contained, or as it is retrieved to the surface. A number of investigators (Wigley, 1967; Flannigan, 1970; Hudson, 1970; Paterson and Fernando, 1971; Howmiller, 1971) have reported on this phenomenon. Most of their research has focused on the displacement of benthic macroinvertebrates such as the small crustaceans, worms and larvae. The principles, however, apply to the sediment fines as well. Of the three major types of sampling devices, the scoops and drag buckets cause the greatest degree of disturbance and, therefore, are not recommended for priority pollutant sediment sampling. Corers and mechanical grabs also disturb the sediment-water interface to some extent; however, if precautions are taken, this disturbance can be minimized. The particular limitations for each sampling device are discussed in their respective sections.

The degree of contamination introduced by the sampling device or technique must also be carefully considered. Plastics are particularly to be avoided because they can introduce phthalate esters and compounds that can interfere with pesticide analyses; they are also known to sorb pesticides. Metal devices, which are prone to corrosion, may also introduce interfering substances and if possible should also be avoided (Cooper, 1958; Robertson, 1968; EPA, 1977a). When conditions dictate the use of a

metal-containing device, strict attention should be given to the recommendations for minimizing metal interference; otherwise, only devices constructed of high quality stainless steel should be used. High quality glass and Teflon®, when properly cleaned, offer the most satisfactory material for priority pollutant sampling. Since the use of these materials is limited to the coring devices, they are recommended as the primary tools for priority pollutant sediment sampling. The various coring and mechanical devices are reviewed in the following sections, with a discussion of their limitations and of the precautions to be observed in their use. Table 3-1 at the end of this section summarizes the equipment discussed, the suitable environment for equipment use, and the equipment's advantages and disadvantages.

Finally, for reproducibility of sediment sampling results, regardless of the equipment or technique used, operator training is absolutely essential and sampling should not be entrusted to well-intentioned but untrained staff or volunteers. This is, of course, true for all types of environmental sampling.

In terms of volume, at least 500 mL (about 1 pint) should be collected per site, and as a rule, it is advisable to collect 1000 mL (about 1 qt), in order to run duplicates or confirmation analyses when desired. Check with the laboratory doing the analyses for the exact amount required. Note that if additional analyses (e.g., particle size distribution, total organic carbon) will be performed, additional volume will be required.

3.2.1 Corers

Core samplers are used to sample vertical columns of sediment. They are particularly useful when a historical approach to sediment deposition is desired, for they preserve the sequential layering of the deposit. Many types of coring devices have been developed depending on the depth of water from which the sample is to be obtained, the nature of the bottom material, and the length of core to be collected. Core samplers vary from hand pushed tubes to explosive or weight driven devices. Since priority pollutant sampling is generally concerned with the uppermost sediment layers, only the devices that can adequately take shallow cores are discussed below.

Coring devices are particularly useful in pollutant monitoring because (1) the "shock wave" created by descent is minimal, thus the fines of the sediment-water interface are not disturbed; (2) the sample is withdrawn intact permitting the removal of only those layers of interest; (3) core liners manufactured of glass or Teflon® can be purchased, thus reducing possible sample contamination; and (4) the samples are easily delivered to the lab for analysis in the tube in which they are collected. The disadvantage of coring devices is that a relatively small surface area and sample size are obtained, necessitating repetitive sampling in order to obtain the required amount needed for analysis. Because it is felt that this disadvantage is offset by the advantages, coring devices are recommended in sampling sediments for priority pollutants. Following is a review of the most commonly used coring devices.

3.2.1.1 Teflon or Glass Tube

In shallow wadeable waters, the direct use of a core liner or tube manufactured of Teflon® or glass is recommended for the collection of sediment samples. Their use can also be extended to deep waters when SCUBA equipment is available. Teflon® is preferred to avoid glass breakage and possible sample loss. The use of the tube by itself eliminates any possible metal contamination from core barrels, cutting heads, and retainers and also cuts down on disturbance of surficial sediments (Flannigan, 1970). The tube should be approximately 13 cm (5 in) in length since only recently deposited sediments (8-13 cm (3-5 in)) are to be sampled. Soft or semi-consolidated sediments such as mud and clays have a greater adherence to the inside of the tube and thus can be sampled with large diameter tubes. Because coarse or unconsolidated sediment such as sand and gravel will tend to fall out of the tube, a small diameter is required for them. Since silt or clay materials are preferred for analysis of priority pollutants, a tube about 5 cm (2 in) in diameter is usually the best size. The wall thickness of the tube should be about 3 mm (1/8 in) for either Teflon® or glass.

Actual sample collection is an easy operation conducted by one person. Caution should be exercised, when the sample is obtained by wading in shallow water, not to disturb the area to be sampled. The core tube is

pushed into the substrate until only 2.5 cm (1 in) or less of the tube is above the sediment-water interface. When sampling hard or coarse substrates, a gentle rotation of the tube while it is pushed will facilitate greater penetration and cut down on core compaction. The tube is then capped with a Teflon® plug or a sheet of Teflon® held in place by a rubber stopper or cork. After capping, the tube is slowly extracted, the negative pressure and adherence of the sediment keeping the sample in the tube. Before the bottom part of the core is pulled above the water surface, it too is capped.

To help prevent contamination from direct contact between the sampler's hands and the upper part of the tube, a collar-type device can be constructed of wood and should have a circular recess to accept the top of the tube. The recess should have a hole in it to allow water to pass through when the tube is pushed in, and should be lined with sheet Teflon®. Handles should be attached to the sides of the collar. After the tube is driven in, impart a wide circular motion to help loosen the core for easy removal; take off the collar device; cap the top of the tube (as described above); pull it up out of the sediment layer; and cap the bottom of the tube before removing it from the water.

Another method of obtaining recently deposited sediments in shallow, wadeable waters with a core tube is to use the tube as a horizontal scoop. The tube should be placed on its side on the sediment surface and carefully inserted into the sediment so that the top inside surface is just at the sediment water interface. It is important to disturb the fines as little as possible. After the tube is filled, both ends should be capped with a Teflon® plug, as described above, before the tube is removed from the sediment. If this method is used with a tube having an outer diameter of 5.2 cm and wall thickness of 3 mm, only the top 4.5 cm of sediment will be sampled (allowing a 1 mm clearance between the sediment surface and top inside of the tube).

Cores should always be kept upright, and should be immediately transferred to a cooler.

As previously mentioned, a minimum of 500 mL, and preferably 1 liter, of sediment should be collected at each site. This translates into

a minimum of 3, and preferably 5, tubes with 10 cm-long (4 in) cores, outer diameter of 5.2 cm (2 in), and wall thickness of 3 mm (1/8 in) (the volume of each core would be about 190 mL). For other tube sizes and core lengths, the number of tubes necessary can, of course, be calculated by using the formula for the volume of a cylinder.

When sampling water slightly deeper than wading depth or when sampling shallow water from a boat, the coring tube may be modified by adapting a handle to the tube. Many devices have been improvised to accomplish this goal; two custom-made devices (Maitland, 1969; Bouma, 1969) are provided as examples (Figures 3-1 and 3-2). It will be necessary, however, to incorporate a valve or capping device at the top of the coring tube to prevent sample loss when the tube is retrieved.

When the sediment material is difficult to penetrate with a Teflon® or glass tube, a commercially available hand coring device may be used (Figure 3-3). These devices are equipped with a metal barrel with a handle and a core liner. The liner is inserted and then held in place by a screw-on core cutter, usually manufactured of stainless steel. The core cutter, along with the handle attached to the core barrel, increases the efficiency of sediment penetration. After the sample has been obtained, the cutting head is removed and the liner carefully withdrawn and immediately capped as previously described. When coarse grain deposits such as sand are sampled, the use of a core retainer will increase the efficiency of sample retention. Only retainers manufactured of stainless steel should be used in order to minimize the risk of trace metal contamination. When several samples are to be obtained, it is advisable to carry several core liners to the sample site. This eliminates the need for time consuming extrusions and permits the use of the core liners as sample containers for shipment to the lab.

3.2.1.2 Gravity Corers

Gravity corers, so named because the energy that causes them to penetrate the bottom is derived from the momentum of free fall, are designed for use in deeper bodies of water. Many variations of the gravity corer have been devised; however, all have the same general characteristic of taking a section of the bottom material that preserves the details of layering.

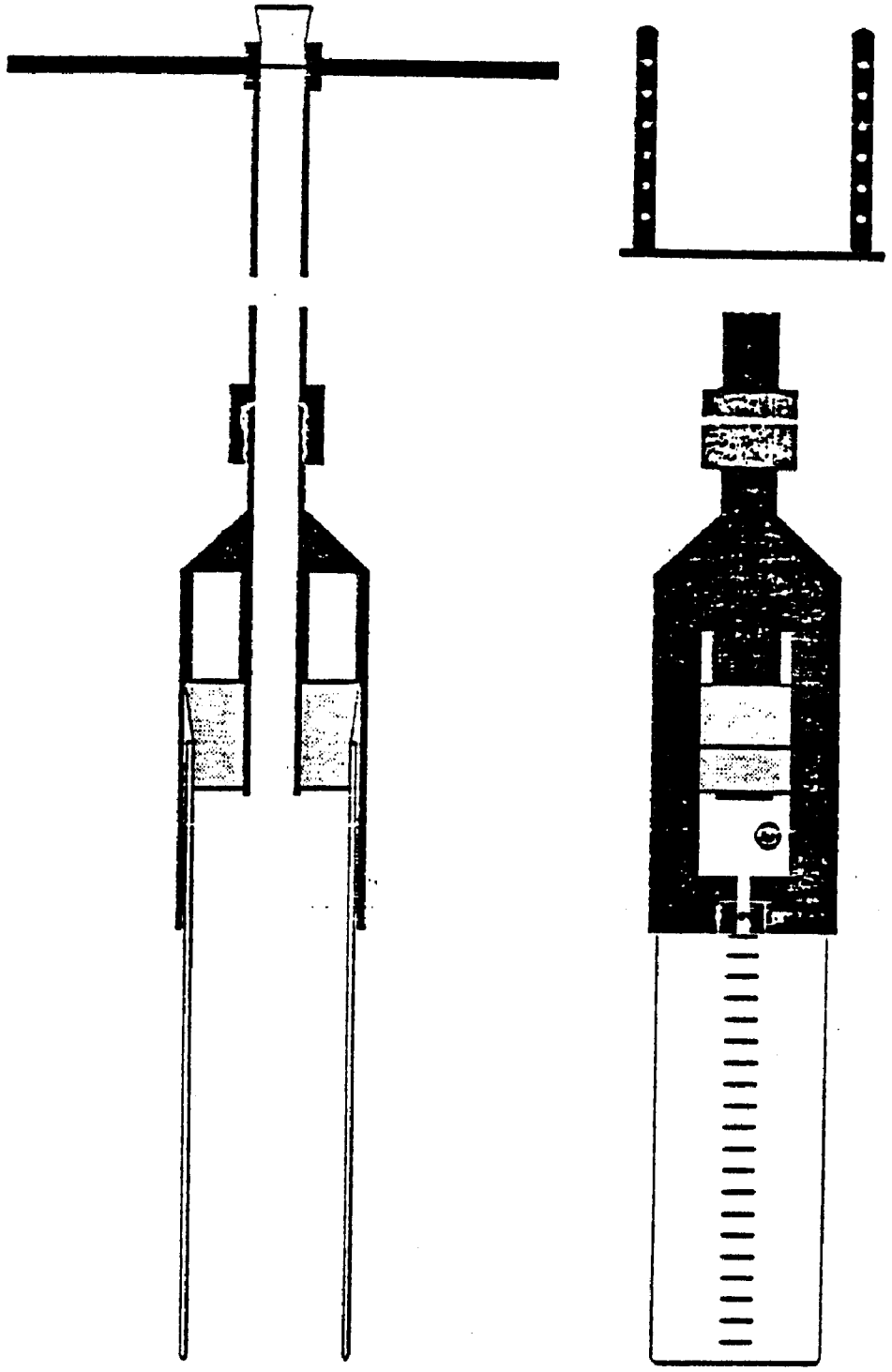

Figure 3-1. Coring Tube Adapted with Handle (from Maitland, 1969).

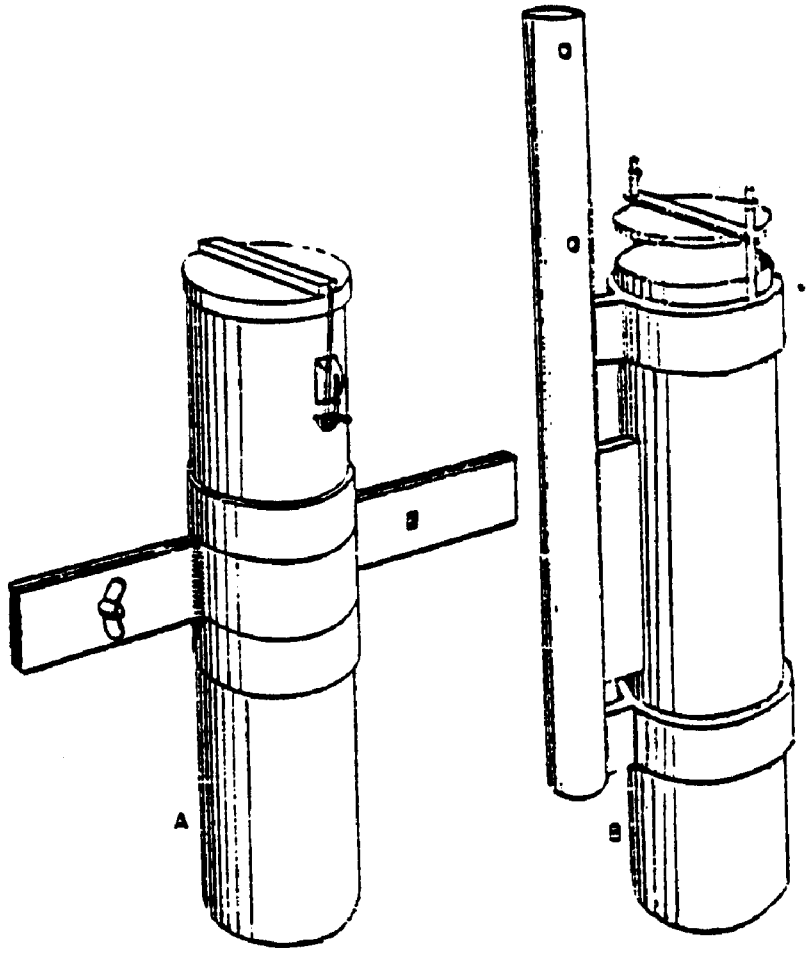

Figure 3-2. Two Types of Coring Tubes with Handles (Van Stratten Tubes),

(A) for use in water up to wading depth
(B) for use from a small boat
(from Bouma, 1969).

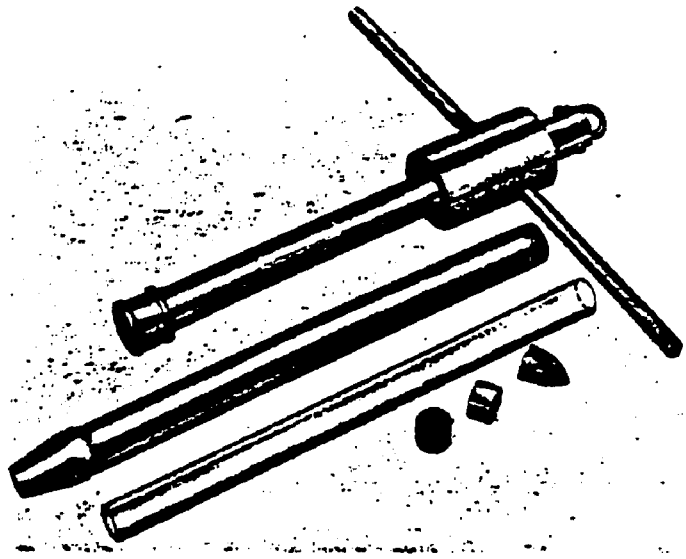

(Figure 3-3. Hand Corer (Kahl Scientific Instrument Corp.)

Gravity corers essentially consist of a metal tube, preferably stainless steel, with a detachable metal cutting nose on the lower end and a weight and valve on the other. The metal nose facilitates penetration, and the core catcher allows the sediment to slide up into the corer, but prevents it from slipping back out. The valve permits the free passage of water through the sampler as it descends, but as it is retrieved, the water pressure on the top of the corer keeps it securely closed. Many gravity corers have been modified to accommodate a core liner. This eliminates the need for time-consuming extrusions when repetitive sampling is necessary and minimizes the introduction of interfering substances from the metallic core barrel. Only those devices that can accommodate either a Teflon® or glass liner are recommended when sampling for priority pollutants.

Selection of a gravity coring device depends upon the nature of the substrate to be sampled. Coarse substrates such as gravel and sand are generally unconsolidated and easily lost from the core barrel unless it has a small diameter. Such substrates are most effectively cored by using Phleger corers (Figure 3-4), which have a small diameter. The main disadvantage in the use of Phleger corers is that a relatively small sample is taken, and repetitive sampling is necessary in order to obtain the required amount for analysis. Finer sediments, such as mud, silt, and clay have a

greater cohesive tendency, and thus larger core barrel diameters can be used.

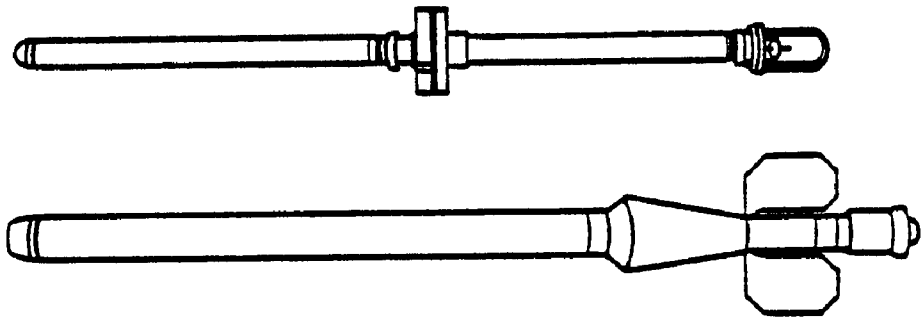

Figure 3-4. Phleger Corer (from APHA, 1976).

The addition of a stainless steel core catcher to the bottom of the corer greatly increases the efficiency of sample retention. Since core catchers are made of metal and the chance of trace metal contamination exists, they should be used only when absolutely required.

The gravity corer is easily operated by a two-person crew from a boat or any structure extending over the water surface. The equipment, fastened to a flexible line of rope or wire, is lowered to within 2 or 3 meters of the bottom. Terminal velocity is generally achieved within this distance (Bouma, 1969), and better accuracy and corer orientation is obtained than with a free fall from the surface. The corer is retrieved to the surface, cutting head unscrewed, and liner with sediment removed. Caution must be exercised at this point not to lose the sample, particularly if it is coarse in nature. Only those cores that have some water in the core tubes above the sediment should be retained. This ensures that the sediment surface is intact and provides a reference point for determining the sample depth below the sediment-water interface. After the core liner has been removed from the barrel, the bottom and top of the liner should be capped (as described in Section 3.2.1.1) and stored upright in an ice filled cooler for delivery to the lab. The operation is repeated with a new liner until sufficient sample for analysis is obtained.

3.2.1.3 Free Fall or Boomerang Corers

Free fall or boomerang corers are gravity corers that are operated without the use of flexible lines such as wire or rope. These devices are equipped with an expendable weight and casing assembly. After the bottom has been penetrated, a delay timer releases the weight and casing and a buoyant device pulls the corer from the substrate and floats it to the surface. This device is particularly convenient because cable connections to the surface are eliminated, and several corers can be dropped at the same time. Simultaneous sampling saves time when sampling very deep water, and higher impact velocity and accuracy are obtained (Hopkins, 1964). The device, however, should never be used in flowing water bodies where corers can easily be swept away.

Free fall corers are primarily a deep-sea device, and their expense, large size, and unwieldiness make them generally unsuitable for routine priority pollutant sampling.

3.2.1.4 Piston Corers

The piston corers have all the features of the gravity and hand corers except that they incorporate a stationary piston within the core barrel. Piston corers can be pushed by hand or operated by a flexible line of rope or wire. After contact with the sediment, the piston remains stationary at the sediment surface while the coring tube penetrates the substrate either by its own or by some externally applied weight. Since the piston remains immobile, a partial vacuum is created over the core sample, increasing core penetration and retention in the core barrel. The piston also aids in easy extrusion of the core sample from the barrel or liner.

A common hand operated piston corer used for obtaining samples from shallow water is the BMH-53 (Figure 3-5) developed by the Federal Interagency Sedimentation Project (1940). The instrument is 120 cm (46 in) long and is usually made of corrosion resistant materials. The collecting end of the sampler is a stainless steel thin-walled cylinder 5 cm (2 in) in diameter and 20 cm (8 in) long fitted with a rod mounted piston. The BMH-53 is operated much like other hand pushed corers, being placed in a vertical position on the stream bed with the piston extended to the open

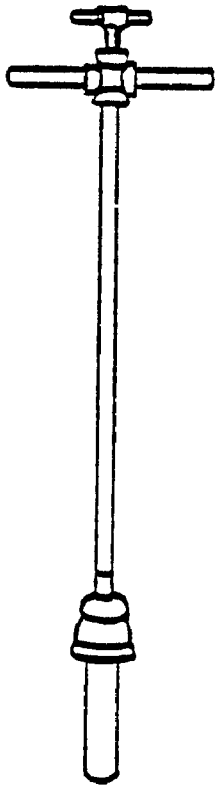

Figure 3-5. BMH-53 Piston Corer (USGS, 1980).

end of the barrel. The barrel is then pushed over the piston into the sediment. When coarser materials are being sampled, pulling on the piston rod while pushing on the cylinder increases penetration and retention of the sample in the liner. The piston also serves to force the sample from the cylinder in a manner that results in a sample column with a minimum of distortions. Since the BMH-53 does not have a liner, repeated extrusions into cleaned sample jars are required in order to reuse the sampling device. After each extrusion, the sampler should be thoroughly rinsed with site water to remove any remaining sediment material. If two fieldmen are used to sample, this procedure can be quite rapid; however the operation is quite awkward and time consuming for one man (Guy and Norman, 1969). The BMH-53 can also be used in deeper water by attaching extension rods. Because the BHM-53 is constructed primarily of metal parts, it is not recommended for sampling inorganic priority pollutants.

3.2.1.5 Multiple Tube Corers

Since single coring tubes are limited in obtaining sufficient material for chemical analysis, several types of multiple coring tube apparatus have been developed. A triple corer (Kemp et al., 1971) (Figures 3-6A and B) has been developed that is particularly suited for sampling the mud-water interface. Basically, three stainless steel core barrels are welded inside a stainless steel ring. Each tube is provided with a valve at the top end to ensure passage of water through the barrels during descent and sealing upon retrieval. The nose end of each barrel contains a screw mounted stainless steel cutting head. The core cutters are removed for insertion of core liners. Only glass or Teflon® liners should be used; plastic liners are unsuitable, because they may introduce phthalate esters and sorb organics.

Operation of the triple corer is the same as for wire supported single tubes. Best results are obtained by lowering the device to within 2 or 3 meters of the bottom and then allowing it to free fall. Kemp et al. (1971) state that good results have been obtained when sampling the fine substrates such as mud, silt, and clays; however, the device was unsatisfactory on coarse substrates such as sand and glacial tills.

One disadvantage introduced by connecting tubes in this manner is that the increased surface area may cause a "shock wave" as the tubes de-

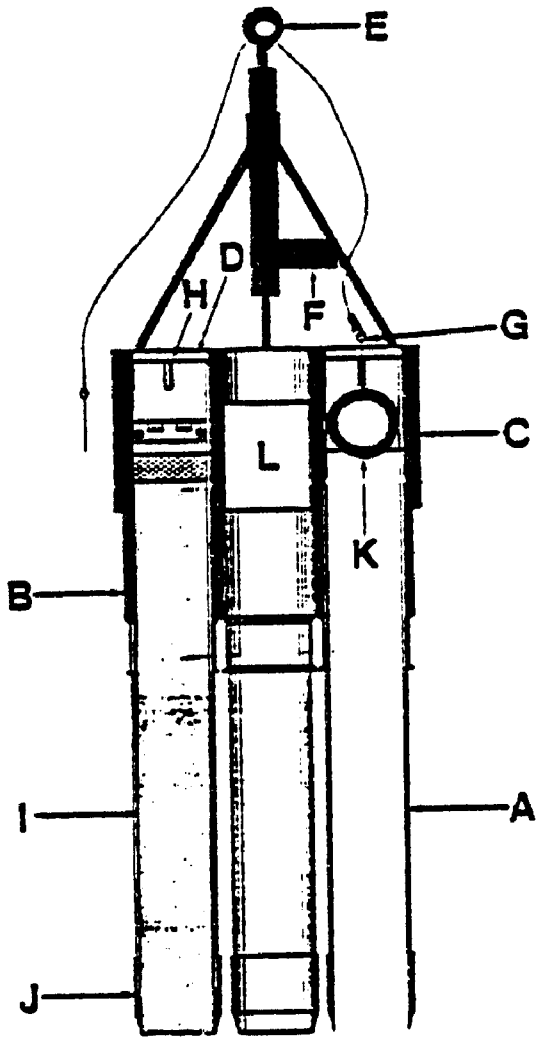

Diagram of section of triple corer. A-Core tube. B-Core barrel. C-Outer ring. D-Retaining stops. E-Lifting rod. F-Trigger mechanism. G-Valve pin. H-Benthos valve in closed position. I-Mud sample with overlying water. J-Metal core cutter. K-Valve in open position. L-Inner core barrel.

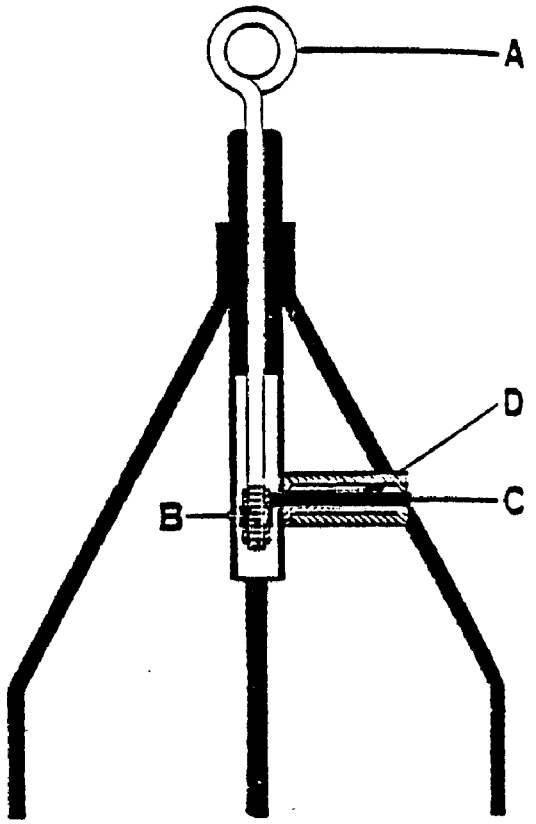

Sectional diagram of trigger mechanism. A-Lifting rod. B-Collar. C-Trigger pin. D-Safety pin.

Figures 3-6A and B. Multiple Coring Tube (from Kemp *et al.*, 1971)

scend which could disturb the sediment fines before they can be contained. With caution and proper handling, this can be avoided, and the multiple corer may eliminate much of the need for repetitive sampling. Nevertheless, in wadeable areas, not even the multiple corer is as expedient (or contamination-free) as single core tubes for sampling sediment.

3.2.2 Mechanical Grabs

Various types of mechanical grabs (or dredges) have been developed depending upon the physical nature of the sediment material to be sampled. All are similar in that they are devices with jaws which are forced shut by weights, lever arms, springs, or cords. Caution should be observed in the selection and use of a mechanical device. All, to varying degrees, create a "shock wave" on descent which may disturb the fine material of the sediment-water interface where many of the priority pollutant compounds are concentrated. Some degree of sample disturbance is also possible as the device is retrieved. Mechanical grabs are constructed of metal and may introduce trace contaminants. The major advantages in the use of mechanical grabs is that they can sample a relatively large area and secure a large amount of material, thus reducing the need for repetitive sampling.

The use of a mechanical grab will require that the sample be transferred from the sampler to a glass or Teflon® container for delivery to the lab. Subsampling from the center of the sediment sample obtained, particularly one with the integral structure of layering preserved by the sampling device, with Teflon® or glass tubes will minimize the possibility of metals introduction from the frame of the sampling device and will provide a container for delivery of the sample to the laboratory (Greig *et al.*, 1977; Greig and McGrath, 1977; Frank *et al.*, 1977). Alternatively, the use of a Teflon® or glass scoop is recommended for removal of the sample. Contact of the sample with hands or other surfaces that may introduce interfering substances should be avoided. Following is a review of the more commonly used mechanical grab sampling devices. Many of these may be used, with proper precautions, for priority pollutant sampling. A comprehensive review of most types of sediment sampling equipment is provided by Hopkins (1964).

3.2.2.1 Ekman Grab or Box Dredge

This device (Figure 3-7) is widely used to sample mud, silt, and other soft substrates (Welch, 1948; APHA, 1976). In studies conducted on the Great Lakes, the Ekman dredge was found to be the most satisfactory device for sampling soft, unconsolidated substrates (Howmiller, 1971). It is not particularly efficient on coarse grain substrates such as sand, gravel, and rock because of limited penetration of the substrate and because small pebbles or grit may prevent the proper closing of the jaws.

The device is made of 12 to 20 gauge brass or stainless steel. The box-like sample container has spring operated jaws on the bottom that are manually cocked. The jaws are triggered with a catch that is released by a messenger (weight) after the sampler is resting on the bottom. The top of the sample container is covered by two hinged overlapping lids that are held partially open during descent by water passing through the sample compartment. The lids are held shut by water pressure during retrieval. The Ekman dredge is available in various sizes depending on the needs of the investigation.

The device can be operated by one person from a boat or any object extending over the water surface. It is slowly lowered by wire or rope to within a few meters of the bottom before it is released for free fall. This gradual descent will ensure proper orientation of the grab before impact and will reduce the possibility of a "shock wave." After the sampler is resting on the bottom, a messenger (weight) is lowered to trigger the jaws, and the grab is slowly retrieved. After retrieval, the sample may be easily subsampled through the lids of the box with coring tubes, thus minimizing the possibility of sample contamination from the frame of the device. The major disadvantage of sampling soft substrates with the Ekman Dredge is that a significant portion of the finer sediments often gets "washed out" of the dredge when water flows through it.

3.2.2.2 Petersen Grab

This device (Figure 3-8) is especially designed for sampling hard or coarse substrates such as sand, gravel, and clay in swift currents and deep water. It is a clam type grab manufactured of corrosion resistant steel in various sizes that will sample an area of 0.06 to 0.09 m^2. Weight

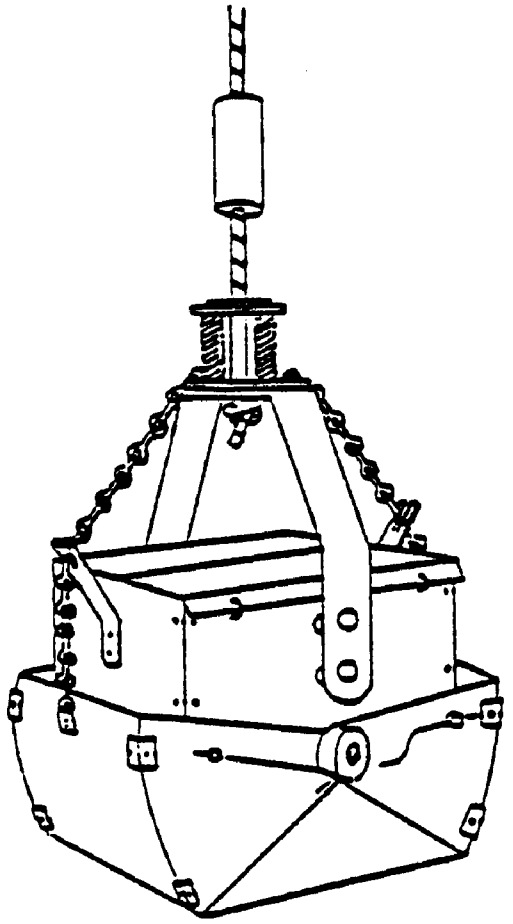

Figure 3-7. Ekman or Box Dredge (from APHA, 1976).

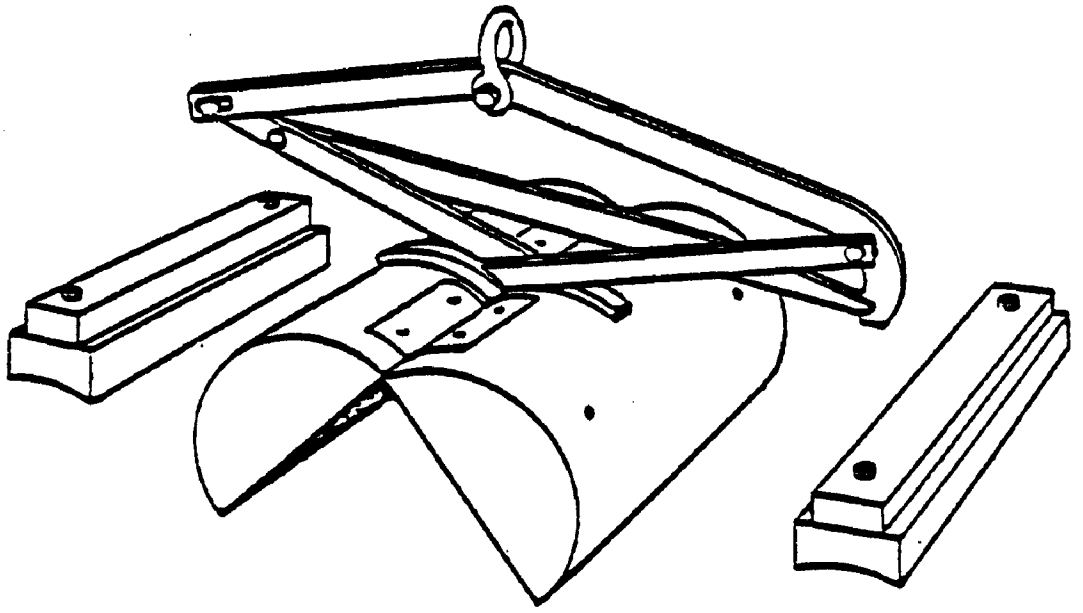

Figure 3-8. Petersen Grab
(from APHA, 1976).

ranges from 14 kg (30 lbs) to 32 kg (70 lbs) depending on its size and on whether auxiliary weights are bolted to its sides. The primary reasons for using extra weights are to achieve stabilization in swift currents and additional cutting power in the jaws.

The device can be operated by one person from a boat or object extending over the water surface (heavy models may require the use of a winch). The jaws are set and the device is lowered slowly to the bottom in order to minimize the "shock wave" which may disturb the lighter bottom materials. The rope or cable is eased to release the locking catch. When the grab is raised, the lever system closes the jaws and secures the sample.

The construction of the Petersen Grab does not permit direct access to the secured sample without opening of the closed jaws. This process may further cause disturbance of the sediment material by destroying the integral nature or sequential layering of the sediment, particularly if the sediment is unconsolidated as with muck and mud. Subsampling with coring tubes or Teflon® scoops may, therefore, not provide a representative sample of the bottom sediment. The lack of a screen or door on the top of the sample compartment which would allow water to pass through the compartment as it descends, also results in the formation of a relatively large shock wave. In comparative analysis with the Ponar Grab (subsequently discussed), the Petersen Grab was observed to cause a much larger displacement of the sediment fines (Wigley, 1967). Furthermore, the metallic construction of the Petersen Grab may result in the introduction of trace contaminants to the secured sample. It is, therefore, not particularly recommended for priority pollutant sampling. If current or substrate conditions dictate its use, particular attention must be given to its limitations.

3.2.2.3 Ponar and VanVeen Grabs

These devices (Figure 3-9) are modifications of the Petersen Grab and are similar in size and weight. They have been modified by the addition of side plates and a screen on the top of the sample compartment. The screen over the sample compartment permits water to pass through the sampler as it descends thus reducing the "shock wave" and permitting direct

access to the secured sample without opening the closed jaws. As previously reported, this advantage has been demonstrated in comparative analysis with the Petersen Grab (Wigley, 1967).

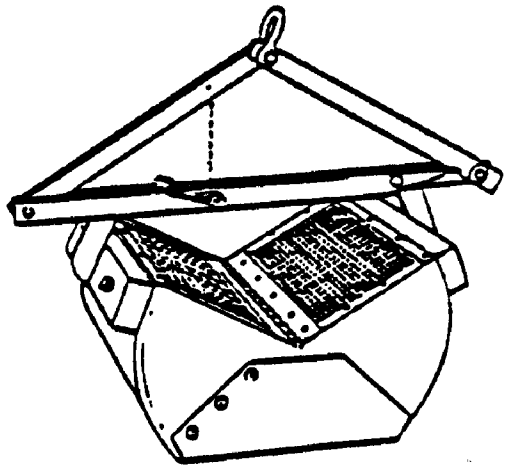

Figure 3-9. Ponar Grab Sampler (from APHA, 1976)

The Ponar and VanVeen Grabs are easily operated by one person in the same fashion as the Petersen Grab. The Ponar Grab is regarded as one of the most effective samplers for general use on all types of substrates (Flannigan, 1970; Hudson, 1970; Howmiller, 1971; APHA, 1976). Access to the secured sample through the covering screens permits subsampling of the secured material with coring tubes or Teflon® scoops, thus minimizing the chance of metal contamination from the frame of the device.

3.2.2.4 Smith-McIntyre Grab

This device is also similar to the Petersen Grab. Its weight is increased by the use of heavy gauge steel, and the jaws are closed by spring loaded coils rather than the use of levers. While its efficiency on hard or coarse substrates is better than the Petersen or Ekman Grabs, its bulk and weight require that it be operated from a boat equipped with a winch. The bulk and weight of the grab also creates a relatively large "shock-wave" on descent, thus disturbing the lighter bottom sediments before they may be contained. Generally, the Smith-McIntyre Grab is used for sampling the benthos of deep lakes, estuaries, and areas of the continental shelf because its great weight provides stability while in descent. It is not recommended, however, for routine sediment sampling in shallow waters.

If this grab is used, operators should use extreme caution as it is a cumbersome and dangerous instrument.

3.2.2.5 Jawed Grab Samplers

These devices, such as the Orange-Peel Grab (Figure 3-10), are designed for use on hard substrates in estuaries and deep lakes. The jaws are operated by a wheel and sprocket mechanism within the upper framework, which may be operated by a second cable or by a stack release mechanism activated by a messenger. These devices frequently are impeded by incomplete closure of the jaws caused by grit, gravel and other objects resulting in sample loss. In a comparative study of the Orange-Peel Grab versus the Ekman and Ponar samplers, the Orange-Peel Grab was found to be the least efficient in terms of sample retention (Hudson, 1970). For this reason, as well as the other limitations discussed for grab samples, the jawed grabs are not recommended for priority pollutant sampling.

3.2.2.6 Pole-Operated Grabs

Many pole operated devices have been developed incorporating the mechanics of the previously discussed grab samplers. These devices are particularly useful for sampling shallow water lakes and streams. They also offer the investigator a much greater degree of control over the sampling operation than can be obtained by cable or hand line. The Ekman or box-type pole operated grab sampler is recommended over the clam type grabs because direct access to the secured sample is provided permitting subsampling of the secured material with Teflon® or glass coring tubes. As mentioned previously, this not only minimizes the risk of trace metal contamination from the frame of the sampling device but also provides a suitable container for delivery of the sample to the laboratory.

An example of a custom made device which overcomes many of the limitations of the other grab sampling devices is a controlled depth, volumetric bottom sampler (Figure 3-11) developed to sample to a constant depth in most types of sediment over the entire area encompassed by the jaws (Jackson, 1970). The sampler has closed ends and screened relief openings to prevent blowout during placement or washout when the sampler is closed and retrieved. Depth guides attached to the sides of the sampler determine the depth to which the sampler can be thrust, thus preventing the jaws from

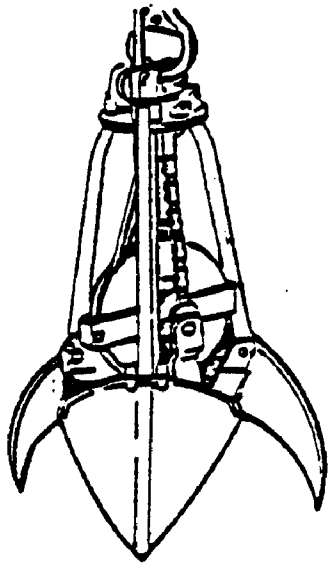

Figure 3-10. Jawed Grab (from APHA, 1976).

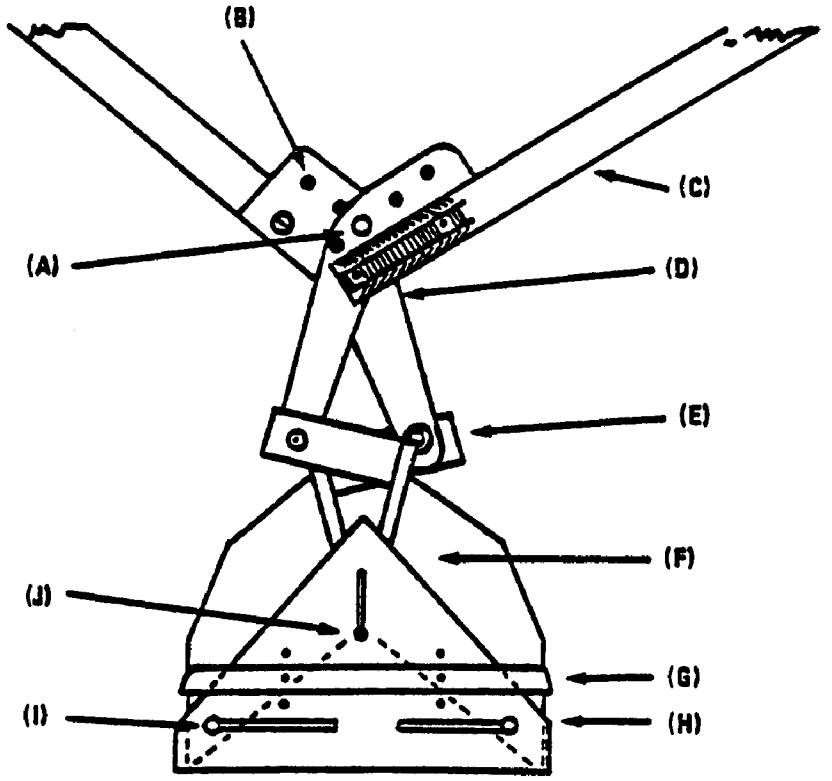

Figure 3-11. Controlled Depth Volumetric Bottom Sampler: Sampler in Open Position (A) Pivot bolt, (b) Optional pivot bolts, (c) Removable handle, (d) Pivot plate, (e) Lever arm, (f) End plate, (g) Depth guide, (h) Guide plate, (i) Carrier bolt and (j) Axis rod (Jackson, 1970).

penetrating too deeply in soft bottoms and exceeding the capacity of the grab. This feature is particularly useful in sampling for priority pollutants since it is the uppermost sediment deposits that may interact with the overlying water. If used for priority pollutant sampling, this grab should preferably be constructed of high quality stainless steel in order to minimize the introduction of trace metal substances to the sample.

3.2.2.7 Shipek Grab Sampler

This grab sampler (Figure 3-12) consists of two concentric half cylinders. When the grab touches bottom, inertia from a self-contained weight releases a catch, and helical springs rotate the inner half cylinder 180 degrees. A sample is taken which is 0.4 m^2 (8 in by 8 in) in surface area and approximately 10 cm (4 in) deep at the center. Its bulk and weight require that it be operated from a boat equipped with a winch. This sampler is generally used for sampling marine waters and large inland bodies of water. The Shipek retains fine sediments effectively, but there is some chance of sample contamination due to its metal construction. This grab is usually effective for deeper waters but may be unwieldy for routine sediment sampling in shallow waters. Like all other samplers, quality control samples should be run initially to ensure the absence of contamination before this grab is used.

3.2.3 Scoops and Buckets

3.2.3.1 Rotating Bucket Sampler - BMH-60

The USBHM-60 developed by the Federal Interagency Project of 1963 is a hand line, spring-driven, rotary bucket bed material sampler. This device is designed primarily for use in coarse bed streams and rivers (Guy and Norman, 1969). It is not particularly efficient in mud or other soft substrates because its weight will cause penetration to the deeper lying sediments, which is not desired when sampling for priority pollutants. It is also difficult to release secured samples in an undisturbed manner so that they could be subsampled. Nevertheless, the BMH-60 is streamlined and is one of the few samplers capable of sampling in moving water from a fixed platform. The BMH-60 may be used for priority pollutant sampling if care is taken to collect only subsamples that have not been in contact with the metal walls of the sampler.

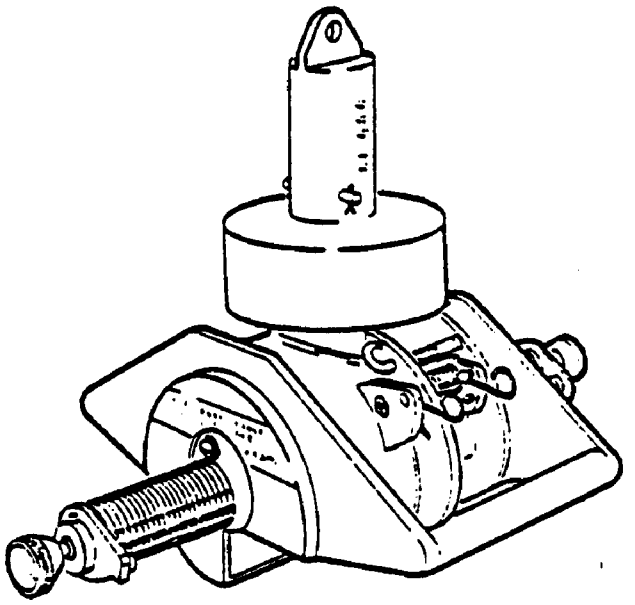

Figure 3-12. Shipek Grab Sampler (From APHA, 1976).

3.2.3.2 Scoops and Drag Buckets

Scoops and drag buckets are designed for general bottom sampling or exploratory work only. Many designs have been developed depending on the type of bottom material to be sampled and the depth of water from which it is to be obtained. All have similar characteristics in that they obtain a sample by direct insertion and removal, as with a shovel, or by being dragged along the bottom for a select distance by a rope or wire. The most common device is the simple hand scoop used in waters of wadeable depth.

The use of scoops or drag buckets for priority pollutant monitoring is not recommended, unless the scoop is enclosed on five sides and capable of being capped before removal from the sediment. The fine materials of the sediment surface are easily lost by the action of the sampling motion or may be washed away as the sample is brought to the surface. The various devices do not provide for a consistent technique that will ensure the securing of a truly representative sample, and it is difficult to quantify the bottom area sampled.

Table 3-1 summarizes the use and advantages and disadvantages of the sampling equipment discussed above.

3.3 Sample Handling, Preservation, and Shipment

Sediment samples obtained for priority pollutant analysis require careful handling to avoid the possibility of introducing interferences, both positive and negative, in the sampling process, in the containers used for storage, or during transport to the lab for analysis. Possible routes of positive interference or contamination include residues on the sampling equipment (such as rust and corrosion products), leaching of materials from containers, paint leached from the hulls of ships and boats, and dust and other micro-particles in the sampling environment. Negative interferences may arise as a result of the adsorption of chemicals to surfaces of containers or from the breakdown of samples because of improper preservation procedures. The risks of contamination, adsorption, and desorption have been reviewed by a number of investigators (Cooper, 1958; Robertson, 1968; Tolg, 1972; NBS, 1974a, 1974b, and 1976). The purpose of this section is to summarize the currently accepted procedures

Table 3-1
Summary of Bottom Sampling Equipment

Device	Use	Advantages	Disadvantages
Teflon® or Glass Tube	Shallow wadeable waters or deep waters if SCUBA available. Soft or semi-consolidated deposits.	Preserves layering and permits historical study of sediment deposition. Rapid - samples immediately ready for laboratory shipment. Minimal risk of contamination. Inexpensive.	Small sample size requires repetitive sampling.
Hand Corer with removable Teflon® or glass liners	Same as above except more consolidated sediments can be obtained. Use extended to waters of 4-6 feet by the use of extension rods.	Handles provide for greater ease of substrate penetration.	Requires removal of liners before repetitive sampling. Slight risk of metal contamination from barrel and core cutter.
Ekman or Box-Dredge	Soft to semi-soft sediments. Can be used from boat, bridge, or pier in waters of various depths.	Obtains a larger sample than coring tubes. Can be subsampled through box lid.	Possible incomplete jaw closure and sample loss. Possible shock wave which may disturb the fines. Metal construction may introduce contaminants. Possible loss of "fines" on retrieval.
Gravity corers i.e., Phleger Corer	Deep lakes and rivers. Semi-consolidated sediments.	Low risk of sample contamination.	Small sample, requires repetitive operation and removal of liners. Time consuming.
Ponar Grab Sampler VanVeen Sampler	Deep lakes, rivers, and estuaries. Useful on sand, silt, or clay.	Most universal grab sampler. Adequate on most substrates. Large sample obtained intact, permitting subsampling.	Shock wave from descent may disturb "fines". Possible incomplete closure of jaws and sample loss. Possible contamination from metal frame construction. Sample must be further prepared for analysis.

Table 3-1(cont)
Summary of Bottom Sampling Equipment

Device	Use	Advantages	Disadvantages
BMI-53 Piston Corer	Waters of 4-6 feet deep when used with extension rod. Soft to semi-consolidated deposits.	Piston provides for greater sample retention.	Cores must be extruded on site to other containers - metal barrel introduces risk of metal contamination
BMI-60	Sampling moving waters from a fixed platform.	Streamlined configuration allows sampling where other devices could not achieve proper orientation.	Possible contamination from metal construction. Sub-sampling difficult. Not effective for sampling fine sediments
Petersen Grab Sampler	Deep lakes, rivers, and estuaries, Useful on most substrates.	Large sample; can penetrate most substrates.	Heavy, may require winch. No cover lid to permit sub-sampling. All other disad-vantages of Ekman and Ponar.
Shipek Grab Sampler	Used primarily in marine waters and large inland lakes and reservoirs.	Sample bucket may be opened to permit subsampling. Retains fine grained sediments effectively.	Possible contamination from metal construction. Heavy, may require winch.
Orange-Peel Grab Smith-McIntyre Grab	Deep lakes, rivers, and estuaries. Useful on most substrates.	Designed for sampling hard substrates.	Loss of fines. Heavy - may require winch. Possible metal contamination.
Scoops, Drag Buckets	Various environments depending on depth and substrate.	Inexpensive, easy to handle.	Loss of fines on retrieval through water column.

with regard to container selection and cleaning and sample handling, preservation, and transport that will maintain the integrity of the sample until analysis.

In general, because of the risk of contamination, the amount of sample handling should be kept to an absolute minimum. It is recommended, therefore, that samples be transported in bulk to the laboratory and not divided into individual groups for specific analysis, such as metals, volatiles, and extractable organics. This will not only reduce handling but also the packaging or container requirements. Core tubes or liners, as discussed in Section 3.2.1, can be used for sampling as well as for containers for laboratory shipment. Coring tubes should be manufactured of high quality borosilicate glass or Teflon®. Plastics should not be used because they are known to introduce plasticizers, such as phthalate esters, and also because they can sorb organics to the container walls. Coring tubes should be equipped with cork or rubber stoppers that have been covered either with Teflon® sheet or aluminum foil.

An alternative to the use of coring tubes is the use of one-quart wide-mouth glass jars with screw cap lids. The cap should also be lined with Teflon® sheeting or aluminum foil to prevent contamination of the sample by the cap material. Some USEPA Regions recommend that samples for volatile organics analysis be collected separately in the field in a sealed container which can be fitted to a purge and trap device.

The core liners, glass jars, caps, stoppers, Teflon® sheeting, and aluminum foil should be thoroughly cleaned before the sampling effort. Since it is recommended that the containers be used for bulk collection and storage, they must be cleaned with regard to all the parameters on the priority pollutant list (see Appendix A). The following cleaning procedure is summarized from Methods for Chemical Analysis of Water and Wastes (EPA, 1979) and the Office of Research and Development proposed analytical procedures for priority pollutant analysis (EPA, 1980).

1. Wash all coring tubes, containers, caps, Teflon® sheeting and aluminum foil with a non-phosphate laboratory grade detergent and tap water.

2. Triple rinse with tap water.

3. Rinse with 1:1 nitric acid (HNO_3 - Reagent grade).

4. Rinse with deionized-distilled water.

5. Rinse with 1:1 hydrochloric acid (HCL - Reagent grade).

6. Triple rinse with deionized-distilled water.

7. Rinse with acetone followed by a final rinsing with pesticide grade hexane.

8. Dry in a contaminant free area such as a laminar flow hood.

The nitric acid-hydrochloric acid washes are designed to remove trace metals, and the acetone-hexane rinses are to remove organic impurities which may interfere with the subsequent priority pollutant analyses. After drying, the core tubes and containers should be sealed and stored in a clean area until ready for use. Additionally, although it is impractical to clean all sampling equipment, common sense does apply. Sampling equipment that has been obviously soiled by oils, grease, or household and laboratory solvents should not be used. All equipment should be carefully stored away from chemical solvents and household items such as paints, cleansers, and disinfectants.

Core samples are prepared for packaging by capping the ends of the coring tubes with an appropriately sized Teflon® or aluminum foil covered stopper as described in Section 3.2.1. The overlying water should be retained in the core tubes, and they should be sealed with no air space in order to prevent loss of volatiles during shipment and storage. If samples are collected by dredging, they should be carefully transferred to a one quart wide-mouth glass jar by means of a Teflon® spatula or, as described in Section 3.2.1, subsampled with coring tubes to minimize the risk of trace metal contamination from the frame of the sampling device. These tubes should be capped as described above. When wide-mouth glass jars are used they should be filled as nearly to the top as possible and topped off with sample water and sealed with the Teflon®-lined screw cap. Maximum effort must be made to seal the sample with a minimum of gaseous headspace to prevent loss of volatiles. The sample must remain sealed until aliquots for volatile organics are taken for analysis (EPA, 1977b).

Each sample container (e.g., core or jar) should be labeled with a unique number by which it can be readily identified in the laboratory.

This identification number should have as few digits as possible to discourage abbreviation. The label should be waterproof, and all information should be written with a ballpoint pen in waterproof ink. The labels should include, in addition to the identification number, the date and the initials of the sampling personnel.

Other pertinent information such as the time the sample was taken, location, approximate depth, stratigraphy, and water quality (e.g., temperature, DO, pH) should be recorded in a field notebook. If coring devices are used, a note should be made of the compaction of the core if this information is available. Any coring will result in compaction of the sediments within the coring tube. Usually mud will adhere to the outside of the corer at some distance above the level of the sediment within the core. Compaction is frequently two or more to one. An estimate of the compaction ratio should be noted if observed. All data in this notebook must, of course, be cross-referenced to the actual sample by using the identification number as previously discussed.

After it is labeled, the sample should be placed in a cooler or freezer chest. The cores should be stored in an upright position. If samples are to be analyzed within 7 days of collection, they should be maintained at 4°C until analysis (EPA, 1980). The use of pre-frozen sealed glycol-based coolant (e.g., "blue ice") is preferred over crushed ice. The cores and glass jars can be stored in a cooler by alternating rows of samples and synthetic ice containers. This method of storing sediment samples for shipment is efficient and results in the least possibility of contamination. For long-term storage, it is recommended that the samples be immediately frozen. Preservation with dry ice (frozen CO_2) is recommended as a means of ensuring that the sample is frozen rapidly and that it remains frozen. This is very important to prevent decomposition and loss of volatile materials (FWGPM, 1974; Bruce et. al., 1974; Straughan, 1974). If freezing is necessary, try to avoid the use of glass containers because of the possibility of breakage.

Dry ice requires special packaging precautions before shipping to comply with DOT regulations. The Federal Code of Regulations classifies dry ice as ORM-A (Other Regulated Material). These regulations specify the

amount of dry ice which may be shipped by air transport and the type of packaging required.

For any amount of dry ice to be shipped by air, advance arrangements must be made with the carrier. Not more than 440 pounds of dry ice may be shipped by air freight unless special arrangements have been made previously between the shipper and the aircraft operator. Quantities of dry ice needed for sample preservation are usually considerably less than 440 pounds.

The regulations further specify that the packaging must be designed and constructed in a manner to permit the release of carbon dioxide gas which, if restricted, could cause rupture of the package. If samples are being transported in a cooler, several vent-holes should be drilled to allow for escape of the sublimated gas. The vents should be near the top of the vertical sides of the cooler, rather than in the cover, to prevent debris from falling into the cooler. Furthermore, wire screen or cheesecloth should be installed to help keep foreign materials from entering the vents. When packaging the samples, care should be taken to keep these vents open to prevent the buildup of pressure.

Dry ice is exempted from shipping paper and certification requirements if the amount is less than 440 pounds and the package meets design requirements. The package must be marked "Carbon Dioxide, Solid" or "Dry Ice" and also marked with an identification that the material being refrigerated is to be used for diagnostic or treatment purposes (e.g., frozen samples).

Upon receipt at the laboratory, the sediment samples should be placed in a refrigerator and maintained at 4°C or, if frozen, placed in a freezer and maintained at a temperature less than -20°C until samples are prepared for analysis. All sediment samples should be kept in their original containers until they are ready to be prepared for analysis.

When the samples are received at the laboratory, they should be recorded in a permanent log book. This log book should include for each sample date and time received, source of sample, sample number, mode of transportation to the laboratory, and the number assigned to the sample by the laboratory if this number differs from the field number. Although this

recording procedure may seem laborious, it is absolutely imperative that precise records be kept for all samples so that the data generated by the sampling and analysis effort is of unquestionable integrity.

An accurate written record should be maintained which can be used to trace possession of the sample from the moment of its collection until it has been analyzed. A chain of custody tag should be placed on all coolers in which samples are stored and shipped. This should have appropriate spaces for signatures when the sample is transferred from one person to another. The date and time at which the custody is transferred should be indicated on the tag.

3.4 References

American Public Health Association (APHA). 1976. Standard Methods for the Examination of Water and Wastewater. 14th Ed. Washington, D.C. 1193 p.

Bruce, H.E., and S.P. Cram. 1974. Sampling Marine Organisms and Sediments for High Precision Gas Chromatographic Analysis of Aromatic Hydrocarbons. In Marine Pollution Monitoring. Proceedings of a Workshop held at National Bureau of Standards. Gaithersburg, MD. (NBS Special Publication 409: 181-182).

Bouma, A.H. 1969. Methods for the Study of Sedimentary Structures. John Wiley & Sons, N.Y. pp. 301-380.

Cooper, L.H.N. 1958. A System for International Exchange of Samples for Trace Element Analysis of Ocean Water. Journal of Marine Research. 17: 128-32.

Federal Interagency Sedimentation Project. 1940. Equipment Used for Sampling Bedload and Bed Material. U.S. Interagency Report No. 2. University of Iowa Hydraulics Laboratory. Iowa City, Iowa.

Federal Working Group on Pest Management (FWGPM). 1974. Guidelines on Sampling and Statistical Methodologies for Ambient Pesticide Monitoring. National Technical Information Service. U.S. Department of Commerce. Washington, D.C. PB-239-798.

Feltz, H.R. 1980. Significance of Bottom Material Data in Evaluating Water Quality. In Contaminants and Sediments, Vol. I. R.A. Baker (ed.). Ann Arbor Science Publications. Ann Arbor, Mich. pp. 271-287.

Feltz, H.R., and J.K. Culbertson. 1972. Sampling Procedures and Problems in Determining Pesticide Residues in the Hydrologic Environment. Pesticide Monitoring Journal. 6(3):171-178.

Flannigan, J.F. 1970. The Efficiencies of Various Grabs and Corers in Sampling Freshwater Benthos. Journal of the Fisheries Research Board of Canada. 27(10):1691-1700.

Frank, R., M. Holdrinet, H.E. Braun, R.L. Thomas, A.L.W. Kemp, and J.M. Jaquet. 1977. Organochlorine Insecticides and PCBs in Sediments of Lake St. Clair (1970 and 1974) and Lake Erie (1971). The Science of the Total Environment. 8:205-227.

Greig, R.A., R.N. Reid, and D.R. Wenzloff. 1977. Trace Metal Concentrations in Sediments from Long Island Sound. Marine Pollution Bulletin. 8(8):183-188.

Greig, R.A., and R.A. McGrath. 1977. Trace Metals in Sediments of Raritan Bay. Marine Pollution Bulletin. 8(8):188-190.

Guy, H.P., and V.W. Norman. 1969. Field Methods for the Measurement of Fluvial Sediment. In Techniques of Water Resources Investigations, Book 3, Chapter C2. U.S. Geological Survey. Reston, VA.

Holliday, B.W. 1978. Processes Affecting the Fate of Dredged Material. U.S. Army Engineer Waterways Experiment Station. Technical Report DS-78-2. Vicksburg, Miss.

Hopkins, T.L. 1964. A Survey of Marine Bottom Samplers. In M. Sears, (ed.), Progress in Oceanography, Volume II. Pergamon Press, N.Y. pp. 215-253.

Hough, J.L. 1939. Bottom Sampling Apparatus. In P.D. Trask, (ed.), Recent Marine Sediments. Dover Publications, Inc., N.Y. pp. 632-664.

Howmiller, R.P. 1971. A Comparison of the Effectiveness of Ekman and Ponar Grabs. Transactions of the American Fisheries Society. 100(3):560-564.

Hudson, P.L. 1970. Quantitative Sampling with Three Benthic Dredges. Transactions of the American Fisheries Society. 99(3): 603-607.

Jackson, H.W. 1970. A Controlled Depth, Volumetric Bottom Sampler. Progressive Fish Culturist. 32(2):113-115.

Kemp, A.L.W., H.A. Savile, C.B. Gray, and A. Mudrochova. 1971. A Simple Corer and Method for Sampling the Mud-Water Interface. Limnology and Oceanography. 16(4):689-694.

Larimore, R.W. 1970. Two Shallow-Water Bottom Samplers. Progressive Fish Culturist. 32(2):116-119.

Lind, O.T. 1974. Handbook of Common Methods in Limnology. The C.V. Mosby Co. St. Louis, Mo.

Maitland, P.S. 1969. A Simple Corer for Sampling Sand and Finer Sediments in Shallow Water. Limnology and Oceanography. 14(1):151-156.

Paterson, C.G., and C.H. Fernando. 1971. A Comparison of a Simple Corer and An Ekman Grab for Sampling Shallow-Water Benthos. Journal of the Fisheries Research Board of Canada. 28(3):365-368.

Robertson, D.E. 1968. Role of Contamination in Trace Element Analysis of Sea Water. Analytical Chemistry. 40(7): 1067-1072.

Schwoerbel, J. 1974. Methods of Hydrobiology (Freshwater Biology). Pergamon Press. Oxford, England.

Straughan, D. 1974. Field Sampling Methods and Techniques for Marine Organisms and Sediments, Marine Pollution Monitoring. In Proceedings of a Workshop held at National Bureau of Standards. Gaithersburg, MD. (NBS Special Publications 409).

Tolg, G. 1972. Extreme Trace Analysis of the Elements - I: Methods and Problems of Sample Treatment, Separation and Enrichment. Talanta. 19:1489-1521.

U.S. Environmental Protection Agency. 1977a. Analysis of Pesticide Residues in Human and Environmental Samples. Health Effects Research Laboratory. Office of Research and Development. Research Triangle Park. North Carolina.

U.S. Environmental Protection Agency. 1977b. (Revised October 1980). Interim Methods for the Sampling and Analysis of Priority Pollutants in Sediments and Fish Tissue. Environmental Monitoring and Support Laboratory. Office of Research and Development. Cincinnati, Ohio.

U.S. Environmental Protection Agency. 1979. Methods for the Chemical Analysis of Water and Wastes. Environmental Monitoring and Support Laboratory. Office of Research and Development. Cincinnati, Ohio.

U.S. Environmental Protection Agency. 1980. Draft Protocols for the Analysis of Priority Pollutants. Methods 601-613, 624 and 625. Monitoring Technology Division. Office of Research and Development. Washington, D.C.

U.S. Geological Survey. 1980. National Handbook of Recommended Methods for Water-Data Acquisition. Office of Water Data Coordination. Reston, VA.

U.S. National Bureau of Standards. 1974a. Sampling, Sample Handling, and Analysis. Symposium on Accuracy in Trace Analysis. Proceedings of the 7th IMR Symposium. P.D. Lafleur, Ed. NBS Special Publication 422. Washington, D.C.

U.S. National Bureau of Standards. 1974b. Marine Pollution Monitoring (Petroleum). Proceedings of a Workshop. NBS Special Publication 409. Washington, D.C.

U.S. National Bureau of Standards. 1976. A Survey of Current Literature on Sampling, Sample Handling, and Long Term Storage for Environmental Materials. U.S. Department of Commerce. Washington, D.C.

Weber, C.I., editor. 1973. Biological Field and Laboratory Methods for Measuring the Quality of Surface Waters and Effluents. U.S. Environmental Protection Agency. Office of Research and Development. Cincinnati, Ohio. EPA 670/4-73-001.

Welch, P.S. 1948. Limnological Methods. The Blakiston Company. Philadelphia, PA. pp. 175-186.

Wigley, R.L. 1967. Comparative Efficiencies of VanVeen and Smith-McIntyre Grab Samplers as Revealed by Motion Pictures. Ecology. 48(1): 168-169.

4.0 SHELLFISH SAMPLING

Shellfish monitoring can provide important information on distribution and occurrence of pollutants. Shellfish live on or in the substrate and may accumulate pollutants from either water or sediment. They are also an important food item for some "higher" aquatic organisms. Therefore, they constitute an interface among the sediment, water column, and biotic components of aquatic and estuarine systems. In terms of equipment and study design, shellfish sampling shares some characteristics with both sediment and fish sampling. Some of the equipment used in sediment sampling can be used to collect bivalves; techniques for site selection and sample preservation and handling are similar to those used in fish sampling. These similarities are evident on comparing this chapter with the respective sections of Chapters 3 and 5.

There are two major assumptions governing the techniques recommended in this chapter: (1) shellfish will be sampled in estuaries only, and (2) target species will be limited to bivalve molluscs (pelecypods). The reason for limiting shellfish sampling to estuaries is that in fresh water, fish are preferable because of their wider distribution, potential for consumption by humans, and more convenient size (many of the fresh water shellfish are small and would take intensive collecting and identifying efforts to provide the minimum 500 gram tissue sample size). On the other hand, in estuaries, many of the fish are anadromous or catadromous and tissue concentrations may not reflect environmental conditions at the site sampled. Some of the common estuarine bivalves offer an excellent alternative to fish because they are sessile, are fairly easy to identify and collect, and are consumed by humans.

The reason for limiting shellfish sampling to bivalves is primarily that they are sessile (with the exception of some scallops) and therefore cannot move out of polluted areas as can gastropods and the crustacean shellfish. The filter feeding employed by bivalves also exposes them to large quantities of water thereby increasing the opportunity for uptake of pollutants. These two factors result in bivalves being rapid indicators of pollution and highly representative of the areas from which they are sampled.

There are, however, several problems encountered when using bivalves as indicators of pollution. As with any organisms used to indicate pollution, uptake and depuration varies widely among species. This is the principal reason for restricting the number of target species. The large volume of water pumped by bivalves in their filter feeding has disadvantages as well as advantages. One major disadvantage is that sporadic episodes of pollution may not show up as readily in these species as they would with finfish. The reason for this is that depuration tends to occur more rapidly in these molluscs because of the large amount of water they process. Excretion is often nearly as rapid as uptake.

Another related problem is the tendency of many bivalves to accumulate appreciable quantities of silt in their digestive system. This may result in high concentrations of metals and other pollutants if the whole organism (not including the shell) is analyzed. If the intent of the study is to determine concentrations available for human exposure, this is perhaps a more representative case since the whole organism is often consumed, including the stomach and contents. On the other hand, if the intent is to determine "tissue" levels of pollutants, this factor can bias the results giving values higher than the actual tissue concentrations.

As discussed in the following chapter on fish, methods can be adopted in developing a sampling program to reduce the difficulty in interpreting data. These include establishing target species for collection (thereby eliminating interspecific variations), sampling shellfish of similar age and size, and limiting sampling at different sites to as short a period as possible to reduce seasonally-related differences. Analytical techniques should also be used to improve the utility of the data. These include analysis of lipid content, analysis of water content, quality control (such as analysis of duplicate samples), and compositing tissues from five or more individual bivalves. Analytical techniques are currently being developed by EPA's Environmental Support Laboratory in Cincinnati, Ohio, and are provided in a separate document.

4.1 Site Selection

Maximum benefits can be obtained from a sampling program by giving careful attention to the process of site selection. Factors which

play an important role in site selection include:

1. Purpose of sampling program.

2. Presence of shellfish at the site.

3. Proximity of sites for sampling water, bed sediment, and fish for priority pollutants.

4. Previous shellfish sampling for priority pollutant analysis.

5. Type of equipment available.

6. Accessibility of site.

Each of these factors is discussed in greater detail in the following paragraphs.

Since bivalve shellfish sampling is recommended only for estuarine areas, there are basically two types of areas related to the purpose of the sampling program. If the program's goal is to provide an overall evaluation of pollutant levels, the sites should be located in open water, characteristic of the overall estuary. On the other hand, if the goal is to identify sources of pollutant input, the sites should be selected near river mouths or suspected sources of pollutant discharge.

The presence of bivalves at the site is an obvious requirement. Finding a suitable site is often less obvious. In many cases, the State Department of Natural Resources (or other related agencies) maintains maps showing the location of major concentrations of commercially important shellfish. Consulting maps of this sort or commercial fishermen as to the location of large beds of shellfish can save a lot of time and eliminate the hit-or-miss sampling technique. Beware of the fact that some shellfish beds are leased from state governments. Before sampling such beds, secure any necessary permits and the consent of the lessee.

There are advantages to locating the shellfish sampling sites near sites selected for priority pollutant sampling of water, bed sediment, or finfish. The principal benefit of this sampling design is the possibility of developing at least a simple model of the dynamic distribution of pollutants in that area. Correlations among pollutant levels in the different compartments (finfish, shellfish, sediment, and water) may be es-

tablished. Selecting sites close to each other also allows a more efficient use of time by providing the opportunity to combine sampling trips.

The availability of historical data on pollutant body burdens should be checked before making any final decisions regarding sample sites. In most cases these data are nonexistent, but in some areas such sampling has been conducted previously. In those few cases where this information is available, consideration should be given to choosing sampling sites near the areas sampled previously in order to construct a historical record of pollution in the area. Closed shellfish areas often have historical data. In addition, they are presumably close to pollution sources and contain many large, old bivalves which may have had the greatest opportunity to accumulate high concentrations of pollutants in their tissues.

The availability of equipment and personnel experienced in its use is also an important consideration when selecting sample sites. If a site which meets the other criteria cannot be sampled with available equipment, there is often the option of coordinating efforts with other biologists or commercial fishermen who have the appropriate equipment and experience.

Another factor closely related to the equipment availability is the depth and accessibility of the site. If hand tongs, a rake, or similar equipment are to be used, the water depth at the site should be 6 meters (20 feet) or less. In any case, choosing a representative site is more important than choosing a site which is highly accessible.

The best approach to developing a sound sampling program is to consult with local biologists regarding the best candidate species and areas in which those species can be located. Before sampling, a reconnaissance should be performed to locate sampling sites. Once again, it is vital to arrange for any necessary collection permits before implementing a sampling program.

4.2 Target Species

The principle of selecting "target" species is designed to limit the number of variables and facilitate comparison of results from different

monitoring studies. Because of the great diversity of estuarine habitats in the United States, it is impossible to select a single target species for all monitoring studies. An attempt should be made, however, to concentrate on a few widely distributed species.

Characteristics of a good target species include:

1. Wide range (e.g., broad distribution).

2. Easy identification.

3. Pollution tolerance.

4. Commercial importance.

Wide range is important since it permits sampling the same species in various areas, thereby facilitating direct comparison between studies. Easy identification is a practical factor in sampling since identification of some pelecypod species requires careful examination of minute details. Pollution tolerance is an important consideration since many of the sites of interest may be polluted to some extent. Commercially important species are preferred because of their larger size and the fact that they represent an important route of human exposure to pollutants.

It is recommended that at least five shellfish of the same species be collected per site. Each mollusc should be wrapped individually and then placed in a plastic bag containing all shellfish of the same species from the same site, as described in Section 4.4. The minimum sample mass (per species) is 500 grams of tissue. It is important to note that the shell of bivalve molluscs represents a considerable percentage of the total organism weight. Therefore, several molluscs should be removed from their shells and tissue weights taken to determine the size needed to obtain the required 500 grams. If five molluscs do not weigh an aggregate 500 grams, more should be collected until this minimum is reached.

If it is not possible to collect one of the recommended species, congeneric species should be collected if available. It is always a good policy to collect the same species throughout a sampling program; however, this is not always possible. The most important principle is to be consistent.

The shellfish listed in Table 4-1 satisfy most of the criteria listed previously for selecting target species. This list is not intended to be exclusive, but should serve as guidance for selecting bivalves to sample.

Table 4-1

Target Species For Bivalve Shellfish

Eastern Oyster (*Crassostrea virginica*)

Native Pacific Oyster (*Ostrea lurida*)

Common Blue Mussel (*Mytilus edulis*)

Northern Quahog or Hard-shell Clam (*Mercenaria mercenaria*)

Soft-shell Clam (*Mya arenaria*)

4.3 Sampling Equipment and Use

Bivalves, such as clams, scallops, mussels and oysters, are typically found buried in benthic substrates or attached to submerged objects such as rocks and piers. Various types of sampling equipment or tools have been developed for the purpose of collecting these bivalves, depending on the type of environment or physical conditions in which the particular target organism is found. Some bivalves such as the eastern oyster (*Crassostrea virginica*) and the hard clam (*Mercenaria mercenaria*) enjoy wide popularity because of their edible and abundant nature. Commercial fisheries have developed sophisticated sampling equipment for each of these particular species in order to maximize the catch efficiency. Sophisticated methods and equipment have also been developed for the purpose of quantifying the biomass of particular bivalves.

When collecting bivalves for the purpose of screening pollutants, the sampling approach is generally qualitative and the equipment need not be extremely sophisticated since only a small sample size is required. The equipment, however, should be specifically adapted to the

target species being sampled and the type of environment in which they are to be found. The specific considerations that are important in the selection of sampling equipment include (1) the size of the target species to be sampled; (2) the number of organisms required in the sample; (3) the type of substrate in which the target species is found; and (4) the depth of water in which the target species is located. Some of the equipment useful for sampling bivalves was discussed in the sediment sampling section of this manual. A brief review is offered in this section, however, for the purpose of discussing equipment use and limitations when sampling for bivalves. This section will also introduce various other types of equipment that are applicable for sampling particular target species.

Regardless of the equipment used, a minimum of 500 grams (1.1 lbs) of body tissue (not including shell) should be collected for priority pollutant analysis. It is recommended that the average tissue weight of the selected size of specimens to be retained for analysis be established prior to actual sample collection. This will preclude the removal and sectioning of tissue material in the field which would increase the risk of sample contamination. Prior knowledge of average tissue weight per specimen size will facilitate determination of the actual number of individual samples required for subsequent priority pollutant analysis.

4.3.1 Mechanical Grabs

Section 3.2.2 of the sediment sampling portion of this manual discusses the various types of mechanical grab (or dredge) samplers that have been developed to sample different sediment types. All are similar in that they are devices with jaws which are forced shut by the action of weights, lever arms, springs, or cord. Many of the devices discussed in that section are applicable to sampling the various types of bivalves. A brief discussion of the advantages and disadvantages in collecting pelecypods is offered according to the major categories within which the devices can be grouped. These categories include (1) the pole operated grab buckets and tongs and (2) the line operated grab buckets.

4.3.1.1 Pole Operated Grab Buckets and Tongs

Pole operated grab buckets and tongs are probably the most efficient means for sampling bivalves such as clams and oysters that are

located on or slightly buried in bottom sediments. The various models are all designed to be used in shallow water areas of less than 6 meters (20 feet) either from a boat or structure such as a pier projecting over the water surface. At depths greater than 6 meters (20 feet), the pole operated devices generally become too difficult to manually operate.

Pole operated grab device efficiency is attributable to the complete control the operator has over the placement of the jaws on the substrate. It also allows the direct application of the needed energy for substrate penetration if the target species is buried. Single-pole operated grab devices, such as the Ekman or Orange-Peel grabs, are not as efficient as the double-pole or scissor-like grab devices. This is because the single-pole grab whose jaws are generally operated by some type of spring loaded mechanism must be repeatedly retrieved and emptied. These devices are also generally small and not suitable for collecting large specimens such as oysters and hard clams.

The double handled grab samplers or "tongs," as they are frequently called, are a much more efficient tool for sampling bivalves in shallow water, lakes, rivers, and estuaries. Essentially the "tong" is composed of a pair of long poles fastened together near their distal ends. The end of each pole has claws or baskets, and the two sets are brought together by closing the handles together like a pair of scissors. Since the collection of surrounding or overlying sediments is not required when sampling for bivalves, the jaws are generally open baskets. This not only reduces the weight of the device but also allows the washing of collected specimens to remove the mud, clay, or other sediments in which they are found. Experienced "tongers" can also feel, via the poles, whether samples have been collected avoiding the necessity of repeated jaw retrieval for inspection. Tongs are frequently used in the commercial industry for gathering oysters, hard clams and scallops.

4.3.1.2 Line or Cable Operated Grab Buckets

Included in this category are the various types of mechanical grabs discussed under sediment sampling such as the Ekman, Petersen, Ponar and Orange-Peel dredges. These devices are generally used for sampling benthic substrates in deep lakes, rivers, and estuaries as discussed in the

sediment sampling section of this manual (Section 3.2.2). Besides sediment sampling, these devices are frequently used for quantitative sampling of small benthic macroinvertebrates. These devices, however, are not particularly effective for collecting the large pelecypods such as oysters and clams. The limitations include the small size of the jaws, incomplete closure of the jaws caused by the jamming action of shells and other debris, lack of penetration into substrates to the depths at which many bivalves may be found, and the relative inefficiency of repeated raising and lowering of the device to inspect the sample containers for success of capture. The only notable exception to the various line operated grab samplers are the patent tongs commonly used in the Chesapeake Bay area for collecting oysters. This device is a variation of the previously discussed hand tongs; for this version, their depth effectiveness has been increased by the use of pulleys. The jaws or baskets are attached to short handles that are lowered by a rope which runs through a block on the upper end of one handle, then across and through a block on the upper end of the opposite handle, where it runs down to the base. Pulling on the rope closes the tongs or jaws together. This device can be operated by hand-line; however, more frequently it is done from a boat supplied with a winch. Since it is unlikely that most priority pollutant investigators would have access to this equipment, it is generally not a practical equipment alternative.

4.3.2 Biological Dredge

Biological dredges are heavy duty nets or bags which are dragged along the bottom of a deep water body to collect stones, bottom debris, or large stationary macroinvertebrates such as clams, scallops, and oysters. Unlike the line operated mechanical grabs which sample a unit area and can be used for quantitative sampling, the tow dredges are generally an unsophisticated tool for simple qualitative sampling of bottom substrates. As such, biological dredges are a valuable tool for securing the samples required for priority pollutant studies.

Many types of biological dredges or drag nets are available depending on the physical nature of the substrate and/or the organism to be sampled. These devices are made of heavy metal frames, frequently with rake-like teeth on the lower edge to which is attached a heavy duty bag of

canvas or net possibly made of chain or wire. The dredge is pulled along the bottom by means of a tow line. Often the metal frame is designed to dig into the bottom sediments, dislodging buried bivalves as it is pulled along. The length of tow depends upon the site of the dredge and prior knowledge of the density of organisms to be found in the area to be sampled. Since only a small number of organisms are needed, the length of tow should only be long enough to obtain the required number of bivalves necessary for analysis. It will be difficult to pinpoint the exact area of sample collection unless the length of tow is relatively short. Because of the scouring operation of biological dredges which may damage the shells of bivalve specimens, it is important that all specimens selected for priority pollutant analysis be inspected. Damaged specimens should be discarded, thus preventing the chance of contamination of the tissues.

4.3.3 Coring Devices

The various types of coring devices discussed in the sediment sampling section of this manual are not suitable for collecting bivalve specimens unless the target species are very small and are known to inhabit a specific area in a relatively high density. The limited diameter of coring devices makes them unsuitable as a tool for the collection of organisms such as clams, mussels, and oysters.

4.3.4 Miscellaneous Devices

In addition to the various types of equipment previously described there are many other kinds of devices for collecting bivalve specimens that do not readily conform to the established categories. These various types of tools are discussed in the following subsections.

4.3.4.1 Scoops or Shovels

Scoops or shovels can frequently be used for collecting bivalves buried in shallow water sediments accessible by wading or SCUBA equipment. The hard clam or quahog (*Mercenaria mercenaria*) and the soft-shell clam (*Mya arenaria*) as well as many other shallow water bivalves can be easily collected using some form of scoop or shovel. The scoop is simply used to scrape or dig away the overlying sediment or to dislodge the buried organisms. Care must be exercised so as not to damage the shell of desired

specimens and thus introduce possible contaminants to the tissue of the organisms. Shovels and scrapers can also be used to dislodge bivalves, such as mussels or oysters, that are attached to the surface of submerged objects.

4.3.4.2 Rakes

Various types of rakes have been designed to collect bivalves that lie on the bottom substrate or are buried in shallow water sediments. These rakes are usually long-handled and can be operated while the sampler is wading or can be used in shallow waters from a boat. Many of the types of "clam" rakes are frequently designed or constructed with a catch basket made of wire or heavier gage metal to maximize the catch efficiency. The mesh size of the basket is determined according to the size of the target organism desired. The rakes are simply operated by "raking" the benthic substrate or, if the target species is buried, by a digging and raking action to force the dislodged organisms into the catch basket. Rakes can also be used to dislodge organisms such as oysters and mussels that are attached to submerged objects such as rocks and the pilings of piers.

A variation of a rake is the scraper with a handle to which is attached a net or canvas bag. The scraper is used to dislodge specimens, and the net is used to capture them before they sink or are carried away by any current that might be present.

4.3.4.3 Dip Nets and Other Assorted Devices

Dip nets made of wire or heavy twine are also acceptable sampling tools in shallow water when the target organisms can be visually identified. Grappling hooks, pocket knives, pry bars, etc., have all been used as effective methods for collecting bivalves in different areas and under different conditions. Regardless of the collection technique chosen, the investigator or sampling personnel must exercise care in the sampling process so as not to damage the specimens, which could cause contamination.

4.3.5 Purchasing Specimens/Coordinated Sampling

The most cost-effective and efficient means for obtaining bivalve specimens for priority pollutant analysis when sampling equipment

and time are limited is to coordinate sampling trips with other types of sampling investigations or to obtain the needed specimens from a commercial fisherman. Local federal agencies such as the Fish and Wildlife Service and the Bureau of Commercial Fisheries, and state agencies such as the Departments of Fish and Game and Natural Resources, conduct routine sampling programs. The priority pollutant investigator need only accompany these fishery biologists or sampling personnel to acquire the needed specimens for subsequent priority pollutant analysis. This coordination will greatly reduce the cost for equipment and provide for a sharing of information that may be beneficial to all investigators involved.

In areas where large commercial operations are ongoing, the priority pollutant investigator may consult with local commercial fishermen to assist them in obtaining the specimens necessary for analysis. If this approach is considered, the investigator must accompany the commercial fishermen and should remove the sample from the collection device. This will not only ensure the proper handling of specimens for subsequent priority pollutant analysis, but will also ensure accurate recording of exact time and place the sample was obtained.

4.3.6 Summary

In summary, the particular equipment or methods selected to obtain bivalve samples for priority pollutant tissue analysis depend on a number of factors. These factors include the type of bivalve, depth of water in which it is to be found, and the nature of the substrate from which it will be removed. Because pelecypods are found in a wide variety of habitats and because they are sessile, the specific collection device or sampling equipment should be based on substrate, water depth, and size of the target organisms. As a general rule, however, pelecypods can be sampled in shallow waters from a boat or with the use of pole-operated mechanical grabs or tongs. Where wading is possible the use of clam rakes as a collection tool may be desirable. When investigators are sampling deep water estuaries, the use of biological tow dredges is preferred over line operated mechanical grabs. The most efficient sampling effort is the coordination of effort with other investigative personnel in order to reduce costs, equipment needs, and time.

4.4 Sample Handling, Preservation, and Shipment

Bivalve samples obtained for priority pollutant analysis require careful handling to avoid the possibility of contamination either in the sampling process or in transport to the lab for analysis. Initially, all samples should be thoroughly rinsed with site water to remove any surrounding sediment deposits. After rinsing, all samples should be carefully inspected for damage in the sampling process before packaging for laboratory transport. Shells or body tissue that have been damaged by the sampling equipment should be discarded. Additionally, although it is unlikely that the bivalves will be contaminated by the sampling equipment itself, common sense does apply. Sampling equipment that has been obviously soiled by oils, grease, or solvents should not be used.

Specimens should not be removed from their shells in the field, except to weigh a few to ensure that minimum sample size has been attained. After the samples are frozen (as described below) they can be excised from their shells at the lab. This reduces the chances of contamination in the field.

After the selected samples have been rinsed and inspected, they should be placed in either clean Teflon® bags, such as the air sample bags manufactured by Pollution Measurement Corporation, or wrapped in clean heavy duty aluminum foil. Teflon® bags are the ideal packaging material; however, they have the disadvantage of high cost. Polyethylene or polypropylene packaging materials, as well as all other plastic containing materials, should not be used because they can introduce contaminants (e.g., phthalate esters) to the sample. If aluminum foil is selected as a packaging material, it should be cleaned beforehand by rinsing with acetone, rinsed again with pesticide grade hexane, and allowed to dry in a contaminant free area. Samples should be completely wrapped in aluminum foil and then sealed in polypropylene bags to retain moisture.

Each sample container (e.g., bag or foil) should be labeled with a unique number by which it may be readily identified in the laboratory. This identification number should have as few digits as possible to discourage abbreviation. The label should be waterproof, and all information should be written with a ballpoint pen in waterproof ink. The labels

should include, in addition to the identification number, the date and the initials of the sampling personnel.

Other pertinent information such as the time the sample was taken, location, approximate depth, species, substrate, and water quality (e.g., temperature, DO, pH) should be recorded in a field notebook. The data in this notebook must, of course, be cross-referenced to the actual sample by using the identification number as previously discussed.

After labeling, the sample should immediately be placed in a freezer chest with dry ice. Preservation with dry ice (frozen CO_2) is recommended as a means of ensuring that the sample is frozen rapidly and that it remains frozen. This is very important to prevent decomposition and loss of volatile materials. Minimum deterioration occurs if biological samples are frozen immediately after death and properly packaged to prevent loss of moisture and the entrance of oxygen into the tissues (Royce, 1972; EPA, 1980). Dry ice is the most effective means of rapidly freezing tissue during field sampling.

Dry ice requires special packaging precautions before shipping to comply with DOT regulations. The Code of Federal Regulations classifies dry ice as ORM-A (Other Regulated Material). These regulations specify the amount of dry ice which may be shipped by air transport and the type of packaging required.

For any amount of dry ice to be shipped by air, advance arrangements must be made with the carrier. Not more than 440 pounds of dry ice may be shipped by air freight unless special arrangements have been made previously between the shipper and the aircraft operator. Quantities of dry ice needed for tissue preservation are usually considerably less than 440 pounds.

The regulations further specify that the packaging must be designed and constructed in a manner to permit the release of carbon dioxide gas which, if restricted, could cause rupture of the package. If samples are being transported in a cooler, several vent holes should be drilled to allow sublimated gas to escape. The vents should be near the top of the vertical sides of the cooler, rather than in the cover, to prevent debris

from falling into the cooler. Furthermore, wire screen or cheesecloth should be installed to help keep foreign materials from entering the vents. When the samples are packaged, care should be taken to keep these vents open to prevent the buildup of pressure.

Dry ice is exempted from shipping paper and certification requirements if the amount is less than 440 pounds and the package meets design requirements. The package must be marked "Carbon Dioxide, Solid" or "Dry Ice" and also marked with a statement indicating that the material being refrigerated is to be used for diagnostic or treatment purposes (e.g., frozen tissue).

An alternative to dry ice is to enclose the bivalves in a waterproof bag and ship them in a cooler with wet ice (H_2O). Bivalves can survive several days at these temperatures and remain closed and inactive.

Upon receipt at the laboratory, the tissue samples should be placed in a freezer and maintained at a temperature less than -20°C (Royce, 1972; EPA, 1980) until the samples are prepared for analysis. All tissue samples should be kept in their original packaging until they are ready to be prepared.

When the samples are received at the laboratory, they should be recorded in a permanent log book. This log book should include for each sample date and time received, source of sample, sample number, mode of transportation to the laboratory, and the number assigned to the sample by the laboratory if this number differs from the field number. Although this recording procedure may seem laborious, it is absolutely imperative that precise records be kept for all samples so that the data generated by the sampling and analysis effort is of unquestionable integrity.

An accurate written record should be maintained which can be used to trace possession of the sample from the moment of its collection until it has been analyzed. A chain of custody tag should be placed on all coolers in which samples are stored and shipped. This should have appropriate spaces for signatures when the sample is transferred from one person to another. The date and time at which the custody is transferred should be indicated on the tag.

4.5 References

American Public Health Association (APHA). 1976. Standard Methods for the Examination of Water and Wastewater. 14th Ed. Washington, D.C. 1193 p.

Feltz, H.R. and J.K. Culbertson. 1972. Sampling Procedures and Problems in Determining Pesticide Residues in the Hydrologic Environment. Pesticide Monitoring Journal. 6(3):171-178.

Flannigan, J.F. 1970. The Efficiencies of Various Grabs and Corers in Sampling Freshwater Benthos. Journal of the Fisheries Research Board of Canada. 27(10):1691-1700.

Hopkins, T.L. 1964. A Survey of Marine Bottom Samplers. In M. Sears, (ed.), Progress in Oceanography, Volume II. Pergamon Press, N.Y. pp. 215-253.

Hough, J.L. 1939. Bottom Sampling Apparatus. In P.D. Trask, (ed.), Recent Marine Sediments. Dover Publications, Inc., N.Y. pp. 632-664.

Howmiller, R.P. 1971. A Comparison of the Effectiveness of Ekman and Ponar Grabs. Transactions of the American Fisheries Society. 100(3):560-564

Hudson, P.L. 1970. Quantitative Sampling with Three Benthic Dredges. Transactions of the American Fisheries Society. 99(3):603-607.

Larimore, R.W. 1970. Two Shallow-Water Bottom Samplers. Progressive Fish Culturist. 32(2):116-119.

Lind, O.T. 1974. Handbook of Common Methods in Limnology. The C.V. Mosby Co. St. Louis, Mo.

Rounsefell, G.A., and W.H. Everhart. 1953. Fishery Science: Its Methods and Applications. John Wiley & Sons, Inc., New York.

Royce, W.F. 1972. Introduction to the Fishery Sciences. Academic Press Inc., New York. pp. 214-214, 284-295.

Schwoerbel, J. 1974. Methods of Hydrobiology (Freshwater Biology). Pergamon Press, Oxford, England.

U.S. Environmental Protection Agency. 1977a. Analysis of Pesticide Residues in Human and Environmental Samples. Health Effects Research Laboratory. Office of Research and Development. Research Triangle Park, North Carolina.

U.S. Environmental Protection Agency. 1977b. (Revised October 1980). Interim Methods for the Sampling and Analysis of Priority Pollutants in Sediments and Fish Tissue. Environmental Monitoring and Support Laboratory. Office of Research and Development. Cincinnati, Ohio.

U.S. Environmental Protection Agency. 1980. Draft Protocols for the Analysis of Priority Pollutants. Methods 601 - 613, 624 and 625. Monitoring Technology Division. Office of Research and Development. Washington, D.C.

Weber, C.I., editor. 1973. Biological Field and Laboratory Methods for Measuring the Quality of Surface Waters and Effluents. U.S. Environmental Protection Agency. Office of Research and Development. Cincinnati, Ohio. 670/4-73-001.

Welch, P.S. 1948. Limnological Methods. The Blakiston Company, Philadelphia, PA. pp. 175-186.

5.0 SAMPLING FISH

Fish can be used to monitor toxic pollutants because of the tendency of fish to bioconcentrate many kinds of chemical substances. The general public regards fish as the most important type of aquatic animal and is more concerned with the effects of water pollution on fish than on other aquatic organisms. Germane to the monitoring of toxic pollutants by fish tissue analysis is the fact that fish are relatively easy to sample, generally occupy high trophic levels, accumulate many pollutants to much higher levels than those concentrations found in ambient water, have a relatively long life span and thus represent long-term conditions, and represent a direct route for human uptake of these pollutants via ingestion. The presence and concentration of toxic pollutants in fish tissue thus indicate the occurrence of these pollutants in the environment, the pathways through which they travel in aquatic ecosystems, and the hazards to humans through dietary exposure.

There are several problems in using the concentration of pollutants in fish tissue to indicate the extent of the toxic pollutant problem. Differences in fish size, age, lipid content, migratory patterns, position in the food web, and uptake and clearing rates make it difficult to analyze pollutant exposure. Even within a species, temporal factors (season/lipid content, age/feeding habits, etc.) can make interpretation of data a speculative matter. Some methods can be adopted in developing a sampling program to reduce the difficulty in interpreting data, such as establishing target species for collection (thereby eliminating interspecific variations), sampling fish of similar age and size, and limiting sampling at different sites to as short a period as possible to reduce seasonally-related differences. Analytical techniques should also be used to improve the utility of the data. These include analysis of lipid content, quality control (such as analysis of duplicate samples), and compositing tissues from five or more individual fish. The recommended method of compositing fish tissue is to grind each fish individually and composite the homogenates so that analysis of individual concentrations can be performed, if required (if you homogenate several fish together, rather than compositing the homogenates, it is impossible to analyze individual fish when unusual results warrant further investigation). Also, individual homogenates may

be desirable to establish the variance of tissue concentrations for various pollutants. Analytical techniques are currently being developed by EPA's Environmental Support Laboratory in Cincinnati, Ohio, and are provided in a separate document.

Guidance on fish sampling is provided in the following sections and is intended for use in rivers, streams, lakes, and estuaries throughout the U.S. There is considerable overlap in the fish fauna and collection methods used in freshwater and estuarine environments as well as in lentic (standing water) and lotic (running water) environments; these systems are not discreet, but rather different positions in a spectrum of aquatic environments. Because of the variety of conditions that will be encountered specific policies on site selection, equipment, target species, number of fish per sample, and collection schedule should be made as part of the initial planning of each sampling program. Regardless of how much planning is done, the sampling crew will need to make judgements in the field. The information in this manual should be helpful in making these decisions, but is no substitute for experience. We recommend that each sampling crew include at least one experienced member for this reason.

One aspect of sampling fish that differs from sampling ambient water and bed sediment is that a collection permit is often required. Before performing any sampling, check with the appropriate fishery agency(ies) to arrange for any necessary permits. If possible, coordinate joint sampling efforts with other agencies to improve cost efficiency and data interpretation. The U.S. Fish and Wildlife Service (FWS) conducts periodic surveys in some areas, and also collects some fish samples for tissue analysis, so FWS is usually a good starting point for coordinating efforts.

5.1 Site Selection

The process of site selection should be given careful consideration to ensure maximum benefits for the sample program. Many factors play an important role in site selection and should be considered in an attempt to maximize the success of the effort. Important factors that should be considered include:

1. Purpose of sampling program.

2. Proximity of sites for sampling water and bed sediment for priority pollutants.

3. Previous priority pollutant sampling/analysis for fish tissue at the site.

4. Availability of data on fish community structure.

5. Bottom conditions.

6. Type of equipment available.

7. Accessibility of site.

Each of these factors is discussed in greater detail in the following paragraphs.

The specific purpose of the sampling program has an important role in the selection of suitable sampling areas. In rivers and streams, for example, a program designed to identify sources of pollution may require the selection of sites immediately up- and downstream of suspected sources. In lakes and estuaries, sites may be selected in open water areas if the program's goal is to provide an overall evaluation of pollutant levels, or near river mouths or outfalls if the goal is to identify the sources of pollutant input. The type of problem being studied will dictate the site, the conditions at the site will affect target species selection, and the site and species will affect equipment selection.

There are several advantages to locating the fish sampling sites near sites selected for priority pollutant sampling of water and sediments. The most important benefit of such a sampling design is the possibility of developing at least a simple model of the dynamic distribution of pollutants in that area. This consideration has greater weight if the target species has a limited territory and spends most of its time in the immediate area. In cases such as this, correlations between pollutant levels in the different compartments (fish, sediment, and water) may be established. Selecting sites in proximity to each other also allows a more efficient use of time by providing the opportunity to combine sampling trips.

The availability of historical data on pollutant body burdens should be checked before making any final decisions regarding sample sites.

In most cases these data are nonexistent, but in some areas such sampling has been conducted previously; in those few cases where this information is available, consideration should be given to choosing sampling sites near the areas sampled previously in order to construct a historical record of pollution in the area.

Data on the ecology of fish communities should play an important role in the final selection of sample sites. Information on food chain relationships, preferred feeding areas, spawning areas, and movement patterns of target species is a valuable asset in site selection. Knowledge of this sort is useful in locating populations of the target species. This type of information is available from fishery biologists familiar with the area. Even though such an expert may not have previously sampled in the water body in question, the information provided regarding habitat preferences may significantly reduce the time required to locate a suitable population of the species. In areas having commercial fishing operations, experienced commercial fisherman can also often provide valuable information.

Bottom condition is another factor closely related to the ecology of the target population. Once the habitat preferences of a species are known, the next step is to locate those preferred areas in the water body being sampled. This factor includes such considerations as the presence of deeper areas (holes) preferred by some species, vegetation beds which are often utilized as feeding areas, and dead trees and other shelters which provide protective cover. Obviously, the bottom condition has important considerations related to equipment use as well. Obstructions such as snags or oyster beds should be avoided when trawls or seines are used. Depth contours and the presence of larger obstacles are readily determined in coastal areas and larger navigable rivers by consulting navigation charts. Other sources of this information include fisheries biologists and commercial fishermen familiar with the candidate area, or where possible use of depth finders.

The availability of equipment and personnel experienced in its use is also an important consideration when selecting sample sites. If a site which meets other criteria cannot be sampled with available equipment, there is often the option of coordinating efforts with other fishery biol-

ogists or commercial fishermen who have the appropriate equipment and experience.

Another factor closely related to equipment availability is the accessibility of the site. This is sometimes a problem with smaller streams where it is impractical to use a boat. In such instances it is desirable to locate sampling sites where there is good land access. The same is true of land-locked lakes, particularly in mountainous areas. When seining or shocking in areas which must be reached by land, factors to consider are: necessary permission to cross private property, the presence of brush and other obstacles which could make it difficult to carry a large seine or electroshocking equipment, and the depth and bottom gradient of the sample site. If access is by water, consideration should be given to the location of nearby boat ramps and marinas and the depth of water required to operate the boat safely.

The factors described above are among the important considerations which should be evaluated in the selection of sampling sites. Other elements may be important in some cases. For example, commercial fishing and popular sport fishing areas may be good sampling sites since fish from these sites represent vehicles for human exposure to water-borne pollutants.

Obviously, the taxa of fish present will vary with the kinds of sites selected. A list of "target species" has been compiled (Section 5.2) representing common aquatic habitats throughout the country. If conditions at several sites are to be compared, it is recommended that the same species and age classes of fish be sampled from each site, since species and age classes differ considerably in their propensity to accumulate and retain pollutants. This, of course, requires that the sites selected be similar as far as providing the habitat necessary for the desired species.

Like water and sediment, fish can be sampled upstream and downstream of point sources of pollutants to indicate the effects of these sources on pollutant loading and aquatic health. Because of the mobility of fish, however, such data should be interpreted carefully. The well documented ability of fish to avoid noxious conditions can result in situations where populations have avoided exposure to maximum concentra-

tions of a pollutant they are able to detect. For the purpose of comparing conditions at nearby sampling stations, it is best to sample fish with relatively narrow territorial confines. Several fish on the target species list given in the next section exhibit well-defined territoriality.

The best approach to developing a sound sampling program is to consult with local fisheries biologists regarding the best candidate species and areas in which those species can be located. Before sampling, a reconnaissance should be performed to locate sampling sites and access points. Once again, it is vital to arrange for any necessary collection permits before implementing a sampling program.

5.2 Target Species

Because of the differences in habitat, niche, and pollutant uptake among fish species, it is very difficult to compare the results from different monitoring studies unless the same species are used. It is obviously impossible to sample for the same species in every study; nevertheless, the number of "target" species should be fairly small to limit the number of variables involved when interpreting data from different sites or studies.

Several characteristics are important for selecting a target species:

1. Wide ranging (e.g., broad distribution).
2. Non-migratory.
3. Easy to identify.
4. Easy to capture.
5. Pollution tolerant.
6. Foodfish.
7. Abundance.

Wide range is vital since it allows sampling the same species in various studies, thus enabling direct comparison among different sites. Non-migratory fish, especially those with a small individual territory, are also

preferable, since they more accurately reflect ambient water quality at the site where they were sampled. Species which are easy to capture and easy-to-identify are practical choices for sampling. Tolerance to pollution is an important attribute because tolerant species can withstand pollutants and accumulate them in their tissues; intolerant species will be absent in such environments. Foodfish are preferred because they are large enough and have a long enough life span to accumulate detectable concentrations of pollutants, and they also represent a route of human exposure to pollutants.

It is recommended that both predators and bottom feeders be sampled. Predators and bottom feeders are not mutually exclusive designations but conveniently describe two ecological groupings of fish that are apt to be exposed to priority pollutants in large concentrations. Predators can indicate the presence of pollutants that are biomagnified (accumulated in the food web). Bottom feeders (most of which prey on benthic invertebrates) may come in contact with heavy pollutant concentrations because many of the organics and metals partition strongly from water to sediment and can then be accumulated by benthic and epibenthic organisms.

In lacustrine and estuarine systems, planktivores should also be sampled, if possible. Plankton are essential to the aquatic food web in these systems and play an important role in pollutant uptake.

It is recommended that five fish of the same species be collected per site for each of the trophic groupings that are to be sampled (i.e., predator, bottom feeder, planktivore). For instance, at a warm water stream site, a sampling crew might collect five largemouth bass (predator) and five white suckers (bottom feeder). Mixing species at the same site is not recommended (i.e., three largemouth bass, two bluegill). Each fish should be wrapped individually and then placed in a plastic bag containing all fish of the same species from the same site, as described in Section 5.6. The minimum sample mass (per species) is 300 grams; if five fish do not weigh an aggregate 300 grams, more should be collected until this minimum is reached.

Target species for freshwater and estuarine systems are discussed in Sections 5.2.1 and 5.2.2, respectively. Synopses of the range

and habitat preferences of the target species are provided in Appendix B. Often, it will not be possible to collect one of the recommended species. In this case, collect congeneric species, if available. It is always a good policy to collect the same species throughout a sampling project; however, this is not always possible. The most important principle is to be consistent.

5.2.1 Freshwater Target Species

Recommended target species for warm water, cold water, and the Great Lakes and other lentic systems are listed in Table 5-1. Detailed information on range and habitat preference for the target species and similar species can be found in common field guides, such as McClane (1978a and 1978b). The U.S Fish and Wildlife Service and state fisheries agencies can usually provide information on types of fish present as well.

The fish that are listed in Table 5-1 satisfy most of the criteria listed previously for selecting target species. This list is not intended to be exclusive, but should serve as guidance for selecting fish to sample.

Some minnows are widely distributed and easy to capture, but identification of these fish is fairly difficult, especially in the field. Because most minnows have a relatively short life-span and are fairly low in the food chain, their capacity for accumulating pollutants may not be as great as most of the species listed in Table 5-1. Other than the carp, squawfish, and stoneroller, which are long-lived, large cyprinids, minnows are absent from the target species list. They can, however, be useful for screening purposes to determine the presence of pollutants in ambient water, and, in some headwater streams, minnows may be the only alternative to stocked trout.

Although trout are of a suitable size and may be the only large species in many cold-water streams, caution should be exercised in using trout as a representative species. Many trout are stocked on a "put and take" basis, so they may not represent long-term exposure conditions for the pollutants in the stream in which they are found. The agency responsible for stocking trout should be able to provide information as to when

Table 5-1. Target Species for Warm Water, Cold Water, and the Great Lakes and other Cold Water Lentic Systems

WARM WATER

Predators:	Bottom Feeders:
**Largemouth bass (*Micropterus salmoides*)	**White sucker (*Catostomus commersoni*)
**Smallmouth bass (*M. dolomieui*)	**Carp (*Cyprinus carpio*)
**Yellow perch (*Perca flavescens*)	*Stoneroller (*Campostoma anomalum*)
*Bluegill (*Lepomis macrochirus*)	*Spotted sucker (*Minytrema melanops*)
*Channel catfish (*Ictalurus punctatus*)	*Silver redhorse (*Moxostoma anisurum*)
*Chain pickerel (*Esox niger*)	*Freshwater drum (*Aplodinotus grunniens*)

COLD WATER

Predators:	Bottom Feeders:
**Rainbow trout (*Salmo gairdneri*)	**White sucker (*Catostomus commersoni*)
**Brown trout (*S. trutta*)	**Largescale sucker (*C. macrocheilus*)
**Brook trout (*Salvelinus fontinalis*)	*Carp (*Cyprinus carpio*)
*Squawfish (*Ptychocheilus oregonensis*)	*Silver redhorse (*Moxostoma anisurum*)
*Round whitefish (*Prosopium cylindraceum*)	*Northern(shorthead)redhorse (*M. macrolepidotum*)
*Moutain whitefish (*P. williamsoni*)	*Freshwater drum (*Aplodinotus grunniens*)

GREAT LAKES & OTHER COLD WATER LENTIC SYSTEMS

Predators:	Bottom Feeders:
**Lake trout (*Salvelinus namaycush*)	**White sucker (*Catostomus commersoni*)
**Yellow perch (*Perca flavescens*)	**Carp (*Cyprinus carpio*)
*Walleye (*Stizostedian vitreum*)	*Silver redhorse (*Moxostoma anisurum*)
*Coho salmon (*Oncoryhnchus kisutch*)	*Northern(shorthead)redhorse (*M. macrolepidotum*)
*Sauger (*S. canadense*)	*Freshwater drum (*Aplodinotus grunniens*)
*Northern pike (*Esox lucius*)	
*Round whitefish (*Prosopium cylindraceum*)	
*Lake whitefish (*Coregonus clupeaformis*)	
*Rainbow smelt (*Osmerus mordax*)	

**Preferred target species
*Good target species

a particular stream was last stocked. The best policy is to avoid using stocked fish at all, whether they are trout or other species.

As previously mentioned, planktivores should be included when lacustrine systems are sampled if the budget will allow it. Clupeids (Herring family) are generally good target planktivores since they have a high lipid content and thus accumulate lipophilic compounds.

A taxonomic key and field guide should be a part of the field equipment. Identification must be done in the field, as it is much easier to do with live or recently dead specimens than those that are frozen.

5.2.2 Estuarine Species Selection

Ideally, estuarine fish samples should comprise predators, bottom feeders, and planktivores as suggested for lacustrine areas. Planktivores play a very important role as forage fish in the highly productive waters of most estuaries, and priority pollutant data for planktivores may furnish valuable insights regarding the pathways of pollutants in these waters. Predators and bottom feeders also tend to accumulate high concentrations of pollutants, as previously discussed.

Some special problems are encountered in the selection of target species for estuarine areas. One major problem is the lack of species which are represented on both the Atlantic and Pacific coasts. Another difficulty encountered in estuarine areas is the tendency of many species to move seasonally. This results in uncertainty as to the source of any pollutants detected in many estuarine species. A related factor is the role of estuaries as spawning and nursery areas for many species. In many cases, sexually mature adults only enter the estuary to spawn. As mentioned in Section 5.4, spawning populations should not normally be sampled. If only juvenile stages of a species occur in the estuary, another species should be selected since juveniles may not have had sufficient time to accumulate pollutants. In some cases, these seasonal movements may vary from estuary to estuary for a given species. The best approach to selecting estuarine species is to consult with an authority familiar with the estuary to be sampled.

As described in Section 4, an alternative approach for detecting pollutants in estuarine biota is to sample shellfish rather than finfish. Shellfish, such as clams and oysters, are sessile and may represent local pollutant levels more accurately than the highly mobile finfish.

Table 5-2 lists some recommended estuarine fish for the Atlantic and Pacific coasts. Many of the Atlantic species are found along the Gulf Coast also. When possible, this list recommends closely related species for the Atlantic and Pacific coasts. Other local species may be more suitable in some cases. In any event, careful consideration should be given to choosing species which will represent local conditions as much as possible.

Table 5-2. Target Species In Estuaries

West Coast

Starry flounder (*Platichthys stellatus*)
Striped mullet (*Mugil cephalus*)
Rainbow smelt (*Osmerus mordax*)
Whitebait smelt (*Allosmerus elongatus*)
Pacific staghorn sculpin (*Leptocottus armadus*)

Atlantic and Gulf Coast

Winter flounder (*Pseudopleuronectes americanus*)
Striped mullet (*Mugil cephalus*)
Spot (*Leiostomus xanthurus*)
Croaker (*Micropogon undulatus*)
Rainbow smelt (*Osmerus mordax*)
Yellow perch (*Perca flavescens*)
White perch (*Morone americana*)

5.3 Sampling Equipment and Use

A number of collection techniques have been developed to sample fish representative of different habitats, sizes, and behaviors. In response to the variations in physical conditions and target organisms of interest, fisheries biologists have had to devise methods which are, for the most part, intrinsically selective for certain species and sizes of fish. Although this selectivity can be a hindrance in an investigation of community structure, it is not a problem where fish tissue analysis is concerned. Results from different samples can only be compared if uncontrolled factors such as differences in taxa and size are minimized.

Collection methods can be divided into two categories, active and passive. Individual methods are discussed under these categories in Sections 5.3.1 and 5.3.2.

5.3.1 Active Collection

Active collection methods utilize electroshock units, seines, trawls, angling equipment, and chemical poisons. Although active collection requires a greater amount of fishing effort, it is usually more efficient than passive collection for covering a large number of sites and catching the relatively small quantities needed from each site for tissue analysis. Active collection methods are particularly useful in shallow waters such as streams, along lake shorelines, and along the shallow coastal areas of estuaries. When sampling must be conducted in deep water, however, active collection methods have distinct disadvantages because, as previously mentioned, they are more intensive requiring large numbers of personnel and expensive equipment. This problem, however, may be overcome when sampling efforts to collect fish samples for priority pollutant analysis are coordinated with other scientific or commercial collecting efforts. In such cases, a subsample can be taken from the entire catch to obtain a sample for priority pollutant analysis.

The following discussions describe each of the most common active collection methods and equipment, the procedures for proper use, and the advantages and disadvantages of each as tools for the collection of fish samples for priority pollutant analysis.

5.3.1.1 Electrofishing

Electrofishing is the most efficient and least selective sampling method available with the exception of radical methods such as poisoning or draining. An AC, DC, or pulsed DC electrical current is applied to the water, which stuns the fish. Pulsed DC is commonly used because it is apparently most efficient in terms of power and because it often attracts fish to the anode. The attraction is caused because the swimming muscles of the fish are stimulated, causing orientation in the direction of the electrode. Although fish are usually just stunned, higher voltages can be lethal. Most stunned fish usually float to the top, where they can easily be collected, but some sink when stunned (e.g., catfish) and thus are not readily sampled in this manner.

Electrofishing is not a viable alternative in brackish, salt, or extremely soft (hardness less than 25 mg/l, as $CaCO_3$) waters (Bennett, 1970; Battelle, 1975). In soft waters, alternating current or pulsed DC may be more effective (Weber, 1973). In most other fresh waters, DC or pulsed DC is usually employed. Areas where these considerations may be very important are the Southeast where the conductivity is frequently too low and in the West where it is often too high.

Two types of electroshocking units are in general use: the boat mount shocker and the backpack shocker. The boat mount shocker uses a generator run by an air cooled gasoline engine. The approximate weight of the motor/generator assembly is 70 lbs, and it has a utility of about 500 watts and 110 volts. The unit is usually mounted in the middle of the boat with the probes extending from bars on the front of the boat. The depth of the electric field can be lowered or raised by adjustment of these probes. Three investigators are required to operate this unit; one operator is responsible for the generator and boat while the other two are responsible for keeping the electrode probes in position and collecting the stunned fish. Boat mount shockers can be used in shallow rivers, ponds, lakes, and impoundments, but they are usually not effective in water deeper than 5 meters.

Smaller backpack shockers are available for small wadeable waterways. At least two, and preferably three or four, investigators are required to carry the backpack, deploy the probes, collect the fish, and carry the sample containers and cooler.

Caution should always be employed when electrofishing because the currents used can not only stun fish, but also <u>kill</u> humans. For this reason, safety precautions such as rubber linesman's gloves, waders, and a readily available cut-off switch should always be included as mandatory equipment when backpack shocking; a "deadman switch" should always be installed in all shockers. Metal handled collection nets should not be used. It is important to emphasize that the sampler responsible for the generator must be capable of shutting off the electricity instantly in case of mishap.

All personnel using electrofishing techniques should receive basic training from experienced operators and have electrofishing safety manuals. For sampling with an electroshock unit, it is a good safety measure to have at least one experienced operator per sampling crew. All members, of the crew should know basic CPR (cardio-pulmonary resuscitation) techniques. The need for safety precautions when working with electroshock units cannot be too strongly emphasized.

Although there is some added element of danger inherent in electrofishing, with caution, problems can be avoided. Electrofishing is, for many applications, probably the best method available because:

1. There is minimal damage to the fish, which concomitantly reduces the danger of contamination.

2. It is very efficient in terms of catch per unit time.

3. It is one of the least selective techniques, so that it provides flexibility in "target" species.

4. It can be adapted for use under a variety of conditions.

5.3.1.2 Seines

A seine consists of a wall-like collecting net held upright in the water by floatlines at the top and lead weights on the bottom. Poles are attached at each end of the net to provide a grip and help keep the net stretched vertically. The nets vary in mesh size as well as length and usually are operated by two or more individuals. Select a mesh size that is small enough to retain the smallest fish to be sampled; very small mesh sizes are disadvantageous because of their drag.

Seines can be used in relatively shallow waters in which organisms can be captured by surrounding an area and pulling the net ashore so as to enclose the specimens. It is extremely important to keep the lead line on the bottom because most fish will attempt to go under the net. Often larger specimens of fish such as bass and trout will attempt to jump the net. Seines are not effective in lakes or streams with irregular bottoms and snags.

Good technique is required for efficient use of a seine. One sampler remains close to shore and plays out the seine so that it doesn't get tangled. The other pulls the seine away from the shore, keeping an eye out for snags, and then turns parallel to the shore. When the seine is completely deployed, the shoreline sampler starts moving in the same direction as the leading sampler. The seine should then be in a long "J" shape. The leading sampler turns quickly into shore, and both ends of the seine are brought close together. The poles are dropped, and the seine is pulled in, one hand on the float line and one hand on the lead line, taking care that these stay on the surface and bottom, respectively. If the seine is snagged, give it slack, and while one sampler holds the ends, the other wades out and frees the snag. In flowing waters, the seine should always be let out as the samplers move upstream.

Seines are somewhat less selective than other net collection forms in that they will take any specimen which cannot pass through the mesh. Since they are relatively cheap and easy to operate, they are widely used.

5.3.1.3 Trawls

Trawls are specialized seines most commonly used in larger open bodies of water. They vary in types and sizes but all are pulled with boats at speeds sufficient to overtake the fish. The two types most commonly used in fresh and estuarine waters are the otter trawl and the beam trawl, both of which are used in collecting fish near or on the bottom. The beam trawl incorporates a log like beam responsible for holding the net open and scaring the fish up from the bottom into the net (See Figure 5-1). This trawl has a very rigid opening and is quite difficult to operate from small to medium sized boats. In recent years beam trawls have been more or less replaced in fish collection methods by the more efficient otter trawl. The otter trawl utilizes otter boards which are sections of white oak bound with heavy iron runners to protect the wood. These boards are placed at either side of the mouth of the net and serve to keep the net open (see Figure 5-2).

Despite this modification in design, trawls cannot be used in water bodies with irregular bottoms. Operation of a trawl often requires

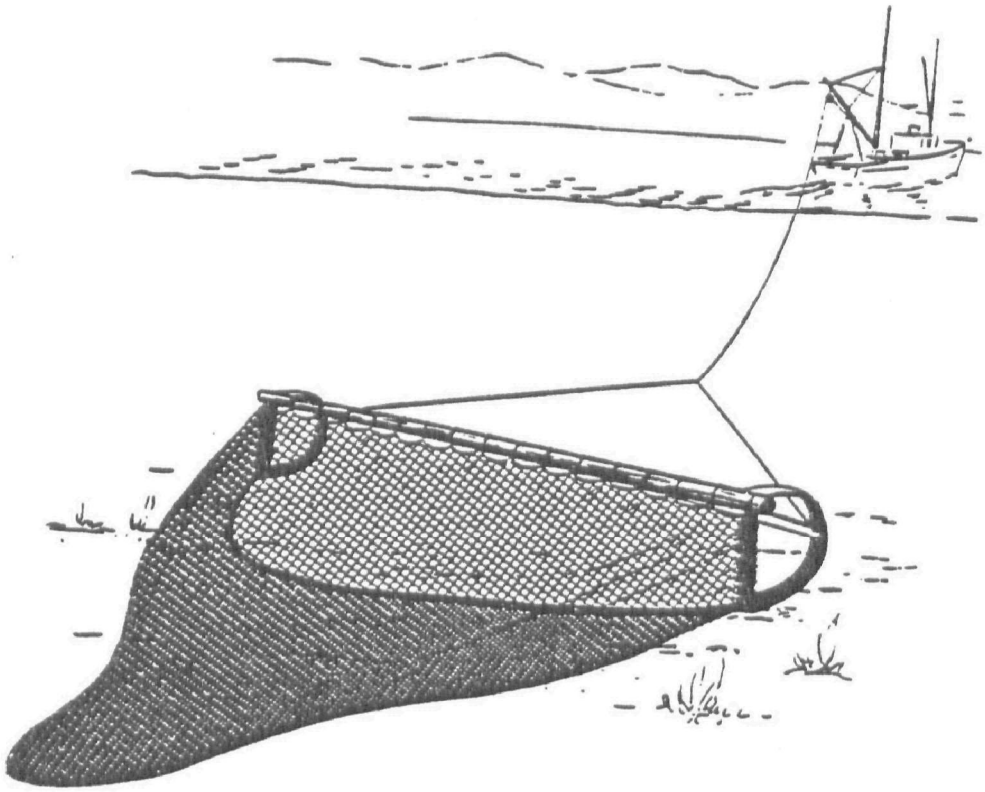

Figure 5-1. Beam Trawl (from Weber, 1973).

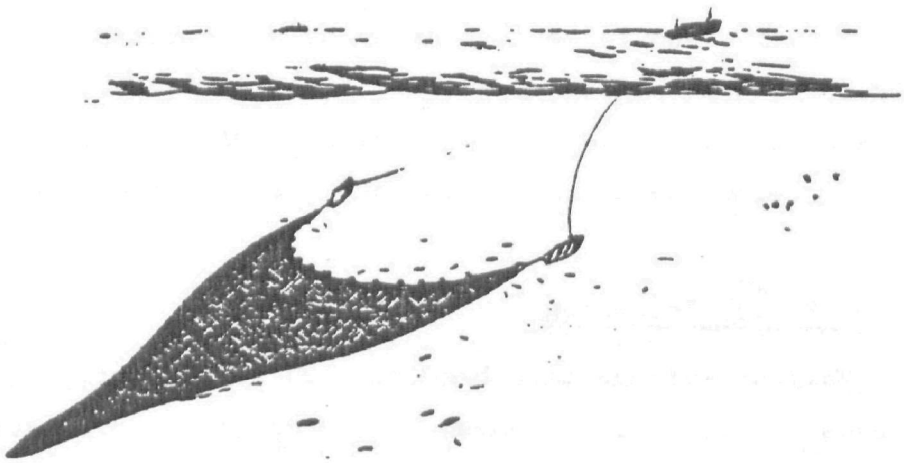

Figure 5-2. Otter Trawl (from Weber, 1973).

the use of a boat equipped with heavy winches and motors as well as experienced personnel. Furthermore, since the number of fish collected by trawling far exceeds the number required for fish tissue analysis at any given site, this method of sampling is probably too intensive (and expensive) for most priority pollutant investigations unless small sampling trawls are readily available.

5.3.1.4 Angling

Angling is one of the most selective forms of fish collection. This form makes use of the hook and line method of fishing. Many variations of angling exist, the most productive being set lines or long lines used primarily for larger, non-schooling species of fish. These are essentially one long mainline anchored or stretched between floats with smaller drop lines with baited hooks attached at intervals. (Trot lines, which are single baited lines attached to branches or other fixed points, may be more useful in rivers.) These lines are normally checked daily by two investigators working from a boat. This method may be especially productive for particular species, such as catfish.

Another form of angling commonly utilized is the use of rod and reel, ranging from large tuna poles to the sport model rods and reels. Although angling is not a dependable means of collection and is generally not as efficient as other methods, in some cases it may be easier to catch fish with a hook and line than to use some of the more elaborate techniques. Therefore, angling should be considered as an acceptable procedure, particularly for deeper bodies of water. Bank fishing, drift fishing, and trolling are all effective for catching fish with rod and reel. Deep trolling is a good way to catch fish such as lake trout which inhabit deep water.

5.3.1.5 Poisoning

Various poisons have been used to sample entire fish communities for purposes of determining community structure and population dynamics. Although the use of these poisons is justifiable for such studies, they should be avoided when sampling fish for analysis of toxic pollutants because they may induce physiological changes which could alter the concen-

tration of pollutants in the tissue. It is interesting to note that several of the chemicals historically used for fish sampling are now on the EPA priority pollutant list (e.g., cyanide, copper, toxaphene).

5.3.2 Passive Collection

Passive collection methods include gill nets, Fyke nets, trammel nets, hoop nets, pound nets, D-traps, and purchasing fish from commercial fishermen. These forms of fish collection generally require less fishing effort than the active forms but are usually less desirable for shallow water collecting because of the ability of many species to evade entanglement and entrapment devices. These methods normally yield a much greater catch than necessary from a particular site and are time-consuming; in deep waters, however, passive collection techniques are generally more efficient than active methods.

5.3.2.1 Gill Nets

The gill net consists of a loosely hung single wall of diamond shaped mesh with a float line on top and a lead line on the bottom. Fish are captured when they swim part way through the mesh and are entangled by the net behind the gills (see Figure 5-3). The degree of selectivity in

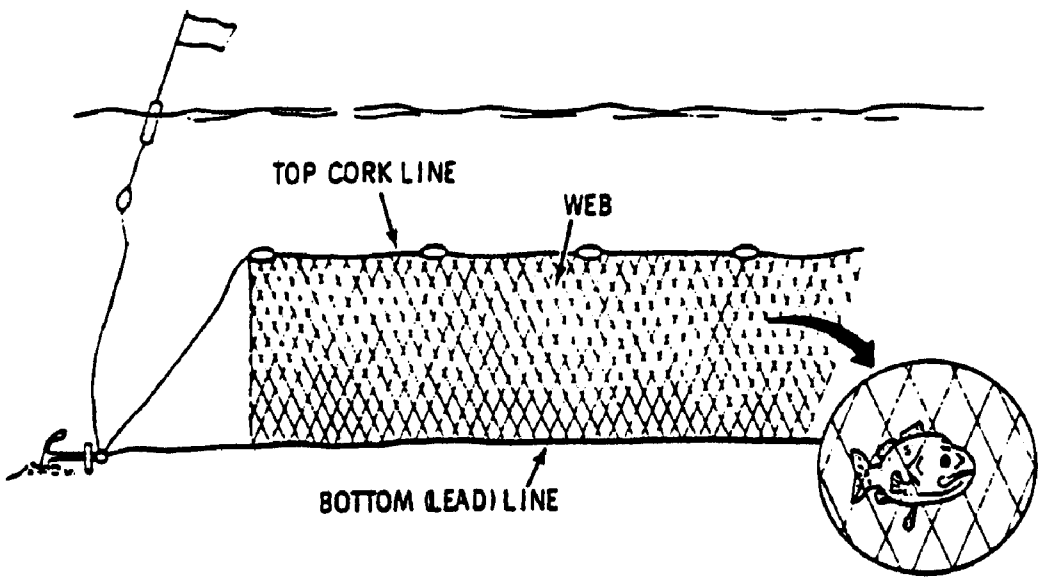

Figure 5.3 Gill Net (from Battelle, 1975).

this net is controlled by the mesh size chosen (Weber, 1973). The recommended range of use for the gill net includes lakes, reservoirs, estuaries, or rivers where fish movement can be expected. They are used extensively in deeper water where they can be set at any desired depth by adjusting the length of the anchor and buoy lines. These nets are set from a boat and require at least two individuals for proper setting. Gill nets have proved effective in collecting pelagic fish, but are also characterized by severe tangling problems when used for species with large or barbed spines such as the channel catfish.

The gill net is commonly set for a period of 24 hours, after which the sampling crew returns to remove specimens that have become entangled during the sampling period. One important consideration is that the gill net will eventually kill entangled fish. Specimens that have been killed and allowed to remain entangled for extended periods may undergo degradation or other physiological changes that could possibly alter the concentration or character of toxic pollutants contained in the fish tissue. Therefore, only those fish that are still living or have recently died should be sampled.

5.3.2.2 Trammel Nets

Trammel nets consist of a light, small-mesh net hung between two walls of large mesh webbing. The fish are captured when they hit the light gill net, pulling a pocket of this netting through the mesh of the larger net (see Figure 5-4). These nets are equipped with a float and weight system identical to the gill net and are commonly fished across waterways or by surrounding visible schools of fish. Trammel nets are most commonly used for commercial fish which can be scared into the nets, such as carp and catfish (Bennett, 1970). Two investigators are required to set these nets from a boat, but additional personnel are recommended to aid in removing severely tangled fish from the netting. As with gill nets, only living or recently dead specimens should be sampled.

5.3.2.3 Hoop, Fyke, and Pound Nets

The hoop net is essentially a shallow water gear owing to the difficulty of setting it effectively in deep water. The hoop net is used

extensively in river sampling and is best adapted for use in a fair current or where fish move in predictable directions.

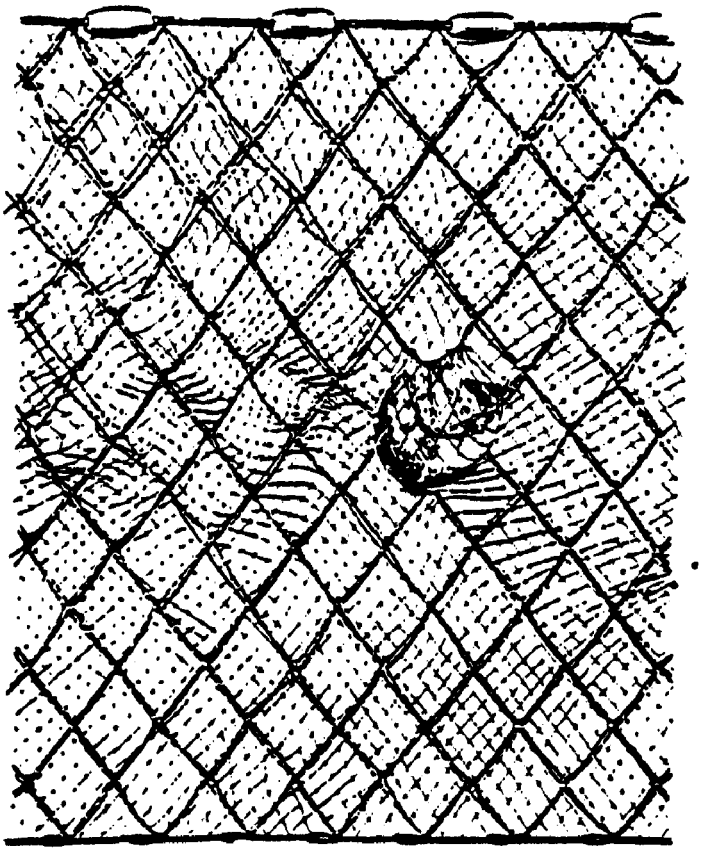

Figure 5-4. Trammel Net (from Weber, 1973).

The typical hoop net (Figure 5-5) is a long cone shaped bag mounted on one or more hoops. The hoops serve a double purpose; they keep the net from collapsing, and they form the attachment for the series of internal funnels (throats) which prevent the fish from escaping readily. The hoops are most frequently constructed of metal or wood, the size of which depends on the depth to be sampled and the particular species to be captured. Most commonly, the trap consists of 5 hoops of decreasing size, the largest hoop being at the front of the net. The hoops are equally spaced and overall length may vary from 3 to 15 meters. Two funnel shaped throats lead inside the net. The first throat is attached peripherally to the front hoop and posteriorly to the third hoop. The second throat, which leads to the cod or pot end, is similarly attached to the third and fifth

hoops. The mesh at the pot or cod end of the net is equipped with a drawstring that may be released for easy removal of the catch. Nets of this type are also available with square frames, which reduces the tendency to roll and twist.

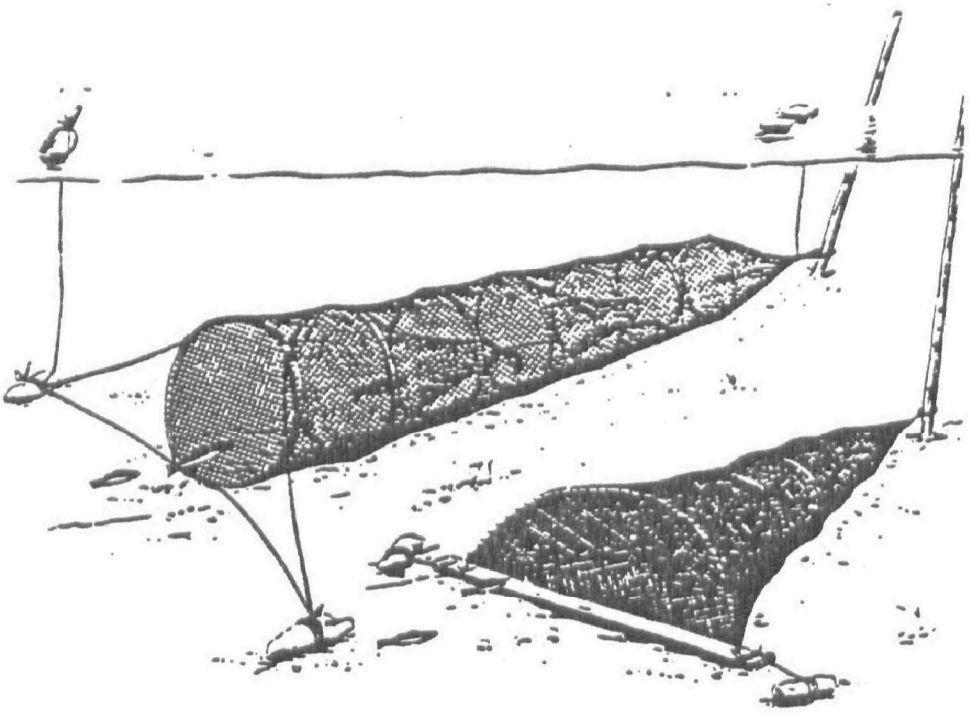

Figure 5-5. Hoop Nets (from Battelle, 1975).

Construction of the hoop net facilitates handling and transport. The net will collapse upon itself, and thus can easily be stored or carried on the deck of a small boat. The net is set parallel to, and usually facing, the current. This arrangement reduces current resistance and also places the throat end in the path of downstream moving fish. The net can be secured and kept taut by anchors or posts secured in the substrate. The net may or may not be baited depending upon the needs or selectivity of the investigation.

The Fyke net (Figure 5-6) is essentially a hoop net with one or more wings attached to the first frame in order to increase its efficiency.

Fyke nets are also used in shallow waters, particularly where little or no current exists and where fish movement is more random such as in lakes, impoundments, or estuaries.

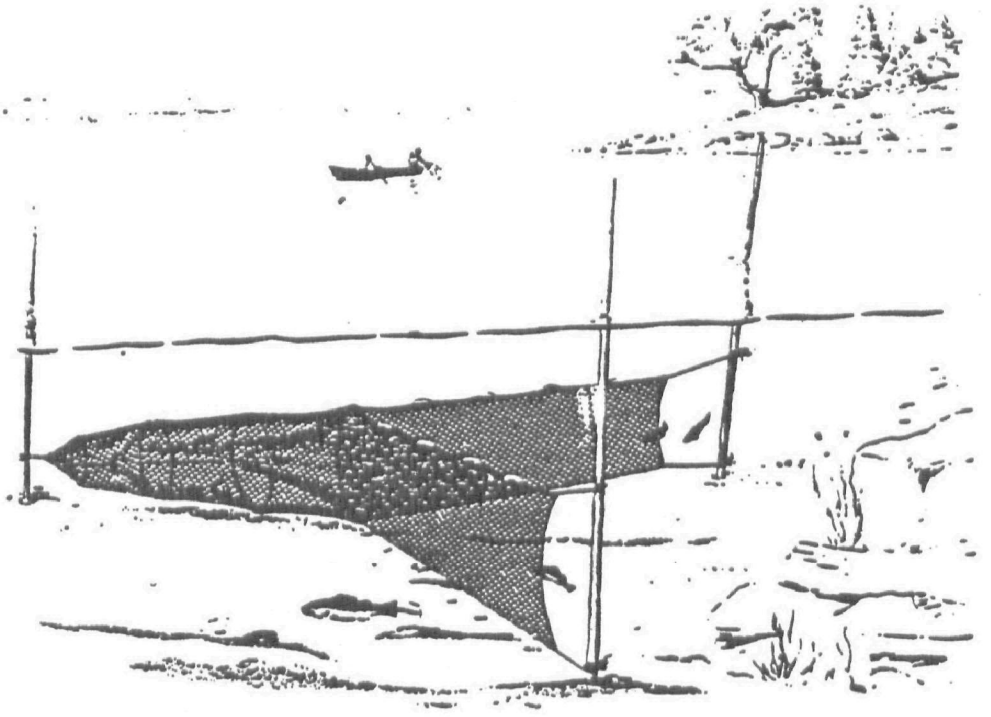

Figure 5-6. Fyke Net (from Weber, 1973).

The wings and leader of a Fyke net consist of net meshing of the same size as the hoop. The wings are set obliquely on either side of the mouth of the bag and are generally 1.5 times as long as the length of the bag. The leader extends directly out perpendicular to the mouth of the bag, and is generally 5 times the total length. The wings and leader of a Fyke net will have a depth equal to the diameter of the first hoop. The top of the net is supported by floats and the bottom by a lead line. The entire structure is kept taut by posts and anchors secured in the substrate.

By nature, the Fyke net is a rather semi-permanent structure. The net can easily be set up by two people and thereafter serviced by one person. The nature of the wings and leader increase the capture efficiency of the hoop net. As fish move and strike the wings or leader, they are deflected toward the mouth of the net.

Pound nets are a particularly effective method for large-scale capture of migratory species that tend to follow a shoreline. There are scores of designs and variations, but the operating principles are the same for all. Fish moving along the shoreline encounter a lead of wire, brush, or net. They follow this lead in order to attempt to pass around it, but are led into one or more enclosures from which escape is extremely difficult.

The typical pound net used on the Great Lakes or Atlantic seaboard uses wire mesh or net that is hung from poles driven in the bottom. These poles are arranged in a straight line leading away from the shoreline towards the impoundment area in deeper water. There, piles are driven into the bottom in depths of up to 25 meters or more from which nets are also hung. This area, often called the heart, is opened from the lead, and fish entering are further funneled to the trap area. The designs of the trap area are also extremely variable, but in essence, they all facilitate the hauling of the catch to the surface for removal to the servicing boats.

Pound nets are typically used for commercial purposes and not routine sampling programs. Many persons are involved in the operation of a pound net, and it is therefore not a feasible operation for priority pollutant sampling programs. It is, however, quite possible that members of the sampling team could accompany commercial fishermen who are operating pound nets and buy fish for sampling purposes. If this alternative is used, the members of the sampling team should take responsibility for removing the desired fish, weighing, and measuring them.

5.3.2.4 D-Traps

The D-trap is a particularly effective method of capturing slow moving fish (e.g., sunfish, perch, catfish) and crustaceans (e.g., crabs, lobsters) that move about on, or just above, the river, lake, or estuary

bottom. The D-trap is usually small enough so that several can be piled on the deck of a small boat and light enough to be operated by one person.

The D-trap is so named for its construction. Wire, wood slats and cotton or synthetic mesh are supported by three attached D-shaped frames. The trap consists of two compartments, the "chamber" and the "parlor." Fish enter the chamber through a suspended funnel shaped throat and then pass through a second funnel to the parlor. The fish are removed from the parlor through a draw-string pocket or a door if the trap is constructed of wire or wood. Mesh and trap size depend on the needs of the investigation.

The trap can be set from a boat or the shoreline of a river or lake in either shallow or deep water. The trap is weighted with a few bricks, steel rods, or stones, and a buoy line is attached to the lower corner of the chamber end. The trap may or may not be baited. A typical set is 24 hours; however, this also varies with the study.

Many variations of the D-trap have evolved with time (Figure 5-7). The most commonly used type are those traps or pots used in the lobster fishery. Frequently, rectangular traps are used. These are particularly popular because they are easily made and stored. All pots or D-traps are fished in the same manner, and they differ in their efficiency and selectivity. Efforts should be made to find which shape or size best fits the needs of the particular investigation about to be undertaken.

D-traps can be useful in sampling fish for priority pollutant analysis, especially when sampling fast, deep waters where other methods are difficult to use. They are usually fairly effective for sampling bottom feeders and less effective for the more visually oriented predators. They are less effective for all species when water is clear than when it is turbid. Although it is generally true that the passive collection methods work best during periods of extensive fish movement, this seems particularly true for D-traps. Because of the highly variable catch efficiency of D-traps, they are not a good choice for a primary sampling technique, but are valuable as a back-up for other methods.

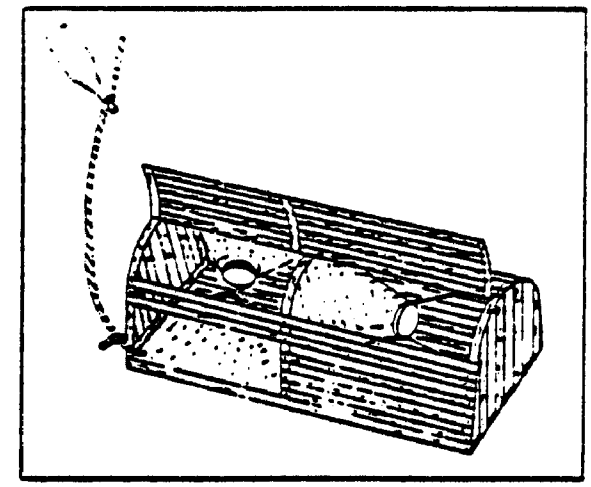

HALF-ROUND LOBSTER POT

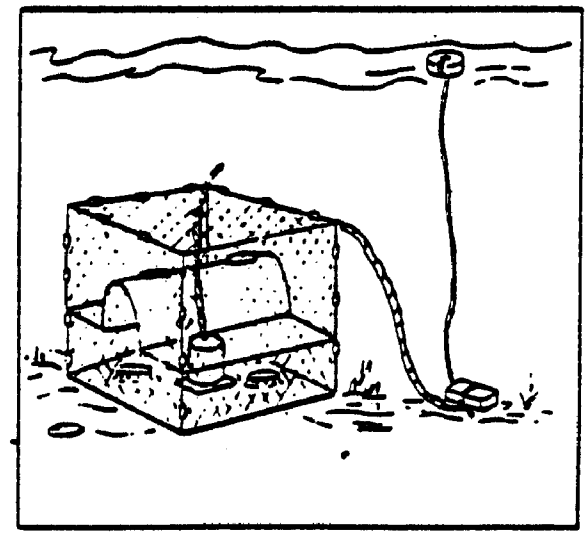

CRAB POT USED IN CHESAPEAKE BAY

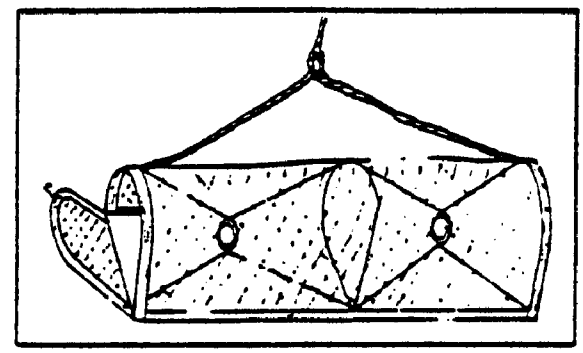

HALF-ROUND EEL POT

Figure 5-7. Modifications of the D-Trap (from Battelle, 1975).

5.3.2.5 Purchasing Specimens

Purchasing fish from commercial fishermen is a common and accepted method of obtaining specimens. When collecting for priority pollutant analysis, it is imperative that samples be preserved immediately and with the least amount of handling. To ensure that proper preparation techniques have been observed, a member (or members) of the sampling team should accompany the fishermen during the operation. In this way, trained personnel can remove the fish from the nets then weigh, measure, and package them with minimal chance of contamination. This is a good method of obtaining specimens of commercially important species in areas such as the Great Lakes and coastal estuarine areas.

Another good possibility in some cases is to work in cooperation with the state fishery agency if they are planning a sampling program. Members of the sampling team can accompany the fishery biologists and remove the desired specimens from the nets or traps.

5.3.3 Summary

In summary, sampling methodologies may be divided into active methods, in which the sampling team can generally catch small quantities of fish in a short period of time, and passive methods, which are usually more selective means of capturing large numbers of a particular species. Active methods of collection are usually less selective and allow the sampling crew to exercise some control over the sample size. Electroshocking is probably the best of the active means of acquiring samples for tissue analysis, but the other active collection methods described may be used, with the exception of poisoning which, until proven otherwise, must be assumed to induce physiological changes that may alter the concentrations of pollutants in the tissues. In deep water or strong currents, passive collection methods may be more efficient in collecting samples. In all cases, the method used depends primarily on the water conditions of the sampling area, the judgement of the sampling team, and the equipment available. Table 5-3 summarizes the use and advantages and disadvantages of each type of sampling equipment or method previously discussed.

Regardless of the sampling technique employed, five or more fish weighing a total of at least 300 grams should be collected from each sam-

Table 5-3

Summary of Fish Sampling Equipment

Device	Use	Advantages	Disadvantages
Active Methods			
Electrofishing	Shallow rivers, lakes, and streams.	Most efficient non-selective method. Minimal damage to fish. Adaptable to a number of sampling conditions (e.g., boat, wading, shorelines, etc.) Particularly useful at sites where other active methods cannot be used (e.g., around snags and irregular bottom contours).	Non-selectivity - stuns or kills most fish. Cannot be used in brackish, salt, or extremely soft water. Requires extensive operator training. DANGEROUS when not used properly.
Seines	Shallow rivers, lakes, and streams. Shoreline areas of estuaries.	Relatively inexpensive and easily operated. Mesh size selection available for target species.	Cannot be used in deep water or over substrates with an irregular contour. Not completely efficient as fish can get over, around, and under during seining operation.
Trawls	Used from boats in deep open bodies of water.	Effective in deep waters not accessible by other methods. Allows collection of large number of samples.	Requires boat and personnel with operator training.
Angling	Generally species selective involving use of hook and line.	Most selective method. Does not require use of large number of personnel or expensive equipment.	Inefficient and not dependable.
Passive Methods			
Gill Nets	Lakes, rivers, and estuaries. Where fish movement can be expected or anticipated.	Effective for collecting pelagic fish species. Not particularly difficult to operate. Requires less fishing effort than active methods. Selectivity can be controlled by varying mesh size.	Not effective for bottom-dwelling fish or populations that do not exhibit movement patterns. Nets prone to tangling or damage by large and sharp spined fish. Gill nets will kill captured specimens, which, when left for extended periods, may experience physiological changes in the tissues.

Table 5-3 (Cont.)

Summary of Fish Sampling Equipment

Device	Use	Advantages	Disadvantages
Passive Methods			
Trammel Nets	Same as gill nets. Frequently used where fish may be scared into the net.	Slightly more efficient than a straight gill net.	Same as for gill nets. Tangling problems may be more severe. Method of scaring fish into net requires more personnel or possibly boats in deep water areas.
Hoop, Fyke and Pound Nets	Shallow rivers, lakes, and estuaries where currents are present or when movements of fish are predictable. Frequently used in commercial operation.	Unattended operation. Very efficient in regard to long term return and expended effort. Particularly useful in areas where active methods are impractical.	Inefficient for short-term. Difficult to set up and maintain.
D-Traps	Used for long-term capture of slow moving fish, particularly bottom species. Can be used in all environments.	Easy to operate and set. Unattended operation. Particularly useful for capturing bottom dwelling organisms in deep waters or other types of inaccessible areas. Relatively inexpensive -- often can be hand made.	Efficiency is highly variable. Not effective for pelagic fish or fish that are visually oriented.

pling site as previously mentioned. Where several small fish are combined to make up the sample, these must all be of the same species.

5.4 When to Collect

A seasonal monitoring program provides the most complete information about levels of pollutants in fish tissue and has the advantage of building a good data base upon which future monitoring programs can rely. Financial constraints usually limit the amount of sampling which can be performed, and therefore consideration must be given to choosing the best time of year to sample. The state fishery agency (or comparable state agency) may be able to provide suggestions as to when and where to collect. The necessary collecting permits will have to be obtained from these agencies in any event.

The spawning season should normally be avoided since fish are usually stressed during spawning and samples may not be representative of the normal population. Changes in feeding habits, fat content, respiration rate, etc., occur during this period which may influence pollutant uptake and clearing. Information on the spawning season of a species may be found in standard references such as Carlander (1969) and should be checked before a sampling program is started. The additional stress of collecting fish during their spawning season may also have adverse consequences on some species such as trout or bass, by inhibiting their spawning behavior or damaging the spawning grounds. On the other hand, populations of some species, such as bluegills, may actually benefit if their population size is reduced during spawning. For most species, spawning occurs during the spring and this season should be avoided unless the target species is known to spawn during some other season.

Fall sampling is probably the best choice for avoiding the spawning season. Water levels are typically lower in many areas during the fall which may make active collection easier. Fat content represents an important reservoir for many pollutants in fish and is often higher in many species during the fall. Another advantage of collecting in the fall is that a new year-class has usually reached maturity, resulting in greater abundance of the species. Again caution should be exercised to ensure that

sampling does not occur during the spawning season since some salmonids and other fish spawn during the fall.

Collection hours should be those which maximize sampling success and reduce injury to extra fish collected and released. The best time period to collect is during the night, but this may be inconvenient for a number of reasons. The work schedule of the sampling team must be adjusted, and an additional person is usually required to operate some type of light while the rest of the team samples. If sampling is to be done at night, state and local regulations regarding the use of a light to fish must be checked and any necessary permission should be secured from the appropriate authority.

Although the catch is not usually as great as at night, the most practical time to sample is usually early morning or evening. Fish are frequently easy to catch at these times since they often come into the shallows to feed. In addition, the stress to the population resulting from sampling activities is less than at mid-day when water temperature is highest. Every effort should be exercised by the sampling team to ensure that fish are not needlessly injured or killed. Injured fish are much more susceptible to fungal infection which is brought on by damage to the slime layer.

When samplers collect in estuarine areas, tidal stage may influence the availability of many species. Local fishery experts can provide helpful advice as to which tidal stage is most appropriate for the target species. Another consideration in this case is that different areas will be inundated by the tides and those shorelines having too many snags to seine at high tide may be relatively clear at low tide.

5.5 Container Selection and Cleaning

The selection of containers or packaging material for the transportation of fish samples to the laboratory for priority pollutant analysis is dependent upon a number of factors including the risk of sample contamination by the container and the mode of sample transport. The most important consideration is to prevent contamination of the sample. Because polyethylene or polypropylene packaging materials can introduce contaminants (such as phthalate esters) to the sample, they, as well as all other

plastic containing materials, should not be used for packaging fish samples for priority pollutant analysis. Clean, sterile Teflon® bags, such as the air sample bags manufactured by Pollution Measurement Corporation (Chicago, Ill.) are the ideal packaging material. The principal disadvantage of Teflon® bags is the high cost. A 4 x 9 inch Teflon® bag typically retails for about $13.00.

Alternatively, aluminum foil or glass containers are the most practical materials. Aluminum foil is preferred over glass, however, because of the risk of container breakage in transport when glass containers are used. Whichever packaging material is used, it must be carefully cleaned to ensure that no contaminants are introduced to the packaged sample. Aluminum foil should be previously cleaned by rinsing with acetone and again with pesticide grade hexane and allowed to dry in a contaminant free area. After the samples have been wrapped with foil, they should be sealed in polypropylene bags to retain moisture. When glass containers are used, they should be washed with a non-phosphate laboratory detergent, rinsed with tap water and distilled water, and finally rinsed with acetone and pesticide grade hexane and allowed to air dry in a contaminant free area. Also, when glass containers are used, the cap should be lined with Teflon® sheeting to further prevent sample contamination by the cap material (EPA, 1981).

Finally, although it is impractical to clean all sampling equipment such as nets and traps, common sense does apply. Sampling equipment that has been obviously soiled by oils, grease or household solvents should not be used. Nets, seines, and other gear should not be treated with preservatives (for this reason, nylon seines are preferred over cotton seines because the nylon seines are more decay-resistant). All equipment should be carefully stored away from chemical solvents and household items such as paints, cleansers, and disinfectants. Finally, all utensils or equipment that will be directly used in handling fish or tissue samples, such as forceps and scalpels, should be rinsed with acetone and pesticide grade hexane and stored in similarly cleaned aluminum foil.

5.6 Sample Handling, Preservation, and Shipment

Fish selected for laboratory analysis should be carefully handled to prevent contamination by the sampler's hands or by field equipment. The use of cleaned forceps to handle selected specimens will greatly reduce this risk. Upon removal from the collection device or water, larger fish should be properly stunned by a sharp blow to the base of the skull with a stick or metal rod. This rod should be used solely for the purpose of stunning fish, and care should be taken to keep it reasonably clean to prevent contamination of the samples. Normally, whole fish will be analyzed. If previous studies have indicated the presence of a pollutant and the reason for sampling is to determine potential human exposure, edible portions should be taken. Filleting, scaling, etc. should be done in the field.

Weight and total length should be determined for all fish collected for laboratory analysis (use metric units). It is recommended that weight and length be determined in the field.

Each sample container (e.g., bag or foil wrapped sample) should be labeled with a unique number by which it may be readily identified in the laboratory. This identification number should have as few digits as possible to discourage abbreviation. The label should be waterproof, and all information should be written in waterproof ink with a ballpoint pen. The labels should include, in addition to the identification number, the date and the initials of the sampling personnel.

It is highly recommended that a few scales be stored separately and cross referenced by the identification number assigned to the tissue specimen. For catfish and other scaleless fish, the pectoral fin spines should be clipped and saved. These scales or spines may be stored by sealing in small envelopes or plastic bags. This technique provides a means by which the fish may be aged by a fisheries biologist if the need should arise. Aging provides a good indication of the length of exposure to pollutants.

Other pertinent information such as the time the sample was taken, location, approximate depth, species, substrate, and water quality (e.g., temperature, DO, pH) should be recorded in a field notebook. The

data in this notebook must, of course, be cross referenced to the actual sample by using the identification number, as previously discussed.

Preservation with dry ice (frozen CO_2) is recommended as a means of ensuring that the sample is frozen rapidly and that it remains frozen. This is very important to prevent decomposition and loss of volatile materials. Minimum deterioration occurs if fish are frozen immediately after death and properly packaged to prevent loss of moisture and the entrance of oxygen into the tissues (Royce, 1972; EPA, 1980). Dry ice is the most effective means of rapidly freezing tissue during field sampling.

Dry ice requires special packaging precautions before shipping to comply with DOT regulations. The Federal Code of Regulations classifies dry ice as ORM-A (Other Regulated Material). These regulations specify the amount of dry ice which may be shipped by air transport and the type of packaging required.

For any amount of dry ice to be shipped by air, advance arrangements must be made with the carrier. Not more than 440 pounds of dry ice may be shipped by air freight unless special arrangements have been made previously between the shipper and the aircraft operator. Quantities of dry ice needed for tissue preservation are usually considerably less than 440 pounds.

The regulations further specify that the packaging must be designed and constructed in a manner to permit the release of carbon dioxide gas which, if restricted, could cause rupture of the package. If samples are being transported in a cooler, several vent-holes should be drilled to allow for escape of the sublimated gas. The vents should be near the top of the vertical sides of the cooler, rather than in the cover, to prevent debris from falling into the cooler. Furthermore, wire screen or cheesecloth should be installed to help keep foreign materials from entering the vents. When the samples are being packaged, care should be taken to keep these vents open to prevent the buildup of pressure.

Dry ice is exempted from shipping paper and certification requirements if the amount is less than 440 pounds and the package meets design requirements. The package must be marked "Carbon Dioxide, Solid" or

"Dry Ice" and also marked with an identification that the material being refrigerated is to be used for diagnostic or treatment purposes (e.g., frozen tissue).

Upon receipt at the laboratory, the tissue samples should be placed in a freezer and maintained at a temperature less than -20°C (Royce, 1972; EPA, 1980) until the samples are prepared for analysis. All tissue samples should be kept in their original packaging until they are ready to be prepared.

When the samples are received at the laboratory, they should be recorded in a permanent log book. This log book should include for each sample date and time received, source of sample, sample number, how transported to the laboratory, and the number assigned to the sample by the laboratory if this number differs from the field number. Although this recording procedure may seem laborious, it is absolutely imperative that precise records be kept for all samples so that the data generated by the sampling and analysis effort is of unquestionable integrity.

An accurate written record should be maintained which can be used to trace possession of the sample from the moment of its collection until it has been analyzed. A chain of custody tag should be placed on all coolers in which samples are stored and shipped. This should have appropriate spaces for signatures when the sample is transferred from one person to another. The date and time at which the custody is transferred should be indicated on the tag.

5.7 References

Battelle. 1975. Environmental Impact Monitoring of Nuclear Power Plants: Source Book of Monitoring Methods, Vol. 2. Atomic Industrial Forum, Inc. Washington, D.C.

Bennett, G.W. 1970. Management of Lakes and Ponds. Van Nostrand Reinhold Company. New York. pp. 182-208.

Carlander, K.D. 1969. Handbook of Freshwater Fishes of the U.S. and Canada, Exclusive of the Perciformes. 3rd Edition. Iowa State University Press. Ames, Iowa.

Lagler, K.F. 1956. Freshwater Fishery Biology. Wm. C. Brown Co. Publications, Dubuque, Iowa.

McClane, A.J. 1978a. Field Guide to Freshwater Fishes of North America. Holt, Rinehart, Winston, New York.

McClane, A.J. 1978b. Field Guide to Saltwater Fishes of North America. Holt, Rinehart, Winston, New York.

Royce, W.F. 1972. Introduction to the Fishery Sciences. Academic Press Inc., New York. pp. 214-214, 284-295.

U.S. Environmental Protection Agency. 1977. (Revised October 1980). Interim Methods for the Sampling and Analysis of Priority Pollutants in Sediments and Fish Tissue. Environmental Monitoring and Support Laboratory. Office of Research and Development. Cincinnati, Ohio.

U.S. Environmental Protection Agency. 1980. Draft Protocols for the Analysis of Priority Pollutants. Methods 601 - 613, 624, and 625. Monitoring Technology Division. Office of Research and Development. Washington. D.C.

Weber, C.I., editor. 1973. Biological Field and Laboratory Methods for Measuring the Quality of Surface Waters and Effluents. U.S. Environmental Protection Agency. Office of Research and Development. Cincinnati, Ohio. 670/4-73-001.

APPENDIX A

PRIORITY POLLUTANTS

I. PESTICIDES

1. Acrolein
2. Aldrin
3. α-BHC (Alpha)
4. β-BHC (Beta)
5. γ-BHC (Lindane) (gamma)
6. δ-BHC (Delta)
7. Chlordane
8. DDD
9. DDE
10. DDT
11. Dieldrin
12 α-Endosulfan (Alpha)
13. β-Endosulfan sulfate (Beta)
14. Endosulfan sulfate
15. Endrin
16. Endrin aldehyde
17. Heptachlor
18. Heptachlor epoxide
19. Isophorone
20. TCDD (2,3,7,8-tetrachlorodibenzo-p-dioxin)
21. Toxaphene

II. METALS AND INORGANICS

22. Antimony
23. Arsenic
24. Asbestos
25. Beryllium
26. Cadmium
27. Chromium
28. Copper
29. Cyanides
30. Lead
31. Mercury
32. Nickel
33. Selenium
34. Silver
35. Thallium
36. Zinc

III. PCBs AND RELATED COMPOUNDS

37. PCB-1016 (Aroclor 1016)
38. PCB-1221 (Aroclor 1221)
39. PCB-1232 (Aroclor 1232)
40. PCB-1242 (Aroclor 1242)

III. PCBs AND RELATED COMPOUNDS (Continued)

41. PCB-1248 (Aroclor 1248)
42. PCB-1254 (Aroclor 1254)
43. PCB-1260 (Aroclor 1260)
44. 2-Chloronaphthalene

IV. HALOGENATED ALIPHATICS

45. Methane, bromo- (methyl bromide)
46. Methane, chloro- (methyl chloride)
47. Methane, dichloro- (methylene chloride)
48. Methane, chlorodibromo-
49. Methane, dichlorobromo-
50. Methane, tribromo- (bromoform)
51. Methane, trichloro- (chloroform)
52. Methane, tetrachloro- (carbon tetrachloride)
53. Methane, trichlorofluoro-
54. Methane, dichlorodifluoro-
55. Ethane, chloro-
56. Ethane, 1,1-dichloro-
57. Ethane, 1,2-dichloro-
58. Ethane, 1,1,1-trichloro-
59. Ethane, 1,1,2-trichloro-
60. Ethane, 1,1,2,2-tetrachloro-
61. Ethane, hexachloro-
62. Ethene, chloro- (vinyl chloride)
63. Ethene, 1,1-dichloro-
64. Ethene, trans-dichloro-
65. Ethene, trichloro-
66. Ethene, tetrachloro-
67. Propane, 1,2-dichloro-
68. Propene, 1,3-dichloro-
69. Butadiene, hexachloro-
70. Cyclopentadiene, hexachloro-

V. ETHERS

71. Ether, bis(choromethyl)
72. Ether, bis(2-chloroethyl)
73. Ether, bis(2-chloroisopropyl)
74. Ether, 2-chloroethyl vinyl
75. Ether, 4-bromophenyl phenyl
76. Ether, 4-chlorophenyl phenyl
77. Bis(2-chloroethoxy) methane

VI. MONOCYCLIC AROMATICS (EXCLUDING PHENOLS, CRESOLS, PHTHALATES)

78. Benzene
79. Benzene, chloro-
80. Benzene, 1,2-dichloro-

VI. MONOCYCLIC AROMATICS (EXCLUDING PHENOLS, CRESOLS, PHTHALATES) (Continued)

81. Benzene, 1,3-dichloro-
82. Benzene, 1,4-dichloro-
83. Benzene, 1,2,4-trichloro-
84. Benzene, hexachloro-
85. Benzene, ethyl-
86. Benzene, nitro-
87. Toluene
88. Toluene, 2,4-dinitro-
89. Toluene, 2,6-dinitro-

VII. PHENOLS AND CRESOLS

90. Phenol
91. Phenol, 2-chloro-
92. Phenol, 2,4-dichloro-
93. Phenol, 2,4,6-trichloro-
94. Phenol, pentachloro-
95. Phenol, 2-nitro-
96. Phenol, 4-nitro-
97. Phenol, 2,4-dinitro-
98. Phenol, 2,4-dimethyl-
99. m-Cresol, p-chloro-
100. o-Cresol, 4,6-dinitro-

VIII. PHTHALATE ESTERS

101. Phthalate, dimethyl-
102. Phthalate, diethyl-
103. Phthalate, di-n-butyl-
104. Phthalate, di-n-octyl-
105. Phthalate, bis(2-ethylhexyl)-
106. Phthalate, butyl benzyl-

IX. POLYCYCLIC AROMATIC HYDROCARBONS

107. Acenaphthene
108. Acenaphthylene
109. Anthracene
110. Benzo(a)anthracene
111. Benzo(b)fluoranthene
112. Benzo(k)fluoranthene
113. Benzo(ghi)perylene
114. Benzo(a)pyrene
115. Chrysene
116. Dibenzo(a,H)anthracene
117. Fluoranthene

IX. POLYCYCLIC AROMATIC HYDROCARBONS (Continued)

118. Fluorene
119. Indeno(1,2,3-cd)pyrene
120. Naphthalene
121. Phenanthrene
122. Pyrene

X. NITROSAMINES AND OTHER NITROGEN-CONTAINING COMPOUNDS

123. Nitrosamine, dimethyl- (DMN)
124. Nitrosamine, diphenyl-
125. Nitrosamine, di-n-propyl-
126. Benzidine
127. Benzidine, 3,3'-dichloro-
128. Hydrazine, 1,2-diphenyl-
129. Acrylonitrile

APPENDIX B

RANGE AND HABITAT PREFERENCE OF TARGET SPECIES

Synopses of the range and habitat preference of target species are provided below. This information is summarized from McClane (1978a and 1978b). The target species are listed alphabetically by their common name.

Bluegill (*Lepomis macrochirus*)

Ranges from coast to coast. Widely distributed in farm ponds in most states. Prefers quiet, weedy waters with the larger fish remaining in deeper waters in the daytime and moving into shallow areas in morning and evening to feed.

Brook Trout (*Salvelinus fontinalis*)

Native to northeastern North America from Georgia to the Arctic Circle. Widely introduced. Found in rivers, streams, and lakes with a preferred temperature range of 57 to 61°F.

Brown Trout (*Salmo trutta*)

European species introduced to the U.S. beginning in 1883. Prefers streams with a temperature range from 55 to 64°F. Very active at night. Found in cool streams and large lakes.

Carp (*Cyprinus carpio*)

Introduced into this country in 1876. Has become widely distributed from coast to coast. Prefers warm streams, lakes, and shallows. Pollution tolerant.

Chain Pickerel (*Esox niger*)

Ranges from Maine to east Texas and north to the Great Lakes. Found in lakes, ponds, and brackish creeks.

Channel Catfish (*Ictalurus punctatus*)

Great Lakes and Saskatchewan River south to Gulf of Mexico. Widely introduced east and west of native range. Found in lakes and large rivers with clean bottoms of sand, gravel, or boulders. Feeds primarily at night.

Croaker (Micropogon undulatus)

Distributed from Rhode Island to Cape Kennedy on the Atlantic coast and from Tampa Bay to the southern Gulf of Campeche in the Gulf of Mexico. In the winter, adults move out to deeper, warmer waters.

Freshwater Drum (Aplodinotus grunniens)

Ranges from Hudson Bay drainage and the Great Lakes east to Lake Champlain and south to the Gulf. Abundant in some of the large, silty lakes and rivers although the species prefers clean water.

Lake Trout (Salvelinus namaycush)

This species is distributed in cold waters of the U.S. in New England, the Finger Lakes, the Great Lakes, and scattered western lakes where it has been introduced. Prefers deep, clear lakes.

Lake Whitefish (Coregonus clupeaformis)

Distributed in cold northern lakes of the U.S., particularly the Great Lakes. May also enter rivers.

Largemouth Bass (Micropterus salmoides)

Ranges from Southeastern Canada through the Great Lakes, and south in the Mississippi Valley to Mexico and Florida, and up the Atlantic Coast through New England. Widely introduced in the east and west. Found in shallow, weedy lakes or river backwaters and usually in water less than 20 feet deep.

Mountain Whitefish (Prosopium williamsoni)

Distributed in lakes and streams on the western slope of the Rocky Mountains from northern California to southern British Columbia.

Northern Pike (Esox lucius)

Ranges from New York through the Great Lakes to Nebraska. Widely introduced in the south and west. Feeding is done during the daylight hours.

Pacific Staghorn Sculpin (Leptocottus armadus)

Ranges from northern Baja California to northwest Alaska. Found in bays and inshore, also in and near freshwater at the mouths of streams.

Rainbow Smelt (Osmerus mordax)

Occurs on the Atlantic and Pacific coasts and in the Great Lakes and other lakes in the northeast U.S. In coastal areas the species is seldom found at depths greater than 20 feet.

Rainbow Trout (Salmo gairdneri)

Ranges from Mexican border to the Aleutian Islands. Found in clear lakes and streams. Prefers temperatures below 70°F.

Round Whitefish (Prosopium cylindraceum)

Distributed from New Brunswick northward to Ungava Bay and westward through the Great Lakes to Alaska.

Sauger (Stizostedion canadense)

Distributed in the Great Lakes, large northern lakes, and in the Mississippi, Missouri, Ohio, and Tennessee rivers. Often found in tailwaters immediately below dams.

Silver Redhorse (Moxostoma anisurum)

Ranges from Manitoba to the St. Lawrence drainage and south to northern Alabama and Missouri. Inhabits large streams, preferring long, deep pools with slow currents. Tolerant of turbidity.

Smallmouth Bass (Micropterus dolomieui)

Ranges from Minnesota to Quebec and south to northern Alabama, then west to eastern Kansas and Oklahoma. Widely introduced. Prefers clear, rocky lakes with a minimum depth of 25 to 30 feet and temperatures between 60 and 80°F in the summer. In streams, prefers a good percentage of riffles flowing over gravel, boulders, or bedrock.

Spot (*Leiostomus xanthurus*)

Distributed from Cape Cod to the Gulf of Mexico. Occur over mud and sand bottoms and oyster beds. The species is more common in deepwater during fall and winter. Can tolerate a range of salinities from freshwater to nearly twice that of seawater.

Spotted Sucker (*Minytrema melanops*)

Ranges from southern Minnesota to Pennsylvania and south to Texas and Florida. Inhabits larger streams and lakes having sand, gravel, or hard clay bottoms. Intolerant of turbid waters or heavy pollution.

Squawfish (*Ptychocheilus oregonensis*)

Columbia River drainage and coastal streams of Washington and Oregon.

Starry Flounder (*Platichthys stellatus*)

Ranges from central California to Alaska. Prefers shallow water and sandy bottoms. May enter brackish water and the mouths of rivers.

Stoneroller (*Campostoma anomalum*)

Ranges from Minnesota and Texas eastward. Found in streams and rivers with a strong preference for riffles.

Striped Mullet (*Mugil cephalus*)

Found on both Atlantic and Pacific coasts. Atlantic coast range is from the Gulf of Mexico to Cape Cod. Most abundant in southeastern U.S. and Gulf of Mexico.

Walleye (*Stizostedian vitreum*)

Original range was northern U.S. and Canada. Widespread stocking has extended the range throughout the east and much of the south and far west. Most common in large bodies of water. Prefers summer temperatures below 85°F and clear water.

Whitebait Smelt (Allosmerus elongatus)

Ranges from the Strait of Juan de Fuca to San Francisco.

White Perch (Morone americana)

Occurs in fresh, brackish, and saltwater from Nova Scotia to North Carolina and inland as far as the Great Lakes. Congregates in the deeper parts of bays and creeks during the winter.

White Sucker (Catostomus commersoni)

Range extends fom Canada south to Florida and west to Montana. Prefers large streams and the deeper water of impoundments. Often found near dense weed beds. Pollution tolerant.

Winter Flounder (Pseudopleuronectes americanus)

Occurs from Labrador to Georgia. Prefers muddy sand bottoms. There is a movement into shallow water during the fall and an offshore movement in the spring.

Yellow Perch (Perca flavescens)

Ranges from Canadian border south to Kansas, Missouri, Illinois, Indiana, and Ohio. Present in Atlantic drainage from Nova Scotia to South Carolina. Widely stocked in the west. Prefers cool, clear water with sand or rocky bottoms. Primarily found in lakes, although may be found in rivers and brackish estuarine areas. Often stays in deeper waters during the day and moves to shallows in the evening.