EPA-600/2-76-008
January 1976

Environmental Protection Technology Series

SO_2 CONTROL PROCESSES FOR NON-FERROUS SMELTERS

Industrial Environmental Research Laboratory
Office of Research and Development
U.S. Environmental Protection Agency
Research Triangle Park, North Carolina 27711

RESEARCH REPORTING SERIES

Research reports of the Office of Research and Development, U.S. Environmental Protection Agency, have been grouped into five series. These five broad categories were established to facilitate further development and application of environmental technology. Elimination of traditional grouping was consciously planned to foster technology transfer and a maximum interface in related fields. The five series are:

1. Environmental Health Effects Research
2. Environmental Protection Technology
3. Ecological Research
4. Environmental Monitoring
5. Socioeconomic Environmental Studies

This report has been assigned to the ENVIRONMENTAL PROTECTION TECHNOLOGY series. This series describes research performed to develop and demonstrate instrumentation, equipment and methodology to repair or prevent environmental degradation from point and non-point sources of pollution. This work provides the new or improved technology required for the control and treatment of pollution sources to meet environmental quality standards.

EPA REVIEW NOTICE

This report has been reviewed by the U.S. Environmental Protection Agency, and approved for publication. Approval does not signify that the contents necessarily reflect the views and policies of the Agency, nor does mention of trade names or commercial products constitute endorsement or recommendation for use.

This document is available to the public through the National Technical Information Service, Springfield, Virginia 22161.

EPA-600/2-76-008

SO_2 CONTROL PROCESSES FOR NON-FERROUS SMELTERS

by

John C. Mathews, Faust L. Bellegia,
Charles H. Gooding, and George E. Weant

Research Triangle Institute
P.O. Box 12194
Research Triangle Park, NC 27709

Contract No. 68-02-1491
ROAP No. 21ADC-059 and 21AUY-040 and -041
Program Element No. 1AB013 and 1AB015

EPA Project Officer: Douglas A. Kemnitz

Industrial Environmental Research Laboratory
Office of Energy, Minerals, and Industry
Research Triangle Park, NC 27711

Prepared for

U.S. ENVIRONMENTAL PROTECTION AGENCY
Office of Research and Development
Washington, DC 20460

January 1976

ABSTRACT

This report provides a review and evaluation of a number of absorption-based SO_2 control systems and the application of these control systems to those U.S. primary copper smelters which generate a weak SO_2-containing gas stream.

Capital and operating cost relationships have been developed for each specific process covering a range of gas flows and SO_2 concentrations. Separate general costs for gas pretreatment and the end-of-the-line SO_2 utilization facilities, i.e., sulfuric acid, elemental sulfur, and liquid SO_2 plants, have also been provided.

Those thirteen U.S. primary copper smelters which still generate weak SO_2 streams have been reviewed with reference to their current operation and active programs in hand to control or eliminate weak SO_2 streams. Appropriate SO_2 control processes have been matched with the individual smelters, and related capital and operating costs were developed from the earlier established cost relationships.

SO_2 CONTROL PROCESSES FOR NON-FERROUS SMELTERS

TABLE OF CONTENTS

		Page
Abstract		ii
List of Figures		v
List of Tables		viii
Units of Measure - Conversions		xii
Acknowledgments		xiii
Sections		
1.0	Summary	1
2.0	General Discussion	3
3.0	Sulfuric Acid	19
4.0	Lime/Limestone Scrubbing	41
5.0	Sodium Scrubbing-Regenerative (Wellman-Lord)	59
6.0	Double-Alkali Sodium Base (Throwaway Process)	75
7.0	Magnesium Oxide Scrubbing	95
8.0	Dimethylaniline/Xylidine Process	115
9.0	Citrate Process	129
10.0	Ammonia Process	149
11.0	Application of Absorption-Based SO_2 Control Systems to Weak SO_2 Copper Smelter Reverberatory Furnaces	177
12.0	Application of Absorption-Based SO_2 Control Systems to the Weak SO_2 Gas Streams of U.S. Primary Copper Smelters	183
12.1	The Anaconda Company - Anaconda, Montana	183
12.2	ASARCO - El Paso Smelter - El Paso, Texas	185
12.3	ASARCO - Hayden Smelter - Hayden, Arizona	197
12.4	ASARCO - Tacoma, Washington Smelter - Tacoma Washington	205
12.5	Kennecott Copper Corporation - Garfield, Utah	215
12.6	Kennecott Copper Corporation - Hayden, Arizona.	217
12.7	Kennecott Copper Corporation - Hurley, New Mexico	225
12.8	Kennecott Copper Corporation - McGill, Nevada	233
12.9	Magma Copper Company - San Manuel, Arizona	241
12.10	Phelps Dodge Corporation - Ajo, Arizona	
12.11	Phelps Dodge Corporation - Douglas, Arizona	257
12.12	Phelps Dodge Corporation - Morenci, Arizona	265
12.13	White Pine Copper Company - White Pine, Michigan	273

Table of Contents (cont'd)

	Page
Appendices	
Gas Cleaning and Conditioning	281
SO_2 Absorption Costs	289
Auxiliary Sulfuric Acid Plant	292
Auxiliary Sulfur Plant	298
SO_2 Liquefaction and Storage Costs	302
Utility Costs	304
Capital and Annual Operating Cost Computation Sheets for Selected SO_2 Control Processes Matched to Specific Primary Copper Smelters	308

LIST OF FIGURES

Figure		Page
3-1	Dilute Feed Gas Sulfuric Acid Process	21
3-2	Total Capital Investment Costs	30
3-3	Total Annual Direct Operating Costs	31
3-4	Total Capital Investment Costs, Acid Plant Section	32
3-5	Total Capital Investment Costs, Gas Cleaning Section	33
3-6	Total Capital Investment Costs, Refrigeration Section	34
3-7	Total Capital Investment Costs, Preheating Section	35
3-8	Total Annual Direct Operating Costs, Acid Section	36
3-9	Total Annual Direct Operating Costs, Gas Cleaning Section	37
3-10	Total Annual Direct Operating Costs, Refrigeration Section	38
3-11	Total Annual Direct Operating Costs, Preheating Section	39
4-1	Limestone Scrubbing Process	43
4-2	Total Capital Investment Costs	54
4-3	Total Annual Direct Operating Costs	55
4-4	Total Capital Investment Costs, Limestone Handling and Disposal	56
5-1	Wellman-Lord Process, Regenerative Sodium Scrubbing	61
5-2	Total Capital Investment Costs	69
5-3	Total Annual Direct Operating Costs	70
5-4	Total Capital Investment Costs, SO_2 Regeneration Section	71
6-1	Sodium Base Double Alkali Process-Dilute System	77
6-2	Total Capital Investment Costs	89
6-3	Total Direct Annual Operating Costs	90
6-4	Total Capital Investment Costs Regeneration & Precipitate Handling	91
7-1	Magnesium Oxide Process	97
7-2	Total Capital Investment Costs	110
7-3	Total Annual Direct Operating Costs	111
7-4	Total Capital Investment Costs, SO_2 Regeneration Section	112

List of Figures (cont'd)

Figure		Page
8-1	Dimethylaniline/Xylidine Process	117
8-2	Total Capital Investment Costs	125
8-3	Total Annual Direct Operating Costs	126
9-1	Citrate Process	131
9-2	Total Capital Investment Costs	143
9-3	Total Annual Direct Operating Costs	144
9-4	Total Capital Investment Costs, SO_2 Regeneration Section	145
10-1	Ammonia Scrubbing Process-ABS Acidulation	151
10-2	Total Capital Investment Costs	171
10-3	Total Annual Direct Operating Costs	172
10-4	Total Capital Investment Costs, SO_2 Regeneration Section	173
10-5	Total Capital Investment Costs, 4-Stage Ammoniacal Scrubber with Liquor Intercooling	174
12.2-1	ASARCO-El Paso, Texas-Smelter Flow Schematic	187
12.3-1	ASARCO-Hayden, Arizona-Smelter Flow Schematic	199
12.4-1	ASARCO-Tacoma, Washington-Smelter Flow Schematic	207
12.6-1	Kennecott Copper-Hayden, Arizona-Smelter Flow Schematic	219
12.7-1	Kennecott Copper-Hurley, New Mexico-Smelter Flow Schematic	227
12.8-1	Kennecott Copper-McGill, Nevada-Smelter Flow Schematic	235
12.9-1	Magma Copper Company-San Manuel, Arizona-Smelter Flow Schematic	243
12.10-1	Phelps Dodge-Ajo, Arizona-Smelter Flow Schematic	253
12.11-1	Phelps Dodge-Douglas, Arizona-Smelter Flow Schematic	259
12.12-1	Phelps Dodge-Morenci, Arizona-Smelter Flow Schematic	267
12.13-1	White Pine Copper Company-White Pine, Michigan-Smelter Flow Schematic	275
A-1	Gas Cooling & Conditioning for Regenerative SO_2 Absorption Systems	283
A-2	Total Capital Investment Costs & Total Annual Direct Operating Costs	286

List of Figures (cont'd)

Figure		Page
B-1	SO_2 Absorption Systems, Total Capital Investment Costs	291
C-1	Auxiliary Sulfuric Acid Plant, Total Capital Investment Costs & Total Annual Direct Operating Costs (Based on 8-9% SO_2 to Acid Plant)	295
D-1	Auxiliary Sulfur Plant, Total Capital Investment Costs & Total Annual Direct Operating Costs	300
E-1	Liquefaction and Storage of SO_2	303
F-1	Capital Cost of Water Treating Facilities	305
F-2	Capital Cost of Package Boilers	306
F-3	Capital Cost of Electrical Substations	307

LIST OF TABLES

Table		Page
2.1	Status of SO_2 Control Processes	6
2.2	Effect of Byproduct Credit on Net Total Annualized Costs of the Regenerable SO_2 Control Processes When Treating a Gas Stream Containing 1% SO_2 . . .	16
3.1	Sulfuric Acid, Total System Capital and Total Annual Costs	40
4.1	Lime/Limestone Process, Unit Usage and Cost Data .	53
4.2	Lime/Limestone Process, Capital and Total Annual Costs	57
4.3	Lime/Limestone Process, Total System Capital and Annual Operating Costs	58
5.1	Sodium Scrubbing Regenerative Wellman-Lord Process, Unit Usage and Cost Data	68
5.2	Sodium Scrubbing Regenerative Wellman-Lord Process, Capital and Total Annual Operating Costs	72
5.3	Sodium Scrubbing Regenerative Wellman-Lord Process, Total System Capital and Annual Operating Costs . .	73
6.1	Sodium Scrubbing-Double Alkali (Throwaway), Unit Usage and Cost Data	88
6.2	Sodium Scrubbing-Double Alkali Dilute System (Throw-away), Capital and Total Annual Cost	92
6.3	Sodium Scrubbing-Double Alkali Dilute System (Throw-away), Total System Capital and Annual Operating Costs	93
7.1	Magnesium Oxide Process Unit Usage and Cost Data .	109
7.2	Magnesium Oxide Scrubbing, Capital and Total Annual Costs	113
7.3	Magnesium Oxide Scrubbing, Total System Capital and Annual Costs	114
8.1	DMA/Xylidine Process, Unit Usage and Cost Data . .	124
8.2	DMA/Xylidine Process, Capital and Total Annual Operating Costs	127
8.3	DMA/Xylidine Process, Total System Capital and Annual Operating Costs	128
9.1	Citrate Process Unit Usage and Cost Data	142
9.2	Citrate Process, Capital and Total Annual Costs . .	146
9.3	Citrate Process, Total System Capital and Annual Operating Costs	147
10.1	Ammonia Process Unit Usage and Cost Data	170

List of Tables (cont'd)

Table		Page
10.2	Ammonia Process, Capital and Total Annual Costs . . .	175
10.3	Ammonia Process, Total System Capital and Annual Costs	176
12.2-1	ASARCO-El Paso Smelter, Texas-Characterization of Weak SO_2 Gas Streams Based on Present Operation . . .	188
12.2-2	ASARCO-El Paso Smelter, Texas-Characterization of Weak SO_2 Gas Streams Adjusted for Concentrate Change	192
12.2-3	ASARCO-El Paso-Capital Costs for SO_2 Control Processes on Combined Roaster and Reverberatory Furnace Off-Gases	193
12.2-4	ASARCO-El Paso-Annual Operating Costs and Total Net Annualized Costs for SO_2 Control Processes on Combined Roaster and Reverberatory Furnace Off-Gases	194
12.2-5	ASARCO-El Paso-Capital Costs for SO_2 Control Processes on Reverberatory Furnace Off-Gases Only . .	195
12.2-6	ASARCO-El Paso-Annual Operating Costs and Total Net Annualized Costs for SO_2 Control Processes On Reverberatory Furnace Off-Gases Only	196
12.3-1	ASARCO-Hayden, Arizona-Characterization of Weak SO_2 Gas Streams	202
12.3-2	ASARCO-Hayden-Capital Costs for SO_2 Control Processes on Combined Roaster and Reverberatory Furnace Off-Gases	203
12.3-3	ASARCO-Hayden-Annual Operating Costs and Total Net Annualized Costs	204
12.4-1	ASARCO-Tacoma, Washington-Characterization of Weak SO_2 Gas Streams	211
12.4-2	ASARCO-Tacoma-Capital Costs for SO_2 Control Processes on Combined Roaster and Reverberatory Furnace Off-Gases	212
12.4-3	ASARCO-Tacoma-Annual Operating Costs and Total Net Annualized Costs for SO_2 Control Processes on Combined Roaster and Reverberatory Furnace Off-Gases . .	213
12.6-1	Kennecott Copper Corp.-Hayden, Arizona-Characterization of Weak SO_2 Gas Streams	222
12.6-2	Kennecott Copper Corp.-Hayden-Capital Costs for SO_2 Control Processes on Reverberatory Furnace Off-Gases	223
12.6-3	Kennecott Copper Corp.-Hayden-Annual Operating Costs and Total Net Annualized Costs	224

List of Tables (cont'd)

Table		Page
12.7-1	Kennecott Copper-Hurley, New Mexico-Characterization of Weak SO_2 Gas Streams	230
12.7-2	Kennecott Copper-Hurley-Capital Costs for SO_2 Control Processes on Reverberatory Furnace Off-Gases	231
12.7-3	Kennecott Copper-Hurley-Annual Operating Costs and Total Net Annualized Costs	232
12.8-1	Kennecott Copper- McGill, Nevada-Characterization of Weak SO_2 Gas Streams	238
12.8-2	Kennecott Copper-McGill-Capital Costs for SO_2 Control Processes on Reverberatory Furnace Off-Gases	239
12.8-3	Kennecott Copper-McGill-Annual Operating Costs and Total Net Annualized Costs	240
12.9-1	Magma Copper-San Manuel, Arizona-Characterization of Weak SO_2 Gas Streams	247
12.9-2	Magma Copper-San Manuel-Capital Costs for SO_2 Control Processes on Reverberatory Furnace Off-Gases	248
12.9-3	Magma Copper-San Manuel-Annual Operating Costs and Total Net Annualized Costs	249
12.10-1	Phelps Dodge-Ajo, Arizona-Characterization of Weak SO_2 Gas Streams	254
12.10-2	Phelps Dodge-Ajo-Capital and Annual Operating Costs for DMA/Xylidine Control System on Reverberatory Furnace Off-Gases	255
12.11-1	Phelps Dodge-Douglas, Arizona-Characterization of Weak SO_2 Gas Streams	262
12.11-2	Phelps Dodge-Douglas-Capital Costs for SO_2 Control Processes on Weak SO_2 Smelter Off-Gases	263
12.11-3	Phelps Dodge-Douglas-Annual Operating Costs and Total Net Annualized Costs	264
12.12-1	Phelps Dodge-Morenci, Arizona-Characterization of Weak SO_2 Gas Streams	269
12.12-2	Phelps Dodge-Morenci-Capital Costs for SO_2 Control Processes on Reverberatory Furnace Off-Gases	270
12.12-3	Phelps Dodge-Morenci-Annual Operating Costs and Total Net Annualized Costs	271
12.13-1	White Pine Copper-White Pine, Michigan-Characterization of SO_2 Gas Streams	278
12.13-2	White Pine Copper-White Pine-Capital Costs for SO_2 Control Processes on Converter Off-Gases	279
12.13-3	White Pine Copper-White Pine-Annual Operating Costs and Total Net Annualized Costs	280

List of Tables (cont'd)

Table		Page
A-1	Gas Cleaning and Conditioning Unit Usage and Cost Data	285
A-2	Gas Cleaning and Conditioning for Regenerable SO_2 Control Processes Capital and Total Annual Costs	287
A-3	Gas Cleaning and Conditioning for "Throwaway" SO_2 Control Processes Capital and Total Annual Costs	288
C-1	Auxiliary Sulfuric Acid Plant Unit Usage and Cost Data (8-9% SO_2 in Feed Gas)	294
C-2	Auxiliary Sulfuric Acid Plant (No gas conditioning) Capital and Total Annual Costs	296
C-3	Auxiliary Sulfuric Acid Plant (Including Dry Gas Cleaning) Capital and Total Annual Costs	297
D-1	Auxiliary Sulfur Plant Unit Usage and Cost Data	299
D-2	Auxiliary Elemental Sulfur Plant Capital and Total Annual Costs	301

UNITS OF MEASURE - CONVERSIONS

Environmental Protection Agency policy is to express all measurements in Agency documents in metric units. When implementing this practice will result in undue cost or lack of clarity, conversion factors are provided for the non-metric units used in a report. Generally, this report uses British units of measure. For conversion to the metric system, use the following conversions:

To convert from	To	Multiply by
cfm	m^3/sec	0.0004719
°F	°C	5/9 (°F-32)
ft.	m	0.3048
gal.	l	3.785
gpm	l/sec	0.0631
gr/scf	mg/Nm^3	2288.136
hp	W	745.7
in.	m	0.0254
in. wc	N/m^2	248.84
lb	kg	0.454
lb/hr	kg/hr	0.454

ACKNOWLEDGMENTS

The authors wish to acknowledge the assistance provided during the course of the study by Control Systems Laboratory personnel, staff members of EPA Regions 6, 8 and 9, and representatives of the responsible State air pollution agencies.

We also wish to recognize the cooperation and help extended by the representatives of the different copper smelters contacted during the second phase of the program.

1.0 SUMMARY

This study has been directed towards the review and evaluation of certain specified scrubbing or absorption-based SO_2 control systems and the application of these control systems to those U.S. primary copper smelters which generate weak SO_2-containing gas streams. The number of absorption-based systems theoretically available today for flue gas desulfurization is large. Many of these systems have had limited application at the pilot plant level under specialized conditions and their general capability is uncertain. The scope of this study has been limited to those processes which have been or are being extensively evaluated in the U.S. and whose feasibility has been demonstrated at pilot plant level under semi-commercial plant conditions or with full scale installations. It is recognized that other processes such as the Chioyda Thoroughbred and the Powerclaus (phosphate scrubbing) processes are also available and appear to have considerable promise, but it is believed that the processes selected for study represent the range and feasibility of present flue gas desulfurization approaches.

Each selected control process has been given a broad overview with particular reference to operational considerations, development status, desulfurization efficiency, oxidation, gas pretreatment requirements, energy demand and cost.

Capital and operating cost relationships in terms of gas flow and SO_2 content have been developed for grass-roots installation of each specific process together with general costs for gas pretreatment and end-of-the-line SO_2 utilization facilities such as sulfuric acid, elemental sulfur and liquid SO_2 plants.

Of the fifteen U.S. primary copper smelters, two facilities--Cities Service, Copperhill, Tennessee and Inspiration Copper at Miami, Arizona--utilize metallurgical processes which do not produce dilute SO_2 content streams; and these two smelters, accordingly, have not been included in this study. Several of the remaining smelters have active programs in hand to eliminate the generation of weak SO_2-containing gas streams by the use of new or developing technology. These particular smelters and their programs have been noted.

A study attempting to apply SO_2 control systems which generally have had only preliminary commercial application in the specialized

industrial area of power utilities to the special situation of primary copper smelters faces a number of difficulties. There are the technical and economic uncertainties associated with any projection, particularly a projection which must make use of limited application data and cost information, frequently only broadly defined. Perhaps an even more difficult area to respond to involves the final disposition or utilization of the recovered sulfur dioxide. In the real world this consideration cannot be divorced from the determination of the total costs of any SO_2 control system. Sulfur dioxide recovered from a smelting process may be conveniently and readily used in an existing or new sulfuric acid plant, but unless the resulting acid can be continuously marketed even at loss or break-even conditions, neutralization facilities with the concomitant problem of solids disposal become an essential complementary part of the SO_2 control system with a significant contribution in both capital and operating costs.

This study, under its defined scope, does not include either marketing or special disposal considerations. Control processes have been matched with the individual smelters on the basis of the expected response of the control process itself to the conditions existing at that smelter and the characteristics of that smelter's weak SO_2 streams. It is also emphasized that no consideration has been given to the possibility of minimizing air dilution in the offgas flue system and thereby reducing the costs of gas cleaning and SO_2-absorption sections of any control system. Equipment and flue conditions and operating modes of each individual smelter will be principal factors in determining how much air dilution can be reduced and at what cost. The scope of the program does not include this evaluation. Therefore the resulting cost profile, both capital and operating, is not a total confirmation of the cost of providing an overall SO_2 control system, but rather an order-of-magnitude indication of the "grass-roots" costs of installing a particular SO_2 control system. The final "turn-key" cost of this system can be only established by an in-depth analysis of the specific smelter's operation as it affects the weak gas system and by evaluating the potential of in-house usage if sulfuric acid is produced, local area marketing prospects, or the impact of providing acid neutralization facilities.

2.0 GENERAL DISCUSSION

2.1 BACKGROUND

Although the non-ferrous smelting industry is the second largest group emitter of SO_2 in the United States, attention over the past 5 to 7 years has focused on the utility industry with its 65-percent share of the total U.S. sulfur emissions. Process developers and engineers, responding to the demand for viable processes to reduce the level of SO_2 in utility flue gases, have directed their attention to the special problems posed by the very large gas volumes and very low SO_2 concentrations associated with these gas streams. Thus, in the United States over the past 4 to 5 years, process development, pilot plant installations, and commercial demonstration units have been almost exclusively devoted to SO_2 control processes applied to utility flue gases. The result today is that there exists a considerable amount of process, engineering, and cost data on SO_2 control methods applied to utility flue gases at both the pilot plant and commercial demonstration levels, and there is a corresponding degree of confidence in projecting expected performance levels and capital investment requirements.

In the non-ferrous smelter area, some limited pilot plant work on weak SO_2 gas streams with the same SO_2 control processes as being applied to utilities has been conducted or is planned for the immediate future at a number of smelter locations.* However, cost estimates for full scale installations are limited and tend to indicate "range of costs" only.

---

*a) 4000 SCFM plant on copper reverberatory furnace gases at McGill, Nevada Smelter of Kennecott Copper Corp. to evaluate primary limestone scrubbing (1972); b) 300 SCFM plant on copper reverberatory furnace gas at San Manuel, Arizona Smelter of Magma Copper Co. to evaluate Bureau of Mines citrate process (1970-71); c) 1000 SCFM plant on Kellogg, Idaho lead smelter of Bunker Hill Co. to investigate citrate process. Part of this system started up in Feb. 1974-continuing; and d) 4000 SCFM plant on copper reverberatory furnace gas started up April 1975 at San Manuel, Arizona Smelter of Magma Copper Co. to investigate ammonia double alkali system and others.

In evaluating the capabilities of the specified SO_2 control processes, the literature and published reports of recent or on-going development work in the utility area provide sufficient input to establish a qualitative assessment of performance under smelter conditions. However, the development of both capital and operating costs for the gas flows and SO_2 concentrations which might be expected in non-ferrous smelters requires considerable massaging, and in certain instances adjustment of the available utility-oriented cost data to ensure that the determined cost estimates for the different processes as applied to smelter operations are reasonably compatible.

2.2 CHARACTERISTICS OF WEAK SO_2 SMELTER GASES

If weak SO_2-containing gases are defined as those containing less than 4 percent SO_2, the source of such streams in primary non-ferrous smelters is usually:

1) the multi-hearth roasters in primary copper smelters
2) the reverberatory furnaces in primary copper smelters
3) the sintering machine and blast furnace in lead smelters
4) the Ropp roaster (if used) and sintering machine in zinc smelters.

The flue gases in all cases leave the furnace at temperatures of 1200 to 1800°F (650°-982°C) with SO_2 concentrations which may range from 0.5 percent to 2.5 percent and with considerable amounts of mechanically entrained solids and vaporized metal compounds. The quantity and nature of this material depends on the operating conditions of the furnace--charging method, gas velocity, temperature--and the composition of the charge itself. Volatile compounds of such elements as arsenic, antimony, bismuth, cadmium, mercury, selenium, tellurium and thallium, as well as of copper, lead and zinc, may be present. SO_3 is also formed during the smelting process with the amount formed related to the amount of excess oxygen and the presence of metal oxides such as iron oxide which may catalyze the oxidation of SO_2 to SO_3.

Under usual smelter practice, it is common for the heat value of the flue gases from reverberatory furnaces to be recovered via a waste heat boiler and most of the entrained dust and fume recovered for its economic value in dry-type particulate removal devices such as balloon

flues, cyclones and electrostatic precipitators before the gas stream is vented to the atmosphere at temperatures of around 400°F (204°C). Thus the exit gas feed available to any SO_2 recovery process is at an elevated temperature; it contains residual quantities of solid and fume particulates; and in addition to SO_2 and SO_3, it may contain gaseous contaminants such as HCl and HF. The limitations of most SO_2 absorption-based control processes to high temperatures and to oxidation side-reactions make pretreatment or conditioning of this gas stream an essential step in the application of such processes.

Under direction of the Project Officer, this study was addressed directly to the weak gas streams from copper smelters, i.e., reverberatory furnaces and multi-hearth roasters. To provide a standardized approach for each SO_2 control process under review, the gas feed available at the battery limits of the SO_2 control section has been specified as being cooled to 600°F (316°C) by the use of radiation cooling and waste heat boilers, and the particulate loading has been reduced to approximately 0.1 gr/SCF via cyclones and electrostatic precipitators.

2.3 SO_2 CONTROL PROCESSES

The SO_2 control processes identified for evaluation and applicability to the weak SO_2-containing effluent streams generated in non-ferrous smelters represent a wide range in the level of demonstrated application, reliability and control effectiveness.

These processes are:

1) sulfuric acid
2) lime and limestone scrubbing
3) sodium scrubbing regenerable (Wellman-Lord Process)
4) sodium scrubbing non-regenerable (Double-Alkali Process)
5) magnesium oxide
6) dimethylaniline (DMA)/xylidine
7) sodium citrate
8) ammonia.

Table 2-1 provides a broad summary of their current states of development and their main areas of application. With the exception of the sulfuric acid process, these SO_2 control systems all have the same functional processing steps:

Table 2.1. STATUS OF SO_2 CONTROL PROCESSES

Process	Developmental Stage	Area of Application
Sulfuric Acid	Well understood and proven technology.	Widely used in non-ferrous smelters or gas streams containing above 3.5% SO_2. Can operate on weaker streams with appropriate modifications.
Lime and Limestone Scrubbing	Commercial sized systems have been installed and are being installed. Considerable development work done over past 5 to 6 years. Reliability of operation improving rapidly.	Primarily in the power plant area, but some metallurgical applications. No known installations in non-ferrous smelters.
Sodium Scrubbing Regenerable (Wellman-Lord Process)	A number of commercial installations in United States and Japan since 1970. Good demonstrated reliability.	Sulfuric acid plant and Claus plant tail gas scrubbing and flue gas from steam generators. No known smelter applications.
Sodium Scrubbing Non-Regenerable (Double-Alkali Process)	Extensive development work in both United States and Japan. Some commercial applications in both countries.	Power plant and industrial boiler applications. No smelter installations.
Magnesium Oxide	Several commercial sized installations in both United States and Japan. Long-term reliability still to be demonstrated.	In the United States, on utility power plants; but in Japan, installed on tail gas from sulfuric acid and Claus plant. Two units installed in copper smelters.

Table 2.1 (cont'd)

Process	Developmental Stage	Area of Application
Dimethylaniline (and Xylidine)	Process has been available for many years and several commercial installations are in operation in the United States.	Several DMA installations in non-ferrous smelters handling a range of SO_2 concentrations. Favors higher concentratins. No xylidine application in the United States.
Sodium Citrate	Second generation process still in small scale pilot plant stage.	Pilot plant installations have treated boiler flue gases, copper reverberatory flue gases and zinc sinter furnace gases, all with high SO_2 removal efficiencies.
Ammonia (Regenerable)	Process has been investigated extensively and commercial applications in both Canada and the USSR date back many years. Pilot plant investigations current in the United States are concentrating on improved regeneration route.	There has been long term application treating smelter offgases (Consolidated Mining and Smelting Co. of Canada) but effective regeneration with reduced energy requirements still to be commercially demonstrated.

1) Gas cooling and conditioning

2) Absorption of the SO_2 from the gas stream

3) Regeneration (or disposal) of the SO_2 from the absorbent liquid

4) Utilization of the regenerated SO_2 in regenerable systems via sulfuric acid or elemental sulfur plants.

The steps of gas cooling and conditioning, and SO_2 utilization can be defined independently of the absorption and regeneration (or disposal) steps which may be considered to constitute the basic SO_2 control process itself.

2.4 GAS COOLING AND CONDITIONING

The purpose of this step is:

a) to cool and humidify the gas stream to prevent excessive evaporation and deposition of solids in the SO_2 absorber itself

b) to remove the residual particulate matter which may catalyze undesirable side reactions in the absorber or contribute to high rates of build-up of inert material in closed loop or regenerative systems.

The degree of pretreatment required by the gas feed to an SO_2 absorption-based system will thus depend on both the characteristics of the gas stream itself and the limitations of the SO_2 control process. The control process may also provide options which allow some economic trade-offs between higher conditioning capital investment and modified operational modes downstream, although with mechanically precleaned smelter gases and the small particulate size of the residual material, the potential may be limited.

Specific industrial experience on SO_2 control systems is limited, and largely related to the conditioning requirements of utility flue gases on throwaway lime/limestone based systems. However, a number of sulfuric acid plants have long operated with gas cooling and conditioning systems under conditions similar to those existing in non-ferrous smelter operations. J. M. Connor in a paper in 1968[1] provided discussion and cost estimates for a typical sulfuric acid plant gas cooling and conditioning system, and his costs, with appropriate modification and escalation, appear to be reflected in several later studies.[2,3]

A typical sulfuric acid plant conditioning system is usually made up of three separate steps:

1) quenching the gas stream with water in a suitable contacting device to provide essentially adiabatic cooling to saturation together with some degree of particulate removal. Additional cooling may be provided in either a second tower or by recirculating the quench water through a cooling loop

2) removal of acid mist carryover with additional particulate removal

3) neutralization and solids removal to waste of part of the recirculated quenching water.

Step 2 is an important part of the overall conditioning process, and the final specifications of the cleaned gas are determined largely by the approach taken in this section. Multi-stage wet electrostatic precipitators in both series and parallel configurations are commonly used in acid plants installed on smelter SO_2 gas streams. In the Miami Smelter of the Inspiration Consolidated Copper Company, converter and electric furnace offgases feeding a new double absorption sulfuric acid plant are cleaned and conditioned via venturi scrubbers and packed washing towers, followed by two stages of electrostatic mist precipitators with four separators in parallel in each stage. Capital costs for such cleaning systems may constitute as much as 40 to 45 percent of the total investment for a sulfuric acid plant installation.

The degree of gas cleaning required for SO_2 control processes varies widely depending on the characteristics of the process itself. Conditioning requirements for "throwaway" processes such as the lime/limestone process are essentially satisfied by providing gas cooling and humidification only. Regenerable processes, however, may require additional feed gas cooling and/or a higher degree of particulate and acid mist removal, although it is unlikely that any of these processes would require full "acid plant level" pretreatment.

Capital and operating costs have been developed in Appendix A for two separate gas cooling and conditioning systems which would be expected to satisfy the requirements of "throwaway" SO_2 control processes and all regenerable SO_2 control processes, respectively. As noted above some regenerable SO_2 control processes may allow process approaches in the regeneration section which provide for the removal of gas-introduced particulate material and thereby reduce the degree of initial feed gas

cleaning needed. The viability of this approach is related to the size distribution of the particulate material entering the system and the operating characteristics and nature of the SO_2 absorption column itself. Non-ferrous gases which have passed through balloon flues, waste heat boilers and electrostatic precipitators prior to the SO_2 control system will have a size distribution concentrated in the submicron range, and it is unlikely that the low pressure drop absorption column will exercise much influence on further particulate removal. However, in any closed system, inert material will build up from make-up water, from reagent impurities, and from the inevitable oxidation reactions which can at best be controlled but not entirely eliminated; and these materials must be removed or purged from the system. This purge will at the same time tend to control any buildup of gas-introduced particulates. If the active reagent is expensive, e.g., sodium salts in the Wellman-Lord process or magnesium in the magnesium oxide process, direct purging to waste may be unattractive and may suggest a secondary purge treatment system to recover the active reagents, and sized to control particulate build-up at the same time.

2.5 SO_2 ABSORPTION AND REGENERATION

In the SO_2 absorption section, the cooled and cleaned SO_2-containing gas is scrubbed, usually countercurrently, with a particular absorbent solution. The process can be carried out using a packed tower, sieve plate or impingement plate tower, or any other "contacting device" such as a moving bed or venturi scrubber. The vapor-liquid equilibrium relations and the process chemistry involved for each specific SO_2 absorption process are important factors which directly affect the design and hence the cost of the absorption system for that process. Capital costs for both a slurry-based and a solution-based absorption system are provided in Appendix B.

The SO_2 regeneration section, or the disposal section if the process is non-regenerable, is also uniquely identified with a specific control process. The capital and operating costs for these two sections, SO_2 absorption and regeneration, together reflect the economic differences between the basic control processes themselves. These costs have therefore been combined to present a single cost function, and are presented under the appropriate SO_2 control process section as a family of parametric curves relating gas flow, SO_2 concentration, and cost.

2.6 AUXILIARY SO_2 UTILIZATION PLANTS

The regenerable SO_2 control processes, with the exception of the citrate process which directly produces elemental sulfur, provide a concentrated stream of sulfur dioxide gas. This stream can be utilized in a number of ways:

1) as feed to a sulfuric acid plant
2) as feed to an elemental sulfur plant
3) for conversion to liquid SO_2.

Sulfuric acid plants are usually designed for an SO_2 concentration of 4 to 10 percent, with any higher concentrations being diluted with additional air. The economics of elemental sulfur plants favor concentrated SO_2 gas feed streams, while liquid SO_2 plants must include suitably sized predryers for those SO_2 streams recovered by steam stripping and condensation. Thus, there is a tendency for the control processes under equal conditions to be preferentially matched with a particular SO_2 utilization process. For example, the regeneration process of the magnesium oxide system produces an SO_2 stream of around 15 percent concentration. An auxiliary sulfuric acid plant would offer the most straightforward utilization avenue. On the other hand, the Wellman-Lord process readily yields an SO_2 product stream with a concentration level up to 80 percent, a level attractive for the production of elemental sulfur or liquid SO_2. However, under certain conditions, the selection of an alternative utilization operation may be well justified in spite of the economic penalties which may be involved.

Capital and operating costs for sulfuric acid, elemental sulfur plants and SO_2 liquefaction plants have been developed; and appropriate cost curves are presented in Appendices C, D and E, respectively.

2.7 CAPITAL AND OPERATING COST ESTIMATES

Capital cost estimates have been developed from basic published data, but considerable adjustment, together with appropriate escalation, has been necessary to provide a degree of compatibility and relationship to smelter operations.

As noted in Section 2.2, smelter effluent gas received at the boundary limits of the control process has been standardized at 600°F temperature with a maximum particulate loading of approximately 0.1 gr/SCF and an SO_3 concentration of 0.03 percent. Capital and operating costs of both the gas conditioning and SO_2 absorption sections have been related only to the gas flow rate, although in the latter section, the chemistry and kinetics of the specific process itself will also influence

the costs. In actual practice, the capital costs of the SO_2 absorption system would be expected to increase somewhat with increasing SO_2 concentrations, as well as with increasing gas volumes, but since the capital estimates for this study are based largely on generalized and adjusted data, the contribution from SO_2 concentration has been ignored. The capital cost of the blowers or fans to move the gas through both the gas cleaning and SO_2 absorption sections to the stack has been allocated entirely to the SO_2 absorption section although in practice they may be located in front of the gas conditioning section. However, operating power costs for these blowers or fans have been allocated to both the conditioning system and the absorption section based on expected pressure drops in each section. Variable operating costs have been based on determined unit usages related to either the gas flows or the SO_2 rate (in lbs/hour) as appropriate.

In both the regeneration and utilization sections, both capital and variable operating costs have been related only to the hourly SO_2 rate.

Operating labor has been allocated separately to each of the functional sections with incremental man-hours being assigned arbitrarily at 75,000 SCFM and 10,000 lb/hr SO_2 rate. Maintenance costs and allowances for local taxes and insurance have been taken as percentages, appropriate for each specific process, of the total capital investment for that process.

In providing for the effect of depreciation and other capital related costs, the commonly accepted approach of using an amortization factor ("Capital Recovery Factor") or a fixed percentage of the capital investment based on expected life has not been adopted. Corporate income tax rates exercise a significant influence on the company's effective annualized cost. In addition, differences between capital cost-intensive and operating cost-intensive control systems are also highlighted by consideration of the tax rate. At the present tax rate of 48 percent, the net annualized cost of an installed SO_2 control system is provided by the relationship:

NET ANNUALIZED COST = (Capital Recovery Factor)(Total Capital Investment) + 0.52 (Annual Operating Costs) - 0.48 (Annual Depreciation Rate).

For the purposes of this study the Annual Depreciation Rate has been taken on the basis of straight line depreciation and not on the more

usual industrial practice of sum-of-the-year's-digits depreciation. It should be noted that if evaluations are desired excluding the effect of income tax rates, the annualized cost becomes:

ANNUALIZED COST = (Capital Recovery Factor)(Total Capital Investment)
+ (Annual Operating Costs).

This information is readily available from the control cost tables provided for each smelter.

The Total Capital Investment data developed for each process include a 35-percent allowance to cover engineering, contractor's fees and contingency contributions. Cost data for years prior to mid-1974 have been escalated to mid-1973 at an annual rate of 5 percent. A rate of 15 percent has been used to escalate this date to mid-1974.

In the preparation of the final capital and operating cost curves for each SO_2 process, as noted in Section 2.5, the SO_2 absorption and the SO_2 regeneration (or disposal) sections have been combined to provide a family of curves relating gas volume and SO_2 concentration with cost for each process. In addition, the separate cost curves for each of the process sections--i.e., gas cleaning and conditioning, SO_2 absorption, SO_2 regeneration or disposal, and SO_2 utilization--have been provided to allow flexibility in defining an overall SO_2 control system to satisfy different conditions.

It should be noted that the capital costs determined above are for new installations and do not include any provision for retrofitting to an existing smelter. Also, no specific provision has been made for reheat of the scrubbed gas discharged from the SO_2 absorber. If this effluent cannot be discharged and effectively distributed using the discharge fans and the high stacks commonly used in smelters, some degree of reheating may be necessary. In view of the current energy shortage, the use of direct-fired oil or gas burners seems to be precluded, with emphasis being directed to some appropriate heat recovery system to provide the necessary reheat. The cost and operating uncertainties associated with this approach have suggested that this factor be omitted from both the general cost curves for the SO_2 control processes and in the actual matching of these SO_2 control processes with specific U.S. copper smelters.

To provide direct cost comparisons between the different SO_2 control processes, a total system capital and annual operating cost breakdown has been prepared in tabular form for each control process treating a range of gas flows containing 1.0 percent SO_2. In the case of the regenerable processes, the most common SO_2 utilization section as determined by past practice has been selected to complete the total system. Also included are unit capital and operating costs on the basis of gas flow (SCFM) and annual tons of SO_2 removed.

2.8 PRODUCT DISPOSAL OR MARKETING CONSIDERATIONS

All SO_2 control processes produce a product which includes the sulfur values captured from the treated gas stream. This product may be a water/solids slurry with the sulfur values held predominantely as sulfates, sulfides and bisulfites as is the case with the "throwaway" processes, or it may take the form of elemental sulfur, sulfuric acid or liquefied or gaseous SO_2 from the regenerable type processes. Whatever the final product, it must be disposed of. If it cannot be used or sold for other processing sequences, it must be discarded as a waste material--usually at a cost which may include capital outlays as well as routine operating expenses.

In the "throwaway" processes considered--limestone scrubbing and the double-alkali processes--since there is no commerical use for the sludge end product under present U.S. conditions, appropriate costs have been provided for the disposal of the sludge and included in either or both the capital and operating cost structures.

The sulfur products which may be produced by the regenerable processes have commercial value and potentially they offer a source of income which could offset the costs associated with operating the control process itself. How much this contribution might be will vary with the geographic location of the source, transportation facilities, seasonal demands, size of the market and potential for growth, to name a few of the considerations. In short, only an in-depth market survey spanning the options offered by different sulfur end products from regenerable SO_2 control processes and the special conditions of the various smelter regions can provide a meaningful response to the income contribution question raised above. Scope limitations on this current study have precluded this approach but a brief consideration of the impact of the

byproduct credit for that product most commonly associated with each of the regenerable control processes on the net total annualized cost has been provided In Table 2.2.

In Section 12, those U.S. primary copper smelters presently generating weak SO_2 streams have been reviewed, and these streams characterized in terms of flow rate and SO_2 content. SO_2 control processes have been appropriately matched with each of these smelters and capital and operating costs developed from the earlier established cost data.

The cost structure of any control system, particularly the gas conditioning and SO_2 absorption sections, installed on existing process equipment in an on-line operating facility is strongly influenced by such factors as the particular site conditions, the age of the plant and equipment, the flue system and the physical layout of the equipment itself. Generally, the sulfur handling section can be located independently of the existing equipment and cost is not adversely influenced. The combined contribution of the above factors may increase the capital cost of the conditioning and absorption installation by factors ranging between 1.1 and 1.8 or even higher under certain circumstances. Retrofitting, and the associated cost penalties, are thus associated uniquely with each specific plant. In developing the costs in Section 12, information on plant age, equipment and facility layout plots, and comments from the plant operators themselves have been reviewed; and using general engineering judgment, a "retrofit factor" or cost multiplier for new plant installation costs has been defined for the gas conditioning and SO_2 absorption sections for each smelter. Specific considerations are discussed in Section 12 under each individual smelter.

Individual cost computation sheets for each control process and each smelter have been provided in Appendix G. It is emphasized, however, that these details have been provided essentially for comparative purposes and additional detailed input is necessary to establish design needs and firm engineering cost estimates.

Table 2.2. EFFECT OF BYPRODUCT CREDIT ON NET TOTAL ANNUALIZED COSTS OF THE REGENERABLE SO_2 CONTROL PROCESSES WHEN TREATING A GAS STREAM CONTAINING 1 % SO_2

CONTROL PROCESS		WELLMAN-LORD		MAGNESIUM OXIDE		AMMONIA		CITRATE		DMA	
Usual Byproduct		H_2SO_4		H_2SO_4		H_2SO_4		Sulfur		Liquid SO_2	
Av. Market Value		$40/ton		$40/ton		$40/ton		$50/ton		$110/ton	
Annual Production at	SCFM										
	70,000	40,800 TPY		38,600		40,800		13,700		27,400	
	100,000	58,300		55,200		58,300		19,600		39,200	
	200,000	116,600		110,500		116,600		39,200		78,500	
	300,000	175,000		165,800		175,000		58,900		117,800	
Net Total Annualized											
	70,000	1,764,400		1,699,600		1,831,800		1,359,900		2,115,800	
	100,000	2,306,700		2,214,300		2,357,800		1,731,200		2,785,100	
	200,000	3,958,900		3,667,900		3,701,100		2,764,000		4,742,600	
	300,000	5,268,500		4,764,300		4,796,200		3,575,600		6,429,000	
Production cost, $/ton											
(Debit)/Credit	70,000	$43	($3/ton)	44	($4/ton)	45	($5/ton)	99	($49/ton)	77	$33/ton
$/ton	100,000	$40	0	40	0	40	0	88	($38/ton)	71	$39/ton
	200,000	$34	$6/ton	33	$7/ton	32	$8/ton	70	($20/ton)	60	$50/ton
	300,000	$30	$10/ton	29	$11/ton	27	$13/ton	61	($11/ton)	55	$55/ton

2.9 REFERENCES

1. Connor, J. M., "Economics of Sulfuric Acid Manufacture," Chemical Engineering Progress, Vol.64, No.11, November 1968.

2. Semrau, Konrad T., "Feasibility Study of New Sulfur Oxide Control Processes for Application to Smelters and Power Plants, Part II, the Wellman-Lord SO_2 Recovery Process."

3. Fluor-Utah, "The Impact of Air Pollution Abatement on the Copper Industry," PB-203-293 (1971).

3.0 SULFURIC ACID

3.1 PROCESS DESCRIPTION

The manufacture of sulfuric acid from smelter gas streams involves essentially four steps: gas conditioning, drying, acid making, and acid storage. Figure 3-1 shows a typical flowsheet.

1) Gas Conditioning

Effective removal of particulates and other impurities from the smelter gases is essential for the operation of the acid plant, avoids costly shutdowns and maintenance due to catalyst fouling and equipment corrosion, and reduces the chances of acid contamination. Gas conditioning also entails gas cooling.

Various equipment combinations for gas conditioning have been proposed. However, for this study, a scrubbing tower, cooler, and electrostatic mist precipitator were used as the prime conditioning equipment. This equipment not only removes the particulates and other impurities but also cools the gas stream down to around 130°F (55°C).

2) Drying

The gases must be dried prior to conversion. However, some moisture in the gas stream is helpful during the conversion stages. In sulfuric acid plants utilizing gas streams with sulfur dioxide contents exceeding 3.5 to 4 percent, a drying tower using 93 percent sulfuric acid will normally be capable of drying the gas stream. The removal procedure in modern sulfuric acid plants is to dry the gases to moisture contents below what is needed and then to add moisture prior to conversion. This procedure results in better control of the moisture content of the gas.

For sulfuric acid plants utilizing gas streams with sulfur dioxide contents of less than 3.5 to 4 percent, refrigeration may be required to sufficiently dry the gases. The amount of drying needed is based on the moisture-balance temperature, the temperature to which the gas stream must be lowered to contain the proper moisture (see Section 3.2.3).

After refrigeration the gases may be further dried in a drying tower, and then a carefully controlled amount of water is added in prior to conversion.

3) Acid Making

After leaving the drying section, gases then proceed to the acid making section. Prior to the catalytic converter, the gas temperature must be raised to 800-860°F (425-460°C). To accomplish this temperature rise, the gas is passed through a series of heat exchangers utilizing waste heat generated during the exothermic conversion of SO_2 to SO_3.

In sulfuric acid plants processing streams containing 4 percent or greater sulfur dioxide, autogenous operation occurs (the heat supplied by the conversion of SO_2 to SO_3 is sufficient to keep the plant in heat balance). For less than 4 percent SO_2, heat must be supplied to raise the temperature of the gases to the required conversion temperature. This makeup heat is supplied by a continuously operating furnace. Large amounts of energy (up to 24.6 million Btu per hour for a 0.5 percent SO_2 stream at 100,000 SCFM) are required. Associated with this high energy requirement is the high cost of the oil necessary for its production.

The gas stream is then introduced into the catalytic converter. Normally 3- or 4-stage converters utilizing vanadium pentoxide catalysts are used. The gas passes through the first stage of the converter where the SO_2 is partially converted to SO_3, with an associated temperature rise, and then through a heat exchanger where it is cooled prior to passing through the second catalyst stage. In single-absorption plants, this process proceeds through the final converter stage where the gas is then passed through a heat exchanger and then to the absorption tower. In double-absorption systems, the gas stream is usually taken from the converter after the second or third stage, passed through a heat exchanger to be cooled, and then introduced into an absorption tower. The gas minus part of the absorbed SO_3 is then reheated and reintroduced into the converter where it follows the same path as in a single-absorption plant.

In the absorption towers, the SO_3 is absorbed by strong sulfuric acid and water is added to make the desired acid strength. From the towers, the acid passes through an acid cooler and then to acid storage tanks. The unabsorbed SO_3 and the remaining SO_2 in the gas stream are vented to the atmosphere.

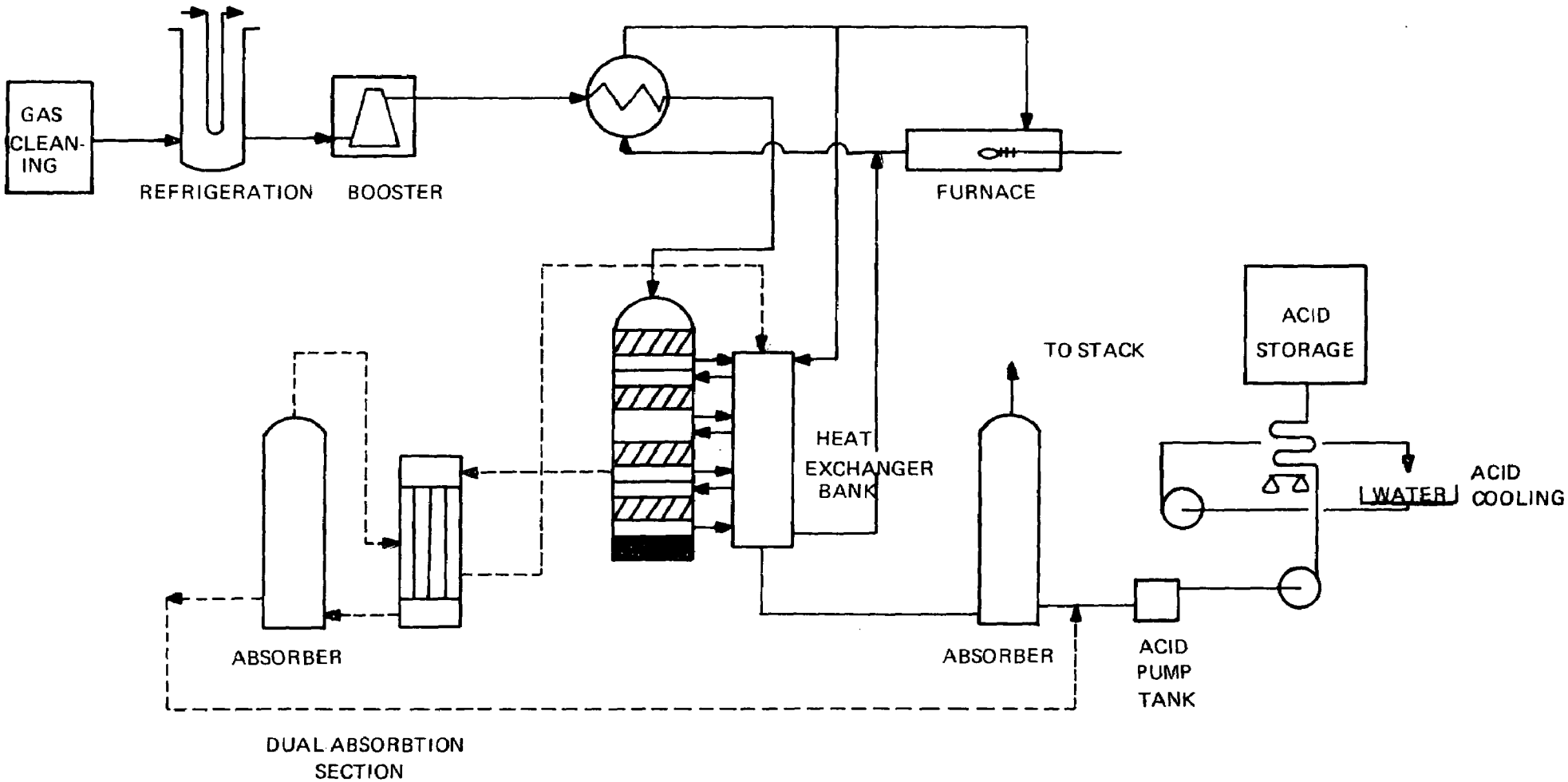

DILUTE FEED GAS
SULFURIC ACID PROCESS

FIGURE 3-1

4) Acid Storage

Acid from the absorption towers is normally passed through acid coolers and then to carbon-steel storage tanks. A 30-day storage capacity is normally sufficient.

3.2 PROCESS AND OPERATING CONSIDERATIONS

Sulfuric acid plants are basically steady-state systems. Those operating on smelter gas streams are subjected to transient conditions that include drastic changes in both gas flows and sulfur dioxide concentrations. Other significant operating considerations based on gas-stream parameters include the presence of highly active metallic and volatile compounds, the sulfur dioxide content, the moisture content, and the temperature.

3.2.1 Transient Operation

As mentioned above, sulfuric acid plants operating on smelter gases are subjected to transient conditions as a normal operating condition. Normally, sulfuric acid plants that are designed for steady-state conditions, within restrictive margins, cannot tolerate these transient conditions; and the plant either produces dilute acid or is shut down. These conditions result in the release of large amounts of sulfur dioxide to the atmosphere unless the smelter is shut down or an alternative source of sulfur dioxide is used.

To avoid this situation, plants designed for transient operations are "oversized" both in terms of gas handling capability and acid production. This approach imposes economic penalties both in terms of capital investment and operating costs. As noted in Section 3.1, acid plants treating gas streams containing less than approximately 4.0 percent SO_2 are not autogenous, and supplementary heat input to the gas stream is necessary to sustain the SO_2 to SO_3 conversion. Variations in gas flow and SO_2 content will require special control loops to balance and control this auxiliary heat input step.

3.2.2 Metallic Particulates and Fumes

Although cleaning and conditioning of the gas stream prior to entering an acid plant is extensive, submicron particulates and metallic fumes are carried through to the converter. Such materials will contribute to plugging, poisoning or partial deactivation of the catalyst, materials corrosion, and/or acid contamination.

In addition, some metallic particulates such as iron oxides may act as catalysts that promote the conversion of SO_2 to SO_3 prior to gas conditioning. The SO_3 thus formed can be removed from the gas stream during the gas conditioning stage with a subsequent reduction in sulfur content of the gas stream entering the converter.

3.2.3 Sulfur Dioxide Concentration

The market for sulfuric acid is generally focused on acid strengths of 93 percent and greater. The concentration of acid produced is a function of both the SO_2 concentration and the moisture content of the incoming gas stream. With SO_2 concentrations below about 3.5 to 4.0 percent, the equilibrium moisture content is more than enough to produce 93 percent or stronger sulfuric acid, and special treatment is required to remove the moisture. The direct effect of the SO_2 concentration on the degree of cooling that is necessary to adequately dry the incoming gas can be seen by the moisture balance equation:[1]

$$H_c \leq (98-80m)\ (\chi)\left[\frac{P_{SO_2}}{221.9\ m}\right]$$

where H_c is the saturated moisture content corresponding to the moisture balance temperature, m is the desired acid concentration, χ is the SO_2/SO_3 conversion ratio, and P_{SO_2} is the partial pressure of the sulfur dioxide.

As the sulfur dioxide concentration drops, the saturated moisture content drops, and accordingly, the temperature to which the gas stream must be cooled drops. Refrigeration must be used to cool the gas stream to the moisture balance temperature. Refrigeration systems are energy intensive, and this pretreatment requirement for low SO_2 gas streams imposes significant penalties in capital and operating costs.

Low SO_2 gas streams also require the use of auxiliary heat to insure proper operation of the sulfuric acid plant (see Section 3.1.3). Associated with low SO_2 concentrations, high volumetric flows are encountered in smelters. To handle these flows, additional expense is required for both larger air handling equipment and for increased energy requirements associated with the larger equipment.

A viable alternative to the direct use of low sulfur streams is upgrading the streams prior to conversion. This can be accomplished by effective draft control by redesign or cleaning of hoods and flues; by gas recycling; and by reduction of air infiltration by filling crevices; by shortening burner-to-refractory distances, and by tightening and sealing flues and hoppers. The application of these methods has resulted in a 70 percent reduction in air infiltration and a 32 percent increase in the SO_2 content of the flue gas by one Japanese smelter.[1] However, the scope of this project precludes the examination of such alternatives.

3.2.4 Moisture Content

The water/SO_2 ratio is important because of the equimolar quantities of water and SO_3 that are needed to complete the reaction

$$SO_3 + H_2O \rightarrow H_2SO_4.$$

More water can be tolerated for lower strength acids according to the formula for the water balance temperature mentioned previously. In most cases, a drying tower follows the refrigeration unit in low sulfur streams to further dry the gases. After the drying tower, the correct amount of water is usually injected into the gas stream prior to the converter. This procedure allows for a more precise water/SO_2 ratio adjustment to produce the desired acid concentration.

3.2.5 Temperature

The temperature of the gas stream is very important in many stages of acid making. The gas stream leaves the reverberatory furnace at about 1200°F (650°C) and is cooled in a waste heat boiler and a spray tower or other gas conditioning device. Intermediate stages of cooling using adiabatic direct cooling by evaporation or gas/liquid heat exchangers may also be needed. From the gas conditioning, the gas stream at about 130°F (55°C) must be dried, and in the case of low sulfur streams (<4 percent), must be refrigerated to reach the moisture-balance temperature.

After cooling to remove the water, the gas must be heated to 800-850°F (425-455°C) prior to entering the converter. This is accomplished by utilization of the heat generated from the conversion of SO_2 to SO_3

for autogenous plants (those using streams of approximately 4 percent SO_2 or greater), while supplementary heat must be applied for lower SO_2 streams (<4 percent SO_2).

The cooling and heating must be accomplished rapidly, especially prior to the final gas cleaning, because dust particles in the gas stream at temperatures in the range of 830-1100°F (445-595°C) may act as catalysts for the formation of SO_3 with the subsequent sulfur yield loss of the gas stream. Therefore, short contact periods between the gas and dust at these temperatures are essential for low SO_3 formation.

3.3 PROCESS DEVELOPMENT STATUS

Sulfuric acid plants have been applied to high SO_2 smelter gases for many years. The success of their application to low SO_2 gas streams (<3.5 to 4 percent) is questionable. In 1971, a sulfuric acid plant was applied to the treatment of the exit gas from a green-charged reverberatory furnace at Onahama Copper Smelter near Onahoma, Japan.[1] Prior to this application, the SO_2 content of the gases was upgraded from about 1.5 percent to about 2.2 percent.

The article which described this application also stated the following:

> When producing concentrated acid from weak gases by a contact process, the practical lower limit (not the economical limit) of SO_2 concentration is 2.0 percent judging from such factors as the temperature limit to maintain the water balance, supplemental heat to the conversion system, etc.[1]

Judging from this statement and from conversations with sulfuric acid plant designers, application of this process to weak SO_2 streams from smelters without prior enrichment processes would not seem to be reasonable.

3.4 PROCESS DESULFURIZATION EFFICIENCY

The theoretical equilibrium conversion of SO_2 to SO_3 for acid making can exceed 99 percent and is related to both the temperature of conversion and the SO_2 content. Generally, the lower the temperature and the lower the SO_2 content, the higher the conversion efficiency. Increasing the oxygen concentration and/or pressure also increases the conversion efficiency, but the relative gain is small and much higher costs are realized.[2]

Favorable low temperatures have correspondingly unfavorable reaction rates. At about 750°F (400°C), the reaction rate is nil with a vanadium catalyst, and fairly slow at about 840°F (450°C).[1] Consequently, the gas is heated to around 800-860°F (430-460°C) prior to entry into the converter. The lower temperatures cause lower conversion efficiencies which are compensated for by the use of a multiple-stage converter (usually three or four stages).

Theoretical conversion efficiencies are not obtained, but the use of the multiple-stage converters can account for the conversion of 97 to 98 percent of the SO_2 to SO_3 which is then absorbed into sulfuric acid. The use of double absorption can result in the conversion of at least 99.5 percent of the original SO_2 concentration.[3]

These conversion efficiencies occur only at peak conditions and will be reduced considerably by both fluctuations in flows and SO_2 content and by an aging catalyst.

3.5 PROCESS ENERGY REQUIREMENTS

The energy requirements of the sulfuric acid plants vary according to both the gas flow and the sulfur dioxide concentrations. At low sulfur dioxide concentrations (<4.0 percent) the energy costs are extremely high. For example, at 150,000 SCFM the energy costs are $750,000 per year for a 4 percent SO_2 stream; while for a 1 percent stream at 150,000 SCFM, the costs are over $4 million, an increase of approximately 550 percent.

The increase in energy costs is primarily due to the electrical power requirements of the refrigeration unit needed for the 1 percent stream, 83 percent of the total increase. The makeup heat required by the 1 percent stream accounts for the remaining 17 percent.

3.6 PROCESS COSTS

Data on the costs of sulfuric acid plants operating on low sulfur dioxide gas streams are practically non-existent because of the lack of operating plants. This lack of data has led to the derivation of cost estimates for capital and operating costs (Figures 3-2 and 3-3).

The total capital costs for acid plants are based on the sum of the costs of acid making and gas cleaning, refigerating, and preheating.

Acid making and gas cleaning -- The first step in the development of capital costs for sulfuric acid plants operating on low sulfur dioxide gas streams was the generation of a cost curve for an 8 percent plant. This curve was based on cost data collected from many sources and updated to mid-1974 costs.[3,4,5]

The cost was divided into acid making and gas cleaning costs (Figures 3-4 and 3-5). For the acid making section, it was assumed that one half of the section was flow dependent and one half was sulfur dependent. This assumption, along with an assumed size factor of 0.65, resulted in the following equation as an expression of the cost of the acid reaction:

$$\left(\frac{V_x}{V_8}\right)^{0.65} \left(\frac{C_8}{2}\right) + \left(\frac{C_8}{2}\right) = C_x$$

where V was the volumetric flow rate (SCFM), C was the cost ($\$10^6$), subscript x was the desired SO_2 percentage, and subscript 8 was at 8 percent SO_2.

For gas cleaning, it was assumed that all the gas cleaning cost is volume dependent and that a size factor of 0.68 applied. These assumptions resulted in the following equation.

$$\left(\frac{V_x}{V_8}\right)^{0.68} (C_8) = C_x.$$

Refrigerating -- For the regrigeration costs (Figure 3-6), the following assumptions were made: no regrigeration is needed for a 4 percent or greater SO_2 concentration, and the gases must be cooled from 130°F (55°C) to the moisture balance temperature. The cost of refrigeration was obtained from the open literature and a vendor.[6,7]

Preheating -- The cost of preheating was assumed to be 15 percent of the acid making cost for plants operating on less than 4 percent SO_2 gas streams (Figure 3-7). Preheating was considered unnecessary for those plants operating on 4 percent or better SO_2 streams.

The annual direct operating costs are shown in Figure 3-3. These costs are made up of the operating costs for the various segments of the process (Figures 3-8 through 3-11), plus the labor, maintenance, insurance and taxes. Typical operating costs for various flow rates at 1 percent SO_2 are shown in Table 3.1.

3.7 ADVANTAGES AND DISADVANTAGES

The chief advantages for sulfuric acid plants for control of SO_2 from smelters are:

1) Relatively high SO_2 control efficiency.
2) Marketable product under most circumstances.

The chief disadvantages of sulfur acid plants for control of weak SO_2 streams from smelters are:

1) Lack of operational plants to properly evaluate the actual operating effectiveness on low sulfur dioxide streams. Only one plant has been applied to this type of situation and it is no longer operating.

2) High capital and operating costs.

3) The catalyst is susceptible to deactivation and fouling from trace metals that are associated with smelter offgases.

4) Process is not autogenous at low SO_2 concentrations, i.e., makeup heat in large amounts and at high costs is needed.

5) At low SO_2 concentrations, refrigeration, with its associated high energy requirements and costs, is required to dry the gases prior to conversion of SO_2 to SO_3.

6) Fluctuating flow rates and SO_2 concentrations and deteriorating catalysts cause reductions in SO_2 removal efficiency.

7) Cooling water demands are high.

3.8 REFERENCES

1. Niimura, M., T. Konada, and R. Kojima, "Sulfur Recovery from Green-Charged Reverberatory Offgases at Onahama Copper Smelter," Paper No. A73-47, presented at Metallurgical Society of AIME Mtg., 1973.

2. Duecker, W.W., and J.R. West (eds), The Manufacture of Sulfuric Acid, Am. Chem. Soc. Mono. Series, Reinhold Publishing Corp, New York, 1959.

3. Chemical Construction Corporation," Engineering Analysis of Emissions Control Technology for Sulfuric Acid Manufacturing Processes," NAPCA Contract No. CPA 22-69-81, March 1970.

4. Connor, J.M., "Economics of Sulfuric Acid Manufacture," in Chem. Eng. Prog., Vol. 64, No. 11, Nov. 1968, pp. 59-65.

5. Fluor Utah Engineers and Constructors, Inc., "The Impact of Air Pollution Abatement in the Copper Industry," published by Kennecott Copper Corporation, New York, NTIS PB-208-293, April 20, 1971.

6. Guthrie, K.M., Process Plant Estimating Evaluation and Control, Craftsman Book Company of Am., Solana Beach, Calif. 1974.

7. Robinson, R., York Industrial, personal communication, November, 1974.

DILUTE FEED GAS
SULFURIC ACID PROCESS

TOTAL CAPITAL INVESTMENT COSTS

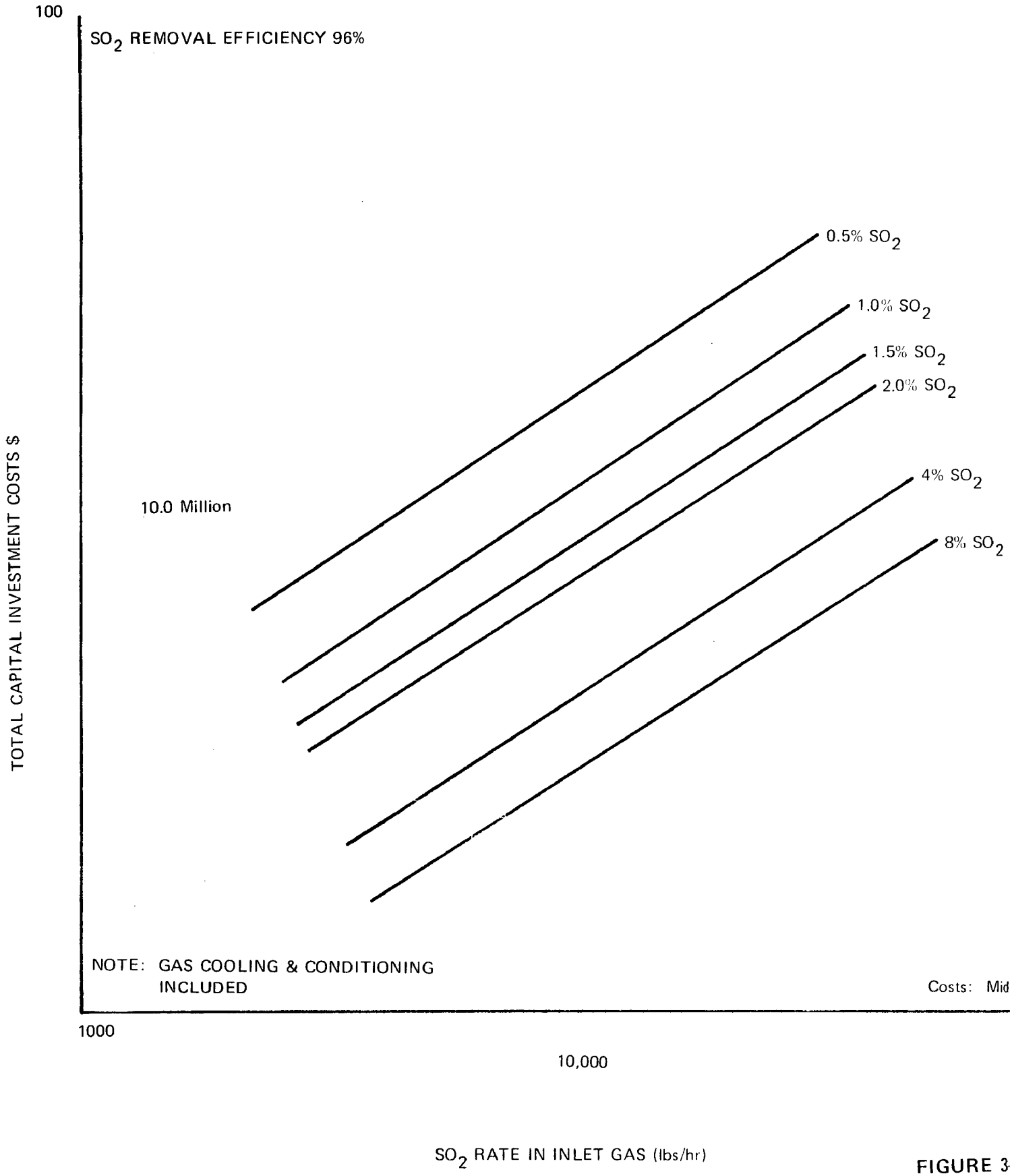

FIGURE 3

DILUTE FEED GAS
SULFURIC ACID PROCESS

TOTAL ANNUAL DIRECT OPERATING COSTS

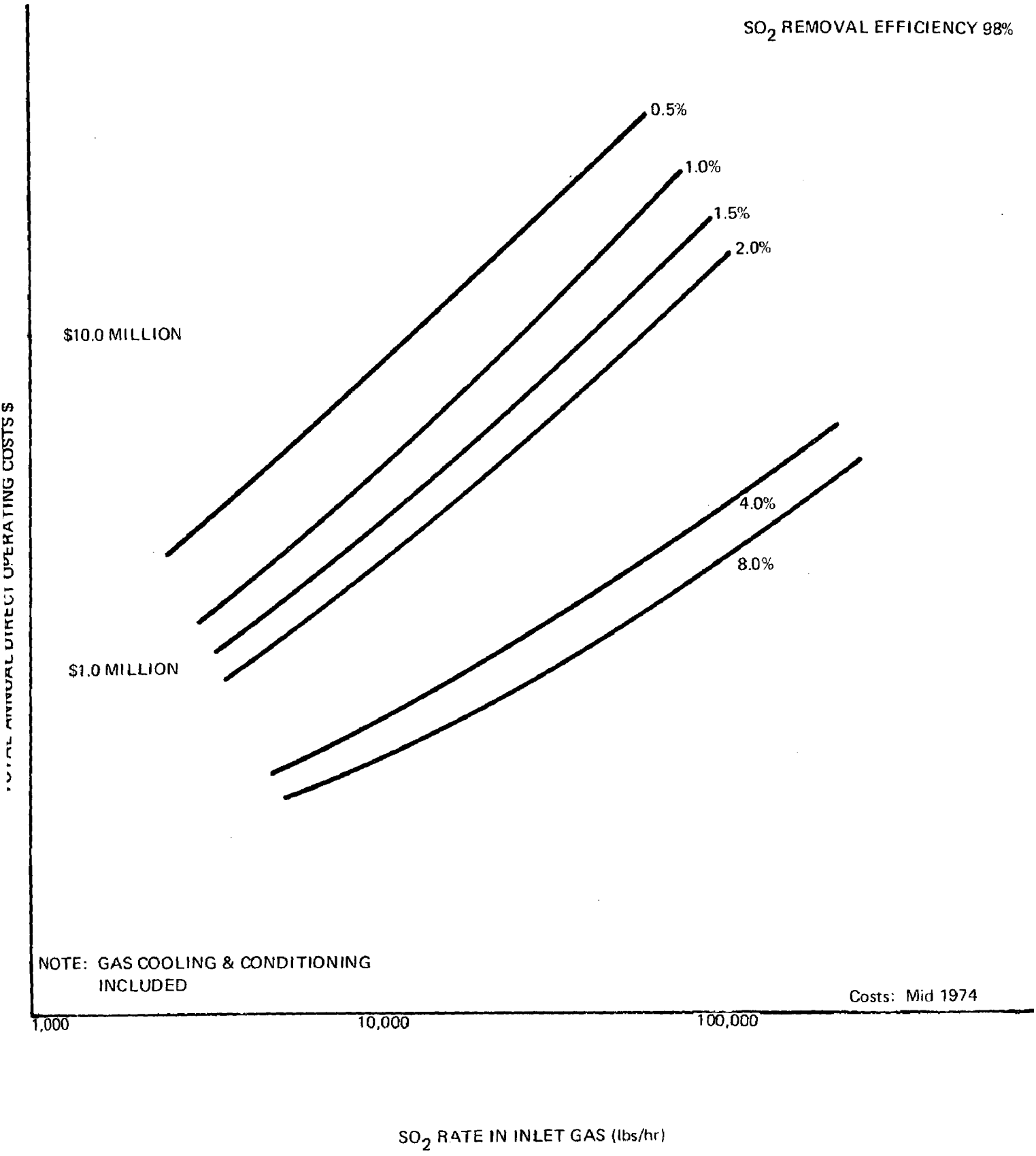

FIGURE 3-3

DILUTE FEED GAS
SULFURIC ACID PROCESS

TOTAL CAPITAL INVESTMENT COSTS
ACID PLANT SECTION

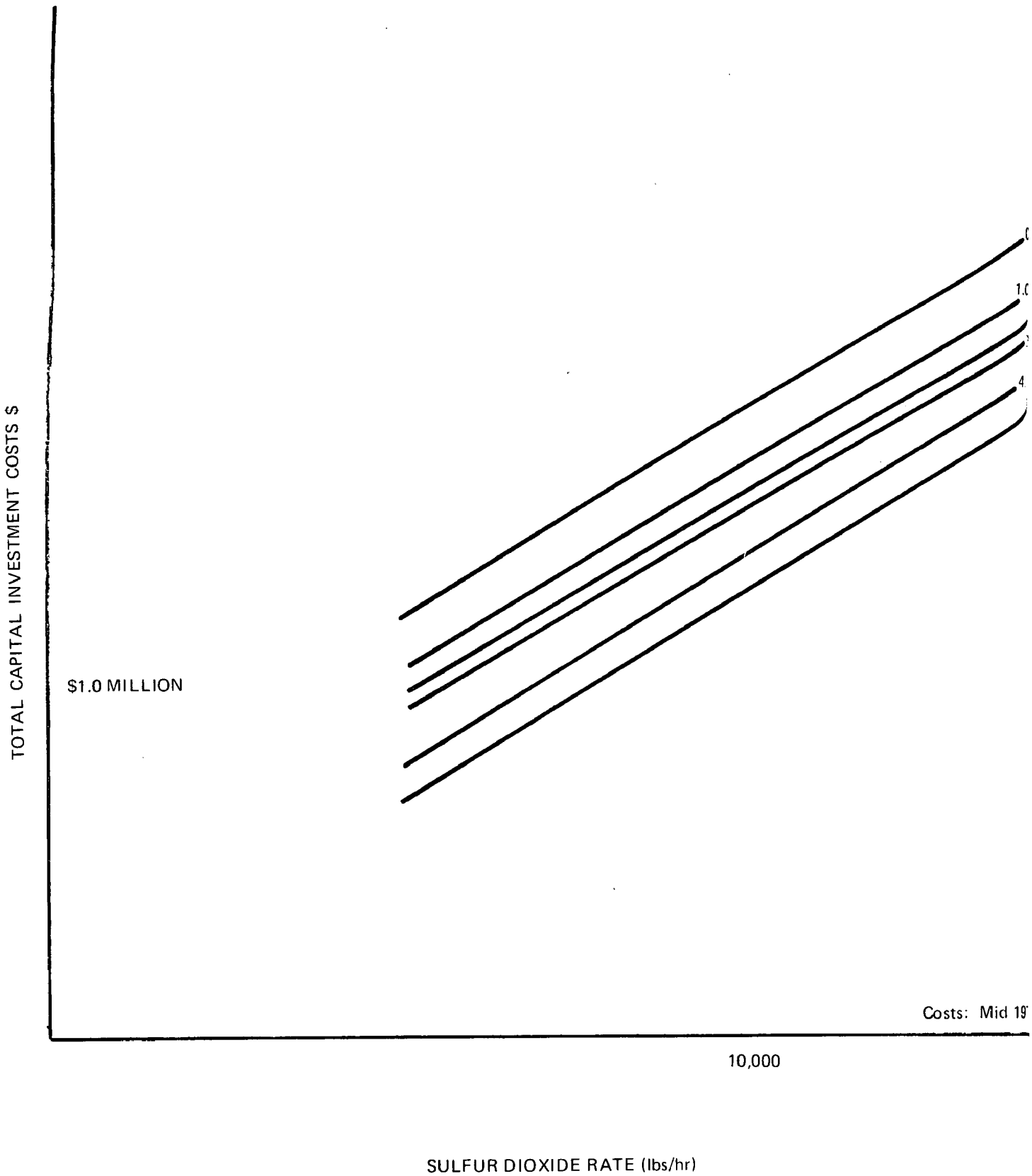

FIGURE

DILUTE FEED GAS
SULFURIC ACID PROCESS

TOTAL CAPITAL INVESTMENT COSTS
GAS CLEANING SECTION

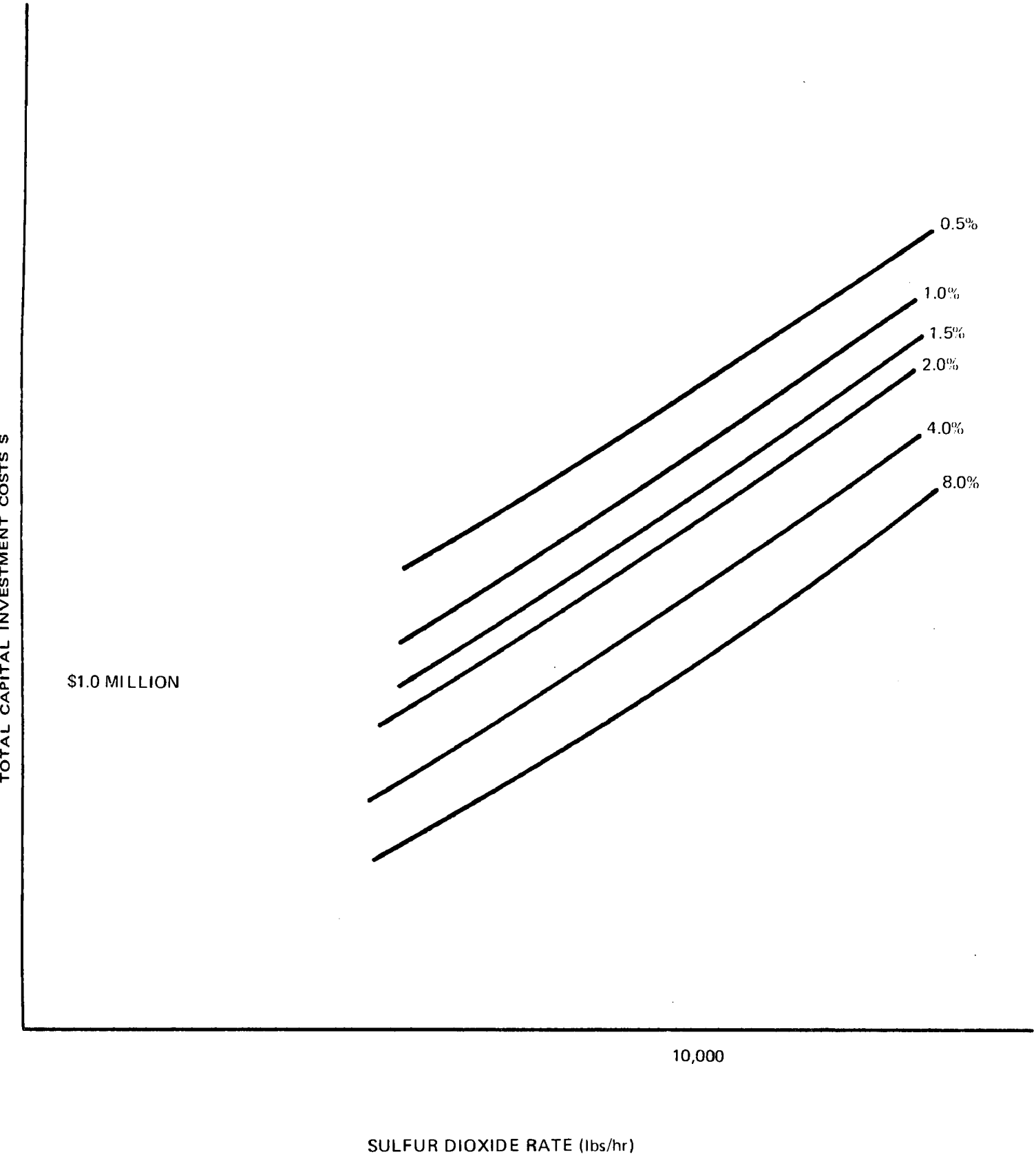

FIGURE 3-5

DILUTE FEED GAS
SULFURIC ACID PROCESS

TOTAL CAPITAL INVESTMENT COSTS
REFRIGERATION SECTION

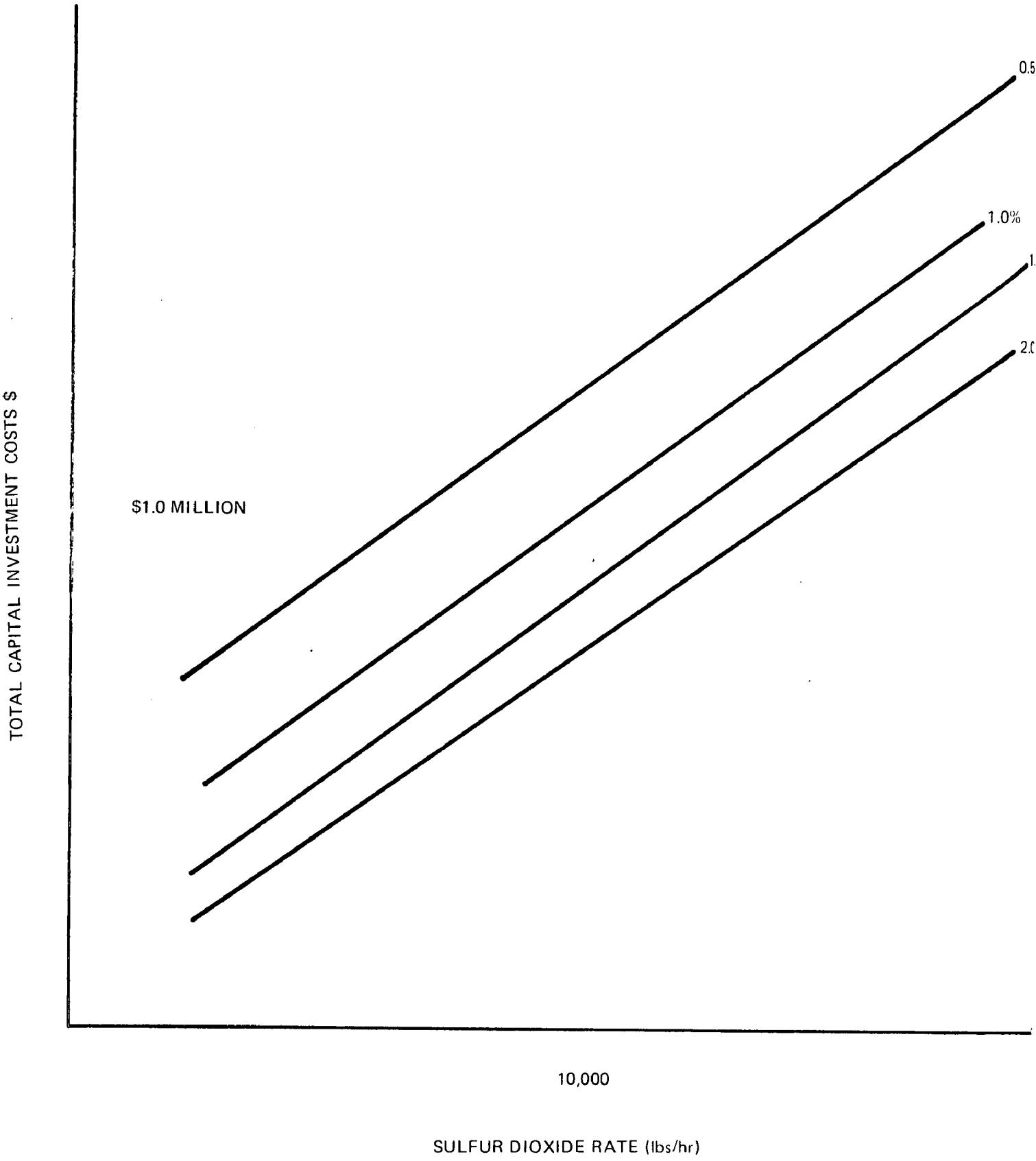

FIGUR

DILUTE FEED GAS
SULFURIC ACID PROCESS

TOTAL CAPITAL INVESTMENT COSTS
PREHEATING SECTION

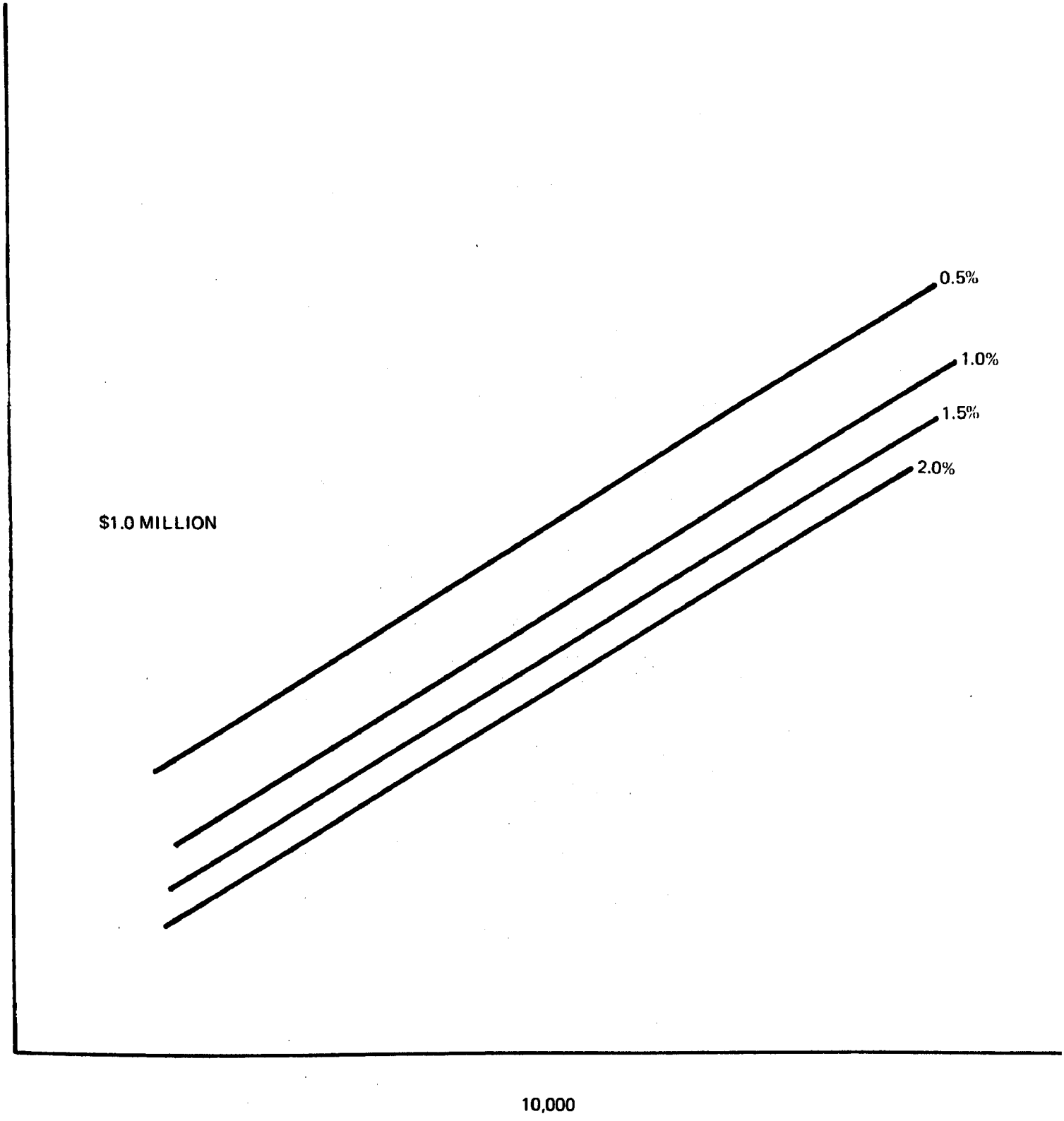

FIGURE 3-7

DILUTE FEED GAS
SULFURIC ACID PROCESS

TOTAL ANNUAL DIRECT OPERATING COSTS
ACID SECTION

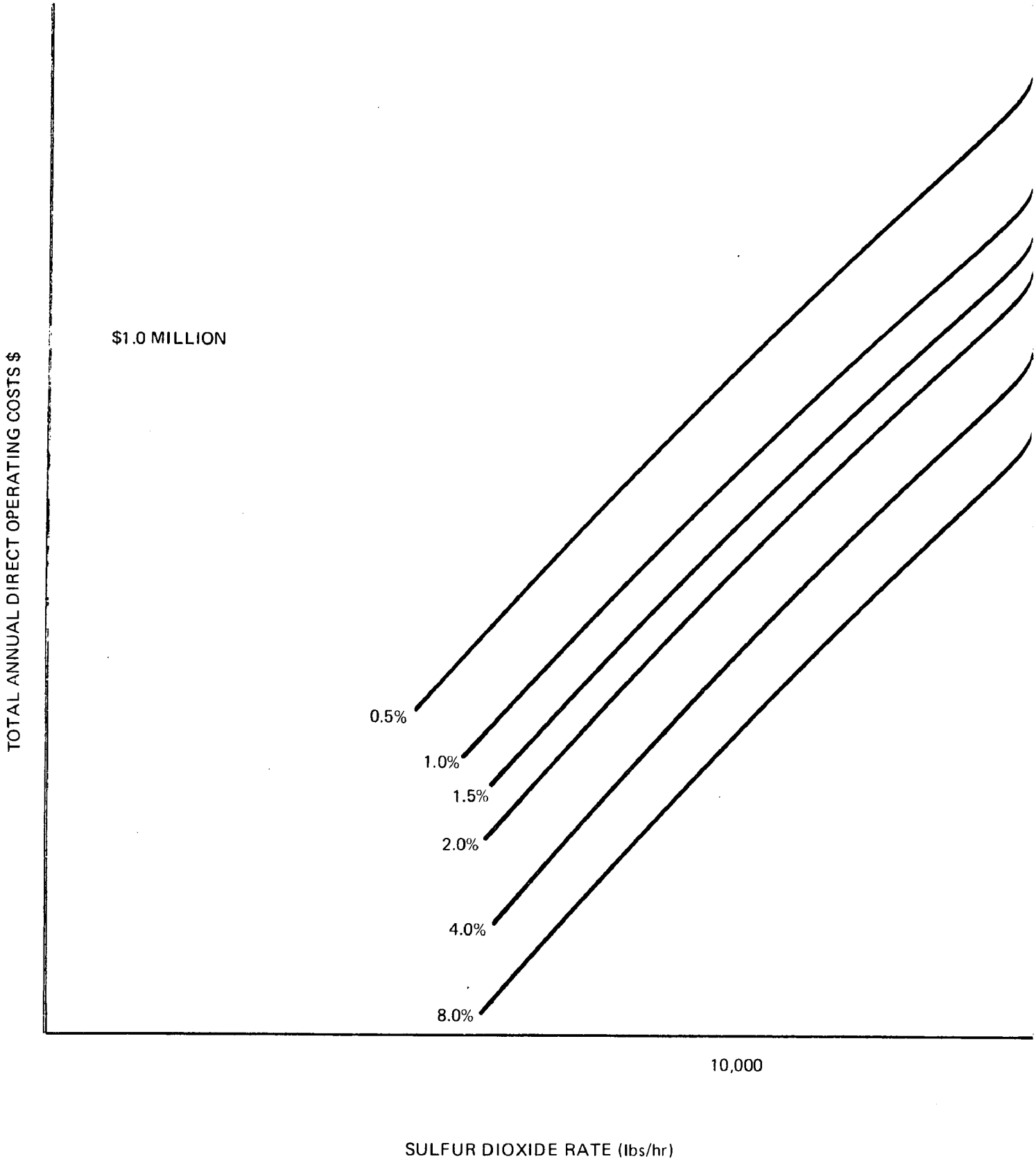

FIGURE 3

DILUTE FEED GAS
SULFURIC ACID PROCESS

TOTAL ANNUAL DIRECT OPERATING COSTS
GAS CLEANING SECTION

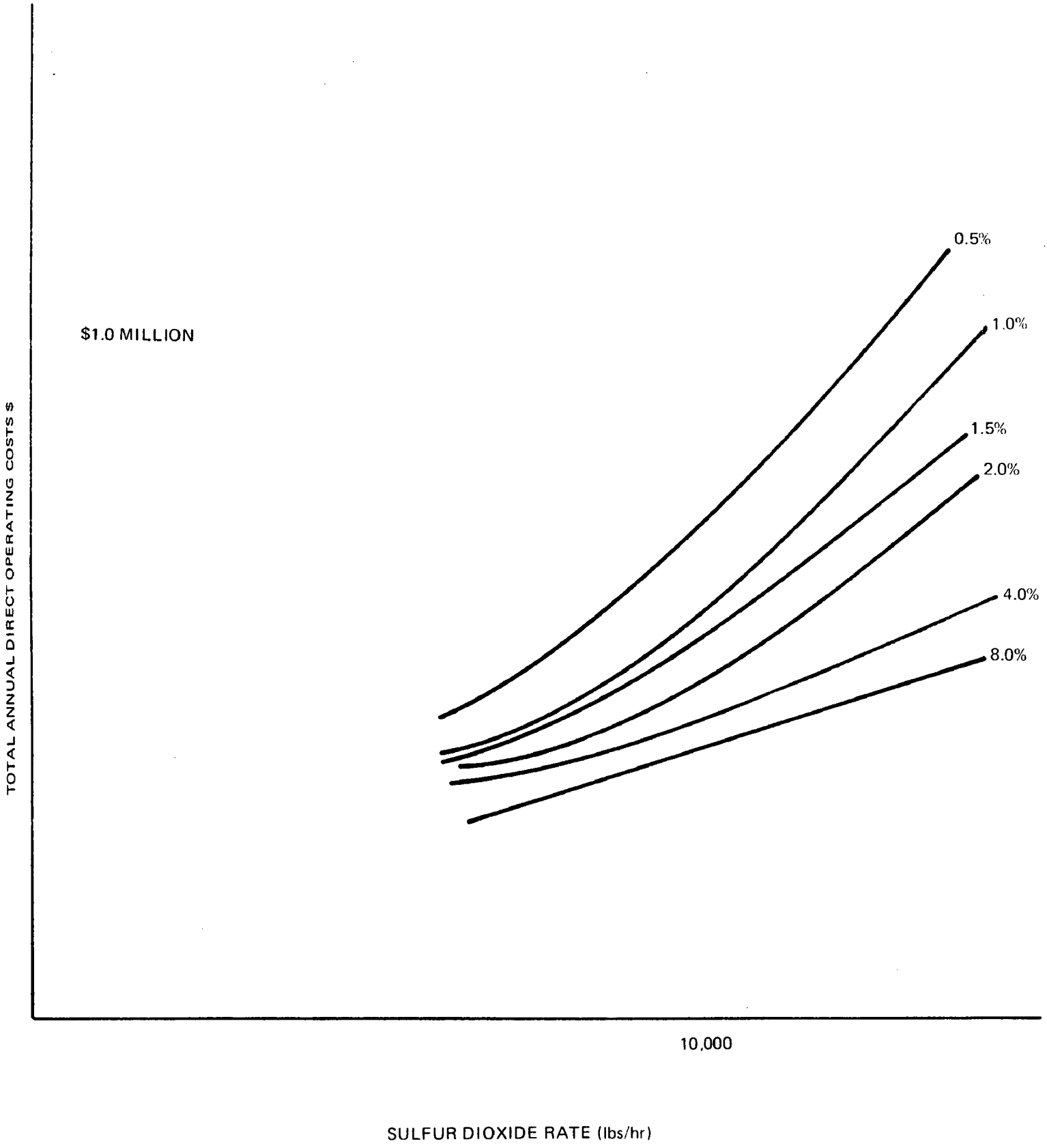

FIGURE 3-9

DILUTE FEED GAS
SULFURIC ACID PROCESS

TOTAL ANNUAL DIRECT OPERATING COSTS
REFRIGERATION SECTION

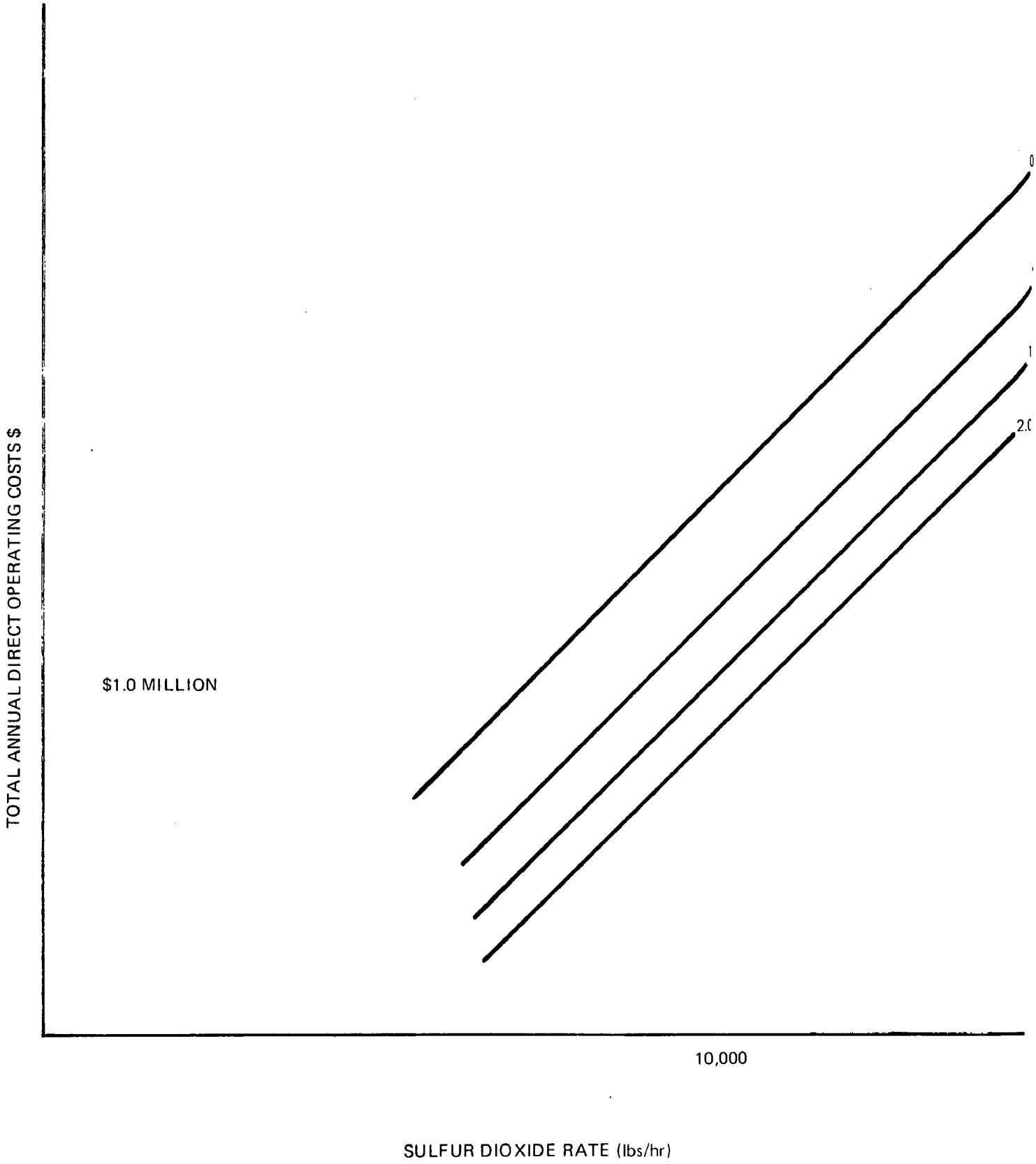

FIGURE

DILUTE FEED GAS
SULFURIC ACID PROCESS

TOTAL ANNUAL DIRECT OPERATING COSTS
PREHEATING SECTION

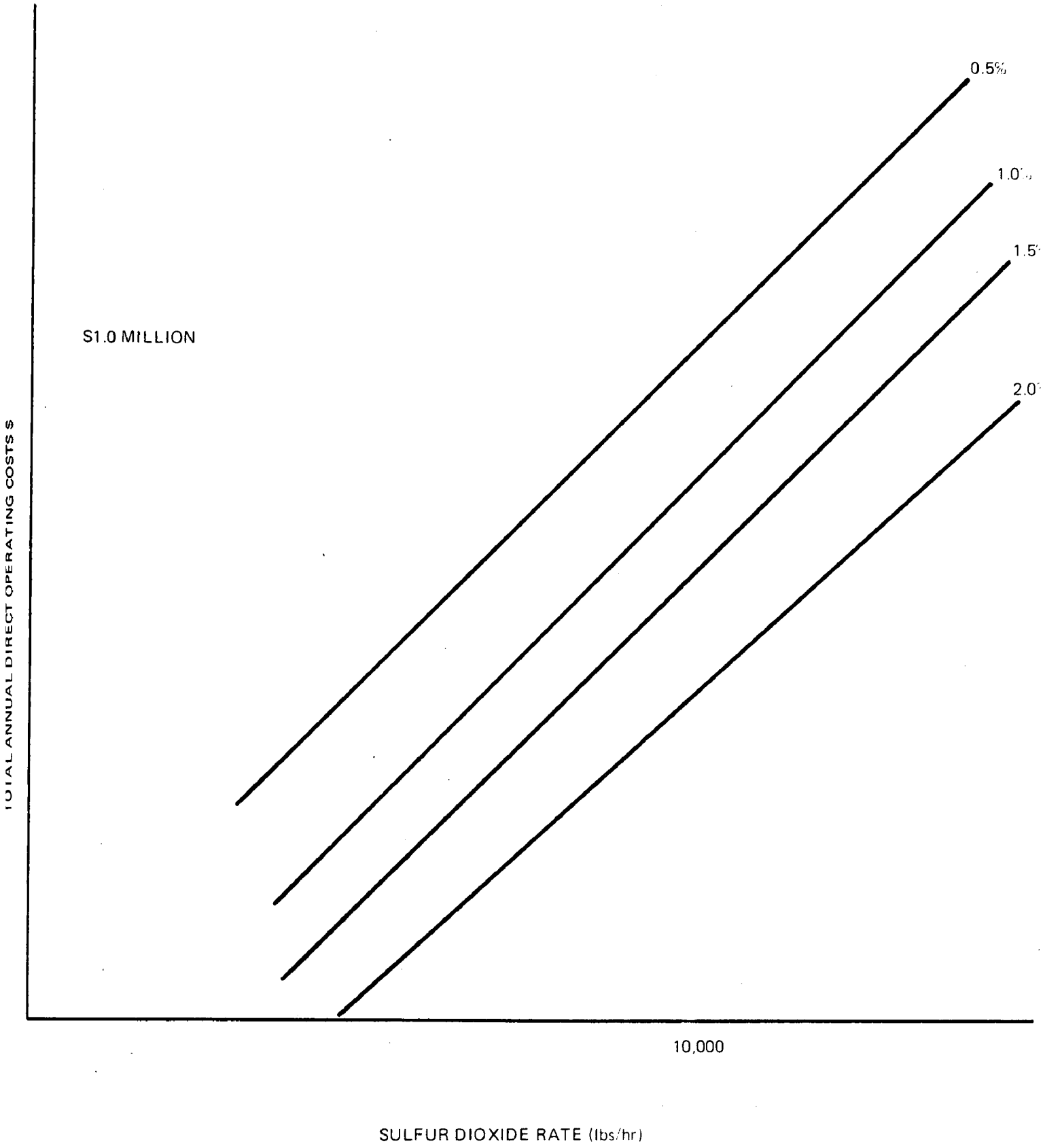

FIGURE 3-11

Table 3.1 SULFURIC ACID

TOTAL SYSTEM CAPITAL AND TOTAL ANNUAL COSTS

		Gas Flow Rate - SCFM @1% SO_2			
		70,000	100,000	200,000	300,000
TOTAL CAPITAL INVESTMENT	$ $/SCFM $/Annual ton SO_2 Removed	9,000,000 129 317	11,300,000 113 279	17,800,000 89 220	23,300,000 78 192
Annual Cost					
A. Direct Operating					
1. Acid Section		570,000	830,000	1,650,000	2,500,000
2. Gas Cleaning		120,000	160,000	300,000	450,000
3. Refrigeration		1,300,000	1,850,000	3,750,000	5,550,000
4. Maintenance		360,000	450,000	700,000	920,000
5. Labor		200,000	200,000	200,000	200,000
6. Taxes & Insurance		230,000	290,000	450,000	580,000
TOTAL ANNUAL DIRECT OPERATING COST	$/yr/ton SO_2 Removed	2,780,000 98	3,780,000 93	7,050,000 87	10,200,000 84
B. Annual Capitalized Cost		1,180,000	1,490,000	2,340,000	3,060,000
C. Net Total Annualized Cost*	$/yr/ton SO_2 Removed	2,340,000 83	3,090,000 76	5,440,000 67	7,620,000 63

*Based on Corporate Tax Rate of 48%.

4.0 LIME/LIMESTONE SCRUBBING

4.1 PROCESS DESCRIPTION

The removal of SO_2 from flue gases by calcium ion capture has had extensive application in the power boiler field by wet scrubbing of the gases with lime or limestone slurries.[1]

Figure 4-1 shows a basic schematic of the process. The principal process steps are:

1) <u>SO_2 Absorption</u> -- The cleaned smelter gas is prepared for scrubbing by a conditioning tower which cools and humidifies the gases by means of water sprays. The conditioned gas enters a multi-staged scrubber which can be of the spray tower, turbulent contactor, or venturi variety. The gas is contacted countercurrently by a lime or limestone slurry prepared from milled and sized material.

2) <u>Demisting</u> -- The gases which have been freed of SO_2 by absorption in the limestone slurry are trapped in a chevron mist eliminator which is washed with clear water to prevent the escape of acidic droplets into the atmosphere.

3) <u>Liquor Loop Operation</u> -- The pregnant slurry is cycled to a lagoon for settling and dewatering, returning the water to the absorber.

4) <u>Limestone Handling</u> -- This system consists of field storage and transfer of mined limestone to a milling and sizing plant for slurrying and makeup in the absorber circulating loop.

4.2 PROCESS AND OPERATING CONSIDERATIONS

The chemistry of the limestone/SO_2 system is quite complicated. As many as 28 chemical equations have been postulated by some authorities to characterize the reactions involved. A simpler mechanism is suggested by the following forms:[2]

$$SO_2 + H_2O \rightarrow H^+ + HSO_3^-$$

$$H^+ + CaCO_3 \rightarrow Ca^{++} + HCO_3^-$$

$$Ca^{++} + HSO_3^- + 1/2H_2O \rightarrow CaSO_3 \cdot 1/2H_2O + H^+$$

$$H^+ + HCO_3^- \rightarrow H_2O + CO_2$$

In addition to the calcium sulfite formed, oxidation will also produce the sulfate:

$$CaSO_3 + 1/2\ O_2 \rightarrow CaSO_4.$$

Solids deposition and scaling are persistent problems in this process. The use of high solids concentrations (up to 15 percent) favors the limestone utilization but results in erosion and increased solids deposition.[3] Scaling due to salt desupersaturation is particularly objectionable when it occurs in the scrubbing or demisting equipment. By seeding the slurry in a hold tank with solid calcium sulfate, the desupersaturation can be controlled at a point not in the scrubbing circuit.[4] Scaling can also be reduced by using a high liquid-to-gas ratio which lowers the concentration of sulfite and sulfate formed per scrubbing cycle. The L/G needs to be much higher for a high SO_2 concentration as found in smelter gases than has been found adequate in power plant practice. SO_2 removal efficiency is favored by high L/G and by low inlet SO_2 concentration.[2] Removal efficiency will decrease as SO_2 concentration increases in the gas feed as encountered in smelter operations.

Tests on a reverberatory gas stream at the McGill pilot unit were made at varying SO_2 concentrations. At constant L/G, SO_2 removal at 0.4 percent SO_2 averaged 87 percent; at 1.6 percent SO_2, average removal efficiency was 72 percent.[2]

The partial pressure of SO_2 over the solution must be kept low for maximum absorption. Equilibrium data are not available for the complex system involved in lime/limestone scrubbing. In the case of the SO_2/ Ca_2SO_3/ $CaHSO_3$ system, SO_2 partial pressure above the solution at 5 pH is about 1 mm Hg; at 7 pH it is practically zero.[2] On the other hand, the solubility of $CaSO_3$ decreases as pH increases which would cause supersaturation and solids scaling at the point of limestone addition where pH is high. Solubility of $CaSO_3$ is about 50 ppm at pH 6 and rises to 2000 ppm at pH 4. For this reason, limestone addition and return of lagoon overflow is made at a holding tank, and not to the scrubber circulating loop.[2] Some investigators find that addition of a weak

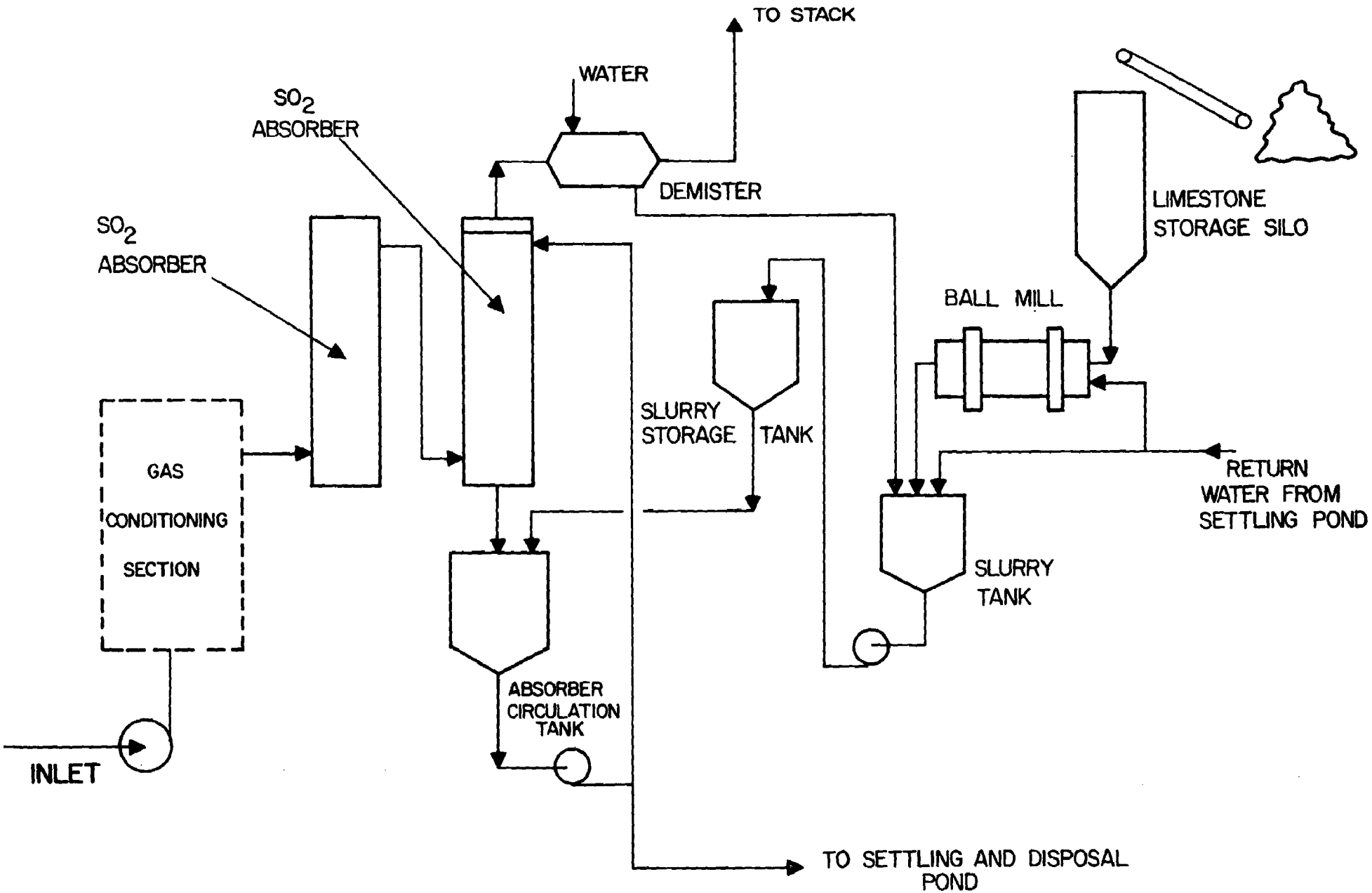

LIMESTONE SCRUBBING PROCESS

FIGURE 4-1

organic acid (e.g., benzoic) will increase the solubility of $CaCO_3$ without volatilizing SO_2 from solution, thus increasing SO_2 absorption.[5]

The sludges formed and needing disposal are largely $CaSO_3$ with some $CaSO_4$ plus salts of other cations found in the limestones. These are Na, K, Mg, etc., salts. Since these are highly soluble they tend to build up in the recirculated lagoon or thickener overflow. There is, however, sufficient bleed as occluded liquid in the settled solids to prevent saturation in the scrubber circuits. A disadvantage in using a lagoon for solids separation in average rainfall areas is the problem of excessive water load in the recycled supernatant liquid.[6]

4.3 PROCESS DEVELOPMENT STATUS

In 1930 the London Power Company first used alkaline scrubbing of flue gases by passing limey Thames river water once through the scrubber. This circuit was later closed to avoid contamination of the river. Gases from ore roasting plants were scrubbed in the 1960's in Japan and the USSR. The Tennessee Valley Authority did pilot work in the United States during the 1950's. Several power plant applications were installed in the 1960's.[7]

In the United States, 21 lime/limestone scrubbing installations have been built or planned between 1968 and 1977. These are for power utility plants totalling 11,482 MW generating capacity.[1] In Japan, there were nine installations built or planned between 1964 and 1974 with a total flue gas flow of 1.2×10^6 SCFM.[8]

Improvements to the lime/limestone slurry process are being made continuously. Prevention of corrosion calls for stainless steels where metal contacts acidic solutions. Erosion is reduced by elastomer linings of pumps, piping, and surfaces subjected to heavy slurry impingement. High temperature surfaces are protected with acid proof gunite or glassflake reinforced polyester resin linings.

Disposal of waste solids remains a serious problem. The smelter industry, which emits 2×10^6 tons of sulfur annually, could produce 25×10^6 tons of sludge if this process were universally applied in the United States. This staggering statistic has stimulated study of possible disposal such as dumping into abandoned mines or quarry pits, chemical

fixation to improve bearing strength for landfill, or as a base for hard surfacing and conversion of the sulfite sludge to useable products such as oxidation to gypsum. Efforts to optimize limestone utilization include use of organic acids to aid dissolution[5] and grinding to fine size to increase "surface to volume" ratio. Much work is going into scrubber design both as to basic type and optimal configurations.

Some of the problems and constraints which are anticipated in applying lime/limestone scrubbing to weak smelter streams are expressed below by the A. D. Little organization.[9] These problems will require extensive pilot and demonstration work on actual smelter gases for this resolution:

1) Need for multiple staging will increase scrubber cost per CFM as compared with utility boiler applications.

2) Variability of SO_2 feed concentrations from roasters and reverberatories will not permit continuous high collection efficiency.

3) Difficulty of passing on the added cost of operating a scrubbing system.

4.4 PROCESS DESULFURIZATION EFFICIENCY

Effectiveness of SO_2 removal is improved by maximizing the SO_2 gas phase mass transfer rate at the liquid interface by proper choice of scrubber type and by use of high liquid-to-gas ratio. The other controlling criterion is to increase the surface availability of the lime or limestone by reducing the particle size of feed solids and by using high slurry recirculation rates, high solids contents, and large liquid holdups.

Tests in power plant applications have reported SO_2 efficiencies of from 70 to 85 percent using limestone (Meramec and Will County). The Phillips Station of Duquesne Power using a calcium hydroxide scrubbing system of Japanese design has reported 80 to 90 percent removal.[1]

Tests conducted by SCRA, Inc.,[2] on a reverberatory furnace gas at the Kennecott McGill, Nevada smelter showed SO_2 removal efficiencies of 72 to 85 percent. Efficiency was highest at low SO_2 inlet concentration and high L/G ratios.

Because of the higher SO_2 content in smelter gases, a single stage contactor would soon be loaded with sulfite with attendant scaling. Multi-staging for smelter gas desulfurization is mandatory.

Scrubbing at McGill used several stages of contacting. Gases are first passed through a venturi scrubber and then through a 2-stage TCA column. Slurry was recycled in both contactors. It was found that recycling improved desulfurization effectiveness.

The general conclusion which developed from operations at McGill is that with optimum conditions it should be possible to achieve 90 percent SO_2 removal from a reverberatory gas stream containing 1 percent SO_2 provided:

1) Use is made of a venturi followed by six stages of absorption.
2) High L/G ratio is maintained.
3) A high quality limestone ground to a moderate fineness is used.
4) The inlet SO_2 concentration can be leveled, to avoid swings and peaks.

Surging of gas concentrations in smelting operations is a serious problem. In contrast to utility boiler operation which hold conditions relatively steady, charging of a reverberatory furnace can cause peaking to five times the daily average SO_2 inlet concentration. This cannot be handled by the absorber unless uneconomically excess capacity is built into it.

Maintenance problems and operating upsets would probably limit on-stream availability of this equipment to 85 percent.

4.5 SULFITE OXIDATION

Oxidation of calcium sulfite to sulfate normally occurs in the presence of oxygen in the smelter offgases. If sulfate is allowed to build up in the scrubber circuit, there is danger of eventual desupersaturation and formation of adherent scale in the scrubber internals and pumping elements. If seeding of the slurry with sulfate crystals is allowed to occur in a holding tank with sufficient retention time, desupersaturation at this point can be controlled. Because of its crystal form, $CaSO_4$ improves clarifier operation and solids settling in ponds. The Howden-I.C.I. Process deliberately introduced an "oxidizer" stage before the thickener to take advantage of the improved dewatering characteristics of the sulfate crystals.[2] In Japan, byproduct markets

for gypsum have existed which encouraged development of processes for oxidation of calcium sulfite wastes. In some cases, even if a saleable byproduct was not produced, conversion of sulfite waste to sulfate was found desirable where land use restrictions favored gypsum ponding with 10 percent moisture over sulfite storage at 60 percent moisture.[10]

Efforts to reduce oxidation to sulfates have included sealing of effluent tanks, use of oxidation inhibitors, and reducing liquid rate.[11] Tests indicate that higher rates of oxidation result at lower inlet liquid pH (5.7-5.9), but these lower pH levels also reduce the amount of lime needed per mole of SO_2 absorbed and, therefore, reduce the cost of absorbent and the amount of waste sludge.

There is little information on what effect smelter gases would have on oxidation rates. There are no commercial installations of lime scrubbing of smelter offgases. Since oxygen contents are greater in smelter gases than in power plant flue gas, higher rates of oxidation might be expected. It is also believed that trace metals in smelter streams may catalyze oxidation reactions. Pilot plant work on simulated and on actual smelter gases, however, does not demonstrate significant oxidation effects attributable to trace metals.[2,12]

4.6 FEED GAS PRETREATMENT

It is expected that smelter gases, which would be treated by slurry scrubbing for SO_2 removal, would be precleaned in an ESP. Statnick[13] reports actual tests on a copper smelter converter gas cleaned at 94 to 97 percent efficiency, indicating outlet particulate loadings of 0.04 to 0.08 gr/SCF. Gas pretreatment as part of the SO_2 capture process, therefore, would be primarily for cooling and humidification at 130°F to prevent evaporation and scaling in the scrubber. This is discussed in Section 2.4. Since the Limestone Process is a throwaway type, exhaustive particulate removal is not warranted.

4.7 PARTICULATE REMOVAL CAPABILITY

The particulate loading in a gas stream which has been pretreated in an electrostatic precipitator with greater than 96 percent efficiency would be generally less than 0.1-0.2 grains/SCF with a size distribution predominantly under 4-5 microns. Gas cooling and conditioning using

predominantly under 4-5 microns. Gas cooling and conditioning using spray or impingement towers will provide some degree of additional cleanup so that the gas stream actually introduced into the absorption section of an SO_2 control system will be a relatively clean gas, with any entrained particulate matter being in the submicron range. A normal pressure drop absorption column, whether it is a sieve tray column, packed tower or a turbulent contact type (TCA) column, will provide little in the way of removal of sub-micron particles.

In the Lime/Limestone Process, venturi and TCA-type columns are commonly used in the SO_2 absorption circuit, and although the pressure drops used in the columns in this service are relatively low, the extremely high liquid/gas ratios (around 100) necessary with gas streams containing 1 percent or greater SO_2 concentrations provide conditions under which some additional fine particulate removal might be expected.

4.8 PROCESS ENERGY REQUIREMENTS

Power requirements for the Lime/Limestone Process constitute approximately 15-20 percent of the total annual direct operating costs although they are related to the SO_2 concentration in the gas stream. The limestone must be ground to approximately 70 percent -200 mesh, and with stoichiometric rates of approximately 150 percent, richer SO_2 gas streams directly increase the power requirements. As SO_2 concentration increases, liquid/gas ratios must also increase, or alternatively, multi-stage absorption must be used with increased power requirements for circulation and slurry transfer.

4.9 RETROFITTING REQUIREMENTS

The Lime/Limestone Process is extremely demanding in its overall requirements for land space. Although the sludge disposal pond can be located several miles, if necessary, from the actual control site, generally the limestone grinding and slurry preparation areas must be reasonably close to the scrubber system to minimize slurry-handling problems. Slurry pipelines should be laid out as straight as possible to minimize "settling-out" points and areas of local erosion.

The gas cooling section and the absorber section, together with the slurry recirculation tanks and associated recirculation piping for this process, are expected to require a larger than normal area for similar

equipment to facilitate the special maintenance problems usually associated with slurry systems.

There will be some variation in space requirements depending on gas volume and SO_2 content, particularly in the limestone stockpile area, grinding, and storage of ground material; but typical space requirements have been estimated as follows:

Gas Conditioning and SO_2 Absorption: (including slurry recirculation)	15-20,000 sq. ft.
Limestone Storage and Grinding:	10-15,000 sq. ft.
Sludge Disposal Pond:	100-300 acres (depending on depth and planned life)

4.10 PROCESS COSTS

Not surprisingly considering the attention given to this SO_2 removal process over the last 6-7 years, there is a plethora of cost estimates in the general literature. Unfortunately, in addition to the frequently uncertain basis for many of these estimates, they also reveal the early cost optimism associated with developing processes. As the Lime/Limestone Process has passed through pilot plant evaluations, small scale installations, and full-scale commercial plants, the cost profile has climbed steeply.

In developing a general cost structure applicable to the specific gas/SO_2 content of nonferrous smelter gases, the approach outlined in Section 2 was followed, with costs for this particular process being developed independently for the limestone preparation area, the sludge handling and disposal system, and a 2-stage SO_2 absorption section. The cost for a total control system includes the cost for a secondary level ("throwaway") gas conditioning system. Reported cost information[2,14,15,16] was reviewed, adjusted as necessary to meet the objectives of this study and escalated to a mid-1974 base. In particular, disposal pond costs were adjusted downwards to reflect that only minimum site clearing and excavation would be expected in the areas in proximity to smelter sites. Many smelters are served by nearby open mining operations and these

areas, in at least some cases, could provide sludge ponding capability. It was judged that with gas streams containing in excess of 0.5 percent SO_2, a double SO_2 absorption column would be necessary, and the costs reflect this approach.

The capital costs for various SO_2 rates have been combined with the capital cost of the absorption section to provide the parametric capital cost relationships detailed in Figure 4-2. Total annual direct operating costs based on gas flow and SO_2 concentration are provided in Figure 4-3.

Table 4.2 provides capital and operating cost breakdowns for the Lime/Limestone Process applied to a range of gas flows containing 1 percent SO_2. Table 4.3 provides a total system cost including gas conditioning on the same basis. Both tables allow direct comparison with the other candidate processes and their total system costs under the same base conditions.

4.11 ADVANTAGES AND DISADVANTAGES

Advantages of this process are:

1) The process has the advantage of several years of development through to full scale commercial installations. Operating problems, materials of construction, and process control considerations have been thoroughly evaluated and process performance, at least in the public utility area, can be now projected with some assurance.

2) Raw material requirements are relatively high but limestone is generally a readily available material at smelter sites.

3) Capital and operating costs appear to be attractive in relation to other control system options.

The disadvantages of this process include:

1) Process development and application has been almost entirely in the public utility area and the conditions here favor a process like the lime/limestone system. Although the gas flows are high, they are constant, the level of SO_2 is uniform and the close control of combustion conditions keeps oxygen levels in the flue gas to moderate values. This situation does not exist in nonferrous smelter operations.

2) The process generates large quantities of a sludge 6-7 lbs/lbSO_2 with unfavorable physical characteristics. Settling is difficult and the space requirements are generally awesome. There are few smelter locations which could handle the volumes of sludge to be expected from a smelter operation over the long term without some difficulty.

3) Close process control, particularly pH control, is essential to prevent or minimize scaling in the absorber and under the varying gas flows and SO_2 concentrations usually encountered in smelter operations, there is doubt how effectively adequate control could be maintained.

4) SO_2 absorption efficiency falls off markedly as the SO_2 level in the gas stream increases and to compensate, very high liquid/gas ratios and/or multi-stage absorption columns are necessary with concomitant increases in both capital and operating costs.

4.12. REFERENCES

1. Raben, I. A., "Status of Technology of Commercially Offered Lime and Limestone Flue Gas Desulfurization Systems," Flue Gas Desulfurization Symposium, 1973.

2. "The Removal of Sulfur Dioxide from Copper Reverberatory Furnace Gas by Wet Limestone Scrubbing," Smelter Control Research Assoc., Inc.

3. Weir, Alexander, "Scrubbing Experiments at the Mohave Generating Station," Flue Gas Desulfurization Symposium, 1973.

4. Epstein, M., C. C. Levio, C. H. Rowland, and S. C. Wang, "The Test Results from EPA Lime/Limestone Scrubbing Test Facility," 1973.

5. Hatfield, J. D., and J. M. Potts, "Use of Weak Acids to Improve Sulfur Oxide Absorption by Limestone Slurries," AIChE Meeting, 1972.

6. Elder, H. W., and W. H. Thompson, "Removal of Sulfur Dioxide from Stack Gases: Recent Developments in Limestone Wet Scrubbing Technology," Transactions of the ASME, July 1973.

7. Slack, A. V.., H. L. Falkenberry, R. E. Harrington, "Sulfur Dioxide Removal from Waste Gases," Journal of the American Pollution Control Association, March 1972.

8. Ando, Jumpei, "Status of Japanese Flue Gas Desulfurization Technology," Flue Gas Desulfurization Symposium, 1973.

9. Berkowitz, Joan B., A. D. Little, Inc., response to questionnaire by J. R. Farmer, EPA, February 20, 1973.

10. Ando, Jumpei, "Utilization and Disposing of Sulfur Products from Flue Gas Desulfurization Processes in Japan," Flue Gas Desulfurization Symposium, 1973.

11. Epstein, M., L. Sybert, S. C. Wang, C. C. Leivo, and R. G. Rhudy, "Limestone and Lime Test Results at the EPA Alkali Scrubbing Test Facility at the Shawnee Power Plant," Symposium on Flue Gas Desulfurization, November 1974.

12. Campbell, I. E., "Status Report on Lime/Wet Limestone Scrubbing to Control SO_2 in Stack Gases," E/MJ, December 1972.

13. Statnick, R. M., "Measurement of Sulfur Dioxide, Particulate and Trace Elements in Copper Smelter Converter and Roaster/Reverberatory Gas Streams," EPA, 1974.

14. E. L. Calvin, Catalytic Inc., "A Process Cost Estimate for Limestone Slurry Scrubbing of Flue Gas," Contract 68-02-0241, January, 1973.

15. G. G. McClamery and R. L. Torstrick, "Cost Comparisons of Flue Gas Desulfurization Systems," paper presented at Flue Gas Desulfurization Symposium, Atlanta, Georgia, November 4-7, 1974.

16. B. G. McKinney, A. F. Little, J. A. Hudson, "The TVA Widow's Creek Limestone Scrubbing Facility," paper presented at the 1973 Flue Gas Desulfurization Symposium, New Orleans, La., May 14-17, 1973.

Table 4.1. LIME/LIMESTONE PROCESS

UNIT USAGE AND COST DATA

A. Chemicals & Utilities	Basis	Unit Cost
Limestone	3 lbs/lbSO_2	\$4/ton
Power a) Scrubbing b) SO_2 handling	6.4 KW/M SCFM 0.09 KWh/lbSO_2	\$0.015/KWh
Water	1.6 gal/lbSO_2	\$0.10/Mgal
B. Operating Labor & Maintenance		
Labor	1½ man/shift <75,000 SCFM <10,000 lb/lbSO_2 2 man/shift >75,000 SCFM >10,000 lb/lbSO_2 plus 1 man(days)	\$8/hr
Maintenance	5.0% TCI/yr	

C. Fixed Charges 15.7% TCI/yr

Based on Capital Recovery Factor using 10% interest over 15 year life plus 2½% taxes and insurance.

LIMESTONE SCRUBBING

TOTAL CAPITAL INVESTMENT COSTS

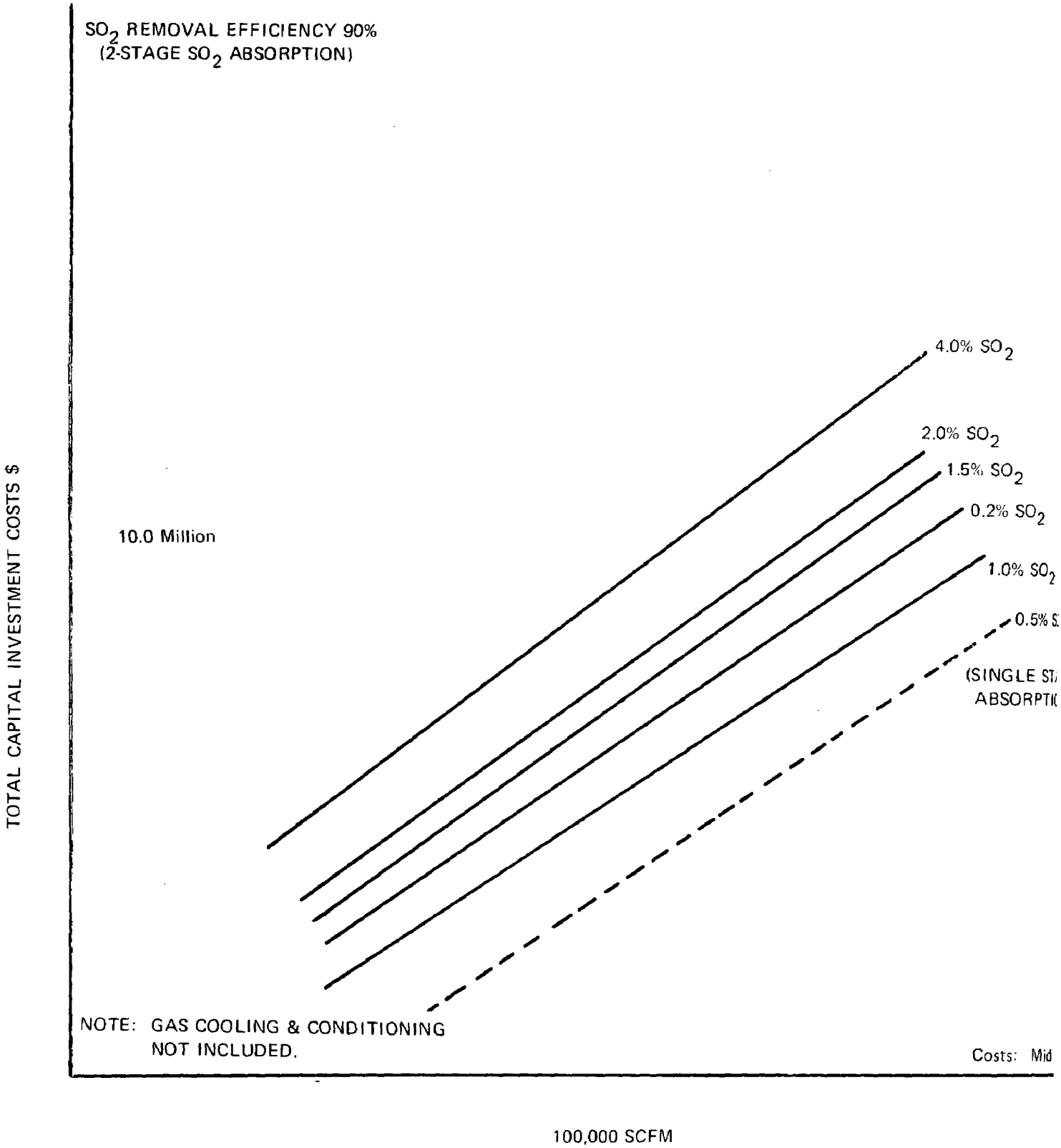

FIGURE

LIMESTONE SCRUBBING

TOTAL ANNUAL DIRECT OPERATING COSTS

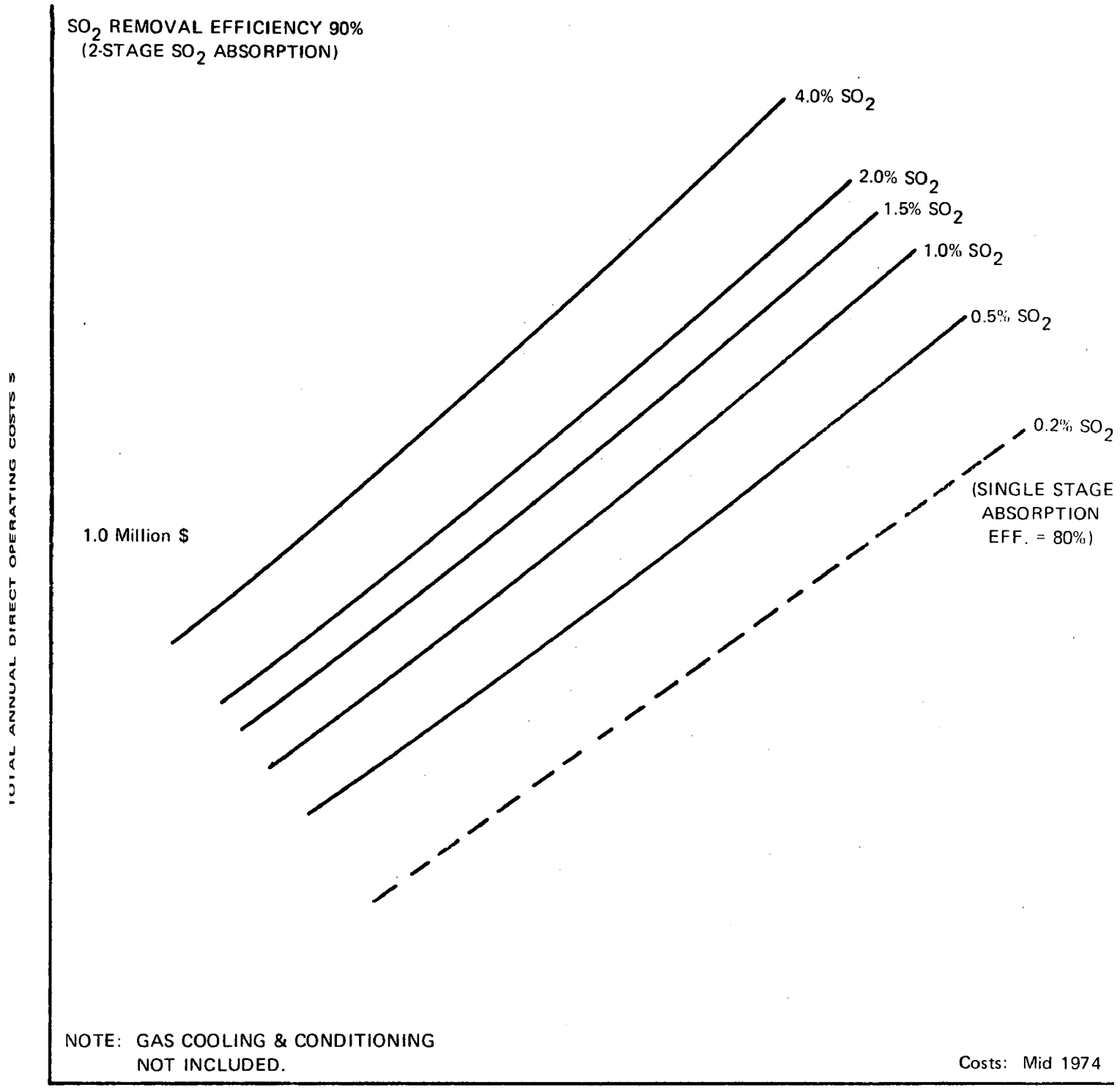

FIGURE 4-3

LIMESTONE SCRUBBING

TOTAL CAPITAL INVESTMENT COSTS
LIMESTONE HANDLING & DISPOSAL

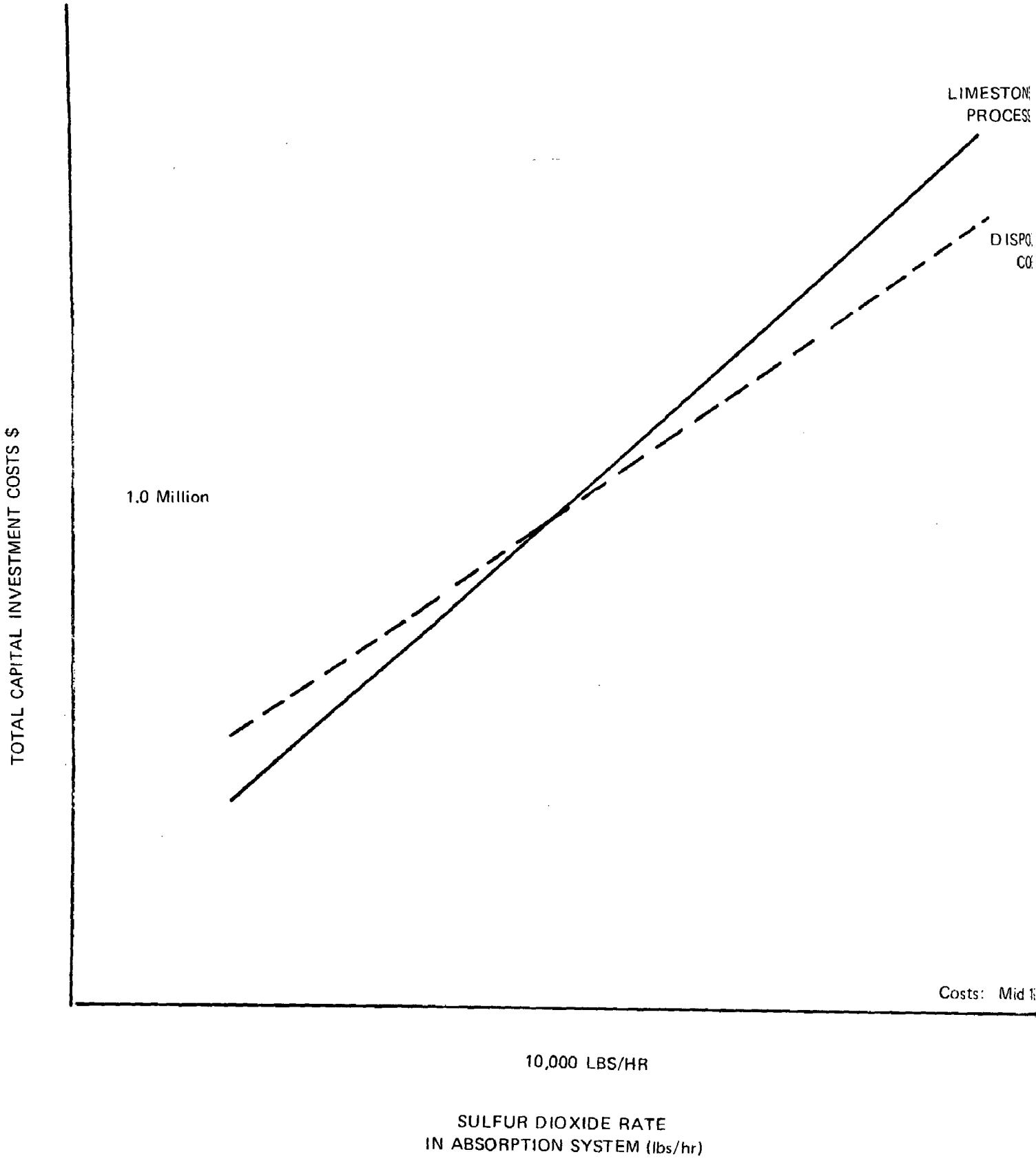

FIGURE 4

CAPITAL AND TOTAL ANNUAL COSTS

		Gas Flow Rate - SCFM @1% SO_2			
		70,000	100,000	200,000	300,000
TOTAL CAPITAL INVESTMENT	$	3,150,000	4,000,000	6,400,000	8,400,000
	$/SCFM	45	40	32	28
	$/Annual ton SO_2 Removed	121	108	86	75
Annual Cost					
A. Direct Operating					
1. Limestone		312,000	446,800	893,600	1,340,400
2. Power		125,000	178,600	357,300	535,800
3. Water		8,300	11,800	23,700	35,700
4. Labor		121,800	156,600	156,600	156,600
5. Maintenance		157,500	200,000	320,000	420,000
6. Taxes & Insurance		78,800	100,000	160,000	210,000
TOTAL ANNUAL DIRECT OPERATING COST		804,200	1,093,900	1,911,200	2,698,500
	$/yr/ton SO_2 Removed	31	29	26	24
B. Annual Capitalized Cost		414,200	526,000	841,600	1,104,600
C. Net Total Annualized Cost*		731,600	966,800	1,630,600	2,239,000
	$/yr/ton	28	26	22	20

*Based on Corporate Tax Rate of 48%

Table 4.3. LIME/LIMESTONE PROCESS

TOTAL SYSTEM CAPITAL AND ANNUAL OPERATING COSTS

		Gas Flow Rate - SCFM @1% SO_2			
		70,000	100,000	200,000	300,000
A. TOTAL CAPITAL INVESTMENT					
1. Gas Conditioning		1,210,000	1,500,000	2,250,000	2,900,000
2. Limestone Scrubbing		3,150,000	4,000,000	6,400,000	8,400,000
TOTAL		4,360,000	5,500,000	8,650,000	11,300,000
	$/Annual ton SO_2 Removed	167	148	116	101
B. TOTAL ANNUAL OPERATING COST					
1. Gas Conditioning		211,000	287,000	465,200	635,700
2. Limestone Scrubbing		804,200	1,093,900	1,911,200	2,698,500
TOTAL		1,015,300	1,380,900	2,376,400	3,334,200
	$/yr/ton SO_2 Removed	39	37	32	30
C. NET TOTAL ANNUALIZED COSTS*					
1. Gas Conditioning		230,200	298,500	465,800	619,200
2. Limestone Scrubbing		731,600	966,800	1,630,600	2,239,000
TOTAL		961,800	1,265,300	2,096,400	2,858,200
	$/yr/ton	37	34	28	26

5.0 SODIUM SCRUBBING - REGENERATIVE (WELLMAN-LORD)

5.1 PROCESS DESCRIPTION

The Wellman-Lord Process provides a method by which the SO_2 from a weak stream can be absorbed by chemical reaction with an alkaline scrubbing liquor. The SO_2 is later desorbed by a heating process in which the SO_2 appears in concentrated form and the absorbing solution is regenerated for recycling to the scrubber.

The strong SO_2 gas resulting from the above absorption and desorption can be further processed along one of the following routes:

1) Dry and cool the gas to produce liquid SO_2
2) Feed the wet SO_2 to a sulfuric acid plant
3) Catalytic reduction and conversion to elemental sulfur (Claus reaction).

Figure 5-1 shows a simplified schematic of the process which consists of the following stages:

1) Absorption
2) Crystallization
3) Solids Separation
4) Recycling.

Absorption -- After particulate removal and cooling, the gas stream enters a two or three stage tower. This is either a tray or a packed unit. The gases are scrubbed by an alkaline solution of Na_2SO_3.

Crystallization -- The pregnant absorbent is pumped to an evaporator/crystallizer for regeneration of the Na_2SO_3.

Solids Separation -- The crystal magma from the crystallizer is filtered out of the mother liquor.

Recycling -- The Na_2SO_3 crystals are dissolved and recycled to the absorber.

5.2 PROCESS AND OPERATING CONSIDERATIONS

The absorption process chemistry[1] is similar to the sodium-based double alkali system described elsewhere in this study. The scrubbing solution consists of soluble Na_2SO_3, $NaHSO_3$, and Na_2SO_4. The SO_2 reacts with Na_2SO_3 as follows:

$$SO_2 + Na_2SO_3 + H_2O \rightarrow 2NaHSO_3.$$

The rich bisulfite absorber bottom is pumped to an evaporator/crystallizer while the gas stripped of SO_2 leaves the top of the absorber. Regeneration is proprietary with Wellman-Lord. The heated solution in the evaporator/crystallizer is stripped of SO_2 as Na_2SO_3 is regenerated:

$$2NaHSO_3 \xrightarrow{\Delta H} Na_2SO_3 \downarrow + SO_2 \uparrow + H_2O \uparrow.$$

The wet SO_2 goes to a partial condenser for removal of water which is re-used. The Na_2SO_3 crystal magma is centrifuged or filtered, with the solids going to a dissolving tank for recycling to the absorber.

The concentrated SO_2 stream is then fed to a sulfur plant, to a sulfuric acid plant, or processed as liquid SO_2.

The liquid/gas (L/G) ratio is kept low in the absorber. The high concentration of salts and low water load has the effects of lowering oxygen absorption, reducing heat demand on the evaporator/crystallizer, and reducing the size of vessels, pumps, and piping. Because of this low throughput, the absorbent fluid is recirculated at each stage of the tower to assure wetting of the tray or packing. Since absorption of oxygen is liquid-film controlling, the low L/G ratio minimizes oxidation.

$NaHSO_3$ is more soluble than Na_2SO_3. By feeding a strongly concentrated solution of Na_2SO_3 to the absorber, scaling and salt precipitation are not experienced since reaction with SO_2 produces the soluble $NaHSO_3$. This same solubility difference operates to advantage in the stripping operation: as SO_2 comes out of the reactants, the resulting Na_2SO_3 crystallizes out, thus driving the stripping reaction forward.

Waste streams from this process consist of the lime neutralization product from the feed gas cooling and conditioning step plus a purge stream from the absorber circuit to eliminate the oxidation product, Na_2SO_4. Loss of sodium ion from this purge is made up by adding NaOH to the scrubbing liquid. Fractional crystallization equipment can be used to separate the Na_2SO_4 from the sulfite/bisulfite fractions in the purge and thus reduce sodium losses.

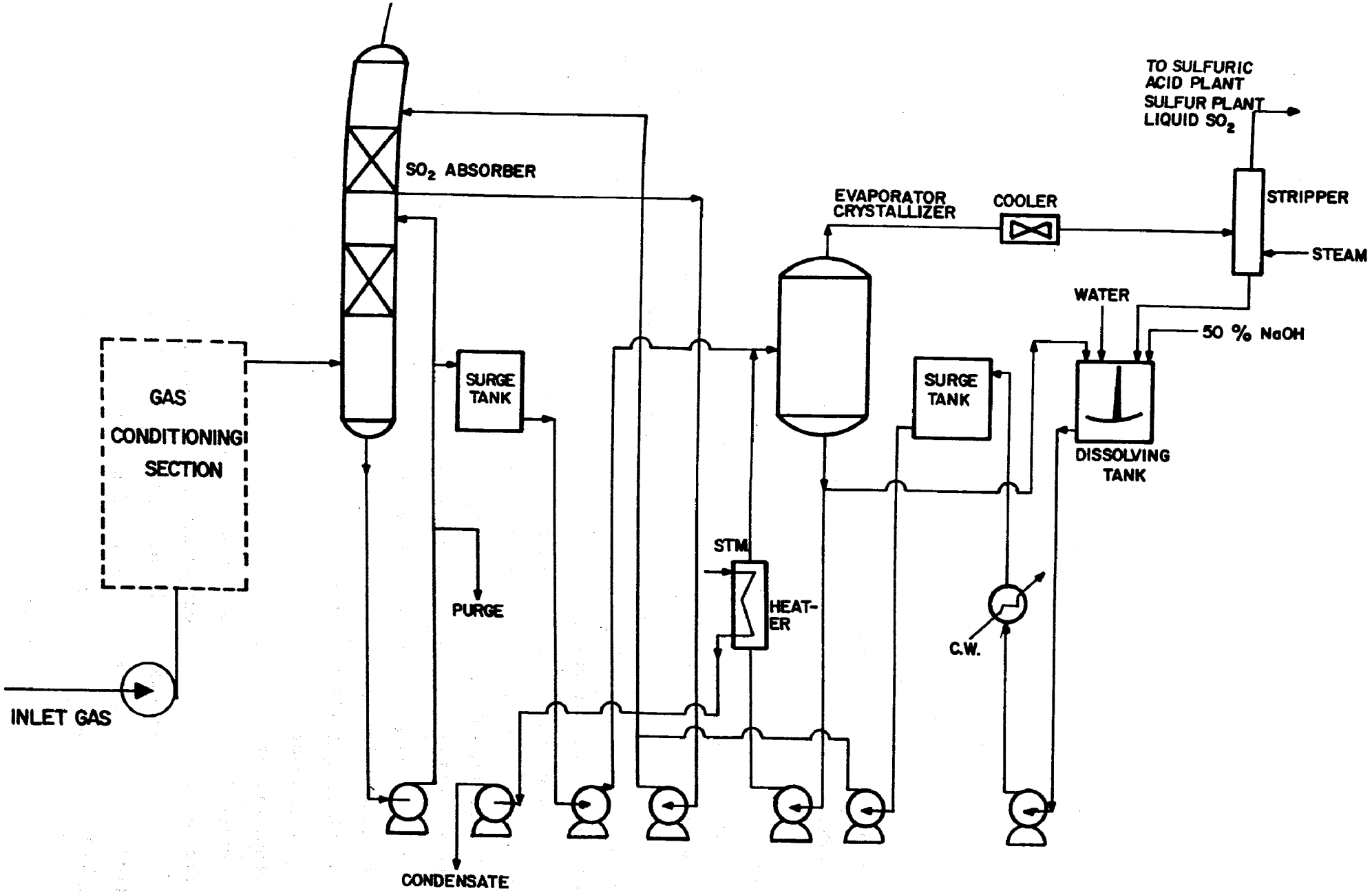

WELLMAN - LORD PROCESS
REGENERATIVE SODIUM SCRUBBING

FIGURE 5-1

Other users of the high concentration salt scrubbing solutions have noted resistance to pH change by the buffering effect of the strong sodium sulfite/bisulfite solutions.[4] SO_2 concentration variation of 2-1/2 to 1 in a kiln offgas showed no change in SO_2 capture efficiency. This property is important in smelter applications where swings in SO_2 concentration can be expected.

5.3 PROCESS DEVELOPMENT STATUS

Of the twenty installations built or planned for use of the Wellman-Lord Process, half are in Japan.[2] Application has been made to tail gases of sulfur plants, sulfuric acid plants, and utility boilers fueled by coal or oil; but none to smelter gases. The earliest installation in the United States was at Paulsboro, New Jersey treating a sulfuric acid plant tail gas. Experience with this installation in 1970 pointed up problems with tube plugging, material corrosion and erosion, absorber inefficiency, and accumulation of particulates in the regeneration system.

Materials of construction have been changed to 316SS in all corrosive and erosive areas. Feed stream to the regeneration step is filtered to remove particulates. Absorber configuration was modified to improve liquid/gas contact. Subsequent installations, especially in Japan, have reported excellent reliability.[1]

A carefully planned installation is scheduled soon to operate on the stack gases of a 115 MW utility boiler of the Northern Indiana Public Service Company. The Wellman-Lord absorption/desorption plant will be followed by an Allied Chemical elemental sulfur plant. This demonstration plant should provide definite answers to questions of operation and economics.

5.4 DESULFURIZATION EFFICIENCY

SO_2 absorption efficiency is controllable by adjusting process parameters at the absorber. In the Davy Power Gas Process, the absorbing solution is recirculated around each stage to permit a low total feed rate but a higher gas contacting rate at each tray.

An installation at Chiba, Japan treats a flue gas from oil-fired boilers with inlet SO_2 concentration of 1500 ppm and exit at 150 ppm or a collection efficiency of 90 percent. The design guarantee for the

NIPSCO installation is also at 90 percent SO_2 removal. The latter involves a utility boiler firing coal at 3.5 percent sulfur and will reduce a 2300 ppm SO_2 flue gas to 200 ppm.

According to FMC Corporation[4] the buffered, high concentration sulfite/bisulfite scrubbing solution used in their double alkali process can achieve 99 percent SO_2 removal by raising pH as required.

Potter and Craig[5] report SO_2 collection of 92 percent in the Wellman-Lord, Paulsboro, New Jersey facility of the Olin Corporation cleaning the tail gas of a sulfuric acid plant. The stream of 45,000 SCFM contains 6000 ppm SO_2 and is reduced to 500 ppm before venting. Application to an oil-fired boiler of the Japan Synthetic Rubber Company achieved 90 percent SO_2 absorption.

Actual experience of 90 to 92 percent SO_2 recovery using the Wellman-Lord Process is well documented. It also appears feasible to raise this figure to a higher level if required. The criterion established in the SCRA study[2] is at 97 percent SO_2 removal.

5.5 SULFITE OXIDATION

In addition to the absorption and desorption operations indicated above, this process does produce some non-regenerable and therefore undesirable oxidation products which need to be suppressed or eliminated. Contact of the scrubbing solution with oxygen in the flue gas will yield Na_2SO_4 according to:

$$Na_2SO_3 + 1/2O_2 \rightarrow Na_2SO_4.$$

The presence of SO_3 from flue combustion gases will also produce Na_2SO_4:

$$2Na_2SO_3 + SO_3 + H_2O \rightarrow Na_2SO_4 + 2NaHSO_3.$$

At temperatures encountered in the evaporator/crystallizer, auto oxidation of the bisulfite will produce non-regenerable sulfate and thiosulfate compounds as follows:

$$6NaHSO_3 \rightarrow 2Na_2SO_4 + Na_2S_2O_3 + 2SO_2 + 3H_2O.$$

Residual Na_2SO_4 has to be purged from the system with loss of Na^+ ion which is replaced by injection of NaOH or Na_2CO_3 into the scrubbing circuit.

Suppression of Na_2SO_4 formation or, at least, its minimization is under active development. By controlling the process parameters and by taking advantage of some of the inherent process characteristics, oxidation effects have been reduced. Some of these methods are:

1) Maintaining a concentrated sulfite solution in the scrubbing medium to reduce the solubility of oxygen.

2) Throttling the circulation rate in the absorber to reduce the liquid/gas ratio to a value just necessary for SO_2 absorption but not so high as to encourage oxygen to liquid transfer.

3) Removing Na_2SO_4 by fractional crystallization and reacting with lime to precipitate gypsum and recycle the NaOH.

4) Using antioxidants such as hydroquinone or hydrazine has been suggested. Other proprietary chemicals have been developed for this purpose.

Davy Power Gas claims that about 0.5 to 3 percent of the SO_2 in a boiler flue gas entering the absorber will be oxidized.[2] Other estimates are at 10 percent.[3] Many weak smelter gases have higher oxygen content than power plant flue gases due to stream dilution by infiltrating air at ESP's, waste heat boilers, and leaky hoods and flues. These higher oxygen concentrations will result in high SO_2 oxidation. The combined effects of higher gas volumes and higher oxygen content adversely affect capital and operating costs of gas scrubbing facilities.

5.6 FEED GAS PRETREATMENT

In this study it is assumed that the gas stream fed to the SO_2 removal plant has been adequately cleansed of particulates by high efficiency electrostatic precipitators or high energy venturi scrubbers. It is also assumed that the high temperatures of the smelter gases have been moderated by waste heat boilers to a level of about 600°F (316°C) before entering the gas conditioning section of the plant.

As discussed in paragraph 2.4 and in Appendix A, gas conditioning consists of adiabatically cooling the gas to about 130°F (54°C) in a spray tower. This cooled, saturated gas enters the absorber in a state which avoids evaporation of the scrubbing solution with consequent deposition of solids. The spray tower circulating water is neutralized with lime and cooled by heat exchange. Any mist carryover is eliminated by a mist precipitator.

5.7 PARTICULATE REMOVAL CAPABILITY

As noted in Section 4.7, gas streams precleaned in dry electrostatic precipitators and then conditioned via scrubbing have very low particulate mass loadings predominantly in the submicron range. Additional treatment in mist precipitators prior to regenerable control systems will tend to further reduce particulates. Thus the absorption section of the Wellman-Lord Process will offer negligible capability in removing additional particulates.

5.8 PROCESS ENERGY REQUIREEMNTS

With the absorption advantages of high concentration solution scrubbing, liquid/gas ratios are significantly less than those required for the Lime/Limestone Process and power requirements for absorbent recirculation are correspondingly less. However, power requirements in the forced-circulation evaporator/crystallizer section of the regeneration area tend to compensate for this saving.

Steam requirements in the evaporator/crystallizer constitute a significant proportion of the total energy needs of this process. Single effect evaporation steam demands appear to be as high as 12 lb/lbSO_2 but the use of a double-effect unit will reduce steam consumption by about 40 percent. Double effect evaporation has been assumed for the smelter application although additional steam generation facilities would still in all likelihood be required to support the operation. Total energy requirements under the cost rates and usage factors provided in Table 5.1 are approximately 40-45 percent of the total annual direct operating costs for treating 1 percent SO_2 at the rate of 100,000 SCFM.

5.9 RETROFITTING REQUIREMENTS

The regeneration section of this process can be located independently of the SO_2 absorption and gas conditioning sections, and this provides some flexibility in retrofitting this process to existing plants.

Estimated space requirements are:

Gas Conditioning and SO_2 Absorption:	10-12,000 sq. ft.
SO_2 Regeneration Area:	8-10,000 sq. ft.
Auxiliary Plant (sulfuric acid including storage):	25-30,000 sq. ft.

5.10 PROCESS COSTS

Capital costs for this process have been developed using information reported in cost estimates by the Tennessee Valley Authority[7] and the Lummus Company,[2] discussions with Davy Power Gas Company,[6] and general cost estimation techniques. Following the methodology adopted for this study, the SO_2 absorption step was considered independently from the SO_2 regeneration and end use section, and the generalized SO_2 absorption cost curve for solution scrubbing provided in Appendix B was taken as directly applicable to the Wellman-Lord system. The SO_2 regeneration section cost was developed against the background noted above with appropriate cost escalation and allowance for indirect charges. The cost curve versus SO_2 rate relationship is provided in Figure 5-4. These two sets of data were then combined to provide the parametric capital cost curves relating gas flow rate and SO_2 concentrations provided in Figure 5-2.

Operating costs covering both the absorption section and the SO_2 regeneration section are based on the specific usage values and unit costs provided in Table 5.1 and developed from the above sources. Total annual direct operating cost curves for the range of SO_2 concentrations and gas flows under consideration are provided in Figure 5-3.

5.11 ADVANTAGES AND DISADVANTAGES

The Wellman-Lord Process has wide applicability to utility and industrial boiler flue gases and to acid plant or sulfur plant tail gases. Although applicability to weak smelter gases has not been commercially demonstrated, the following advantages of the process are noted:

1) SO_2 absorption capability is excellent and as a clear solution scrubbing system, equipment maintenance and operation poses no special problems.

2) The process generates a high purity stream of SO_2--around 85 percent or higher if appropriate drying facilities are added. This provides options among sulfuric acid, elemental sulfur or liquid SO_2.

3) The process has enjoyed considerable commercial application and it appears that plants can be designed with a high degree of confidence as indicated by the performance guarantees being provided with the Wellman-Lord installation for the Northern Indiana Public Service Company (NIPSCO) on a 115 MW coal-fired utility boiler[1].

4) The process can handle wide swings in SO_2 concentration.

The principal disadvantages of this system appear to be:

1) Oxidation in the absorbent results in purging and loss of high cost sodium ions. The use of antioxidants appears to be common in Japanese installations but this increases the operating costs substantially. There are alternatives such as fractional crystallization of the purge stream to separate and regenerate the sodium sulfate, but this approach is associated with both additional capital and operating costs.

2) Total energy requirements of the overall process--i.e., gas conditioning, SO_2 absorption and regeneration, and the necessary end-use plant--are appreciable and constitute a major part (40-50 percent) of the total overall operating costs.

5.12 REFERENCES

1. Schneider, R. T. and Earl, C. B., "Application of Wellman-Lord SO_2 Recovery Process to Stack Gas Desulfurization," Davy Powergas, Inc., Lakeland, Florida. Paper presented at Flue Gas Desulfurization Symposium, New Orleans, Louisiana, May 14-17, 1973.

2. Report to the U.S. Bureau of Mines by the Smelter Control Research Association, March 1974, "Engineering Evaluation of Soluble Scrubbing Systems."

3. LaMantia, C. R., R. R. Lunt, I. S. Shah, "Dual Alkali Process for SO_2 Control." Paper 25 C, presented at the 66th Annual Meeting of The American Institute of Chemical Engineers at Philadelphia, Pa., Nov. 11-15, 1973.

4. Brady, J. D., "FMC Corporation's Sulphite Absorption Process". Presented at the Missouri Public Service Commission Conference, September 1974.

5. Potter, B. H. and T. L. Craig, "Commercial Experience with an SO_2 Recovery Process." Chemical Engineering Progress, August 1972.

6. Earl, C. B., Davy Power Gas Company, private communication.

7. McGlamery, G. G. and R. L. Torstrick, Tennessee Valley Authority. "Cost Comparisons of Flue Gas Desulfurization Systems." Paper presented at Flue Gas Desulfurization Symposium, Atlanta, Ga., Nov. 4-7, 1974.

Table 5.1. SODIUM SCRUBBING REGENERATIVE - WELLMAN LORD PROCESS

UNIT USAGE AND COST DATA

A. Chemical & Utilities	Basis	Unit Cost
Sodium Carbonate: (Soda Ash)	0.13 lb/lb SO_2	$52/ton
Antioxidant:	0.002 lb/SO_2	$2.00/lb
Power: Absorption	4.0 KW/M SCFM	$0.015/KWh
SO_2 Regeneration	0.085 KWh/lbSO_2	
Water: a) Process Water	0.2 gal/lbSO_2	$0.30/M gal
b) Cooling Water	1.2 gal/lbSO_2	$0.19/M gal
Steam:	7.7 lb/lbSO_2	$1.25/M lb
B. Operating Labor & Maintenance	**Basis**	**Unit Cost**
Labor: Absorption	½ man/shift <75,000 SCFM 1 man/shift >75,000 SCFM	$8/hr
SO_2 Regeneration	2½ man/shift <10,000 lb/lbSO_2 3½ man/shift >10,000 lb/lbSO_2	
Maintenance:	4.0% TCI/year	
Taxes & Insurance	2.5% TCI/year	
C. Fixed Charges	13.15% TCI/year	

Based on Capital Recovery Factor, using 10% interest over 15 year life

SODIUM SCRUBBING - REGENERABLE
WELLMAN - LORD PROCESS

TOTAL CAPITAL INVESTMENT COSTS

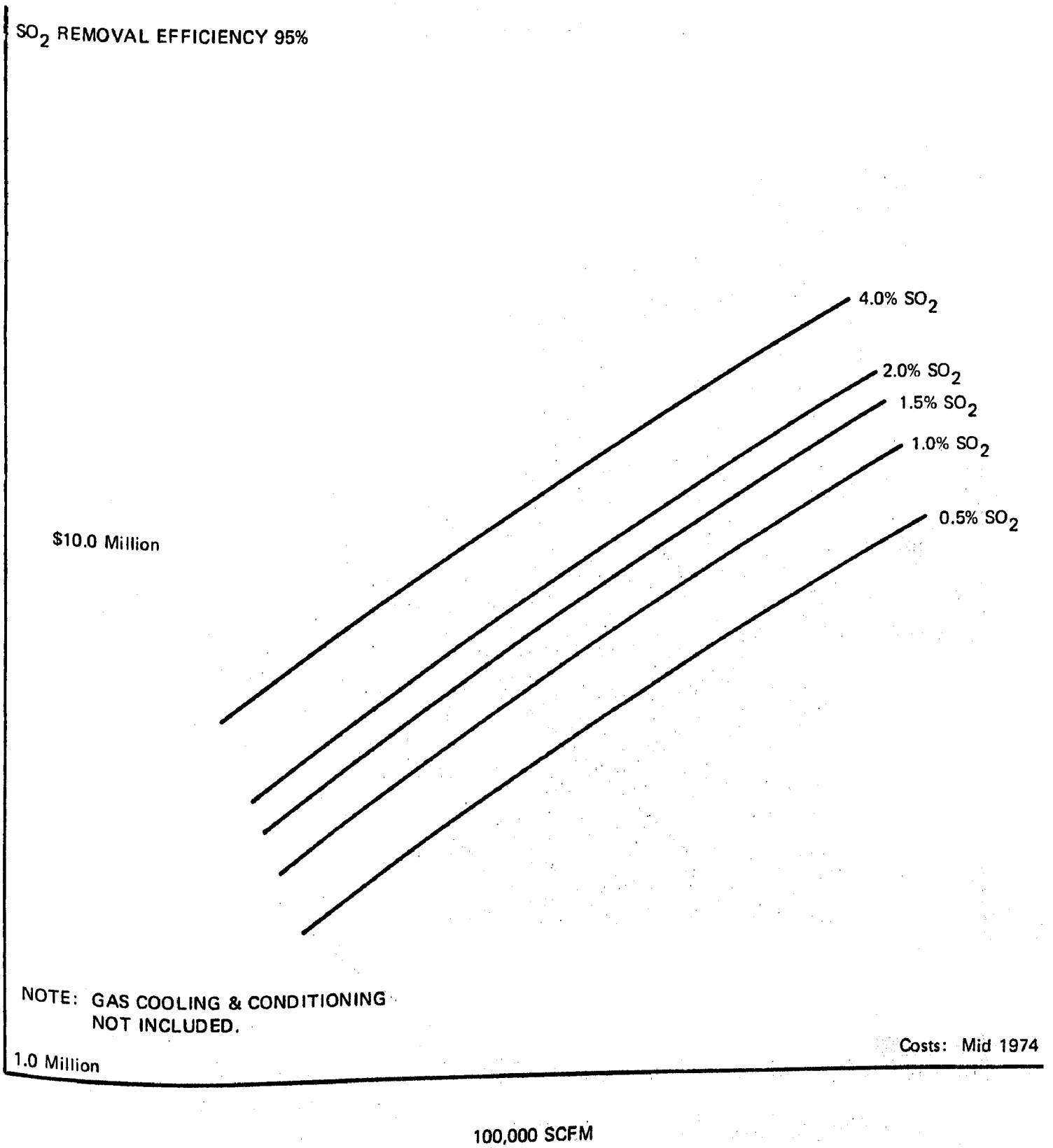

FIGURE 5-2

SODIUM SCRUBBING - REGENERABLE WELLMAN-LORD PROCESS

TOTAL ANNUAL DIRECT OPERATING COSTS

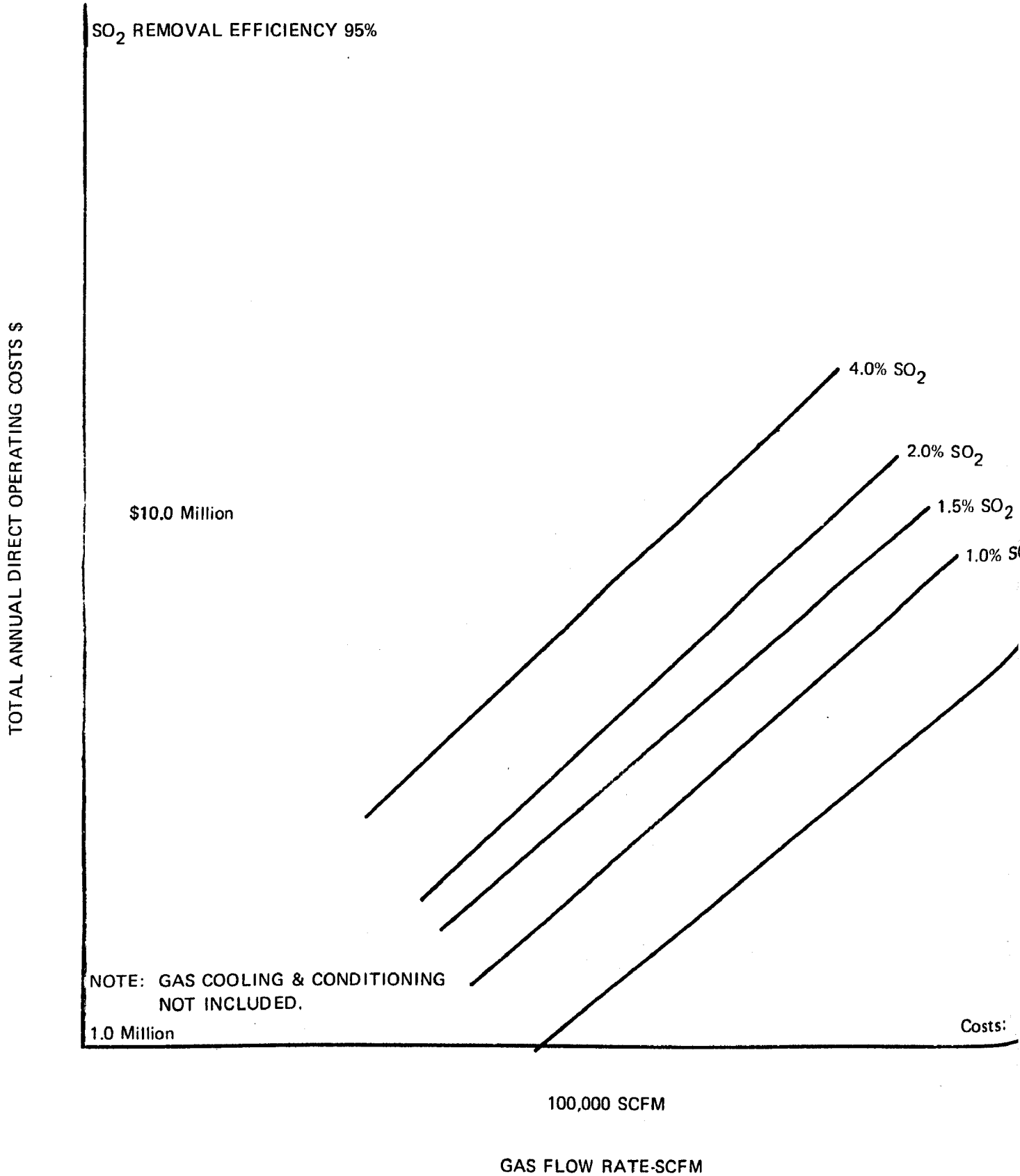

FIG

SODIUM SCRUBBING - REGENERABLE WELLMAN-LORD PROCESS

TOTAL CAPITAL INVESTMENT COSTS
SO_2 REGENERATION SECTION

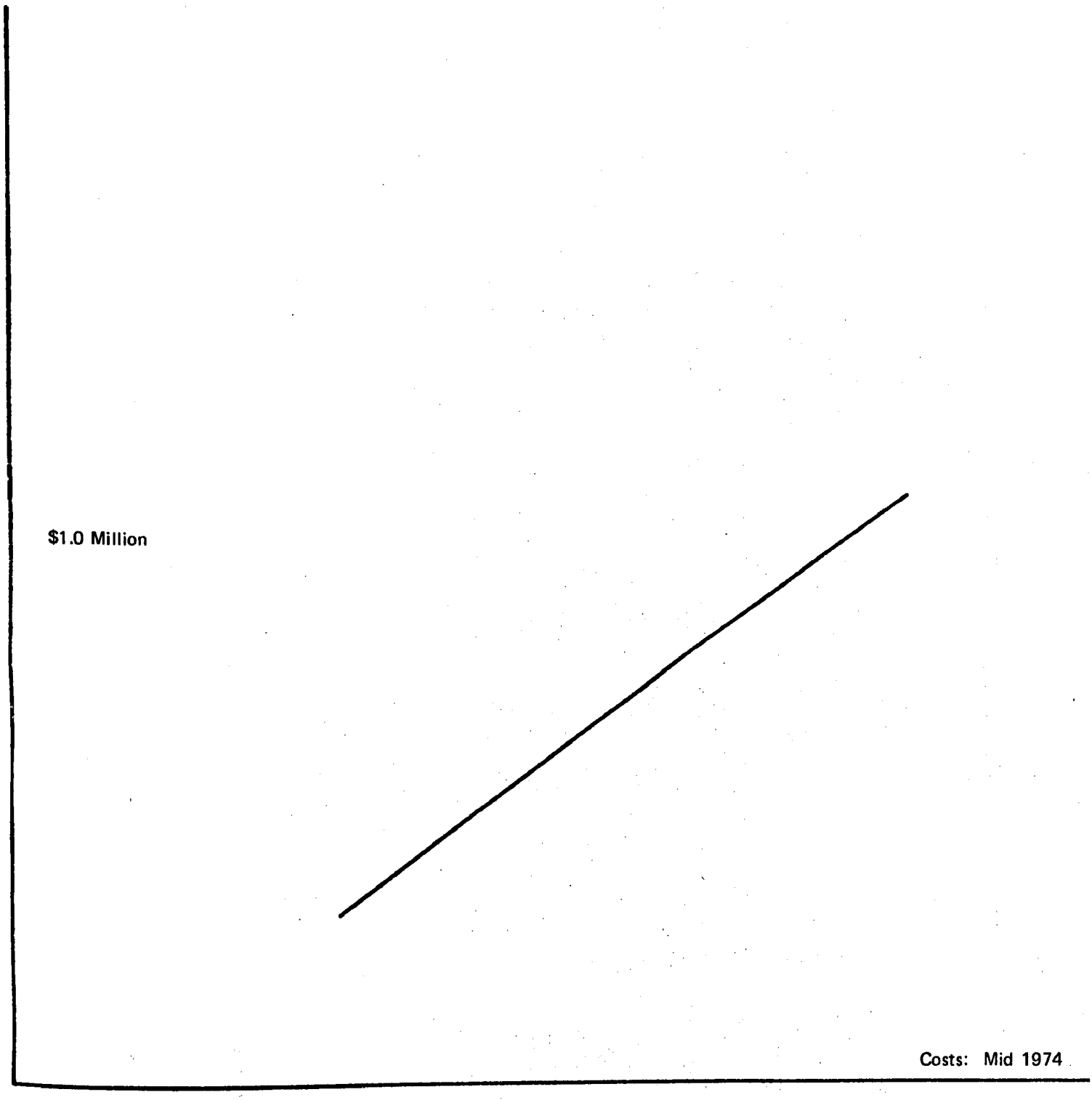

10,000 LBS/HR

SULFUR DIOXIDE RATE
IN REGENERATION SECTION (lbs/hr)

FIGURE 5-4

Table 5.2. SODIUM SCRUBBING REGENERATIVE - WELLMAN LORD PROCESS
CAPITAL AND TOTAL ANNUAL OPERATING COSTS

		Gas Flow Rate - SCFM @1% SO_2			
		70,000	100,000	200,000	300,000
TOTAL CAPITAL INVESTMENT	$ $/SCFM $/Annual ton SO_2 Removed	4,250,000 61 154	5,400,000 54 137	8,600,000 43 110	11,210,000 37 95
Annual Cost					
A. Direct Operating					
1. Power		96,300	137,600	275,100	412,800
2. Water		10,100	14,400	28,900	43,200
3. Steam		527,600	753,200	1,507,300	2,259,600
4. Soda Ash (Na_2CO_3)		186,000	265,200	531,300	795,600
5. Antioxidant		219,700	313,800	627,700	941,400
6. Labor		175,200	192,700	262,800	262,800
7. Maintenance		170,000	216,600	344,000	448,000
8. Taxes & Insurance		106,300	135,000	215,000	280,000
TOTAL ANNUAL DIRECT OPERATING COST	$/yr/ton SO_2 Removed	1,491,200 54	2,027,900 52	3,792,000 48	5,443,000 46
B. Annual Capitalized Cost		558,900	710,100	1,130,900	1,472,800
C. Net Total Annualized Cost*	$/yr/ton SO_2 Removed	1,198,300 44	1,591,800 41	2,827,500 36	3,945,000 33

*Based on Corporate Tax Rate of 48%

Table 5.3 SODIUM SCRUBBING REGENERATIVE WELLMAN-LORD PROCESS
TOTAL SYSTEM CAPITAL AND ANNUAL OPERATING COSTS

		Gas Flow Rate - SCFM @1% SO_2			
		70,000	100,000	200,000	300,000
A. TOTAL CAPITAL INVESTMENT					
1. Gas Conditioning		1,800,000	2,275,000	3,550,000	4,650,000
2. SO_2 Absorption & Recovery		4,250,000	5,400,000	8,600,000	11,200,000
3. Sulfuric Acid Plant		1,420,000	1,750,000	2,675,000	3,450,000
TOTAL		7,470,000	9,425,000	14,825,000	19,300,000
	$/Annual ton SO_2 Removed	280	247	195	169
B. TOTAL ANNUAL OPERATING COSTS					
1. Gas Conditioning		273,100	370,600	613,500	843,300
2. SO_2 Absorption & Recovery		1,481,200	2,027,900	3,792,000	5,443,400
3. Sulfuric Acid Plant		199,500	234,100	271,200	462,000
TOTAL		1,963,800	2,632,600	4,776,700	6,748,700
	$/yr/ton SO_2 Removed	74	69	63	59
C. NET TOTAL ANNUALIZED COSTS*					
1. Gas Conditioning		321,100	419,100	672,200	740,000
2. SO_2 Absorption & Recovery		1,198,300	1,591,800	2,827,500	3,945,000
3. Sulfuric Acid Plant		245,000	295,800	459,200	583,500
TOTAL		1,764,400	2,306,700	3,958,900	5,268,500
	$/yr/ton SO_2 Removed	66	61	52	46

*Based on Corporate Tax Rate of 48%

6.0 DOUBLE-ALKALI SODIUM BASE (THROWAWAY PROCESS)

6.1 PROCESS DESCRIPTION

Although there is now a growing number of lime/limestone based systems installed and in operation on utility power plants, the early problems of scaling, plugging, and equipment erosion gave impetus to the investigation of soluble alkali scrubbing systems which will not precipitate solids in the scrubbers and associated equipment. Regeneration of the soluble scrubbing fluid takes place in separate reaction vessels under controlled conditions. No slurries are in contact with the treated gas stream as in the case of the lime/limestone systems.

Although double-alkali processes can be sodium, potassium, or ammonium based, the interest and emphasis today is with the sodium and ammonia systems. This section will focus on the sodium based system and in particular the dilute absorbent alternative, although continuing studies and the installation of commercial and pilot plant concentrated systems suggest that this latter system has many advantages. Figure 6-1 provides a simplified flowsheet representative of the dilute process.

The principal steps are:

1) Absorption -- The cleaned, humidified flue or smelter gas enters a mobile bed, valve tray or sieve tray scrubber, where the gas is contacted by the recirculated absorbing alkaline solution.

2) Regeneration -- A portion of the pregnant absorbent is pumped to a reaction tank where it is treated with lime before flowing to a thickener or clarifier. The precipitated solids are pumped to a rotary filter and discarded. The overflow from the thickener is pumped to the softener.

3) Softening -- Soda ash and frequently CO_2 is added at the softener to make up for sodium losses and to precipitate excess calcium ion. The underflow is returned to the reaction tank with the regenerated absorbent being pumped to the absorber.

6.2 PROCESS AND OPERATING CONSIDERATIONS

The effectiveness of a soluble alkali as an SO_2 scrubbing medium is limited only by the gas/liquid chemical equilibrium and the rate of transfer of SO_2 from the gas to the scrubbing solution. Such scrubbing systems are thus highly efficient in SO_2 removal. The main chemical reactions involving absorption are:

$$2NaOH + SO_2 \rightarrow Na_2SO_3 + H_2O$$

$$Na_2SO_3 + SO_2 + H_2O \rightarrow 2NaHSO_3.$$

The presence of oxygen in the gas stream will, as is common in all absorption-based processes, convert the active sulfite species to inactive sodium sulfate.

$$Na_2SO_3 + 1/2O_2 \rightarrow Na_2SO_4$$

$$2NaHSO_3 + 1/2O_2 \rightarrow Na_2SO_4 + H_2O + SO_2.$$

The concentration of the active alkali in a particular system determines whether this process is described as the "dilute" or "concentrated" system. In the dilute system, the active sodium is about 0.1 molar while in the concentrated system it runs 0.5 molar or greater. There is a marked difference between these two systems in their response to the regeneration of the oxidized sodium sulfate product.

$$Ca(OH)_2 + 2NaHSO_3 \rightarrow Na_2SO_3 + CaSO_3\downarrow$$

$$Ca(OH)_2 + Na_2SO_3 + 1/2H_2O \rightarrow 2NaOH + CaSO_3\downarrow + H_2O$$

$$Ca(OH)_2 + Na_2SO_4 + 1/2H_2O \rightarrow CaSO_4 \cdot + 2H_2O\downarrow + 2NaOH.$$

In the dilute system the Na_2SO_4 is regenerated readily to NaOH under appropriate operating conditions, and calcium sulfate is precipitated. In the concentrated system, the above regeneration reaction does not

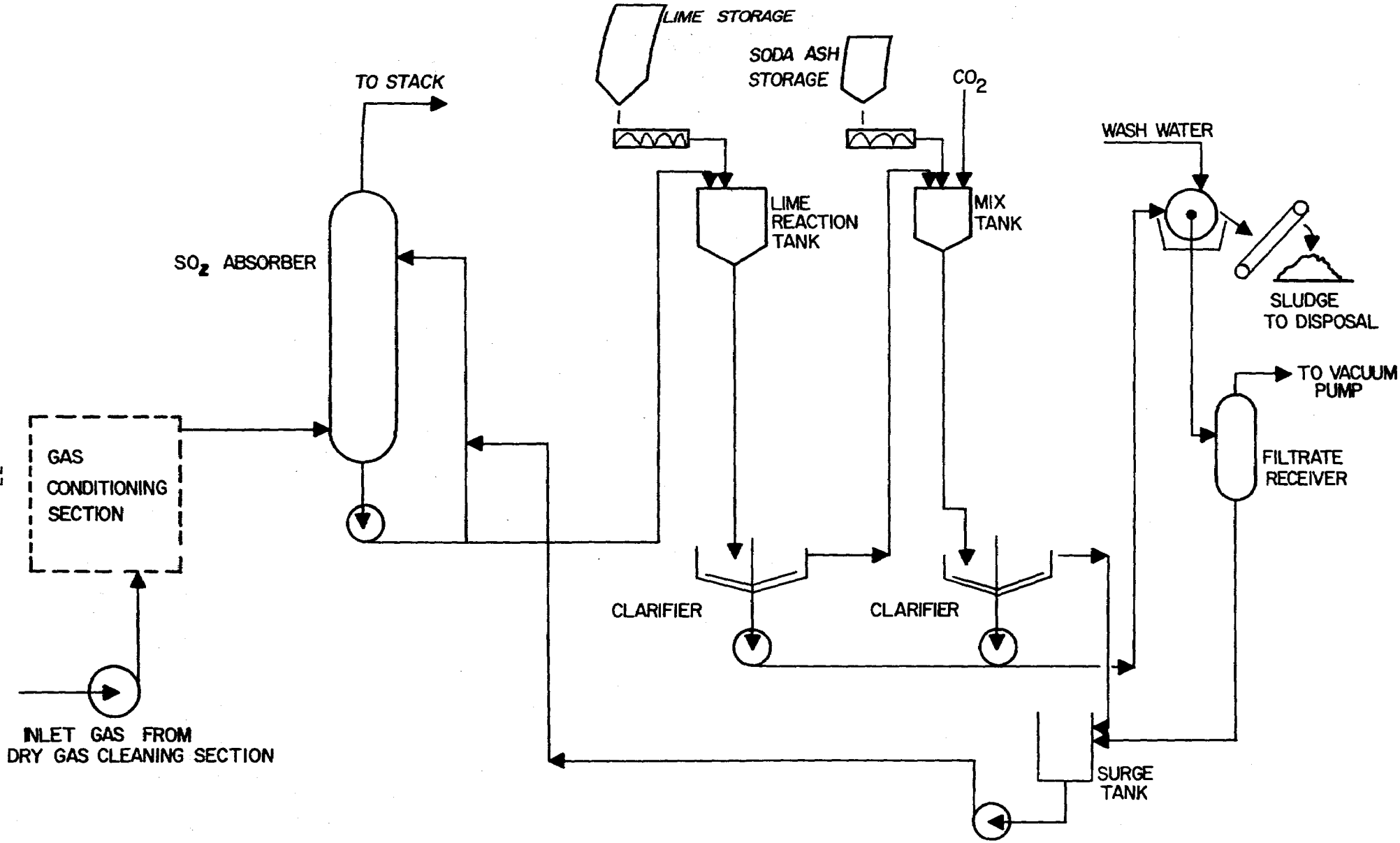

SODIUM BASE DOUBLE ALKALI PROCESS-DILUTE SYSTEM

FIGURE 6-1

proceed readily and the soluble sodium sulfate tends to remain in the system, necessitating a purge of the material with the associated problems of potential water pollution or special treatment. However, in recent pilot plant work with concentrated double alkali systems, Arthur D. Little, Inc., has observed the simultaneous precipitation of sulfate and sulfite; and it appears that if the system oxidation rate is below about 20-25 percent,[1] sulfate can be removed without special purging and treatment of the Na_2SO_4. Obviously further work is necessary before these conclusions can be interpreted in terms of an actual commercially operating process. At this point in the double-alkali process development, in view of the overall regeneration chemistry, the dilute system appears to be more suited to those applications where oxidation is expected to be high, i.e., where the oxygen content of the effluent gases is relatively high.

In the dilute system, the precipitated sludge will contain an appreciable proportion of calcium sulfate along with the calcium sulfite. Such sludges are less thixotropic, more easily filtered and can be more completely dewatered than predominantly calcium sulfite sludges. These are important characteristics if water conservation and a system water balance is of concern. To minimize the loss of the active sodium ions, washing of the sludge cake is mandatory; but at the same time, the amount of washing must be limited if the system is to operate in the closed loop mode and if the build-up of dissolved solids in the system is to be controlled. Thus, the relatively coarse-grained calcium sulfate crystals in the sludge provide favorable dewatering and structural properties which in turn favor reduced washing cycles. It has been reported that some double-alkali systems producing high calcium sulfate cake can be filtered to over 65 percent solids.[2]

Another important consideration in the double-alkali system is the necessary softening step to control the level of dissolved calcium ions remaining in the regenerated absorbent after the lime regeneration step. If the regenerated absorbent is returned directly to the absorber, there is a potential of calcium sulfate or gypsum scaling within this equipment. Sodium carbonate (Na_2CO_3) is usually used to provide both the sodium makeup values and the carbonate for the softening process. The reaction is:

$$Ca^{++} + Na_2CO_3 \rightarrow 2Na^{+} + CaCO_3\downarrow.$$

If lime utilization in the regeneration step is poor, the carbonate addition above may be inadequate to provide complete softening and the use of CO_2 will be required to be added with the Na_2CO_3 to remove the excess calcium ions prior to returning the regenerated absorbent to the scrubber. However, carbon dioxide also lowers the free hydroxide available for SO_2 absorption so the degree of softening by CO_2 should be held to a minimum.

It should be noted that based on experience with the General Motors full-scale double alkali systems,[3] carbonate scaling--i.e., the conversion of soluble calcium ions to precipitated insoluble calcium carbonate in the absorbing system--can occur as a result of high pH (<9) scrubbing liquor absorbing CO_2 from the flue gas. Thus pH in the scrubbing system should be controlled below this level.

As with all scrubbing systems, the liquid/gas ratio (L/G) in the double-alkali systems directly affects SO_2 removal efficiency. For a given removal efficiency, the L/G ratio must increase as the pressure drop in the absorber decreases.[3,4] In the commercial scale system installed at General Motors' Parma plant on coal-fired boilers, an L/G ratio of 20 gal/1000 CF is used for a column pressure drop of 7.5 inches W.G. Japanese installations on two oil-fired utility boilers use 12 gal/1000 CF and 7.5 gal/1000 CF, respectively, at approximately the same pressure drops.[5]

Although in the U.S. regeneration has been affected through the use of lime, Japanese installations use limestone in the regeneration section of their concentrated double alkali systems. Preliminary laboratory scouting runs on dilute systems conducted by EPA and reported by Arthur D. Little/EPA[1], together with rough economic analyses, suggest that the capital cost increases and increases in waste disposal costs for the limestone based regeneration system under U.S. conditions would exceed the costs of the lime based systems. From the same studies, however, there is confirmation that the use of limestone is a viable approach in the regeneration of concentrated double-alkali absorbent stream.

6.3 PROCESS DEVELOPMENT

The sodium base double alkali system has received considerable attention over the past several years both in the U.S. and in Japan. Although there are no full-scale utility boiler applications in the

U.S., there are two 150 MW operating systems in Japan on oil-fired boilers. Both systems operate in the concentrated mode with gypsum production. A total of 5 additional large scale utility concentrated double-alkali systems with a total capacity of 1750 MW are presently being engineered and/or constructed in Japan by Kawasaki/Kureka, with start-up dates between mid-1975 and mid-1977.[5] In the U.S. there are two operating full-scale industrial boiler applications equivalent in size to a 40 MW and a 20 MW power system, respectively, and an industrial kiln control system. The 40 MW General Motors system is based on the dilute process while the 20 MW Scholz station of Gulf Power Company utilizes a concentrated system developed by Arthur D. Little/Combustion Equipment Associates. The FMC concentrated system was put into service in late 1971 to control the emissions from two reduction kilns. In addition to these operating units, there are at least five full-scale systems in the U.S. projected for completion by mid-1975. All these units with one exception utilize the concentrated system.

It is obvious that in the application of the double-alkali process to utility and industrial boiler installations, preference has been directed towards the concentrated active alkali option. The usual practice of operating industrial boilers with relatively high levels of excess air would seem to suggest that special operating considerations may be necessary with the concentrated system to optimize the regeneration sequence. Operating experience and data analysis will be necessary before the commercial performance of the concentrated system in a potentiall high oxidation rate application can be evaluated. Considerable development work on both dilute and concentrated systems is still underway in the U.S. by Environtech, General Motors, Zurn Industries and A.D. Little/ Combustion Equipment Associates; but there has been little pilot plant work specifically directed towards the nonferrous smelter industry. The Smelter Control Research Association (SCRA) has performed exploratory investigations of both the double-alkali sodium and ammonia processes on a 4000 SCFM pilot plant located at the McGill smelter of Kennecott Copper Corporation.[7] The dilute active salt mode was chosen but rapid scale formation occurred in the scrubbing system since the softening step was not apparently adopted. Some difficulty was also experienced in regenerating the oxidized scrubbing liquor and it was concluded that

the problems experienced made the process less attractive than the ammonia double-alkali process, and attention has now been directed accordingly to this process.

In spite of the impressive progress made in bringing the sodium double-alkali process into commercial applications in the utility and commercial boiler area, there are broad uncertainties regarding its application to dilute SO_2 streams containing relatively high oxygen levels associated with reverberatory furnace operation in copper smelters. Current programs sponsored by EPA, and continuing evaluation of commercial scale units such as the General Motors Parma dilute mode installation and FMC's concentrated mode installations, should ultimately resolve questions involving the effective regeneration of sodium sulfate with good lime utilization and the potential use of limestone in the regeneration cycle to improve overall economics.

6.4 DESULFURIZATION EFFICIENCY

Performance of double alkali systems with respect to SO_2 removal is well established, with values of 90 to above 95 percent being common. Absorbent temperature, pH, concentration of the sulfite/bisulfite species and the total ionic strength all influence the equilibrium partial pressure of SO_2 over solutions of sulfite/bisulfite and hence the SO_2 removal effectiveness. It is thus possible to design a double alkali system to accomplish any desired level of removal efficiency.

In the Smelter Control Research Association's pilot plant work at the Kennecott McGill Smelter on the double-alkali process, removal efficiencies in excess of 90 percent were recorded with feed streams containing 0.3 to 0.95 percent SO_2.[7] However, if the pH fell below 5.5, removal efficiency fell sharply, with values of 55-75 percent being recorded.

6.5 SULFITE OXIDATION

As has been noted in Section 6.2., the active alkali species in the double-alkali process--sodium sulfite and sodium bisulfite--are susceptible to oxidation by the presence of oxygen in the gas stream, although submicron metallic particles or fume remaining after the gas cleaning sequence or impurities in the regeneration lime may also promote oxidation.

The rate of oxidation is thus related to the composition of the scrubbing liquor (high concentrations of dissolved salts may absorb oxygen more slowly), the oxygen content of the gas, the presence of impurities and the equipment design itself which may limit oxygen uptake.

The sodium sulfate produced by the oxidation reactions is inactive in the SO_2 absorption process and the overall result of oxidation is to remove active sodium from the scrubbing circuit. This soluble sulfate must be removed from the system but there are certain problems which must be recognized:

1) A simple purge of the soluble Na_2SO_4 to disposal poses environmental problems

2) A large loss of sulfate means active sodium must be replaced in the scrubbing circuit and this imposes a substantial economic penalty.

From a practical point of view, it is necessary to convert this sulfate back into active sodium by removing the sulfate ion. Several techniques are available.

In the dilute double-alkali system, treatment with lime as noted in Section 6.2, removes the sulfate ion as gypsum ($CaSO_4 \cdot 2H_2O$) with the production of NaOH. In Japan, where a market for gypsum exists, the sulfate ions are precipitated from the concentrated double-alkali solutions by acidulating with sulfuric acid. The applicable equation is:

$$Na_2SO_4 + 2CaSO_3 \cdot 1/2H_2O + H_2SO_4 + 3H_2O \rightarrow 2NaHSO_3 + 2CaSO_4 \cdot 2H_2O$$

This approach is not economically attractive if the gypsum must be discarded and where the oxidation rate is high. In experimental work conducted by Arthur D. Little under the EPA-ADL Dual Alkali Program,[1] it was observed that a simultaneous precipitation of sulfate and sulfite with lime and limestone treatment of concentrated double alkali liquors took place if the system oxidation rate was below about 20-25 percent of the SO_2 removed. As noted earlier, this phenomenon suggests the possibility of a broader potential for the concentrated double alkali system.

It is also possible to limit the degree of oxidation through process and equipment design. Minimum residence times and the use of high ionic strengths in the scrubbing liquor provide two such approaches. The use of anti-oxidants may also be useful although such compounds are usually expensive and add appreciably to the operating costs.

6.6 FEED GAS TREATMENT

Since the double-alkali process produces a throwaway product, it is not necessary to provide the same degree of solids cleaning as that required for a closed loop regenerative system, and gas pretreatment requirements are satisified by cooling the feed gas stream to around 130°F. A system similar to that discussed in Appendix A but without the provision of mist electrostatic precipitators should provide acceptable cooling and saturation of the gas with moisture to minimize evaporation and scaling in the absorber itself.

6.7 PARTICULATE REMOVAL CAPABILITY

The removal of particulates in the scrubbing operation of the double-alkali systems is variously reported. This is to be expected since removal efficiency in scrubbing is affected by a large number of variables such as liquid to gas ratios, particle size distribution, nature of the particles, energy input to the scrubber, and type of scrubber. Where no particulate removal is needed, as in the case of a pre-cleaned gas stream, simple baffle-type scrubbers can be used to remove SO_2. Where simultaneous particulate and SO_2 removal is necessary, high energy venturi scrubbers can effectively do both jobs.

Although a scrubber can be designed to achieve any reasonable degree of particulate removal, depending basically on the amount of pneumatic and hydraulic energy input at the contacting surface, SO_2 absorption columns are not high pressure drop devices and they are not particularly effective particulate removers. As has been noted in Section 2, gas cleaning or particulate removal has been considered as an independent process step which can be tailored to suit the requirements of the SO_2 absorber section and the condition of the incoming gas. In smelters, the use of cyclones, balloon flues and electrostatic precipitators is universal on reverberatory gas streams, and the mass loading of the residual particulates is low with the size distribution predominantly under 2-3 μ.

6.8 PROCESS ENERGY REQUIREMENTS

The double-alkali process is not an energy-intensive process. Electrical power requirement to support the absorption process, liquor circulation, and the solids separation equipment is a function of the total gas flow and the SO_2 handling rate in the regeneration section; but total power costs amount to only about 6-8 percent of the total direct annual operating costs for a range of gas flows from 70,000 to 300,000 SCFM containing 1 percent SO_2.

6.9 RETROFITTING REQUIREMENTS

There is some potential of separating the gas conditioning and SO_2 absorption section of the process from the regeneration section in this process so retrofitting will predominantly affect the location of the gas conditioning equipment and the SO_2 absorber in relation to the existing ductwork and available space. Space requirements for this equipment are similar to those required for the other absorbent-based systems. With the exception of the clarifiers, the tankage and other equipment associated with the regeneration section can be installed in a number of ways. The equipment at General Motors Parma plant occupies three floor levels, all under cover. Another vendor of the double-alkali process, FMC,[8] estimates that the recovery plant for a 50 MW power plant (approximately 100,000 SCFM) would occupy two floors, each 40' x 60'.

Generalized space requirements can be estimated as follows:

Gas conditioning and SO_2 absorption: (including neutralization and cooling tower)	8-12,000 sq. ft.
Regeneration section and clarifiers	20-25,000 sq. ft.

6.10 COSTS

A number of cost estimates[8,9,10] for the double alkali process have been published, and although they cover both the dilute and the concentrated absorbent system modes, they have provided source data in developing both capital and operating cost relationships for the SO_2 handling section of the process. A capital cost curve based on the hourly rate of SO_2 handled by the regeneration section is provided by Figure 6-4. Capital costs for the SO_2 absorption section including absorbent recirculation have been taken from the appropriate generalized curve for clear solution absorption in Appendix B. Figure 6-3 represents the combination of these two cost sections under defined conditions of gas flow and SO_2 content.

The direct annual operating costs were developed from reported usage values and updated unit costs presented in Table 6-1. The corresponding direct annual operating costs for the range of SO_2 contents are provided in Figure 6-3. It should be noted that these costs do not include capitalization costs.

Tables 6-2 and 6-3, respectively, provide capital and operating cost details for the double-alkali process itself and for the overall control system which includes the gas conditioning section. These tables provide direct comparison with similar tables for the other SO_2 control processes under evaluation.

6.11 ADVANTAGES AND DISADVANTAGES

Advantages of the double-alkali, sodium-based scrubbing process are:

1) This soluble salt scrubbing fluid avoids erosion of equipment which has plagued the slurry systems using lime/limestone sorbents.

2) Scaling and plugging are more readily controlled than in slurry systems.

3) High SO_2 recovery (85 to 95 percent) is possible by adjustment of system parameters such as pH, L/G ratio, and salts concentration.

4) The system responds well to swings in SO_2 concentrations.

5) In the dilute system, the sulfate oxidation product is regenerated during the lime treatment step with precipitation of calcium sulfate together with the calcium sulfite.

Disadvantages are:

1) Supplemental "softening" of the absorbent stream is required to control residual calcium sulfate and potential scaling in the absorber system.

2) The double alkali system shares with the lime/limestone systems the disadvantage of producing large volumes of waste calcium sulfite/sulfate (3-4 lbs/lbSO_2) which must be disposed of in an environmentally acceptable manner.

3) Soluble sodium salts will end up in the waste sludges and although the level should be low, they may pose water pollution problems.

6.12 REFERENCES

1. LaMantia, C., et al., "EPA-ADL Dual Alkali Program Interim Results." Presented at EPA Symposium on Flue Gas Desulfurization, Atlanta, Ga. Nov. 4-7, 1974.

2. Cornell, C.F., "Liquid-Solids Separation in Air Pollutant Removal Systems." Presented at the ASCE Annual and National Environmental Engineering Convention, Kansas City, Missouri, Oct. 1974.

3. Cornell, C.F., Dahlstrom, D.A., "Performance of a 2500 ACFM Double Alkali Plant for SO_2 Removal." 66th Annual Mtg., A.I.Ch.E., 1973.

4. Asahara, Ken, "Double Alkali Systems for Control of Sulfur Dioxide Pollution." Chemical Economy and Engineering Review, December 1972.

5. Kaplan, Norman, "An Overview of Double Alkali Processes for Flue Gas Desulfurization," Presented at EPA Symposium on FGD, Atlanta, Ga., Nov. 1974.

6. Phillips, R.J. "Operating Experiences with a Commercial Dual-Alkali SO_2 Removal System." Presented at 67th Annual Mtg. of APCA, Denver, Col., June 1974.

7. Campbell, I. E., "Exploration Investigations of the Ammonia and Sodium Double Alkali Processes for SO_2 Control." Presented at AIChE National Mtg., Salt Lake City, Utah, August 1974.

8. Brady, J.D.. "FMC Corporation's Sulfite Absorption-Lime Regeneration Process." Presented at Missouri Public Service Commission Conference, Sept. 1974.

9. Smelter Control Research Association, Inc. "Report to U.S. Bureau of Mines on Engineering Evaluation of Possible High Efficiency Soluble Scrubbing Systems for the Removal of SO_2 from Copper Smelter Reverberatory Furnace and Like Flue Gases," March 1974.

10. G.G. McGlamery and R.L. Torstrick, Tennessee Valley Authority, "Cost Comparisons of Flue Gas Desulfurization Systems." Presented at FGD Symposium, Atlanta, Ga., Nov. 1974.

Table 6.1. SODIUM SCRUBBING - DOUBLE ALKALI (THROWAWAY)
UNIT USAGE AND COST DATA

A. Chemicals & Utilities	Basis	Unit Cost
Lime	1.25 lb/lbSO_2	\$22/ton
Na_2CO_3	0.038 lb/lbSO_2	\$52/ton
CO_2	0.0116 lb/lbSO_2	\$50/ton
Power a) Absorption	4KW/1000 SCFM	\$0.015/KWH
b) Regeneration	0.075 KWh/lbSO_2	\$0.015/KWH
Water	0.2 gal/lbSO_2	\$0.30/M gal
B. Operating Labor & Maintenance		
Labor a) Absorption	½ man/shift for <75,000 SCFM	\$8/hr
	3/4 man/shift for >75,000 SCFM	
b) Regeneration	1 man/shift <10,000 lbSO_2/hr	
	1½ man/shift >10,000 lbSO_2/hr	
Maintenance	4% TCI/yr	
Taxes & Insurance	2 1/2% TCI/yr	
Sludge Disposal	3.53 lb Sludge/lbSO_2	\$3/ton sludge

C. Fixed Charges 13.15% TCI/yr

Based on Capital Recovery Factor using 10% interest over 15 year life

DOUBLE ALKALI PROCESS - SODIUM BASE

TOTAL CAPITAL INVESTMENT COSTS

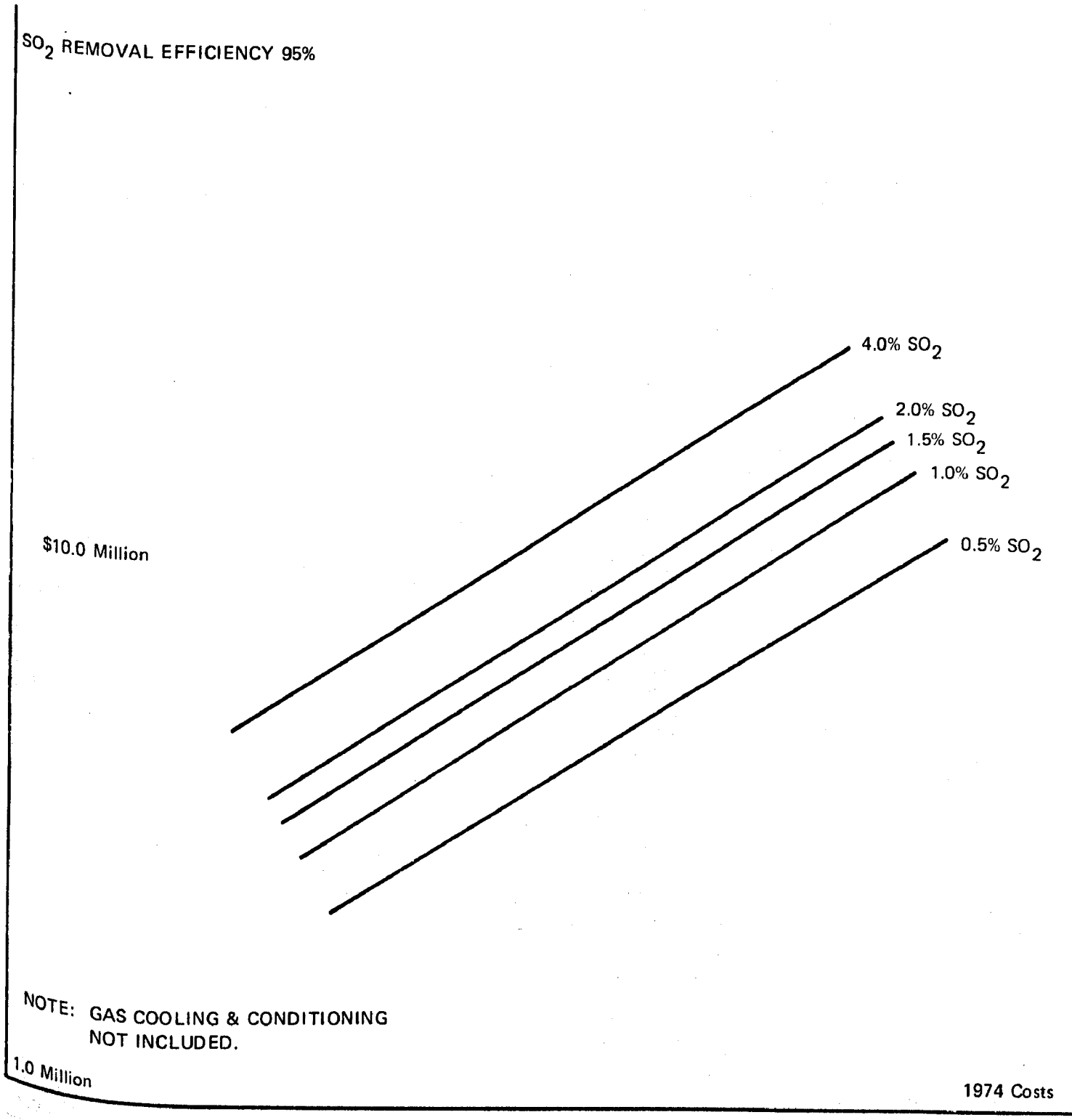

100,000 SCFM

GAS FLOW RATE-SCFM

FIGURE 6-2

DOUBLE ALKALI PROCESS - SODIUM BASE

TOTAL DIRECT ANNUAL OPERATING COSTS

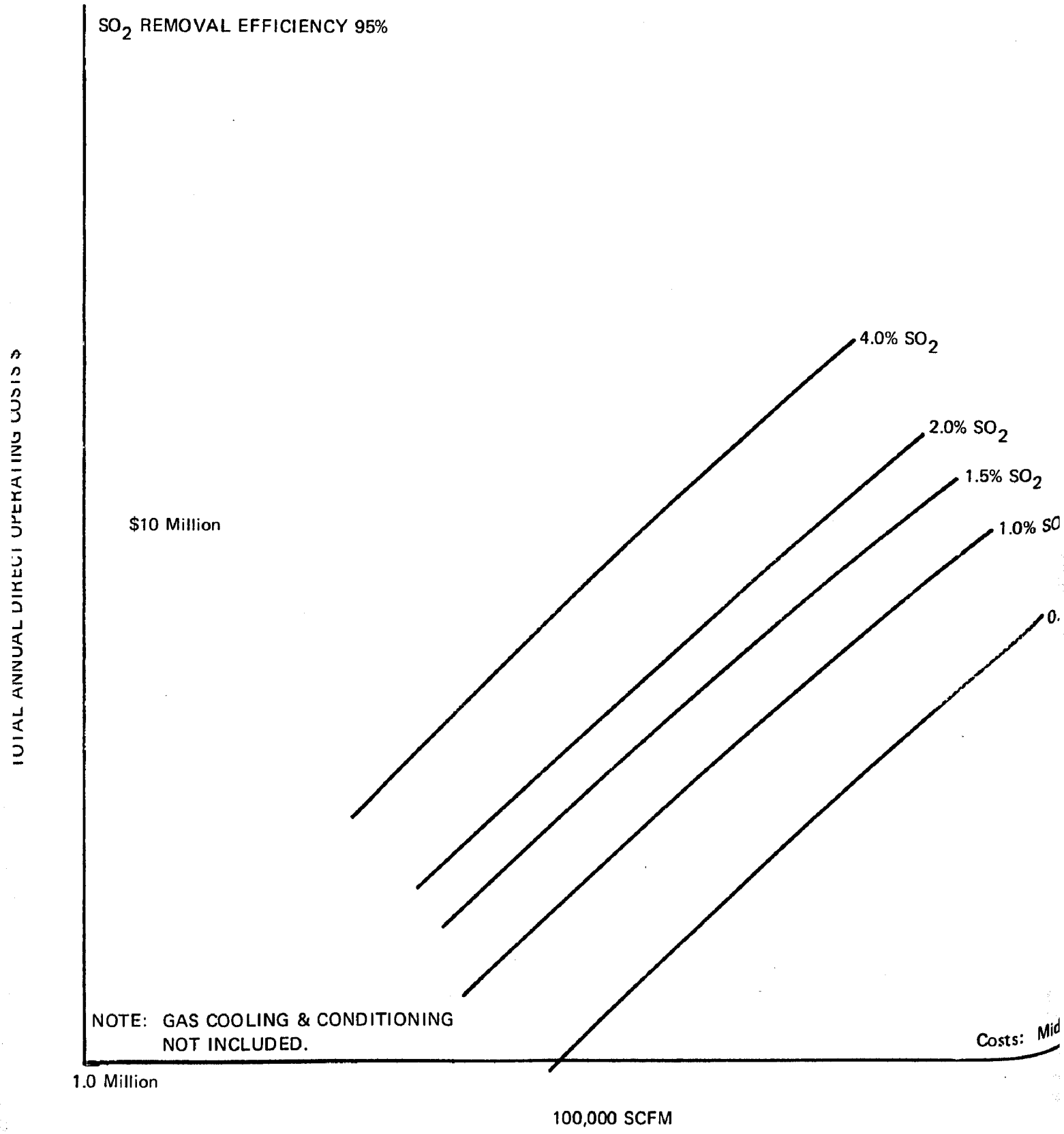

FIGURE

SODIUM DOUBLE ALKALI SCRUBBING

TOTAL CAPITAL INVESTMENT COSTS
REGENERATION & PRECIPITATE HANDLING

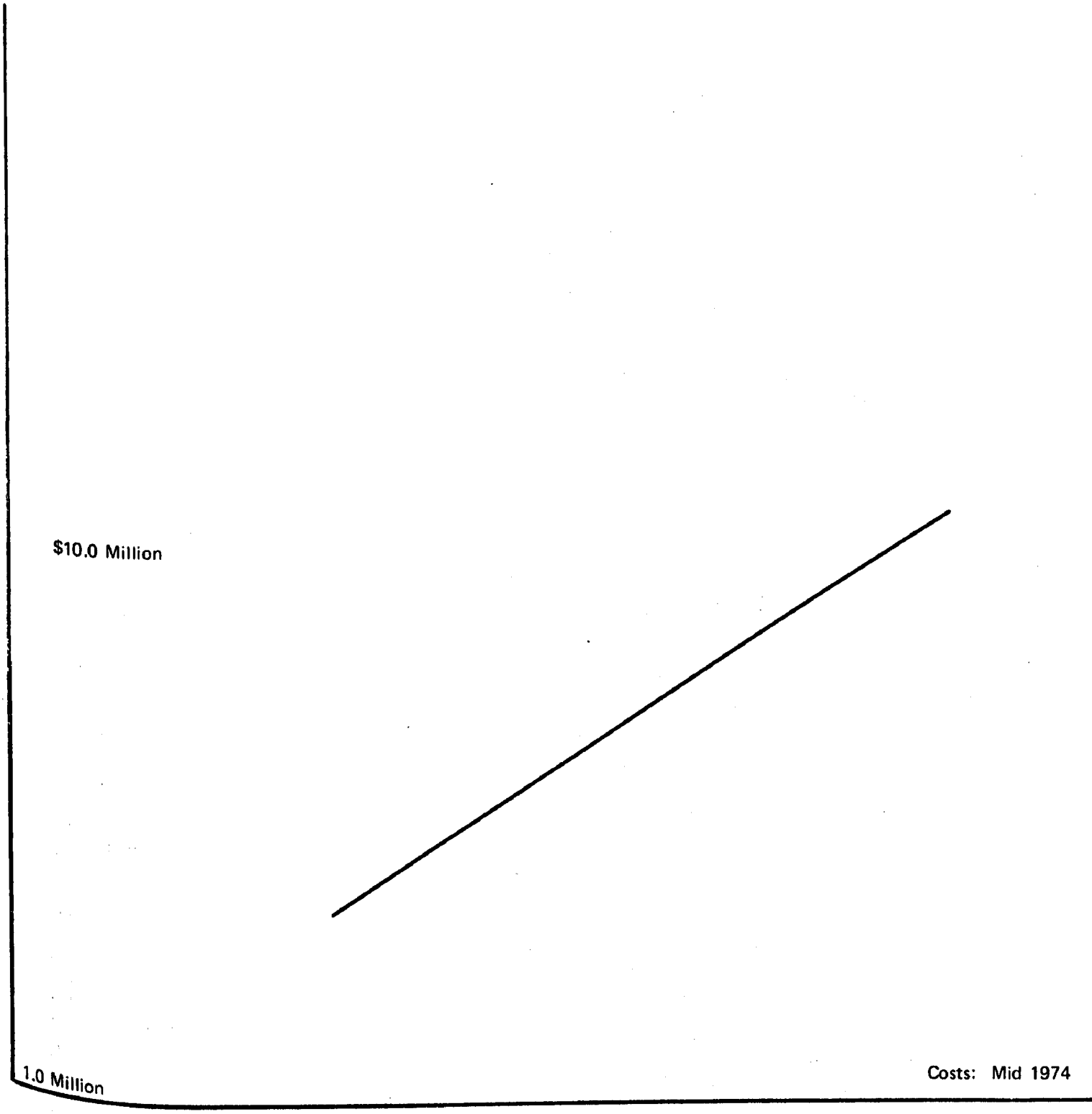

10,000 LBS/HR

SULFUR DIOXIDE RATE
OF REGENERATION SYSTEM (lbs/hr)

FIGURE 6-4

Table 6.2. SODIUM SCRUBBING - DOUBLE ALKALI DILUTE SYSTEM (THROWAWAY)

CAPITAL AND TOTAL ANNUAL COST

		Gas Flow Rate - SCFM @1% SO_2			
		70,000	100,000	200,000	300,000
TOTAL CAPITAL INVESTMENT	$	4,200,000	5,250,000	8,100,000	10,750,000
	$/SCFM	60	53	41	36
	$/Annual ton SO_2 Removed	152	134	103	91
Annual Cost					
A. Direct Operating					
1. Power		96,000	137,200	274,800	411,600
2. Water		3,300	4,700	9,400	14,100
3. CaO, Na_2CO_3, CO_2		846,100	1,212,300	2,424,600	3,637,200
4. Labor		100,000	151,200	151,200	151,200
5. Maintenance		168,600	210,000	324,000	430,000
6. Sludge Disposal		290,000	411,500	831,900	1,235,000
7. Taxes & Insurance		105,000	131,300	202,500	268,800
TOTAL ANNUAL DIRECT OPERATING COST		1,609,600	2,258,200	4,218,400	6,147,900
	$/yr/ton SO_2 Removed	59	58	54	52
B. Annual Capitalized Cost		554,400	693,000	1,069,200	1,419,000
C. Net Total Annualized Cost*		1,257,000	1,699,000	3,004,000	4,272,000
	$/yr/ton SO_2 Removed	46	43	38	36

*Based on Corporate Tax Rate of 48%.

Table 6.3. SODIUM SCRUBBING - DOUBLE ALKALI DILUTE SYSTEM (THROWAWAY)
TOTAL SYSTEM CAPITAL AND ANNUAL OPERATING COSTS

		Gas Flow Rate - SCFM @1% SO_2			
		70,000	100,000	200,000	300,000
A. TOTAL CAPITAL INVESTMENT					
1. Gas Conditioning		1,210,000	1,500,000	2,250,000	2,900,000
2. Absorption and Neutralization		4,200,000	5,250,000	8,100,000	10,750,000
TOTAL		5,410,000	6,750,000	10,350,000	13,650,000
	$/Annual ton SO_2 Removed	197	172	132	112
B. TOTAL ANNUAL OPERATING COSTS					
1. Gas Conditioning		211,100	287,000	465,200	635,700
2. Absorption and Neutralization		1,609,600	2,258,200	4,218,400	6,147,900
TOTAL		1,820,700	2,545,200	4,683,600	6,783,600
	$/yr/ton SO_2 Removed	67	65	60	58
C. NET TOTAL ANNUALIZED COST*					
1. Gas Conditioning		230,200	298,500	465,800	619,200
2. Absorption and Neutralization		1,257,000	1,699,000	3,004,000	4,272,000
		1,487,200	1,997,500	3,469,800	4,891,200
	$/yr/ton SO_2 Removed	54	51	44	42

*Based on Corporate Tax Rate of 48%.

7.0 MAGNESIUM OXIDE SCRUBBING

7.1 PROCESS DESCRIPTION

There are a number of different magnesia-based scrubbing systems which provide effective SO_2 removal, but U.S. development work, as well as Russian and Japanese, has concentrated on the use of magnesium sulfite-magnesium oxide slurries having a basic pH. This process was the one chosen for the demonstration installation at Boston Edison's Mystic Station. The process description provided below and represented in Figure 7.1 is based on this approach but includes the process alternatives proposed by TVA in their conceptual design and cost study on magnesium scrubbing[1] for the slurry handling and SO_2 recovery sections. There are four primary operations:

1) Absorption
2) Slurry handling
3) Drying - Calcination
4) MgO system

Absorption -- The SO_2-containing gas streams, after suitable cooling and removal of particulate matter, enters a venturi or absorber tower where it is scrubbed with the magnesia slurry.

Slurry Handling -- A bleed stream is taken from the slurry recirculation loop directly to a centrifuge to provide a wet cake of $MgSO_3 \cdot 6H_2O$ and $MgSO_4$ or, alternatively, to reduce overall energy requirements to gravity thickeners or wet screens for thickening the solids, conversion of the $MgSO_3 \cdot 6H_2O$ to $MgSO_3 \cdot 3H_2O$ by heating of the slurry, and then to centrifuging.

Drying - Calcination -- The wet cake of $MgSO_3 \cdot 3H_2O$ with some $MgSO_4$ is dried in a fluid bed dryer at approximately 400°F to a moisture content of less than approximately 4 percent. Offgases are cleaned by the use of cyclones and a high temperature bag filter or ESP. The dried solids with added coke to reduce the $MgSO_4$ are conveyed to a fluid bed calciner operating at 1400 to 1600°F. Provision of a waste heat boiler in the offgas stream to cool to 600-700°F followed by air dilution to cool to 400°F allows use of a bag filter for dust control. The clean

and diluted SO_2 gas stream containing approximately 8 percent SO_2 is directed to a sulfuric acid plant or an elemental sulfur plant.

MgO System -- The regenerated MgO is conveyed to storage and with the required makeup is reslurried for circulation to the absorption section.

7.2 PROCESS AND OPERATING CONSIDERATIONS

Slurries of magnesia are good absorbants for SO_2 and the process provides easy separation of the sulfite salts from the scrubber liquor, an ability to regenerate and recycle the absorbent, and an avoidance of a solid disposal problem. The main reactions which take place when the SO_2-containing gas is contacted with an aqueous recycled slurry of magnesium oxide (MgO), magnesium sulfite ($MgSO_3$) and magnesium sulfate ($MgSO_4$) are:

Main Reaction: $MgO + SO_2 + 3H_2O \rightarrow MgSO_3 \cdot 6H_2O$

Side Reactions:

$$MgSO_3 + SO_2 + H_2O \rightarrow Mg(HSO_3)_2$$

$$Mg(HSO_2)_2 + MgO \rightarrow 2MgSO_3 + H_2O$$

$$MgO + SO_3 + 2H_2O \rightarrow MgSO_4 \cdot 2H_2O$$

$$MgSO_3 + 1/2\ O_2 \rightarrow MgSO_4 \cdot 2H_2O$$

The important relationships in the MgO slurry process which directly affect the degree of SO_2 removal and thus the operating design of the process are:[2]

1) Liquid to gas ratio (L/G) - defined as the gallons of liquid absorbent per 1000 ACFM. SO_2 removal efficiency increases with an increase in L/G.

2) pH - increasing the pH in a slurry system provides an increased SO_2 removal capability. Scrubber solution composition exercises a strong influence on the SO_2 vapor pressure over the solution and scrubbing efficiency is directly related to the difference between the partial pressure of SO_2 in the stack gas and the SO_2 vapor pressure over the scrubbing solution. SO_2 vapor pressure decreases with increased pH.[2]

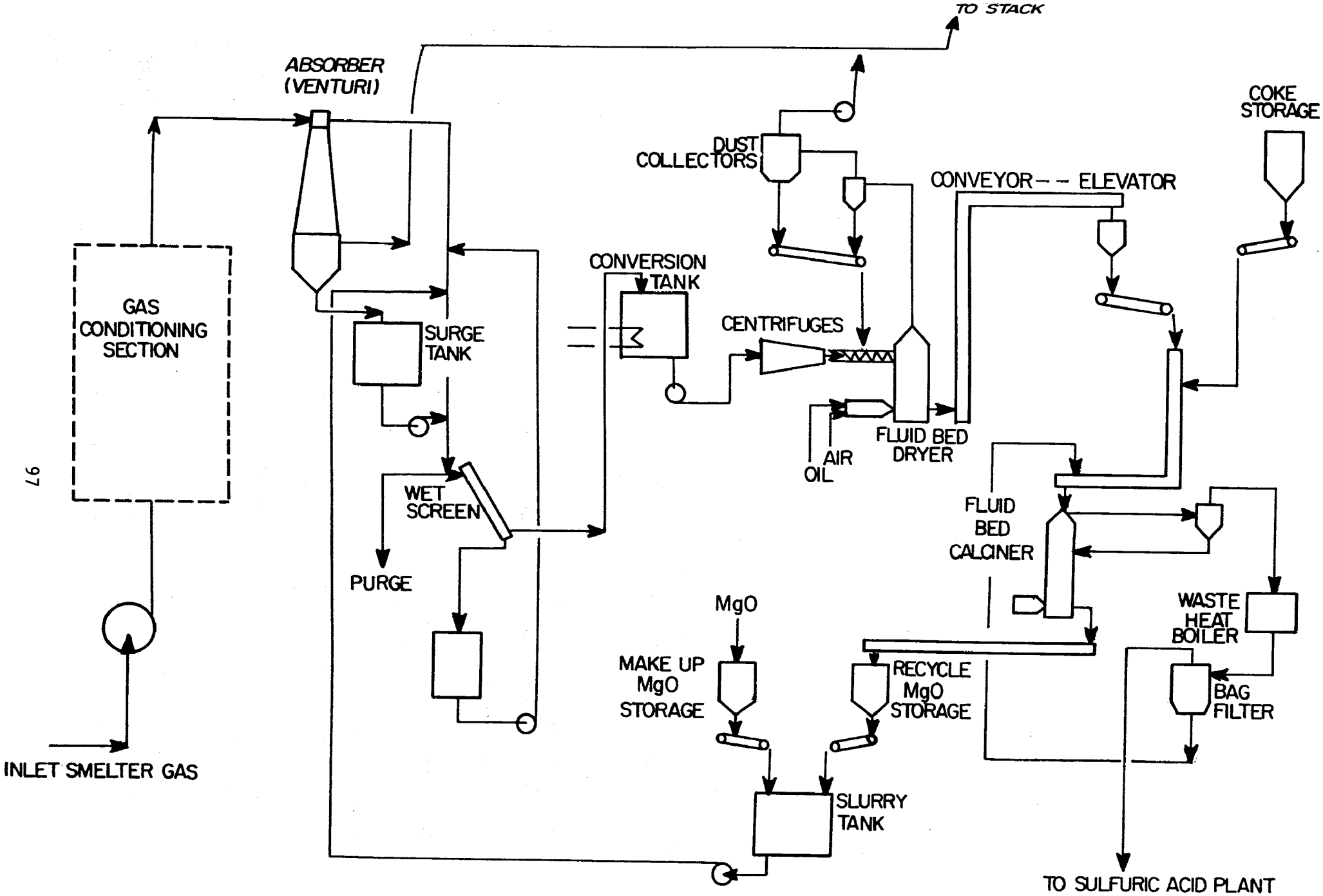

MAGNESIUM OXIDE PROCESS

FIGURE 7.1

Temperature exercises little adverse effect on the mass transfer rates with a pH above 6 because of this very low SO_2 vapor pressure over the scrubbing solution at this pH level. The effect of $MgSO_4$ on SO_2 absorption is also minor at higher pH values.

Both venturi and mobile bed absorbers have been evaluated for magnesia scrubbing and both types are capable of attaining SO_2 absorption efficiencies of 90 percent or greater, but the venturi absorber requires a higher operating L/G to achieve the same absorption efficiency. In spite of this factor, the venturi absorber appears to provide overall operating advantages and it has been selected in one configuration or another as the SO_2 absorber for the commercial U.S. installations. Typical operating parameters of a venturi absorber scrubbing utility plant flue gas are:

L/G: 20 gal/MACFM

Gas Velocity: 75 ft/sec

SP: 4-6" WG.

pH: 7-7.5.

On the basis of Chertkov's work,[3] SO_2 concentration in the gas phase would not be expected to adversely affect the absorption rate until concentration levels are above 3.5 percent, but as SO_2 concentrations in the stack gas increase and magnesia requirements increase correspondingly, the L/G gas ratio will also increase to maintain the usual 10 percent weight of solids in the slurry.

Because the magnesia scrubbing system operates in a closed loop, consideration must be given to the buildup of impurities in the system and the requirement for purging. The quality of the make-up water, the impurities of the magnesium oxide itself, together with the level of soluble $MgSO_4$, determine the purge required; and if losses of active salts are to be minimized, these elements must be controlled. In the case of magnesium oxide, this will limit the sources of MgO suitable for magnesia scrubbing. Raw uncalcined magnesite (45 percent MgO) which occurs in Nevada and agricultural-grade calcined magnesite (87 to 92 percent MgO) would increase the purge requirements significantly. The requirement for 98 percent MgO calcined magnesite may involve not only initial cost premiums but appreciable transportation costs as well, depending on source and use location. Unusual local water supply quality may necessitate additional pretreatment before introduction into the magnesia scrubbing loop.

The process as now commercially defined imposes no unusual problems in terms of corrosion or special processing equipment, although certain processing areas appear to offer potential for further processing development. As is normal in slurry systems, the use of rubber lined or specially coated equipment and piping in the scrubbing and recirculation system has provided acceptable service in the U.S. commercial installations apart from some localized problem areas. In the Boston Edison installation, the wet solids handling section, centrifuge operation, and wet cake handling provided difficulties during operation which may suggest an area for further development. The use of fluid bed equipment for drying and calcination in place of the rotary equipment used is an attractive alternative which offers the potential of reduced operating costs and improved process control.

The SO_2 removed in the calcination step may be directed after suitable gas cleaning to either a conventional sulfuric acid plant or an elemental sulfur plant. The nature of the recovery process also provides the further option of separating the SO_2 regeneration and utilization steps from the gas scrubbing and slurry processing section. The U.S. commercial demonstration installations of the magnesia scrubbing process have taken this separate SO_2 regeneration and use approach using a sulfuric acid plant. The concept of a centralized regeneration and processing facility servicing a number of independent scrubbing facilities, however, may offer significant economies in a situation where different scrubbing facilities are within the same geographical area and a market exists for the sulfuric acid produced.

7.3 PROCESS DEVELOPMENT STATUS

The magnesium oxide slurry scrubbing system has been under commercial scale evaluation in the United States since 1972.

Construction of the first commercial system, the Chemico/Basic MgO sulfur recovery process, including the scrubbing and recovery system at Boston Edison's Mystic Station on a 150 MW oil-fired boiler, and the regeneration facility at the Essex Chemical Company, Rumford, R.I., sulfuric acid plant, was completed in April 1972. A second Chemico/Basic system was placed in operation in September 1973 at Potomac Electric Power Company's Dickerson Station on half the flue gas from a coal-fired boiler rated at 190 MW. A third system using magnesium-sulfite slurry

scrubbing is currently being installed on an equivalent 120 MW coal burning boiler at Philadelphia Electric Company's Eddystone Station.

The Boston Edison system during its 27-month period of operation (it was shut down in June 1974 at completion of the contract) logged 4000 hours of running time and demonstrated that it could meet the process guarantees of 90 percent removal of the inlet SO_2, that the magnesia could be regenerated and recycled, and that 98 percent sulfuric acid of good quality could be recovered from the SO_2 removed from the flue gas.[4] Equipment problems and malfunctions were frequent during the test period, especially in the dryer and calciner systems, but they were corrected before completion of the program. These problems also contributed to the higher MgO losses experienced during the program (10 percent) and prevented demonstration that the regenerated MgO could be recycled continuously without loss of reactivity and determination of the effect of buildup of particulate matter, vanadium, etc., in the system. The program did provide additional valuable information for future plant design in such areas as required quality control and analytical methods, equipment selection, and materials of construction.

The buildup of impurities, both soluble and insoluble, introduced into the closed loop system by makeup water, makeup MgO, oxidized $MgSO_4$, and particulates captured in the SO_2 absorber will require some attention in an operating facility, but the limited operating experience gained to date does not allow a clear definition of the magnitude of the problem and the appropriate approach required. In dry climates, with high solar evaporation rates, bleeding off a small stream to a dead-end pond may be acceptable though losses of magnesium via $MgSO_4$ must be considered.

The two process sections which appear to offer potential for improved reliability and/or reduced energy requirements are:

1) The slurry or solution process section

2) The drying and calcining sections.

In the MgO slurry scrubbing system, the effluent from the SO_2 absorber contains predominantly $MgSO_3 \cdot 6H_2O$. Private in-house and outside communications reported by TVA[1] indicate that $MgSO_3 \cdot 6H_2O$ rapidly converts to $MgSO_3 \cdot 3H_2O$ at the reasonably low temperature of 80°C and that the conversion rate is significantly increased by increasing the slurry concentration from 10 to 60 percent $MgSO_3$. Although dewatering of the

$MgSO_3 \cdot 3H_2O$ may be somewhat more difficult because of the smaller crystal size, less energy is required to dehydrate the trihydrate than the hexahydrate, and this approach may provide a viable route to reduced operating costs. The TVA report referenced above provides a number of separation alternatives with associated capital and operating costs related to a power plant facility, but the relationships have general application.

In the drying and calcining sections, the use of fluid bed equipment offers advantages in lower investment and operating costs, lower heat losses, and better temperature control and in the case of the calciner, precise control of oxygen which could reduce the requirement for coke to reduce the $MgSO_4$. It should be noted that the regeneration facilities for the Philadelphia Electric Company's Eddystone magnesia scrubbing system will include a fluidized bed reactor. On the basis of presently operating and planned installations, the magnesia scrubbing process appears to have qualified as a demonstrated commercially viable desulfurization process. In addition to the three U.S. installations noted above, Philadelphia Electric Company has signed an agreement with EPA committing it to the installation of additional magnesia scrubbing systems by 1978 at their Eddystone 1 and 2 stations and their Cromby-1 Station. A number of installations are reported in operation in Japan.[5] Two units are installed in copper smelters and are tied to sulfuric acid plants; one treats 44,000 SCFM of tail gas from a sulfuric acid plant and the second treats 49,000 SCFM of converter gas containing 2 percent SO_2. Another installation to start up in the near future will treat 275,000 SCFM gas from a Claus furnace and an industrial boiler to produce elemental sulfur via the Claus unit.

7.4 PROCESS DESULFURIZATION EFFICIENCY

Commercial demonstration runs on both coal- and oil-fired utility boilers have demonstrated that the magnesium oxide scrubbing process has an SO_2 removal capability on these streams up to at least 90 percent. Considerable experimental work over several decades has established with some assurance the chemistry, kinetics and mass transfer relationships of the different magnesia scrubbing systems; and with appropriate adjustment

of the L/G ratio and control of pH, it appears that this level of SO_2 removal efficiency can be maintained using magnesium oxide slurries on SO_2-containing gas streams containing up to 3 to 4 percent SO_2. However, magnesium sulfite-bisulfite scrubbing, because of the higher equilibria vapor pressure of the SO_2 over a slurry of $MgSO_3$ in a slightly acid solution of bisulfite, may not be quite as effective as the alkaline scrubbing system in SO_2 removal efficiency.

7.5 SULFITE OXIDATION

Both the MgO and $MgSO_3$ species in the scrubber slurry are susceptible to oxidation to the soluble $MgSO_4$. Downs and Kubasco[2] indicate that most of the magnesium sulfate formed in mobile bed or venturi scrubbers results from sulfite oxidation by oxygen absorbed from the input gas. A number of researchers have also noted the catalytic effect of heavy metal ions on increased sulfite oxidation rates. Chertkov[7] found, however, that the concentration of the oxidation product itself, $MgSO_4$, has a significant influence on reducing oxygen mass transfer coefficients and presumably sulfite oxidation rates. Higher pH also reduces oxidation. Other work by Chertkov[7] suggests that the oxidation rate above 13 to 15 percent $MgSO_4$ in the slurry may be small or even zero. If the steady-state oxidation rate is not zero, provision must be made for $MgSO_4$ removal. Data from the Boston Edison demonstration indicates that some $MgSO_4$ (approximately 4 percent) is occluded in the $MgSO_3 \cdot 6H_2O$ crystals and removed with the centrifuge cake.[8] If the $MgSO_3 \cdot 6H_2O$ to $MgSO_3 \cdot 3H_2O$ conversion route is adopted, the occluded $MgSO_4$ will be solubilized and returned with the mother liquor to the scrubber system. In this case separate purge facilities for $MgSO_4$ may have to be provided. Although there is little information currently available to predict the effect of long term buildup of $MgSO_4$ in continuously operated, closed cycle SO_2 scrubbers, operating experiences reported by Chemico on the Boston Edison installation[4] suggest that changes in the SO_2/O_2 ratio with reduced SO_2 causes higher oxidation rates with the increased $MgSO_4$ concentration making centrifugal separation more difficult. Where the gas stream is likely to contain high oxygen levels such as copper reverberatory flue gases, the use of organic inhibitors may be warranted to reduce their oxidation rate.

Some oxidation of $MgSO_3$ to $MgSO_4$ may also take place during the drying cycle but complete regeneration to MgO is readily achieved in the calciner with the addition of coke.

7.6 FEED GAS PRETREATMENT

The magnesia scrubbing process in common with most aqueous scrubbing systems requires the feed gas to be at least saturated with water vapor to minimize evaporation and localized high salt concentrations in the absorber. With initial gas temperatures of between 300 to 600°F, water quenching in the typical system discussed in Appendix A should provide acceptable conditioning. The closed system mode of operation of the magnesia process emphasizes the advantages of minimizing the introduction of both particulates, particularly oxidation catalyzing metals, and sulfuric acid mist into the SO_2 absorber and the gas pretreatment section should include an electrostatic mist eliminator or similar device.

7.7 PARTICULATE REMOVAL CAPABILITY

Particulate removal efficiency is related to the nature of the particles themselves, their mass loading, particle size and distribution, and the pressure drop of scrubbing equipment. However, in discussing the particulate removal capability of the magnesia scrubbing system, attention will be focused only on the SO_2 absorber itself and the response which might be expected when treating a gas already cooled and conditioned by a system such as that described in Appendix A.

The venturi scrubber commonly used as the SO_2 absorber in magnesia scrubbing systems is not a high pressure drop device at 4 to 6" W.G. With electrostatic precipitator cleaning of the gas stream prior to conditioning, and with the application of a mist precipitator after conditioning, the particulate loading into the absorber will be low, with the size distribution itself concentrated under 2 to 3 μ. Further particulate removal in the scrubber will be limited.

A test conducted by York Research Corporation on the venturi SO_2 absorber installed at the Boston Edison Mystic Station on an oil-fired boiler indicated an average mass removal efficiency of around 57 percent.

Tests conducted to determine efficiency of removal according to particle size indicated that approximately 80 percent of the particulate material in the inlet gas was sized greater than 7 μ . About 10 to 11 weight percent of the incoming particulates were sized at and below 1 μ with around 50 weight percent of this material being removed in the scrubber. With input gases which have already received particulate cleaning, and having a remaining particulate distribution predominantly under the 2 to 3 μ level, the particulate removal efficiency in the scrubber would be expected to be well below 50 percent. The nature of the particles themselves, poor wettability, etc., may also increase the difficulty of capture in the absorber.

7.8 PROCESS ENERGY REQUIREMENTS

The overall energy requirements for the magnesia scrubbing system are determined largely by the concentration of the SO_2 in the treated gas streams. Power requirements for the gas conditioning system, and moving the gas stream through the SO_2 absorber, demister and ductwork will be essentially the same as for other desulfurization processes, although column design and related pressure drop will introduce some differences.

In the slurry handling and SO_2 recovery sections, the SO_2 rate will directly affect the power requirements of the centrifuges, conveyors, blowers to the driers and calciners, and slurry preparation area; but a requirement of 0.1 to 0.2 Kw/lb SO_2 recovered appears likely.

The most significant energy demand is imposed by the drying and calcining steps of the MgO regeneration process. Direct firing of either fluidized or rotary units requires either gas or oil fuel. The Boston Eddison-Essex Chemical demonstration unit used No.6 fuel oil to fire both the rotary drier and the rotary calciner. An approximate estimate of the heat requirements for such a system indicates a value of 7000 to 8000 Btu/lb SO_2 or 0.05 gallons of fuel oil per lb SO_2 recovered. At today's oil prices, the cost of SO_2 regeneration in the magnesia scrubbing process becomes the most significant element in the overall operating cost picture. Even if fluidized beds are used and advantage is taken of the lower drying requirements of the $MgSO_3 \cdot 3H_2O$ crystal, oil requirements still appear to be on the order of 0.04 gal/lbSO_2

recovered. Fluidized bed drying and calcining direct annual costs for a gas flow of 100,000 SCFM containing 1 percent SO_2 are approximately 60 percent of the total annualized operating costs including capitalization costs. As the concentration of SO_2 in the input gas goes up, the SO_2 recovery energy costs take an increasingly larger share of the total annual operating costs.

7.9 RETROFITTING REQUIREMENTS

The magnesia scrubbing process as a whole is readily separated into three separate areas, and direct retrofitting considerations apply only to the gas conditioning/SO_2 absorption section. The slurry processing and SO_2 recovery area, and the SO_2 conversion section--sulfuric acid plant or elemental sulfur plant--can be located apart from the gas handling section and even apart from each other, and this situation allows considerable flexibility in adjusting to existing plant configurations.

Space requirements for the separate areas of the process can vary widely depending on equipment options such as rotary or fluid bed drying equipment. Throughput, in terms of both gas volume handled and weight of equivalent SO_2 recovered, will have some effect on space requirements; but within the ranges covered in this study, the effect is not expected to be large.

Space requirements are estimated as follows:

Gas Conditioning and SO_2 Absorption:	8 to 12,000 sq. ft.
Neutralization and Cooling Tower:	2 to 3,000 sq. ft.
Slurry Processing and SO_2 Recovery:	
(fluidized handling)	25 to 35,000 sq. ft.
(rotary handling)	50 to 60,000 sq. ft.
H_2SO_4 Plant including 30 Day Storage:	35 to 45,000 sq. ft.
Sulfur Plant	15 to 20,000 sq. ft.

7.10 PROCESS COSTS

The Tennessee Valley Authority's conceptual design and cost study[1] provided capital and operating cost estimates for this process as applied to various sized utility plants. Figure 7-4 provides a capital cost curve for the SO_2 regeneration section which reflects the TVA cost estimates for this section with appropriate escalation and indirect changes. The capital costs for the SO_2 absorption section have been taken from the general cost curves developed in Appendix B. These two sets of data have been combined to develop the parametric capital cost curves relating SO_2 concentration and gas flow rate provided in Figure 7-2.

Operating costs which also cover both the absorption section and the regeneration section have been developed from data reported in the TVA report above and in a summary of operating results from the Boston Edison installation. Specific values are provided in Table 7.1. Total annual direct operating cost curves for a range of SO_2 concentrations are provided in Figure 7-3.

Tables 7.2 and 7.3, respectively, provide capital and operating cost details for the magnesium oxide process itself and for the overall control system, which includes the gas conditioning section and an auxiliary sulfuric acid plant. These tables provide direct comparison with similar tables for the other SO_2 control processes under evaluation.

7.11 ADVANTAGES AND DISADVANTAGES

Advantages of this process are:

1) Process has been commercially demonstrated in both the the United States and Japan and additional units are presently in construction and/or planning stages in the United States. Long-term reliability can be expected to continue to improve quite rapidly.

2) Utilization of the regenerated SO_2 can be obtained as high grade sulfuric acid via a conventional H_2SO_4 plant or as elemental sulfur via an SO_2 reduction step.

3) There is an appreciable degree of independence between the regeneration step and the SO_2 removal step. Outages of the regeneration facilities and the end use acid or sulfur plant can be tolerated without interruption of the SO_2 section.

This flexibility also allows the regeneration step to be accomplished at a different location from the SO_2 control point and offers the potential of having one regeneration and SO_2 use facility servicing a number of SO_2 control facilities.

4) The use of the venturi scrubber for SO_2 removal provides considerable turn-down capability and the ability to handle fluctuating input gas flows without incurring problems either within the scrubber itself or in the slurry handling section.

5) The process produces only minor quantities of waste material associated with the purge requirements of the systems.

The most important disadvantage of the process is:

1) The energy requirements for SO_2 regeneration are high and can account for 60 percent or more of the total annual costs. They are directly related to the SO_2 content of the gas to be treated and the SO_2 recovered. Although the SO_2 removal capability of the process is excellent over a wide range of SO_2 contents, the related energy requirements suggest that its application potential is best utilized on low SO_2 content (< 2 percent SO_1 gas streams).

7.12 REFERENCES

1. McClamery, G.G., Torstrick, R.L., et al. "Conceptual Design and Cost Study - Sulfur Oxide Removal from Power Plant Stack Gas," Tennessee Valley Authority, EPA-R2-73-244, May 1973.

2. Downs, W., and Kubasco, A.J., "Magnesia Base Wet Scrubbing of Pulverized Coal Generated Flue Gas - Pilot Demonstration," Babcox and Wilcox Company for EPA, Report 5153, September, 1970.

3. Chertkov, B.A. "The Influence of SO_2 Concentration in a Gas on its Rate of Absorption by Different Solvents," Khim. Prom. 7. 586-91, 1959.

4. Koehler, G.R., and Dober, E.J. "New England SO_2 Control Project-Final Results," Chemical Construction Company, Paper Presented at EPA Flue Gas Desulfurization Symposium, Atlanta, Georgia, November, 1974.

5. Jumpei, Ando. "Utilizing and Disposing of Sulfur Products from FGD Processes in Japan." Paper Presented at EPA Flue Gas Desulfurization Symposium, Atlanta, Ga., November 1974.

6. Chertkov, B.A. "Mass Transfer Coefficients During Absorption of SO_2 from Gases using Magnesium Sulfite and Bisulfite Solution," Khem. Prom. 7. 537-41 (1963).

7. Chertkov, B.A. "Oxidation of Magnesium Sulfite and Bisulfite during Extraction of SO_2 from Gases." J. App., USSR 33 (60) 2136-42 (1960).

8. Maxwell, M.A., and Koehler, G.R. "The Magnesia Slurry SO_2 Recovery Process Operating Experience with a Large Prototype System," Presented at American Institute of Chem. Engineers 65th Annual Mtg., New York, November, 1972.

9. Quigley, C.P. and J.A. Burns, "Assessment of Prototype Operation and Future Expansion Study - Magnesia Scrubbing, Mystic Generating Station," Paper presented at EPA Flue Gas Desulfurization Symposium, Atlanta, Georgia, November, 1973.

Table 7.1 MAGNESIUM OXIDE PROCESS UNIT USAGE AND COST DATA

A. Chemicals & Utilities	Basis	Unit Cost
MgO: (based on 5% loss)	0.0322 lb/lbSO_2	\$140/ton
Coke:	0.0105 lb/lbSO_2	\$26/ton
Power (a) Absorbing	4.0 KW/M SCFM	\$0.015/KWH
(b) SO_2 regeneration	0.10 KWhr/lbSO_2	
Make-up Water	0.2 gal/lb SO_2	\$0.30/M gal
Fuel Oil	0.037 gal/lbSO_2	\$0.30/gal
B. Operating Labor & Maintenance	**Basis**	**Unit Cost**
Labor (based on 365 day/yr)		
SO_2 Absorption	½ man/shift <75,000 SCFM 1 man/shift >75,000 SCFM	\$8/hr
SO_2 Regeneration	2 man/shift <10,000 lb/lbSO_2 2½ man/shift >10,000 lb/lbSO_2 1 man/day	
Maintenance	5% TCI/yr	
Insurance and taxes	2 1/2% TCI/yr	
C. Fixed Charges	13.12% TCI/yr	

Based on Capital Recovery Factor using 10% interest over 15 year life.

MAGNESIUM OXIDE SCRUBBING

TOTAL CAPITAL INVESTMENT COSTS

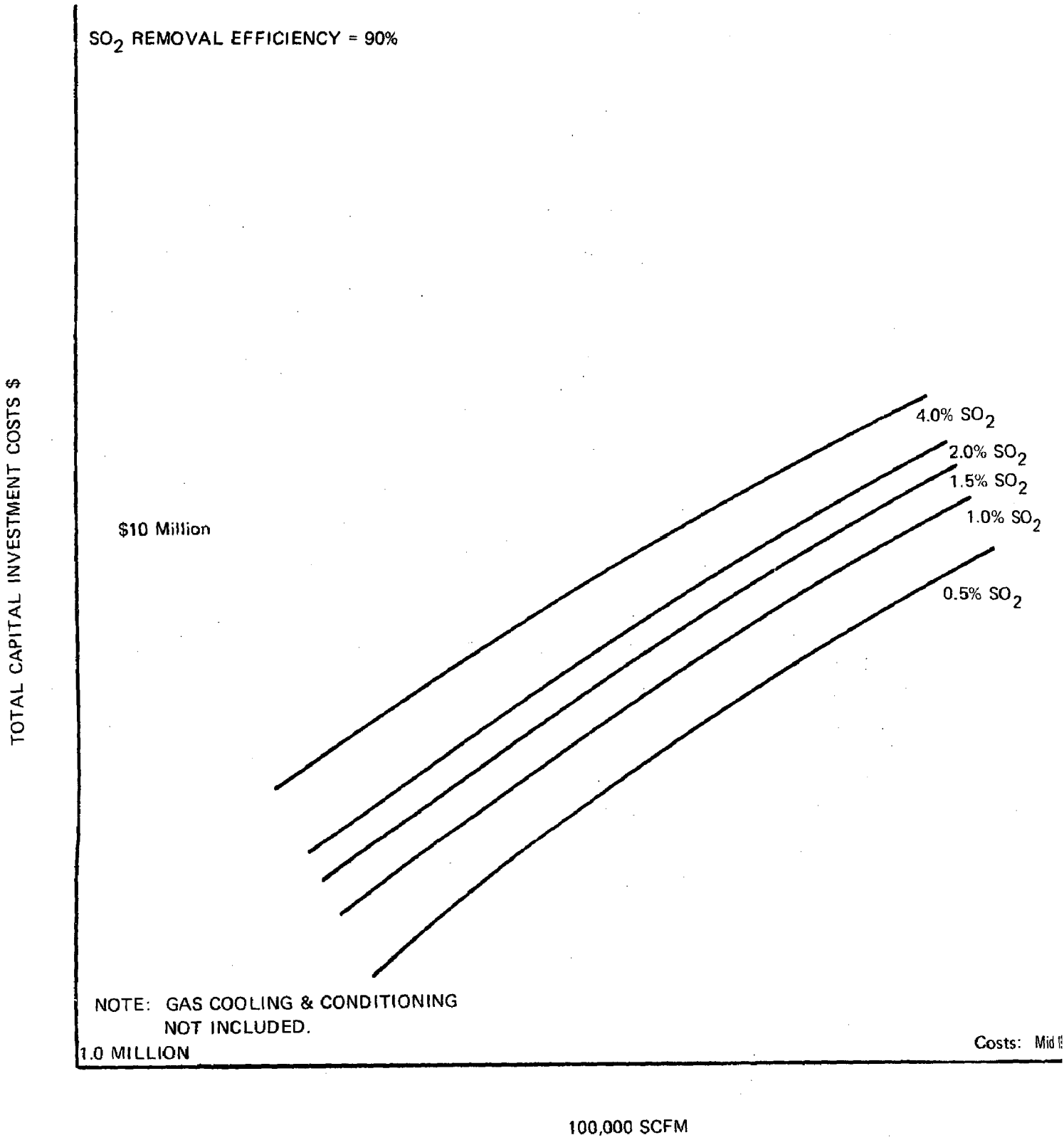

FIGURE 7.2

MAGNESIUM OXIDE SCRUBBING

TOTAL ANNUAL DIRECT OPERATING COSTS

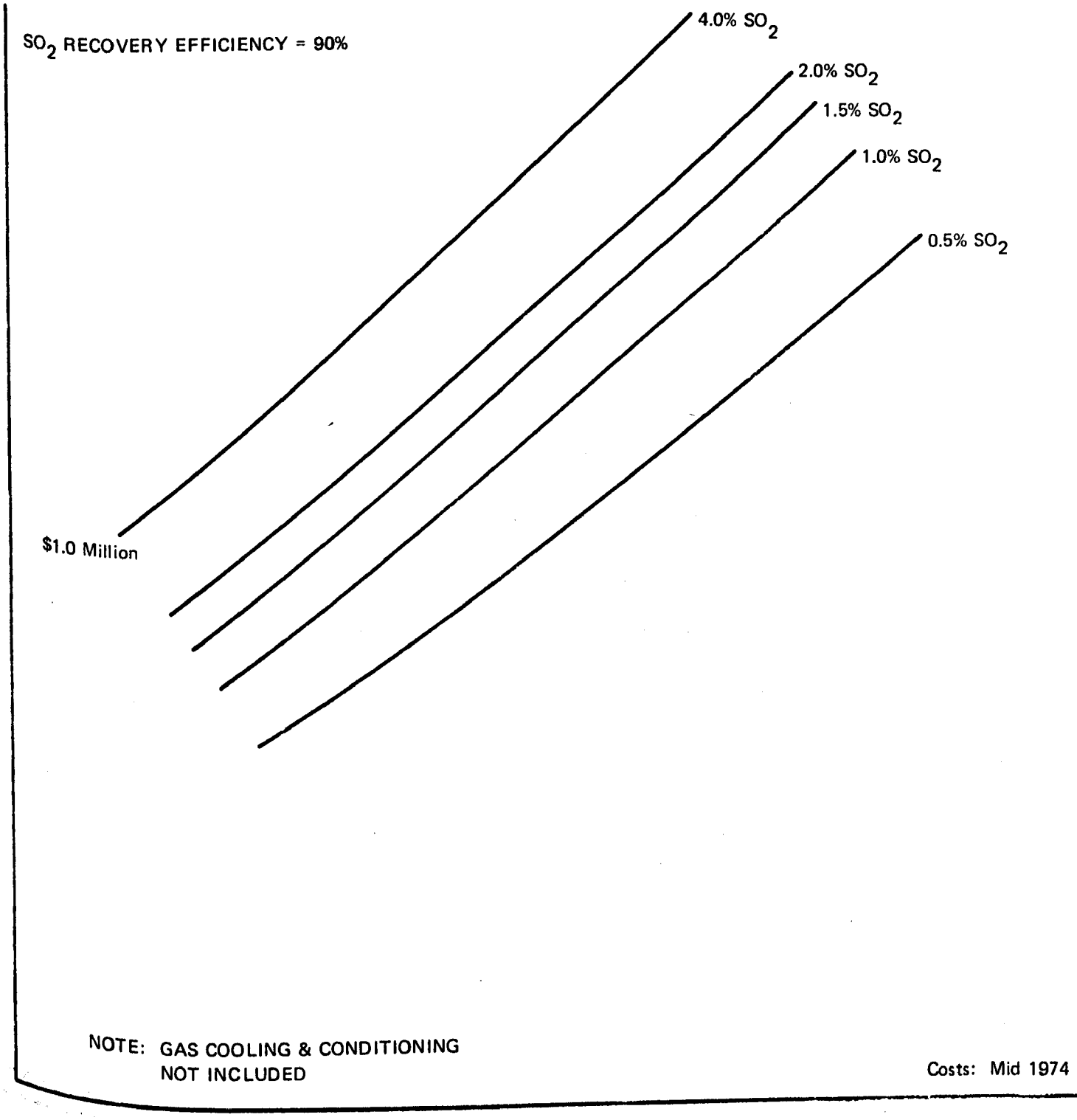

FIGURE 7.3

MAGNESIUM OXIDE SCRUBBING

TOTAL CAPITAL INVESTMENT COSTS
SO_2 REGENERATION SECTION

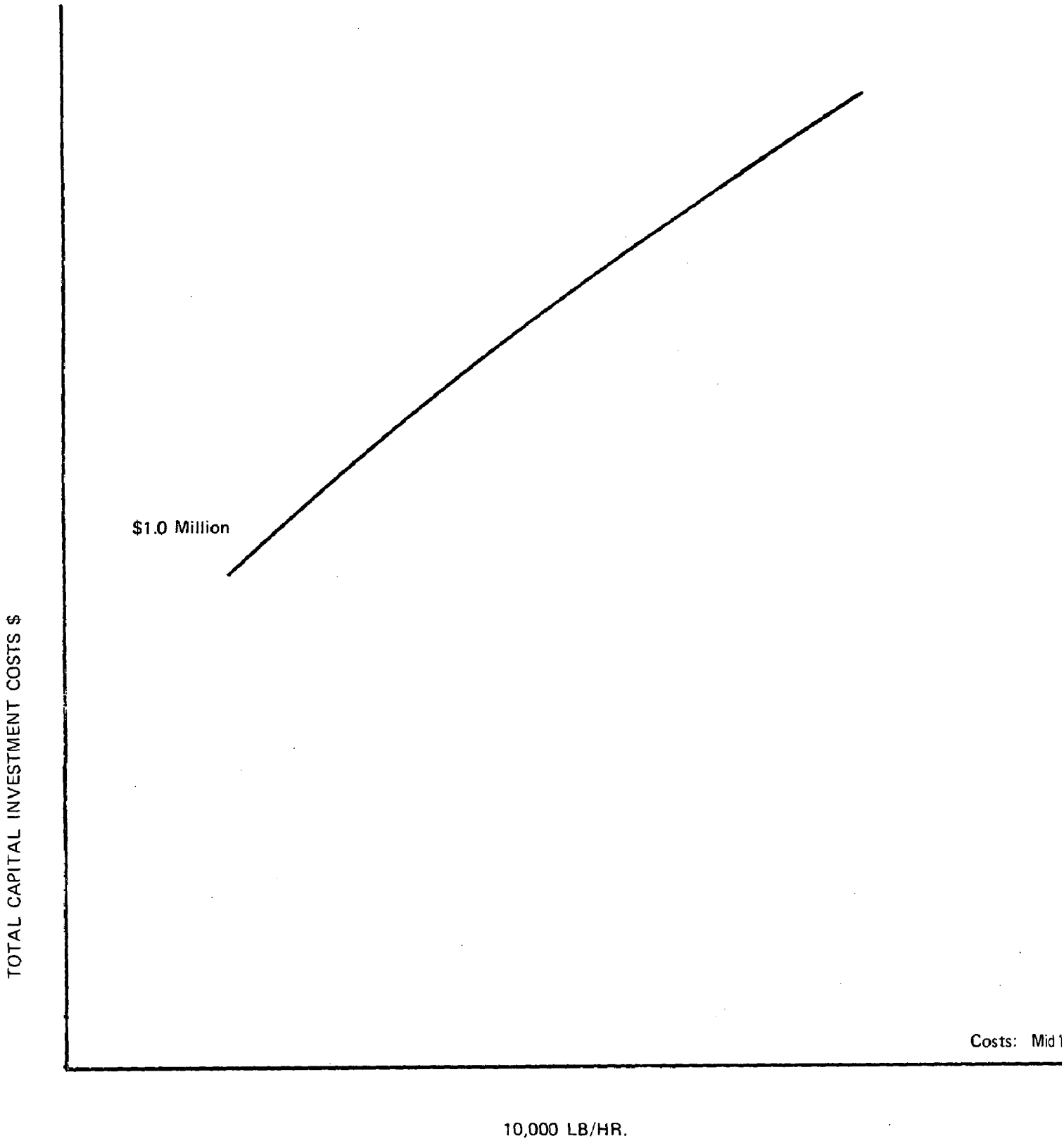

FIGURE 7

Table 7.2 MAGNESIUM OXIDE SCRUBBING

CAPITAL AND TOTAL ANNUAL COSTS

		Gas Flow Rate - SCFM @1% SO_2			
		70,000	100,000	200,000	300,000
TOTAL CAPITAL INVESTMENT	$	3,800,000	4,800,000	7,250,000	8,700,000
	$/SCFM	54	48	36	29
	$/Annual ton SO_2 Removed	145	129	97	78
Annual Cost					
A. Direct Operating					
1. MgO		117,500	167,800	335,600	503,400
2. Coke		7,100	10,100	20,200	30.400
3. Power		112,400	160,600	321,100	481,700
4. Fuel oil		578,200	826,000	1,651,900	2,477,900
5. Water		3,100	4,500	8,900	13,400
6. Labor		192,000	226,800	262,000	262,000
7. Maintenance		190,000	240,000	362,500	435,000
8. Taxes & Insurance		95,000	100,00	181,300	217,500
TOTAL ANNUAL DIRECT OPERATING COST		1,295,300	1,755,800	3,143,500	4,421,300
	$/yr/ton SO_2 Removed	50	47	42	40
B. Annual Capitalized Cost		499,700	631,200	953,400	1,144,100
C. Net Total Annualized Cost*		1,051,700	1,390,600	2,356,000	3,164,800
	$/yr/ton SO_2 Removed	40	37	32	28

*Based on Corporate Tax Rate of 48%.

Table 7.3 MAGNESIUM OXIDE SCRUBBING

TOTAL SYSTEM CAPITAL AND ANNUAL COSTS

		Gas Flow Rate - SCFM @1% SO_2			
		70,000	100,000	200,000	300,000
A. TOTAL CAPITAL INVESTMENT					
1. Gas Conditioning		1,800,000	2,275,000	3,550,000	4,650,000
2. SO_2 Absorption & Recovery		3,800,000	4,800,000	7,250,000	8,700,000
3. Sulfuric Acid Plant		2,000,000	2,520,000	3,950,000	5,400,000
TOTAL		7,730,000	9,800,000	15,000,000	18,750,000
	$/Annual ton SO_2 Removed	306	272	208	173
B. TOTAL ANNUAL OPERATING COST					
1. Gas Conditioning		273,100	370,600	613,500	843,300
2. SO_2 Absorption & Recovery		1,295,300	1,755,800	3,143,500	4,421,300
3. Sulfuric Acid Plant		245,700	295,700	474,500	619,700
TOTAL		1,814,100	2,422,100	4,231,500	5,884,300
	$/yr/ton SO_2 Removed	72	67	59	54
C. NET TOTAL ANNUALIZED COSTS*					
1. Gas Conditioning		321,100	419,100	672,200	740,000
2. SO_2 Absorption & Recovery		1,051,700	1,390,600	2,356,000	3,164,800
3. Sulfuric Acid Plant		326,800	404,600	639,700	859,500
TOTAL		1,699,600	2,214,300	3,667,900	4,764,300
	$/yr/ton SO_2 Removed	67	61	51	44

*Based on Corporate Tax Rate of 48%.

8.0 DIMETHYLANILINE/XYLIDINE PROCESS

8.1 PROCESS DESCRIPTION

In this process aromatic amines such as N,N-dimethylaniline (DMA) or 2,3-dimethylaniline (xylidine) are used to absorb the SO_2 from the gas stream. In the case of xylidine, the absorbent is an aqueous solution of xylidine, whereas the dimethylaniline is used essentially as 100 percent organic. The process is represented in Figure 8-1.[1] There are three distinct steps which make up this process:

1) <u>SO_2 Absorption</u> -- The cooled and cleaned flue gas is introduced into the bottom of a special bubble-cap type of absorber column containing three separate sections. The bottom section, where essentially all the absorption of SO_2 takes place, uses approximately eight trays. The second section, with usually only two or three trays, uses sodium carbonate to remove the residual sulfur dioxide. The third section, with its nine or so trays and sulfuric acid feed, scrubs the flue gas of the DMA/xylidine carried over from the bottom section.

Each of these units in the absorber tower is separate and distinct in operation and is provided with independent inlet and outlet nozzles for liquid flows. The liquid phases are kept separate for subsequent treatment.

In the DMA system, as the SO_2 is absorbed by the anhydrous DMA, its color changes from light yellow to deep ruby red.

Considerable heat is evolved during the absorption of sulfur dioxide and to optimize the absorption process, inter-tray coolers are provided on the bottom absorption section.

2) <u>SO_2 Absorption</u> -- The SO_2-enriched DMA/xylidine stream is pumped from the absorber via an appropriate heat exchanger to a second multi-section bubble-cap type column. The SO_2-pregnant stream is introduced into the middle or stripper section of this column, and as it passes down the four or five trays in this section, the SO_2 is liberated by the rising steam and SO_2 stream from the bottom or regenerator section. The regenerator section with usually seven or eight trays, treats the combined dilute sulfuric acid and sodium carbonate (sulfite and sulfate) streams from the main absorber column to release dimethylaniline/xylidine

vapor and SO_2 which passes up through the stripper section. This total vapor load of SO_2 and dimethylaniline/xylidine then passes into the top or rectifier section of the column where it is scrubbed with water. The DMA/xylidine vapors in the presence of SO_2 are converted to the sulfite form, dissolved in the water which overflows into the stripper section below and joins the rich absorbent stream. The DMA/xylidine stream from the bottom of the stripper section is transferred via the heat exchanger to a separator where the DMA/xylidine separates and is returned to the SO_2 absorption section.

The SO_2 stream leaving the rectifier is cooled and scrubbed with water to remove the last traces of DMA/xylidine before passing to the SO_2 utilization section.

A purge stream containing the sodium sulfate is removed from the bottom of the regenerator section.

3) SO_2 Utilization -- Although any SO_2 utilization plant can be coupled to the DMA/xylidine Process, an SO_2 liquefaction plant is common, and this system has been considered as being integral with this particular SO_2 control process.

The cold SO_2 stream from the after scrubber of the regeneration section is dried in a drying tower using 98 percent sulfuric acid, compressed, cooled and run to storage.

8.2 PROCESS AND OPERATING CONSIDERATIONS

The process and operating considerations are similar for both the anhydrous dimethylaniline and the aqueous xylidine processes although there are some important differences.

Since the DMA system is essentially anhydrous, it is not particularly susceptible to oxidation in the absorber section. The small amount of DMA sulfate formed is readily converted to DMA and sodium sulfate during the regeneration process, and the Na_2SO_4 is removed as part of the purge. However, DMA sulfate is also formed in the top section of the absorber column where the DMA vapors are scrubbed with dilute sulfuric acid. This sulfate is converted back to DMA and sodium sulfate in the regeneration loop but the amount of sodium sulfate formed and purged is related to the SO_2 concentration in the gas feed. As the SO_2 concentration in the gas feed drops, the production of sodium sulfate per unit of SO_2 removed increases dramatically. At 5 percent SO_2, sodium sulfate formation

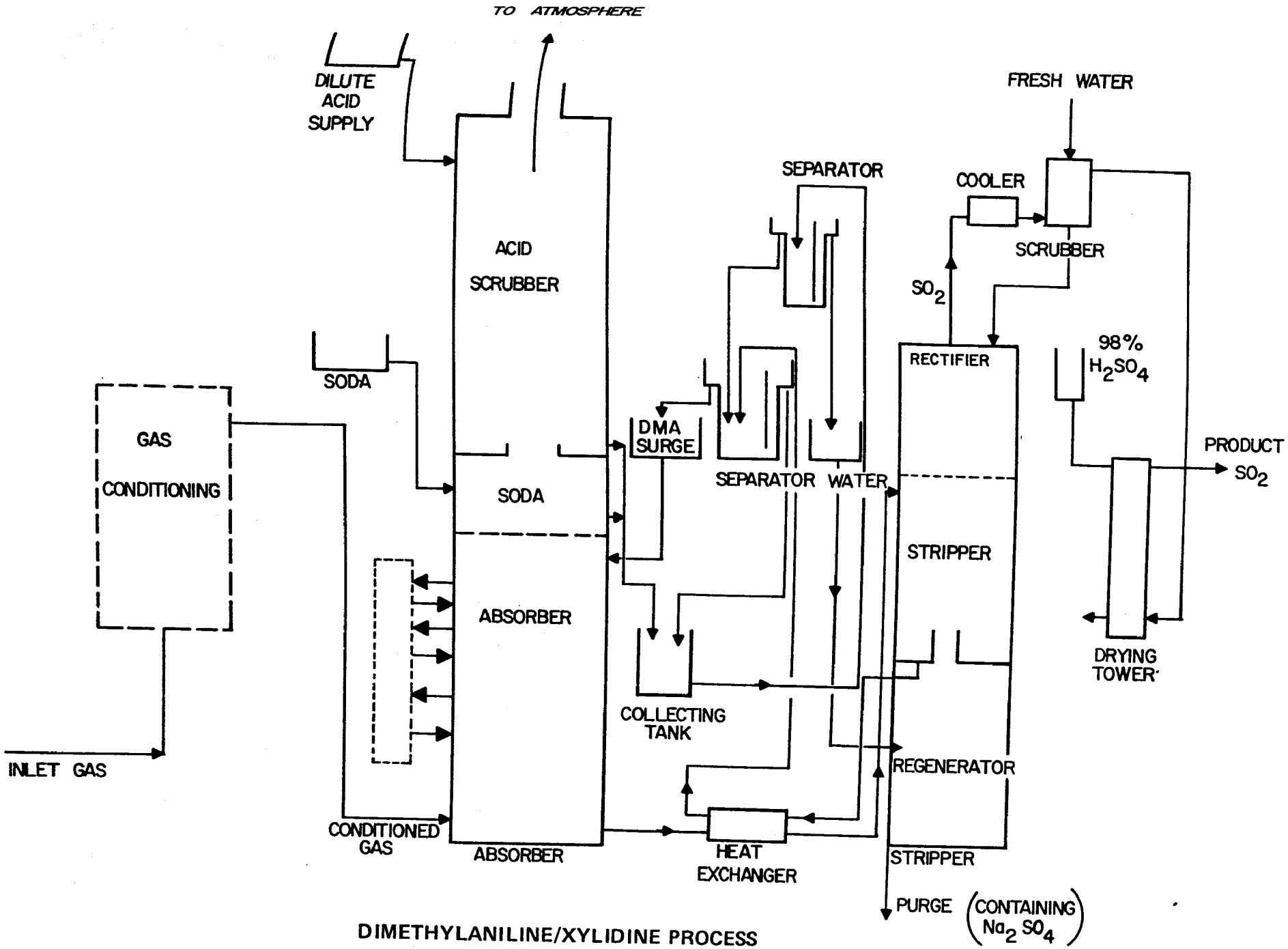

DIMETHYLANILINE/XYLIDINE PROCESS

FIGURE 8-1

is on the order of 40 lbs/ton SO_2 recovered, but at 0.5 percent SO_2 in the gas feed, the sulfate rate increases to 400 lbs/ton SO_2 recovered. At the lower concentrations of SO_2, the solubility of SO_2 in DMA is reduced. Pastnikov and Astashera[2] have reported an equilibrium solubility of SO_2 in DMA of 250 grams/liter for an SO_2 gas stream at 5 percent against a value of 25 grams/liter for an SO_2 gas stream at 0.5 percent. Hence at lower SO_2 concentrations, higher recirculation rates of DMA are required and this tends to increase DMA losses, increase both Na_2CO_3 and H_2SO_4 usage levels, and results in increased sodium sulfate generation.

On the other hand, the xylidine system with its higher solubility capability at the low SO_2 concentrations is not penalized in this manner when treating weak SO_2 gas streams, but being an aqueous solution, it does experience high oxidation rates in the absorber section itself as the oxygen/SO_2 ratio increases. This situation requires special additional treatment of the absorbent stream with Na_2CO_3 to regenerate the xylidine and the overall result is to increase significantly the load on the regeneration section and the necessary sodium sulfate purge. This higher stripper water bleed off to the regenerator is essential to prevent the formation of solid reaction products within the system itself through the reduced solubility of xylidine sulfate in water.

There is some uncertainty as to at what point one process begins to demonstrate advantages over the other, although two authors with considerable experience in this particular process have expressed the opinion that the DMA system is competitive with the xylidine system down to as low as 2 percent SO_2.[3]

To enhance the SO_2 solubility capability of both process versions but particularly the DMA system, intercoolers are required between each of the absorption section trays to remove the heat of absorption. An advantage of these coolers is that they reduce the vapor pressure of the DMA and, accordingly, reduce losses. This in turn reduces chemical consumption and indirectly the formation of sodium sulfate.

8.3 PROCESS DEVELOPMENT STATUS

There are a number of DMA systems installed in both the U.S. and overseas.

The American Smelting and Refining Company (ASARCO) initially applied the DMA process to the recovery of SO_2 from lead sinter machine gases at its Selby, California lead plant (now closed) in the late 1940's. This plant recovered approximately 20 tons of liquid SO_2/day from gases with an SO_2 content ranging from 4-6 percent. ASARCO completed a second DMA plant at its Tacoma, Washington plant in 1973-74, rated at 200 TPD liquid SO_2 processing copper converter gases of variable SO_2 content (3-10 percent) but averaging about 5 percent.[4] This plant is in operation today and is performing as expected.

ASARCO has also licensed construction of DMA plants as follows:

1) Phelps Dodge Corporatio, Ajo, Arizona -- This plant was nominally rated at 160 TPD liquid SO_2 and originally was to treat mixed copper converter and reverberatory gases. Although the plant was commissioned in 1973, operation has been only spasmodic with numerous mechanical and equipment problems. The plant has been modified and it is expected to start up at reduced capacity on reverberatory gases only (1-3 percent SO_2) during the second half of 1975.

2) Cities Service Company, Copperhill, Tennessee -- Two plants rated at 40 and 55 TPD liquid SO_2 were eventually brought into operation. The gas feed uses a mixture of gases from iron and copper roasters, reverberatories and converters with an SO_2 content of about 6 percent.

3) General Products Company, S.A. Mexico City -- Plant rated at 5 TPD liquid SO_2 treating gases containing 16 percent SO_2.

4) Real Compania Asturiana de Mines, Torrelavega, Spain -- Plant capacity 165 TPD liquid SO_2.

It is apparent that the DMA process operating on SO_2 streams with concentrations above 4 or 5 percent is a proven commercial process. Its effectiveness, either in the DMA or xylidine variation, on weaker SO_2 streams is much less certain. The Ajo installation is yet to demonstrate its capability on low SO_2 content streams, and the literature references to commercial application of the xylidine (or sulphidine) process in Europe are dated and discuss small installations prior to 1945.[5] One installation in the Norddeutsche Affinerie in Hamburg during the 1930's[6] reportedly used the xylidine process to treat copper converter gases containing 0.5-8.0 percent SO_2 (average 3.6 percent).

8.4 PROCESS DESULFURIZATION EFFICIENCY

This process appears to be capable of very high SO_2 recovery efficiences. A number of references[5,6] have indicated efficiency levels of above 98 percent but in each case, the process was applied on streams of 5-8 percent SO_2 content. However, there is no reason to expect that removal efficiencies of at least 95 percent could not be met on weak SO_2 streams.

8.5 SULFITE OXIDATION

The presence of oxygen in the flue gas entering the SO_2 absorber will result in only a small amount of oxidation in the essentially anhydrous DMA system. An early reference[1] indicates that the oxidation in a DMA system treating 3.5 percent SO_2 or greater is only 0.3 percent.

In the aqueous xylidine system, however, especially when treating low SO_2 gases and the oxygen/SO_2 is high, oxidation in the absorber itself can be high. Under this situation, it is necessary to add dilute sodium carbonate to the xylidine absorbent stream itself to enhance conversion of the xylidine sulfate and polythionate to free xylidine and sodium sulfate and sodium thiosulfate, respectively, in the stripper section. The sodium compounds pass into the aqueous phase and are ultimately purged from the regenerator section. It should be noted that this special treatment is in addition to the normal treatment of the xylidine sulfate formed in the top section of the absorber column by stripping the gases with H_2SO_4. Obviously, the additional treatment of the absorbent stream does increase the use of makeup soda ash and overall operating costs.

8.6 FEED GAS TREATMENT

To minimize oxidation and enhance SO_2 solubility, the feed gas must be cleaned and cooled to approximately ambient temperatures. It has been stated that particulate removal equivalent to that required for a contact sulfuric acid plant treating metallurgical gas streams is required for the successful application of the DMA process.[7] The gas pretreatment section at ASARCO's Tacoma copper smelter which serves their DMA plant uses cyclones, spray chambers, dry electrostatic precipitators, unpacked and packed scrubbers and mist precipitators in a series-parallel configuration. The Ajo installation is not as comprehensive but it has

been necessary to install mist precipitators after the cooling and humidifying towers located after the dry electrostatic precipitator on the reverberatory gas system.

8.7 PARTICULATE REMOVAL CAPABILITY

The DMA/xylidine absorber has minimal particulate removal capability especially on gas streams which have already received an extensive precleaning sequence.

8.8 PROCESS ENERGY REQUIREMENTS

This process is not an energy intensive process. Blower horsepower requirements might be expected to be somewhat higher than for other scrubber systems because of the higher pressure drop associated with the special absorber column. Total power requirements (Kwh) per ton of SO_2 recovered will be inversely related to the concentration of SO_2 in the gas feed, with low strength streams incurring the high power values. Steam requirements will be greater with the xylidine approach than with DMA, but values of between 1 to 1.5 lbs/ton SO_2 appear likely.

8.9 RETROFITTING REQUIREMENTS

The DMA/xylidine process with its gas conditioning requirements and the necessity to locate the special absorber column and its associated intercoolers and secondary loops in proximity to the existing flue ductwork will pose retrofitting problems in any old or congested smelter. It is possible to locate the stripper section and SO_2 liquefaction section away from the absorption area, but based on the experiences at Tacoma and Ajo, DMA plants require at least 40-50,000 sq. ft. of total installation area.

8.10 PROCESS COSTS

The installations of DMA units at Tacoma and Ajo within the past 4 or so years have provided overall installed cost figures for two installations similar in rated SO_2 capacity--200 TPD and 160 TPD, respectively--and both handling gas streams of quite variable flow and SO_2 concentrations. As is commonly the case with such overall cost figures, and without the benefit of detailed work scope breakdowns, the two costs are difficult to evaluate. Some order of magnitude estimates have also been offered in correspondence between ASARCO representatives and EPA.[8] This data has been used after appropriate adjustment and escalation together with

the background information on both the DMA and xylidine processes to develop the capital and operating costs presented in Figures 8-2 and 8-3, respectively. The emphasis has been on a process treating low SO_2 content gases, and the operating costs have been extrapolated to reflect the impact of weak SO_2 streams on the cost structure. A cost study on the DMA Process prepared by Allied Chemical[9] was also reviewed in determining operating unit usage values.

It should be noted that with this process, although the capital costs tend to show a fairly narrow increasing spread of costs with SO_2 concentration, the highest operating costs are associated with the weakest SO_2 gas streams. As the gas stream SO_2 concentration increases, the operating costs are reduced, but at 4 percent SO_2 content the annual operating costs appear to increase. Obviously, this response reflects the way the costs, both capital and operating, have been structured.

For this process only, the SO_2 utilization section--i.e., compression and liquefaction--has been included in the basic process cost. Also because of the integrated nature of the SO_2 regeneration circuit and the absorption loop, no attempt has been made to provide a separate SO_2 regeneration cost curve as was done for the other candidate control processes.

Tables 8.2 and 8.3, respectively, provide capital and direct operating cost breakdowns for this process applied to a range of gas flows containing 1 percent SO_2 and a total system cost including gas conditioning for the same range of gas flows and SO_2 concentration.

8.11 ADVANTAGES AND DISADVANTAGES

Advantages of this process are:

1) Based on the experience with higher SO_2 streams, this system has few significant operating problems if the gases are adequately cleaned and conditioned.

2) The process achieves a high level of SO_2 removal efficiency over a wide range of SO_2 concentrations.

3) On higher SO_2 content gas streams, the DMA system provides good control of oxidation and is capable of treating higher oxygen level streams without penalty.

The disadvantages of the process are:

1) The xylidine alternative for treating low SO_2 content streams is a relatively undemonstrated process.

2) Oxidation rates in the xylidine system treating low SO_2 content gases are relatively high and increase with decreasing SO_2 concentration. Control becomes more critical.

3) Chemical consumption and steam requirements increase as the SO_2 concentration drops.

8.12 REFERENCES

1. Office of Water and Air Programs, EPA, Background Information for New Source Performance Standards: Primary Copper, Zinc, and Lead Smelters, February, 1974, pp. 4-65 to 4-74.

2. Pastinikov and A.A. Astasheve. J. Chem. Ind. (USSR) 17(3): 14-19 (1940.)

3. Fleming, E.P. and T.C. Fitt, "Liquid Sulfur Dioxide from Waste Smelter Gases," Industrial and Engineering Chemistry, November 1950, pp. 2253-2258.

4. Henderson, J.M. and J.B. Pfeiffer, "Liquid SO_2 from Copper Smelter Gases - The ASARCO DMA Process," presented at the 78th National Meeting, American Institute of Chemical Engineers, Salt Lake City, Utah, August 1974.

5. Meisel, G.M., "Sulfur Recovery," Journal of Metals, May 1972, pp. 31-39.

6. Weidmann, H. and G. Rosener, Industrial and Engineering Chemistry, New Edition, March 1936, p. 105.

7. Kohl, A.L. and F.C. Riesanfeld, "Gas Purification," McGraw-Hill, New York, 1960, pp. 197-209.

8. Henderson, J.M., ASARCO. Private communication to Jack R. Farmer, EPA, March 15, 1973.

9. "Applicability of Reduction to Sulfur Techniques to the Development of New Processes for Removing SO_2 from Flue Gases," Vol. II, Allied Chemical Corporation, Morristown, New Jersey, November 1970, NTIS PB 198-408.

Table 8.1. DMA/XYLIDINE PROCESS

UNIT USAGE AND COST DATA

A. Chemicals & Utilities	Basis	Unit Cost
DMA/Xylidine	$\left(\frac{.002}{\sqrt{\frac{\%SO_2}{100}}}\right)$ lb/MSCFM	$ 0.50/lb
Sulfuric Acid	$\left(\frac{0.034}{\sqrt{\frac{\%SO_2}{100}}}\right)$ lb/MSCFM	$ 48/ton
Soda Ash (Na_2CO_3)	$\left(\frac{0.03}{\sqrt{\frac{\%SO_2}{100}}}\right)$ lb/MSCFM	$ 52/ton
Electric Power (a)	8.0 KW/MSCFM	$ 0.015/KWh
(b)	0.02 KWh/lbSO_2	
Cooling Water	$300\sqrt{\frac{\%SO_2}{100}}$ gal/MSCFM	$ 0.1/Mgal
Steam	1.5 lbs/lbSO_2	$ 1.25/Mgal
B. Operating Labor & Maintenance		
Labor	2 man/shift	$ 8/hr
Maintenance	5% TCI/yr	
Insurance & Taxes	2½% TCI/yr	

C. Fixed Charges 13.15% TCI/yr

Based on Capital Recovery Factor using 10% interest over 15 year life.

DMA/XYLIDINE SCRUBBING

TOTAL CAPITAL INVESTMENT COSTS

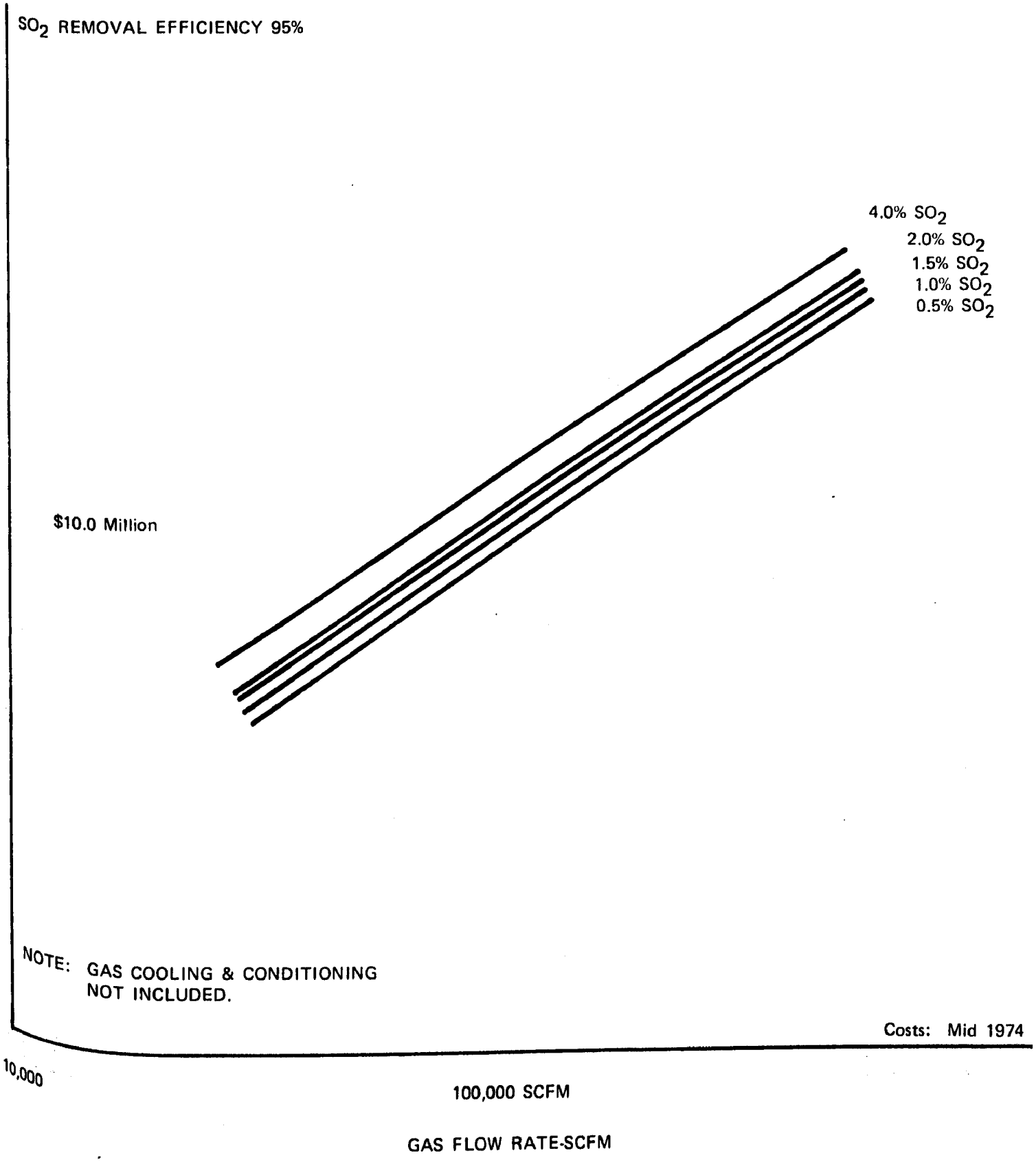

FIGURE 8-2

DMA/XYLIDINE SCRUBBING

TOTAL ANNUAL DIRECT OPERATING COSTS

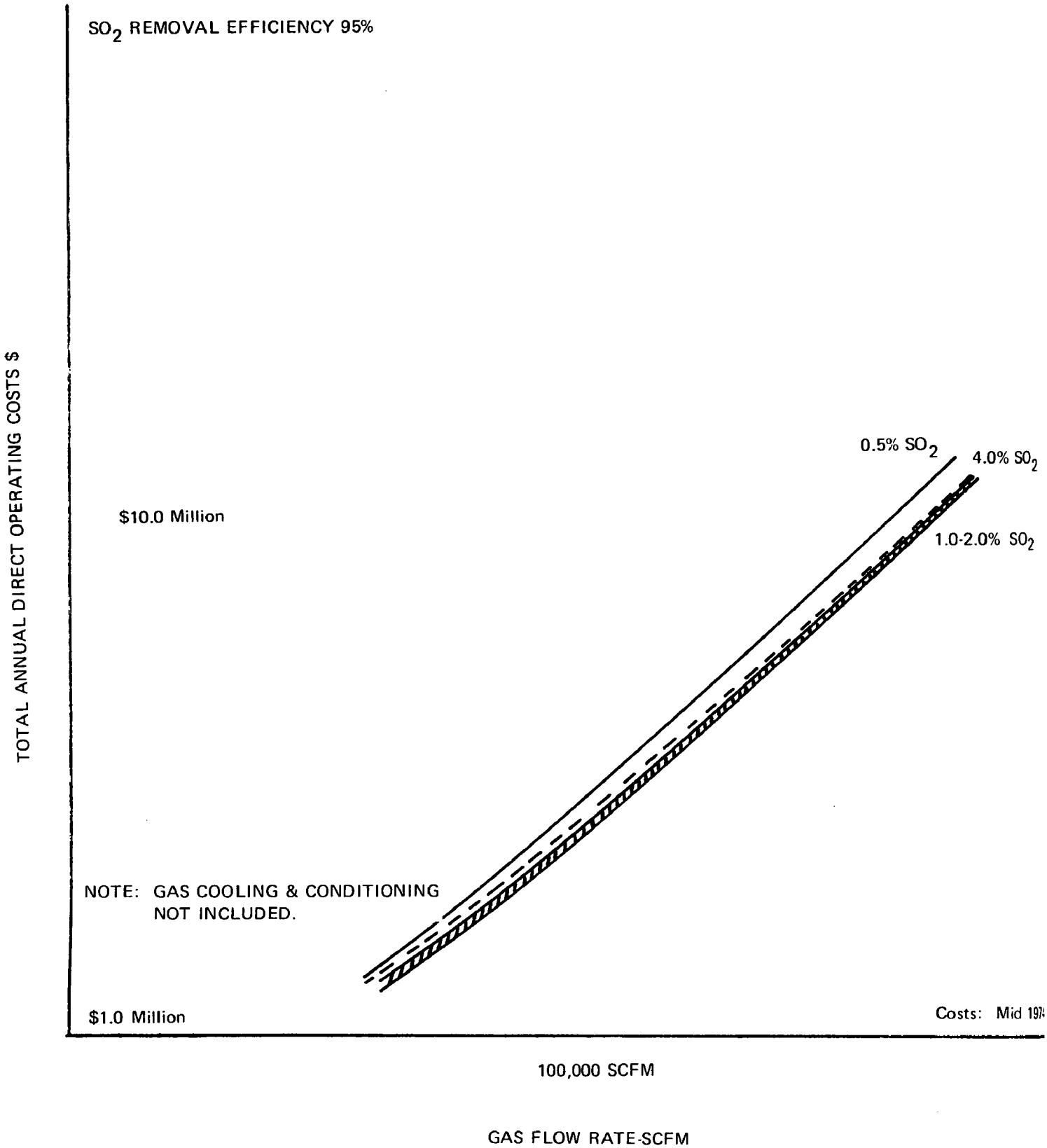

FIGURE

Table 8.2. DIMETHYLANILINE/XYLIDINE PROCESS

CAPITAL AND TOTAL ANNUAL OPERATING COSTS

		Gas Flow Rate - SCFM @1% SO_2			
		70,000	100,000	200,000	300,000
TOTAL CAPITAL INVESTMENT	$ $/SCFM $/Annual Ton SO_2 Removed	8,000,000 114 291	10,230,000 102 261	16,200,000 81 206	21,560,000 72 183
Annual Cost					
A. Direct Operating					
1. Power		85,000	121,500	243,000	364,500
2. Water		102,800	146,900	293,800	440,600
3. Steam		102,800	146,900	293,800	440,600
4. Soda Ash (Na_2CO_3)		267,300	381,900	763,800	1,145,700
5. Sulfuric Acid		279,700	399,500	799,000	1,198,500
6. DMA/Xyline		342,700	489,600	979,200	1,468,800
7. Labor		140,200	140,200	140,200	140,200
8. Maintenance		400,000	511,500	810,000	1,078,000
9. Taxes & Insurance		200,000	255,800	405,000	539,000
TOTAL ANNUAL DIRECT OPERATING COST		1,920,600	2,593,800	4,727,800	6,815,900
	$/yr/ton SO_2 Removed	70	66	60	58
B. Annual Capitalized Cost		1,052,000	1,345,000	2,130,300	2,835,000
C. Net Total Annualized Cost*		1,794,700	2,366,000	4,070,400	5,689,400
	$/yr/ton SO_2 Removed	65	60	52	48

*Based on Corporate Tax Rate of 48%

Table 8.3. DIMETHYLANALINE/XYLIDINE PROCESS

TOTAL SYSTEM CAPITAL AND ANNUAL OPERATING COSTS

		Gas Flow Rate - SCFM @1% SO_2			
		70,000	100,000	200,000	300,000
A. TOTAL CAPITAL INVESTMENT					
1. Gas Conditioning		1,800,000	2,275,000	3,550,000	4,650,000
2. SO_2 Absorption and Recovery		8,000,000	10,230,000	16,200,000	21,560,000
TOTAL		9,800,000	12,505,000	19,750,000	26,210,000
	$/Annual ton SO_2 Removed	356	319	252	226
B. TOTAL ANNUAL OPERATING COSTS					
1. Gas Conditioning		273,100	370,600	613,500	843,300
2. SO_2 Absorption and Recovery		1,920,600	2,593,800	4,727,800	6,815,900
TOTAL		2,193,700	2,964,400	5,341,300	7,659,200
	$/yr/ton SO_2 Removed	80	76	68	65
C. NET TOTAL ANNUALIZED COSTS*					
1. Gas Conditioning		321,100	419,100	672,200	740,000
2. SO_2 Absorption and Recovery		1,794,700	2,366,000	4,070,400	5,689,000
TOTAL		2,115,800	2,785,100	4,742,600	6,429,000
	$/yr/ton SO_2 Removed	77	71	60	55

9.0 CITRATE PROCESSS

9.1 PROCESS DESCRIPTION

The citrate process as it is presently defined uses an aqueous solution of citric acid, sodium citrate and sodium thiosulfate to scrub the SO_2-containing gas; the SO_2-containing absorbent is treated with H_2S to precipitate elemental sulfur; part of the sulfur produced is recycled for production of H_2S while the balance is removed as product.

The overall process is comprised of the following steps or sections and is depicted in Figure 9-1 which follows the flowsheet provided by the Smelter Control Research Association in their report to the Bureau of Mines.[1]

1) Sulfur Dioxide Absorption -- The input SO_2-containing gas, cooled to between 108-125°F (42-52°C) and cleaned of particulate material in an appropriate gas conditioning system, is contacted countercurrently in either a packed column or an impingement plate column with the aqueous citrate solution. The treated gas passes through an entrainment separator before discharge to the stack. The SO_2-loaded citrate solution is pumped to the regeneration section.

2) Regeneration -- The SO_2-rich solution from the absorber feeds a cascade of three agitated regenerator vessels where it is contacted countercurrently with an H_2S stream to precipitate elemental sulfur. The reaction is moderately exothermic and is maintained at a temperature of around 150°F (65.56°C). If the H_2S is generated by the interaction of methane and sulfur, the gas stream is actually a mixture of H_2S and CO_2 and the first vessel is vented back to the SO_2 absorber or to an appropriate incinerator to oxidize the excess H_2S. The sulfur slurry flows to a conditioning tank where kerosene (or SAE 10 motor oil) is introduced to agglomerate and float the sulfur. This material containing about 50 percent solution is skimmed and transferred to a melter where the sulfur is melted at about 275°F (135 °C). Molten sulfur and citrate solution pass into a closed settler tank under a pressure of 35 psi. Molten sulfur is tapped from the bottom for casting into blocks or pumping to the H_2S generation section. Citrate solution and oil are withdrawn from the top of the settler through a knockout pot, filter, cooler and decanter for re-use. The regenerated citrate solution from the settler passes through a settling tank and after filtration is returned to the absorption tower.

3) H_2S Generation -- The filtered liquid sulfur is preheated, vaporized and superheated to 122°F (649°C). Part of the steam and natural gas required for H_2S generation is also preheated and mixed with part of the sulfur vapor before entering the catalytic H_2S reactor. The remaining sulfur vapor is blended with an unpreheated steam-natural gas mixture and is injected into the catalytic bed to maintain near isothermal bed temperature. The heat of the reaction products, H_2S and CO_2, is used to preheat the sulfur feed and for steam generation before final cooling to about 140°F (60°C) and transfer to the regeneration section.

4) Sulfate Purge -- A slipstream from the regenerated citrate solution to the SO_2 absorber is treated in a crystallization unit where the solution is cooled to about 40°F (5°C) to crystallize out Glauber's salt or sodium sulfate decahydrate. The recovered mother liquor returns to the regenerated citrate solution loop and the sodium sulfate crystals are disposed of.

It should be noted that the Bureau of Mines is currently working on a process option to the normal process whereby the SO_2-enriched absorbent is steam-stripped to release the SO_2 rather than proceeding through the H_2S reaction step and recovery of elemental sulfur. Steam consumption rates are at present high; rates of 10 lb steam/lb SO_2 are required when absorbing from a 0.5 percent SO_2 inlet gas.[1]

9.2 PROCESS AND OPERATING CONSIDERATIONS

The citrate process uses the citrate ion, provided by the presence of citric acid and sodium citrate in an aqueous solution, as a buffering agent to increase the solubility of SO_2 in water. Under usual conditions, the absorption of SO_2 in water is pH dependent, and as hydrogen ions are released by the dissociation of the sulfurous acid, it becomes self-limiting. The equilibrium condition may be expressed as:

$$SO_2 + H_2O \rightleftarrows HSO_3^- + H^+.$$

The buffering action of the various citrate species removes the hydrogen ions and allows substantially higher SO_2 loadings to be attained by the absorbent. Thus the solubility of SO_2 in an aqueous solution is a

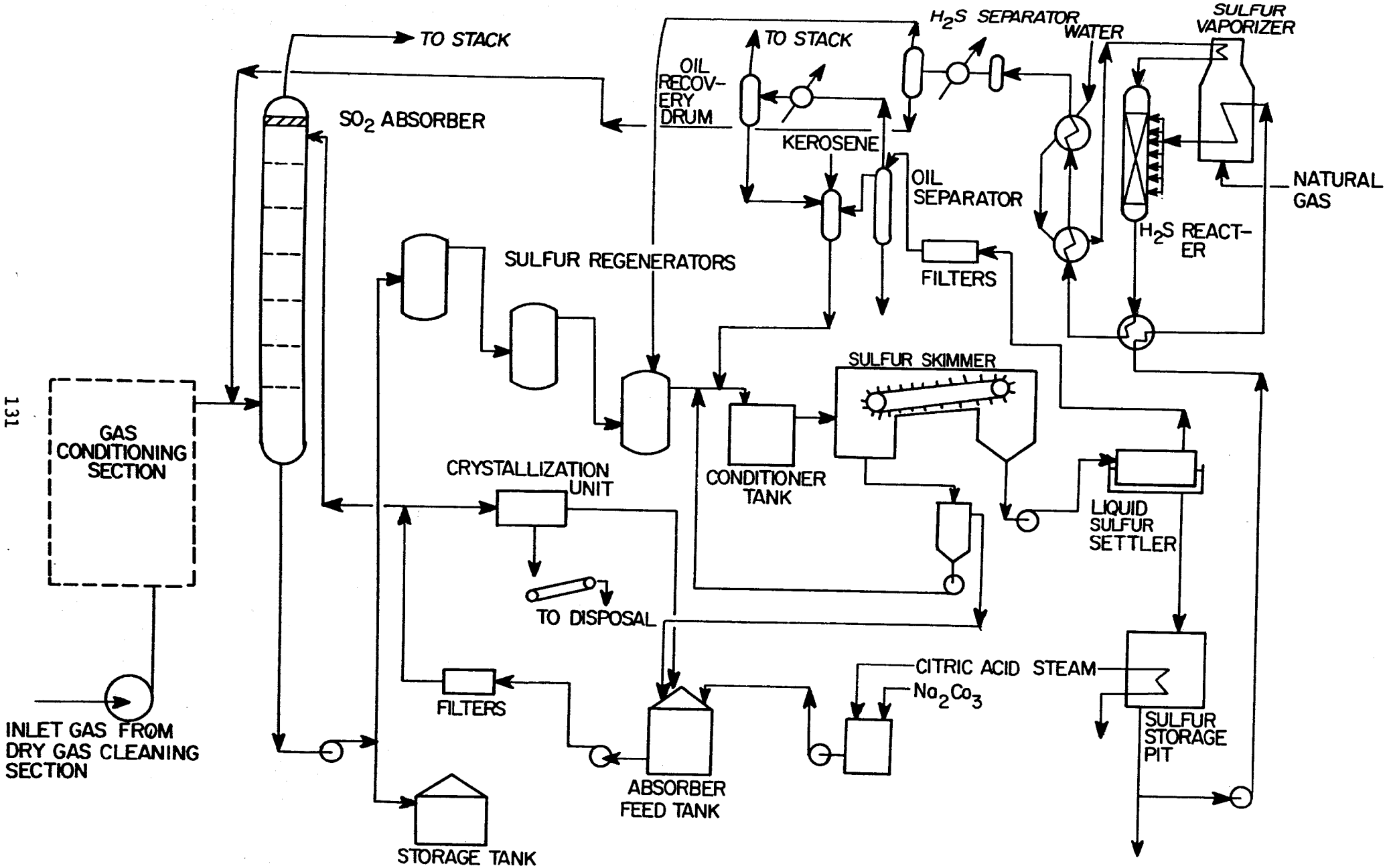

CITRATE PROCESS

FIGURE 9.1

function of the partial pressure of SO_2 in the gas phase, the hydrogen ion concentration and the ionization constants of sulfurous acid. The important relationships in the citrate process can therefore be identified as:

1) the solution pH
2) the citrate concentration
3) the concentration of the SO_2 in the gas feed
4) the temperature of the gas feed.

Sulfur dioxide absorption is favored by increased pH and buffer content of the solution, increased SO_2 content of the gas feed, and decreased temperature. Under operating plant conditions, the citrate concentration would be established at the lowest level compatible with the SO_2 content of the gas and requisite solution flows, and the operating temperature selected would balance the advantages of higher SO_2 loading of the absorbent at lower temperatures against the increased cost of gas cooling. The absorbent recirculation rate used for a specified SO_2 removal efficiency will depend on the actual citrate concentration selected to satisfy the SO_2 content of the gas input. In the Bureau of Mines Bunker Hill pilot plant program, the absorbent flow rate on a gas stream of 1000 SCFM containing 0.5 percent SO_2 was about 10 gal/minute for a 0.5 M citrate solution to give an SO_2 loading of about 10 grams/liter. The pH limit is controlled by the regeneration step rather than the absorption step, but the test work to date on the above gas stream has been conducted in the pH range of 4.0 to 4.6 using 0.5 M citrate solution with a molar ratio of NaOH to citric acid of 2. Operating temperatures have been in the range of 108 to 149°F (42 to 65°C).

In practice, when regenerated absorbent is returned to the absorption loop, thiosulfate is introduced into the system. The thiosulfate ion complexes with the HSO_3^- and H^+ formed in the absorption process, and thereby sharply depresses oxidation of the HSO_3^-. SO_2 absorption itself is also aided by the presence of the thiosulfate. The presence of thiosulfate in the absorbent solution is therefore an essential element of the citrate process.

The chemistry of the citrate process is discussed in some detail by a Bureau of Mines publication[3] and a paper presented at the American Chemical Society National Meeting in 1974.[4] The overall stoichiometry of the regeneration reaction is the same as the gas-phase Claus reaction,

but the chemistry is more complex than that represented by the usual reaction:

$$SO_2 + 2H_2 \rightarrow 3S + 2H_2O.$$

At pH 4.0 to 4.5, the usual pH of the citrate absorbent solution, thiosulfate, trithionate, tetrathionate, and polythionates are all believed to be formed in the regeneration step, with further reactions with H_2S yielding elemental sulfur. The discussion of the regeneration chemistry provided in the paper by representatives of the McKee-Peabody-Pfizer group[4] indicates that the reaction of H_2S with thiosulfate is the rate determining step in regeneration and that by allowing the thiosulfate concentration to build up in the system, the reaction rate is increased and smaller reactors can be used. They also note that an important feature of the citrate process is the capability of the buffering capacity of the citrate content and the thiosulfate content to minimize short-term overloads of either SO_2 or H_2S.

As with all closed loop systems, the cumulative buildup of oxidation products, particulates, and other soluble impurities contributed by the makeup water and process chemicals must be controlled by purging a part of the recirculated absorbing solution. The addition of soda ash, Na_2CO_3, to the recirculation loop of the absorbing solution produces Na_2SO_4 from the oxidation sulfate ion product which is readily removed after crystallation and filtration. This treatment will also tend to remove particulate matter by occlusion. A further treatment may be necessary to remove soluble impurities but the frequency and extent of this treatment will depend upon the characteristics of the makeup water and purity levels of the process chemicals used.

Although the process is being developed to yield elemental sulfur, variations of the process are possible. The SO_2-loaded citrate solution can be steam stripped, and depending on the level of solution loading, about two-thirds of the SO_2 can be recovered using 3 to 5 lbs of steam per lb SO_2.[3] The residual SO_2 in the solution would be precipitated in the normal manner by H_2S for H_2S generation with the regenerated citrate solution being returned to the scrubbing loop. This is an alternative

approach to complete stream stripping which requires almost twice the steam consumption. The stripped SO_2, after condensation of the water vapor, can be used as feed with approximate air dilution to a sulfuric acid or used to enrich a lean SO_2 gas stream for feed to a sulfuric acid plant. These options provide considerable flexibility in both sizing and mode of application to optimize around the local conditions which may exist at any specific smelter.

9.3 PROCESS DEVELOPMENT STATUS

The citrate process is a second generation SO_2 control process and is still in the pilot plant developmental stage.

A small pilot plant to process up to 300 cfm of reverberatory furnace gas was placed into operation jointly by the Bureau of Mines and Magma Copper Company in November 1970 at the San Manuel, Arizona Copper Smelter. Although operation was intermittent over a a six month period due to equipment breakdowns and operational problems, the capability of the SO_2 absorption and regeneration system to remove 93 to 99 percent of the SO_2 from the 1.1 to 1.7 percent SO_2 content smelter gas was demonstrated.[5]

In 1969, Arthur G. McKee and Company, as part of a study for the U.S. Department of Health, Education and Welfare on SO_2 emissions from non-ferrous smelters, made a broad survey and analysis of the technology applicable to SO_2 emission abatement. From this survey, they established criteria for an ideal SO_2 control process, criteria which appeared to be met by the citrate process. In September 1972, McKee, Peabody Engineering and Pfizer announced a joint project to install a 2000 SCFM pilot plant unit on a coal-fired steam boiler at Pfizer's Terre Haute, Indiana plant to generate hard engineering and economic data. Operation began in June 1973.

The Bureau of Mines development program has also continued with laboratory work and a pilot plant installation at the Bunker Hill Company lead smelter in Kellogg, Idaho to treat 1000 SCFM of 0.5 percent SO_2.[2,5] Phase I of this program, covering the SO_2 absorption and sulfur recovery sections, was completed in January 1974 and operation began in February 1974 on a clean diluted 0.5 percent SO_2 stream from a sintering furnace. Construction of Phase II, the H_2S generation plant to produce 76 to 78 percent H_2S from natural gas and steam, was completed in September 1974.

Phase III, the gas cooling and cleaning section of the dirty sinter plant tail gas containing 0.3 to 0.9 percent SO_2, was scheduled for completion early in 1975.

Although the programs have confirmed the system chemistry, expected SO_2 removal efficiency, and the essential operating relationships of the citrate process, there is still a requirement to demonstrate the full commercial potential of the process under extended plant operating situations and conditions. The Bureau of Mines has recently announced[2] that plans are underway via a cooperative and cost-sharing arrangment between the Bureau of Mines, EPA and interested industrial firms to provide one or more large scale demonstration plants at power plants or steam generating facilities burning high sulfur coal or oil.

The short continuous run times common in pilot plant installations do not always provide adequate data on the operating losses which might be experienced in full scale commercial operations. The use of kerosene and the losses per ton of sulfur recovered presently estimated by the Bureau of Mines constitute a major part of the total raw material cost. However, laboratory scale tests have indicated that the use of SAE 10 motor oil provide results equivalent to those produced by kerosene with an oil consumption one-fourth that of kerosene.[2] The McKee-Peabody-Pfizer version of the process uses no hydrocarbon addition but affects sulfur separation based on a flotation principle. The cost advantages of this approach are obvious but it is not known if there are offsetting difficulties. Very little experience has been gained in pilot plants by using on-site generated H_2S. A reliable source of H_2S is mandatory to insure uninterrupted operation of the citrate process and while commercial quantities of H_2S can be obtained from several alternative sources, the locations of non-ferrous smelters suggest that economic factors would tend to emphasize on-site generation using some form of sulfur, steam and a reducing agent. A recent study[6] reviews the potential of leaching of neutral roasted copper concentrations with HCl and the associated release of H_2S. Such an operation would mesh well with an on-site citrate process. The continuing program at the Bunker Hill pilot plant includes demonstration of the sulfur-methane-steam reaction for H_2S generation to provide both engineering data and information on the influence of impure, on-site generated 76 to 78 percent H_2S on sulfur precipitation.

The McKee-Peabody-Pfizer pilot plant program at Terre Haute has indicated that the level of gas cleaning required for the citrate process may not be as demanding as that originally considered to be necessary and that particulate material can be readily removed from the regeneration loop.[7] As noted above, Phase III of the Bureau of Mines Bunker Hill pilot plant which is scheduled for operation in 1975 will focus on defining gas cleaning requirements and the effect on process capabilities.

9.4 PROCESS DESULFURIZATION EFFICIENCY

Pilot plant programs conducted by both the Bureau of Mines[2,3] and the McKee-Peabody-Pfizer group[4] have consistently obtained SO_2 removal efficiencies between 93 and 99 percent. SO_2 content of the inlet gas streams has ranged from 0.1 to 0.2 percent for the flue gases from a coal-fired steam generating boiler to 1.0 to 1.7 percent for a copper reverberatory furnace stream. It is expected that any full scale installation, using the process as developed, could achieve an overall SO_2 removal efficiency of at least 95 to 96 percent.

9.5 SULFITE OXIDATION

The citrate process, with its various citrate species providing a buffering action, increases the solubility of SO_2 in water with formation of the bisulfite ion:

$$SO_2 + H_2O \rightleftarrows HSO_3 + H^+.$$

Oxygen is universally present in smelter and combustion process flue gases together with some H_2SO_4 pickup from incomplete mist removal, and during the absorption step, some oxidation of the bisulfite occurs:

$$HSO_3^- + 1/2\ O_2 \rightarrow HSO_4^- \rightleftarrows H^+ + SO_4^=.$$

Some oxidation may also occur in the solution present during melting of the sulfur:

$$3HSO_3 \rightarrow 2SO_4 + H^+ + S + H_2O.$$

Certain metal ions such as copper and iron act as catalysts for the reaction. Results from some laboratory runs reported by McKee-Peabody-Pfizer[4] indicate that the oxidation rate increases with pH, a change from pH 4 to pH 5 approximately doubling the rate. The results also indicate that the addition of thiosulfate reduces the oxidation rate. The formation of thiosulfate during the regeneration step and the presence of these ions in the absorption system thus tend to inhibit the oxidation process. However, some decomposition of the thiosulfate does take place during the melting of the precipitated sulfur, and this reaction produces additional sulfate. The quantity of sulfate formed is dependent on the concentration of thiosulfate, temperature, and duration of heating; but on the basis of laboratory tests, the Bureau of Mines has estimated that under expected operation conditions, the sulfate formation during melting would be about 3 lbs/ton sulfur melted.[3]

During the operation of the Phase I section of the Bunker Hill pilot plant with a feed gas containing about 25 percent oxygen, the rate of oxidation of SO_2 to $SO_4^{=}$ was determined to be about 1.3 percent[2] or approximately 53 lb/ton of sulfur melted. The thiosulfate concentration in this period ranged between 20 to 40 gms/liter, a much lower concentration than would normally be expected because of the large solution losses and fresh citrate solution makeup required by plant upsets.

While the overall rate of sulfate formation from all sources is small, the effect is cumulative and requires that sulfate be purged from the system.

9.6 FEED GAS PRETREATMENT

To prevent excessive evaporation of the citrate solution in the absorption tower, the feed gas must be cooled and saturated with water vapor in a cooling/humidification system typically described in Appendix A. Because SO_2 absorption by the citrate solution is favored by lower temperatures, the selection of a preferred operating temperature will represent a trade-off between the higher SO_2 loadings of the citrate solution associated with lower temperatures and the effect on equipment and piping costs and the cost of the gas cooling section itself. Pilot plant work at the San Manuel location was done at temperatures between 108 to 125°F (42 to 52°C) but higher temperatures between 113 and 149°F (45 to 65°C) were used in the Phase I test program at the Bunker Hill

smelter to correspond with temperatures to which the lead sintering furnace tail gas would be cooled in Phase III of the program.[2]

The gas cooling and conditioning system described in Appendix A would provide acceptable treatment for the process as its requirements are now defined. The particulate loading remaining in the gas stream after dry gas cleaning in the smelter itself would be further reduced by both the quenching step and the electrostatic mist precipitator itself.

The proposed testing program at the Bunker Hill smelter under Phase III will provide more detailed information on the overall degree of feed gas pretreatment required by the citrate process when handling hot smelter-generated gas streams.

9.7 PARTICULATE REMOVAL CAPABILITY

As with other SO_2 control processes, the SO_2 absorber in the citrate process is not a high pressure drop device, and with a gas feed that has received prior mechanical and electrostatic cleaning followed by water quenching and mist electrostatic precipitation, the particulate capture on smelter streams will be small.

The use of packed columns in the Bureau of Mines development program will tend to provide somewhat better collection than a sieve tray or impingement plate column, but with the particle size distribution predominately under 1 to 2 μm, the mass removal overall is negligible.

The process itself will tend to maintain any captured particulate material at an equilibrium level since the sulfur precipitation step by occlusion will continually remove such material from the closed loop of the system.

9.8 PROCESS ENERGY REQUIREMENTS

The direct energy requirements in terms of electric power of the citrate process are relatively modest. Power requirements for gas movement though the conditioning and SO_2 absorption sections will be similar to those for other desulfurization processes, but lower absorbent liquid recirculation rates will reduce pumping power costs accordingly. Power costs in the regeneration and recovery sections are expected to be around 0.075 KW/lb SO_2 recovered.

The use of natural gas both as fuel and as process raw material stock in the production of H_2S constitutes a major part of the energy demands of this process. Approximately 4 cubic feet of natural gas are required for every pound of SO_2 removed. For a gas flow of 100,000 SCFM containing 1 percent SO_2, the annual cost of natural gas represents approximately 27 percent of the total annualized operating costs. However, where local conditions favor steam stripping of the SO_2 for output to a sulfuric acid plant, this energy cost would be substantially reduced.

9.9 RETROFITTING REQUIREMENTS

The regeneration and sulfur recovery sections can be located at some distance from the gas conditioning SO_2 absorption sections and existing plant configurations should not pose any undue difficulties.

Both the gas conditioning and SO_2 absorption sections must be retrofitted to existing ductwork and within the structural and space limitations of any existing plant. The age of the plant will exercise a significant influence on the degree of difficulty and the associated cost picture. Space requirements are estimated as follows:

Gas Conditioning and SO_2 Absorption (including neutralization and cooling tower)	8-12,000 sq. ft.
Regeneration and sulfur recovery	15-20,000 sq. ft.

9.10 PROCESS COSTS

Published cost data are limited and are based on projections from the small pilot plant programs handled to date. Over the past several years, the Bureau of Mines and Arthur G. McKee and Company have provided estimates for both non-ferrous applications and power plants,[2,3,7] and the Lummus Company prepared for the Smelter Control Research Association, Inc.,[1] an engineering estimate for a copper reverberatory furnace gas. These essentially order-of-magnitude costs have been reviewed and have provided the basis for developing capital costs for the citrate process regeneration section on the basis of SO_2 handled in lbs/hr. The costs for various SO_2 rates have been combined with the capital cost of the related SO_2 absorption section developed in Appendix II to provide the parametric capital cost relationships detailed in Figure 9-2.

Total annual operating costs for the citrate process based on gas flow and concentration of SO_2 are provided in Figure 9-3.

For comparative purposes, Table 9-2 provides a capital and operating cost breakdown for this process applied to a range of gas flows containing 1 percent SO_2. Table 9-3 provides a total system cost, including gas cooling and conditioning, and allows direct comparison with similar system costs for the other SO_2 control processes under evaluation.

9.11 ADVANTAGES AND DISADVANTAGES

Advantages of the process are:

1) The process achieves a high level of SO_2 removal efficiency over a wide range of SO_2 concentrations.

2) There are no potential scaling or plugging problems in the absorption section.

3) The process is inherently stable and can accommodate variable SO_2 loadings without upset in the H_2S regeneration section.

4) There is a minimum effect from oxidation with the citrate absorbent solution providing an oxidation-inhibiting effect.

5) The process provides direct recovery to elemental sulfur with an option of generating SO_2 for acid plant feed.

The disadvantages of the process are:

1) The process has been demonstrated only at the pilot plant level and full scale commercial application is still several years off.

2) The requirement for natural gas in the H_2S generation section for the elemental sulfur option is fairly high and constitutes a significant part of the operating charges--25-30 percent of the total annual direct operating costs.

9.12 REFERENCES

1. Smelter Control Research Association, Inc. "Report to U.S. Bureau of Mines on Engineering Evaluation of Possible High Efficiency Soluble Scrubbing Systems for the Removal of SO_2 from Copper Smelter Reverberatory Furnace Flue Gases," B.O.M. Contract No. S0133044, March 1974.

2. W.A. McKinney, et al. "Pilot Plant Testing of the Citrate Process for SO_2 Emission Control," Presented at Flue Gas Desulfurization Symposium, Atlanta, Georgia, November 4-7, 1974.

3. J. B. Rosenbaum, W.A. McKinney, et al. "Sulfur Dioxide Emission Control by H_2S Reaction in Aqueous Solution, the Citrate Process," Bureau of Mines Report of Investigations RI 7774, 1973.

4. L. Korosy, H. L. Gewanter, F. S. Chambers and S. Vasan. "Chemistry of SO_2 Absorption and Conversion to Sulfur by the Citrate Process". Paper presented at the Symposium on Sulfur Removal and Recovery from Industrial Sources, 167th American Chem. Society National Mtg., Los Angeles, California, April, 1974.

5. J.B. Rosenbaum, D.R. George, and L. Crocker. The Citrate Process for Removing SO_2 and Recovering Sulfur from Waste Gases. Presented at A.I.M.E. Environmental Quality Conference, Washington, D.C., June 7-9, 1971.

6. C.A. Rohrmann and H.T. Fullman. "Control of SO_2 Emissions from Copper Smelters," Vol. II, Hydrogen Sulfide Production from Copper Concentrates," Battelle Pacific Northwest Laboratories, EPA-650/2-74-085-5, September, 1974.

7. Private communication with Frank S. Chambers, Assistant Director, Consulting and Developing, Arthur G. McKee & Co., Cleveland, Ohio.

8. F.S. Chambers, L. Korosy and A. Scaleem. "The Citrate Process to Convert SO_2 to Elemental Sulfur". Paper presented at Industrial Fuel Conference Purdue University, October, 1973.

9. Private communication with W.I. Nissen, Bureau of Mines, Salt Lake City, Utah.

Table 9.1. CITRATE PROCESS UNIT USAGE AND COST DATA

A. Chemicals & Utilities	Basis	Unit Cost
Citric Acid	0.003 lb/lbSO_2	\$0.50/lb
Sodium Carbonate	0.009 lb/lbSO_2	\$52/ton
Kerosene	0.0036 gal/lbSO_2	\$0.50/gal
Natural Gas	3.6 CF/lbSO_2	\$1.25/MCF
Catalyst	0.00042 lb/lbSO_2	\$0.15/lb
Power a) SO_2 Absorption b) SO_2 Regeneration	4 KW/M SCFM 0.075 KWhr/lbSO_2	\$0.015/KWH
Water a) Process b) Cooling	1.5 gal/lbSO_2 5.0 gal/lbSO_2	\$0.30/M gal \$0.10/M gal
B. Operating Labor & Maintenance		
Labor: Absorption	½ man/shift <75,000 SCFM 3/4 man/shift >75,000 SCFM	\$8/hr
SO_2 Regeneration	2½ man/shift <10,000 lb/yr 3 1/4 man/shift >10,000 lb/hr	
Maintenance:	4.0% TCI/year	
Taxes and Insurace:	2.5% TCI/year	
C. Fixed Charges	13.15% TCI/year	

Based on Capital Recovery Factor using 10% interest over 15 year life.

CITRATE PROCESS

TOTAL CAPITAL INVESTMENT COSTS

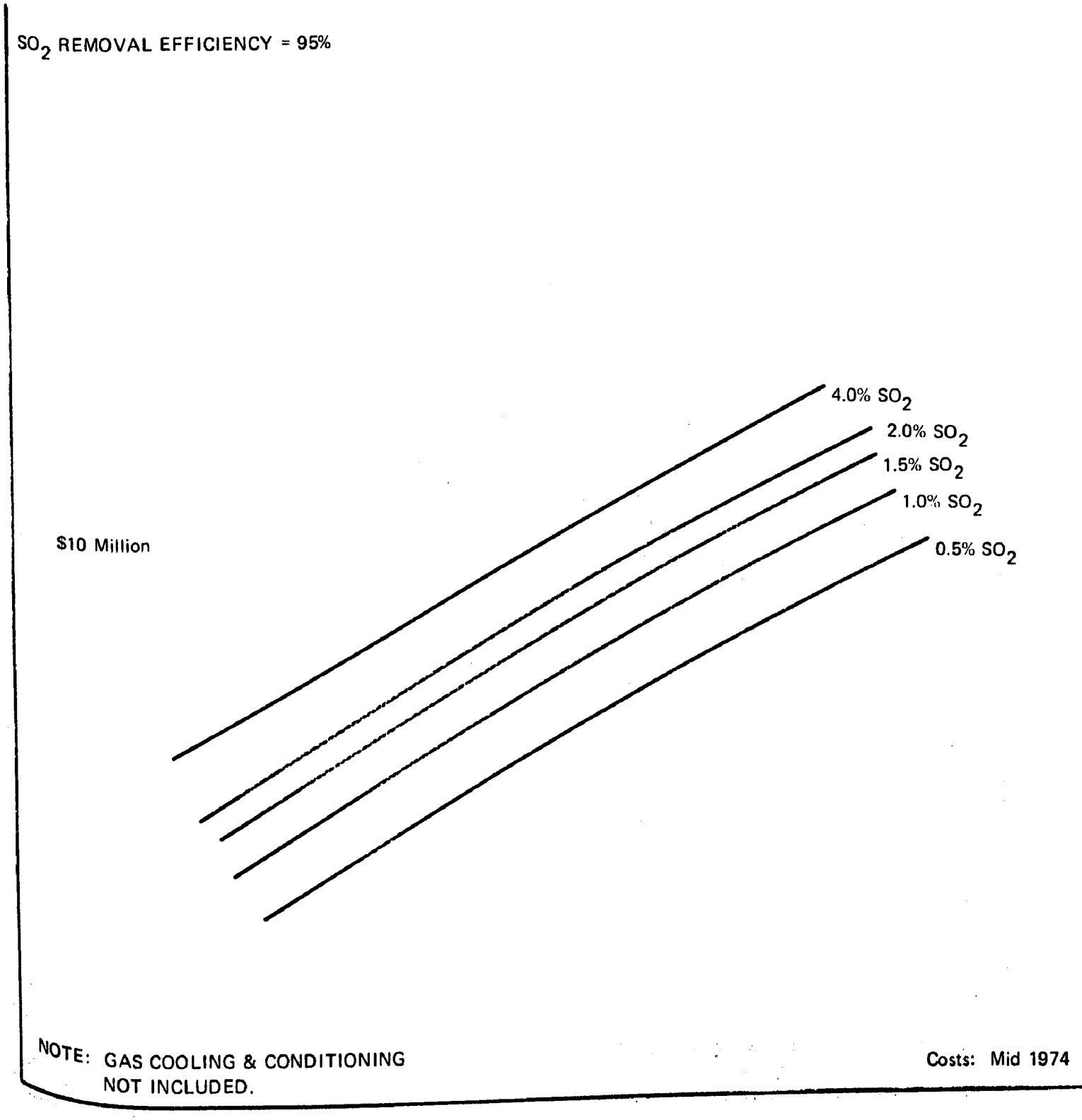

FIGURE 9.2

CITRATE PROCESS

TOTAL ANNUAL DIRECT OPERATING COSTS

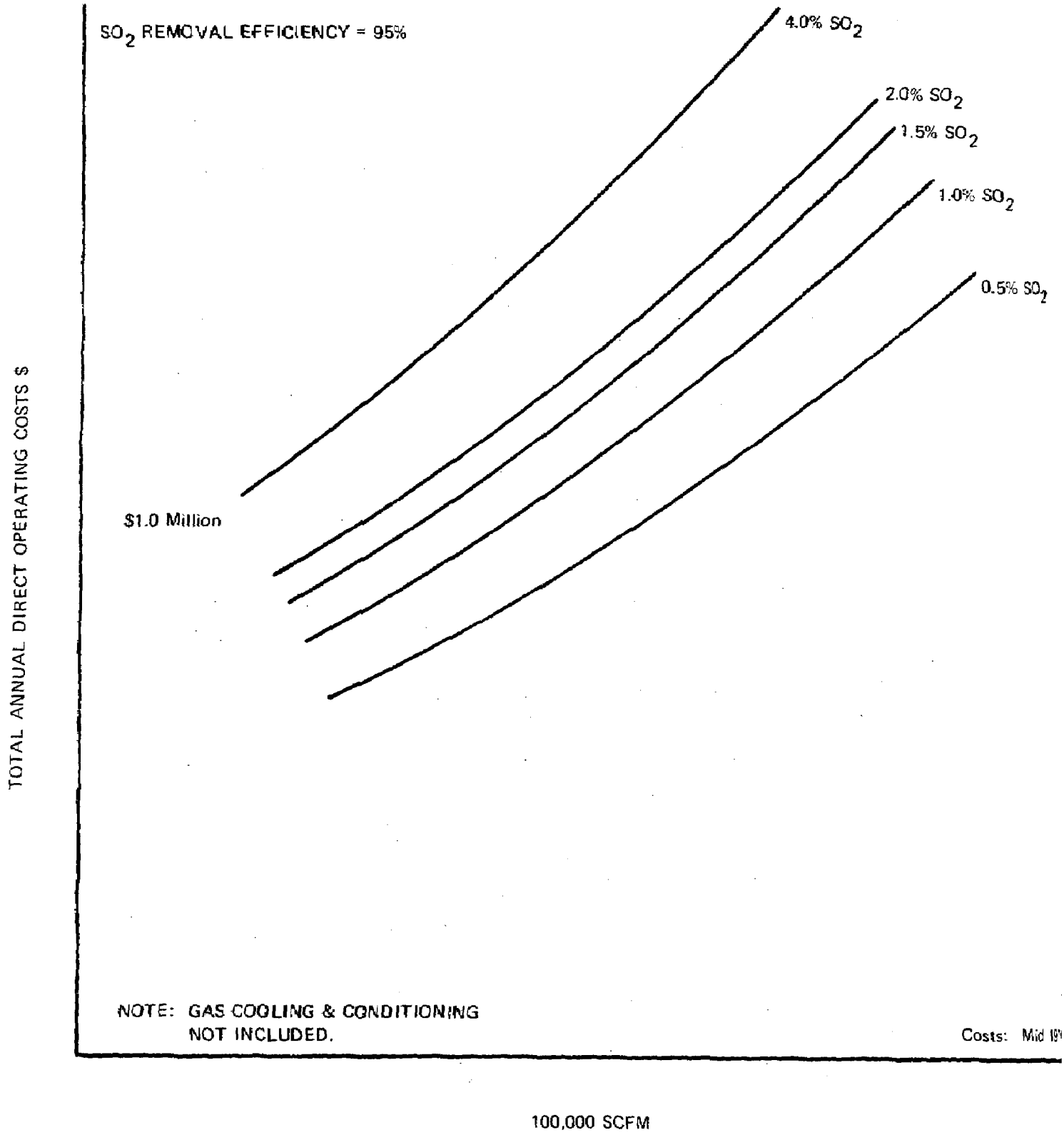

FIGURE

CITRATE PROCESS

TOTAL CAPITAL INVESTMENT COSTS
SO_2 REGENERATION SECTION

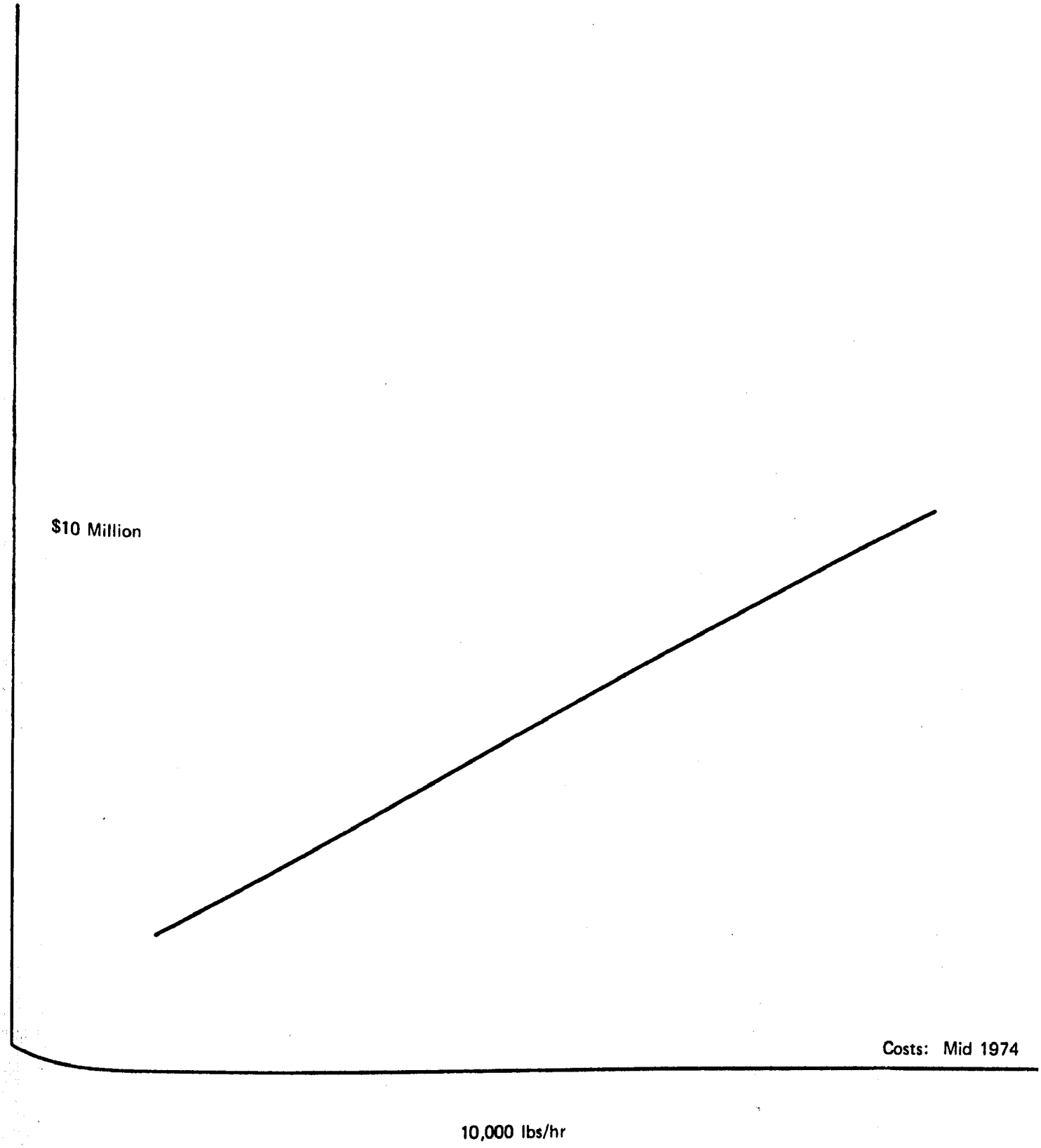

SULFUR DIOXIDE RATE
OF REGENERATION SYSTEM (lbs/hr)

FIGURE 9.4

Table 9.2. CITRATE PROCESS

CAPITAL AND TOTAL ANNUAL COSTS

		Gas Flow Rate - SCFM @ 1% SO_2			
		70,000	100,000	200,000	300,000
TOTAL CAPITAL INVESTMENT	$	4,640,000	5,630,000	8,150,000	10,200,000
	$/SCFM	66	56	41	34
	$/Annual ton SO_2 Removed	169	143	104	86
Annual Cost					
A. Direct Operating					
1. Power		96,300	137,600	275,100	412,700
2. Water Process		25,700	35,300	70,600	106,000
3. Water Cooling		27,600	39,500	79,900	118,400
4. Citric Acid		82,500	117,800	235,600	353,400
5. Soda Ash (Na_2CO_3)		13,800	19,600	39,300	59,900
6. Kerosene		99,000	141,500	283,000	424,500
7. Natural Gas		249,300	356,200	712,300	1,068,400
8. Alumina Catalyst		3,500	4,900	9,900	14,800
9. Labor		210,200	227,800	227,800	280,300
10. Maintenance		188,300	230,400	326,000	408,000
11. Taxes & Insurance		116,000	140,800	203,800	255,000
TOTAL ANNUAL DIRECT OPERATINC COST		1,109,500	1,446,200	2,463,300	3,501,400
	$/yr/ton SO_2 Removed	41	37	31	30
B. Annual Capitalized Cost		610,200	740,300	1,071,700	1,341,300
C. Net Total Annualized Cost*		1,038,800	1,312,100	2,091,800	2,835,600
	$/yr/ton SO_2 Removed	38	33	27	24

Table 9.3. CITRATE PROCESS

TOTAL SYSTEM CAPITAL AND ANNUAL OPERATING COSTS

		Gas Flow Rate - SCFM @ 1% SO_2			
		70,000	100,000	200,000	300,000
A. TOTAL CAPITAL INVESTMENT					
1. Gas Conditioning		1,800,000	2,275,000	3,550,000	4,650,000
2. Citrate Scrubbing & Sulfur Recovery		4,640,000	5,630,000	8,150,000	10,200,000
TOTAL		6,440,000	7,905,000	11,700,000	14,850,000
	$/Annual ton SO_2 Removed	234	201	149	126
B. TOTAL ANNUAL OPERATING COSTS					
1. Gas Conditioning		273,100	370,600	613,500	843,300
2. Citrate Scrubbing & Sulfur Recovery		1,109,500	1,446,200	2,463,300	3,501,400
TOTAL		1,382,600	1,816,800	3,076,800	4,344,700
	$/yr/ton SO_2 Removed	50	46	39	37
C. NET TOTAL ANNUALIZED COSTS*					
1. Gas Conditioning		321,100	419,100	672,200	740,000
2. Citrate Scrubbing & Sulfur Recovery		1,038,800	1,312,100	2,091,800	2,835,600
TOTAL		1,359,900	1,731,200	2,764,000	3,575,600
	$/yr/ton SO_2 Removed	49	44	35	30

*Based on Corporate Tax Rate of 48%.

10.0 AMMONIA PROCESS

10.1 PROCESS DESCRIPTION

Sulfur dioxide removal from gas streams by ammonia-based scrubbing has been studied intermittently by various groups since the 1880's when a British patent was first issued to Ramsey.[1] Ammonia-based processes are not amenable to throwaway operation because of the cost of ammonia and the solubility and nitrogen value (with chemical oxygen demand) of ammonium salts. The first such experimental processes were operated to yield a product of ammonium sulfate for eventual fertilizer use. Commercial and experimental modifications have evolved over the years with the greatest developmental emphasis being placed on methods of regenerating the scrubbing liquor to reduce operating costs and produce various useful products. Among the more widely studied methods of regenerating the scrubbing liquor are:[2]

1) thermal stripping to yield primarily sulfur dioxide,
2) oxidation to yield primarily ammonium sulfate,
3) disproportionation to yield ammonium sulfate and elemental sulfur
4) acidulation to yield sulfur dioxide and an ammonium salt.

Recent U.S. work by the Tennessee Valley Authority and the Environmental Protection Agency has been directed toward a variation of the Hixson-Miller scheme.[3] The process employs acidulation of the scrubbing liquor with ammonium bisulfate (ABS) to release sulfur dioxide, followed by crystallization and decomposition of the resulting ammonium sulfate to yield recyclable ABS and ammonia.[4,5] This process appears to have several advantages over other regenerable ammonia scrubbing schemes. The energy requirements are lower than those for thermal stripping. Cyclic acidulation and decomposition also avoid marketing problems associated with the large-scale production of ammonium sulfate or other undesirable coproducts. The sulfur dioxide is a versatile product that can be liquefied and sold directly or converted into sulfuric acid or elemental sulfur.

Of the many alternative regenerable ammonia scrubbing processes, the ammonia absorption-ABS acidulation process was chosen as the most appropriate for evaluation in this study. The overall process is summarized

in the following paragraphs with implied reference to the process flow diagram presented in Figure 10-1. The flow diagram essentially depicts the process being piloted by TVA and EPA with appropriate modifications to represent a complete commercial system.

1) Sulfur Dioxide Absorption -- The SO_2-laden gas, which has been cleaned of particulate material and cooled to about 125°F (52°C), enters the absorber and flows countercurrently to an ammoniacal solution. The absorber contains four or more valve trays, each of which is fed by a scrubbing solution of different concentration. The liquor composition is controlled to maximize absorption of SO_2 while minimizing the loss of NH_3 and the undesirable formation of an opaque fume in the cleaned gas. The product liquor is withdrawn from the bottom stage for regeneration.

2) Acidulation and Stripping -- The absorber product liquor is pumped to a mixer and blended with ammonium bisulfate. The solution then flows to a reactor where the product liquor and ABS react to form ammonium sulfate and release SO_2. Liquor from the acidulation reaction is fed to a packed column where a countercurrent flow of air strips the remaining SO_2 from the solution and blends it with offgas from the reactor to form a concentrated SO_2 product stream.

3) Regeneration of ABS -- The acidulated and stripped liquor is pumped to an evaporator-crystallizer to concentrate and crystallize the ammonium sulfate. The sulfate crystals flow to a belt filter and dryer which reduce their moisture content to less than 1 percent. They are then conveyed to a decomposer where ammonium sulfate decomposes at high temperature to ammonia and ABS. The ammonia is returned to the absorption system, and the ABS is recycled to the acidulation mixer.

4) Sulfate Purge -- A side stream is removed from the acidulated and stripped liquor for purge requirements. The purge removes excess sulfate formed in the absorber and controls other solid impurities in the system. Limestone is added to the purge stream for neutralization. The slurry is settled in a thickener, and the solids are removed as a cake from a drum filter. The clear liquor is returned to the absorption system.

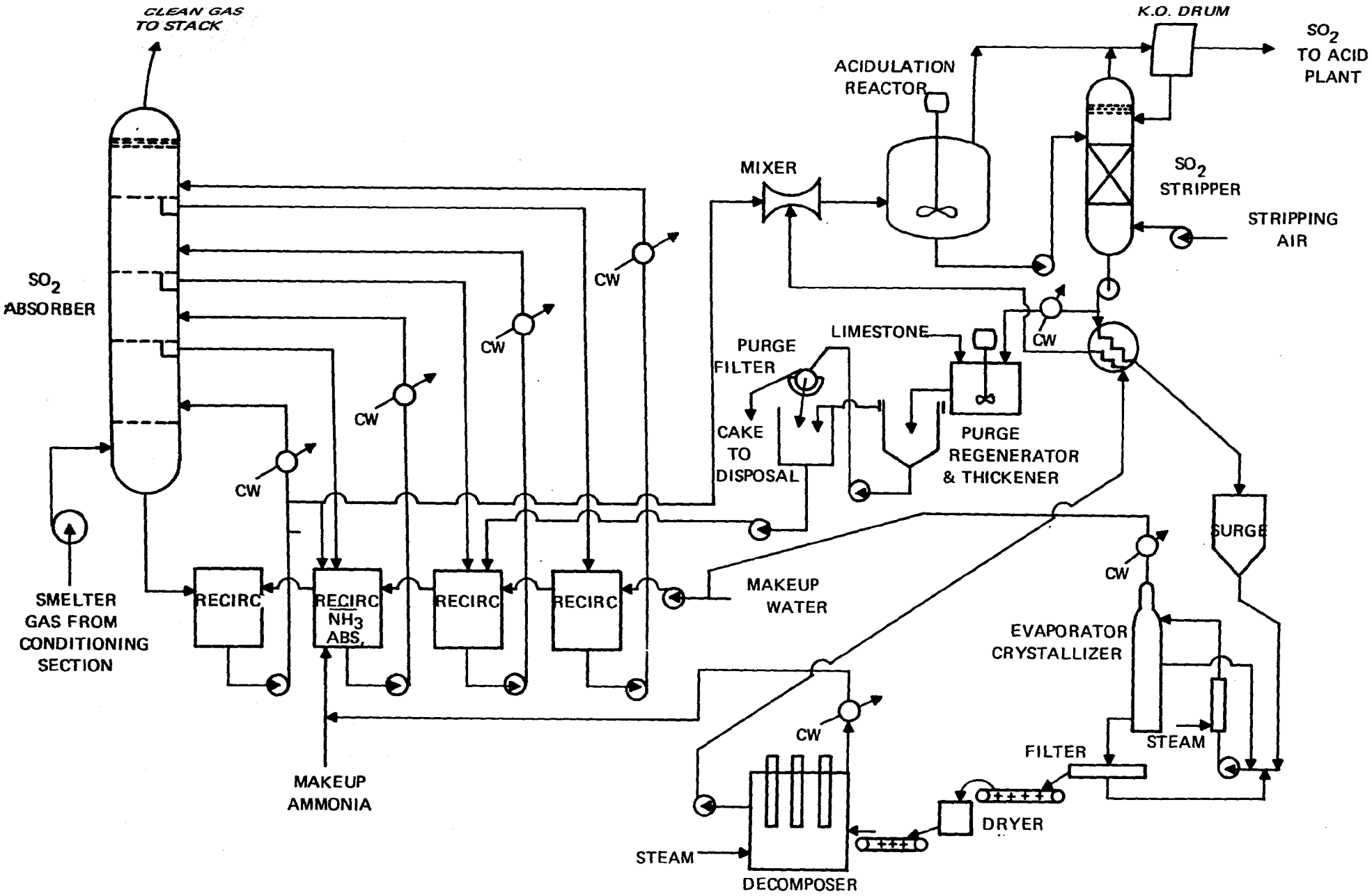

AMMONIA SCRUBBING PROCESS - ABS ACIDULATION

FIGURE 10-1

10.2 PROCESS AND OPERATING CONSIDERATIONS

10.2.1 Absorption Section

The ammonia scrubbing process utilizes aqueous ammonia and ammonium salt solutions to absorb sulfur dioxide from a gas stream. The net absorption reactions are

$$NH_3 + SO_2 + H_2O \rightleftarrows NH_4HSO_3$$

$$NH_4HSO_3 + NH_3 \rightleftarrows (NH_4)_2SO_3$$

$$(NH_4)_2SO_3 + SO_2 + H_2O \rightleftarrows 2NH_4HSO_3.$$

Part of the sulfite is oxidized to sulfate primarily by the reaction

$$(NH_4)_2SO_3 + 1/2\ O_2 \rightleftarrows (NH_4)_2SO_4.$$

The most significant operating parameters in the absorption step have been shown to be:

1) solution temperature,
2) total concentration of SO_2 and NH_3 in solution,
3) concentration of individual ammonium salts (sulfite, bisulfite, and sulfate) which also determines pH,
4) ratio of liquid to gas flow,
5) type of internal column construction.

The important operating considerations of the abosrber are related to the vapor-liquid equilibria of the system and the approach to equilibrium conditions. In 1935 Johnstone[6] obtained experimental data which fit theoretically-based correlations for the vapor pressure of SO_2, NH_3, and water above ammoniacal solutions of varying composition, pH, and temperature. Additional data and correlations were published in the late 1950's and early 60's by Russian and English scientists.[7,8,9,10]

In 1974, Griffin[11] recast the original Johnstone correlations and showed that the equilibrium absorption of SO_2 is enhanced by

1) decreasing the solution temperature,
2) minimizing the total SO_2 concentration in solution,

3) minimizing S/C_a, the molar ratio of SO_2 in solution as ammonium sulfite and bisulfite to ammonia as sulfite and bisulfite.

Ammonia losses are reduced by

1) decreasing the solution temperature,

2) minimizing the total NH_3 concentration in solution,

3) maximizing S/C_a.

The vapor pressure of water in this system follows Raoult's law to a good approximation. Although conflicting opinions have been reported,[6,7,8,10] the sulfate concentration seems to have little effect on SO_2 and NH_3 vapor pressures in the range of sulfate concentration normally encountered in scrubbers. Johnstone[6] and Chertkov[8] have also reported compatible data which show that the solution pH is well correlated in the range of 4.8 to 6.6 with the bisulfite-sulfite ratio as the only parameter. Obviously, the favorable conditions stated above are not all compatible and must be optimized along with other system parameters.

The primary factors affecting the approach to equilibrium in the absorption column are the internal absorber construction and the liquid to gas flow ratio, L/G. Absorption of SO_2 in ammoniacal solutions has been satisfactorily accomplished in both packed towers and tray columns. In the older units treating Cominco's zinc roaster and acid plant waste gases at Trail, B.C.[12,13] and Olin Mathieson's acid plant tail gas at Pasadena, Texas,[14] wood-slat packing was used in one or more stages with L/G's ranging from 16-32 gal/1000 CFM. Treating inlet gas concentrations of 0.9 to 5.5 percent SO_2, removal efficiencies of 92 to 97 percent were achieved. In a Cominco unit treating 0.75 percent SO_2 offgas from a lead sintering plant, an L/G of 8 to 10 was used in the lower stages and 4 to 5 in the top stage to achieve an efficiency of 87 percent.[12]

In the more recent TVA-EPA pilot plant work, multistage marble bed and valve tray arrangements have been used. The best apparent combination for inlet gases of approximately 0.25 percent SO_2 is a four-stage valve tray configuration, which allows flexibility with respect to the control of absorbent composition at different points in the column and achieves overall SO_2 removal efficiencies of about 90 percent.[5]

In the process shown in Figure 1, makeup ammonia and ammonia recycled from the regeneration unit are absorbed into solution and added

to the second stage from the bottom. Ammonia stripped from the lower two stages is captured in the water feed to the top stage and in the weak salt solution overflowing to the third stage below. Product liquor is withdrawn from the bottom of the column and a portion is recirculated to the second stage for pH control. L/G's of about 10 at the bottom and middle stages and 5 at the top stage have been used at the TVA-EPA pilot plant.[4]

Listed below are several general operating observations that follow directly from the above discussion of controlling parameters:

1) Increasing the salt concentration of the bottom product increases liquor concentration throughout the column and thus increases SO_2 and NH_3 vapor pressures above the top stage. A water wash on the top stage can be used to control NH_3 losses.[5]

2) A liquor pH below 5.6 allows essentially no SO_2 absorption; a pH above 6.8 results in very high NH_3 losses.[15] The liquor pH on the top tray must be $\leq$ 6.1 to control NH_3 emissions to 50 ppm or less.[4]

3) Temperatures must be kept relatively low to minimize NH_3 losses and maintain a favorable equilibrium for SO_2 absorption. Reported operating values range from 77°F[13] to 125°F[2].

With respect to heat effects of a system scrubbing 100°F, 1 percent SO_2 acid plant tail gas maintains a fairly constant temperature of 77°F with no external cooling[13] since the heat of reaction generated in the system is balanced by humidification cooling of the dry gas. Heat effects can be significant with higher SO_2 concentrations and a saturated inlet gas stream, however. Depending on the ultimate product mix of bisulfite, sulfite and sulfate, the net heat of reaction of the system can vary from about 56,000 Btu/lb mole SO_2 absorbed to more than 210,000 Btu/lb mole SO_2 absorbed. A practical value occurring with a product S/C_a of 0.8 and 13 percent oxidation of SO_2 to sulfate is about 89,000 Btu/lb mole SO_2. After credit for gas humidifcation, if applicable, this heat release may still require additional cooling between absorption stages in the column to maintain the liquor temperature at an acceptable value.

A serious problem which has been encountered in most ammonia scrubbing systems is the formation of an opaque fume in the exit gas stream. The fume is partially attributed to gas-phase reactions of ammonia, SO_2, and

water forming ammonium sulfite,[4,5,13,14,17] which are not prevented by a mist eliminator. Carryover of salt through the mist eliminator may also play an important role. The fume is objectionable as an opacity and particulate emission problem and as a contributing factor to ammonia loss. Cominco reported adequate control of the fume when operating with liquor temperature of 77°F and a clean inlet gas (low particulate concentration and no acid mist).[13] Olin Mathieson operated with a pH control system which reportedly eliminated the fume, but the exact pH limitations are not reported.[14] In the USSR a wet electrostatic precipitator is reportedly used at the top of ammonia scrubbers to control the fume.[16]

At the TVA-EPA pilot plant, the fume has been controlled to 5 percent opacity or less when operating with a liquor temperature of about 120°F by using a prewash to remove particulates and SO_3, maintaining a low salt concentration on the top stage, and reheating the exit gas 10 to 20°F above the temperature required to dissipate the steam plume. Even with these restrictions, the fume will often reform outside the absorber on humid days.[5]

10.2.2 Regeneration Section

For the complete regeneration process shown in Figure 10-1, the net reactions are

ACIDULATION

$$NH_4HSO_3 + HN_4HSO_4 \rightleftharpoons (NH_4)_2SO_4 + H_2O + SO_2 \uparrow$$

$$(NH_4)_2SO_3 + 2NH_4HSO_4 \rightleftharpoons 2(NH_4)_2SO_4 + H_2O + SO_2 \uparrow$$

DECOMPOSITION

$$(NH_4)_2SO_4 \overset{\Delta}{\rightleftharpoons} NH_4HSO_4 + NH_3 \uparrow$$

The net products of this regeneration system are water and ammonia, which are recycled back to the absorption section, SO_2, and a small purge of ammonium sulfate.

The ABS acidulation scheme is based on a U.S. patent granted to Hixson and Miller in 1946,[3] but has not yet been applied commercially. Acidulation of the absorber product liquor has been practiced by Cominco since the 1930's by adding sulfuric acid to yield a net production of SO_2 and ammonium sulfate.[12] Acidulation with nitric and phosphoric acid, also leading to the production of SO_2 and fertilizer, has been reported in Czechoslavakia and Romania, respectively.[2]

The uncertainty of a large market for ammonium-based fertilizers limits the applicability of these otherwise proven processes in the United States so the TVA-EPA pilot program was designed to concentrate primarily on the ABS acidulation scheme. Since the regeneration system has not been fully integrated, sulfuric acid has been used in the pilot-scale tests completed to date. The acid is metered to the acidulator to give an acid ion to ammonia ratio of 1.2 to 1.5. The retention time of the acidulator can be varied from 0 to 30 minutes. The solution leaves the acidulator and flows countercurrently to stripping gas (air at about 30 ft^3/gal solution) to remove the chemically released SO_2. Under these conditions, up to 97 percent release of the SO_2 in the bisulfite-sulfite liquor has been accomplished in the combined acidulation-stripping operation.[4,5] The product gas contains 20 to 30 percent SO_2, varying according to the concentration of the absorber product liquor and the gas to liquor ratio in the stripper.

Laboratory tests have shown that ammonium bisulfate acts very similarly to sulfuric acid in the acidulation step and should give comparable results.[17] The chemical equations stated above show that a high bisulfite to sulfite ratio (high S/C_a) in the absorber product stream reduces the amount of ABS required for acidulation and thus reduces the equipment size of the entire regeneration cycle. This factor must be weighed against S/C_a restrictions in the absorber.

The product liquor from the stripper is pumped to an evaporator-crystallizer where water is evaporated and ammonium sulfate crystals are formed. Provisions must be made to remove the SO_2 not stripped from the liquor in the stripper. This residual SO_2 is released with steam in the evaporator. When the steam is condensed, part of the SO_2 is dissolved in the water and recycled to the absorption section, and the excess must be bled from the condenser to the product SO_2 stream or elsewhere.

The two-phase mixture from the crystallizer is sent to a belt filter where the crystals are dewatered to about 5 percent moisture. A gas-fired dryer lowers the water content further to about 1 percent, yielding free-flowing crystals, approximately 70 percent of which are retained on a 35-mesh screen.[5]

The total water that must be removed from the crystals increases with a decrease in the salt concentration leaving the absorber. For example, with a product liquor concentration of 12 moles NH_3 (as sulfite and bisulfite) per 100 moles total water (C_a = 12) which represents a reasonable absorber operating mode, the total evaporation-dewatering-drying burden is about 2.9 lb water per lb SO_2 product. With a C_a of 8 the burden increases to about 3.5 lb water/lbSO_2.[4]

To maintain a system material balance, ammonium sulfate formed by oxidation reactions in the absorber must be purged from the system. This may be accomplished as a sidestream treated as waste as shown in Figure 10-1 or as a net product of ammonium sulfate crystals.

Decomposition of ammonium sulfate crystals to ammonium bisulfate and ammonia can be accomplished in an electrical or a direct-fired decomposer. A large-scale electric furnace ammonium sulfate decomposer (about 550 ton $(NH_4)_2SO_4$/day) was built and operated for the U.S. Government toward the end of World War II to produce bisulfate for mineral extraction.[18] A direct-fired furnace decomposer has been developed by Bohna Engineering and Research Company and licensed to Foster-Wheeler Corporation. A pilot-scale operation has reportedly been operated in France,[17] but details are not available.

The decomposition reaction is normally conducted at about 700 to 750°F. Approximately 85 percent decomposition of ammonium sulfate to ABS is accomplished. The released ammonia is recycled back to the absorber and the ABS-ammonium sulfate mass is fed to the acidulator. The decomposition may be accomplished in either an electric or a direct-fired furnace. An electric furnace generally allows better temperature control and is more easily constructed from corrosion resistant material.[17] Also important, in a direct-fired decomposer the higher temperature and presence of excess oxygen are likely to cause catalytic cracking of NH_3 in the presence of metallic contaminants.

An electric furnace decomposer is to be installed at the TVA-EPA pilot plant in late 1975 for the continuation of that project. When this decomposer and the associated ABS acidulation process are fully integrated into the pilot plant, important operating variables of the regeneration cycle can be better defined.

10.3 DEVELOPMENT STATUS

The ammonia scrubbing-ABS acidulation process, which is being jointly developed by TVA and EPA and is shown schematically in Figure 10-1, was initially patented by Hixson and Miller in 1946.[3] Although the process has never been operated in an integrated fashion on a significant scale, the individual unit operations have all been proven to be technically feasible in large industrial applications.

Scrubbing SO_2 from waste gases with ammoniacal solutions has been practiced commercially by Cominco in Trail, B.C., by Olin Mathieson in Texas (using the Cominco system), and in Romania, Russia, Czechoslavakia, Germany, Japan, and France.[20,21] Acidulation of the absorber liquor to release SO_2 and form an ammonium salt has been practiced commercially in Germany using H_2SO_4 and in Romania using H_3PO_4.[20,21] Acidulation with ammonium bisulfate has not yet been practiced on a large scale. Decomposition of ammonium sulfate to yield ABS and ammonia was accomplished successfully on a large scale in a U.S. Government sponsored program during World War II.[18] More recently in France, a direct-fired decomposer has been developed to produce ABS from ammonium sulfate for metallurgical uses.[21] The success of this unit is not yet known.

The Tennessee Valley Authority and the Environmental Protection Agency began studies on an ammonia scrubbing program at TVA's Colbert Power Plant in 1968. The pilot plant work accomplished to date has been concentrated primarily on the absorption process. Extensive tests have been run on a 3000 CFM unit to establish important operating parameters and develop solutions to process difficulties such as the fume emission.[4,5,22] Preliminary regeneration tests have also been made.[5] Complete integration of the ABS acidulation and ammonium sulfate decomposition steps into the pilot plant should be accomplished in late 1975 or 1976.

Although the individual unit operations have been applied in industrial systems, it is obvious from the preceding sections that several features have not yet been satisfactorily demonstrated (e.g., consistant control of the fume emission from the absorber). In an integrated system additional problems are likely to be encountered. Despite the extensive work accomplished to date, the ammonia scrubbing-ABS acidulation process cannot be considered fully developed for commercial application until extended operational tests of an integrated system are completed at the TVA-EPA pilot plant.

10.4 DESULFURIZATION EFFICIENCY

A high desulfurization efficiency of weak or strong SO_2 streams can be achieved with the ammonia absorption system provided adequate absorption capacity is provided and the salt concentration and solution temperature are properly controlled, particularly at the top stage. The older Cominco units exhibited high efficiencies in various applications as shown in the table below.

Type of Gas	Gas Volume ft^3/min	Inlet SO_2 %	Outlet SO_2 %	SO_2 Removal Efficiency %
Lead Sintering Plant[12]	150,000	0.75	0.10	85
Zinc Absorption Plant[12]	20,000	5.5	10.2	95
Acid Plant[12,13]	50-60,000	0.9-1.0	0.07-0.08	92

The TVA-EPA pilot plant has generally been operated with an SO_2 removal efficiency of 90 percent or higher, with a feed concentration of 0.2 to 0.3 percent SO_2 and an exit gas concentration of 200 to 300 ppm SO_2.[4]

From these experiences, it is evident that desulfurization efficiencies of 90 to 95 percent are technically achievable. Since the salt concentration and solution temperature also affect ammonia losses from the absorber, as well as energy requirements in the regeneration section, the costs associated with these variables are essential considerations in determining the efficiency that can be achieved practically in a particular application.

10.5 SULFITE OXIDATION

The cause and effect relationships of sulfite oxidation in the ammonia scrubbing process are not well established although extensive studies have been conducted, primarily in Russia. At least three separate mechanisms can contribute to oxidation as represented by the following reactions:

$$3SO_2 \rightleftarrows S + 2SO_3$$

$$(NH_4)_2SO_3 + SO_3 \rightleftarrows (NH_4)_2SO_4 + SO_2\uparrow$$

$$(NH_4)_2SO_3 + 1/2\ O_2 \rightleftarrows (NH_4)_2SO_4.$$

The first reaction is insignificant at low temperatures unless catalysts are present in the system. Several metallic salts such as Mn^{++}, V^{5+}, and Fe^{++}, which are commonly found in fly ash, may accelerate this mechanism. A prewash before the absorber should minimize the concentration of these catalysts and should also inhibit the second reaction by scrubbing SO_3 from the gas. The third reaction is probably the most significant and is directly related to the oxygen content of the flue gases and the salt concentration of the scrubbing liquor.

In the Cominco scrubbers, where ammonia sulfate is considered a product, oxidation is relatively unimportant. Sketchy information from European ammonia scrubbing processes indicates oxidation levels of 10 to 30 percent of the inlet SO_2. In the TVA-EPA pilot plant approximately 10 to 15 percent of the SO_2 is typically oxidized to sulfate with an average of 13 percent. Scattered data from this pilot plant appear to indicate that increasing the S/C_a increases oxidation.[4] This is in qualtitative agreement with Chertkov's correlation of industrial data

which indicates that oxidation rate is proportional to (S/C_a) to the sixth power.[19] On the other hand, the chemical equation shown above indicates that oxidation of ammonium sulfite is the appropriate mechanism, and thus for a constant SO_2 concentration, decreasing S/C_a would encourage oxidation. Operating experience reported by Olin Mathieson confirms that low pH (high S/C_a) inhibits rather than promotes sulfate formation.[14] The large number of variables and possible mechanisms acting on the system obviously contribute to this conflict of opinion. Additional study is needed in this area.

Newall[10] published data which indicate that the presence of ammonium sulfate in the scrubbing solution significantly increases the vapor pressure of SO_2 and NH_3 and thus adversely affects the scrubbing efficiency and ammonia conservation. Newall's data correspond to a scrubber operating with low salt concentration and over 50 percent oxidation. However, Chertkov[7] also indicated an adverse effect of sulfate concentration on SO_2 vapor pressure, but his data emphasized dilute solutions and solutions containing higher than normal ratios of bisulfite to sulfite. There are apparently no data reported that indicate a significant sulfate effect on absorption equilibria with the solution conditions encountered in a practical scrubber installation, but additional study in this area would also be prudent.

With the ABS regeneration system, oxidation definitely increases the purge requirements. To maintain a material balance in the regeneration section, sulfate must be purged to the extent that it is formed in the absorber. Figure 10-1 shows this purge accomplished by removing a sidestream from the stripper effluent and reacting with limestone to yield a gypsum cake for disposal and a clear liquor for recycle to the absorber. If a small market for ammonium sulfate exists, a feasible alternative is to purge ammonium sulfate crystals prior to decomposition.

10.6 GAS PRETREATMENT

Waste gas from any process must be cooled to a reasonable temperature prior to being fed to an absorption tower to avoid excessive evaporation of the scrubbing solution. With ammonia scrubbing the "reasonable temperature" is established as a trade-off between the absorption capacity and vapor-liquid equilibria of the system and the cost of the pre-cooling or inter-cooling. Since the SO_2 absorption in ammoniacal solutions

is exothermic, some humidification cooling of a hot, dry gas stream can be allowed in the tower to eliminate the need for cooling of the liquor between stages. For example, operating experience at Cominco's acid plant tail gas treatment system showed that humidification cooling of the 104°F, dry inlet gas stream resulted in 77°F tower operation with no external cooling.[13] Liquor temperatures of up to 130°F (after pre-cooling of the gas) have been utilized at the TVA-EPA pilot plant with acceptable SO_2 absorption and NH_3 loss.[4] The gas cooling and conditioning system for regenerable systems which is described in Appendix A would provide acceptable pre-cooling for the ammonia scrubbing process, but interstage cooling of the liquor would probably be necessary with stronger SO_2 streams (perhaps 1 percent and higher) since the inlet gas would be saturated with water.

Pretreatment would also be necessary in most applications to minimize SO_3 and particulate concentrations in the tower. Sulfur trioxide as well as certain metallic oxides in the flue gas would promote oxidation in the tower. Particulates such as fly ash can also cause problems in the regeneration section by adversely affecting the production of crystalline ammonium sulfate and by catalyzing the decomposition of ammonia during the thermal decomposition of ammonium sulfate.[4]

In the TVA-EPA pilot plant, a low-pressure-drop venturi scrubber is used to humidify, cool, and remove solids from the inlet gas stream. The inlet gas is a slipstream from a coal-fired boiler and enters at about 295°F with a dust loading of 4 to 6 grains per dry standard cubic foot and an SO_2 concentration of 0.2 to 0.3 percent. The venturi is operated with a pressure drop of 5 to 6 inches of water and a liquid to gas ratio of about 10 gal/1000 ft^3. Under these conditions approximately 90 percent of the fly ash and 10 to 20 percent of the SO_2 are removed. Trace amounts of chloride (35 ppm average) in the inlet gas are also completely removed. The gas is cooled to saturation humidity at 120 to 130°F[5]. Satisfactory absorption tower operation is achieved with this degree of pretreatment. While the experience is not directly relatable to smelter offgases, it exemplifies the relative degree of pretreatment considered necessary for the ammonia absorption system.

The conditioning system described for regenerable processes in Appendix A should therefore provide adequate cooling and particulate removal. The important additional cost factor for the ammonia system is the probable requirement for interstage cooling to maintain the tower temperature at 130°F or lower.

10.7 PARTICULATE REMOVAL CAPABILITY

Pretreatment requirements with respect to particulate removal were discussed in the preceding section. There is no detailed information available on the operation of the absorber without prior removal of particulates although the Russians are reported to favor this design to avoid the expense of a separate dust scrubber or precipitator.[21] The ash is said to be easily filterable from the absorber liquor.

At the TVA-EPA pilot plant a yellow solid, tentatively identified petrographically as a homogeneous iron-ammonia-sulfur compound is normally present in the absorber liquors even though 90 percent or greater particulate removal is accomplished prior to the absorber.[5] It would appear that precipitation of solids in the absorber could be a problem especially if no pretreatment were provided. The solids tend to settle in the product storage tank. In contrast to the Russian claims, attempts to remove the solids by filtration have been unsuccessful at the pilot plant because the precipitated solids and fly ash form a gelatinous, thixotropic material that blinds the filter media.[5] In a smelter application the solids may not behave in this manner.

The extraneous solids that do not settle in storage and process vessels would normally be controlled by the purge stream. Depending on the dust load of the inlet gas and the allowable concentration in the scrubbing liquor, the purge requirement to control solids may not be consistent with the normal purge rate required to maintain a sulfate balance. The solids may also interfere with ammonium sulfate crystallization and could feasibly catalyze the decomposition of ammonia in the thermal decomposer. Without sufficient operating experience to access these potential problems, the particulate removal capability of the process remains in question.

10.8 PROCESS ENERGY REQUIREMENTS

Power requirements in the conditioning and absorption sections of the ammonia process should be comparable to other SO_2 scrubbing processes since the standardized conditioning system described in Appendix A is applicable to the ammonia system, and flue gas pressure drop through the valve-tray absorber is moderate. Pumping power requirements will be slightly increased with stronger SO_2 streams which require interstage cooling of the absorbent. The estimated total power requirement for the absorption section (not including the separate gas-conditioning section) is about 4kW/1000 SCFM.

In the regeneration section, the predominant energy requirements are steam for the evaporator and decomposer and electricity for the decomposer. With a typical absorber product liquor C_a value of 12, the evaporation requirement is about 2.5 to 2.9 lb water per lb SO_2 product.[4] Evaporation requirements increase with a more dilute product liquor. Decomposer design studies based on the Plancor 1865 project[18] show requirements of approximately 350 kWh electric power and 400 lb superheated steam per ton of ammonium sulfate fed to the decomposer (based on approximately 85 percent decomposition of ammonium sulfate to ABS). With a typical absorber product liquor S/C_a of 0.8, these figures convert to 0.45 kWh electricity and 0.5 lb superheated steam per lb of SO_2 product.

10.9 RETROFITTING REQUIREMENTS

Space requirements for the ammonia process should not be significantly different from the other SO_2 scrubbing processes. The gas conditioning and absorption sections will consist primarily of vertical vessels, pumps, and piping, requiring an estimated 8-12,000 ft^2 for a system capacity on the order of 100,000 SCFM. To tie into existing ductwork and keep fan power requirements to a minimum, these sections would be installed as close as possible to the existing plant and stack.

The largest space requirement in the regeneration section will be the decomposer. In the Plancor operation,[18] four furnaces, each 16 ft in diameter by 10 ft deep, were designed for a total feed rate of about 550 tons $(NH_4)_2SO_4$ per day. By contrast a 100,000 SCFM absorption system treating 2 percent SO_2 gas will require a decomposer capacity of approximately 600 tons $(NH_4)SO_4$ per day. The total space requirement of a regeneration system of this capacity, including the purge system shown

in Figure 10-1, is estimated to be 12-15,000 ft^2. This requirement is obviously related to both the volume of gas treated in the absorption system and the sulfur dioxide concentration. It is not imperative that the regeneration facility (especially the purge system) be adjacent to the existing plant, but it would normally be sited as close as possible to minimize pumping costs.

10.10 PROCESS COSTS

Published cost data on the ammonia system are limited to estimates which have been based primarily on the TVA-EPA pilot plant and on the literature studies conducted in preparation for the TVA-EPA project. In 1970, TVA published an extensive literature survey and study of the ammonia scrubbing process including cost estimates for application to power plant stack gases yielding ammonium sulfate for fertilizer production.[23] M. W. Kellogg utilized these estimates as a basis for another study in 1971.[24] More recently the Lummus Company prepared for the Smelter Control Research Association, Inc., an engineering estimate for application of the ammonia scrubbing-ABS acidulation process to 1 percent SO_2 copper reverberatory furnace gases.[25] These estimates, supplemented by standard chemical engineering cost estimation techniques,[26,27] provided the basis for developing capital costs for the absorption and regeneration sections.

Capital costs versus gas flow for the absorption section are presented in Figure 10-2. Ammonia scrubbing will in general require a larger capital investment than the "standardized" absorption systems presented in Appendix B because of the interstage liquor cooling requirements. Although only one curve is shown in Figure 10-4, the capital cost of the absorber section will actually be somewhat dependent on SO_2 concentration in the gas stream. Capital cost of the regeneration and purge section is presented in Figure 10-5 on the basis of SO_2 handled in lbs/hr. The accuracy of both of these correlations is of course limited by the lack of experience with a large scale integrated ammonia-ABS system.

The regeneration and purge costs for various SO_2 rates have been combined with the capital cost of the SO_2 absorption section to provide the parametric capital cost relationships presented in Figure 10-2. Total annual operating costs have been developed from estimates of the energy, chemical make-up, and operating labor requirements of the system, combined with maintenance, taxes and insurance expressed as a percentage

of invested capital. These parametric curves are presented in Figure 10-3. Unit bases and costs are shown in Table 10-1.

For comparative purposes, Table 10-2 provides a capital and operating cost breakdown for this process applied to a range of gas flows containing 1 percent SO_2. Table 10-3 estimates the total system cost including gas cooling and conditioning as described in Appendix A and an auxiliary sulfuric acid plant as described in Appendix C. This table allows direct comparison with similar system costs for the other SO_2 control processes under evaluation.

10.11 ADVANTAGES AND DISADVANTAGES

Advantages of the ammonia absorption-ABS acidulation process are as follows:

1) The process can achieve high efficiencies of SO_2 removal over a wide range of SO_2 concentration;

2) Reaction products in the absorber are soluble salts which avoid the scaling and plugging problems of some alternative processes;

3) The integrated absorption-regeneration system produces a concentrated SO_2 stream which can be used to produce sulfuric acid, elemental sulfur, or liquid SO_2;

4) A potential for sale of small amounts of ammonium sulfate may eliminate the need for purge treatment equipment and minimize the penalty of sulfite oxidation;

5) The ABS acidulation scheme requires only one-half to two-thirds as much energy as the Johnstone steam-stripping process and avoids the disproportionation reactions and sulfite purge encountered in other regeneration processes following ammonia absorption of SO_2.

Disadvantages of the process are:

1) Ammonia volatility may limit the minimum level of SO_2 emission to 200-300 ppm for practical operation;

2) Ammonia may also be destroyed during the decomposition of ammonium sulfate;

3) Satisfactory elimination of the fume emitted from the absorber has not yet been completely achieved in the latest EPA-TVA work;

4) The ABS regeneration scheme has not yet been demonstrated in an integrated system. Until this is achieved at least on a pilot scale, the process will probably not be commercially viable.

10.12 REFERENCES

1. Ramsey, "Use of the NH_3-SO_2-H_2O System as a Cyclic Recovery Method," British Patent 1,427 (1883).

2. Slack, A.V., "Sulfur Dioxide Removal from Waste Gases," Park Ridge, New Jersey, Noyes Data Corporation, 1971 (Pollution Control Review No.4).

3. Hixson, A.W. and R. Miller, "Recovery of Acidic Gases," U.S. Patent 2,405,747 (August 13, 1946).

4. Tennessee Valley Authority, "Pilot-Plant Study of An Ammonia Absorption-Ammonium Bisulfate Regeneration Process, Topical Report Phases I and II," U.S. Environmental Protection Agency, Environmental Protection Technology Series, EPA-650/2-74-049-a (June 1974).

5. Holliden, G.A., and C.E. Breed, "TVA-EPA Pilot-Plant Study of the Ammonia Absorption-Ammonium Bisulfate Regeneration Process," paper presented at the Flue Gas Desulfurization Symposium, Atlanta, Ga., Nov. 4-7, 1974 (proceedings to be published).

6. Johnstone, H.G., "Recovery of Sulfur Dioxide from Waste Gases: Equilibrium Partial Vapor Pressure over Solutions of the Ammonia-Sulfur Dioxide-Water System." Ind. Eng. Chem., 27(5), May 1935, pp 587-593.

7. Chertkov, B.A. and N.S. Dobromyslova, "The Influence of Traces of Sulfate on the Partial Pressure of SO_2 over Ammonium Sulfite-Bisulfite Solutions." J. Appl. Chem. USSR, 37(8), 1964, pp 1707-1711.

8. Chertkov, B.A., D.L. Puklina, and T. I. Pekareva, "The pH Values of Ammonium Sulfite-Bisulfite Solutions." J. Appl. Chem. USSR, 32(6), 1959, pp 1417-1419.

9. Berdyanskaya, R.A., S.M. Golyand, and B.A. Chertkov, "On the Partial Pressure of SO_2 Over Ammonium Sulfite-Bisulfite Solutions," J. Appl. Chem. USSR, 32, 1959, pp 1978-1984.

10. Newall, H.E., "Ammonia Process for Removal of Sulfur Dioxide from Flue Gas," in Problems and Control of Air Pollution, F.S. Mallette, ed., New York, Reinhold, 1955, pp 170-190.

11. Griffin, L.I., "Evaluation of Equations for Designing Ammoniacal Scrubbers to Remove Sulfur Oxides from Waste Gases," U.S. Environmental Protection Agency, Environmental Protection Technology Series, EPA-650/2-74-035 (January 1974).

12. King, R.A., "Economic Utilization of Sulfur Dioxide from Metallurgical Gases," Ind. Eng. Chem., 42(11),(November 1950), pp. 2241-8.

13. Burgess, W.D., "SO_2 Recovery Process as Applied to Acid Plant Tail Gas," Chemistry in Canada, June 1956, pp 116-119.

14. Lehle, W.W., "Processing of Waste Gases from Sulfuric Acid Plants," in The Manufacture of Sulfuric Acid, W.W. Duecker and J.R. West, ed., New York, Reinhold, 1959, pp 346-358.

15. Hein, L.B., A.B. Phillips, and R.D. Young, "Recovery of Sulfur Dioxide from Coal Combustion Stack Gases," in Problems and Control of Air Pollution, F.S. Mallette, ed., New York, Reinhold, 1955, pp 155-169.

16. "Ammonia-Cyclic Scrubbing of SO_2 from Flue Gas of Power Stations," Ministry of Chemical and Petroleum Machine Building, the State Scientific Research Institute for Industrial and Sanitary Gas Cleaning, Moscow, 1973.

17. Newcombe, G.M., "Technical Status Report, Ammonia Scrubbing Program," intralaboratory report of Control Systems Laboratory, U.S. Environmental Protection Agency, April 6, 1972.

18. Engineer - Contractor's Report on Alumina-from-Clay Experimental Plant (Plancor 1865) at Salem, Oregon, 1946.

19. Chertkov, B.A., "General Equations for the Oxidation Rate of Sulfite-Bisulfite Solutions in the Extraction of SO_2 from Gases," J.Appl. Chem. USSR 34(4), 1961, pp. 743-747.

20. Newcombe, G.M., M.A. Maxwell, and G.T. Rochelle (EPA Control Systems Laboratory), "Control of Sulfur Dioxide Emission from Stack Gases: Discussion of Promising Soluble-Base Aqueous-Scrubbing Processes," unpublished paper presented at Delaware Valley Section Meeting, A.I.Ch.E., Philadelphia, Pa., March 21, 1972.

21. Griffin, L.I., personal communication, August 1974.

22. Holliden, G.A., N.D. Moore, P.C. Williamson, and D.A. Denny, "Removal of Sulfur Dioxide from Stack Gases by Scrubbing with Ammoniacal Solutions: Pilot-Scale Studies at TVA," Proceedings: Flue Gas Desulfurization Symposium (1973), U.S. Environmental Protection Agency, Environmental Protection Technology Series, EPA-650/2-73-038 (December 1973) pp 961-996.

23. Tennessee Valley Authority, "Sulfur Oxide Removal from Power Plant Stack Gases", prepared for National Air Pollution Control Administration under Contract No. TV-29233A, 1970.

24. M.W. Kellogg Company, "Evaluation of SO_2-Control Processes, Task No.5 Final Report". U.S. Environmental Protection Agency (APTD-807), October 1971.

25. Smelter Control Research Association, Inc.,"Report to U.S. Bureau of Mines on Engineering Evaluation of Possible High Efficiency Soluble Scrubbing Systems for the Removal of SO_2 from Copper Smelter Reverberatory Furnace Flue Gases." B.O.M. Contract No. S0133044, March 1974.

26. Peters, M.S. and K.D. Timmerhaus, Plant Design and Economics for Chemical Engineers, 2nd edition McGraw Hill Book Company, New York, 1968.

27. Guthrie, K.M., Process Plant Estimating Evaluation and Control, Craftsman Book Company of America, Solvanca Beach, Calif. 1974.

Table 10.1 AMMONIA PROCESS UNIT USAGE AND COST DATA

A. Chemical Utilities	Basis	Unit Cost
Power a) SO_2 Absorption	4 kW/1000 SCFM	$0.015/kWh
b) SO_2 Regeneration	0.392 kWh/lbSO_2 absorbed	
Water a) Process	0.06 gal/lbSO_2 absorbed	$0.30/Mgal
b) Cooling	12.8 gal/lbSO_2 absorbed	$0.10/Mgal
Ammonia (anhydrous)		
a) Loss from scrubber	50 ppm	$190/ton NH_3
b) Loss from purge	0.0126 lb/lbSO_2 absorbed	
Limestone	0.25 lb/SO_2 absorbed	$ 4/ton limestone
Natural Gas	0.145 CF/lbSO_2 absorbed	$1.25/MCF
Steam a) 15 psig saturated	2.27 lb/SO_2 absorbed	$0.80/M lb steam
b) 15 psig, 700°F	0.45 lb/lbSO_2 absorbed	$1.25/M lb steam
B. Operating Labor & Maintenance		
Labor: Absorption	½ man/shift <75,000 SCFM 3/4 man/shift >75,000 SCFM	$8/hr
SO_2 Regeneration	2½ man/shift <10,000 lb/yr 3¼ man/shift >10,000 lb/hr	
Maintenance:	4.0% TCI/year	
Taxes and Insurance	2.5% TCI/year	
C. Fixed Charges	13.15% TCI/year	

Based on Capital Recovery Factor using 10% interest over 15 year life

AMMONIA SCRUBBING - ABS ACIDULATION

TOTAL CAPITAL INVESTMENT COSTS

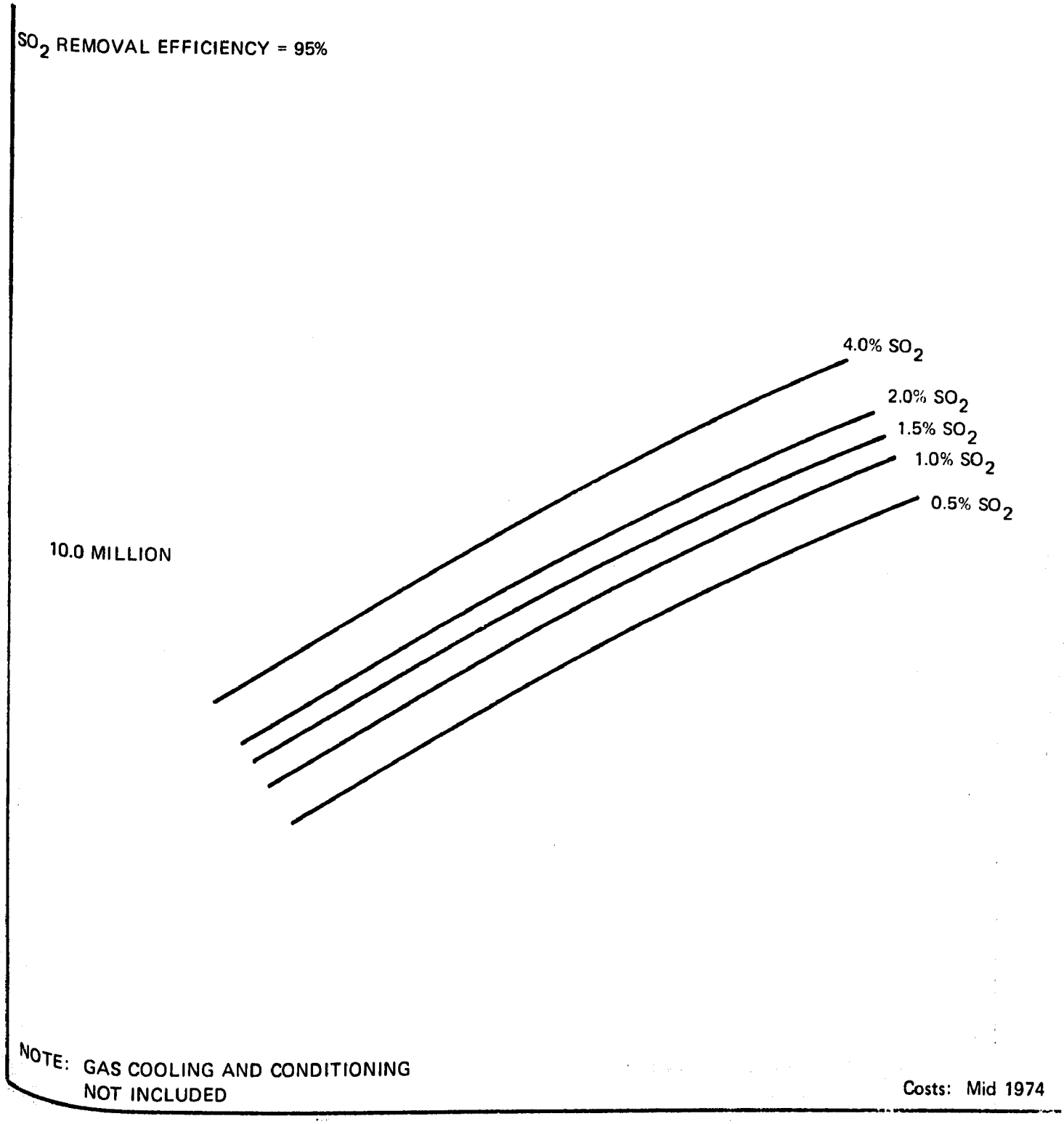

100,000 SCFM

GAS FLOW RATE-SCFM

FIGURE 10-2

AMMONIA SCRUBBING - ABS ACIDULATION

TOTAL ANNUAL DIRECT OPERATING COSTS

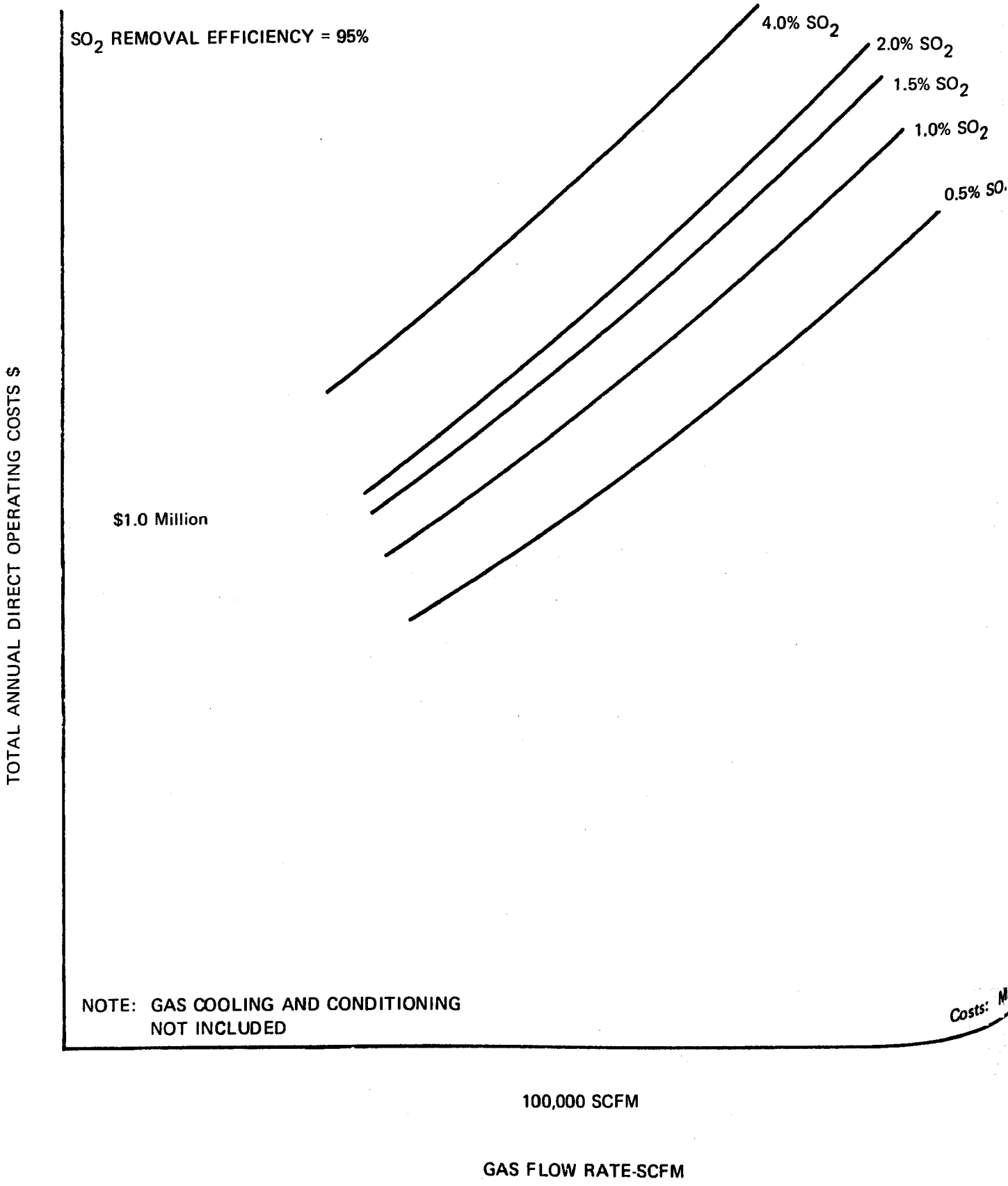

AMMONIA SCRUBBING - ABS ACIDULATION

TOTAL CAPITAL INVESTMENT COSTS
SO_2 REGENERATION SECTION

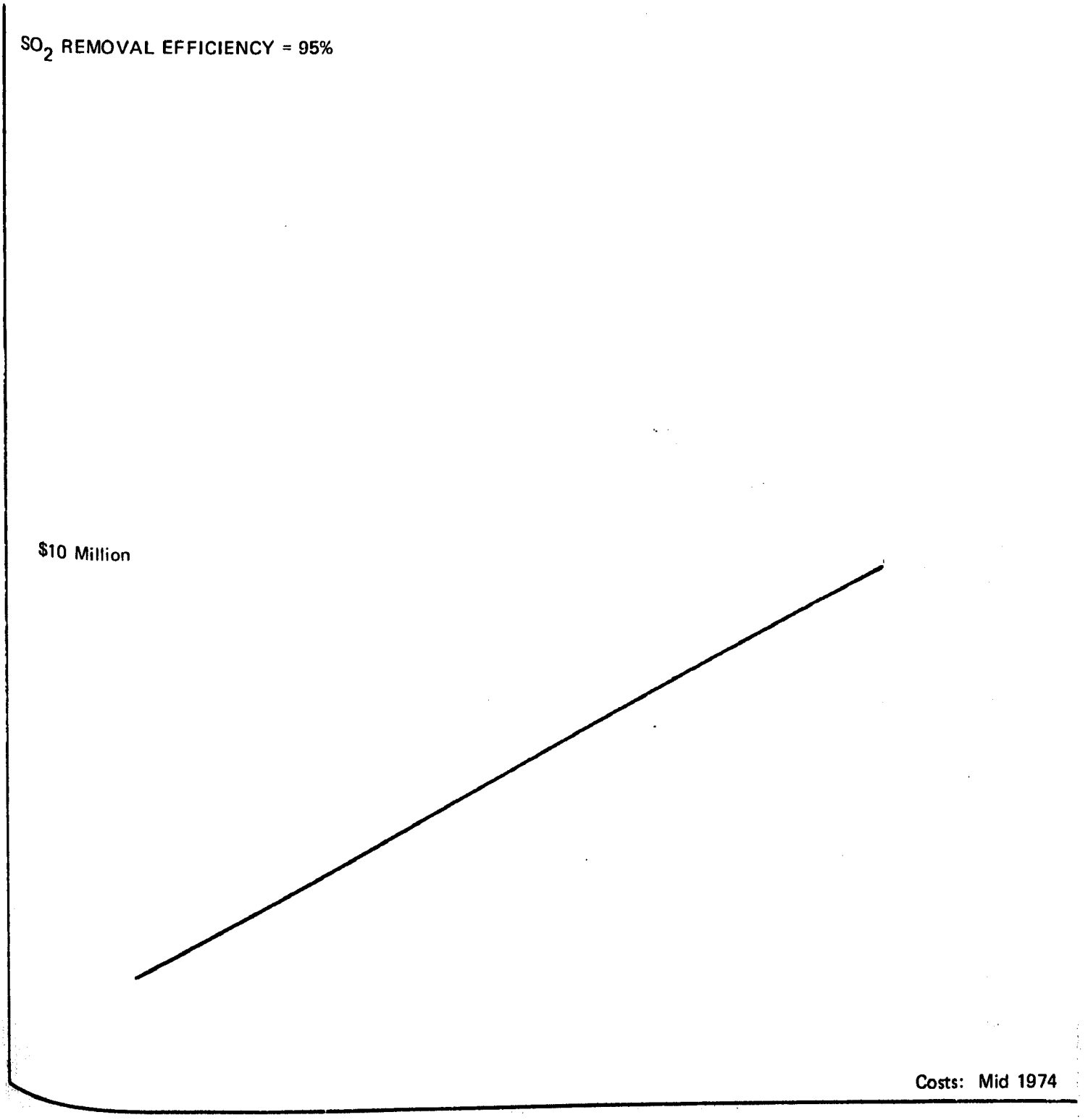

10,000 LB/HR

SULFUR DIOXIDE RATE,
IN REGENERATION SECTION (lbs/hr)

FIGURE 10-4

AMMONIA SCRUBBING - ABS ACIDULATION

(TOTAL CAPITAL INVESTMENT COSTS)
4-STAGE AMMONIACAL SCRUBBER
WITH LIQUOR INTERCOOLING

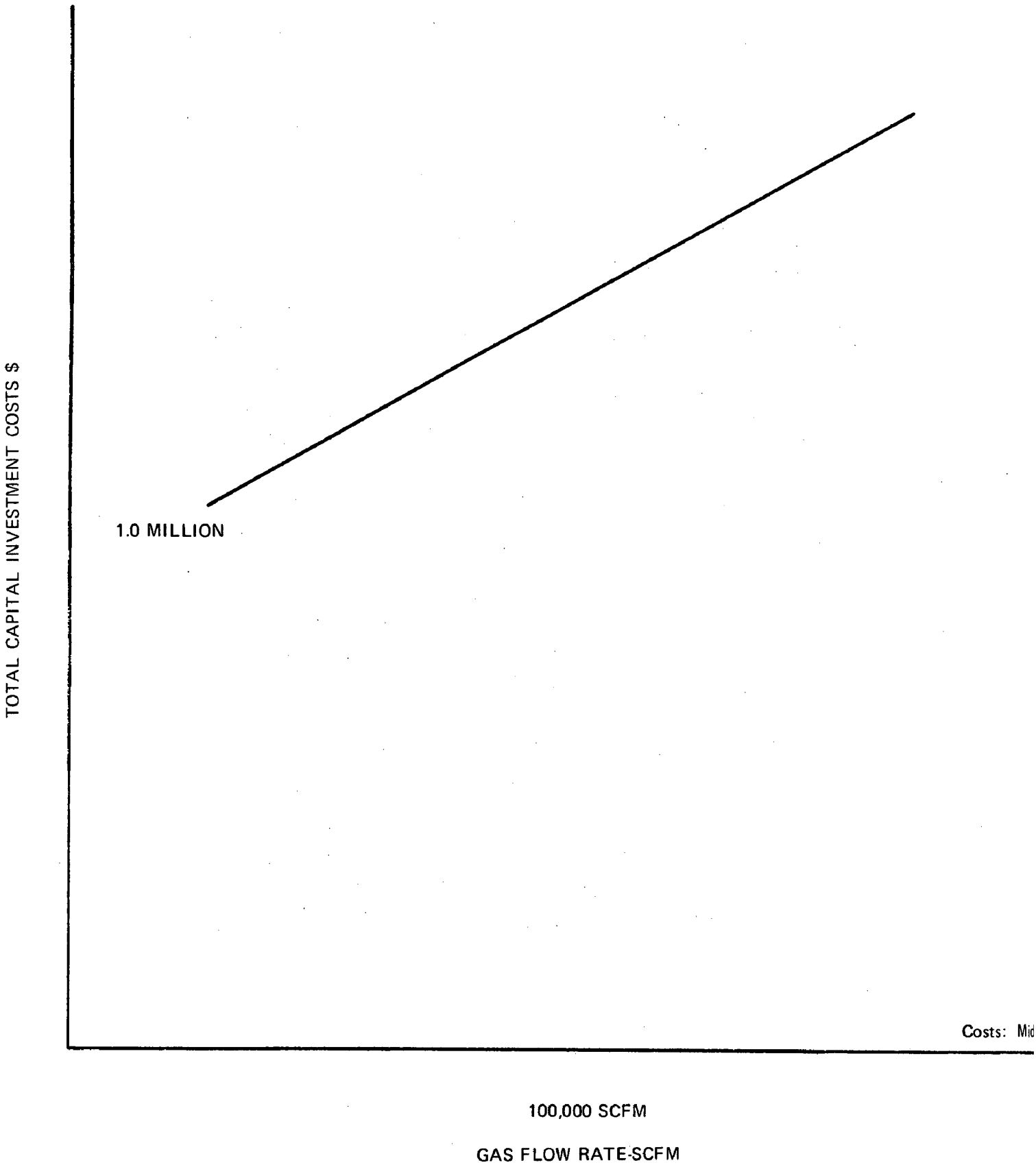

FIGURE

Table 10.2 AMMONIA PROCESS

CAPITAL AND TOTAL ANNUAL COSTS

		Gas Flow Rate - SCFM @1% SO_2			
		70,000	100,000	200,000	300,000
TOTAL CAPITAL INVESTMENT	$	5,900,000	7,450,000	10,450,000	13,000,000
	$/SCFM	84	75	52	43
	$/Annual ton SO_2 Removed	214	190	133	110
Annual Cost					
A. Direct Operating					
1. Power		376,000	537,100	1,074,100	1,611,200
2. Process Water		1,000	1,500	3,000	4,500
3. Cooling Water		74,000	105,200	211,300	317,000
4. Ammonia		77,000	110,000	220,100	330,200
5. Limestone		29,500	42,100	84,200	126,300
6. Natural Gas		10,500	15,000	30,000	45,100
7. Steam		137,800	196,900	393,900	590,800
8. Labor		210,200	227,800	227,800	280,300
9. Maintenance		236,000	298,000	418,000	520,000
10. Taxes & Insurance		147,500	186,300	261,300	325,000
TOTAL ANNUAL DIRECT OPERATING COST		1,299,500	1,720,400	2,923,700	4,150,400
	$/yr/ton SO_2 Removed	49	44	37	35
B. Annual Capitalized Cost		775,900	979,700	1,374,200	1,709,500
C. Net Total Annualized Cost*		1,262,800	1,635,900	2,560,100	3,451,700
	$/yr/ton SO_2 Removed	46	42	33	30

Based on Corporate Tax Rate of 48%.

Table 10.3 AMMONIA PROCESS

TOTAL SYSTEM CAPITAL AND ANNUAL COSTS

		Gas Flow Rate - SCFM @1% SO_2			
		70,000	100,000	200,000	300,000
A. TOTAL CAPITAL INVESTMENT					
1. Gas Conditioning		1,800,000	2,275,000	3,550,000	4,650,000
2. Ammonia Scrubbing-ABS Acidulation		5,900,000	7,450,000	10,450,000	13,000,000
3. Auxiliary Sulfuric Acid Plant		1,450,000	1,820,000	2,775,000	3,600,000
TOTAL		9,150,000	11,545,000	16,775,000	21,250,000
	$/Annual ton SO_2 Removed	333	293	214	180
B. TOTAL ANNUAL OPERATING COSTS					
1. Gas Conditioning		273,100	370,600	613,500	843,300
2. Ammonia Scrubbing-ABS Acidulation		1,299,500	1,720,400	2,923,700	4,150,400
3. Auxiliary Sulfuric Acid Plant		199,500	234,100	271,200	475,000
TOTAL		1,772,100	2,325,108	3,908,400	5,468,700
	$/yr/ton SO_2 Removed	66	61	51	46
C. NET TOTAL ANNUALIZED COSTS*					
1. Gas Conditioning		321,100	419,100	672,200	740,000
2. Ammonia Scrubbing-ABS Acidulation		1,262,800	1,635,900	2,560,100	3,451,700
3. Auxiliary Sulfuric Acid Plant		248,000	302,800	469,000	605,200
TOTAL		1,831,900	2,357,800	3,701,100	4,796,200
	$/yr/ton SO_2 Removed	67	60	47	41

*Based on Corporate Tax Rate of 48%.

11.0 APPLICATION OF ABSORPTION-BASED SO_2 CONTROL SYSTEMS TO WEAK SO_2 COPPER SMELTER REVERBERATORY FURNACES

11.1 GENERAL

Development of SO_2 absorption-based control processes has been generally oriented towards power utility plant application. The flue gases from such plants, whether coal- or oil-fired, are characterized by 1) large uniform gas volumes, 2) moderate temperatures of around 300°F, 3) low levels of SO_2--usually less than 0.3 percent, and 4) moderately low levels of oxygen--5 percent or less.

Some limited pilot plant development work on nonferrous smelter gas slip streams or smelter-simulated gas streams has been done, or is in progress, on the limestone, double alkali (both sodium and ammonia alternatives), and citrate processes. Results have ranged from discouraging for the limestone process, to promising for the citrate process. Much additional work is still required.

Only three SO_2 absorption processes have had the benefit of full-scale commercial application in a smelter environment--the ammonia process usually producing ammonium sulfate as the end product, ASARCO's dimethylaniline process, and the magnesium oxide process on a reverberatory furnace gas in Japan. ASARCO's DMA process is presently operating on copper converter gases at the ASARCO Tacoma smelter. A unit has also been installed by Phelps-Dodge at the Ajo smelter but has been plagued with mechanical problems and has not yet demonstrated its capability on a weak SO_2 gas stream.

It is only after many years of development and a number of demonstration installations in the utility area that the lime/limestone scrubbing process has been able to demonstrate the reliability and process capability which a control process in an industrial environment must have. Investment and operating costs have continued to climb as operating needs were established and equipment requirements were better specified. While much has been gained from this development period, it must be appreciated that it has taken place under the essentially uniform conditions of the utility industry. Even overseas efforts in effecting SO_2 control with alternative processes to the lime/limestone approach understandably have focused on power plant applications.

In considering the application of absorption-based SO_2 control systems to the weak SO_2 streams of nonferrous smelters, it is necessary to give some thought to the differences which exist between smelter operation and utility practice and the effect these differences may have on the control process itself.

11.2 SMELTER REVERBERATORY FURNACE AND ROASTER OPERATIONS

In reverberatory furnaces, smelting of the copper-carrying ore concentrate or calcine is accomplished by the combustion of large volumes of fuel and air. The offgases are accordingly large in volume with low concentrations of the sulfur oxides. The operating conditions are established to produce from a given concentrate or calcine, a copper matte with a composition which facilitates conversion to blister copper during the converter step. However, there are a number of major factors which directly affect reverberatory furnace operation and hence the volume of the effluent gases and the concentration of SO_2 in these gases:

1) The mineralogy of the ore concentrates -- Copper-bearing ores, even after concentration, differ widely in their mineral makeup. The levels of pyritic sulfur, silicate makeup and content, etc., exercise a strong influence on the readiness with which an ore will smelt and hence the firing rate or fuel/charge rates necessary to achieve the desired reactions. It is apparent, therefore, that reverberatory operations may differ markedly between different smelters processing different source ore material. Some smelters process ore on a custom basis and, as purchasing contracts are competitively negotiated and ore sources change, operating conditions in their reverberatories could change dramatically.

2) The type of reverberatory charge -- Four of the domestic copper smelters under review presently use multi-hearth roasters and two use fluo-solids roasters to produce a calcine charge to their reverberatory furnaces. Roasting tends to reduce the sulfur eliminated in the reverberatory and results in weaker SO_2 streams.

3) The method of charging the reverberatory furnace -- A reverberatory furnace is charged approximately every 15-20 minutes. Charging through the roof (side-wall charging) is invariably associated with peaks in both gas flow and SO_2 concentration. Charging by Wagstaff guns, which disperse the concentrate or calcine over the molten bath, tends to reduce emissions.

4) Treatment of converter slag -- It is common practice to return converter slag to the reverberatory furnace and this approach will tend to increase the sulfur oxide emissions per unit of charge. In one smelter at least, this practice is no longer followed and the converter slag is treated in separate facilities.

5) Air infiltration -- Air infiltration into the gas ductwork system of a reverberatory furnace is a universal occurrence, although the condition of the ductwork and equipment and the operating practices exercise a significant influence on the total amount of infiltration. However, additional dilution of the reverberatory offgases is also related to the necessity of periodically "blowing" the waste heat boiler of deposited particulates carried over from the furnace. Air is usually used, but in some smelters, the system makes use of steam.

Theoretically, the offgases from multi-hearth roasters should be relatively uniform with an SO_2 concentration of 5-10 percent, but operating roasters are usually old and considerable air ingress is common. It is also common practice to use air dilution to effect cooling of the effluent gases. Actual operating conditions of the roasters and sulfur elimination will also be influenced by the mineralogy of the ore concentrates.

Control of both the roasters and the reverberatory furnaces is focused on the combustion conditions in the equipment itself. Temperatures at specific locations and visual observation of certain trays in the multi-hearth roaster are used to adjust air flows and hence combustion within the roaster. In reverberatory furnaces, under established firing conditions, oxygen analyzers at the furnace uptake and automatic draft control are used to achieve and maintain optimum control. Routinely available data have thus tended to be concentrated at these key metallurgical operational steps. Conditions down the offgas system, with the exception of the operation of the waste heat boilers and the electrostatic precipitator have not warranted close attention in the past. With the advent of SO_2 control legislation over recent years and the defined responsibilities of smelter operators to limit emissions, there has arisen a need to know the SO_2 levels at the effluent stack; and the use of continuous SO_2 analyzers at the stack is becoming common.

11.3 UNCERTAINTIES IN THE CHARACTERIZATION OF SMELTER WEAK SO_2 GAS STREAMS

Effective matching of particular SO_2 control processes with the weak SO_2 gas streams of individual copper smelters demands a thorough understanding of the candidate control processes themselves, and a detailed characterization of the subject SO_2 gas streams. Unfortunately, the characterization of these gas streams has not resolved a number of uncertainties related to the impact of operating practices and data sources on gas flow variations and composition ranges.

As discussed above in Section 11.2, reverberatory gas streams are subject to significant changes in both flow rate and SO_2 concentration. For a paper study such as this current effort, the minimum information needed to size an absorption-based system is 1) maximum gas flow rate and 2) average SO_2 weight rate. The latter parameter must usually be determined using the volume percent SO_2 content of the gas and an appropriate gas flow rate. Unless the values of SO_2 content and gas flow used for this calculation are approximately equal to the "average" values of the system, the resulting SO_2 weight rate can be substantially in error, with distortion of both estimated costs and appropriate control strategies.

Data available from individual smelters should be interpreted within the framework of the conditions under which it is obtained or developed. This has not always been possible. Some situations have been identified where the gas stream characteristics are "composites" with the different parameters having been determined at different locations in the system.

Routine data on sulfur trioxide levels, particulate loading after the electrostatic precipitators, and the oxygen content of the gas streams after the furnaces is generally not available simply because such information has not been a necessary part of smelter operations.

It is also noted that although gas flow rates are determined on the total gas volume including moisture, SO_2 determinations are usually on a dry gas basis. In view of the uncertainties noted above, no correction has been made for the SO_2 content in calculating the weight rate of SO_2.

11.4 UNCERTAINTIES IN THE APPLICATION OF ABSORPTION-BASED SO_2 CONTROL PROCESSES TO WEAK SO_2 STREAMS

In general, absorption-based SO_2 control processes are in an early stage of development, and there has been very little application to gas streams with the characteristics provided by non-ferrous smelters. While the development and pilot plant work conducted to date has been mainly on utility plant flue gases, a greater understanding of the process relationships has resulted, and it is possible to identify at least some of the areas of uncertainty these processes must accommodate in the non-ferrous smelting field:

1) Variable SO_2 concentrations and gas volumes -- Although most of the candidate processes have demonstrated a measurable degree of turn-down capability, the total effect of relatively short cycle, wide variations in both SO_2 and gas flow in the absorption step is uncertain. Liquid/gas (L/G) ratios can be established for the maximum conditions but the changes in pH associated with the changing conditions may pose operational problems, particularly with the lime/limestone processes.

2) Oxygen levels -- The weak SO_2 smelter gas streams are invariably high in oxygen with values of up to 10-15 percent. This level of oxygen, together with the possible presence of submicron-sized metallic particulates acting as catalysts, offers the potential for high rates of oxidation in the absorbent. High oxidation rates increase purge requirements with the loss of the active chemicals and inflate operating expenses. The use of antioxidants may reduce oxidation but they are not entirely effective and, again, their use escalates operating costs significantly.

3) Utilization of SO_2 -- The regenerable control processes, with the appropriate auxiliary plant, produce sulfuric acid, elemental sulfur, or liquid or gaseous sulfur dioxide. Obviously, the choice of end product is an economic one and will depend on internal requirements for sulfuric acid or the marketing outlet for the available options. In certain situations, the option may be between acid production with neutralization facilities to absorb over-market production, and the production of elemental sulfur. It is beyond the scope of this study to consider these aspects, but it is realized that the total cost of a selected SO_2 control process for a particular smelter could be substantially higher than that cost which results from simply applying an auxiliary sulfuric acid plant to the primary SO_2 control process.

4) Adequacy of existing particulate removal facilities -- Recovery of solid material carryover from the roasters and reverberatory furnaces is a routine practice in copper smelters. In some cases, however, the electrostatic precipitators in use are old, recovery efficiency is low, and air infiltration is appreciable. The implementation of an SO_2 control system would, in all likelihood, be associated with replacement of the existing ESP. Where such situations have been identified, the cost of a replacement unit has been estimated but not directly included in the cost of the SO_2 control system itself.

5) Cost uncertainties -- Uncertainties in characterizing the weak gas streams themselves will be reflected in the associated cost structures but, at best, the cost estimates developed for the specific smelters should be regarded as order-of-magnitude only. Historically, as control methods have progressed from pilot plant to demonstration scale to full commercial application (for example the lime/limestone system), estimated costs have escalated dramatically. Estimated costs for the citrate process appear to be very attractive today when viewed against the costs for the other processes, but as this process, too, continues through its development cycle, investment costs may grow appreciably. The installation of new processes in an on-line production facility also involves significant cost uncertainties. Retrofitting costs and the difficulties of scheduling, special safety requirements, provision of temporary production facilities, etc., are all variables with uncertain limits. Allowances have been made in the smelter application costs, but this uncertainty should be noted. The cost structures for each of the basic control systems have been escalated to a mid-1974 base, but cost escalation levels recently experienced make it difficult to project future costs. This situation should certainly be kept in mind in evaluating the developed costs in the subsequent sections.

12.0 APPLICATION OF ABSORPTION-BASED SO_2 CONTROL SYSTEMS TO THE WEAK SO_2 GAS STREAMS OF U.S. PRIMARY COPPER SMELTERS

12.1 THE ANACONDA COMPANY-ANACONDA, MONTANA

The Anaconda Smelter with a nominal capacity of 2000 TPD of concentrate presently operates with 4 reverberatory furnaces and 4 on-line Pierce-Smith converters. Reverberatory gases from one furnace pass through a waste heat boiler while the gases from the other three units are water quenched in a cooling chamber. The reverberatory gases are then mixed with a portion of the converter offgases before passing through an electrostatic precipitator and being vented up a 925 foot stack. About 83,000 SCFM of the converter gases are directed to a double absorption sulfuric acid plant presently producing about 400 TPD of acid.

The company is presently in the final stages of a major project to convert its smelting operation from reverberatory furnaces to a fluo-solids roasting and electric furnace process. SO_2 content of the off-gases is expected to be around 6.5 percent and the present acid plant will be upgraded to 1100 TPD acid to accommodate this loading. Startup is scheduled for October 1975 with full on-line operation expected by the end of the year.

In view of this situation, no absorption-based control systems will be considered.

12.2 ASARCO -- EL PASO SMELTER, TEXAS

12.2.1 Smelter Characteristics

This smelter began operations in 1905. It is a custom smelter with a nominal capacity of around 1000 tons of concentrate per day. The concentrates are treated in 4 multi-hearth roasters, smeltered in a single reverberatory furnace and 2 Pierce-Smith converters. The roaster gases pass through a settling flue and join the reverberatory gases prior to a spray chamber and the electrostatic precipitator. Presently in the planning stage, with a 1978 target date, is a proposal to treat the roaster gases together with the gases from a lead smelter sintering machine in a new 500 TPD sulfuric acid plant.

The reverberatory gases pass through waste heat boilers and mix with the roaster gases; the total gas stream, after cooling in a spray chamber, is treated in an ESP before being vented up an 825 ft stack.

The offgases from the 2 operating converters (a third unit is on standby) pass through waste heat boilers, spray chamber, and an electrostatic precipitator before feeding a double contact, 525 TPD sulfuric acid plant rated at 60,000 SCFM at 4.5 percent SO_2, commissioned in 1972.

The El Paso smelter is located close to the city of El Paso on a fairly congested plant site. Steam and power facilities are fully loaded. Water is available.

12.2.2 Weak SO_2 Streams

Although there are two sources of weak SO_2 streams in this smelter, the mixing of these streams prior to the electrostatic precipitators results in one combined dilute stream being vented to atmosphere. A flow schematic is provided in Figure 12.2-1 and indicates the individual stream parameters which have been developed to represent this smelter's operation. It is noted that these data represent El Paso's operation only under the conditions of processing a specific ore concentrate. Since this smelter is a custom smelter, ore concentrate characteristics and hence operating conditions and SO_2 elimination may change markedly. The reverberatory fuel/charge ratio for the reported period was low and does not necessarily represent the long range conditions.

On the basis of the data provided for the El Paso operation, the SO_2 content of the reverberatory gases range from 0.06 to a high of 0.78 percent over a cycle of 3 chargings. At the normal operating rate of a charge taking place approximately every 20 minutes, the related SO_2 level swings make the determination of a meaningful SO_2 level for SO_2 control sizing extremely difficult. The practice of "soot" blowing the waste heat boilers approximately every hour also contributes to the gas volume and SO_2 content variability. The "average" figures provided must be taken as indications only. The SO_2 levels for the El Paso multiple hearth roasters also show wide variations over a 2 hour cycle, and an approximate "average" has been estimated.

The parameters of the combined stream flow presently being vented represent "average" reported gas flows, with the SO_2 and oxygen contents being estimated for the individual stream information.

The weak gas streams of the ASARCO El Paso smelter under present operation are thus characterized as shown in Table 12.2-1.

12.2.3 SO_2 Control Process Selection

As noted in Section 11, custom smelters pose a large degree of uncertainty when it comes to selecting and sizing SO_2 control processes. The "average" characteristics identified for the El Paso Smelter provide a particularly doubtful basis. Although this smelter is nominally equivalent to the smelting capacity of ASARCO's Tacoma smelter, the particular conditions under which this smelter was operating and for which the reported data applies were very different, and the resulting SO_2 levels are markedly different from those of Tacoma. Since it is quite feasible for the El Paso smelter to handle concentrates similar to those being handled at Tacoma, or vice versa, there is some validity in considering these two smelters as having the same parameters as far as selecting and sizing SO_2 control processes. That is, the SO_2-handling section of the process should be sized for the maximum average SO_2 levels expected. This approach will be taken for the combined roasters and reverberatory streams. A secondary situation will be considered where the roaster gases are already treated in the planned second acid plant and only the reverberatory gas stream at the maximum expected SO_2 concentration and gas flows will require scrubbing treatment.

ASARCO — EL PASO, TEXAS
SMELTER FLOW SCHEMATIC

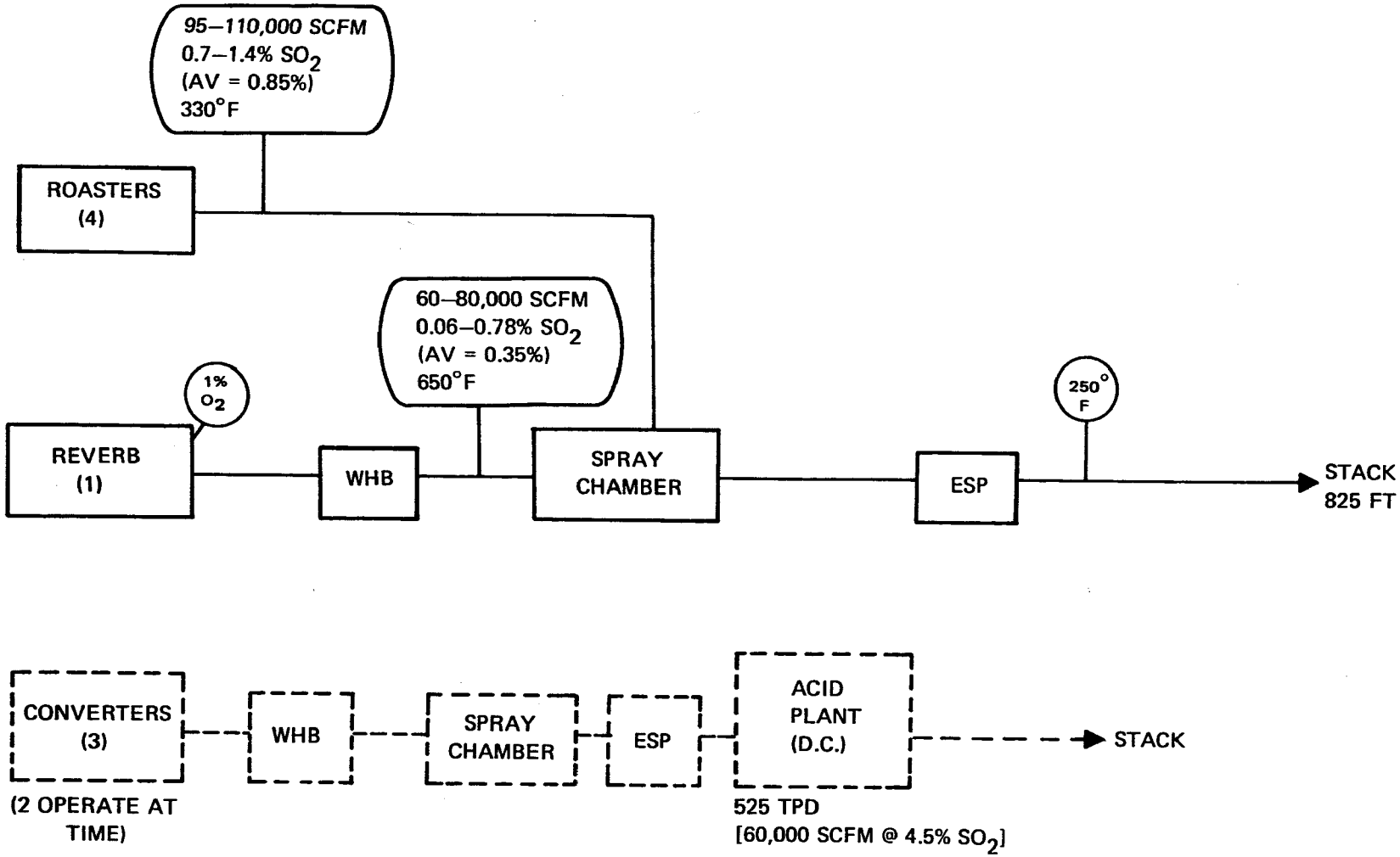

FIGURE 12.2-1

Table 12.2-1. ASARCO - EL PASO SMELTER, TEXAS

CHARACTERIZATION OF WEAK SO_2 GAS STREAMS
BASED ON PRESENT OPERATION.

Stream	Volume SCFM	Av. SO_2 Content Sizing basis (lbs/hr)	Equivalent Av. SO_2 Content (%)	% Oxygen(2)	Temp. °F
Roasters (4)	95-110,000	8,600	0.85	5-7	330
Reverbs. (1) (after W.H.B.)	60-80,000	2,500	0.35	4-6	650
Combined streams after ESP(3)	190-220,000	11,100	0.52	7-9	250

Notes. (1) No data on SO_3 or particulate loading available.

(2) Oxygen content of gas streams estimated.

(3) Additional ventilation gas streams are vented into the flue system, but since they carry little or no SO_2, they have not been included in the combined roaster and reverberatory stream values. The provided values do include the additional air infiltration after the W.H.B.

The "adjusted" parameters for the El Paso smelter will thus be defined as shown in Table 12.2-2.

Although the SO_2 absorption section of any control system is largely sized by the gas flow rate, the liquid/gas ratios are related to the SO_2 concentration and would be fixed at the higher levels. To provide a reasonable sizing basis for the SO_2-handling section, additional surge tanks would be necessary after the absorption system to give an averaged SO_2-content absorbent input.

Of the throwaway processes, only the double alkali process appears to be practical. The high peaking concentration of SO_2 would necessitate 2-stage absorption for the limestone process and on the basis of past experience, the fluctuating SO_2 content may lead to pH control problems with concomitant scaling and operating problems.

The regenerable processes are all theoretically applicable although the relatively high oxygen levels present in the blended roaster/reverberatory gases pose major problems in terms of economics and operation. The two control processes which are the least affected by oxidation are the citrate process and the magnesium oxide process. The resulting, rather weak (15%) SO_2 obtained from the regeneration process of the MgO process could not be handled in the existing acid plant and an additional acid plant with full gas cleaning facilities would be necessary. Although some oxidation would still be experienced with the citrate process, the much lower level suggests that this process with its end product of elemental sulfur offers practical advantages. It is recognized, however, that the status of this process--only limited pilot plant experience--and the requirement for natural gas do constitute uncertainties.

The water quenching of the roaster/reverberatory gas stream and the moderate temperature which exists after the electrostatic precipitator (approximately 250°F) will result in very little additional gas cooling being required before the SO_2 absorption section.

12.2.2 SO_2 Control Process Costs

Conditions specific to this smelter which will directly affect the capital and operating costs of the available SO_2 control processes include the following:

1) The mixing of the roaster and reverberatory gases and quenching them in a spray chamber provide both cooling and some degree of cleaning. The temperature of this gas stream after the electrostatic precipitators is approximately 250°F, and only an additional water quench to bring the temperature down to about 130°F should be necessary before the SO_2 absorption column.

2) Retrofitting costs will reflect the difficulties of making the necessary tie-ins with appropriate bypass and dampers to the rather short (approximately 100 ft) flue system existing between the ESP and the stack. A factor of 50 percent of the capital cost of the prequench and SO_2 absorption system has been assumed.

3) The variability of both gas flow and SO_2 content in the reverberatory gas stream will require the provision of larger surge capacity after the absorption system to provide a uniform SO_2 rate to the regeneration section, and an additional 5 percent of the capital investment of the SO_2 absorption section has been provided to cover this provision.

4) Additional service facilities such as substations, power distribution, and a water treatment plant to support a scrubbing process will be necessary. Estimated costs have been based on the unit values established for each control process.

5) The implementation of a major process change in an operating plant incurs substantial additional costs not readily identifiable in advance, but nevertheless directly affecting the total capital cost of the project. An estimate of 20 percent of the total boundary limit costs for each process has been allowed.

With the weak SO_2 stream parameters of this smelter adjusted to those of ASARCO's Tacoma smelter, it is apparent that SO_2 control costs will parallel those of Tacoma. However, there are certain differences which will have a small effect on final investment costs. Retrofitting the absorption system itself in the El Paso smelter should not pose the same difficulties as might be expected in the Tacoma smelter. Special treatment of recovered ESP particulates for secondary metal recovery with the associated auxiliary gas stream being vented into the roaster/reverberatory flue system as presently practiced at Tacoma is not now part of

The El Paso operation, and should such an operation become necessary at El Paso through ore concentrate changes, the capital costs associated with providing auxiliary gas cleaning are independent of the SO_2 control system. Hence no provision of auxiliary gas cleaning facilities to reduce the total gas volume through an SO_2 control system is necessary.

Summaries of capital and annual operating costs for selected SO_2 control systems on the combined roaster and reverberatory streams of the El Paso smelter are provided in Tables 12.2-3 and 12.2-4, respectively. Summaries of capital and operating costs for selected SO_2 control systems applied to the reverberatory gas stream only are provided in Tables 12.2-5 and 12.2-6, respectively. Individual calculation sheets for the applied processes--namely, double alkali, magnesium oxide and citrate process--are provided under the appropriate smelter heading in Appendix G.

Table 12.2-2. ASARCO - EL PASO SMELTER, TEXAS.

CHARACTERIZATION OF WEAK SO_2 GAS STREAMS
ADJUSTED FOR CONCENTRATE CHANGE.

Stream	Volume SCFM	Av. SO_2 Content Sizing basis (lbs/hr)	Equivalent Av. SO_2 Content (%)	% Oxygen(2)	Temp. °F
Roasters (4)	95-110,000	9,200	0.9	5-8	330
Reverbs. (1) (after W.H.B.)	70-100,000	13,800	1.6	5-8	600
Combined streams after ESP(3)	200-250,000	23,000	1.0	8-12	250

Notes. (1) No data on SO_3 or particulate loading available.

(2) Oxygen content of gas streams estimated.

(3) Additional ventilation gas streams are vented into the flue system, but since they carry little or no SO_2, they have not been included in the combined roaster and reverberatory stream values. The provided values do include the additional air infiltration after the W.H.B.

Table 12.2-3. ASARCO - EL PASO, TEXAS
CAPITAL COSTS FOR SO_2 CONTROL PROCESSES ON COMBINED ROASTER AND REVERBERATORY FURNACE OFF-GASES

ITEM	Primary SO_2 Control Method			COMMENTS
	Double Alkali (95% Removal)	Magnesium Oxide (90% Removal)	Citrate (95% Removal)	
1. Boundary limits retrofitted fitted primary system	10,390,000	9,270,000	10,390,000	
2. Auxiliary Plant: (a) H_2SO_4 plant with dry gas cleaning	N/A	4,350,000	N/A	
TOTAL Boundary Limit Cost	10,390,000	13,620,000	10,390,000	
3. Total Service Costs	550,000	570,000	800,000	
4. Associated Investment Costs (a) new ESP (b) General site-related costs	2,080,000	2,720,000	2,080,000	
Total Capital Investment	13,020,000	16,910,000	13,270,000	
Capital cost/annual ton SO_2 Removed	$146	$206	$149	

Table 12.2-4. ASARCO - EL PASO, TEXAS
ANNUAL OPERATING COSTS AND TOTAL NET ANNUALIZED COSTS FOR SO_2 CONTROL PROCESSES ON COMBINED ROASTER AND REVERBERATORY FURNACE OFF-GASES

ITEM	Primary SO_2 Control Method			COMMENTS
	Double Alkali (95% Removal)	Magnesium Oxide (90% Removal)	Citrate (95% Removal)	
1. Gas conditioning and SO_2 absorption	179,000	179,000	179,000	
2. SO_2 handling	3,906,000	2,542,000	2,226,000	
3. Labor	158,000	262,000	280,000	
4. Maintenance, Ins. & Taxes	742,000	778,000	748,000	
5. Total Annual Operating Cost	4,985,000	3,761,000	3,433,000	
6. Auxiliary Plant Total Operating Costs (a) Sulfuric acid plant	N/A	520,000	N/A	
7. Total Annual Operating Cost	4,985,000	4,281,000	3,433,000	
8. Annualized Capital Cost	1,712,000	2,224,000	1,745,000	
9. Total Net Annualized Cost	3,888,000	3,909,000	3,106,000	
10. Cost/year/ton SO_2 removed	$44	$48	$35	
11. Cost/lb copper(1)	3.35¢/lb	3.37¢/lb	2.68¢/lb	

(1) Based on smelter rated capacity of 1000 TPC concentrate, 18% copper, operating 340 days/year. Annual production 58,000 TPY. Zero net-back to smelter for acid or sulfur produced.

Table 12.2-5. ASARCO – EL PASO, TEXAS
CAPITAL COSTS FOR SO_2 CONTROL PROCESSES ON REVERBERATORY FURNACE OFF-GASES ONLY

ITEM	Primary SO_2 Control Method			COMMENTS
	Double Alkali (95% Removal)	Magnesium Oxide (90% Removal)	Citrate (95% Removal)	
1. Boundary limits retrofitted primary system	7,280,000	6,350,000	7,580,000	
2. Auxiliary Plant: (a) H_2SO_4 plant with dry gas cleaning	N/A	3,100,000	N/A	
TOTAL Boundary Limit Cost	7,280,000	9,450,000	7,580,000	
3. Total Service Costs	420,000	420,000	600,000	
4. Associated Investment Costs (a) new ESP (b) General site-related costs	1,460,000	1,890,000	1,520,000	
Total Capital Investment	9,160,000	11,760,000	9,700,000	
Capital cost/annual ton SO_2 Removed	$172	$240	$182	

Table 12.2-6. ASARCO - EL PASO, TEXAS
ANNUAL OPERATING COSTS AND TOTAL NET ANNUALIZED COSTS FOR SO_2 CONTROL PROCESSES ON REVERBERATORY FURNACE OFF-GASES ONLY

ITEM	Primary SO_2 Control Method			COMMENTS
	Double Alkali (95% Removal)	Magnesium Oxide (90% Removal)	Citrate (95% Removal)	
1. Gas conditioning and SO_2 absorption	82,000	82,000	82,000	
2. SO_2 handling	2,340,000	1,523,000	1,337,000	
3. Labor	158,000	260,000	280,000	
4. Maintenance, Ins. & Taxes	520,000	535,000	546,000	
5. Total Annual Operating Cost	3,100,000	2,400,000	2,245,000	
6. Auxiliary Plant Total Operating Costs (a) Sulfiric acid plant	N/A	370,000	N/A	
7. Total Annual Operating Cost	3,100,000	2,770,000	2,245,000	
8. Annualized Capital Cost	1,205,000	1,546,000	1,276,000	
9. Total Net Annualized Cost	2,524,000	2,611,000	2,133,000	
10. Cost/year/ton SO_2 removed	$47	$52	$40	
11. Cost/lb copper (1)	2.18¢/lb	2.25¢/lb	1.84¢/lb	

(1) Based on smelter rated capacity of 1000 TPD concentrate, 18% copper, operating 340 days/year. Annual production 58,000 TPY. Zero net-back to smelter for acid or sulfur produced.

12.3 ASARCO -- HAYDEN SMELTER, ARIZONA

12.3.1 Smelter Characteristics

This custom smelter with a nominal capacity of 1800-2000 tons of concentrate per day began operations in 1912. There are 12 multiple hearth roasters with normally 6-8 in operation at any one time. Gases from the roasters enter a settling chamber where they are blended with the reverberatory furnace gases.

Roasted calcine is handled in two reverberatories--one 27 feet wide and 112 feet long, and the other 23 feet wide and 105 feet long. Charging is accomplished using Wagstaff guns. Gases pass through waste heat boilers and are cooled in a spray chamber before passing into the settling chamber to be blended with the roaster gases. The combined stream is treated in an electrostatic precipitator for particulate recovery before being vented to a new 1000 ft stack completed in 1974.

There are five Pierce-Smith converters provided with water cooled hoods, with normally three being in operation at a time. The converter gases pass through cyclones, a water spray chamber, and an electrostatic precipitator before passing to the gas conditioning section of a single contact sulfuric acid plant rated at 750 TPD treating approximately 100,000 SCFM of 4.0 percent SO_2 content feed. The tail gas is vented up the 1000 ft stack. Some availability and efficiency problems have been experienced with this acid plant, but recent maintenance programs may have corrected this situation.

The smelter is located at about 2000 ft elevation, adjacent to the Kennecott Copper Corporation's Hayden Smelter site. The surrounding land which is available to the smelter for industrial purposes is limited. Much of it is under lease as grazing land or is Federally-owned land.

The smelter fully utilizes its present steam generating capability for power generation, and available power is fully loaded. Water availability is good although it is hard and typical of Arizona water supplies.

12.3.2 Weak SO_2 Streams

As with the other ASARCO copper smelters, both the roaster gases and the reverberatory gases are weak SO_2 streams and these are mixed prior to the electrostatic precipitator and then vented as a combined stream. The flow schematic provided in Figure 12.3-1 indicates the individual stream parameters based on Hayden's operation under the conditions of processing a particular charge of ore concentrates. Again, as noted with ASARCO's other copper smelters, ore concentrate characteristics may change with corresponding changes in operating conditions and SO_2 elimination.

Data from the Hayden smelter indicates that SO_2 levels in the combined gases from the two reverberatory furnaces, as determined after the waste heater boilers, respond markedly to the furnace charging sequences. At the normal operating rates, there are about 16 loads per hour smelted in the larger reverberatory, and 10 loads per hour smelted in the smaller furnace. Within this period the determined SO_2 level appears to vary from a low of approximately 0.1 percent to a peak value of 1.4 to 1.7 percent as charging takes place. An "average" SO_2 value of 0.5 percent has been estimated for this combined reverberatory gas stream after the spray tower.

The multiple hearth roaster gases also show variability in SO_2 content and the effect of appreciable air dilution. The gas volume has been "normalized" and an approximate "average" value for SO_2 content estimated.

The characteristics of the combined stream flow after the electrostatic precipitator have been developed from the individual stream information with appropriate allowance for additional air dilution.

The weak gas streams of the ASARCO Hayden Smelter have been characterized as indicated in Table 12.3-1.

12.3.3 SO_2 Control Process Selection

The SO_2 control processes for this smelter will be applied to the blended roaster and reverberatory stream after the electrostatic precipitator. The selection and sizing of specific processes will be based on the parameters defined in Table 12.3-1.

ASARCO — HAYDEN, ARIZONA
SMELTER FLOW SCHEMATIC

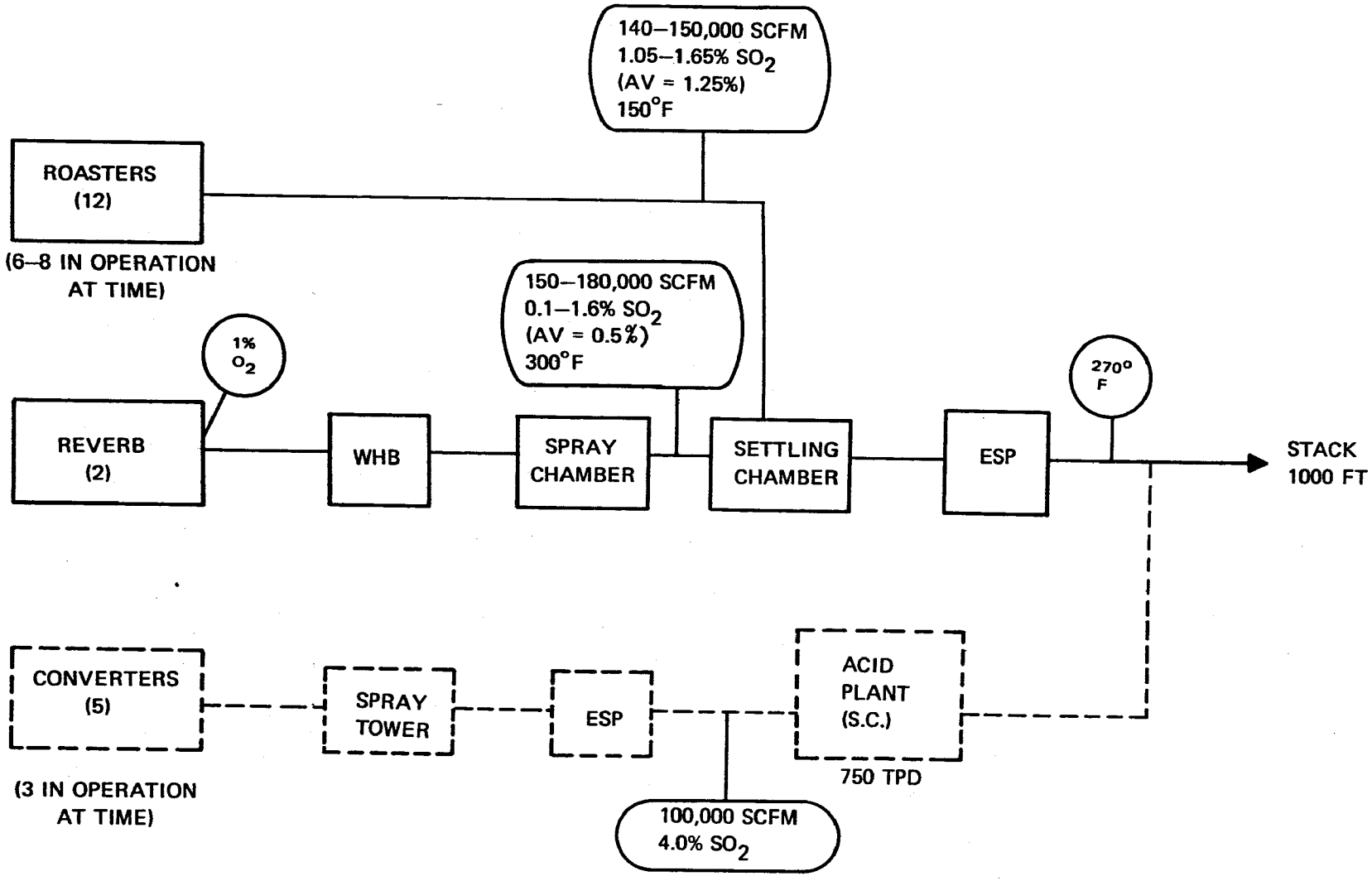

FIGURE 12.3-1

The constraint on available land around the Hayden Smelter for sludge disposal ponds and the variable SO_2 level of the effluent gases appear to preclude application of the lime/limestone process. The double alkali throwaway process will be susceptible to the relatively high oxygen levels in these streams, but the regeneration chemistry of this system suggests that the process may offer potential in this application. The resulting filtered sludge would have to be trucked from the smelter site, but for the purposes of this study, it is assumed that a suitable landfill location is available within 10 to 15 miles of the smelter.

Oxidation also imposes significant penalties on all the regenerable processes with perhaps the exception of the citrate process and the magnesium oxide process. The sulfite and bisulfite products usually resulting from an SO_2 absorption process are oxidized to non-regenerable sulfates which must then be removed from the system. These purge requirements result in the loss of the active absorbent chemicals or, alternatively, the treatment of these heavier purge streams will incur significant additional capital investment and increased operating expenses.

The citrate process with its tolerance for relatively high oxygen levels without an appreciable increase in SO_2 oxidation levels, appears to offer the outstanding potential with an end product of elemental sulfur. In the magnesium oxide process sulfite oxidation appears to be self-limiting at around 15 percent $MgSO_4$, but if this situation does not exist, purging and secondary removal of the $MgSO_4$ will be necessary; or alternatively, if the $MgSO_4$ concentration builds up to approximately 33 weight percent, $MgSO_4 \cdot 7H_2O$ will be precipitated with the $MgSO_3 \cdot 6H_2O$ and will be reduced during the calcination step. This process requires the provision of additional gas cleaning facilities to handle the approximately 15 percent SO_2 regenerated stream and an auxiliary sulfuric acid plant. The direct application of a sulfuric acid plant to gas streams of this volume and with such low levels of SO_2 would demand unrealistically sized preheating and refrigeration facilities and is obviously an impractical approach.

The SO_2 control processes which appear to offer reasonable potential for application in this smelter are the double alkali, citrate, and magnesium oxide processes.

12.3.4 SO_2 Control Process Costs

The basic cost structures for the selected processes for this smelter have been modified to take into consideration the special factors and conditions associated with this operation.

1) The practice common to the ASARCO copper smelters of mixing the roaster and reverberatory gases and quenching the combined stream in a spray chamber provides both cooling and a degree of cleaning. The temperature of this gas stream after the electrostatic precipitator is between 250 and 270°F and only an additional water quench to bring the temperature down to about 130°F should be necessary before the absorption column. An appropriate cost allowance has been made for this pre-absorption quench.

2) Retrofitting costs to accommodate this SO_2 absorption column and prequench with the necessary damper system have been allowed for on the basis of 50 percent of the capital cost of the SO_2 absorption column and prequench.

3) An additional 5 percent of the capital investment of the SO_2 absorption section has been provided to allow for increased surge capacity after the absorption section to accommodate the variable SO_2 content and gas flow rates, and to provide a uniform SO_2 rate to the regneration section.

4) Additional power and water treatment facilities will be required to support a scrubbing process, and costs have been based on the unit relationships established for each control process and the cost-capacity relationships provided in Appendix F.

5) A general site cost factor of 20 percent of the total boundary cost for each process has been allowed to cover those additional but not readily identifiable charges associated with the implementation of a major process change in an operating plant.

The capital and operating cost structures for the three processes selected as applicable for the Hayden Smelter--double alkali, citrate, and magnesium oxide processes--are provided in Tables 12.3-2 and 12.3-3, respectively. Individual computation sheets for each process are provided under the appropriate smelter name in Appendix G.

Table 12.3-1. ASARCO - HAYDEN SMELTER, ARIZONA.

CHARACTERIZATION OF WEAK SO_2 GAS STREAMS.

Stream	Volume SCFM	Av. SO_2 Content[1] Sizing basis (lbs/hr)	Equivalent Av. SO_2 Content (%)	% Oxygen[2]	Temp. °F
Roasters (6-8)	140-150,000	18,400	1.25	4-8	250
Reverbs. (2) (after spray chamber)	150-180,000	8,100	0.5	4-8	330
Combined streams (after ESP's)	350-400,000	26,500	0.7	8-12	270

Notes. (1) No data on SO_3 or particulate loading available.

(2) Oxygen content of gas streams estimated.

Table 12.3-2. ASARCO - HAYDEN, ARIZONA
CAPITAL COSTS FOR SO_2 CONTROL PROCESSES ON COMBINED ROASTER AND REVERBERATORY FURNACE OFF-GASES

ITEM	Primary SO_2 Control Method			COMMENTS
	Double Alkali (95% Removal)	Magnesium Oxide (90% Removal)	Citrate (95% Removal)	
1. Boundary limits retrofitted primary system	11,940,000	9,990,000	11,990,000	
2. Auxiliary Plant: (a) H_2SO_4 plant with dry gas cleaning	N/A	4,750,000	N/A	
TOTAL Boundary Limit Cost	$11,940,000	$14,740,000	$11,990,000	
3. Total Service Costs	580,000	610,000	830,000	
4. Associated Investment Costs (a) new ESP (b) General site-related costs	$ 2,390,000	$ 2,950,000	$ 2,400,000	
Total Capital Investment	$14,910,000	$18,300,000	$15,220,000	
Capital cost/annual ton SO_2 Removed	$146	$194	$149	

Table 12.3-3. ASARCO - HAYDEN, ARIZONA
ANNUAL OPERATING COSTS AND TOTAL NET ANNUALIZED COSTS

ITEM	Primary SO_2 Control Method			COMMENTS
	Double Alkali (95% Removal)	Magnesium Oxide (90% Removal)	Citrate (95% Removal)	
1. Gas conditioning and SO_2 absorption	270,000	270,000	270,000	
2. SO_2 handling	4,479,000	2,923,000	2,076,000	
3. Labor	158,000	262,000	280,000	
4. Maintenance, Ins. & Taxes	851,000	839,000	861,000	
5. Total Annual Operating Cost	$5,758,000	$4,294,000	$3,487,000	
6. Auxiliary Plant total Operating Costs (a) Sulfuric acid plant	N/A	570,000	N/A	
7. Total Annual Operating Cost	$5,758,000	$4,864,000	$3,487,000	
8. Annualized Capital Cost	$1,961,000	$2,407,000	$2,001,000	
9. Total Net Annualized Cost	$4,478,000	$4,350,000	$3,328,000	
10. Cost/year/ton SO_2 removed	$44	$46	$33	
11. Cost/lb copper (1)	1.93¢/lb	1.88¢/lb	1.43¢/lb	

(1) Based on smelter rated capacity of 2000 TPD concentrate 18% copper, operating 340 days/yr. Annual production 75,000 TYP. Zero net-back to smelter for acid or sulfur produced.

12.4 ASARCO -- TACOMA, WASHINGTON SMELTER

12.4.1 Smelter Characteristics

This smelter handles custom smelting exclusively. Of the 10 multiple hearth roasters available, 4-6 are usually on-line at a time. They are old with high leakage rates and correspondingly high dilution of the roasting offgases. These gases are combined with the reverberatory furnace gases in a spray chamber prior to the electrostatic precipitators. Other gases from the arsenic recovery plant, ventilation gases, etc., containing little or no SO_2 are also mixed with the roaster and reverberatory gases before the electrostatic precipitator.

One on-line reverberatory furnace handles the roaster calcines with charging normally taking place 4-5 times/hour. The offgases pass through waste heat boilers before being combined with the roaster gases and further cooled in a spray chamber. They are then mixed with other smelter gases and the combined stream passes through two electrostatic precipitators in series before being vented up a 535 ft stack. Two oil burners are used at the base of the stack to provide adequate buoyancy.

The offgases from the two on-line converters are subjected to a comprehensive gas conditioning and cleanup sequence including electrostatic precipitators, scrubbers and mist ESP's before feeding a Monsanto 150 TPD sulfuric acid plant and a dimethylaniline scrubbing system to produce liquid SO_2. The gas conditioning system and the DMA plant are new and became operative in 1974.

The smelter is located between a built-up urbanized area and open water where additional land is not available.

12.4.2 Weak SO_2 Streams

The flow schematic provided in Figure 12.4-1 relates the roaster and reverberatory gas flows and indicates individual stream parameters which are believed to reasonably represent Tacoma's present operation. It should be noted that the parameters of combined streams after the electrostatic precipitators do not include the secondary operation gas stream introduced prior to the ESP's.

Custom smelters can expect wide variations in the sulfur content of their input ore material, and while roasters provide flexibility in handling this material, nevertheless the offgases from the Tacoma smelter

will reflect this situation in both gas volumes and SO_2 content. The volume of exhaust gases is influenced by the firing rate or fuel/charge ratio and this in turn is related to the "smelterability" of the charge ore material. As discussed in Section 11, fluctuations of the SO_2 content in the exhaust gases from both the roasters and reverberatory furnace are normal conditions. On the basis of the data provided by ASARCO, the SO_2 content of the Tacoma reverberatory offgas sampled after the W.H.B. undergoes wide swings of as much as 4.8 percent down to 0.5 percent during the charging sequence. At a rate of 4-5 charges per hour (2 larry-cars/charge), it is apparent that the SO_2 level and the volume of gas will be continually varying over relatively short time periods. As a basis for sizing the sulfur dioxide-dependent section of any control process, i.e., the regeneration section or the raw material requirements of the throwaway processes, an average SO_2 level of approximately 1.7 percent can be estimated. Because of the variability associated with custom smelting, even this value could change significantly (see data for the ASARCO, El Paso and Hayden Smelters).

No direct data for the Tacoma roasters are available but on the basis that smelting capacity at Tacoma is approximately equivalent to that of the ASARCO El Paso Smelter, the total roaster gas volume and SO_2 concentration noted for this latter smelter have been used for defining the Tacoma system. The SO_2 concentration of 0.9 percent represents an approximate "average" of the concentration profile available.

The present weak gas streams in the Tacoma Smelter are thus characterized as shown in Table 12.4-1.

12.4.3 Selection of SO_2 Control Processes

Under the present operational mode of the Tacoma smelter, the combined roaster and reverberatory gas streams after the electrostatic precipitators include an appreciable quantity of essentially "zero-SO_2" gases from auxiliary operations conducted at the Tacoma site. It has been estimated that these gases could amount to as much as 30,000-40,000 SCFM. In considering the application of an SO_2 control process to the combined roaster and reverberatory, it is apparent that including these auxiliary gas streams as part of the total scrubbing input gas load results in a significantly bigger scrubbing system with higher capital and operating costs. On the other hand, if these gas streams are

ASARCO — TACOMA, WASHINGTON
SMELTER FLOW SCHEMATIC

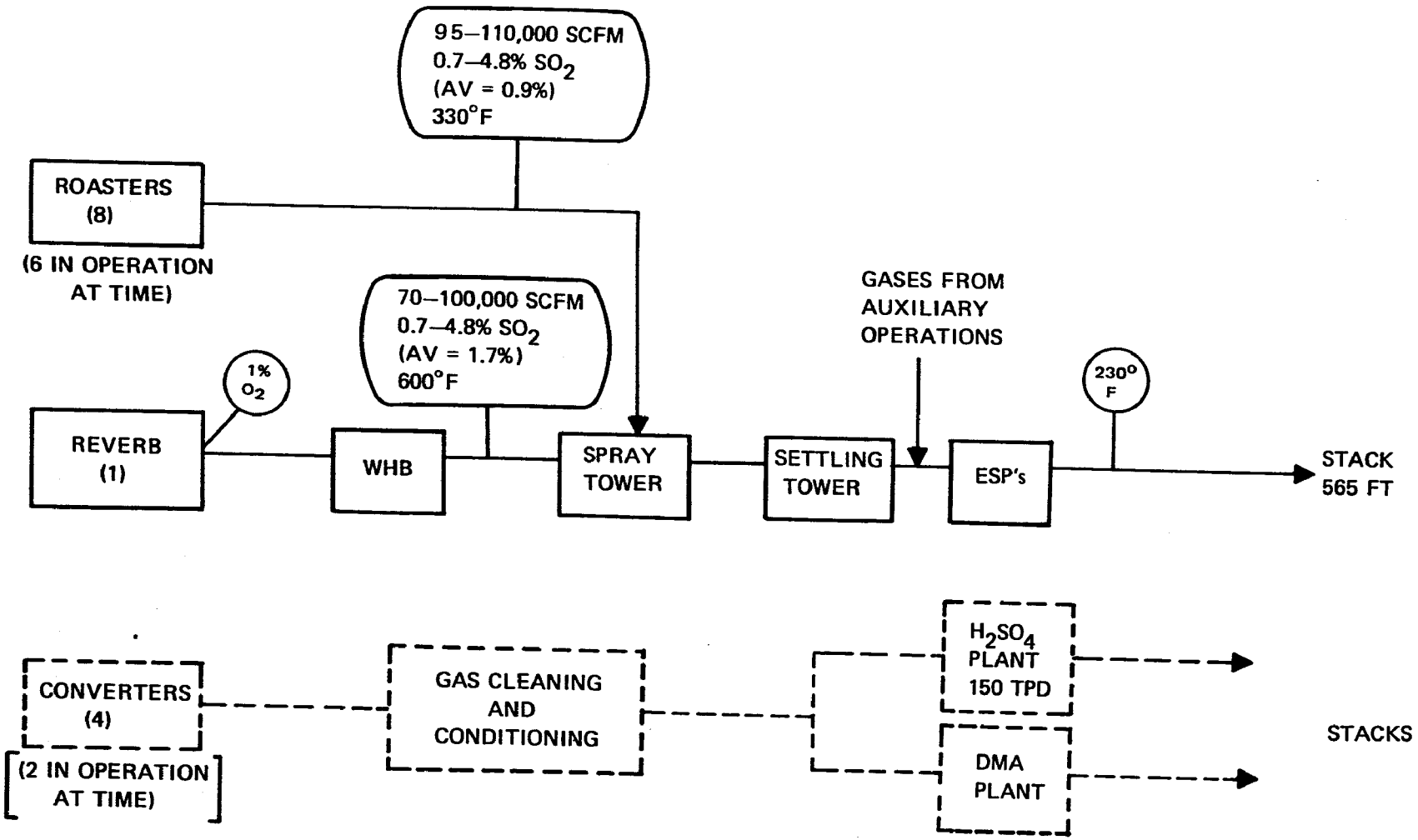

FIGURE 12.4-1

diverted from the roaster/reverberatory electrostatic precipitators, alternative processing facilities must be provided, and the capital cost and operating cost of such facilities should be charged against the SO_2 control process applied.

For the purposes of this study, it will be assumed that alternative processing will be provided for the auxiliary gases and that the SO_2 control processes will be sized for the combined roaster/reverberatory stream as characterized in Table 12.4-1.

The urbanized location of this smelter with its limited land availability precludes the application of the lime/limestone process. Although problems might be anticipated with the routine trucking of sludge wastes from the double alkali process through an urban area, there is a possibility of using this material with proper fixation techniques as fill material in reclaiming land from the sea area.

The highly variable SO_2 content of the reverberatory stream will impose additional cost penalities on scrubbing processes by virtue of the higher liquid/gas (L/G) ratios required to handle the weak SO_2 levels and, in the case of the xylidine and ammonia processes, larger heat exchange units for the inter-tray coolers. The oxygen level of the combined streams has been estimated at around 8-12 percent, and at this level, it is expected that the Wellman-Lord, xylidine and ammonia processes all would be adversely affected in both capital and operating costs by the higher oxidation rates. The direct use of a sulfuric acid plant on this weak stream is clearly an unattractive alternative when assessed in economic terms and energy requirements.

The three processes which appear to have the capability of accommodating the oxidation problem and the variable SO_2 level with the least penalties are the double alkali process, the citrate process and the magnesium oxide process, although it is noted that the energy requirements of the latter process together with the requirements for gas conditioning facilities and an auxiliary sulfuric acid plant pose a substantial economic premium. It is noted that as a result of the in-process quenching of these gas streams and the low temperature of the final mixed gases (250°F), little if any separate gas cooling and conditioning will be required for the selected control processes.

12.4.4 SO_2 Control Process Costs

The capital and the operating costs developed for the control processes judged as applicable to the Tacoma smelter recognize a number of conditions which are peculiar to this smelter.

1) The blending of the roaster and reverberatory gases and subjecting them to a water quenching step provide both cooling and conditioning prior to the electrostatic precipitators. The gases exiting the ESP's are at a temperature of approximately 250°F and an additional simple quench to approximately 130°F prior to the SO_2 absorption column should be adequate. Any particulate carryover would be removed from the SO_2 control process itself via the purge system. Operating costs will be incrementally increased by approximately 80 gal/min of treated water.

2) Retrofitting costs--i.e., making the necessary tie-ins to the existing ductwork after the ESP's, with appropriate bypass and dampers for the SO_2 absorption column--would be expected to be high because of the age of the smelter and the congested space. A retrofit factor of 75 percent of the cost of the prequench and SO_2 absorption system has been assumed.

3) To accommodate the variability of both gas flow and SO_2 content in these gas streams, larger surge capacity after the absorption section will be necessary to provide a uniform SO_2 rate to the regeneration section. An additional 5 percent of the capital investment of the SO_2 absorption section has been provided.

4) The auxiliary gases which are presently vented into the gas handling system prior to the electrostatic precipitators contain little or no SO_2 and the approach has been taken to eliminate these streams (estimated at approximately 40,000 SCFM) from the gas flow to the SO_2 control system. However, a replacement particulate removal system would have to be provided and the cost should be allocated against the total cost for SO_2 control. A bag filter system has been selected and costed accordingly.

5) The capital costs of service facilities such as substations, power distribution, and water treatment plants have been estimated based on the unit values established for each specific control process and the cost data provided in Appendix F. Process water has been assumed to need a degree of chemical treatment.

6) The implementation of a major process change in a congested operating plant incurs substantial additional costs not readily identifiable in advance but nevertheless directly affecting the total capital cost of the project. An estimate of 20 percent of the total boundary costs for

Individual calculation sheets for the applied processes are provided under the appropriate smelter heading in Appendix G and a summary of these capital costs for the Tacoma smelter is provided in Table 12.4-2. Associated annual operating and total annualized costs are provided in Table 12.4-3.

Table 12.4-1. ASARCO - TACOMA SMELTER, WASHINGTON

CHARACTERIZATION OF WEAK SO_2 GAS STREAMS

Stream	Volumes SCFM	Av. SO_2 Content Sizing Basis (lbs/hr)	Equivalent Av. SO_2 Content (%)	% Oxygen[2]	Temp°F
Roasters (6)	95-110,000	9,200	0.9	5-8	330°
Reverb (1) (after W.H.B.)	70-100,000	13,800	1.6	5-8	600°
Combined Streams after ESP's[3]	200-250,000	23,000	1.0	8-12	250°

NOTES:

1) No data an SO_3 or particulate loading available.
2) Oxygen content of gas streams estimated.
3) At the Tacoma smelter additional gas streams estimated at 30-50,000 SCFM are directed into the system prior to the ESP's. These streams carry little or no SO_2 and they have not been included in these combined roaster and reverberatory stream values. There is additional air infiltration after the W.H.B.

Table 12.4-2. ASARCO - TACOMA, WASHINGTON
CAPITAL COSTS FOR SO_2 CONTROL PROCESSES ON COMBINED ROASTER AND REVERBERATORY FURNACE OFF-GASES

ITEM	Primary SO_2 Control Method			COMMENTS
	Double Alkali (95% Removal)	Magnesium Oxide (90% Removal)	Citrate (95% Removal)	
1. Boundary limits retrofitted primary system	11,000,000	9,960,000	11,000,000	No gas conditioning provided but cost allowance for pre-absorber quenching to 130°F. Retrofit allowance 75% absorption section.
2. Auxiliary Plant: (a) H_2SO_4 plant with dry gas cleaning	N/A	4,350,000	N/A	Gas cleaning provided by high temperature bag filters rather than wet scrubbing.
TOTAL Boundary Limit Cost	11,000,000	14,310,000	11,000,000	
3. Total Service Costs	550,000	570,000	800,000	
4. Associated Investment Costs (a) Bag filter system for auxiliary gases	600,000	600,000	600,000	Bag filter systems for auxiliary gases previously vented through ESP's.
(b) General site-related costs	2,200,000	2,860,000	2,200,000	Related to difficulties of scheduling, interruptions, etc., in operating plants.
Total Capital Investment	$14,350,000	$18,340,000	$14,600,000	
Capital cost/annual ton SO_2 Removed	$161	$224	$164	

Table 12.4-3. ASARCO - TACOMA, WASHINGTON
ANNUAL OPERATING COSTS AND TOTAL NET ANNUALIZED COSTS FOR SO_2 CONTROL PROCESSES ON COMBINED ROASTER AND REVERBERATORY FURNACE OFF-GASES

ITEM	Primary SO_2 Control Method			COMMENTS
	Double Alkali (95% Removal)	Magnesium Oxide (90% Removal)	Citrate (95% Removal)	
1. Gas conditioning and SO_2 absorption	179,000	179,000	179,000	
2. SO_2 handling	3,906,000	2,542,000	2,226,000	
3. Labor	158,000	262,000	280,000	
4. Maintenance, Ins. & Taxes	799,000	848,000	805,000	
5. Total Annual Operating Cost	5,042,000	3,831,000	3,480,000	
6. Auxiliary Plant Total Operating Costs (a) Sulfuric acid plant	N/A	520,000	N/A	
7. Total Annual Operating Cost	$5,042,000	$4,351,000	$3,490,000	
8. Annualized Capital Cost	$1,887,000	$2,412,000	$1,920,000	
9. Total Net Annualized Cost	$4,050,000	$4,087,000	$3,268,000	
10. Cost/year/ton SO_2 removed	$46	$50	$37	
11. Cost/lb copper[1]	2.28¢/lb	2.30¢/lb	1.84¢/lb	

[1] Based on smelter rated capacity of 1100 TPD concentrate 25% copper, operating 340 days/year. Annual production 89,000 TPY. Zero net-back to smelter for acid or sulfur produced.

12.5 KENNECOTT COPPER CORPORATION -- GARFIELD, UTAH

This smelter is the largest of the Kennecott Copper Corporation smelters with a nominal capacity of 2400 TPD of concentrate. Operations began in 1907. Under the present operating configuration, green concentrate is fed to three reverberatory furnaces with the matte being processed through 6 or 7 on-line converters. Nine converters are available. Reverberatory gases are treated in the usual way through waste heat boilers and an electrostatic precipitator before being vented out a 400 ft stack. The converter gases, after appropriate gas cleaning, feed 5 acid plants with a combined capacity of 1400 TPD acid.

As part of a compliance schedule submitted to the State of Utah, Kennecott proposes to replace the reverberatory furnaces with 3 Noranda reactors with completion by early 1977. The approximately 10 percent SO_2 offgases will be directed to the acid plant system. The program also includes the installation of water-cooled hoods on the 4 converters required to balance the Noranda reactor system, and the provision of a new 800 TPD acid plant to replace two of the present small, older units and to increase rated acid production capability to 2000 TPD. A new 1200 ft stack has been constructed as part of the Noranda reactor project and is presently being lined although it will not be commissioned until the Noranda reactors are available.

Although the present reverberatory gas stream carries approximately only 1 percent SO_2, no consideration will be given in this study to the application of an absorption-based control system in view of the Noranda reactor and related system changes and the July 1977 completion date.

12.6 KENNECOTT COPPER CORPORATION -- HAYDEN SMELTER, ARIZONA

12.6.1 Smelter Characteristics

The Kennecott Copper Corporation Hayden Smelter was put on stream in 1958 with a single green-feed sidewall charged reverberatory furnace and three Pierce-Smith converters. In 1969, a fluo-solids roaster was commissioned, with the cleaned effluent gases feeding a 750 TPD rated sulfuric acid plant.

In January 1971, a comprehensive compliance plan was submitted to the Arizona Air Pollution Hearing Board with accomplishment targeted for early 1974. The program included improved reliability of the fluo-solids reactor and gas handling system; installation of water-cooled hoods and water spray coolers on each converter; new burner blocks, water-cooled door frames and improved doors, and redesigned Wagstaff feeders; elimination of the return of hot converter slag to the reverberatory furnace; and conversion of the 750 TPD acid plant to a double contact plant rated at 100,000 SCFM at 10.5 percent SO_2. Sections of the program were completed and became operational during the plan period, and the final acceptance tests on the acid plant were made in April 1974. In May 1974, the Hayden Smelter of Kennecott Copper Corporation became the first Arizona smelter to be issued a certified operating permit, with total SO_2 control being better than the 90 percent reduction specified by the State.

Nominal capacity of the smelter is approximately 1100 tons/day of concentrate.

Under the smelter's process configuration, the offgases from the roaster, after mechanical cleaning in a cyclone system and cooling via water sprays, pass through a venturi scrubber and a Peabody scrubber before mixing with the cleaned converter gases. The converter gases are cooled by ultrasonic water sprays to 700°F and then pass through an electrostatic precipitator and a Peabody scrubber. They are blended with the cleaned roaster gases, and the total stream passes through two banks of three parallel mist precipitators before being directed to the double contact acid plant. Because of frequent periods of low gas strength or volume, a direct-fired preheater is kept on-line at all times. Control dampers in the duct system vary the amount of process

gas passing through the preheater, depending on the need of the plant. The reverberatory gases, following usual practice, pass through a waste heat boiler and electrostatic precipitator before being vented up a 600 ft stack.

The acid production is used within the Ray Mines Division of Kennecott Copper.

Service facilities at this smelter--electric power and treated water--are fully loaded. Water is available but is characteristically hard.

12.6.2 Weak SO_2 Streams

The flow schematic provided in Figure 12.6-1 indicates the gas flow configurations for this smelter. The only weak SO_2 stream is that produced by the reverberatory furnace. Only about 6-9 percent of the total sulfur contained in the feed concentrate is released in the reverberatory and the concentration of SO_2 in the resulting offgases is accordingly very low. The gas stream is characterized in Table 12.6-1.

12.6.3 SO_2 Control Process Selection

Under existing regulations, further control of SO_2 streams in this smelter is not required and there is only an academic interest in selecting an applicable SO_2 control for the reverberatory stream.

As with most reverberatory gas streams, the relatively high oxygen level of the Kennecott Hayden Smelter, together with the very low SO_2 concentration, poses a severe problem for most absorption-based control systems. Oxidation of the usual sulfite or bisulfite absorption product to sulfate is universally related to higher purge requirements, and hence higher costs for makeup chemicals or for auxiliary recovery facilities. It is also frequently the cause for operational problems such as scaling. Absorption processes which appear to be the least susceptible to these oxidation effects are the citrate process and magnesium oxide process--both regenerable type processes. However, since the latter process produces a regeneration product which is a "dirty" and fairly weak (15 percent) SO_2 stream, and considering the small amount of SO_2 involved (< 50 TPD), it does not appear to be a viable consideration for this smelter.

The double alkali throwaway process may be also an applicable process for this particular situation because of the limited quantity of SO_2 involved and its ability to regenerate the sulfate routinely during the active sodium ion regeneration sequence.

KENNECOTT COPPER — HAYDEN, ARIZONA
SMELTER FLOW SCHEMATIC

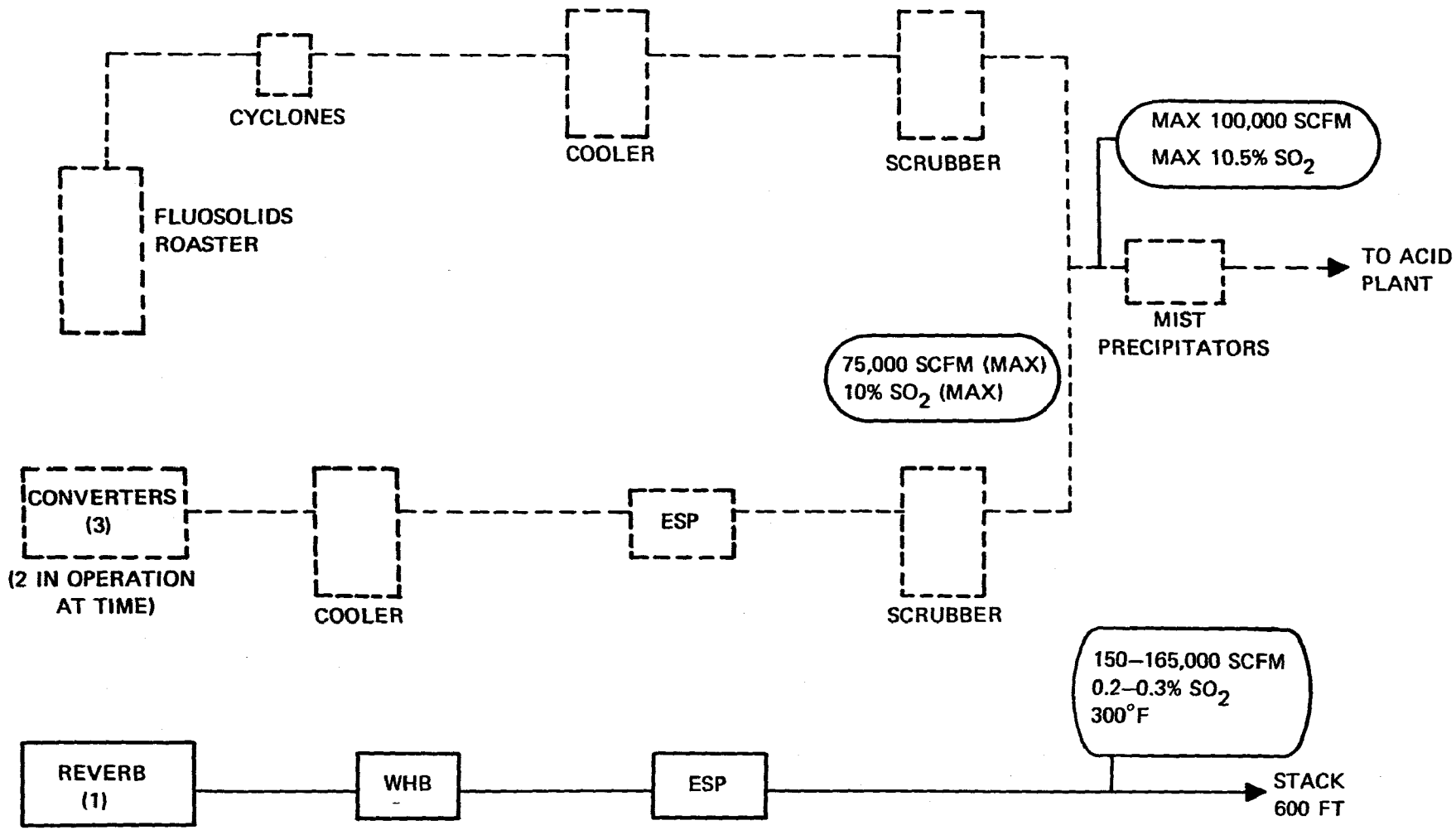

FIGURE 12.6-1

In considering the application of the citrate process, it is worth noting that the Bureau of Mines is currently working on this process to effect release of the SO_2 from the citrate absorbent using steam stripping. Steam consumption is presently around 10 lbs/lb SO_2 for 0.5 percent SO_2 gas streams, but there is some expectation that this may be reduced. The use of appropriate condensing and drying equipment would provide an essentially 100 percent SO_2 stream which could be blended with a sulfuric acid plant gas feed. This approach would be particularly effective for the Kennecott Hayden Smelter. The existing plant with additional "standby" capacity to accommodate the usual flow and SO_2 fluctuations associated with converter operation could handle the additional 300-400 SCFM of SO_2 via an appropriate control system responding to low SO_2 flow levels.

12.6.4 SO_2 Control Process Costs

The citrate, modified citrate, and double alkali processes have been selected as the potential control systems for this smelter and the basic cost structures have been modified to accommodate the specific conditions of this operation.

1) The temperature of the reverberatory gas stream at the stack is 300°F, and the gas cooling and conditioning costs have been reduced from these provided in Appendix A. Capital costs for the identified maximum gas flow have been reduced by the factor

$$\left[\frac{T^\circ R(300^\circ F)}{T^\circ R(600^\circ F)}\right]^{0.6}$$

2) The retrofitting costs of making the necessary tie-ins of the gas conditioning and SO_2 absorption columns with bypass and dampers in the existing ductwork have been allowed for by using a factor of 20 percent of the capital cost of the gas conditioning and SO_2 absorption systems.

3) The variability of both gas flow and SO_2 content in the reverberatory gases requires the provision of larger surge capacity after the absorption system to provide a uniform SO_2 rate to the regeneration or sulfur dioxide handling section, and an additional 5 percent of the capital investment of the SO_2 absorption section has been provided to cover this modification.

4) Additional service facilities, including an electrical substation and a water treatment plant to support a scrubbing process, have been included in the total capital cost structure for each process. Costs have been based on the power and water unit relationships established for each process and the cost relationships provided in Appendix F. A packaged boiler system and treated water facility have been provided for the citrate process SO_2 stripping option.

5) The citrate SO_2 stripping operation will also require a suitably sized auxiliary SO_2 liquefaction and storage plant to supplement the stripping facilities. Appendix E provides capital and operating cost relationships for the SO_2 liquefaction and storage plant.

6) To allow for those additional costs which are incurred during any major construction program in an operating plant, an additional 20 percent of the total boundary limit cost for each process has been added to the capital cost structure.

The capital and operating cost structures for the citrate process, for the citrate process plus its special SO_2 stripping option, and for the double alkali process selected for the Hayden Smelter are provided in Tables 12.6-2 and 12.6-3, respectively. Individual computation sheets for each process are provided under the appropriate smelter name in Appendix G.

Table 12.6-1. KENNECOTT COPPER CORPORATION - HAYDEN SMELTER, ARIZONA.

CHARACTERIZATION OF WEAK SO_2 GAS STREAMS.

Stream	Volume SCFM	Av. SO_2 Content[1] Sizing basis (lbs/hr)	Equivalent Av. SO_2 Content (%)	% Oxygen[2]	Temp. °F
Reverb (1) (at stack)	150-165,000	3000	0.2	10-15	300

Notes. (1) No data on SO_3 content available. Particulate loading after ESP <0.02 grains/SCF.

(2) Oxygen content range estimated based on reported test data of 13.0%.

Table 12.6-2. KENNECOTT COPPER CORPORATION - HAYDEN, ARIZONA CAPITAL COSTS FOR SO_2 CONTROL PROCESSES ON REVERBERATORY FURNACE OFF-GASES

ITEM	Primary SO_2 Control Method			COMMENTS
	Double Alkali (95% Removal)	Citrate Process (95% Removal)	Citrate Process with Direct Stripping	
1. Boundary limits retro-fitted primary system	6,120,000	7,660,000	5,890,000	
2. Auxiliary Plant: (a) SO_2 liquefaction and storage	N/A	N/A	200,000	
TOTAL Boundary Limit Cost	6,120,000	7,660,000	6,090,000	
3. Total Service Costs	675,000	820,000	930,000	
4. Associated Investment Costs (a) new ESP (b) General site-related costs	1,224,000	1,530,000	1,220,000	
Total Capital Investment	8,020,000	10,010,000	8,240,000	
Capital cost/annual ton SO_2 Removed	$691	$863	$710	

Table 12.6-3. KENNECOTT COPPER CORPORATION - HAYDEN, ARIZONA
ANNUAL OPERATING COSTS AND TOTAL NET ANNUALIZED COSTS

ITEM	Primary SO_2 Control Method			COMMENTS
	Double Alkali (95% Removal)	Citrate Process (95% Removal)	Citrate Process with Direct Stripping	
1. Gas conditioning and SO_2 absorption	205,000	223,000	223,000	
2. SO_2 handling	511,000	240,000	441,000	
3. Labor	140,000	245,000	175,000	
4. Maintenance, Ins. & Taxes	465,000	588,000	481,000	
5. Total Annual Operating Cost	1,321,000	1,296,000	1,320,000	
6. Auxiliary Plant Total Operating Costs (a) SO_2 liquefaction and storage	N/A	N/A	15,000	
7. Total Annual Operating Cost	1,321,000	1,296,000	1,335,000	
8. Annualized Capital Cost	1,055,000	1,316,000	1,084,000	
9. Total Net Annualized Cost	1,485,000	1,670,000	1,514,000	
10. Cost/year/ton SO_2 Removed	$128	$144	$130	
11. Cost/lb copper[1]	1.00¢/lb	1.11¢/lb	1.0¢/lb	

[1] Based on smelter rated capacity of 1100 TPD concentrate. 21% copper, operating 340 days/year. Annual production 75000 TPY. Zero net-back to smelter for acid or sulfur produced.

12.7 KENNECOTT COPPER CORPORATION -- HURLEY SMELTER, NEW MEXICO

12.7.1 Smelter Characteristics

This smelter, which began operations in 1939, is a relatively small smelter with a nominal capacity of 850 TPD of reverberatory feed. Green concentrate is presently processed in one of two available reverberatory furnaces with the matte being processed through three converters. Offgases from the reverberatory pass through a waste heat boiler, are treated in an electrostatic precipitator, and are then vented to atmosphere through a 500 ft stack. The reverberatory and flue system is in very poor condition, and air in-leakage is excessive. The electrostatic precipitator cannot adequately handle the accompanying gas flow rates with the result that efficiency levels are low, estimated at under 60 percent. Maximum average grain loading has been reported as 0.97 gr/SCF.

Offgases from the converters (3 normally in operation) were originally cleaned of particulate material in a battery of multiclones and vented up a 625 ft stack. In December, 1974, a converter gas collection system with water cooled hoods and a 650 TPD rated double contact sulfuric acid plant with the usual gas cleaning facilities was commissioned to process these converter gases. The acid plant has a maximum flow capability of around 90,000 SCFM at approximately 4.5 percent SO_2 content.

Kennecott in a variance petition dated March 1, 1974, has requested relief through October 1, 1978, for its reverberatory stack particulate emissions on the basis of their research and development program to implement an improved smelting process based on converter smelting with oxygen-enriched blast air and supplemental heating. The resulting white metal would then be transferred to a finishing converter for production of blister copper in the usual manner. If successful, this converter smelting process will essentially eliminate the reverberatory furnace process. A report on the status of this program and Kennecott's future action is due to the State of New Mexico Environmental Improvement Agency in August, 1975.

The smelter is located about 7 miles from the mine site, but land availability at the smelter is not a problem and a one square mile tailing pond is available. The smelter has its own supply of limestone and an on-site lime plant although its capacity is limited to the present needs of the smelter and reduction plant.

A source of good quality water is available but additional pumping facilities would be needed to make it available at the smelter site. The existing power system appears to be capable of meeting the additional demand from an SO_2 control system.

12.7.2 Weak SO_2 Streams

The weak SO_2 stream in the Hurley smelter results from the reverberatory furnace operation and the high degree of dilution which occurs down the gas collection system. A flow schematic is provided in Figure 12.7-1. With a nominally uniform green reverberatory charge, furnace operating conditions are relatively stable. The charging operations and "soot" blowing of the waste heat boilers contribute to peak levels in both gas volume and SO_2 content but the excessive dilution taking place down the collection system tends to minimize these disturbances. The gas stream has been characterized at the stack breeching as shown in Table 12.7-1.

12.7.3 SO_2 Control Process Selection

Although this smelter is doing research and development to eliminate its weak SO_2 stream, for the purposes of this study, the present reverberatory gas stream as characterized in Table 12.7-3 will be considered as the feed to an absorption-based SO_2 control process.

The high degree of dilution with the resulting low level of SO_2 and high oxygen content of the final effluent reverberatory gas stream generally makes such a stream unfavorable for the application of liquid scrubbing control systems. The higher expected oxidation rates suggest that the Wellman-Lord, ammonia, xylidine, and even the limestone process would all be penalized significantly by both higher operating costs through increased purge requirements and more difficult operating conditions. The direct application of a sulfuric acid plant with preheating and refrigeration is obviously an unfavorable approach. The citrate and magnesium oxide processes are less sensitive in the final analysis to oxidation and are applicable processes, although the magnesium oxide process may be susceptible to higher scaling in the absorber and may also require magnesium sulfate purge and recovery facilities. Energy costs and the additional requirement for gas cleaning equipment and an

KENNECOTT COPPER — HURLEY, NEW MEXICO
SMELTER FLOW SCHEMATIC

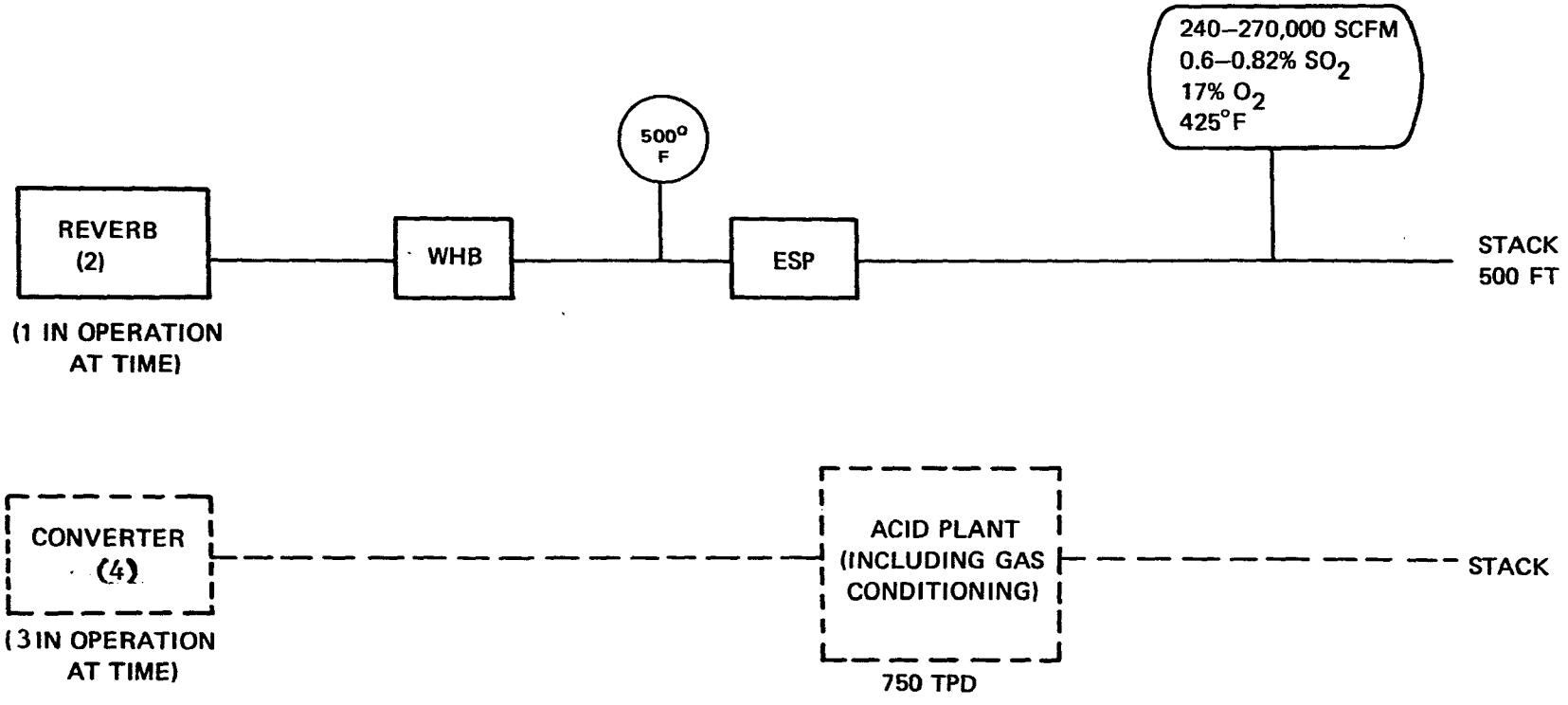

FIGURE 12.7-1

auxiliary sulfuric acid plant associated with this latter process are additional adverse characteristics. The double alkali system will incur higher oxidation through the high oxygen levels of the reverberatory stream but the lime treatment in the regeneration step of the dilute system converts the Na_2SO_4 product to sodium hydroxide and calcium sulfate, with the calcium sulfate being precipitated along with the other regeneration precipitates.

The cost structures for the double alkali, citrate and magnesium oxide processes selected for the Kennecott, Hurley, New Mexico smelter including support services and miscellaneous charges are provided in Tables 12.7-2 and 12.7-3.

12.7.4 SO_2 Control Process Costs

The basic cost structures for the selected processes for this smelter have been modified to take into consideration those special factors and conditions associated with this operation.

1) The temperature of the reverberatory gas stream at the stack is 430-450°F and the gas cooling and conditioning requirements will be reduced from those specified in Appendix A. Capital costs for the identified maximum gas flow have been reduced by the factor

$$\left[\frac{T^\circ_{R(450°F)}}{T^\circ_{R(600°F)}}\right]^{0.6}$$

2) The retrofitting costs of making the necessary tie-ins of the gas conditioning and SO_2 absorption columns with bypass and dampers in the existing ductwork have been allowed for by using a factor of 25 percent of the capital cost of the gas conditioning and SO_2 absorption systems.

3) The existing electrostatic precipitator at Hurley is not adequate for the gas flows it is presently handling and the installation of an absorption based SO_2 control process would necessitate the installation of a replacement ESP sized to handle approximately 500,000 ACFM at 500°F. However, since the existing unit is not presently meeting the particulate emissions regulation, its replacement is not dependent on the installation of the absorption system and the cost is not chargeable against the SO_2 control system itself.

4) An additional 5 percent of the capital investment of the SO_2 absorption section has been provided to allow for the larger surge capacity after the absorption section to accommodate the variable SO_2 content and gas flow rates and to provide a uniform SO_2 rate to the regeneration section.

5) An allowance has been provided for a new water pumping station but other existing service facilities appear to be capable of handling the requirements of a scrubbing system.

6) A general site cost factor of 20 percent of the total boundary costs for each process has been allowed to cover the additional cost associated with the implementation of major process changes in an operating plant.

Individual calculation sheets for the applied processes are provided under the appropriate smelter heading in Appendix G. A summary of these capital costs and associated annual operating and total annualized costs is provided in Tables 12.7-2 and 12.7-3, respectively.

Table 12.7-1. KENNECOTT COPPER CORPORATION - HURLEY SMELTER, NEW MEXICO

CHARACTERIZATION OF WEAK SO_2 GAS STREAMS.

Stream	Volume SCFM	Av. SO_2 Content[1] Sizing basis (lbs/hr)	Equivalent Av. SO_2 Content (%)	% Oxygen[2]	Temp. °F
Reverb[1]	240-270,000	20,200	0.74	15-18	425

Notes. (1) No data on particulate loading available SO_3 content 0.05%.

(2) Oxygen content of gas stream estimated.

Table 12.7-2. KENNECOTT COPPER CORPORATION - HURLEY SMELTER, NEW MEXICO CAPITAL COSTS FOR SO_2 CONTROL PROCESSES ON REVERBERATORY FURNACE OFF-GASES

ITEM	Primary SO_2 Control Method			COMMENTS
	Double Alkali (95% Removal)	Magnesium Oxide (90% Removal)	Citrate (95% Removal)	
1. Boundary limits retrofitted primary system	12,080,000	14,150,000	12,900,000	
2. Auxiliary Plant: (a) H_2SO_4 plant with dry gas cleaning	N/A	N/A	3,900,000	Gas cleaning by high temperature bag filters. SO_2 removal efficiency 97%
TOTAL Boundary Limit Cost	12,080,000	14,150,000	16,800,000	
3. Total Service Costs	50,000	50,000	50,000	Additional pumping facilities only.
4. Associated Investment Costs (a) new ESP	(3,500,000)	(4,000,000)	(4,000,000)	This item not chargeable to SO_2 control.
(b) General site-related costs	2,420,000	2,830,000	3,360,000	
Total Capital Investment	$14,550,000	$17,030,000	$20,210,000	
Capital cost/annual ton SO_2 Removed	$186	$217	$266	

Table 12.7-3. KENNECOTT COPPER CORPORATION - HURLEY SMELTER, NEW MEXICO
ANNUAL OPERATING COSTS AND TOTAL NET ANNUALIZED COSTS

ITEM	Primary SO_2 Control Method			COMMENTS
	Double Alkali (95% Removal)	Magnesium Oxide (90% Removal)[1]	Citrate (95% Removal)	
1. Gas conditioning and SO_2 absorption	393,000	440,000	440,000	
2. SO_2 handling	3,439,000	2,169,000	1,601,000	
3. Labor	210,000	315,000		
4. Maintenance, Ins. & Taxes	888,000	1,065,000	1,047,000	
5. Total Annual Operating Cost	4,930,000	3,989,000	3,421,000	
6. Auxiliary Plant Total Operating Costs (a) Sulfuric acid plant	N/A	470,000[2]	N/A	
7. Total Annual Operating Cost	4,930,000	4,459,000	3,421,000	
8. Annualized Capital Cost	1,937,000	2,683,000	2,263,000	
9. Total Net Annualized Cost	4,029,000	4,104,000	3,491,000	
10. Cost/year/ton SO_2 removed	$51	$57	$45	
11. Cost/lb copper[3]	2.42¢/lb	2.47¢/lb	2.10¢/lb	

(1) Overall SO_2 removal with H_2SO_4 plant is 87.3%.

(2) Includes maintenance, insurance, and taxes.

(3) Based on smelter rated capacity of 850 TPD concentrate. Reverberatory fuel includes 15% precipitate copper to give total copper content of charge 30.3%, 340 days/year operation. Annual production 83,000 TPY. Zero net-back to smelter for acid or sulfur produced.

12.8 KENNECOTT COPPER CORPORATION -- McGILL SMELTER, NEVADA

12.8.1 Smelter Characteristics

This smelter began operations in 1907. Two reverberatory furnaces currently handle approximately 800-1000 tons/day of copper concentrate with the output being processed through three converters. Offgases from the reverberatories pass through waste heat boilers and electrostatic precipitators before being vented out a new 750 ft stack. The electrostatic precipitators are old and recovery efficiencies are low (70-80 percent). Offgases from the converters are treated in an electrostatic precipitator and are presently vented up the same 750 ft stack as the reverberatory gases.

A compliance schedule with completion originally scheduled for mid-1976 has been submitted encompassing upgrading of the reverberatory ESP's to a proposed 98.9 percent, installation of water-cooled hoods on the converters and the provision of a 500 TPD single contact sulfuric acid plant. Tail gas would be vented up a separate 250 ft stack with the 750 ft stack handling the reverberatory gases. Emissions collected from auxiliary hooding in the converter area would be vented to the reverberatory furnace gas system prior to the stack. At the same time capacity of the smelter would be reduced from the nominal capacity of 1000 TPD of concentrate to approximately 750 TPD by the elimination of their custom smelting business. Implementation of this plan is presently in abeyance pending an appeal by Kennecott for Intermittent Control System (ICS) options. The State of Nevada's SO_2 emission standard calls for 60 percent control of the input sulfur, and approximately 64 percent control would be accomplished via the proposed changes. However, as noted by the State authorities, existing ambient air standards are not apparently being violated with the present level of SO_2 emissions.

This smelter is located in a rather harsh environment at an elevation of 600-7000 ft. Water, which is in short supply, is piped from a source 15 miles away. This water shortage has caused problems in the operation of their tailings pond. Although the size of the pond has been reduced to approximately 2 square miles as part of the effort to control dust, the original size of the pond was approximately 6 square miles.

12.8.2 Weak SO_2 Streams

Under the present operating mode, both the reverberatory and converter offgases are weak SO_2 streams. A flow schematic is provided in Figure 12.8-1 based on the present operating level of approximately 1000-1100 TPD concentrate, with the converter gases being vented to the stack.

For the purposes of this study, it is assumed that the proposed acid plant and the upgraded converter gas system will be installed as provided for in the compliance schedule. However, the proposed reduction of the smelter capacity will not be taken into consideration, and the gas streams will be characterized on the basis of present capacity gas flow levels as provided in Table 12.8-1.

12.8.3. SO_2 Control Process Selection

The elevation of this smelter, together with the high oxygen levels in the reverberatory gases, are not favorable conditions for an absorption based SO_2 control process. The effect of the 6000-7000 ft elevation will be to reduce absorption efficiency, and to compensate, additional cooling of the absorbent liquid, higher liquid/gas (L/G) ratios, or additional absorption stages may be necessary. The higher oxygen levels in the gas stream will produce higher oxidation levels in the absorbent with significantly higher purge requirements and loss of active chemicals, or alternatively, greater capital investment for purge treatment and recovery facilities.

Under these conditions only the double alkali, citrate and the magnesium oxide processes appear to offer reasonable potential as applicable control systems.

12.8.4 SO_2 Control Process Costs

The absorption characteristics of the double alkali, citrate and the magnesium oxide processes are such that the high elevation of this smelter will have only a moderately negative effect; and no special cost allowance to compensate for lower absorption efficiency will be provided The following conditions specific to this smelter will impact on the capital and operating cost structure.

KENNECOTT COPPER — McGILL, NEVADA

SMELTER FLOW SCHEMATIC

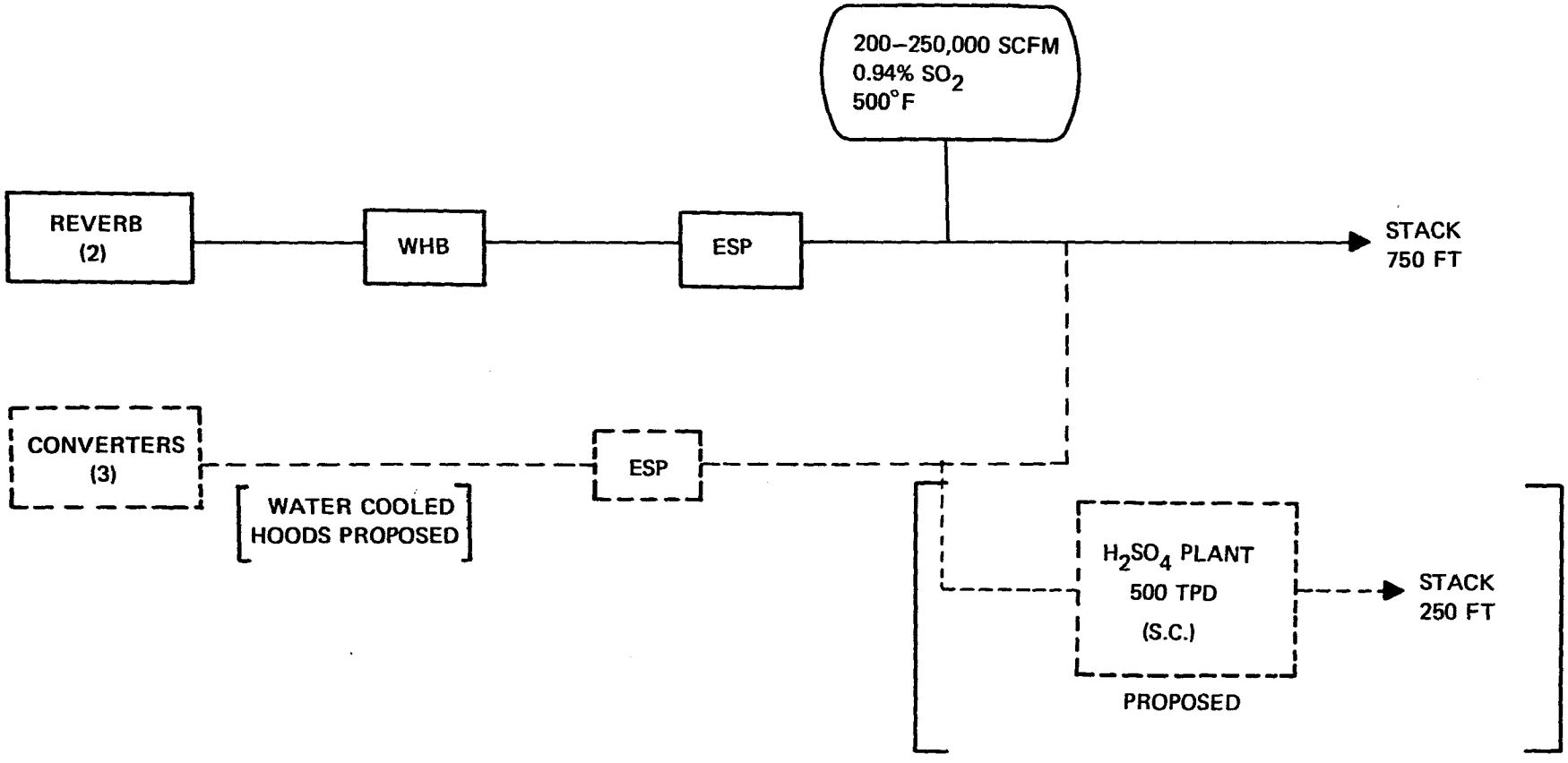

FIGURE 12.8-1

1) Temperature of the reverberatory gases after the electrostatic precipitators is between 400-500°F, and gas cooling and conditioning requirements would be reduced from the 600°F temperature basis selected for the general cost relationship provided in Appendix A. Using an average temperature of 450°F, costs will be adjusted on the basis of

$$\left[\frac{T^{\circ}R(450^{\circ}F)}{T^{\circ}R(600^{\circ}F)}\right] 0.6$$

2) The additional costs incurred by installing and tieing in the gas conditioning and SO_2 absorption sections to existing flues and providing bypasses and appropriate dampers have been allowed for by the use of a retrofit factor of 30 percent of the capital investment of these sections.

3) To accommodate the variability in both gas flow and SO_2 content in the reverberatory gases, larger surge capacity after the absorption system will be necessary to provide a uniform SO_2 rate to the regeneration section. An additional 5 percent of the capital investment of the SO_2 absorption section has been provided.

4) Additional service facilities including substations, power distribution system, and water treatment plant to support a scrubbing process will be necessary; and estimated costs have been based on the unit values established for each control process and the cost data provided in Appendix F. It should be noted that the cost of a cooling tower has been included in the costs developed for the gas conditioning section.

5) An auxiliary sulfuric acid plant taking an 8 percent SO_2 gas stream feed has been provided with the magnesium oxide process. Capital and operating costs of this plant based on the SO_2 hourly rate of the magnesium oxide process itself are provided in Appendix C.

6) As with all on-going operating plants, major process changes incur substantial additional costs related to coordination and scheduling difficulties, space limiations, special safety requirements, etc. To allow for these not readily identifiable costs, an estimate of 20 percent of the total boundary limit costs for each process has been allowed.

7) The cost of replacing the present electrostatic precipitator is not allocated against the SO_2 control system costs. Replacement has already been planned.

The capital and operating cost structures for the three processes identified for the McGill Smelter--double alkali, magnesium oxide, and citrate--are provided in Tables 12.8-2 and 12.8-3, respectively. Individual computation sheets for each process are provided under the appropriate smelter name in Appendix G.

Table 12.8-1. KENNECOTT COPPER CORPORATION - McGILL SMELTER, NEVADA.

CHARACTERIZATION OF WEAK SO_2 GAS STREAMS.

Stream	Volume SCFM	Av. SO_2 Content[1] Sizing basis (lbs/hr)	Equivalent Av. SO_2 Content (%)	% Oxygen[2]	Temp. °F[3]
Reverbs. (2)	200-250,000 (210,000 Av.)	20,000	0.94	12-16	500

Notes. (1) No data on SO_3 loading but average particulate loading 0.35 gr/cubic foot.

(2) Oxygen content of gas stream estimated.

(3) Temperature at stack itself 400°F.

Table 12.8-2. KENNECOTT COPPER CORPORATION - MCGILL, NEVADA CAPITAL COSTS FOR SO_2 CONTROL PROCESSES ON REVERBERATORY FURNACE OFF-GASES

ITEM	Primary SO_2 Control Method			COMMENTS
	Double Alkali (95% Removal)	Magnesium Oxide (90% Removal)	Citrate (95% Removal)	
1. Boundary limits retrofitted primary system	12,250,000	13,010,000	14,290,000	
2. Auxiliary Plant: (a) H_2SO_4 plant with dry gas cleaning	N/A	3,950,000	N/A	
TOTAL Boundary Limit Cost	12,250,000	16,960,000	14,290,000	
3. Total Service Costs	780,000	1,000,000	980,000	
4. Associated Investment Costs (a) new ESP (b) General site-related costs	2,450,000	3,390,000	2,820,000	
Total Capital Investment	$15,480,000	$21,350,000	$18,090,000	
Capital cost/annual ton SO_2 Removed	$200	$300	$233	

Table 12.8-3. KENNECOTT COPPER CORPORATION - MCGILL, NEVADA
ANNUAL OPERATING COSTS AND TOTAL NET ANNUALIZED COSTS

ITEM	Primary SO_2 Control Method			COMMENTS
	Double Alkali (95% Removal)	Magnesium Oxide (90% Removal)	Citrate (95% Removal)	
1. Gas conditioning and SO_2 absorption	356,000	400,000	400,000	
2. SO_2 handling	3,404,000	2,210,000	2,035,000	
3. Labor	210,000	315,000	333,000	
4. Maintenance, Ins. & Taxes	908,000	1,098,000	1,069,000	
5. Total Annual Operating Cost	4,878,000	4,023,000	3,837,000	
6. Auxiliary Plant Total Operating Costs (a) Sulfuric acid plant	N/A	470,000	N/A	
7. Total Annual Operating Cost	$ 4,878,000	$ 4,493,000	$ 3,837,000	
8. Annualized Capital Cost	$ 2,036,000	$ 2,807,000	$ 2,379,000	
9. Total Net Annualized Cost	$ 4,077,000	$ 4,461,000	$ 3,795,000	
10. Cost/year/ton SO_2 Removed	$53	$61	$49	
11. Cost/lb copper[1]	3.16¢/lb	3.45¢/lb	2.94¢/lb	

[1] Based on smelter operating capacity of 800 TPD concentrate. Reverberatory feed includes 8 % precipitate copper to give total copper content of charge = 25%. 340 days/year operation. Zero net-back to smelter for acid or sulfur produced.

12.9 MAGMA COPPER COMPANY -- SAN MANUEL SMELTER, ARIZONA

12.9.1 Smelter Characteristics

The Magma Copper Smelter began operation in 1956. The smelter is a relatively modern facility with a present capacity of approximately 2500 TPD concentrate. Completion of long range plans will ultimately raise the capacity of this smelter to approximately 2900 TPD concentrate. The smelter has made substantial investments in pollution control equipment and modifications over the past several years. Green concentrate is smelted in three reverberatory furnaces, with the offgases being treated in new high efficiency electrostatic precipitators before venting out a 515 ft stack. Final completion of the installation of these ESP's is scheduled for late 1975. Output from the reverberatory furnaces is treated in 5 Pierce-Smith converters. A sixth converter is presently being installed with completion expected at the end of 1975. New ducting and water-cooled hoods were installed on the converters over 1973-1974, and the entire gas flow now goes to a single contact, 2-train sulfuric acid plant rated at 2480 TPD. The parallel trains provide unusual flexibility. Although the 93 percent acid is used internally in small quantities with a significant amount being marketed, a supplemental acid neutralization plant using basic tailings and limestone has been provided. This facility can accept the total output of the acid plant for short periods of up to 2-3 days if necessary. Approximately 600 tons/day of acid are being neutralized at the present time due to excess supply over demand. Although actual data are not available on the performance of the new ESP's currently being installed on the reverberatory furnace offgas line, it is expected that particulate loading will be reduced to below 0.02 grains/SCF.

The smelter utilizes waste heat boilers in the reverberatory offgas lines to generate in-house power, with supplemental purchases from public service facilities transmitting over long distances. The extreme hardness and high salt content of available water require extensive treatment.

12.9.2 Weak SO_2 Streams

The weak SO_2 stream in this smelter is produced by the reverberatory furnaces. A flow schematic is provided in Figure 12.9-1. The reverberatory charge is uniform and only minor variations in the fuel/charge ratio occur.

As with all reverberatory offgases, the operations of charging and "soot" blowing of the waste heat boilers, together with normal air infiltration along the gas handling system, have a significant effect on both gas volumes and SO_2 concentrations. Total air infiltration may range as high as 100-200 percent over a typical operating cycle which includes charging the furnace, smelting the concentrate, and "soot" blowing the waste heat boilers. From the data available, and based on the present operating capacity, the reverberatory gas stream at the stack breeching has been characterized at the representative values indicated in Table 12.9-1.

12.9.3 SO_2 Control Process Selection

The application of an SO_2 control process based on gas scrubbing to the reverberatory gases of the Magma Copper Company faces the same uncertainties noted previously--wide fluctuations in both gas volumes and SO_2 contents, and high oxygen contents. The gas handling sections--gas conditioning and SO_2 absorption--must be sized for the maximum expected gas flow independent of the varying range of SO_2 in the gas stream. The SO_2 handling section of the process must be sized to handle an "average" SO_2 rate established via appropriate surge capacity after the SO_2 absorption section.

The high oxygen levels associated with these reverberatory gas streams limit the SO_2 control processes which might be considered as appropriate matches for this smelter. High oxygen levels will generally result in increased oxidation rates in the absorbent thereby producing sulfates which must be purged from the system. High purge rates and the associated loss of the active absorbent may inflate the annual operating costs to unrealistic levels, or alternatively, increase capital investment and operating costs by necessitating the provision of secondary recovery and treatment facilities.

The lime/limestone throwaway system does not appear to be applicable under these conditions. The Smelter Control Research Association (SCRA) sponsored limestone scrubbing pilot plant which operated in 1972 on a 1.0 percent SO_2 content reverberatory gas level was plagued with severe scaling and operational problems. The variable SO_2 level and the 10-15 percent oxygen level in the Magma Smelter gases suggest that similar

MAGMA COPPER COMPANY — SAN MANUEL, ARIZONA

SMELTER FLOW SCHEMATIC

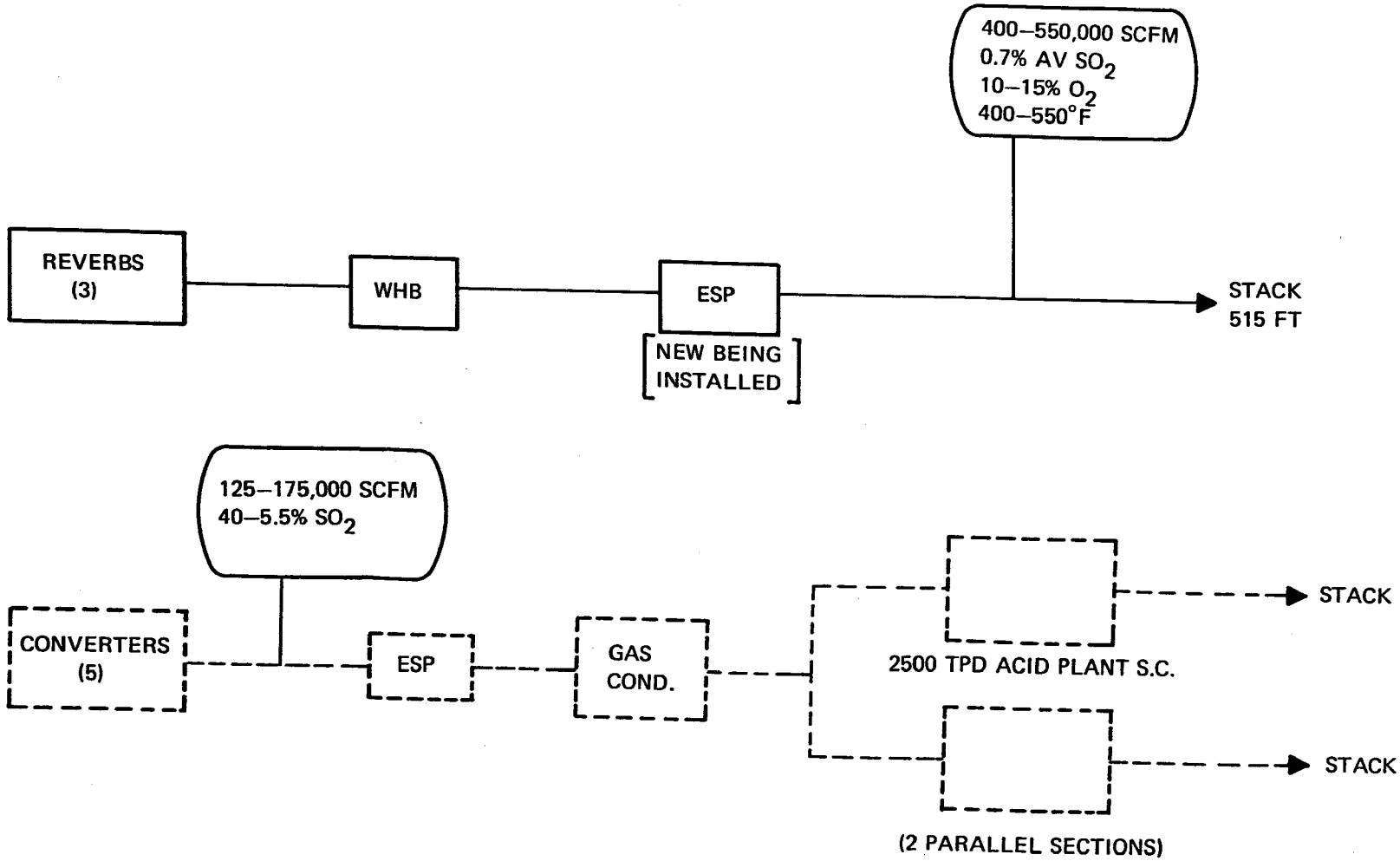

FIGURE 12.9-1

problems might be expected, and the process cannot be considered a suitable application. Although the double alkali process is also susceptible to the high oxygen content and related oxidation, its regeneration chemistry in the dilute absorbent mode provides sulfate regeneration and the process appears to offer an acceptable control approach for this smelter. However, it is noted that a new SCRA pilot plant project using the ammonia double alkali system started up at San Manuel in May 1975, and this program may yield more detailed information on oxidation characteristics.

Of the regenerable processes, only the magnesium oxide and citrate processes appear to have the capability of treating high oxygen content SO_2 streams without substantial penalty. In the magnesium oxide process, sulfate formation may be self-limiting at around 15 percent $MgSO_4$; otherwise, purging and secondary treatment of the $MgSO_4$ will be necessary. If the $MgSO_4$ concentration increases to 33 percent weight percent, $MgSO_4 \cdot 7H_2O$ is precipitated with the $MgSO_3 \cdot 6H_2O$ and the sulfate can be reduced in the calcination step using coke. The high energy requirements of this process and the production of a relatively weak (15 percent) SO_2 stream which needs cleaning and conditioning prior to an auxiliary sulfuric acid or elemental sulfur plant are disadvantages. The citrate process is relatively insensitive to oxidation, while its absorption characteristics are such that fluctuating SO_2 levels can be handled readily and effectively. Although this process is still under development, it appears to offer the most potential of the candidate processes for this smelter. In 1972, a small pilot plant using the citrate process was operated at San Manuel, but gave discouraging results in terms of citrate losses. Under subsequent development work carried out by the Bureau of Mines, this deficiency appears to have been largely overcome.

There is also a possibility of using the citrate process with SO_2 regeneration only via steam stripping and using the SO_2 from liquefied storage to increase the SO_2 concentration in the converter gas system. However, steam consumption values appear to be on the order of 8 lb/lb SO_2 for this level of SO_2 removal, and this must be considered a major disadvantage. The Bureau of Mines is currently working on this aspect of the process in an attempt to reduce steam requirements.

Considering the gas volume and the SO_2 concentrations involved, the direct application of a sulfuric acid plant to the Magma Copper Smelter reverberatory gases is not a realistic alternative.

12.9.4 SO_2 Control Process Costs

Special factors or conditions associated with the Magma Smelter which modify the basic cost structures of the selected processes are as follows:

1) The temperature of the reverberatory gas stream at the stack is 400-550°F. 500°F has been taken as an average value, and the capital costs from Appendix A for gas cooling and conditioning the identified maximum gas flow have been modified by the factor

$$\left[\frac{T^{\circ}R(500°F)}{T^{\circ}R(600°F)}\right]^{0.6}$$

2) At Magma, the reverberatory gas stack is located very close to the electrostatic precipitator itself, and a flue length is only approximately 25 feet. Auxiliary equipment located in this area would have to be relocated. Effecting the necessary tie-ins of the gas conditioning and SO_2 absorption equipment in this situation would be moderately difficult, and a factor of 25 percent of the capital cost of these two sections has been allowed to cover the additional cost.

3) The variability of both gas flow and SO_2 content in the reverberatory gas stream will require the provision of larger surge capacity after the absorption system to provide a uniform SO_2 rate to the regeneration section, and an additional 5 percent of the capital investment of the SO_2 absorption section has been provided to cover this modification.

4) Additional electrical substation and distribution facilities and a water treatment plant to support the makeup water requirements of the scrubbing system have been provided, with the estimated cost being based on the unit relationships established for each process and the cost curves in Appendix F.

5) The implementation of a major process change in an operating plant incurs significant additional costs related to scheduling difficulties, special safety and operating requirements, etc. An estimate of 15 percent of the total boundary limit cost for each process has been allowed.

The capital and operating cost structures for the three processes selected for the Magma Copper Smelter--double alkali, magnesium oxide and citrate processes--are provided in Tables 12.9-2 and 12.9-3, respectively. Individual computation sheets for each process are provided under the Magma Copper name in Appendix G.

Table 12.9-1. MAGMA COPPER COMPANY - SAN MANUEL SMELTER, ARIZONA

CHARACTERIZATION OF WEAK SO_2 GAS STREAMS.

Stream	Volume SCFM	Av. SO_2 Content[1] Sizing basis (lbs/hr)	Equivalent Av. SO_2 Content (%)	% Oxygen[2]	Temp. °F
Reverbs. (3)	400-550,000	34,500	0.7	10-15	400-550

Notes. (1) No data on SO_3 available. Particulate loading less than 0.02 grains/SCF.

(2) Oxygen content of gas stream estimated.

Table 12.9-2. MAGMA COPPER COMPANY - SAN MANUEL, ARIZONA
CAPITAL COSTS FOR SO_2 CONTROL PROCESSES ON REVERBERATORY FURNACE OFF-GASES

ITEM	Primary SO_2 Control Method			COMMENTS
	Double Alkali (95% Removal)	Magnesium Oxide (90% Removal)	Citrate (95% Removal)	
1. Boundary limits retrofitted primary system	17,980,000	19,810,000	21,060,000	
2. Auxiliary Plant: (a) H_2SO_4 plant with dry gas cleaning	N/A	5,650,000	N/A	
TOTAL Boundary Limit Cost	17,980,000	25,460,000	21,060,000	
3. Total Service Costs	1,160,000	1,230,000	1,330,000	
4. Associated Investment Costs (a) new ESP				
(b) General site-related	2,700,000	3,820,000	3,160,000	
Total Capital Investment	$21,840,00	$30,510,000	$25,550,000	
Capital cost/annual tons SO_2 Removed	$163	$228	$191	

Table 12.9-3. MAGMA COPPER COMPANY - SAN MANUEL, ARIZONA ANNUAL OPERATING COSTS AND TOTAL NET ANNUALIZED COSTS

ITEM	Primary SO_2 Control Method			COMMENTS
	Double Alkali (95% Removal)	Magnesium Oxide (90% Removal)	Citrate (95% Removal)	
1. Gas conditioning and SO_2 absorption	833,000	942,000	942,000	
2. SO_2 handling	5,876,000	3,835,000	2,722,000	
3. Labor	210,000	315,000	333,000	
4. Maintenance, Ins. & Taxes	1,315,000	1,612,000	1,556,000	
5. Total Annual Operating Cost	8,234,000	6,704,000	5,553,000	
6. Auxiliary Plant Total Operating Costs (a) Sulfuric acid plant	N/A	690,000	N/A	
7. Total Annual Operating Cost	$ 8,234,000	$ 7,394,000	$ 5,553,000	
8. Annualized Capital Cost	$ 2,872,000	$ 4,012,000	$3,360,000	
9. Total Net Annualized Cost	$ 6,455,000	$ 6,881,000	$ 5,430,000	
10. Cost/year/ton SO_2 Removed	$48	$56	$41	
11. Cost/lb copper (1)	1.99¢/lb	2.12¢/lb	1.68¢/lb	

(1) Based on smelter rated capacity of 2,500 TPD concentrate. 20% copper operating 340 days/year. Annual production 162,000 TPY. Zero net-back to smelter for acid or sulfur produced.

12.10 PHELPS DODGE CORPORATION -- AJO, ARIZONA

12.10.1 Smelter Characteristics

The Ajo plant is a 25 year old copper smelter, handling about 700 TPD of concentrate. Uniform green charge is fed to a single reverberatory furnace. Matte is processed in three converters. The reverberatory offgases are processed through a waste heat boiler and an electrostatic precipitator which removes particulates to a level of 0.06 gr/ACF. The converter gases are similarly cleaned in an ESP before entering the gas conditioning section of a single absorption acid plant rated at 750 tons of sulfuric acid per day. The tail gas from the acid plant is vented to a stack. The mining and concentrating plants adjoin the smelter, which makes possible conveyor feed to the reverberatory. Belt slingers feed the furnace from the sides.

12.10.2 Weak SO_2 Stream

The only weak stream originates from the reverberatory furnace. A flow schematic is provided in Figure 12.10-1. This gas has been vented to the atmosphere but it is planned to treat this stream in a dimethylaniline (DMA) scrubbing system which is expected to start up around the middle of 1975. The gas stream has been characterized in Table 12.10-1.

12.10.3 SO_2 Control Process Selection

An SO_2 control system for the reverberatory gases has already been selected for the Ajo smelter by the installation of a DMA scrubbing system completed in 1972. Originally, it was to handle a mixture of reverberatory and converter gases but equipment and operating problems prevented effective application. The plant has since undergone considerable development and modification. It is now planned to treat the reverberatory gases only and to utilize less than the designed capacity. Startup of the plant under these conditions is expected in mid-1975. Although this process has been previously applied to copper smelter converter gases in the 4-10 percent SO_2 range, the Ajo installation will be handling a much weaker gas stream with SO_2 concentrations in the 1-3 percent range. There is some uncertainty as to the operating effectiveness of the DMA Process at these low SO_2 levels.

12.10.4 SO_2 Control Process Costs

The original design basis for this installation was about 168 TPD of liquid SO_2 but it will operate considerably below this capacity when it comes into operation on the reverberatory gases. At its original design base it was similar in capacity to ASARCO's 200 TPD rated plant in the Tacoma, Washington smelter; but the reported costs for this latter unit excluding gas conditioning appear to be substantially greater than the Ajo installation. Although the plant has undergone changes and modifications since 1972, including the addition of electrostatic mist precipitators following the original humidifying and cooling towers, the total cost including gas conditioning has been reported as $5,400,000. If this cost is assumed to be averaged at 1971 cost levels, the escalated value at mid-1974 is approximately $7,000,000. From the capital cost curves presented in Figure 8-2 (based largely on ASARCO reported costs) and including an adjusted gas conditioning cost for the Ajo temperature of 450°F, the total capital cost would be approximately $8,800,000 including a retrofitting allowance. Because the costs have been based on an actual smelter installation, an additional site cost allowance has not been provided as with the other control processes.

Operating costs have been calculated from the unit usage and cost data presented in Table 8.1. It must be noted however, that these costs are oriented towards the xylidine system, and accordingly, they report higher usage values than may be experienced with a dimethylaniline system.

Table 12.10-2 provides a summary of both capital and annual costs based on the cost relationships developed for the DMA/xylidine process in Section 8. The computations for the annual operating costs are included in Appendix G.

PHELPS DODGE — AJO, ARIZONA

SMELTER FLOW SCHEMATIC

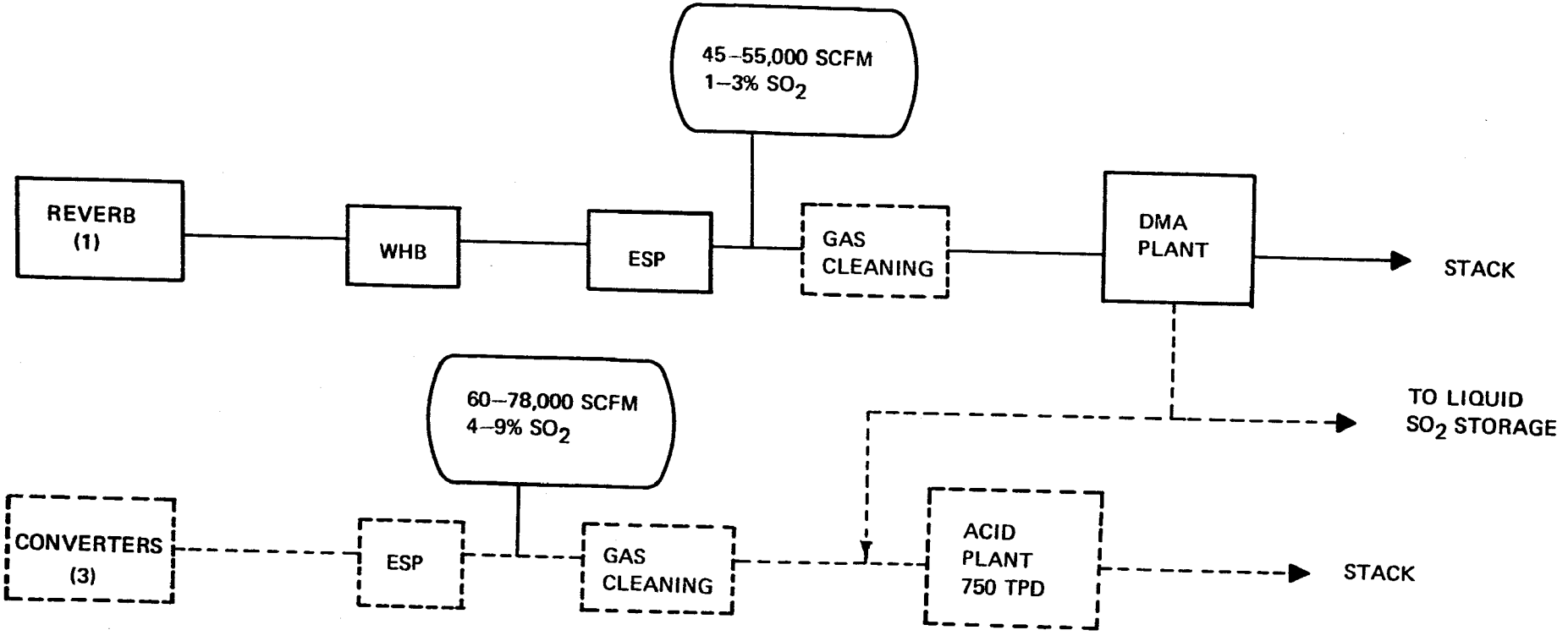

FIGURE 12.10-1

Table 12.10-1. PHELPS DODGE CORPORATION - AJO SMELTER - ARIZONA

CHARACTERIZATION OF WEAK SO_2 GAS STREAMS

Stream	Volume SCFM	Av. SO_2 Content Sizing Basis (lbs/hr) (1)	Equivalent Av. SO_2 Content (%)	% Oxygen Feed to DMA Plant (3)	Temp. °F
Reverb.	45-55,000	10,100	2.0%	8 - 10%	450°

NOTES: (1) Particulate loading after ESP has been indicated as 0.02 grains/AFCM .

(2) SO_3 content at the furnace uptake has been indicated as 0.1%.

(3) Oxygen content of gas stream at stack breeching estimated.

Table 12.10-2. PHELPS DODGE CORPORATION - AJO, ARIZONA
CAPITAL AND ANNUAL OPERATING COSTS FOR DMA/XYLIDINE
CONTROL SYSTEM ON REVERBERATORY FURNACE OFF-GASES

TOTAL CAPITAL INVESTMENT		$8,830,000
Capital Cost/Annual tons SO_2 Removed		$223
ANNUAL DIRECT OPERATING COST		
Gas Conditioning	$ 62,000	
SO_2 Absorption & Handling	832,000	
Labor	140,000	
Maintenance, Ins. & Taxes	589,000	
		$1,623,000
ANNUALIZED CAPITAL COST		$1,161,000
TOTAL NET ANNUALIZED COST		$1,722,000
ANNUAL COST/TON SO_2 REMOVED		$ 43
COST/LB COPPER(1)		1.57¢/lb

(1) Based on smelter rated capacity 700 TPD concentrate, 24% copper operating 340 days/year. Annual production 55,000 TPY. Zero net-back to smelter for SO_2 or acid produced.

12.11 PHELPS DODGE CORPORATION -- DOUGLAS, ARIZONA

12.11.1 Smelter Characteristics

The Douglas Plant dates back to around 1903. It has a rated green concentrate capacity of about 2800 TPD although the present operating level is around 2000 TPD concentrate. The charge is highly variable and reflects approximately 50 percent custom ore. The 24 installed Hirschoff multi-hearth roasters are old and the source of considerable leakage. Only 18 are normally in operation at a time. Offgases are treated in a new, recently-installed electrostatic precipitator before being vented to the atmosphere through a 544 ft stack. Vent gases from the roaster load-out stations after cleanup in a baghouse are also directed into the roaster offgas system. Calcines from the roasters are charged to 3 reverberatory furnaces. Reverberatory offgases pass through waste heat boilers and a new electrostatic precipitator system before being vented through the same 544 ft stack. Four of the five available Pierce-Smith converters are usually in operation. Hoods of the Walter radiation cooling type have been fitted recently to the converters but they are not close fitting and air dilution is still appreciable. The offgases are cleaned in electrostatic precipitators and then vented through a separate 560 ft stack.

The location of the smelter in a valley limits the availability of land in the immediate vicinity. Utility services are fully loaded.

The smelter has no present SO_2 control system installation plans but Phelps Dodge management has stated that Arizona's ambient air standards for SO_2 at Douglas would be met met through

1) a permanent cutback in smelter operation
2) the installation and operation of an intermittent production curtailment system and
3) such operating adjustments as might thereafter be shown to be necessary or desirable.

12.11.2 Weak SO_2 Streams

The offgases from the roasters, reverberatory furnaces and the converters are all weak SO_2 gas streams as a result of the high degree of air dilution in the various systems. A flow schematic is provided in

Figure 12.11-1. With custom ores making up a significant part of the smelter input, the smelter charge tends to be variable and this situation might be expected to be reflected in variable operating conditions and changing levels in gas flows and SO_2 contents as ore characteristics change. The three gas streams have been characterized at the stack end of the respective flue systems as shown in Table 12.11-1.

12.11.3 SO_2 Control Process Selection

The application of absorption-based SO_2 control processes to the entire gaseous output of this smelter--i.e., a total maximum gas flow of approximately 700,000 SCFM with a total SO_2 loading of around 100,000 lb/hr--is a rather overwhelming consideration. With all three offgas systems having the same approximate low SO_2 content, there does not appear to be any particular merit in attempting to use the SO_2 content of any two of the streams to increase the SO_2 level of the third to provide a satisfactory feed to a new, conventional sulfuric acid plant. Although the roaster and reverberatory gas systems are independent and presently share only the stack in common, it appears possible to combine these two streams after their respective precipitators and install a common gas conditioning and SO_2 absorption system. Similarly, although there would be construction difficulties, the converter offgases could be directed to a gas conditioning and SO_2 absorption system before being redirected back to the converter stack. These two absorption systems could then supply a common SO_2 handling or regeneration section, sized to handle the combined SO_2 rate and located in a convenient area of the plant site, away from the congested smelting operational area itself.

In reviewing the available processes against the gas characteristics and conditions at this smelter, the high oxygen levels of the gases, together with the relatively dilute SO_2 concentrations, suggest that the Wellman-Lord, DMA/xylidine and ammonia processes would be penalized substantially in terms of operating costs and/or higher capital investment. The lime/limestone process for an SO_2 rate of approximately 100,000 lb/hr would be associated with very large sludge rates and the limited land availability around the Douglas smelter would seem to preclude this process even without the potential operational problems which might be expected with gas streams of high oxygen contents. The use of a direct application sulfuric acid plant is clearly impractical. The magnesium oxide process is associated with high energy demands and fairly large

PHELPS DODGE — DOUGLAS, ARIZONA

SMELTER FLOW SCHEMATIC

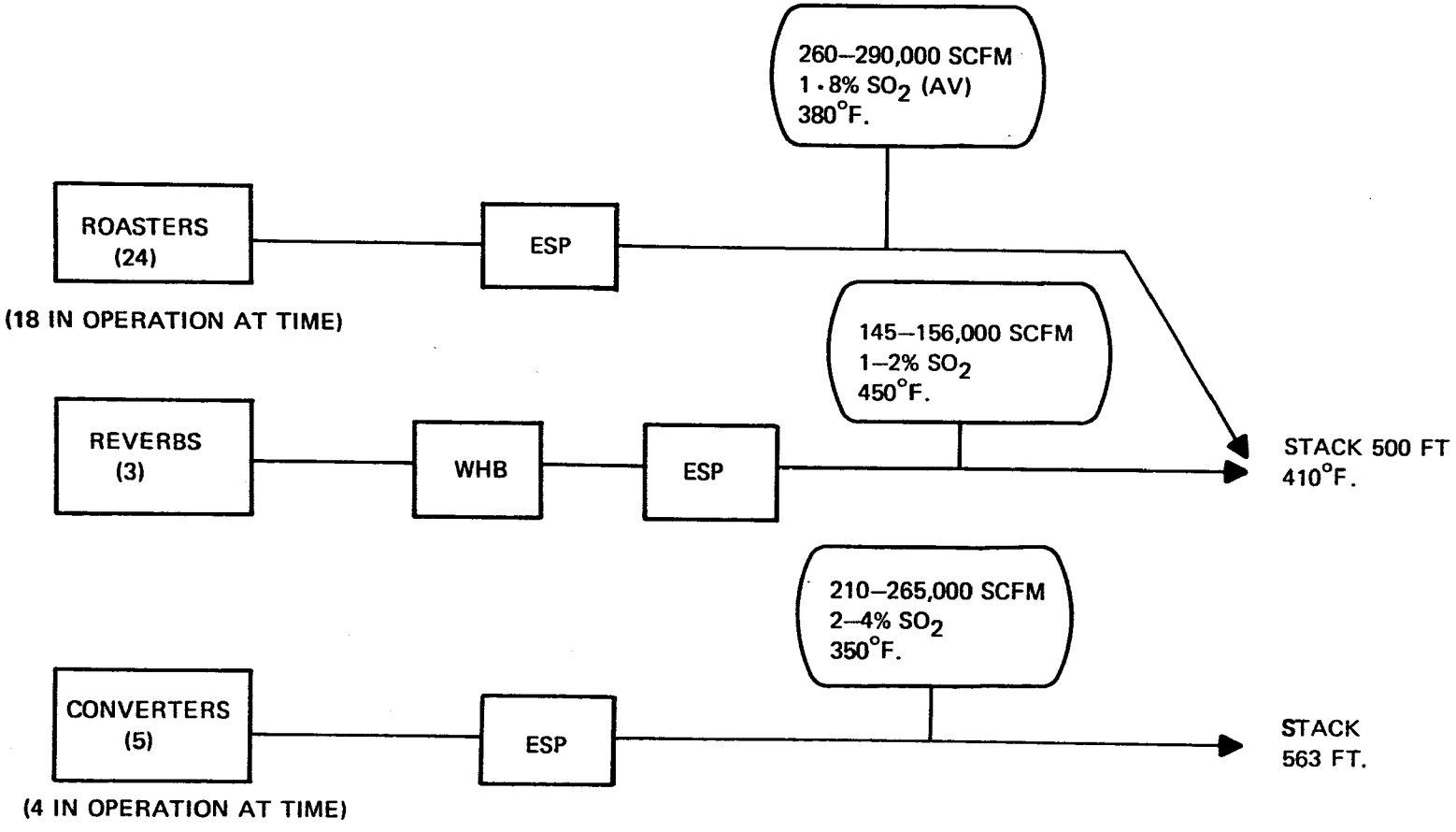

FIGURE 12.11-1

space requirements to accommodate the solids handling equipment, auxiliary gas cleaning facilities and an auxiliary acid or elemental sulfur plant. It does not appear to be an attractive match for this smelter. The two control processes which might have some applicability to the Douglas smelter are the double alkali and the citrate processes. However, the former process still entails the disposal of impressive quantities of throwaway sludge, and the task of trucking around the clock approximately 350,000 lb/hr of sludge appears to undercut the practicability of this approach. It is possible that a conveyor belt system to a depleted mine site might provide an approach but the uncertainties involved suggest that the only viable control is offered by the citrate process producing elemental sulfur. The fact that only 1/2 lb of sulfur is generated for every pound of SO_2 removed and that this material can be readily stockpiled is an impressive argument for the potential of this control process in relation to the characteristics and special factors of the Douglas smelter.

12.11.4 SO_2 Control Process Costs

The cost development for the citrate process will include two separate, appropriately sized gas conditioning and SO_2 absorption systems feeding a single SO_2 regeneration and processing section. The maximum gas flows and the average SO_2 rates provided in Table 12.11-1 will provide the cost basis.

Special factors or conditions which modify the basic cost structures are as follows:

1) The capital costs from Appendix A for gas cooling and conditioning for the identified maximum gas flows for the combined roaster/reverberatory gas streams and the converter gas stream, have been modified by the factor

$$\left[\frac{T^\circ_{R(t^\circ F)}}{T^\circ_{R(600^\circ F)}}\right]^{0.6}$$

where t°F = 410°- roaster/reverberatory gases
= 350°- converter gases.

2) The present congested flue configuration around the roaster/reverberatory stack and the short flue length at the converter stack will make the installation of the gas conditioning and SO_2 absorption systems with appropriate bypasses and dampers at these locations extremely difficult. Factors of 50 percent of the capital cost of the roaster/reverberatory gas treating and absorption systems and 70 percent of the capital cost of the converter gas treating and absorption systems have been allowed to cover the additional costs involved.

3) Additional surge capacity will be required at the central SO_2 regeneration facility to handle the pregnant citrate liquor returns from the two absorption systems. An allowance of $100,000 total capital has been provided and added to the SO_2 regeneration facility capital cost.

4) Additional electrical substations and water treatment facilities to support the makeup water requirements of the scrubbing systems and the steam generation units associated with the citrate process have been provided, with the estimated costs being based on the unit relationships established for the gas conditioning, SO_2 absorption and SO_2 handling sections of the citrate process and the cost curves in Appendix F.

5) To cover the additional costs associated with implementing a major process change in an operating plant, an estimate of 15 percent of the total boundary limit cost for the control process has been allowed.

The capital and operating cost structures for the citrate process are provided in Tables 12.11-2 and 12.11-3, respectively. The individual computation sheets are provided under the Phelps-Dodge-Douglas smelter in Appendix G.

Table 12.11-1. PHELPS-DODGE CORPORATION - DOUGLAS, ARIZONA

CHARACTERIZATION OF WEAK SO_2 GAS STREAMS

Stream	Volume SCFM	Av. SO_2 Content Sizing basis (lbs/hr)	Equivalent Av. SO_2 Content (%)	% Oxygen(2)	Temp. °F
Roasters (24) (18 in operation at a time)	260-290,000	51,100	1.8	14-18	380
Reverbs (3)	145-156,000	19,000	1.25	10-15	450
Converters (5) (4 in operation at a time)	210-265,000	43,000	1.8	12-18	350

Notes. (1) SO_3 loading in all cases approximately 0.1%. Particulates less than 0.01 grains/SCF for the roaster and reverberatory streams and less than 0.02 grains/SCF for the converter stream.

(2) Oxygen content of gas streams estimated.

Table 12.11-2. PHELPS DODGE - DOUGLAS, ARIZONA
CAPITAL COSTS FOR SO_2 CONTROL PROCESSES ON WEAK SO_2 SMELTER OFF-GASES

ITEM	Primary SO_2 Control Method Citrate Process (95% Removal)	COMMENTS
1. Boundary limits retrofitted primary system	39,150,000	
2. Auxiliary Plant: (a) H_2SO_4 plant with dry gas cleaning	N/A	
TOTAL Boundary Limit Cost	39,150,000	
3. Total Service Costs	1,900,000	
4. Associated Investment Costs (a) new ESP (b) General site-related costs	5,870,000	
Total Capital Investment	$46,920,000	
Capital cost/annual tons SO_2 Removed	$107	

Table 12.11-3. PHELPS DODGE - DOUGLAS, ARIZONA
ANNUAL OPERATING COSTS AND TOTAL NET ANNUALIZED COSTS

ITEM	Primary SO_2 Control Method Citrate Process (95% Removal)	COMMENTS
1. Gas conditioning and SO_2 absorption	1,062,000	
2. SO_2 handling	8,914,000	
3. Labor	561,000	
4. Maintenance, Ins. & Taxes	2,873,000	
5. Total Annual Operating Cost	13,410,000	
6. Auxiliary Plant Total Operating Costs (a) Sulfuric acid plant	N/A	
7. Total Annual Operating Costs	$13,410,000	
8. Annualized Capital Cost	$ 6,170,000	
9. Total Net Annualized Cost	$11,642,000	
10. Cost/year/ton SO_2 removed	$27	
11. Cost/lb copper(1)	4.48¢/lb	

(1) Based on smelter's present operating level of 2000 TPD concentrate, 20% copper 130,000 TPY. Zero net-back to smelter for sulfur produced.

12.12 PHELPS DODGE CORPORATION -- MORENCI, ARIZONA

12.12.1 Smelter Characteristics

The Morenci smelter began operations in 1943. Concentrate capacity is over 2000 TPD. Approximately 35 percent of the total plant feed is processed through a fluid bed roaster with the balance feeding directly up to 3 of the 5 available reverberatory furnaces. Four of the reverberatories are old units and are approximately the same size, but the fifth unit, commissioned in 1974, is a much larger furnace. A total of nine Pierce-Smith converters are available, and under normal scheduling with seven operating, they provide a relatively even offgas flow although SO_2 concentration does vary. All converters are fitted with close-fitting hoods with appropriate dampers to provide shutoff when not blowing and volume and system balancing control.

Offgases from the fluid bed roaster are mechanically cleaned in a series of cyclones before passing to the gas cleaning system of an old single contact sulfuric acid plant originally rated at 750 TPD but actually with a present maximum capacity of around 600 TPD acid. The roaster gas SO_2 concentration of approximately 12-15 percent is diluted to about 6.5 percent SO_2 before being introduced into the acid plant.

Reverberatory offgases pass through waste heat boilers and electrostatic precipitators before being vented out of a 605 ft stack.

Gases from the converters pass through coolers and electrostatic precipitators to the gas cleaning plant and then through an extended flue system to a dual train, single contact sulfuric acid plant rated at 2500 TPD of acid (237,000 SCFM at 5.5 percent SO_2). Most of the acid presently produced at Morenci must be disposed of by neutralization. Two tailings leach/lime neutralization modules have been constructed with a total capacity of about 1800 TPD of acid.

The smelter is extremely congested and available space around the reverberatory operating area is minimal. Five 150 ft diameter thickeners are located in close proximity to the smelter operating area. Water supply is limited.

12.12.2 Weak SO_2 Streams

The only weak SO_2 streams in this smelter are the offgases from the reverberatories. The furnaces are operated at a slight negative pressure and the usual operations of routine charging contribute to air infiltration.

Routine "soot" blowing of the waste heat boilers and leakage at the electrostatic precipitators also contribute to the considerable degree of air dilution experienced in this system. Depending on the line-up of the available reverberatory furnaces, gas flows in the reverberatory flue gas systems at the stack have been estimated to range from 340-500,000 SCFM. A flow schematic is provided in Figure 12.12-1. the reverberatory gas stream has been characterized at the stack as shown in Table 12.12-1.

12.12.3 SO_2 Control Process Selection

Although the high oxygen ratio in the gas stream is unfavorable in both operational and economic terms to most of the candidate SO_2 absorption based control processes, other considerations are equally important at this smelter. Morenci is already a major producer of sulfuric acid, and while the general market for acid and the corresponding price has moved upward markedly over the past year, it is apparent that present geographical conditions limit the available market and Morenci has found it necessary to neutralize a significant proportion of their existing acid production. An SO_2 control system on the reverberatory gases with the production of another potential 700-800 TPD of acid does not appear to be a very attractive option either now or in the longer term, even if the demand for acid in Arizona increases appreciably.

The majority of the regenerable processes do provide the SO_2 end-use options of both elemental sulfur and liquid SO_2 in addition to sulfuric acid, but the potential economic penalties associated with the high oxygen levels in the gas stream and related high oxidation rates in the Wellman-Lord, xylidine and ammonia processes appear to preclude serious consideration of these three systems. The magnesium oxide process produces only a 15 percent stream of regenerated SO_2 and the elemental sulfur route is unattractive when evaluated in terms of natural gas (reductant) requirements and related costs. The citrate process with its limited oxidation potential and direct production of elemental sulfur appears to be the most attractive process although the system is still in the developmental phase. Of the two throwaway processes only the double alkali appears to offer a reasonable approach under the Morenci conditions. The direct application of a sulfuric acid plant to the reverberatory gases is obviously unrealistic in view of the comments made above and the very high energy demand of this approach.

PHELPS DODGE — MORENCI, ARIZONA

SMELTER FLOW SCHEMATIC

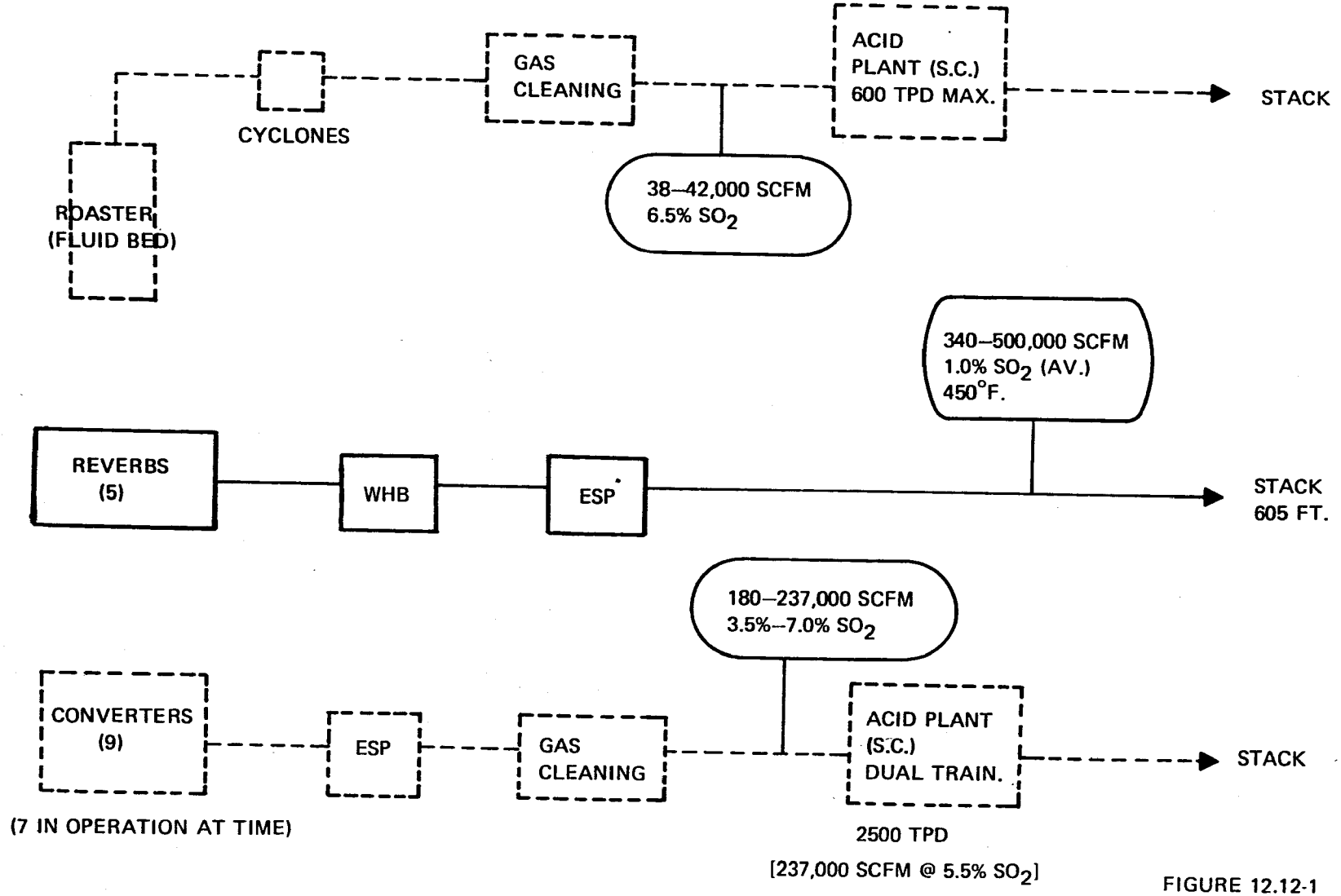

FIGURE 12.12-1

Thus the only SO_2 control processes judged to be applicable to the Morenci reverberatory gas stream are the double alkali and citrate processes.

12.12.4 SO_2 Control Process Costs

The special factors or conditions which modify the basic cost structures for this smelter are as follows:

1) The temperature of 450°F at the stack end will reduce the capital costs from Appendix A for the necessary gas cooling and conditioning. The modification factor is

$$\left[\frac{T^\circ R(450^\circ F)}{T^\circ R(600^\circ F)}\right]^{0.6}$$

2) Retrofitting a gas conditioning and absorption system to the reverberatory gas duct system and accommodating the equipment within the extremely congested area in the immediate vicinity of the duct system appear to be major problems. There are 6 acid storage tanks located parallel to and almost under the flue system with 2 adjacent railroad spins. Special approaches towards equipment configuration and connecting ducting would seem mandatory. A factor of 70 percent of the capital cost of the gas conditioning and SO_2 absorption systems has been allowed to cover the additional costs involved.

3) To provide uniform processing rates in the SO_2 regeneration section, additional surge capacity to handle the SO_2 rate variations in the gas system will be required at the SO_2 absorption section. An allowance of 5 percent of the SO_2 absorption section cost has been provided.

4) Additional electrical substations and water treatment facilities to support the makeup water requirements have been provided, with the estimated costs being based on the unit relationships established for the appropriate systems and the cost curves in Appendix F.

5) Any major process changes in a plant as congested as Morenci will incur substantial additional costs related to coordination and scheduling difficulties, special safety requirements, etc. An allowance of 20 percent of the total boundary limit cost for each of the selected processes has been provided.

The capital and operating cost structures for the double alkali and citrate processes are provided in Tables 12.12-2 and 12.12-3, respectively. Individual computation sheets are provided under the Phelps Dodge-Morenci smelter section in Appendix G.

Table 12.12-1. PHELPS DODGE CORPORATION - MORENCI, ARIZONA

CHARACTERIZATION OF WEAK SO_2 REVERBERATORY GAS STREAMS.

Stream	Volume SCFM	Av. SO_2 Content[1] Sizing basis (lbs/hr)	Equivalent Av. SO_2 Content (%)	% Oxygen[2]	Temp. °F
Reverb. (1)	340-500,000	43,000	1.0	12-15	450

Notes. (1) SO_3 reported as 0.1% at furnace uptake.

(2) Oxygen content of gas stream estimated.

Table 12.12-2. PHELPS DODGE CORPORATION - MORENCI, ARIZONA
CAPITAL COSTS FOR SO_2 CONTROL PROCESSES ON REVERBERATORY FURNACE OFF-GASES

ITEM	Primary SO_2 Control Method		COMMENTS
	Double Alkali (95% Removal)	Citrate Process (95% Removal)	
1. Boundary limits retrofitted primary system	21,880,000	25,150,000	
2. Auxiliary Plant (a) H_2SO_4 plant with dry gas cleaning	N/A	N/A	
TOTAL Boundary Limit Cost	21,880,000	25,150,000	
3. Total Service Costs	1,120,000	1,360,000	
4. Associated Investment Costs (a) new ESP (b) General site-related costs	4,370,000	5,000,000	
Total Capital Investment	27,370,000	31,510,000	
Capital cost/annual ton SO_2 Removed	$164	$189	

Table 12.12-3. PHELPS DODGE CORPORATION - MORENCI, ARIZONA
ANNUAL OPERATING COSTS AND TOTAL NET ANNUALIZED COSTS

ITEM	Primary SO_2 Control Method		COMMENT
	Double Alkali (95% Removal)	Citrate Process (95% Removal)	
1. Gas conditioning and SO_2 absorption	713,000	800,000	
2. SO_2 handling	7,161,000	3,387,000	
3. Labor	210,000	333,000	
4. Maintenance, ins. & taxes	1,622,000	1,893,000	
5. Total Annual Operating Cost	9,706,000	6,413,000	
6. Auxiliary Plant Total Operating Costs (a) Sulfuric acid plant	N/A	N/A	
7. Total Annual Operating Cost	9,706,000	6,413,000	
8. Annualized Capital Cost	3,599,000	4,144,000	
9. Total Net Annualized Cost	7,770,000	6,470,000	
10. Cost/year/ton SO_2 Removed	$47	$39	
11. Cost/lb copper[1]	2.22¢/lb	1.85¢/lb	

[1] Based on smelter rated capacity of 2200 TPD concentrate, 24% copper operating 340 days/year. Annual production 175,000 TPY. Zero net-back to smelter for sulfur produced.

12.13 WHITE PINE COPPER COMPANY -- WHITE PINE, MICHIGAN

12.13.1 Smelter Characteristics

The White Pine Copper Company smelter is one of the newer U.S. copper smelters, having begun operations in the mid-fifties. Siting of the plant was chosen taking atmospheric dispersion characteristics into consideration. Green concentrate mixed with coal is charged to the two reverberatory furnaces by conveyor belt with charging on each furnace occupying about 9 hours out of every 24. Matte from the reverberatories is converted in two Pierce-Smith converters with only one on line at a time. Gases from the reverberatory furnaces pass through waste heat boilers to a common flue and are cleaned in an electrostatic precipitator before being vented up a 504 ft stack. Considerable dilution of these gases takes place through the flue although the system has been recently renovated. The waste heat boilers are "soot" blown each shift for about one hour using steam. Additional steam is also introduced continuously into the electrostatic precipitator. The converter gases are also vented directly to the 504 ft stack but without special particulate removal treatment.

It must be noted that the smelting operation at the smelter is not typical of domestic primary copper smelters. The copper values of the ore-body mineralogy are present exclusively as chalcocite and native copper, and reverberatory processing of the green concentrate as is would produce a difficult to handle matte containing over 75 percent copper. The copper content is reduced to a manageable level (about 65 percent) by including purchased pyrite with the reverberatory furnace charge. The 65 percent matte requires only a brief slag blow (30 minutes total for both the first and second slag blow) to go to white metal. The total converter operating cycle is 4 hours with a total elapsed cycle time of 10 1/2 hours. With only 2 converters available, gas flows from this operation are thus intermittent and limited to about 8-9 hours in any one day.

This smelter under its current operating mode has demonstrated its compliance with ambient air standards through 1980. It has been indicated that approaches towards emission level reductions after this date will focus on metallurgical and related processing considerations.

The smelter is located in north Michigan on Lake Superior with adequate land availability. The surrounding area is heavily treed.

12.13.2 Weak SO_2 Streams

The offgases from both reverberatory furnaces contain a very low level of SO_2 even with the inclusion of pyrite in the reverberatory charge. Air infiltration in the reverberatory flue system further reduces the SO_2 content to marginal values. Figure 12.13-1 provides a flow schematic of the gas system and indicates the gas flows and SO_2 concentrations under the usual operating mode.

With only two converters, gas flows in the converter flue system are intermittent, with flows ranging between approximately 99,000 SCFM for 20 minutes duration during the first slag blow to 142,000 SCFM for 10 minutes during the second slag blow. The copper blow duration is about 3 1/2 hours with an associated gas flow of approximately 106,000 SCFM. Sulfur dioxide contents vary from 1 percent during the first slag blow to 2.5 percent during the second slag blow to 4.5 percent during the copper blow. Total SO_2 generation during a 24 hour period has been computed on the basis of the 10 1/2 hour elapsed time converter cycle and the 4 hour operational cycle.

Although the converter gas streams in this smelter do not fall within the accepted definition of "weak" SO_2 gas streams, they present a special problem because of their intermittent nature. They have been characterized in terms of gas flow and average SO_2 content together with the reverberatory gas stream in Table 12.13-1.

12.13.3 SO_2 Control Process Selection

In view of this smelter's present compliance with ambient air standards, its location, and the marginal SO_2 level of the reverberatory gases, specific application of an SO_2 control process to the reverberatory gas stream does not appear to be warranted. The converter system, however, can be controlled with an absorption-based process if sufficient surge capacity is provided to operate the regeneration section continuously and the gas conditioning and SO_2 absorption system is sized to the maximum expected gas flow. It is noted that the maximum gas flow of 142,000 SCFM which is associated with the second slag blow is only of 10 minutes duration and that a sizing level of 110,000 SCFM would accommodate the complete gas flow rate for at least 96 percent of the time.

WHITE PINE COPPER COMPANY — WHITE PINE, MICHIGAN
SMELTER FLOW SCHEMATIC

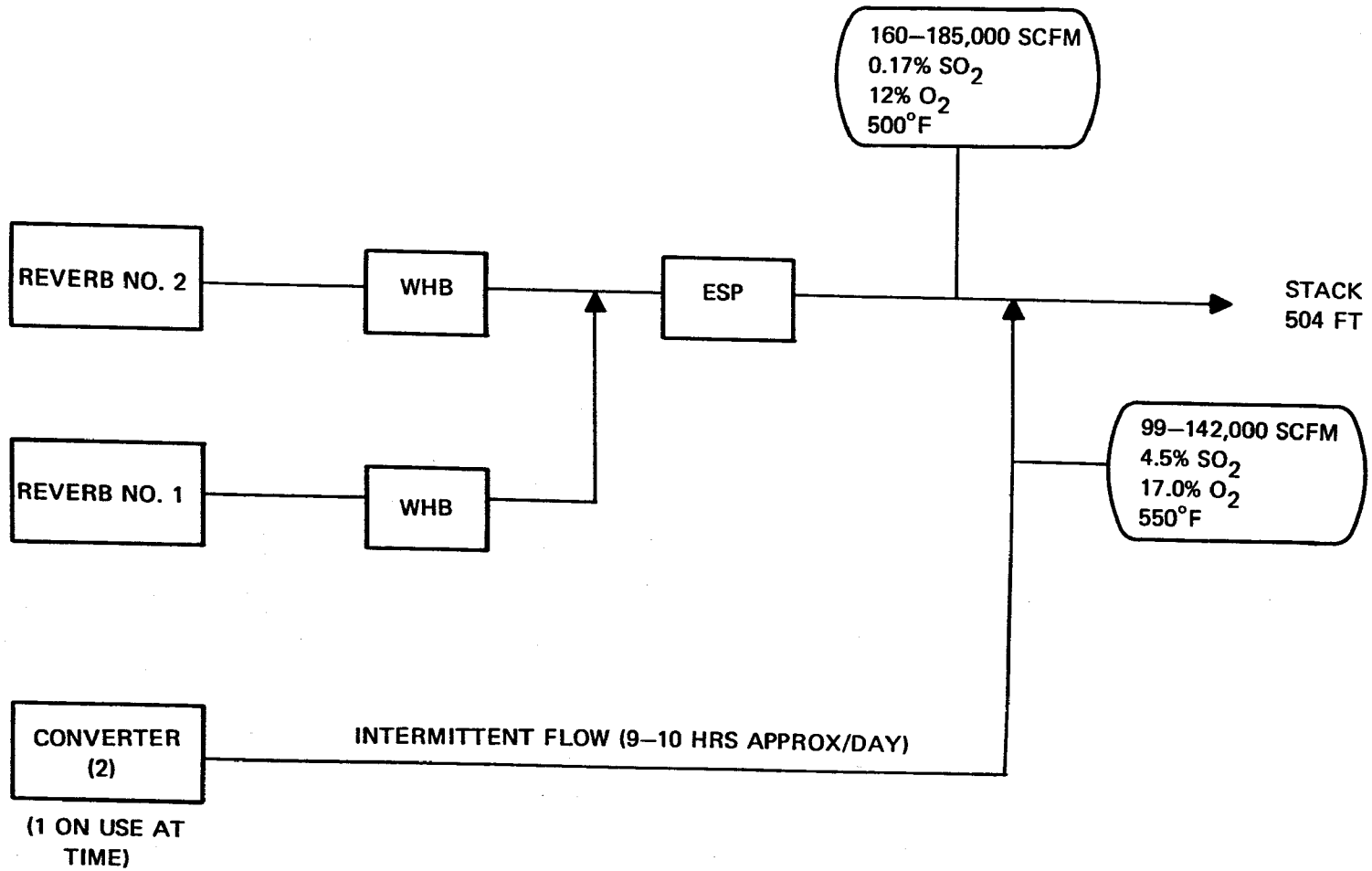

NOTE: (1) FEED EXCLUSIVELY CHALCOCITE AND NATIVE COPPER PYRITE ADDED TO CONTROL MATTE COPPER CONTENT
(2) BASED ON ACTUAL TEST DATA TAKEN IN MAY 1975

FIGURE 12.13-1

The very high oxygen level in the converter gas stream will limit applicable SO_2 control processes to those least affected by high oxidation levels. Of the regenerable processes, only the magnesium oxide and citrate processes appear to be viable candidates, although as noted previously, there is some uncertainty that sulfate formation in the MgO process is self-limiting at around 15 percent. Without this provision, purging and secondary treatment of the $MgSO_4$ with lime [$Ca(OH)_2$] will be necessary to recover the magnesium. The double alkali throwaway process also appears to be applicable. Although high oxidation levels of the sodium sulfite/bisulfite will occur, the lime regeneration step plus appropriate softening should provide an acceptable process.

12.13.4 SO_2 Control Process Costs

The special conditions associated with the White Pine Smelter which modify the cost structures of the selected processes are as follows:

1) The average temperature of the converter gas stream at the stack is 550°F and the capital costs from Appendix A for gas cooling and conditioning have been modified by the factor

$$\left[\frac{T^{\circ}R(550^{\circ}F)}{T^{\circ}R(600^{\circ}F)}\right] 0.6$$

2) Retrofitting the gas conditioning and SO_2 absorption sections to the existing flues and providing bypasses and appropriate dampers incur additional costs, and these have been allowed for on the basis of 15 percent of the capital investment of these two sections.

3) To provide continuous operation of the SO_2 regeneration sections of the control processes, large surge capacity after the absorption system will be necessary. Actual absorption will occupy only 9-10 hours of each day. An additional 7 percent of the capital investment of the SO_2 absorption section has been provided.

4) Additional service facilities required will include an electrical substation, but specific water treatment facilities should not be necessary. Capital cost curves are provided in in Appendix F.

5) An auxiliary sulfuric acid plant taking an 8 percent SO_2 gas stream has been provided with the magnesium oxide process. Capital and operating costs of this plant based on the SO_2 hourly rate of the magnesium oxide process itself are provided in Appendix C.

6) An estimate of 20 percent of the total boundary limit costs for each process has been allowed to cover the additional costs usually associated with the implementation of major process changes in an ongoing operating plant.

The capital and operating cost structures for the three processes identified for the White Pine Smelter--double alkali, magnesium oxide, and citrate processes--are provided in Tables 12.13-2 and 12.13-3, respectively. Individual computation sheets for each process are provided under the appropriate smelter name in Appendix G.

TABLE 12.13-1. WHITE PINE COPPER COMPANY - WHITE PINE, MICHIGAN

CHARACTERIZATION OF SO_2 GAS STREAMS

Stream	Volume SCFM	Av. SO_2 Content Sizing basis (lbs/hr)	Equivalent Av. SO_2 Cont. (%)	% Oxygen(2)	Temp. °F
Reverb. (2)	160,000-185,000	2,800	0.17	12	500
Converter	99,000-142,000 (Predominant flow rate 106,400)	176,300 lb for 4hr cycle On basis of 2.5 cycles/day, av. SO_2 rate for 24 hours = 18,500 lb/hr	(4.5)	17	550

Notes. (1) No data on SO_3 or particulate loading.

(2) Oxygen levels determined during test programs.

Table 12.13-2. WHITE PINE COPPER COMPANY - WHITE PINE, MICHIGAN CAPITAL COSTS FOR SO_2 CONTROL PROCESSES ON CONVERTER OFF-GASES

ITEM	Primary SO_2 Control Method			COMMENTS
	Double Alkali (95% Removal)	Magnesium Oxide (90% Removal)	Citrate (95% Removal)	
1. Boundary limits retrofitted primary system	9,420,000	9,120,000	10,500,000	
2. Auxiliary Plant: (a) H_2SO_4 plant with dry gas cleaning	N/A	3,750,000	N/A	
TOTAL Boundary Limit Cost	9,420,000	12,870,000	10,500,000	
3. Total Service Costs	320,000	350,000	330,000	
4. Associated Investment Costs (a) new ESP (b) General site-related costs	1,880,000	2,570,000	2,100,000	
Total Capital Investment	11,620,000	15,790,000	12,930,000	
Capital cost/annual ton SO_2 Removed	$163	$240	$181	

Table 12.13-3. WHITE PINE COPPER COMPANY - WHITE PINE, MICHIGAN
ANNUAL OPERATING COSTS AND TOTAL NET ANNUALIZED COSTS

ITEM	Primary SO_2 Control Method			COMMENTS
	Double Alkali (95% Removal)	Magnesium Oxide (90% Removal)	Citrate (95% Removal)	
1. Gas conditioning and SO_2 absorption	176,000	200,000	200,000	
2. SO_2 handling	3,137,000	2,039,000	1,453,000	
3. Labor	210,000	315,000	333,000	
4. Maintenance, Ins. & Taxes	686,000	757,000	770,000	
5. Total Annual Operating Cost	4,209,000	3,311,000	2,756,000	
6. Auxiliary Plant Total Operating Costs (a) Sulfuric acid plant[1]	N/A	450,000	N/A	
7. Total Annual Operating Cost	4,209,000	3,761,000	2,756,000	
8. Annualized Capital Cost	1,528,000	2,076,000	1,700,000	
9. Total Net Annualized Cost	3,345,000	3,527,000	2,720,000	
10. Cost/year/ton SO_2 removed	$47	$54	$38	
11. Cost/lb copper[2]	2.23¢/lb	2.35¢/lb	1.81¢/lb	

[1] Overall SO_2 removal efficiency with H_2SO_4 plant is 87.3%.

[2] Based on annual production of 75,000 TPY. Zero net-back to smelter for acid or sulfur produced.

APPENDIX A

GAS CLEANING AND CONDITIONING

In establishing costs for a gas cleaning and conditioning system prior to an absorption-based SO_2 control process, an attempt has been made to recognize the actual demands of the processes themselves.

The pretreatment requirements of feed gases to sulfuric acid plants have been well defined in terms of both residual concentrations of contaminants to minimize catalyst plugging and deterioration,[1] and the process equipment to accomplish this standard. Acid plant installations in smelter environments are characterized by extensive gas treatment facilities, which constitute a significant proportion of the total investment.

The use of weak SO_2 streams as input to sulfuric acid plants directs even greater emphasis to the gas pretreatment section since additional cooling or even refrigeration is necessary to reduce the moisture content of the gas feed as part of maintaining the required water balance. Because of the interrelationship between conditioning requirements and SO_2 content of weak streams feeding sulfuric acid plants, gas conditioning for sulfuric acid plants has been treated as part of the recovery process itself and is not covered specifically in this section.

As discussed in Section 2.0 both regenerable and throwaway SO_2 control processes require a cooled and humidified input gas to reduce excessive evaporation of the aqueous SO_2 absorbent with attendant scaling and related problems. Temperatures between 130° and 150°F for most processes appear acceptable, although certain processes, namely the NH_3 and citrate systems, appear to require lower temperatures of around 90° and 125°F, respectively. Dry gas cleaning on the smelter gas streams accomplished by cyclones, balloon flues and electrostatic precipitators has the capability of reducing the particulate and fume material to residual levels of 0.1 to 0.2 gr/SCF. The presence of this residual material may introduce certain problems to the SO_2 absorption and recovery circuits such as:

1) buildup of solids in closed loop systems
2) carryover into the final product
3) increased oxidation of active salts by catalysis or direct interaction.

4) equipment corrosion if halides and mercury compounds are present.

The wet cleaning system should be designed to minimize the effect of these contributions on the performance and economics of each specific control process.

A flow sheet for a typical gas cleaning system for a regenerative-SO_2 control system which provides the required steps of cooling and humidification and removal of particulate and fume material is shown in Figure A-1. Inlet conditions are taken as 600°F temperature, 0.03 percent SO_3, a particulate loading of 0.1 to 0.2 gr/SCF and are assumed to be representative of a copper smelter reverberatory furnace gas stream after the usual dry gas cleaning. Cooling and humidification is commonly accomplished in a spray tower or impingement column with recirculation of the scrubbing water although the use of high energy venturi absorbers is highly effective where energy is readily available. The absorption of SO_3 by the recirculated scrubbing water produces a weak H_2SO_4 acid solution which can theoretically reach a concentration of 50 to 60 percent sulfuric acid, but where halides are present in the gas stream, acid strength is limited to 5 to 10 percent[1] by discarding a portion of the recirculating stream usually to a neutralization section and using fresh water makeup. Additional cooling from the 150°F saturation temperature in the scrubbing tower to 130°F or lower, if necessary, is provided in a second packed tower using cooled, recirculated weak acid. This recirculated stream is cooled in graphite or stainless steel heat exchangers with water recirculated through a water cooling tower loop. The cooled gases leaving this column still contain both some fine particulates and sulfuric acid mist aerosols from the SO_3 entering with the feed gas. Treatment in wet ESP's and/or high efficiency demisters is the final step in the conditioning sequence.

For the non-regenerable or "throwaway" SO_2 control processes, the gas pretreatment requirements are satisfied by scrubbing and cooling the feed gas only, and the system requirements accordingly are less demanding.

Capital costs have been developed from reported data[2,3] for systems similar to that depicted by Figure A-1 with appropriate adjustment for equipment differences, escalation, indirects, etc.; and a cost versus gas flow rate curve is provided in Figure A-2. Operating costs have

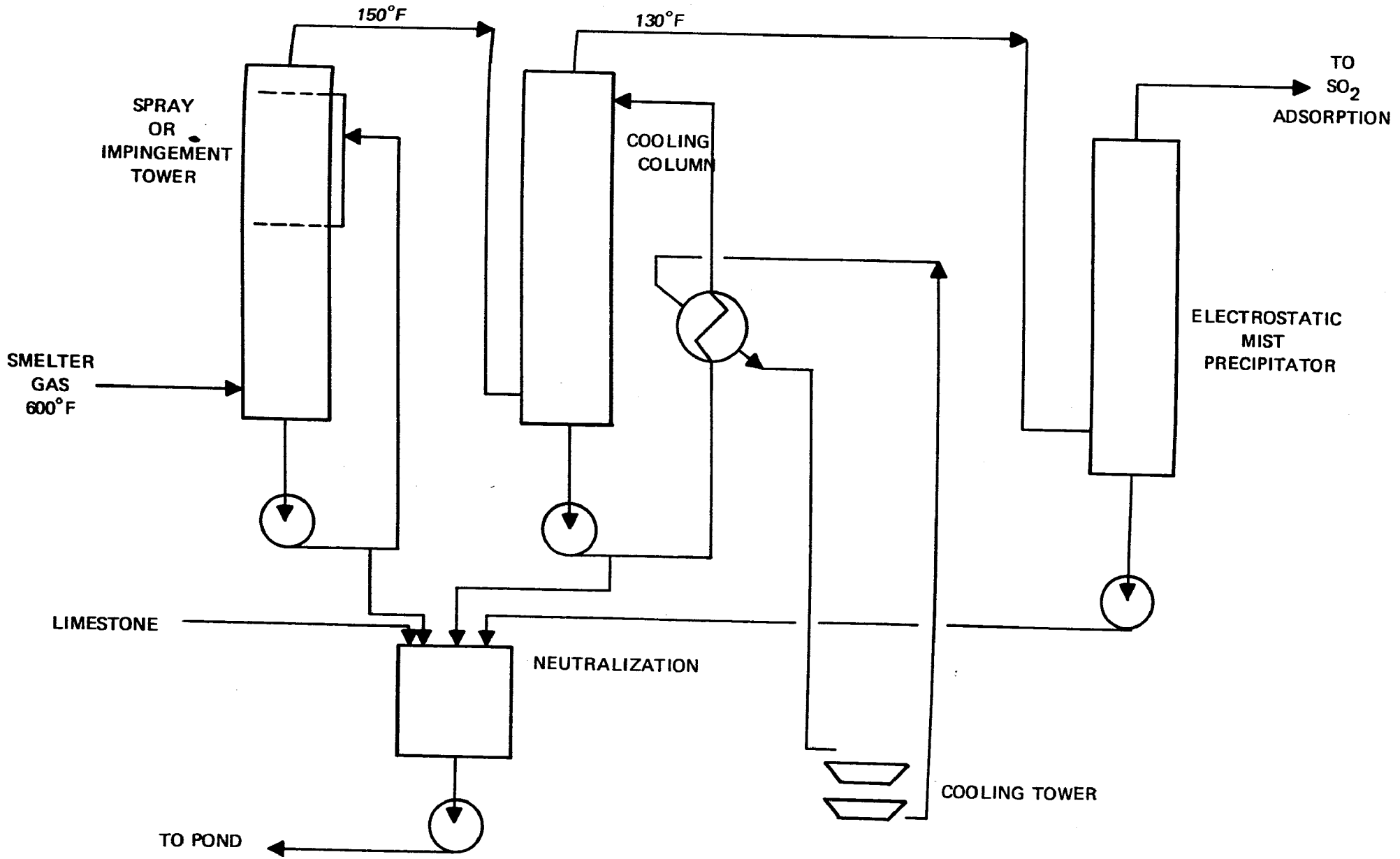

GAS COOLING & CONDITIONING FOR REGENERATIVE SO_2 ABSORPTION SYSTEMS

FIGURE A-1

been calculated using reported or developed values for power and water requirements with limestone quantities based on a 0.03 percent input level of SO_3.

Usage factors and unit cost data together with maintenance and labor factors are presented in Table A-1.

Capital and total annual costs have been calculated for four gas flow rates varying from 70,000 to 300,000 SCFM for each of the two gas conditioning systems and these are presented in Tables A-2 and A-3, respectively.

REFERENCES

1. Donovan, J.R. and P.J. Stuber, "Sulfuric Acid Production from Ore Roaster Gases," J. Metals 19 (11) 45-50 (November, 1967).

2. Industrial Gas Cleaning Institute, Inc., "Air Pollution Control Technology and Costs in Nine Selected Areas," PB-222-746, September 1972 pp. 294-298.

3. Bureau of Mines RI 7957, "Cost of Producing Copper from Chalcopyrite Concentrate as Related to SO_2 Emission Abatement," p. 44.

Table A-1. GAS CLEANING AND CONDITIONING UNIT USAGE AND COST DATA

A. Chemicals & Utilities	Basis	Unit Cost
Limestone: Regenerable System (Throwaway System)	0.09 lb/M SCFM[1] 0.07 lb/M SCFM	$8.0/ton
Power: Regenerable System (Throwaway System)	7.0 KW/M SCFM 5.25 KW/M SCFM	$0.015/KWHr
Make-up Water	3.0 gal/M SCFM[2]	$0.30/M gal
B. Operating Labor & Maintenance		
Labor[3]	½ man/shift < 75,000 SCFM 3/4 man/shift >75,000 SCFM	$8.0/hr
Maintenance	5% TCI/year	
Taxes and Insurance	2 1/2% TCI/year	
C. Fixed Charges	13.15% TCI/year	
Based on Capital Recovery Factor using 10% interest over 15 year life		

[1] Based on 0.03% SO_3 in in-coming gas.

[2] Include losses from cooling tower.

[3] Labor costs taken over 365 days.

GAS CONDITIONING & CLEANING

TOTAL CAPITAL INVESTMENT COSTS

& TOTAL ANNUAL DIRECT OPERATING COSTS

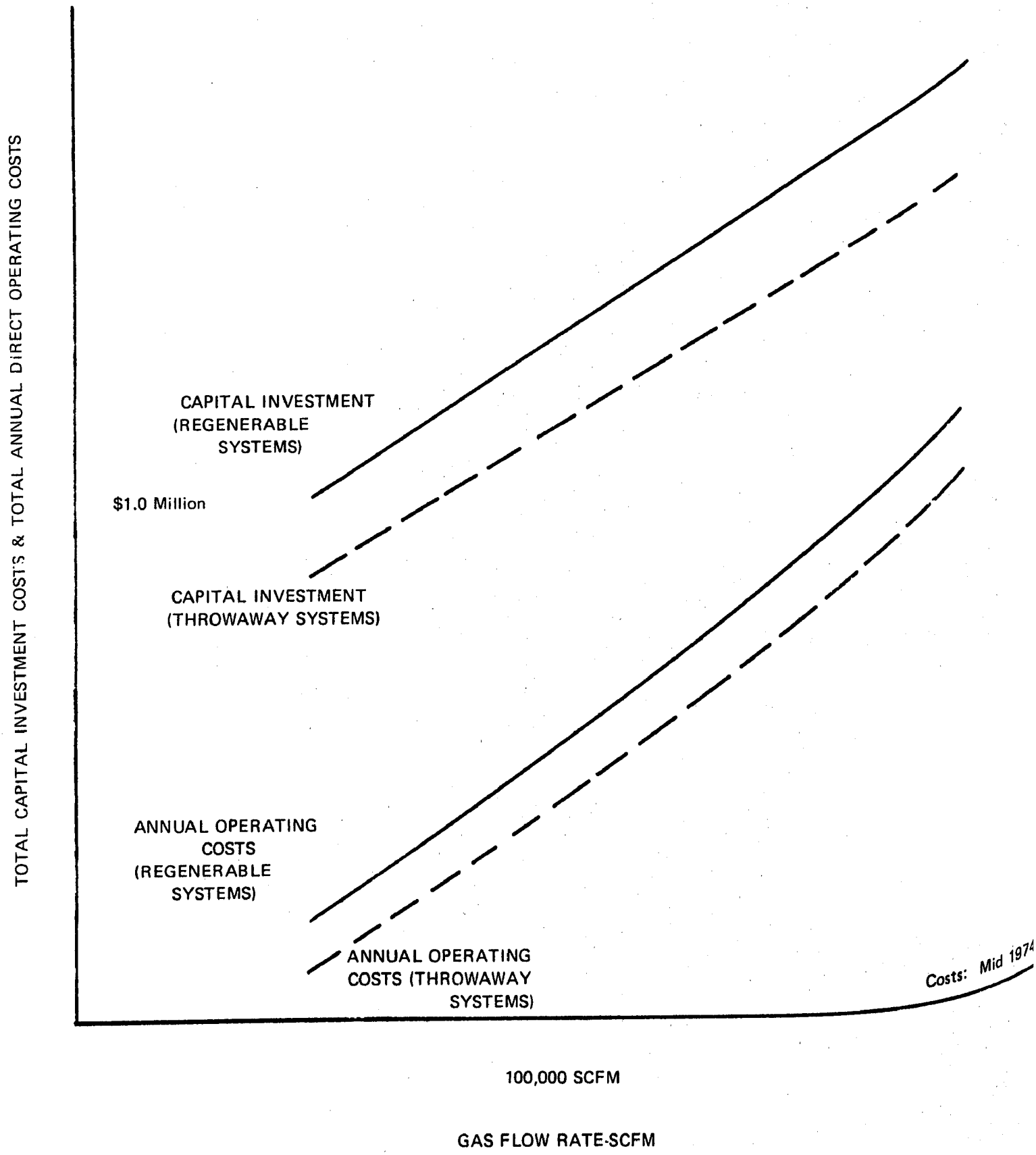

FIGURE A-2

Table A-2. GAS CLEANING AND CONDITIONING FOR REGENERABLE SO_2 CONTROL PROCESSES

CAPITAL AND TOTAL ANNUAL COSTS

		Gas Flow Rate - SCFM			
		70,000	100,000	200,000	300,000
TOTAL CAPITAL INVESTMENT	$ $/SCFM	1,800,000 26	2,275,000 23	3,550,000 18	4,650,000 16
Annual Cost					
A. Direct Operating					
1. Power		60,000	85,700	171,400	257,100
2. Water		30,800	44,000	88,000	132,000
3. Limestone		12,300	17,600	35,200	52,800
4. Labor		35,000	52,600	52,600	52,600
5. Maintenance		90,000	113,800	177,500	232,500
6. Taxes & Insurance		45,000	56,900	88,800	116,300
TOTAL ANNUAL DIRECT OPERATINC COST	$/SCFM	273,100 3.9	370,600 3.7	613,500 3.1	843,300 2.8
B. Annual Capitalized Cost		236,700	299,200	466,800	611,500
C. Net Total Annualized Cost*	$/SCFM	321,100 4.6	419,100 4.2	672,200 3.4	740,000 2.5

*Based on Corporate Tax Rate of 48%.

Table A-3. GAS CLEANING AND CONDITIONING FOR "THROWAWAY" SO_2 CONTROL PROCESSES CAPITAL AND TOTAL ANNUAL COSTS

		Gas Flow Rate - SCFM			
		70,000	100,000	200,000	300,000
TOTAL CAPITAL INVESTMENT	$	1,210,000	1,500,000	2,250,000	2,900,000
	$/SCFM	17	15	11	10
Annual Cost					
A. Direct Operating					
1. Power		44,900	64,200	128,400	192,300
2. Water		30,800	44,000	88,000	132,200
3. Limestone		9,600	13,700	27,400	41,100
4. Labor		35,000	52,600	52,600	52,600
5. Maintenance		60,500	75,000	112,500	145,000
6. Taxes & Insurance		30,300	37,500	56,300	72,500
TOTAL ANNUAL DIRECT OPERATING COST		211,100	287,000	465,200	635,700
	$/SCFM	3.0	2.9	2.3	2.1
B. Annual Capitalized Cost		159,100	197,300	295,900	381,400
C. Net Total Annualized Cost*		230,200	298,500	465,800	619,200
	$/SCFM	3.3	3.0	2.3	2.1

*Based on Corporate Tax Rate of 48%.

APPENDIX B

SO_2 ABSORPTION COSTS

The absorption section of absorption-based SO_2 control systems generally includes the gas scrubbing unit itself, the absorbent recirculation loop including hold-up and storage, and a suitable mist separator to prevent carryover of the absorbent to the stack. Certain processes, however, may require additional equipment to satisfy this special requirement. The fan or blower necessary to move the gas through both the conditioning and absorption sections may be located before the conditioning section or after the SO_2 absorber itself. Gas characteristics, flow rate, temperature, overall economics, may all exercise an influence on a specific application. For this study, it is assumed that the blower or fan is located before the gas conditioning section, but as noted in Section 2, the capital charges are allocated entirely to the SO_2 absorption section with the power operating costs being prorated over both sections based on expected pressure drop in each section.

Of the candidate SO_2 control processes under review, three are characterized by a very specific SO_2 absorption step--sulfuric acid, Dimethylaniline and ammonia scrubbing--which directly influences the associated cost structure. The other processes, however, utilize either slurry or clear solution scrubbing; and while there is a variety in the absorption equipment being used by these processes, the effect on overall capital costs does not appear to be significant. Slurry scrubbing, because of the higher L/G ratios used and the effect on auxiliary equipment, tends to incur capital costs somewhat higher than those for clear solution scrubbing.

Cost studies for SO_2 control processes applied to power plants have been reported in some detail by TVA,[1,2] and Catalytic Incorporated.[3] Other order-of-magnitude estimates for various SO_2 control processes have also been reported in trade journals and papers presented at various symposia. These data have been reviewed and used with appropriate modification, adjustment and escalation to develop the general capital cost curves provided in Figure B-1. Escalation and indirect loading factors used are the same as those specified in Section 2.

A capital cost curve for the ammonia process has been developed separately, but is represented in Figure 10-5. The dimethylanine process absorption system is such an integral part of the control process itself that the costs have not been separately identified.

Since operating costs are more clearly identified with the specific control processes, a generalized approach has not been taken and the costs have been developed as part of the effort for each particular control process.

REFERENCES

1. G.G. McGlamery, et al. Tennessee Valley Authority, Conceptual Design and Cost study, Sulfur Oxide Removal for Power Plant Stack Gas (Magnesia Scrubbing-Regeneration), PB-222-509, May 1973.

2. G.G. McGlamery and R.C. Torstrick, Tennessee Valley Authority, "Cost Comparisons of Flue Gas Desulfurization System", Paper presented at Flue Gas Desulfurization Symposium, Atlanta, Georgia, November 1974.

3. E.L. Calvin, Catalytic, Inc., "A Process Estimate for Limestone Slurry Scrubbing of Flue Gas", EPA-R2-73-1489, January, 1973.

SO_2 ABSORPTION SYSTEMS

TOTAL CAPITAL INVESTMENT COSTS

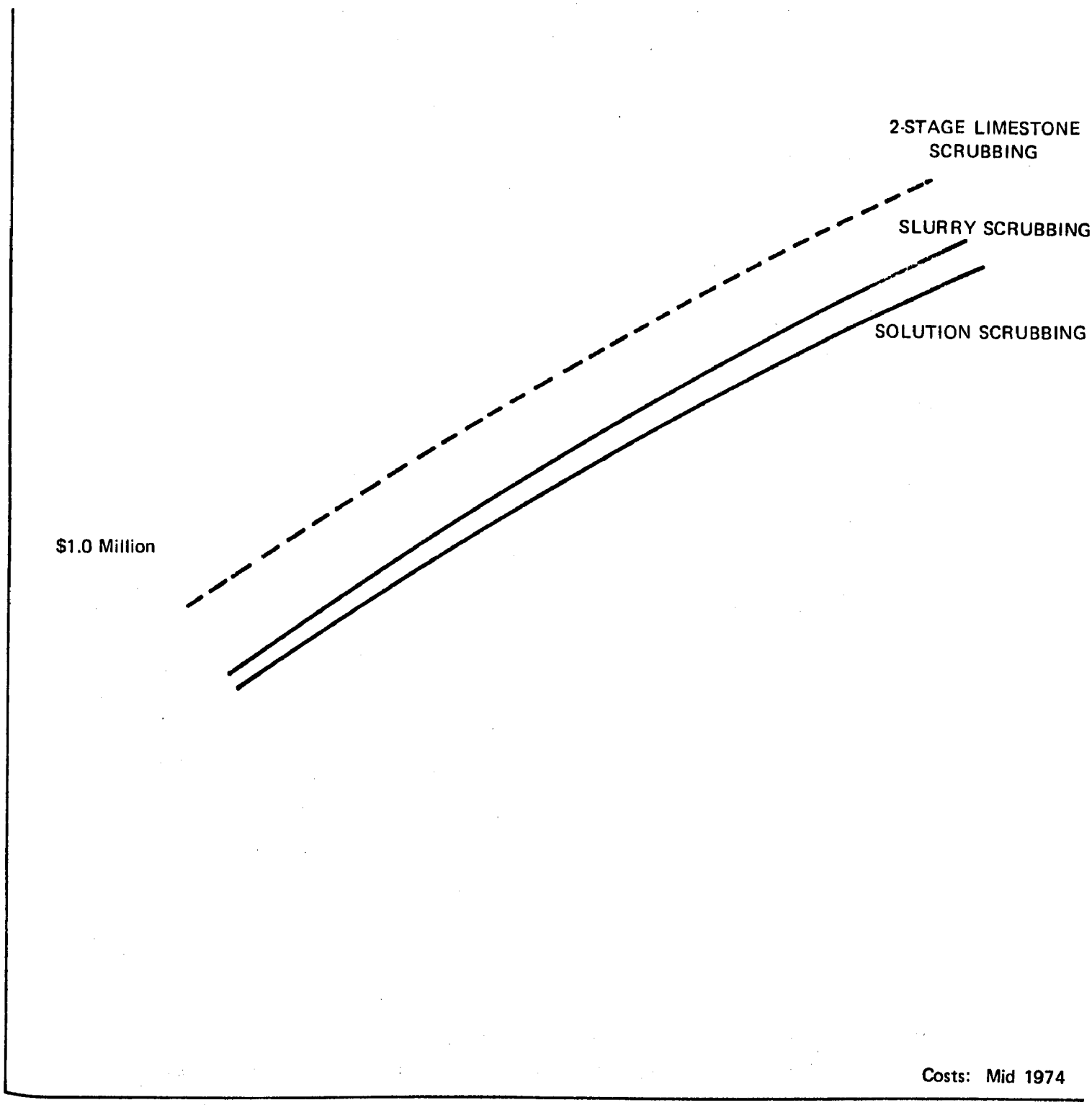

100,000 SCFM

GAS FLOW RATE-SCFM

FIGURE B-1

APPENDIX C

AUXILIARY SULFURIC ACID PLANT

Auxiliary sulfuric acid plants coupled to regenerable SO_2 control processes usually include only the acid-making section together with appropriate gas drying and acid cooling and storage facilities. An exception to this situation is posed by the magnesium oxide process which regenerates the active absorbent and releases the captured SO_2 via a high temperature calcination process. The resulting gas stream containing about 15 percent SO_2 is both hot and "dirty" with entrained particulates. Although the conventional approach is to cool and clean these gases via water scrubbing, in view of today's concern with energy utilization and conservation, it is both feasible and practical to consider using a waste heat boiler for heat recovery and cooling, air dilution to provide an approximately 8 percent SO_2 stream at 400-450°F, and high temperature bag filters to accomplish particulate removal before introduction to the acid plant drying tower.

Capital and operating costs have been developed for both situations, i.e.,

1) auxiliary acid plant only with no gas cooling and cleaning facilities

2) auxiliary acid plant with dry gas cleaning facilities (heat recovery facilities have been included with the primary SO_2 control system).

Capital and operating costs for sulfuric acid plants have appeared in a number of published reports and technical articles over the past 5 to 6 years. As with most published cost data, the bases and conditions upon which the estimates have been made are not well defined, and it is difficult to compare or evaluate such data. A number of formal references,[1,2,3,4] together with peripheral cost data gleaned from a range of articles which included references to acid plant costs, were used to develop costs for an acid section only, handling an 8 percent SO_2 feed gas, and for an acid section with conventional wet scrubbing with appropriate allowances for engineering and contractor fees and storage costs. The costs of dry gas cleaning facilities were developed from information provided in the TVA conceptual design and cost study on the magnesium oxide scrubbing process applied to power plant stack gases.[5]

Operating costs for an auxiliary acid plant only and for an auxiliary acid plant provided with dry gas cleaning have been determined on the basis of the usage and cost data provided in Table C-1. Figure C-1 provides both capital and direct annual operating costs for these two operations over a range of SO_2 values. These SO_2 values are based on an acid plant efficiency of 97 percent and have been adjusted to represent the SO_2 rate from the regeneration section of the primary control system itself. To provide ready matching of capital and operating costs with the primary control systems in terms of various gas flows at 1 percent SO_2, Tables C-2 and C-3 have been prepared on the basis of the gas flow and SO_2 content to the primary SO_2 control process.

REFERENCES

1. "The Production and Marketing of Sulfuric Acid from the Magnesium Oxide Flue Gas Desulfurization Process," by Zonis, Holst, Olmsted and Cunningham, Essex Chemical Corp. Presented at EPA Flue Gas Desulfurization Symposium, Atlanta, Georgia, November 1974.

2. "Economics of Sulfuric Acid Manufacture," J.M. Connor, Chemical Engr. Progress, November 1968 (59-65) Vol. 64, No.11.

3. "The Impact of Air Pollution Abatement on the Copper Industry. An Engineering Economic Analysis Related to Sulfur Oxide Recovery," by Fluor Utah Engineers and Constructors, Inc. for Kennecott Copper Corp, PB-208-293, April 1971.

4. "Systems Study for Control of Emissions Primary Non-ferrous Smelting Industry, " Arthur G. McKee and Co., Vol. I, Section VIII, Contract PH 86-65-85.

5. "Conceptual Design and Cost Study Sulfur Oxide Removal from Power Plant Stack Gas, Magnesia Scrubbing, Regeneration: Production of Concentrated Sulfuric Acid," Tennessee Valley Authority, prepared for EPA, PB-22509.

Table C-1. AUXILIARY SULFURIC ACID PLANT UNIT USAGE AND COST DATA
(8-9% SO_2 in feed gas)

A. Utilities & Materials	Basis	Unit Cost
Power: a) No gas cleaning	0.02 KWHr/lbSO_2	\$0.015/KWH
b) With dry gas cleaning	0.025 kWH/lbSO_2	
Water: (cooling)	0.08 gal/lbSO_2	\$0.10/M Gal
Catalyst	0.00002 liters/lbSO2	\$1.80/liter
B. Operating Labor & Maintenance	**Basis**	**Unit Cost**
Labor	1 man/shift (for 365 days)	\$8/hr
Maintenance	5% TCI/yr	
Taxes and Insurance	2 1/2% TCI/yr	
C. Fixed Charges	13.15% TCI/hr	

Based on Capital Recovery Factor using 10% interest over 15 year life.

AUXILIARY SULFURIC ACID PLANT

TOTAL CAPITAL INVESTMENT COSTS & TOTAL ANNUAL DIRECT OPERATING COSTS
(BASED ON 8-9% SO_2 TO ACID PLANT)

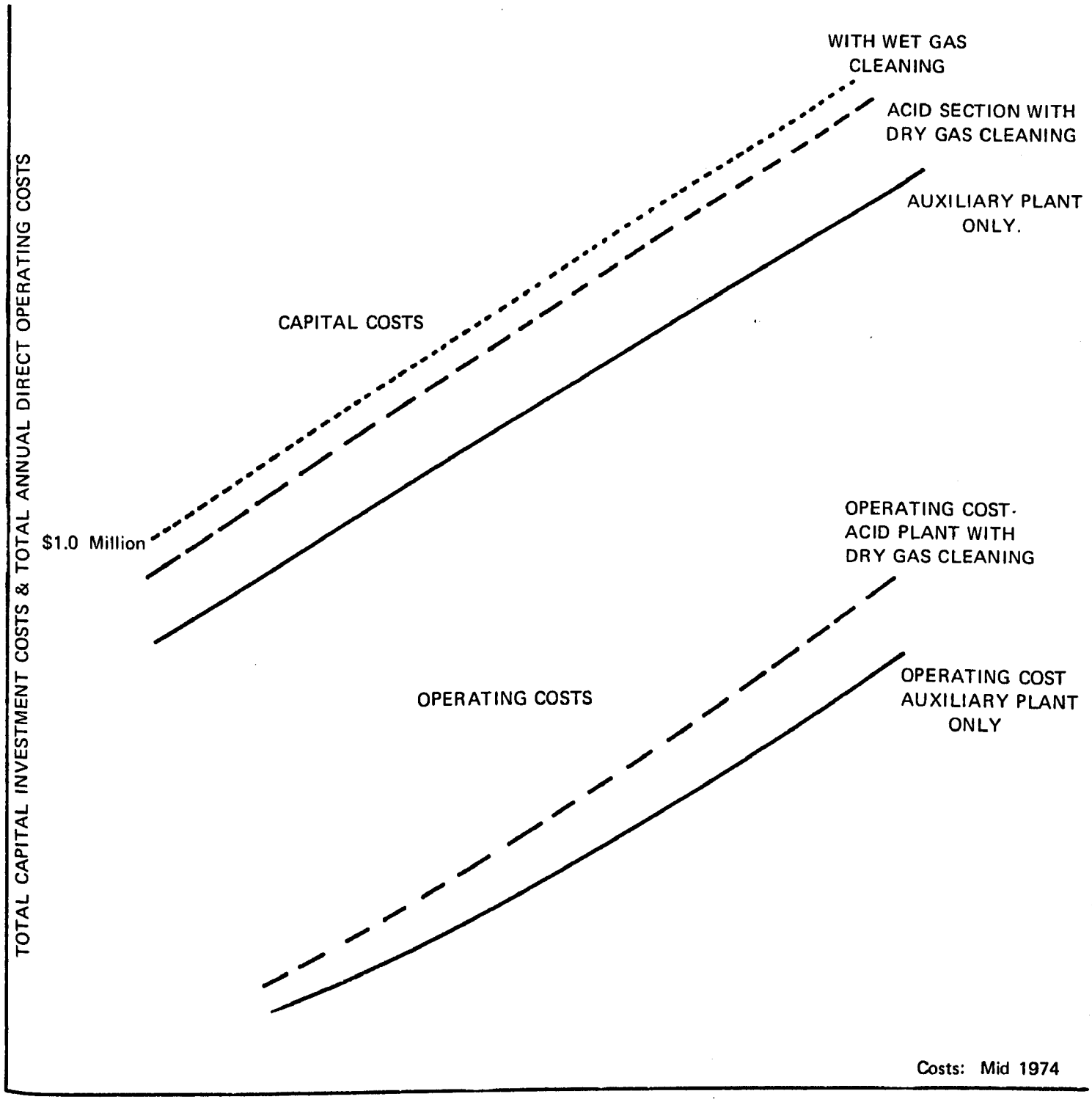

FIGURE C-1

Table C-2. AUXILIARY SULFURIC ACID PLANT
(No gas conditioning)
CAPITAL AND TOTAL ANNUAL COSTS

		Equivalent SO_2 Control System Gas Flow Rate-SCFM @1% SO_2			
		70,000	100,000	200,000	300,000
TOTAL CAPITAL INVESTMENT	$	1,420,000	1,750,000	2,675,000	3,450,000
	$/Annual ton[1] SO_2 Removed	56	48	37	25
Annual Cost					
A. Direct Operating					
1. Power		16,500	23,600	47,100	70,700
2. Water		4,400	6,300	12,600	18,900
3. Catalyst		2,000	2,800	5,700	8,500
4. Labor		70,100	70,100	105,100	105,100
5. Maintenance		71,000	87,500	133,800	172,500
6. Taxes & Insurance		35,500	43,800	66,900	86,300
TOTAL ANNUAL DIRECT OPERATING COST		199,500	234,100	371,200	462,200
B. Annual Capitalized Cost		186,700	230,100	351,800	453,700
C. Net Total Annualized Cost[2]		245,000	295,800	459,200	583,500
	$/yr/ton SO_2 Removed	10	8	6	5

[1] Efficiency of Sulfuric Acid Plant 97%.

[2] Based on Corporate Tax Rate of 48%.

Table G-3 *AUXILIARY SULFURIC ACID PLANT*
(Including Dry Gas Cleaning)

CAPITAL AND TOTAL ANNUAL COSTS

		Equivalent SO_2 Control System Gas Flow Rate - SCFM @1% SO_2			
		70,000	100,000	200,000	300,000
TOTAL CAPITAL INVESTMENT	$	2,000,000	2,520,000	3,950,000	5,400,000
	$/Annual ton SO_2 Removed[1]	79	70	55	50
Annual Cost					
A. Direct Operating					
1. Power		19,500	27,900	55,800	83,700
2. Water		4,400	6,300	12,600	18,900
3. Catalyst		2,000	2,800	5,700	8,500
4. Labor		70,100	70,100	105,100	105,100
5. Maintenance		100,000	126,000	197,500	270,000
6. Taxes & Insurance		50,000	63,000	98,800	135,000
TOTAL ANNUAL DIRECT OPERATING COST		246,000	296,100	475,500	621,200
B. Annual Capitalized Cost		263,000	331,400	519,400	710,100
C. Net Total Annualized Cost[2]		326,800	404,600	639,700	859,500
	$/yr/ton SO_2 Removed	13	11	9	8

[1]Efficiency of Sulfuric Acid Plant 97%.

[2]Based on Corporate Tax Rate of 48%.

APPENDIX D

AUXILIARY SULFUR PLANT

Although the Allied Chemical Corporation process for reducing SO_2 to elemental sulfur will handle a wide range of SO_2 concentrations, the presence of oxygen in the gas stream increases the consumption of the natural gas reductant and tends to distort the economics unfavorably. Operating costs are thus minimized in situations where the SO_2 concentration approaches 100 percent. Auxiliary sulfur plants therefore become a viable option for those regenerable SO_2 control processes which have the capability of generating an SO_2 stream of 80 percent concentration or better.

Capital and annual operating cost curves based on the hourly SO_2 rate of the regeneration system itself are provided in Figure D-1. Capital costs were developed from data included in a paper presented by William D. Hunter of Allied Chemical Corporation at the 1973 Flue Gas Desulfurization Symposium. Operating costs were developed from usage data provided in the report, "Applicability of Reduction to Sulfur Techniques to the Development of New Processes for Removing SO_2 from Flue Gases," Allied Chemical Corporation, Contract PH-22-68-24. Unit values and the applicable labor, and maintenance allowances are provided in Table D-1.

Table D-2 has been prepared to provide a ready matching of capital and operating costs with the primary control systems in terms of various gas flows to the primary system at 1 percent SO_2.

Table D-1. AUXILIARY SULFUR PLANT UNIT USAGE AND COST DATA

A. Chemicals & Utilities	Basis	Unit Cost
Methane (Natural gas)	3.1 CF/lbSO_2 input	\$1.25/M CF
Power:	0.0096 KWHr/lbSO_2	\$0.015/KWH
Steam credit	0.4 lb/lbSO_2	\$0.80/M lb
B. Operating Labor & Maintenance	**Basis**	**Unit Cost**
Labor	1 man/shift +1 man/day	\$8/hr
Maintenance	5% TCI/yr	
Taxes and Insurance	2 1/2% TCI/yr	

C. Fixed Charges 13.15% TCI/hr

Based on Capital Recovery Factor using 10% interest over 15 year life.

AUXILIARY SULFUR PLANT

TOTAL CAPITAL INVESTMENT COSTS
& TOTAL ANNUAL DIRECT OPERATING COSTS

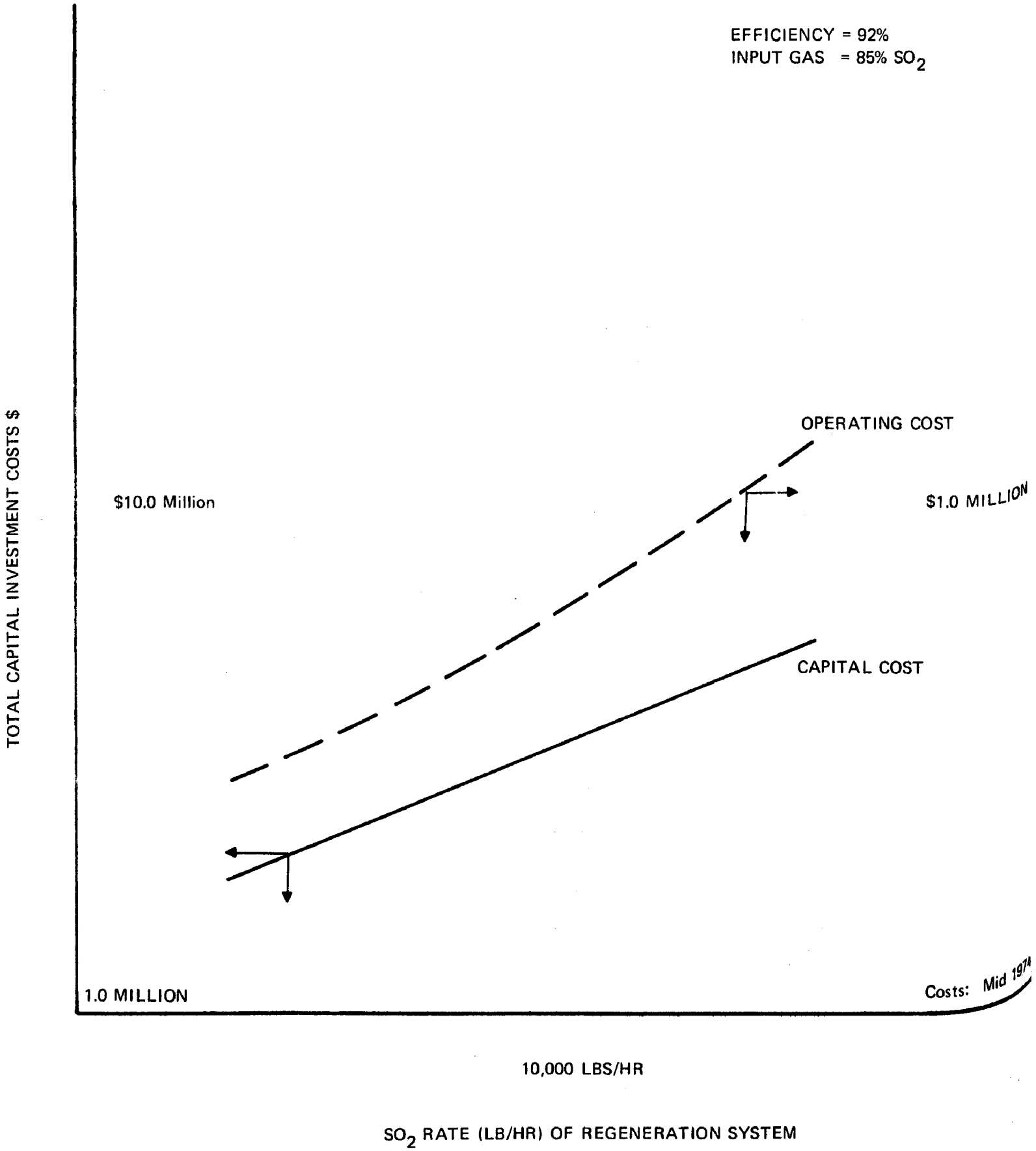

FIGURE D

Table D-2. AUXILIARY ELEMENTAL SULFUR PLANT

CAPITAL AND TOTAL ANNUAL COSTS

		Equivalent SO_2 Control System Gas Flow Rate - SCFM @1% SO_2			
		70,000	100,000	200,000	300,000
TOTAL CAPITAL INVESTMENT		2,940,000	3,370,000	4,450,000	5,450,000
	$/Annual ton[1] SO_2 Removed	123	98	65	53
Annual Cost					
A. Direct Operating					
1. Power		7,700	10,900	21,900	32,800
2. Natural gas (methane)		201,700	288,200	576,300	864,500
3. Steam (credit)		(16,000)	(23,700)	(47,400)	(71,100)
4. Labor		86,700	86,700	86,700	86,700
5. Maintenance		147,000	168,500	222,500	272,500
6. Taxes & Insurance		73,500	84,300	111,300	136,300
TOTAL ANNUAL DIRECT OPERATING COST		500,000	614,900	971,300	1,321,700
B. Annual Capitalized Cost		386,600	443,200	585,200	716,700
C. Net Total Annualized Cost[2]		552,500	655,100	797,100	1,229,600
	$/yr/ton SO_2 Removed	23	19	12	12

[1]Efficiency of Sulfur Plant 92%.

[2]Based on Corporate Tax Rate of 48%.

APPENDIX E

SO_2 LIQUEFACTION AND STORAGE COSTS

Capital and Annual Direct Operating Costs - Figure E-1

LIQUEFACTION AND STORAGE OF SO_2

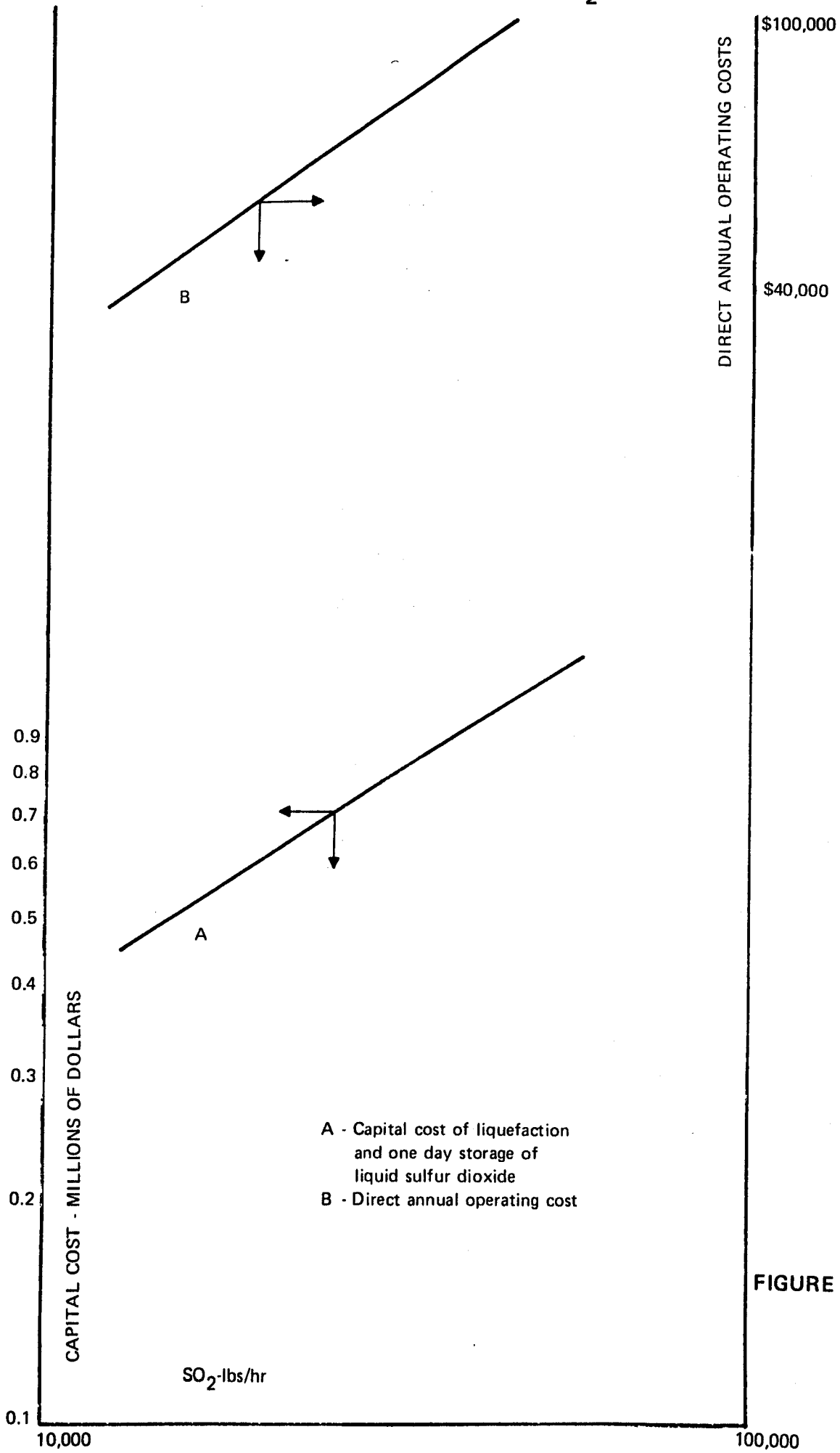

FIGURE E-1

APPENDIX F

UTILITY COSTS

- Water Treatment Facilities - Figure F-1
- Package Boilers - Figure F-2
- Electrical Substations - F-3

CAPITAL COST OF WATER TREATING FACILITIES

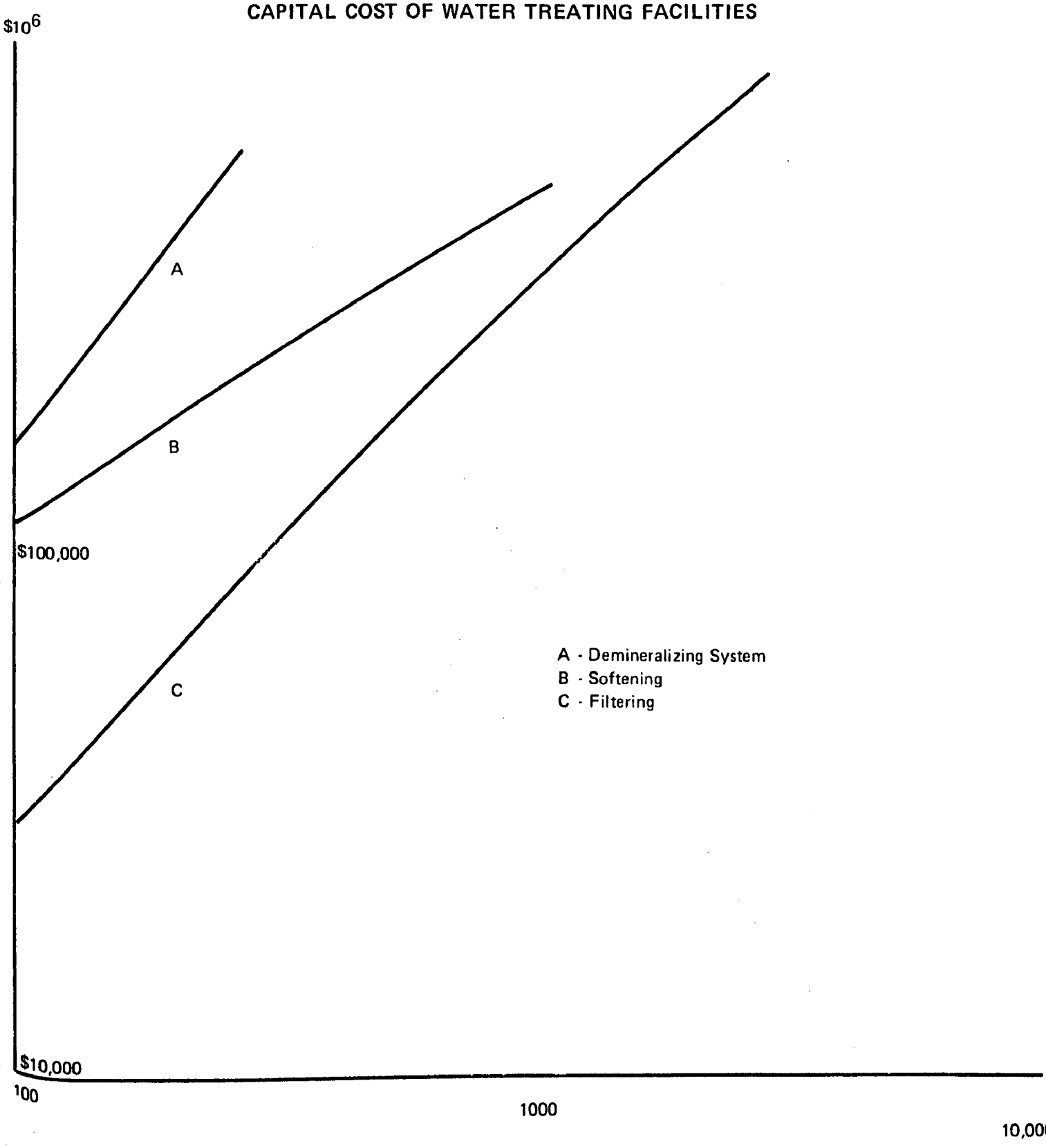

FIGURE F-1

CAPITAL COST PACKAGE BOILERS

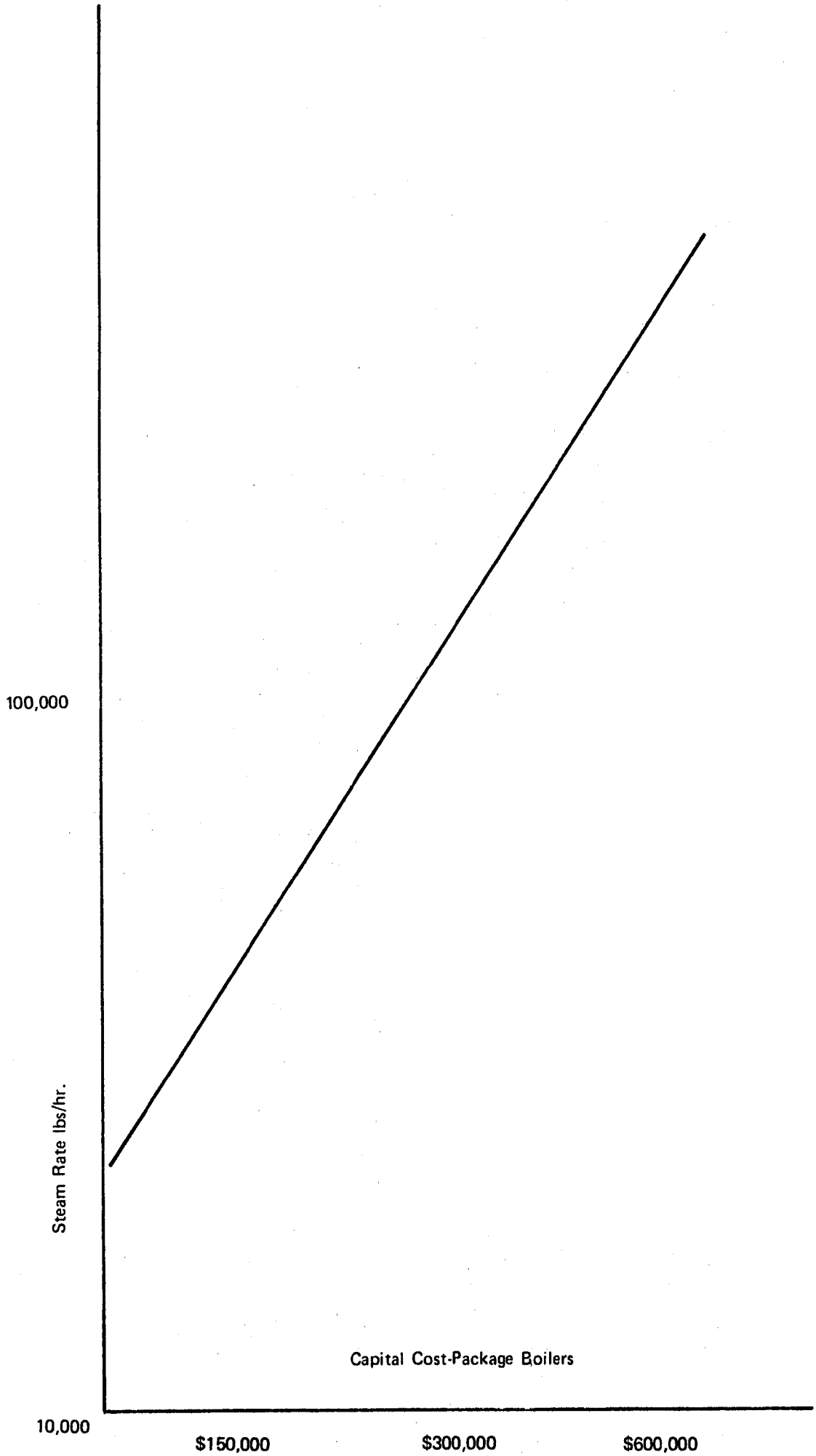

FIGURE F-2

CAPITAL COST OF ELECTRICAL SUBSTATIONS

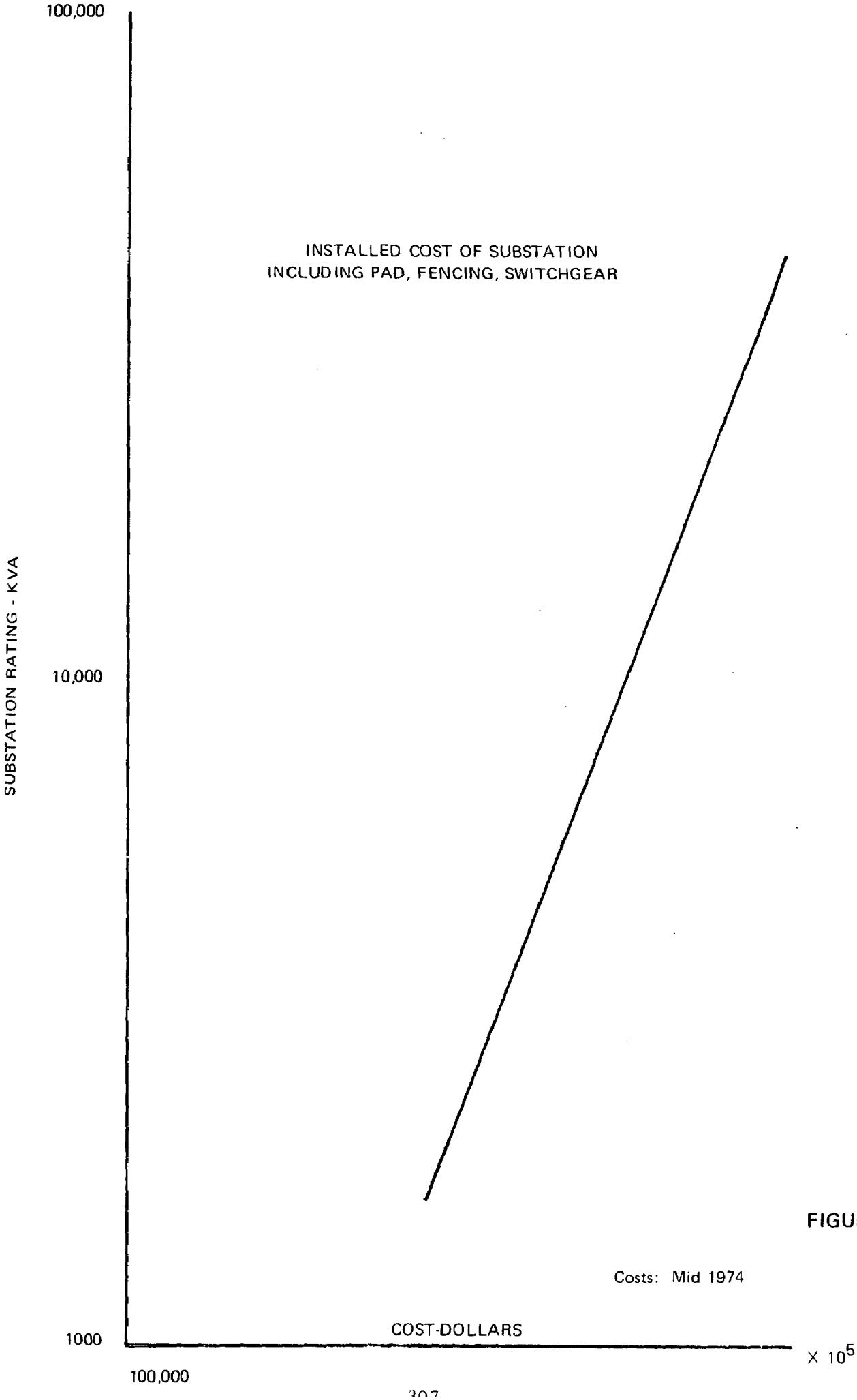

FIGURE F-3

APPENDIX G

Capital and Annual Operating Cost Computation Sheets for Selected SO_2 Control Processes Matched to Specific Primary Copper Smelters

WEAK SO_2 STREAM CONTROL COPPER SMELTERS

CAPITAL INVESTMENT COSTS

SMELTER: Asarco - El Paso, Texas

CONTROL PROCESS Double Alkali

BASIS: Maximum gas flow 250,000 SCFM

Average SO_2 rate 23,000 lbs/hr

Temperature at control point 250 °F

SPECIAL CONDITIONS

Roaster and reverberatory gases are quenched and cooled in a spray chamber prior to ESP.

COST DETERMINATION

1. Prequench Cost	=	100,000	
	=		
2. SO_2 Absorption cost (includes 5% allowance)	=	2,360,000	
TOTAL	=	2,460,000	
(a) Retrofit allowance (50% C.I.)	=	1,230,000	
TOTAL	=		3,690,000
3. SO_2 Handling Section cost (21,800lb/hr)		6,700,000	
(a) Disposal	=		
TOTAL	=		6,700,000
4. Auxiliary plant			
(a) Liquid SO_2	=		
(b) H_2SO_4	=		N/A
(c) Modifications to existing H_2SO_4 plant	=		
TOTAL BOUNDARY LIMIT COSTS	=		10,390,000
5. Support Services			
(a) Power (3,300KVA)	=	350,000	
(b) Steam (____ lbs/hr)	=		
(c) Water (0.2 Mgal/min)	=	200,000	
TOTAL	=		550,000
6. Special costs			–
(a) ESP	=		
(b) Alternate processing equip.	=		
(c) General site costs @20% Item 4	=	2,080,000	
TOTAL	=		2,080,000
TOTAL CAPITAL INVESTMENT	=		$13,020,000

WEAK SO_2 STREAM CONTROL COPPER SMELTERS

ANNUAL OPERATING COSTS

Smelter: Asarco-El Paso, Texas Control Process: Double Alkali

Basis: Max. Gas Flow 250,000 SCFM Temp. at Control Point 250°F

Av. SO_2 Rate 23,000 lbs/hr

COST COMPUTATION:

	Basis	Unit Cost	Annual Cost
1. Gas Conditioning & SO_2 Absorption			
a. Power	4.0 KWh/MSCFM	$ 0.015/KWh	122,000
b. Make-up water	1.0gal/MSCFM	$ 0.3/Mgal	37,000
c. Neutral. Limestone	0.02lb/MSCFM	$ 8/ton	20,000
TOTAL			179,000
2. SO_2 Handling (21,800 lb/hr)	See appropriate process section		2,753,000
a. Chemicals			
b. Power	0.075KWh/lbSO_2	$ 0.015/KWh	200,000
c. Steam			-
d. Fuel Oil or Nat. Gas			
e. Water	0.2gal/lbSO_2	$ 0.3/Mgal	11,000
f. Disposal	3.53 lb/lbSO_2	$ 3/ton	942,000
TOTAL			3,906,000
3. Labor (2 1/4 man/shift)	19710 hr	$ 8/hr	158,000
4. Maintenance			
a. Gas Condn. @ ___ % TCI	$10,390,000		416,000
b. SO_2 Handling @ 4 % TCI	$13,020,000		326,000
5. Insurance & Taxes @ 2 1/2% TCI			

TOTAL ANNUAL OPERATING COST FOR PRIMARY CONTROL PROCESS $ 4,985,000

6. Auxiliary Plant

a. _____

b. Alternative _____ N/A

c. Incremental Costs Associated with Use of Existing Acid Plant

TOTAL ANNUAL OPERATING COST $ 4,985,000

7. Annualized Capital Cost 1,712,000

8. Total Net Annualized Cost 3,888,000

9. Annual Cost/ton SO_2 Removed $44

WEAK SO_2 STREAM CONTROL COPPER SMELTERS

CAPITAL INVESTMENT COSTS

SMELTER: Asarco - El Paso, Texas

CONTROL PROCESS Magnesium Oxide

BASIS: Maximum gas flow 250,000 SCFM

Average SO_2 rate 23,000 lbs/hr

Temperature at control point 250 °F

SPECIAL CONDITIONS

Roaster and reverberatory gases are quenched and cooled in a spray chamber prior to ESP.

COST DETERMINATION

1. Prequench cost	=	100,000	
	=		
2. SO_2 Absorption cost (includes 5% allowance)	=	2,680,000	
TOTAL	=	2,780,000	
(a) Retrofit allowance (50% C.I.)	=	1,390,000	
TOTAL	=		4,170,000
3. SO_2 Handling Section cost(20,700lb/hr)			
(a) Disposal	=		
TOTAL	=		5,100,000
4. Auxiliary plant			
(a) Liquid SO_2	=		
(b) H_2SO_4	=		4,350,000
(c) Modifications to existing H_2SO_4 plant	=		
TOTAL BOUNDARY LIMIT COSTS	=		13,620,000
5. Support Services			
(a) Power (4000 KVA)	=	370,000	
(b) Steam (lbs/hr)	=		
(c) Water (0.2 Mgal/min)	=	200,000	
TOTAL	=		570,000
6. Special costs			
(a) ESP	=		
(b) Alternate processing equip.	=		
(c) General site costs @20% item 4	=	2,720,000	
TOTAL	=		2,720,000
TOTAL CAPITAL INVESTMENT	=		$16,910,000

WEAK SO_2 STREAM CONTROL COPPER SMELTERS

ANNUAL OPERATING COSTS

Smelter: Asarco - El Paso Control Process: Double Alkali

Basis: Max. Gas Flow 120,000 SCFM Temp. at Control Point 250°F

Av. SO_2 Rate 13,800

COST COMPUTATION:

	Basis	Unit Cost	Annual Cost
1. Gas Conditioning & SO_2 Absorption			
a. Power	4.0KWh/MSCFM	$ 0.015/KWh	59,000
b. Make-up water	1.0gal/MSCFM	$ 0.3/Mgal	18,000
c. Neutral. Limestone	0.02lb/MSCFM	$ 8/ton	5,000
TOTAL			82,000
2. SO_2 Handling (13,100 lb/hr)			
a. Chemicals	See appropriate process section		1,654,000
b. Power	0.075KWh/lbSO_2	$ 0.015/KWh	120,000
c. Steam			
d. Fuel Oil or Nat. Gas			
e. Water			
f. Disposal	3.53lb/SO_2	$ 3/ton	566,000
TOTAL			2,340,000
3. Labor (2 1/4 man/shift)	19,710 hrs	$ 8/hr	158,000
4. Maintenance			
a. Gas Condn. @ ___ % TCI			
b. SO_2 Handling @ 4 % TCI	$7,280,000		291,000
5. Insurance & Taxes @ 2 1/2% TCI	$9,160,000		229,000

TOTAL ANNUAL OPERATING COST FOR PRIMARY CONTROL PROCESS $ 3,100,000

6. Auxiliary Plant

a. _____

b. Alternative _____ N/A

c. Incremental Costs Associated with Use of Existing Acid Plant

TOTAL ANNUAL OPERATING COST $ 3,100,000

7. Annualized Capital Cost $ 1,205,000

8. Total Net Annualized Cost $ 2,524,000

9. Annual Cost/ton SO_2 Removed $47

WEAK SO_2 STREAM CONTROL COPPER SMELTERS

CAPITAL INVESTMENT COSTS

SMELTER: Asarco - El Paso, Texas

CONTROL PROCESS Magnesium Oxide

BASIS: Maximum gas flow 120,000 SCFM

Average SO_2 rate 13,800 lbs/hr

Temperature at control point 250 °F

SPECIAL CONDITIONS

Treating reverberatory gases only. (Roaster gases mixed with lead sintering machine goes to acid plant - planned)

COST DETERMINATION

1. Prequench cost	=	70,000	
	=		
2. SO_2 Absorption cost (includes 5% allowance)	=	1,760,000	
TOTAL	=	1,830,000	
(a) Retrofit allowance (50% C.I.)	=	920,000	
TOTAL	=	-	2,750,000
3. SO_2 Handling Section cost (12,400lb/hr)		3,600,000	
(a) Disposal	=		
TOTAL	=		3,600,000
4. Auxiliary plant			
(a) Liquid SO_2	=		
(b) H_2SO_4	=		3,100,000
(c) Modifications to existing H_2SO_4 plant	=		
TOTAL BOUNDARY LIMIT COSTS	=		9,450,000
5. Support Services			
(a) Power (2200 KVA)	=	300,000	
(b) Steam (lbs/hr)	=		
(c) Water (0.1 Mgal/min)	=	120,000	
TOTAL	=		420,000
6. Special costs			-
(a) ESP	=		
(b) Alternate processing equip.	=		
(c) General site costs @20% item 4	=	1,890,000	
TOTAL	=		1,890,000
TOTAL CAPITAL INVESTMENT	=		$11,760,000

WEAK SO_2 STREAM CONTROL COPPER SMELTERS

ANNUAL OPERATING COSTS

Smelter: Asarco - El Paso, Texas Control Process: Magnesium Oxide

Basis: Max. Gas Flow 250,000 SCFM Temp. at Control Point 250°F

Av. SO_2 Rate 23,000 lb/hr

COST COMPUTATION:

	Basis	Unit Cost	Annual Cost
1. Gas Conditioning & SO_2 Absorption			
a. Power	4.0KWh/MSCFM	$ 0.015/KWh	122,000
b. Make-up water	1.0gal/MSCFM	$ 0.3/Mgal	37,000
c. Neutral. Limestone	0.02lb/MSCFM	$ 8/ton	20,000
TOTAL			179,000
2. SO_2 Handling (20,700 lb/hr)			
a. Chemicals	See appropriate process section		404,000
b. Power	0.1KWh/lbSO_2	$ 0.015/KWh	253,000
c. Steam			
d. Fuel Oil or Nat. Gas	0.037gal/lbSO_2	$ 0.3/gal	1,875,000
e. Water	0.2gal/lbSO_2	$ 0.3/Mgal	10,000
f. Disposal			
TOTAL			2,542,000
3. Labor (3 1/2 man/shift + 1 day)	32,740 hrs	$ 8/hr	262,000
4. Maintenance			
a. Gas Condn. @ ___ % TCI			
b. SO_2 Handling @ 5 % TCI	$ 9,270,000		464,000
5. Insurance & Taxes @ 2 1/2% TCI	$12,560,000		314,000

TOTAL ANNUAL OPERATING COST FOR PRIMARY CONTROL PROCESS 3,761,000

6. Auxiliary Plant

a. H_2SO_4 Plant 520,000

b. Alternative

c. Incremental Costs Associated with Use of Existing Acid Plant

TOTAL ANNUAL OPERATING COST $4,281,000

7. Annualized Capital Cost $2,224,000

8. Total Net Annualized Cost $3,909,000

9. Annual Cost/ton SO_2 Removed $48

WEAK SO_2 STREAM CONTROL COPPER SMELTERS

CAPITAL INVESTMENT COSTS

SMELTER: Asarco- El Paso, Texas

CONTROL PROCESS Citrate

BASIS: Maximum gas flow 250,000 SCFM

Average SO_2 rate 23,000 lbs/hr

Temperature at control point 250 °F

SPECIAL CONDITIONS

Roaster and reverberatory gases are quenched and cooled in a spray chamber prior to ESP.

COST DETERMINATION

1. Prequench Cost	=	100,000	
	=		
2. SO_2 Absorption cost (includes 5% allowance)	=	2,360,000	
TOTAL	=	2,460,000	
(a) Retrofit allowance (50% C.I.)	=	1,230,000	
TOTAL	=	-	3,690,000
3. SO_2 Handling Section cost (21,800 lb/hr)	=		
(a) Disposal	=		
TOTAL	=		6,700,000
4. Auxiliary plant			
(a) Liquid SO_2	=		
(b) H_2SO_4	=		N/A
(c) Modifications to existing H_2SO_4 plant	=		
TOTAL BOUNDARY LIMIT COSTS	=		10,390,000
5. Support Services			
(a) Power (3300 KVA)	=	350,000	
(b) Steam (lbs/hr)	=		
(c) Water (0.8 Mgal/min)	=	450,000	
TOTAL	=		800,000
6. Special costs			-
(a) ESP	=		
(b) Alternate processing equip.	=		
(c) General site costs @20% item 4	=	2,080,000	
TOTAL	=		2,080,000
TOTAL CAPITAL INVESTMENT	=		$13,270,000

WEAK SO_2 STREAM CONTROL COPPER SMELTERS

ANNUAL OPERATING COSTS

Smelter: Asarco - El Paso, Texas Control Process: Citrate

Basis: Max. Gas Flow 250,000SCFM Temp. at Control Point 250°F

Av. SO_2 Rate 23,000 lb/hr

COST COMPUTATION:

	Basis	Unit Cost	Annual Cost
1. Gas Conditioning & SO_2 Absorption			
a. Power	4.0KWh/MSCFM	$ 0.015/KWh	122,000
b. Make-up water	1.0gal/MSCFM	$ 0.3/Mgal	37,000
c. Neutral. Limestone	0.02lb/MSCFM	$ 8/ton	20,000
TOTAL			179,000
2. SO_2 Handling (21,800 lb/hr)			
a. Chemicals	See appropriate process section		1,056,000
b. Power	0.075KWh/lbSO_2	$0.015/KWh	200,000
c. Steam			
d. Fuel Oil or Nat. Gas	3.6CF/lbSO_2	$ 1.25/MCF	801,000
e. Water (a) Process	1.5gal/lbSO_2	$ 0.3/Mgal	80,000
(b) Cooling	5.0gal/lbSO_2	$ 0.1/Mgal	89,000
TOTAL			2,226,000
3. Labor (4 man/shift)	35,040 hr	$ 8/ton	280,000
4. Maintenance			
a. Gas Condn. @ ___ % TCI			
b. SO_2 Handling @ 4 % TCI	$10,390,000		416,000
5. Insurance & Taxes @ 2 1/2% TCI	$13,270,000		332,000

TOTAL ANNUAL OPERATING COST FOR PRIMARY CONTROL PROCESS 3,433,000

6. Auxiliary Plant

a. _____

b. Alternative _____ N/A

c. Incremental Costs Associated with Use of Existing Acid Plant

TOTAL ANNUAL OPERATING COST 3,433,000

7. Annualized Capital Cost 1,745,000

8. Total Net Annualized Cost 3,106,000

9. Annual Cost/ton SO_2 Removed $35

WEAK SO_2 STREAM CONTROL COPPER SMELTERS

CAPITAL INVESTMENT COSTS

SMELTER: Asarco - El Paso, Texas

CONTROL PROCESS Double Alkali

BASIS: Maximum gas flow 120,000 SCFM

Average SO_2 rate 13,800 lbs/hr

Temperature at control point 250 °F

SPECIAL CONDITIONS

Treating reverberatory gases only. (Roaster gases mixed with lead sintering machine goes to acid plant - planned).

COST DETERMINATION

1. Prequench cost	=	70,000	
	=		
2. SO_2 Absorption cost (includes 5% allowance)	=	1,580,000	
TOTAL	=	1,650,000	
(a) Retrofit allowance (50% C.I.)	=	830,000	
TOTAL	=		2,480,000
3. SO_2 Handling Section cost (13,100 lb/hr		4,800,000	
(a) Disposal	=		
TOTAL	=		4,800,000
4. Auxiliary plant			
(a) Liquid SO_2	=		
(b) H_2SO_4	=		N/A
(c) Modifications to existing H_2SO_4 plant	=		
TOTAL BOUNDARY LIMIT COSTS	=		7,280,000
5. Support Services			
(a) Power (2,000 KVA)	=	300,000	
(b) Steam (lbs/hr)	=		
(c) Water (0.1 Mgal/min)	=	120,000	
TOTAL	=		420,000
6. Special costs			
(a) ESP	=		
(b) Alternate processing equip.	=		
(c) General site costs @20% item 4	=	1,460,000	
TOTAL	=		1,460,000
TOTAL CAPITAL INVESTMENT	=		$ 9,160,000

WEAK SO_2 STREAM CONTROL COPPER SMELTERS

ANNUAL OPERATING COSTS

Smelter: Asarco - El Paso, Texas Control Process: Magnesium Oxide

Basis: Max. Gas Flow 120,000 SCFM Temp. at Control Point 250°F

Av. SO_2 Rate 13,800 lb/hr

COST COMPUTATION:

	Basis	Unit Cost	Annual Cost
1. Gas Conditioning & SO_2 Absorption			
a. Power	4.0KWh/MSCFM	$ 0.015/KWh	$ 59,000
b. Make-up water	1.0gal/MSCFM	$ 0.3/Mgal	18,000
c. Neutral. Limestone	0.02lb/MSCFM	$ 8/ton	5,000
TOTAL			82,000
2. SO_2 Handling (12,400 lb/hr)			
a. Chemicals	See appropriate process section		242,000
b. Power	0.1KWh/lbSO_2	$ 0.015/KWh	152,000
c. Steam			
d. Fuel Oil or Nat. Gas	0.037gal/lbSO_2	$ 0.3/gal	1,123,000
e. Water	0.2gal/lbSO_2	$ 0.3/Mgal	6,000
f. Disposal			
TOTAL			1,523,000
3. Labor (3 1/2 man/shift + 1 day)	32,740 hr	$ 8/hr	260,000
4. Maintenance			
a. Gas Condn. @ ___ % TCI			
b. SO_2 Handling @ 5 % TCI	$ 6,350,000		318,000
5. Insurance & Taxes @ 2 1/2% TCI	$ 8,660,000		217,000

TOTAL ANNUAL OPERATING COST FOR PRIMARY CONTROL PROCESS 2,400,000

6. Auxiliary Plant

a. Acid Plant 370,000

b. Alternative

c. Incremental Costs Associated with Use of Existing Acid Plant

TOTAL ANNUAL OPERATING COST $ 2,770,000

7. Annualized Capital Cost $ 1,546,000

8. Total Net Annualized Cost $ 2,611,000

9. Annual Cost/ton SO_2 Removed $52

WEAK SO_2 STREAM CONTROL COPPER SMELTERS

CAPITAL INVESTMENT COSTS

SMELTER: Asarco - El Paso, Texas

CONTROL PROCESS Citrate

BASIS: Maximum gas flow 120,000 SCFM

Average SO_2 rate 13,800 lbs/hr

Temperature at control point 250 °F

SPECIAL CONDITIONS

Treating reverberatory gases only. (Roaster gases mixed with lead sintering machine goes to acid plant - planned)

COST DETERMINATION

1. Prequench cost	=	70,000	
	=		
2. SO_2 Absorption cost(includes 5% allowance)	=	1,580,000	
TOTAL	=	1,650,000	
(a) Retrofit allowance (50% C.I.)	=	830,000	
TOTAL	=		2,480,000
3. SO_2 Handling Section cost(13,100lb/hr)	=	5,000,000	
(a) Disposal	=	~~100,000~~	
TOTAL	=		5,100,000
4. Auxiliary plant			
(a) Liquid SO_2	=		
(b) H_2SO_4	=		N/A
(c) Modifications to existing H_2SO_4 plant	=		
TOTAL BOUNDARY LIMIT COSTS	=		7,580,000
5. Support Services			
(a) Power (2000 KVA)	=	300,000	
(b) Steam (____ lbs/hr)	=		
(c) Water (0.4 Mgal/min)	=	300,000	
TOTAL	=		600,000
6. Special costs			
(a) ESP	=		
(b) Alternate processing equip.	=		
(c) General site costs@20% item 4	=	1,520,000	
TOTAL	=		1,520,000
TOTAL CAPITAL INVESTMENT	=		$9,700,000

WEAK SO_2 STREAM CONTROL COPPER SMELTERS

ANNUAL OPERATING COSTS

Smelter: Asarco - El Paso, Texas Control Process: Citrate

Basis: Max. Gas Flow 120,000 SCFM Temp. at Control Point 250°F

Av. SO_2 Rate 13,800 lb/hr

COST COMPUTATION:

	Basis	Unit Cost	Annual Cost
1. Gas Conditioning & SO_2 Absorption			
a. Power	4.0KWh/MSCFM	$ 0.015/KWh	59,000
b. Make-up water	1.0gal/MSCFM	$ 0.3/Mgal	18,000
c. Neutral. Limestone	0.02lb/MSCFM	$ 8/ton	5,000
TOTAL			82,000
2. SO_2 Handling (13,100 lb/hr)			
a. Chemicals	See apprpriate process section		635,000
b. Power	0.075KWh/lbSO_2	$0.015/KWh	120,000
c. Steam			
d. Fuel Oil or Nat. Gas	3.6CF/lbSO_2	$ 1.25/MCF	481,000
e. Water (a) Process	1.5gal/lbSO_2	$ 0.3/Mgal	48,000
f. Disposal (b) Cooling	5.0 gal/lbSO_2	$ 0.1/Mgal	53,000
TOTAL			1,337,000
3. Labor (4 man/shift)	35,040 hrs	$ 8/hr	280,000
4. Maintenance			
a. Gas Condn. @ ___ % TCI			
b. SO_2 Handling @ 4 % TCI	$7,580,000		303,000
5. Insurance & Taxes @ 2 1/2% TCI	$9,700,000		243,000

TOTAL ANNUAL OPERATING COST FOR PRIMARY CONTROL PROCESS 2,245,000

6. Auxiliary Plant

a. _____

b. Alternative _____ N/A

c. Incremental Costs Associated with Use of Existing Acid Plant –

TOTAL ANNUAL OPERATING COST $2,245,000

7. Annualized Capital Cost $1,276,000

8. Total Net Annualized Cost $2,133,000

9. Annual Cost/ton SO_2 Removed $40

WEAK SO_2 STREAM CONTROL COPPER SMELTERS

CAPITAL INVESTMENT COSTS

SMELTER: ASARCO - Hayden, Arizona

CONTROL PROCESS - Double Alkali

BASIS: Maximum gas flow 400,000 SCFM

Average SO_2 rate 26,500 lbs/hr

Temperature at control point 270 °F

SPECIAL CONDITIONS

Roaster and reverberatory gases are mixed prior to ESP. As a result of spray cooling of the reverberatory gases, temperatures are moderate and full gas conditioning treatment is not required.

COST DETERMINATION

1. Prequench Cost	=	100,000	
	=		
2. SO_2 Absorption cost (includes 5 % allowance)	=	2,990,000	
TOTAL	=	3,090,000	
(a) Retrofit allowance (50% C.I.)	=	1,550,000	
TOTAL	=		4,640,000
3. SO_2 Handling Section cost (25,000lb/hr)	=	7,300,000	
(a) Disposal	=		
TOTAL	=		7,300,000
4. Auxiliary plant			
(a) Liquid SO_2	=		
(b) H_2SO_4	=		N/A
(c) Modifications to existing H_2SO_4 plant	=		
TOTAL BOUNDARY LIMIT COSTS	=		11,940,000
5. Support Services			
(a) Power (4,300 KVA)	=	380,000	
(b) Steam (lbs/hr)	=		
(c) Water (0.2 Mgal/min)	=	200,000	
TOTAL	=		580,000
6. Special costs			
(a) ESP	=		
(b) Alternate processing equip.	=		
(c) General site costs -@20% Item 4	=	2,390,000	
TOTAL	=		2,390,000
TOTAL CAPITAL INVESTMENT	=		$ 14,910,000

WEAK SO_2 STREAM CONTROL COPPER SMELTERS

ANNUAL OPERATING COSTS

Smelter: ASARCO-Hayden, Arizona Control Process: Double Alkali

Basis: Max. Gas Flow 400,000 SCFM Temp. at Control Point 270°F

Av. SO_2 Rate 26,500 lb/hr

COST COMPUTATION:

	Basis	Unit Cost	Annual Cost
1. Gas Conditioning & SO_2 Absorption			
a. Power	4.0KWh/MSCFM	$0.015/KWh	196,000
b. Make-up water	1.0gal/MSCFM	$0.3/Mgal	59,000
c. Neutral. Limestone	0.02lb/MSCFM	$8/ton	15,000
TOTAL			270,000
2. SO_2 Handling (25,000 lb/hr)			
a. Chemicals	See appropriate process section		3,157,000
b. Power	0.075 KWh/lbSO_2	$0.015/KWh	230,000
c. Steam	-		-
d. Fuel Oil or Nat. Gas	-		-
e. Water	0.2gal/lbSO_2	$0.3/Mgal	12,000
f. Disposal	3.53lb/lbSO_2	$3/ton	1,080,000
TOTAL			4,479,000
3. Labor (2 1/4 men/shift)	19,710 hrs	$8/hr	158,000
4. Maintenance			
a. Gas Condn. @ - % TCI			
b. SO_2 Handling @ ___ % TCI	$11,940,000		478,000
5. Insurance & Taxes @ 2 1/2% TCI	$14,910,000		373,000

TOTAL ANNUAL OPERATING COST FOR PRIMARY CONTROL PROCESS 5,758,000

6. Auxiliary Plant

a. _____

b. Alternative _____ N/A

c. Incremental Costs Associated with Use of Existing Acid Plant -

TOTAL ANNUAL OPERATING COST $5,758,000

7. Annualized Capital Cost $1,961,000

8. Total Net Annualized Cost $4,478,000

9. Annual Cost/ton SO_2 Removed $44

WEAK SO_2 STREAM CONTROL COPPER SMELTERS

CAPITAL INVESTMENT COSTS

SMELTER: ASARCO - Hayden, Arizona

CONTROL PROCESS Magnesium Oxide

BASIS: Maximum gas flow 400,000 SCFM

Average SO_2 rate 26,500 lbs/hr

Temperature at control point 270 °F

SPECIAL CONDITIONS

Roaster and reverberatory gases are mixed prior to ESP. As a result of spray cooling of the reverberatory gases, temperatures are moderate.

COST DETERMINATION

1. Prequench Cost	=	100,000	
	=		
2. SO_2 Absorption cost (includes 5% allowance)	=	3,410,000	
TOTAL	=	3,510,000	
(a) Retrofit allowance (25% C.I.)	=	880,000	
TOTAL	=		4,390,000
(23,800 lb/hr)			
3. SO_2 Handling Section cost	=	5,600,000	
(a) Disposal	=		
TOTAL	=		5,600,000
4. Auxiliary plant			
(a) Liquid SO_2	=		
(b) H_2SO_4	=		4,750,000
(c) Modifications to existing H_2SO_4 plant	=		
TOTAL BOUNDARY LIMIT COSTS	=		14,740,000
5. Support Services			
(a) Power (5000 KVA)	=	410,000	
(b) Steam (lbs/hr)	=		
(c) Water (0.2 Mgal/min)	=	200,000	
TOTAL	=		610,000
6. Special costs			–
(a) ESP	=		
(b) Alternate processing equip.	=		
(c) General site costs @20% Item 4	=	2,950,000	
TOTAL	=		2,950,000
TOTAL CAPITAL INVESTMENT	=		$18,300,000

WEAK SO_2 STREAM CONTROL COPPER SMELTERS

ANNUAL OPERATING COSTS

Smelter: ASARCO-Hayden, Arizona Control Process: Magnesium Oxide

Basis: Max. Gas Flow 400,000 SCFM Temp. at Control Point 270°F

Av. SO_2 Rate 26,5000 lb/hr

COST COMPUTATION:

	Basis	Unit Cost	Annual Cost
1. Gas Conditioning & SO_2 Absorption			
a. Power	4.0KWh/MSCFM	$0.015/KWh	196,000
b. Make-up water	1.0gal/MSCFM	$0.3/M gal	59,000
c. Neutral. Limestone	0.02lb/MSCFM	$8/ton	15,000
TOTAL			270,000
2. SO_2 Handling (23,800 lb/hr)			
a. Chemicals	See appropriate process section		464,000
b. Power	0.1KWh/lbSO_2	$0.015/KWh	291,000
c. Steam	-		-
d. Fuel Oil or Nat. Gas	0.037gal/lbSO_2	$0.30/gal	2,156,000
e. Water	0.2gal/lbSO_2	$0.3/Mgal	12,000
f. Disposal			-
TOTAL			2,923,000
3. Labor (3 1/2 man/shift + 1 day)	32,740 hrs	$8/hr	262,000
4. Maintenance			
a. Gas Condn. @ - % TCI			-
b. SO_2 Handling @ - % TCI	$ 9,990,000		500,000
5. Insurance & Taxes @ 2 1/2% TCI	$13,550,000		339,000

TOTAL ANNUAL OPERATING COST FOR PRIMARY CONTROL PROCESS $ 4,294,000

6. Auxiliary Plant
   a. H_2SO_4 Plant 570,000
   b. Alternative -
   c. Incremental Costs Associated with Use of Existing Acid Plant -

TOTAL ANNUAL OPERATING COST $ 4,864,000

7. Annualized Capital Cost (basis $18,300,000) $ 2,407,000

8. Total Net Annualized Cost $ 4,350,000

9. Annual Cost/ton SO_2 Removed $46

WEAK SO_2 STREAM CONTROL COPPER SMELTERS

CAPITAL INVESTMENT COSTS

SMELTER: ASARCO - Hayden, Arizona

CONTROL PROCESS Citrate

BASIS: Maximum gas flow 400,000 SCFM

Average SO_2 rate 26,500 lbs/hr

Temperature at control point 270 °F

SPECIAL CONDITIONS

Roaster and reverberatory gases are mixed prior to ESP. As a result of spray cooling of the reverberatory gases, temperatures are moderate and full gas conditioning treatment is not required.

COST DETERMINATION

1. Prequench Cost	=	100,000	
	=		
2. SO_2 Absorption cost (includes 5% allowance)	=	2,990,000	
TOTAL	=	3,090,000	
(a) Retrofit allowance (50% C.I.)	=	1,550,000	
TOTAL	=	-	4,640,000
3. SO_2 Handling Section cost (25,000 lb/hr)	=	7,200,000	
(a) Disposal	=	150,000	
TOTAL	=		7,350,000
4. Auxiliary plant			
(a) Liquid SO_2	=		
(b) H_2SO_4	=		N/A
(c) Modifications to existing H_2SO_4 plant	=		
TOTAL BOUNDARY LIMIT COSTS	=		11,990,000
5. Support Services			
(a) Power (4300 KVA)	=	380,000	
(b) Steam (lbs/hr)	=		
(c) Water (0.8 Mgal/min)	=	450,000	
TOTAL	=		830,000
6. Special costs			-
(a) ESP	=		
(b) Alternate processing equip.	=		
(c) General site costs @20% Item 4	=	2,400,000	
TOTAL	=		2,400,000
TOTAL CAPITAL INVESTMENT	=		$15,220,000

WEAK SO_2 STREAM CONTROL COPPER SMELTERS

ANNUAL OPERATING COSTS

Smelter: ASARCO-Hayden, Arizona Control Process: Citrate

Basis: Max. Gas Flow 400,000 SCFM Temp. at Control Point 270°F

Av. SO_2 Rate 26,500 lb/hr

COST COMPUTATION:

	Basis	Unit Cost	Annual Cost
1. Gas Conditioning & SO_2 Absorption			
a. Power	4.0KWh/MSCFM	$0.015/KWh	196,000
b. Make-up water	1.0gal/MSCFM	$0.3/M gal	59,000
c. Neutral. Limestone	0.02lb/MSCFM	$8/ton	15,000
TOTAL			270,000
2. SO_2 Handling (25,000 lb/hr)			
a. Chemicals	See appropriate process section		734,000
b. Power	0.075KWh/lbSO_2	$0.015/KWh	230,000
c. Steam			
d. Fuel Oil or Nat. Gas	3.6CF/lbSO_2	$1.25/MCF	918,000
e. Water a) Process	1.5gal/lbSO_2	$0.3/Mgal	92,000
b) Cooling	5.0gal/lbSO_2	$0.1/Mgal	102,000
TOTAL			2,076,000
3. Labor (4 man/shift)	35,040 hrs	$8/hr	280,000
4. Maintenance			
a. Gas Condn. @ - % TCI			
b. SO_2 Handling @ 4 % TCI	$ 11,990,000		480,000
5. Insurance & Taxes @ 2 1/2% TCI	$ 15,220,000		381,000

TOTAL ANNUAL OPERATING COST FOR PRIMARY CONTROL PROCESS 3,487,000

6. Auxiliary Plant

a. _____

b. Alternative _____ N/A

c. Incremental Costs Associated with Use of Existing Acid Plant

TOTAL ANNUAL OPERATING COST $3,487,000

7. Annualized Capital Cost $2,001,000

8. Total Net Annualized Cost $3,328,000

9. Annual Cost/ton SO_2 Removed $33

WEAK SO_2 STREAM CONTROL COPPER SMELTERS

CAPITAL INVESTMENT COSTS

SMELTER: ASARCO-Tacoma, Washington

CONTROL PROCESS Double Alkali

BASIS: Maximum gas flow 250,000 SCFM

Average SO_2 rate 23,000 lbs/hr

Temperature at control point 250 °F

SPECIAL CONDITIONS

Under the present system, mixed roaster and reverberatory gases are quenched and cooled in a spray chamber before the ESP's (2 in series).

COST DETERMINATION

1. Prequench Cost	=	100,000	
	=		
2. SO_2 Absorption cost(includes 5% allowance)	=	2,360,000	
TOTAL	=	2,460,000	
(a) Retrofit allowance (75% C.I.)	=	1,840,000	
TOTAL	=		4,300,000
3. SO_2 Handling Section cost(21,800 lb/hr)	=	6,700,000	
(a) Disposal	=		
TOTAL	=		6,700,000
4. Auxiliary plant			
(a) Liquid SO_2	=		
(b) H_2SO_4	=		N/A
(c) Modifications to existing H_2SO_4 plant	=		
TOTAL BOUNDARY LIMIT COSTS	=		11,000,000
5. Support Services			
(a) Power (3300 KVA)	=	350,000	
(b) Steam (lbs/hr)	=		
(c) Water (0.2 Mgal/min)	=	200,000	
TOTAL	=		550,000
6. Special costs			
(a) ESP	=		
(b) *Alternate processing equip.	=	600,000	
(c) General site costs @20% Item 4	=	2,200,000	
TOTAL	=		2,800,000
TOTAL CAPITAL INVESTMENT	=		$14,350,000

*Bag filter @40,000 SCFM.

WEAK SO_2 STREAM CONTROL COPPER SMELTERS

ANNUAL OPERATING COSTS

Smelter: ASARCO-Tacoma, Washington Control Process: Double Alkali

Basis: Max. Gas Flow 250,000 SCFM Temp. at Control Point 250°F

Av. SO_2 Rate 23,000 lb/hr

COST COMPUTATION:

	Basis	Unit Cost	Annual Cost
1. Gas Conditioning & SO_2 Absorption			
a. Power	4.0KWh/MSCFM	$0.015/KWh	122,000
b. Make-up water	1.0gal/MSCFM	$0.3/Mgal	37,000
c. Neutral. Limestone	0.2lb/MSCFM	$8/ton	20,000
TOTAL			179,000
2. SO_2 Handling (21,800 lb/hr)			
a. Chemicals	See appropriate process section		2,753,000
b. Power	0.057 KWh/lbSO_2	$0.015/KWh	200,000
c. Steam			
d. Fuel Oil or Nat. Gas			
e. Water	0.2gal/lbSO_2	$0.3/Mgal	11,000
f. Disposal	3.53lb/lbSO_2	$3/ton	942,000
TOTAL			3,906,000
3. Labor (2 1/4 man/shift)	$19,710 hrs	$8/hr	158,000
4. Maintenance			
a. Gas Condn. @ - % TCI			
b. SO_2 Handling @ 4 % TCI	$ 11,000,000		440,000
5. Insurance & Taxes @ 2 1/2% TCI	$ 14,350,000		359,000

TOTAL ANNUAL OPERATING COST FOR PRIMARY CONTROL PROCESS $5,042,000

6. Auxiliary Plant

a. _____

b. Alternative _____ N/A

c. Incremental Costs Associated with Use of Existing Acid Plant

TOTAL ANNUAL OPERATING COST $5,042,000

7. Annualized Capital Cost $1,887,000

8. Total Net Annualized Cost $4,050,000

9. Annual Cost/ton SO_2 Removed $46

WEAK SO_2 STREAM CONTROL COPPER SMELTERS

CAPITAL INVESTMENT COSTS

SMELTER: ASARCO - Tacoma, Washington

CONTROL PROCESS Magnesium Oxide

BASIS: Maximum gas flow 250,000 SCFM

Average SO_2 rate 23,000 lbs/hr

Temperature at control point 250 °F

SPECIAL CONDITIONS

Under the present system, mixed roaster and reverberatory gases are quenched and cooled in a spray chamber before the ESP's (2 in series).

COST DETERMINATION

1. Prequench Cost	=	100,000	
	=		
2. SO_2 Absorption cost (includes 5% allowance)	=	2,680,000	
TOTAL	=	2,780,000	
(a) Retrofit allowance (75% C.I.)	=	2,080,000	
TOTAL	=		4,860,000
3. SO_2 Handling Section cost (20,700 lb/hr)	=	5,100,000	
(a) Disposal	=		
TOTAL	=		5,100,000
4. Auxiliary plant			
(a) Liquid SO_2	=		
(b) H_2SO_4	=		4,350,000
(c) Modifications to existing H_2SO_4 plant	=		
TOTAL BOUNDARY LIMIT COSTS	=		14,310,000
5. Support Services			
(a) Power (4000 KVA)	=	370,000	
(b) Steam (lbs/hr)	=		
(c) Water (0.2 Mgal/min)	=	200,000	
TOTAL	=		570,000
6. Special costs			
(a) ESP	=		
(b) Alternate processing equip.	=	600,000	
(c) General site costs @20% Item 4	=	2,860,000	
TOTAL	=		3,460,000
TOTAL CAPITAL INVESTMENT	=		$18,340,000

WEAK SO_2 STREAM CONTROL COPPER SMELTERS

ANNUAL OPERATING COSTS

Smelter: ASARCO-Tacoma, Washington Control Process: Magnesium Oxide

Basis: Max. Gas Flow 250,000 SCFM Temp. at Control Point 250°F

Av. SO_2 Rate 23,000lb/hr

COST COMPUTATION:

	Basis	Unit Cost	Annual Cost
1. Gas Conditioning & SO_2 Absorption			
a. Power	4.0KWh/MSCFM	$0.015/KWh	122,000
b. Make-up water	1.0gal/MSCFM	$0.3/Mgal	37,000
c. Neutral. Limestone	0.02lb/MSCFM	$8/ton	20,000
TOTAL			179,000
2. SO_2 Handling (20,700 lb/hr)			
a. Chemicals	See appropriate process section		404,000
b. Power	0.1KWh/lbSO_2	$0.015/KWh	253,000
c. Steam			
d. Fuel Oil or Nat. Gas	0.037gal/lbSO_2	$0.3/gal	1,875,000
e. Water	0.2 gal/lbSO_2	$0.3/M gal	10,000
f. Disposal			
TOTAL			2,542,000
3. Labor (3 1/2 man/shift + 1 day)	$ 32,740 hrs	$8/hr	262,000
4. Maintenance			
a. Gas Condn. @ - % TCI			
b. SO_2 Handling @ 5 % TCI	$ 9,960,000		498,000
5. Insurance & Taxes @ 2 1/2% TCI	$ 13,990,000		350,000

TOTAL ANNUAL OPERATING COST FOR PRIMARY CONTROL PROCESS 3,831,000

6. Auxiliary Plant

a. H_2SO_4 Plant 520,000

b. Alternative

c. Incremental Costs Associated with Use of Existing Acid Plant

TOTAL ANNUAL OPERATING COST $ 4,351,000

7. Annualized Capital Cost (basis $18,340,000) $ 2,412,000

8. Total Net Annualized Cost $ 4,087,000

9. Annual Cost/ton SO_2 Removed $50

WEAK SO_2 STREAM CONTROL COPPER SMELTERS

CAPITAL INVESTMENT COSTS

SMELTER: ASARCO-Tacoma, Washington

CONTROL PROCESS Citrate

BASIS: Maximum gas flow 250,000 SCFM

Average SO_2 rate 23,000 lbs/hr

Temperature at control point 250 °F

SPECIAL CONDITIONS

Under the present system, mixed roaster and reverberatory gases are quenched and cooled in a spray chamber before the ESP's (2 in series)

COST DETERMINATION

1. Prequench Cost	=	100,000	
	=		
2. SO_2 Absorption cost (includes 5% allowance)	=	2,360,000	
TOTAL	=	2,460,000	
(a) Retrofit allowance (75% C.I.)	=	1,840,000	
TOTAL	=		4,300,000
3. SO_2 Handling Section cost (21,800 lb/hr)	=	6,700,000	
(a) Disposal	=		
TOTAL	=		6,700,000
4. Auxiliary plant			
(a) Liquid SO_2	=		
(b) H_2SO_4	=		N/A
(c) Modifications to existing H_2SO_4 plant	=		
TOTAL BOUNDARY LIMIT COSTS	=		11,000,000
5. Support Services			
(a) Power (3300 KVA)	=	350,000	
(b) Steam (lbs/hr)	=		
(c) Water (0.8 Mgal/min)	=	450,000	
TOTAL	=		800,000
6. Special costs			
(a) ESP	=		
(b) Alternate processing equip.	=	600,000	
(c) General site costs@20% Item 4	=	2,200,000	
TOTAL	=		$ 2,800,000
TOTAL CAPITAL INVESTMENT	=		$ 14,600,000

WEAK SO_2 STREAM CONTROL COPPER SMELTERS

ANNUAL OPERATING COSTS

Smelter: ASARCO-Tacoma, Washington Control Process: Citrate

Basis: Max. Gas Flow 250,000 SCFM Temp. at Control Point 250°F

Av. SO_2 Rate 23,000 lb/hr

COST COMPUTATION:

	Basis	Unit Cost	Annual Cost
1. Gas Conditioning & SO_2 Absorption			
a. Power	4.0KWh/MSCFM	$0.015/KWh	122,000
b. Make-up water	1.0gal/MSCFM	$0.3/Mgal	37,000
c. Neutral. Limestone	0.02lb/MSCFM	$8/ton	20,000
TOTAL			179,000
2. SO_2 Handling (21,800 lb/hr)			
a. Chemicals	See appropriate process section		1,056,000
b. Power	0.075KWh/lbSO_2	$0.015/KWh	200,000
c. Steam			
d. Fuel Oil or Nat. Gas	3.6CF/lbSO_2	$1.25/MCF	801,000
e. Water a) Process	1.5 gal/lbSO_2	$0.3/M gal	80,000
b) Cooling	5.0 gal/lbSO_2	$0.1/M gal	89,000
TOTAL			2,226,000
3. Labor (4 man/shift)	$ 35,040 hrs	$8/hr	280,000
4. Maintenance			
a. Gas Condn. @ - % TCI			
b. SO_2 Handling @ 4 % TCI	$11,000,000		440,000
5. Insurance & Taxes @ 2 1/2% TCI	$14,600,000		365,000

TOTAL ANNUAL OPERATING COST FOR PRIMARY CONTROL PROCESS 3,490,000

6. Auxiliary Plant

a. _____

b. Alternative _____ N/A

c. Incremental Costs Associated with Use of Existing Acid Plant

TOTAL ANNUAL OPERATING COST $3,490,000

7. Annualized Capital Cost $1,920,000

8. Total Net Annualized Cost $3,268,000

9. Annual Cost/ton SO_2 Removed $37

WEAK SO_2 STREAM CONTROL COPPER SMELTERS

CAPITAL INVESTMENT COSTS

SMELTER: Kennecott - Hayden, Arizona

CONTROL PROCESS Double Alkali

BASIS: Maximum gas flow 165,000 SCFM

Average SO_2 rate 3,000 lbs/hr

Temperature at control point 300 °F

SPECIAL CONDITIONS

COST DETERMINATION

1. Gas conditioning cost	=	2,030,000	
(a) Adjusted cost	=	1,665,000	
2. SO_2 Absorption cost (includes 5% allowance)	=	1,890,000	
TOTAL	=	3,555,000	
(a) Retrofit allowance (20%C.I.)	=	710,000	
TOTAL	=		4,270,000
3. SO_2 Handling Section cost (2850 lb/hr)		1,850,000	
(a) Disposal	=		
TOTAL	=		1,850,000
4. Auxiliary plant			
(a) Liquid SO_2	=		
(b) H_2SO_4	=		N/A
(c) Modifications to existing H_2SO_4 plant	=		
TOTAL BOUNDARY LIMIT COSTS	=		6,120,000
5. Support Services			
(a) Power (2200 KVA)	=	295,000	
(b) Steam (lbs/hr)	=		
(c) Water (0.6 Mgal/min)	=	380,000	
TOTAL	=		675,000
6. Special costs			–
(a) ESP	=		
(b) Alternate processing equip.	=		
(c) General site costs @20% item 4	=	1,224,000	
TOTAL	=		1,224,000
TOTAL CAPITAL INVESTMENT	=		8,020,000

WEAK SO_2 STREAM CONTROL COPPER SMELTERS

ANNUAL OPERATING COSTS

Smelter: Kennecott-Hayden, Arizona Control Process: Double Alkali

Basis: Max. Gas Flow 165,000 SCFM Temp. at Control Point 300°F

Av. SO_2 Rate 3,000 lb/hr

COST COMPUTATION:

	Basis	Unit Cost	Annual Cost
1. Gas Conditioning & SO_2 Absorption			
a. Power $[5.25(\frac{760}{1060})^3 + 4.0]$	6.0KW/MSCFM	$ 0.015/KWh	$ 121,000
b. Make-up water $[3(\frac{760}{1060}).6]$	2.5gal/MSCFM	$ 0.30/Mgal	61,000
c. Neutral. Limestone	0.07lb/MSCFM	$ 8/ton	23,000
TOTAL			205,000
2. SO_2 Handling (2850 lb/hr)			
a. Chemicals	See appropriate process section		360,000
b. Power	0.075KWh/lbSO_2	$ 0.015/KWh	26,000
c. Steam	-		-
d. Fuel Oil or Nat. Gas			
e. Water	0.2gal/lbSO_2	$ 0.3/Mgal	2,000
f. Disposal	3.53lb/lbSO_2	$ 3/ton	123,000
TOTAL			511,000
3. Labor (2 man/shift)	17,520 hrs	$ 8/hr	140,000
4. Maintenance			
a. Gas Condn. @ 5 % TCI	$ 1,998,000		100,000
b. SO_2 Handling @ 4 % TCI	$ 4,118,000		165,000
5. Insurance & Taxes @ 2 1/2% TCI	$ 8,020,000		200,000

TOTAL ANNUAL OPERATING COST FOR PRIMARY CONTROL PROCESS 1,321,000

6. Auxiliary Plant

a. _____

b. Alternative _____ N/A

c. Incremental Costs Associated with Use of Existing Acid Plant -

TOTAL ANNUAL OPERATING COST $ 1,321,000

7. Annualized Capital Cost $ 1,055,000

8. Total Net Annualized Cost $ 1,485,000

9. Annual Cost/ton SO_2 Removed $128

WEAK SO_2 STREAM CONTROL COPPER SMELTERS

CAPITAL INVESTMENT COSTS

SMELTER: Kennecott - Hayden, Arizona

CONTROL PROCESS Citrate

BASIS: Maximum gas flow 165,000 SCFM

Average SO_2 rate 3,000 lbs/hr

Temperature at control point 300 °F

SPECIAL CONDITIONS

COST DETERMINATION

1. Gas conditioning cost	=	3,180,000	
(a) Adjusted cost	=	2,600,000	
2. SO_2 Absorption cost (includes 5% allowance)	=	1,890,000	
TOTAL	=	4,490,000	
(a) Retrofit allowance (20%C.I.)	=	900,000	
TOTAL	=		5,390,000
3. SO_2 Handling Section cost (2850 lb/hr)	=	2,250,000	
(a) Disposal	=	20,000	
TOTAL	=		2,270,000
4. Auxiliary plant			
(a) Liquid SO_2	=		
(b) H_2SO_4	=		N/A
(c) Modifications to existing H_2SO_4 plant	=		
TOTAL BOUNDARY LIMIT COSTS	=		7,660,000
5. Support Services			
(a) Power (2600 KVA)	=	320,000	
(b) Steam (lbs/hr)	=		
(c) Water (1.0 Mgal/min)	=	500,000	
TOTAL	=		820,000
6. Special costs			
(a) ESP	=		
(b) Alternate processing equip.	=		
(c) General site costs @20% item 4	=	1,530,000	
TOTAL	=		1,530,000
TOTAL CAPITAL INVESTMENT	=		$10,010,000

WEAK SO_2 STREAM CONTROL COPPER SMELTERS

ANNUAL OPERATING COSTS

Smelter: Kennecott-Hayden, Arizona Control Process: Citrate

Basis: Max. Gas Flow 165,000 SCFM Temp. at Control Point 300°F

Av. SO_2 Rate 3,000 lb/hr

COST COMPUTATION:

	Basis	Unit Cost	Annual Cost
1. Gas Conditioning & SO_2 Absorption			
a. Power $[7.0(\frac{760}{1060})^3 + 4.0]$	6.6 KW/MSCFM	$ 0.015/KWHr	$ 133,000
b. Make-up water $[3(\frac{760}{1060})^{.6}]$	2.5gal/MSCFM	$ 0.30/Mgal	61,000
c. Neutral. Limestone	0.09lb/MSCFM	$ 8/ton	29,000
TOTAL			223,000
2. SO_2 Handling (2850 lb/hr)			
a. Chemicals	See appropriate process section		84,000
b. Power	0.075KWh/lbSO_2	$ 0.015/KWh	28,000
c. Steam			
d. Fuel Oil or Nat. Gas	3.6CF/lbSO_2	$ 1.25/MCF	105,000
e. Water (a) Process	1.5gal/lbSO_2	$ 0.3/Mgal	11,000
(b) Cooling	5.0gal/lbSO_2	$ 0.1/Mgal	12,000
TOTAL			240,000
3. Labor (3 1/2 man/shift)	30,660 hrs	$ 8/hr	245,000
4. Maintenance			
a. Gas Condn. @ 5 % TCI	$3,120,000		156,000
b. SO_2 Handling @ 4 % TCI	$4,538,000		182,000
5. Insurance & Taxes @ 2 1/2% TCI	$10,010,000		250,000

TOTAL ANNUAL OPERATING COST FOR PRIMARY CONTROL PROCESS 1,296,000

6. Auxiliary Plant

a. _____ N/A

b. Alternative _____

c. Incremental Costs Associated with Use of Existing Acid Plant – –

TOTAL ANNUAL OPERATING COST $ 1,296,000

7. Annualized Capital Cost $ 1,316,000

8. Total Net Annualized Cost $ 1,670,000

9. Annual Cost/ton SO_2 Removed $144

WEAK SO_2 STREAM CONTROL COPPER SMELTERS

CAPITAL INVESTMENT COSTS

SMELTER: Kennecott - Hayden, Arizona

CONTROL PROCESS Citrate - Direct Stripping Option

BASIS: Maximum gas flow 165,000 SCFM

Average SO_2 rate 3,000 lbs/hr

Temperature at control point 300 °F

SPECIAL CONDITIONS

COST DETERMINATION

1. Gas conditioning cost	=	3,180,000	
(a) Adjusted cost	=	2,600,000	
2. SO_2 Absorption cost (includes 5% allowance)	=	1,890,000	
TOTAL	=	4,490,000	
(a) Retrofit allowance (20% C.I.)	=	900,000	
TOTAL	=		5,390,000
3. SO_2 Stripping Section Cost	=	500,000	
(a) Disposal	=		
TOTAL	=		500,000
4. Auxiliary plant			
(a) Liquid SO_2	=		200,000
(b) H_2SO_4	=		
(c) Modifications to existing H_2SO_4 plant	=		
TOTAL BOUNDARY LIMIT COSTS	=		$6,090,000
5. Support Services			
(a) Power (2300 KVA)	=	300,000	
(b) Steam (20,000 lbs/hr)	=	130,000	
(c) Water (1.0 Mgal/min)	=	500,000	
TOTAL	=		930,000
6. Special costs			
(a) ESP	=		
(b) Alternate processing equip.	=		
(c) General site costs @20% item 4	=	1,220,000	
TOTAL	=		1,220,000
TOTAL CAPITAL INVESTMENT	=		$8,240,000

WEAK SO_2 STREAM CONTROL COPPER SMELTERS

ANNUAL OPERATING COSTS

Smelter: Kennecott - Hayden, Arizona Control Process: Citrate-Direct Stripping

Basis: Max. Gas Flow 165,000SCFM Temp. at Control Point 300°F

Av. SO_2 Rate 3,000 lb/hr

COST COMPUTATION:

	Basis	Unit Cost	Annual Cost
1. Gas Conditioning & SO_2 Absorption			
a. Power $[7.0(\frac{760}{1060})^3 + 4.0]$	6.6KW/MSCFM	$ 0.015/KWHr	$ 133,000
b. Make-up water $[3(\frac{760}{1060})^{.6}]$	2.5gal/MSCFM	$ 0.30/Mgal	61,000
c. Neutral. Limestone	0.09lb/MSCFM	$ 8/ton	29,000
TOTAL			223,000
2. SO_2 Handling (2850 lb/hr)			
a. Chemicals			3,000 (Est)
b. Power			
c. Steam	10lbs/lbSO_2	$ 1.25/M lbs.	291,000
d. Fuel Oil or Nat. Gas			
e. Water	1000 GPM	$ 0.3/Mgal	147,000
f. Disposal			
TOTAL			441,000
3. Labor (2 ½ man/shift)	21,900 hrs	$ 8/hr	175,000
4. Maintenance			
a. Gas Condn. @ 5% TCI	$3,120,000		156,000
b. SO_2 Handling @ 4 % TCI	$2,968,000		119,000
5. Insurance & Taxes @ 2 1/2% TCI	$8,240,000		206,000

TOTAL ANNUAL OPERATING COST FOR PRIMARY CONTROL PROCESS 1,320,000

6. Auxiliary Plant
   - a. SO_2 liquifaction 15,000
   - b. Alternative
   - c. Incremental Costs Associated with Use of Existing Acid Plant – –

TOTAL ANNUAL OPERATING COST $ 1,335,000

7. Annualized Capital Cost $ 1,084,000
8. Total Net Annualized Cost $ 1,514,000
9. Annual Cost/ton SO_2 Removed $130

WEAK SO_2 STREAM CONTROL COPPER SMELTERS

CAPITAL INVESTMENT COSTS

SMELTER: Kennecott - Hurley, New Mexico

CONTROL PROCESS Double Alkali

BASIS: Maximum gas flow 270,000 SCFM

Average SO_2 rate 20,200 lbs/hr

Temperature at control point 425 °F

SPECIAL CONDITIONS

ESP cannot handle present gas flows and efficiency is poor

COST DETERMINATION

1. Gas conditioning cost	=	2,730,000	
(a) Adjusted cost	=	2,450,000	
2. SO_2 Absorption cost (includes 5% allowance)	=	2,450,000	
TOTAL	=	4,900,000	
(a) Retrofit allowance (25%C.I.)	=	1,230,000	
TOTAL	=		6,130,000
3. SO_2 Handling Section cost (19,200lb/hr)		6,100,000	
(a) Disposal	=		
TOTAL	=		6,100,000
4. Auxiliary plant			
(a) Liquid SO_2	=		
(b) H_2SO_4	=		
(c) Modifications to existing H_2SO_4 plant	=	N/A	
TOTAL BOUNDARY LIMIT COSTS	=		12,230,000
5. Support Services			
(a) Power (KVA)	=		
(b) Steam (lbs/hr)	=		
(c) Water (3.2 Mgal/min)	=	50,000	
TOTAL	=		50,000
6. Special costs			
(a) ESP (not chargeable to process)	=	(3,500,000)	
(b) Alternate processing equip.	=		
(c) General site costs @20% item 4	=	2,450,000	
TOTAL	=		2,450,000
TOTAL CAPITAL INVESTMENT	=		$14,730,000

WEAK SO_2 STREAM CONTROL COPPER SMELTERS

ANNUAL OPERATING COSTS

Smelter: Kennecott-Hurley, New Mexico Control Process: Double Alkali

Basis: Max. Gas Flow 275,000 SCFM Temp. at Control Point 425°F

Av. SO_2 Rate 20,200 lbs/hr

COST COMPUTATION:

	Basis	Unit Cost	Annual Cost
1. Gas Conditioning & SO_2 Absorption			
a. Power $[5.25(\frac{910}{1060})^3 + 4.0]$	7.3KW/MSCFM	$ 0.15/KWh	$ 246,000
b. Make-up water $[3 \times (\frac{910}{1060}) \cdot 6]$	2.7gal/MSCFM	$ 0.30/Mgal	109,000
c. Neutral. Limestone	0.07lbs/MSCFM	$ 8/ton	38,000
TOTAL			393,000
2. SO_2 Handling	See appropriate process sect.		
a. Chemicals			2,425,000
b. Power	0.75KWh/lbSO_2	$ 0.015/KWh	176,000
c. Steam			
d. Fuel Oil or Nat. Gas			
e. Water	0.2gal/lbSO_2	$ 0.30/Mgal	9,000
f. Disposal	3.53lb/lbSO_2	$ 3/ton	829,000
TOTAL			3,439,000
3. Labor (3 men/shift)	26,280 hrs	$ 8/hr	210,000
4. Maintenance			
a. Gas Condn. @ 5 % TCI	$ 3,062,000		153,000
b. SO_2 Handling @ 4 % TCI	$ 9,163,000		367,000
5. Insurance & Taxes @ 2 1/2% TCI	$14,730,000		368,000

TOTAL ANNUAL OPERATING COST FOR PRIMARY CONTROL PROCESS $4,930,000

6. Auxiliary Plant

a. _____

b. Alternative _____ N/A

c. Incremental Costs Associated with Use of Existing Acid Plant

TOTAL ANNUAL OPERATING COST $4,930,000

7. Annualized Capital Cost $1,937,000

8. Total Net Annualized Cost $4,029,000

9. Annual Cost/ton SO_2 Removed $51

WEAK SO_2 STREAM CONTROL COPPER SMELTERS

CAPITAL INVESTMENT COSTS

SMELTER: Kennecott-Hurley, New Mexico

CONTROL PROCESS Magnesium Oxide

BASIS: Maximum gas flow 270,000 SCFM

Average SO_2 rate 20,200 lbs/hr

Temperature at control point 425 °F

SPECIAL CONDITIONS

ESP cannot handle present gas flows and efficiency is poor

COST DETERMINATION

1. Gas conditioning cost	=	4,400,000	
(a) Adjusted cost	=	3,950,000	
2. SO_2 Absorption cost (includes 5% allowance)	=	2,780,000	
TOTAL	=	6,730,000	
(a) Retrofit allowance (25%C.I.)	=	1,680,000	
TOTAL	=		8,410,000
3. SO_2 Handling Section cost (18,200 lb/hr)	=	4,650,000	
(a) Disposal	=		
TOTAL	=		4,650,000
4. Auxiliary plant			
(a) Liquid SO_2	=		
(b) H_2SO_4 (324 TPD) Dry Gas cleaning	=		3,900,000
(c) Modifications to existing H_2SO_4 plant	=		
TOTAL BOUNDARY LIMIT COSTS	=		16,960,000
5. Support Services			
(a) Power (KVA)	=		
(b) Steam (lbs/hr)	=		
(c) Water (3.2 Mgal/min)	=	50,000	
TOTAL	=		50,000
6. Special costs			
(a) ESP (not chargeable to process)	=	(4,000,000)	
(b) Alternate processing equip.	=		
(c) General site costs 20% item 4	=	3,390,000	
TOTAL	=		3,390,000
TOTAL CAPITAL INVESTMENT	=		$20,400,000

WEAK SO_2 STREAM CONTROL COPPER SMELTERS

ANNUAL OPERATING COSTS

Smelter: Kennecott - Hurley, New Mexico Control Process: Magnesium Oxide

Basis: Max. Gas Flow 275,000 SCFM Temp. at Control Point 425°F

Av. SO_2 Rate 20,200 lbs/hr

COST COMPUTATION:

	Basis	Unit Cost	Annual Cost
1. Gas Conditioning & SO_2 Absorption			
a. Power $[7x(\frac{910}{1060})^3 + 4.0]$	8.4KW/MSCFM	$ 0.15/KWh	$ 283,000
b. Make-up water $[3x(\frac{910}{1060}) \cdot 6]$	2.7gal/MSCFM	$ 0.30/Mgal	109,000
c. Neutral. Limestone	0.09lb/MSCFM	$ 8/ton	48,000
TOTAL			440,000
2. SO_2 Handling (18,100 lb/hr)			
a. Chemicals	See appropriate process section		355,000
b. Power	0.075KWh/lbSO_2	$ 0.015/KWh	167,000
c. Steam			
d. Fuel Oil or Nat. Gas	0.037gal/lbSO_2	$ 0.30/gal	1,647,000
e. Water			
f. Disposal			
TOTAL			$ 2,169,000
3. Labor (4¼ men/shift + 1 day)	39,310 hrs	$ 8/hr	315,000
4. Maintenance			
a. Gas Condn. @ 5 % TCI	$ 4,938,000		247,000
b. SO_2 Handling @ 5 % TCI	$ 8,125,000		406,000
5. Insurance & Taxes @ 2 1/2% TCI	$ 16,500,000		412,000

TOTAL ANNUAL OPERATING COST FOR PRIMARY CONTROL PROCESS $3,989,000

6. Auxiliary Plant

a. Sulfuric Acid 470,000

b. Alternative

c. Incremental Costs Associated with Use of Existing Acid Plant –

TOTAL ANNUAL OPERATING COST $4,459,000

7. Annualized Capital Cost (basis $20,400,000) $2,683,000

8. Total Net Annualized Cost $4,104,000

9. Annual Cost/ton SO_2 Removed $57

WEAK SO_2 STREAM CONTROL COPPER SMELTERS

CAPITAL INVESTMENT COSTS

SMELTER: Kennecott - Hurley, New Mexico

CONTROL PROCESS Citrate Process

BASIS: Maximum gas flow 270,000 SCFM

Average SO_2 rate 20,200 lbs/hr

Temperature at control point 425 °F

SPECIAL CONDITIONS

ESP cannot handle present fas flows and efficiency is poor

COST DETERMINATION

1. Gas conditioning cost	=	4,400,000	
(a) Adjusted cost	=	3,950,000	
2. SO_2 Absorption cost (includes 5% allowance)	=	2,450,000	
TOTAL	=	6,400,000	
(a) Retrofit allowance (25%C.I.)	=	1,600,000	
TOTAL	=		8,000,000
3. SO_2 Handling Section cost (19,200lb/hr)		6,200,000	
(a) Disposal	=	100,000	
TOTAL	=		6,300,000
4. Auxiliary plant			
(a) Liquid SO_2	=		
(b) H_2SO_4	=	N/A	
(c) Modifications to existing H_2SO_4 plant	=		
TOTAL BOUNDARY LIMIT COSTS	=		14,300,000
5. Support Services			
(a) Power (____ KVA)	=		
(b) Steam (____ lbs/hr)	=		
(c) Water (3.2 Mgal/min) (pumping only)	=	50,000	
TOTAL	=		50,000
6. Special costs			
(a) ESP (not chargeable to process)	=	(4,000,000)	
(b) Alternate processing equip.	=		
(c) General site costs 20% item 4	=	2,860,000	
TOTAL	=		2,860,000
TOTAL CAPITAL INVESTMENT	=		17,210,000

WEAK SO_2 STREAM CONTROL COPPER SMELTERS

ANNUAL OPERATING COSTS

Smelter: Kennecott - Hurley, New Mexico Control Process: Citrate

Basis: Max. Gas Flow 275,000SCFM Temp. at Control Point 425°F

Av. SO_2 Rate 20,200 lbs/hr

COST COMPUTATION:

	Basis	Unit Cost	Annual Cost
1. Gas Conditioning & SO_2 Absorption			
a. Power $[7x(\frac{910}{1060})^3 + 4.0]$	8.4/KW/MSCFM	$ 0.15 KWh	$ 283,000
b. Make-up water $[3.0x(\frac{910}{1060}).6]$	2.7gal/MSCFM	$ 0.30/Mgal	109,000
c. Neutral. Limestone	0.091bs/MSCFM	$ 8/ton	48,000
TOTAL			440,000
2. SO_2 Handling (19,200 lb/hr)	See appropriate process section		
a. Chemicals			563,000
b. Power	0.075KWh/lbSO_2	$ 0.015/KWh	176,000
c. Steam			
d. Fuel Oil or Nat. Gas	3.6CF/lbSO_2	$ 1.25/MCF	713,000
e. Water (a) Process	1.5gal/lbSO_2	$ 0.3/Mgal	71,000
f. Disposal (b) Cooling	5.0gal/lbSO_2	$ 0.1/Mgal	78,000
TOTAL			1,601,000
3. Labor (4 3/4 men/shift)	41,610 hrs	$ 8/hr	333,000
4. Maintenance			
a. Gas Condn. @ 5 % TCI	$ 4,940,000		247,000
b. SO_2 Handling @ 4 % TCI	$ 9,260,000		370,000
5. Insurance & Taxes @ 2 1/2% TCI	$17,210,000		430,000

TOTAL ANNUAL OPERATING COST FOR PRIMARY CONTROL PROCESS $3,421,000

6. Auxiliary Plant

a. _____

b. Alternative _____ N/A

c. Incremental Costs Associated with Use of Existing Acid Plant

TOTAL ANNUAL OPERATING COST $3,421,000

7. Annualized Capital Cost $2,263,000

8. Total Net Annualized Cost $3,491,000

9. Annual Cost/ton SO_2 Removed $45

WEAK SO_2 STREAM CONTROL COPPER SMELTERS

CAPITAL INVESTMENT COSTS

SMELTER: Kennecott-McGill, Nevada

CONTROL PROCESS Double Alkali

BASIS: Maximum gas flow 250,000 SCFM

Average SO_2 rate 20,000 lbs/hr

Temperature at control point 450 ^oF

SPECIAL CONDITIONS

Existing ESP's old and recovery efficiencies low. Replacement is proposed.

COST DETERMINATION

1. Gas conditioning cost	=	2,600,000	
(a) Adjusted cost	=	2,370,000	
2. SO_2 Absorption cost (includes 5% allowance)	=	2,360,000	
TOTAL	=	4,730,000	
(a) Retrofit allowance (30%C.I.)	=	1,420,000	
TOTAL	=		6,150,000
3. SO_2 Handling Section cost (19,000lb/hr)		6,100,000	
(a) Disposal	=		
TOTAL	=		6,100,000
4. Auxiliary plant			
(a) Liquid SO_2	=		
(b) H_2SO_4	=		N/A
(c) Modifications to existing H_2SO_4 plant	=		
TOTAL BOUNDARY LIMIT COSTS	=		12,250,000
5. Support Services			
(a) Power (4000 KVA)	=	380,000	
(b) Steam (____ lbs/hr)	=		
(c) Water (0.7 Mgal/min)	=	400,000	
TOTAL	=		780,000
6. Special costs			
(a) ESP	=		
(b) Alternate processing equip.	=		
(c) General site costs@20% item 4	=	2,450,000	
TOTAL	=		2,450,000
TOTAL CAPITAL INVESTMENT	=		$15,480,000

WEAK SO_2 STREAM CONTROL COPPER SMELTERS

ANNUAL OPERATING COSTS

Smelter: Kennecott - McGill, Nevada Control Process: Double Alkali

Basis: Max. Gas Flow 250,000 SCFM Temp. at Control Point 450°F

Av. SO_2 Rate 20,000 lb/hr

COST COMPUTATION:

	Basis	Unit Cost	Annual Cost
1. Gas Conditioning & SO_2 Absorption			
a. Power $[5.25(\frac{910}{1060})^3 + 4.0]$	7.3KW /MSCFM	$ 0.015/KWh	223,000
b. Make-up water $[3(\frac{910}{1060}).6]$	2.7gal/MSCFM	$ 0.3/Mgal	99,000
c. Neutral. Limestone	0.07lb/MSCFM	$ 8/ton	34,000
TOTAL			356,000
2. SO_2 Handling(19,000 lb/hr)	See appropriate process section		
a. Chemicals			2,400,000
b. Power	0.075KWh/lbSO_2	$0.015/KWh	174,000
c. Steam			
d. Fuel Oil or Nat. Gas			
e. Water	0.2gal/lbSO_2	$ 0.3/Mgal	9,000
f. Disposal	3.53lb/lbSO_2	$ 3/ton	821,000
TOTAL			3,404,000
3. Labor (3 men/shift)	26,280 hrs	$ 8/hr	210,000
4. Maintenance			
a. Gas Condn. @ 5 % TCI	$ 3,081,000		154,000
b. SO_2 Handling @ 4 % TCI	$ 9,168,000		367,000
5. Insurance & Taxes @ 2 1/2% TCI	$15,480,000		387,000

TOTAL ANNUAL OPERATING COST FOR PRIMARY CONTROL PROCESS 4,878,000

6. Auxiliary Plant

a. _____

b. Alternative _____ N/A

c. Incremental Costs Associated with Use of Existing Acid Plant

TOTAL ANNUAL OPERATING COST $4,878,000

7. Annualized Capital Cost $2,036,000

8. Total Net Annualized Cost $4,077,000

9. Annual Cost/ton SO_2 Removed $53

WEAK SO_2 STREAM CONTROL COPPER SMELTERS

CAPITAL INVESTMENT COSTS

SMELTER: Kennecott - McGill, Nevada

CONTROL PROCESS Magnesium Oxide

BASIS: Maximum gas flow 250,000 SCFM

Average SO_2 rate 20,000 lbs/hr

Temperature at control point 450 °F

SPECIAL CONDITIONS

Existing ESP's old and recovery efficiencies low. Replacement is proposed.

COST DETERMINATION

1. Gas conditioning cost	=	4,150,000	
(a) Adjusted cost	=	3,790,000	
2. SO_2 Absorption cost (includes 5% allowance)	=	2,680,000	
TOTAL	=	6,470,000	
(a) Retrofit allowance (30% C.I.)	=	1,940,000	
TOTAL	=		8,410,000
3. SO_2 Handling Section cost	=	4,600,000	
(a) Disposal (18,000 lb/hr)	=	----	
TOTAL	=		4,600,000
4. Auxiliary plant			
(a) Liquid SO_2	=		
(b) H_2SO_4	=		3,950,000
(c) Modifications to existing H_2SO_4 plant	=		
TOTAL BOUNDARY LIMIT COSTS	=		16,960,000
5. Support Services			
(a) Power (6500 KVA)	=	450,000	
(b) Steam (lbs/hr)	=		
(c) Water (1.2 Mgal/min)	=	550,000	
TOTAL	=		1,000,000
6. Special costs			
(a) ESP	=		
(b) Alternate processing equip.	=		
(c) General site costs @ 20% item 4	=	3,390,000	
TOTAL	=		3,390,000
TOTAL CAPITAL INVESTMENT	=		$21,350,000

WEAK SO_2 STREAM CONTROL COPPER SMELTERS

ANNUAL OPERATING COSTS

Smelter: Kennecott-McGill, Nevada Control Process: Magnesium Oxide

Basis: Max. Gas Flow 250,000SCFM Temp. at Control Point 450°F

Av. SO_2 Rate 20,000 lb/hr

COST COMPUTATION:

	Basis	Unit Cost	Annual Cost
1. Gas Conditioning & SO_2 Absorption			
a. Power $[7.0(\frac{910}{1060})^3 + 4.0]$	8.4KW /MSCFM	$ 0.015/KWh	$ 257,000
b. Make-up water $[3(\frac{910}{1060})^{.6}]$	2.7gal/MSCFM	$ 0.3/Mgal	99,000
c. Neutral. Limestone	0.09lb/MSCFM	$ 8/ton	44,000
TOTAL			400,000
2. SO_2 Handling (18,000 lb/hr)			
a. Chemicals	See appropriate process section		351,000
b. Power	0.1KWh/lbSO_2	$ 0.015/KWh	220,000
c. Steam			
d. Fuel Oil or Nat. Gas	0.037gal/lbSO_2	$ 0.30/gal	1,630,000
e. Water	0.2gal/lbSO_2	$ 0.30/Mgal	9,000
f. Disposal			
TOTAL			2,210,000
3. Labor (4¼ man/shift + 1 day)	39,310 hrs	$ 8/hr	315,000
4. Maintenance			
a. Gas Condn. @ 5% TCI	$ 5,173,000		259,000
b. SO_2 Handling @ 5% TCI	~~$ 8,084,000~~		~~404,000~~
5. Insurance & Taxes @ 2 1/2% TCI	$17,400,000		435,000

TOTAL ANNUAL OPERATING COST FOR PRIMARY CONTROL PROCESS 4,023,000

6. Auxiliary Plant
   - a. H_2SO_4 (dry gas cleaning) 470,000
   - b. Alternative
   - c. Incremental Costs Associated with Use of Existing Acid Plant

TOTAL ANNUAL OPERATING COST $ 4,493,000

7. Annualized Capital Cost $ 2,807,000

8. Total Net Annualized Cost $ 4,461,000

9. Annual Cost/ton SO_2 Removed $61

WEAK SO_2 STREAM CONTROL COPPER SMELTERS

CAPITAL INVESTMENT COSTS

SMELTER: Kennecott-McGill, Nevada

CONTROL PROCESS Citrate

BASIS: Maximum gas flow 250,000 SCFM

Average SO_2 rate 20,000 lbs/hr

Temperature at control point 450 °F

SPECIAL CONDITIONS

Existing ESP's old and recovery efficiencies low. Replacement is proposed.

COST DETERMINATION

1. Gas conditioning cost	=	4,150,000	
(a) Adjusted cost	=	3,790,000	
2. SO_2 Absorption cost (includes 5% allowance)	=	2,360,000	
TOTAL	=	6,150,000	
(a) Retrofit allowance (30% C.I.)	=	1,840,000	
TOTAL	=		7,990,000
3. SO_2 Handling Section cost (19,000 lb/hr)		6,200,000	
(a) Disposal	=	100,000	
TOTAL	=		6,300,000
4. Auxiliary plant			
(a) Liquid SO_2	=		
(b) H_2SO_4	=		N/A
(c) Modifications to existing H_2SO_4 plant	=		
TOTAL BOUNDARY LIMIT COSTS	=		14,290,000
5. Support Services			
(a) Power (4200 KVA)	=	380,000	
(b) Steam (lbs/hr)	=		
(c) Water (1.5 Mgal/min)	=	600,000	
TOTAL	=		980,000
6. Special costs			
(a) ESP	=		
(b) Alternate processing equip.	=		
(c) General site costs @20% item 4	=	2,820,000	
TOTAL	=		2,820,000
TOTAL CAPITAL INVESTMENT	=		$18,090,000

WEAK SO_2 STREAM CONTROL COPPER SMELTERS

ANNUAL OPERATING COSTS

Smelter: Kennecott - McGill, Nevada Control Process: Citrate

Basis: Max. Gas Flow 250,000 SCFM Temp. at Control Point 450°F

Av. SO_2 Rate 20,000 lb/hr

COST COMPUTATION:

	Basis	Unit Cost	Annual Cost
1. Gas Conditioning & SO_2 Absorption			
a. Power	8.4KW /MSCFM	$ 0.015/KWh	$ 257,000
b. Make-up water	2.7gal/MSCFM	$ 0.3/Mgal	99,000
c. Neutral. Limestone	0.09lb/MSCFM	$ 8/ton	44,000
TOTAL			400,000
2. SO_2 Handling (19,000 lb/hr)	See appropriate process section		558,000
a. Chemicals			
b. Power	0.075KWh/lbSO_2	$ 0.015/KWh	174,000
c. Steam			
d. Fuel Oil or Nat. Gas	3.6CF/lbSO_2	$ 1.25/MCF	698,000
e. Water (a) Process	1.5gal/lbSO_2	$ 0.3/Mgal	70,000
f. Disposal (b) Cooling	5.0gal/lbSO_2	$ 0.1/Mgal	77,000
TOTAL			2,035,000
3. Labor (4 3/4 man/shift)	41,610 hrs	$ 8/hr	333,000
4. Maintenance			
a. Gas Condn. @ 5% TCI	$ 4,927,000		246,000
b. SO_2 Handling @ 4% TCI	$ 9,268,000		371,000
5. Insurance & Taxes @ 2 1/2% TCI	$18,090,000		452,000

TOTAL ANNUAL OPERATING COST FOR PRIMARY CONTROL PROCESS 3,837,000

6. Auxiliary Plant

a. _____

b. Alternative _____ N/A

c. Incremental Costs Associated with Use of Existing Acid Plant — —

TOTAL ANNUAL OPERATING COST 3,837,000

7. Annualized Capital Cost $ 2,379,000

8. Total Net Annualized Cost $3,795,000

9. Annual Cost/ton SO_2 Removed $49

WEAK SO_2 STREAM CONTROL COPPER SMELTERS

CAPITAL INVESTMENT COSTS

SMELTER: Magma Copper - San Manuel, Arizona

CONTROL PROCESS Double Alkali

BASIS: Maximum gas flow 550,000 SCFM

Average SO_2 rate 34,500 lbs/hr

Temperature at control point 500 °F

SPECIAL CONDITIONS

COST DETERMINATION

1. Gas conditioning cost	=	4,200,000	
(a) Adjusted cost	=	3,950,000	
2. SO_2 Absorption cost(includes 5% allowance)	=	3,470,000	
TOTAL	=	7,420,000	
(a) Retrofit allowance (25%C.I.)	=	1,860,000	
TOTAL	=		9,280,000
3. SO_2 Handling Section cost(32,800lb/hr)	=	8,700,000	
(a) Disposal	=		
TOTAL	=		8,700,000
4. Auxiliary plant			
(a) Liquid SO_2	=		
(b) H_2SO_4	=		N/A
(c) Modifications to existing H_2SO_4 plant	=		
TOTAL BOUNDARY LIMIT COSTS	=		17,980,000
5. Support Services			
(a) Power (9000 KVA)	=	520,000	
(b) Steam (____ lbs/hr)	=		
(c) Water (1.7 Mgal/min)	=	640,000	
TOTAL	=		1,160,000
6. Special costs			
(a) ESP	=		
(b) Alternate processing equip.	=		
(c) General site costs 15% item 4	=	2,700,000	
TOTAL	=		2,700,000
TOTAL CAPITAL INVESTMENT	=		$21,840,000

WEAK SO_2 STREAM CONTROL COPPER SMELTERS

ANNUAL OPERATING COSTS

Smelter: Magma Copper - San Manuel, Arizona Control Process: Double Alkali

Basis: Max. Gas Flow 550,000 SCFM Temp. at Control Point 500°F

Av. SO_2 Rate 34,500 lb/hr

COST COMPUTATION:

	Basis	Unit Cost	Annual Cost
1. Gas Conditioning & SO_2 Absorption			
a. Power $[5.25(\frac{960}{1060})^3 + 4.0]$	7.9KWh/MSCFM	$ 0.015/KWh	532,000
b. Make-up water $[3.0(\frac{960}{1060})^{.6}]$	2.8gal/MSCFM	$ 0.3/Mgal	226,000
c. Neutral. Limestone	0.07lb/MSCFM	$ 8/ton	75,000
TOTAL			833,000
2. SO_2 Handling (32,800 lb/hr)	See appropriate process section		
a. Chemicals			4,142,000
b. Power	0.075KWh/lbSO_2	$ 0.015/KWh	301,000
c. Steam			
d. Fuel Oil or Nat. Gas			
e. Water	0.2gal/lbSO_2	$ 0.3/Mgal	16,000
f. Disposal	3.53lb/lbSO_2	$ 3/ton	1,417,000
TOTAL			5,876,000
3. Labor (3 man/shift)	26,280 hrs	$ 8/hr	210,000
4. Maintenance			
a. Gas Condn. @ 5 % TCI	$ 4,938,000		247,000
b. SO_2 Handling @ 4 % TCI	$13,038,000		522,000
5. Insurance & Taxes @ 2 1/2% TCI	$21,840,000		546,000

TOTAL ANNUAL OPERATING COST FOR PRIMARY CONTROL PROCESS 8,234,000

6. Auxiliary Plant

a. _____

b. Alternative _____ N/A

c. Incremental Costs Associated with Use of Existing Acid Plant

TOTAL ANNUAL OPERATING COST $8,234,000

7. Annualized Capital Cost $2,872,000

8. Total Net Annualized Cost $6,455,000

9. Annual Cost/ton SO_2 Removed $48

WEAK SO_2 STREAM CONTROL COPPER SMELTERS

CAPITAL INVESTMENT COSTS

SMELTER: Magma Copper - San Manuel, Arizona

CONTROL PROCESS Magnesium Oxide

BASIS: Maximum gas flow 550,000 SCFM

Average SO_2 rate 34,500 lbs/hr

Temperature at control point 500 °F

SPECIAL CONDITIONS

COST DETERMINATION

1. Gas conditioning cost	=	7,000,000	
(a) Adjusted cost	=	6,580,000	
2. SO_2 Absorption cost (includes 5% allowance)	=	3,990,000	
TOTAL	=	10,570,000	
(a) Retrofit allowance (25% C.I.)	=	2,640,000	
TOTAL	=		13,210,000
3. SO_2 Handling Section cost (31,000 lb/hr)		6,600,000	
(a) Disposal	=		
TOTAL	=		6,600,000
4. Auxiliary plant			
(a) Liquid SO_2	=		
(b) H_2SO_4	=		5,650,000
(c) Modifications to existing H_2SO_4 plant	=		
TOTAL BOUNDARY LIMIT COSTS	=		25,460,000
5. Support Services			
(a) Power (10,200 KVA)	=	550,000	
(b) Steam (lbs/hr)	=		
(c) Water (1.8 Mgal/min)	=	680,000	
TOTAL	=		1,230,000
6. Special costs			
(a) ESP	=		
(b) Alternate processing equip.	=		
(c) General site costs @15% item 4	=	3,820,000	
TOTAL	=		3,820,000
TOTAL CAPITAL INVESTMENT	=		$30,510,000

WEAK SO_2 STREAM CONTROL COPPER SMELTERS

ANNUAL OPERATING COSTS

Smelter: Magma Copper - San Manuel, Arizona Control Process: Magnesium Oxide

Basis: Max. Gas Flow 550,000 SCFM Temp. at Control Point 500°F

Av. SO_2 Rate 34,500 lb/hr

COST COMPUTATION:

	Basis	Unit Cost	Annual Cost
1. Gas Conditioning & SO_2 Absorption			
a. Power $[7.0(\frac{960}{1060})^3 + 4.0]$	9.2 KWh/MSCFM	$ 0.015/KWh	$ 619,000
b. Make-up water $[3.0(\frac{960}{1060})^{.6}]$	2.8gal/MSCFM	$ 0.3/Mgal	226,000
c. Neutral. Limestone	0.09lb/MSCFM	$ 8.0/ton	97,000
TOTAL			942,000
2. SO_2 Handling (31,000 lb/hr)	See appropriate process section		
a. Chemicals			605,000
b. Power	0.1KWh/lbSO_2	$ 0.015/KWh	407,000
c. Steam			
d. Fuel Oil or Nat. Gas	0.037gal/lbSO_2	$ 0.3/gal	2,808,000
e. Water	0.2gal/lbSO_2	$ 0.3/Mgal	15,000
f. Disposal			
TOTAL			3,835,000
3. Labor (4¼ men/shift + 1 day)	39,310 hrs	$ 8/hr	315,000
4. Maintenance			
a. Gas Condn. @ 5% TCI	$ 8,225,000		411,000
b. SO_2 Handling @ 5 % TCI	$11,588,000		579,000
5. Insurance & Taxes @ 2 1/2% TCI	$24,860,000		622,000

TOTAL ANNUAL OPERATING COST FOR PRIMARY CONTROL PROCESS 6,704,000

6. Auxiliary Plant

a. H_2SO_4 Plant 690,000

b. Alternative

c. Incremental Costs Associated with Use of Existing Acid Plant –

TOTAL ANNUAL OPERATING COST $7,394,000

7. Annualized Capital Cost (basis $30,510,000) $4,012,000

8. Total Net Annualized Cost $6,881,000

9. Annual Cost/ton SO_2 Removed $ 56

WEAK SO_2 STREAM CONTROL COPPER SMELTERS

CAPITAL INVESTMENT COSTS

SMELTER: Magma Copper - San Manuel, Arizona

CONTROL PROCESS Citrate

BASIS: Maximum gas flow 550,000 SCFM

Average SO_2 rate 34,500 lbs/hr

Temperature at control point 500 °F

SPECIAL CONDITIONS

COST DETERMINATION

1. Gas conditioning cost	=	7,000,000	
(a) Adjusted cost	=	6,580,000	
2. SO_2 Absorption cost (includes 5% allowance)	=	3,470,000	
TOTAL	=	10,050,000	
(a) Retrofit allowance (25% C.I.)	=	2,510,000	
TOTAL	=		12,560,000
3. SO_2 Handling Section cost (32,800 lb/hr)		8,300,000	
(a) Disposal	=	200,000	
TOTAL	=		8,500,000
4. Auxiliary plant			
(a) Liquid SO_2	=		
(b) H_2SO_4	=		N/A
(c) Modifications to existing H_2SO_4 plant	=		
TOTAL BOUNDARY LIMIT COSTS	=		$21,060,000
5. Support Services			
(a) Power (9500 KVA)	=	530,000	
(b) Steam (lbs/hr)	=		
(c) Water (2.6 Mgal/min)	=	800,000	
TOTAL	=		1,330,000
6. Special costs			
(a) ESP	=		
(b) Alternate processing equip.	=		
(c) General site costs @15% item 4	=	3,160,000	
TOTAL	=		3,160,000
TOTAL CAPITAL INVESTMENT	=		$25,550,000

WEAK SO_2 STREAM CONTROL COPPER SMELTERS

ANNUAL OPERATING COSTS

Smelter: Magma Copper - San Manuel, Arizona Control Process: Citrate

Basis: Max. Gas Flow 550,000SCFM Temp. at Control Point 500°F

Av. SO_2 Rate 34,500 lb/hr

COST COMPUTATION:

	Basis	Unit Cost	Annual Cost
1. Gas Conditioning & SO_2 Absorption			
a. Power	9.2KWh/MSCFM	$ 0.015/KWh	619,000
b. Make-up water	2.8gal/MSCFM	$ 0.3/Mgal	226,000
c. Neutral. Limestone	0.09lb/MSCFM	$ 8.0/ton	97,000
TOTAL			942,000
2. SO_2 Handling (32,800 lb/hr)	See appropriate process section		963,000
a. Chemicals			
b. Power	0.075KWh/lbSO_2	$ 0.015/KWh	301,000
c. Steam			
d. Fuel Oil or Nat. Gas	3.6CF/lbSO_2	$ 1.25/MCF	1,204,000
e. Water (a) Process	1.5gal/lbSO_2	$ 0.3/Mgal	120,000
(b) Cooling	5.0gal/lbSO_2	$ 0.1/Mgal	134,000
TOTAL			2,722,000
3. Labor (4 3/4 man/shift)	41,610 hrs	$ 8/hr	333,000
4. Maintenance			
a. Gas Condn. @ 5 % TCI	$ 8,225,000		411,000
b. SO_2 Handling @ 4 % TCI	~~$ 12,638,000~~		~~506,000~~
5. Insurance & Taxes @ 2 1/2% TCI	$ 25,550,000		639,000

TOTAL ANNUAL OPERATING COST FOR PRIMARY CONTROL PROCESS 5,553,000

6. Auxiliary Plant

a. _____

b. Alternative _____ N/A

c. Incremental Costs Associated with Use of Existing Acid Plant —

TOTAL ANNUAL OPERATING COST 5,553,000

7. Annualized Capital Cost 3,360,000

8. Total Net Annualized Cost 5,430,000

9. Annual Cost/ton SO_2 Removed $41

ANNUAL OPERATING COSTS

Smelter: Phelps Dodge-Ajo, Arizona Control Process: *Dimethylaniline

Basis: Max. Gas Flow 55,000 SCFM Temp. at Control Point 450°F

Av. SO_2 Rate 10,100 lbs/hr *Note: Includes SO_2 liquifaction

COST COMPUTATION:

	Basis	Unit Cost	Annual Cost
1. Gas Conditioning			
a. Power $[7(\frac{910}{1060})^3]$	4.4KW/MSCFM	$ 0.015/KWh	30,000
b. Make-up water	2.7gal/MSCFM	$ 0.30/Mgal	22,000
c. Neutral. Limestone	0.09lb/MSCFM	$ 8/ton	10,000
TOTAL			62,000
2. SO_2 Absorption & Handling (9,700 lb/hr or 2.0%)	See appropriate process section		492,000
a. Chemicals			
b. Power (1) Absorption	8.0KW/MSCFM		54,000
(2) SO_2 Handling	0.02KWh/lbSO_2	$ 0.015/KWh	24,000
c. Stream	1.5lb/lbSO_2	$ 1.25/Mlbs	148,000
d. Water	42.4gal/MSCFM	$ 0.10/Mgal	114,000
TOTAL			832,000
3. Labor (2 man/shift)	17,520 hrs	$ 8/hr	140,000
4. Maintenance			
a. Gas Condn. @ 5 % TCI	$ 1,630,000		81,000
b. SO_2 Handling @ 4 % TCI	$ 7,200,000		288,000
5. Insurance & Taxes @ 2 1/2% TCI	$ 8,830,000		220,000

TOTAL ANNUAL OPERATING COST FOR PRIMARY CONTROL PROCESS 1,623,000

6. Auxiliary Plant

a. _____

b. Alternative _____ N/A

c. Incremental Costs Associated with Use of Existing Acid Plant

TOTAL ANNUAL OPERATING COST $1,623,000

7. Annualized Capital Cost $1,161,000

8. Total Net Annualized Cost $1,722,000

9. Annual Cost/ton SO_2 Removed $43

WEAK SO_2 STREAM CONTROL COPPER SMELTERS

CAPITAL INVESTMENT COSTS

SMELTER: Phelps-Dodge - Douglas, Arizona

CONTROL PROCESS Citrate Process

BASIS:	Roaster/Reverb		Converter	
Maximum gas flow	445,000	SCFM	265,000	SCFM
Average SO_2 rate	70,100	lbs/hr	43,000	lbs/hr
Temperature at control point	410	°F	350	°F

SPECIAL CONDITIONS

Two separate gas conditioning and SO_2 absorption systems with a common SO_2 regeneration section

COST DETERMINATION

1. Gas conditioning cost	=	6,100,000	4,350,000
(a) Adjusted cost	=	5,430,000	3,700,000
2. SO_2 Absorption cost	=	3,000,000	2,330,000
TOTAL	=	8,430,000	6,030,000
(a) Retrofit allowance (50 %C.I.)	=	4,220,000	(70%C.I.) 4,220,000
TOTAL	=		$22,900,000
3. SO_2 Handling Section cost (107,400 lb/hr)		16,000,000	
(a) Disposal	=	250,000	
TOTAL	=		16,250,000
4. Auxiliary plant			
(a) Liquid SO_2	=		
(b) H_2SO_4	=		
(c) Modifications to existing H_2SO_4 plant	=		
TOTAL BOUNDARY LIMIT COSTS	=		39,150,000
5. Support Services			
(a) Power (15,000 KVA)	=	650,000	
(b) Steam (lbs/hr)	=		
(c) Water (5.0 Mgal/min)	=	1,250,000	
TOTAL	=		1,900,000
6. Special costs			
(a) ESP	=		
(b) Alternate processing equip.	=		
(c) General site costs (15% item 4)	=	5,870,000	
TOTAL	=		5,870,000
TOTAL CAPITAL INVESTMENT	=		$46,920,000

WEAK SO_2 STREAM CONTROL COPPER SMELTERS

ANNUAL OPERATING COSTS FOR GAS CONDITIONING AND SO_2 ABSORPTION

Smelter: Phelps-Dodge-Douglas, Arizona Control Process: Citrate

A. Roaster/Reverb Gas Stream

Basis: Max. Gas Flow 445,000 SCFM Temp. at Control Point 410°F

Av. SO_2 Rate 70,100 lb/hr

COST COMPUTATION:

	Basis	Unit Cost	Annual Cost
1. Gas Conditioning & SO_2 Absorption			
a. Power $[7(\frac{870}{1060})^3 + 4]$	7.9KW/MSCFM	$0.015/KWh	430,000
b. Make-up water	2.7gal/MSCFM	$0.3/Mgal	176,000
c. Neutral. Limestone $3(\frac{870}{1060})^{.6}$	0.09lb/MSCFM	$8/ton	78,000
TOTAL			684,000

B. Converter Gas Stream

Basis: Max. Gas Flow 265,000 SCFM Temp. at Control Point 350°F

Av. SO_2 Rate 43,000 lb/hr

COST COMPUTATION:

	Basis	Unit Cost	Annual Cost
1. Gas Conditioning & SO_2 Absorption			
a. Power $[7(\frac{810}{1060})^3 + 4]$	7.1KW/MSCFM	$0.015/KWh	230,000
b. Make-up water	2.6gal/MSCFM	$0.3/Mgal	101,000
c. Neutral. Limestone $3(\frac{810}{1060})^{.6}$	0.09lb/MSCFM	$8/ton	47,000
TOTAL			378,000

GRAND TOTAL $1,062,000

WEAK SO_2 STREAM CONTROL COPPER SMELTERS

ANNUAL OPERATING COSTS

Smelter: Phelps-Dodge - Douglas, Arizona Control Process: Citrate

Basis: Separate Gas Handling Facilities - Central SO_2 Regeneration

Total Av. SO_2 Rate 113,100 lb/hr

COST COMPUTATION:

	Basis	Unit Cost	Annual Cost
1. Gas Conditioning & SO_2 Absorption			
Total for Both Gas Systems			
TOTAL			1,062,000
2. SO_2 Handling (107,400 lb/hr)	See appropriate process section		
a. Chemicals			3,152,000
b. Power	0.075KWh/lbSO_2	$0.015/KWh	986,000
c. Steam			
d. Fuel Oil or Nat. Gas	3.6CF/lbSO_2	$1.25/MCF	3,944,000
e. Water (a) Process	1.5gal/lbSO_2	$0.3/Mgal	394,000
(b) Cooling	5.0gal/lbSO_2	$0.1/Mgal	438,000
TOTAL			8,914,000
3. Labor 8 man/shift	70,080 hrs	$8/hr	561,000
4. Maintenance			
a. Gas Condn. @ 5 % TCI	$14,435,000		722,000
b. SO_2 Handling @ 4% TCI	$24,461,000		978,000
5. Insurance & Taxes @ 2 1/2% TCI	$46,920,000		1,173,000

TOTAL ANNUAL OPERATING COST FOR PRIMARY CONTROL PROCESS 13,410,000

6. Auxiliary Plant

a. _____

b. Alternative _____ N/A

c. Incremental Costs Associated with Use of Existing Acid Plant

TOTAL ANNUAL OPERATING COST $13,410,000

7. Annualized Capital Cost $ 6,170,000

8. Total Net Annualized Cost $11,642,000

9. Annual Cost/ton SO_2 Removed $27

WEAK SO_2 STREAM CONTROL COPPER SMELTERS

CAPITAL INVESTMENT COSTS

SMELTER: Phelps Dodge - Morenci, Arizona

CONTROL PROCESS Double Alkali

BASIS: Maximum gas flow 500,000 SCFM

Average SO_2 rate 43,000 lbs/hr

Temperature at control point 450 ^oF

SPECIAL CONDITIONS

Extremely congested operating area - limited space availability

COST DETERMINATION

1. Gas conditioning cost	=	4,100,000	
(a) Adjusted cost	=	3,690,000	
2. SO_2 Absorption cost (includes 5% allowance)	=	3,300,000	
TOTAL	=	6,990,000	
(a) Retrofit allowance (70%C.I.)	=	4,890,000	
TOTAL	=		11,880,000
3. SO_2 Handling Section cost (40,000 lb/hr)	=	10,000,000	
(a) Disposal	=		
TOTAL	=		
4. Auxiliary plant			
(a) Liquid SO_2	=		
(b) H_2SO_4	=		
(c) Modifications to existing H_2SO_4 plant	=		
TOTAL BOUNDARY LIMIT COSTS	=		21,880,000
5. Support Services			
(a) Power (8000 KVA)	=	520,000	
(b) Steam (lbs/hr)	=		
(c) Water (1.5 Mgal/min)	=	600,000	
TOTAL	=		1,120,000
6. Special costs			
(a) ESP	=		
(b) Alternate processing equip.	=		
(c) General site costs @ 20% Item 4	=	4,370,000	
TOTAL	=		4,370,000
TOTAL CAPITAL INVESTMENT	=		$27,370,000

WEAK SO_2 STREAM CONTROL COPPER SMELTERS

ANNUAL OPERATING COSTS

Smelter: Phelps Dodge - Morenci, Arizona Control Process: Double Alkali

Basis: Max. Gas Flow 500,000 SCFM Temp. at Control Point 450°F

Av. SO_2 Rate 43,000 lb/hr

COST COMPUTATION:

	Basis	Unit Cost	Annual Cost
1. Gas Conditioning & SO_2 Absorption			
a. Power $\left[5.25\left(\frac{910}{1060}\right)^3+4\right]$	7.3 KW/mSCFM	$0.015/kwh	$ 447,000
b. Make-up water $\left[3\left(\frac{910}{1060}\right)^{0.6}\right]$	2.7 gal/mSCFM	$0.3/mgal	198,000
c. Neutral. Limestone	0.07 lb/mSCFM	$8/ton	68,000
TOTAL			713,000
2. SO_2 Handling (40,800 lb/hr)			
a. Chemicals	See appropriate process sect.		5,003,000
b. Power	0.075kwh/lbSO_2	$0.015/kwh	375,000
c. Steam			
d. Fuel Oil or Nat. Gas			
e. Water	0.2 gal/lbSO_2	$0.3/mgal	20,000
f. Disposal	3.53 lb/lbSO_2	$3/ton	1,763,000
TOTAL			7,161,000
3. Labor 3 men/shift	26,280 hrs	$8/hr	210,000
4. Maintenance			
a. Gas Condn. @ 5% TCI	$ 6,273,000		314,000
b. SO_2 Handling @ 4% TCI	$15,610,000		624,000
5. Insurance & Taxes @ 1/2% TCI	$27,370,000		684,000
TOTAL ANNUAL OPERATING COST FOR PRIMARY CONTROL PROCESS			9,706,000
6. Auxiliary Plant			
a.			
b. Alternative			N/A
c. Incremental Costs Associated with Use of Existing Acid Plant			
TOTAL ANNUAL OPERATING COST			9,706,000
7. Annualized Capital Cost			3,599,000
8. Total Net Annualized Cost			7,770,000
9. Annual Cost/ton SO_2 Removed			$47

WEAK SO_2 STREAM CONTROL COPPER SMELTERS

CAPITAL INVESTMENT COSTS

SMELTER: Phelps Dodge - Morenci, Arizona

CONTROL PROCESS Citrate

BASIS: Maximum gas flow 500,000 SCFM

Average SO_2 rate 43,000 lbs/hr

Temperature at control point 450 °F

SPECIAL CONDITIONS

Extremely congested operating area - limited space availability

COST DETERMINATION

1. Gas conditioning cost	=	6,500,000	
(a) Adjusted cost	=	5,850,000	
2. SO_2 Absorption cost (includes 5% allowance)	=	3,300,000	
TOTAL	=	9,150,000	
(a) Retrofit allowance (70%C.I.)	=	6,400,000	
TOTAL	=		15,550,000
3. SO_2 Handling Section cost (40,800 lb/hr)		9,400,000	
(a) Disposal	=	200,000	
TOTAL	=		9,600,000
4. Auxiliary plant			
(a) Liquid SO_2	=		
(b) H_2SO_4	=		N/A
(c) Modifications to existing H_2SO_4 plant	=		
TOTAL BOUNDARY LIMIT COSTS	=		25,150,000
5. Support Services			
(a) Power (10,000 KVA)	=	560,000	
(b) Steam (lbs/hr)	=		
(c) Water (2.6 Mgal/min)	=	800,000	
TOTAL	=		1,360,000
6. Special costs			
(a) ESP	=		
(b) Alternate processing equip.	=		
(c) General site costs @ 20% Item 4	=	5,000,000	
TOTAL	=		5,000,000
TOTAL CAPITAL INVESTMENT	=		$31,510,000

WEAK SO_2 STREAM CONTROL COPPER SMELTERS

ANNUAL OPERATING COSTS

Smelter: Phelps Dodge - Morenci, Arizona Control Process: Citrate

Basis: Max. Gas Flow 500,000 SCFM Temp. at Control Point 450°F

Av. SO_2 Rate 43,000 lb/hr

COST COMPUTATION:

	Basis	Unit Cost	Annual Cost
1. Gas Conditioning & SO_2 Absorption			
a. Power $\left[7\left(\frac{910}{1060}\right)^3+4\right]$	8.4 kw/mSCFM	$0.015/kwh	$ 514,000
b. Make-up water $\left[3\left(\frac{910}{1060}\right)^{0.6}\right]$	2.7 gal/mSCFM	$0.3/mgal	198,000
c. Neutral. Limestone	0.09 lb/mSCFM	$8/ton	88,000
TOTAL			800,000
2. SO_2 Handling (40,000 lb/hr)			
a. Chemicals	See appropriate process sect.		1,198,000
b. Power	0.075kwh/lbSO_2	$0.015/kwh	375,000
c. Steam			
d. Fuel Oil or Nat. Gas	3.6 CF/lbSO_2	$1.25/MCF	1,498,000
e. Water (a) Process	1.5 gal/lbSO_2	$0.3/mgal	150,000
(b) Cooling	5.0 gal/lbSO_2	$0.1/mgal	166,000
TOTAL			3,387,000
3. Labor (4.75 men/shift)	41,610 hrs	$8/hr	333,000
4. Maintenance			
a. Gas Condn. @ 5% TCI	$ 9,945,000		497,000
b. SO_2 Handling @ 4% TCI	$15,210,000		608,000
5. Insurance & Taxes @ 2 1/2% TCI	$31,510,000		788,000

TOTAL ANNUAL OPERATING COST FOR PRIMARY CONTROL PROCESS 6,413,000

6. Auxiliary Plant

a. _____ _____

b. Alternative _____ N/A

c. Incremental Costs Associated with Use of Existing Acid Plant _____

TOTAL ANNUAL OPERATING COST 6,413,000

7. Annualized Capital Cost 4,144,000

8. Total Net Annualized Cost 6,470,000

9. Annual Cost/ton SO_2 Removed $39

WEAK SO_2 STREAM CONTROL COPPER SMELTERS

CAPITAL INVESTMENT COSTS

SMELTER: White Pine - White Pine, Michigan

CONTROL PROCESS Double Alkali

BASIS: Maximum gas flow 110,000 SCFM

Average SO_2 rate 18,500 lbs/hr

Temperature at control point 550 °F

SPECIAL CONDITIONS

This is a converter gas stream which operates only approximately 9 - 10 hours/day.

SO_2 rate has been averaged over 24 hours.

COST DETERMINATION

1. Gas conditioning cost	=	1,670,000	
(a) Adjusted cost	=	1,620,000	
2. SO_2 Absorption cost (includes 7% allowance)	=	1,530,000	
TOTAL	=	3,150,000	
(a) Retrofit allowance (15%C.I.)	=	470,000	
TOTAL	=		3,620,000
3. SO_2 Handling Section cost (17,500 lb/hr)	=	5,800,000	
(a) Disposal	=		
TOTAL	=		5,800,000
4. Auxiliary plant			
(a) Liquid SO_2	=		
(b) H_2SO_4	=		N/A
(c) Modifications to existing H_2SO_4 plant	=		
TOTAL BOUNDARY LIMIT COSTS	=		9,420,000
5. Support Services			
(a) Power (2600 KVA)	=	320,000	
(b) Steam (____ lbs/hr)	=		
(c) Water (____ Mgal/min)	=		
TOTAL	=		320,000
6. Special costs			
(a) ESP	=		
(b) Alternate processing equip.	=		
(c) General site costs (20% item 4)	=	1,880,000	
TOTAL	=		1,880,000
TOTAL CAPITAL INVESTMENT	=		11,620,000

WEAK SO_2 STREAM CONTROL COPPER SMELTERS

ANNUAL OPERATING COSTS

Smelter: White Pine - White Pine, Michigan Control Process: Double Alkali

Basis: Max. Gas Flow 110,000 SCFM Temp. at Control Point 550°F

Av. SO_2 Rate 18,500 lbs/hr

COST COMPUTATION:

	Basis	Unit Cost	Annual Cost
1. Gas Conditioning & SO_2 Absorption			
a. Power $\left[5.25\left(\frac{1010}{1060}\right)^3 + 4.0\right]$	8.5 kwh/mSCFM	$0.015/kwh	$ 114,000
b. Make-up water $\left[3\left(\frac{1010}{1060}\right)^{.6}\right]$	2.9 gal/mSCFM	$0.3/m gal	47,000
c. Neutral. Limestone	0.07 lb/mSCFM	$8/ton	15,000
TOTAL			176,000
2. SO_2 Handling (17,500 lb/hr)			
a. Chemicals	See appropriate process sect.		2,211,000
b. Power	0.075 kwh/lb SO_2	$0.3/m gal	161,000
c. Steam			
d. Fuel Oil or Nat. Gas			
e. Water	0.2 gal/lb SO_2	$0.3/m gal	9,000
f. Disposal	3.53 lb/lb SO_2	$3/ton	756,000
TOTAL			3,137,000
3. Labor (3 men/shift)	26,280 hrs	$8/hr	210,000
4. Maintenance			
a. Gas Condn. @ 5 % TCI	$ 1,863,000		93,000
b. SO_2 Handling @ 4 % TCI	$ 7,560,000		302,000
5. Insurance & Taxes @ 2 1/2% TCI	$11,620,000		291,000

TOTAL ANNUAL OPERATING COST FOR PRIMARY CONTROL PROCESS $ 4,209,000

6. Auxiliary Plant

a. _____

b. Alternative _____ N/A

c. Incremental Costs Associated with Use of Existing Acid Plant

TOTAL ANNUAL OPERATING COST $ 4,209,000

7. Annualized Capital Cost $ 1,528,000

8. Total Net Annualized Cost $ 3,345,000

9. Annual Cost/ton SO_2 Removed $47

WEAK SO_2 STREAM CONTROL COPPER SMELTERS

CAPITAL INVESTMENT COSTS

SMELTER: White Pine - White Pine, Michigan

CONTROL PROCESS Magnesium Oxide

BASIS: Maximum gas flow 110,000 SCFM

Average SO_2 rate 18,500 lbs/hr

Temperature at control point 550 °F

SPECIAL CONDITIONS

This is a converter gas stream which operates only approximately 9 - 10 hours/day.

SO_2 rate has been averaged over 24 hours.

COST DETERMINATION

1. Gas conditioning cost	=	2,450,000	
(a) Adjusted cost	=	2,380,000	
2. SO_2 Absorption cost (includes 7% allowance)	=	1,720,000	
TOTAL	=	4,100,000	
(a) Retrofit allowance (15%C.I.)	=	620,000	
TOTAL	=		4,720,000
3. SO_2 Handling Section cost (16,600 lb/hr)	=	4,400,000	
(a) Disposal	=		
TOTAL	=		4,400,000
4. Auxiliary plant			
(a) Liquid SO_2	=		
(b) H_2SO_4	=		3,750,000
(c) Modifications to existing H_2SO_4 plant	=		
TOTAL BOUNDARY LIMIT COSTS	=		12,870,000
5. Support Services			
(a) Power (3200 KVA)	=	350,000	
(b) Steam (____ lbs/hr)	=		
(c) Water (____ Mgal/min)	=		
TOTAL	=		350,000
6. Special costs			
(a) ESP	=		
(b) Alternate processing equip.	=		
(c) General site costs (20% item 4)	=	2,570,000	
TOTAL	=		2,570,000
TOTAL CAPITAL INVESTMENT	=		15,790,000

WEAK SO_2 STREAM CONTROL COPPER SMELTERS

ANNUAL OPERATING COSTS

Smelter: White Pine – White Pine, Michigan Control Process: Magnesium oxide

Basis: Max. Gas Flow 110,000 SCFM Temp. at Control Point 550°F

Av. SO_2 Rate 18,500 lb/hr

COST COMPUTATION:

	Basis	Unit Cost	Annual Cost
1. Gas Conditioning & SO_2 Absorption			
a. Power $\left[>7\left(\frac{1010}{1060}\right)^3+4\right]$	9.95 kwh/mSCFM	$0.015/kwh	$ 134,000
b. Make-up water	2.9 gal/mSCFM	$0.3/mgal	47,000
c. Neutral. Limestone	0.09 lb/mSCFM	$8/ton	19,000
TOTAL			200,000
2. SO_2 Handling (16,600 lb/hr)			
a. Chemicals	See appropriate process section		324,000
b. Power	0.1 kwh/lb SO_2	$0.015/kwh	203,000
c. Steam			
d. Fuel Oil or Nat. Gas	0.037 gal/lb SO_2	$0.3/gal	1,504,000
e. Water	0.2 gal/lb SO_2	$0.3/mgal	8,000
f. Disposal			
TOTAL			2,039,000
3. Labor (4¼ men/shift + 1 day)	39,310 hrs	$8/hr	315,000
4. Maintenance			
a. Gas Condn. @ 5 % TCI	$2,737,000		137,000
b. SO_2 Handling @ 5 % TCI	$6,378,000		319,000
5. Insurance & Taxes @ 2 1/2% TCI	$12,040,000		301,000

TOTAL ANNUAL OPERATING COST FOR PRIMARY CONTROL PROCESS 3,311,000

6. Auxiliary Plant

a. H_2SO_4 plant 450,000

b. Alternative

c. Incremental Costs Associated with Use of Existing Acid Plant

TOTAL ANNUAL OPERATING COST 3,761,000

7. Annualized Capital Cost (basis $15,790,000) 2,076,000

8. Total Net Annualized Cost 3,527,000

9. Annual Cost/ton SO_2 Removed $54

WEAK SO_2 STREAM CONTROL COPPER SMELTERS

CAPITAL INVESTMENT COSTS

SMELTER: White Pine - White Pine, Michigan

CONTROL PROCESS Citrate

BASIS: Maximum gas flow 110,000 SCFM

Average SO_2 rate 18,500 lbs/hr

Temperature at control point 550 °F

SPECIAL CONDITIONS

This is a converter gas stream which operates only approximately 9 - 10 hours/day.

SO_2 rate has been averaged over 24 hours.

COST DETERMINATION

1. Gas conditioning cost	=	2,450,000	
(a) Adjusted cost	=	2,380,000	
2. SO_2 Absorption cost (includes 7% allowance)	=	1,530,000	
TOTAL	=	3,910,000	
(a) Retrofit allowance (15%C.I.)	=	590,000	
TOTAL	=		4,500,000
3. SO_2 Handling Section cost (17,500 lb/hr)	=	5,900,000	
(a) Disposal	=	100,000	
TOTAL	=		6,000,000
4. Auxiliary plant			
(a) Liquid SO_2	=		
(b) H_2SO_4	=		
(c) Modifications to existing H_2SO_4 plant	=		N/A
TOTAL BOUNDARY LIMIT COSTS	=		10,500,000
5. Support Services			
(a) Power (3000 KVA)	=	330,000	
(b) Steam (lbs/hr)	=		
(c) Water (Mgal/min)	=		
TOTAL	=		330,000
6. Special costs			
(a) ESP	=		
(b) Alternate processing equip.	=		
(c) General site costs (20% item 4)	=	2,100,000	
TOTAL	=		2,100,000
TOTAL CAPITAL INVESTMENT	=		12,930,000

WEAK SO_2 STREAM CONTROL COPPER SMELTERS

ANNUAL OPERATING COSTS

Smelter: White Pine - White Pine, Michigan Control Process: Citrate

Basis: Max. Gas Flow 110,000 SCFM Temp. at Control Point 550°F

Av. SO_2 Rate 18,500 lb/hr

COST COMPUTATION:

	Basis	Unit Cost	Annual Cost
1. Gas Conditioning & SO_2 Absorption			
a. Power $\left[>7\left(\frac{1010}{1060}\right)^3+4\right]$	9.95 kwh/mSCFM	$0.015/kwh	$ 134,000
b. Make-up water	2.9 gal/mSCFM	$0.3/mgal	47,000
c. Neutral. Limestone	0.09 lb/mSCFM	$8/ton	19,000
TOTAL			200,000
2. SO_2 Handling (17,500 lb/hr)			
a. Chemicals	See appropriate process section		514,000
b. Power	0.075 kwh/lb SO_2	$0.015/kwh	161,000
c. Steam			
d. Fuel Oil or Nat. Gas	3.6 CF/lb SO_2	$1.25/MCF	643,000
e. Water a) Process	1.5 gal/lb SO_2	$0.3/mgal	64,000
f. ~~Disposal~~ b) Cooling	5.0 gal/lb SO_2	$0.1/mgal	71,000
TOTAL			1,453,000
3. Labor (4.75 men/shift)	41,610 hr	$8/hr	333,000
4. Maintenance			
a. Gas Condn. @ 5 % TCI	$ 2,737,000		137,000
b. SO_2 Handling @ 4 % TCI	$ 7,760,000		310,000
5. Insurance & Taxes @ 2 1/2% TCI	$12,930,000		323,000

TOTAL ANNUAL OPERATING COST FOR PRIMARY CONTROL PROCESS 2,756,000

6. Auxiliary Plant

a. _____

b. Alternative _____ N/A

c. Incremental Costs Associated with Use of Existing Acid Plant

TOTAL ANNUAL OPERATING COST 2,756,000

7. Annualized Capital Cost 1,700,000

8. Total Net Annualized Cost 2,720,000

9. Annual Cost/ton SO_2 Removed $38

TECHNICAL REPORT DATA
(Please read Instructions on the reverse before completing)

1. REPORT NO. EPA-600/2-76-008	2.	3. RECIPIENT'S ACCESSION NO.
4. TITLE AND SUBTITLE SO2 Control Processes for Non-ferrous Smelters		5. REPORT DATE January 1976
		6. PERFORMING ORGANIZATION CODE
7. AUTHOR(S) John C. Mathews, Faust L. Bellegia, Charles H. Gooding, and George E. Weant		8. PERFORMING ORGANIZATION REPORT NO.
9. PERFORMING ORGANIZATION NAME AND ADDRESS Research Triangle Institute P.O. Box 12194 Research Triangle Park, North Carolina 27709		10. PROGRAM ELEMENT NO. 1AB013/015; ROAP 21ADC-59/21AUY-40/41
		11. CONTRACT/GRANT NO. 68-02-1491
12. SPONSORING AGENCY NAME AND ADDRESS EPA, Office of Research and Development Industrial Environmental Research Laboratory Research Triangle Park, NC 27711		13. TYPE OF REPORT AND PERIOD COVERED Final; 6/74-6/75
		14. SPONSORING AGENCY CODE

15. SUPPLEMENTARY NOTES

16. ABSTRACT The report reviews and evaluates a number of absorption-based SO2 control systems and the application of these control systems to those U.S. primary copper smelters which generate weak SO2-containing gas streams. Capital and operating cost relationships have been developed for each specific process, covering a range of gas flows and SO2 concentrations. Separate general costs for gas pretreatment and the end-of-the-line SO2 utilization facilities (i.e., sulfuric acid, elemental sulfur, and liquid SO2 plants) are also provided. The 13 U.S. primary copper smelters which currently still generate weak SO2 streams have been reviewed with reference to their current operation and active programs in hand to control or eliminate weak SO2 streams. Appropriate SO2 control processes have been matched with the individual smelters and related capital and operating costs have been developed from the earlier established cost relationships.

17. KEY WORDS AND DOCUMENT ANALYSIS

a. DESCRIPTORS	b. IDENTIFIERS/OPEN ENDED TERMS	c. COSATI Field/Group
Air Pollution Absorption Sulfur Oxides Smelters Copper Sulfuric Acid Sulfur Cost Analysis	Air Pollution Control Stationary Sources Elemental Sulfur Liquid SO2	13B 14A 07B 11F

18. DISTRIBUTION STATEMENT Unlimited	19. SECURITY CLASS (This Report) Unclassified	21. NO. OF PAGES 383
	20. SECURITY CLASS (This page) Unclassified	22. PRICE

EPA Form 2220-1 (9-73)