PB83-117366

Acid Rain Mitigation Study. Volume II
FGD Cost Estimates (Appendices)

Radian Corp.
Austin, TX

Prepared for

Industrial Environmental Research Lab.
Research Triangle Park, NC

Sep 82

U.S. DEPARTMENT OF COMMERCE
National Technical Information Service
NTIS

PB83-117366

EPA-600/2-82-070b
September 1982

ACID RAIN MITIGATION STUDY
Volume II. FGD Cost Estimates
(Appendices)

by

J.G. Ball and W.R. Menzies

Radian Corporation
8501 Mo-Pac Blvd
Austin, Texas 78766

EPA Contract No: 68-02-3171

Work Assignment 12

William Baasel and P.P. Turner
Technical Support Staff
Industrial Environmental Research Laboratory
U.S. Environmental Protection Agency
Research Triangle Park, NC 27711

Prepared for:

INDUSTRIAL ENVIRONMENTAL RESEARCH LABORATORY
OFFICE OF RESEARCH AND DEVELOPMENT
U.S. ENVIRONMENTAL PROTECTION AGENCY
RESEARCH TRIANGLE PARK, NC 27711

TECHNICAL REPORT DATA
(Please read Instructions on the reverse before completing)

1. REPORT NO. EPA-600/2-82-070b	2.	3. RECIPIENT'S ACCESSION NO. PB83 117366
4. TITLE AND SUBTITLE Acid Rain Mitigation Study: Volume II. FGD Cost Estimates (Appendices)		5. REPORT DATE September 1982
		6. PERFORMING ORGANIZATION CODE
7. AUTHOR(S) J. G. Ball and W. R. Menzies		8. PERFORMING ORGANIZATION REPORT NO DCN 81-203-001-12-23
9. PERFORMING ORGANIZATION NAME AND ADDRESS Radian Corporation 8501 Mo-Pac Boulevard Austin, Texas 78766		10. PROGRAM ELEMENT NO.
		11. CONTRACT/GRANT NO. 68-02-3171, Task 12
12. SPONSORING AGENCY NAME AND ADDRESS EPA, Office of Research and Development Industrial Environmental Research Laboratory Research Triangle Park, NC 27711		13. TYPE OF REPORT AND PERIOD COVERED Task Final: 2/80-2/81
		14. SPONSORING AGENCY CODE EPA/600/13

15. SUPPLEMENTARY NOTES IERL-RTP project officer William D. Baasel is no longer with EPA. For details, contact P. P. Turner, Mail Drop 62, 919/541-2826. Volume III is the industrial boiler technical report. Volume I is the estimates technical report.

16. ABSTRACT The report gives results of work to provide a consistent set of capital investment and operating costs for flue gas desulfurization (FGD) systems retrofitted to existing industrial boilers. The investigation of wet limestone scrubbers and lime spray drying FGD systems included: (1) the apparent discontinuities in both FGD system capital investment and operating costs; (2) FGD retrofit factors applied to existing boilers based on published reports; and (3) differences between PEDCo Environmental, Inc. and TVA cost estimates for utility boiler FGD systems. These costing issues were examined on the bases of design scope, costing factors (for equipment installation, indirect investment, etc.), year of costs, inherent strengths and weaknesses, and published data of actual system costs. Recommendations are made for the cost bases to use in further acid rain studies.

17. KEY WORDS AND DOCUMENT ANALYSIS

a. DESCRIPTORS		b. IDENTIFIERS/OPEN ENDED TERMS	c. COSATI Field/Group	
Pollution	Calcium Carbonates	Pollution Control	13B	07B
Flue Gases	Limestone	Stationary Sources	21B	08G
Desulfurization	Calcium Oxides	Lime	07A,07D	
Cost Estimates	Rain	Acid Rain	05A,04A	04B
Boilers	Acidity		13A	
Industrial Processes			13H	

18. DISTRIBUTION STATEMENT Release to Public	19. SECURITY CLASS (This Report) Unclassified	21. NO OF PAGES 228
	20. SECURITY CLASS (This page) Unclassified	22. PRICE

EPA Form 2220-1 (9-73)

NOTICE

THIS DOCUMENT HAS BEEN REPRODUCED FROM THE BEST COPY FURNISHED US BY THE SPONSORING AGENCY. ALTHOUGH IT IS RECOGNIZED THAT CERTAIN PORTIONS ARE ILLEGIBLE, IT IS BEING RELEASED IN THE INTEREST OF MAKING AVAILABLE AS MUCH INFORMATION AS POSSIBLE.

1.G

NOTICE

This document has been reviewed in accordance with U.S. Environmental Protection Agency policy and approved for publication. Mention of trade names or commercial products does not constitute endorsement or recommendation for use.

ABSTRACT

The U.S. EPA has initiated a multiphased study of the acid rain problem. As part of Phase I, Radian Corporation investigated SO_2 emissions and controls in the industrial sector. The primary objective of this work was to provide a consistent set of capital investment and operating costs for flue gas desulfurization (FGD) systems applied to both industrial and electric utility boilers. Retrofit factors as well as the cost for FGD systems applied to new boilers were addressed. Wet limestone scrubbing and lime spray drying FGD systems were evaluated.

In conducting the work to provide a consistent set of capital investment and operating costs for FGD systems retrofitted to existing boilers, the following issues were investigated:

- The apparent discontinuities in both FGD system capital investment and operating costs as a function of boiler capacity in the region between industrial boilers and small utility boilers,

- FGD retrofit factors applied to existing boilers based on published reports, and

- The differences between PEDCo Environmental, Inc. and TVA cost estimates for utility boiler FGD systems.

These costing issues were examined on the bases of design scope, costing factors (for equipment installation, indirect investment, etc.), year of costs, inherent strengths and weaknesses, and published data of actual system costs. Recommendations are made for the cost bases to use in further acid rain studies.

TABLE OF CONTENTS

VOLUME I

Abstract. iii

List of Tables. ix

List of Figures xiii

1 INTRODUCTION AND SUMMARY 1-1

1.1 Introduction 1-1

1.2 Summary of Results 1-4

1.2.1 Utility and Industrial Boiler FGD System Costs. 1-4

1.2.2 FGD System Retrofit Factor Evaluation. . . . 1-15

1.2.3 TVA & PEDCo Environmental, Inc. FGD System Cost Comparison 1-16

2 FLUE GAS DESULFURIZATION SYSTEM COST COMPARISONS FOR INDUSTRIAL AND UTILITY BOILERS 2-1

2.1 Wet Limestone FGD System Cost Estimates. 2-2

2.1.1 Process Description. 2-2

2.1.2 Limestone FGD System Capital Investment. . . 2-7

2.1.2.1 Utility Boiler FGD System Capital Investment Estimates 2-9

2.1.2.2 Industrial Boiler FGD System Capital Investment Estimates 2-13

2.1.2.3 Comparison and Integration of Utility and Industrial Boiler FGD System Capital Investment Estimates 2-17

2.1.2.4 Comparison of TVA Utility Boiler FGD System Capital Investment Estimates with Actual Installed FGD System Investment. 2-32

2.1.2.5 Equipment on Actual Installed FGD Systems. . 2-36

2.1.3 Limestone FGD System Annual Operating Cost Estimates 2-39

2.1.3.1 Utility Boiler FGD System Annual Operating and Maintenance Cost Estimates 2-39

2.1.3.2 Industrial Boiler FGD System Annual Operating and Maintenance Cost Estimates . . 2-44

2.1.3.3 Comparison and Integration of Utility and Industrial Boiler FGD System Annual O&M Cost Estimates 2-48

Preceding page blank

TABLE OF CONTENTS (continued)

SECTION			PAGE
	2.1.4	Use of the Cost Estimate Results	2-58
2.2	Lime Spray Dryer FGD System Cost Estimates		2-60
	2.2.1	Process Description.	2-60
	2.2.2	Lime Spray Dryer FGD System Capital Investment	2-64
	2.2.2.1	Utility Boiler Lime Spray Dryer Capital Investment Estimates	2-65
	2.2.2.2	Industrial Boiler FGD System Capital Investment Estimates	2-68
	2.2.2.3	Comparison and Integration of Utility and Boiler FGD System Capital Investment Estimates	2-70
	2.2.3	Dry Scrubbing FGD System Annual O&M Cost Estimates	2-81
	2.2.3.1	Utility Boiler FGD System Annual O&M Cost Estimates	2-81
	2.2.3.2	Industrial Boiler FGD System Annual O&M Cost Estimates	2-85
	2.2.3.3	Comparison and Integration of Utility and Industrial Boiler FGD System Annual Cost Estimates	2-88
	2.2.4	Use of the Cost Estimate Results	2-98
References			2-100
3	FLUE GAS DESULFURIZATION SYSTEM RETROFIT COST ESTIMATES FOR UTILITY BOILERS		3-1
3.1	Review of Existing Studies		3-2
3.2	Current Studies.		3-14
3.3	Recommended Flue Gas Desulfurization Retrofit Factors.		3-16
	3.3.1	Utility Boilers.	3-16
	3.3.2	Industrial Boilers	3-18
References			3-19

TABLE OF CONTENTS (continued)

SECTION		PAGE
4	COMPARISON OF TENNESSE VALLEY AUTHORITY AND PEDCO ENVIRONMENTAL, INC. CAPITAL INVESTMENT AND ANNUAL COST ALGORITHMS FOR UTILITY BOILER FGD SYSTEMS.	4-1
4.1	Equipment Configuration Basis.	4-1
4.2	Economic Premises.	4-2
4.3	Capital Investment Algorithms.	4-2
4.4	Comparison of TVA and PEDCo Capital Investment . . .	4-2
4.5	Annual Operating Cost and Revenue Algorithms	4-8
4.6	Comparison of TVA and PEDCo Annual Operating Cost and Annual Revenue Requirement	4-11
4.7	Summary.	4-11
	References	4-15

VOLUME II

APPENDICES		
A	Utility Boiler Limestone FGD System Premises	A-1
B	Industrial Boiler Limestone FGD System Premises.	B-1
C	Utility Boiler Limestone FGD System Premises on an "Industrial Basis"	C-1
D	Utility Boiler Lime Dry Scrubbing FGD System Premises. . . .	D-1
E	Industrial Boiler Lime Dry Scrubbing FGD System Premises . .	E-1
F	Description of TVA and PEDCo Environmental, Inc. Investment/Cost Components	F-1
G	Utility Boiler Lime FGD System Costs Comparison of TVA's Old and New Premises and PEDCo Environmental, Inc. Costs	G-1

LIST OF TABLES

NUMBER		PAGE
1.2.1-1	Industrial Boiler Limestone FGD System Capital Investment. .	1-7
1.2.1-2	Industrial Boiler Limestone FGD System First Year Operating and Maintenance Costs.	1-8
1.2.1-3	Utility Boiler Limestone FGD System Capital Investment (1980$).	1-9
1.2.1-4	Utility Boiler Limestone FGD System First Year Operating and Maintenance Costs (1981$).	1-10
2.1.2-1	TVA Utility Boiler Wet Limestone FGD System Investment Bases.	2-10
2.1.2-2	TVA Utility Boiler Wet Limestone FGD System Design Scope . .	2-11
2.1.2-3	Utility Boiler Wet Limestone FGD System Capital Investment (1980$).	2-12
2.1.2-4	Industrial Boiler Wet Limestone FGD System Investment Bases.	2-14
2.1.2-5	Radian Industrial Boiler Wet Limestone FGD System Design Scope.	2-15
2.1.2-6	Radian Industrial Boiler Limestone FGD System Investment . .	2-16
2.1.2-7	Impact of Different Design Scope on TVA Utility Boiler FGD System Capital Investment.	2-20
2.1.2-8	Utility Boiler Limestone FGD System Investment on an Industrial Basis	2-21
2.1.2-9	Industrial Boiler Limestone FGD System Investment Using Industrial Installation Factors and Based on TVA Indirect Investment Algorithm	2-24
2.1.2-10	Limestone Wet Scrubbing FGD System Installation Factors. . .	2-26
2.1.2-11	Industrial Boiler Limestone FGD System Investment Using TVA Costing Algorithm for Both Equipment Installation and Indirect Investment.	2-27
2.1.2-12	Comparison of PEDCo Adjusted Capital Investment with TVA Estimates for Comparable Operating FGD Systems	2-33
2.1.2-13	Comparison of Final Adjusted PEDCo Capital Investment to TVA Estimates for Similar Operating FGD Systems.	2-34
2.1.2-14	Equipment Summary for 62 Operational Utility FGD Systems . .	2-37
2.1.3-1	TVA Utility Boiler Limestone FGD System Economic Premises and Assumptions.	2-40
2.1.3-2	Utility Boiler Limestone FGD System First Year Operating and Maintenance Costs.	2-41

Preceding page blank

LIST OF TABLES (continued)

NUMBER		PAGE
2.1.3-3	Radian Industrial Boiler Limestone FGD System Economic Assumptions.	2-45
2.1.3-4	Industrial Boiler Limestone FGD System First Year Operating and Maintenance Costs Using Radian Material and Operating Costs and Overhead Algorithm	2-46
2.1.3-5	Utility Boiler Limestone FGD System First Year Operating and Maintenance Costs on an Industrial Basis	2-49
2.1.3-6	Industrial Boiler Limestone FGD System First Year Operating and Maintenance Costs Using TVA Material and Operating Costs Plus Overhead Algorithm (Radian Investment Basis).	2-52
2.1.3-7	Industrial Boiler Limestone FGD System First Year Operating and Maintenance Costs Using TVA Material and Operating Costs Plus Overhead Algorithm (TVA Investment Basis, i.e. Installation Factors).	2-54
2.1.4-1	Summary of Limestone FGD System Cost Studies	2-59
2.2.2-1	Utility Boiler Lime Spray Dryer FGD System Capital Investment	2-67
2.2.2-2	Radian Industrial Boiler Lime Dry Scrubbing FGD System Capital Investment Estimates	2-69
2.2.2-3	Utility Boiler Lime Dry Scrubbing FGD System Capital Investment on an Industrial Basis.	2-72
2.2.2-4	Industrial Boiler Lime Dry Scrubbing FGD System Investment Calculated Using Industrial Installation Factors (Radian) and TVA Indirect Investment Algorithm.	2-75
2.2.2-5	Industrial Boiler Lime Dry Scrubbing FGD System Investment Using TVA Costing Algorithms for Both Equipment Installation and Indirect Investment.	2-77
2.2.3-1	TVA Utility Boiler Dry Scrubbing FGD System Economic Premises and Assumptions	2-82
2.2.3-2	Utility Boiler Lime Dry Scrubbing FGD System First-Year Operating and Maintenance Costs.	2-83
2.2.3-3	Industrial Boiler Lime Dry Scrubbing FGD System First-Year Operating and Maintenance Costs Using Radian Material and Operating Costs and Overhead Algorithm	2-86
2.2.3-4	Utility Boiler Lime Dry Scrubbing FGD System First-Year Operating and Maintenance Costs on an Industrial Basis . . .	2-89
2.2.3-5	Industrial Boiler Lime Dry Scrubbing FGD System First-Year Operating and Maintenance Costs Using TVA Material and Operating Costs Plus Overhead Algorithm (Radian Investment Basis)	2-91

LIST OF TABLES (continued)

NUMBER		PAGE
2.2.3-6	Industrial Boiler Lime Dry Scrubbing FGD System First-Year Operating and Maintenance Costs Using TVA Material and Operating Costs Plus Overhead Algorithms (TVA Investment Basis, i.e., Installation Factors)	2-94
2.2.3-7	Summary of Lime Dry Scrubbing FGD Cost Studies	2-99
3.1-1	1972 M.W. Kellogg FGD System Retrofit Study	3-3
3.1-2	Retrofit Factors From TVA Analysis (3.5% S Coal, 90% SO_2 Removal, On-site Solids Disposal)	3-5
3.1-3	PEDCo Power Plant FGD Capital Investment Retrofit Factors	3-7
3.2-1	Investment Retrofit Factor Evaluation	3-15
3.3-1	Capital Investment Components	3-17
4.1-1	Comparison of TVA and PEDCo Equipment Configuration and Operating Conditions	4-3
4.2-1	Comparison of TVA and PEDCo Economic Premises	4-5
4.3-1	Comparison of TVA and PEDCo Capital Investment Algorithms	4-6
4.4-1	Design Bases for TVA and PEDCo Total Capital Investment Comparison	4-7
4.4-2	500 MWe Lime Slurry FGD System Capital Investment (3.5% S Coal, 90% SO_2 Removal, 1980$)	4-9
4.5-1	Comparison of TVA and PEDCo Annual Operating Cost and Revnue Algorithms	4-10
4.6-1	500 MWe Lime Slurry FGD Annual Costs and Revenue (3.5% S Coal, 90% SO_2 Removal)	4-12
4.6-2	500 MWe Lime Slurry FGD Annual Costs on Same Unit Cost and Operating Basis (3.5% S Coal, 90% SO_2 Removal, 0.63 Capacity Factor)	4-13

LIST OF FIGURES

FIGURE		PAGE
1.2.1-1	Capital Investment for Industrial and Utility Boiler Wet Limestone FGD Systems.	1-13
1.2.1-2	First Year O&M Costs for Industrial and Utility Wet Limestone FGD Systems.	1-14
2.1.1-1	Limestone FGD Process Flow Diagram	2-3
2.1.2-1	Comparison of Total Capital Investment for Small Industrial and Large Utility Boiler FGD Systems.	2-8
2.1.2-2	Difference in Capital Investment for Utility and Industrial Boiler Limestone FGD Systems.	2-18
2.1.2-3	Impact of Major Equipment Components on Costs of Large Utility Boiler FGD Systems	2-22
2.1.2-4	Impact of Using a Utility Indirect Investment Algorithm on Small Industrial Boiler FGD Systems	2-25
2.1.2-5	Impact of Using Large System Installation Factors and Utility Indirect Investment Algorithm on Small Industrial Boiler FGD Systems.	2-28
2.1.2-6	Comparison of All Cases for Limestone Wet Scrubbing FGD System Investment.	2-30
2.1.2-7	Equipment on 62 Operational Utility Boiler FGD Systems . . .	2-38
2.1.3-1	Utility Boiler Limestone FGD System First-Year Operating and Maintenance Costs.	2-42
2.1.3-2	Differences in First-Year Operating and Maintenance Costs for Utility and Industrial Boiler FGD Systems.	2-47
2.1.3-3	Impact of Putting Large Utility Boiler FGD Systems on an Industrial Basis	2-50
2.1.3-4	Impact of Putting Small Industrial Boiler FGD Systems on a Large Utility Boiler FGD System Basis	2-53
2.1.3-5	Impact of Putting Small Industrial Boiler FGD Systems on a Large Utility Boiler FGD System Basis, Including Investment	2-55

Preceding page blank

LIST OF FIGURES (continued)

FIGURE		PAGE
2.1.3-6	Comparison of All Cases for Wet Limestone Scrubbing FGD System First-Year Operating and Maintenance Costs.	2-56
2.2.1-1	Lime Spray Dryer Process Flow Diagram.	2-61
2.2.2-1	Differences in Capital Investment for Utility and Industrial Boiler FGD Systems.	2-71
2.2.2-2	Impact of Major Equipment Components on Costs of Large Utility Boiler FGD Systems	2-73
2.2.2-3	Impact of Using Utility Indirect Algorithm on Small Industrial Boiler FGD Systems.	2-76
2.2.2-4	Impact of Using Large System Installation Factors and a Utility Indirect Investment Algorithm on Small Industrial Boiler FGD Systems.	2-78
2.2.2-5	Comparison for All Low Sulfur Cases for Lime Dry Scrubbing FGD System Investment.	2-79
2.2.3-1	Utility Boiler FGD System First-Year Operating and Maintenance Costs.	2-84
2.2.3-2	Difference in First-Year Operating and Maintenance Costs for Utility and Industrial Boiler FGD Systems.	2-87
2.2.3-3	Impact of Putting Large Utility Boiler FGD Systems on an Industrial Basis.	2-90
2.2.3-4	Impact of Putting Small Industrial Boiler FGD Systems on a Large Utility System Basis	2-92
2.2.3-5	Impact of Putting Small Industrial Boiler FGD Systems on a Large Utility Boiler FGD System Basis, Including Investment	2-95
2.2.3-6	Comparison of all Low Sulfur Cases for Lime Dry Scrubbing FGD System First Year Operating and Maintenance Costs. . . .	2-96

VOLUME II

INTRODUCTION

There is a growing concern about the acidity of precipitation in the northeastern United States and Canada. Acidic precipitation is thought by many scientists to kill aquatic and plant life, damage crop-growing soil, and accelerate erosion and damage to buildings. Although the mechanisms producing acid rain are not clearly understood, sulfur dioxide (SO_2) and oxides of nitrogen (NO_x) are thought to be the precursors of the chemicals that cause acid rain. Large quantities of SO_2 and NO_x are produced by various combustion and non-combustion processes in both the utility and industrial sectors.[1] Reducing these SO_2 and NO_x emissions to the atmosphere should reduce the potential for acid rain.

Because this concern is increasing, the United States Environmental Protection Agency (EPA) initiated a multi-phased study of the acid rain problem. As one part of Phase I, Radian Corporation investigated SO_2 emissions and controls in the industrial sector, while Teknekron, Inc. made a similar study of the utility sector. The results of these studies would provide direction for additional phases. The objectives of the later phases are to investigate SO_2 sources in more detail than Phase I, to investigate NO_x sources, and to model source/receptor relationships.

In support of the Phase I efforts, Radian Corporation was asked to provide a consistent set of capital investment and operating costs for flue gas desulfurization (FGD) systems applied to both industrial and electric utility boilers. Since existing SO_2 sources are the primary targets for reducing the impacts of acid rain, retrofit factors as well as the cost for

FGD systems applied to new boilers were addressed. This report summarizes the results of that cost work.

The cost estimates used as the basis for this study are:

- Utility boiler FGD systems by TVA and PEDCo Environmental, Inc., and
- Industrial boiler FGD systems by Radian Corporation.

Wet limestone scrubbing and lime spray drying FGD systems were evaluated. The U.S. EPA has recognized that there appear to be discrepancies in these published cost estimates in two areas:

- Utility boiler limestone FGD system costs prepared by TVA and PEDCo Environmental, Inc., and
- FGD system costs in the capacity transition from industrial boilers to small utility boilers.

To achieve the primary objective of the study (provide a consistent set of capital investment and operating costs for FGD systems retrofitted to existing boilers), the following issues were investigated:

- The apparent discontinuities in both FGD system capital investment and operating costs as a function of boiler capacity in the region between industrial boilers and small utility boilers,
- FGD retrofit factors applied to existing boilers based on published reports, and
- The differences between PEDCo Environmental, Inc. and TVA cost estimates for utility boiler FGD systems.

The above costing issues are examined on the bases of design scope, costing factors*, year of costs, inherent strengths and weaknesses, and published data of actual system costs. Recommendations are made for the cost bases to use in further acid rain studies.

This report contains two volumes. Volume I is divided into four major sections. Section 1 contains an introduction and summary of results. The three issues described above are addressed in Sections 2, 3, and 4, respectively. Volume II, Appendices, contains the technical support for the study.

---

*For equipment installation, indirect investment, etc.

APPENDIX A

UTILITY BOILER LIMESTONE FGD SYSTEM PREMISES

MATERIAL BALANCES

EQUIPMENT LIST

CAPITAL INVESTMENT ESTIMATES

ANNUAL O&M COSTS

ANNUAL REVENUE REQUIREMENTS

APPENDIX A

TVA estimated the capital and operating costs for new limestone FGD systems applied to 100, 250, 500, and 1000 MW boilers. The computer output from TVA's cost estimating program for each case is presented in this Appendix. There are 16 pages of output for each case, and the following information is included:

1. Plant heat rate
2. Coal analysis
3. Flue gas characteristics
4. Limestone analysis
5. Complete FGD system design scope
6. Material and energy balances
7. FGD system operating conditions
8. Sludge pond design criteria
9. FGD system process stream characterization
10. Equipment list and costs
11. Equipment installation costs
12. Indirect investment costs
13. Annual O&M costs
14. Annual revenue requirements

In order to facilitate use of these outputs, the process capacity (100, 250, 500, or 1000 MW) is stamped on each page.

EXAMPLE UTILITY, LIMESTONE, NEW ECONOMIC PREMISES CASE 005

*** INPUTS ***

BOILER CHARACTERISTICS

MEGAWATTS = 100. UTILITY BASIS - NEW POND BASIS

BOILER HEAT RATE = 9500. BTU/KWH

EXCESS AIR = 39. PERCENT, INCLUDING LEAKAGE

HOT GAS TEMPERATURE = 300. DEG F

COAL ANALYSIS, WT % AS FIRED :

C	H	O	N	S	CL	ASH	H2O
66.70	3.80	5.60	1.30	3.30	0.14	15.10	4.00

SULFUR OVERHEAD = 92.0 PERCENT

ASH OVERHEAD = 80.0 PERCENT

HEATING VALUE OF COAL = 11700. BTU/LB

FLYASH REMOVAL	EFFICIENCY, %	EMISSION, LBS/M BTU
UPSTREAM OF SCRUBBER	99.7	0.03
WITHIN SCRUBBER	50.0	0.02

COST OF UPSTREAM FLYASH REMOVAL EXCLUDED

ALKALI

LIMESTONE :

CACO3 = 97.15 WT % DRY BASIS
SOLUBLE MGO = 0.0
INERTS = 2.85
MOISTURE CONTENT = 5.00 LB H2O/100 LBS DRY LIMESTONE
LIMESTONE HARDNESS WORK INDEX FACTOR = 10.00
LIMESTONE DEGREE OF GRIND FACTOR = 1.35

FLY ASH :

SOLUBLE CAO = 0.0 WT %
SOLUBLE MGO = 0.0
INERTS = 100.00

RAW MATERIAL HANDLING AREA

NUMBER OF REDUNDANT ALKALI PREPARATION UNITS = 0

Reproduced from best available copy.

SCRUBBER SYSTEM VARIABLES

NUMBER OF OPERATING SCRUBBING TRAINS = 1

NUMBER OF REDUNDANT SCRUBBING TRAINS = 1

NUMBER OF BEDS = 3

NUMBER OF GRIDS = 4

HEIGHT OF SPHERES PER BED = 5.0 INCHES

LIQUID-TO-GAS RATIO = 55. GAL/1000 ACF(SATD)

SCRUBBER GAS VELOCITY = 12.5 FT/SEC

INDUCED DRAFT SCRUBBER FAN OPTION

SCRUBBER PRESSURE = 14.7 PSIA

STOICHIOMETRY = 1.25 MOLE CACO3 ADDED AS LIMESTONE
PER MOLE (SO2+2HCL) ABSORBED

SO2 REMOVAL = 90. PERCENT

ENTRAINMENT LEVEL = 0.10 WT %

ENT RESIDENCE TIME = 12.0 MIN

SO2 OXIDIZED IN SYSTEM = 30.0 PERCENT

SOLIDS IN RECIRCULATED SLURRY = 15.0 WT %

SOLIDS DISPOSAL SYSTEM

COST OF LAND = 5000.00 DOLLARS/ACRE

SOLIDS IN SYSTEM SLUDGE DISCHARGE = 35.0 WT %

MAXIMUM POND AREA = 9999. ACRES

MAXIMUM EXCAVATION = 25.00 FT

DISTANCE TO POND = 5280. FT

POND LINED WITH 12.0 INCHES CLAY

STEAM REHEATER (IN-LINE)

SATURATED STEAM TEMPERATURE = 470. DEG F

HEAT OF VAPORIZATION OF STEAM = 751. BTU/LB

OUTLET FLUE GAS TEMPERATURE = 175. DEG F

SUPERFICIAL GAS VELOCITY (FACE VELOCITY) = 25.0 FT/SEC

EXAMPLE UTILITY, LIMESTONE, NEW ECONOMIC PREMISES CASE 005

*** OUTPUTS ***

HOT GAS TO SCRUBBER

	MOLE PERCENT	LB-MOLE/HR	LB/HR
CO2	12.338	0.4509E+04	0.1985E+06
HCL	0.006	0.2290E+01	0.8351E+02
SO2	0.214	0.7829E+02	0.5015E+04
O2	5.560	0.2032E+04	0.6502E+05
N2	75.227	0.2749E+05	0.7704E+06
H2O	6.654	0.2432E+04	0.4381E+05

SO2 CONCENTRATION IN SCRUBBER INLET GAS = 2142. PPM
= 5.28 LBS / MILLION BTU

FLYASH EMISSION = 0.03 LBS/MILLION BTU
= 0.015 GRAINS/SCF (WET) OR 29. LB/HR

SOLUBLE CAO IN FLY ASH = 0. LB/HR
SOLUBLE MGO IN FLY ASH = 0.

HOT GAS FLOW RATE = .2309E+06 SCFM (60 DEG F, 14.7 PSIA)
= .3374E+06 ACFM (300. DEG F, 14.7 PSIA)

CORRESPONDING COAL FIRING RATE = .8120E+05 LB/HR

HOT GAS HUMIDITY = 0.042 LB H2O/LB DRY GAS

WET BULB TEMPERATURE = 124. DEG F

WET GAS FROM SCRUBBER

	MOLE PERCENT	LB-MOLE/HR	LB/HR
CO2	11.716	0.4582E+04	0.2017E+06
HCL	0.000	0.1145E+00	0.4175E+01
SO2	0.020	0.7829E+01	0.5015E+03
O2	5.169	0.2021E+04	0.6469E+05
N2	70.300	0.2749E+05	0.7704E+06
H2O	12.795	0.5004E+04	0.9015E+05

SO2 CONCENTRATION IN SCRUBBER OUTLET GAS = 200. PPM

FLYASH EMISSION = 0.02 LBS/MILLION BTU
= 0.007 GRAINS/SCF (WET) OR 15. LB/HR

TOTAL WATER PICKUP = 95. GPM
INCLUDING 2.3 GPM ENTRAINMENT

WET GAS FLOW RATE = .2470E+06 SCFM (60 DEG F, 14.7 PSIA)
= .2775E+06 ACFM (124. DEG F, 14.7 PSIA)

WET GAS SATURATION HUMIDITY = 0.087 LB H2O/LB DRY GAS

Reproduced from best available copy.

FLUE GAS TO STACK

	MOLE PERCENT	LB-MOLE/HR	LB/HR
CO2	11.697	0.4582E+04	0.2017E+06
HCL	0.000	0.1149E+00	0.4175E+01
SO2	0.020	0.7829E+01	0.5015E+03
O2	5.160	0.2021E+04	0.6467E+05
N2	70.188	0.2749E+05	0.7704E+06
H2O	12.934	0.5067E+04	0.9120E+05

SPECIFIED SO2 REMOVAL EFFICIENCY = 90.0 %

CALCULATED SO2 EMISSION = 0.53 POUNDS PER MILLION BTU

CALCULATED SO2 CONCENTRATION IN STACK GAS = 200. PPM

FLYASH EMISSION = 0.02 LBS/MILLION BTU
= 0.007 GRAINS/SCF (WET) OR 15. LB/HR

STACK GAS FLOW RATE = .2474E+06 SCFM (60 DEG F, 14.7 PSIA)
= .3022E+06 ACFM (175. DEG F, 14.7 PSIA)

STEAM REHEATER (IN-LINE)

SUPERFICIAL GAS VELOCITY (FACE VELOCITY) = 25.0 FT/SEC

SQUARE PIPE PITCH = 2 TIMES ACTUAL PIPE O.D.

SATURATED STEAM TEMPERATURE = 470. DEG F

OUTLET FLUE GAS TEMPERATURE = 175. DEG F

REQUIRED HEAT INPUT TO REHEATER = 0.1316E+08 BTU/HR

STEAM CONSUMPTION = 0.1752E+05 LBS/HR

OUTSIDE PIPE DIAMETER, IN.	PRESSURE DROP, IN. H2O	HEAT TRANSFER COEFFICIENT, BTU/HR FT2 DEG F
1.00	0.65	0.2098E+02

	REHEATER OUTSIDE PIPE AREA, SQ FT PER TRAIN	NUMBER OF PIPES PER BANK PER TRAIN	NUMBER OF BANKS (ROWS) PER TRAIN
INCONEL	0.1227E+04	81	4
CORTEN	0.7058E+03	81	2
TOTAL	0.1933E+04	81	6

WATER BALANCE INPUTS

RAINFALL(IN/YEAR)	50.
POND SEEPAGE(CM/SEC)*10**8	50.
POND EVAPORATION(IN/YEAR)	32.

WATER BALANCE OUTPUTS

WATER AVAILABLE

RAINFALL	231. GPM	113485. LB/HR
ALKALI	1. GPM	461. LB/HR
TOTAL	232. GPM	113946. LB/HR

WATER REQUIRED

HUMIDIFICATION	93. GPM	46329. LB/HR
ENTRAINMENT	2. GPM	1126. LB/HR
DISPOSAL WATER	44. GPM	22176. LB/HR
HYDRATION WATER	2. GPM	1197. LB/HR
CLARIFIER EVAPORATION	0. GPM	0. LB/HR
POND EVAPORATION	155. GPM	77534. LB/HR
SEEPAGE	29. GPM	14328. LB/HR
TOTAL WATER REQUIRED	326. GPM	162709. LB/HR
NET WATER REQUIRED	94. GPM	46763. LB/HR

SCRUBBER SYSTEM

TOTAL NUMBER OF SCRUBBING TRAINS (OPERATING+REDUNDANT) = 2

SO2 REMOVAL = 90.0 PERCENT

PARTICULATE REMOVAL IN SCRUBBER SYSTEM = 50.0 PERCENT

TCA PRESSURE DROP ACROSS 3 BEDS = 8.6 IN. H2O

TOTAL SYSTEM PRESSURE DROP = 14.7 IN. H2O

OVERRIDE TOTAL SYSTEM PRESSURE DROP = 20.0 IN. H2O

SPECIFIED LIQUID-TO-GAS-RATIO = 55. GAL/1000 ACF(SATD)

LIMESTONE ADDITION = 0.9214E+04 LB/HR DRY LIMESTONE

SPECIFIED LIMESTONE STOICHIOMETRY = 1.25 MOLE CACO3 ADDED AS LIMESTONE PER MOLE (SO2+2HCL) ABSORBED

SOLUBLE CAO FROM FLY ASH = 0.0 MOLE PER MOLE (SO2+2HCL) ABSORBED

TOTAL SOLUBLE MGO = 0.0 MOLE PER MOLE (SO2+2HCL) ABSORBED

TOTAL STOICHIOMETRY = 1.25 MOLE SOLUBLE (CA+MG) PER MOLE (SO2+2HCL) ABSORBED

SCRUBBER INLET LIQUOR PH = 5.66

MAKE UP WATER = 94. GPM

CROSS-SECTIONAL AREA PER SCRUBBER = 370. SQ FT

SYSTEM SLUDGE DISCHARGE

SPECIES	LB-MOLE/HR	LB/HR	SOLID COMP. WT %	LIQUID COMP. PPM
CASO3 .1/2 H2O	0.4930E+02	0.6365E+04	52.92	
CASO4 .2H2O	0.2088E+02	0.3594E+04	29.88	
CACO3	0.1788E+02	0.1790E+04	14.88	
INSOLUBLES	----------	0.2773E+03	2.31	
H2O	0.1231E+04	0.2218E+05		
CA++	0.1384E+01	0.5544E+02		2484.
MG++	0.0	0.0		0.
SO3--	0.3637E-01	0.2911E+01		130.
SO4--	0.2595E+00	0.2492E+02		1116.
CL-	0.2176E+01	0.7714E+02		3453.

TOTAL DISCHARGE FLOW RATE = 0.3436E+05 LB/HR
= 54. GPM

TOTAL DISSOLVED SOLIDS IN DISCHARGE LIQUID = 7169. PPM

DISCHARGE LIQUID PH = 7.37

Reproduced from best available copy.

SCRUBBER SLURRY BLEED

SPECIES	LB-MOLE/HR	LB/HR
CASO3 .1/2 H2O	0.4930E+02	0.6365E+04
CASO4 .2H2O	0.2088E+02	0.3594E+04
CACO3	0.1788E+02	0.1790E+04
INSOLUBLES	----------	0.2773E+03
H2O	0.3756E+04	0.6766E+05
CA++	0.4223E+01	0.1693E+03
MG++	0.0	0.0
SO3--	0.1110E+00	0.8884E+01
SO4--	0.7917E+00	0.7605E+02
CL-	0.6639E+01	0.2354E+03
AD=	0.0	0.0

TOTAL FLOW RATE = 0.8018E+05 LB/HR
= 146. GPM

TOTAL SUPERNATE RETURN

SPECIES	LB-MOLE/HR	LB/HR
H2O	0.3826E+04	0.6893E+05
CA++	0.4303E+01	0.1724E+03
MG++	0.0	0.0
SO3--	0.1130E+00	0.9050E+01
SO4--	0.8065E+00	0.7747E+02
CL-	0.6764E+01	0.2398E+03
AD=	0.0	0.0

TOTAL FLOW RATE = 0.6943E+05 LB/HR
= 139. GPM

SUPERNATE TO WET BALL MILL

SPECIES	LB-MOLE/HR	LB/HR
H2O	0.3385E+03	0.6099E+04
CA++	0.3807E+00	0.1526E+02
MG++	0.0	0.0
SO3--	0.1000E-01	0.8007E+00
SO4--	0.7135E-01	0.6854E+01
CL-	0.5984E+00	0.2121E+02
AD=	0.0	0.0

TOTAL FLOW RATE = 0.6143E+04 LB/HR
= 12. GPM

LIMESTONE SLURRY FEED

SPECIES	LB-MOLE/HR	LB/HR
CACO3	0.8943E+02	0.8952E+04
SOLUBLE MGO	0.0	0.0
INSOLUBLES	----------	0.2626E+03
H2O	0.3385E+03	0.6099E+04
CA++	0.3807E+00	0.1526E+02
MG++	0.0	0.0
SO3--	0.1000E-01	0.8007E+00
SO4--	0.7135E-01	0.6854E+01
CL-	0.5984E+00	0.2121E+02
AD=	0.0	0.0

TOTAL FLOW RATE = 0.1536E+05 LB/HR
= 19. GPM

SUPERNATE RETURN TO SCRUBBER OR EMT

SPECIES	LB-MOLE/HR	LB/HR
H2O	0.3488E+04	0.6283E+05
CA++	0.3922E+01	0.1572E+03
MG++	0.0	0.0
SO3--	0.1030E+00	0.8249E+01
SO4--	0.7352E+00	0.7062E+02
CL-	0.6165E+01	0.2186E+03
AD=	0.0	0.0

TOTAL FLOW RATE = 0.6329E+05 LB/HR
= 127. GPM

RECYCLE SLURRY TO SCRUBBER

SPECIES	LB-MOLE/HR	LB/HR
CASO3 .1/2 H2O	0.5168E+04	0.6672E+06
CASO4 .2H2O	0.2189E+04	0.3767E+06
CACO3	0.1875E+04	0.1876E+06
INSOLUBLES	----------	0.2907E+05
H2O	0.3937E+06	0.7093E+07
CA++	0.4427E+03	0.1774E+05
MG++	0.0	0.0
SO3--	0.1163E+02	0.9312E+03
SO4--	0.8298E+02	0.7971E+04
CL-	0.6959E+01	0.2467E+05
AD=	0.0	0.0

TOTAL FLOW RATE = 0.8404E+07 LB/HR
= 15264. GPM

FLUE GAS COOLING SLURRY

SPECIES	LB-MOLE/HR	LB/HR
CASO3 .1/2 H2O	0.3759E+03	0.4452E+05
CASO4 .2H2O	0.1592E+03	0.2740E+05
CACO3	0.1363E+03	0.1365E+05
INSOLUBLES	----------	0.2114E+04
H2O	0.2863E+05	0.5158E+06
CA++	0.3220E+02	0.1290E+04
MG++	0.0	0.0
SO3--	0.8459E+00	0.6772E+02
SO4--	0.6035E+01	0.5797E+03
CL-	0.5061E+02	0.1794E+04
AD=	0.0	0.0

TOTAL FLOW RATE = 0.6112E+06 LB/HR
= 1110. GPM

POND DESIGN

OPTIMIZED TO MINIMIZE TOTAL COST PLUS OVERHEAD

POND DIMENSIONS

DEPTH OF POND	17.95	FT
DEPTH OF EXCAVATION	4.69	FT
LENGTH OF POND PERIMETER	7976.	FT
LENGTH OF DIVIDER	1421.	FT
LENGTH PERIMETER FENCE	8857.	FT
AREA OF BOTTOM	363.	THOUSAND YD2
AREA OF INSIDE WALLS	69.	THOUSAND YD2
AREA OF OUTSIDE WALLS	47.	THOUSAND YD2
AREA OF RECLAIM STORAGE	47.	THOUSAND YD2
AREA OF POND	431.	THOUSAND YD2
AREA OF POND SITE	592.	THOUSAND YD2
AREA OF POND SITE	122.	ACRES
VOLUME OF EXCAVATION	654.	THOUSAND YD3
VOLUME OF RECLAIM STORAGE	263.	THOUSAND YD3
VOLUME OF SLUDGE TO BE	2387.	THOUSAND YD3
DISPOSED OVER LIFE OF PLANT	1480.	ACRE FT

POND COSTS (THOUSANDS OF DOLLARS)

	LABOR	MATERIAL	TOTAL
CLEARING LAND	198.		198.
EXCAVATION	1624.		1624.
DIKE CONSTRUCTION	845.		845.
LINING(12. IN. CLAY)	432.		432.
SODDING DIKE WALLS	42.	28.	70.
ROAD CONSTRUCTION	23.	7.	29.
PERIMETER COSTS, FENCE+	44.	89.	133.
RECLAMATION EXPENSE	327.		327.
MONITOR WELLS	4.	4.	8.
POND CONSTRUCTION	3540.	127.	3667.
LAND COST			612.
POND SITE			4279.
OVERHEAD			3132.
TOTAL			7411.

EXAMPLE UTILITY, LIMESTONE, NEW ECONOMIC PREMISES CASE 005

PARTICULATE REMOVAL INVESTMENT AND OPERATING COST

		PARTICULATE EMISSION REGULATION (LB ASH/MILLION BTU):	0.03
UPSOIL CONTENT (%):	3.30	FLUE GAS TEMPERATURE (COLD) (F):	300.0
ASH CONTENT (%):	15.10	FLUE GAS TEMPERATURE (HOT) (F):	700.0
BTU RATING:	11700	COST OF ELECTRICITY ($/KWHR):	0.03
BOILER TYPE:	DRY PULVERIZED COAL	COST OF STEAM ($/THOUSAND LB):	2.00
NO. OF SCRUBBERS:	1	FIRST YEAR CAPITAL CHARGE FACTOR:	0.180
SCRUBBER VELOCITY (FT/M):	750.0	BAGHOUSE RATIO (OPER. SQ.FT./ACTUAL SQ.FT.):	0.80
PLANT SIZE (MW):	100	BAG COST ($/SQ.FT.):	0.70
OPERATING HRS/YR:	4731	BAG LIFE(YEARS):	3.00
PUMPING RATE (GAL/1000 ACF):	20.00	FLUE GAS REHEAT TEMPERATURE (F):	175.
SCA RATIO: (ACTUAL SQ.FT./CALC. SQ.FT.)	1.300	CHEMICAL ENGINEERING PLANT INDEX:	265.0

ELECTROSTATIC PRECIPITATORS

	COLD	HOT	BAGHOUSE FABRIC FILTERS	SCRUBBERS
REQUIRED REMOVAL EFFICIENCY (%):	99.70	99.70	99.70	99.70
DRIFT VELOCITY (FT/M):	27.19	20.00		
SPECIFIC COLLECTION AREA (SQ.FT./ACFM):	277.74	377.59		
COLLECTION AREA (SQ.FT.):	93719.4	194402.1	173226.8	
TOTAL CORONA POWER (KW):	132.7	202.6		
AUXILIARY POWER (KW):	68.4	133.6	168.9	
FAN POWER (KW):	52.8	80.6	264.0	3208.0
PUMP POWER (KW):				653.6
TOTAL POWER (KW):	253.9	436.8	432.9	3861.5
OPERATING AIR/CLOTH RATIO:			2.4	
INSTALLED AIR/CLOTH RATIO:			1.9	
REQUIRED PRESSURE DROP (INCHES):	1.0	1.0	5.0	60.8
DIAMETER (FEET):				27
REQUIRED REHEAT (MBTU/HR):				12053818.0
STEAM SUPPLY/YR (THOUSAND LB):				67568.2
INSTALLED COST (1979 DOLLARS):	$ 1582453	$ 2921883	$ 4277191	$ 3917050
FIRST YEAR CAPITALIZED COST:	$ 285369	$ 526913	$ 771320	$ 1067041
ANNUAL POWER COST:	$ 34835	$ 59927	$ 59391	$ 529800
ANNUAL OPERATING AND MAINTENANCE COST (1979 DOLLARS):	$ 46137	$ 69233	$ 49307	$ 310499
REPLACEMENT COST (1979 DOLLARS):			$ 53026	
ANNUAL REHEAT COST:				$ 135136
TOTAL ANNUAL COST:	$ 366341	$ 656073	$ 933124	$ 2042476
ANNUALIZED COST OF POWER(MILLS/KWHR):	0.77	1.39	1.97	4.32

RAW MATERIAL HANDLING AND PREPARATION

ITEM	DESCRIPTION	NO.	MATERIAL	LABOR
MOBILE EQUIPMENT	BUCKET TRACTOR	1	65176.	0.
RECLAIM HOPPER	7FT WIDE, 4.25FT HT, 2FT WIDE BOTTOM, CS	1	1035.	675.
RECLAIM VIBRATING FEEDER	3.5HP	1	4687.	432.
RECLAIM BELT CONVEYOR	100FT, 2HP	1	19618.	1188.
RECLAIM INCLINE BELT CONVEYOR	193FT, 40HP	1	51661.	3024.
RECLAIM PIT DUST COLLECTOR	POLYPROPYLENE BAG TYPE	1	6648.	2160.
RECLAIM PIT SUMP PUMP	60GPM, 70FT HEAD, 5HP	1	2071.	648.
RECLAIM BUCKET ELEVATOR	90FT HIGH, 75HP	1	49591.	5509.
FEED BIN	13FT DIA, 21FT STRAIGHT SIDE HT, COVERED, CS	1	12370.	6643.
BIN WEIGH FEEDER	14FT PULLEY CENTERS, 2HP	1	14169.	648.
GYRATORY CRUSHERS	75HP	1	84904.	1782.
BALL MILL DUST COLLECTORS	POLYPROPYLENE BAG TYPE 2200 CFM, 7.5HP	1	6648.	2160.
BALL MILL	4.6TPH, 100.HP	1	137073.	16396.
MILLS PRODUCT TANK	5500 GAL 10FT DIA, 10FT HT, FLAKEGLASS LINED CS	1	3924.	3024.
MILLS PRODUCT TANK AGITATOR	10HP	1	6539.	1512.
MILLS PRODUCT TANK SLURRY PUMP	19.GPM, 60FT HEAD, 1.HP, 1 OPERATING AND 1 SPARES	2	4530.	1512.
SLURRY FEED TANK	10237.GAL, 12.0FT DIA, 12.0FT HT, FLAKEGLASS-LINED CS	1	5370.	4287.
SLURRY FEED TANK AGITATOR	15.HP	1	10825.	658.
SLURRY FEED TANK PUMPS	19.GPM, 60 FT HEAD, 1.HP, 1 OPERATING AND 2 SPARE	3	6795.	2268.
TOTAL EQUIPMENT COST			423634.	54728.

SCRUBBING

INCLUDING 1 OPERATING AND 1 SPARE SCRUBBING TRAINS

ITEM	DESCRIPTION	NO.	MATERIAL	LABOR
I.D. FANS	20.0IN H2O, WITH 1268. HP MOTOR AND DRIVE	2	1552064.	21697.
SHELL			454959.	
RUBBER LINING			442549.	
MIST ELIMINATOR			85091.	
SLURRY HEADER AND NOZZLES			104675.	
GRIDS			182020.	
SPHERES			251071.	
TOTAL TCA SCRUBBER COSTS		2	1520363.	110173.
REHEATERS		2	739393.	45007.
SOOTBLOWERS		24	101143.	60486.
EFFLUENT HOLD TANK	201489.GAL, 32.5FT DIA, 32.5FT HT, FLAKEGLASS-LINED CS	2	89695.	70031.
EFFLUENT HOLD TANK AGITATOR	57.HP	2	118956.	18862.
COOLING SPRAY PUMPS	1110.GPM 100FT HEAD, 51.HP, 1 OPERATING AND 3 SPARE	4	31939.	9700.
ABSORBER RECYCLE PUMPS	7632.GPM, 100FT HEAD, 354.HP, 2 OPERATING AND 4 SPARE	6	439298.	33790.
MAKEUP WATER PUMPS	555.GPM, 200.FT HEAD, 47.HP, 1 OPERATING AND 1 SPARE	2	10905.	1189.
TOTAL EQUIPMENT COST			4599752.	370936.

WASTE DISPOSAL

ITEM	DESCRIPTION	NO.	MATERIAL	LABOR
ABSORBER BLEED RECEIVING TANK	50320.GAL, 16.2FT DIA, 32.5FT HT, FLAKGLASS-LINED CS	1	17856.	14266.
ABSORBER BLEED TANK AGITATOR	33.HP	1	20219.	1603.
POND FEED SLURRY PUMPS	144.GPM, 130.FT HEAD 4.HP, 2 OPERATING AND 2 SPARE	4	13702.	3993.
POND SUPERNATE PUMPS	139.GPM, 192.FT HEAD, 11.HP, 1 OPERATING AND 1 SPARE	2	8181.	892.
TOTAL EQUIPMENT COST			59958.	20754.

LIMESTONE SLURRY PROCESS -- BASIS: 100 MW UNIT, 1981 STARTUP

PROJECTED CAPITAL INVESTMENT REQUIREMENTS - EXAMPLE UTILITY, LIMESTONE, NEW ECONOMIC PREMISES CASE 002

	INVESTMENT, THOUSANDS OF 1980 DOLLARS				DISTRIBUTION
	RAW MATERIAL HANDLING AND PREPARATION	SCRUBBING	WASTE DISPOSAL	TOTAL	PERCENT OF DIRECT INVESTMENT
EQUIPMENT					
MATERIAL	494.	4600.	60.	5153.	31.9
LABOR	55.	371.	21.	446.	2.8
PIPING					
MATERIAL	215.	1188.	482.	1886.	11.7
LABOR	86.	252.	186.	524.	3.2
DUCTWORK					
MATERIAL	0.	746.	0.	746.	4.6
LABOR	0.	588.	0.	588.	3.6
FOUNDATIONS					
MATERIAL	110.	42.	17.	169.	1.0
LABOR	301.	89.	34.	423.	2.6
POND CONSTRUCTION	0.	0.	3667.	3667.	22.7
STRUCTURAL					
MATERIAL	37.	105.	1.	142.	0.9
LABOR	35.	176.	1.	213.	1.3
ELECTRICAL					
MATERIAL	94.	223.	122.	439.	2.7
LABOR	176.	449.	257.	876.	5.4
INSTRUMENTATION					
MATERIAL	49.	257.	9.	315.	2.0
LABOR	7.	41.	8.	57.	0.4
BUILDINGS					
MATERIAL	14.	0.	0.	14.	0.1
LABOR	15.	0.	0.	15.	0.1
SERVICES AND MISCELLANEOUS	51.	276.	147.	474.	2.9
SUBTOTAL DIRECT INVESTMENT	1738.	9399.	5013.	16149.	100.0
ENGINEERING DESIGN AND SUPERVISION	156.	846.	451.	1453.	9.0
CONSTRUCTION EXPENSES	278.	1504.	802.	2584.	16.0
CONTRACTOR FEES	87.	470.	251.	807.	5.0
CONTINGENCY	452.	2444.	1303.	4199.	26.0
SUBTOTAL FIXED INVESTMENT	2711.	14663.	7820.	25192.	156.0
ALLOWANCE FOR STARTUP AND MODIFICATIONS	209.	1128.	602.	1938.	12.0
INTEREST DURING CONSTRUCTION	407.	2199.	1173.	3779.	23.4
SUBTOTAL CAPITAL INVESTMENT	3327.	17990.	9595.	30909.	191.4
LAND	9.	1.	624.	634.	3.9
WORKING CAPITAL	88.	477.	254.	820.	5.1
TOTAL CAPITAL INVESTMENT	3424.	18468.	10473.	32363.	200.4

LIMESTONE SLURRY PROCESS -- BASIS: 100 MW UNIT, 1981 STARTUP

PROJECTED REVENUE REQUIREMENTS - EXAMPLE UTILITY, LIMESTONE, NEW ECONOMIC PREMISES CASE 009

DISPLAY SHEET FOR YEAR= 1
ANNUAL OPERATION KW-HR/KW = 4731 = 0.54 cap factor

6.01 TONS PER HOUR DRY SLUDGE
TOTAL CAPITAL INVESTMENT 31393000

	ANNUAL QUANTITY	UNIT COST,$	TOTAL ANNUAL COST,$
DIRECT COSTS			
RAW MATERIAL			
LIMESTONE	21.8 K TONS	8.00/TON	174400
SUBTOTAL RAW MATERIAL			174400
CONVERSION COSTS			
OPERATING LABOR AND			
SUPERVISION	13760.0 MAN-HR	12.50/MAN-HR	172000
UTILITIES			
STEAM	82870.0 K LB	2.00/K LB	165700
PROCESS WATER	26560.0 K GAL	0.12/K GAL	3200
ELECTRICITY	9088790.0 KWH	0.029/KWH	263600
MAINTENANCE			
LABOR AND MATERIAL			1108600
ANALYSES	3060.0 HR	17.00/HR	52000
~~Sludge Disposal~~			
SUBTOTAL CONVERSION COSTS			1769100
SUBTOTAL DIRECT COSTS			1939500
INDIRECT COSTS			
OVERHEADS			
PLANT AND ADMINISTRATIVE (60.0% OF CONVERSION COSTS LESS UTILITIES)			799600
FIRST YEAR OPERATING AND MAINTENANCE COSTS			2739100
LEVELIZED CAPITAL CHARGES(14.7% OF TOTAL CAPITAL INVESTMENT)			4757360
FIRST YEAR ANNUAL REVENUE REQUIREMENTS			7496460
EQUIVALENT FIRST YEAR UNIT REVENUE REQUIREMENTS, MILLS/KWH			15.84
LEVELIZED OPERATING AND MAINTENANCE (1.886 TIMES FIRST YEAR OPER. & MAIN.)			5165900
LEVELIZED CAPITAL CHARGES(11.64% OF TOTAL CAPITAL INVESTMENT)			4757360
LEVELIZED ANNUAL REVENUE REQUIREMENTS			9923260
EQUIVALENT LEVELIZED UNIT REVENUE REQUIREMENTS, MILLS/KWH			20.97

HEAT RATE 9500. BTU/KWH - HEAT VALUE OF COAL 11700 BTU/LB - COAL RATE 192100 TONS/YR

Reproduced from best available copy.

EXAMPLE UTILITY, LIMESTONE, NEW ECONOMIC PREMISES CASE 006

*** INPUTS ***

BOILER CHARACTERISTICS

MEGAWATTS = 250. UTILITY BASIS - NEW POND BASIS

BOILER HEAT RATE = 9500. BTU/KWH

EXCESS AIR = 39. PERCENT, INCLUDING LEAKAGE

HOT GAS TEMPERATURE = 300. DEG F

COAL ANALYSIS, WT % AS FIRED :

C	H	O	N	S	CL	ASH	H2O
66.70	3.80	5.60	1.30	3.36	0.10	15.10	4.00

SULFUR OVERHEAD = 92.0 PERCENT

ASH OVERHEAD = 80.0 PERCENT

HEATING VALUE OF COAL = 11700. BTU/LB

FLYASH REMOVAL	EFFICIENCY, %	EMISSION, LBS/M BTU
UPSTREAM OF SCRUBBER	99.7	0.03
WITHIN SCRUBBER	50.0	0.02

COST OF UPSTREAM FLYASH REMOVAL EXCLUDED

ALKALI

LIMESTONE :

CACO3 = 97.15 WT % DRY BASIS
SOLUBLE MGO = 0.0
INERTS = 2.85
MOISTURE CONTENT = 5.00 LB H2O/100 LBS DRY LIMESTONE
LIMESTONE HARDNESS WORK INDEX FACTOR = 10.00
LIMESTONE DEGREE OF GRIND FACTOR = 1.35

FLY ASH :

SOLUBLE CAO = 0.0 WT %
SOLUBLE MGO = 0.0
INERTS = 100.00

RAW MATERIAL HANDLING AREA

NUMBER OF REDUNDANT ALKALI PREPARATION UNITS = 0

SCRUBBER SYSTEM VARIABLES

NUMBER OF OPERATING SCRUBBING TRAINS = 2

NUMBER OF REDUNDANT SCRUBBING TRAINS = 1

NUMBER OF BEDS = 3

NUMBER OF GRIDS = 4

HEIGHT OF SPHERES PER BED = 5.0 INCHES

LIQUID-TO-GAS RATIO = 55. GAL/1000 ACF(SATD)

SCRUBBER GAS VELOCITY = 12.5 FT/SEC

INDUCED DRAFT SCRUBBER FAN OPTION

SCRUBBER PRESSURE = 14.7 PSIA

STOICHIOMETRY = 1.25 MOLE CACO3 ADDED AS LIMESTONE
PER MOLE (SO2+2HCL) ABSORBED

SO2 REMOVAL = 90. PERCENT

ENTRAINMENT LEVEL = 0.10 WT %

EMT RESIDENCE TIME = 12.0 MIN

SO2 OXIDIZED IN SYSTEM = 30.0 PERCENT

SOLIDS IN RECIRCULATED SLURRY = 15.0 WT %

SOLIDS DISPOSAL SYSTEM

COST OF LAND = 5000.00 DOLLARS/ACRE

SOLIDS IN SYSTEM SLUDGE DISCHARGE = 35.0 WT %

MAXIMUM POND AREA = 9999. ACRES

MAXIMUM EXCAVATION = 25.00 FT

DISTANCE TO POND = 5280. FT

POND LINED WITH 12.0 INCHES CLAY

STEAM REHEATER (IN-LINE)

SATURATED STEAM TEMPERATURE = 470. DEG F

HEAT OF VAPORIZATION OF STEAM = 751. BTU/LB

OUTLET FLUE GAS TEMPERATURE = 175. DEG F

SUPERFICIAL GAS VELOCITY (FACE VELOCITY) = 25.0 FT/SEC

EXAMPLE UTILITY, LIMESTONE, NEW ECONOMIC PREMISES CASE 006

*** OUTPUTS ***

HOT GAS TO SCRUBBER

	MOLE PERCENT	LB-MOLE/HR	LB/HR
CO2	12.338	0.1177E+05	0.4961E+06
HCL	0.006	0.5726E+01	0.2088E+03
SO2	0.214	0.1957E+03	0.1254E+05
O2	5.560	0.5080E+04	0.1626E+06
N2	75.227	0.6874E+05	0.1926E+07
H2O	6.654	0.6080E+04	0.1095E+06

SO2 CONCENTRATION IN SCRUBBER INLET GAS = 2142. PPM
= 5.28 LBS / MILLION BTU

FLYASH EMISSION = 0.03 LBS/MILLION BTU
= 0.015 GRAINS/SCF (WET) OR 74. LB/HR

SOLUBLE CAO IN FLY ASH = 0. LB/HR
SOLUBLE MGO IN FLY ASH = 0.

HOT GAS FLOW RATE = .5772E+06 SCFM (60 DEG F, 14.7 PSIA)
= .8435E+06 ACFM (300. DEG F, 14.7 PSIA)

CORRESPONDING COAL FIRING RATE = .2030E+06 LB/HR

HOT GAS HUMIDITY = 0.042 LB H2O/LB DRY GAS

WET BULB TEMPERATURE = 124. DEG F

WET GAS FROM SCRUBBER

	MOLE PERCENT	LB-MOLE/HR	LB/HR
CO2	11.716	0.1146E+05	0.5042E+06
HCL	0.000	0.2663E+00	0.1044E+02
SO2	0.020	0.1957E+02	0.1254E+04
O2	5.169	0.5054E+04	0.1617E+06
N2	70.300	0.6874E+05	0.1926E+07
H2O	12.795	0.1251E+05	0.2254E+06

SO2 CONCENTRATION IN SCRUBBER OUTLET GAS = 200. PPM

FLYASH EMISSION = 0.02 LBS/MILLION BTU
= 0.007 GRAINS/SCF (WET) OR 37. LB/HR

TOTAL WATER PICKUP = 237. GPM
INCLUDING 5.6 GPM ENTRAINMENT

WET GAS FLOW RATE = .6176E+06 SCFM (60 DEG F, 14.7 PSIA)
= .6938E+06 ACFM (124. DEG F, 14.7 PSIA)

WET GAS SATURATION HUMIDITY = 0.067 LB H2O/LB DRY GAS

Reproduced from best available copy.

FLUE GAS TO STACK

	MOLE PERCENT	LB-MOLE/HR	LB/HR
CO2	11.697	0.1146E+05	0.5042E+06
HCL	0.000	0.2863E+00	0.1044E+02
SO2	0.020	0.1957E+02	0.1254E+04
O2	5.160	0.5054E+04	0.1617E+06
N2	70.188	0.6874E+05	0.1926E+07
H2O	12.934	0.1267E+05	0.2282E+06

SPECIFIED SO2 REMOVAL EFFICIENCY = 90.0 %

CALCULATED SO2 EMISSION = 0.53 POUNDS PER MILLION BTU

CALCULATED SO2 CONCENTRATION IN STACK GAS = 200. PPM

FLYASH EMISSION = 0.02 LBS/MILLION BTU
= 0.007 GRAINS/SCF (WET) OR 37. LB/HR

STACK GAS FLOW RATE = .6186E+06 SCFM (60 DEG F, 14.7 PSIA)
= .7554E+06 ACFM (175. DEG F, 14.7 PSIA)

STEAM REHEATER (IN-LINE)

SUPERFICIAL GAS VELOCITY (FACE VELOCITY) = 25.0 FT/SEC

SQUARE PIPE PITCH = 2 TIMES ACTUAL PIPE O.D.

SATURATED STEAM TEMPERATURE = 470. DEG F

OUTLET FLUE GAS TEMPERATURE = 175. DEG F

REQUIRED HEAT INPUT TO REHEATER = 0.3289E+08 BTU/HR

STEAM CONSUMPTION = 0.4379E+05 LBS/HR

OUTSIDE PIPE DIAMETER, IN.	PRESSURE DROP, IN. H2O	HEAT TRANSFER COEFFICIENT, BTU/HR FT2 DEG F
1.00	0.65	0.2098E+02

	REHEATER (OUTSIDE PIPE AREA, SQ FT PER TRAIN	NUMBER OF PIPES PER BANK PER TRAIN	NUMBER OF BANKS (ROWS) PER TRAIN
INCONEL	0.1533E+04	91	4
CORTEN	0.8823E+03	91	2
TOTAL	0.2416E+04	91	6

WATER BALANCE INPUTS

RAINFALL(IN/YEAR)	50.
POND SEEPAGE(CM/SEC)*10**8	50.
POND EVAPORATION(IN/YEAR)	32.

WATER BALANCE OUTPUTS

WATER AVAILABLE

RAINFALL	496. GPM	248145. LB/HR
ALKALI	2. GPM	1152. LB/HR
TOTAL	499. GPM	249297. LB/HR

WATER REQUIRED

HUMIDIFICATION	232. GPM	115848. LB/HR
ENTRAINMENT	6. GPM	2815. LB/HR
DISPOSAL WATER	111. GPM	55439. LB/HR
HYDRATION WATER	6. GPM	2992. LB/HR
CLARIFIER EVAPORATION	0. GPM	0. LB/HR
POND EVAPORATION	336. GPM	167870. LB/HR
SEEPAGE	62. GPM	30809. LB/HR
TOTAL WATER REQUIRED	752. GPM	375773. LB/HR
NET WATER REQUIRED	253. GPM	126476. LB/HR

SCRUBBER SYSTEM

TOTAL NUMBER OF SCRUBBING TRAINS (OPERATING+REDUNDANT) = 3

SO2 REMOVAL = 90.0 PERCENT

PARTICULATE REMOVAL IN SCRUBBER SYSTEM = 50.0 PERCENT

TCA PRESSURE DROP ACROSS 3 BEDS = 8.6 IN. H2O

TOTAL SYSTEM PRESSURE DROP = 14.7 IN. H2O

OVERRIDE TOTAL SYSTEM PRESSURE DROP = 20.0 IN. H2O

SPECIFIED LIQUID-TO-GAS-RATIO = 55. GAL/1000 ACF(SATD)

LIMESTONE ADDITION = 0.2304E+05 LB/HR DRY LIMESTONE

SPECIFIED LIMESTONE STOICHIOMETRY = 1.25 MOLE CACO3 ADDED AS LIMESTONE PER MOLE (SO2+2HCL) ABSORBED

SOLUBLE CAO FROM FLY ASH = 0.0 MOLE PER MOLE (SO2+2HCL) ABSORBED

TOTAL SOLUBLE MGO = 0.0 MOLE PER MOLE (SO2+2HCL) ABSORBED

TOTAL STOICHIOMETRY = 1.25 MOLE SOLUBLE (CA+MG) PER MOLE (SO2+2HCL) ABSORBED

SCRUBBER INLET LIQUOR PH = 5.66

MAKE UP WATER = 253. GPM

CROSS-SECTIONAL AREA PER SCRUBBER = 463. SQ FT

SYSTEM SLUDGE DISCHARGE

SPECIES	LB-MOLE/HR	LB/HR	SOLID COMP, BY %	LIQUID COMP, PPM
CASO3 .1/2 H2O	0.1233E+03	0.1591E+05	52.92	
CASO4 .2H2O	0.5221E+02	0.8966E+04	29.88	
CACO3	0.4471E+02	0.4476E+04	14.88	
INSOLUBLES	----------	0.6933E+03	2.31	
H2O	0.3077E+04	0.5544E+05		
CA++	0.3460E+01	0.1387E+03		2484.
MG++	0.0	0.0		0.
SO3--	0.9091E-01	0.7279E+01		130.
SO4--	0.6486E+00	0.6231E+02		1116.
CL-	0.5440E+01	0.1928E+03		3453.

TOTAL DISCHARGE FLOW RATE = 0.8391E+05 LB/HR
= 135. GPM

TOTAL DISSOLVED SOLIDS IN DISCHARGE LIQUID = 7169. PPM

DISCHARGE LIQUID PH = 7.57

SCRUBBER SLURRY BLEED

SPECIES	LB-MOLE/HR	LB/HR
CASO3 .1/2 H2O	0.1233E+03	0.1591E+05
CASO4 .2H2O	0.5221E+02	0.8946E+04
CACO3	0.4471E+02	0.4476E+04
INSOLUBLES	----------	0.693[illegible]E+03
H2O	0.9389E+04	0.1492E+06
CA++	0.1056E+02	0.4232E+03
MG++	0.0	0.0
SO3--	0.2774E+00	0.2221E+02
SO4--	0.1979E+01	0.1901E+03
CL-	0.1660E+02	0.5884E+03
AD=	0.0	0.0

TOTAL FLOW RATE = 0.2004E+06 LB/HR
= 364. GPM

TOTAL SUPERNATE RETURN

SPECIES	LB-MOLE/HR	LB/HR
H2O	0.9038E+04	0.1628E+06
CA++	0.1016E+02	0.4074E+03
MG++	0.0	0.0
SO3--	0.2670E+00	0.2138E+02
SO4--	0.1905E+01	0.1830E+03
CL-	0.1598E+02	0.5664E+03
AD=	0.0	0.0

TOTAL FLOW RATE = 0.1640E+06 LB/HR
= 328. GPM

SUPERNATE TO WET BALL MILL

SPECIES	LB-MOLE/HR	LB/HR
H2O	0.7912E+03	0.1425E+05
CA++	0.8897E+00	0.3566E+02
MG++	0.0	0.0
SO3--	0.2339E-01	0.1871E+01
SO4--	0.1664E+00	0.1602E+02
CL-	0.1399E+01	0.4958E+02
AD=	0.0	0.0

TOTAL FLOW RATE = 0.1436E+05 LB/HR
= 29. GPM

LIMESTONE SLURRY FEED

SPECIES	LB-MOLE/HR	LB/HR
CACO3	0.2236E+03	0.2238E+05
SOLUBLE MGO	0.0	0.0
INSOLUBLES	----------	0.6565E+03
H2O	0.8463E+03	0.1525E+05
CA++	0.8897E+00	0.3566E+02
MG++	0.0	0.0
SO3--	0.2338E-01	0.1871E+01
SO4--	0.1668E+00	0.1602E+02
CL-	0.1399E+01	0.4958E+02
AD=	0.0	0.0

TOTAL FLOW RATE = 0.3839E+05 LB/HR
= 48. GPM

SUPERNATE RETURN TO SCRUBBER OR EHT

SPECIES	LB-MOLE/HR	LB/HR
H2O	0.8247E+04	0.1486E+06
CA++	0.9274E+01	0.3717E+03
MG++	0.0	0.0
SO3--	0.2437E+00	0.1951E+02
SO4--	0.1738E+01	0.1670E+03
CL-	0.1458E+02	0.5168E+03
AD=	0.0	0.0

TOTAL FLOW RATE = 0.1497E+06 LB/HR
= 299. GPM

RECYCLE SLURRY TO SCRUBBER

SPECIES	LB-MOLE/HR	LB/HR
CASO3 .1/2 H2O	0.1292E+05	0.1668E+07
CASO4 .2H2O	0.5473E+04	0.9419E+06
CACO3	0.4687E+04	0.4691E+06
INSOLUBLES	----------	0.7267E+05
H2O	0.9842E+06	0.1773E+08
CA++	0.1107E+04	0.4436E+05
MG++	0.0	0.0
SO3--	0.2908E+02	0.2328E+04
SO4--	0.2075E+03	0.1993E+05
CL-	0.1740E+04	0.6168E+05
AD=	0.0	0.0

TOTAL FLOW RATE = 0.2101E+08 LB/HR
= 38161. GPM

FLUE GAS COOLING SLURRY

SPECIES	LB-MOLE/HR	LB/HR
CASO3 .1/2 H2O	0.9396E+03	0.1213E+06
CASO4 .2H2O	0.3980E+03	0.6850E+05
CACO3	0.3408E+03	0.3412E+05
INSOLUBLES	----------	0.5285E+04
H2O	0.7158E+05	0.1290E+07
CA++	0.8049E+02	0.3226E+04
MG++	0.0	0.0
SO3--	0.2115E+01	0.1693E+03
SO4--	0.1509E+02	0.1449E+04
CL-	0.1265E+03	0.4486E+04
AD=	0.0	0.0

TOTAL FLOW RATE = 0.1528E+07 LB/HR
= 2775. GPM

POND DESIGN

OPTIMIZED TO MINIMIZE TOTAL COST PLUS OVERHEAD

POND DIMENSIONS

DEPTH OF POND	20.44	FT
DEPTH OF EXCAVATION	4.26	FT
LENGTH OF POND PERIMETER	11654.	FT
LENGTH OF DIVIDER	2106.	FT
LENGTH PERIMETER FENCE	12612.	FT
AREA OF BOTTOM	818.	THOUSAND YD2
AREA OF INSIDE WALLS	113.	THOUSAND YD2
AREA OF OUTSIDE WALLS	81.	THOUSAND YD2
AREA OF RECLAIM STORAGE	80.	THOUSAND YD2
AREA OF POND	930.	THOUSAND YD2
AREA OF POND SITE	1185.	THOUSAND YD2
AREA OF POND SITE	245.	ACRES
VOLUME OF EXCAVATION	1295.	THOUSAND YD3
VOLUME OF RECLAIM STORAGE	538.	THOUSAND YD3
VOLUME OF SLUDGE TO BE	5967.	THOUSAND YD3
DISPOSED OVER LIFE OF PLANT	3699.	ACRE FT

POND COSTS (THOUSANDS OF DOLLARS)

	LABOR	MATERIAL	TOTAL
CLEARING LAND	397.		397.
EXCAVATION	3218.		3218.
DIKE CONSTRUCTION	1635.		1635.
LINING(12. IN. CLAY)	931.		931.
SODDING DIKE WALLS	71.	46.	118.
ROAD CONSTRUCTION	33.	10.	43.
PERIMETER COSTS, FENCE+	63.	126.	189.
RECLAMATION EXPENSE	654.		654.
MONITOR WELLS	4.	4.	8.
POND CONSTRUCTION	7005.	187.	7192.
LAND COST			1224.
POND SITE			8415.
OVERHEAD			6142.
TOTAL			14557.

EXAMPLE UTILITY, LIMESTONE, NEW ECONOMIC PREMISES — CASE 006

PARTICULATE REMOVAL INVESTMENT AND OPERATING COST

		PARTICULATE EMISSION REGULATION (LB ASH/MILLION BTU):	0.03
WPSUL CONTENT (%):	3.36	FLUE GAS TEMPERATURE (COLD) (F):	300.0
ASH CONTENT (%):	13.10	FLUE GAS TEMPERATURE (HOT) (F):	700.0
BTU RATING:	11700	COST OF ELECTRICITY ($/KWHR):	0.03
BOILER TYPE:	DRY PULVERIZED COAL	COST OF STEAM ($/THOUSAND LB):	2.00
NO. OF SCRUBBERS:	2	FIRST YEAR CAPITAL CHARGE FACTOR:	0.180
SCRUBBER VELOCITY (FT/M):	750.0	BAGHOUSE RATIO (OPER. SQ.FT./ACTUAL SQ.FT.):	0.80
PLANT SIZE (MW):	250	BAG COST ($/SQ.FT.):	0.70
OPERATING HRS/YR:	4731	BAG LIFE(YEARS):	3.00
PUMPING RATE (GAL/1000 ACF):	30.00	FLUE GAS REHEAT TEMPERATURE (F):	175.
SCA RATIO: (ACTUAL SQ.FT./CALC. SQ.FT.)	1.300	CHEMICAL ENGINEERING PLANT INDEX:	265.0

ELECTROSTATIC PRECIPITATORS

	COLD	HOT	BAGHOUSE FABRIC FILTERS	SCRUBBERS
REQUIRED REMOVAL EFFICIENCY (%):	99.70	99.70	99.70	99.70
DRIFT VELOCITY (FT/M):	27.19	20.00		
SPECIFIC COLLECTION AREA (SQ.FT./ACFM):	277.74	377.59		
COLLECTION AREA (SQ.FT.):	234286.6	486139.2	433067.2	
TOTAL CORONA POWER (KW):	331.8	506.4		
AUXILIARY POWER (KW):	188.9	424.3	309.8	
FAN POWER (KW):	132.0	201.5	660.0	8020.0
PUMP POWER (KW):				1633.9
TOTAL POWER (KW):	652.7	1132.2	969.8	9653.9
OPERATING AIR/CLOTH RATIO:			2.4	
INSTALLED AIR/CLOTH RATIO:			1.9	
REQUIRED PRESSURE DROP (INCHES):	1.0	1.0	5.0	60.8
DIAMETER (FEET):				30
REQUIRED REHEAT (BTU/HR):				32134544.0
STEAM SUPPLY/YR (THOUSAND LB):				168920.6
INSTALLED COST (1979 DOLLARS):	$ 3356565	$ 6585005	$ 9162336	$ 12732165
FIRST YEAR CAPITALIZED COST:	$ 641367	$ 1187495	$ 1652274	$ 2296033
ANNUAL POWER COST:	$ 89547	$ 159342	$ 133059	$ 1324499
ANNUAL OPERATING AND MAINTENANCE COST (1979 DOLLARS):	$ 76790	$ 115231	$ 57651	$ 668123
REPLACEMENT COST (1979 DOLLARS):			$ 132564	
ANNUAL REHEAT COST:				$ 337841
TOTAL ANNUAL COST:	$ 807704	$ 1458068	$ 1975548	$ 4626496
ANNUALIZED COST OF POWER(MILLS/KWHR):	0.68	1.23	1.67	3.91

RAW MATERIAL HANDLING AND PREPARATION

ITEM	DESCRIPTION	NO.	MATERIAL	LABOR
MOBILE EQUIPMENT	BUCKET TRACTOR	1	65176.	0.
RECLAIM HOPPER	7FT WIDE, 4.25FT HT, 2FT WIDE BOTTOM, CS	1	1035.	675.
RECLAIM VIBRATING FEEDER	3.5HP	1	4687.	432.
RECLAIM BELT CONVEYOR	100FT, 2HP	1	19618.	1188.
RECLAIM INCLINE BELT CONVEYOR	193FT, 40HP	1	51661.	3024.
RECLAIM PIT DUST COLLECTOR	POLYPROPYLENE BAG TYPE	1	6648.	2160.
RECLAIM PIT SUMP PUMP	600GPM, 70FT HEAD, 5HP	1	2071.	648.
RECLAIM BUCKET ELEVATOR	90FT HIGH, 75HP	1	49591.	5509.
FEED BIN	13FT DIA, 21FT STRAIGHT SIDE HT, COVERED, CS	1	12370.	6643.
BIN WEIGH FEEDER	14FT PULLEY CENTERS, 2HP	1	14169.	648.
GYRATORY CRUSHERS	75HP	1	84904.	1782.
BALL MILL DUST COLLECTORS	POLYPROPYLENE BAG TYPE 2200 CFM, 7.5HP	1	6648.	2160.
BALL MILL	11.5TPH, 155.HP	1	162639.	18645.
MILLS PRODUCT TANK	5500 GAL 10FT DIA, 10FT HT, FLAKEGLASS LINED CS	1	3924.	3024.
MILLS PRODUCT TANK AGITATOR	10HP	1	6339.	1512.
MILLS PRODUCT TANK SLURRY PUMP	48.GPM, 60FT HEAD, 2.HP, 1 OPERATING AND 1 SPARES	2	4830.	1512.
SLURRY FEED TANK	25392.GAL, 16.3FT DIA, 16.3FT HT, FLAKEGLASS-LINED CS	1	9691.	7896.
SLURRY FEED TANK AGITATOR	28.HP	1	20701.	1641.
SLURRY FEED TANK PUMPS	24.GPM, 60 FT HEAD, 1.HP, 2 OPERATING AND 3 SPARE	3	11486.	3780.
TOTAL EQUIPMENT COST			538589.	62861.

SCRUBBING

INCLUDING 2 OPERATING AND 1 SPARE SCRUBBING TRAINS

ITEM	DESCRIPTION	NO.	MATERIAL	LABOR
I.D. FANS	20.0IN H2O, WITH 1585. HP MOTOR AND DRIVE	3	2649313.	36948.
SHELL			788074.	
RUBBER LINING			776774.	
MIST ELIMINATOR			160813.	
SLURRY HEADER AND NOZZLES			196144.	
GRIDS			348663.	
SPHERES			475489.	
TOTAL TCA SCRUBBER COSTS		3	2745956.	192188.
REHEATERS		3	1283829.	77441.
SOOTBLOWERS		36	151715.	90730.
EFFLUENT HOLD TANK	291861.GAL, 35.0FT DIA, 35.0FT HT, FLAKEGLASS-LINED CS	3	156119.	121894.
EFFLUENT HOLD TANK AGITATOR	66.HP	3	208953.	49698.
COOLING SPRAY PUMPS	1388.GPM 100FT HEAD, 64.HP, 2 OPERATING AND 4 SPARE	6	53879.	16041.
ABSORBER RECYCLE PUMPS	9540.GPM, 100FT HEAD, 442.HP, 4 OPERATING AND 5 SPARE	9	519750.	55878.
MAKEUP WATER PUMPS	1388.GPM, 200.FT HEAD, 117.HP, 1 OPERATING AND 1 SPARE	2	15981.	1742.
TOTAL EQUIPMENT COST			7785491.	642559.

WASTE DISPOSAL

ITEM	DESCRIPTION	NO.	MATERIAL	LABOR
ABSORBER BLEED RECEIVING TANK	62898.GAL, 17.5FT DIA, 35.0FT HT, FLAKGLASS-LINED CS	1	20720.	16354.
ABSORBER BLEED TANK AGITATOR	38.HP	1	23676.	1677.
POND FEED SLURRY PUMPS	364.GPM, 130.FT HEAD 22.HP, 1 OPERATING AND 1 SPARE	2	9108.	2980.
POND SUPERNATE PUMPS	328.GPM, 192.FT HEAD, 26.HP, 1 OPERATING AND 1 SPARE	2	9394.	1024.
TOTAL EQUIPMENT COST			62898.	22435.

LIMESTONE SLURRY PROCESS -- BASIS: 250 MW UNIT, 1981 STARTUP

PROJECTED CAPITAL INVESTMENT REQUIREMENTS - EXAMPLE UTILITY, LIMESTONE, NEW ECONOMIC PREMISES — CASE 006

	INVESTMENT, THOUSANDS OF 1980 DOLLARS				DISTRIBUTION
	RAW MATERIAL HANDLING AND PREPARATION	SCRUBBING	WASTE DISPOSAL	TOTAL	PERCENT OF DIRECT INVESTMENT
EQUIPMENT					
MATERIAL	539.	7785.	63.	8387.	31.3
LABOR	68.	643.	22.	728.	2.7
PIPING					
MATERIAL	240.	2032.	669.	2941.	11.0
LABOR	109.	401.	237.	748.	2.8
DUCTWORK					
MATERIAL	0.	1351.	0.	1351.	5.0
LABOR	0.	1079.	0.	1079.	4.0
FOUNDATIONS					
MATERIAL	113.	77.	17.	207.	0.8
LABOR	306.	162.	34.	507.	1.9
POND CONSTRUCTION	0.	0.	7192.	7192.	26.8
STRUCTURAL					
MATERIAL	37.	172.	1.	211.	0.8
LABOR	33.	290.	2.	328.	1.2
ELECTRICAL					
MATERIAL	98.	424.	124.	645.	2.4
LABOR	187.	808.	261.	1256.	4.7
INSTRUMENTATION					
MATERIAL	37.	386.	9.	433.	1.7
LABOR	8.	62.	8.	79.	0.3
BUILDINGS					
MATERIAL	18.	0.	0.	18.	0.1
LABOR	19.	0.	0.	19.	0.1
SERVICES AND MISCELLANEOUS	46.	398.	220.	664.	2.5
SUBTOTAL DIRECT INVESTMENT	1875.	16070.	8859.	26805.	100.0
ENGINEERING DESIGN AND SUPERVISION	169.	1446.	797.	2412.	9.0
CONSTRUCTION EXPENSES	300.	2571.	1418.	4289.	16.0
CONTRACTOR FEES	94.	804.	443.	1340.	5.0
CONTINGENCY	488.	4178.	2303.	6969.	26.0
SUBTOTAL FIXED INVESTMENT	2926.	25069.	13820.	41816.	156.0
ALLOWANCE FOR STARTUP AND MODIFICATIONS	225.	1928.	1063.	3217.	12.0
INTEREST DURING CONSTRUCTION	439.	3760.	2073.	6272.	23.4
SUBTOTAL CAPITAL INVESTMENT	3590.	30757.	16956.	51305.	191.4
LAND	9.	2.	1236.	1247.	4.7
WORKING CAPITAL	97.	832.	459.	1388.	5.2
TOTAL CAPITAL INVESTMENT	3696.	31591.	18651.	53932.	201.2

LIMESTONE SLURRY PROCESS -- BASIS: 250 MW UNIT, 1981 STARTUP

PROJECTED REVENUE REQUIREMENTS - EXAMPLE UTILITY, LIMESTONE, NEW ECONOMIC PREMISES CASE 006

DISPLAY SHEET FOR YEAR= 1
ANNUAL OPERATION KW-HR/KW = 4731

15.03 TONS PER HOUR DRY SLUDGE
TOTAL CAPITAL INVESTMENT 52332000

	ANNUAL QUANTITY	UNIT COST,$	TOTAL ANNUAL COST,$
DIRECT COSTS			
RAW MATERIAL			
LIMESTONE	54.2 K TONS	8.00/TON	433900
SUBTOTAL RAW MATERIAL			433900
CONVERSION COSTS			
OPERATING LABOR AND SUPERVISION	20810.0 MAN-HR	12.80/MAN-HR	266100
UTILITIES			
STEAM	207180.0 K LB	2.00/K LB	414400
PROCESS WATER	71830.0 K GAL	0.12/K GAL	8600
ELECTRICITY	20837870.0 KWH	0.029/KWH	604300
MAINTENANCE			
LABOR AND MATERIAL			1784800
ANALYSES	2040.0 HR	17.00/HR	32000
SUBTOTAL CONVERSION COSTS			3124200
SUBTOTAL DIRECT COSTS			3560100
INDIRECT COSTS			
OVERHEADS			
PLANT AND ADMINISTRATIVE (60.0% OF CONVERSION COSTS LESS UTILITIES)			1258100
FIRST YEAR OPERATING AND MAINTENANCE COSTS			4818200
LEVELIZED CAPITAL CHARGES(14.7% OF TOTAL CAPITAL INVESTMENT)			7928000
FIRST YEAR ANNUAL REVENUE REQUIREMENTS			12746200
EQUIVALENT FIRST YEAR UNIT REVENUE REQUIREMENTS, MILLS/KWH			10.77
LEVELIZED OPERATING AND MAINTENANCE (1.886 TIMES FIRST YEAR OPER. & MAIN.)			9087100
LEVELIZED CAPITAL CHARGES(11.64% OF TOTAL CAPITAL INVESTMENT)			7928000
LEVELIZED ANNUAL REVENUE REQUIREMENTS			17015100
EQUIVALENT LEVELIZED UNIT REVENUE REQUIREMENTS, MILLS/KWH			14.83

HEAT RATE 9500. BTU/KWH - HEAT VALUE OF COAL 11700 BTU/LB - COAL RATE 480200 TONS/YR

EXAMPLE UTILITY, LIMESTONE, NEW ECONOMIC PREMISES CASE 007

*** INPUTS ***

BOILER CHARACTERISTICS

MEGAWATTS = 500. UTILITY BASIS - NEW POND BASIS

BOILER HEAT RATE = 9500. BTU/KWH

EXCESS AIR = 39. PERCENT, INCLUDING LEAKAGE

HOT GAS TEMPERATURE = 300. DEG F

COAL ANALYSIS, WT % AS FIRED :

C	H	O	N	S	CL	ASH	H2O
66.70	3.80	5.60	1.30	3.36	0.10	15.10	4.00

SULFUR OVERHEAD = 92.0 PERCENT

ASH OVERHEAD = 80.0 PERCENT

HEATING VALUE OF COAL = 11700. BTU/LB

FLYASH REMOVAL	EFFICIENCY, %	EMISSION, LBS/M BTU
UPSTREAM OF SCRUBBER	99.7	0.03
WITHIN SCRUBBER	90.0	0.02

COST OF UPSTREAM FLYASH REMOVAL EXCLUDED

ALKALI

LIMESTONE :

CACO3 = 97.15 WT % DRY BASIS
SOLUBLE MGO = 0.0
INERTS = 2.85
MOISTURE CONTENT = 5.00 LB H2O/100 LBS DRY LIMESTONE
LIMESTONE HARDNESS WORK INDEX FACTOR = 10.00
LIMESTONE DEGREE OF GRIND FACTOR = 1.35

FLY ASH :

SOLUBLE CAO = 0.0 WT %
SOLUBLE MGO = 0.0
INERTS = 100.00

RAW MATERIAL HANDLING AREA

NUMBER OF REDUNDANT ALKALI PREPARATION UNITS = 0

SCRUBBER SYSTEM VARIABLES

NUMBER OF OPERATING SCRUBBING TRAINS = 4

NUMBER OF REDUNDANT SCRUBBING TRAINS = 1

NUMBER OF BEDS = 3

NUMBER OF GRIDS = 4

HEIGHT OF SPHERES PER BED = 3.0 INCHES

LIQUID-TO-GAS RATIO = 55. GAL/1000 ACF(SAT'D)

SCRUBBER GAS VELOCITY = 12.5 FT/SEC

INDUCED DRAFT SCRUBBER FAN OPTION

SCRUBBER PRESSURE = 14.7 PSIA

STOICHIOMETRY = 1.25 MOLE CACO3 ADDED AS LIMESTONE
PER MOLE (SO2+2HCL) ABSORBED

SO2 REMOVAL = 90. PERCENT

ENTRAINMENT LEVEL = 0.10 WT %

EHT RESIDENCE TIME = 12.0 MIN

SO2 OXIDIZED IN SYSTEM = 30.0 PERCENT

SOLIDS IN RECIRCULATED SLURRY = 15.0 WT %

SOLIDS DISPOSAL SYSTEM

COST OF LAND = 5000.00 DOLLARS/ACRE

SOLIDS IN SYSTEM SLUDGE DISCHARGE = 35.0 WT %

MAXIMUM POND AREA = 9999. ACRES

MAXIMUM EXCAVATION = 25.00 FT

DISTANCE TO POND = 5280. FT

POND LINED WITH 12.0 INCHES CLAY

STEAM REHEATER (IN-LINE)

SATURATED STEAM TEMPERATURE = 475. DEG F

HEAT OF VAPORIZATION OF STEAM = 751. BTU/LB

OUTLET FLUE GAS TEMPERATURE = 175. DEG F

SUPERFICIAL GAS VELOCITY (FACE VELOCITY) = 25.0 FT/SEC

Reproduced from best available copy.

EXAMPLE UTILITY, LIMESTONE, NEW ECONOMIC PREMISES CASE 007

*** OUTPUTS ***

HOT GAS TO SCRUBBER

	MOLE PERCENT	LB-MOLE/HR	LB/HR
CO2	12.338	0.2255E+05	0.9923E+06
HCL	0.006	0.1142E+02	0.4179E+03
SO2	0.214	0.3914E+03	0.2508E+05
O2	5.560	0.1016E+05	0.3251E+06
N2	75.227	0.1375E+06	0.3852E+07
H2O	6.654	0.1216E+05	0.2191E+06

SO2 CONCENTRATION IN SCRUBBER INLET GAS = 2142. PPM
= 5.28 LBS / MILLION BTU

FLYASH EMISSION = 0.03 LBS/MILLION BTU
= 0.015 GRAINS/SCF (WET) OR 147. LB/HR

SOLUBLE CAO IN FLY ASH = 0. LB/HR
SOLUBLE MGO IN FLY ASH = 0.

HOT GAS FLOW RATE = .1154E+07 SCFM (60 DEG F, 14.7 PSIA)
= .1687E+07 ACFM (300. DEG F, 14.7 PSIA)

CORRESPONDING COAL FIRING RATE = .4060E+06 LB/HR

HOT GAS HUMIDITY = 0.042 LB H2O/LB DRY GAS

WET BULB TEMPERATURE = 124. DEG F

WET GAS FROM SCRUBBER

	MOLE PERCENT	LB-MOLE/HR	LB/HR
CO2	11.716	0.2291E+05	0.1008E+07
HCL	0.000	0.5726E+00	0.2088E+02
SO2	0.020	0.3914E+02	0.2508E+04
O2	5.169	0.1011E+05	0.3234E+06
N2	70.300	0.1375E+06	0.3852E+07
H2O	12.795	0.2502E+05	0.4508E+06

SO2 CONCENTRATION IN SCRUBBER OUTLET GAS = 200. PPM

FLYASH EMISSION = 0.02 LBS/MILLION BTU
= 0.007 GRAINS/SCF (WET) OR 74. LB/HR

TOTAL WATER PICKUP = 475. GPM
INCLUDING 11.4 GPM ENTRAINMENT

WET GAS FLOW RATE = .1235E+07 SCFM (60 DEG F, 14.7 PSIA)
= .1388E+07 ACFM (124. DEG F, 14.7 PSIA)

WET GAS SATURATION HUMIDITY = 0.087 LB H2O/LB DRY GAS

FLUE GAS TO STACK

	MOLE PERCENT	LB-MOLE/HR	LB/HR
CO2	11.697	0.2291E+05	0.1008E+07
HCL	0.000	0.5726E+00	0.2088E+02
SO2	0.020	0.3914E+07	0.2508E+04
O2	5.160	0.1011E+05	0.3234E+06
N2	70.188	0.1375E+06	0.3852E+07
H2O	12.934	0.2533E+05	0.4564E+06

SPECIFIED SO2 REMOVAL EFFICIENCY = 90.0 %

CALCULATED SO2 EMISSION = 0.53 POUNDS PER MILLION BTU

CALCULATED SO2 CONCENTRATION IN STACK GAS = 200. PPM

FLYASH EMISSION = 0.02 LBS/MILLION BTU
= 0.007 GRAINS/SCF (WET) OR 74. LB/HR

STACK GAS FLOW RATE = .1237E+07 SCFM (60 DEG F, 14.7 PSIA)
= .1511E+07 ACFM (175. DEG F, 14.7 PSIA)

STEAM REHEATER (IN-LINE)

SUPERFICIAL GAS VELOCITY (FACE VELOCITY) = 25.0 FT/SEC

SQUARE PIPE PITCH = 2 TIMES ACTUAL PIPE O.D.

SATURATED STEAM TEMPERATURE = 470. DEG F

OUTLET FLUE GAS TEMPERATURE = 175. DEG F

REQUIRED HEAT INPUT TO REHEATER = 0.6578E+08 BTU/HR

STEAM CONSUMPTION = 0.8758E+05 LBS/HR

OUTSIDE PIPE DIAMETER, IN.	PRESSURE DROP, IN. H2O	HEAT TRANSFER COEFFICIENT, BTU/HR FT2 DEG F
1.00	0.65	0.2098E+02

	REHEATER OUTSIDE PIPE AREA, SQ FT PER TRAIN	NUMBER OF PIPES PER BANK PER TRAIN	NUMBER OF BANKS (ROWS) PER TRAIN
INCONEL	0.1533E+04	91	4
CORTEN	0.8823E+03	91	2
TOTAL	0.2416E+04	91	6

Reproduced from best available copy.

WATER BALANCE INPUTS

RAINFALL(IN/YEAR)	50.
POND SEEPAGE(CM/SEC)*10**8	50.
POND EVAPORATION(IN/YEAR)	32.

WATER BALANCE OUTPUTS

WATER AVAILABLE

RAINFALL	879. GPM	439534. LB/HR
ALKALI	5. GPM	2304. LB/HR
TOTAL	884. GPM	441838. LB/HR

WATER REQUIRED

HUMIDIFICATION	464. GPM	231695. LB/HR
ENTRAINMENT	11. GPM	5630. LB/HR
DISPOSAL WATER	222. GPM	110878. LB/HR
HYDRATION WATER	12. GPM	5983. LB/HR
CLARIFIER EVAPORATION	0. GPM	0. LB/HR
POND EVAPORATION	599. GPM	299417. LB/HR
SEEPAGE	109. GPM	54571. LB/HR
TOTAL WATER REQUIRED	1417. GPM	708175. LB/HR
NET WATER REQUIRED	533. GPM	266337. LB/HR

SCRUBBER SYSTEM

TOTAL NUMBER OF SCRUBBING TRAINS (OPERATING+REDUNDANT) = 5

SO2 REMOVAL = 90.0 PERCENT

PARTICULATE REMOVAL IN SCRUBBER SYSTEM = 50.0 PERCENT

TCA PRESSURE DROP ACROSS 3 BEDS = 8.6 IN. H2O

TOTAL SYSTEM PRESSURE DROP = 14.7 IN. H2O

OVERRIDE TOTAL SYSTEM PRESSURE DROP = 20.0 IN. H2O

SPECIFIED LIQUID-TO-GAS-RATIO = 55. GAL/1000 ACF(SATR)

LIMESTONE ADDITION = 0.4607E+05 LB/HR DRY LIMESTONE

SPECIFIED LIMESTONE STOICHIOMETRY = 1.25 MOLE CACO3 ADDED AS LIMESTONE PER MOLE (SO2+2HCL) ABSORBED

SOLUBLE CAO FROM FLY ASH = 0.0 MOLE PER MOLE (SO2+2HCL) ABSORBED

TOTAL SOLUBLE MGO = 0.0 MOLE PER MOLE (SO2+2HCL) ABSORBED

TOTAL STOICHIOMETRY = 1.25 MOLE SOLUBLE (CA+MG) PER MOLE (SO2+2HCL) ABSORBED

SCRUBBER INLET LIQUOR PH = 5.66

MAKE UP WATER = 533. GPM

CROSS-SECTIONAL AREA PER SCRUBBER = 463. SQ FT

SYSTEM SLUDGE DISCHARGE

SPECIES	LB-MOLE/HR	LB/HR	SOLID COMP. WT %	LIQUID COMP. PPM
CASO3 .1/2 H2O	0.2465E+03	0.3183E+05	52.92	
CASO4 .2H2O	0.1044E+03	0.1797E+05	29.88	
CACO3	0.8942E+02	0.8951E+04	14.88	
INSOLUBLES	----------	0.1387E+04	2.31	
H2O	0.6154E+04	0.1109E+06		
CA++	0.6921E+01	0.2774E+03		2484.
MG++	0.0	0.0		0.
SO3--	0.1818E+00	0.1456E+02		130.
SO4--	0.1297E+01	0.1246E+03		1116.
CL-	0.1048E+02	0.3857E+03		3453.

TOTAL DISCHARGE FLOW RATE = 0.1718E+06 LB/HR
= 270. GPM

TOTAL DISSOLVED SOLIDS IN DISCHARGE LIQUID = 7169. PPM

DISCHARGE LIQUID PH = 7.37

SCRUBBER SLURRY BLEED

SPECIES	LB-MOLE/HR	LB/HR
CASO3 .1/2 H2O	0.2465E+03	0.3153E+05
CASO4 .2H2O	0.1044E+03	0.1777E+05
CACO3	0.8942E+02	0.8951E+04
INSOLUBLES	----------	0.1387E+04
H2O	0.1878E+05	0.3343E+06
CA++	0.2112E+02	0.8454E+03
MG++	0.0	0.0
SO3--	0.5548E+00	0.4442E+02
SO4--	0.3958E+01	0.3832E+03
CL-	0.3320E+02	0.1177E+04
AD=	0.0	0.0

TOTAL FLOW RATE = 0.4009E+06 LB/HR
= 728. GPM

TOTAL SUPERNATE RETURN

SPECIES	LB-MOLE/HR	LB/HR
H2O	0.1734E+05	0.3124E+06
CA++	0.1950E+02	0.7815E+03
MG++	0.0	0.0
SO3--	0.5123E+00	0.4101E+02
SO4--	0.3655E+01	0.3511E+03
CL-	0.3065E+02	0.1087E+04
AD=	0.0	0.0

TOTAL FLOW RATE = 0.3146E+06 LB/HR
= 630. GPM

SUPERNATE TO WET BALL MILL

SPECIES	LB-MOLE/HR	LB/HR
H2O	0.1582E+04	0.2851E+05
CA++	0.1779E+01	0.7132E+02
MG++	0.0	0.0
SO3--	0.4675E-01	0.3743E+01
SO4--	0.3336E+00	0.3204E+02
CL-	0.2797E+01	0.9917E+02
AD=	0.0	0.0

TOTAL FLOW RATE = 0.2871E+05 LB/HR
= 57. GPM

LIMESTONE SLURRY FEED

SPECIES	LB-MOLE/HR	LB/HR
CACO3	0.4471E+03	0.4476E+05
SOLUBLE MGO	0.0	0.0
INSOLUBLES	----------	0.1313E+04
H2O	0.1623E+04	0.3049E+05
CA++	0.1779E+01	0.7132E+02
MG++	0.0	0.0
SO3--	0.4675E-01	0.3743E+01
SO4--	0.3336E+00	0.3204E+02
CL-	0.2797E+01	0.9917E+02
AD=	0.0	0.0

TOTAL FLOW RATE = 0.7678E+05 LB/HR
= 97. GPM

SUPERNATE RETURN TO SCRUBBER OR EHT

SPECIES	LB-MOLE/HR	LB/HR
H2O	0.1576E+05	0.2839E+06
CA++	0.1772E+02	0.7101E+03
MG++	0.0	0.0
SO3--	0.4655E+00	0.3727E+02
SO4--	0.3321E+01	0.3190E+03
CL-	0.2785E+02	0.9876E+03
AD=	0.0	0.0

TOTAL FLOW RATE = 0.2859E+06 LB/HR
= 372. GPM

RECYCLE SLURRY TO SCRUBBER

SPECIES	LB-MOLE/HR	LB/HR
CASO3 .1/2 H2O	0.2584E+05	0.3336E+07
CASO4 .2H2O	0.1095E+05	0.1884E+07
CACO3	0.9373E+04	0.9382E+06
INSOLUBLES	----------	0.1453E+06
H2O	0.1968E+07	0.3546E+08
CA++	0.2213E+04	0.8872E+05
MG++	0.0	0.0
SO3--	0.5815E+02	0.4656E+04
SO4--	0.4149E+03	0.3946E+05
CL-	0.3480E+04	0.1234E+06
AD=	0.0	0.0

TOTAL FLOW RATE = 0.4202E+08 LB/HR
= 76321. GPM

FLUE GAS COOLING SLURRY

SPECIES	LB-MOLE/HR	LB/HR
CASO3 .1/2 H2O	0.1879E+04	0.2426E+06
CASO4 .2H2O	0.7960E+03	0.1370E+06
CACO3	0.6817E+03	0.6824E+05
INSOLUBLES	----------	0.1357E+05
H2O	0.1432E+04	0.2579E+07
CA++	0.1610E+03	0.6452E+04
MG++	0.0	0.0
SO3--	0.4229E+01	0.3386E+03
SO4--	0.3010E+02	0.2899E+04
CL-	0.2531E+03	0.8971E+04
AD=	0.0	0.0

TOTAL FLOW RATE = 0.3056E+07 LB/HR
= 5551. GPM

POND DESIGN

OPTIMIZED TO MINIMIZE TOTAL COST PLUS OVERHEAD

POND DIMENSIONS

DEPTH OF POND	22.81	FT
DEPTH OF EXCAVATION	9.02	FT
LENGTH OF POND PERIMETER	15484.	FT
LENGTH OF DIVIDER	2819.	FT
LENGTH PERIMETER FENCE	16510.	FT
AREA OF BOTTOM	1486.	THOUSAND YD2
AREA OF INSIDE WALLS	164.	THOUSAND YD2
AREA OF OUTSIDE WALLS	123.	THOUSAND YD2
AREA OF RECLAIM STORAGE	122.	THOUSAND YD2
AREA OF POND	1648.	THOUSAND YD2
AREA OF POND SITE	2015.	THOUSAND YD2
AREA OF POND SITE	416.	ACRES
VOLUME OF EXCAVATION	2183.	THOUSAND YD3
VOLUME OF RECLAIM STORAGE	928.	THOUSAND YD3
VOLUME OF SLUDGE TO BE DISPOSED OVER LIFE OF PLANT	11935.	THOUSAND YD3
	7398.	ACRE FT

POND COSTS (THOUSANDS OF DOLLARS)

	LABOR	MATERIAL	TOTAL
CLEARING LAND	674.		674.
EXCAVATION	5424.		5424.
DIKE CONSTRUCTION	2711.		2711.
LINING(12. IN. CLAY)	1650.		1650.
SODDING DIKE WALLS	105.	69.	174.
ROAD CONSTRUCTION	44.	13.	57.
PERIMETER COSTS, FENCE+	83.	165.	248.
RECLAMATION EXPENSE	1113.		1113.
MONITOR WELLS	4.	4.	8.
POND CONSTRUCTION	11817.	251.	12059.
LAND COST			2081.
POND SITE			14140.
OVERHEAD			10298.
TOTAL			24438.

EXAMPLE UTILITY, LIMESTONE, NEW ECONOMIC PREMISES — CASE 007

PARTICULATE REMOVAL INVESTMENT AND OPERATING COST

WPSUL CONTENT (%):	3.36	PARTICULATE EMISSION REGULATION (LB ASH/MILLION BTU):	0.03
ASH CONTENT (%):	15.10	FLUE GAS TEMPERATURE (COLD) (F):	300.0
BTU RATING:	11700	FLUE GAS TEMPERATURE (HOT) (F):	700.0
BOILER TYPE:	DRY PULVERIZED COAL	COST OF ELECTRICITY ($/KWHR):	0.03
NO. OF SCRUBBERS:	4	COST OF STEAM ($/THOUSAND LB):	2.00
SCRUBBER VELOCITY (FT/M):	750.0	FIRST YEAR CAPITAL CHARGE FACTOR:	0.180
PLANT SIZE (MW):	500	BAGHOUSE RATIO (OPER. SQ.FT./ACTUAL SQ.FT.):	0.60
OPERATING HRS/YR:	4731	BAG COST ($/SQ.FT.):	0.70
PUMPING RATE (GAL/1000 ACF):	20.00	BAG LIFE(YEARS):	3.00
SCA RATIO: (ACTUAL SQ.FT./CALC. SQ.FT.)	1.300	FLUE GAS REHEAT TEMPERATURE (F):	175.
		CHEMICAL ENGINEERING PLANT INDEX:	262.0

ELECTROSTATIC PRECIPITATORS

	COLD	HOT	BAGHOUSE FABRIC FILTERS	SCRUBBERS
REQUIRED REMOVAL EFFICIENCY (%):	99.70	99.70	99.70	99.70
DRIFT VELOCITY (FT/M):	27.19	20.00		
SPECIFIC COLLECTION AREA (SQ.FT./ACFM):	277.74	377.59		
COLLECTION AREA (SQ.FT.):	468576.7	972309.6	866133.3	
TOTAL CORONA POWER (KW):	663.6	1012.8		
AUXILIARY POWER (KW):	407.4	915.2	490.2	
FAN POWER (KW):	264.0	403.0	1320.1	16039.9
PUMP POWER (KW):				3267.8
TOTAL POWER (KW):	1335.0	2331.0	1810.3	19307.7
OPERATING AIR/CLOTH RATIO:			2.4	
INSTALLED AIR/CLOTH RATIO:			1.9	
REQUIRED PRESSURE DROP (INCHES):	1.0	1.0	5.0	60.8
DIAMETER (FEET):				30
REQUIRED REHEAT (BTU/HR):				64268960.0
STEAM SUPPLY/YR (THOUSAND LB):				337840.4
INSTALLED COST (1979 DOLLARS):	$ 6562679	$ 12176132	$ 16303550	$ 22732816
FIRST YEAR CAPITALIZED COST:	$ 1183469	$ 2195762	$ 2940073	$ 4099484
ANNUAL POWER COST:	$ 183154	$ 319804	$ 249373	$ 2648996
ANNUAL OPERATING AND MAINTENANCE COST (1979 DOLLARS):	$ 112895	$ 169411	$ 73728	$ 1192909
REPLACEMENT COST (1979 DOLLARS):			$ 265128	
ANNUAL REHEAT COST:				$ 675681
TOTAL ANNUAL COST:	$ 1479518	$ 2684977	$ 3527302	$ 8617070
ANNUALIZED COST OF POWER(MILLS/KWHR):	0.63	1.14	1.49	3.64

RAW MATERIAL HANDLING AND PREPARATION

ITEM	DESCRIPTION	NO.	MATERIAL	LABOR
CAR SHAKER AND HOIST	20HP SHAKER 7.5HP HOIST	1	61661.	10801.
CAR PULLER	25HP PULLER, 5HP RETURN	1	54059.	16207.
UNLOADING HOPPER	16FT DIA, 10FT STRAIGHT INCLUDES 6 IN SQ GRATEING	1	13297.	4915.
UNLOADING VIBRATING FEEDER	3.5HP	1	4687.	432.
UNLOADING BELT CONVEYOR	20FT HORIZONTAL, 5HP	1	9809.	1188.
UNLOADING INCLINE BELT CONVEYOR	310FT, 50HP	1	73133.	3996.
UNLOADING PIT DUST COLLECTOR	POLYPROPYLENE BAGTYPE, INCLUDES DUST HOOD	1	9591.	4320.
UNLOADING PIT SUMP PUMP	60GPM, 70FT HEAD, 5HP	1	2071.	648.
STORAGE BELT CONVEYOR	200FT, 5HP	1	62670.	3240.
STORAGE CONVEYOR TRIPPER	30FPM, 1HP	1	23324.	7561.
MOBILE EQUIPMENT	SCRAPPER TRACTOR	1	121633.	0.
RECLAIM HOPPER	7FT WIDE, 4.25FT HT, 2FT WIDE BOTTOM, CS	2	2071.	1350.
RECLAIM VIBRATING FEEDER	3.5HP	2	9373.	864.
RECLAIM BELT CONVEYOR	200FT, 5HP	1	35095.	2376.
RECLAIM INCLINE BELT CONVEYOR	173FT, 40HP	1	51661.	3024.
RECLAIM PIT DUST COLLECTOR	POLYPROPYLENE BAG TYPE	1	6648.	2160.
RECLAIM PIT SUMP PUMP	60GPM, 70FT HEAD, 5HP	1	2071.	648.
RECLAIM BUCKET ELEVATOR	90FT HIGH, 75HP	1	57002.	5509.
FEED BIN	13FT DIA, 21FT STRAIGHT SIDE HT, COVERED, CS	2	24741.	13285.
BIN WEIGH FEEDER	14FT PULLEY CENTERS, 2HP	2	28338.	1270.
GYRATORY CRUSHERS	75HP	2	169807.	3564.
BALL MILL DUST COLLECTORS	POLYPROPYLENE BAG TYPE 2200 CFM, 7.5HP	2	13297.	4320.
BALL MILL	11.5TPH, 135.HP	2	325278.	37290.
MILLS PRODUCT TANK	5500 GAL 10FT DIA, 10FT HT, FLAKEGLASS LINED CS	2	7847.	6049.
MILLS PRODUCT TANK AGITATOR	10HP	2	13079.	3024.

MILLS PRODUCT TANK SLURRY PUMP	48.GPM,60FT HEAD,3 2.HP, 2 OPERATING AND 1 SPARES		7245.	2268.
SLURRY FEED TANK	51185.GAL, 20.6FT DIA, 20.6FT HT, FLAKEGLASS-LINED CS	1	15700.	12533.
SLURRY FEED TANK AGITATOR	45.HP	1	33805.	2680.
SLURRY FEED TANK PUMPS	24.GPM, 60 FT HEAD, 1.HP, 4 OPERATING AND 4 SPARE	8	15377.	6049.
TOTAL EQUIPMENT COST			1257368.	141364.

SCRUBBING

INCLUDING 4 OPERATING AND 1 SPARE SCRUBBING TRAINS

ITEM	DESCRIPTION	NO.	MATERIAL	LABOR
I.D. FANS	20.0IN H2O, WITH 1585. HP MOTOR AND DRIVE	5	4415522.	91580.
SHELL			1313456.	
RUBBER LINING			1294623.	
MIST ELIMINATOR			268021.	
SLURRY HEADER AND NOZZLES			326906.	
GRIDS			581105.	
SPHERES			792482.	
TOTAL TCA SCRUBBER COSTS		5	4576593.	320314.
REHEATERS		5	2139716.	129069.
SOOTBLOWERS		60	252858.	151216.
EFFLUENT HOLD TANK	251860.GAL, 35.0FT DIA, 35.0FT HT, FLAKEGLASS-LINED CS	5	260199.	203156.
EFFLUENT HOLD TANK AGITATOR	66.HP	5	348255.	138051.
COOLING SPRAY PUMPS	1388.GPM 100FT HEAD, 64.HP, 4 OPERATING AND 6 SPARE	10	89798.	26735.
ABSORBER RECYCLE PUMPS	9540.GPM, 100FT HEAD, 442.HP, 8 OPERATING AND 7 SPARE	15	866250.	93129.
MAKEUP WATER PUMPS	2775.GPM, 200.FT HEAD, 234.HP, 1 OPERATING AND 1 SPARE	2	24300.	2043.
TOTAL EQUIPMENT COST			12973471.	1125897.

WASTE DISPOSAL

ITEM	DESCRIPTION	NO.	MATERIAL	LABOR
ABSORBER BLEED RECEIVING TANK	62898.GAL, 17.5FT DIA, 35.0FT HT, FLAKGLASS-LINED CS	1	20720.	16554.
ABSORBER BLEED TANK AGITATOR	38.HP	1	23676.	1877.
POND FEED SLURRY PUMPS	728.GPM, 130.FT HEAD 44.HP, 1 OPERATING AND 1 SPARE	2	15311.	4034.
POND SUPERNATE PUMPS	630.GPM, 192.FT HEAD, 51.HP, 1 OPERATING AND 1 SPARE	2	11210.	1222.
TOTAL EQUIPMENT COST			70917.	23687.

LIMESTONE SLURRY PROCESS -- BASIS: 500 MW UNIT, 1981 STARTUP

PROJECTED CAPITAL INVESTMENT REQUIREMENTS - EXAMPLE UTILITY, LIMESTONE, NEW ECONOMIC PREMISES — CASE 007

	INVESTMENT, THOUSANDS OF 1980 DOLLARS				DISTRIBUTION
	RAW MATERIAL HANDLING AND PREPARATION	SCRUBBING	WASTE DISPOSAL	TOTAL	PERCENT OF DIRECT INVESTMENT
EQUIPMENT					
MATERIAL	1257.	12973.	71.	14302.	32.0
LABOR	102.	1126.	24.	1311.	2.9
PIPING					
MATERIAL	330.	3370.	879.	4579.	10.3
LABOR	148.	660.	290.	1098.	2.5
DUCTWORK					
MATERIAL	0.	2298.	0.	2298.	5.1
LABOR	0.	1854.	0.	1854.	4.2
FOUNDATIONS					
MATERIAL	243.	136.	17.	396.	0.9
LABOR	637.	285.	34.	956.	2.1
POND CONSTRUCTION	0.	0.	12059.	12059.	27.0
STRUCTURAL					
MATERIAL	147.	287.	2.	436.	1.0
LABOR	86.	484.	3.	573.	1.3
ELECTRICAL					
MATERIAL	163.	716.	126.	1006.	2.3
LABOR	410.	1322.	266.	1998.	4.5
INSTRUMENTATION					
MATERIAL	101.	633.	9.	744.	1.7
LABOR	13.	102.	8.	126.	0.3
BUILDINGS					
MATERIAL	33.	0.	0.	33.	0.1
LABOR	36.	0.	0.	36.	0.1
SERVICES AND MISCELLANEOUS	74.	515.	271.	860.	1.9
SUBTOTAL DIRECT INVESTMENT	3844.	26764.	14058.	44666.	100.0
ENGINEERING DESIGN AND SUPERVISION	346.	2409.	1265.	4020.	9.0
CONSTRUCTION EXPENSES	615.	4282.	2249.	7147.	16.0
CONTRACTOR FEES	192.	1338.	703.	2233.	5.0
CONTINGENCY	899.	6259.	3655.	11613.	26.0
SUBTOTAL FIXED INVESTMENT	5996.	41752.	21930.	69679.	156.0
ALLOWANCE FOR STARTUP AND MODIFICATIONS	461.	3212.	1687.	5360.	12.0
INTEREST DURING CONSTRUCTION	899.	6263.	3290.	10452.	23.4
SUBTOTAL CAPITAL INVESTMENT	7356.	51227.	26907.	85491.	191.4
LAND	10.	4.	2093.	2107.	4.7
WORKING CAPITAL	202.	1408.	739.	2349.	5.3
TOTAL CAPITAL INVESTMENT	7568.	52639.	29739.	89947.	201.4

LIMESTONE SLURRY PROCESS -- BASIS: 500 MW UNIT, 1981 STARTUP

PROJECTED REVENUE REQUIREMENTS - EXAMPLE UTILITY, LIMESTONE, NEW ECONOMIC PREMISES CASE 007

DISPLAY SHEET FOR YEAR= 1
ANNUAL OPERATION KH-HR/KW = 4731

30.07 TONS PER HOUR DRY SLUDGE
TOTAL CAPITAL INVESTMENT 87267000

	ANNUAL QUANTITY	UNIT COST,$	TOTAL ANNUAL COST,$
DIRECT COSTS			
RAW MATERIAL			
LIMESTONE	109.0 K TONS	8.00/TON	871800
SUBTOTAL RAW MATERIAL			871800
CONVERSION COSTS			
OPERATING LABOR AND SUPERVISION	28450.0 MAN-HR	12.50/MAN-HR	355600
UTILITIES			
STEAM	414360.0 K LB	2.00/K LB	828700
PROCESS WATER	151270.0 K GAL	0.12/K GAL	18200
ELECTRICITY	41607580.0 KWH	0.029/KWH	1206900
MAINTENANCE			
LABOR AND MATERIAL			2970400
ANALYSES	4590.0 HR	17.00/HR	78000
SUBTOTAL CONVERSION COSTS			5431700
SUBTOTAL DIRECT COSTS			6323500
INDIRECT COSTS			
OVERHEADS			
PLANT AND ADMINISTRATIVE (60.0% OF CONVERSION COSTS LESS UTILITIES)			2042400
FIRST YEAR OPERATING AND MAINTENANCE COSTS			8365900
LEVELIZED CAPITAL CHARGES(14.7% OF TOTAL CAPITAL INVESTMENT)			13222000
FIRST YEAR ANNUAL REVENUE REQUIREMENTS			21567900
EQUIVALENT FIRST YEAR UNIT REVENUE REQUIREMENTS, MILLS/KWH			9.13
LEVELIZED OPERATING AND MAINTENANCE (1.886 TIMES FIRST YEAR OPER. & MAIN.)			15778100
LEVELIZED CAPITAL CHARGES(11.664% OF TOTAL CAPITAL INVESTMENT)			13222000
LEVELIZED ANNUAL REVENUE REQUIREMENTS			29000100
EQUIVALENT LEVELIZED UNIT REVENUE REQUIREMENTS, MILLS/KWH			12.54

HEAT RATE 9500. BTU/KWH = HEAT VALUE OF COAL 11700 BTU/LB = COAL RATE 960400 TONS/YR

Reproduced from best available copy.

EXAMPLE UTILITY, LIMESTONE, NEW ECONOMIC PREMISES CASE 008

*** INPUTS ***

BOILER CHARACTERISTICS

MEGAWATTS = 1000. UTILITY BASIS - NEW POND BASIS

BOILER HEAT RATE = 9500. BTU/KWH

EXCESS AIR = 39. PERCENT, INCLUDING LEAKAGE

HOT GAS TEMPERATURE = 300. DEG F

COAL ANALYSIS, WT % AS FIRED :

C	H	O	N	S	CL	ASH	H2O
66.70	3.80	5.60	1.30	3.36	0.10	15.10	4.00

SULFUR OVERHEAD = 92.0 PERCENT

ASH OVERHEAD = 80.0 PERCENT

HEATING VALUE OF COAL = 11700. BTU/LB

FLYASH REMOVAL	EFFICIENCY, %	EMISSION, LBS/M BTU
UPSTREAM OF SCRUBBER	93.7	0.03
WITHIN SCRUBBER	90.0	0.02

COST OF UPSTREAM FLYASH REMOVAL EXCLUDED

ALKALI

LIMESTONE :

CACO3 = 97.15 WT % DRY BASIS
SOLUBLE MGO = 0.0
INERTS = 2.85
MOISTURE CONTENT = 5.00 LB H2O/100 LBS DRY LIMESTONE
LIMESTONE HARDNESS WORK INDEX FACTOR = 10.00
LIMESTONE DEGREE OF GRIND FACTOR = 1.35

FLY ASH :

SOLUBLE CAO = 0.0 WT %
SOLUBLE MGO = 0.0
INERTS = 100.00

RAW MATERIAL HANDLING AREA

NUMBER OF REDUNDANT ALKALI PREPARATION UNITS = 0.

SCRUBBER SYSTEM VARIABLES

NUMBER OF OPERATING SCRUBBING TRAINS = 8

NUMBER OF REDUNDANT SCRUBBING TRAINS = 2

NUMBER OF BEDS = 3

NUMBER OF GRIDS = 4

HEIGHT OF SPHERES PER BED = 5.0 INCHES

LIQUID-TO-GAS RATIO = 55. GAL/1000 ACF(SATD)

SCRUBBER GAS VELOCITY = 12.5 FT/SEC

INDUCED DRAFT SCRUBBER FAN OPTION

SCRUBBER PRESSURE = 14.7 PSIA

STOICHIOMETRY = 1.25 MOLE CACO3 ADDED AS LIMESTONE
PER MOLE (SO2+2HCL) ABSORBED

SO2 REMOVAL = 90. PERCENT

ENTRAINMENT LEVEL = 0.10 WT %

EMT RESIDENCE TIME = 12.0 MIN

SO2 OXIDIZED IN SYSTEM = 30.0 PERCENT

SOLIDS IN RECIRCULATED SLURRY = 15.0 WT %

SOLIDS DISPOSAL SYSTEM

COST OF LAND = 9000.00 DOLLARS/ACRE

SOLIDS IN SYSTEM SLUDGE DISCHARGE = 35.0 WT %

MAXIMUM POND AREA = 2999. ACRES

MAXIMUM EXCAVATION = 25.00 FT

DISTANCE TO POND = 5280. FT

POND LINED WITH 12.0 INCHES CLAY

STEAM REHEATER (IN-LINE)

SATURATED STEAM TEMPERATURE = 470. DEG F

HEAT OF VAPORIZATION OF STEAM = 751. BTU/LB

OUTLET FLUE GAS TEMPERATURE = 175. DEG F

SUPERFICIAL GAS VELOCITY (FACE VELOCITY) = 25.0 FT/SEC

Reproduced from best available copy.

EXAMPLE UTILITY, LIMESTONE, NEW ECONOMIC PREMISES CASE 004

*** OUTPUTS ***

HOT GAS TO SCRUBBER

	MOLE PERCENT	LB-MOLE/HR	LB/HR
CO2	12.338	0.4509E+05	0.1985E+07
HCL	0.006	0.2290E+02	0.8351E+03
SO2	0.214	0.7829E+03	0.5015E+05
O2	5.560	0.2032E+05	0.6502E+06
N2	75.227	0.2749E+06	0.7704E+07
H2O	6.654	0.2432E+05	0.4381E+06

SO2 CONCENTRATION IN SCRUBBER INLET GAS = 2142. PPM
= 5.28 LBS / MILLION BTU

FLYASH EMISSION = 0.03 LBS/MILLION BTU
= 0.015 GRAINS/SCF (WET) OR 294. LB/HR

SOLUBLE CAO IN FLY ASH = 0. LB/HR
SOLUBLE MGO IN FLY ASH = 0.

HOT GAS FLOW RATE = .2309E+07 SCFM (60 DEG F, 14.7 PSIA)
= .3374E+07 ACFM (300. DEG F, 14.7 PSIA)

CORRESPONDING COAL FIRING RATE = .8120E+06 LB/HR

HOT GAS HUMIDITY = 0.042 LB H2O/LB DRY GAS

WET BULB TEMPERATURE = 124. DEG F

WET GAS FROM SCRUBBER

	MOLE PERCENT	LB-MOLE/HR	LB/HR
CO2	11.716	0.4582E+05	0.2017E+07
HCL	0.000	0.1145E+01	0.4175E+02
SO2	0.020	0.7829E+02	0.5015E+04
O2	5.169	0.2021E+05	0.6469E+06
N2	70.300	0.2749E+06	0.7704E+07
H2O	12.795	0.5004E+05	0.9015E+06

SO2 CONCENTRATION IN SCRUBBER OUTLET GAS = 200. PPM

FLYASH EMISSION = 0.02 LBS/MILLION BTU
= 0.007 GRAINS/SCF (WET) OR 147. LB/HR

TOTAL WATER PICKUP = 950. GPM
INCLUDING 22.5 GPM ENTRAINMENT

WET GAS FLOW RATE = .2470E+07 SCFM (60 DEG F, 14.7 PSIA)
= .2775E+07 ACFM (124. DEG F, 14.7 PSIA)

WET GAS SATURATION HUMIDITY = 0.087 LB H2O/LB DRY GAS

FLUE GAS TO STACK

	MOLE PERCENT	LB-MOLE/HR	LB/HR
CO2	11.697	0.4582E+05	0.2017E+07
HCL	0.000	0.1145E+01	0.4175E+02
SO2	0.020	0.7829E+02	0.5015E+04
O2	5.160	0.7021E+05	0.6469E+06
N2	70.188	0.2749E+06	0.7704E+07
H2O	12.934	0.5067E+05	0.9128E+06

SPECIFIED SO2 REMOVAL EFFICIENCY = 90.0 %

CALCULATED SO2 EMISSION = 0.53 POUNDS PER MILLION BTU

CALCULATED SO2 CONCENTRATION IN STACK GAS = 200. PPM

FLYASH EMISSION = 0.02 LBS/MILLION BTU
= 0.007 GRAINS/SCF (WET) OR 147. LB/HR

STACK GAS FLOW RATE = .2474E+07 SCFM (60 DEG F, 14.7 PSIA)
= .3022E+07 ACFM (175. DEG F, 14.7 PSIA)

STEAM REHEATER (IN-LINE)

SUPERFICIAL GAS VELOCITY (FACE VELOCITY) = 25.0 FT/SEC

SQUARE PIPE PITCH = 2 TIMES ACTUAL PIPE O.D.

SATURATED STEAM TEMPERATURE = 470. DEG F

OUTLET FLUE GAS TEMPERATURE = 175. DEG F

REQUIRED HEAT INPUT TO REHEATER = 0.1316E+09 BTU/HR

STEAM CONSUMPTION = 0.1752E+06 LBS/HR

OUTSIDE PIPE DIAMETER, IN.	PRESSURE DROP, IN. H2O	HEAT TRANSFER COEFFICIENT, BTU/HR FT2 DEG F
1.00	0.65	0.2098E+02

	REHEATER OUTSIDE PIPE AREA, SQ FT PER TRAIN	NUMBER OF PIPES PER BANK PER TRAIN	NUMBER OF BANKS (ROWS) PER TRAIN
INCONEL	0.1533E+04	91	4
CORTEN	0.8823E+03	91	2
TOTAL	0.2416E+04	91	6

Reproduced from best available copy.

WATER BALANCE INPUTS

RAINFALL(IN/YEAR)	50.
POND SEEPAGE(CM/SEC)*1000B	50.
POND EVAPORATION(IN/YEAR)	32.

WATER BALANCE OUTPUTS

WATER AVAILABLE

RAINFALL	1945. GPM	772120. LB/HR
ALKALI	9. GPM	4607. LB/HR
TOTAL	1954. GPM	776727. LB/HR

WATER REQUIRED

HUMIDIFICATION	927. GPM	463391. LB/HR
ENTRAINMENT	23. GPM	11260. LB/HR
DISPOSAL WATER	444. GPM	221757. LB/HR
HYDRATION WATER	24. GPM	11906. LB/HR
CLARIFIER EVAPORATION	0. GPM	0. LB/HR
POND EVAPORATION	1061. GPM	530386. LB/HR
SEEPAGE	192. GPM	95865. LB/HR
TOTAL WATER REQUIRED	2670. GPM	1334625. LB/HR
NET WATER REQUIRED	1114. GPM	557898. LB/HR

SCRUBBER SYSTEM

TOTAL NUMBER OF SCRUBBING TRAINS (OPERATING+REDUNDANT) = 10

SO2 REMOVAL = 90.0 PERCENT

PARTICULATE REMOVAL IN SCRUBBER SYSTEM = 90.0 PERCENT

TCA PRESSURE DROP ACROSS 3 BEDS = 6.6 IN. H2O

TOTAL SYSTEM PRESSURE DROP = 14.7 IN. H2O

OVERRIDE TOTAL SYSTEM PRESSURE DROP = 20.0 IN. H2O

SPECIFIED LIQUID-TO-GAS-RATIO = 55. GAL/1000 ACF(SATD)

LIMESTONE ADDITION = 0.9214E+05 LB/HR DRY LIMESTONE

SPECIFIED LIMESTONE STOICHIOMETRY = 1.25 MOLE CACO3 ADDED AS LIMESTONE PER MOLE (SO2+2HCL) ABSORBED

SOLUBLE CAO FROM FLY ASH = 0.0 MOLE PER MOLE (SO2+2HCL) ABSORBED

TOTAL SOLUBLE MGO = 0.0 MOLE PER MOLE (SO2+2HCL) ABSORBED

TOTAL STOICHIOMETRY = 1.25 MOLE SOLUBLE (CA+MG) PER MOLE (SO2+2HCL) ABSORBED

SCRUBBER INLET LIQUOR PH = 5.66

MAKE UP WATER = 1116. GPM

CROSS-SECTIONAL AREA PER SCRUBBER = 463. SQ FT

SYSTEM SLUDGE DISCHARGE

SPECIES	LB-MOLE/HR	LB/HR	SOLID COMP. WT %	LIQUID COMP. PPM
CASO3 .1/2 H2O	0.4930E+03	0.6365E+05	52.92	
CASO4 .2H2O	0.2088E+03	0.3594E+05	29.88	
CACO3	0.1788E+03	0.1790E+05	14.88	
INSOLUBLES	----------	0.2773E+04	2.31	
H2O	0.1231E+05	0.2218E+06		
CA++	0.1384E+02	0.5548E+03		2484.
MG++	0.0	0.0		0.
SO3--	0.3637E+00	0.2911E+02		130.
SO4--	0.2595E+01	0.2492E+03		1116.
CL-	0.2176E+02	0.7714E+03		3453.

TOTAL DISCHARGE FLOW RATE = 0.3436E+06 LB/HR
= 540. GPM

TOTAL DISSOLVED SOLIDS IN DISCHARGE LIQUID = 7169. PPM

DISCHARGE LIQUID PH = 7.37

Reproduced from best available copy.

SCRUBBER SLURRY BLEED

SPECIES	LB-MOLE/HR	LB/HR
CASO3 .1/2 H2O	0.4930E+03	0.6363E+05
CASO4 .2H2O	0.2088E+03	0.3544E+05
CACO3	0.1789E+03	0.1790E+05
INSOLUBLES	----------	0.2773E+04
H2O	0.3756E+05	0.6766E+06
CA++	0.4223E+02	0.1693E+04
MG++	0.0	0.0
SO3--	0.1110E+01	0.8884E+02
SO4--	0.7917E+01	0.7605E+03
CL-	0.6639E+02	0.2354E+04
AO=	0.0	0.0

TOTAL FLOW RATE = 0.8018E+06 LB/HR
= 1496. GPM

TOTAL SUPERNATE RETURN

SPECIES	LB-MOLE/HR	LB/HR
H2O	0.3329E+05	0.5997E+06
CA++	0.3743E+02	0.1500E+04
MG++	0.0	0.0
SO3--	0.9835E+00	0.7874E+02
SO4--	0.7017E+01	0.6740E+03
CL-	0.5884E+02	0.2086E+04
AO=	0.0	0.0

TOTAL FLOW RATE = 0.6040E+06 LB/HR
= 1209. GPM

SUPERNATE TO WET BALL MILL

SPECIES	LB-MOLE/HR	LB/HR
H2O	0.3137E+04	0.5652E+05
CA++	0.3523E+01	0.1414E+03
MG++	0.0	0.0
SO3--	0.9269E-01	0.7421E+01
SO4--	0.6613E+00	0.6352E+02
CL-	0.5546E+01	0.1966E+03
AO=	0.0	0.0

TOTAL FLOW RATE = 0.5693E+05 LB/HR
= 114. GPM

LIMESTONE SLURRY FEED

SPECIES	LB-MOLE/HR	LB/HR
CACO3	0.0943E+03	0.8932E+05
SOLUBLE MGO	0.0	0.0
INSOLUBLES	----------	0.2625E+04
H2O	0.3385E+04	0.6099E+05
CA++	0.3528E+01	0.1414E+03
MG++	0.0	0.0
SO3--	0.9269E-01	0.7421E+01
SO4--	0.6613E+00	0.6352E+02
CL-	0.5546E+01	0.1966E+03
AD=	0.0	0.0

TOTAL FLOW RATE = 0.1536E+06 LB/HR
= 194. GPM

SUPERNATE RETURN TO SCRUBBER OR EMT

SPECIES	LB-MOLE/HR	LB/HR
H2O	0.3015E+05	0.5432E+06
CA++	0.3390E+02	0.1359E+04
MG++	0.0	0.0
SO3--	0.8908E+00	0.7132E+02
SO4--	0.6355E+01	0.6105E+03
CL-	0.5330E+02	0.1889E+04
AD=	0.0	0.0

TOTAL FLOW RATE = 0.5471E+06 LB/HR
= 1095. GPM

RECYCLE SLURRY TO SCRUBBER

SPECIES	LB-MOLE/HR	LB/HR
CASO4 .1/2 H2O	0.5168E+05	0.6672E+07
CASO4 .2H2O	0.2189E+05	0.3767E+07
CACO3	0.1875E+05	0.1876E+07
INSOLUBLES	----------	0.2907E+06
H2O	0.3937E+07	0.7093E+08
CA++	0.4427E+04	0.1774E+06
MG++	0.0	0.0
SO3--	0.1163E+03	0.9312E+04
SO4--	0.8298E+03	0.7971E+05
CL-	0.6959E+04	0.2467E+06
AD=	0.0	0.0

TOTAL FLOW RATE = 0.8404E+08 LB/HR
= 152643. GPM

FLUE GAS COOLING SLURRY

SPECIES	LB-MOLE/HR	LB/HR
CASO3 .1/2 H2O	0.3759E+04	0.4852E+06
CASO4 .2H2O	0.1592E+04	0.2740E+06
CACO3	0.1363E+04	0.1365E+06
INSOLUBLES	----------	0.2114E+05
H2O	0.2463E+06	0.5158E+07
CA++	0.3220E+03	0.1290E+05
MG++	0.0	0.0
SO3--	0.0459E+01	0.6772E+03
SO4--	0.6035E+02	0.5797E+04
CL-	0.5061E+03	0.1794E+05
AO-	0.0	0.0

TOTAL FLOW RATE = 0.6112E+07 LB/HR
= 11101. GPM

POND DESIGN

OPTIMIZED TO MINIMIZE TOTAL COST PLUS OVERHEAD

POND DIMENSIONS

DEPTH OF POND	25.75	FT
DEPTH OF EXCAVATION	3.86	FT
LENGTH OF POND PERIMETER	23447.	FT
LENGTH OF DIVIDER	3792.	FT
LENGTH PERIMETER FENCE	21034.	FT
AREA OF BOTTOM	2659.	THOUSAND YD2
AREA OF INSIDE WALLS	240.	THOUSAND YD2
AREA OF OUTSIDE WALLS	187.	THOUSAND YD2
AREA OF RECLAIM STORAGE	142.	THOUSAND YD2
AREA OF POND	2895.	THOUSAND YD2
AREA OF POND SITE	3429.	THOUSAND YD2
AREA OF POND SITE	709.	ACRES
VOLUME OF EXCAVATION	3698.	THOUSAND YD3
VOLUME OF RECLAIM STORAGE	1597.	THOUSAND YD3
VOLUME OF SLUDGE TO BE DISPOSED OVER LIFE OF PLANT	23670.	THOUSAND YD3
	14795.	ACRE FT

POND COSTS (THOUSANDS OF DOLLARS)

	LABOR	MATERIAL	TOTAL
CLEARING LAND	1148.		1148.
EXCAVATION	9160.		9160.
DIKE CONSTRUCTION	4938.		4938.
LINING(12. IN. CLAY)	2900.		2900.
SODDING DIKE WALLS	157.	102.	259.
ROAD CONSTRUCTION	58.	18.	76.
PERIMETER COSTS, FENCE+	106.	218.	324.
RECLAIMATION EXPENSE	1894.		1894.
MONITOR WELLS	4.	4.	9.
POND CONSTRUCTION	19993.	340.	20333.
LAND COST			3543.
POND SITE			23876.
OVERHEAD			17365.
TOTAL			41241.

Reproduced from best available copy.

EXAMPLE UTILITY, LIMESTONE, NEW ECONOMIC PREMISES CASE 008

PARTICULATE REMOVAL INVESTMENT AND OPERATING COST

		PARTICULATE EMISSION REGULATION (LB ASH/MILLION BTU):	0.03
WPSUL CONTENT (%):	3.36	FLUE GAS TEMPERATURE (COLD) (F):	300.0
ASH CONTENT (%):	15.10	FLUE GAS TEMPERATURE (HOT) (F):	700.0
BTU RATING:	11700	COST OF ELECTRICITY ($/KWHR):	0.03
BOILER TYPE:	DRY PULVERIZED COAL	COST OF STEAM ($/THOUSAND LB):	2.00
NO. OF SCRUBBERS:	6	FIRST YEAR CAPITAL CHARGE FACTOR:	0.180
SCRUBBER VELOCITY (FT/M):	750.0	BAGHOUSE RATIO (OPER. SQ.FT./ACTUAL SQ.FT.):	0.80
PLANT SIZE (MW):	1000	BAG COST ($/SQ.FT.):	0.70
OPERATING HRS/YR:	4731	BAG LIFE(YEARS):	3.00
PUMPING RATE (GAL/1000 ACF):	20.00	FLUE GAS REHEAT TEMPERATURE (F):	175.
SCA RATIO: (ACTUAL SQ.FT./CALC. SQ.FT.)	1.300	CHEMICAL ENGINEERING PLANT INDEX:	265.0

ELECTROSTATIC PRECIPITATORS

	COLD	HOT	BAGHOUSE FABRIC FILTERS	SCRUBBERS
REQUIRED REMOVAL EFFICIENCY (%):	99.70	99.70	99.70	99.70
DRIFT VELOCITY (FT/M):	27.19	20.00		
SPECIFIC COLLECTION AREA (SQ.FT./ACFM):	277.74	377.59		
COLLECTION AREA (SQ.FT.):	937153.9	1944619.0	1732267.0	
TOTAL CORONA POWER (KW):	1327.1	2025.6		
AUXILIARY POWER (KW):	870.9	1973.7	775.6	
FAN POWER (KW):	528.0	805.9	2640.2	32079.9
PUMP POWER (KW):				6535.5
TOTAL POWER (KW):	2733.7	4805.3	3415.9	38615.4
OPERATING AIR/CLOTH RATIO:			2.4	
INSTALLED AIR/CLOTH RATIO:			1.9	
REQUIRED PRESSURE DROP (INCHES):	1.0	1.0	5.0	60.8
DIAMETER (FEET):				30
REQUIRED REHEAT (BTU/HR):				128538032.
STEAM SUPPLY/YR (THOUSAND LB):				675681.5
INSTALLED COST (1979 DOLLARS):	$ 12109651	$ 22514496	$ 29010704	$ 40588688
FIRST YEAR CAPITALIZED COST:	$ 2183773	$ 4060113	$ 5231596	$ 7319492
ANNUAL POWER COST:	$ 375064	$ 659278	$ 468665	$ 5297995
ANNUAL OPERATING AND MAINTENANCE COST (1979 DOLLARS):	$ 165977	$ 249066	$ 110662	$ 2129900
REPLACEMENT COST (1979 DOLLARS):			$ 530257	
ANNUAL REHEAT COST:				$ 1351363
TOTAL ANNUAL COST:	$ 2724814	$ 4968457	$ 6341180	$ 16098750
ANNUALIZED COST OF POWER(MILLS/KWHR):	0.58	1.05	1.34	3.40

RAW MATERIAL HANDLING AND PREPARATION

ITEM	DESCRIPTION	NO.	MATERIAL	LABOR
CAR SHAKER AND HOIST	20HP SHAKER 7.5HP HOIST	1	61661.	10801.
CAR PULLER	25HP PULLER, 5HP RETURN	1	54059.	16202.
UNLOADING HOPPER	16FT DIA, 10FT STRAIGHT INCLUDES 6 IN SQ GRATEING	1	13297.	4915.
UNLOADING VIBRATING FEEDER	3.5HP	1	4687.	432.
UNLOADING BELT CONVEYOR	20FT HORIZONTAL, 5HP	1	9809.	1188.
UNLOADING INCLINE BELT CONVEYOR	310FT, 50HP	1	73133.	3996.
UNLOADING PIT DUST COLLECTOR	POLYPROPYLENE BAGTYPE, INCLUDES DUST HOOD	1	9591.	4320.
UNLOADING PIT SUMP PUMP	600GPM, 70FT HEAD, 5HP	1	2071.	648.
STORAGE BELT CONVEYOR	300FT, 7HP	1	87465.	4861.
STORAGE CONVEYOR TRIPPER	30FPM, 1HP	1	23324.	7561.
MOBILE EQUIPMENT	SCRAPPER TRACTOR	1	121633.	0.
RECLAIM HOPPER	7FT WIDE, 4.25FT HT, 2FT WIDE BOTTOM, CS	3	3106.	2025.
RECLAIM VIBRATING FEEDER	3.5HP	3	14060.	1296.
RECLAIM BELT CONVEYOR	300FT, 7HP	1	50572.	3564.
RECLAIM INCLINE BELT CONVEYOR	193FT, 40HP	1	51661.	3024.
RECLAIM PIT DUST COLLECTOR	POLYPROPYLENE BAG TYPE	1	6648.	2160.
RECLAIM PIT SUMP PUMP	600GPM, 70FT HEAD, 5HP	1	2071.	648.
RECLAIM BUCKET ELEVATOR	90FT HIGH, 75HP	1	57002.	5509.
FEED BIN	13FT DIA, 21FT STRAIGHT SIDE HT, COVERED, CS	2	24741.	13285.
BIN WEIGH FEEDER	14FT PULLEY CENTERS, 2HP	2	28338.	1296.
GYRATORY CRUSHERS	75HP	2	169807.	3564.
BALL MILL DUST COLLECTORS	POLYPROPYLENE BAG TYPE 2200 CFM, 7.5HP	2	13297.	4320.
BALL MILL	23.0TPH, 311.HP	2	437624.	45602.
MILLS PRODUCT TANK	5500 GAL 10FT DIA, 10FT HT, FLAKEGLASS LINED CS	2	7847.	6049.
MILLS PRODUCT TANK AGITATOR	10HP	2	13070.	3024.

MILLS PRODUCT TANK SLURRY 97.GPM,60FT HEAD,3 10186. 2507.

PUMP	4.HP, 2 OPERATING AND 1 SPARES			
SLURRY FEED TANK	102370.GAL, 25.9FT DIA, 25.9FT HT, FLAKEGLASS-LINED CS	1	24921.	19894.
SLURRY FEED TANK AGITATOR	72.HP	1	55206.	4377.
SLURRY FEED TANK PUMPS	24.GPM, 60 FT HEAD, 1.HP, 8 OPERATING AND 7 SPARE	15	34438.	11341.
			---------	---------
TOTAL EQUIPMENT COST			1465350.	188611.

SCRUBBING

INCLUDING 8 OPERATING AND 2 SPARE SCRUBBING TRAINS

ITEM	DESCRIPTION	NO.	MATERIAL	LABOR
I.D. FANS	20.0IN H2O, WITH 1585. HP MOTOR AND DRIVE	10	8831051.	123160.
SHELL			2626915.	
RUBBER LINING			2589249.	
MIST ELIMINATOR			536043.	
SLURRY HEADER AND NOZZLES			653813.	
GRIDS			1162211.	
SPHERES			1584964.	
TOTAL TCA SCRUBBER COSTS		10	9153196.	640628.
REHEATERS		10	4279434.	258136.
SOOTBLOWERS		120	505716.	302432.
EFFLUENT HOLD TANK	251861.GAL, 35.0FT DIA, 35.0FT HT, FLAKEGLASS-LINED CS	10	520398.	406312.
EFFLUENT HOLD TANK AGITATOR	60.HP	10	696511.	552204.
COOLING SPRAY PUMPS	1388.GPM 100FT HEAD, 64.HP, 8 OPERATING AND 12 SPARE	20	179596.	53470.
ABSORBER RECYCLE PUMPS	9540.GPM, 100FT HEAD, 442.HP, 16 OPERATING AND 14 SPARE	30	1732501.	186259.
MAKEUP WATER PUMPS	5551.GPM, 200.FT HEAD, 468.HP, 1 OPERATING AND 1 SPARE	2	57353.	6292.
TOTAL EQUIPMENT COST			25955664.	2528849.

WASTE DISPOSAL

ITEM	DESCRIPTION	NO.	MATERIAL	LABOR
ABSORBER BLEED RECEIVING TANK	62878.GAL, 17.5FT DIA, 35.0FT HT, FLAKGLASS-LINED CS	1	20720.	16554.
ABSORBER BLEED TANK AGITATOR	30.HP	1	23676.	1877.
POND FEED SLURRY PUMPS	1456.GPM, 130.FT HEAD 87.HP, 1 OPERATING AND 1 SPARE	2	20050.	5461.
POND SUPERNATE PUMPS	1209.GPM, 192.FT HEAD, 98.HP, 1 OPERATING AND 1 SPARE	2	14599.	1591.
TOTAL EQUIPMENT COST			79044.	25484.

LIMESTONE SLURRY PROCESS -- BASIS: 1000 MW UNIT, 1981 STARTUP

PROJECTED CAPITAL INVESTMENT REQUIREMENTS - EXAMPLE UTILITY, LIMESTONE, NEW ECONOMIC PREMISES CASE 008

	INVESTMENT, THOUSANDS OF 1980 DOLLARS				DISTRIBUTION
	RAW MATERIAL HANDLING AND PREPARATION	SCRUBBING	WASTE DISPOSAL	TOTAL	PERCENT OF DIRECT INVESTMENT
EQUIPMENT					
MATERIAL	1465.	25956.	79.	27500.	34.1
LABOR	189.	2929.	25.	2743.	3.4
PIPING					
MATERIAL	493.	6707.	1154.	8354.	10.4
LABOR	209.	1303.	355.	1860.	2.3
DUCTWORK					
MATERIAL	0.	4694.	0.	4694.	5.8
LABOR	0.	3827.	0.	3827.	4.8
FOUNDATIONS					
MATERIAL	291.	272.	17.	579.	0.7
LABOR	772.	570.	34.	1376.	1.7
POND CONSTRUCTION	0.	0.	20333.	20333.	25.2
STRUCTURAL					
MATERIAL	177.	575.	2.	754.	0.9
LABOR	93.	968.	4.	1065.	1.3
ELECTRICAL					
MATERIAL	160.	1338.	131.	1628.	2.0
LABOR	362.	2341.	273.	2976.	3.7
INSTRUMENTATION					
MATERIAL	144.	1250.	11.	1405.	1.7
LABOR	22.	204.	8.	234.	0.3
BUILDINGS					
MATERIAL	50.	0.	0.	50.	0.1
LABOR	53.	0.	0.	53.	0.1
SERVICES AND MISCELLANEOUS	63.	738.	315.	1116.	1.4
SUBTOTAL DIRECT INVESTMENT	4341.	53272.	22743.	80556.	100.0
ENGINEERING DESIGN AND SUPERVISION	409.	4794.	2047.	7250.	9.0
CONSTRUCTION EXPENSES	727.	8524.	3639.	12889.	16.0
CONTRACTOR FEES	227.	2664.	1137.	4028.	5.0
CONTINGENCY	1181.	13851.	5913.	20945.	26.0
SUBTOTAL FIXED INVESTMENT	7085.	83105.	35479.	125566.	156.0
ALLOWANCE FOR STARTUP AND MODIFICATIONS	545.	6393.	2729.	9667.	12.0
INTEREST DURING CONSTRUCTION	1063.	12466.	5322.	18850.	23.4
SUBTOTAL CAPITAL INVESTMENT	8693.	101964.	43530.	154184.	191.4
LAND	11.	7.	3553.	3571.	4.4
WORKING CAPITAL	241.	2824.	1206.	4270.	5.3
TOTAL CAPITAL INVESTMENT	8945.	104795.	48291.	162027.	201.1

LIMESTONE SLURRY PROCESS -- BASIS: 1000 MW UNIT, 1981 STARTUP

PROJECTED REVENUE REQUIREMENTS - EXAMPLE UTILITY, LIMESTONE, NEW ECONOMIC PREMISES CASE 209

DISPLAY SHEET FOR YEAR= 1
ANNUAL OPERATION KH-HR/KW = 4731

60.13 TONS PER HOUR DRY SLUDGE
TOTAL CAPITAL INVESTMENT 157194000

	ANNUAL QUANTITY	UNIT COST,$	TOTAL ANNUAL COST,$
DIRECT COSTS			
RAW MATERIAL			
LIMESTONE	218.0 K TONS	8.00/TON	1743700
SUBTOTAL RAW MATERIAL			1743700
CONVERSION COSTS			
OPERATING LABOR AND SUPERVISION	38910.0 MAN-HR	12.50/MAN-HR	486300
UTILITIES			
STEAM	828720.0 K LB	2.00/K LB	1657400
PROCESS WATER	316860.0 K GAL	0.12/K GAL	38000
ELECTRICITY	80788430.0 KWH	0.0299/KWH	2342900
MAINTENANCE			
LABOR AND MATERIAL			5427800
ANALYSES	6110.0 HR	17.00/HR	103900
SUBTOTAL CONVERSION COSTS			10056300
SUBTOTAL DIRECT COSTS			11800000
INDIRECT COSTS			
OVERHEADS			
PLANT AND ADMINISTRATIVE (60.0% OF CONVERSION COSTS LESS UTILITIES)			3610400
FIRST YEAR OPERATING AND MAINTENANCE COSTS			15410800
LEVELIZED CAPITAL CHARGES(14.7% OF TOTAL CAPITAL INVESTMENT)			23817970
FIRST YEAR ANNUAL REVENUE REQUIREMENTS			39228770
EQUIVALENT FIRST YEAR UNIT REVENUE REQUIREMENTS, MILLS/KWH			8.29
LEVELIZED OPERATING AND MAINTENANCE (1.886 TIMES FIRST YEAR OPER. & MAIN.)			29064800
LEVELIZED CAPITAL CHARGES(11.64% OF TOTAL CAPITAL INVESTMENT)			23817970
LEVELIZED ANNUAL REVENUE REQUIREMENTS			52882770
EQUIVALENT LEVELIZED UNIT REVENUE REQUIREMENTS, MILLS/KWH			11.18

HEAT RATE 9500. BTU/KWH - HEAT VALUE OF COAL 11700 BTU/LB - COAL RATE 1920700 TONS/YR

APPENDIX B

INDUSTRIAL BOILER LIMESTONE FGD SYSTEM PREMISES

MATERIAL BALANCES

EQUIPMENT LIST

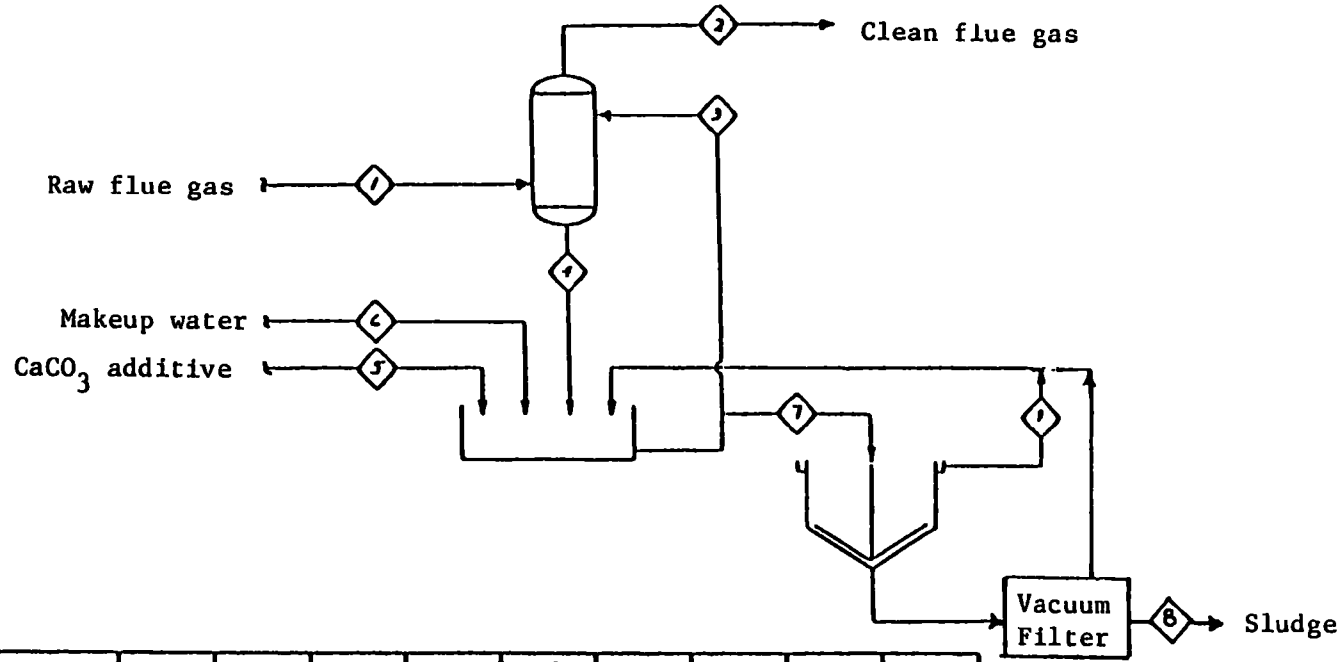

STREAM NUMBER / DESCRIPTION	1 INLET GAS	2 EXIT GAS	3 RECYCLE LIQUOR	4 SCRUBBER BOTTOMS	5 MAKEUP ALKALI	6 MAKEUP WATER	7 CLARIFIER FEED	8 SLUDGE	9 CLARIFIER RETURN
TOTAL FLOW RATE (lb/hr)	35,810	38,336	575,870	573,360	281	2998	3960	712	2942
(GPM)	—	—	1037.3	1032	—	6.0		0.7	5.9
TEMPERATURE (°F)	400	125							
GAS FLOW RATE (lb/hr)	35,810	38,336							
(lb MOLES/hr)	1234	1379							
(ACFM)	12,900	9800							
(SCFM)	7800	8711							
LIQUID PHASE FLOW RATE (lb/hr)			518,270	515,760		2998	3564	356	2902
SOLID PHASE FLOW RATE (lb/hr)			57,600	57,600	281		396	356	40

LIMESTONE FGD PROCESS

Boiler size: 30 x 10^6 BTU/Hr.
Coal type: Eastern

SO_2 Removal: 90%

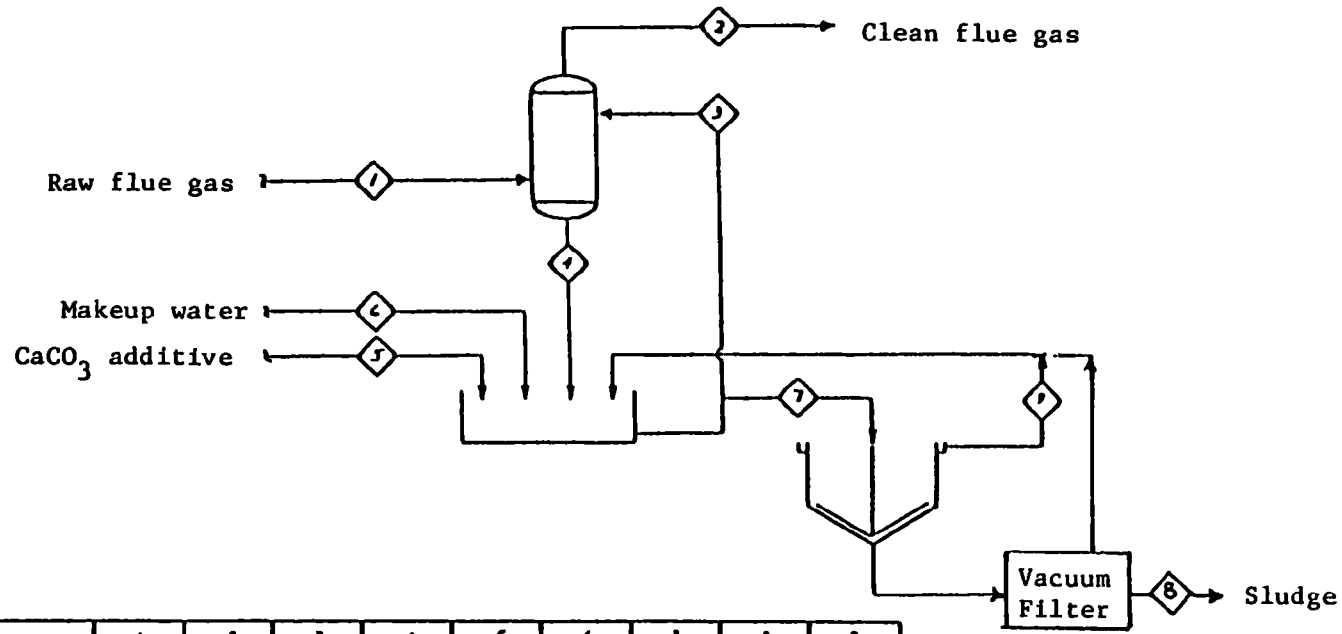

STREAM NUMBER / DESCRIPTION	1 INLET GAS	2 EXIT GAS	3 RECYCLE LIQUOR	4 SCRUBBER BOTTOMS	5 MAKEUP ALKALI	6 MAKEUP WATER	7 FEED	8 SLUDGE	9 RETURN
TOTAL FLOW RATE									
(lb/hr)	89663	96076	1.44×10^6	1.43×10^6	708		9980		7413
(GPM)	—	—	2597	2584	—		18		146
TEMPERATURE (°F)	400	125							
GAS FLOW RATE									
(lb/hr)	89663	96,076							
(lb MOLES/hr)	3091	3456							
(ACFM)	32,300	24559							
(SCFM)	19,530	21830							
LIQUID PHASE FLOW RATE									
(lb/hr)			1.3×10^6	1.29×10^6			8982		7313
SOLID PHASE FLOW RATE									
(lb/hr)			144,000	144,000	708		998	898	100

LIMESTONE FGD PROCESS

Boiler size: 75 x 10^6 BTU/Hr.
Coal type: Eastern
SO_2 removal: 90%

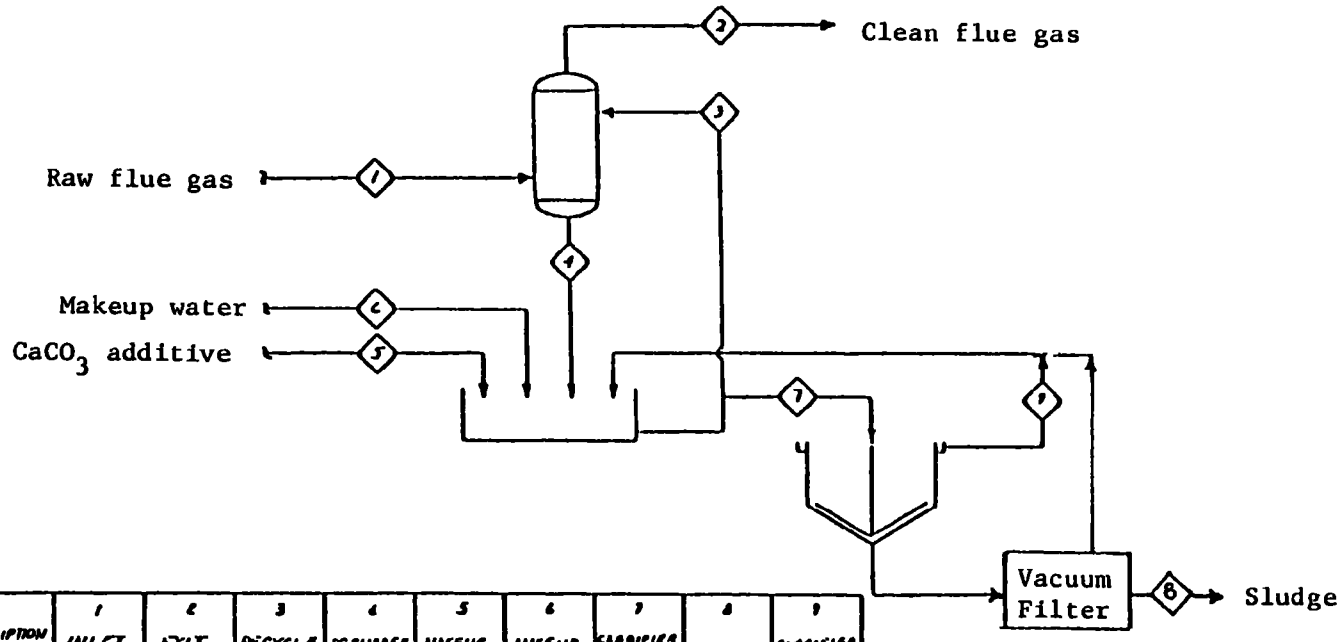

STREAM NUMBER / DESCRIPTION	1 INLET GAS	2 EXIT GAS	3 RECYCLE LIQUOR	4 SCRUBBER BOTTOMS	5 MAKEUP ALKALI	6 MAKEUP WATER	7 CLARIFIER FEED	8 SLUDGE	9 CLARIFIER RETURN
TOTAL FLOW RATE									
(lb/hr)	179,882	192,765	289×10^6	2.99×10^6	1428	15193	20130	3634	14953
(GPM)	—	—	5211	5184		30.4	36.2	3.6	27.5
TEMPERATURE (°F)	400	125							
GAS FLOW RATE									
(lb/hr)	179882	192765							
(lb MOLES/hr)	6202	6934							
(ACFM)	64800	49,774							
(SCFM)	39180	43789							
LIQUID PHASE FLOW RATE									
(lb/hr)			2.6×10^6	2.59×10^6		15193	19117	1812	14752
SOLID PHASE FLOW RATE									
(lb/hr)			289,323	289,373	1428		2013	1812	201

LIMESTONE FGD PROCESS

Boiler size: 150 x 10^6 BTU/Hr.
Coal type: Eastern
SO_2 removal: 90%

Reproduced from best available copy.

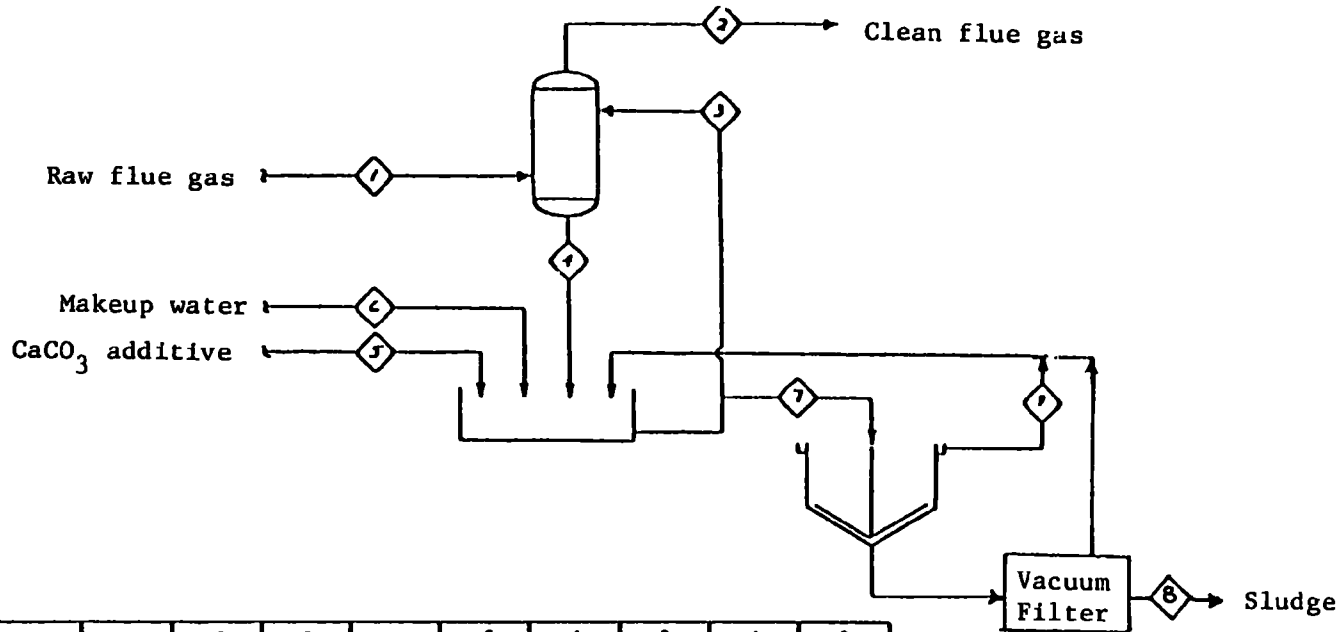

LIMESTONE FGD PROCESS

Boiler size: 200 x 10^6 BTU/Hr.
Coal type: Eastern
SO_2 removal: 90%

STREAM NUMBER / DESCRIPTION	1 INLET GAS	2 EXIT GAS	3 RECYCLE LIQUOR	4 SCRUBBER BOTTOMS	5 MAKEUP ALKALI	6 MAKEUP WATER	7 CLARIFIER FEED	8 SLUDGE	9 CLARIFIER RETURN
TOTAL FLOW RATE									
(lb/hr)	207640	222489	333×10^6	332×10^6	1896	17892	26730	4812	17450
(GPM)	—	—	6015	5989	—	35.8	48.1	1.8	34.3
TEMPERATURE (°F)	400	125	—	—	—	—	—	—	—
GAS FLOW RATE									
(lb/hr)	207640	222489							
(lb MOLES/hr)	7160	8003							
(ACFM)	74800	68971							
(SCFM)	45228	50552							
LIQUID PHASE FLOW RATE									
(lb/hr)			3.00×10^6	2.99×10^6		17892	24057	2406	17183
SOLID PHASE FLOW RATE									
(lb/hr)			334000	334000	1896		2673	2406	267

EQUIPMENT LIST - PURCHASED PRICE (1978 Dollars)

LIMESTONE FGD - INDUSTRIAL BOILERS

	8.8 MWt		22 MWt		44 MWt		58.6 MWt	
	Description	$	Description	$	Description	$	Description	$
Raw Material Handling								
Pneumatic Conveyor		3,394		3,394		3,394		3,394
Silo - 2 wt capacity	94.4k lbs	24,000	237.9k lbs	46,000	480.0k lbs	73,000	637.0k lbs	87,000
Screw Feeder		1,193		1,193		1,193		1,193
Mix Tank	30 gal	270	76 gal	390	152 gal	600	179 gal	670
Mixer		190		300		430		460
Feed Pumps - 2	6 gpm	6,000	15.2 gpm	7,200	30.4 gpm	8,400	35.8 gpm	8,700
		35,053		58,477		87,017		101,430
Fans	12,900 acfm	8,900	32,300 acfm	17,500	64,800 acfm	30,000	74,800 acfm	33,000
SO_2 Scrubbing								
Absorber	12,900 acfm	21,000	32,300 acfm	40,000	64,800 acfm	66,000	74,800 acfm	72,000
Hold Tank	5,220 gal	6,500	13,135 gal	12,000	26,220 gal	19,000	30,270 gal	21,500
Mixer		3,400		6,500		10,300		11,500
Circulation Pumps	1,000 gpm	17,000	2,596 gpm	20,000	5,134 gpm	23,000		24,000
		47,900		78,500		118,300		129,000
Solids Separation								
Clarifier	7.1 gpm	25,000	18 gpm	29,000	36.2 gpm	33,600	48.1 gpm	38,000
Clarifier Pumps - 2	7.1 gpm	6,400	18 gpm	7,800	36.2 gpm	8,800	48.1 gpm	9,200
Vacuum Filter	0.7 gpm	27,000	1.8 gpm	31,500	3.6 gpm	40,000	8.9 gpm	54,000
Clarifier Recycle Pumps	6 gpm	6,000	15 gpm	7,200	30 gpm	8,400	34.3 gpm	8,600
		64,400		75,500		90,800		109,800

APPENDIX C

UTILITY BOILER LIMESTONE FGD SYSTEM

PREMISES ON AN "INDUSTRIAL BASIS"

MATERIAL BALANCES

EQUIPMENT LISTS

CAPITAL INVESTMENT ESTIMATES

ANNUAL O&M COSTS

ANNUAL REVENUE REQUIREMENTS

APPENDIX C

As discussed in Section 2.1.2.3, TVA estimated the costs of utility boiler limestone FGD systems on an "industrial basis," i.e. with the following design scope differences from the standard TVA design scope described in Appendix A:

1. No stack gas reheat.
2. No spare absorber modules.
3. No on-site pond disposal. The waste solids are thickened and filtered to form a sludge which is hauled to off-site landfill disposal by an outside contractor.

This design is more typical of industrial boiler FGD system designs and is similar to the FGD system design scope used by Radian to develop industrial boiler FGD system costs.

The following information is included for each FGD system in this Appendix:

1. Plant heat rate
2. Flue gas characteristics
3. Coal analysis
4. Limestone analysis
5. Complete FGD system design scope
6. Material and energy balances
7. FGD system operating conditions
8. Sludge pond design criteria
9. FGD system process stream characterization
10. FGD system equipment list and costs
11. Equipment installation costs
12. Indirect investment costs
13. Annual O&M costs
14. Annual revenue requirements

Reheat & Spare Scrubber Investment

(10^3 \$, 1980 \$)

Boiler Capacity, MWe	100	250	500	1000
Reheat				
Equipment	735	1284	2140	4279
Installation Factor	2.25	2.25	2.21	2.16
Total Direct Investment	1652	2884	4729	9255
Indirect Investment Factor	1.979	1.978	1.975	1.975
Total Capital Investment	3269	5707	9340	18279
Spares				
Equipment	1988	2292	2423	4854
Installation Factor	2.25	2.25	2.21	2.16
Total Direct Investment	4468	5148	5354	10499
Indirect Investment Factor	1.979	1.978	1.975	1.975
Total Capital Investment	8843	10183	10575	20735
# Scrubbing Towers - Operating/Spares				
"Utility Basis"	1/1	2/1	4/1	8/2
"Industrial Basis"	1/0	2/0	4/0	8/0

Pond - determined by difference:

Utility Case - (Industrial Case + Reheat + Spares)

```
EXAMPLE INDUSTRIAL, LIMESTONE, NEW ECONOMIC PREMISES                    CASE 001

                        *** INPUTS ***

BOILER CHARACTERISTICS
------ --------------

MEGAWATTS =   100.        INDUSTRIAL BASIS

BOILER HEAT RATE =  9500. BTU/KWH

EXCESS AIR =  39. PERCENT, INCLUDING LEAKAGE

HOT GAS TEMPERATURE = 300. DEG F

COAL ANALYSIS, WT % AS FIRED :

 C      H      O      N      S      CL     ASH    H2O
66.70  3.80   5.60   1.30   3.36   0.10  15.10   4.00

SULFUR OVERHEAD =  92.0 PERCENT

ASH OVERHEAD =  80.0 PERCENT

HEATING VALUE OF COAL = 11700. BTU/LB

                              EFFICIENCY,    EMISSION,
FLYASH REMOVAL                   %          LBS/M BTU
------ ------                 ----------    ---------

UPSTREAM OF SCRUBBER            99.7           0.03

WITHIN SCRUBBER                 50.0           0.02

COST OF UPSTREAM FLYASH REMOVAL EXCLUDED

ALKALI
------

LIMESTONE :

        CACO3        =  97.15 WT % DRY BASIS
        SOLUBLE MGO  =   0.0
        INERTS       =   2.85
        MOISTURE CONTENT =   5.00 LB H2O/100 LBS DRY LIMESTONE
        LIMESTONE HARDNESS WORK INDEX FACTOR = 10.00
        LIMESTONE DEGREE OF GRIND FACTOR =  1.35

FLY ASH :

        SOLUBLE CAO  =   0.0  WT %
        SOLUBLE MGO  =   0.0
        INERTS       = 100.00


RAW MATERIAL HANDLING AREA
--- -------- -------- ----

NUMBER OF REDUNDANT ALKALI PREPARATION UNITS =    0
```

SCRUBBER SYSTEM VARIABLES

NUMBER OF OPERATING SCRUBBING TRAINS = 1

NUMBER OF REDUNDANT SCRUBBING TRAINS = 0

NUMBER OF BEDS = 3

NUMBER OF GRIDS = 4

HEIGHT OF SPHERES PER BED = 5.0 INCHES

LIQUID-TO-GAS RATIO = 55. GAL/1000 ACF(SATD)

SCRUBBER GAS VELOCITY = 12.5 FT/SEC

INDUCED DRAFT SCRUBBER FAN OPTION

SCRUBBER PRESSURE = 14.7 PSIA

STOICHIOMETRY = 1.25 MOLE CACO3 ADDED AS LIMESTONE
PER MOLE (SO2+2HCL) ABSORBED

SO2 REMOVAL = 90. PERCENT

ENTRAINMENT LEVEL = 0.10 WT %

EHT RESIDENCE TIME = 12.0 MIN

SO2 OXIDIZED IN SYSTEM = 30.0 PERCENT

SOLIDS IN RECIRCULATED SLURRY = 15.0 WT %

SOLIDS DISPOSAL SYSTEM

COST OF LAND = 5000.00 DOLLARS/ACRE

SOLIDS IN SYSTEM SLUDGE DISCHARGE = 50.0 WT %

SOLIDS IN CLARIFIER DISCHARGE = 35.0 WT %

CLARIFIER SOLIDS SETTLING RATE = 0.20 FT/HR

SOLIDS IN FILTER CAKE = 50.0 WT %

FILTRATION RATE = 1.20 TONS DRY SOLIDS/FT2 DAY

NO REHEATERS

EXAMPLE INDUSTRIAL, LIMESTONE, NEW ECONOMIC PREMISES CASE 001

*** OUTPUTS ***

HOT GAS TO SCRUBBER

	MOLE PERCENT	LB-MOLE/HR	LB/HR
CO2	12.338	0.4509E+04	0.1985E+06
HCL	0.006	0.2290E+01	0.8351E+02
SO2	0.214	0.7829E+02	0.5015E+04
O2	5.560	0.2032E+04	0.6502E+05
N2	75.227	0.2749E+05	0.7704E+06
H2O	6.654	0.2432E+04	0.4381E+05

SO2 CONCENTRATION IN SCRUBBER INLET GAS = 2142. PPM
= 5.28 LBS / MILLION BTU

FLYASH EMISSION = 0.03 LBS/MILLION BTU
= 0.015 GRAINS/SCF (WET) OR 29. LB/HR

SOLUBLE CAO IN FLY ASH = 0. LB/HR
SOLUBLE MGO IN FLY ASH = 0.

HOT GAS FLOW RATE = .2309E+06 SCFM (60 DEG F, 14.7 PSIA)
= .3374E+06 ACFM (300. DEG F, 14.7 PSIA)

CORRESPONDING COAL FIRING RATE = .8120E+05 LB/HR

HOT GAS HUMIDITY = 0.042 LB H2O/LB DRY GAS

WET BULB TEMPERATURE = 124. DEG F

WET GAS FROM SCRUBBER

	MOLE PERCENT	LB-MOLE/HR	LB/HR
CO2	11.716	0.4582E+04	0.2017E+06
HCL	0.000	0.1145E+00	0.4175E+01
SO2	0.020	0.7829E+01	0.5015E+03
O2	5.169	0.2021E+04	0.6469E+05
N2	70.300	0.2749E+05	0.7704E+06
H2O	12.795	0.5004E+04	0.9015E+05

SO2 CONCENTRATION IN SCRUBBER OUTLET GAS = 200. PPM

FLYASH EMISSION = 0.02 LBS/MILLION BTU
= 0.007 GRAINS/SCF (WET) OR 15. LB/HR

TOTAL WATER PICKUP = 95. GPM
INCLUDING 2.3 GPM ENTRAINMENT

WET GAS FLOW RATE = .2470E+06 SCFM (60 DEG F, 14.7 PSIA)
= .2775E+06 ACFM (124. DEG F, 14.7 PSIA)

WET GAS SATURATION HUMIDITY = 0.087 LB H2O/LB DRY GAS

FLUE GAS TO STACK

	MOLE PERCENT	LB-MOLE/HR	LB/HR
CO2	11.697	0.4582E+04	0.2017E+06
HCL	0.000	0.1145E+00	0.4175E+01
SO2	0.020	0.7829E+01	0.5015E+03
O2	5.160	0.2021E+04	0.6469E+05
N2	70.188	0.2749E+05	0.7704E+06
H2O	12.934	0.5067E+04	0.9128E+05

SPECIFIED SO2 REMOVAL EFFICIENCY = 90.0 %

CALCULATED SO2 EMISSION = 0.33 POUNDS PER MILLION BTU

CALCULATED SO2 CONCENTRATION IN STACK GAS = 200. PPM

FLYASH EMISSION = 0.02 LBS/MILLION BTU
= 0.007 GRAINS/SCF (WET) OR 15. LB/HR

STACK GAS FLOW RATE = .2474E+06 SCFM (60 DEG F, 14.7 PSIA)
= .2819E+06 ACFM (132. DEG F, 14.7 PSIA)

WATER BALANCE INPUTS

RAINFALL(IN/YEAR)	50.
POND SEEPAGE(CM/SEC)*10**8	50.
POND EVAPORATION(IN/YEAR)	32.

WATER BALANCE OUTPUTS

WATER AVAILABLE

RAINFALL	0. GPM	109. LB/HR
ALKALI	1. GPM	461. LB/HR
TOTAL	1. GPM	569. LB/HR

WATER REQUIRED

HUMIDIFICATION	93. GPM	46339. LB/HR
ENTRAINMENT	2. GPM	1126. LB/HR
DISPOSAL WATER	24. GPM	11911. LB/HR
HYDRATION WATER	2. GPM	1201. LB/HR
CLARIFIER EVAPORATION	4. GPM	2097. LB/HR
POND EVAPORATION	0. GPM	0. LB/HR
SEEPAGE	0. GPM	0. LB/HR
TOTAL WATER REQUIRED	125. GPM	62674. LB/HR
NET WATER REQUIRED	124. GPM	62104. LB/HR

SCRUBBER SYSTEM

TOTAL NUMBER OF SCRUBBING TRAINS (OPERATING+REDUNDANT) = 1

SO2 REMOVAL = 90.0 PERCENT

PARTICULATE REMOVAL IN SCRUBBER SYSTEM = 50.0 PERCENT

TCA PRESSURE DROP ACROSS 3 BEDS = 8.6 IN. H2O

TOTAL SYSTEM PRESSURE DROP = 13.9 IN. H2O

OVERRIDE TOTAL SYSTEM PRESSURE DROP = 20.0 IN. H2O

SPECIFIED LIQUID-TO-GAS-RATIO = 55. GAL/1000 ACF(SAT0)

LIMESTONE ADDITION = 0.9214E+04 LB/HR DRY LIMESTONE

SPECIFIED LIMESTONE STOICHIOMETRY = 1.25 MOLE CACO3 ADDED AS LIMESTONE
PER MOLE (SO2+2HCL) ABSORBED

SOLUBLE CAO FROM FLY ASH = 0.0 MOLE PER MOLE (SO2+2HCL) ABSORBED

TOTAL SOLUBLE MGO = 0.0 MOLE PER MOLE (SO2+2HCL) ABSORBED

TOTAL STOICHIOMETRY = 1.25 MOLE SOLUBLE (CA+MG)
PER MOLE (SO2+2HCL) ABSORBED

SCRUBBER INLET LIQUOR PH = 5.66

MAKE UP WATER = 124. GPM

CROSS-SECTIONAL AREA PER SCRUBBER = 370. SQ FT

SOLIDS DISPOSAL SYSTEM

TOTAL CLARIFIER(S) CROSS-SECTIONAL AREA = 3664. SQ FT

SYSTEM SLUDGE DISCHARGE

SPECIES	LB-MOLE/HR	LB/HR	SOLID COMP, WT %	LIQUID COMP, PPM
CASO3 .1/2 H2O	0.4932E+02	0.6367E+04	52.84	
CASO4 .2H2O	0.2101E+02	0.3616E+04	30.01	
CACO3	0.1788E+02	0.1790E+04	14.86	
INSOLUBLES	----------	0.2773E+03	2.30	
H2O	0.6611E+03	0.1191E+05		
CA++	0.1244E+01	0.4985E+02		4136.
MG++	0.0	0.0		0.
SO3--	0.1898E-01	0.1519E+01		126.
SO4--	0.1314E+00	0.1262E+02		1047.
CL-	0.2176E+01	0.7714E+02		6401.

TOTAL DISCHARGE FLOW RATE = 0.2410E+05 LB/HR
= 33. GPM

TOTAL DISSOLVED SOLIDS IN DISCHARGE LIQUID = 11697. PPM

DISCHARGE LIQUID PH = 7.28

SCRUBBER SLURRY BLEED

SPECIES	LB-MOLE/HR	LB/HR
CASO3 .1/2 H2O	0.4932E+02	0.6367E+04
CASO4 .2H2O	0.2101E+02	0.3616E+04
CACO3	0.1788E+02	0.1790E+04
INSOLUBLES	----------	0.2773E+03
H2O	0.3746E+04	0.6749E+05
CA++	0.7047E+01	0.2825E+03
MG++	0.0	0.0
SO3--	0.1075E+00	0.8609E+01
SO4--	0.7444E+00	0.7151E+02
CL-	0.1233E+02	0.4371E+03
AD=	0.0	0.0

TOTAL FLOW RATE = 0.8034E+05 LB/HR
= 146. GPM

TOTAL SUPERNATE RETURN

SPECIES	LB-MOLE/HR	LB/HR
H2O	0.2976E+04	0.5362E+05
CA++	0.5599E+01	0.2244E+03
MG++	0.0	0.0
SO3--	0.8543E-01	0.6840E+01
SO4--	0.5914E+00	0.5681E+02
CL-	0.9795E+01	0.3472E+03
AD=	0.0	0.0

TOTAL FLOW RATE = 0.5425E+05 LB/HR
= 109. GPM

SUPERNATE TO WET BALL MILL

SPECIES	LB-MOLE/HR	LB/HR
H2O	0.3370E+03	0.6071E+04
CA++	0.6339E+00	0.2541E+02
MG++	0.0	0.0
SO3--	0.9673E-02	0.7744E+00
SO4--	0.6696E-01	0.6432E+01
CL-	0.1109E+01	0.3932E+02
AD=	0.0	0.0

TOTAL FLOW RATE = 0.6143E+04 LB/HR
= 12. GPM

LIMESTONE SLURRY FEED

SPECIES	LB-MOLE/HR	LB/HR
CACO3	0.8943E+02	0.8952E+04
SOLUBLE MGO	0.0	0.0
INSOLUBLES	----------	0.2626E+03
H2O	0.3370E+03	0.6071E+04
CA++	0.6339E+00	0.2541E+02
MG++	0.0	0.0
SO3--	0.9673E-02	0.7744E+00
SO4--	0.6696E-01	0.6432E+01
CL-	0.1109E+01	0.3932E+02
AD=	0.0	0.0

TOTAL FLOW RATE = 0.1536E+05 LB/HR
= 19. GPM

SUPERNATE RETURN TO SCRUBBER OR EMT

SPECIES	LB-MOLE/HR	LB/HR
H2O	0.2639E+04	0.4753E+05
CA++	0.4965E+01	0.1990E+03
MG++	0.0	0.0
SO3--	0.7576E-01	0.6065E+01
SO4--	0.5244E+00	0.5037E+02
CL-	0.8686E+01	0.3079E+03
AD=	0.0	0.0

TOTAL FLOW RATE = 0.4811E+05 LB/HR
= 96. GPM

RECYCLE SLURRY TO SCRUBBER

SPECIES	LB-MOLE/HR	LB/HR
CASO3 .1/2 H2O	0.5159E+04	0.6661E+06
CASO4 .2H2O	0.2198E+04	0.3753E+06
CACO3	0.1871E+04	0.1873E+06
INSOLUBLES	----------	0.2901E+05
H2O	0.3919E+06	0.7060E+07
CA++	0.7372E+03	0.2955E+05
MG++	0.0	0.0
SO3--	0.1125E+02	0.9006E+03
SO4--	0.7787E+02	0.7485E+04
CL-	0.1270E+04	0.4572E+05
AD=	0.0	0.0

TOTAL FLOW RATE = 0.8404E+07 LB/HR
= 15264. GPM

FLUE GAS COOLING SLURRY

SPECIES	LB-MOLE/HR	LB/HR
CASO3 .1/2 H2O	0.3752E+03	0.4844E+05
CASO4 .2H2O	0.1599E+03	0.2751E+05
CACO3	0.1361E+03	0.1362E+05
INSOLUBLES	----------	0.2110E+04
H2O	0.2850E+05	0.5135E+06
CA++	0.5361E+02	0.2149E+04
MG++	0.0	0.0
SO3--	0.8181E+00	0.6550E+02
SO4--	0.5663E+01	0.5440E+03
CL-	0.9381E+02	0.3325E+04
AD=	0.0	0.0

TOTAL FLOW RATE = 0.6112E+06 LB/HR
= 1110. GPM

CLARIFIER UNDERFLOW SLURRY

SPECIES	LB-MOLE/HR	LB/HR
CASO3 .1/2 H2O	0.4932E+02	0.6367E+04
CASO4 .2H2O	0.2101E+02	0.3616E+04
CACO3	0.1788E+02	0.1790E+04
INSOLUBLES	----------	0.2773E+03
H2O	0.1228E+04	0.2212E+05
CA++	0.2310E+01	0.9257E+02
MG++	0.0	0.0
SO3--	0.3524E-01	0.2822E+01
SO4--	0.2440E+00	0.2344E+02
CL-	0.4041E+01	0.1433E+03
AD=	0.0	0.0

TOTAL FLOW RATE = 0.3443E+05 LB/HR
= 54. GPM

SUPERNATE FROM CLARIFIER

SPECIES	LB-MOLE/HR	LB/HR
CASO3 .1/2 H2O	0.0	0.0
CASO4 .2H2O	0.0	0.0
CACO3	0.0	0.0
INSOLUBLES	----------	0.0
H2O	0.2409E+04	0.4341E+05
CA++	0.4533E+01	0.1817E+03
MG++	0.0	0.0
SO3--	0.6916E-01	0.5537E+01
SO4--	0.4788E+00	0.4599E+02
CL-	0.7930E+01	0.2811E+03
AD=	0.0	0.0

TOTAL FLOW RATE = 0.4392E+05 LB/HR

= 88. GPM

FILTER CAKE SLURRY

SPECIES	LB-MOLE/HR	LB/HR
CASO3 .1/2 H2O	0.4932E+02	0.6367E+04
CASO4 .2H2O	0.2101E+02	0.3616E+04
CACO3	0.1788E+02	0.1790E+04
INSOLUBLES	----------	0.2773E+03
H2O	0.6611E+03	0.1191E+05
CA++	0.1244E+01	0.4985E+02
MG++	0.0	0.0
SO3--	0.1898E-01	0.1519E+01
SO4--	0.1314E+00	0.1262E+02
CL-	0.2176E+01	0.7714E+02
AD=	0.0	0.0

TOTAL FLOW RATE = 0.2410E+05 LB/HR
= 33. GPM

FILTRATE FROM FILTER

SPECIES	LB-MOLE/HR	LB/HR
CASO3 .1/2 H2O	0.0	0.0
CASO4 .2H2O	0.0	0.0
CACO3	0.0	0.0
INSOLUBLES	----------	0.0
H2O	0.5667E+03	0.1021E+05
CA++	0.1066E+01	0.4272E+02
MG++	0.0	0.0
SO3--	0.1627E-01	0.1302E+01
SO4--	0.1126E+00	0.1082E+02
CL-	0.1865E+01	0.6612E+02
AD=	0.0	0.0

TOTAL FLOW RATE = 0.1033E+05 LB/HR
= 21. GPM

EXAMPLE INDUSTRIAL, LIMESTONE, NEW ECONOMIC PREMISES CASE 001

PARTICULATE REMOVAL INVESTMENT AND OPERATING COST

		PARTICULATE EMISSION REGULATION (LB ASH/MILLION BTU):	0.03
WPSUL CONTENT (%):	3.36	FLUE GAS TEMPERATURE (COLD) (F):	300.0
ASH CONTENT (%):	15.10	FLUE GAS TEMPERATURE (HOT) (F):	700.0
BTU RATING:	11700	COST OF ELECTRICITY ($/KWHR):	0.03
BOILER TYPE:	DRY PULVERIZED COAL	COST OF STEAM ($/THOUSAND LB):	2.00
NO. OF SCRUBBERS:	1	FIRST YEAR CAPITAL CHARGE FACTOR:	0.180
SCRUBBER VELOCITY (FT/M):	750.0	BAGHOUSE RATIO (OPER. SQ.FT./ACTUAL SQ.FT.):	0.80
PLANT SIZE (MW):	100	BAG COST ($/SQ.FT.):	0.70
OPERATING HRS/YR:	5256	BAG LIFE(YEARS):	3.00
PUMPING RATE (GAL/1000 ACF):	20.00	FLUE GAS REHEAT TEMPERATURE (F):	132.
SCA RATIO: (ACTUAL SQ.FT./CALC. SQ.FT.)	1.300	CHEMICAL ENGINEERING PLANT INDEX:	265.0

	ELECTROSTATIC PRECIPITATORS			
	COLD	HOT	BAGHOUSE FABRIC FILTERS	SCRUBBERS
REQUIRED REMOVAL EFFICIENCY (%):	99.70	99.70	99.70	99.70
DRIFT VELOCITY (FT/M):	27.19	20.00		
SPECIFIC COLLECTION AREA (SQ.FT./ACFM):	277.74	377.59		
COLLECTION AREA (SQ.FT.):	95715.4	194462.1	173226.8	
TOTAL CORONA POWER (KW):	132.7	202.6		
AUXILIARY POWER (KW):	68.4	153.6	168.9	
FAN POWER (KW):	52.8	80.6	264.0	3208.0
PUMP POWER (KW):				653.6
TOTAL POWER (KW):	253.9	436.8	432.9	3861.5
OPERATING AIR/CLOTH RATIO:			2.4	
INSTALLED AIR/CLOTH RATIO:			1.9	
REQUIRED PRESSURE DROP (INCHES):	1.0	1.0	5.0	60.8
DIAMETER (FEET):				27
REQUIRED REHEAT (BTU/HR):				1204911.0
STEAM SUPPLY/YR (THOUSAND LB):				7036.7
INSTALLED COST (1979 DOLLARS):	$ 1502453	$ 2921883	$ 4277191	$ 5917050
FIRST YEAR CAPITALIZED COST:	$ 285369	$ 526913	$ 771320	$ 1067041
ANNUAL POWER COST:	$ 38701	$ 66377	$ 65982	$ 588592
ANNUAL OPERATING AND MAINTENANCE COST (1979 DOLLARS):	$ 46137	$ 69233	$ 49387	$ 310499
REPLACEMENT COST (1979 DOLLARS):			$ 53026	
ANNUAL REHEAT COST:				$ 14073
TOTAL ANNUAL COST:	$ 370207	$ 662723	$ 939715	$ 1980203
ANNUALIZED COST OF POWER(MILLS/KWHR):	0.70	1.26	1.79	3.77

RAW MATERIAL HANDLING AND PREPARATION

ITEM	DESCRIPTION	NO.	MATERIAL	LABOR	
MOBILE EQUIPMENT	BUCKET TRACTOR	1	65176.	0.	
RECLAIM HOPPER	7FT WIDE, 4.25FT HT, 2FT WIDE BOTTOM, CS	1	1035.	675.	
RECLAIM VIBRATING FEEDER	3.5HP	1	4687.	432.	
RECLAIM BELT CONVEYOR	100FT, 2HP	1	19618.	1188.	
RECLAIM INCLINE BELT CONVEYOR	193FT, 40HP	1	51661.	3024.	
RECLAIM PIT DUST COLLECTOR	POLYPROPYLENE BAG TYPE	1	6648.	2160.	
RECLAIM PIT SUMP PUMP	60GPM, 70FT HEAD, 5HP	1	2071.	648.	
RECLAIM BUCKET ELEVATOR	90FT HIGH, 75HP	1	49591.	5509.	
FEED BIN	13FT DIA, 21FT STRAIGHT SIDE HT, COVERED, CS	1	12270.	6648.	
BIN WEIGH FEEDER	14FT PULLEY CENTERS, 2HP	1	14169.	648.	
GYRATORY CRUSHERS	75HP	1	84904.	1782.	
BALL MILL DUST COLLECTORS	POLYPROPYLENE BAG TYPE 2200 CFM, 7.5HP	1	6648.	2160.	
BALL MILL	4.6TPH, 100.HP	1	137073.	16396.	X
MILLS PRODUCT TANK	5500 GAL 10FT DIA, 10FT HT, FLAKEGLASS LINED CS	1	3924.	3024.	
MILLS PRODUCT TANK AGITATOR	10HP	1	6539.	1512.	X
MILLS PRODUCT TANK SLURRY PUMP	19.GPM, 60FT HEAD, 1.HP, 1 OPERATING AND 1 SPARES	2	4530.	1512.	
SLURRY FEED TANK	10237.GAL, 12.0FT DIA, 12.0FT HT, FLAKEGLASS-LINED CS	1	5870.	4287.	X
SLURRY FEED TANK AGITATOR	15.HP	1	10825.	898.	X
SLURRY FEED TANK PUMPS	19.GPM, 60 FT HEAD, 1.HP, 1 OPERATING AND 1 SPARE	2	4530.	1512.	X
TOTAL EQUIPMENT COST			491369.	53972.	

SCRUBBING

ITEM	DESCRIPTION	NO.	MATERIAL	LABOR
I.D. FANS	20.0IN H2O, WITH 1185. HP MOTOR AND DRIVE	1	746551.	10445.
SHELL			227480.	
RUBBER LINING			221274.	
MIST ELIMINATOR			42546.	
SLURRY HEADER AND NOZZLES			32327.	
GRIDS			91010.	
SPHERES			125935.	
TOTAL TCA SCRUBBER COSTS		1	760182.	55087.
SOOTBLOWERS		8	19182.	17282.
EFFLUENT HOLD TANK	201489.GAL, 32.5FT DIA, 32.5FT HT, FLAKEGLASS-LINED CS	1	44847.	35016.
EFFLUENT HOLD TANK AGITATOR	57.HP	1	59478.	4716.
COOLING SPRAY PUMPS	1110.GPM 100FT HEAD, 51.HP, 1 OPERATING AND 1 SPARE	2	15970.	4850.
ABSORBER RECYCLE PUMPS	7632.GPM, 100FT HEAD, 354.HP, 2 OPERATING AND 1 SPARE	3	219649.	16895.
MAKEUP WATER PUMPS	555.GPM, 200.FT HEAD, 47.HP, 1 OPERATING AND 1 SPARE	2	10905.	1189.
TOTAL EQUIPMENT COST			1876758.	145478.

WASTE DISPOSAL

ITEM	DESCRIPTION	NO.	MATERIAL	LABOR
ABSORBER BLEED RECEIVING TANK	50320.GAL, 16.2FT DIA, 32.5FT HT, FLAKGLASS-LINED CS	1	17856.	14266.
ABSORBER BLEED TANK AGITATOR	33.HP	1	20219.	1603.
THICKENER FEED PUMP	146.GPM, 60FT HEAD, 4.HP, 1 OPERATING AND 1 SPARE	2	6813.	1998.
THICKENER	3664.SQ.FT., 68.FT DIA, 6.0TANK FT HT	1	102589.	101515.
THICKENER UNDERFLOW SLURRY PUMPS	54.GPM, 9.3FT HEAD, 0.HP , 1 OPERATING AND 1 SPARE	2	4187.	1512.
THICKENER OVERFLOW PUMPS	88.GPM, 75.0FT HEAD, 3.HP, 1 OPERATING AND 1 SPARE	2	7515.	819.
THICKENER OVERFLOW TANK	1450.GAL, 6.4FT DIA, 6.0FT HT	1	845.	538.
FILTER FEED TANK	892.GAL, 5.3FT DIA, 5.3FT HT, FLAKEGLASS-LINED CS	1	1056.	843.
FILTER FEED TANK AGITATOR	2.HP	1	865.	69.
FILTER FEED SLURRY PUMP	27.GPM, 30FT HEAD, 1.HP, 2 OPERATING AND 1 SPARE	3	6767.	2268.
FILTER	60.SQ FT FILTRATION AREA	2	94890.	26493.
FILTRATE PUMP (PER FILTER)	10.GPM, 20.0FT HEAD, 0.HP, 2 OPERATING AND 2 SPARE	4	13978.	1524.
FILTRATE SURGE TANK	341.GAL, 3.9FT DIA, 3.9FT HT	1	324.	214.
FILTRATE SURGE TANK PUMP	21.GPM, 85.0FT HEAD, 1.HP, 2 OPERATING AND 2SPARE	2	7142.	779.
TOTAL EQUIPMENT COST			285046.	154461.

LIMESTONE SLURRY PROCESS -- BASIS: 100 MW UNIT, 1981 STARTUP

PROJECTED CAPITAL INVESTMENT REQUIREMENTS - EXAMPLE INDUSTRIAL, LIMESTONE, NEW ECONOMIC PREMISES CASE 001

	INVESTMENT, THOUSANDS OF 1980 DOLLARS				DISTRIBUTION
	RAW MATERIAL HANDLING AND PREPARATION	SCRUBBING	WASTE DISPOSAL	TOTAL	PERCENT OF DIRECT INVESTMENT
EQUIPMENT					
MATERIAL	491.	1877.	285.	2653.	34.0
LABOR	54.	145.	154.	354.	4.5
PIPING					
MATERIAL	195.	504.	193.	892.	11.4
LABOR	79.	71.	86.	237.	3.0
DUCTWORK					
MATERIAL	0.	391.	0.	391.	5.0
LABOR	0.	287.	0.	287.	3.7
FOUNDATIONS					
MATERIAL	110.	24.	19.	153.	2.0
LABOR	301.	54.	39.	393.	5.0
POND CONSTRUCTION	0.	0.	0.	0.	0.0
STRUCTURAL					
MATERIAL	37.	52.	0.	89.	1.1
LABOR	35.	88.	0.	123.	1.6
ELECTRICAL					
MATERIAL	94.	138.	200.	432.	5.5
LABOR	170.	249.	578.	1003.	12.9
INSTRUMENTATION					
MATERIAL	41.	121.	40.	202.	2.6
LABOR	6.	20.	54.	79.	1.0
BUILDINGS					
MATERIAL	14.	0.	5.	19.	0.2
LABOR	15.	0.	5.	20.	0.3
SERVICES AND MISCELLANEOUS	106.	260.	107.	474.	6.1
SUBTOTAL DIRECT INVESTMENT	1753.	4283.	1767.	7803.	100.0
ENGINEERING DESIGN AND SUPERVISION	158.	385.	159.	702.	9.0
CONSTRUCTION EXPENSES	281.	685.	283.	1249.	16.0
CONTRACTOR FEES	88.	214.	88.	390.	5.0
CONTINGENCY	456.	1114.	459.	2029.	26.0
SUBTOTAL FIXED INVESTMENT	2736.	6681.	2756.	12173.	156.0
ALLOWANCE FOR STARTUP AND MODIFICATIONS	210.	514.	212.	936.	12.0
INTEREST DURING CONSTRUCTION	410.	1002.	413.	1826.	23.4
SUBTOTAL CAPITAL INVESTMENT	3356.	8197.	3381.	14936.	191.4
LAND	9.	1.	5.	15.	0.2
WORKING CAPITAL	110.	269.	111.	491.	6.3
TOTAL CAPITAL INVESTMENT	3475.	8467.	3497.	15441.	197.9

10/45

LIMESTONE SLURRY PROCESS -- BASIS: 100 MW UNIT, 1981 STARTUP

PROJECTED REVENUE REQUIREMENTS - EXAMPLE INDUSTRIAL, LIMESTONE, NEW ECONOMIC PREMISES CASE 001

DISPLAY SHEET FOR YEAR= 1 - 8
ANNUAL OPERATION KW-HR/KW = 5256 - 0.6 cap factor

6.03 TONS PER HOUR DRY SLUDGE
TOTAL CAPITAL INVESTMENT 14972000

	ANNUAL QUANTITY	UNIT COST,$	TOTAL ANNUAL COST,$
DIRECT COSTS			
RAW MATERIAL			
LIMESTONE	24.2 K TONS	8.00/TON	193700
SUBTOTAL RAW MATERIAL			193700
CONVERSION COSTS			
OPERATING LABOR AND SUPERVISION	27390.0 MAN-HR	12.50/MAN-HR	342400
UTILITIES			
PROCESS WATER	39190.0 K GAL	0.12/K GAL	4700
ELECTRICITY	9891580.0 KWH	0.029/KWH	286900
MAINTENANCE			
LABOR AND MATERIAL (8%xDI)			624300
ANALYSES	3220.0 HR	17.00/HR	54800
Sludge Disposal	63.4 K tons (50% solids)	15.00/HR	950810
SUBTOTAL CONVERSION COSTS			2263910
SUBTOTAL DIRECT COSTS			2457610
INDIRECT COSTS			
OVERHEADS			
PLANT AND ADMINISTRATIVE (60.0% OF CONVERSION COSTS LESS UTILITIES)			1183386
FIRST YEAR OPERATING AND MAINTENANCE COSTS			3640996
LEVELIZED CAPITAL CHARGES(14.7% OF TOTAL CAPITAL INVESTMENT)			2269827
FIRST YEAR ANNUAL COSTS			5910823

HEAT RATE 9500. BTU/KWH - HEAT VALUE OF COAL 11700 BTU/LB - COAL RATE 213400 TONS/YR

EXAMPLE INDUSTRIAL, LIMESTONE, NEW ECONOMIC PREMISES CASE 002

*** INPUTS ***

BOILER CHARACTERISTICS

INDUSTRIAL BASIS

MEGAWATTS = 250.

BOILER HEAT RATE = 9500. BTU/KWH

EXCESS AIR = 39. PERCENT, INCLUDING LEAKAGE

HOT GAS TEMPERATURE = 300. DEG F

COAL ANALYSIS, WT % AS FIRED :

C	H	O	N	S	CL	ASH	H2O
66.70	3.80	5.60	1.30	3.36	0.10	15.10	4.00

SULFUR OVERHEAD = 92.0 PERCENT

ASH OVERHEAD = 80.0 PERCENT

HEATING VALUE OF COAL = 11700. BTU/LB

FLYASH REMOVAL	EFFICIENCY, %	EMISSION, LBS/M BTU
UPSTREAM OF SCRUBBER	99.7	0.03
WITHIN SCRUBBER	50.0	0.02

COST OF UPSTREAM FLYASH REMOVAL EXCLUDED

ALKALI

LIMESTONE :

CACO3 = 97.15 WT % DRY BASIS
SOLUBLE MGO = 0.0
INERTS = 2.85
MOISTURE CONTENT = 5.00 LB H2O/100 LBS DRY LIMESTONE
LIMESTONE HARDNESS WORK INDEX FACTOR = 10.00
LIMESTONE DEGREE OF GRIND FACTOR = 1.35

FLY ASH :

SOLUBLE CAO = 0.0 WT %
SOLUBLE MGO = 0.0
INERTS = 100.00

RAW MATERIAL HANDLING AREA

NUMBER OF REDUNDANT ALKALI PREPARATION UNITS = 0

SCRUBBER SYSTEM VARIABLES

NUMBER OF OPERATING SCRUBBING TRAINS = 2

NUMBER OF REDUNDANT SCRUBBING TRAINS = 0

NUMBER OF BEDS = 3

NUMBER OF GRIDS = 4

HEIGHT OF SPHERES PER BED = 5.0 INCHES

LIQUID-TO-GAS RATIO = 55. GAL/1000 ACF(SATD)

SCRUBBER GAS VELOCITY = 12.5 FT/SEC

INDUCED DRAFT SCRUBBER FAN OPTION

SCRUBBER PRESSURE = 14.7 PSIA

STOICHIOMETRY = 1.25 MOLE CACO3 ADDED AS LIMESTONE
PER MOLE (SO2+2HCL) ABSORBED

SO2 REMOVAL = 90. PERCENT

ENTRAINMENT LEVEL = 0.10 WT %

EWT RESIDENCE TIME = 12.0 MIN

SO2 OXIDIZED IN SYSTEM = 30.0 PERCENT

SOLIDS IN RECIRCULATED SLURRY = 15.0 WT %

SOLIDS DISPOSAL SYSTEM

COST OF LAND = 5000.00 DOLLARS/ACRE

SOLIDS IN SYSTEM SLUDGE DISCHARGE = 50.0 WT %

SOLIDS IN CLARIFIER DISCHARGE = 35.0 WT %

CLARIFIER SOLIDS SETTLING RATE = 0.20 FT/HR

SOLIDS IN FILTER CAKE = 50.0 WT %

FILTRATION RATE = 1.20 TONS DRY SOLIDS/FT2 DAY

NO REHEATERS

```
EXAMPLE INDUSTRIAL, LIMESTONE, NEW ECONOMIC PREMISES                    CASE 002

                    *** OUTPUTS ***

HOT GAS TO SCRUBBER
--- --- -- --------

        MOLE PERCENT      LB-MOLE/HR      LB/HR

CO2        12.338         0.1127E+05      0.4961E+06
HCL         0.006         0.5726E+01      0.2088E+03
SO2         0.214         0.1957E+03      0.1254E+05
O2          5.560         0.5080E+04      0.1626E+06
N2         75.227         0.6874E+05      0.1926E+07
H2O         6.654         0.6080E+04      0.1095E+06

SO2 CONCENTRATION IN SCRUBBER INLET GAS = 2142. PPM
                                        = 5.28 LBS / MILLION BTU

FLYASH EMISSION =  0.03 LBS/MILLION BTU
                =  0.015 GRAINS/SCF (WET)  OR     74. LB/HR

      SOLUBLE CAO IN FLY ASH =     0. LB/HR
      SOLUBLE MGO IN FLY ASH =     0.

HOT GAS FLOW RATE =  .3772E+06 SCFM (60 DEG F, 14.7 PSIA)
                  =  .8435E+06 ACFM (300. DEG F, 14.7 PSIA)

CORRESPONDING COAL FIRING RATE =  .2030E+06 LB/HR

HOT GAS HUMIDITY =  0.042 LB H2O/LB DRY GAS

WET BULB TEMPERATURE = 124. DEG F

WET GAS FROM SCRUBBER
--- --- ---- --------

        MOLE PERCENT      LB-MOLE/HR      LB/HR

CO2        11.716         0.1146E+05      0.5042E+06
HCL         0.000         0.2863E+00      0.1044E+02
SO2         0.020         0.1957E+02      0.1254E+04
O2          5.169         0.5054E+04      0.1617E+06
N2         70.300         0.6874E+05      0.1926E+07
H2O        12.795         0.1251E+05      0.2254E+06

SO2 CONCENTRATION IN SCRUBBER OUTLET GAS =  200. PPM

FLYASH EMISSION =  0.02 LBS/MILLION BTU
                =  0.007 GRAINS/SCF (WET)  OR     37. LB/HR

TOTAL WATER PICKUP =  237.  GPM
          INCLUDING    5.6 GPM ENTRAINMENT

WET GAS FLOW RATE =  .6176E+06 SCFM (60 DEG F, 14.7 PSIA)
                  =  .6938E+06 ACFM (124. DEG F, 14.7 PSIA)

WET GAS SATURATION HUMIDITY =  0.087 LB H2O/LB DRY GAS
```

FLUE GAS TO STACK

	MOLE PERCENT	LB-MOLE/HR	LB/HR
CO2	11.697	0.1146E+05	0.5042E+06
HCL	0.000	0.2863E+00	0.1044E+02
SO2	0.020	0.1957E+02	0.1254E+04
O2	5.160	0.5054E+04	0.1617E+06
N2	70.180	0.6874E+05	0.1926E+07
H2O	12.934	0.1267E+05	0.2282E+06

SPECIFIED SO2 REMOVAL EFFICIENCY = 90.0 %

CALCULATED SO2 EMISSION = 0.53 POUNDS PER MILLION BTU

CALCULATED SO2 CONCENTRATION IN STACK GAS = 200. PPM

FLYASH EMISSION = 0.02 LBS/MILLION BTU
= 0.007 GRAINS/SCF (WET) OR 37. LB/HR

STACK GAS FLOW RATE = .6186E+06 SCFM (60 DEG F, 14.7 PSIA)
= .7047E+06 ACFM (132. DEG F, 14.7 PSIA)

WATER BALANCE INPUTS

RAINFALL(IN/YEAR)	50.
POND SEEPAGE(CM/SEC)*10**8	50.
POND EVAPORATION(IN/YEAR)	32.

WATER BALANCE OUTPUTS

WATER AVAILABLE		
RAINFALL	1. GPM	271. LB/HR
ALKALI	2. GPM	1152. LB/HR
TOTAL	3. GPM	1423. LB/HR
WATER REQUIRED		
HUMIDIFICATION	232. GPM	115848. LB/HR
ENTRAINMENT	6. GPM	2815. LB/HR
DISPOSAL WATER	60. GPM	29776. LB/HR
HYDRATION WATER	6. GPM	3004. LB/HR
CLARIFIER EVAPORATION	10. GPM	5241. LB/HR
POND EVAPORATION	0. GPM	0. LB/HR
SEEPAGE	0. GPM	0. LB/HR
TOTAL WATER REQUIRED	313. GPM	156684. LB/HR
NET WATER REQUIRED	311. GPM	155261. LB/HR

SCRUBBER SYSTEM

TOTAL NUMBER OF SCRUBBING TRAINS (OPERATING+REDUNDANT) = 2

SO2 REMOVAL = 90.0 PERCENT

PARTICULATE REMOVAL IN SCRUBBER SYSTEM = 50.0 PERCENT

TCA PRESSURE DROP ACROSS 3 BEDS = 8.6 IN. H2O

TOTAL SYSTEM PRESSURE DROP = 13.9 IN. H2O

OVERRIDE TOTAL SYSTEM PRESSURE DROP = 20.0 IN. H2O

SPECIFIED LIQUID-TO-GAS-RATIO = 55. GAL/1000 ACF(SATD)

LIMESTONE ADDITION = 0.2304E+05 LB/HR DRY LIMESTONE

SPECIFIED LIMESTONE STOICHIOMETRY = 1.25 MOLE CACO3 ADDED AS LIMESTONE
PER MOLE (SO2+2HCL) ABSORBED

SOLUBLE CAO FROM FLY ASH = 0.0 MOLE PER MOLE (SO2+2HCL) ABSORBED

TOTAL SOLUBLE MGO = 0.0 MOLE PER MOLE (SO2+2HCL) ABSORBED

TOTAL STOICHIOMETRY = 1.25 MOLE SOLUBLE (CA+MG)
PER MOLE (SO2+2HCL) ABSORBED

SCRUBBER INLET LIQUOR PH = 5.66

MAKE UP WATER = 311. GPM

CROSS-SECTIONAL AREA PER SCRUBBER = 463. SQ FT

SOLIDS DISPOSAL SYSTEM

TOTAL CLARIFIER(S) CROSS-SECTIONAL AREA = 9139. SQ FT

SYSTEM SLUDGE DISCHARGE

SPECIES	LB-MOLE/HR	LB/HR	SOLID COMP, WT %	LIQUID COMP, PPM
CASO3 .1/2 H2O	0.1233E+03	0.1592E+05	52.84	
CASO4 .2H2O	0.5253E+02	0.9041E+04	30.01	
CACO3	0.4471E+02	0.4476E+04	14.86	
INSOLUBLES	----------	0.6933E+03	2.30	
H2O	0.1653E+04	0.2978E+05		
CA++	0.3109E+01	0.1246E+03		4136.
MG++	0.0	0.0		0.
SO3--	0.4744E-01	0.3798E+01		126.
SO4--	0.3284E+00	0.3155E+02		1047.
CL-	0.5440E+01	0.1928E+03		6401.

TOTAL DISCHARGE FLOW RATE = 0.6026E+05 LB/HR
= 83. GPM

TOTAL DISSOLVED SOLIDS IN DISCHARGE LIQUID = 11697. PPM

DISCHARGE LIQUID PH = 7.28

SCRUBBER SLURRY BLEED

SPECIES	LB-MOLE/HR	LB/HR
CASO3 .1/2 H2O	0.1233E+03	0.1592E+05
CASO4 .2H2O	0.5253E+02	0.9041E+04
CACO3	0.4471E+02	0.4476E+04
INSOLUBLES	----------	0.6933E+03
H2O	0.9366E+04	0.1667E+06
CA++	0.1762E+02	0.7061E+03
MG++	0.0	0.0
SO3--	0.2688E+00	0.2152E+02
SO4--	0.1861E+01	0.1788E+03
CL-	0.3083E+02	0.1093E+04
AD=	0.0	0.0

TOTAL FLOW RATE = 0.2009E+06 LB/HR
= 365. GPM

TOTAL SUPERNATE RETURN

SPECIES	LB-MOLE/HR	LB/HR
H2O	0.7440E+04	0.1340E+06
CA++	0.1400E+02	0.5610E+03
MG++	0.0	0.0
SO3--	0.2136E+00	0.1710E+02
SO4--	0.1478E+01	0.1420E+03
CL-	0.2449E+02	0.8681E+03
AD=	0.0	0.0

TOTAL FLOW RATE = 0.1356E+06 LB/HR
= 271. GPM

SUPERNATE TO WET BALL MILL

SPECIES	LB-MOLE/HR	LB/HR
H2O	0.7876E+03	0.1419E+05
CA++	0.1482E+01	0.5938E+02
MG++	0.0	0.0
SO3--	0.2261E-01	0.1810E+01
SO4--	0.1565E+00	0.1503E+02
CL-	0.2592E+01	0.9190E+02
AD=	0.0	0.0

TOTAL FLOW RATE = 0.1436E+05 LB/HR
= 29. GPM

LIMESTONE SLURRY FEED

SPECIES	LB-MOLE/HR	LB/HR
CACO3	0.2236E+03	0.2238E+05
SOLUBLE MGO	0.0	0.0
INSOLUBLES	----------	0.6565E+03
H2O	0.8424E+03	0.1518E+05
CA++	0.1482E+01	0.5938E+02
MG++	0.0	0.0
SO3--	0.2261E-01	0.1810E+01
SO4--	0.1565E+00	0.1503E+02
CL-	0.2592E+01	0.9190E+02
AD=	0.0	0.0

TOTAL FLOW RATE = 0.3839E+05 LB/HR
= 48. GPM

SUPERNATE RETURN TO SCRUBBER OR EHT

SPECIES	LB-MOLE/HR	LB/HR
H2O	0.6653E+04	0.1199E+06
CA++	0.1251E+02	0.5016E+03
MG++	0.0	0.0
SO3--	0.1910E+00	0.1929E+02
SO4--	0.1322E+01	0.1270E+03
CL-	0.2190E+02	0.7762E+03
AD=	0.0	0.0

TOTAL FLOW RATE = 0.1213E+06 LB/HR
= 243. GPM

RECYCLE SLURRY TO SCRUBBER

SPECIES	LB-MOLE/HR	LB/HR
CASO3 .1/2 H2O	0.1290E+05	0.1665E+07
CASO4 .2H2O	0.5495E+04	0.9457E+06
CACO3	0.4677E+04	0.4682E+06
INSOLUBLES	----------	0.7252E+05
H2O	0.9797E+06	0.1765E+08
CA++	0.1843E+04	0.7387E+05
MG++	0.0	0.0
SO3--	0.2812E+02	0.2251E+04
SO4--	0.1947E+03	0.1870E+05
CL-	0.3225E+04	0.1143E+06
AD=	0.0	0.0

TOTAL FLOW RATE = 0.2101E+08 LB/HR
= 38161. GPM

FLUE GAS COOLING SLURRY

SPECIES	LB-MOLE/HR	LB/HR
CASO3 .1/2 H2O	0.9381E+03	0.1211E+06
CASO4 .2H2O	0.3997E+03	0.6878E+05
CACO3	0.3402E+03	0.3405E+05
INSOLUBLES	----------	0.5274E+04
H2O	0.7125E+05	0.1284E+07
CA++	0.1340E+03	0.5372E+04
MG++	0.0	0.0
SO3--	0.2045E+01	0.1637E+03
SO4--	0.1416E+02	0.1360E+04
CL-	0.2345E+03	0.8313E+04
AD=	0.0	0.0

TOTAL FLOW RATE = 0.1528E+07 LB/HR
= 2775. GPM

CLARIFIER UNDERFLOW SLURRY

SPECIES	LB-MOLE/HR	LB/HR
CASO3 .1/2 H2O	0.1233E+03	0.1592E+05
CASO4 .2H2O	0.5253E+02	0.9041E+04
CACO3	0.4471E+02	0.4476E+04
INSOLUBLES	----------	0.6933E+03
H2O	0.3069E+04	0.5530E+05
CA++	0.5774E+01	0.2314E+03
MG++	0.0	0.0
SO3--	0.8811E-01	0.7054E+01
SO4--	0.6099E+00	0.5859E+02
CL-	0.1010E+02	0.3581E+03
AD=	0.0	0.0

TOTAL FLOW RATE = 0.8608E+05 LB/HR
= 135. GPM

SUPERNATE FROM CLARIFIER

SPECIES	LB-MOLE/HR	LB/HR
CASO3 .1/2 H2O	0.0	0.0
CASO4 .2H2O	0.0	0.0
CACO3	0.0	0.0
INSOLUBLES	----------	0.0
H2O	0.6024E+04	0.1085E+06
CA++	0.1133E+02	0.4542E+03
MG++	0.0	0.0
SO3--	0.1729E+00	0.1384E+02
SO4--	0.1197E+01	0.1150E+03
CL-	0.1983E+02	0.7028E+03
AD=	0.0	0.0

TOTAL FLOW RATE = 0.1098E+06 LB/HR

.220 GPM

FILTER CAKE SLURRY

SPECIES	LB-MOLE/HR	LB/HR
CASO3 .1/2 H2O	0.1233E+03	0.1592E+05
CASO4 .2H2O	0.5253E+02	0.9041E+04
CACO3	0.4471E+02	0.4476E+04
INSOLUBLES	----------	0.6933E+03
H2O	0.1653E+04	0.2978E+05
CA++	0.3109E+01	0.1246E+03
MG++	0.0	0.0
SO3--	0.4744E-01	0.3798E+01
SO4--	0.3284E+00	0.3155E+02
CL-	0.5440E+01	0.1928E+03
AD=	0.0	0.0

TOTAL FLOW RATE = 0.6026E+05 LB/HR
= 83. GPM

FILTRATE FROM FILTER

SPECIES	LB-MOLE/HR	LB/HR
CASO3 .1/2 H2O	0.0	0.0
CASO4 .2H2O	0.0	0.0
CACO3	0.0	0.0
INSOLUBLES	----------	0.0
H2O	0.1417E+04	0.2552E+05
CA++	0.2665E+01	0.1068E+03
MG++	0.0	0.0
SO3--	0.4067E-01	0.3256E+01
SO4--	0.2815E+00	0.2704E+02
CL-	0.4663E+01	0.1653E+03
AD=	0.0	0.0

TOTAL FLOW RATE = 0.2582E+05 LB/HR
= 52. GPM

EXAMPLE INDUSTRIAL, LIMESTONE, NEW ECONOMIC PREMISES CASE 002

PARTICULATE REMOVAL INVESTMENT AND OPERATING COST

		PARTICULATE EMISSION REGULATION (LB ASH/MILLION BTU):	0.03
WPSUL CONTENT (%):	3.36	FLUE GAS TEMPERATURE (COLD) (F):	300.0
ASH CONTENT (%):	15.10	FLUE GAS TEMPERATURE (HOT) (F):	700.0
BTU RATING:	11700	COST OF ELECTRICITY ($/KWHR):	0.03
BOILER TYPE:	DRY PULVERIZED COAL	COST OF STEAM ($/THOUSAND LB):	2.00
NO. OF SCRUBBERS:	2	FIRST YEAR CAPITAL CHARGE FACTOR:	0.180
SCRUBBER VELOCITY (FT/M):	750.0	BAGHOUSE RATIO (OPER. SQ.FT./ACTUAL SQ.FT.):	0.80
PLANT SIZE (MW):	250	BAG COST ($/SQ.FT.):	0.70
OPERATING HRS/YR:	5256	BAG LIFE(YEARS):	3.00
PUMPING RATE (GAL/1000 ACF):	20.00	FLUE GAS REHEAT TEMPERATURE (F):	132.
SCA RATIO: (ACTUAL SQ.FT./CALC. SQ.FT.)	1.300	CHEMICAL ENGINEERING PLANT INDEX:	265.0

ELECTROSTATIC PRECIPITATORS

	COLD	HOT	BAGHOUSE FABRIC FILTERS	SCRUBBERS
REQUIRED REMOVAL EFFICIENCY (%):	99.70	99.70	99.70	99.70
DRIFT VELOCITY (FT/M):	27.19	20.00		
SPECIFIC COLLECTION AREA (SQ.FT./ACFM):	277.74	377.59		
COLLECTION AREA (SQ.FT.):	294288.6	486193.2	433067.2	
TOTAL CORONA POWER (KW):	331.8	906.4		
AUXILIARY POWER (KW):	188.9	424.3	309.8	
FAN POWER (KW):	132.0	201.5	660.0	8020.0
PUMP POWER (KW):				1633.9
TOTAL POWER (KW):	652.7	1132.2	969.8	9653.9
OPERATING AIR/CLOTH RATIO:			2.4	
INSTALLED AIR/CLOTH RATIO:			1.9	
REQUIRED PRESSURE DROP (INCHES):	1.0	1.0	5.0	60.8
DIAMETER (FEET):				30
REQUIRED REHEAT (BTU/HR):				3012280.0
STEAM SUPPLY/YR (THOUSAND LB):				17591.7
INSTALLED COST (1979 DOLLARS):	$ 3556565	$ 6589005	$ 9162336	$ 12732165
FIRST YEAR CAPITALIZED COST:	$ 641367	$ 1187495	$ 1652274	$ 2296033
ANNUAL POWER COST:	$ 99484	$ 172580	$ 147825	$ 1471479
ANNUAL OPERATING AND MAINTENANCE COST (1979 DOLLARS):	$ 76790	$ 115231	$ 57651	$ 668123
REPLACEMENT COST (1979 DOLLARS):			$ 132564	
ANNUAL REHEAT COST:				$ 35183
TOTAL ANNUAL COST:	$ 817641	$ 1475306	$ 1990314	$ 4470818
ANNUALIZED COST OF POWER(MILLS/KWHR):	0.62	1.12	1.51	3.40

RAW MATERIAL HANDLING AND PREPARATION

ITEM	DESCRIPTION	NO.	MATERIAL	LABOR
MOBILE EQUIPMENT	BUCKET TRACTOR	1	65176.	0.
RECLAIM HOPPER	7FT WIDE, 4.25FT HT, 2FT WIDE BOTTOM, CS	1	1035.	675.
RECLAIM VIBRATING FEEDER	3.5HP	1	4687.	432.
RECLAIM BELT CONVEYOR	100FT, 2HP	1	19618.	1188.
RECLAIM INCLINE BELT CONVEYOR	193FT, 40HP	1	51661.	3024.
RECLAIM PIT DUST COLLECTOR	POLYPROPYLENE BAG TYPE	1	6648.	2160.
RECLAIM PIT SUMP PUMP	60GPM, 70FT HEAD, 3HP	1	2071.	648.
RECLAIM BUCKET ELEVATOR	90FT HIGH, 75HP	1	49391.	5509.
FEED BIN	13FT DIA, 21FT STRAIGHT SIDE HT, COVERED, CS	1	12370.	6643.
BIN WEIGH FEEDER	14FT PULLEY CENTERS, 2HP	1	14169.	648.
GYRATORY CRUSHERS	75HP	1	84904.	1782.
BALL MILL DUST COLLECTORS	POLYPROPYLENE BAG TYPE 2200 CFM, 7.5HP	1	6648.	2160.
BALL MILL	11.3TPH, 155.HP	1	102639.	18648.
MILLS PRODUCT TANK	5500 GAL 10FT DIA, 10FT HT, FLAKEGLASS LINED CS	1	3924.	3024.
MILLS PRODUCT TANK AGITATOR	10HP	1	6539.	1512.
MILLS PRODUCT TANK SLURRY PUMP	48.GPM, 60FT HEAD, 2.HP, 1 OPERATING AND 1 SPARES	2	4830.	1512.
SLURRY FEED TANK	25592.GAL, 16.3FT DIA, 16.3FT HT, FLAKEGLASS-LINED CS	1	9891.	7896.
SLURRY FEED TANK AGITATOR	28.HP	1	20701.	1641.
SLURRY FEED TANK PUMPS	24.GPM, 60 FT HEAD, 1.HP, 2 OPERATING AND 1 SPARE	3	6892.	2268.
TOTAL EQUIPMENT COST			533994.	61368.

SCRUBBING

ITEM	DESCRIPTION	NO.	MATERIAL	LABOR
I.D. FANS	20.0IN H2O, WITH 1482. HP MOTOR AND DRIVE	2	1698593.	23705.
SHELL			525383.	
RUBBER LINING			517850.	
MIST ELIMINATOR			107209.	
SLURRY HEADER AND NOZZLES			130762.	
GRIDS			232442.	
SPHERES			316993.	
TOTAL TCA SCRUBBER COSTS		2	1830636.	128125.
SOOTBLOWERS		16	38365.	34564.
EFFLUENT HOLD TANK	251861.GAL, 35.OFT DIA, 35.OFT HT, FLAKEGLASS-LINED CS	2	104080.	81262.
EFFLUENT HOLD TANK AGITATOR	66.HP	2	139302.	22088.
COOLING SPRAY PUMPS	1388.GPM 100FT HEAD, 64.HP, 2 OPERATING AND 2 SPARE	4	35919.	10694.
ABSORBER RECYCLE PUMPS	9540.GPM, 100FT HEAD, 442.HP, 4 OPERATING AND 2 SPARE	6	346500.	37252.
MAKEUP WATER PUMPS	1388.GPM, 200.FT HEAD, 117.HP, 1 OPERATING AND 1 SPARE	2	15981.	1742.
TOTAL EQUIPMENT COST			4209373.	339432.

WASTE DISPOSAL

ITEM	DESCRIPTION	NO.	MATERIAL	LABOR
ABSORBER BLEED RECEIVING TANK	62898.GAL, 17.5FT DIA, 35.0FT HT, FLAKGLASS-LINED CS	1	20720.	16554.
ABSORBER BLEED TANK AGITATOR	38.HP	1	23676.	1877.
THICKENER FEED PUMP	365.GPM, 60FT HEAD, 10.HP, 1 OPERATING AND 1 SPARE	2	7870.	2982.
THICKENER	9159.SQ.FT.,108.FT DIA, 7.2TANK FT HT	1	195262.	196725.
THICKENER UNDERFLOW SLURRY PUMPS	135.GPM, 7.2FT HEAD, 1.HP , 1 OPERATING AND 1 SPARE	2	6087.	1932.
THICKENER OVERFLOW PUMPS	220.GPM, 75.0FT HEAD, 7.HP, 1 OPERATING AND 1 SPARE	2	7937.	867.
THICKENER OVERFLOW TANK	3625.GAL, 9.2FT DIA, 7.2FT HT	1	1519.	1004.
FILTER FEED TANK	2230.GAL, 7.2FT DIA, 7.2FT HT, FLAKEGLASS-LINED CS	1	1944.	1592.
FILTER FEED TANK AGITATOR	4.HP	1	2143.	170.
FILTER FEED SLURRY PUMP	68.GPM, 30FT HEAD, 2.HP, 2 OPERATING AND 1 SPARE	3	7207.	2268.
FILTER	151.SQ FT FILTRATION AREA	2	143467.	31670.
FILTRATE PUMP (PER FILTER)	26.GPM, 20.0FT HEAD, 0.HP, 2 OPERATING AND 2 SPARE	4	14281.	1557.
FILTRATE SURGE TANK	853.GAL, 5.3FT DIA, 5.3FT HT	1	598.	395.
FILTRATE SURGE TANK PUMP	52.GPM, 35.0FT HEAD, 2.HP, 2 OPERATING AND 2SPARE	2	7365.	803.
TOTAL EQUIPMENT COST			440096.	260357.

LIMESTONE SLURRY PROCESS -- BASIS: 250 MW UNIT, 1981 STARTUP

PROJECTED CAPITAL INVESTMENT REQUIREMENTS - EXAMPLE INDUSTRIAL, LIMESTONE, NEW ECONOMIC PREMISES — CASE 002

	INVESTMENT, THOUSANDS OF 1980 DOLLARS				DISTRIBUTION
	RAW MATERIAL HANDLING AND PREPARATION	SCRUBBING	WASTE DISPOSAL	TOTAL	PERCENT OF DIRECT INVESTMENT
EQUIPMENT					
MATERIAL	534.	4209.	440.	5183.	37.8
LABOR	61.	339.	260.	661.	4.8
PIPING					
MATERIAL	211.	1170.	286.	1666.	12.2
LABOR	101.	160.	116.	377.	2.7
DUCTWORK					
MATERIAL	0.	954.	0.	954.	7.0
LABOR	0.	715.	0.	715.	5.2
FOUNDATIONS					
MATERIAL	113.	59.	21.	193.	1.4
LABOR	306.	123.	43.	472.	3.4
POND CONSTRUCTION	0.	0.	0.	0.	0.0
STRUCTURAL					
MATERIAL	37.	115.	0.	152.	1.1
LABOR	35.	194.	0.	229.	1.7
ELECTRICAL					
MATERIAL	98.	294.	205.	597.	4.4
LABOR	187.	557.	602.	1345.	9.8
INSTRUMENTATION					
MATERIAL	49.	240.	40.	329.	2.4
LABOR	7.	40.	54.	101.	0.7
BUILDINGS					
MATERIAL	18.	0.	13.	31.	0.2
LABOR	19.	0.	13.	32.	0.2
SERVICES AND MISCELLANEOUS	90.	467.	107.	664.	4.8
SUBTOTAL DIRECT INVESTMENT	1866.	9636.	2199.	13700.	100.0
ENGINEERING DESIGN AND SUPERVISION	168.	867.	198.	1233.	9.0
CONSTRUCTION EXPENSES	299.	1542.	352.	2192.	16.0
CONTRACTOR FEES	93.	482.	110.	685.	5.0
CONTINGENCY	485.	2505.	572.	3582.	26.0
SUBTOTAL FIXED INVESTMENT	2911.	15032.	3431.	21372.	156.0
ALLOWANCE FOR STARTUP AND MODIFICATIONS	224.	1156.	264.	1644.	12.0
INTEREST DURING CONSTRUCTION	437.	2255.	515.	3206.	23.4
SUBTOTAL CAPITAL INVESTMENT	3572.	18443.	4210.	26222.	191.4
LAND	9.	2.	8.	19.	0.1
WORKING CAPITAL	116.	599.	137.	852.	6.2
TOTAL CAPITAL INVESTMENT	3697.	19044.	4355.	27093.	197.8

LIMESTONE SLURRY PROCESS -- BASIS: 250 MW UNIT, 1981 STARTUP

PROJECTED REVENUE REQUIREMENTS - EXAMPLE INDUSTRIAL, LIMESTONE, NEW ECONOMIC PREMISES CASE 002

DISPLAY SHEET FOR YEAR= 1
ANNUAL OPERATION KW-HR/KW = 5256

15.06 TONS PER HOUR DRY SLUDGE
TOTAL CAPITAL INVESTMENT 26270000

	ANNUAL QUANTITY	UNIT COST,$	TOTAL ANNUAL COST,$
DIRECT COSTS			
RAW MATERIAL			
LIMESTONE	60.5 K TONS	8.00/TON	484300
SUBTOTAL RAW MATERIAL			484300
CONVERSION COSTS			
OPERATING LABOR AND SUPERVISION	34820.0 MAN-HR	12.50/MAN-HR	435200
UTILITIES			
PROCESS WATER	97970.0 K GAL	0.12/K GAL	11800
ELECTRICITY	22502120.0 KWH	0.029/KWH	652600
MAINTENANCE			
LABOR AND MATERIAL			1096000
ANALYSES	3220.0 HR	17.00/HR	54800
Sludge Disposal	158.3 tons	15.00/HR	2374661
SUBTOTAL CONVERSION COSTS			4625061
SUBTOTAL DIRECT COSTS			5109361
INDIRECT COSTS			
OVERHEADS			
PLANT AND ADMINISTRATIVE (60.0% OF CONVERSION COSTS LESS UTILITIES)			2376397
FIRST YEAR OPERATING AND MAINTENANCE COSTS			7485768
LEVELIZED CAPITAL CHARGES(14.7% OF TOTAL CAPITAL INVESTMENT)			3982671
FIRST YEAR ANNUAL COSTS			11468439

HEAT RATE 9500. BTU/KWH - HEAT VALUE OF COAL 11700 BTU/LB - COAL RATE 533500 TONS/YR

```
EXAMPLE INDUSTRIAL, LIMESTONE, NEW ECONOMIC PREMISES                    CASE 003

                        *** INPUTS ***

BOILER CHARACTERISTICS
------ ---------------

MEGAWATTS =   500.   INDUSTRIAL BASIS

BOILER HEAT RATE =  9500. BTU/KWH

EXCESS AIR =  39. PERCENT, INCLUDING LEAKAGE

HOT GAS TEMPERATURE = 300. DEG F

COAL ANALYSIS, WT % AS FIRED :

 C      H      O      N      S      CL     ASH    H2O
66.70  3.80   5.60   1.30   3.36   0.10  15.10   4.00

SULFUR OVERHEAD =  92.0 PERCENT

ASH OVERHEAD =  80.0 PERCENT

HEATING VALUE OF COAL = 11700. BTU/LB

                              EFFICIENCY,   EMISSION,
FLYASH REMOVAL                     %       LBS/M BTU
------ -------                 ----------  ---------

UPSTREAM OF SCRUBBER            99.7          0.03

WITHIN SCRUBBER                 50.0          0.02

COST OF UPSTREAM FLYASH REMOVAL EXCLUDED

ALKALI
------

LIMESTONE :

        CACO3        =  97.15 WT % DRY BASIS
        SOLUBLE MGO  =   0.0
        INERTS       =   2.85
        MOISTURE CONTENT =   5.00 LB H2O/100 LBS DRY LIMESTONE
        LIMESTONE HARDNESS WORK INDEX FACTOR = 10.00
        LIMESTONE DEGREE OF GRIND FACTOR =  1.35

FLY ASH :

        SOLUBLE CAO  =   0.0  WT %
        SOLUBLE MGO  =   0.0
        INERTS       = 100.00


RAW MATERIAL HANDLING AREA
--- -------- -------- ----

NUMBER OF REDUNDANT ALKALI PREPARATION UNITS =     0
```

SCRUBBER SYSTEM VARIABLES

NUMBER OF OPERATING SCRUBBING TRAINS = 4

NUMBER OF REDUNDANT SCRUBBING TRAINS = 0

NUMBER OF BEDS = 3

NUMBER OF GRIDS = 4

HEIGHT OF SPHERES PER BED = 5.0 INCHES

LIQUID-TO-GAS RATIO = 55. GAL/1000 ACF(SATD)

SCRUBBER GAS VELOCITY = 12.5 FT/SEC

INDUCED DRAFT SCRUBBER FAN OPTION

SCRUBBER PRESSURE = 14.7 PSIA

STOICHIOMETRY = 1.25 MOLE CACO3 ADDED AS LIMESTONE PER MOLE (SO2+2HCL) ABSORBED

SO2 REMOVAL = 90. PERCENT

ENTRAINMENT LEVEL = 0.10 WT %

EMT RESIDENCE TIME = 12.0 MIN

SO2 OXIDIZED IN SYSTEM = 30.0 PERCENT

SOLIDS IN RECIRCULATED SLURRY = 15.0 WT %

SOLIDS DISPOSAL SYSTEM

COST OF LAND = 5000.00 DOLLARS/ACRE

SOLIDS IN SYSTEM SLUDGE DISCHARGE = 50.0 WT %

SOLIDS IN CLARIFIER DISCHARGE = 35.0 WT %

CLARIFIER SOLIDS SETTLING RATE = 0.20 FT/HR

SOLIDS IN FILTER CAKE = 50.0 WT %

FILTRATION RATE = 1.20 TONS DRY SOLIDS/FT2 DAY

NO REHEATERS

EXAMPLE INDUSTRIAL, LIMESTONE, NEW ECONOMIC PREMISES CASE 003

*** OUTPUTS ***

HOT GAS TO SCRUBBER

	MOLE PERCENT	LB-MOLE/HR	LB/HR
CO2	12.338	0.2255E+05	0.9923E+06
HCL	0.006	0.1145E+02	0.4175E+03
SO2	0.214	0.3914E+03	0.2508E+05
O2	5.560	0.1016E+05	0.3251E+06
N2	75.227	0.1375E+06	0.3852E+07
H2O	6.654	0.1216E+05	0.2191E+06

SO2 CONCENTRATION IN SCRUBBER INLET GAS = 2142. PPM
= 5.28 LBS / MILLION BTU

FLYASH EMISSION = 0.03 LBS/MILLION BTU
= 0.015 GRAINS/SCF (WET) OR 147. LB/HR

SOLUBLE CAO IN FLY ASH = 0. LB/HR
SOLUBLE MGO IN FLY ASH = 0.

HOT GAS FLOW RATE = .1154E+07 SCFH (60 DEG F, 14.7 PSIA)
= .1687E+07 ACFM (300. DEG F, 14.7 PSIA)

CORRESPONDING COAL FIRING RATE = .4060E+06 LB/HR

HOT GAS HUMIDITY = 0.042 LB H2O/LB DRY GAS

WET BULB TEMPERATURE = 124. DEG F

WET GAS FROM SCRUBBER

	MOLE PERCENT	LB-MOLE/HR	LB/HR
CO2	11.716	0.2291E+05	0.1008E+07
HCL	0.000	0.5726E+00	0.2088E+02
SO2	0.020	0.3914E+02	0.2508E+04
O2	5.169	0.1011E+05	0.3234E+06
N2	70.300	0.1375E+06	0.3852E+07
H2O	12.795	0.2502E+05	0.4508E+06

SO2 CONCENTRATION IN SCRUBBER OUTLET GAS = 200. PPM

FLYASH EMISSION = 0.02 LBS/MILLION BTU
= 0.007 GRAINS/SCF (WET) OR 74. LB/HR

TOTAL WATER PICKUP = 475. GPM
INCLUDING 11.3 GPM ENTRAINMENT

WET GAS FLOW RATE = .1235E+07 SCFH (60 DEG F, 14.7 PSIA)
= .1388E+07 ACFM (124. DEG F, 14.7 PSIA)

WET GAS SATURATION HUMIDITY = 0.087 LB H2O/LB DRY GAS

FLUE GAS TO STACK

	MOLE PERCENT	LB-MOLE/HR	LB/HR
CO2	11.697	0.2291E+05	0.1008E+07
HCL	0.000	0.5726E+00	0.2088E+02
SO2	0.020	0.3914E+02	0.2508E+04
O2	5.160	0.1011E+05	0.3234E+06
N2	70.188	0.1375E+06	0.3852E+07
H2O	12.934	0.2533E+05	0.4564E+06

SPECIFIED SO2 REMOVAL EFFICIENCY = 90.0 %

CALCULATED SO2 EMISSION = 0.53 POUNDS PER MILLION BTU

CALCULATED SO2 CONCENTRATION IN STACK GAS = 200. PPM

FLYASH EMISSION = 0.02 LBS/MILLION BTU
= 0.007 GRAINS/SCF (WET) OR 74. LB/HR

STACK GAS FLOW RATE = .1237E+07 SCFM (60 DEG F, 14.7 PSIA)
= .1409E+07 ACFM (128. DEG F, 14.7 PSIA)

WATER BALANCE INPUTS

RAINFALL(IN/YEAR)	50.
POND SEEPAGE(CM/SEC)*10**8	50.
POND EVAPORATION(IN/YEAR)	32.

WATER BALANCE OUTPUTS

WATER AVAILABLE		
RAINFALL	1. GPM	543. LB/HR
ALKALI	5. GPM	2304. LB/HR
TOTAL	6. GPM	2846. LB/HR
WATER REQUIRED		
HUMIDIFICATION	464. GPM	231699. LB/HR
ENTRAINMENT	11. GPM	5630. LB/HR
DISPOSAL WATER	119. GPM	59553. LB/HR
HYDRATION WATER	12. GPM	6007. LB/HR
CLARIFIER EVAPORATION	21. GPM	10483. LB/HR
POND EVAPORATION	0. GPM	0. LB/HR
SEEPAGE	0. GPM	0. LB/HR
TOTAL WATER REQUIRED	627. GPM	313368. LB/HR
NET WATER REQUIRED	621. GPM	310521. LB/HR

SCRUBBER SYSTEM

TOTAL NUMBER OF SCRUBBING TRAINS (OPERATING+REDUNDANT) = 4

SO2 REMOVAL = 90.0 PERCENT

PARTICULATE REMOVAL IN SCRUBBER SYSTEM = 50.0 PERCENT

TCA PRESSURE DROP ACROSS 3 BEDS = 8.6 IN. H2O

TOTAL SYSTEM PRESSURE DROP = 13.9 IN. H2O

OVERRIDE TOTAL SYSTEM PRESSURE DROP = 20.0 IN. H2O

SPECIFIED LIQUID-TO-GAS-RATIO = 55. GAL/1000 ACF(SATD)

LIMESTONE ADDITION = 0.4607E+05 LB/HR DRY LIMESTONE

SPECIFIED LIMESTONE STOICHIOMETRY = 1.25 MOLE CACO3 ADDED AS LIMESTONE
PER MOLE (SO2+2HCL) ABSORBED

SOLUBLE CAO FROM FLY ASH = 0.0 MOLE PER MOLE (SO2+2HCL) ABSORBED

TOTAL SOLUBLE MGO = 0.0 MOLE PER MOLE (SO2+2HCL) ABSORBED

TOTAL STOICHIOMETRY = 1.25 MOLE SOLUBLE (CA+MG)
PER MOLE (SO2+2HCL) ABSORBED

SCRUBBER INLET LIQUOR PH = 5.66

MAKE UP WATER = 621. GPM

CROSS-SECTIONAL AREA PER SCRUBBER = 462. SQ FT

SOLIDS DISPUSAL SYSTEM

TOTAL CLARIFIER(S) CROSS-SECTIONAL AREA = 18318. SQ FT

SYSTEM SLUDGE DISCHARGE

SPECIES	LB-MOLE/HR	LB/HR	SOLID COMP. WT %	LIQUID COMP. PPM
CASO3 .1/2 H2O	0.2466E+03	0.3184E+05	52.84	
CASO4 .2H2O	0.1051E+03	0.1808E+05	30.01	
CACO3	0.8942E+02	0.8951E+04	14.86	
INSOLUBLES	----------	0.1387E+04	2.30	
H2O	0.3306E+04	0.5955E+05		
CA++	0.6218E+01	0.2492E+03		4136.
MG++	0.0	0.0		0.
SO3--	0.9489E-01	0.7597E+01		126.
SO4--	0.6568E+00	0.6309E+02		1047.
CL-	0.1088E+02	0.3857E+03		6401.

TOTAL DISCHARGE FLOW RATE = 0.1209E+06 LB/HR
= 167. GPM

TOTAL DISSOLVED SOLIDS IN DISCHARGE LIQUID = 11697. PPM

DISCHARGE LIQUID PH = 7.28

SCRUBBER SLURRY BLEED

SPECIES	LB-MOLE/HR	LB/HR
CASO3 .1/2 H2O	0.2466E+03	0.3184E+05
CASO4 .2H2O	0.1051E+03	0.1808E+05
CACO3	0.8942E+02	0.8951E+04
INSOLUBLES	----------	0.1387E+04
H2O	0.1873E+05	0.3375E+06
CA++	0.3524E+02	0.1412E+04
MG++	0.0	0.0
SO3--	0.5377E+00	0.4305E+02
SO4--	0.3722E+01	0.3575E+03
CL-	0.6165E+02	0.2186E+04
AD=	0.0	0.0

TOTAL FLOW RATE = 0.4017E+06 LB/HR
= 730. GPM

TOTAL SUPERNATE RETURN

SPECIES	LB-MOLE/HR	LB/HR
H2O	0.1488E+05	0.2681E+06
CA++	0.2799E+02	0.1122E+04
MG++	0.0	0.0
SO3--	0.4271E+00	0.3420E+02
SO4--	0.2957E+01	0.2840E+03
CL-	0.4898E+02	0.1736E+04
AD=	0.0	0.0

TOTAL FLOW RATE = 0.2713E+06 LB/HR
= 543. GPM

SUPERNATE TO WET BALL MILL

SPECIES	LB-MOLE/HR	LB/HR
H2O	0.1575E+04	0.2838E+05
CA++	0.2963E+01	0.1188E+03
MG++	0.0	0.0
SO3--	0.4522E-01	0.3620E+01
SO4--	0.3130E+00	0.3007E+02
CL-	0.5184E+01	0.1838E+03
AD=	0.0	0.0

TOTAL FLOW RATE = 0.2871E+05 LB/HR
= 57. GPM

LIMESTONE SLURRY FEED

SPECIES	LB-MOLE/HR	LB/HR
CACO3	0.4471E+03	0.4476E+05
SOLUBLE MGO	0.0	0.0
INSOLUBLES	----------	0.1313E+04
H2O	0.1685E+04	0.3035E+05
CA++	0.2963E+01	0.1188E+03
MG++	0.0	0.0
SO3--	0.4522E-01	0.3620E+01
SO4--	0.3130E+00	0.3007E+02
CL-	0.5184E+01	0.1838E+03
AD=	0.0	0.0

TOTAL FLOW RATE = 0.7678E+05 LB/HR
= 97. GPM

SUPERNATE RETURN TO SCRUBBER OR EHT

SPECIES	LB-MOLE/HR	LB/HR
H2O	0.1331E+05	0.2397E+06
CA++	0.2503E+02	0.1002E+04
MG++	0.0	0.0
SO3--	0.3819E+00	0.3058E+02
SO4--	0.2644E+01	0.2540E+03
CL-	0.4379E+02	0.1552E+04
AD=	0.0	0.0

TOTAL FLOW RATE = 0.2425E+06 LB/HR
= 485. GPM

RECYCLE SLURRY TO SCRUBBER

SPECIES	LB-MOLE/HR	LB/HR
CASO3 .1/2 H2O	0.2580E+05	0.3330E+07
CASO4 .2H2O	0.1099E+05	0.1891E+07
CACO3	0.9354E+04	0.9364E+06
INSOLUBLES	----------	0.1450E+06
H2O	0.1959E+07	0.3530E+08
CA++	0.3686E+04	0.1477E+06
MG++	0.0	0.0
SO3--	0.5625E+02	0.4503E+04
SO4--	0.3893E+03	0.3740E+05
CL-	0.6449E+04	0.2286E+06
AD=	0.0	0.0

TOTAL FLOW RATE = 0.4202E+08 LB/HR
= 76321. GPM

FLUE GAS COOLING SLURRY

SPECIES	LB-MOLE/HR	LB/HR
CASO3 .1/2 H2O	0.1876E+04	0.2422E+06
CASO4 .2H2O	0.7993E+03	0.1376E+06
CACO3	0.6803E+03	0.6810E+05
INSOLUBLES	----------	0.1055E+05
H2O	0.1425E+06	0.2567E+07
CA++	0.2681E+03	0.1074E+05
MG++	0.0	0.0
SO3--	0.4091E+01	0.3275E+03
SO4--	0.2832E+02	0.2720E+04
CL-	0.4690E+03	0.1663E+05
AD=	0.0	0.0

TOTAL FLOW RATE = 0.3056E+07 LB/HR
= 5551. GPM

CLARIFIER UNDERFLOW SLURRY

SPECIES	LB-MOLE/HR	LB/HR
CASO3 .1/2 H2O	0.2466E+03	0.3184E+05
CASO4 .2H2O	0.1051E+03	0.1808E+05
CACO3	0.8942E+02	0.8951E+04
INSOLUBLES	----------	0.1387E+04
H2O	0.6139E+04	0.1106E+06
CA++	0.1155E+02	0.4629E+03
MG++	0.0	0.0
SO3--	0.1762E+00	0.1411E+02
SO4--	0.1220E+01	0.1172E+03
CL-	0.2021E+02	0.7163E+03
AD=	0.0	0.0

TOTAL FLOW RATE = 0.1722E+06 LB/HR
= 270. GPM

SUPERNATE FROM CLARIFIER

SPECIES	LB-MOLE/HR	LB/HR
CASO3 .1/2 H2O	0.0	0.0
CASO4 .2H2O	0.0	0.0
CACO3	0.0	0.0
INSOLUBLES	----------	0.0
H2O	0.1205E+05	0.2170E+06
CA++	0.2264E+02	0.9083E+03
MG++	0.0	0.0
SO3--	0.3458E+00	0.2769E+02
SO4--	0.2394E+01	0.2300E+03
CL-	0.3965E+02	0.1406E+04
AD=	0.0	0.0

TOTAL FLOW RATE = 0.2196E+06 LB/HR

= 439. GPM

FILTER CAKE SLURRY

SPECIES	LB-MOLE/HR	LB/HR
CASO3 .1/2 H2O	0.2466E+03	0.3184E+05
CASO4 .2H2O	0.1051E+03	0.1808E+05
CACO3	0.8942E+02	0.8951E+04
INSOLUBLES	----------	0.1387E+04
H2O	0.3306E+04	0.5955E+05
CA++	0.6218E+01	0.2492E+03
MG++	0.0	0.0
SO3--	0.9489E-01	0.7497E+01
SO4--	0.6568E+00	0.6309E+02
CL-	0.1088E+02	0.3857E+03
AD-	0.0	0.0

TOTAL FLOW RATE = 0.1205E+06 LB/HR
= 167. GPM

FILTRATE FROM FILTER

SPECIES	LB-MOLE/HR	LB/HR
CASO3 .1/2 H2O	0.0	0.0
CASO4 .2H2O	0.0	0.0
CACO3	0.0	0.0
INSOLUBLES	----------	0.0
H2O	0.2833E+04	0.5105E+05
CA++	0.5330E+01	0.2136E+03
MG++	0.0	0.0
SO3--	0.8133E-01	0.6511E+01
SO4--	0.5630E+00	0.5408E+02
CL-	0.9325E+01	0.3306E+03
AD-	0.0	0.0

TOTAL FLOW RATE = 0.5165E+05 LB/HR
= 103. GPM

EXAMPLE INDUSTRIAL, LIMESTONE, NEW ECONOMIC PREMISES CASE 003

PARTICULATE REMOVAL INVESTMENT AND OPERATING COST

		PARTICULATE EMISSION REGULATION (LB ASH/MILLION BTU):	0.03
WPSUL CONTENT (%):	3.36	FLUE GAS TEMPERATURE (COLD) (F):	300.0
ASH CONTENT (%):	15.10	FLUE GAS TEMPERATURE (HOT) (F):	700.0
BTU RATING:	11700	COST OF ELECTRICITY ($/KWHR):	0.03
BOILER TYPE:	DRY PULVERIZED COAL	COST OF STEAM ($/THOUSAND LB):	2.00
NO. OF SCRUBBERS:	4	FIRST YEAR CAPITAL CHARGE FACTOR:	0.180
SCRUBBER VELOCITY (FT/M):	730.0	BAGHOUSE RATIO (OPER. SQ.FT./ACTUAL SQ.FT.):	0.80
PLANT SIZE (MW):	500	BAG COST ($/SQ.FT.):	0.70
OPERATING HRS/YR:	5256	BAG LIFE(YEARS):	3.00
PUMPING RATE (GAL/1000 ACF):	20.00	FLUE GAS REHEAT TEMPERATURE (F):	132.
SCA RATIO: (ACTUAL SQ.FT./CALC. SQ.FT.)	1.300	CHEMICAL ENGINEERING PLANT INDEX:	265.0

	ELECTROSTATIC PRECIPITATORS			
	COLD	HOT	BAGHOUSE FABRIC FILTERS	SCRUBBERS
REQUIRED REMOVAL EFFICIENCY (%):	99.70	99.70	99.70	99.70
DRIFT VELOCITY (FT/M):	27.19	20.00		
SPECIFIC COLLECTION AREA (SQ.FT./ACFM):	277.74	377.59		
COLLECTION AREA (SQ.FT.):	468576.7	972309.6	866133.3	
TOTAL CORONA POWER (KW):	663.6	1012.8		
AUXILIARY POWER (KW):	407.4	915.2	490.2	
FAN POWER (KW):	264.0	403.0	1320.1	16039.9
PUMP POWER (KW):				3267.8
TOTAL POWER (KW):	1335.0	2331.0	1810.3	19307.7
OPERATING AIR/CLOTH RATIO:			2.4	
INSTALLED AIR/CLOTH RATIO:			1.9	
REQUIRED PRESSURE DROP (INCHES):	1.0	1.0	5.0	60.8
DIAMETER (FEET):				30
REQUIRED REHEAT (BTU/HR):				6024548.0
STEAM SUPPLY/YR (THOUSAND LB):				35183.4
INSTALLED COST (1979 DOLLARS):	$ 6562679	$ 12176132	$ 16303550	$ 22732816
FIRST YEAR CAPITALIZED COST:	$ 1183469	$ 2195762	$ 2940073	$ 4099484
ANNUAL POWER COST:	$ 203479	$ 355293	$ 275935	$ 2942956
ANNUAL OPERATING AND MAINTENANCE COST (1979 DOLLARS):	$ 112895	$ 169411	$ 73728	$ 1192909
REPLACEMENT COST (1979 DOLLARS):			$ 265128	
ANNUAL REHEAT COST:				$ 70367
TOTAL ANNUAL COST:	$ 1499843	$ 2720466	$ 3554864	$ 8305716
ANNUALIZED COST OF POWER(MILLS/KWHR):	0.57	1.04	1.35	3.16

RAW MATERIAL HANDLING AND PREPARATION

ITEM	DESCRIPTION	NO.	MATERIAL	LABOR
CAR SHAKER AND HOIST	20HP SHAKER 7.5HP HOIST	1	61661.	10801.
CAR PULLER	25HP PULLER, 5HP RETURN	1	34059.	16202.
UNLOADING HOPPER	16FT DIA, 10FT STRAIGHT INCLUDES 6 IN SQ GRATEING	1	13297.	4915.
UNLOADING VIBRATING FEEDER	3.5HP	1	4687.	432.
UNLOADING BELT CONVEYOR	20FT HORIZONTAL, 5HP	1	9809.	1188.
UNLOADING INCLINE BELT CONVEYOR	310FT, 50HP	1	73133.	3996.
UNLOADING PIT DUST COLLECTOR	POLYPROPYLENE BAGTYPE, INCLUDES DUST HOOD	1	9591.	4320.
UNLOADING PIT SUMP PUMP	60GPM, 70FT HEAD, 5HP	1	2071.	648.
STORAGE BELT CONVEYOR	200FT, 5HP	1	62670.	3240.
STORAGE CONVEYOR TRIPPER	30FPM, 1HP	1	23324.	7561.
MOBILE EQUIPMENT	SCRAPPER TRACTOR	1	121033.	0.
RECLAIM HOPPER	7FT WIDE, 4.25FT HT, 2FT WIDE BOTTOM, CS	2	2071.	1350.
RECLAIM VIBRATING FEEDER	3.5HP	2	9273.	864.
RECLAIM BELT CONVEYOR	200FT, 5HP	1	35095.	2376.
RECLAIM INCLINE BELT CONVEYOR	193FT, 40HP	1	51661.	3024.
RECLAIM PIT DUST COLLECTOR	POLYPROPYLENE BAG TYPE	1	6648.	2160.
RECLAIM PIT SUMP PUMP	60GPM, 70FT HEAD, 5HP	1	2071.	648.
RECLAIM BUCKET ELEVATOR	90FT HIGH, 75HP	1	57002.	5509.
FEED BIN	13FT DIA, 21FT STRAIGHT SIDE HT, COVERED, CS	2	24741.	13285.
BIN WEIGH FEEDER	14FT PULLEY CENTERS, 2HP	2	28338.	1296.
GYRATORY CRUSHERS	75HP	2	169807.	3564.
BALL MILL DUST COLLECTORS	POLYPROPYLENE BAG TYPE 2200 CFM, 7.5HP	2	13297.	4320.
BALL MILL	11.5TPH, 155.HP	2	325278.	37290.
MILLS PRODUCT TANK	5500 GAL 10FT DIA, 10FT HT, FLAKEGLASS LINED CS	2	7847.	6049.
MILLS PRODUCT TANK AGITATOR	10HP	2	13079.	3024.

MILLS PRODUCT TANK SLURRY PUMP	48.GPH, 60FT HEAD, 2.HP, 2 OPERATING AND 1 SPARES	3	7245.	2268.
SLURRY FEED TANK	51185.GAL, 20.6FT DIA, 20.6FT HT, FLAKEGLASS-LINED CS	1	15700.	12533.
SLURRY FEED TANK AGITATOR	45.HP	1	33805.	2680.
SLURRY FEED TANK PUMPS	24.GPM, 60 FT HEAD, 1.HP, 4 OPERATING AND 2 SPARE	6	13783.	4530.
TOTAL EQUIPMENT COST			1252774.	160082.

SCRUBBING

ITEM	DESCRIPTION	NO.	MATERIAL	LABOR
I.D. FANS	20.0IN H2O, WITH 1482. HP MOTOR AND DRIVE	4	3397185.	47410.
SHELL			1050765.	
RUBBER LINING			1035699.	
MIST ELIMINATOR			214417.	
SLURRY HEADER AND NOZZLES			261525.	
GRIDS			464884.	
SPHERES			633986.	
TOTAL TCA SCRUBBER COSTS		4	3661275.	256251.
SOOTBLOWERS		32	76729.	69127.
EFFLUENT HOLD TANK	251860.GAL, 35.0FT DIA, 35.0FT HT, FLAKEGLASS-LINED CS	4	208159.	162525.
EFFLUENT HOLD TANK AGITATOR	66.HP	4	278604.	88352.
COOLING SPRAY PUMPS	1388.GPM 100FT HEAD, 64.HP, 4 OPERATING AND 4 SPARE	8	71838.	21388.
ABSORBER RECYCLE PUMPS	9540.GPM, 100FT HEAD, 442.HP, 8 OPERATING AND 4 SPARE	12	693000.	74503.
MAKEUP WATER PUMPS	2775.GPM, 200.FT HEAD, 234.HP, 1 OPERATING AND 1 SPARE	2	24300.	2649.
TOTAL EQUIPMENT COST			8411090.	722206.

WASTE DISPUSAL

ITEM	DESCRIPTION	NO.	MATERIAL	LABOR
ABSORBER BLEED RECEIVING TANK	62898.GAL, 17.9FT DIA, 35.0FT HT, FLAKGLASS-LINED CS	1	20720.	16554.
ABSORBER BLEED TANK AGITATOR	38.HP	1	23676.	1877.
THICKENER FEED PUMP	730.GPM, 60FT HEAD, 20.HP, 1 OPERATING AND 1 SPARE	2	13252.	4037.
THICKENER	18318.SQ.FT.,153.FT DIA, 8.6TANK FT HT	1	325295.	337388.
THICKENER UNDERFLOW SLURRY PUMPS	270.GPM, 9.1FT HEAD, 1.HP , 1 OPERATING AND 1 SPARE	2	6683.	2616.
THICKENER OVERFLOW PUMPS	439.GPM, 75.0FT HEAD, 14.HP, 1 OPERATING AND 1 SPARE	2	8559.	933.
THICKENER OVERFLOW TANK	7250.GAL, 12.0FT DIA, 8.6FT HT	1	2388.	1578.
FILTER FEED TANK	4460.GAL, 9.1FT DIA, 9.1FT HT, FLAKEGLASS-LINED CS	1	3086.	2464.
FILTER FEED TANK AGITATOR	7.HP	1	4257.	337.
FILTER FEED SLURRY PUMP	135.GPM, 50FT HEAD, 4.HP, 2 OPERATING AND 1 SPARE	3	10137.	2898.
FILTER	301.SQ FT FILTRATION AREA	2	196139.	36249.
FILTRATE PUMP (PER FILTER)	52.GPM, 20.0FT HEAD, 0.HP, 2 OPERATING AND 2 SPARE	4	14531.	1584.
FILTRATE SURGE TANK	1705.GAL, 6.6FT DIA, 6.6FT HT	1	949.	627.
FILTRATE SURGE TANK PUMP	103.GPM, 45.0FT HEAD, 4.HP, 2 OPERATING AND 2SPARE	2	7606.	829.
			---	---
TOTAL EQUIPMENT COST			637277.	409972.

LIMESTONE SLURRY PROCESS -- BASIS: 500 MW UNIT, 1981 STARTUP

PROJECTED CAPITAL INVESTMENT REQUIREMENTS - EXAMPLE INDUSTRIAL, LIMESTONE, NEW ECONOMIC PREMISES CASE 003

	INVESTMENT, THOUSANDS OF 1980 DOLLARS				DISTRIBUTION
	RAW MATERIAL HANDLING AND PREPARATION	SCRUBBING	WASTE DISPOSAL	TOTAL	PERCENT OF DIRECT INVESTMENT
EQUIPMENT					
MATERIAL	1253.	8411.	637.	10301.	40.1
LABOR	160.	722.	410.	1292.	5.0
PIPING					
MATERIAL	301.	2341.	386.	3028.	11.8
LABOR	140.	319.	146.	604.	2.4
DUCTWORK					
MATERIAL	0.	1953.	0.	1953.	7.6
LABOR	0.	1480.	0.	1480.	5.8
FOUNDATIONS					
MATERIAL	248.	118.	22.	388.	1.5
LABOR	637.	247.	46.	930.	3.6
POND CONSTRUCTION	0.	0.	0.	0.	0.0
STRUCTURAL					
MATERIAL	147.	230.	0.	377.	1.5
LABOR	86.	387.	0.	473.	1.8
ELECTRICAL					
MATERIAL	163.	591.	219.	973.	3.8
LABOR	410.	1050.	674.	2134.	8.3
INSTRUMENTATION					
MATERIAL	93.	468.	40.	602.	2.3
LABOR	13.	78.	54.	146.	0.6
BUILDINGS					
MATERIAL	33.	0.	26.	59.	0.2
LABOR	36.	0.	26.	62.	0.2
SERVICES AND MISCELLANEOUS	129.	638.	93.	860.	3.4
SUBTOTAL DIRECT INVESTMENT	3845.	19033.	2780.	25639.	100.0
ENGINEERING DESIGN AND SUPERVISION	346.	1713.	250.	2309.	9.0
CONSTRUCTION EXPENSES	615.	3045.	445.	4105.	16.0
CONTRACTOR FEES	192.	952.	139.	1283.	5.0
CONTINGENCY	1000.	4949.	723.	6671.	26.0
SUBTOTAL FIXED INVESTMENT	5998.	2962.	4337.	00027.	156.0
ALLOWANCE FOR STARTUP AND MODIFICATIONS	461.	2284.	334.	3079.	12.0
INTEREST DURING CONSTRUCTION	900.	4454.	651.	6004.	23.4
SUBTOTAL CAPITAL INVESTMENT	7359.	36430.	5322.	49110.	191.4
LAND	10.	3.	13.	27.	0.1
WORKING CAPITAL	232.	1149.	168.	1549.	6.0
TOTAL CAPITAL INVESTMENT	7601.	37582.	5503.	50686.	197.5

LIMESTONE SLURRY PROCESS -- BASIS: 500 MW UNIT, 1981 STARTUP

PROJECTED REVENUE REQUIREMENTS - EXAMPLE INDUSTRIAL, LIMESTONE, NEW ECONOMIC PREMISES CASE 003

DISPLAY SHEET FOR YEAR: 1
ANNUAL OPERATION KW-HR/KW = 5256

30.13 TONS PER HOUR DRY SLUDGE
TOTAL CAPITAL INVESTMENT 49147000

	ANNUAL QUANTITY	UNIT COST,$	TOTAL ANNUAL COST,$
DIRECT COSTS			
RAW MATERIAL			
LIMESTONE	121.1 K TONS	8.00/TON	968600
SUBTOTAL RAW MATERIAL			968600
CONVERSION COSTS			
OPERATING LABOR AND SUPERVISION	42880.0 MAN-HR	12.50/MAN-HR	536000
UTILITIES			
PROCESS WATER	195930.0 K GAL	0.12/K GAL	23500
ELECTRICITY	44625570.0 KWH	0.029/KWH	1294100
MAINTENANCE LABOR AND MATERIAL			2092700
ANALYSES	4830.0 HR	17.00/HR	82200
Sludge Disposal	316.7 K tons	15.00/HR	4750898
SUBTOTAL CONVERSION COSTS			8739398
SUBTOTAL DIRECT COSTS			9707998
INDIRECT COSTS			
OVERHEADS			
PLANT AND ADMINISTRATIVE (60.0% OF CONVERSION COSTS LESS UTILITIES)			4453079
FIRST YEAR OPERATING AND MAINTENANCE COSTS			14161077
LEVELIZED CAPITAL CHARGES(14.7% OF TOTAL CAPITAL INVESTMENT)			7450842
FIRST YEAR ANNUAL REVENUE REQUIREMENTS			21611919

HEAT RATE 9500. BTU/KWH - HEAT VALUE OF COAL 11700 BTU/LB - COAL RATE 1066900 TONS/YR

EXAMPLE INDUSTRIAL, LIMESTONE, NEW ECONOMIC PREMISES CASE 004

*** INPUTS ***

BOILER CHARACTERISTICS

MEGAWATTS = 1000. INDUSTRIAL BASIS

BOILER HEAT RATE = 9300. BTU/KWH

EXCESS AIR = 39. PERCENT, INCLUDING LEAKAGE

HOT GAS TEMPERATURE = 300. DEG F

COAL ANALYSIS, WT % AS FIRED :

C	H	O	N	S	CL	ASH	H2O
66.70	3.80	5.00	1.30	3.36	0.10	15.10	4.00

SULFUR OVERHEAD = 92.0 PERCENT

ASH OVERHEAD = 80.0 PERCENT

HEATING VALUE OF COAL = 11700. BTU/LB

FLYASH REMOVAL	EFFICIENCY, %	EMISSION, LBS/M BTU
UPSTREAM OF SCRUBBER	99.7	0.03
WITHIN SCRUBBER	50.0	0.02

COST OF UPSTREAM FLYASH REMOVAL EXCLUDED

ALKALI

LIMESTONE :

CACO3 = 97.15 WT % DRY BASIS
SOLUBLE MGO = 0.0
INERTS = 2.85
MOISTURE CONTENT = 5.00 LB H2O/100 LBS DRY LIMESTONE
LIMESTONE HARDNESS WORK INDEX FACTOR = 10.00
LIMESTONE DEGREE OF GRIND FACTOR = 1.35

FLY ASH :

SOLUBLE CAO = 0.0 WT %
SOLUBLE MGO = 0.0
INERTS = 100.00

RAW MATERIAL HANDLING AREA

NUMBER OF REDUNDANT ALKALI PREPARATION UNITS = 0

SCRUBBER SYSTEM VARIABLES

NUMBER OF OPERATING SCRUBBING TRAINS = 8

NUMBER OF REDUNDANT SCRUBBING TRAINS = 0

NUMBER OF BEDS = 3

NUMBER OF GRIDS = 4

HEIGHT OF SPHERES PER BED = 5.0 INCHES

LIQUID-TO-GAS RATIO = 55. GAL/1000 ACF(SATD)

SCRUBBER GAS VELOCITY = 12.5 FT/SEC

INDUCED DRAFT SCRUBBER FAN OPTION

SCRUBBER PRESSURE = 14.7 PSIA

STOICHIOMETRY = 1.25 MOLE CACO3 ADDED AS LIMESTONE
PER MOLE (SO2+2HCL) ABSORBED

SO2 REMOVAL = 90. PERCENT

ENTRAINMENT LEVEL = 0.10 WT %

EMT RESIDENCE TIME = 12.0 MIN

SO2 OXIDIZED IN SYSTEM = 30.0 PERCENT

SOLIDS IN RECIRCULATED SLURRY = 15.0 WT %

SOLIDS DISPOSAL SYSTEM

COST OF LAND = 9000.00 DOLLARS/ACRE

SOLIDS IN SYSTEM SLUDGE DISCHARGE = 30.0 WT %

SOLIDS IN CLARIFIER DISCHARGE = 35.0 WT %

CLARIFIER SOLIDS SETTLING RATE = 0.20 FT/HR

SOLIDS IN FILTER CAKE = 50.0 WT %

FILTRATION RATE = 1.20 TONS DRY SOLIDS/FT2 DAY

NO REHEATERS

EXAMPLE INDUSTRIAL, LIMESTONE, NEW ECONOMIC PREMISES CASE 004

*** OUTPUTS ***

HOT GAS TO SCRUBBER

	MOLE PERCENT	LB-MOLE/HR	LB/HR
CO2	12.338	0.4509E+05	0.1985E+07
HCL	0.006	0.2290E+02	0.8351E+03
SO2	0.214	0.7829E+03	0.5015E+05
O2	5.560	0.2032E+05	0.6502E+06
N2	75.227	0.2749E+06	0.7704E+07
H2O	6.654	0.2432E+05	0.4381E+06

SO2 CONCENTRATION IN SCRUBBER INLET GAS = 2142. PPM
= 5.28 LBS / MILLION BTU

FLYASH EMISSION = 0.03 LBS/MILLION BTU
= 0.015 GRAINS/SCF (WET) OR 294. LB/HR

SOLUBLE CAO IN FLY ASH = 0. LB/HR
SOLUBLE MGO IN FLY ASH = 0.

HOT GAS FLOW RATE = .2309E+07 SCFM (60 DEG F, 14.7 PSIA)
= .3374E+07 ACFM (300. DEG F, 14.7 PSIA)

CORRESPONDING COAL FIRING RATE = .8120E+06 LB/HR

HOT GAS HUMIDITY = 0.042 LB H2O/LB DRY GAS

WET BULB TEMPERATURE = 124. DEG F

WET GAS FROM SCRUBBER

	MOLE PERCENT	LB-MOLE/HR	LB/HR
CO2	11.716	0.4582E+05	0.2017E+07
HCL	0.000	0.1145E+01	0.4175E+02
SO2	0.020	0.7829E+02	0.5015E+04
O2	5.169	0.2021E+05	0.6469E+06
N2	70.300	0.2749E+06	0.7704E+07
H2O	12.795	0.5004E+05	0.9015E+06

SO2 CONCENTRATION IN SCRUBBER OUTLET GAS = 200. PPM

FLYASH EMISSION = 0.02 LBS/MILLION BTU
= 0.007 GRAINS/SCF (WET) OR 147. LB/HR

TOTAL WATER PICKUP = 950. GPM
INCLUDING 22.5 GPM ENTRAINMENT

WET GAS FLOW RATE = .2470E+07 SCFM (60 DEG F, 14.7 PSIA)
= .2775E+07 ACFM (124. DEG F, 14.7 PSIA)

WET GAS SATURATION HUMIDITY = 0.097 LB H2O/LB DRY GAS

FLUE GAS TO STACK

	MOLE PERCENT	LB-MOLE/HR	LB/HR
CO2	11.697	0.4582E+05	0.2017E+07
HCL	0.000	0.1145E+01	0.4175E+02
SO2	0.020	0.7829E+02	0.5015E+04
O2	5.160	0.2021E+05	0.6469E+06
N2	70.188	0.2749E+06	0.7704E+07
H2O	12.934	0.5067E+05	0.9128E+06

SPECIFIED SO2 REMOVAL EFFICIENCY = 90.0 %

CALCULATED SO2 EMISSION = 0.53 POUNDS PER MILLION BTU

CALCULATED SO2 CONCENTRATION IN STACK GAS = 200. PPM

FLYASH EMISSION = 0.02 LBS/MILLION BTU
= 0.007 GRAINS/SCF (WET) OR 147. LB/HR

STACK GAS FLOW RATE = .2474E+07 SCFM (60 DEG F, 14.7 PSIA)
= .2819E+07 ACFM (132. DEG F, 14.7 PSIA)

WATER BALANCE INPUTS

RAINFALL(IN/YEAR)	50.
POND SEEPAGE(CM/SEC)*10**8	50.
POND EVAPORATION(IN/YEAR)	32.

WATER BALANCE OUTPUTS

WATER AVAILABLE		
RAINFALL	2. GPM	1086. LB/HR
ALKALI	9. GPM	4607. LB/HR
TOTAL	11. GPM	5693. LB/HR
WATER REQUIRED		
HUMIDIFICATION	927. GPM	463391. LB/HR
ENTRAINMENT	23. GPM	11260. LB/HR
DISPOSAL WATER	238. GPM	119105. LB/HR
HYDRATION WATER	24. GPM	12014. LB/HR
CLARIFIER EVAPORATION	42. GPM	20965. LB/HR
POND EVAPORATION	0. GPM	0. LB/HR
SEEPAGE	0. GPM	0. LB/HR
TOTAL WATER REQUIRED	1254. GPM	626736. LB/HR
NET WATER REQUIRED	1243. GPM	621043. LB/HR

SCRUBBER SYSTEM

TOTAL NUMBER OF SCRUBBING TRAINS (OPERATING+REDUNDANT) = 8

SO2 REMOVAL = 90.0 PERCENT

PARTICULATE REMOVAL IN SCRUBBER SYSTEM = 50.0 PERCENT

TCA PRESSURE DROP ACROSS 3 BEDS = 8.6 IN. H2O

TOTAL SYSTEM PRESSURE DROP = 13.9 IN. H2O

OVERRIDE TOTAL SYSTEM PRESSURE DROP = 20.0 IN. H2O

SPECIFIED LIQUID-TO-GAS-RATIO = 55. GAL/1000 ACF(SATD)

LIMESTONE ADDITION = 0.9214E+05 LB/HR DRY LIMESTONE

SPECIFIED LIMESTONE STOICHIOMETRY = 1.25 MOLE CACO3 ADDED AS LIMESTONE
PER MOLE (SO2+2HCL) ABSORBED

SOLUBLE CAO FROM FLY ASH = 0.0 MOLE PER MOLE (SO2+2HCL) ABSORBED

TOTAL SOLUBLE MGO = 0.0 MOLE PER MOLE (SO2+2HCL) ABSORBED

TOTAL STOICHIOMETRY = 1.25 MOLE SOLUBLE (CA+MG)
PER MOLE (SO2+2HCL) ABSORBED

SCRUBBER INLET LIQUOR PH = 5.66

MAKE UP WATER = 1243. GPM

CROSS-SECTIONAL AREA PER SCRUBBER = 463. SQ FT

SOLIDS DISPOSAL SYSTEM

TOTAL CLARIFIER(S) CROSS-SECTIONAL AREA = 36036. SQ FT

SYSTEM SLUDGE DISCHARGE

SPECIES	LB-MOLE/HR	LB/HR	SOLID COMP, WT %	LIQUID COMP, PPM
CASO3 .1/2 H2O	0.4932E+03	0.6367E+05	52.84	
CASO4 .2H2O	0.2101E+03	0.3616E+05	30.01	
CACO3	0.1788E+03	0.1790E+05	14.86	
INSOLUBLES	----------	0.2773E+04	2.30	
H2O	0.6611E+04	0.1191E+06		
CA++	0.1244E+02	0.4985E+03		4136.
MG++	0.0	0.0		0.
SO3--	0.1898E+00	0.1519E+02		126.
SO4--	0.1314E+01	0.1262E+03		1047.
CL-	0.2176E+02	0.7714E+03		6401.

TOTAL DISCHARGE FLOW RATE = 0.2410E+06 LB/HR
= 334. GPM

TOTAL DISSOLVED SOLIDS IN DISCHARGE LIQUID = 11697. PPM

DISCHARGE LIQUID PH = 7.28

SCRUBBER SLURRY BLEED

SPECIES	LB-MOLE/HR	LB/HR
CASO3 .1/2 H2O	0.4932E+03	0.6367E+05
CASO4 .2H2O	0.2101E+03	0.3616E+05
CACO3	0.1788E+03	0.1790E+05
INSOLUBLES	----------	0.2773E+04
H2O	0.3746E+05	0.6749E+06
CA++	0.7047E+02	0.2825E+04
MG++	0.0	0.0
SO3--	0.1075E+01	0.8609E+02
SO4--	0.7444E+01	0.7151E+03
CL-	0.1233E+03	0.4371E+04
AD=	0.0	0.0

TOTAL FLOW RATE = 0.8034E+06 LB/HR
= 1459. GPM

TOTAL SUPERNATE RETURN

SPECIES	LB-MOLE/HR	LB/HR
H2O	0.2976E+05	0.5362E+06
CA++	0.5599E+02	0.2244E+04
MG++	0.0	0.0
SO3--	0.8543E+00	0.6840E+02
SO4--	0.5914E+01	0.5681E+03
CL-	0.9793E+02	0.3472E+04
AD=	0.0	0.0

TOTAL FLOW RATE = 0.5425E+06 LB/HR
= 1085. GPM

SUPERNATE TO WET BALL MILL

SPECIES	LB-MOLE/HR	LB/HR
H2O	0.3123E+04	0.5626E+05
CA++	0.5875E+01	0.2355E+03
MG++	0.0	0.0
SO3--	0.8965E-01	0.7177E+01
SO4--	0.6206E+00	0.5961E+02
CL-	0.1028E+02	0.3644E+03
AD=	0.0	0.0

TOTAL FLOW RATE = 0.5693E+05 LB/HR
= 114. GPM

LIMESTONE SLURRY FEED

SPECIES	LB-MOLE/HR	LB/HR
CACO3	0.8943E+03	0.8932E+05
SOLUBLE MGO	0.0	0.0
INSOLUBLES	----------	0.2626E+04
H2O	0.3370E+04	0.6071E+05
CA++	0.5875E+01	0.2355E+03
MG++	0.0	0.0
SO3--	0.8965E-01	0.7177E+01
SO4--	0.6206E+00	0.5961E+02
CL-	0.1028E+02	0.3644E+03
AD=	0.0	0.0

TOTAL FLOW RATE = 0.1536E+06 LB/HR
= 194. GPM

SUPERNATE RETURN TO SCRUBBER OR EHT

SPECIES	LB-MOLE/HR	LB/HR
H2O	0.2664E+05	0.4799E+06
CA++	0.5011E+02	0.2008E+04
MG++	0.0	0.0
SO3--	0.7647E+00	0.6122E+02
SO4--	0.5293E+01	0.5085E+03
CL-	0.8768E+02	0.3108E+04
AD=	0.0	0.0

TOTAL FLOW RATE = 0.4856E+06 LB/HR
= 972. GPM

RECYCLE SLURRY TO SCRUBBER

SPECIES	LB-MOLE/HR	LB/HR
CASO3 .1/2 H2O	0.5159E+05	0.6661E+07
CASO4 .2H2O	0.2198E+05	0.3783E+07
CACO3	0.1871E+05	0.1873E+07
INSOLUBLES	----------	0.2901E+06
H2O	0.3919E+07	0.7060E+08
CA++	0.7372E+04	0.2955E+06
MG++	0.0	0.0
SO3--	0.1125E+03	0.9006E+04
SO4--	0.7787E+03	0.7480E+05
CL-	0.1290E+05	0.4572E+06
AD=	0.0	0.0

TOTAL FLOW RATE = 0.8404E+08 LB/HR
= 152643. GPM

FLUE GAS COOLING SLURRY

SPECIES	LB-MOLE/HR	LB/HR
CASO3 .1/2 H2O	0.3752E+04	0.4844E+06
CASO4 .2H2O	0.1599E+04	0.2751E+06
CACO3	0.1361E+04	0.1362E+06
INSOLUBLES	----------	0.2110E+05
H2O	0.2850E+06	0.5135E+07
CA++	0.5361E+03	0.2149E+05
MG++	0.0	0.0
SO3--	0.8101E+01	0.6550E+03
SO4--	0.5663E+02	0.5440E+04
CL-	0.9381E+03	0.3325E+05
AD=	0.0	0.0

TOTAL FLOW RATE = 0.6112E+07 LB/HR
= 11101. GPM

CLARIFIER UNDERFLOW SLURRY

SPECIES	LB-MOLE/HR	LB/HR
CASO3 .1/2 H2O	0.4932E+03	0.6367E+05
CASO4 .2H2O	0.2101E+03	0.3616E+05
CACO3	0.1788E+03	0.1790E+05
INSOLUBLES	----------	0.2773E+04
H2O	0.1228E+05	0.2212E+06
CA++	0.2310E+02	0.9257E+03
MG++	0.0	0.0
SO3--	0.3524E+00	0.2822E+02
SO4--	0.2440E+01	0.2344E+03
CL-	0.4041E+02	0.1433E+04
AD=	0.0	0.0

TOTAL FLOW RATE = 0.3443E+06 LB/HR
= 541. GPM

SUPERNATE FROM CLARIFIER

SPECIES	LB-MOLE/HR	LB/HR
CASO3 .1/2 H2O	0.0	0.0
CASO4 .2H2O	0.0	0.0
CACO3	0.0	0.0
INSOLUBLES	----------	0.0
H2O	0.2409E+05	0.4341E+06
CA++	0.4533E+02	0.1817E+04
MG++	0.0	0.0
SO3--	0.6916E+00	0.5537E+02
SO4--	0.4788E+01	0.4599E+03
CL-	0.7930E+02	0.2811E+04
AD=	0.0	0.0

TOTAL FLOW RATE = 0.4392E+06 LB/HR

= 879 GPM

FILTER CAKE SLURRY

SPECIES	LB-MOLE/HR	LB/HR
CASO3 ,1/2 H2O	0.4932E+03	0.6367E+05
CASO4 ,2H2O	0.2101E+03	0.3616E+05
CACO3	0.1788E+03	0.1790E+05
INSOLUBLES	----------	0.2773E+04
H2O	0.6611E+04	0.1191E+06
CA++	0.1244E+02	0.4985E+03
MG++	0.0	0.0
SO3--	0.1898E+00	0.1519E+02
SO4--	0.1314E+01	0.1262E+03
CL-	0.2176E+02	0.7714E+03
AD=	0.0	0.0

TOTAL FLOW RATE = 0.2410E+06 LB/HR
= 334. GPM

FILTRATE FROM FILTER

SPECIES	LB-MOLE/HR	LB/HR
CASO3 ,1/2 H2O	0.0	0.0
CASO4 ,2H2O	0.0	0.0
CACO3	0.0	0.0
INSOLUBLES	----------	0.0
H2O	0.5667E+04	0.1021E+06
CA++	0.1066E+02	0.4272E+03
MG++	0.0	0.0
SO3--	0.1627E+00	0.1302E+02
SO4--	0.1126E+01	0.1082E+03
CL-	0.1865E+02	0.6612E+03
AD=	0.0	0.0

TOTAL FLOW RATE = 0.1033E+06 LB/HR
= 207. GPM

EXAMPLE INDUSTRIAL, LIMESTONE, NEW ECONOMIC PREMISES CASE 004

PARTICULATE REMOVAL INVESTMENT AND OPERATING COST

		PARTICULATE EMISSION REGULATION (LB ASH/MILLION BTU):	0.03
WPSUL CONTENT (%):	3.36	FLUE GAS TEMPERATURE (COLD) (F):	300.0
ASH CONTENT (%):	15.10	FLUE GAS TEMPERATURE (HOT) (F):	700.0
BTU RATING:	11700	COST OF ELECTRICITY ($/KWHR):	0.03
BOILER TYPE:	DRY PULVERIZED COAL	COST OF STEAM ($/THOUSAND LB):	2.00
NO. OF SCRUBBERS:	8	FIRST YEAR CAPITAL CHARGE FACTOR:	0.180
SCRUBBER VELOCITY (FT/M):	750.0	BAGHOUSE RATIO (OPER. SQ.FT./ACTUAL SQ.FT.):	0.80
PLANT SIZE (MW):	1000	BAG COST ($/SQ.FT.):	0.70
OPERATING HRS/YR:	5256	BAG LIFE(YEARS):	3.00
PUMPING RATE (GAL/1000 ACF):	20.00	FLUE GAS REHEAT TEMPERATURE (F):	132.
SCA RATIO: (ACTUAL SQ.FT./CALC. SQ.FT.)	1.300	CHEMICAL ENGINEERING PLANT INDEX:	265.0

	ELECTROSTATIC PRECIPITATORS			
	COLD	HOT	BAGHOUSE FABRIC FILTERS	SCRUBBERS
REQUIRED REMOVAL EFFICIENCY (%):	99.70	99.70	99.70	99.70
DRIFT VELOCITY (FT/M):	27.19	20.00		
SPECIFIC COLLECTION AREA (SQ.FT./ACFM):	277.76	377.59		
COLLECTION AREA (SQ.FT.):	937153.9	1944619.0	1732267.0	
TOTAL CORONA POWER (KW):	1327.1	2023.6		
AUXILIARY POWER (KW):	878.5	1973.7	775.8	
FAN POWER (KW):	528.0	805.9	2640.2	32079.9
PUMP POWER (KW):				6535.5
TOTAL POWER (KW):	2733.7	4805.5	9415.9	38615.4
OPERATING AIR/CLOTH RATIO:			2.4	
INSTALLED AIR/CLOTH RATIO:			1.9	
REQUIRED PRESSURE DROP (INCHES):	1.0	1.0	5.0	60.8
DIAMETER (FEET):				30
REQUIRED REHEAT (BTU/HR):				12049106.0
STEAM SUPPLY/YR (THOUSAND LB):				70366.7
INSTALLED COST (1979 DOLLARS):	$ 12109651	$ 22914496	$ 29010704	$ 40588688
FIRST YEAR CAPITALIZED COST:	$ 2183773	$ 4060113	$ 5231596	$ 7319492
ANNUAL POWER COST:	$ 416685	$ 732438	$ 520673	$ 5885915
ANNUAL OPERATING AND MAINTENANCE COST (1979 DOLLARS):	$ 163977	$ 249066	$ 110662	$ 2129900
REPLACEMENT COST (1979 DOLLARS):			$ 530257	
ANNUAL REHEAT COST:				$ 140734
TOTAL ANNUAL COST:	$ 2766435	$ 5041617	$ 6393188	$ 13476041
ANNUALIZED COST OF POWER(MILLS/KWHR):	0.53	0.96	1.22	2.94

RAW MATERIAL HANDLING AND PREPARATION

ITEM	DESCRIPTION	NO.	MATERIAL	LABOR
CAR SHAKER AND HOIST	20HP SHAKER 7.5HP HOIST	1	61661.	10801.
CAR PULLER	25HP PULLER, 5HP RETURN	1	54059.	16202.
UNLOADING HOPPER	16FT DIA, 10FT STRAIGHT INCLUDES 6 IN SQ GRATEING	1	13297.	4918.
UNLOADING VIBRATING FEEDER	3.5HP	1	4687.	432.
UNLOADING BELT CONVEYOR	20FT HORIZONTAL, 5HP	1	9809.	1188.
UNLOADING INCLINE BELT CONVEYOR	310FT, 50HP	1	73133.	3996.
UNLOADING PIT DUST COLLECTOR	POLYPROPYLENE BAGTYPE, INCLUDES DUST HOOD	1	9591.	4320.
UNLOADING PIT SUMP PUMP	60GPM, 70FT HEAD, 5HP	1	2071.	648.
STORAGE BELT CONVEYOR	300FT, 7HP	1	87469.	4861.
STORAGE CONVEYOR TRIPPER	30FPM, 1HP	1	23324.	7561.
MOBILE EQUIPMENT	SCRAPPER TRACTOR	1	121633.	0.
RECLAIM HOPPER	7FT WIDE, 4.25FT HT, 2FT WIDE BOTTOM, CS	3	3106.	2028.
RECLAIM VIBRATING FEEDER	3.5HP	3	14060.	1296.
RECLAIM BELT CONVEYOR	300FT, 7HP	1	50572.	3564.
RECLAIM INCLINE BELT CONVEYOR	193FT, 40HP	1	51661.	3024.
RECLAIM PIT DUST COLLECTOR	POLYPROPYLENE BAG TYPE	1	6648.	2160.
RECLAIM PIT SUMP PUMP	60GPM, 70FT HEAD, 5HP	1	2071.	648.
RECLAIM BUCKET ELEVATOR	90FT HIGH, 75HP	1	57002.	5509.
FEED BIN	13FT DIA, 21FT STRAIGHT SIDE HT, COVERED, CS	2	24741.	13285.
BIN WEIGH FEEDER	14FT PULLEY CENTERS, 2HP	2	28338.	1296.
GYRATORY CRUSHERS	75HP	2	169807.	3564.
BALL MILL DUST COLLECTORS	POLYPROPYLENE BAG TYPE 2200 CFM, 7.5HP	2	13297.	4320.
BALL MILL	23.0TPH, 311.HP	2	437624.	45802.
MILLS PRODUCT TANK	5500 GAL 10FT DIA, 10FT HT, FLAKEGLASS LINED CS	2	7847.	6049.
MILLS PRODUCT TANK AGITATOR	10HP	2	13079.	3024.

MILLS PRODUCT TANK SLURRY PUMP	97.GPM, 60FT HEAD, 4.HP, 2 OPERATING AND 1 SPARES	3	10186.	2507.
SLURRY FEED TANK	102370.GAL, 25.9FT DIA, 25.9FT HT, FLAKEGLASS-LINED CS	1	24921.	19894.
SLURRY FEED TANK AGITATOR	72.HP	1	55206.	4377.
SLURRY FEED TANK PUMPS	24.GPM, 60 FT HEAD, 1.HP, 8 OPERATING AND 4 SPARE	12	27566.	9073.
TOTAL EQUIPMENT COST			1458659.	186343.

SCRUBBING

ITEM	DESCRIPTION	NO.	MATERIAL	LABOR
I.D. FANS	20.0IN H2O, WITH 1682. HP MOTOR AND DRIVE	8	6794377.	94820.
SHELL			2101532.	
RUBBER LINING			2071400.	
MIST ELIMINATOR			428835.	
SLURRY HEADER AND NOZZLES			523051.	
GRIDS			929769.	
SPHERES			1267972.	
TOTAL TCA SCRUBBER COSTS		8	7322559.	312502.
SOOTBLOWERS		64	153459.	138255.
EFFLUENT HOLD TANK	251861.GAL, 35.0FT DIA, 35.0FT HT, FLAKEGLASS-LINED CS	8	416318.	325050.
EFFLUENT HOLD TANK AGITATOR	66.HP	8	557209.	353410.
COOLING SPRAY PUMPS	1388.GPM 100FT HEAD, 64.HP, 8 OPERATING AND 8 SPARE	16	143677.	42776.
ABSORBER RECYCLE PUMPS	9540.GPM, 100FT HEAD, 442.HP, 16 OPERATING AND 8 SPARE	24	1386001.	149007.
MAKEUP WATER PUMPS	5551.GPM, 200.FT HEAD, 468.HP, 1 OPERATING AND 1 SPARE	2	57353.	6252.
TOTAL EQUIPMENT COST			16830896.	1622069.

WASTE DISPOSAL

ITEM	DESCRIPTION	NO.	MATERIAL	LABOR
ABSORBER BLEED RECEIVING TANK	62898.GAL, 17.5FT DIA, 35.0FT HT, FLAKGLASS-LINED CS	1	20720.	16554.
ABSORBER BLEED TANK AGITATOR	38.HP	1	23676.	1877.
THICKENER FEED PUMP	1459.GPM, 60FT HEAD, 41.HP, 1 OPERATING AND 1 SPARE	2	15865.	5466.
THICKENER	36636.SQ.FT.,216.FT DIA, 10.5TANK FT HT	1	562891.	602732.
THICKENER UNDERFLOW SLURRY PUMPS	541.GPM, 11.5FT HEAD, 3.HP , 1 OPERATING AND 1 SPARE	2	7049.	3548.
THICKENER OVERFLOW PUMPS	879.GPM, 75.0FT HEAD, 28.HP, 1 OPERATING AND 1 SPARE	2	9650.	1058.
THICKENER OVERFLOW TANK	14500.GAL, 19.3FT DIA, 10.5FT HT	1	3775.	2494.
FILTER FEED TANK	8921.GAL, 11.5FT DIA, 11.5FT HT, FLAKEGLASS-LINED CS	1	4899.	3911.
FILTER FEED TANK AGITATOR	10.HP	1	8072.	640.
FILTER FEED SLURRY PUMP	270.GPM, 50FT HEAD, 7.HP, 2 OPERATING AND 1 SPARE	3	11199.	3924.
FILTER	603.SQ FT FILTRATION AREA	2	268148.	41489.
FILTRATE PUMP (PER FILTER)	103.GPM, 20.0FT HEAD, 1.HP, 2 OPERATING AND 2 SPARE	4	14816.	1613.
FILTRATE SURGE TANK	3410.GAL, 8.3FT DIA, 8.3FT HT	1	1506.	995.
FILTRATE SURGE TANK PUMP	207.GPM, 85.0FT HEAD, 7.HP, 2 OPERATING AND 2SPARE	2	7979.	870.
TOTAL EQUIPMENT COST			960244.	697160.

LIMESTONE SLURRY PROCESS -- BASIS: 1000 MW UNIT, 1981 STARTUP

PROJECTED CAPITAL INVESTMENT REQUIREMENTS - EXAMPLE INDUSTRIAL, LIMESTONE, NEW ECONOMIC PREMISES — CASE 004

	INVESTMENT, THOUSANDS OF 1980 DOLLARS				DISTRIBUTION
	RAW MATERIAL HANDLING AND PREPARATION	SCRUBBING	WASTE DISPOSAL	TOTAL	PERCENT OF DIRECT INVESTMENT
EQUIPMENT					
MATERIAL	1498.	16831.	960.	19250.	42.0
LABOR	186.	1622.	687.	2496.	5.4
PIPING					
MATERIAL	441.	4681.	525.	5647.	12.3
LABOR	195.	638.	183.	1016.	2.2
DUCTWORK					
MATERIAL	0.	3997.	0.	3997.	8.7
LABOR	0.	3056.	0.	3056.	6.7
FOUNDATIONS					
MATERIAL	290.	236.	24.	551.	1.2
LABOR	771.	494.	51.	1315.	2.9
POND CONSTRUCTION	0.	0.	0.	0.	0.0
STRUCTURAL					
MATERIAL	177.	460.	0.	636.	1.4
LABOR	93.	774.	0.	867.	1.9
ELECTRICAL					
MATERIAL	160.	1040.	243.	1444.	3.1
LABOR	362.	1818.	782.	2962.	6.5
INSTRUMENTATION					
MATERIAL	127.	923.	41.	1092.	2.4
LABOR	19.	157.	54.	230.	0.5
BUILDINGS					
MATERIAL	50.	0.	52.	101.	0.2
LABOR	53.	0.	53.	106.	0.2
SERVICES AND MISCELLANEOUS	109.	916.	91.	1116.	2.4
SUBTOTAL DIRECT INVESTMENT	4492.	37643.	3746.	45882.	100.0
ENGINEERING DESIGN AND SUPERVISION	404.	3388.	337.	4129.	9.0
CONSTRUCTION EXPENSES	719.	6023.	599.	7341.	16.0
CONTRACTOR FEES	225.	1882.	187.	2294.	5.0
CONTINGENCY	1168.	9787.	974.	11929.	260.0
SUBTOTAL FIXED INVESTMENT	7008.	58723.	5843.	71575.	156.0
ALLOWANCE FOR STARTUP AND MODIFICATIONS	539.	4517.	450.	5506.	12.0
INTEREST DURING CONSTRUCTION	1051.	8809.	877.	10736.	23.4
SUBTOTAL CAPITAL INVESTMENT	8598.	72049.	7170.	87817.	191.4
LAND	11.	6.	24.	42.	0.1
WORKING CAPITAL	269.	2256.	224.	2749.	6.0
TOTAL CAPITAL INVESTMENT	8878.	74311.	7418.	90608.	197.5

LIMESTONE SLURRY PROCESS -- BASIS: 1000 MW UNIT, 1981 STARTUP

PROJECTED REVENUE REQUIREMENTS - EXAMPLE INDUSTRIAL, LIMESTONE, NEW ECONOMIC PREMISES CASE 004

DISPLAY SHEET FOR YEAR= 1
ANNUAL OPERATION KW-HR/KW = 5256

60.26 TONS PER HOUR DRY SLUDGE
TOTAL CAPITAL INVESTMENT 87055000

	ANNUAL QUANTITY	UNIT COST,$	TOTAL ANNUAL COST,$
DIRECT COSTS			
RAW MATERIAL			
LIMESTONE	242.1 K TONS	8.00/TON	1937200
SUBTOTAL RAW MATERIAL			1937200
CONVERSION COSTS			
OPERATING LABOR AND			
SUPERVISION	53900.0 MAN-HR	12.50/MAN-HR	673700
UTILITIES			
PROCESS WATER	391860.0 K GAL	0.12/K GAL	47000
ELECTRICITY	86886270.0 KWH	0.029/KWH	2519700
MAINTENANCE			
LABOR AND MATERIAL			3670500
ANALYSES	6440.0 HR	17.00/HR	109600
Solids Disposal	633.5 K tons	15.00/TON	9501797
SUBTOTAL CONVERSION COSTS			16522297
SUBTOTAL DIRECT COSTS			18459497
INDIRECT COSTS			
OVERHEADS			
PLANT AND ADMINISTRATIVE (60.0% OF CONVERSION COSTS LESS UTILITIES)			8373358
FIRST YEAR OPERATING AND MAINTENANCE COSTS			26832855
LEVELIZED CAPITAL CHARGES(14.7% OF TOTAL CAPITAL INVESTMENT)			13319376
FIRST YEAR ANNUAL COSTS			40152231

HEAT RATE 9500, BTU/KWH - HEAT VALUE OF COAL 11700 BTU/LB - COAL RATE 2133800 TONS/YR

APPENDIX D

UTILITY BOILER LIME DRY SCRUBBING FGD SYSTEM PREMISES

MATERIAL BALANCE FOR 0.7% SULFUR COAL - 70% SULFUR REMOVAL

1982 BARE EQUIPMENT COSTS

EQUIPMENT INSTALLATION FACTORS

SCALE FACTORS

1982 CAPITAL INVESTMENT

OPERATING LABOR & SUPERVISION ASSUMPTIONS

ANNUAL O&M COSTS

1984 ANNUAL REVENUE REQUIREMENT

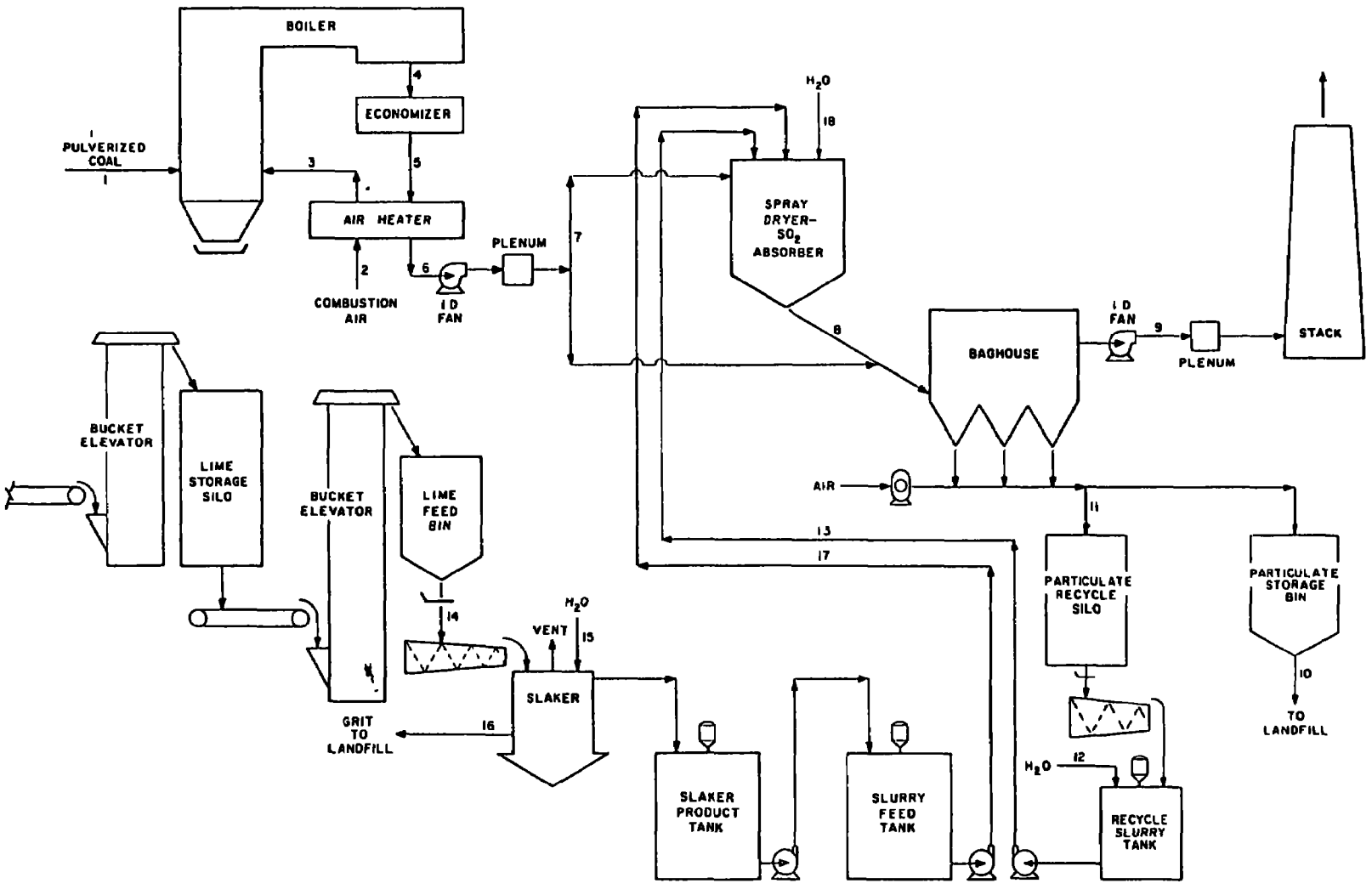

Generic lime spray dryer process. Flow diagram.

500 MWe

0.7%S - 70% Removal

GENERIC LIME SPRAY DRYER PROCESS -

MATERIAL BALANCE

Stream No		1	2	3	4	5
	Description	Coal to boiler	Combustion air to air heater	Combustion air to boiler	Gas to economizer	Gas to air heater
1	Total stream, lb/hr	489,700	5,119,000	4,419,000	4,897,000	4,397,000
2	scfm at 60°F		1,131,000	976,400	1,045,000	1,045,000
3	Temperature, °F		80	535	890	705
4	Pressure, psig					
5	gpm					
6	Specific gravity					
7	pH					
8	Undissolved solids, %					
9	Ash wt % (wet)	9.71				
10	Sulfur wt % (wet)	0.59				

Stream No.		6	7	8	9	10
	Description	Gas to FGD system	Gas to spray dryer	Gas from spray dryer	Gas to stack[a]	Waste to landfill
1	Total stream, lb/hr	5,597,000	4,547,000	4,743,000	5,715,000	44,650
2	scfm at 60°F	1,200,000	975,000	1,020,000	1,250,000	
3	Temperature, °F	300	300	160	175	
4	Pressure, psig					
5	gpm					
6	Specific gravity					
7	pH					
8	Undissolved solids, %					
9						
10						

Stream No		11	12	13	14	15
	Description	Waste to recycle particulate silo	Makeup water to recycle slurry tank	Recycle slurry to spray dryer	Makeup lime to slaker	Makeup water to slaker
1	Total stream, lb/hr	55,450	83,150	138,600	3,661	11,350
2	scfm at 60°F					
3	Temperature, °F					
4	Pressure, psig					
5	gpm		166			23
6	Specific gravity					
7	pH					
8	Undissolved solids, %			40		
9						
10						

Stream No		16	17	18		
	Description	Grit to landfill	Lime slurry to spray dryer	Dilution water to spray dryer		
1	Total stream, lb/hr	366	14,650	19,890		
2	scfm at 60°F					
3	Temperature, °F			60		
4	Pressure, psig					
5	gpm			40		
6	Specific gravity					
7	pH					
8	Undissolved solids, %		22.5			
9						
10						

a Includes air inleakage into the baghouse

scfm = standard cubic feet per minute.

LIME DRY SCRUBBING FGD CAPITAL INVESTMENT[1]

	Capital Investment, 103$	
	0.7% S - 70% Removal	3.5% S - 90% Removal
Direct Investment		
Material Handling	1,634	4,639
Feed Prep	615	1,378
Gas Handling	9,471	10,481
SO_2 Absorption	7,088	8,713
Particulate Removal (Baghouse)	11,133	10,855
Particulate Handling & Recycle	1,392	636
Solids Disposal	444	674
Total Process Capital	31,777	37,376
Services, Utilities, Misc. (6% TPC)	1,907	2,243
Land Fill Construction	2,345	4,199
Total Direct Investment	36,029	43,818
Indirect Investment		
Engr. Design & Supv.	2,522	3,067
A & E	721	876
Construction Expense	5,765	7,011
Contractor Fees	1,801	2,191
Contingency	9,367	11,393
Total Fixed Investment	56,205	68,355
Other Capital Requirements		
Startup & Modification	5,621	6,836
Interest During Const.	8,768	10,663
Royalties	180	2,019
Land	720	1,320
Working Capital	1,927	2,795
Total Capital Investment	73,421	90,188
&/kwe	146.8	180.4

[1]Source: Tom Burnett, Economic Evaluation Section, TVA, Muscle Shoals, Ala., July 1980. These results are preliminary and are not approved by TVA or EPA.

Bases
1982 $
500 MWe Boiler

LIME DRY SCRUBBING FGD ANNUAL REVENUE REQUIREMENT[1]

Direct Costs	Unit Cost, $	0.7% S - 70% Removal Annual Quantity	0.7% S - 70% Removal Annual Cost $10^3$$	3.5% S - 90% Removal Annual Quantity	3.5% S - 90% Removal Annual Cost $10^3$$
Direct Costs					
Raw Materials					
Lime	$102/ton-0.7% S $ 75/ton-3.5% S	10,100 tons	1,030.2	86,100 tons	6,457.5
Conversion Costs					
Operating Labor & Supv					
FGD	$15/m-h	25,400 m-h	381.0	29,120 m-h	436.8
Solids Disposal	$21/m-h	14,560 m-h	305.8	20,800 m-h	436.8
Utilities					
Process Water	$0.14/kgal	78,600 kgal	11.0	134,600 kgal	18.8
Electricity	$0.037/kwh	39,405,000 kwh	1,458.0	41,603,000 kwh	1,539.3
Steam	$2.70/MBtu				371.0
Maintenance					
Labor & Material			2,091.7		2,503.1
Analyses	$21/m-h	4,160 m-h	87.4	4,160 m-h	87.4
Waste Disposal Operation	$0.15/ton	122,800 tons	18.4	280,800 tons	42.1
Total Conv. Costs			4,353.0		5,435.3
Total Direct Costs			5,383.5		11,892.8
Indirect Costs					
Overheads					
Plant & Admin.			1,730.6		2,103.7
First Year - O & M			7,114.1		13,996.5
Levelized Capital Charges (14.7% of TCI)			10,792.8		13,257.7
Total First Year Annual Revenue Requirement			17,906.9		27,254.2
Levelized First Year O & M (1.886 × First Year O & M)			13,417.1		26,397.4
Levelized Annual Revenue Requirement			24,209.9		39,655.1
First Year Annual Revenue Requirement, mills/Kwh			6.51		9.91
Levelized Annual Revenue Requirement, mills/Kwh			8.80		14.42

[1]Source: Tom Burnett, Economic Evaluation Section, TVA, Muscle Shoals, Ala., July, 1980. These results are preliminary and are not approved by TVA or EPA.

Bases
- 1984 $
- 500 MWe Boiler
- 0.63 Capacity Utilization Factor

LIME DRY SCRUBBING FGD
BARE EQUIPMENT COSTS & INSTALLATION FACTORS

	0.7% S - 70% Removal			3.5% S - 90% Removal		
	Material Cost 10^3\$, 1982	Installation Factor		Material Cost 10^3\$, 1982	Installation Factor	
Material Handling	333.3	4.90	4.25	825.0	5.62	5.17
Feed Preparation	195.7	3.14		399.4	4.06	
Gas Handling	2260.0	4.19		2260.8	4.64	
SO_2 Absorption (3 operator, 1 spare)	4324.0	1.64		5405.5	1.61	
Particulate Removal (Baghouse)	8262.0	1.35		8032.0	1.35	
Particulate Handling and Recycle	556.9	2.49		266.7 (no Recycle)	2.38	

Bases
- 1982 \$
- 500 MWe Boiler

To obtain 1980\$ cost multiply 1982\$ costs by:

Material CECI $\frac{1980}{1982} = \frac{286.1}{333.7} = 0.857$

LIME DRY SCRUBBING FGD
250 & 1000 MWe Assumptions

Investment Scale Factors	Scale Factor
Material Handling	0.89
Feed Preparation	0.57
Gas Handling	0.68
SO_2 Absorption	0.65
Particulate Removal	1.0
Particulate Handling	0.71
Solids Disposal	1.0
Land Fill Construction	1.0

Operating Labor & Supv

250,500 & 1000 MWe dry scrubbing in same proportions as operating labor & supv. for the limestone cases.

	Man-hours/year	
MWe	Wet Scrubbing	Dry Scrubbing
250	20810	18580
500	28450	25400
1000	38910	34740

APPENDIX E

INDUSTRIAL BOILER LIME DRY SCRUBBING FGD SYSTEM PREMISES

MATERIAL BALANCES

EQUIPMENT LISTS AND COSTS

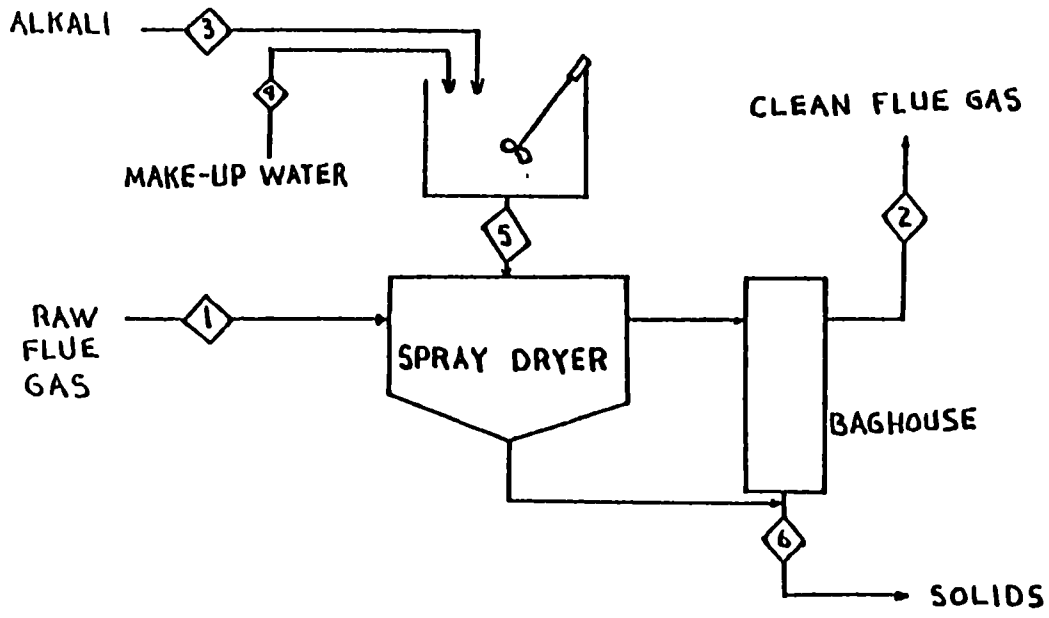

SPRAY DRYER FGD

Boiler size: 150 x 10^6 BTU/Hr.
Coal type: Western
SO_2 removal: 75%
Type alkali: Lime
Percent ash*: 5.4% (wt)
Percent sulfur*: 0.6% (wt)
*Wet Basis

Stream Number / Description	1 Inlet Gas	2 Exit Gas	3 Alkali	4 Water	5 Slurry to Dryer	6 Solids
TOTAL FLOW RATE lb/hr	185,640	190,709	187	9688	9875	855
gpm				19.4	19.4	
Temp (°F)	350	175				
GAS FLOW RATE lb/hr	185,092	190,706				
lb/moles/hr	6382	6715				
ACFM	62,800	51,797				
SCFM	40,316	42,416				
LIQUID FLOW RATE lb/hr				9688	9688	
SOLID FLOW RATE lb/hr	548	3	187		187	855

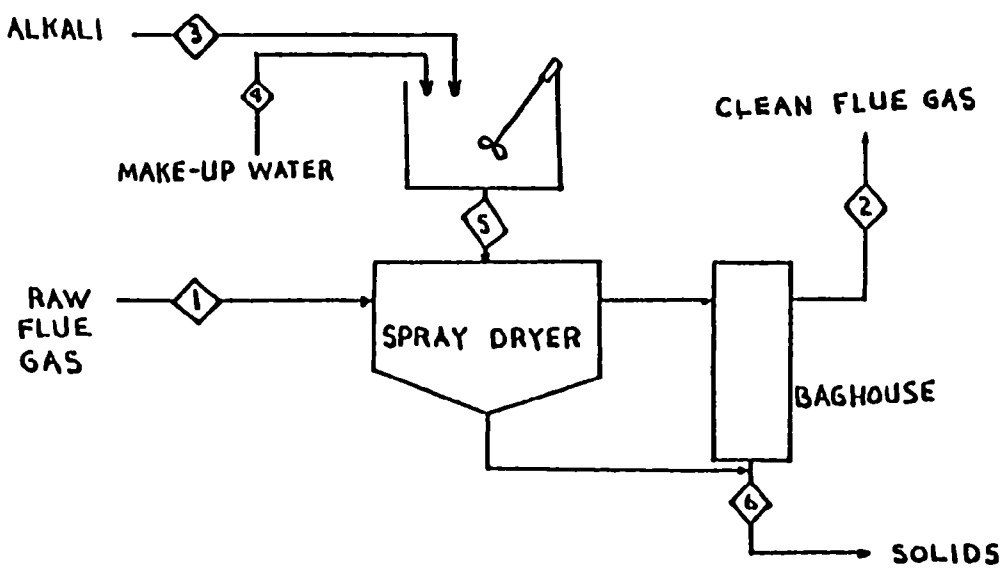

SPRAY DRYER FGD

Boiler size: 400 x 10^6 BTU/Hr.
Coal type: Western
SO_2 removal: 70%
Type alkali: Lime
Percent ash*: 5.4%(wt)
Percent sulfur*: 0.6%(wt)
*Wet basis

Stream Number / Description	1 Inlet Gas	2 Exit Gas	3 Alkali	4 Water	5 Slurry to Dryer	6 Solids
TOTAL FLOW RATE lb/hr	431,620	451,532	499	21,890	22,389	2781
gpm	—	—	—	43.8	43.8	—
Temp (°F)	350	175	—	—	—	—
GAS FLOW RATE lb/hr	429,820	451,523				
lb/moles/hr	14,820	16,031				
ACFM	146,000	123,800				
SCFM	88,680	95,918				
LIQUID FLOW RATE lb/hr				21,890	21,890	
SOLID FLOW RATE lb/hr	1800	9	499		499	2781

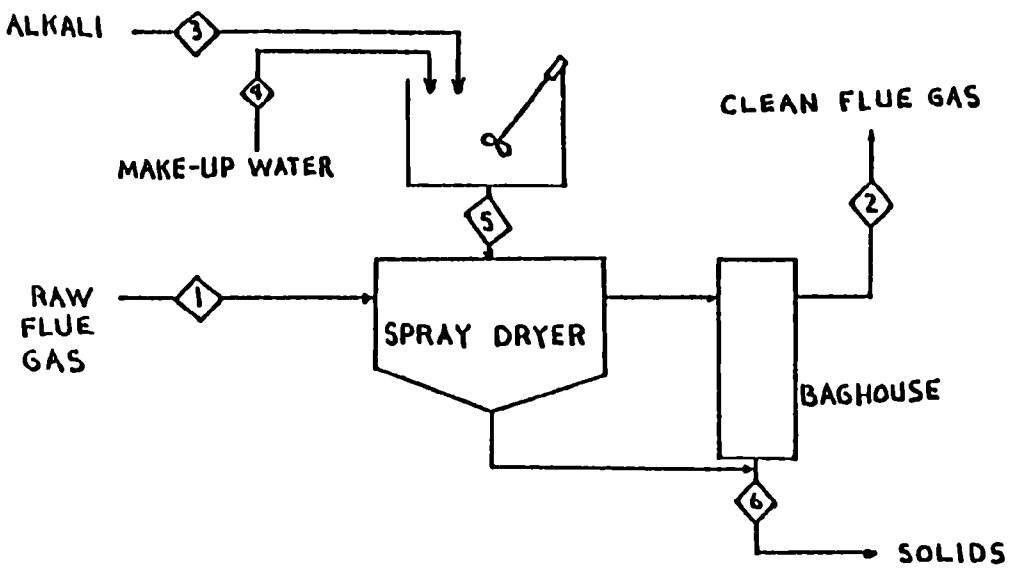

SPRAY DRYER FGD

Boiler size: 75 x 10^6 BTU/Hr.
Coal type: Medium Sulfur
SO_2 removal: 70%
Type alkali: Lime
Percent ash*: 13.2%(wt)
Percent sulfur*: 2.3%(wt)
*Wet basis

Stream Number / Description	1 Inlet Gas	2 Exit Gas	3 Alkali	4 Water	5 Slurry to Dryer	6 Solids
TOTAL FLOW RATE lb/hr	91,691	96,359	1261	4948	5209	675
gpm	—	—		9.9	9.9	
Temp (°F)	400	175				
GAS FLOW RATE lb/hr	91,503	96,358				
lb/moles/hr	3155	3427				
ACFM	33,000	26,467				
SCFM	18,879	20,507				
LIQUID FLOW RATE lb/hr				4948	4948	
SOLID FLOW RATE lb/hr						

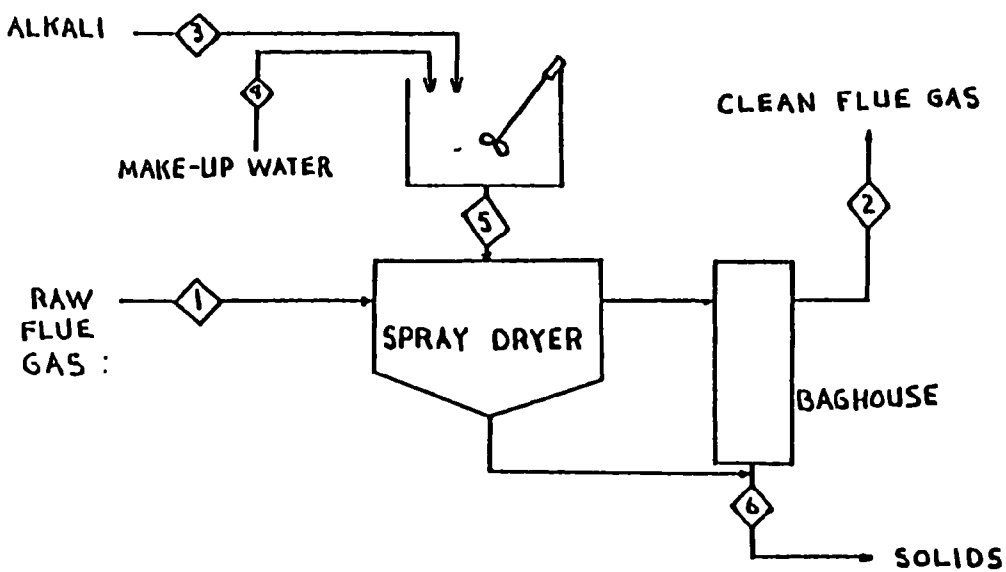

SPRAY DRYER FGD

Boiler size: 400 x 10^6 BTU/Hr.
Coal type: Medium Sulfur
SO_2 removal: 70%
Type alkali: Lime
Percent ash*: 13.2%(wt)
Percent sulfur*: 2.3%(wt)
*Wet basis

Stream Number / Description	1 Inlet Gas	2 Exit Gas	3 Alkali	4 Water	5 Slurry to Dryer	6 Solids
TOTAL FLOW RATE						
lb/hr	472,488	441,532	1389	22,690	24,079	5782
gpm	—	—	—	45.4	45.4	—
Temp (°F)	400	175	—	—	—	—
GAS FLOW RATE						
lb/hr	449,250	441,516				
lb/moles/hr	14,457	15,703				
ACFM	151,200	121,270				
SCFM	86,500	93,859				
LIQUID FLOW RATE						
lb/hr				22,690	22,690	
SOLID FLOW RATE						
lb/hr	3198	16	1389		1389	5782

EQUIPMENT LIST - PURCHASED PRICE
LIME DRY SCRUBBING FGD - INDUSTRIAL BOILERS

	44 MWt - 0.6% S - 70% Removal		118 MWt - 0.6% S - 70% Removal		22 MWt - 2.3% S - 70% Removal		118 MWt - 2.3% S - 70% Removal	
	Description	$	Description	$	Description	$	Description	$
Raw Material Handling								
Pneumatic Conveyor		3,394		3,394		3,394		3,394
Silo - 2 wk Capacity	63 k lbs	18,500	167.7 k lbs	36,000	87.7 k lbs	23,200	466.7 k lbs	72,000
Screw Feeder		1,193		1,193		1,193		1,193
Mix Tank - 5 mw		330		760		280		760
Mixer		270		520		260		520
Lime Slaker		16,000		17,300		16,500		18,800
Feed Pumps - 2		7,200	44 gpm	9,200	10 gpm	6,800	45 gpm	9,200
		46,900		68,380		51,640		105,930
Fans	62,800 acfm	29,000	146,000 acfm	54,000	33,000 acfm	18,000	151,200 acfm	55,000
SO_2 Scrubbing[1]								
Absorber, Circulator Tank (5 min)		230,000		337,200		170,800		349,200
Mixer, Circulation Pumps								
Solids Collection[2]								
Baghouse								
Equip.		359,750		812,700		193,200		840,650
Installation Costs		353,359		497,540		246,918		503,438
		713,109		1,310,240		440,138		1,344,088

[1] SO_2 Scrubbing = installed cost

[2] Installation costs = $-1506523 + 168531 \ln \left[(acfm) \frac{2}{A/C} \right]$

Equipment cost = $8.34 (acfm)^{0.966} \left(\frac{2}{A/C} \right)$

A/C = air/cloth = 2.0 fpm

APPENDIX F

DESCRIPTION OF TVA AND PEDCO ENVIRONMENTAL, INC. INVESTMENT/COST COMPONENTS

APPENDIX F

1.0 TVA INVESTMENT/COST COMPONENTS

1.1 Capital Investment

Capital investment estimates are based on an East Central location (Kentucky, Illinois, Indiana, Ohio, Michigan, and Wisconsin) and represent projects beginning in 1981 and ending in 1983. Capital cash flows for a standard project are assumed to be 25% the first year, 50% the second year, and 25% the third year of the project life. Capital costs for fixed assets are projected to mid-1982, which represents approximately the midpoint of the construction expenditure schedule.

Typically, capital estimates made by Emission Control Development Projects are either preliminary or definitive level estimates. Preliminary estimates are based on a process description, flow sheet, material balance, and equipment list. Piping, ductwork, and instrumentation are normally factored. The preliminary capital cost estimate is normally considered to have a -20% to +40% range of accuracy. Definitive estimates are based on the same items as a preliminary estimate plus a layout, instrument control diagram, and piping diagram. The definitive estimate is considered to have a -5% to +25% range of accuracy.

The total fixed capital investment includes direct capital costs for equipment, building, utilities, service facilities, raw material and byproduct storage, waste disposal facilities, engineering design and supervision, construction expense, contractors' fees, and contingency.

The total capital investment includes the total fixed capital investment plus allowances for startup and modifications, royalties, the cost of funds used during construction, plus the cost of land and working capital.

(1) Direct Capital Costs - Process

Direct capital costs cover installed process equipment, piping, insulation, transport lines, foundations, structural, electrical, instrumentation, raw material and byproduct storage, site preparation and excavation, buildings, roads and railroads, trucks, and earthmoving equipment.

Direct investments are prepared using standard estimation techniques and the average annual Chemical Engineering cost indexes and projections as shown in Table F-1.

The overtime premium for 7% overtime is included in the construction labor. Appropriate amounts for sales tax and for freight are included in the process capital costs.

(2) Direct Capital Costs - Utilities, Service and Miscellaneous Facilities

Necessary electrical substations, conduit, steam, process water, fire and service water, instrument air, chilled water, inert gas, and compressed air distribution facilities are included in the utilities investment.

These facilities are costed as increments to the facilities already required by the power plant. For existing units, a package boiler is used for all steam generation including reheat, since steam is assumed to be unavailable from the power plant cycle. Flue gas from the package boiler is added to the utility boiler flue gas before the scrubber.

Electrical switchyard locations are assumed to be approximately 200 yards from the control rooms. Control room location varies with each process, depending upon equipment size and configuration. Generation facilities for electricity are not included.

Service facilities such as maintenance shops, stores, communications, security, offices, and road and railroad facilities are estimated or allocated on the basis of process requirements.

TABLE F-1

Cost Indexes and Projections

Year	1975	1976	1977	1978	1979[a]	1980[a]	1981[a]	1982[a]	1983[a]	1984[a]
Plant	182.4	192.1	204.1	218.8	240.2	259.4	278.9	299.8	322.3	344.9
Material[b]	194.7	205.8	220.9	240.6	262.5	286.1	309.0	333.7	360.4	385.6
Labor[c]	168.6	174.2	178.2	185.9	209.7	226.5	244.6	264.2	285.3	305.3

a. TVA projections
b. Same as index in Chemical Engineering (10) for "equipment, machinery, supports."
c. Same as index in Chemical Engineering (10) for "construction labor."

Services, nonpower plant utilities, and miscellaneous will normally be in the range of 4% to 8% of the total process capital depending on the type of process.

(3) Indirect Capital Costs

Indirect capital costs cover engineering design and supervision, architect and engineering contractor costs, construction costs, contractor fees, and contingency. Construction facilities, which include costs for mobile equipment, temporary lighting, construction roads, raw water supply, construction safety and sanitary facilities, and other similar expenses incurred during construction are considered part of construction expenses and are charged to indirect capital investment.

Listed below are the ranges of indirect costs to be used depending upon the scope and complexity of design and construction involved in the process being studied.

	% of direct investment		
	Low	Base	High
Engineering design and supervision	6	7	8
Architect and engineering contractor	1	2	3
Construction expense	14	16	18
Contractor fees	4	5	6
Total	25	30	35

For comparative studies, a contingency of 20% is included since projects normally have a higher likelihood of exceeding rather than underrunning the capital estimate. While actual projects could properly have both project and process contingencies of varying amounts depending on the type and developmental maturity of the process, comparability among processes could be skewed by the use of different contingencies in the same study.

(4) Other Capital Requirements

Startup and modification allowances are estimated as 8% to 12% of the total fixed investment depending upon the complexities of the process being studied.

For proprietary processes, either actual royalty fees or 0.5% of the direct investment will be charged.

Cost of funds during construction is estimated to be 15.6% of the total fixed investment for each process. This factor is equivalent to the 10% weighted cost of capital with 25% of the construction expenditures in the first year, 50% the second year, and 25% the third year of the project construction schedule. Expenditures in a given year are assumed to be uniform over that year. Start-up costs are assumed to occur late enough in the project schedule that there are no charges for the use of money used to pay startup costs. For processes that have construction periods significantly different than the 3-year premise period, the cost of funds during construction are adjusted to the actual period required.

1.2 ANNUAL REVENUE REQUIREMENTS

Annual revenue requirements use 1984 costs and are based on 5500 hours of operation per year at full load for pollution control processes that are close-coupled with a utility boiler. Typical operating experiences are used as a basis.

(1) Direct Operating and Maintenance Costs

Direct costs include raw materials, labor, utilities, maintenance, and analytical costs. Unit costs for steam and electricity are based on the assumption that the required energy is purchased from another source. Unit costs ($/kW, mills/kWh) are calculated on the basis of net power output after the addition of the pollution control systems. Acutally the electrical usage

by the pollution control equipment after the ESP will result in a derating of the utility plant for either a new or a retrofitted unit. To minimize iterative calculations, instead of derating the utility plant, the pollution control equipment (excluding ESP) will be charged with purchased electricity.

Maintenance costs are estimated to be 3% to 9% of the direct investment based on unit size and process complexity.

(2) Indirect Operating and Maintenance Costs

Indirect costs cover levelized annual capital charges and overheads.

The levelized annual capital charges consist of sinking fund factor, allowance for interim replacement, property taxes, insurance, weighted cost of capital, income tax, credits for accelerated depreciation, and investment credit. The levelized annual capital charge for a regulated utility is 14.7%.

Overheads consist of plant, administrative, and marketing expenses assumed to be as follows:

- Plant and administrative overhead = 60 % of conversion costs less utilities
- Marketing overhead is assigned as applicable for processes that have byproduct sales

The plant and administrative overheads include plant services such as safety, cafeteria, medical, plant protection, janitorial, purchasing personnel, general engineering (excluding maintenance), interplant communications and transportation, recreational facilities, and the expenses connected with top management activities. Fringe benefits such as retirement, vacation, dental and medical plans are included in the base wage rates.

Credit is given for byproduct sales where appropriate. First-year annual revenue requirements using levelized capital charges (14.7%) are calculated. In addition, levelized annual revenue requirements are calculated using a 10% discount factor, 6% inflation factor, and a 30-year economic life giving a 1.886 leveling factor.

2.0 PEDCo ENVIRONMENTAL, INC., INVESTMENT/COST COMPONENTS

Capital cost and annualized cost are estimated for each FGD system. The capital cost represents the initial investment necessary to install and commission the system. The annualized cost represents the cost of operating and maintaining the system and the charges needed to recover the capital investment, which are referred to as fixed costs or fixed charges.

2.1 Capital Costs

Capital costs consist of direct and indirect costs incurred up to the successful commissioning of the facility. Direct costs include the costs of various items of equipment and the labor and material required for installing these items and interconnecting the system. Indirect costs are expenditures for the overall facility that cannot be attributed to specific equipment; they include such items as freight, spares, engineering, contingency, etc.

Direct Costs

The "bought-out" cost of the equipment and the cost of installing it are considered direct costs. A bought-out cost of an equipment item is the purchase price paid to the equipment supplier on a free-on-board (f.o.b.) basis; this does not include the freight charges. Installation costs cover the interconnection of the system, which involves piping, electrical, and the other work needed to commission it. Also attributed to installation are the costs of foundations, supporting structures, enclosures, ducting, control panels, instrumentation, insulation, painting, and similar items. Costs for interconnecting various items of FGD equipment include site development, construction of access roads and walkways, and the establishment of rail, barge, or truck facilities. Finally, the cost of administrative facilities is considered a direct cost.

Various procedures are available for estimating direct costs. The PEDCo computer model uses the installation factor technique to estimate total direct costs. The bought-out cost of each item of equipment is multiplied by an individual installation factor to obtain the installed cost. This installed cost includes a proportional cost for interconnecting the equipment into the system. The installation factors are based on the complexity of the equipment and the cost of the material and labor required. The installed costs of all the equipment are added together to obtain the total direct cost of the facility.

Indirect Costs

The indirect costs of an FGD system include the following:

Interest: covers interest accrued on borrowed capital during construction.

Engineering costs: include administrative, process, project, and general costs; design and related functions for specifications; bid analysis; special studies; cost analysis; accounting; reports; purchasing ; procurement; travel expenses; living expenses; expediting; inspection; safety; communications, modeling; pilot plant studies; royalty payments during construction; training of plant personnel; field engineering; safety engineering; and consultant services.

Freight: includes delivery costs on FGD process and related equipment shipped f.o.b. from point of origin.

Offsite expenditures: include expenditures for powerhouse modifications, interruption to power generation, and service facilities added to the existing plant facilities.

Taxes: include sales, franchise, property, and excise taxes.

Spare parts: represent costs of items stocked to permit high process availability; such items include pumps, valves, controls, special piping and fittings, instruments, spray nozzles, and similar equipment.

Shakedown: includes costs associated with system startup.

Contractor's fee and expenses: include costs for field labor payroll, supervision field office, administrative personnel, construction offices, temporary roadways, railroad trackage, maintenance and welding shops, parking lot, communications, temporary piping, electrical, sanitary facilities, rental equipment, unloading and storage of materials, travel expenses, permits, licenses, taxes, insurance, overhead, legal liability, field testing of equipment, and labor relations.

Contingency costs: include costs resulting from malfunctions, equipment design alterations, and similar unforeseen sources.

Land cost: includes only the cost of the land required for sludge disposal. The cost of land for installing FGD equipment is accounted for in the installation factors.

All indirect cost components, except land cost, are obtained by multiplying the direct costs by an indirect cost factor. The land cost is based on land rate and the disposal area required.

2.2 Annual Revenue Requirements

The capital investment of a pollution control system is generally translated into annual fixed charges. These charges, along with the annual operating costs, represent the total revenue requirement of a particulate control system.

The annual fixed charges are classified under four cost components: depreciation, taxes, insurance, and capital costs. The component costs are summed to obtain the total fixed charges.

Depreciation: The value of the depreciation component is obtained by using a straight-line depreciation over the life period of the pollution control system. A 20-year life is assumed for depreciation purposes. The annual cost is calculated by dividing the total capital investment by the assumed years of life.

Annualized Costs

The annualized operating costs of an FGD system consist of the following:

Raw materials: include costs of lime for the FGD system and fixation chemicals.

Utilities: include costs of water for slurries, cooling, and cleaning; electricity for pumps, fans, valves, lighting controls, conveyors, and mixers; fuel for reheating flue gases; and steam for processing.

Operating Labor: includes costs of supervision and skilled and unskilled labor to operate, monitor, and control the FGD process.

Maintenance and repairs: include costs of manpower and materials to keep the unit operating efficiently. The function of maintenance is both preventative and corrective to keep outages to a minimum.

Overhead: represents business expenses that are not charged directly to a particular part of a process, but are allocated to it. Overhead costs include administrative, safety, engineering, legal, and medical services; payroll; employee benefits; recreation; and public relations.

The capital investment in an FGD system is generally translated into annual fixed charges. These charges, along with the annual operating cost, represent the total revenue requirement or annualized cost of a system. The annual fixed charges are calculated under four cost components: depreciation, taxes, insurance, and capital costs. The values for these components are obtained as follows:

Depreciation: calculated by using a sinking-fund method over the life period of the FGD system.

Taxes: calculated by multiplying the total capital cost by the input tax rate. The tax rate varies for different plants.

Insurance: calculated by multiplying the total capital cost by the insurance rate.

Capital charges: calculated by multiplying the total capital cost by the input interest rate. Capital charges represent the interest paid per year for the use of capital, and they vary according to interest rates.

The total annual fixed charges are obtained by adding the values of the above four components. The annualized cost or total annual revenue is the sum of the annual operating costs and the total annual fixed charges.

APPENDIX G

UTILITY BOILER LIME FGD SYSTEM COSTS

COMPARISON OF TVA'S OLD & NEW PREMISES

PEDCO ENVIRONMENTAL, INC., COSTS

APPENDIX G

In this Appendix, the TVA cost estimating procedures are described and compared for their "old" and "new" premises (see Section 4 for discussion). Costs are presented for a system based on the following:

500 MWe Boiler
Lime Wet Scrubbing
Approximately 90% SO_2 Removal

In addition, PEDCo Environmental, Inc., costs for a similar system are also presented.

OLD PREMISES
500 MW
LIME WET SCRUBBING

EXAMPLE CASE [redacted] CASE 008

*** INPUTS ***

BOILER CHARACTERISTICS

MEGAWATTS = 500.

BOILER HEAT RATE = 9000. BTU/KWH

EXCESS AIR = 33. PERCENT, INCLUDING LEAKAGE

HOT GAS TEMPERATURE = 300. DEG F

COAL ANALYSIS, WT % AS FIRED :

C	H	O	N	S	CL	ASH	H2O
57.56	4.14	7.00	1.29	3.12	0.10	16.00	10.76

SULFUR OVERHEAD = 95.0 PERCENT

ASH OVERHEAD = 80.0 PERCENT

HEATING VALUE OF COAL = 10500. BTU/LB

FLYASH REMOVAL	EFFICIENCY, %	EMISSION, LBS/M BTU
UPSTREAM OF SCRUBBER	98.5	0.18
WITHIN SCRUBBER	50.0	0.09

COST OF UPSTREAM FLYASH REMOVAL EXCLUDED

ALKALI

LIME :

CAO = 97.19 WT % DRY BASIS
SOLUBLE MGO = 0.0
INERTS = 2.81
MOISTURE CONTENT : 5.00 LB H2O/100 LBS DRY LIME

FLY ASH :

SOLUBLE CAO = 0.0 WT %
SOLUBLE MGO = 0.0
INERTS = 100.00

RAW MATERIAL HANDLING AREA

NUMBER OF REDUNDANT ALKALI PREPARATION UNITS = 0

OLD PREMISES
500 MW
LIME WET SCRUBBING

SCRUBBER SYSTEM VARIABLES

NUMBER OF OPERATING SCRUBBING TRAINS = 4

NUMBER OF REDUNDANT SCRUBBING TRAINS = 0

NUMBER OF BEDS = 3

NUMBER OF GRIDS = 4

HEIGHT OF SPHERES PER BED = 5.0 INCHES

LIQUID-TO-GAS RATIO = 55. GAL/1000 ACF(SATD)

SCRUBBER GAS VELOCITY = 12.8 FT/SEC

INDUCED DRAFT SCRUBBER FAN OPTION

SCRUBBER PRESSURE = 14.7 PSIA

STOICHIOMETRY = 1.10 MOLE CAO ADDED AS LIME
PER MOLE (SO2+2HCL) ABSORBED

SCRUBBER INLET LIQUOR PH = 7.00

SO2 EMISSION LIMIT = 0.60 LB SO2/M BTU

ENTRAINMENT LEVEL = 0.10 WT %

EMT RESIDENCE TIME = 12.0 MIN

SO2 OXIDIZED IN SYSTEM = 30.0 PERCENT

SOLIDS IN RECIRCULATED SLURRY = 15.0 WT %

SOLIDS DISPOSAL SYSTEM

COST OF LAND = 3500.00 DOLLARS/ACRE

SOLIDS IN SYSTEM SLUDGE DISCHARGE = 40.0 WT %

MAXIMUM POND AREA = 9999. ACRES

MAXIMUM EXCAVATION = 25.00 FT

DISTANCE TO POND = 5280. FT

POND LINED WITH 12.0 INCHES CLAY

STEAM REHEATER (IN-LINE)

SATURATED STEAM TEMPERATURE = 470. DEG F

HEAT OF VAPORIZATION OF STEAM = 751. BTU/LB

OUTLET FLUE GAS TEMPERATURE = 175. DEG F

OLD PREMISES
500 MW
LIME WET SCRUBBING

SUPERFICIAL GAS VELOCITY (FACE VELOCITY) = 25.0 FT/SEC

100.0000**********	42.1480	10500.0000

OLD PREMISES
500 MW
LIME WET SCRUBBING

```
EXAMPLE CASE OLD PREMSIS LIME                                          CASE 002

                        *** OUTPUTS ***

HOT GAS TO SCRUBBER
--- --- -- --------

          MOLE PERCENT      LB-MOLE/HR      LB/HR

CO2         12.315          0.2054E+05      0.9040E+06
HCL          0.007          0.1209E+02      0.4408E+03
SO2          0.238          0.3962E+03      0.2538E+05
O2           4.827          0.8051E+04      0.2576E+06
N2          73.869          0.1232E+06      0.3452E+07
H2O          8.763          0.1459E+05      0.2628E+06

SO2 CONCENTRATION IN SCRUBBER INLET GAS = 2375. PPM
                                        = 5.64 LBS / MILLION BTU

FLYASH EMISSION =  0.18 LBS/MILLION BTU
                =  0.091 GRAINS/SCF (WET)  OR    823. LB/HR

        SOLUBLE CAO IN FLY ASH =      0. LB/HR
        SOLUBLE MGO IN FLY ASH =      0.

HOT GAS FLOW RATE =  .1054E+07 SCFM (60 DEG F, 14.7 PSIA)
                  =  .1540E+07 ACFM (300. DEG F, 14.7 PSIA)

CORRESPONDING COAL FIRING RATE =  .4286E+06 LB/HR

HOT GAS HUMIDITY =  0.087 LB H2O/LB DRY GAS

WET BULB TEMPERATURE = 129. DEG F

WET GAS FROM SCRUBBER
--- --- ---- --------

          MOLE PERCENT      LB-MOLE/HR      LB/HR

CO2         11.540          0.2050E+05      0.9024E+06
HCL          0.000          0.6045E+00      0.2204E+02
SO2          0.024          0.4215E+02      0.2700E+04
O2           4.501          0.7998E+04      0.2559E+06
N2          69.342          0.1232E+06      0.3452E+07
H2O         14.593          0.2593E+05      0.4671E+06

SO2 CONCENTRATION IN SCRUBBER OUTLET GAS =  237. PPM

FLYASH EMISSION =  0.09 LBS/MILLION BTU
                =  0.043 GRAINS/SCF (WET)  OR    411. LB/HR

TOTAL WATER PICKUP =  419.  GPM
          INCLUDING   10.2 GPM ENTRAINMENT

WET GAS FLOW RATE =  .1122E+07 SCFM (60 DEG F, 14.7 PSIA)
                  =  .1271E+07 ACFM (129. DEG F, 14.7 PSIA)

WET GAS SATURATION HUMIDITY =  0.101 LB H2O/LB DRY GAS
```

OLD PREMISES
500 MW
LIME WET SCRUBBING

FLUE GAS TO STACK

	MOLE PERCENT	LB-MOLE/HR	LB/HR
CO2	11.921	0.2050E+05	0.9024E+06
HCL	0.000	0.6045E+00	0.2204E+02
SO2	0.024	0.4215E+02	0.2700E+04
O2	4.494	0.7998E+04	0.2559E+06
N2	69.233	0.1232E+06	0.3452E+07
H2O	14.728	0.2621E+05	0.4722E+06

CALCULATED SO2 REMOVAL EFFICIENCY = 89.4 %

SPECIFIED SO2 EMISSION = 0.60 POUNDS PER MILLION BTU

CALCULATED SO2 CONCENTRATION IN STACK GAS = 297. PPM

FLYASH EMISSION = 0.09 LBS/MILLION BTU
= 0.043 GRAINS/SCF (WET) OR 411. LB/HR

STACK GAS FLOW RATE = .1124E+07 SCFM (60 DEG F, 14.7 PSIA)
= .1373E+07 ACFM (178. DEG F, 14.7 PSIA)

STEAM REHEATER (IN-LINE)

SUPERFICIAL GAS VELOCITY (FACE VELOCITY) = 25.0 FT/SEC

SQUARE PIPE PITCH = 2 TIMES ACTUAL PIPE O.D.

SATURATED STEAM TEMPERATURE = 470. DEG F

OUTLET FLUE GAS TEMPERATURE = 175. DEG F

REQUIRED HEAT INPUT TO REHEATER = 0.9712E+08 BTU/HR

STEAM CONSUMPTION = 0.7606E+05 LBS/HR

OUTSIDE PIPE DIAMETER, IN.	PRESSURE DROP, IN. H2O	HEAT TRANSFER COEFFICIENT, BTU/HR FT2 DEG F
1.00	0.42	0.2079E+02

	REHEATER OUTSIDE PIPE AREA, SQ FT PER TRAIN	NUMBER OF PIPES PER BANK PER TRAIN	NUMBER OF BANKS (ROWS) PER TRAIN
INCONEL	0.1184E+04	87	3
CORTEN	0.9577E+03	87	3
TOTAL	0.2141E+04	87	6

OLD PREMISES
500 MW
LIME WET SCRUBBING

WATER BALANCE INPUTS

RAINFALL(IN/YEAR)	50.
POND SEEPAGE(CM/SEC)*10**8	50.
POND EVAPORATION(IN/YEAR)	32.

WATER BALANCE OUTPUTS

WATER AVAILABLE

RAINFALL	645. GPM	322187. LB/HR
ALKALI	2. GPM	1142. LB/HR
TOTAL	647. GPM	323329. LB/HR

WATER REQUIRED

HUMIDIFICATION	409. GPM	204351. LB/HR
ENTRAINMENT	10. GPM	5074. LB/HR
DISPOSAL WATER	163. GPM	81399. LB/HR
HYDRATION WATER	12. GPM	6027. LB/HR
CLARIFIER EVAPORATION	0. GPM	0. LB/HR
POND EVAPORATION	448. GPM	224072. LB/HR
SEEPAGE	80. GPM	40008. LB/HR
TOTAL WATER REQUIRED	1122. GPM	560921. LB/HR
NET WATER REQUIRED	475. GPM	237592. LB/HR

OLD PREMISES
500 MW
LIME WET SCRUBBING

SCRUBBER SYSTEM

TOTAL NUMBER OF SCRUBBING TRAINS (OPERATING+REDUNDANT) = 4

SO2 REMOVAL = 89.4 PERCENT

PARTICULATE REMOVAL IN SCRUBBER SYSTEM = 50.0 PERCENT

TCA PRESSURE DROP ACROSS 3 BEDS = 8.6 IN. H2O

TOTAL SYSTEM PRESSURE DROP = 14.6 IN. H2O

OVERRIDE TOTAL SYSTEM PRESSURE DROP = 20.0 IN. H2O

SPECIFIED LIQUID-TO-GAS-RATIO = 55. GAL/1000 ACF(SATD)

LIME ADDITION = 0.2285E+05 LB/HR DRY LIME

SPECIFIED LIME STOICHIOMETRY = 1.10 MOLE CAO ADDED AS LIME PER MOLE (SO2+2HCL) ABSORBED

SOLUBLE CAO FROM FLY ASH = 0.0 MOLE PER MOLE (SO2+2HCL) ABSORBED

TOTAL SOLUBLE MGO = 0.0 MOLE PER MOLE (SO2+2HCL) ABSORBED

TOTAL STOICHIOMETRY = 1.10 MOLE SOLUBLE (CA+MG) PER MOLE (SO2+2HCL) ABSORBED

SCRUBBER INLET LIQUOR PH = 7.00

MAKE UP WATER = 475. GPM

CROSS-SECTIONAL AREA PER SCRUBBER = 424. SQ FT

SYSTEM SLUDGE DISCHARGE

SPECIES	LB-MOLE/HR	LB/HR	SOLID COMP. WT %	LIQUID COMP. PPM
CASO3 .1/2 H2O	0.2478E+03	0.3199E+05	58.40	
CASO4 .2H2O	0.1053E+03	0.1813E+05	33.09	
CACO3	0.3597E+02	0.3601E+04	6.57	
INSOLUBLES	----------	0.1063E+04	1.94	
H2O	0.4518E+04	0.8140E+05		
CA++	0.6820E+01	0.2734E+03		3326.
MG++	0.0	0.0		0.
SO3--	0.1394E+00	0.1086E+02		132.
SO4--	0.9255E+00	0.8890E+02		1082.
CL-	0.1148E+02	0.4071E+03		4955.

TOTAL DISCHARGE FLOW RATE = 0.1370E+06 LB/HR
= 207. GPM

TOTAL DISSOLVED SOLIDS IN DISCHARGE LIQUID = 9479. PPM

DISCHARGE LIQUID PH = 7.30

OLD PREMISES
500 MW
LIME WET SCRUBBING

SCRUBBER SLURRY BLEED

SPECIES	LB-MOLE/HR	LB/HR
CASO3 .1/2 H2O	0.2478E+03	0.3199E+05
CASO4 .2H2O	0.1053E+03	0.1812E+05
CACO3	0.2597E+02	0.3601E+04
INSOLUBLES	----------	0.1062E+04
H2O	0.1707E+05	0.3075E+06
CA++	0.2576E+02	0.1033E+04
MG++	0.0	0.0
SO3--	0.5115E+00	0.4095E+02
SO4--	0.3496E+01	0.3358E+03
CL-	0.4339E+02	0.1538E+04
AD-	0.0	0.0

TOTAL FLOW RATE = 0.3652E+06 LB/HR
= 662. GPM

TOTAL SUPERNATE RETURN

SPECIES	LB-MOLE/HR	LB/HR
H2O	0.1574E+05	0.2837E+06
CA++	0.2377E+02	0.9526E+03
MG++	0.0	0.0
SO3--	0.4719E+00	0.3778E+02
SO4--	0.3225E+01	0.3098E+03
CL-	0.4002E+02	0.1419E+04
AD-	0.0	0.0

TOTAL FLOW RATE = 0.2864E+06 LB/HR
= 973. GPM

SUPERNATE TO LIME SLAKER

SPECIES	LB-MOLE/HR	LB/HR
H2O	0.6969E+04	0.1256E+06
CA++	0.1052E+02	0.4216E+03
MG++	0.0	0.0
SO3--	0.2089E+00	0.1672E+02
SO4--	0.1428E+01	0.1371E+03
CL-	0.1772E+02	0.6280E+03
AD-	0.0	0.0

TOTAL FLOW RATE = 0.1268E+06 LB/HR
= 256. GPM

LIME SLURRY FEED

SPECIES	LB-MOLE/HR	LB/HR
CASO3 .1/2 H2O	0.0	0.0
CASO4 .2H2O	0.5150E-01	0.8863E+01
CA(OH)2	0.3950E+03	0.2927E+05

OLD PREMISES
500 MW
LIME WET SCRUBBING

SOLUBLE MGO	0.0	0.0
INSOLUBLES	----------	0.6912E+03
H2O	0.6669E+04	0.1202E+06
CA++	0.1124E+02	0.4505E+03
MG++	0.0	0.0
SO3--	0.2089E+00	0.1672E+02
SO4--	0.1376E+01	0.1322E+03
CL-	0.1772E+02	0.6280E+03
AD=	0.0	0.0

TOTAL FLOW RATE = 0.1909E+06 LB/HR
= 268. GPM

SUPERNATE RETURN TO SCRUBBER OR EMT

SPECIES	LB-MOLE/HR	LB/HR
H2O	0.8776E+04	0.1581E+06
CA++	0.1325E+02	0.5310E+03
MG++	0.0	0.0
SO3--	0.2630E+00	0.2106E+02
SO4--	0.1798E+01	0.1727E+03
CL-	0.2231E+02	0.7909E+03
AD=	0.0	0.0

TOTAL FLOW RATE = 0.1596E+06 LB/HR
= 319. GPM

RECYCLE SLURRY TO SCRUBBER

SPECIES	LB-MOLE/HR	LB/HR
CASO3 .1/2 H2O	0.2613E+05	0.3378E+07
CASO4 .2H2O	0.1110E+05	0.1911E+07
CACO3	0.3792E+04	0.3796E+06
INSOLUBLES	----------	0.1120E+06
H2O	0.1799E+07	0.3242E+08
CA++	0.2716E+04	0.1089E+06
MG++	0.0	0.0
SO3--	0.5393E+02	0.4317E+06
SO4--	0.3686E+03	0.3541E+05
CL-	0.6576E+04	0.1622E+06
AD=	0.0	0.0

TOTAL FLOW RATE = 0.3850E+08 LB/HR
= 69931. GPM

OLD PREMISES
500 MW
LIME WET SCRUBBING

FLUE GAS COOLING SLURRY

SPECIES	LB-MOLE/HR	LB/HR
CASO3 .1/2 H2O	0.1900E+04	0.2453E+06
CASO4 .2H2O	0.8076E+03	0.1390E+06
CACO3	0.2798E+03	0.2761E+05
INSOLUBLES	----------	0.8147E+04
H2O	0.1309E+06	0.2358E+07
CA++	0.1975E+03	0.7918E+04
MG++	0.0	0.0
SO3--	0.3922E+01	0.3140E+03
SO4--	0.2681E+02	0.2575E+04
CL-	0.3327E+03	0.1179E+05
AO-	0.0	0.0

TOTAL FLOW RATE = 0.2800E+07 LB/HR
= 5086. GPM

OLD PREMISES
500 MW
LIME WET SCRUBBING

POND DESIGN

OPTIMIZED TO MINIMIZE TOTAL COST PLUS OVERHEAD

POND DIMENSIONS

DEPTH OF POND	20.49	FT
DEPTH OF EXCAVATION	3.95	FT
LENGTH OF POND PERIMETER	13269.	FT
LENGTH OF DIVIDER	2409.	FT
LENGTH PERIMETER FENCE	14235.	FT
AREA OF BOTTOM	1079.	THOUSAND YD2
AREA OF INSIDE WALLS	129.	THOUSAND YD2
AREA OF OUTSIDE WALLS	94.	THOUSAND YD2
AREA OF RECLAIM STORAGE	96.	THOUSAND YD2
AREA OF POND	1208.	THOUSAND YD2
AREA OF POND SITE	1304.	THOUSAND YD2
AREA OF POND SITE	311.	ACRES
VOLUME OF EXCAVATION	1575.	THOUSAND YD3
VOLUME OF RECLAIM STORAGE	688.	THOUSAND YD3
VOLUME OF SLUDGE TO BE	7826.	THOUSAND YD3
DISPOSED OVER LIFE OF PLANT	6851.	ACRE FT

POND COSTS (THOUSANDS OF DOLLARS)

	LABOR	MATERIAL	TOTAL
CLEARING LAND	503.		503.
EXCAVATION	3913.		3913.
DIKE CONSTRUCTION	1917.		1917.
LINING(12. IN. CLAY)	1007.		1007.
SODDING DIKE WALLS	82.	53.	135.
ROAD CONSTRUCTION	38.	11.	49.
PERIMETER COSTS, FENCE+	71.	142.	214.
RECLAIMATION EXPENSE	830.		830.
MONITOR WELLS	4.	4.	8.
POND CONSTRUCTION	8366.	211.	8577.
LAND COST			1087.
POND SITE			9664.
OVERHEAD			5832.
TOTAL			15496.

OLD PREMISES
500 MW
LIME WET SCRUBBING

EXAMPLE CASE OLD PREMSIS LIME — CASE 002

PARTICULATE REMOVAL INVESTMENT AND OPERATING COST

		PARTICULATE EMISSION REGULATION (LB ASH/MILLION BTU):	0.10
WPSUL CONTENT (%):	3.12	FLUE GAS TEMPERATURE (COLD) (F):	300.0
ASH CONTENT (%):	16.00	FLUE GAS TEMPERATURE (HOT) (F):	700.0
BTU RATING:	10500	COST OF ELECTRICITY ($/KWHR):	0.03
BOILER TYPE:	DRY PULVERIZED COAL	COST OF STEAM ($/THOUSAND LB):	2.00
NO. OF SCRUBBERS:	4	FIRST YEAR CAPITAL CHARGE FACTOR:	0.217
SCRUBBER VELOCITY (FT/M):	750.0	BAGHOUSE RATIO (OPER. SQ.FT./ACTUAL SQ.FT.):	0.80
PLANT SIZE (MW):	500	BAG COST ($/SQ.FT.):	0.70
OPERATING HRS/YR:	7000	BAG LIFE(YEARS):	3.00
PUMPING RATE (GAL/1000 ACF):	20.00	FLUE GAS REHEAT TEMPERATURE (F):	175.
SCA RATIO:	1.100	CHEMICAL ENGINEERING PLANT INDEX:	265.0
(ACTUAL SQ.FT./CALC. SQ.FT.)			

ELECTROSTATIC PRECIPITATORS

	COLD	HOT	BAGHOUSE FABRIC FILTERS	SCRUBBERS
REQUIRED REMOVAL EFFICIENCY (%):	98.50	98.50	98.80	98.80
DRIFT VELOCITY (FT/M):	25.78	20.00		
SPECIFIC COLLECTION AREA (SQ.FT./ACFM):	179.17	230.98		
COLLECTION AREA (SQ.FT.):	278903.4	362889.0	571927.0	
TOTAL CORONA POWER (KW):	370.5	865.5		
AUXILIARY POWER (KW):	226.4	479.4	461.5	
FAN POWER (KW):	241.0	367.8	1204.9	2633.2
PUMP POWER (KW):				2982.6
TOTAL POWER (KW):	837.9	1412.9	1666.3	5615.8
OPERATING AIR/CLOTH RATIO:			3.4	
INSTALLED AIR/CLOTH RATIO:			3.7	
REQUIRED PRESSURE DROP (INCHES):	1.0	1.0	8.0	10.9
DIAMETER (FEET):				29
REQUIRED REHEAT (BTU/HR):				58460416.0
STEAM SUPPLY/YR (THOUSAND LB):				456847.6
INSTALLED COST (1979 DOLLARS):	$ 4109471	$ 7262089	$ 11339158	$ 21061472
FIRST YEAR CAPITALIZED COST:	$ 891892	$ 1576114	$ 2504381	$ 4571041
ANNUAL POWER COST:	$ 170098	$ 286816	$ 338268	$ 1140000
ANNUAL OPERATING AND MAINTENANCE COST (1979 DOLLARS):	$ 84097	$ 122823	$ 70773	$ 1105209
REPLACEMENT COST (1979 DOLLARS):			$ 174948	
ANNUAL REHEAT COST:				$ 912498
TOTAL ANNUAL COST:	$ 1146084	$ 1985453	$ 3088370	$ 7728741
ANNUALIZED COST OF POWER(MILLS/KWHR):	0.33	0.57	0.88	2.21

OLD PREMISES
500 MW
LIME WET SCRUBBING

RAW MATERIAL HANDLING AND PREPARATION

ITEM	DESCRIPTION	NO.	MATERIAL	LABOR
CONVEYOR FROM CALCINATION PLANT	1500FT HORIZONTAL, 30HP	1	177763.	31269.
STORAGE SILO ELEVATOR	126.FT HIGH, 50 HP	1	83720.	2727.
CONCRETE STORAGE SILO	137084.FT3,48.8FT DIA , 73.2FT STRAIGHT SIDE STORAGE HT	1	182068.	311874.
STORAGE SILO HOPPER BOTTOM	60 DEGREE, CS	1	19116.	12630.
RECLAIM VIBRATING FEEDER	3.5HP	1	3270.	324.
RECLAIM BELT CONVEYOR	124.FT HORIZONTAL, 5HP	1	22116.	2811.
FEED BIN ELEVATOR	50FT HIGH, 50HP	1	40871.	1836.
FEED BIN	10FT DIA, 15FT STRAIGHT SIDE HT, COVERED, CS	2	8883.	5809.
BIN VIBRATING FEEDER	3.5HP	2	17438.	2160.
BIN WEIGH FEEDER	12FT, 12IN SCREW, 1HP	2	8037.	1296.
SLAKER	6.TPH, 10.HP	2	100721.	8651.
SLAKER PRODUCT TANK		2	8828.	6913.
SLAKER PRODUCT TANK AGITATOR	10HP	2	13079.	3024.
LIME SYSTEM DUST COLLECTORS	POLYPROPYLENE BAG TYPE 2200 CFM,7.5HP	4	26594.	9509.
SLAKER PRODUCT TANK SLURRY PUMPS	134.GPM, 60FT HEAD, 4.HP, 2 OPERATING AND 1 SPARES	3	10172.	2887.
SLURRY FEED TANK	141442.GAL, 28.9FT DIA, 28.9FT HT, FLAKEGLASS-LINED CS	1	90915.	24679.
SLURRY FEED TANK AGITATOR	51.HP	1	49079.	3891.
SLURRY FEED TANK PUMPS	67.GPM, 60 FT HEAD, 2.HP, 4 OPERATING AND 2 SPARE	6	14671.	4536.
TOTAL EQUIPMENT COST			757445.	437522.

OLD PREMISES
500 MW
LIME WET SCRUBBING

SCRUBBING

ITEM	DESCRIPTION	NO.	MATERIAL	LABOR
I.D. FANS	20.0IN H2O, WITH 1440. HP MOTOR AND DRIVE	4	3341278.	46644.
SHELL			993143.	
RUBBER LINING			973846.	
MIST ELIMINATOR			195856.	
SLURRY HEADER AND NOZZLES			239685.	
GRIDS			422604.	
SPHERES			578629.	
TOTAL TCA SCRUBBER COSTS		4	3403860.	241532.
REHEATERS		4	1521827.	95923.
SOOTBLOWERS		48	202286.	120973.
EFFLUENT HOLD TANK	230772.GAL, 34.0FT DIA, 34.0FT HT, FLAKEGLASS. LINED CS	4	196372.	153322.
EFFLUENT HOLD TANK AGITATOR	63.HP	4	261888.	83051.
COOLING SPRAY PUMPS	1271.GPM 100FT HEAD, 59.HP, 4 OPERATING AND 4 SPARE	8	49872.	20886.
ABSORBER RECYCLE PUMPS	8741.GPM, 100FT HEAD, 405.HP, 8 OPERATING AND 4 SPARE	12	662111.	71710.
MAKEUP WATER PUMPS	2543.GPM, 200.FT HEAD, 214.HP, 1 OPERATING AND 1 SPARE	2	82912.	2498.
TOTAL EQUIPMENT COST			9682105.	835837.

OLD PREMISES
500 MW
LIME WET SCRUBBING

WASTE DISPOSAL

ITEM	DESCRIPTION	NO.	MATERIAL	LABOR
ABSORBER BLEED RECEIVING TANK	37632.GAL, 17.0FT DIA, 34.0FT HT, FLAKGLASS-LINED CS	1	19846.	15617.
ABSORBER BLEED TANK AGITATOR	36.HP	1	22256.	1764.
POND FEED SLURRY PUMPS	663.GPM, 130.FT HEAD 40.HP, 1 OPERATING AND 1 SPARE	2	14993.	3873.
POND SUPERNATE PUMPS	573.GPM, 192.FT HEAD, 46.HP, 1 OPERATING AND 1 SPARE	2	10874.	1185.
TOTAL EQUIPMENT COST			67969.	22439.

OLD PREMISES
500 MW
Lime Wet Scrubbing

LIME SLURRY PROCESS -- BASIS: 500 MW UNIT, 1981 STARTUP

PROJECTED CAPITAL INVESTMENT REQUIREMENTS - EXAMPLE CASE OLD PREMSIS LIME

CASE 002

	INVESTMENT, THOUSANDS OF 1980 DOLLARS				DISTRIBUTION
	RAW MATERIAL HANDLING AND PREPARATION	SCRUBBING	WASTE DISPOSAL	TOTAL	PERCENT OF DIRECT INVESTMENT
EQUIPMENT					
MATERIAL	757.	9682.	68.	10507.	31.3
LABOR	438.	836.	22.	1296.	3.9
PIPING					
MATERIAL	446.	2553.	847.	3845.	11.5
LABOR	210.	512.	282.	1004.	3.0
DUCTWORK					
MATERIAL	0.	1718.	0.	1718.	5.1
LABOR	0.	1385.	0.	1385.	4.1
FOUNDATIONS					
MATERIAL	64.	112.	17.	192.	0.6
LABOR	129.	233.	34.	396.	1.2
POND CONSTRUCTION	0.	0.	8577.	8577.	25.6
STRUCTURAL					
MATERIAL	94.	222.	2.	318.	0.9
LABOR	80.	373.	3.	456.	1.4
ELECTRICAL					
MATERIAL	106.	538.	126.	770.	2.3
LABOR	226.	1024.	265.	1514.	4.5
INSTRUMENTATION					
MATERIAL	93.	506.	9.	608.	1.8
LABOR	13.	82.	8.	104.	0.3
BUILDINGS					
MATERIAL	0.	0.	0.	0.	0.0
LABOR	0.	0.	0.	0.	0.0
SERVICES AND MISCELLANEOUS	70.	520.	270.	860.	2.6
SUBTOTAL DIRECT INVESTMENT	2724.	20295.	10529.	33549.	100.0
ENGINEERING DESIGN AND SUPERVISION	245.	1827.	948.	3019.	9.0
CONSTRUCTION EXPENSES	436.	3247.	1685.	5368.	16.0
CONTRACTOR FEES	136.	1015.	526.	1677.	5.0
CONTINGENCY	272.	2030.	1053.	3355.	10.0
SUBTOTAL FIXED INVESTMENT	3814.	28414.	14741.	46968.	140.0
ALLOWANCE FOR STARTUP AND MODIFICATIONS	305.	2273.	1179.	3757.	11.2
INTEREST DURING CONSTRUCTION	458.	3410.	1769.	5636.	16.8
SUBTOTAL CAPITAL INVESTMENT	4577.	34096.	17689.	56362.	168.0
LAND	10.	2.	1096.	1107.	3.3
WORKING CAPITAL	128.	953.	495.	1576.	4.7
TOTAL CAPITAL INVESTMENT	4714.	35052.	19279.	59045.	176.0

OLD PREMISES
500 MW
Lime Wet Scrubbing

LIME SLURRY PROCESS -- BASIS: 500 MW UNIT, 1981 STARTUP

PROJECTED LIFETIME REVENUE REQUIREMENTS - EXAMPLE CASE OLD PREMSIS LIME

CASE 002

TOTAL CAPITAL INVESTMENT: $ 59045000

YEARS AFTER POWER UNIT START	ANNUAL OPERATION, KW-HR /KW	POWER UNIT HEAT REQUIREMENT, MILLION BTU /YEAR	POWER UNIT FUEL CONSUMPTION, TONS COAL /YEAR	SULFUR REMOVED BY POLLUTION CONTROL PROCESS, TONS/YEAR	BYPRODUCT RATE, EQUIVALENT TONS/YEAR DRY SLUDGE	SLUDGE FIXATION FEE $/TON DRY SLUDGE	ADJUSTED GROSS ANNUAL REVENUE REQUIREMENT EXCLUDING SLUDGE FIXATION COST, $/YEAR	TOTAL ANNUAL SLUDGE FIXATION COST, $/YEAR	NET ANNUAL INCREASE IN TOTAL REVENUE REQUIREMENT, $	CUMULATIVE NET INCREASE IN TOTAL REVENUE REQUIREMENT, $
1	7000	31500000	1500000	39700	191700	0.0	23061800	0	23061800	23061800
2	7000	31500000	1500000	39700	191700	0.0	23359000	0	23359000	46420800
3	7000	31500000	1500000	39700	191700	0.0	23692900	0	23692900	70113700
4	7000	31500000	1500000	39700	191700	0.0	24066500	0	24066500	94180200
5	7000	31500000	1500000	39700	191700	0.0	24482100	0	24482100	118662300
6	7000	31500000	1500000	39700	191700	0.0	24942100	0	24942100	143604400
7	7000	31500000	1500000	39700	191700	0.0	25449100	0	25449100	169053500
8	7000	31500000	1500000	39700	191700	0.0	26005500	0	26005500	195059000
9	7000	31500000	1500000	39700	191700	0.0	26614800	0	26614800	221673800
10	7000	31500000	1500000	39700	191700	0.0	27280300	0	27280300	248954100
11	5000	22500000	1071400	28400	137000	0.0	23553300	0	23553300	272507400
12	5000	22500000	1071400	28400	137000	0.0	24073700	0	24073700	296581100
13	5000	22500000	1071400	28400	137000	0.0	24644800	0	24644800	321225900
14	5000	22500000	1071400	28400	137000	0.0	25269400	0	25269400	346495300
15	5000	22500000	1071400	28400	137000	0.0	25951000	0	25951000	372446300
16	3500	15750000	750000	19800	95900	0.0	22010600	0	22010600	394456900
17	3500	15750000	750000	19800	95900	0.0	22535300	0	22535300	416992200
18	3500	15750000	750000	19800	95900	0.0	23111200	0	23111200	440103400
19	3500	15750000	750000	19800	95900	0.0	23740600	0	23740600	463844000
20	3500	15750000	750000	19800	95900	0.0	24427400	0	24427400	488271400
21	1500	6750000	321400	8500	41100	0.0	16064800	0	16064800	504336200
22	1500	6750000	321400	8500	41100	0.0	16329900	0	16329900	520666100
23	1500	6750000	321400	8500	41100	0.0	16630100	0	16630100	537296200
24	1500	6750000	321400	8500	41100	0.0	16967700	0	16967700	554263900
25	1500	6750000	321400	8500	41100	0.0	17345100	0	17345100	571609000
26	1500	6750000	321400	8500	41100	0.0	17764600	0	17764600	589273600
27	1500	6750000	321400	8500	41100	0.0	18228300	0	18228300	607601900
28	1500	6750000	321400	8500	41100	0.0	18739600	0	18739600	626341500
29	1500	6750000	321400	8500	41100	0.0	19300800	0	19300800	645642300
30	1500	6750000	321400	8500	41100	0.0	19915100	0	19915100	665557400
TOT	127500	573750000	27321000	723000	3492500		665557400	0	665557400	

LIFETIME AVERAGE INCREASE IN UNIT REVENUE REQUIREMENT

DOLLARS PER TON OF COAL BURNED	24.36	0.0	24.36
MILLS PER KILOWATT-HOUR	10.44	0.0	10.44
CENTS PER MILLION BTU HEAT INPUT	116.00	0.0	116.00
DOLLARS PER TON OF SULFUR REMOVED	920.55	0.0	920.55
REVENUE REQUIREMENT DISCOUNTED AT 11.6% TO INITIAL YEAR, DOLLARS	197778300	0	197778300

LEVELIZED INCREASE IN UNIT REVENUE REQUIREMENT EQUIVALENT TO DISCOUNTED REQUIREMENT OVER LIFE OF POWER UNIT

DOLLARS PER TON OF COAL BURNED	18.57	0.0	18.57
MILLS PER KILOWATT-HOUR	7.96	0.0	7.96
CENTS PER MILLION BTU HEAT INPUT	88.44	0.0	88.44
DOLLARS PER TON OF SULFUR REMOVED	701.39	0.0	701.39

UNIT COSTS INFLATED AT 6.00% PER YEAR

OLD PREMISES
500 MW
Lime Wet Scrubbing

LIME SLURRY PROCESS -- BASIS: 500 MW UNIT, 1981 STARTUP

PROJECTED REVENUE REQUIREMENTS - EXAMPLE CASE OLD PREMSIS LINE

CASE 002

DISPLAY SHEET FOR YEAR= 1
ANNUAL OPERATION KW-HR/KW = 7000

27.39 TONS PER HOUR DRY SLUDGE
TOTAL CAPITAL INVESTMENT 59045000

	ANNUAL QUANTITY	UNIT COST,$	TOTAL ANNUAL COST,$
DIRECT COSTS			
RAW MATERIAL			
LIME	80.0 K TONS	40.00/TON	3198600
SUBTOTAL RAW MATERIAL			3198600
CONVERSION COSTS			
OPERATING LABOR AND			
SUPERVISION	34610.0 MAN-HR	12.50/MAN-HR	432600
UTILITIES			
STEAM	532390.0 K LB	2.00/K LB	1064800
PROCESS WATER	199660.0 K GAL	0.12/K GAL	24000
ELECTRICITY	53578740.0 KWH	0.029/KWH	1553800
MAINTENANCE			
LABOR AND MATERIAL			2255100
ANALYSES	5580.0 HR	17.00/HR	94800
SUBTOTAL CONVERSION COSTS			5625100
SUBTOTAL DIRECT COSTS			8823700
INDIRECT COSTS			
DEPRECIATION			1878700
COST OF CAPITAL AND TAXES, 17.20% OF UNDEPRECIATED INVESTMENT			10155800
INSURANCE & INTERIM REPLACEMENTS, 1.17% OF TOTAL CAPITAL INVESTMENT			690800
OVERHEAD			
PLANT, 60.0% OF CONVERSION COSTS LESS UTILITIES			1669500
ADMINISTRATIVE, RESEARCH, AND SERVICE, 10.0% OF OPERATING LABOR AND SUPERVISION			43300
SUBTOTAL INDIRECT COSTS			14438100
TOTAL ANNUAL REVENUE REQUIREMENT			23061800
EQUIVALENT UNIT REVENUE REQUIREMENT, MILLS/KWH			6.59

HEAT RATE 9000. BTU/KWH - HEAT VALUE OF COAL 10500 BTU/LB - COAL RATE 1500000 TONS/YR

NEW PREMISES
500 MW
LIME WET SCRUBBING

```
EXAMPLE CASE:[redacted]                                                    CASE 004

                        *** INPUTS ***

BOILER CHARACTERISTICS
------ --------------

MEGAWATTS =    500.

BOILER HEAT RATE =  9500. BTU/KWH

EXCESS AIR =  39. PERCENT, INCLUDING LEAKAGE

HOT GAS TEMPERATURE = 300. DEG F

COAL ANALYSIS, WT % AS FIRED :

 C      H      O      N      S      CL     ASH    H2O
66.70  3.80   3.00   1.30   3.30   0.10  15.10   6.00

SULFUR OVERHEAD =  92.0 PERCENT

ASH OVERHEAD =  80.0 PERCENT

HEATING VALUE OF COAL = 11700. BTU/LB

                              EFFICIENCY,    EMISSION,
FLYASH REMOVAL                   %          LBS/M BTU
------ -------               ----------     ---------

UPSTREAM OF SCRUBBER          99.7           0.03

WITHIN SCRUBBER               50.0           0.02

COST OF UPSTREAM FLYASH REMOVAL EXCLUDED

ALKALI
------

LIME :

        CAO          =  97.15 WT % DRY BASIS
        SOLUBLE MGO =   0.0
        INERTS       =  2.85
        MOISTURE CONTENT :   3.00 LB H2O/100 LBS DRY LIME

FLY ASH :

        SOLUBLE CAO =   0.0  WT %
        SOLUBLE MGO =   0.0
        INERTS      = 100.00


RAW MATERIAL HANDLING AREA
--- -------- -------- ----

NUMBER OF REDUNDANT ALKALI PREPARATION UNITS =    1
```

NEW PREMISES
500 MW
LIME WET SCRUBBING

SCRUBBER SYSTEM VARIABLES

NUMBER OF OPERATING SCRUBBING TRAINS = 4

NUMBER OF REDUNDANT SCRUBBING TRAINS = 1

NUMBER OF BEDS = 3

NUMBER OF GRIDS = 4

HEIGHT OF SPHERES PER BED = 5.0 INCHES

LIQUID-TO-GAS RATIO = 55. GAL/1000 ACF(SATD)

SCRUBBER GAS VELOCITY = 12.5 FT/SEC

INDUCED DRAFT SCRUBBER FAN OPTION

SCRUBBER PRESSURE = 14.7 PSIA

STOICHIOMETRY = 1.25 MOLE CAO ADDED AS LIME
PER MOLE (SO2+2HCL) ABSORBED

SCRUBBER INLET LIQUOR PH = 7.00

SO2 EMISSION LIMIT = 0.60 LB SO2/M BTU

ENTRAINMENT LEVEL = 0.10 WT %

EHT RESIDENCE TIME = 12.0 MIN

SO2 OXIDIZED IN SYSTEM = 30.0 PERCENT

SOLIDS IN RECIRCULATED SLURRY = 15.0 WT %

SOLIDS DISPOSAL SYSTEM

COST OF LAND = 5000.00 DOLLARS/ACRE

SOLIDS IN SYSTEM SLUDGE DISCHARGE = 40.0 WT %

MAXIMUM POND AREA = 9999. ACRES

MAXIMUM EXCAVATION = 25.00 FT

DISTANCE TO POND = 5280. FT

POND LINED WITH 12.0 INCHES CLAY

STEAM REHEATER (IN-LINE)

SATURATED STEAM TEMPERATURE = 470. DEG F

HEAT OF VAPORIZATION OF STEAM = 751. BTU/LB

OUTLET FLUE GAS TEMPERATURE = 175. DEG F

NEW PREMISES
500 MW
LIME WET SCRUBBING

SUPERFICIAL GAS VELOCITY (FACE VELOCITY) = 25.0 FT/SEC

500.0000********** 44.4896 11700.0000

NEW PREMISES
500 MW
LIME WET SCRUBBING

EXAMPLE CASE NEW PREMSIS LIME CASE 004

*** OUTPUTS ***

HOT GAS TO SCRUBBER

	MOLE PERCENT	LB-MOLE/HR	LB/HR
CO2	12.338	0.2255E+05	0.9923E+06
HCL	0.006	0.1148E+02	0.4175E+03
SO2	0.214	0.3914E+03	0.2508E+05
O2	5.560	0.1016E+05	0.3251E+06
N2	75.227	0.1375E+06	0.3852E+07
H2O	6.654	0.1216E+05	0.2191E+06

SO2 CONCENTRATION IN SCRUBBER INLET GAS = 2142. PPM
= 5.28 LBS / MILLION BTU

FLYASH EMISSION = 0.03 LBS/MILLION BTU
= 0.015 GRAINS/SCF (WET) OR 167. LB/HR

SOLUBLE CAO IN FLY ASH = 0. LB/HR
SOLUBLE MGO IN FLY ASH = 0.

HOT GAS FLOW RATE = .1154E+07 SCFM (60 DEG F, 14.7 PSIA)
= .1687E+07 ACFM (300. DEG F, 14.7 PSIA)

CORRESPONDING COAL FIRING RATE = .4060E+06 LB/HR

HOT GAS HUMIDITY = 0.062 LB H2O/LB DRY GAS

WET BULB TEMPERATURE = 124. DEG F

WET GAS FROM SCRUBBER

	MOLE PERCENT	LB-MOLE/HR	LB/HR
CO2	11.517	0.2246E+05	0.9884E+06
HCL	0.000	0.5726E+00	0.2088E+02
SO2	0.023	0.4449E+02	0.2850E+04
O2	5.183	0.1011E+05	0.3235E+06
N2	70.495	0.1375E+06	0.3852E+07
H2O	12.782	0.2493E+05	0.4491E+06

SO2 CONCENTRATION IN SCRUBBER OUTLET GAS = 228. PPM

FLYASH EMISSION = 0.02 LBS/MILLION BTU
= 0.007 GRAINS/SCF (WET) OR 74. LB/HR

TOTAL WATER PICKUP = 471. GPM
INCLUDING 11.2 GPM ENTRAINMENT.

WET GAS FLOW RATE = .1232E+07 SCFM (60 DEG F, 14.7 PSIA)
= .1384E+07 ACFM (124. DEG F, 14.7 PSIA)

WET GAS SATURATION HUMIDITY = 0.087 LB H2O/LB DRY GAS

NEW PREMISES
500 MW
LIME WET SCRUBBING

FLUE GAS TO STACK

	MOLE PERCENT	LB-MOLE/HR	LB/HR
CO2	11.498	0.2246E+05	0.9884E+06
HCL	0.000	0.5726E+00	0.2088E+02
SO2	0.023	0.4449E+02	0.2850E+04
O2	5.175	0.1011E+05	0.3235E+06
N2	70.382	0.1375E+06	0.3852E+07
H2O	12.921	0.2524E+05	0.4547E+06

CALCULATED SO2 REMOVAL EFFICIENCY = 88.7 %

SPECIFIED SO2 EMISSION = 0.60 POUNDS PER MILLION BTU

CALCULATED SO2 CONCENTRATION IN STACK GAS = 228. PPM

FLYASH EMISSION = 0.02 LBS/MILLION BTU
= 0.007 GRAINS/SCF (WET) OR 74. LB/HR

STACK GAS FLOW RATE = .1234E+07 SCFM (60 DEG F, 14.7 PSIA)
= .1507E+07 ACFM (178. DEG F, 14.7 PSIA)

STEAM REHEATER (IN-LINE)

SUPERFICIAL GAS VELOCITY (FACE VELOCITY) = 25.0 FT/SEC

SQUARE PIPE PITCH = 2 TIMES ACTUAL PIPE O.D.

SATURATED STEAM TEMPERATURE = 470. DEG F

OUTLET FLUE GAS TEMPERATURE = 175. DEG F

REQUIRED HEAT INPUT TO REHEATER = 0.6954E+08 BTU/HR

STEAM CONSUMPTION = 0.9260E+05 LBS/HR

OUTSIDE PIPE DIAMETER, IN.	PRESSURE DROP, IN. H2O	HEAT TRANSFER COEFFICIENT, BTU/HR FT2 DEG F
1.00	0.70	0.2096E+02

	REHEATER OUTSIDE PIPE AREA, SQ FT PER TRAIN	NUMBER OF PIPES PER BANK PER TRAIN	NUMBER OF BANKS (ROWS) PER TRAIN
INCONEL	0.1529E+04	91	4
CORTEN	0.1039E+04	91	3
TOTAL	0.2568E+04	91	7

NEW PREMISES
500 MW
Lime Wet Scrubbing

WATER BALANCE INPUTS

RAINFALL(IN/YEAR)	50.
POND SEEPAGE(CM/SEC)*10**8	50.
POND EVAPORATION(IN/YEAR)	32.

WATER BALANCE OUTPUTS

WATER AVAILABLE		
RAINFALL	746. GPM	372601. LB/HR
ALKALI	3. GPM	1271. LB/HR
TOTAL	748. GPM	373873. LB/HR
WATER REQUIRED		
HUMIDIFICATION	460. GPM	229999. LB/HR
ENTRAINMENT	11. GPM	5609. LB/HR
DISPOSAL WATER	175. GPM	87310. LB/HR
HYDRATION WATER	12. GPM	5903. LB/HR
CLARIFIER EVAPORATION	0. GPM	0. LB/HR
POND EVAPORATION	513. GPM	256151. LB/HR
SEEPAGE	93. GPM	46261. LB/HR
TOTAL WATER REQUIRED	1263. GPM	631232. LB/HR
NET WATER REQUIRED	515. GPM	257360. LB/HR

NEW PREMISES
500 MW
Lime Wet Scrubbing

SCRUBBER SYSTEM
-------- ------

TOTAL NUMBER OF SCRUBBING TRAINS (OPERATING+REDUNDANT) = 3

SO2 REMOVAL = 88.6 PERCENT

PARTICULATE REMOVAL IN SCRUBBER SYSTEM = 50.0 PERCENT

TCA PRESSURE DROP ACROSS 3 BEDS = 8.6 IN. H2O

TOTAL SYSTEM PRESSURE DROP = 14.7 IN. H2O

OVERRIDE TOTAL SYSTEM PRESSURE DROP = 20.0 IN. H2O

SPECIFIED LIQUID-TO-GAS-RATIO = 55. GAL/1000 ACF(SATD)

LIME ADDITION = 0.2543E+05 LB/HR DRY LIME

SPECIFIED LIME STOICHIOMETRY = 1.25 MOLE CAO ADDED AS LIME
PER MOLE (SO2+2HCL) ABSORBED

SOLUBLE CAO FROM FLY ASH = 0.0 MOLE PER MOLE (SO2+2HCL) ABSORBED

TOTAL SOLUBLE MGO = 0.0 MOLE PER MOLE (SO2+2HCL) ABSORBED

TOTAL STOICHIOMETRY = 1.25 MOLE SOLUBLE (CA+MG)
PER MOLE (SO2+2HCL) ABSORBED

SCRUBBER INLET LIQUOR PH = 7.00

MAKE UP WATER = 515. GPM

CROSS-SECTIONAL AREA PER SCRUBBER = 461. SQ FT

SYSTEM SLUDGE DISCHARGE
------ ------ ---------

SPECIES	LB-MOLE/HR	LB/HR	SOLID COMP. WT %	LIQUID COMP. PPM
CASO3 .1/2 H2O	0.2428E+03	0.3135E+05	53.39	
CASO4 .2H2O	0.1031E+03	0.1775E+05	30.23	
CACO3	0.8808E+02	0.8817E+04	15.02	
INSOLUBLES	----------	0.7982E+03	1.36	
H2O	0.4846E+04	0.8731E+05		
CA++	0.6593E+01	0.2643E+03		3001.
MG++	0.0	0.0		0.
SO3--	0.1417E+00	0.1135E+02		129.
SO4--	0.9982E+00	0.9589E+02		1089.
CL-	0.1088E+02	0.3857E+03		4379.

TOTAL DISCHARGE FLOW RATE = 0.1468E+06 LB/HR
= 221. GPM

TOTAL DISSOLVED SOLIDS IN DISCHARGE LIQUID = 8584. PPM

DISCHARGE LIQUID PH = 7.33

NEW PREMISES
500 MW
Lime Wet Scrubbing

SCRUBBER SLURRY BLEED

SPECIES	LB-MOLE/HR	LB/HR
CASO3 .1/2 H2O	0.2428E+03	0.3135E+05
CASO4 .2H2O	0.1031E+03	0.1775E+05
CACO3	0.8808E+02	0.8817E+04
INSOLUBLES	----------	0.7982E+03
H2O	0.1831E+05	0.3298E+06
CA++	0.2491E+02	0.9983E+03
MG++	0.0	0.0
SO3--	0.5355E+00	0.4287E+02
SO4--	0.3771E+01	0.3622E+03
CL-	0.4110E+02	0.1457E+04
AD=	0.0	0.0

TOTAL FLOW RATE = 0.3914E+06 LB/HR
= 711. GPM

TOTAL SUPERNATE RETURN

SPECIES	LB-MOLE/HR	LB/HR
H2O	0.1732E+05	0.3121E+06
CA++	0.2357E+02	0.9447E+03
MG++	0.0	0.0
SO3--	0.5067E+00	0.4057E+02
SO4--	0.3568E+01	0.3428E+03
CL-	0.3889E+02	0.1379E+04
AD=	0.0	0.0

TOTAL FLOW RATE = 0.3148E+06 LB/HR
= 630. GPM

SUPERNATE TO LIME SLAKER

SPECIES	LB-MOLE/HR	LB/HR
H2O	0.7753E+04	0.1397E+06
CA++	0.1055E+02	0.4228E+03
MG++	0.0	0.0
SO3--	0.2268E+00	0.1816E+02
SO4--	0.1597E+01	0.1534E+03
CL-	0.1741E+02	0.6170E+03
AD=	0.0	0.0

TOTAL FLOW RATE = 0.1409E+06 LB/HR
= 282. GPM

LIME SLURRY FEED

SPECIES	LB-MOLE/HR	LB/HR
CASO3 .1/2 H2O	0.0	0.0
CASO4 .2H2O	0.5118E-01	0.8809E+01
CA(OH)2	0.4395E+03	0.3257E+05

NEW PREMISES
500 MW
LIME WET SCRUBBING

SOLUBLE MGO	0.0	0.0
INSOLUBLES	----------	0.7247E+03
H2O	0.7425E+04	0.1338E+06
CA++	0.1149E+02	0.4605E+03
MG++	0.0	0.0
SO3--	0.2268E+00	0.1816E+02
SO4--	0.1546E+01	0.1485E+03
CL-	0.1741E+02	0.6170E+03
AD-	0.0	0.0

TOTAL FLOW RATE = 0.1680E+06 LB/HR
= 298. GPM

SUPERNATE RETURN TO SCRUBBER OR EHT

SPECIES	LB-MOLE/HR	LB/HR
H2O	0.9571E+04	0.1724E+06
CA++	0.1302E+02	0.5219E+03
MG++	0.0	0.0
SO3--	0.2799E+00	0.2241E+02
SO4--	0.1971E+01	0.1894E+03
CL-	0.2149E+02	0.7617E+03
AD-	0.0	0.0

TOTAL FLOW RATE = 0.1739E+06 LB/HR
= 348. GPM

RECYCLE SLURRY TO SCRUBBER

SPECIES	LB-MOLE/HR	LB/HR
CASO3 .1/2 H2O	0.2600E+05	0.3356E+07
CASO4 .2H2O	0.1104E+05	0.1900E+07
CACO3	0.9431E+04	0.9440E+06
INSOLUBLES	----------	0.8947E+05
H2O	0.1960E+07	0.3531E+08
CA++	0.2667E+04	0.1069E+06
MG++	0.0	0.0
SO3--	0.5733E+02	0.4590E+04
SO4--	0.4037E+03	0.3878E+05
CL-	0.4400E+04	0.1560E+06
AD-	0.0	0.0

TOTAL FLOW RATE = 0.4191E+08 LB/HR
= 70111. GPM

FLUE GAS COOLING SLURRY

NEW PREMISES
500 MW
Lime Wet Scrubbing

SPECIES	LB-MOLE/HR	LB/HR
CASO3 .1/2 H2O	0.1891E+04	0.2441E+06
CASO4 .2H2O	0.8030E+03	0.1382E+06
CACO3	0.6859E+03	0.6866E+05
INSOLUBLES	----------	0.6216E+04
H2O	0.1426E+06	0.2568E+07
CA++	0.1939E+03	0.7773E+04
MG++	0.0	0.0
SO3--	0.4170E+01	0.3338E+03
SO4--	0.2936E+02	0.2821E+04
CL-	0.3200E+03	0.1135E+05
AD=	0.0	0.0

TOTAL FLOW RATE = 0.3048E+07 LB/HR
= 5535. GPM

EXAMPLE CASE NEW PREMSIS LIME CASE 004

PARTICULATE REMOVAL INVESTMENT AND OPERATING COST

		PARTICULATE EMISSION REGULATION (LB ASH/MILLION BTU):	0.03
WPSUL CONTENT (%):	3.36	FLUE GAS TEMPERATURE (COLD) (F):	300.0
ASH CONTENT (%):	15.10	FLUE GAS TEMPERATURE (HOT) (F):	700.0
BTU RATING:	11700	COST OF ELECTRICITY ($/KWHR):	0.03
BOILER TYPE:	DRY PULVERIZED COAL	COST OF STEAM ($/THOUSAND LB):	2.00
NO. OF SCRUBBERS:	4	FIRST YEAR CAPITAL CHARGE FACTOR:	0.180
SCRUBBER VELOCITY (FT/M):	750.0	BAGHOUSE RATIO (OPER. SQ.FT./ACTUAL SQ.FT.):	0.80
PLANT SIZE (MW):	500	BAG COST ($/SQ.FT.):	0.70
OPERATING HRS/YR:	4730	BAG LIFE(YEARS):	3.00
PUMPING RATE (GAL/1000 ACF):	20.00	FLUE GAS REHEAT TEMPERATURE (F):	175.
SCA RATIO:	1.300	CHEMICAL ENGINEERING PLANT INDEX:	268.0
(ACTUAL SQ.FT./CALC. SQ.FT.)			

NEW PREMISES
500 MW
Lime Wet Scrubbing

	ELECTROSTATIC PRECIPITATORS			
	COLD	HOT	BAGHOUSE FABRIC FILTERS	SCRUBBERS
REQUIRED REMOVAL EFFICIENCY (%):	99.70	99.70	99.70	99.70
DRIFT VELOCITY (FT/M):	27.19	20.00		
SPECIFIC COLLECTION AREA (SQ.FT./ACFM):	277.74	377.59		
COLLECTION AREA (SQ.FT.):	468576.7	972309.6	866133.3	
TOTAL CORONA POWER (KW):	663.6	1012.8		
AUXILIARY POWER (KW):	407.6	915.2	490.2	
FAN POWER (KW):	264.0	403.0	1320.1	16039.9
PUMP POWER (KW):				3267.8
TOTAL POWER (KW):	1335.0	2331.0	1810.3	19307.7
OPERATING AIR/CLOTH RATIO:			2.6	
INSTALLED AIR/CLOTH RATIO:			1.9	
REQUIRED PRESSURE DROP (INCHES):	1.0	1.0	5.0	60.8
DIAMETER (FEET):				30
REQUIRED REHEAT (BTU/HR):				66268960.0
STEAM SUPPLY/YR (THOUSAND LB):				337769.0
INSTALLED COST (1979 DOLLARS):	$ 6562679	$ 12176132	$ 16303550	$ 22732816
FIRST YEAR CAPITALIZED COST:	$ 1183469	$ 2195762	$ 2940073	$ 4099484
ANNUAL POWER COST:	$ 183115	$ 319737	$ 248320	$ 2648436
ANNUAL OPERATING AND MAINTENANCE COST (1979 DOLLARS):	$ 112895	$ 169411	$ 73728	$ 1192909
REPLACEMENT COST (1979 DOLLARS):			$ 265128	
ANNUAL REHEAT COST:				$ 675538
TOTAL ANNUAL COST:	$ 1479479	$ 2684910	$ 3527249	$ 8616367
ANNUALIZED COST OF POWER(MILLS/KWHR):	0.63	1.14	1.49	3.64

POND DESIGN

OPTIMIZED TO MINIMIZE TOTAL COST PLUS OVERHEAD

NEW PREMISES
500 MW
Lime Wet Scrubbing

POND DIMENSIONS

DEPTH OF POND	22.17	FT
DEPTH OF EXCAVATION	4.10	FT
LENGTH OF POND PERIMETER	14263.	FT
LENGTH OF DIVIDER	2591.	FT
LENGTH PERIMETER FENCE	15270.	FT
AREA OF BOTTOM	1251.	THOUSAND YD2
AREA OF INSIDE WALLS	148.	THOUSAND YD2
AREA OF OUTSIDE WALLS	109.	THOUSAND YD2
AREA OF RECLAIM STORAGE	108.	THOUSAND YD2
AREA OF POND	1397.	THOUSAND YD2
AREA OF POND SITE	1727.	THOUSAND YD2
AREA OF POND SITE	357.	ACRES
VOLUME OF EXCAVATION	1883.	THOUSAND YD3
VOLUME OF RECLAIM STORAGE	793.	THOUSAND YD3
VOLUME OF SLUDGE TO BE DISPOSED OVER LIFE OF PLANT	9802.	THOUSAND YD3
	5076.	ACRE FT

POND COSTS (THOUSANDS OF DOLLARS)

	LABOR	MATERIAL	TOTAL
CLEARING LAND	578.		578.
EXCAVATION	4678.		4678.
DIKE CONSTRUCTION	2359.		2359.
LINING(12. IN. CLAY)	1398.		1398.
SODDING DIKE WALLS	94.	62.	156.
ROAD CONSTRUCTION	40.	12.	53.
PERIMETER COSTS, FENCE+	76.	153.	229.
RECLAIMATION EXPENSE	954.		954.
MONITOR WELLS	4.	4.	8.
POND CONSTRUCTION	10179.	231.	10409.
LAND COST			1784.
POND SITE			12193.
OVERHEAD			8889.
TOTAL			21082.

NEW PREMISES
500 MW
Lime Wet Scrubbing

RAW MATERIAL HANDLING AND PREPARATION

INCLUDING 2 OPERATING AND 1 SPARE PREPARATION UNITS

ITEM	DESCRIPTION	NO.	MATERIAL	LABOR
CONVEYOR FROM CALCINATION PLANT	1500FT HORIZONTAL, 30HP	1	177763.	31269.
STORAGE SILO ELEVATOR	105.FT HIGH, 50 HP	1	53741.	3214.
CONCRETE STORAGE SILO	76283.FT3,40.2FT DIA , 60.2FT STRAIGHT SIDE STORAGE HT	2	205763.	419981.
STORAGE SILO HOPPER BOTTOM	60 DEGREE, CS	2	25981.	17165.
RECLAIM VIBRATING FEEDER	3.5HP	2	6539.	648.
RECLAIM BELT CONVEYOR	155.FT HORIZONTAL, 5HP	1	25549.	3321.
FEED BIN ELEVATOR	50FT HIGH, 50HP	1	32370.	1836.
FEED BELT CONVEYOR	50FT HORIZONTAL, 5HP	1	10354.	864.
FEED CONVEYOR TRIPPER	30FPM, 1HP	1	16240.	5401.
FEED BIN	10FT DIA, 15FT STRAIGHT SIDE HT, COVERED, CS	3	12425.	8263.
BIN VIBRATING FEEDER	3.5HP	3	26158.	3240.
BIN WEIGH FEEDER	12FT, 12IN SCREW, 1HP	3	13406.	1944.
SLAKER	6.TPH, 11.HP	3	157694.	8912.
SLAKER PRODUCT TANK		3	13242.	10369.
SLAKER PRODUCT TANK AGITATOR	10HP	3	19618.	4536.
LIME SYSTEM DUST COLLECTORS	POLYPROPYLENE BAG TYPE 2200 CFM,7.5HP	5	33242.	11881.
SLAKER PRODUCT TANK SLURRY PUMPS	149.GPM, 60FT HEAD, 4.HP, 2 OPERATING AND 1 SPARES	3	10253.	3025.
SLURRY FEED TANK	157415.GAL, 29.9FT DIA, 29.9FT HT, FLAKEGLASS-LINED CS	1	33200.	26504.
SLURRY FEED TANK AGITATOR	54.HP	1	52939.	4197.
SLURRY FEED TANK PUMPS	75.GPM, 60 FT HEAD, 2.HP, 4 OPERATING AND 4 SPARE	8	26096.	5959.
TOTAL EQUIPMENT COST			952573.	572529.

NEW PREMISES
500 MW
Lime Wet Scrubbing

SCRUBBING

INCLUDING 4 OPERATING AND 1 SPARE SCRUBBING TRAINS

ITEM	DESCRIPTION	NO.	MATERIAL	LABOR
I.D. FANS	20.0IN H2O, WITH 1580. HP MOTOR AND DRIVE	5	4408429.	61483.
SHELL			1311117.	
RUBBER LINING			1292106.	
MIST ELIMINATOR			267256.	
SLURRY HEADER AND NOZZLES			326007.	
GRIDS			579348.	
SPHERES			790198.	
TOTAL TCA SCRUBBER COSTS		5	4566029.	319715.
REHEATERS		5	2195402.	133789.
SOOTBLOWERS		60	252858.	151216.
EFFLUENT HOLD TANK	251165.GAL, 35.OFT DIA, 35.OFT HT, FLAKEGLASS-LINED CS	5	259720.	202782.
EFFLUENT HOLD TANK AGITATOR	66.HP	5	347575.	137781.
COOLING SPRAY PUMPS	1384.GPM 100FT HEAD, 64.HP, 4 OPERATING AND 6 SPARE	10	89717.	26703.
ABSORBER RECYCLE PUMPS	9514.GPM, 100FT HEAD, 441.HP, 8 OPERATING AND 7 SPARE	15	864979.	93017.
MAKEUP WATER PUMPS	2768.GPM, 200.FT HEAD, 233.HP, 1 OPERATING AND 1 SPARE	2	24254.	2644.
TOTAL EQUIPMENT COST			13008947.	1129128.

NEW PREMISES
500 MW
Lime Wet Scrubbing

WASTE DISPOSAL

ITEM	DESCRIPTION	NO.	MATERIAL	LABOR
ABSORBER BLEED RECEIVING TANK	62724.GAL, 17.5FT DIA, 35.0FT HT, FLAKGLASS-LINED CS	1	20681.	16524.
ABSORBER BLEED TANK AGITATOR	38.HP	1	23630.	1873.
POND FEED SLURRY PUMPS	711.GPM, 130.FT HEAD 43.HP, 1 OPERATING AND 1 SPARE	2	15227.	3992.
POND SUPERNATE PUMPS	630.GPM, 192.FT HEAD, 51.HP, 1 OPERATING AND 1 SPARE	2	11212.	1222.
TOTAL EQUIPMENT COST			70751.	23611.

NEW PREMISES
500 MW
Lime Wet Scrubbing

LIME SLURRY PROCESS -- BASIS: 500 MW UNIT, 1981 STARTUP

PROJECTED CAPITAL INVESTMENT REQUIREMENTS - EXAMPLE CASE NEW PREMISIS LIME

CASE 004

	INVESTMENT, THOUSANDS OF 1980 DOLLARS				DISTRIBUTION
	RAW MATERIAL HANDLING AND PREPARATION	SCRUBBING	WASTE DISPOSAL	TOTAL	PERCENT OF DIRECT INVESTMENT
EQUIPMENT					
MATERIAL	953.	13009.	71.	14032.	33.1
LABOR	573.	1129.	24.	1725.	4.1
PIPING					
MATERIAL	513.	3364.	872.	4749.	11.2
LABOR	231.	656.	289.	1176.	2.8
DUCTWORK					
MATERIAL	0.	2297.	0.	2297.	5.4
LABOR	0.	1853.	0.	1853.	4.4
FOUNDATIONS					
MATERIAL	74.	136.	17.	227.	0.5
LABOR	150.	285.	34.	469.	1.1
POND CONSTRUCTION	0.	0.	10409.	10409.	24.5
STRUCTURAL					
MATERIAL	109.	287.	2.	398.	0.9
LABOR	88.	483.	3.	574.	1.4
ELECTRICAL					
MATERIAL	113.	715.	126.	954.	2.2
LABOR	248.	1312.	266.	1825.	4.3
INSTRUMENTATION					
MATERIAL	128.	632.	9.	769.	1.8
LABOR	18.	102.	8.	128.	0.3
BUILDINGS					
MATERIAL	0.	0.	0.	0.	0.0
LABOR	0.	0.	0.	0.	0.0
SERVICES AND MISCELLANEOUS	66.	543.	251.	860.	2.0
SUBTOTAL DIRECT INVESTMENT	3261.	26803.	12380.	42444.	100.0
ENGINEERING DESIGN AND SUPERVISION	294.	2412.	1114.	3820.	9.0
CONSTRUCTION EXPENSES	522.	4288.	1981.	6791.	16.0
CONTRACTOR FEES	163.	1340.	619.	2122.	5.0
CONTINGENCY	848.	6969.	3219.	11035.	26.0
SUBTOTAL FIXED INVESTMENT	5088.	41812.	19313.	66212.	156.0
ALLOWANCE FOR STARTUP AND MODIFICATIONS	391.	3216.	1486.	5093.	12.0
INTEREST DURING CONSTRUCTION	763.	6272.	2897.	9932.	23.4
SUBTOTAL CAPITAL INVESTMENT	6242.	51300.	23696.	81237.	185.4
LAND	15.	4.	1796.	1815.	4.3
WORKING CAPITAL	184.	1509.	697.	2390.	5.6
TOTAL CAPITAL INVESTMENT	6441.	52813.	26189.	85442.	201.3

LIME SLURRY PROCESS -- BASIS: 500 MW UNIT, 1981 STARTUP

PROJECTED REVENUE REQUIREMENTS - EXAMPLE CASE NEW PREMSIS LIME — CASE 004

DISPLAY SHEET FOR YEAR= 1
ANNUAL OPERATION KW-HR/KW = 4730

29.36 TONS PER HOUR — DRY — SLUDGE
TOTAL CAPITAL INVESTMENT 82896000

	ANNUAL QUANTITY	UNIT COST,$	TOTAL ANNUAL COST,$
DIRECT COSTS			
RAW MATERIAL			
LIME	60.1 K TONS	40.00/TON	2405400
SUBTOTAL RAW MATERIAL			2405400
CONVERSION COSTS			
OPERATING LABOR AND SUPERVISION	28450.0 MAN-HR	12.50/MAN-HR	355600
UTILITIES			
STEAM	438010.0 K LB	2.00/K LB	876000
PROCESS WATER	146140.0 K GAL	0.12/K GAL	17500
ELECTRICITY	39498880.0 KWH	0.029/KWH	1145500
MAINTENANCE			
LABOR AND MATERIAL			2879100
ANALYSES	4590.0 HR	17.00/HR	77900
SUBTOTAL CONVERSION COSTS			5347600
SUBTOTAL DIRECT COSTS			7753000
INDIRECT COSTS			
OVERHEADS			
PLANT AND ADMINISTRATIVE (60.0% OF CONVERSION COSTS LESS UTILITIES)			1985200
FIRST YEAR OPERATING AND MAINTENANCE COSTS			9738200
LEVELIZED CAPITAL CHARGES(14.7% OF TOTAL CAPITAL INVESTMENT)			12560000
FIRST YEAR ANNUAL REVENUE REQUIREMENTS			22298200
EQUIVALENT FIRST YEAR UNIT REVENUE REQUIREMENTS, MILLS/KWH			9.43
LEVELIZED OPERATING AND MAINTENANCE (1.886 TIMES FIRST YEAR OPER. & MAIN.)			18366200
LEVELIZED CAPITAL CHARGES(14.7% OF TOTAL CAPITAL INVESTMENT)			12560000
LEVELIZED ANNUAL REVENUE REQUIREMENTS			30926200
EQUIVALENT LEVELIZED UNIT REVENUE REQUIREMENTS, MILLS/KWH			13.08

HEAT RATE 9500. BTU/KWH - HEAT VALUE OF COAL 11700 BTU/LB - COAL RATE 960100 TONS/YR

NEW PREMISES
500 MW
Lime Wet Scrubbing

PEDCO ENVIRONMENTAL, INC., INVESTMENT/COSTS

(MID-1980 DOLLARS)

LIME FGD

CAPITAL INVESTMENT

500 MW,3.48% S.90%

LIME PREPARATION	EQUIPMENT COST, $	
CONVEYORS	546000.	
SLAKERS AND PUMPS	161000.	
STORAGE SILOS	1249000.	
STORAGE TANKS	261000.	
PUMPS AND MOTORS	36000.	
	SUB TOTAL - LIME PREP	2253000.

SO 2 SCRUBBING		
ABSORBERS	15973000.	
FANS AND MOTORS	2040000.	
HEAT EXCHANGERS	3100000.	
SOOT BLOWERS	1196000.	
VALVES AND DUCTING	1617000.	
MOLD TANKS	1037000.	
PUMPS AND MOTORS	2982000.	
	SUB TOTAL - SO2 SCRUB	27945000.

CAPITAL INVESTIMENT (CONTD)

SLUDGE DISPOSAL		
CLARIFIERS	986000.	
VACUUM FILTERS	0.	
CHEMICAL STORAGE	44000.	
MOBILE EQUIPMENT	62000.	
TANKS AND AGITATORS	95000.	
PUMPS AND MOTORS	245000.	
	SUB TOTAL - SLUDGE DISP	1432000.
	TOTAL INSTALLED COST	31630000.
	RAW MATL INVENTORY (working cap)	304000.
	SLUDGE POND	7986000.

DI = total installed cost + sludge pond

CAPITAL INVESTMENT (CONTD)

INDIRECT COSTS		
INTEREST DURING CONSTRUCTION	3962000.	
FIELD OVERHEAD	3962000.	
ENGINEERING	3163000.	
FREIGHT	395000.	
OFFSITE	1188000.	
TAXES	474000.	
SPARES	158000.	
ALLOWANCE FOR SHAKEDOWN	1996000.	
TOTAL INDIRECT COST		15298000.
CONTINGENCY		11044000.
CONTRACTOR FEE		3313000.
LAND COST		154000.
TOTAL CAPITAL INVESTMENT		69729000.
TOTAL INVESTMENT PER KW		139.46

LIME FGD

OPERATING COST

500 MW,3.48% S.90% REG

RAW MATERIAL	QUANTITY	RATE	ANNUAL COST, $
LIME	11.3 TON/HR	$ 50.00 /TON	3219000.
FIXATION CHEMICAL	4.6 TON/HR	$ 20.00 /TON	527000.
UTILITIES			
WATER	591.9 GPM	$ 0.200 /kgal	32000.
ELECTRICITY	16711.6 KW	$ 25.00 MILLS/KWH	1903000.
REHEAT	92.0 MMBTU/HR	$ 1.25 /MMBTU	524000.
LABOR			
DIRECT LABOR	76.00 MANHR/DAY	$ 10.00 /MANHR	277000.
SUPERVISION	15 % OF DIRECT LABOR		42000.
MAINTENANCE			
LABOR AND MATERIAL	4.35 % OF TOTAL CAPITAL INVESTMENT		2889000.
SUPPLIES	15 % OF LABOR AND MATERIAL		433000.
OVERHEAD			
PLANT	50 % OF OPERATING LABOR AND MAINT		1821000.
PAYROLL	20 % OF OPERATING LABOR		64000.
SLUDGE HANDLING	264000. TON-MILE/YR	$ 2.00 /TON-MILE	528000.

SUB TOTAL - OPERATING AND MAINTENANCE 12259000.